TROUBLESHOOTING

SA0OP-02

PROBLEM SYMPTOMS TABLE

Use the table below to help you find the cause of the problem. The numbers indicate the priority of the likely cause of the problem. Check each part in order. If necessary, replace these parts.

Symptom	Suspect Area	See page
Wander/pulls	1. Tires (Worn or improperly inflated)	SA-2
	2. Wheel alignment (Incorrect)	SA-3 SA-8
	3. Steering linkage (Loosen or worn)	-
	4. Hub bearings (Loosen or worn)	SA-11 SA-41
	5. Steering gear (Out of adjustment or broken)	-
Bottoming	1. Vehicle (Overloaded)	-
	2. Spring (Weak)	SA-19 SA-89
	3. Shock absorber (Worn out)	SA-19 SA-89
Sways/pitches	1. Tires (Worn or improperly inflated)	SA-2
	2. Stabilizer bar (Bent or broken)	SA-37 SA-107
	3. Shock absorber (Worn out)	SA-19 SA-89
Front wheel shimmy	1. Tires (Worn or improperly inflated)	SA-2
	2. Wheels (Out of balance)	SA-2
	3. Shock absorber (Worn out)	SA-19
	4. Wheel alignment (Incorrect)	SA-3
	5. Ball joints (Worn)	SA-28 SA-32
	6. Hub bearings (Loosen or worn)	SA-11
	7. Steering linkage (Loosen or worn)	-
	8. Steering gear (Out of adjustment or broken)	-
Abnormal tire wear	1. Tires (Improperly inflated)	SA-2
	2. Wheel alignment (Incorrect)	SA-3 SA-8
	3. Suspension parts (Worn out)	-
	4. Shock absorber (Worn out)	SA-19 SA-89
Noise in rear differential	1. Oil level (Low or wrong grade)	SA-59
	2. Excessive backlash between pinion and ring gear	SA-62
	3. Ring, pinion or side gears (Worn or chipped)	SA-62
	4. Pinion shaft bearing (Worn)	SA-62
	5. Side bearing (Worn)	SA-62
	6. Differential bearing (Loosen or worn)	SA-62
Oil leak from rear differential	1. Oil level (Too high or wrong grade)	SA-59
	2. Drive pinion oil seal (Worn or damaged)	SA-62
	3. Side gear oil seal (Worn or damaged)	SA-62
	4. Companion flange (Loose or damaged)	SA-62
	5. Side gear shaft (Damaged)	SA-62

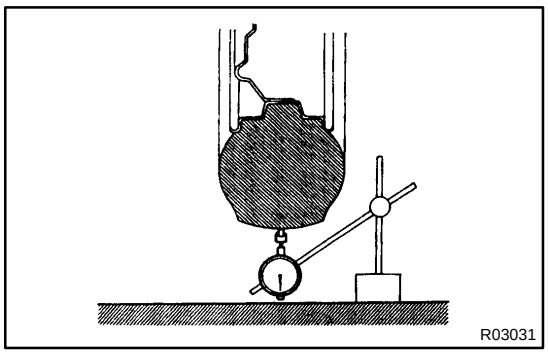

TIRE AND WHEEL

SA0OQ-01

INSPECTION

1. INSPECT TIRE

(a) Check the tires for wear and for the proper inflation pressure.

Cold tire inflation pressure:

2JZ-GE

Tire size	Front kPa (kgf/cm^2, psi)	Rear kPa (kgf/cm^2, psi)
225/50R16 92V	230 (2.3, 33)	-
245/45R16 94V	-	230 (2.3, 33)

2JZ-GTE

Tire size	Front kPa (kgf/cm^2, psi)	Rear kPa (kgf/cm^2, psi)
235/45ZR17	230 (2.3, 33)	-
255/40ZR17	-	230 (2.3, 33)

(b) Check the tire runout.

Tire runout: 1.4 mm (0.055 in.) or less

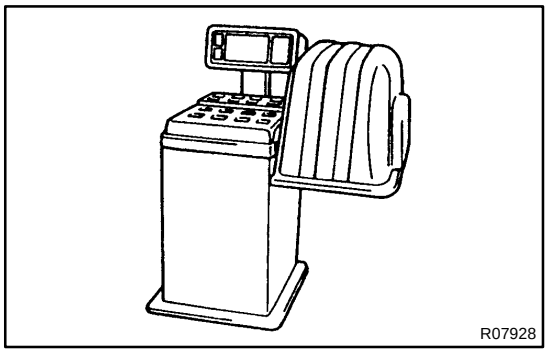

2. INSPECT WHEEL BALANCE

(a) Check and adjust the Off-the-car balance.

(b) If necessary, check and adjust the On-the-car balance.

Imbalance after adjustment: 5.0 g (0.011 lb) or less

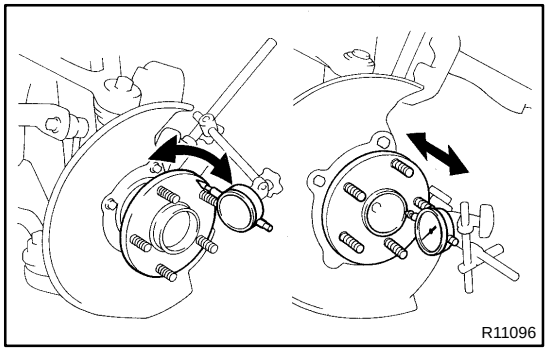

3. CHECK WHEEL BEARING LOOSENESS

(a) Check the axle bearing backlash.

Maximum: 0.05 mm (0.0020 in.)

(b) Check the axle hub deviation.

Maximum: 0.05 mm (0.0020 in.)

4. CHECK FRONT SUSPENSION FOR LOOSENESS

5. CHECK STEERING LINKAGE FOR LOOSENESS

6. CHECK BALL JOINT FOR LOOSENESS

7. CHECK SHOCK ABSORBER WORKS PROPERLY

★ Check for oil leak.

★ Check mounting bushings for wear.

★ Check front and rear of the vehicle for bounce.

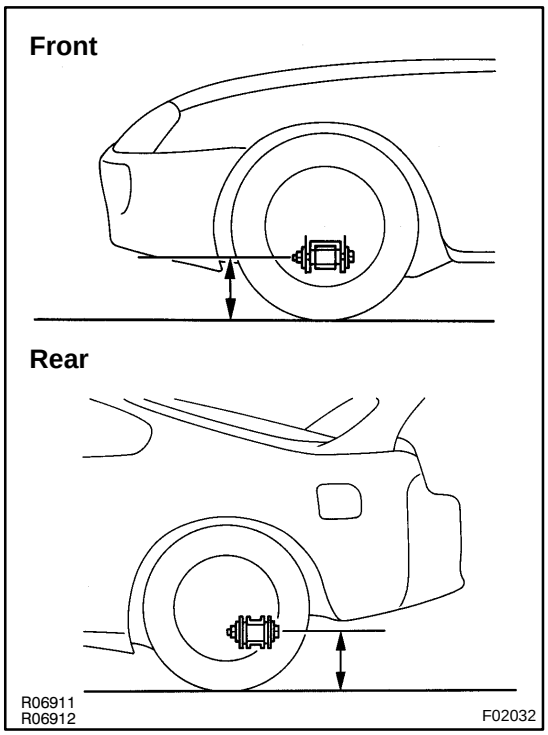

FRONT WHEEL ALIGNMENT

SA0OR-01

INSPECTION

1. MEASURE FRONT AND REAR VEHICLE HEIGHT

		Tire size	Height
2JZ-GE	Front*1	225/50R16 92V	186 mm (7.32 in.)
	Rear*2	245/45R16 94V	246 mm (9.68 in.)
2JZ-GTE	Front*1	235/45ZR17	188 mm (7.40 in.)
	Rear*2	255/40ZR17	254 mm (10.00 in.)

***1: Front measuring point**

Measure from the ground to the center of the lower suspension arm front mounting bolt.

***2: Rear measuring point**

Measure from the ground to the center of the lower suspension arm No.2 mounting bolt.

NOTICE:

Before inspecting the wheel alignment, adjust the vehicle height to the specification.

If the vehicle height is not within the specification, try adjust it by pushing down on or lifting the body.

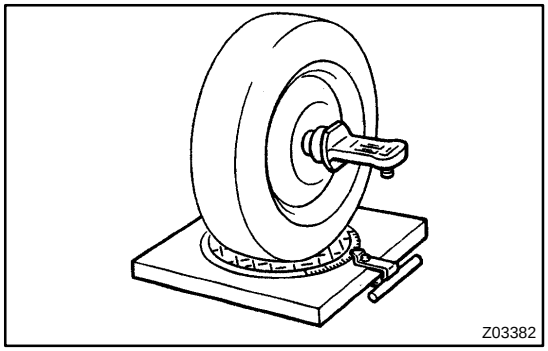

2. INSTALL CAMBER- CASTER- KINGPIN GAUGE ONTO VEHICLE OR POSITION VEHICLE ON WHEEL ALIGNMENT TESTER

Follow the specific instructions of the equipment manufacturer.

3. INSPECT CAMBER, CASTER AND STEERING AXIS INCLINATION

	2JZ-GE	2JZ-GTE
Camber	-0 °20' ± 45' (-0.33 ° ± 0.75°)	-0 °30' ± 45' (-0.5 ° ± 0.75°)
Left-right error	30' (0.5°) or less	30' (0.5°) or less
Caster	3°20' ± 45' (3.33° ± 0.75°)	3°30' ± 45' (3.5° ± 0.75°)
Left-right error	30' (0.5°) or less	30' (0.5°) or less
Steering axis inclination <Reference>	9°35' ± 45' (9.58° ± 0.75°)	9°45' ± 45' (9.75° ± 0.75°)

If the steering axis inclination is not within the specification, after camber and caster have been correctly adjusted, recheck the steering knuckle and front wheel for bearing or looseness.

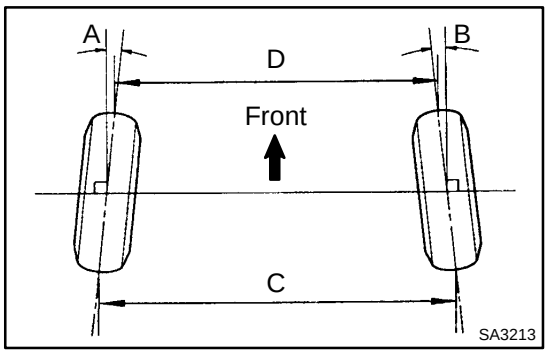

4. INSPECT TOE-IN

Toe-in (Total)	A + B: 0° ± 12' (0° ± 0.2°) C - D: 0 ± 2 mm (0 ± 0.08 in.)

If toe-in is not within specification, adjust by the tie rod end.

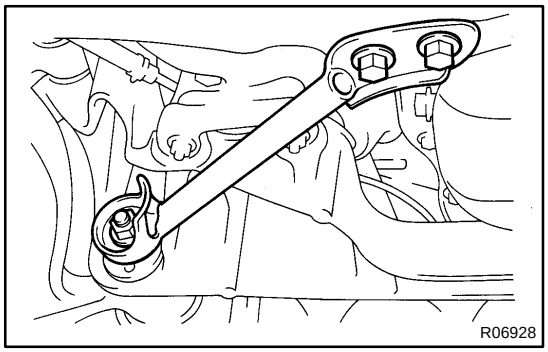

5. ADJUST CAMBER AND CASTER

(a) Remove the engine under cover.

(b) Remove the nut, 2 bolts and lower arm bracket stay.

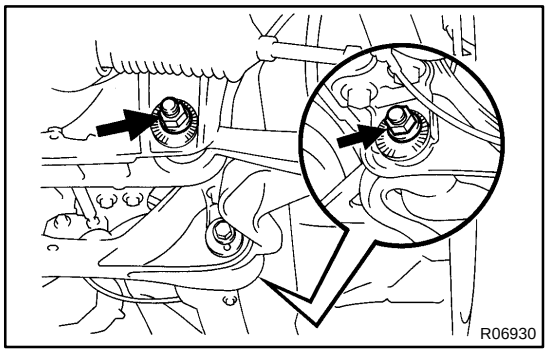

(c) Loosen the front and/or rear adjusting cam nuts.

(d) Adjust the camber and caster by front and/or rear adjusting cams (See adjustment chart).

HINT:

Try to adjust the camber and caster to the center value.

(e) Torque the front and/or rear adjusting cam nuts.
Torque: 226 N·m (2,300 kgf·cm, 166 ft·lbf)

(f) Install the lower arm bracket stay.
Torque:
Bolt: 44 N·m (450 kgf·cm, 32 ft·lbf)
Nut: 59 N·m (600 kgf·cm, 43 ft·lbf)

(g) Install the engine under cover.

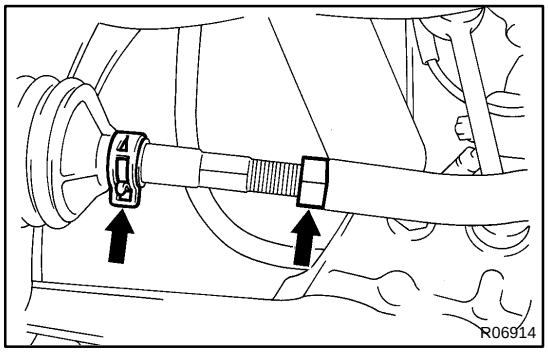

6. ADJUST TOE-IN

(a) Remove the boot clamps.

(b) Loosen the tie rod end lock nuts.

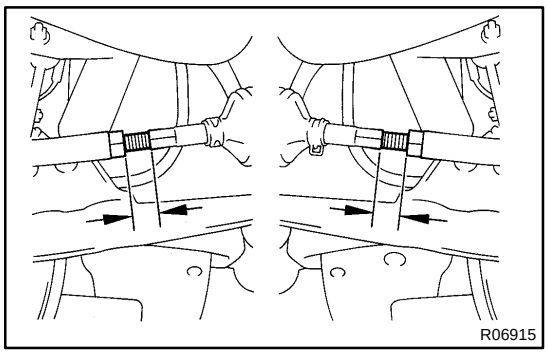

(c) Turn the left and right rack ends an equal amount to adjust the toe-in.

HINT:

★ Make sure that the lengths of the left and right rack ends are the same.

★ Try to adjust the toe-in to the center value.
Rack end length difference:
1.5 mm (0.059 in.) or less

(d) Tighten the tie rod end lock nut.
Torque: 56 N·m (570 kgf·cm, 41 ft·lbf)

(e) Place the boot on the seat and clip it.

HINT:

Make sure that the boots are not twisted.

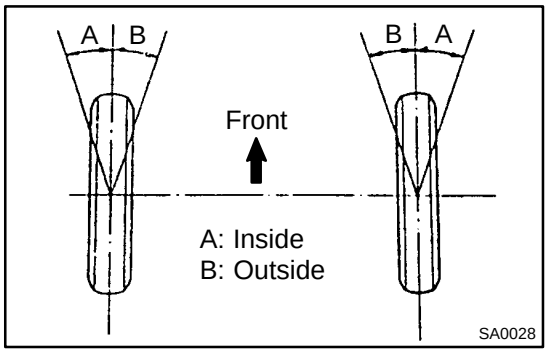

7. INSPECT WHEEL ANGLE

Turn the steering wheel fully and measure the turning angle.

	2JZ-GE	2JZ-GTE
Inside wheel	35˚00' (33˚00' - 36˚00') 35˚ (33˚ – 36˚)	34˚55' (33˚55' - 36˚55') 34.92˚ (32.92˚ – 35.92˚)
Outside wheel <Reference>	30˚45' (30.75˚)	30˚35' (30.58˚)

If the wheel angle are not within the specifications, check to see if the lengths of the left and right rack ends are the same.

HINT:

If the tie rods lengths are not equal, the wheel angle cannot be adjusted properly. Reinspect the toe-in after adjusting the tie rods lengths.

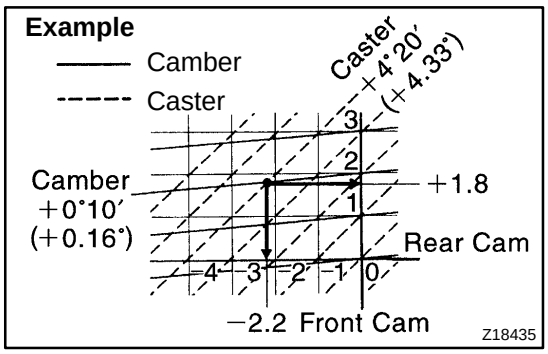

8. HOW TO READ ADJUSTMENT CHART

(a) Mark on the graph the measurements taken from the vehicle.

Example (2JZ-GE):
Camber: +0°10' (+0.16°)
Caster: +4°20' (+4.33°)

(b) Read from the graph the amounts of the front and/or rear cams to be adjusted.

Amount to turn adjusting cam (by graduation):
Front cam: + (Longer) 1.8
Rear cam: - (Shorter) 2.2

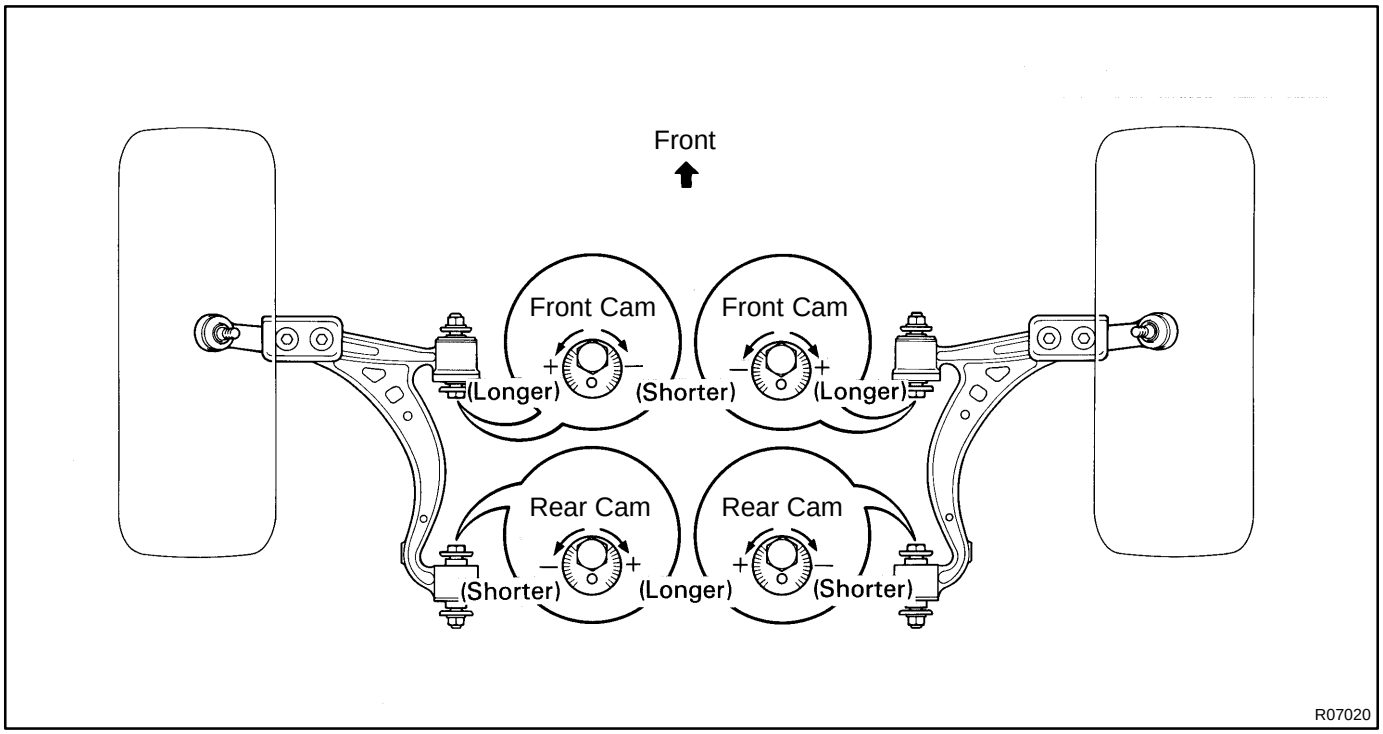

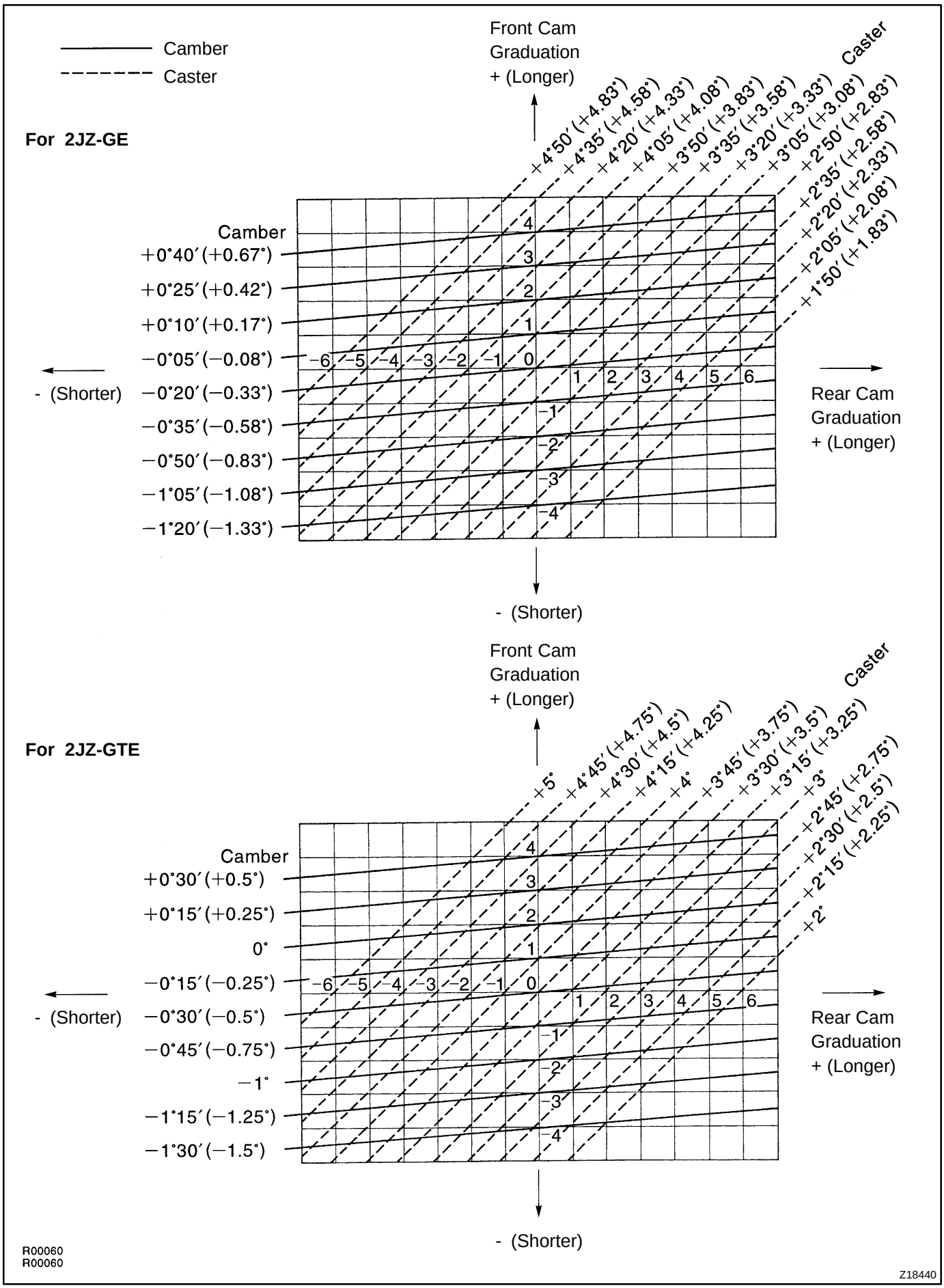
Camber
Caster
For 2JZ-GE
Front Cam Graduation + (Longer)
- (Shorter)
Rear Cam Graduation + (Longer)
Camber
+0°40′(+0.67°)
+0°25′(+0.42°)
+0°10′(+0.17°)
−0°05′(−0.08°)
−0°20′(−0.33°)
−0°35′(−0.58°)
−0°50′(−0.83°)
−1°05′(−1.08°)
−1°20′(−1.33°)
Caster
+4°50′(+4.83°)
+4°35′(+4.58°)
+4°20′(+4.33°)
+4°05′(+4.08°)
+3°50′(+3.83°)
+3°35′(+3.58°)
+3°20′(+3.33°)
+3°05′(+3.08°)
+2°50′(+2.83°)
+2°35′(+2.58°)
+2°20′(+2.33°)
+2°05′(+2.08°)
+1°50′(+1.83°)
For 2JZ-GTE
Front Cam Graduation + (Longer)
- (Shorter)
Rear Cam Graduation + (Longer)
Camber
+0°30′(+0.5°)
+0°15′(+0.25°)
0°
−0°15′(−0.25°)
−0°30′(−0.5°)
−0°45′(−0.75°)
−1°
−1°15′(−1.25°)
−1°30′(−1.5°)
Caster
+5°
+4°45′(+4.75°)
+4°30′(+4.5°)
+4°15′(+4.25°)
+4°
+3°45′(+3.75°)
+3°30′(+3.5°)
+3°15′(+3.25°)
+3°
+2°45′(+2.75°)
+2°30′(+2.5°)
+2°15′(+2.25°)
+2°
R00060
R00060
Z18440

REAR WHEEL ALIGNMENT

SA0OS-02

INSPECTION

1. MEASURE REAR VEHICLE HEIGHT
(See page SA-3)

2. INSTALL CAMBER- CASTER- KINGPIN GAUGE ONTO VEHICLE OR POSITION VEHICLE ON WHEEL ALIGNMENT TESTER

Follow the specific instructions of the equipment manufacturer.

3. INSPECT CAMBER

	2JZ-GE	2JZ-GTE
Camber	-1 ˚35' ± 45' (-1.58 ˚ ± 0.75˚)	-1 ˚30' ± 45' (-1.5 ˚ ± 0.75˚)
Left-right error	30' (0.5˚) or less	30' (0.5˚) or less

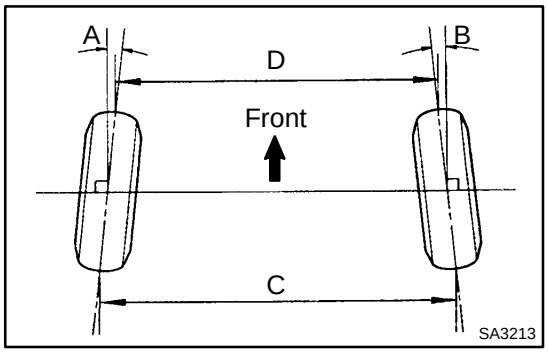

4. INSPECT TOE-IN

Toe-in (Total)	A + B: 0˚18' ± 12' (0.3˚ ± 0.2˚) C - D: 3 ± 2 mm (0.12 ± 0.08 in.)

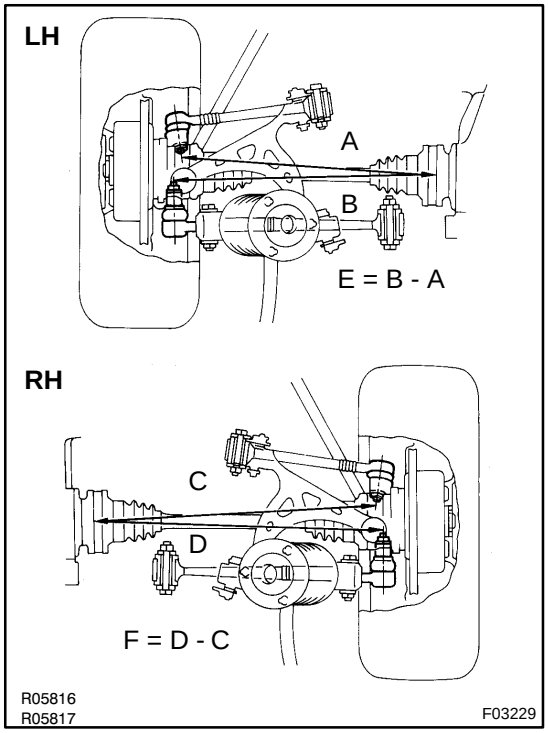

5. ADJUST CAMBER AND TOE-IN

(a) Measure the length of the lower suspension arm No.1 and No.2, as shown in the illustration.

Length:

(E - F) or (F - E) should be less than 4.0 mm (0.16 in.).

If not, adjust the length of the arms by turning the adjusting cam as shown, until (E - F) or (F - E) is less than 4.0 mm (0.16 in.).

(b) Measure the camber and toe-in.

If the camber and toe-in are still not within the specification, adjust the camber and toe-in with the adjusting cam.

(c) Remove the bolt and disconnect the parking brake cable bracket.

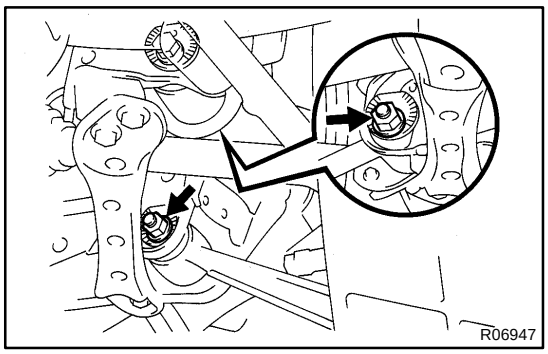

(d) Loosen and adjust the No.1 and/or No.2 cams.

(e) Adjust camber and toe-in by turning the No.1 and/or No.2 cams (See adjustment chart).

HINT:

Try to adjust the camber and toe-in to the center value.

(f) Torque the No.1 and/or No.2 cam nuts.
Torque: 184 N·m (1,880 kgf·cm, 136 ft·lbf)

(g) Connect the parking brake cable bracket with the bolt.

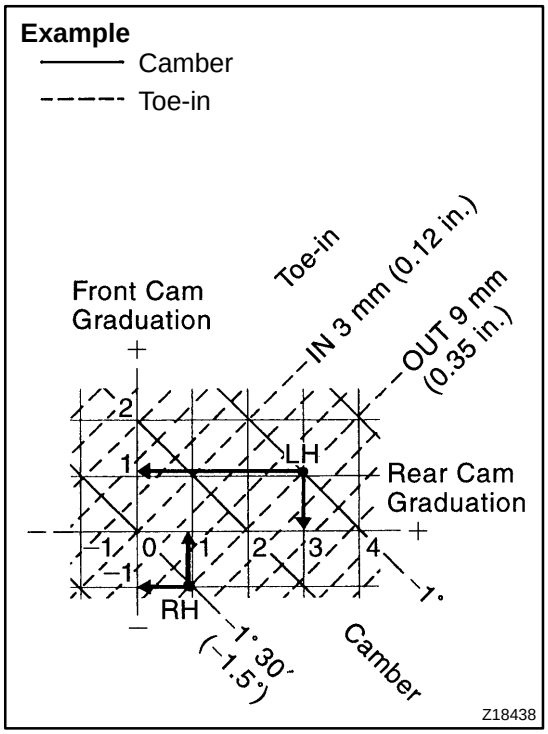

6. HOW TO READ ADJUSTMENT CHART

(a) Mark on the graph the measurements taken from vehicle.
Example (2JZ-GTE):
Camber (LH): -1°00' (-1°)
Camber (RH): −1°30' (-1.5°)

(b) Read from the graph the amounts of the front and/or rear cam to be adjusted.
Amount to turn adjusting cam (by graduation)
LH Front cam: + (Longer) 1.1
LH Rear cam: + (Longer) 3.0
RH Front cam: - (Shorter) 1.0
RH Rear cam: + (Longer) 0.9

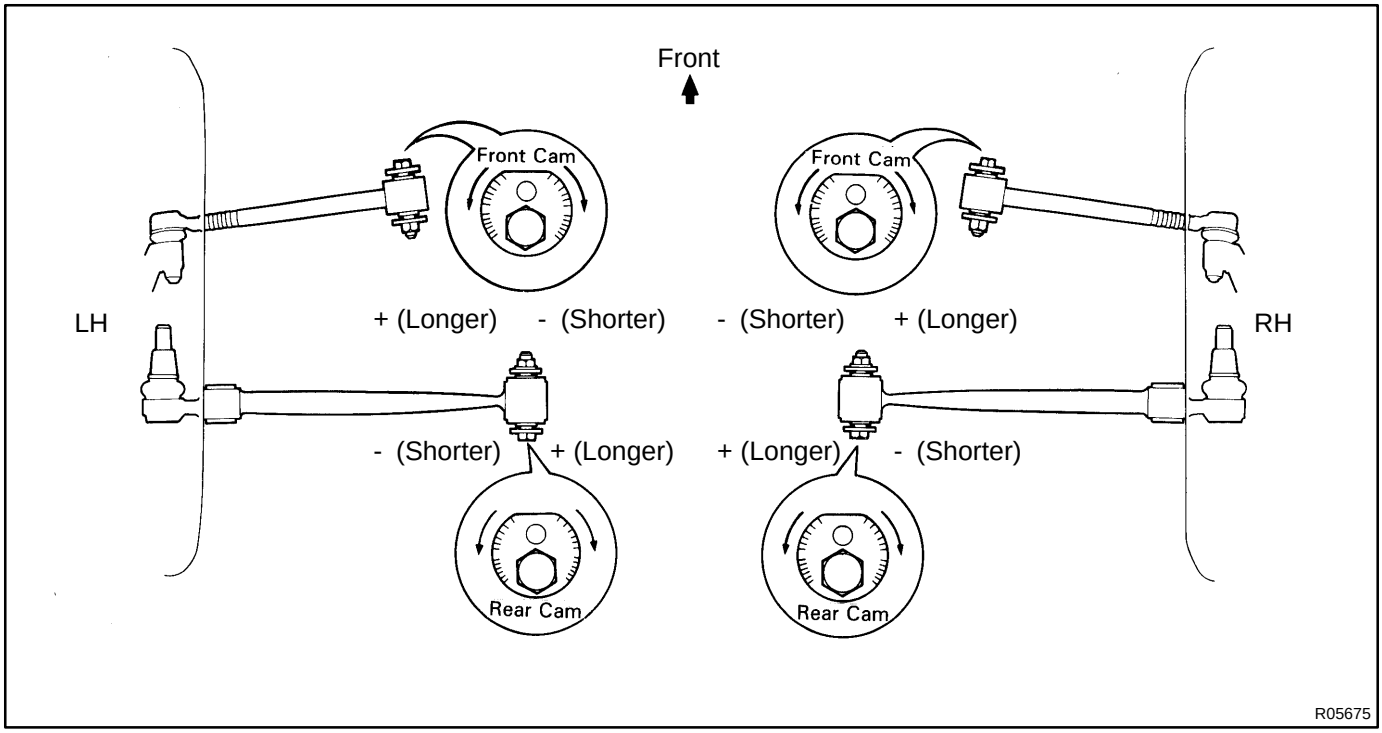

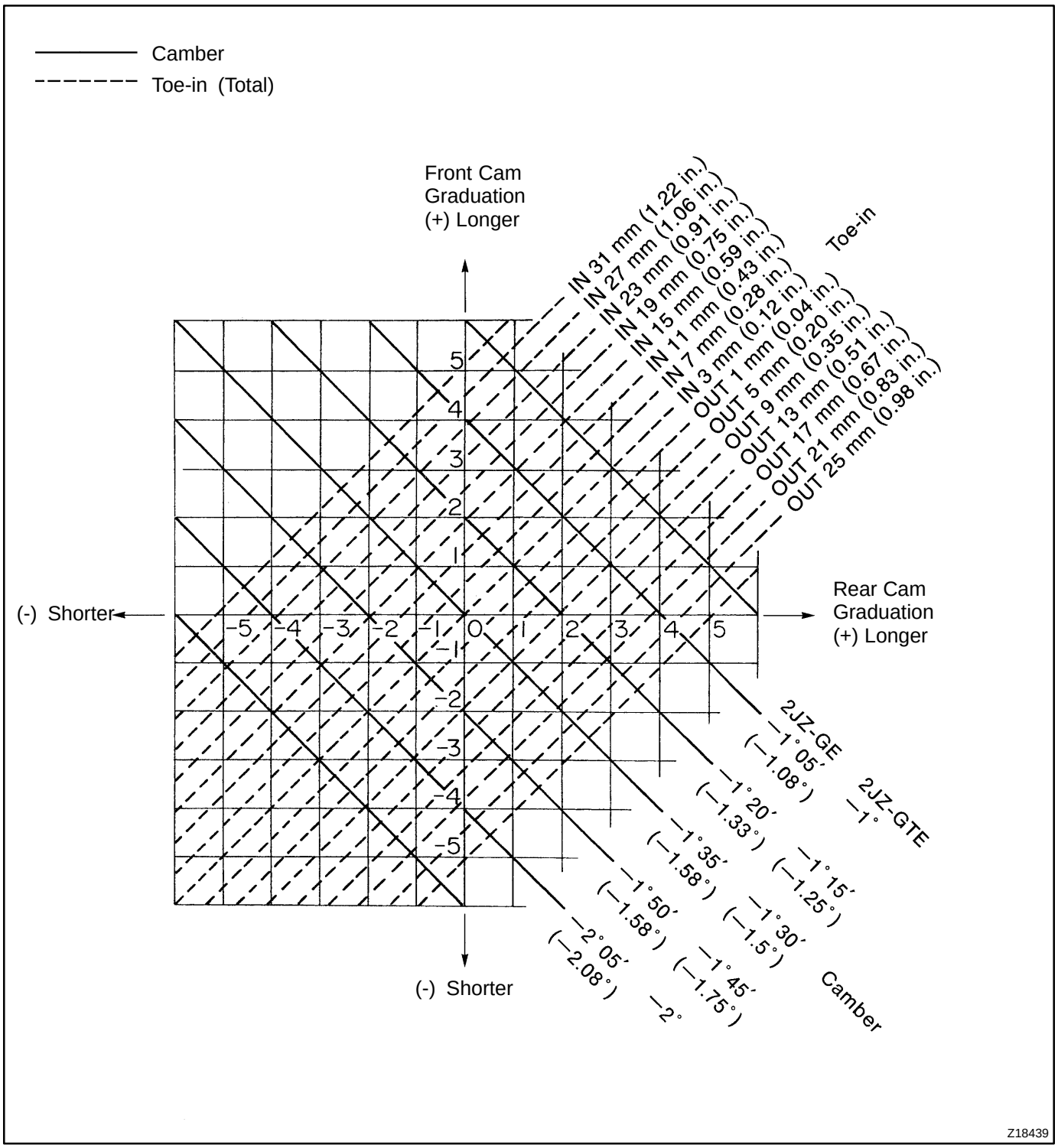
Camber
Toe-in (Total)
Front Cam Graduation (+) Longer
(-) Shorter
Rear Cam Graduation (+) Longer
(-) Shorter
Toe-in
IN 31 mm (1.22 in.)
IN 27 mm (1.06 in.)
IN 23 mm (0.91 in.)
IN 19 mm (0.75 in.)
IN 15 mm (0.59 in.)
IN 11 mm (0.43 in.)
IN 7 mm (0.28 in.)
IN 3 mm (0.12 in.)
OUT 1 mm (0.04 in.)
OUT 5 mm (0.20 in.)
OUT 9 mm (0.35 in.)
OUT 13 mm (0.51 in.)
OUT 17 mm (0.67 in.)
OUT 21 mm (0.83 in.)
OUT 25 mm (0.98 in.)
2JZ-GE
2JZ-GTE
−1° 05′ (−1.08°)
−1° 20′ (−1.33°)
−1° 35′ (−1.58°)
−1° 50′ (−1.58°)
−2° 05′ (−2.08°)
−1°
−1° 15′ (−1.25°)
−1° 30′ (−1.5°)
−1° 45′ (−1.75°)
−2°
Camber
Z18439

FRONT AXLE HUB

COMPONENTS

SA0OT-02

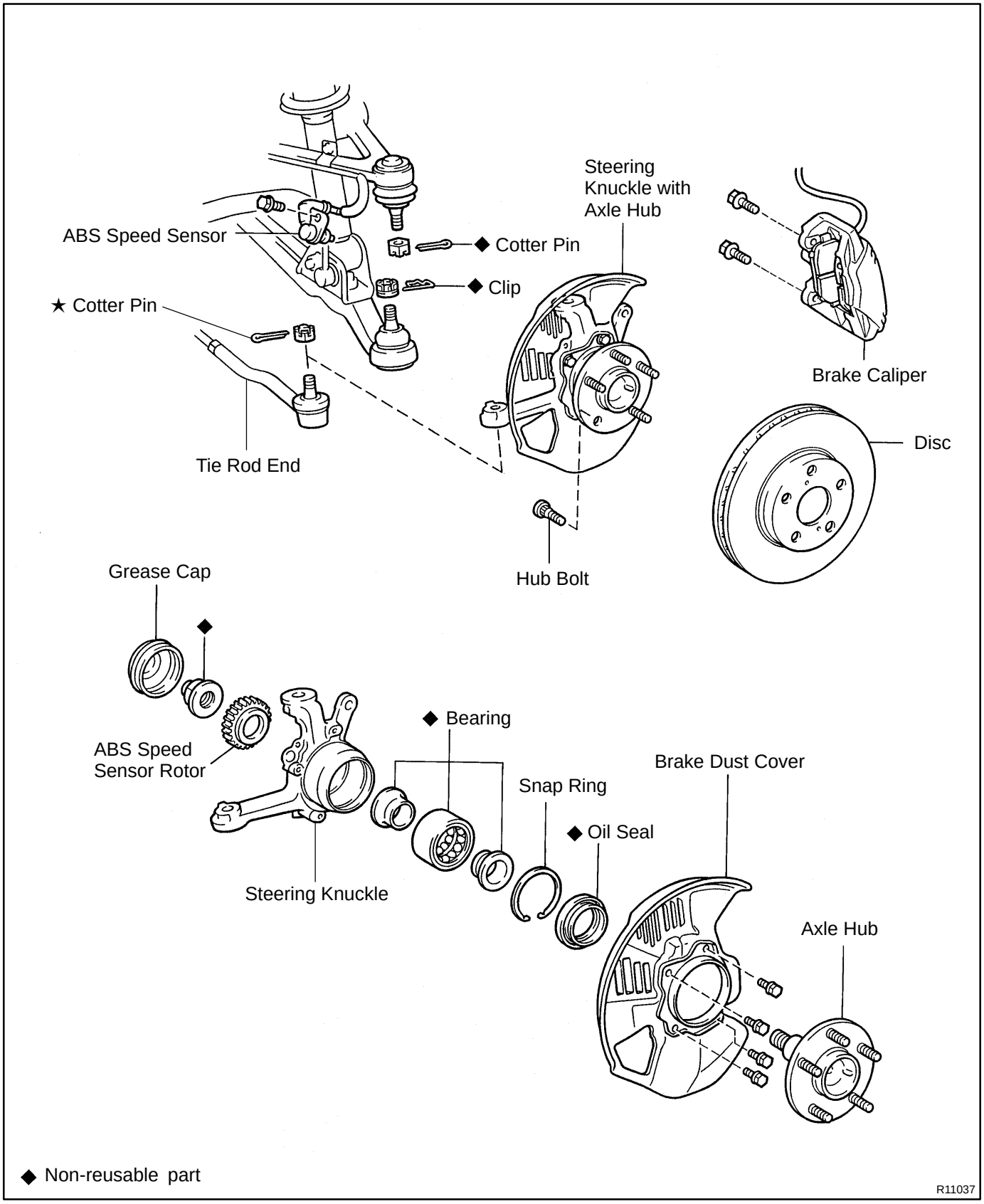

SA0OU-02

REMOVAL

1. REMOVE FRONT WHEEL

Torque: 103 N·m (1,050 kgf·cm, 76 ft·lbf)

2. REMOVE BRAKE CALIPER AND DISC

(a) Remove the 2 bolts and brake caliper from the steering knuckle.

Torque: 118 N·m (1,200 kgf·cm, 87 ft·lbf)

(b) Support the brake caliper securely.

(c) Place matchmarks on the disc and axle hub.

(d) Remove the disc.

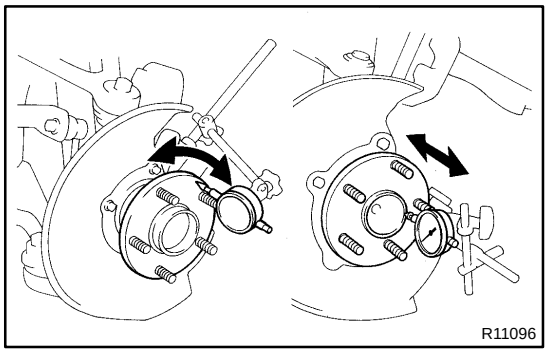

3. CHECK BEARING BACKLASH AND AXLE HUB DEVIATION

(a) Using a dial indicator near the center of the axle hub and check the backlash in the bearing shaft direction.

Maximum: 0.05 mm (0.0020 in.)

If the backlash exceeds the maximum, replace the bearing.

(b) Using a dial indicator, check the deviation at the surface of the axle hub outside the hub bolt.

Maximum: 0.05 mm (0.0020 in.)

If the deviation exceeds the maximum, replace the bearing.

4. DISCONNECT ABS SPEED SENSOR FROM STEERING KNUCKLE

Remove the bolt and disconnect the ABS speed sensor from the steering knuckle.

Torque: 7.8 N·m (80 kgf·cm, 69 in.·lbf)

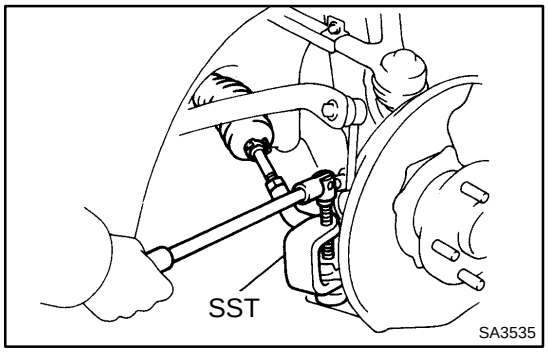

5. DISCONNECT TIE ROD END FROM STEERING KNUCKLE

(a) Remove the cotter pin and nut.

Torque: 49 N·m (500 kgf·cm, 36 ft·lbf)

(b) Using SST, disconnect the tie rod end from the steering knuckle.

SST 09611-12010

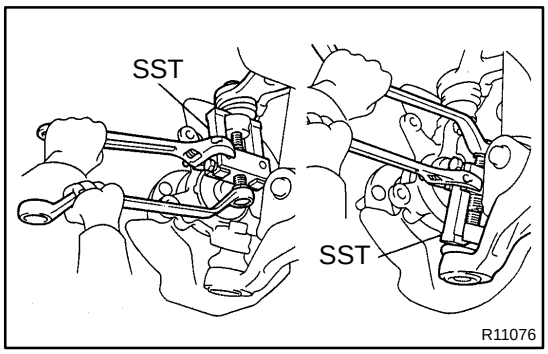

6. REMOVE STEERING KNUCKLE

(a) Remove the upper side of the cotter pin and nut.
Torque: 103 N·m (1,050 kgf·cm, 76 ft·lbf)

(b) Remove the lower side of the clip and nut.
Torque: 125 N·m (1,270 kgf·cm, 92 ft·lbf)

(c) Using SST, remove the steering knuckle from the upper and lower suspension arms.
SST 09628-6201 1

SA0OV-01

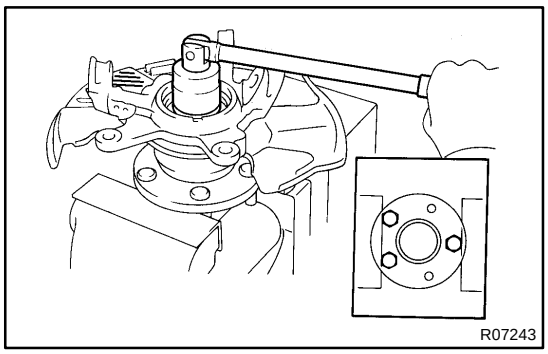

DISASSEMBLY

1. REMOVE HUB GREASE CAP

Using a screwdriver, remove the grease cap from the steering knuckle.

2. REMOVE FRONT AXLE HUB LOCK NUT AND ABS SPEED SENSOR ROTOR

(a) Clamp the axle hub in a soft jaw vise.

HINT:

Close vise until it holds hub bolt. Do not tighten further.

(b) Using a chisel and hammer, loosen the staked part of the lock nut and remove it.

(c) Remove the sensor rotor.

NOTICE:

Take care not to scratch the serrations of the sensor rotor.

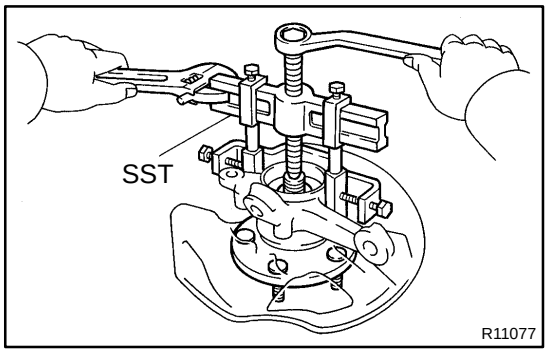

3. REMOVE AXLE HUB FROM STEERING KNUCKLE

(a) Remove the 4 bolts and shift the brake dust cover toward the axle hub side (outside).

(b) Using SST, remove the axle hub from the steering knuckle.

SST 09950-40010 (09951-04010, 09952-04010, 09953-04020, 09954-04010, 09955-04030, 09958-04010)

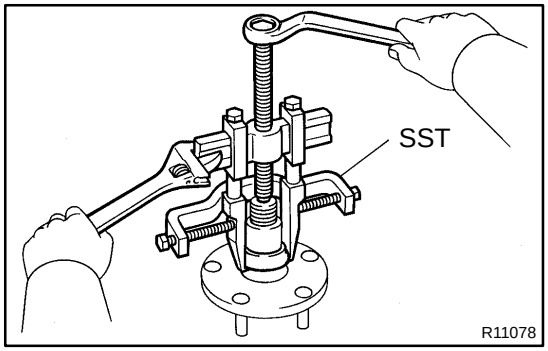

4. REMOVE INNER RACE (OUTSIDE) FROM AXLE HUB

Using SST, remove the inner race from the axle hub.

SST 09950-40010 (09951-04010, 09952-04010, 09953-04020, 09954-04010, 09955-04010, 09958-04010)

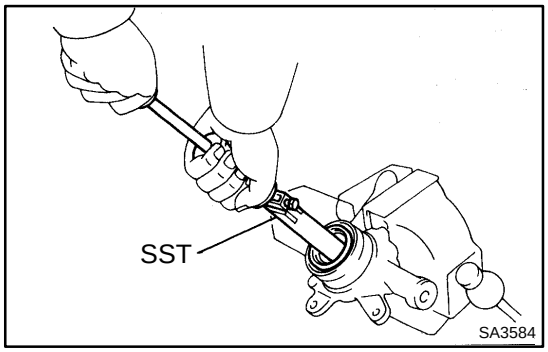

5. REMOVE OIL SEAL

Using SST, remove the oil seal from the steering knuckle.

SST 09308-00010

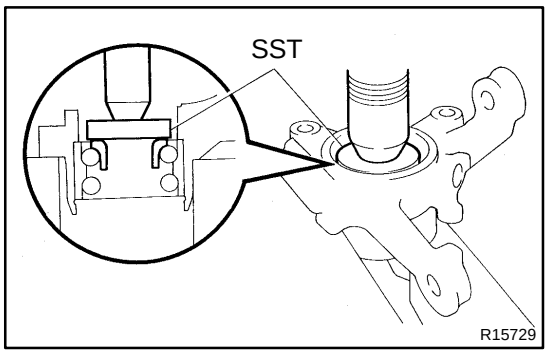

6. REMOVE BEARING FROM STEERING KNUCKLE

(a) Using snap ring pliers, remove the snap ring.

(b) Position the inner race above the bearing on the inner side.

(c) Using SST and a press, remove the bearing from the steering knuckle.
SST 09950-60010 (09951-00560)

SA0OW-02

REASSEMBLY

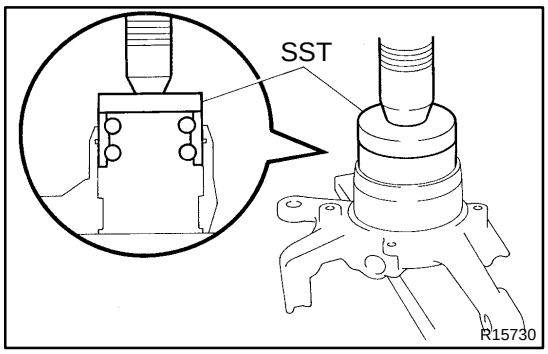

1. INSTALL BEARING TO STEERING KNUCKLE

(a) Using SST and a press, install a new bearing.
SST 09950-60020 (09951-00720)

NOTICE:

If the inner race and balls come loose from the bearing outer race, be sure to install them on the same side as before.

(b) Using snap ring pliers, install the snap ring.

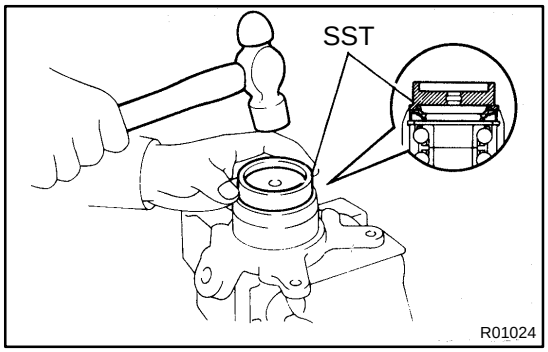

2. INSTALL OIL SEAL

(a) Install the inner race (outside).

(b) Using SST and a hammer, install a new oil seal until it becomes flush with the end surface of the steering knuckle.
SST 09608-32010

(c) Coat MP grease to the oil seal lip.

3. INSTALL AXLE HUB TO STEERING KNUCKLE

(a) Install the brake dust cover to the steering knuckle with the 4 bolts.
Torque: 8.0 N·m (85 kgf·cm, 74 in.·lbf)

(b) Using SST and a press, install the axle hub to steering knuckle.
SST 09608-32010, 09608-06041

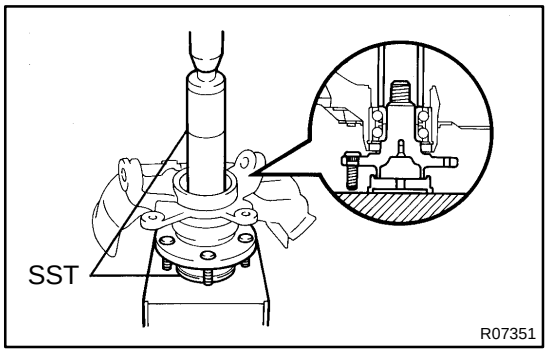

4. INSTALL ABS SPEED SENSOR ROTOR ON AXLE SHAFT

NOTICE:

Do not scratch the serrations of the sensor rotor.

5. INSTALL AXLE HUB LOCK NUT

(a) Install and torque a new axle hub lock nut.
Torque: 199 N·m (2,030 kgf·cm, 147 ft·lbf)

(b) Using a chisel and hammer, stake the lock nut.

6. INSTALL HUB GREASE CAP

Using a screwdriver and hammer, install the grease cap to the steering knuckle.

FRONT WHEEL HUB BOLT

SA0OY-01

REPLACEMENT

1. REMOVE FRONT WHEEL

2. REMOVE BRAKE CALIPER AND DISC

(a) Remove the 2 bolts and brake caliper from the steering knuckle.

(b) Support the brake caliper securely.

(c) Place matchmarks on the disc and axle hub.

(d) Remove the disc.

3. REMOVE HUB BOLT

Using SST, remove the hub bolt.

SST 09628-1001 1

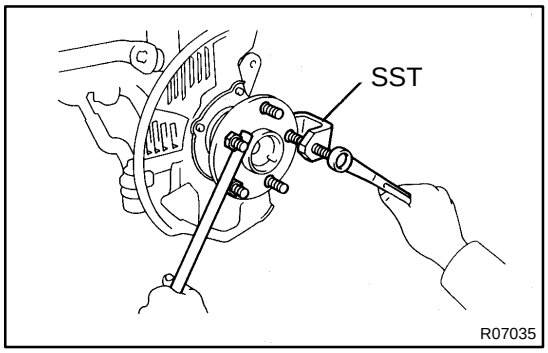

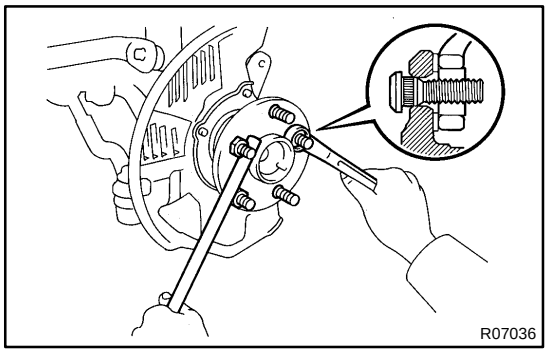

4. INSTALL HUB BOLT

(a) Install washer and nut to a new hub bolt, as shown in the illustration.

(b) Turn the wheel nut to pull the hub bolt through until the underside of the hub bolt head touches the axle hub.

5. INSTALL DISC AND BRAKE CALIPER

(a) Install the disc.

(b) Install the 2 bolts and brake caliper to the steering knuckle.

Torque: 118 N·m (1,200 kgf·cm, 87 ft·lbf)

6. INSTALL FRONT WHEEL

Torque: 103 N·m (1,050 kgf·cm, 76 ft·lbf)

FRONT SHOCK ABSORBER

SA0OZ-02

COMPONENTS

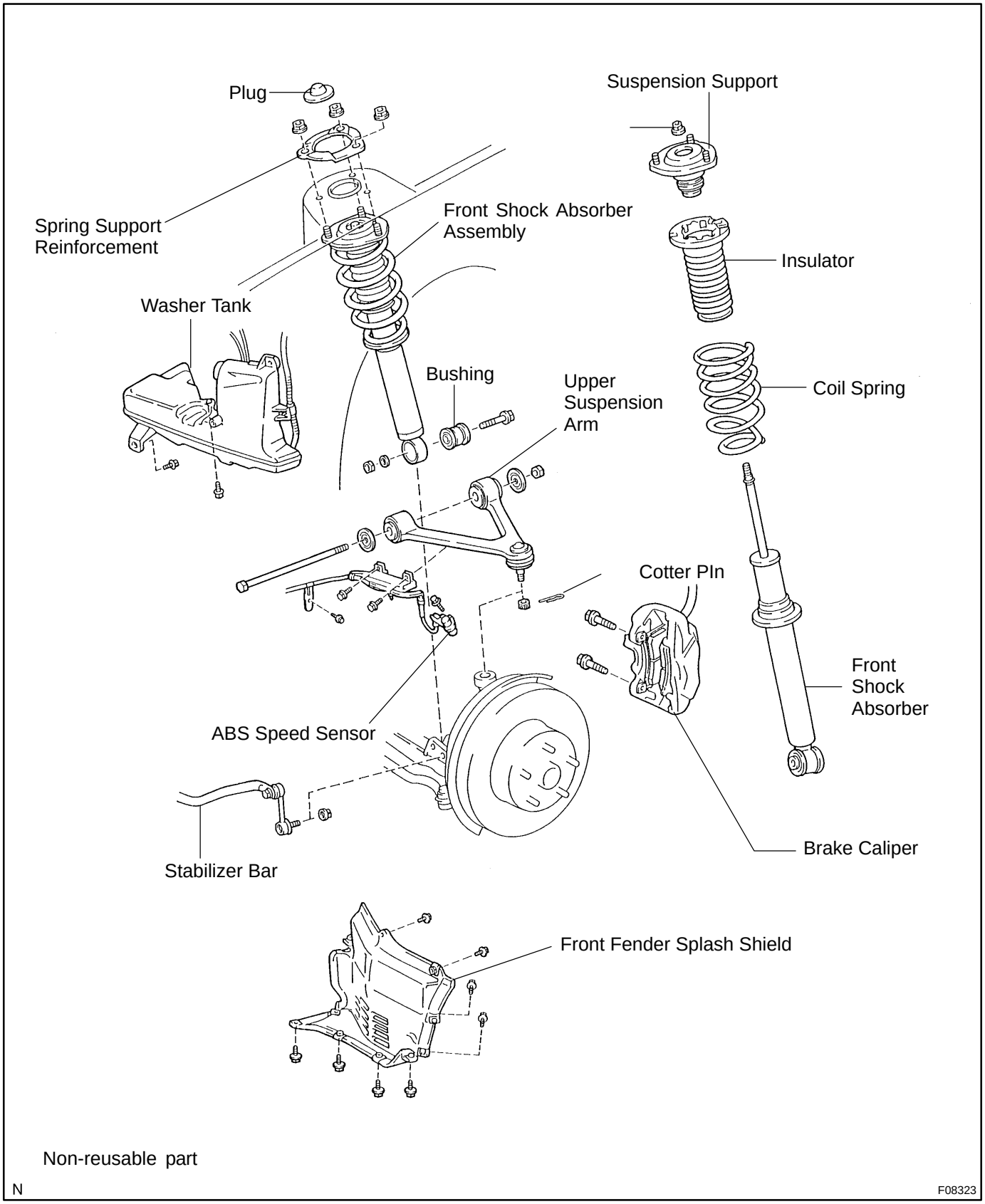

SA0P0-01

REMOVAL

1. REMOVE FRONT WHEEL

Torque: 103 N·m (1,050 kgf·cm, 76 ft·lbf)

2. REMOVE BRAKE CALIPER

(a) Remove the 2 bolts and brake caliper from the steering knuckle.

Torque: 118 N·m (1,200 kgf·cm, 87 ft·lbf)

(b) Support the brake caliper securely.

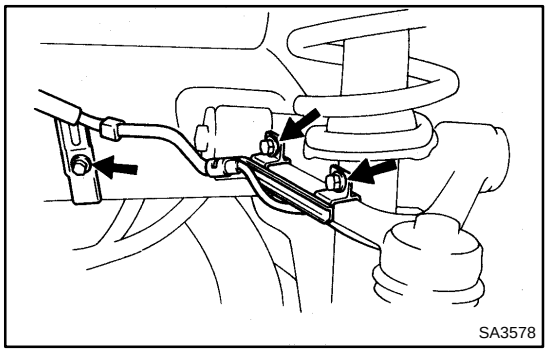
SA3578

3. DISCONNECT ABS SPEED SENSOR AND WIRE HARNESS

(a) Remove the bolt and disconnect the speed sensor from the steering knuckle.

Torque: 7.8 N·m (80 kgf·cm, 69 in.·lbf)

(b) Remove the 3 bolts and disconnect the wire harness clamp to prevent the wire harness from being damaged when removing or installing the through bolt of the upper suspension arm.

Torque: 5.4 N·m (55 kgf·cm, 48 in.·lbf)

4. REMOVE FRONT FENDER SPLASH SHIELD

5. LH side only:

MOVE WASHER TANK

(a) Remove the 2 washer tank set bolts.

(b) Move the washer tank away from the body.

6. DISCONNECT UPPER SUSPENSION ARM

(a) Remove the bolt and nut and disconnect the upper suspension arm from the sub-frame.

Torque: 164 N·m (1,670 kgf·cm, 121 ft·lbf)

HINT:

At the time of installation, after stabilizing the suspension, torque the nut.

(b) Support the upper suspension arm securely.

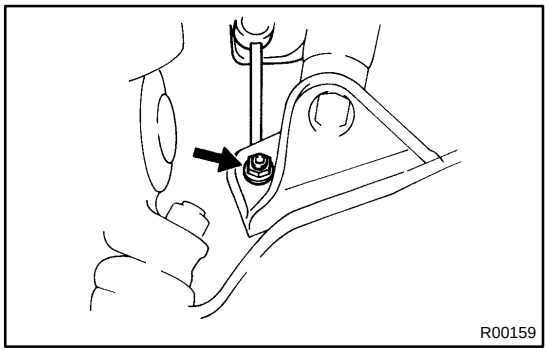
R00159

7. DISCONNECT STABILIZER BAR LINK

Remove the nut and disconnect the stabilizer bar link.

Torque: 74 N·m (750 kgf·cm, 54 ft·lbf)

HINT:

If the ball joint stud turns together with the nut, use a hexagon wrench to hold the stud.

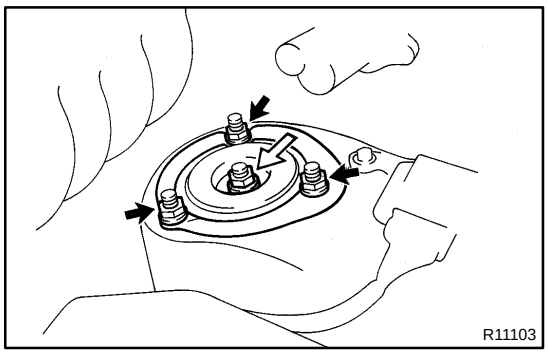

8. REMOVE SHOCK ABSORBER

(a) Remove the nut, washer and bolt and disconnect the shock absorber from the lower suspension arm.
Torque: 143 N·m (1,460 kgf·cm, 106 ft·lbf)

HINT:
At the time of installation, after stabilizing the suspension torque the nut.

(b) Remove the plug from the suspension support.

(c) Loosen the lock nut in the middle of the suspension support.

NOTICE:
Do not remove the nut.
Torque: 29 N·m (300 kgf·cm, 22 ft·lbf)

(d) Remove the 3 nuts, spring support reinforcement and shock absorber from the body.
Torque: 35 N·m (360 kgf·cm, 26 ft·lbf)

SA0P1-01

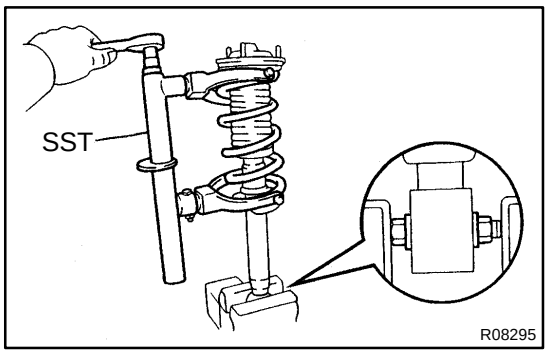

DISASSEMBLY

1. REMOVE SUSPENSION SUPPORT AND COIL SPRING

(a) Using SST, compress the coil spring.
SST 09727-30021

NOTICE:

Do not use an impact wrench. It will damage the SST.

(b) Install the nut and bolt to the lower part of the shock absorber and secure it in a vise.

(c) Remove the suspension support center nut.

(d) Remove the suspension support and coil spring.

2. REMOVE INSULATOR FROM SUSPENSION SUPPORT

SA0P2-01

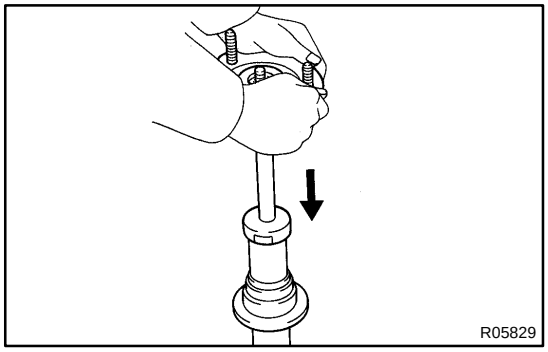

INSPECTION

INSPECT SHOCK ABSORBER

Compress and extend the shock absorber rod and check that there is no abnormal resistance or unusual operation sound.

If there is any abnormality, replace the shock absorber with a new one.

NOTICE:

When discarding the shock absorber, see DISPOSAL on page SA-24 .

SA0P3-01

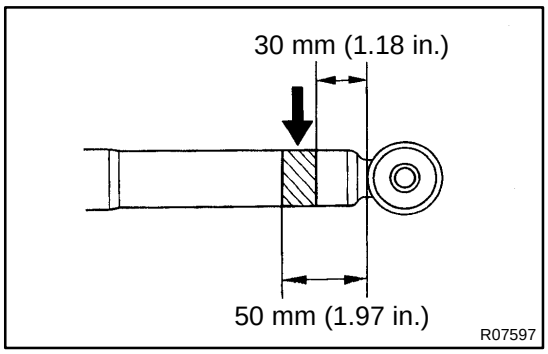

DISPOSAL

1. FULLY EXTEND SHOCK ABSORBER ROD

2. DRILL HOLE TO REMOVE GAS FROM CYLINDER

Using a drill, make a hole in the cylinder within the shaded region to remove the gas inside.

CAUTION:

The discharged gas is harmless, but be careful of chips which may fly up when drilling.

SA0P4-01

REPLACEMENT

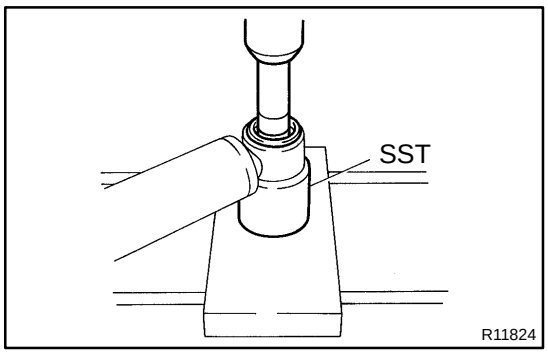

1. REMOVE BUSHING

Using SST and a deep socket wrench, remove the bushing.

SST 09710-14013 (09710-00021)

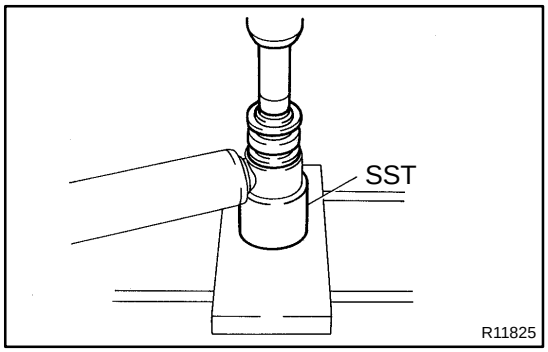

2. INSTALL NEW BUSHING

Using SST and a deep socket wrench, install a new bushing.

SST 09710-14013 (09710-00021)

NOTICE:

Do not apply grease or oil to the bushing.

SA0P5-01

REASSEMBLY

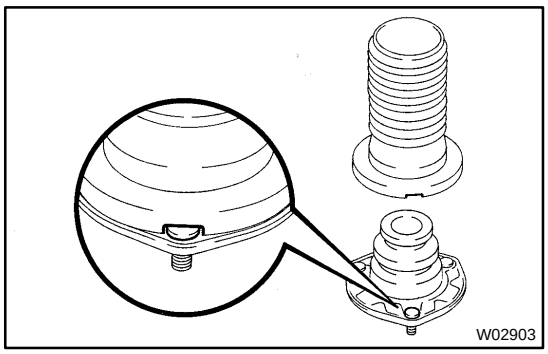

1. INSTALL INSULATOR TO SUSPENSION SUPPORT

HINT:

Match the bolt of the suspension support with the cut-out part of the insulator.

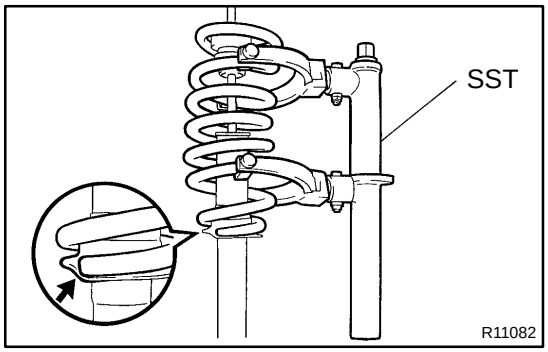

2. INSTALL COIL SPRING TO SHOCK ABSORBER

(a) Using SST, compress the coil spring.
SST 09727-30021

NOTICE:

Do not use an impact wrench. It will damage the SST.

(b) Install the coil spring to the shock absorber.

HINT:

Fit the lower end of the coil spring into the gap of the spring seat of the shock absorber.

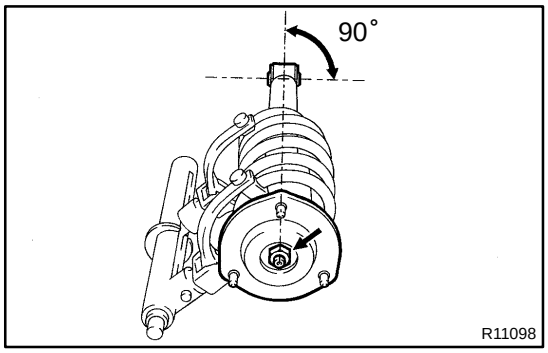

3. INSTALL SUSPENSION SUPPORT

(a) Install the suspension support to the rod.
(b) Temporarily tighten a new nut.
(c) Turn the suspension support so that one of the bolts on the suspension support faces the same direction, as shown in the illustration.

HINT:

Align the bolt so that a line drawn between the rod and the bolt would be 90° to the direction of the lower bushing.

(d) Remove the SST.
SST 09727-30021

HINT:

After removing the SST, again check the direction of the suspension support.

FRONT UPPER SUSPENSION ARM

SA0P7-02

COMPONENTS

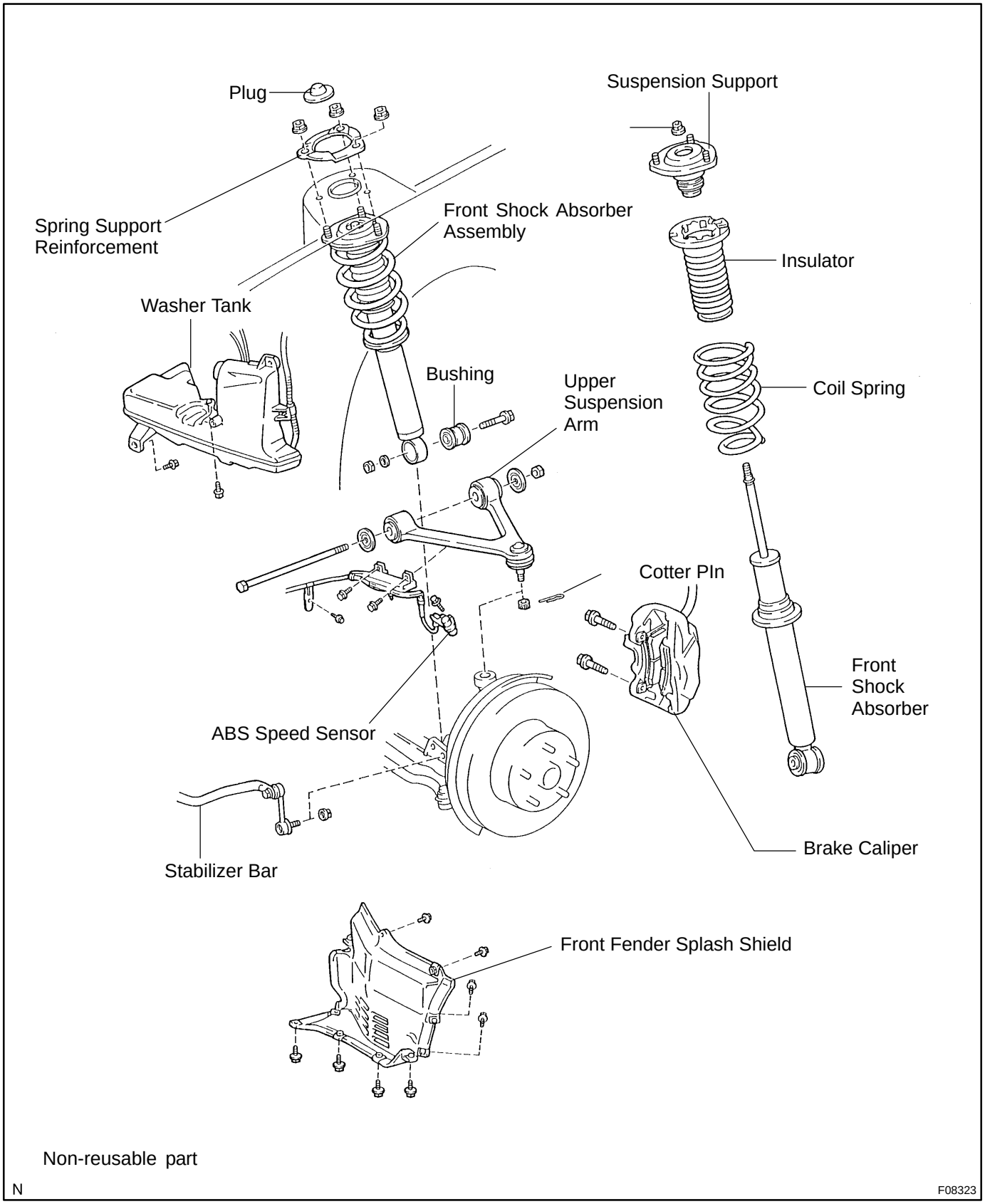

SA0P8-01

REMOVAL

1. REMOVE FRONT WHEEL

Torque: 103 N·m (1,050 kgf·cm, 76 ft·lbf)

2. REMOVE BRAKE CALIPER

(a) Remove the 2 bolts and brake caliper from the steering knuckle.

Torque: 118 N·m (1,200 kgf·cm, 87 ft·lbf)

(b) Support the brake caliper securely.

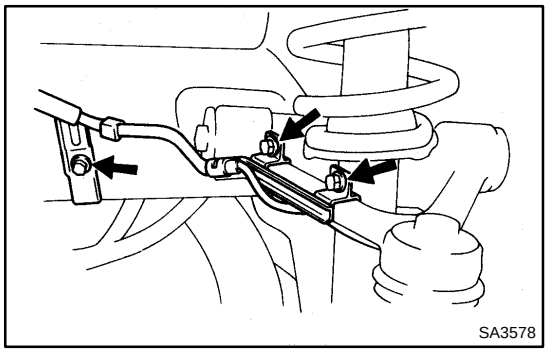

3. DISCONNECT ABS SPEED SENSOR AND WIRE HARNESS CLAMP

(a) Remove the bolt and disconnect the speed sensor from the steering knuckle.

Torque: 7.8 N·m (80 kgf·cm, 69 in.·lbf)

(b) Remove the 3 bolts and disconnect the wire harness clamp to prevent the wire harness being damaged when removing or installing the through bolt.

Torque: 5.4 N·m (55 kgf·cm, 48 in.·lbf)

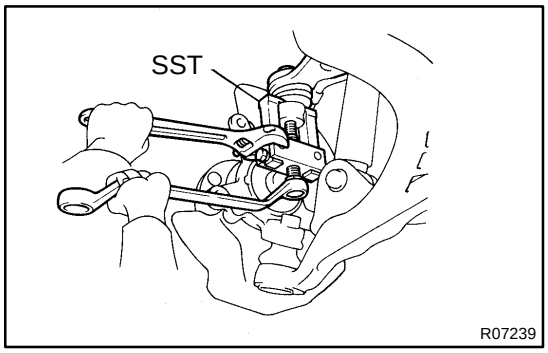

4. DISCONNECT UPPER SUSPENSION ARM

(a) Remove the cotter pin and the nut.

Torque: 103 N·m (1,050 kgf·cm, 76 ft·lbf)

(b) Using SST, disconnect the upper suspension arm from the steering knuckle.

SST 09628-6201 1

5. REMOVE FRONT FENDER SPLASH SHIELD

6. LH side only:

MOVE WASHER TANK

(a) Remove the 2 washer tank set bolts.

(b) Move the washer tank away from the body.

7. REMOVE UPPER SUSPENSION ARM

(a) Remove the nut, 2 washers and bolt.

Torque: 164 N·m (1,670 kgf·cm, 121 ft·lbf)

HINT:

At the time of installation, after stabilizing the suspension, torque the nut.

(b) Remove the upper suspension arm.

SA0P9-01

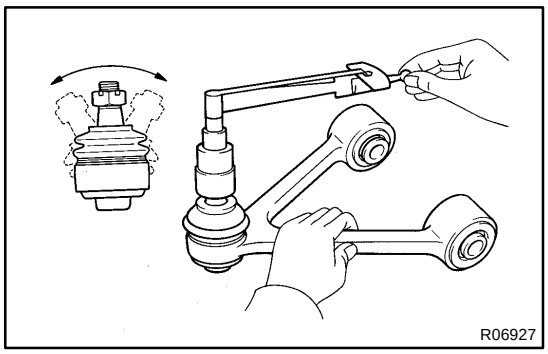

INSPECTION

INSPECT UPPER BALL JOINT FOR ROTATION CONDITION

(a) As shown in the illustration, flip the ball joint stud back and forth 5 times before installing the nut.

(b) Using a torque wrench, turn the nut continuously taking 2 - 4 seconds per a turn and take the torque reading on the 5th turn.

Torque (turning):
1.0 - 3.4 N·m (10 - 35 kgf·cm, 9 - 30 in.·lbf)

FRONT LOWER SUSPENSION ARM

SA0PC-02

COMPONENTS

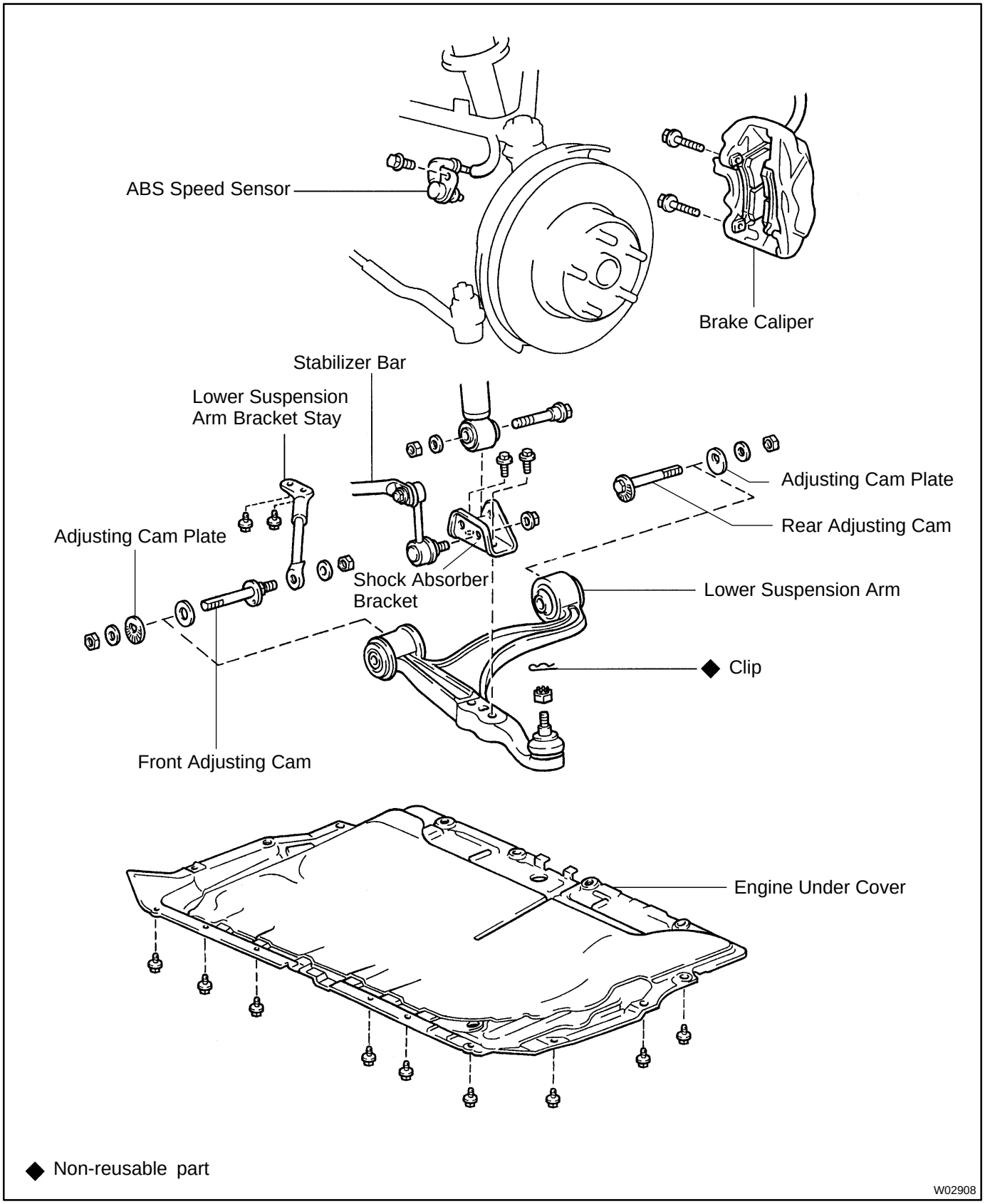

SA0PD-01

REMOVAL

1. REMOVE FRONT WHEEL

Torque: 103 N·m (1,050 kgf·cm, 76 ft·lbf)

2. REMOVE ENGINE UNDER COVER

3. REMOVE BRAKE CALIPER

(a) Remove the 2 bolts and brake caliper from the steering knuckle.

Torque: 118 N·m (1,200 kgf·cm, 87 ft·lbf)

(b) Support the brake caliper securely.

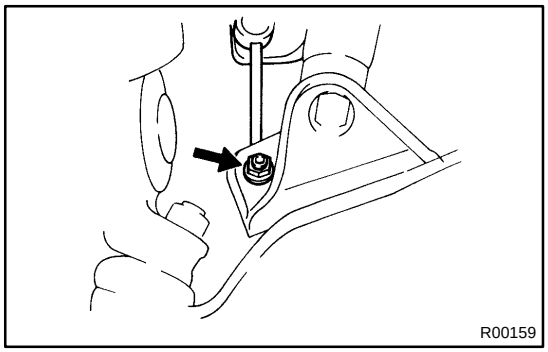

4. DISCONNECT STABILIZER BAR LINK FROM SHOCK ABSORBER BRACKET

Remove the nut and disconnect the stabilizer bar link from the shock absorber bracket.

Torque: 74 N·m (750 kgf·cm, 54 ft·lbf)

HINT:

If the ball joint stud turns together with the nut, use a hexagon wrench to hold the stud.

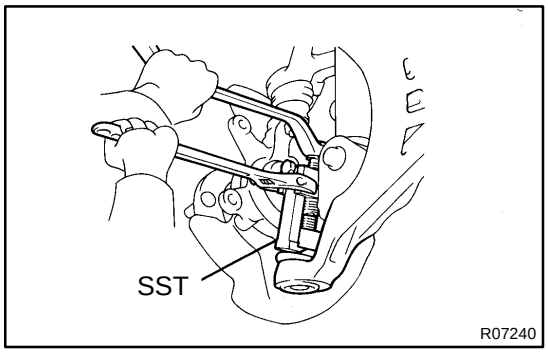

5. DISCONNECT STEERING KNUCKLE

(a) Remove the clip and nut.

Torque: 125 N·m (1,270 kgf·cm, 92 ft·lbf)

(b) Using SST, disconnect the steering knuckle from the lower suspension arm.

SST 09628-6201 1

6. REMOVE LOWER SUSPENSION ARM

(a) Remove the nut, washer and bolt and disconnect the lower suspension arm from the shock absorber.

Torque: 143 N·m (1,460 kgf·cm, 106 ft·lbf)

HINT:

At the time of installation, after stabilizing the suspension, torque the nut.

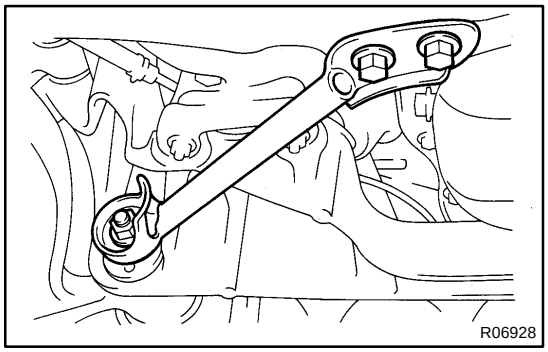

(b) Remove the nut, 2 bolts and the lower suspension arm bracket stay.

Bolt: 44 N·m (450 kgf·cm, 32 ft·lbf)

Nut: 59 N·m (600 kgf·cm, 43 ft·lbf)

HINT:

At the time of installation, before installing the lower suspension arm bracket stay, adjust the front wheel alignment.

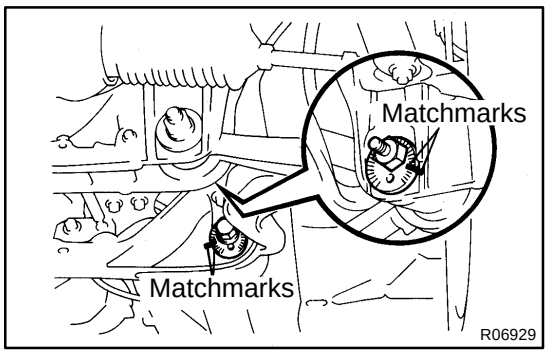

(c) Before loosening the adjusting cam, place matchmarks on the front and rear adjusting cams and sub-frame.

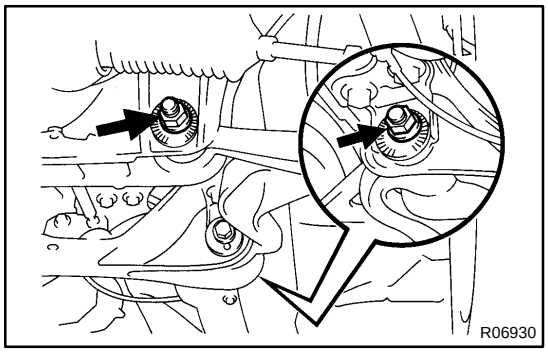

(d) Remove the 2 nuts, washers, adjusting cam plates and adjusting cams and lower suspension arm.
Torque: 226 N·m (2,300 kgf·cm, 166 ft·lbf)

HINT:
At the time of installation, after stabilizing the suspension, torque the nuts.

7. REMOVE SHOCK ABSORBER BRACKET FROM LOWER SUSPENSION ARM

Remove the 2 bolts and bracket from the lower suspension arm.
Torque: 52 N·m (530 kgf·cm, 38 ft·lbf)

SA0PE-02

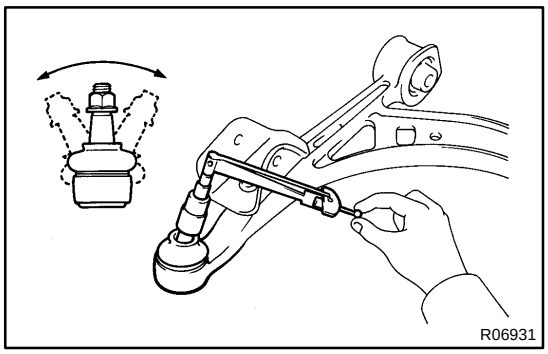

INSPECTION

INSPECT LOWER BALL JOINT FOR ROTATION CONDITION

(a) As shown in the illustration, flip the ball joint stud back and forth 5 times before installing the nut.

(b) Using torque wrench, turn the nut continuously taking 2 - 4 seconds per a turn and take the torque reading on the 5th turn.

Torque (turning):
1.0 - 3.4 N·m (10 - 35 kgf·cm, 9 - 30 in.·lbf)

FRONT STABILIZER BAR

SA0PG-02

COMPONENTS

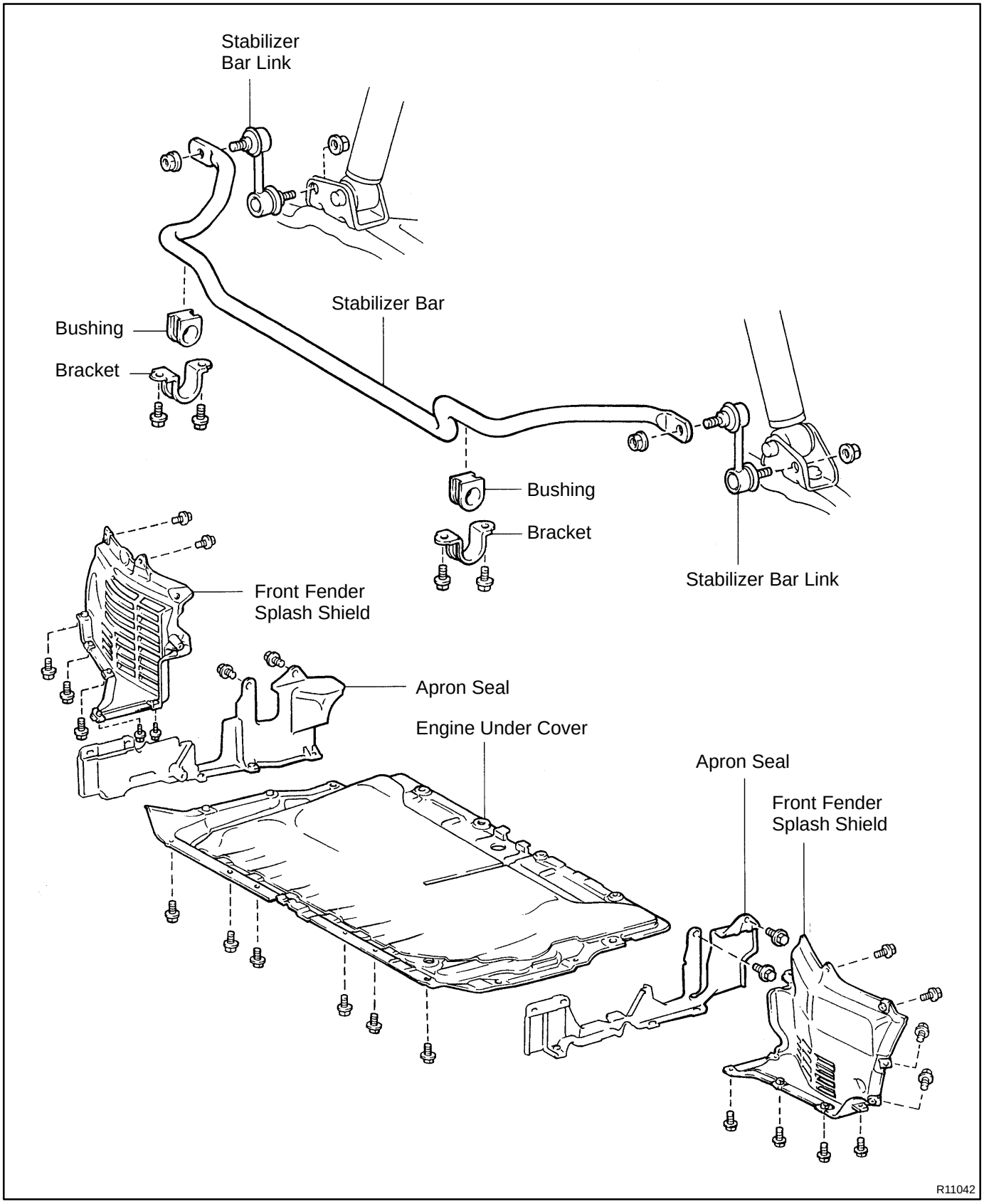

SA0PH-01

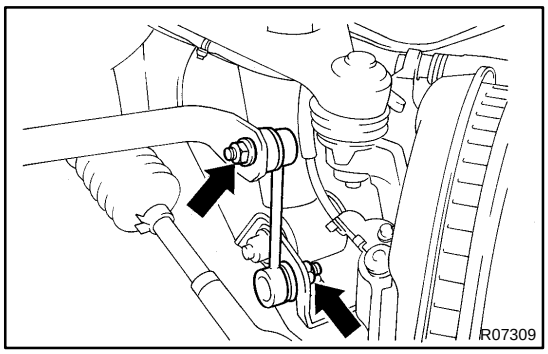

REMOVAL

1. REMOVE FRONT WHEELS
Torque: 103 N·m (1,050 kgf·cm, 76 ft·lbf)

2. REMOVE ENGINE UNDER COVER

3. REMOVE LEFT AND RIGHT FRONT FENDER SPLASH SHIELDS

4. REMOVE BOTH STABILIZER BAR LINKS

(a) Remove the 2 nuts and stabilizer bar link from the stabilizer bar and the lower suspension arm.
Torque: 74 N·m (750 kgf·cm, 54 ft·lbf)

HINT:
If the ball joint stud turns together with the nut, use a hexagon wrench to hold the stud.

(b) Employ the same manner described above to the other side.

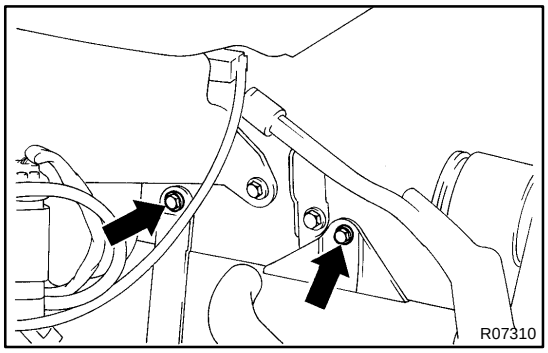

5. REMOVE STABILIZER BAR

(a) Remove the left and right apron seal set bolts.

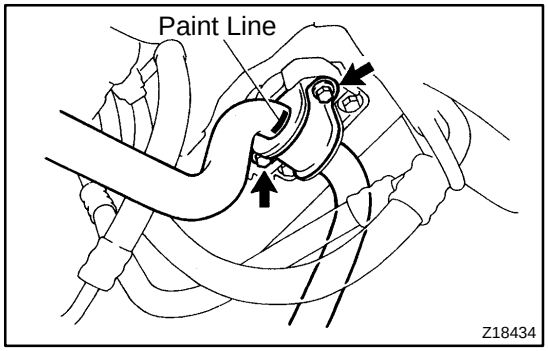

(b) Remove the 4 bracket bolts and the stabilizer bar with the 2 bushings and brackets.
Torque: 18 N·m (180 kgf·cm, 13 ft·lbf)

6. REMOVE CUSHIONS AND BRACKETS

HINT:
At the time of installation, install the cushion to the outside of the paint line.

SA0PI-01

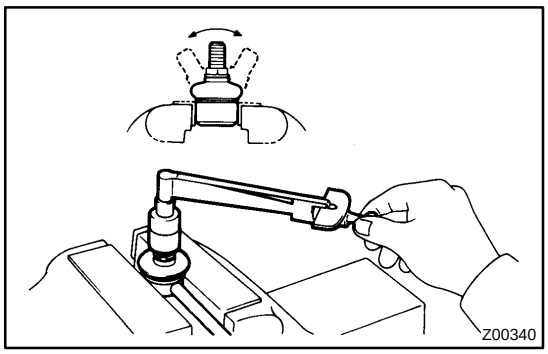

INSPECTION

INSPECT STABILIZER BAR LINK BALL JOINT FOR ROTATION CONDITION

(a) As shown in the illustration, flip the ball joint stud back and forth 5 times before installing the nut.

(b) Using a torque wrench, turn the nut continuously taking 2 - 4 seconds per a turn and take the torque reading on the 5th turn.

Torque (turning):
0.05 - 1.0 N·m (0.5 - 10 kgf·cm, 0.4 - 8.7 in.·lbf)

REAR AXLE HUB

COMPONENTS

SA0PK-02

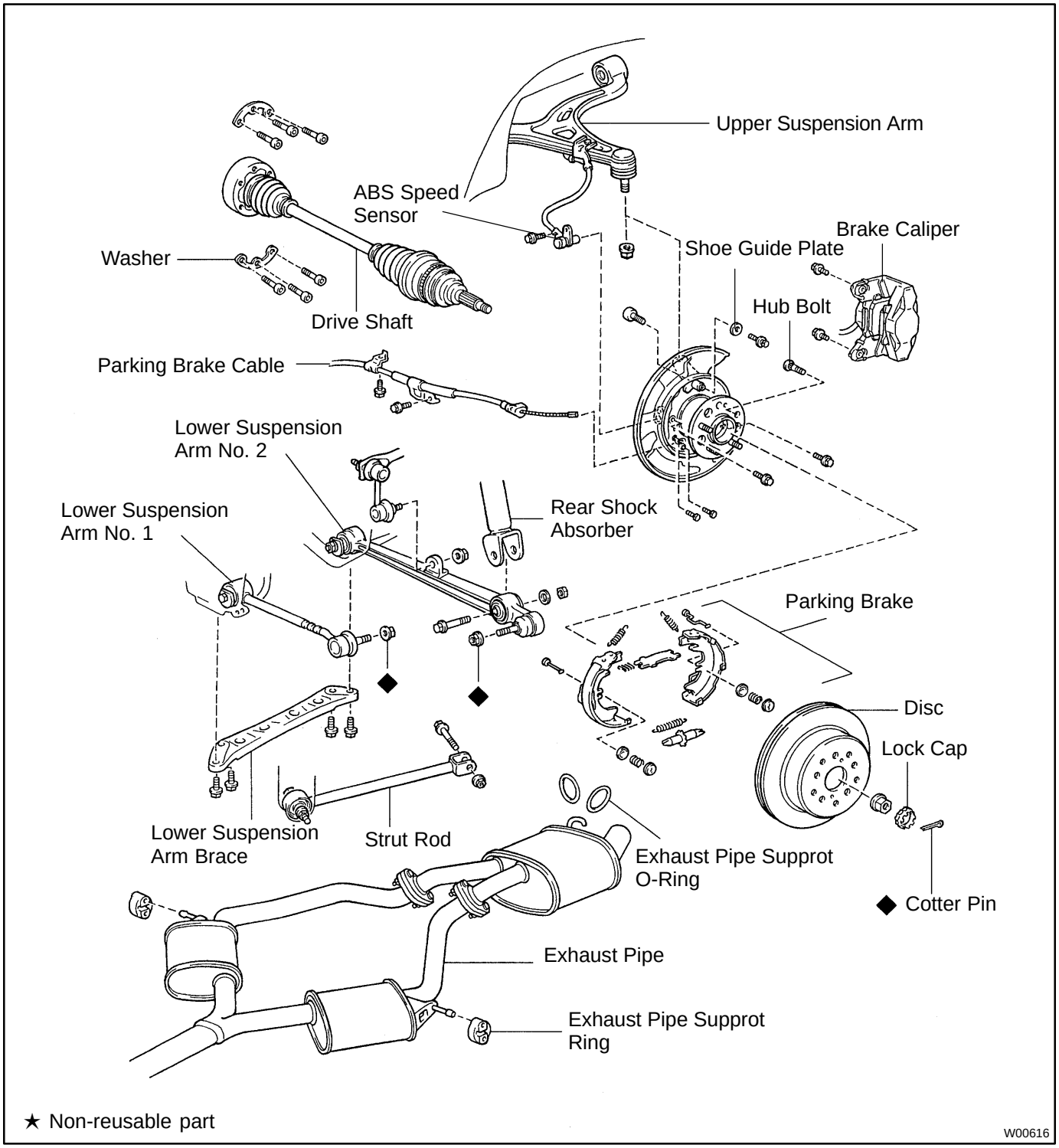

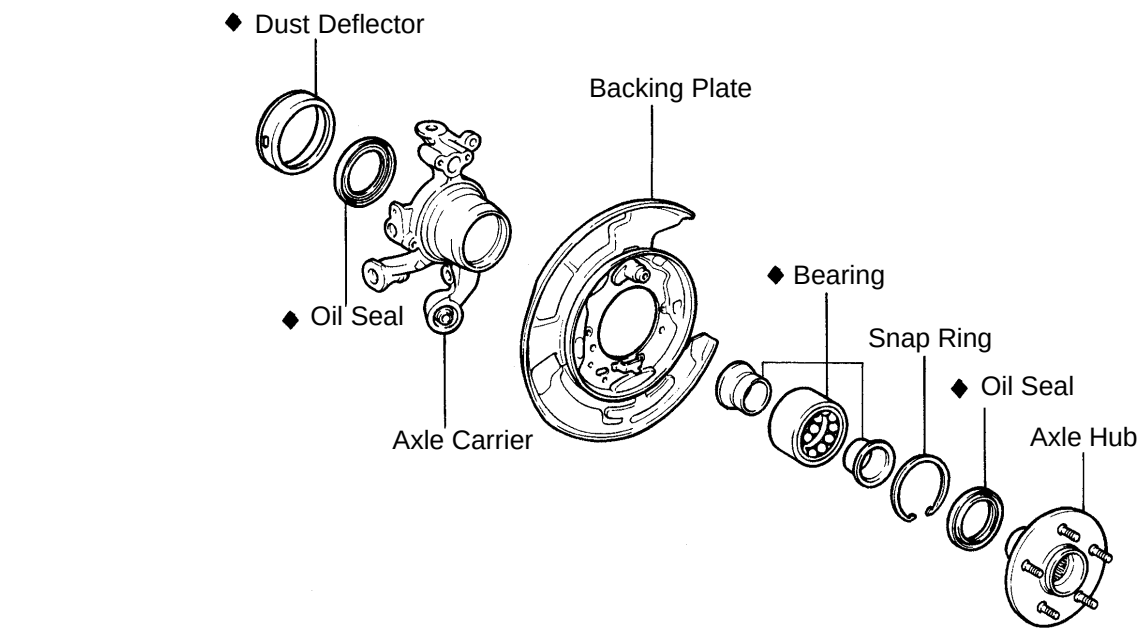

◆ Non-reusable part

R05923

SA0PL-02

REMOVAL

1. REMOVE REAR WHEEL

Torque: 103 N·m (1,050 kgf·cm, 76 ft·lbf)

2. REMOVE BRAKE CALIPER AND DISC

(a) Remove the 2 bolts and brake caliper from the rear axle hub.

Torque: 104 N·m (1,065 kgf·cm, 77 ft·lbf)

(b) Support the brake caliper securely.

(c) Place matchmarks on the disc and axle hub.

(d) Remove the disc.

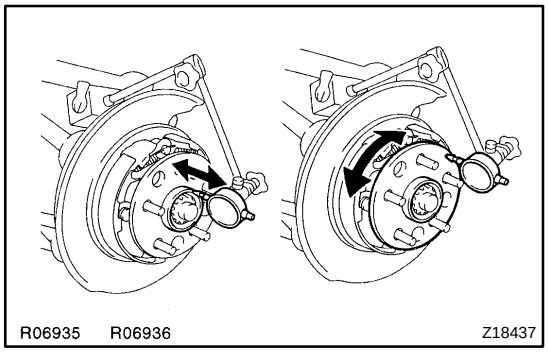

3. CHECK BEARING BACKLASH AND AXLE HUB DEVIATION

(a) Using a dial indicator near the center of the axle hub and check the backlash in the bearing shaft direction.

Maximum: 0.05 mm (0.0020 in.)

If the backlash exceeds the maximum, replace the bearing.

(b) Using a dial indicator, check the deviation at the surface of the axle hub outside the hub bolt.

Maximum: 0.05 mm (0.0020 in.)

If the deviation exceeds the maximum, replace the axle hub.

4. REMOVE DRIVE SHAFT LOCK NUT

(a) Install the disc and brake caliper.

Torque: 104 N·m (1,065 kgf·cm, 77 ft·lbf)

(b) Remove the cotter pin and lock cap.

(c) With applying the brakes, remove the nut.

Torque: 289 N·m (2,950 kgf·cm, 213 ft·lbf)

(d) Remove the brake caliper and disc.

5. REMOVE DRIVE SHAFT (See page SA-51)

6. REMOVE PARKING BRAKE SHOE (See page BR-60)

7. DISCONNECT ABS SPEED SENSOR

Remove the bolt and disconnect the ABS speed sensor.

Torque: 7.8 N·m (80 kgf·cm, 69 in.·lbf)

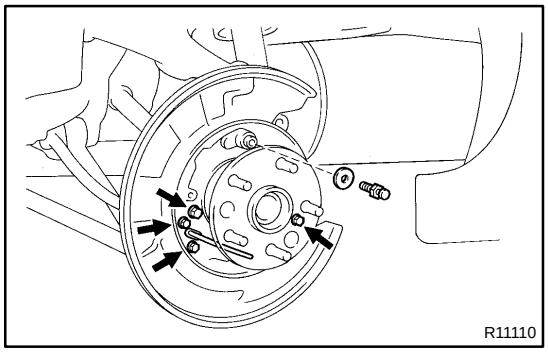

8. DISCONNECT PARKING BRAKE CABLE

(a) Remove the 2 parking brake cable set bolts.

Torque: 8.0 N·m (80 kgf·cm, 69 in.·lbf)

(b) Remove the 2 backing plate set bolts.

Torque: 26 N·m (260 kgf·cm, 19 ft·lbf)

(c) Remove the bolt and shoe guide plate.

Torque: 18 N·m (185 kgf·cm, 13 ft·lbf)

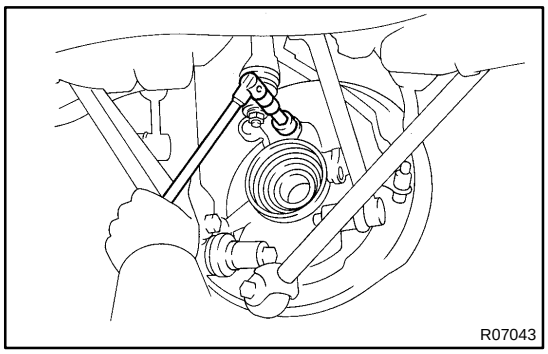

(d) Using a 14 mm hexagon wrench, remove the hexagon bolt.
Torque: 180 N·m (1,825 kgf·cm, 132 ft·lbf)

(e) Slide the backing plate to the outside and disconnect the parking brake cable.

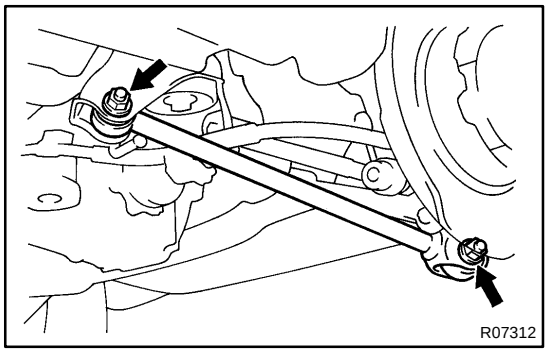

9. REMOVE STRUT ROD

Remove the 2 bolts and nuts.
Torque: 184 N·m (1,880 kgf·cm, 136 ft·lbf)

HINT:
At the time of installation, after stabilizing the suspension, torque the bolt.

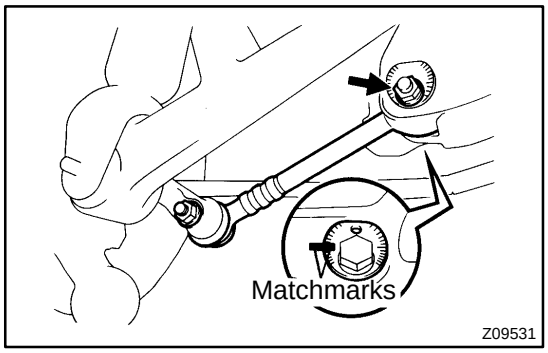

10. DISCONNECT LOWER SUSPENSION ARM NO.1

(a) Remove the 2 bolt and disconnect the parking brake cable clamps.
Torque: 19 N·m (190 kgf·cm, 14 ft·lbf)

(b) Place matchmarks on the adjusting cam and sub-frame.

(c) Remove the nut, washer, adjusting cam plate and adjusting cam and disconnect the lower suspension arm No.1.
Torque: 184 N·m (1,880 kgf·cm, 136 ft·lbf)

HINT:
At the time of installation, after stabilizing the suspension, torque the nut.

11. DISCONNECT LOWER SUSPENSION ARM NO.2

(a) Remove the nut, washer and bolt and disconnect the shock absorber from the lower suspension arm No.2.
Torque: 137 N·m (1,400 kgf·cm, 101 ft·lbf)

HINT:
At the time of installation, after stabilizing the suspension, torque the nut.

(b) Remove the nut and disconnect the stabilizer bar link from the lower suspension arm No.2.
Torque: 74 N·m (750 kgf·cm, 54 ft·lbf)

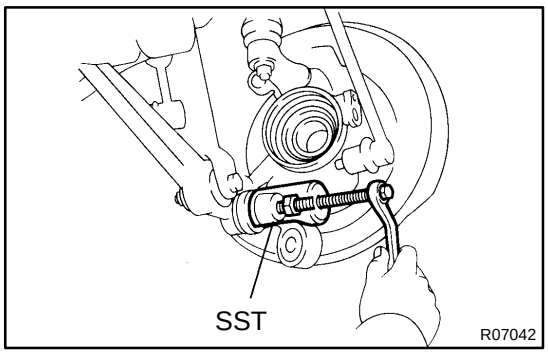

(c) Loosen the nut.
Torque: 150 N·m (1,525 kgf·cm, 110 ft·lbf)

(d) Using SST, disconnect the lower suspension arm No.2 from the axle carrier.
SST 09610-20012

NOTICE:
Be careful not to damage the ball joint bolt.

(e) Remove the nut.

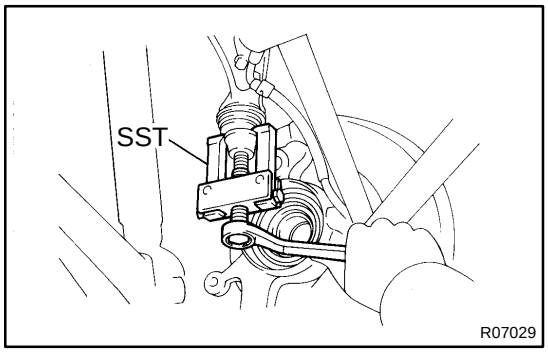

12. REMOVE REAR AXLE CARRIER

(a) Remove the nut.
Torque: 108 N·m (1,100 kgf·cm, 80 ft·lbf)

(b) Using SST, disconnect the upper suspension arm from the axle carrier.
SST 09628-6201 1

NOTICE:
Be careful not to damage the dust boot.

(c) Remove the rear axle carrier.

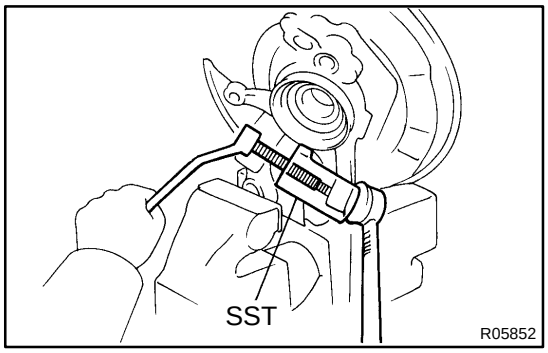

13. REMOVE REAR SUSPENSION ARM NO.1

(a) Remove the nut.
Torque: 59 N·m (600 kgf·cm, 43 ft·lbf)

(b) Using SST, disconnect the lower suspension arm No.1 from the axle carrier.
SST 09610-20012

NOTICE:
Be careful not to damage the dust boot.

HINT:
At the time of installation, before install the suspension arm No.1, install the axle carrier to the vehicle.

SA0PM-01

DISASSEMBLY

1. REMOVE DUST DEFLECTOR

Using a screwdriver, remove the dust deflector.

2. REMOVE AXLE HUB FROM AXLE CARRIER

(a) Mount the axle carrier in a vise.

HINT:

Use a set of soft jaws in the vise to protect the axle carrier.

NOTICE:

Do not tighten the vise too tight.

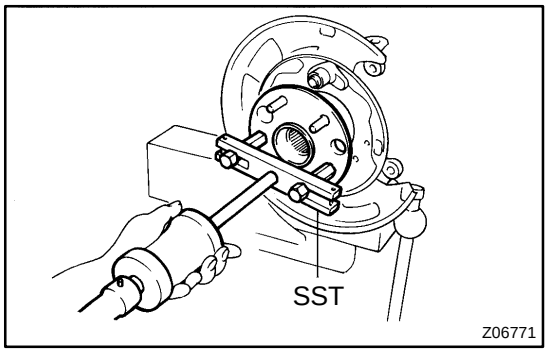

(b) Using SST, remove the axle hub.
SST 09520-00031

(c) Remove the backing plate.

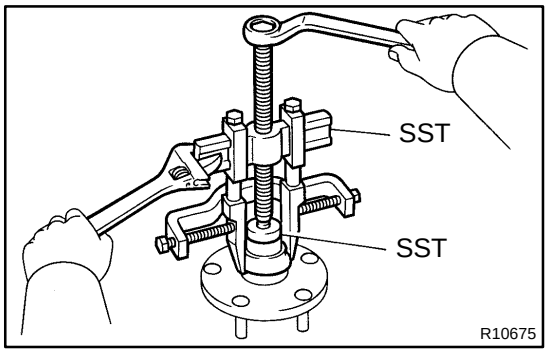

(d) Using SST, remove the outside inner race from the axle hub.
SST 09608-00081, 09950-40010 (09951-04010, 09952-04010, 09953-04020, 09954-04010, 09955-04010, 09957-04010, 09958-04010)

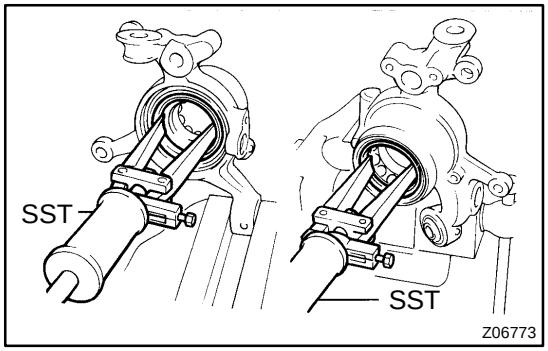

3. REMOVE OIL SEALS

Using SST, remove the inner and outer oil seals.
SST 09308-00010

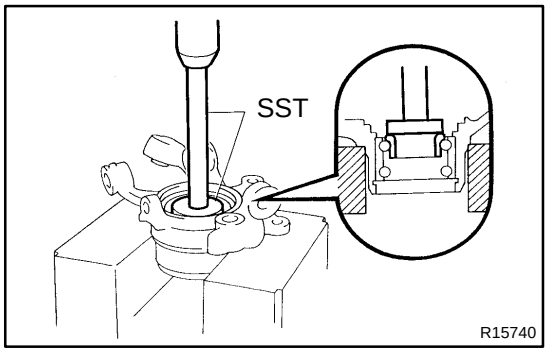

4. REMOVE BEARING

(a) Using snap ring pliers, remove the snap ring.

(b) Place the inner race (inside) to the bearing.

(c) Using SST and a press, remove the bearing.
SST 09950-60010 (09951-00640), 09950-70010 (09951-07150)

SA0PN-01

REASSEMBLY

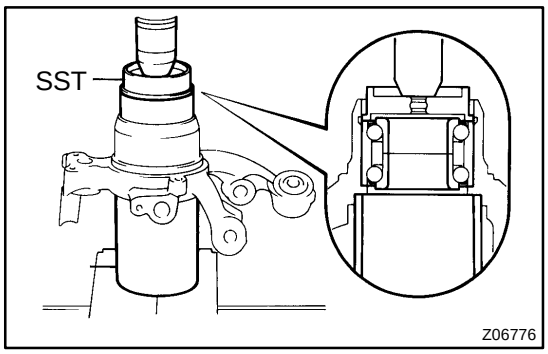

1. INSTALL NEW BEARING

(a) Using SST and a press, install a bearing to the axle carrier.
SST 09527-1701 1, 09608-32010

NOTICE:

If the inner races come loose from the bearing outer race, be sure to install them on the same side as before.

(b) Using snap ring pliers, install the snap ring.

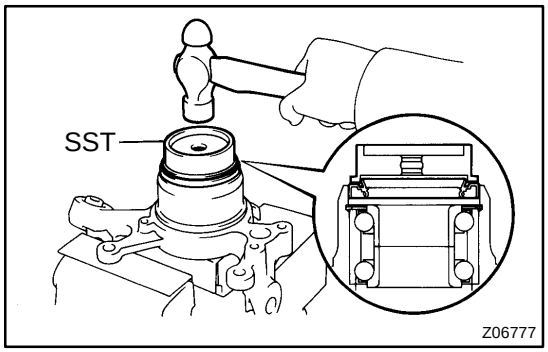

2. INSTALL OIL SEAL (Outer)

(a) Place the inner race (outside).

(b) Using SST and a hammer, tap in a new oil seal until it becomes flush with end surface of the carrier.
SST 09608-32010

NOTICE:

Be careful not to damage the oil seal.

(c) Coat MP grease to the oil seal lip.

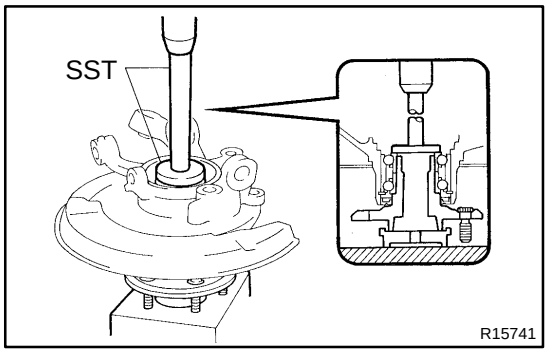

3. INSTALL AXLE HUB

(a) Temporarily install the backing plate with the hexagon bolt.

(b) Place the inner race (inside).

(c) Using SST and a press, install the axle hub.
SST 09608- 32010, 09950- 60010 (09951- 00640), 09950-70010 (09951-07150)

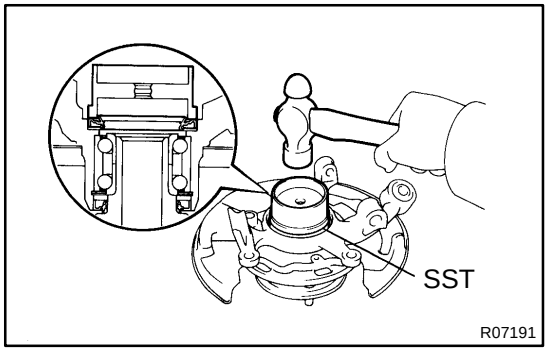

4. INSTALL OIL SEAL (Inner)

(a) Using SST and a hammer, install a new oil seal.
SST 09223-15020

NOTICE:

Be careful not to damage the oil seal.

(b) Coat MP grease to the oil seal lip.

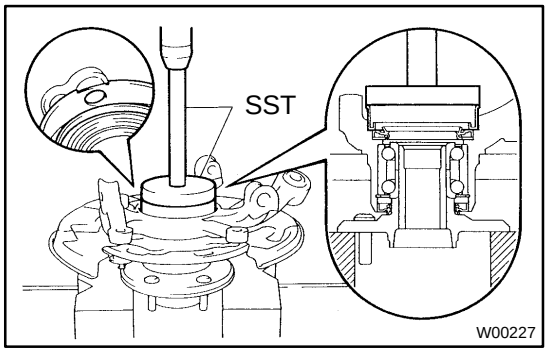

5. INSTALL DUST DEFLECTOR

Using SST and a press, install a new dust deflector.
SST 09950-60020 (09951-01030), 09950-70010 (09951-07150)

HINT:

Align the holes for the ABS speed sensor in the dust deflector and carrier.

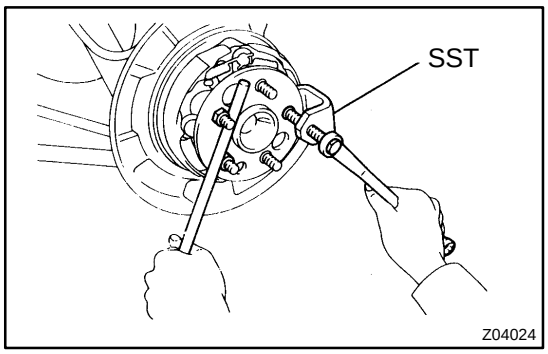

REAR WHEEL HUB BOLT

SA0PP-01

REPLACEMENT

1. REMOVE REAR WHEEL

2. REMOVE BRAKE CALIPER AND DISC

(a) Remove the 2 bolts and brake caliper from the rear axle hub.

(b) Support the brake caliper securely.

(c) Place matchmarks on the disc and axle hub.

(d) Remove the disc.

3. REMOVE HUB BOLT

Using SST, remove the hub bolt.

SST 09628-1001 1

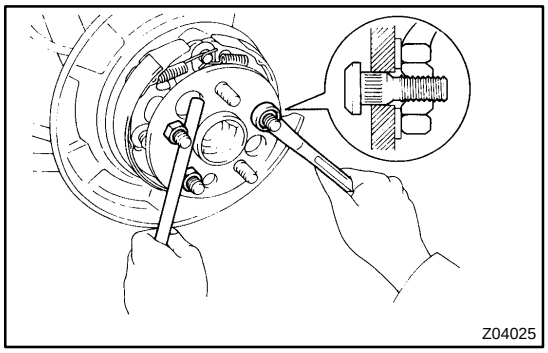

4. INSTALL HUB BOLT

(a) Install washer and nut to a new hub bolt, as shown in the illustration.

(b) Turn the wheel nut to pull the hub bolt through until the underside of the hub bolt head touches the axle hub.

5. INSTALL DISC AND BRAKE CALIPER

(a) Install the disc.

(b) Install the 2 bolts and brake caliper to the rear axle hub.
Torque: 104 N·m (1,065 kgf·cm, 77 ft·lbf)

6. INSTALL REAR WHEEL
Torque: 103 N·m (1,050 kgf·cm, 76 ft·lbf)

REAR DRIVE SHAFT

COMPONENTS

SA0PQ-02

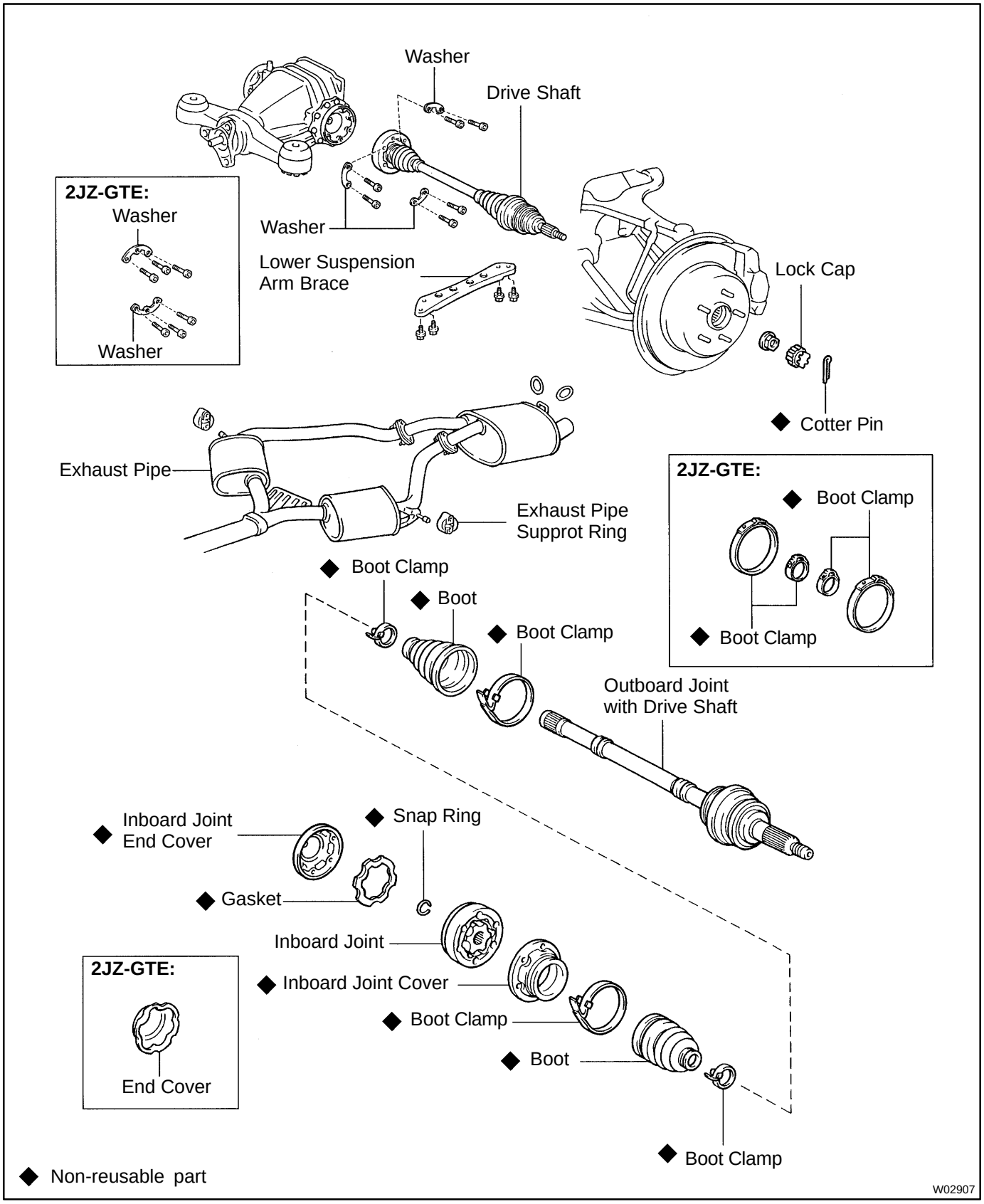

SA0PR-02

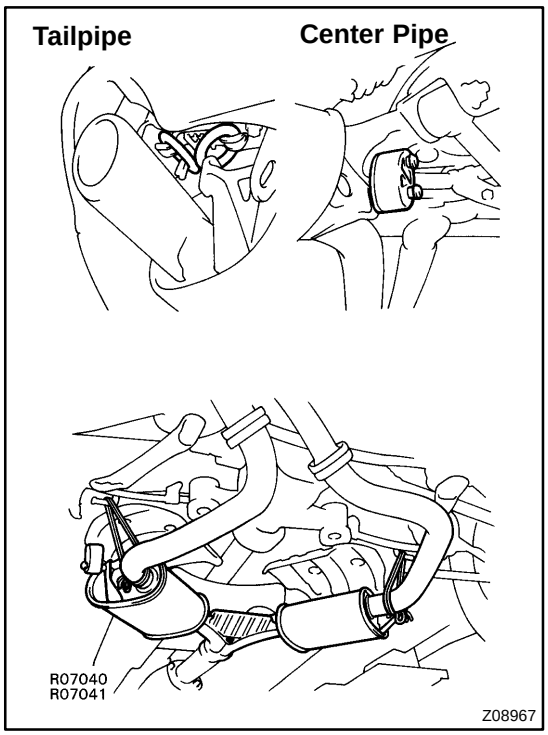

REMOVAL

1. REMOVE REAR WHEEL

Torque: 103 N·m (1,050 kgf·cm, 76 ft·lbf)

2. DISCONNECT EXHAUST PIPE SUPPORTS

(a) Remove the 2 exhaust pipe support rings.

(b) Support the exhaust pipe securely.

(c) Remove the 2 exhaust pipe support O-rings.

3. REMOVE COTTER PIN, LOCK CAP AND LOCK NUT

(a) Remove the cotter pin and lock cap.

(b) With applying the brakes, remove the nut.

Torque: 289 N·m (2,950 kgf·cm, 213 ft·lbf)

4. REMOVE LOWER SUSPENSION ARM BRACE

Remove the 4 bolts and lower suspension arm brace.

Torque: 18 N·m (180 kgf·cm, 13 ft·lbf)

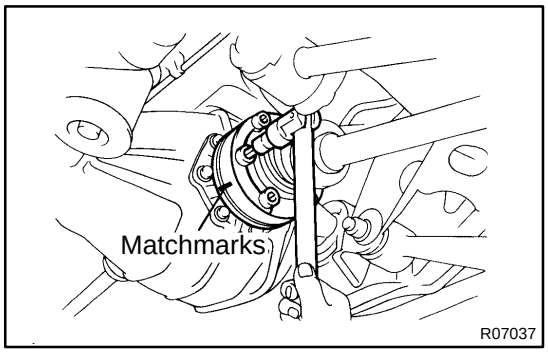

5. REMOVE REAR DRIVE SHAFT

(a) Place matchmarks on the drive shaft and side gear shaft.

(b) 2JZ-GE:

Using 8 mm hexagon wrench, remove the 6 hexagon bolts and 3 washers with applying the brakes.

Torque: 68 N·m (695 kgf·cm, 50 ft·lbf)

(c) 2JZ-GTE:

Using a 10 mm hexagon wrench, remove the 6 hexagon bolts and 2 washers with applying the brakes.

Torque: 83 N·m (850 kgf·cm, 61 ft·lbf)

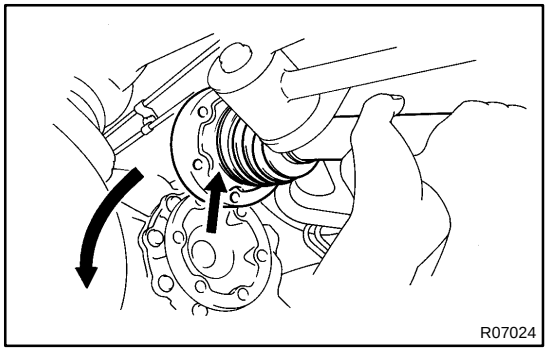

(d) Disconnect the inboard joint from the differential side gear shaft.

(e) Hold the inboard joint side of the drive shaft so that the outboard joint side does not bend too much.

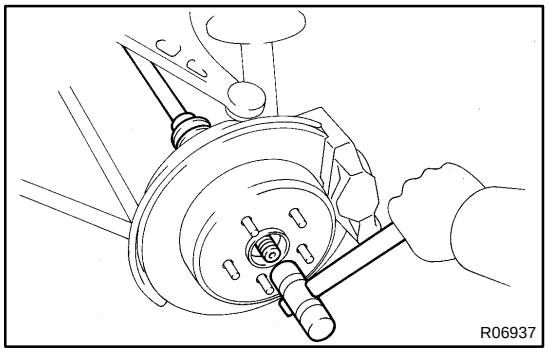

(f) Using a hammer, lightly tap the end of the drive shaft to disengage the axle hub and remove the drive shaft.

NOTICE:

★ **Be careful not to damage the boots and speed sensor rotor of the drive shaft, and oil seal of the axle hub.**

★ **At the time of installation, make sure the outboard joint side of the drive shaft does not bend too much.**

SA0PS-01

DISASSEMBLY

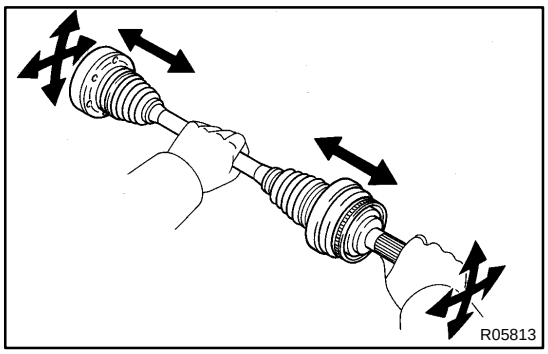

1. CHECK DRIVE SHAFT

(a) Check that operation of the joint is smooth within the sliding region in the axial direction.

HINT:

If a large angle is used for the cross-groove type joint, the joint will feel like it is catching, but this does not indicate an abnormality.

(b) Check that the boots are not cracked, damaged or leaking.

(c) Check that there are no scratches on the speed sensor rotor.

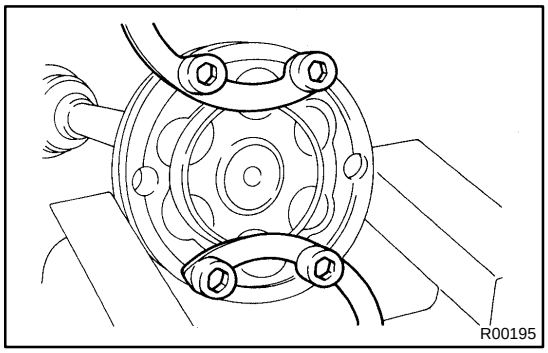

2. REMOVE END COVER

(a) Using a screwdriver, remove the end cover.

(b) Use bolts, nuts and washers to keep the inboard joint together.

NOTICE:

Tighten the bolt by hand to avoid scratching the flange surface.

3. REMOVE BOOT CLAMPS

Using a side cutter or pliers, remove the 4 boot clamps.

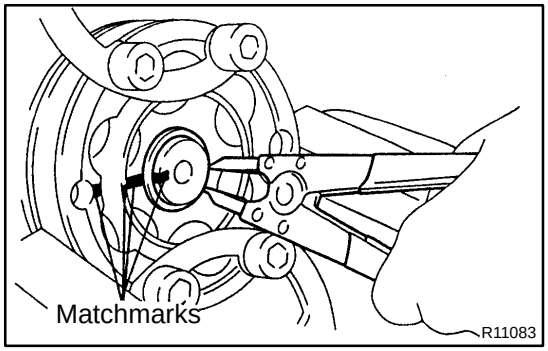

4. REMOVE INBOARD JOINT

(a) Place matchmarks on the inboard joint and drive shaft.

(b) Using a snap ring expander, remove the snap ring.

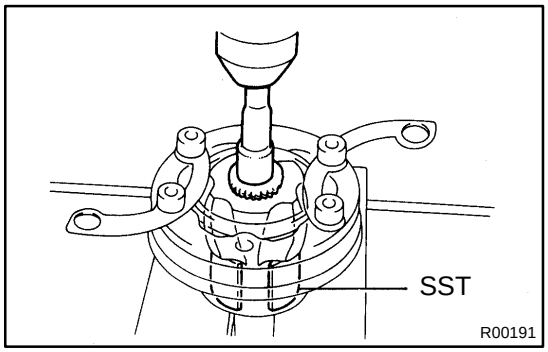

(c) Using SST, an extension bar and a press, remove the inboard joint from the drive shaft.

SST 09726-12023 (09726-01031)

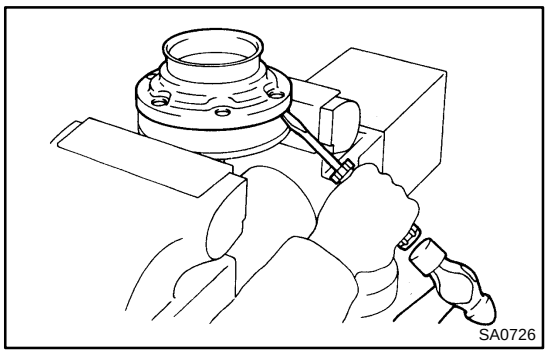

(d) Mount the inboard joint in a soft jaw vise.

(e) Using a screwdriver and hammer, remove the inboard joint cover from the inboard joint.

NOTICE:

Make sure the cage and inner race are not positioned too much to one side of the outer race.

5. REMOVE BOOTS FROM DRIVE SHAFT

Remove the inboard joint boot and outboard boot.

SA1TE-01

REASSEMBLY

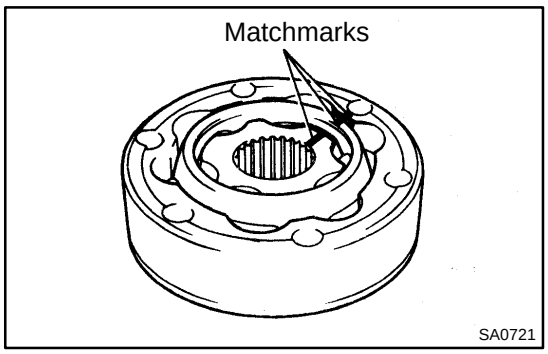

1. ASSEMBLE INBOARD JOINT

If the joint has come apart, reassemble it in the following order.

(a) Align the matchmarks placed before removal.

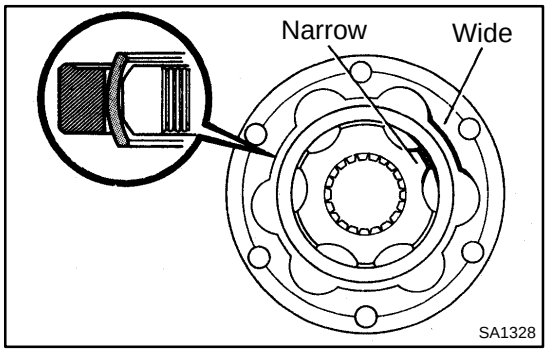

HINT:

When the matchmarks have disappeared, do the following procedure.

(1) Install the inner race to the cage so that the indented bevelled part of the inner race is on the opposite side to the bevelled top of the cage.

(2) Install the outer race so that the indented side of the outer race is facing the same side as the bevelled surface of the cage.

(3) Match the narrow projections of the inner race with the wide projections of the outer race.

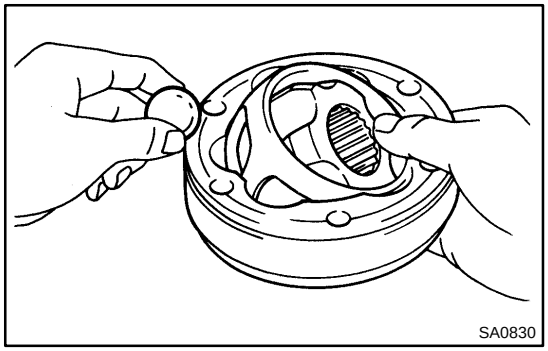

(b) Tilt the cage and inner race to the side and insert the balls one by one.

NOTICE:

When the cage and inner race are tilted over, support the joint with your hand to prevent the balls from falling out.

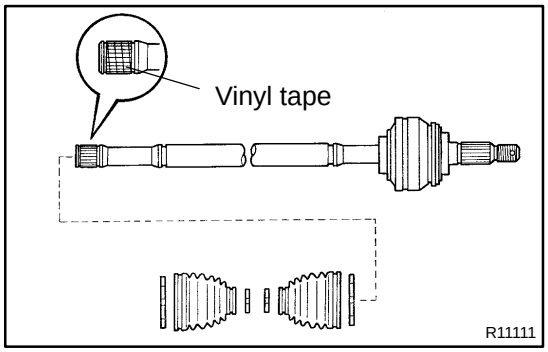

2. TEMPORARILY INSTALL 2 NEW BOOTS AND 4 NEW BOOT CLAMPS

(a) Place 4 new boot clamps to the boots.

HINT:

Before installing the boots, wrap vinyl tape around the spline of the shaft to prevent damaging the boots.

(b) Install 2 boots to the drive shaft.

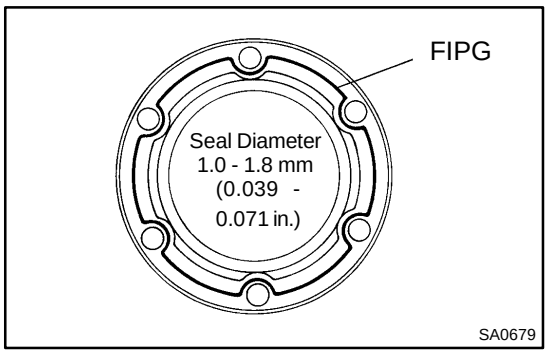

3. INSTALL INBOARD JOINT COVER

(a) Apply FIPG to the inboard joint cover as shown in the illustration.

FIPG:

Part No.08826-00801, THREE BOND 1121 or equivalent

Install a nozzle that is cut to 1 mm (0.04 in.) opening.

HINT:

Avoid applying an excessive amount to the surface.

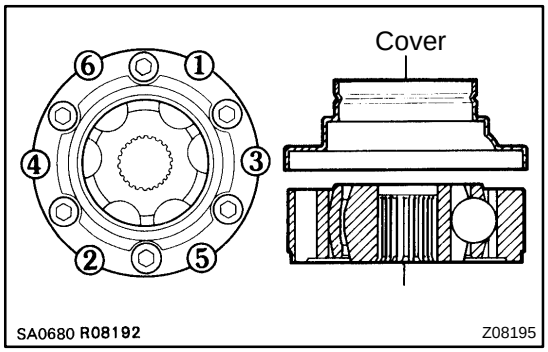

(b) Clean the surface of the inboard joint facing the cover.

(c) Align the bolt holes of the cover with those of the inboard joint, then insert the hexagon bolts.

(d) Use a plastic hammer to tap the rim of the inboard joint cover in place. Do this in the order shown, and repeat several times.

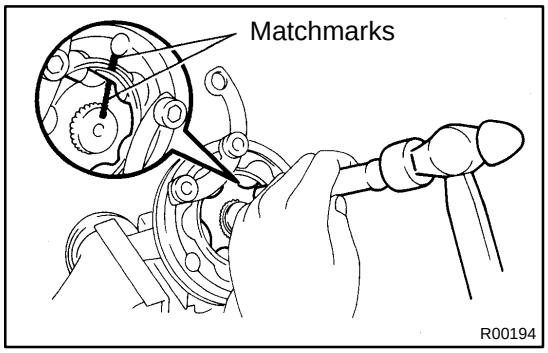

4. INSTALL INBOARD JOINT

(a) Align the matchmarks placed before removal.

(b) Using a brass bar and hammer, install the inboard joint onto the drive shaft.

NOTICE:

Check that the brass bar is touching the inner race, and not the cage.

(c) Using a snap ring expander, install a new snap ring.

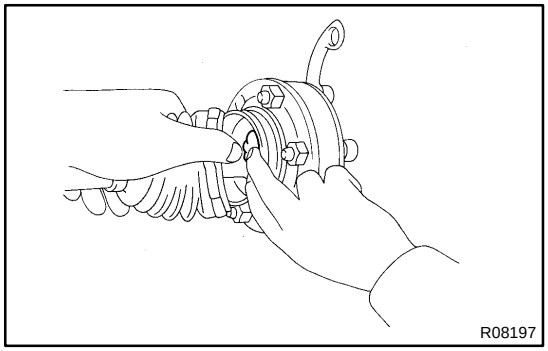

5. ASSEMBLE BOOTS TO JOINTS

Before assembling the boot, pack with only the same amount of grease that was wiped off.

Grease capacity:

Inboard and Outboard joint:

100 - 105 g (3.5 - 3.7 oz.)

HINT:

Use the grease supplied in the boot kit.

NOTICE:

★ **Keep grease off the joint connection groove of the boot.**

★ **Pack with grease all over the ball contact surface inside the joint.**

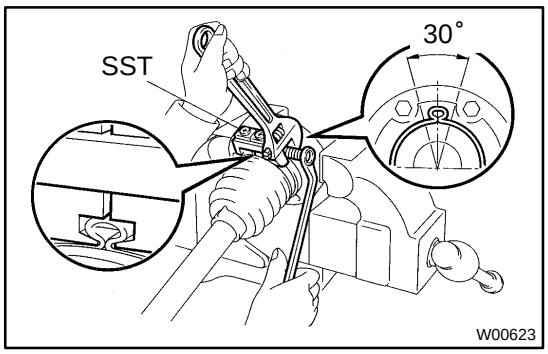

6. 2JZ-GTE:
INSTALL NEW BOOT CLAMPS TO BOTH BOOTS

(a) Position the clamp onto the boot.

HINT:

Pinch the inboard side of the boot clamp, as shown in the illustration.

(b) Place SST onto the clamp.
SST 09521-24010

(c) Tighten the SST so that the clamp is pinched.

NOTICE:

Do not overtighten the clamp by the SST.

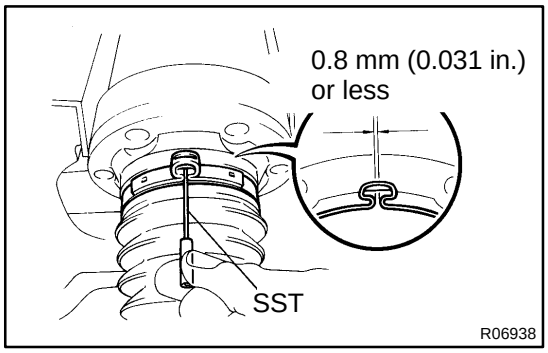

(d) Using SST, adjust the clearance of the clamp.
SST 09240-00020
Clearance: 0.8 mm (0.031 in.) or less

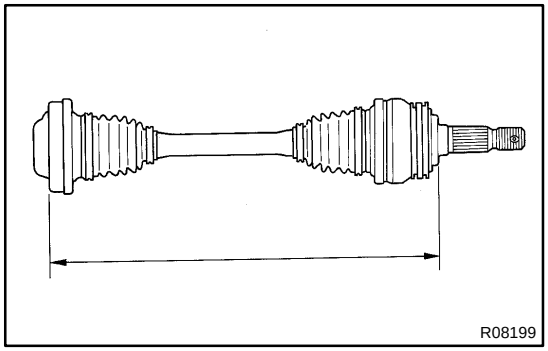

(e) The drive shaft is designed to move ±20 mm from the standard position.
Drive shaft standard length

	RH	LH
M/T	598.5 mm (23.602 in.)	547.5 mm (21.555 in.)
A/T	598.5 mm (23.602 in.)	553.5 mm (21.791 in.)

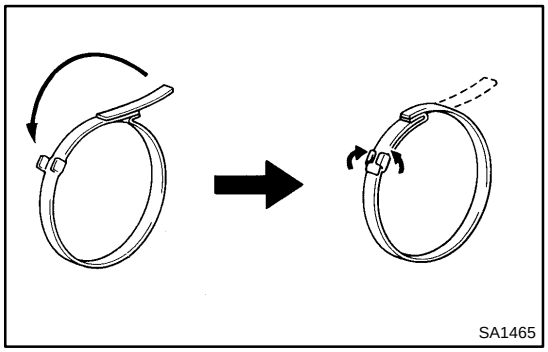

7. 2JZ-GE:
INSTALL NEW BOOT CLAMPS TO BOTH BOOTS

(a) Be sure the boot is on the shaft groove.

(b) Using a screwdriver, bend the clamp and lock it as shown.

(c) The drive shaft is designed to move ± 20 mm from standard position.
Drive shaft standard length

RH	582.4 mm (22.929 in.)
LH	537.4 mm (21.157 in.)

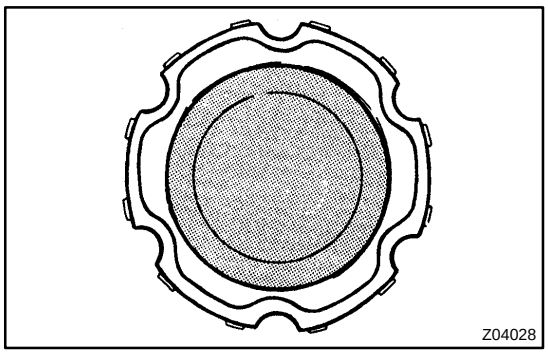

8. INSTALL NEW END COVER

(a) Pack grease into the end cover.
Grease capacity: 50 - 55 g (1.8 - 1.9 oz.)

(b) Clean the surface of the inboard joint facing the cover.

(c) Glue on a new gasket, with the side with adhesive on it facing toward the outer race side of the inboard joint.

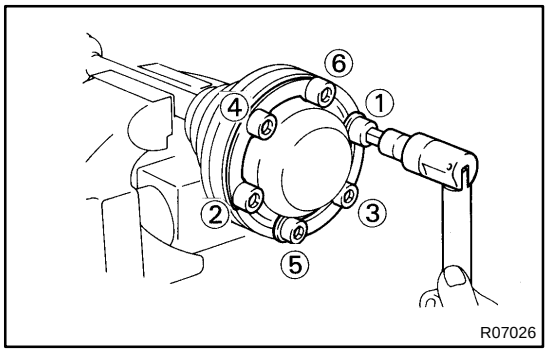

(d) Align the bolt holes of the cover with those of the inboard joint.

(e) Install the 6 hexagon bolts and 2 washers to the end cover side.

(f) Install the 6 nuts to the boot side.

(g) 2JZ-GE:
Using a 8 mm hexagon wrench, tighten the bolts. Do this in the order shown, and repeat several times.

(h) 2JZ-GTE:
Using a 10 mm hexagon wrench, tighten the bolts. Do this in the order shown, and repeat several times.

(i) Check that the claw of the end cover touches the inboard joint.

9. CHECK DRIVE SHAFT (See page SA-52)

REAR DIFFERENTIAL SIDE GEAR SHAFT OIL SEAL

SA0PV-02

COMPONENTS

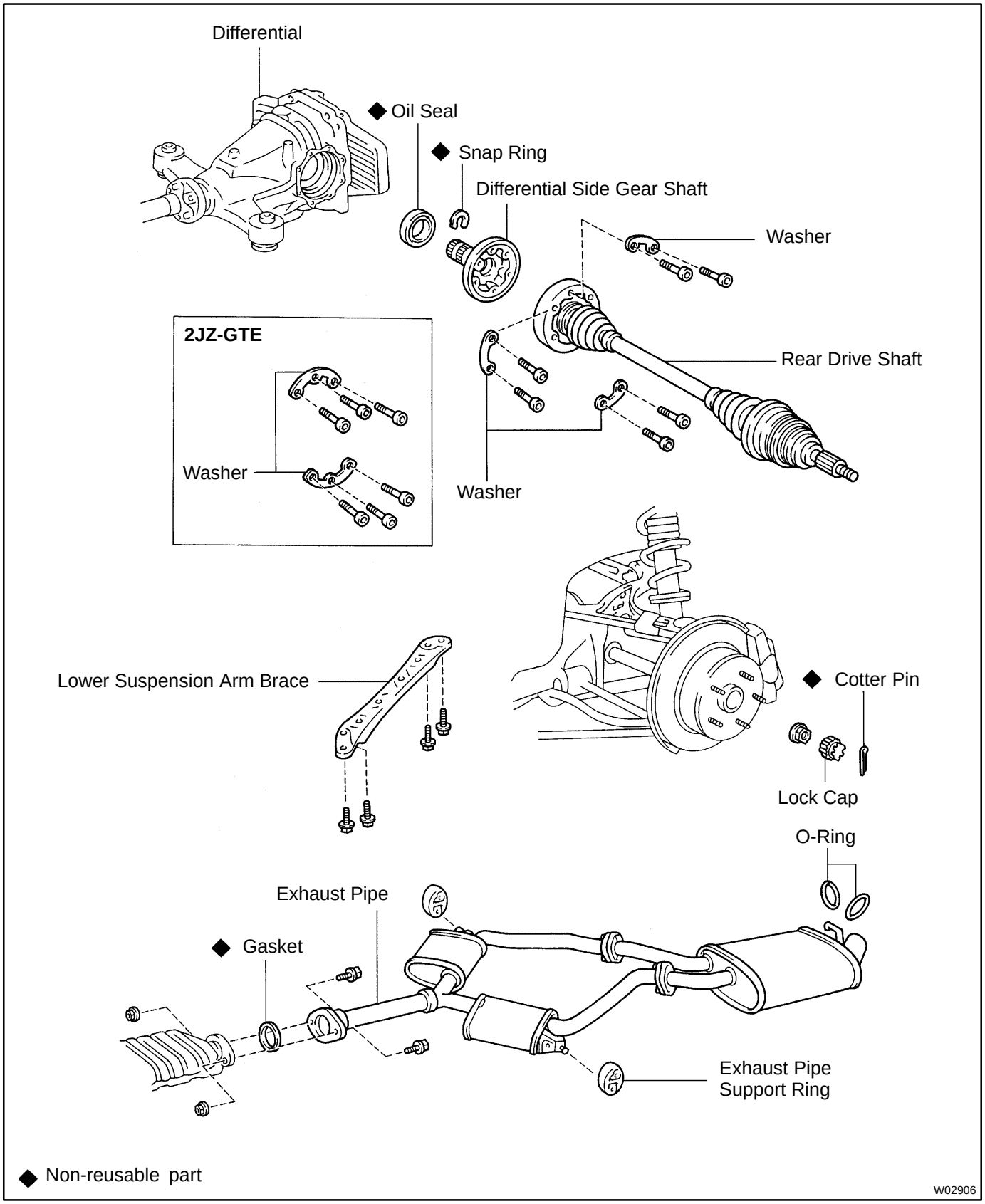

SA0PW-01

REPLACEMENT

1. DRAIN HYPOID GEAR OIL

2. REMOVE REAR DRIVE SHAFT (See page SA-51)

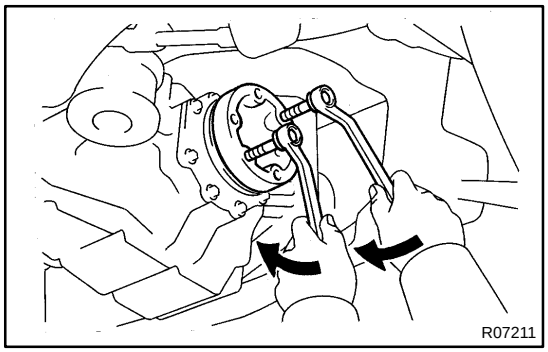

3. REMOVE SIDE GEAR SHAFT

(a) 2JZ-GTE M/T:
Equally tighten both bolts at the same time and pull out the side gear shaft.

NOTICE:
Pull out the side gear shaft until a nut can fit behind the shaft. Pulling the shaft out too far will damage the dust cover.

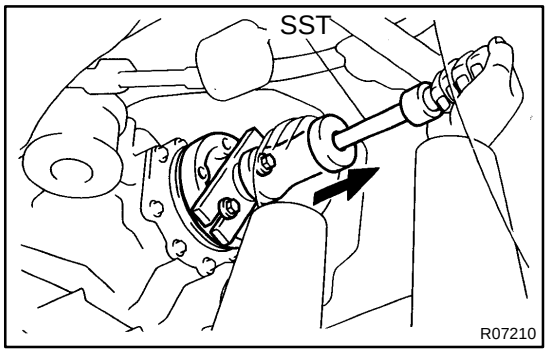

(b) Using SST and 2 bolts, nuts, remove the side gear shaft.
SST 09520-24010

4. REMOVE SNAP RING

Remove the snap ring from the side gear shaft.

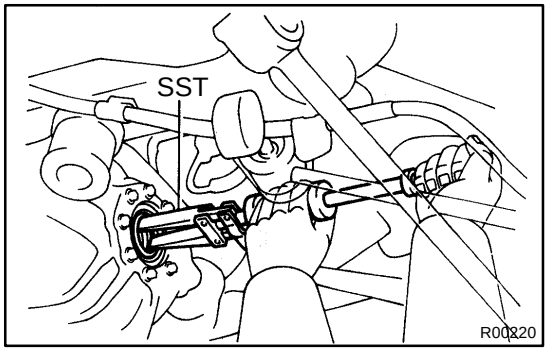

5. REMOVE SIDE GEAR SHAFT OIL SEAL

Using SST, remove the oil seal.
SST 09308-00010

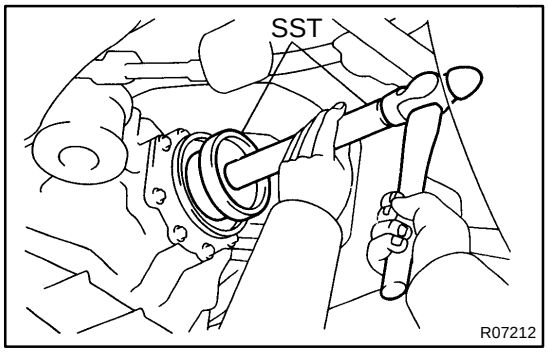

6. INSTALL SIDE GEAR SHAFT OIL SEAL

(a) 2JZ-GTE M/T:
Using SST and a hammer, install a new oil seal.
SST 09223-15030, 09950-70010 (09951-07150)

(b) Except 2JZ-GTE M/T:
Using SST and a hammer, install a new oil seal.
SST 09608-32010, 09950-70010 (09951-07150)

(c) Apply MP grease to the oil seal lip.

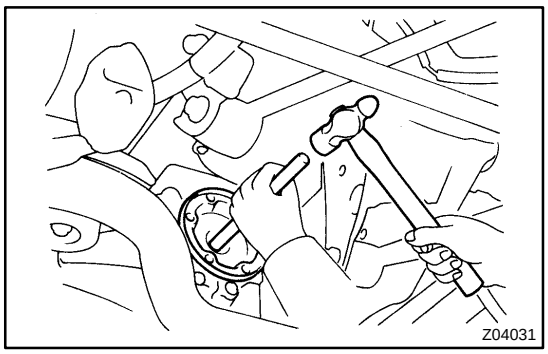

7. INSTALL SIDE GEAR SHAFT

(a) Install a new snap ring to the side gear shaft.

(b) Coat MP grease onto the snap ring.

(c) Using a brass bar and hammer, install the side gear shaft to the differential.

NOTICE:

Be careful not damage the side gear shaft and oil seal.

HINT:

Whether or not the side gear shaft is making contact with the pinion shaft can be determined by the sound or feeling when driving it in.

8. CHECK INSTALLATION OF SIDE GEAR SHAFT

Check that the side gear shaft will not come out by trying to pull it out by hand.

9. INSTALL REAR DRIVE SHAFT (See page SA-58)

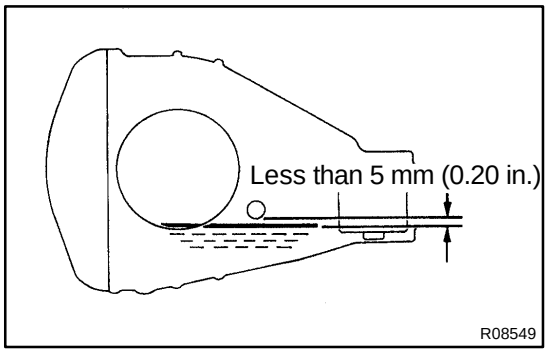

10. FILL DIFFERENTIAL WITH HYPOID GEAR OIL

Torque: 49 N·m (500 kgf·cm, 36 ft·lbf)

Oil grade: Hypoid gear oil API GL-5

Viscosity:

Above -18 ˚C (0 ˚F) SAE 90

Below -18 ˚C (0 ˚F) 80W-90 or SAE 80W

Capacity: 1.35 liters (1.43 US qts, 1.19 Imp. qts)

REAR DIFFERENTIAL CARRIER

SA0PX-02

COMPONENTS

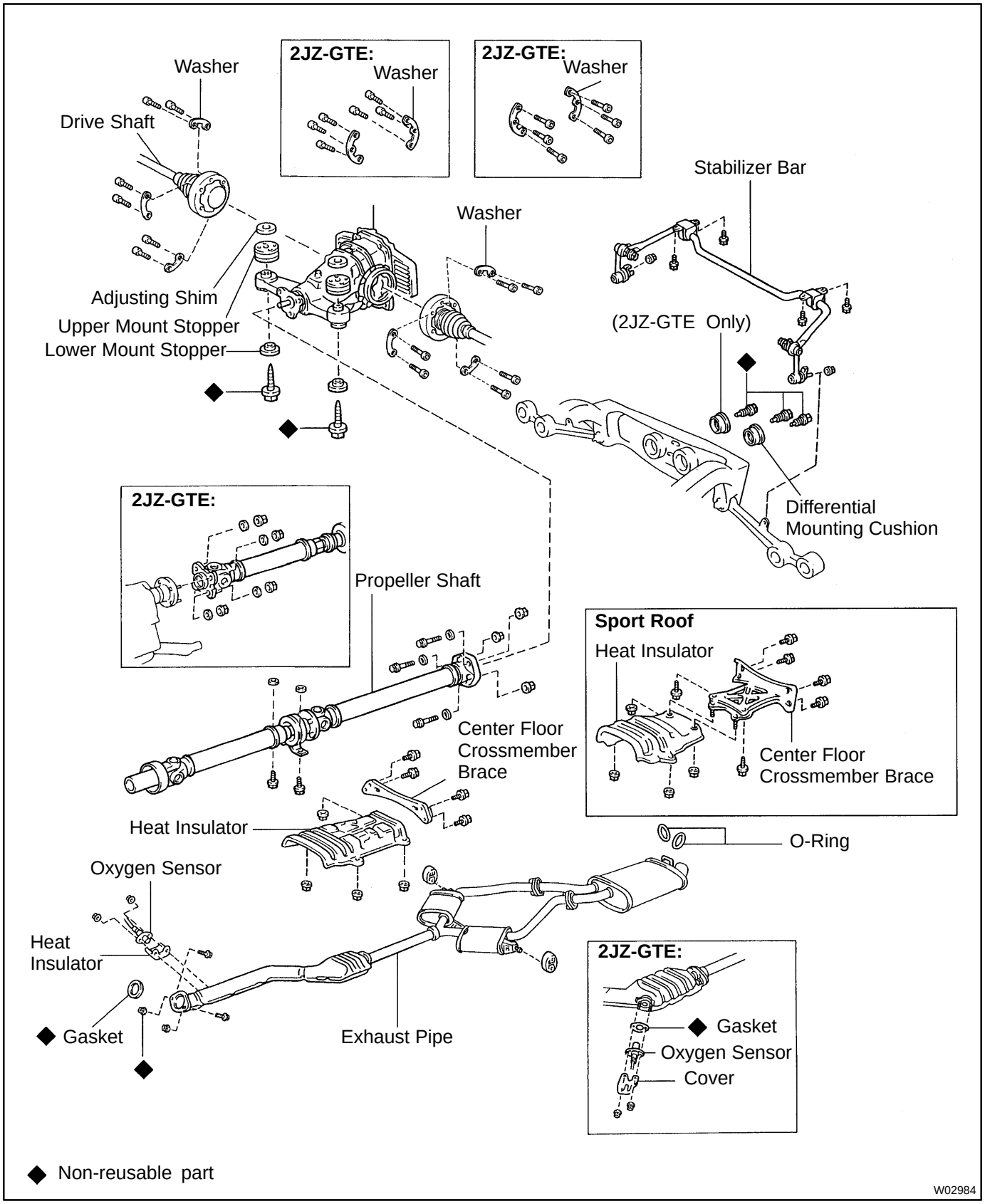

2JZ-GTE M/T

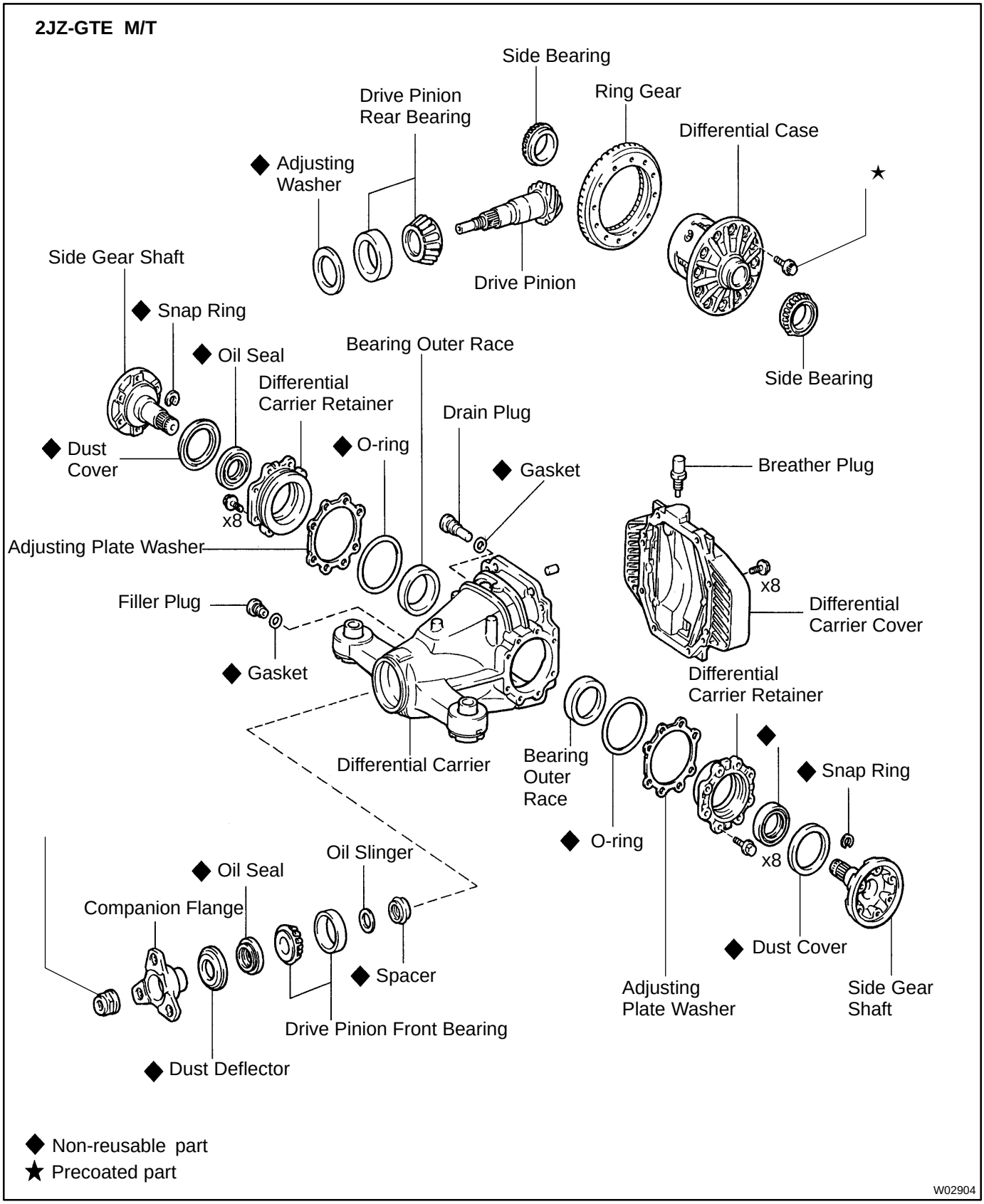
Side Bearing
Ring Gear
Drive Pinion
Rear Bearing
Differential Case
◆ Adjusting
Washer
★
Side Gear Shaft
Drive Pinion
◆ Snap Ring
Bearing Outer Race
◆ Oil Seal
Side Bearing
Differential
Carrier Retainer
Drain Plug
◆ Dust
Cover
◆ O-ring
◆ Gasket
Breather Plug
x8
Adjusting Plate Washer
x8
Filler Plug
Differential
Carrier Cover
◆ Gasket
Differential
Carrier Retainer
◆
Differential Carrier
Bearing
Outer
Race
◆ Snap Ring
◆ O-ring
x8
Oil Slinger
◆ Oil Seal
Companion Flange
◆ Dust Cover
◆ Spacer
Adjusting
Plate Washer
Side Gear
Shaft
Drive Pinion Front Bearing
◆ Dust Deflector
◆ Non-reusable part
★ Precoated part
W02904

Except 2JZ-GTE M/T

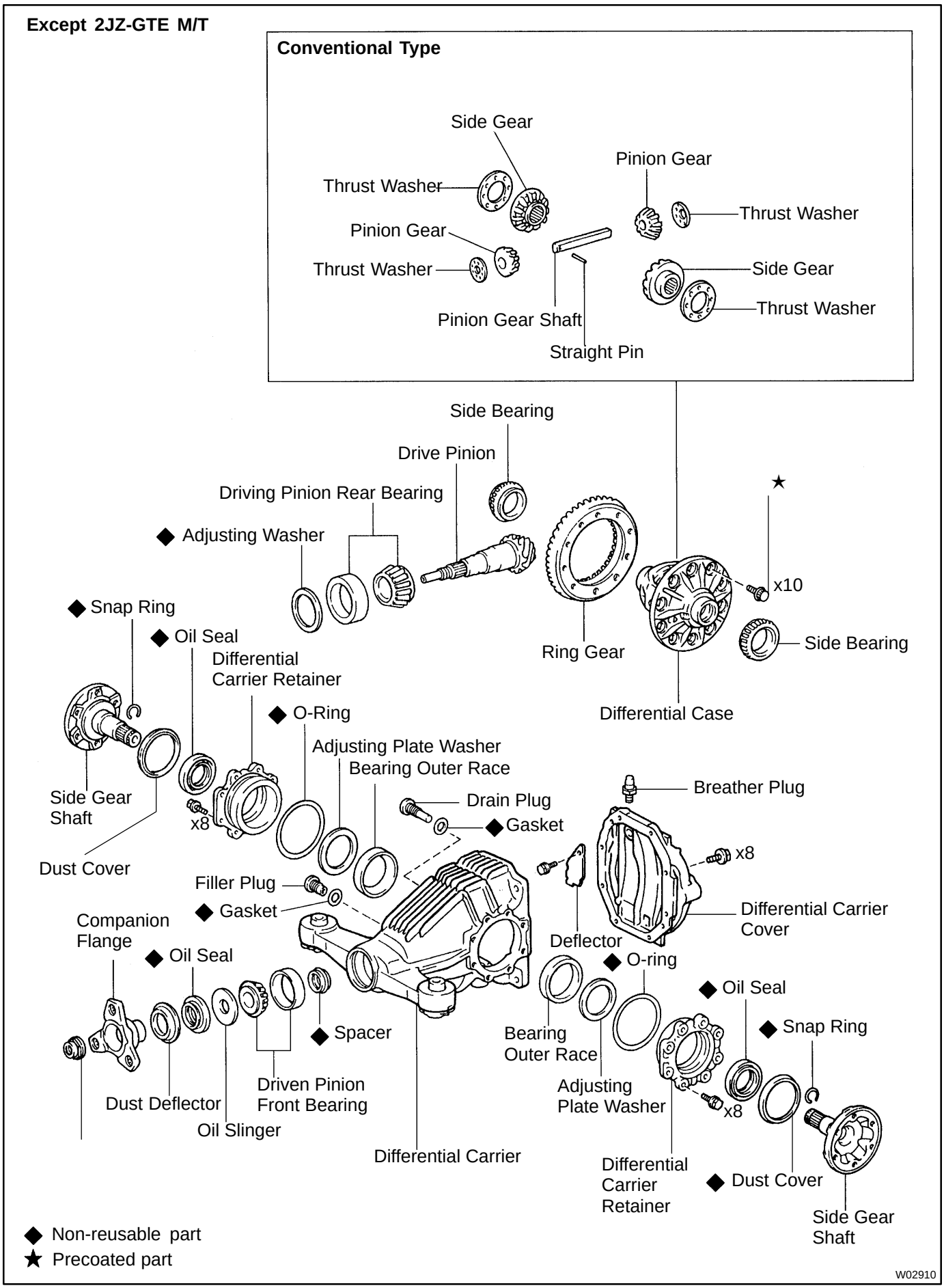

SA0PY-02

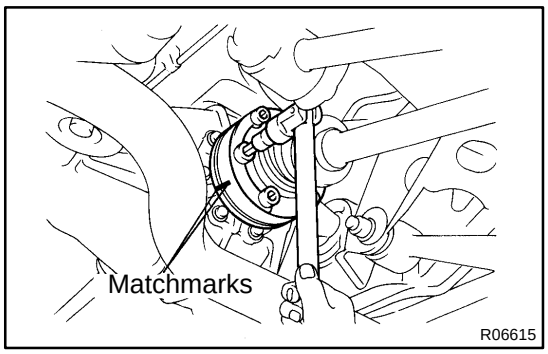

REMOVAL

1. DRAIN HYPOID GEAR OIL

2. REMOVE PROPELLER SHAFT
(See page PR-4)

3. DISCONNECT BOTH REAR DRIVE SHAFTS FROM DIFFERENTIAL

(a) Place matchmarks on the drive shaft and side gear shaft.

(b) 2JZ-GE:
Using a 8 mm hexagon wrench, remove the 16 bolts and disconnect both drive shafts from the differential.

(c) 2JZ-GTE:
Using a 10 mm hexagon wrench, remove the 16 bolts and disconnect both drive shafts from the differential.
Torque: 83 N·m (850 kgf·cm, 61 ft·lbf)

HINT:
Apply a light coat of engine oil on the threads of the bolts.
Torque: 65 N·m (660 kgf·cm, 48 ft·lbf)

(d) Support both drive shafts securely.

4. REMOVE REAR STABILIZER BAR
(See page SA-108)

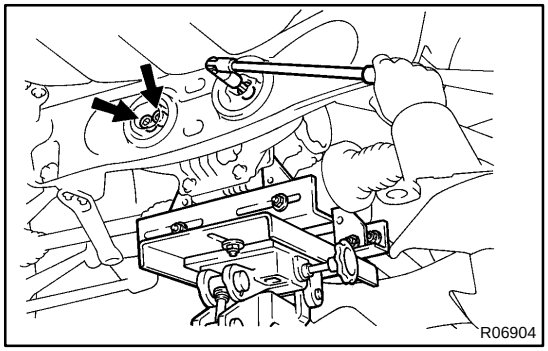

5. REMOVE DIFFERENTIAL

(a) Support the differential with a jack.

(b) Using a 12 mm hexagon wrench, remove the bolts.
Torque: 142 N·m (1,450 kgf·cm, 105 ft·lbf)

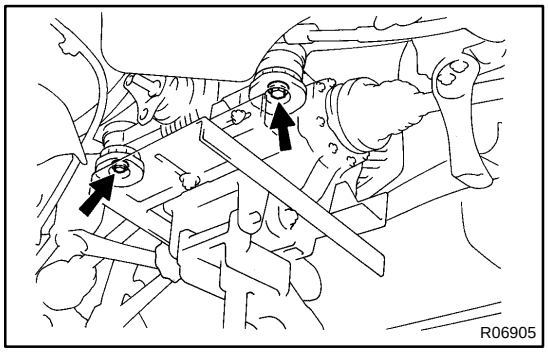

(c) Remove the 2 bolts and lower mount stoppers.
Torque: 147 N·m (1,500 kgf·cm, 108 ft·lbf)

(d) Remove the differential.

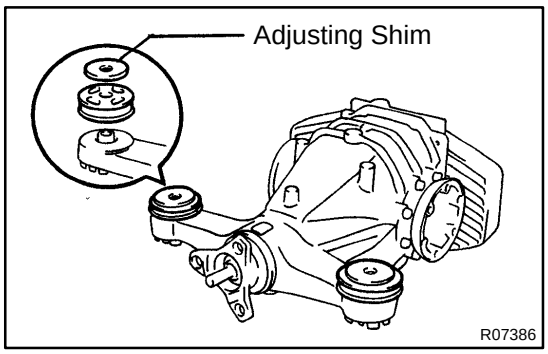

(e) Remove the upper mount stopper from the differential carrier.

HINT:

★ During production, some vehicles did not need adjusting shims to be fitted.

★ Use the upper mount stopper which was removed.

SA0PZ-01

DISASSEMBLY

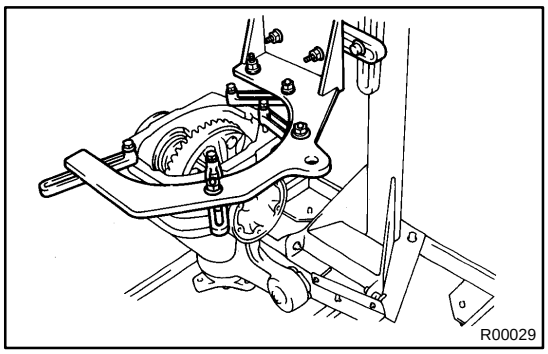

1. SET DIFFERENTIAL CARRIER TO OVERHAUL STAND ETC., AS SHOWN

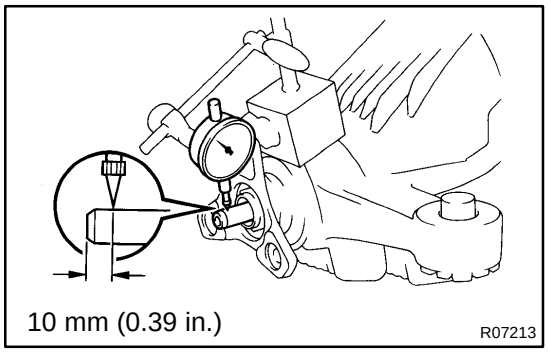

2. CHECK DRIVE PINION SHAFT RUNOUT

Using dial indicator, measure the drive pinion shaft runout.

	Maximum runout
ALL	0.08 mm (0.0031 in.)

If the runout is not within the specification, replace the drive pinion and/or ring gear.

3. REMOVE DIFFERENTIAL CARRIER COVER

(a) Remove the 8 bolts from the carrier cover.

(b) Using a brass bar and hammer, separate the cover and carrier.

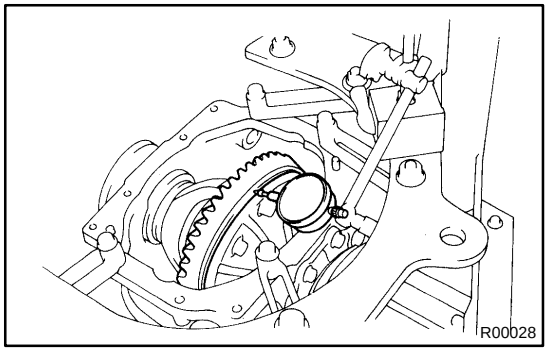

4. CHECK RING GEAR RUNOUT

Using a dial indicator, measure the ring gear runout.

	Maximum runout
2JZ-GTE M/T	0.08 mm (0.0031 in.)
Others	0.05 mm (0.0020 in.)

If the runout is not within the specification, replace the drive pinion, ring gear and/or differential case.

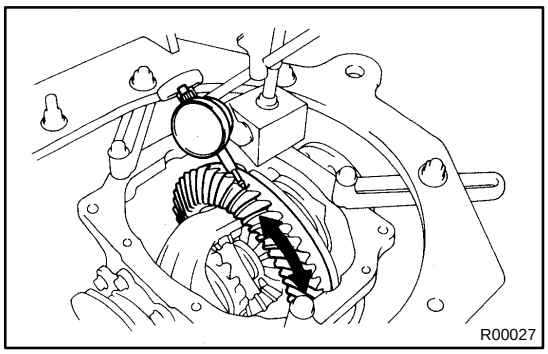

5. CHECK RING GEAR BACKLASH

Using a dial indicator, measure the backlash of the ring gear and drive pinion at 3 points (minimum) and check that the average value is within the specification.

	Backlash (average value)
ALL	0.08 - 0.13 mm (0.0031 - 0.0051 in.)

NOTICE:

The difference between the maximum and minimum measured values must be less than 0.05 mm (0.0020 in.).

If the backlash is not within the specification, adjust the ring gear backlash (See page SA-74).

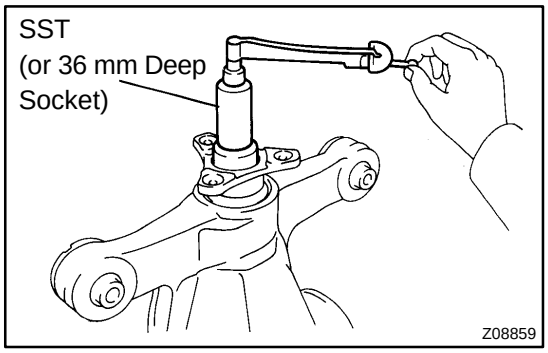

6. MEASURE DRIVE PINION PRELOAD

Using SST (or a 36 mm deep socket) and a torque wrench, measure the preload of backlash between the drive pinion and ring gear.

SST 09229-55010

	Preload (at starting)
2JZ-GTE M/T	1.0 - 1.2 N·m (10 - 12 kgf·cm, 8.9 - 10.6 in.·lbf)
Others	0.5 - 0.8 N·m (5 - 8 kgf·cm, 4.3 - 6.9 in.·lbf)

7. CHECK TOTAL PRELOAD

Using SST (or a 36 mm deep socket) and a torque wrench, measure the preload with the teeth of the drive pinion and ring gear in contact.

SST 09229-55010

	Total preload (at starting) Drive pinion preload plus
2JZ - GTE M/T	0.4 - 0.6 N·m (4 - 6 kgf·cm, 3.4 - 5.2 in.·lbf)
Others	0.5 - 0.8 N·m (5 - 8 kgf·cm, 4.3 - 6.9 in.·lbf)

If necessary, disassemble and inspect the differential.

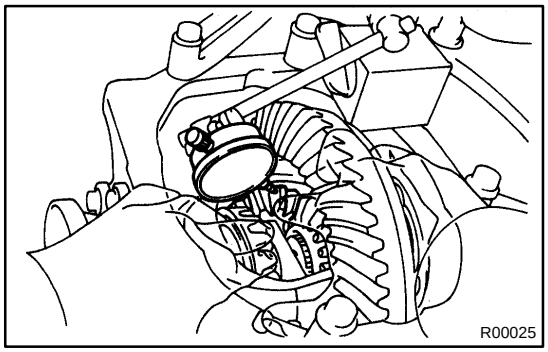

8. CONVENTIONAL DIFFERENTIAL ONLY: CHECK PINION GEAR BACKLASH

Using a dial indicator, measure the pinion gear backlash while holding one side gear toward the case.

Backlash: 0.05 - 0.20 mm (0.0020 - 0.0079 in.)

If the backlash is not within the specification, install the correct thrust washer (See page SA-74).

9. CHECK TOOTH CONTACT PATTERN (See page SA-74)

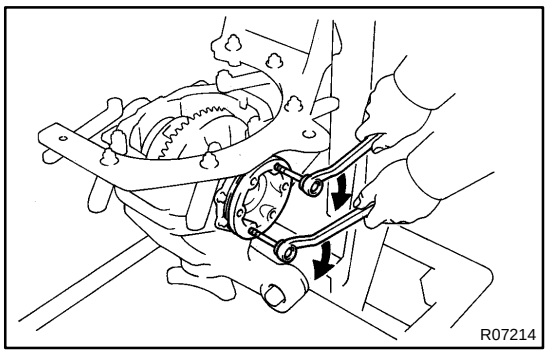

10. REMOVE SIDE GEAR SHAFT

(a) 2JZ-GTE M/T:
Equally tighten both bolts at the same time and pull out the side gear shaft.

NOTICE:
Pull out the side gear shaft until a nut can fit behind the shaft. Pulling the shaft out too far will damage the dust cover.

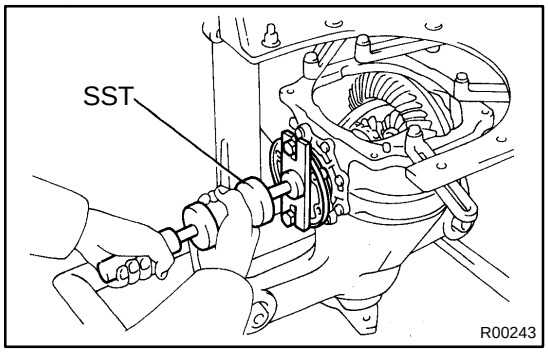

(b) Using SST, 2 bolts and nuts, remove the side gear shaft.
SST 09520-24010

(c) Using a screwdriver, remove the snap ring from the side gear shaft.

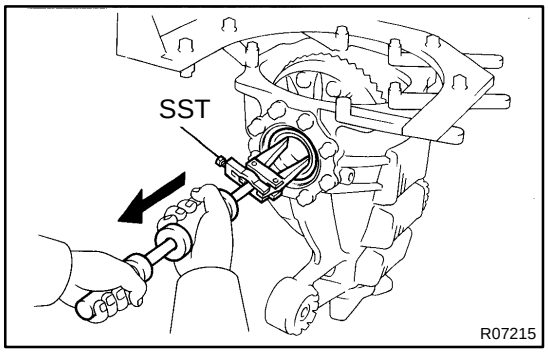

11. REMOVE SIDE GEAR SHAFT OIL SEALS

Using SST, remove the oil seal.
SST 09308-00010

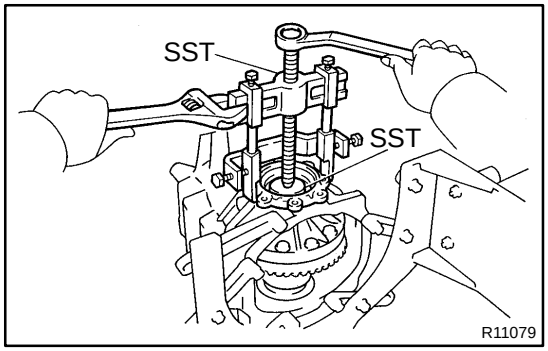

12. REMOVE DIFFERENTIAL CARRIER RETAINER (AND ADJUSTING PLATE WASHER)

(a) Remove the 8 bolts.

(b) 2JZ-GTE M/T:
Using SST, remove the carrier retainer and adjusting plate washer.
SST 09550-10012 (09558-10010),
09950-40010 (09951-04010, 09952-04020, 09953-04020, 09954-04010, 09955-04070, 09957-04010, 09958-04010)

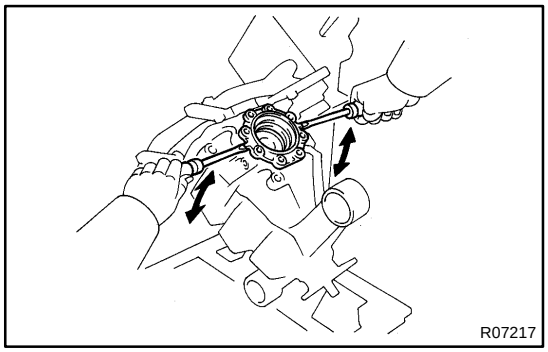

(c) Others:
Using 2 screwdrivers, remove the carrier retainer.

(d) Using a screwdriver, remove the O-ring from the carrier retainer.

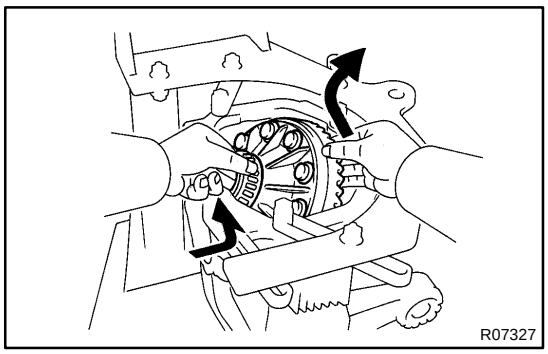

13. REMOVE DIFFERENTIAL CASE

Take the differential case out of the carrier while lifting the ring gear side, as shown in the illustration.

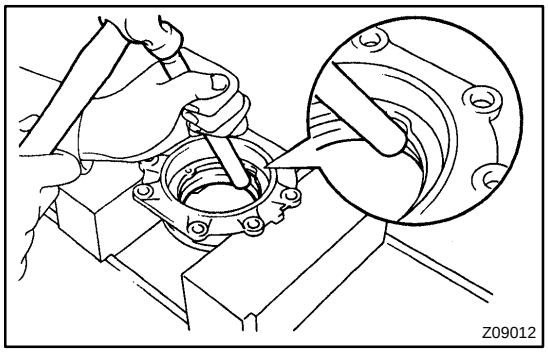

14. REMOVE SIDE BEARING OUTER RACE (AND ADJUSTING PLATE WASHER)

(a) 2JZ-GTE M/T:
Using a brass bar and hammer, remove the outer race.

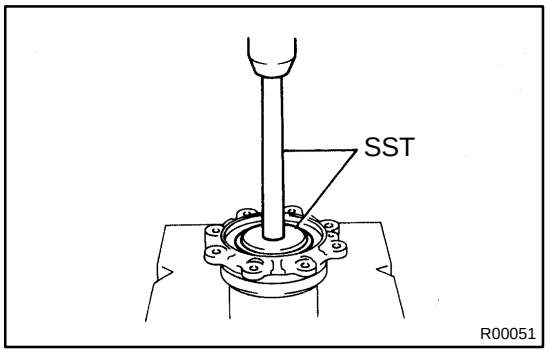

(b) Others:
Using SST and a press, remove the outer race and adjusting plate washer.
SST 09950-60020 (09951-00710),
09950-70010 (09951-07150)

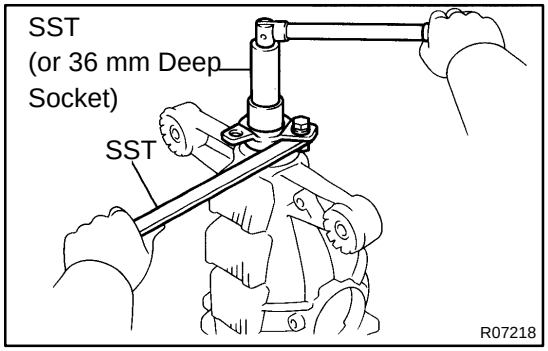

15. REMOVE DRIVE PINION, OIL SLINGER (2JZ- GTE M/T), SPACER AND COMPANION FLANGE

(a) Using a chisel and hammer, loosen the staked part of the nut.
(b) Using SST (or 36 mm deep socket wrench), remove the nut.
SST 09229-55010,
09330-00021

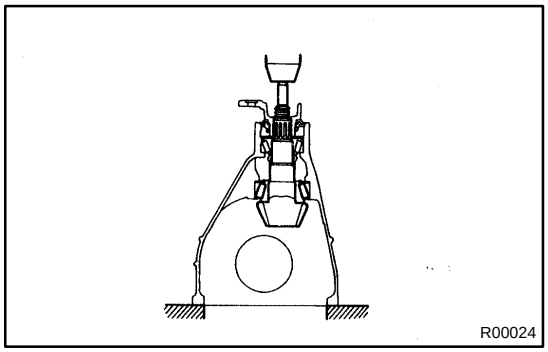

(c) Using a press, remove the drive pinion with the rear bearing and spacer.

NOTICE:

Be careful not to drop the drive pinion.

(d) Remove the companion flange.
(e) Remove the oil slinger (2JZ-GTE M/T) and spacer from the drive pinion.

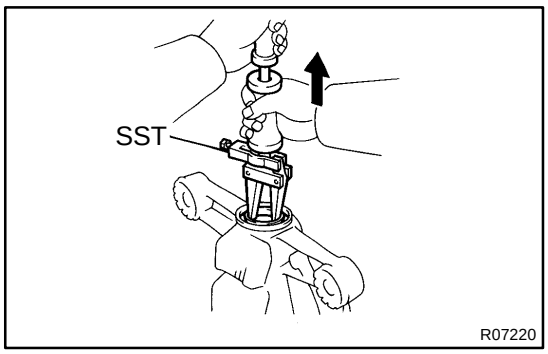

16. REMOVE OIL SEAL

Using SST, remove the oil seal.

SST 09308-00010

17. REMOVE OIL SLINGER (EXCEPT 2JZ-GTE M/T) AND FRONT BEARING

Remove the oil slinger (except 2JZ-GTE M/T) and front bearing by hand.

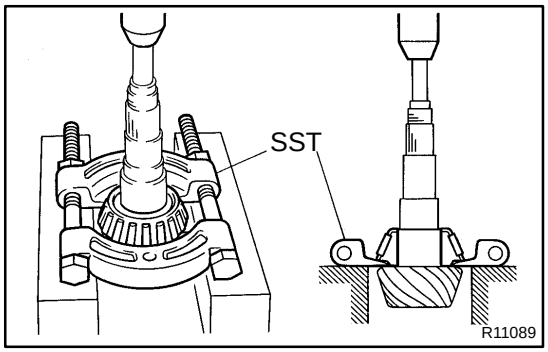

18. REMOVE REAR BEARING FROM DRIVE PINION

Using SST and a press, remove the rear bearing from the drive pinion.

SST 09950-00020

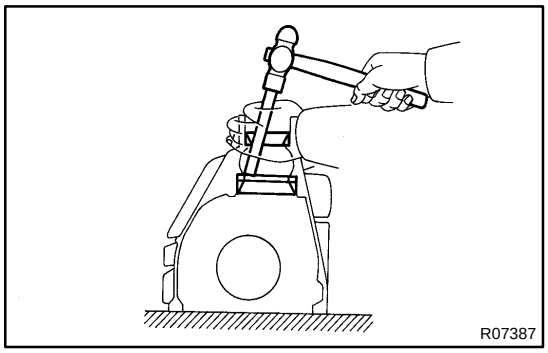

19. REMOVE FRONT AND REAR BEARING OUTER RACES AND ADJUSTING PLATE WASHER

Using a brass bar and hammer, remove the outer races and adjusting plate washer from the differential carrier.

HINT:

Measure the adjusting plate washer thickness and make a note down of it for reassemble.

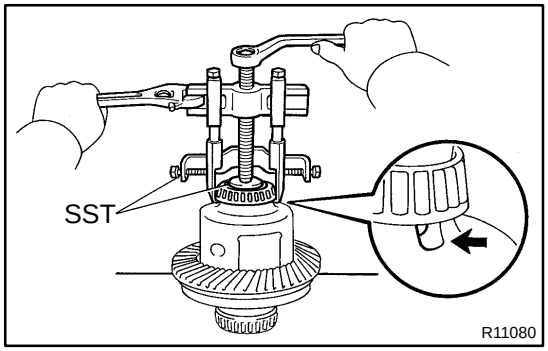

20. REMOVE LH AND RH SIDE BEARINGS

Using SST, remove the LH and RH side bearings from the differential case.

SST 09550-10012 (09558-10010),
09950-40010 (09951-04010, 09952-04010, 09953-04020, 09954-04010, 09955-04070, 09957-04010, 09958-04010)

HINT:

Fix the claws of SST to the notch in the differential case.

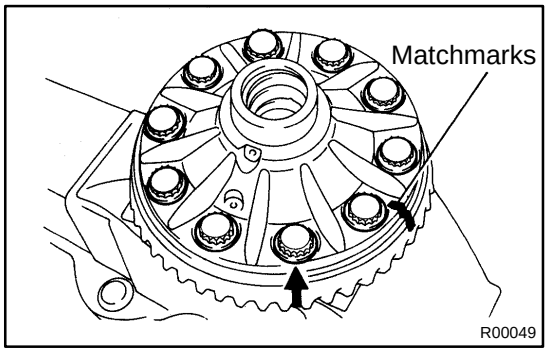

21. REMOVE RING GEAR

(a) Place matchmarks on the ring gear and differential case.
(b) Remove the ring gear set bolts.
(c) Using a plastic hammer, tap on the ring gear to separate it from the differential case.

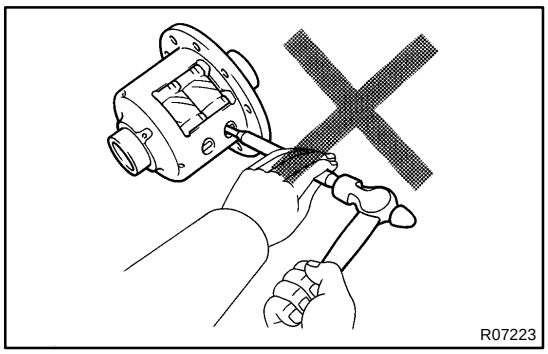

22. CONVENTIONAL DIFFERENTIAL: DISASSEMBLE DIFFERENTIAL CASE

NOTICE:

Do not disassemble the differential case except conventional differential.

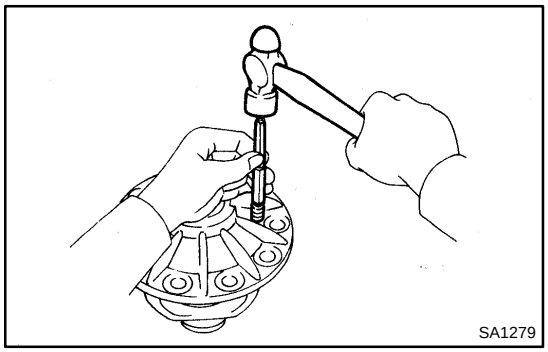

(a) Using a pin punch and hammer, remove the straight pin.

(b) Remove these parts from the differential case.

- ★ Pinion shaft
- ★ 2 pinion gears
- ★ 2 pinion gear thrust washers
- ★ 2 side gears
- ★ 2 side gears thrust washers

SA0Q0-01

REPLACEMENT

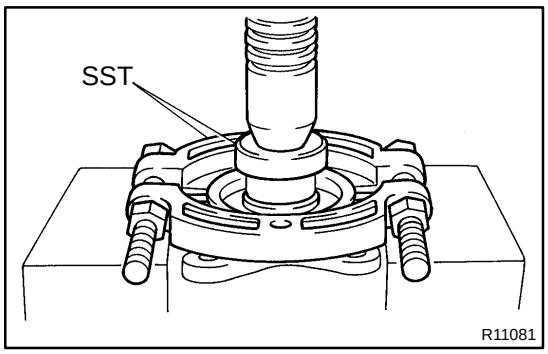

1. REPLACE COMPANION FLANGE DUST DEFLECTOR

(a) Using SST and a press, remove the dust deflector.
SST 09950-00020, 09950-60010 (09951-00510)

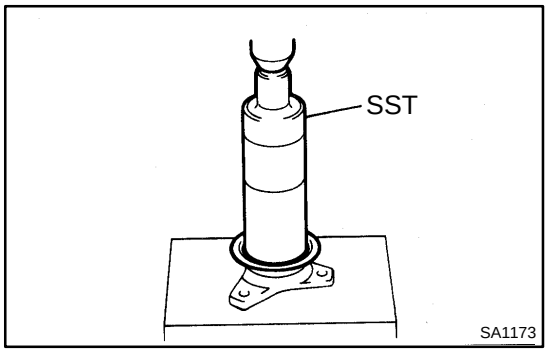

(b) 2JZ-GTE M/T:
Using SST and a press, install a new dust deflector.
SST 09316-2001 1, 09316-60011 (09316-00011)

(c) Others:
Using SST and a press, install a new dust deflector.
SST 09316-6001 1 (09316-00011)

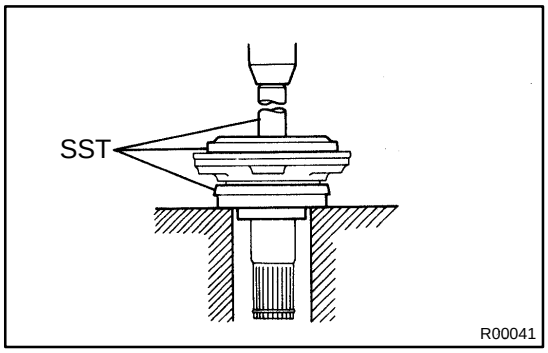

2. REPLACE SIDE GEAR SHAFT DUST COVER

(a) Using a screwdriver, remove the dust cover.

(b) Using SST and a press, install a new dust cover.
SST 09502- 24010, 09950- 60020 (09951- 00780),
09950-70010 (09951-07150)

SA1TF-01

REASSEMBLY

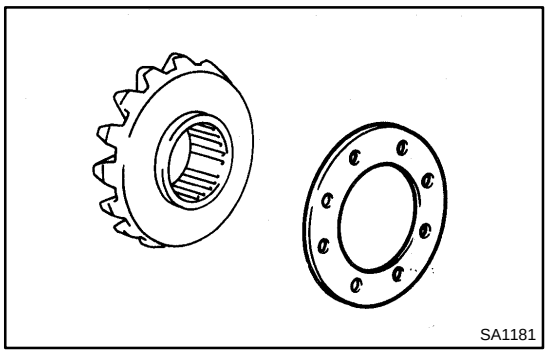
SA1181

1. CONVENTIONAL DIFFERENTIAL ONLY: ADJUST DIFFERENTIAL PINION GEAR BACKLASH

(a) Install the proper thrust washers on the side gears.

HINT:

Using the table below, select thrust washers which will ensure that the backlash is within the specification.

Thrust washer thickness

Thickness mm (in.)	Thickness mm (in.)
1.6 (0.063)	1.8 (0.071)
1.7 (0.067)	-

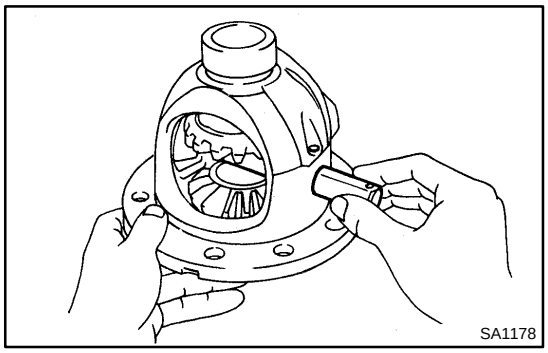
SA1178

(b) Install the side gears, pinion gears, pinion gear thrust washers and pinion shaft in the differential case.

HINT:

Align the holes of the differential case and pinion shaft.

(c) Push the side gear shafts gently into the differential case by hand and install them.

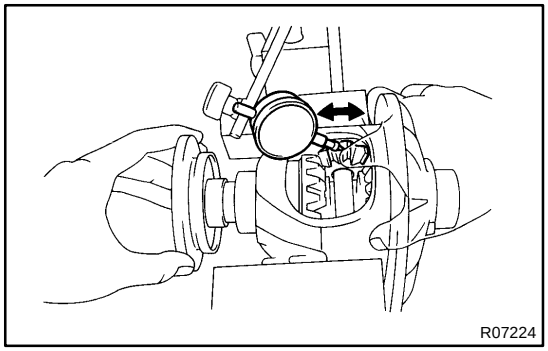
R07224

(d) Using a dial indicator, measure the pinion gear backlash while holding one side gear toward the case.

Backlash: 0.05 - 0.20 mm (0.0020 - 0.0079 in.)

If the backlash is not within the specification, install different thickness side gear thrust washers.

(e) Remove the side gear shaft.

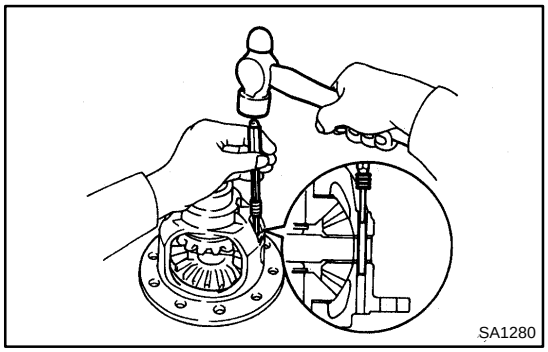
SA1280

2. CONVENTIONAL DIFFERENTIAL ONLY: INSTALL STRAIGHT PIN AND STAKE DIFFERENTIAL CASE

(a) Using a pin punch and hammer, install the straight pin through the differential case and hole of the pinion shaft.

(b) Stake the differential case.

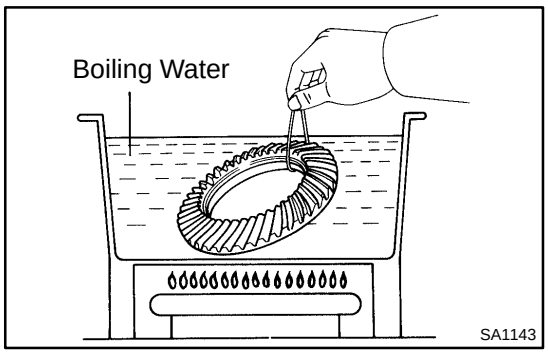

3. INSTALL RING GEAR ON DIFFERENTIAL CASE

(a) Clean the contact surfaces of the differential case, the threads of the ring gear and differential case.

(b) Heat the ring gear in boiling water.

(c) Carefully remove the ring gear from the boiling water.

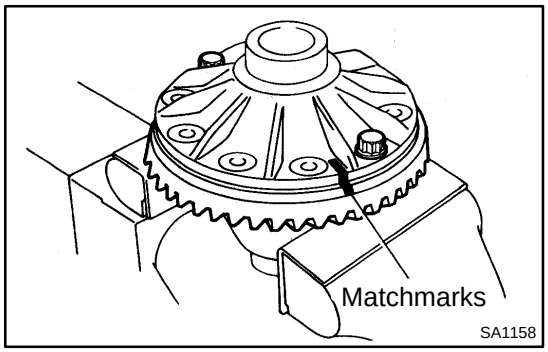

(d) After the moisture on the ring gear has completely evaporated, quickly install the ring gear to the differential case.

HINT:

Align the matchmarks on the ring gear and the differential case.

(e) Temporarily tighten the 2 bolts so that the bolt holes in the ring gear and differential case are not misaligned.

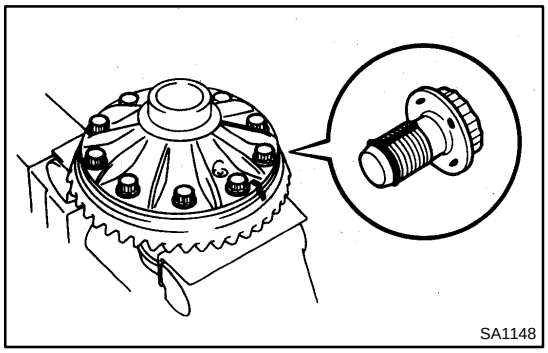

(f) After the ring gear has cooled sufficiently, install new ring gear set bolts to which thread lock has been applied.

Thread lock:

Part No. 08833-00100, THREE BOND 1360 K or equivalent.

NOTICE:

New ring gear set bolts should be used in every case.

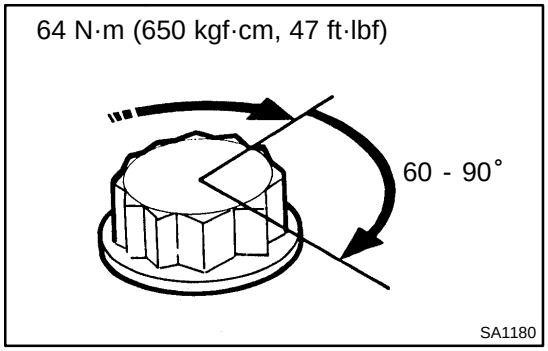

(g) Torque the set bolts uniformly and a little at a time.

Torque: 64 N·m (650 kgf·cm, 47 ft·lbf)

(h) Tighten the bolts an additional 60 - 90 °.

NOTICE:

Tighten the bolts in diagonally opposite pairs.

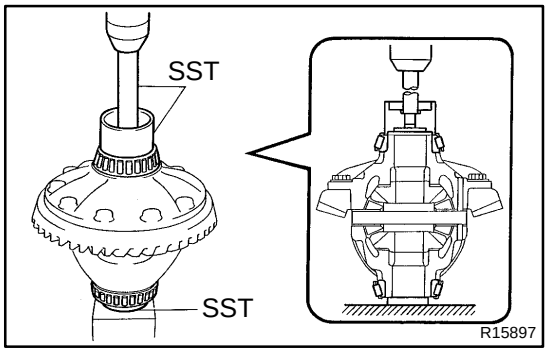

4. INSTALL SIDE BEARINGS

(a) 2JZ-GTE M/T:

Using SST and a press, install the side bearings.

SST 09710-30050, 09726-36010, 09950-70010 (09951-07150)

(b) Others:

Using SST and a press, install the side bearings.

SST 09710-30050, 09950-60010 (09950-00560), 09950-70010 (09951-07150)

5. INSTALL DRIVE PINION BEARING OUTER RACES AND ADJUSTING PLATE WASHER

NOTICE:

Always reassemble with a new adjusting plate washer.

HINT:

The adjusting plate washer is used for adjusting the tooth contact pattern. 42 types of washer with differential thicknesses are available.

(a) First fit a washer with the same thickness as the washer which was removed, then after checking the tooth contact pattern, replace the washer with one of a different thickness if necessary.

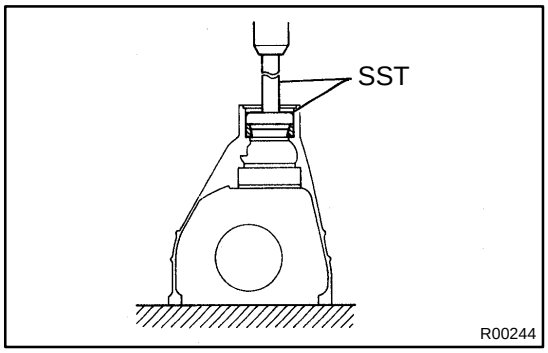

(b) 2JZ-GTE M/T:
Using SST and a press, install the front bearing outer race.
SST 09502-24010, 09950-70010 (09951-07150)

(c) Others:
Using SST and a press, install the front bearing outer race.
SST 09950-60020 (09951-00710),
09950-70010 (09951-07150)

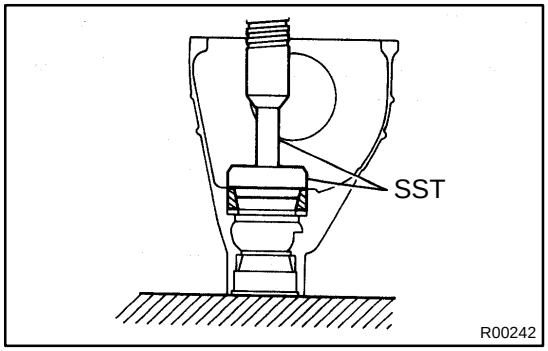

(d) 2JZ-GTE M/T:
Using SST and a press, install a new adjusting plate washer and the rear bearing outer race.
SST 09950-60020 (09951-01030),
09950-70010 (09951-07150)

(e) Others:
Using SST and a press, install a new adjusting plate washer and the rear bearing outer race.
SST 09250-1001 1 (09252-10010, 09255-10011)

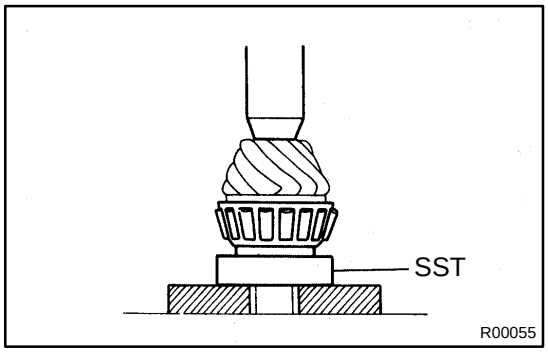

6. INSTALL REAR BEARING TO DRIVE PINION

(a) 2JZ-GTE M/T:
Using SST and a press, install the rear bearing.
SST 09316-2001 1

(b) Others:
Using SST and a press, install the rear bearing.
SST 09502-24010

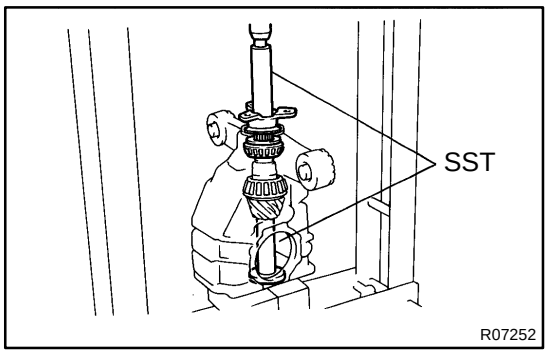

7. TEMPORARILY INSTALL DRIVE PINION, FRONT BEARING, OIL SLINGER (EXCEPT 2JZ- GTE M/T) AND COMPANION FLANGE

(a) Position the drive pinion in the differential carrier.

(b) Using SST and a press, install the front bearing, oil slinger (except 2JZ-GTE M/T) and companion flange.
SST 09608-04031, 09608-06041

HINT:
Assemble the spacer, oil slinger (2JZ-GTE M/T) and oil seal after adjusting the tooth contact pattern.

NOTICE:
Be careful not to press the bearing too far onto the drive pinion's bearing surface.

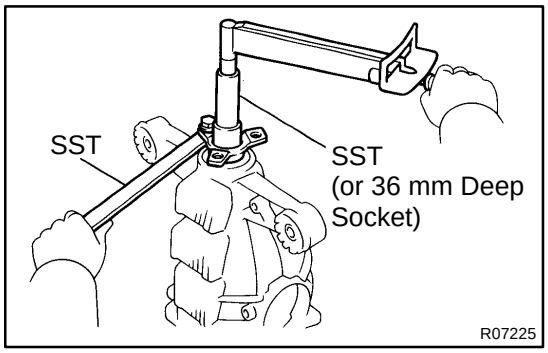

8. TEMPORARILY ADJUST DRIVE PINION PRELOAD

(a) Adjust the drive pinion preload by tightening the nut.

HINT:
Using SST (or a 36 mm deep socket wrench) to hold the companion flange, tighten the nut.
SST 09229-55010, 09330-00021

NOTICE:
As there is no spacer, tighten the nut a little at a time, being careful not to overtighten it.

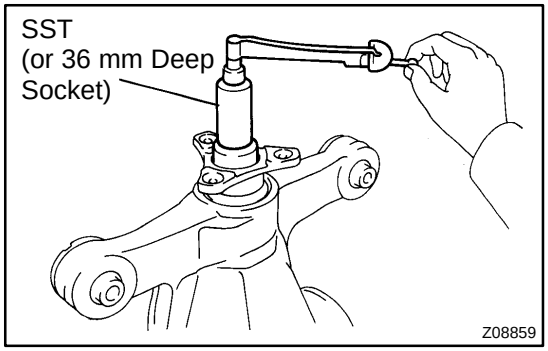

(b) Using SST (or a 36 mm deep socket) and a torque wrench, measure the drive pinion preload.
SST 09229-55010

	New bearing preload (at starting)
2JZ-GTE M/T	2.0 - 2.5 N·m (20 - 25 kgf·cm, 17.3 - 21.7 in.·lbf)
Others	1.5 - 1.8 N·m (15 - 18 kgf·cm, 13.0 - 16.0 in.·lbf)

	Reused bearing preload (at starting)
2JZ-GTE M/T	1.0 - 1.2 N·m (10 - 12 kgf·cm, 8.9 - 10.6 in.·lbf)
Others	0.5 - 0.8 N·m (5 - 8 kgf·cm, 4.3 - 6.9 in.·lbf)

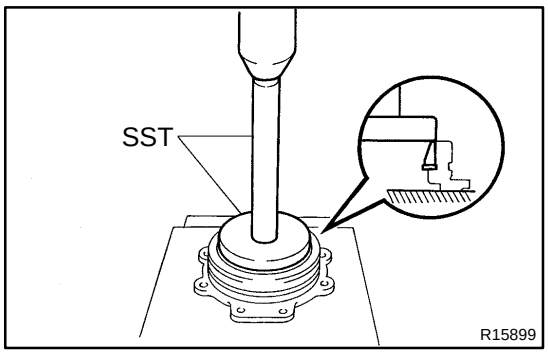

9. INSTALL SIDE BEARING OUTER RACE AND ADJUST PLATE WASHER

(a) 2JZ-GTE M/T:
Using SST and a press, install the outer race.
SST 09950-60020 (09951-00910),
09950-70010 (09951-07150)

(b) Others:
Using SST and a press, install the outer race and adjusting plate washer.
SST 09950-60020 (09951-00810),
09950-70010 (09951-07150)

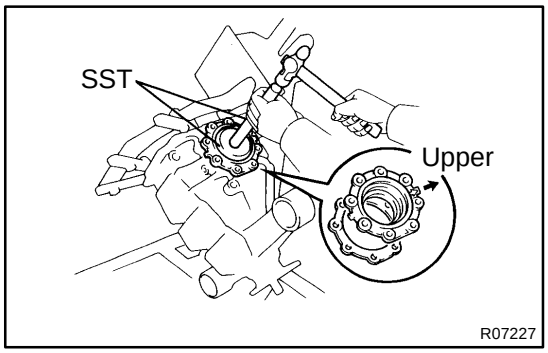

10. INSTALL DIFFERENTIAL CASE IN CARRIER

Install the drive side bearing in the differential carrier first, as shown in the illustration, then install the differential case.

11. 2JZ-GTE M/T:
INSTALL ADJUSTING PLATE WASHER AND DIFFERENTIAL CARRIER RETAINERS

(a) Place the adjusting washer to the carrier retainer.

(b) Using SST and a hammer, install the carrier retainer with adjusting washer.
SST 09950-60020 (09951-00910),
09950-70010 (09951-07150)

HINT:
Do not install a new O-ring and a new oil seal.
Install it after inspect tooth contact pattern.

(c) Tighten the 8 bolts.
Torque: 47 N·m (480 kgf·cm, 35 ft·lbf)

12. EXCEPT 2JZ-GTE M/T:
INSTALL DIFFERENTIAL CARRIER RETAINERS

(a) Using SST and a hammer, install the carrier retainer.
SST 09950-60020 (09951-00890),
09950-70010 (09951-07150)

(b) Tighten the 8 bolts.
Torque: 22 N·m (225 kgf·cm, 16 ft·lbf)

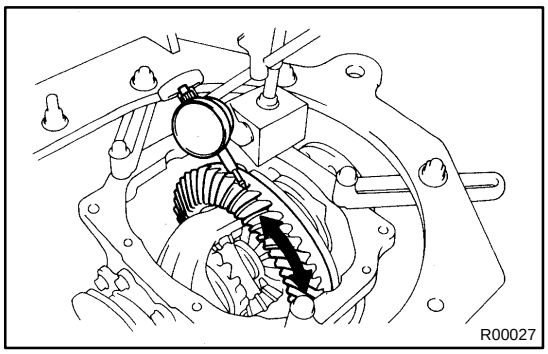

13. CHECK RING GEAR BACKLASH

Using a dial indicator, measure the backlash of the ring gear and drive pinion at 3 positions at least.

Backlash (average value):
0.08 - 0.13 mm (0.0031 - 0.0051 in.)

NOTICE:

The difference between the maximum and minimum measured values must be less than 0.05 mm (0.0020 in.).

HINT:

The measured values should be used for reference when selecting washers, so make a memo of the values.

If the backlash is not within the specification replace the washer on the ring gear side with one of a different thickness using the following procedure.

Adjusting washer thickness
2JZ-GTE M/T

No.	Thickness mm(in.)	No.	Thickness mm (in.)	No.	Thickness mm (in.)
18	1.18 (0.0465)	48	1.48 (0.0583)	78	1.78 (0.0701)
20	1.20 (0.0472)	50	1.50 (0.0591)	80	1.80 (0.0709)
22	1.22 (0.0480)	52	1.52 (0.0598)	82	1.82 (0.0717)
24	1.24 (0.0488)	54	1.54 (0.0606)	84	1.84 (0.0724)
26	1.26 (0.0496)	56	1.56 (0.0614)	86	1.86 (0.0732)
28	1.28 (0.0504)	58	1.58 (0.0622)	88	1.88 (0.0740)
30	1.30 (0.0512)	60	1.60 (0.0630)	90	1.90 (0.0748)
32	1.32 (0.0520)	62	1.62 (0.0638)	92	1.92 (0.0756)
34	1.34 (0.0528)	64	1.64 (0.0646)	08	1.08 (0.0425)
36	1.36 (0.0535)	66	1.66 (0.0654)	10	1.10 (0.0433)
38	1.38 (0.0543)	68	1.68 (0.0661)	12	1.12 (0.0441)
40	1.40 (0.0551)	70	1.70 (0.0669)	14	1.14 (0.0449)
42	1.42 (0.0559)	72	1.72 (0.0677)	16	1.16 (0.0457)
44	1.44 (0.0567)	74	1.74 (0.0685)		-
46	1.46 (0.0575)	76	1.76 (0.0693)		-

Except 2JZ-GTE M/T

No.	Thickness mm(in.)	No.	Thickness mm (in.)	No.	Thickness mm (in.)
02	2.02 (0.0795)	32	2.32 (0.0913)	62	2.62 (0.1031)
04	2.04 (0.0803)	34	2.34 (0.0921)	64	2.64 (0.1039)
06	2.06 (0.0811)	36	2.36 (0.0929)	66	2.66 (0.1047)
08	2.08 (0.0819)	38	2.38 (0.0937)	68	2.68 (0.1055)
10	2.10 (0.0827)	40	2.40 (0.0945)	70	2.70 (0.1063)
12	2.12 (0.0835)	42	2.42 (0.0953)	72	2.72 (0.1071)
14	2.14 (0.0843)	44	2.44 (0.0961)	74	2.74 (0.1079)
16	2.16 (0.0850)	46	2.46 (0.0969)	76	2.76 (0.1087)
18	2.18 (0.0858)	48	2.48 (0.0976)	78	2.78 (0.1094)
20	2.20 (0.0866)	50	2.50 (0.0984)	80	2.80 (0.1102)
22	2.22 (0.0874)	52	2.52 (0.0992)	82	2.82 (0.1110)
24	2.24 (0.0882)	54	2.54 (0.1000)	84	2.84 (0.1118)
26	2.26 (0.0890)	56	2.56 (0.1008)	86	2.86 (0.1126)
28	2.28 (0.0898)	58	2.58 (0.1016)	-	
30	2.30 (0.0906)	60	2.60 (0.1024)	-	

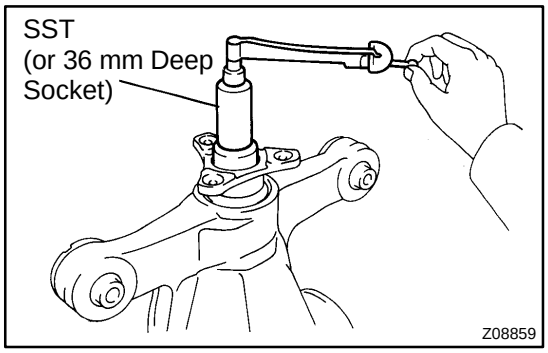

14. MEASURE TOTAL PRELOAD

Using SST (or a 36 mm deep socket) and a torque wrench, measure the preload with the teeth of the drive pinion and ring gear in contact.

SST 09229-55010

	Total preload (at starting) Drive pinion preload plus
2JZ-GTE M/T	0.4 - 0.6 N·m (4 - 6 kgf·cm, 3.5 - 5.2 in.·lbf)
Others	0.5 - 0.8 N·m (5 - 8 kgf·cm, 4.3 - 6.9 in.·lbf)

If the measured preload is less than the specification, replace the washer of the ring gear's tooth surface side with a thicker one.

If the preload is greater than the specification, replace the washer of the ring gear's tooth surface side with thinner one.

HINT:

Changing the washer thickness by 0.02 mm (0.0008 in.) will change the total preload by approx. 0.1 N·m (1 kgf·cm, 0.9 in.·lbf).

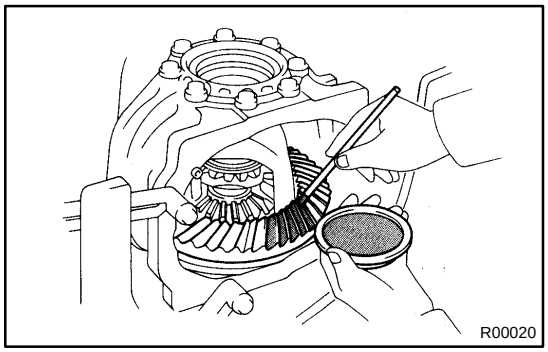

15. INSPECT TOOTH CONTACT PATTERN

(a) Coat 3 or 4 teeth at 3 different positions on the ring gear with red lead primer.

(b) Hold the companion flange firmly and rotate the ring gear in both directions.

(c) Inspect the tooth contact pattern.

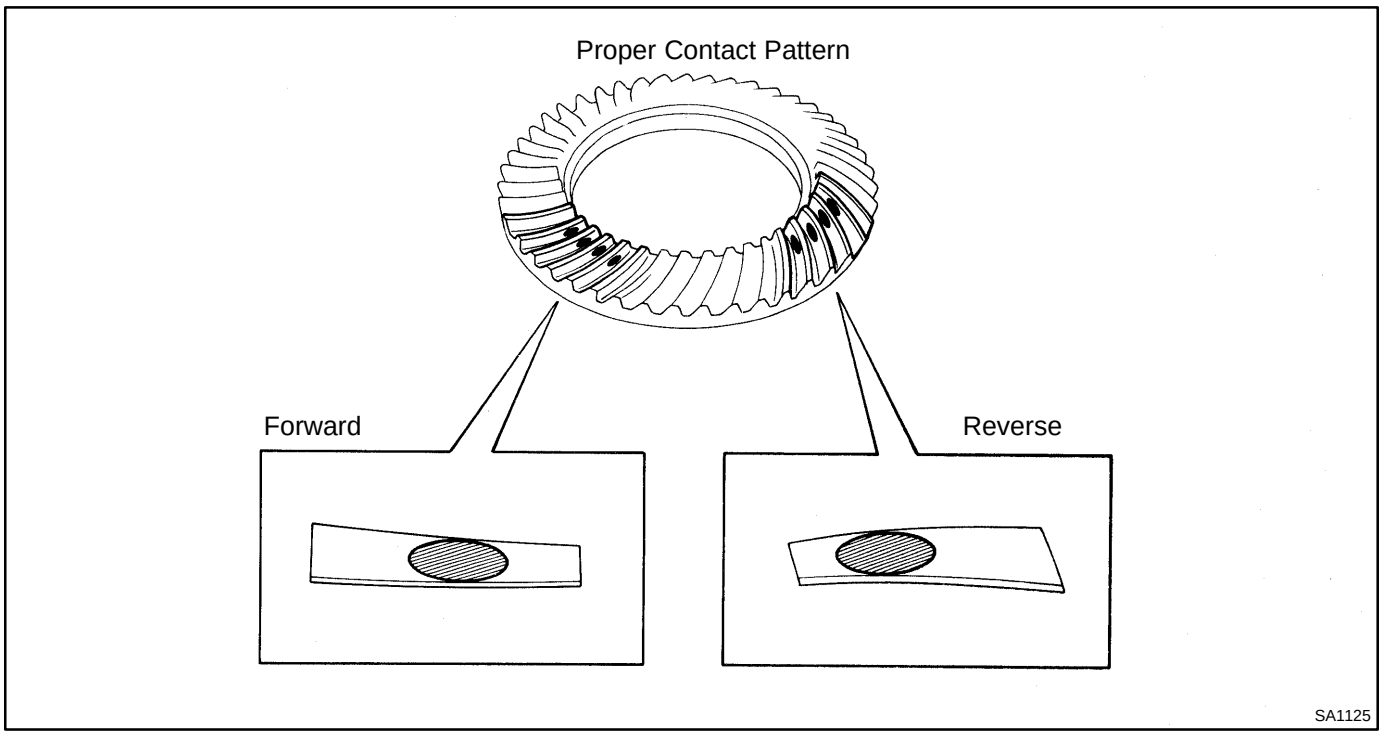

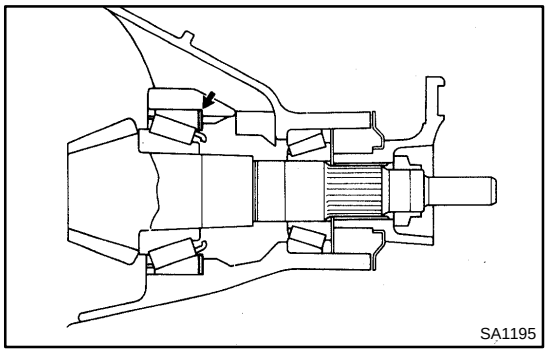

If tooth contact pattern is not correct, replace the adjusting washer installed on the front of the drive pinion rear bearing to adjust it.

NOTICE:

Be sure to always use a new part when replacing adjusting washer.

HINT:

Refer to the table below for selection of the adjusting washer.

Tooth contact pattern		Adjusting washer selection	
Forward	Reverse		
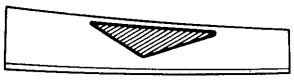		+ 0.08 mm (+ 0.0031 in.)	Replacing the washer with one 0.08 mm (0.0031 in.) thicker will give proper contact pattern.
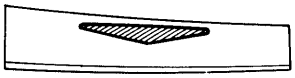		+ 0.14 mm (+ 0.0055 in.)	Replacing the washer with one 0.14 mm (0.0055 in.) thicker will give proper contact pattern.
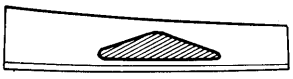	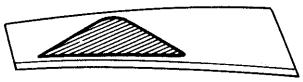	- 0.08 mm (- 0.0031 in.)	Replacing the washer with one 0.08 mm (0.0031 in.) thinner will give proper contact pattern.
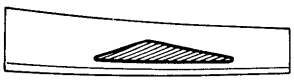	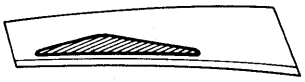	- 0.14 mm (- 0.0055 in.)	Replacing the washer with one 0.14 mm (0.0055 in.) thinner will give proper contact pattern.

V02917

HINT:
Adjust washer are available in 42 different thicknesses, in increments of 0.01 mm (0.004 in.).

Adjusting washer thickness
2JZ-GTE M/T

No.	Thickness mm (in.)	No.	Thickness mm (in.)	No.	Thickness mm (in.)
80	1.80 (0.0709)	94	1.94 (0.0764)	08	2.08 (0.0819)
81	1.81 (0.0713)	95	1.95 (0.0768)	09	2.09 (0.0823)
82	1.82 (0.0717)	96	1.96 (0.0772)	10	2.10 (0.0827)
83	1.83 (0.0720)	97	1.97 (0.0776)	11	2.11 (0.0831)
84	1.84 (0.0724)	98	1.98 (0.0780)	12	2.12 (0.0835)
85	1.85 (0.0728)	99	1.99 (0.0783)	13	2.13 (0.0839)
86	1.86 (0.0732)	00	2.00 (0.0787)	14	2.14 (0.0843)
87	1.87 (0.0736)	01	2.01 (0.0791)	15	2.15 (0.0846)
88	1.88 (0.0740)	02	2.02 (0.0795)	16	2.16 (0.0850)
89	1.89 (0.0744)	03	2.03 (0.0799)	17	2.17 (0.0854)
90	1.90 (0.0748)	04	2.04 (0.0803)	18	2.18 (0.0858)
91	1.91 (0.0752)	05	2.05 (0.0807)	77	1.77 (0.0697)
92	1.92 (0.0756)	06	2.06 (0.0811)	78	1.78 (0.0701)
93	1.93 (0.0760)	07	2.07 (0.0815)	79	1.79 (0.0705)

Except 2JZ-GTE M/T

No.	Thickness mm (in.)	No.	Thickness mm (in.)	No.	Thickness mm (in.)
87	1.87 (0.0736)	01	2.01 (0.0791)	15	2.15 (0.0846)
88	1.88 (0.0740)	02	2.02 (0.0795)	16	2.16 (0.0850)
89	1.89 (0.0744)	03	2.03 (0.0799)	17	2.17 (0.0854)
90	1.90 (0.0748)	04	2.04 (0.0803)	18	2.18 (0.0858)
91	1.91 (0.0752)	05	2.05 (0.0807)	19	2.19 (0.0862)
92	1.92 (0.0756)	06	2.06 (0.0811)	20	2.20 (0.0866)
93	1.93 (0.0760)	07	2.07 (0.0815)	21	2.21 (0.0870)
94	1.94 (0.0764)	08	2.08 (0.0819)	22	2.22 (0.0874)
95	1.95 (0.0768)	09	2.09 (0.0823)	23	2.23 (0.0878)
96	1.96 (0.0772)	10	2.10 (0.0827)	24	2.24 (0.0882)
97	1.97 (0.0776)	11	2.11 (0.0831)	25	2.25 (0.0886)
98	1.98 (0.0780)	12	2.12 (0.0835)	26	2.26 (0.0890)
99	1.99 (0.0783)	13	2.13 (0.0839)	27	2.27 (0.0894)
00	2.00 (0.0787)	14	2.14 (0.0843)	28	2.28 (0.0898)

16. REMOVE DIFFERENTIAL RETAINER, DIFFERENTIAL CASE AND DRIVE PINION (See page SA-67)

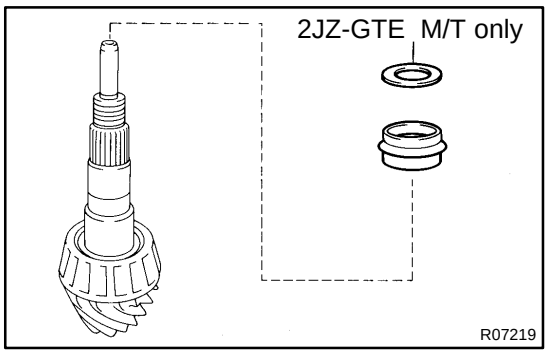

17. INSTALL SPACER AND OIL SLINGER (2JZ-GTE M/T) ON DRIVE PINION

Install a new spacer and the oil slinger (2JZ-GTE M/T) on the drive pinion.

18. POSITION DRIVE PINION IN DIFFERENTIAL CARRIER (See page SA-74)

19. INSTALL FRONT BEARING AND OIL SLINGER (EXCEPT 2JZ-GTE M/T) (See page SA-74)

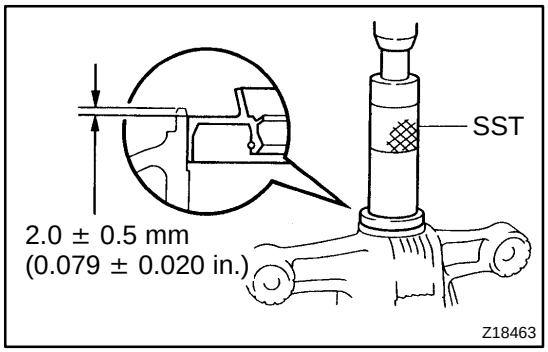

20. INSTALL OIL SEAL

(a) 2JZ-GTE M/T:

Using SST and press, install a new oil seal to the differential carrier.

SST 09316- 60011 (09316- 00011, 09316- 00071), 09502-24010

Oil seal drive in depth:
2.0 ± 0.5 mm (0.079 ± 0.020 in.)

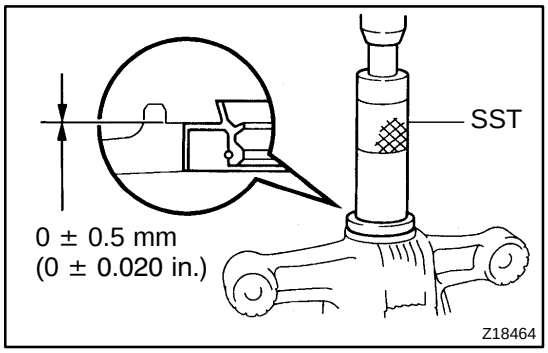

(b) Others:

Using SST and press, install a new oil seal to the differential carrier.

SST 09316- 60011 (09316- 00011, 09316- 00041), 09502-12010

Oil seal drive in depth:
0 ± 0.5 mm (0 ± 0.020 in.)

(c) Apply MP grease to a new oil seal lip.

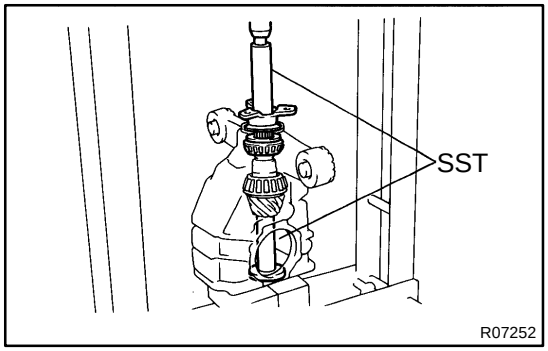

21. INSTALL COMPANION FLANGE

Using SST and a press, install the companion flange.

SST 09608-04031, 09608-06041

NOTICE:

★ **Be careful not to damage the oil seal.**

★ **Be careful not to press the bearing too far onto the drive pinion's bearing surface.**

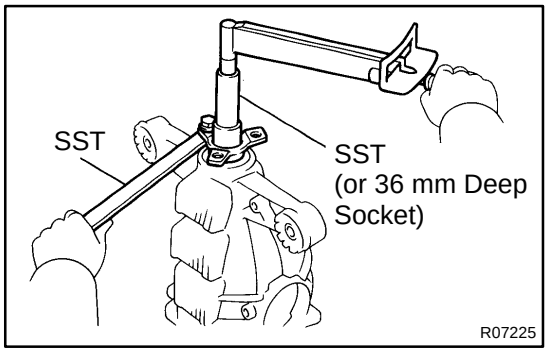

22. ADJUST DRIVE PINION PRELOAD

(a) Coat the drive pinion's threads and a new nut's flange with hypoid gear oil for LSD.

(b) Using SST (or a 36 mm deep socket wrench), tighten the nut.

SST 09229-55010 (Except 2JZ-GTE M/T), 09330-00021

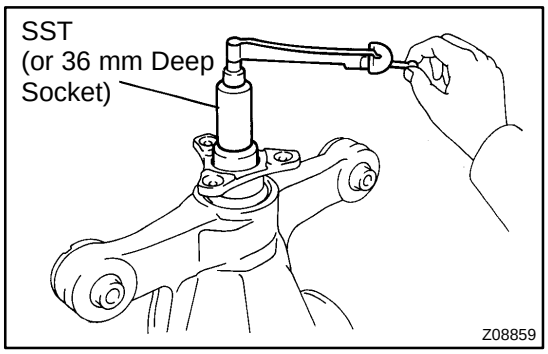

(c) Using SST (or a 36 mm deep socket) and a torque wrench, measure the preload.
SST 09229-55010

	New bearing preload (at starting)
2JZ-GTE M/T	2.0 - 2.5 N·m (20 - 25 kgf·cm, 17.3 - 21.7 in.·lbf)
Others	1.5 - 1.8 N·m (15 - 18 kgf·cm, 13.0 - 16.0 in.·lbf)

	Reused bearing preload (at starting)
2JZ-GTE M/T	1.0 - 1.2 N·m (10 - 12 kgf·cm, 8.9 - 10.6 in.·lbf)
Others	0.5 - 0.8 N·m (5 - 8 kgf·cm, 4.3 - 6.9 in.·lbf)

If the preload is greater than the specification, replace the spacer and repeat the preload procedure.

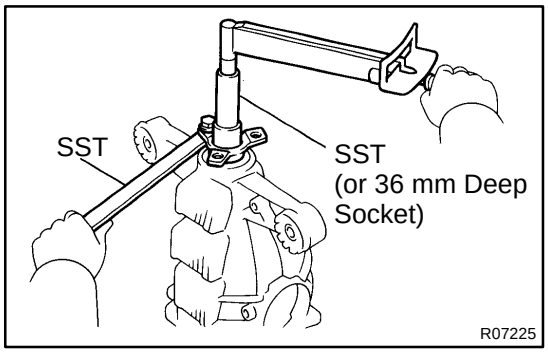

If the preload is less than the specification, retighten the nut 13 N·m (130 kgf·cm, 9 ft·lbf) at a time until the specified preload is reached.

	Maximum torque
2JZ-GTE M/T	510 N·m (5,200 kgf·cm, 376 ft·lbf)
Others	490 N·m (5,000 kgf·cm, 362 ft·lbf)

If the maximum torque is exceeded while retightening the nut, replace the spacer and repeat the preload procedure.
Do not back off the nut to reduce the preload.

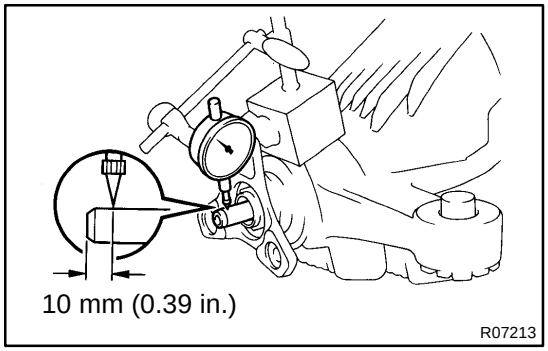

23. CHECK DRIVE PINION SHAFT RUNOUT

Measure the drive pinion shaft runout.

Maximum runout: 0.08 mm (0.0031 in.)

24. INSTALL DIFFERENTIAL CASE IN CARRIER (See page SA-74)

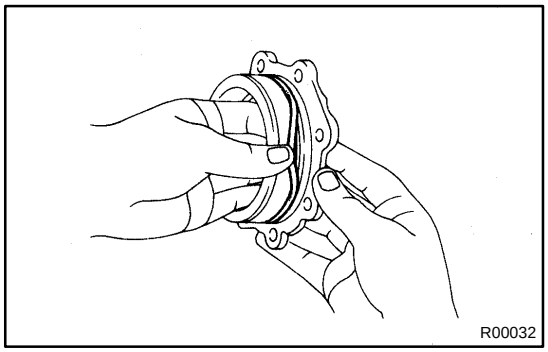

25. INSTALL O-RING

(a) Coat a new O-ring with hypoid gear oil.
(b) Install the O-ring to the carrier retainer.

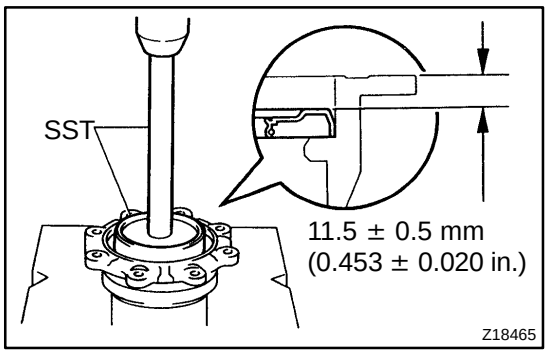

26. INSTALL OIL SEAL

(a) 2JZ-GTE M/T:
Using SST and a press, install a new oil seal to the carrier retainer.
SST 09223-15030, 09950-70010 (09951-07150)

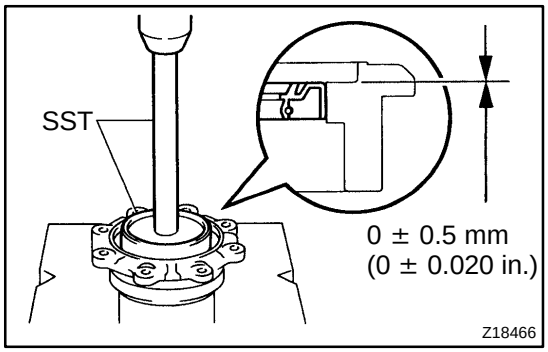

(b) Others:
Using SST and a press, install a new oil seal to the carrier retainer.
SST 09608-32010, 09950-70010 (09951-07150)

(c) Coat MP grease to the oil seal lip.

27. INSTALL SIDE BEARING RETAINER
(See page SA-74)

28. STAKE DRIVE PINION NUT

NOTICE:
Do not damage the drive pinion.

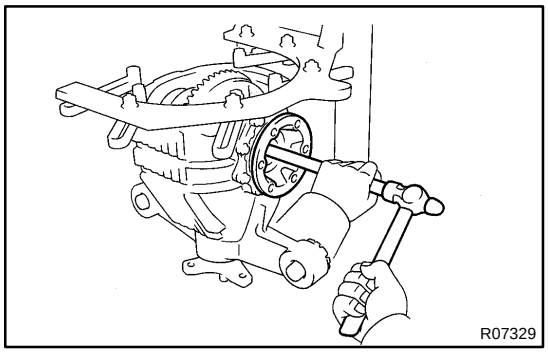

29. INSTALL BOTH GEAR SHAFTS

(a) Install a new snap ring to the shaft.

(b) Coat MP grease onto the snap ring.

(c) Using a brass bar and hammer, install both side gear shafts.

NOTICE:
Be careful not to damage the side gear shaft and the oil seal.

HINT:
Whether or not the side gear shaft is in contact with the pinion shaft can be known by the sound or feeling when driving it in.

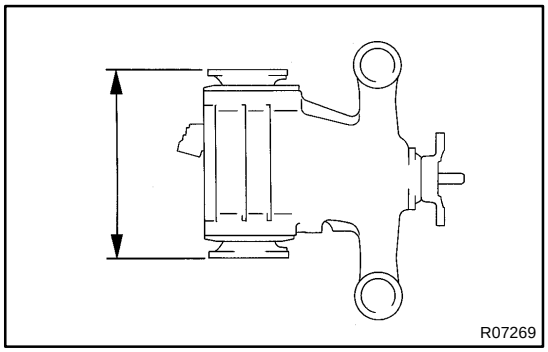

30. INSPECT DIFFERENTIAL CARRIER

Using vernier calipers, measure the distance between the mating surfaces of the 2 side gear shafts, as shown in the illustration.

	Standard distance
2JZ-GTE M/T	293.4 ± 0.65 mm (11.551 ± 0.026 in.)
Others	281.8 ± 0.95 mm (11.094 ± 0.037 in.)

31. RECHECK BACKLASH, TOTAL PRELOAD AND TOOTH CONTACT PATTERN (See page SA-74)

32. REMOVE DIFFERENTIAL CARRIER FROM OVERHAUL STAND, ETC.

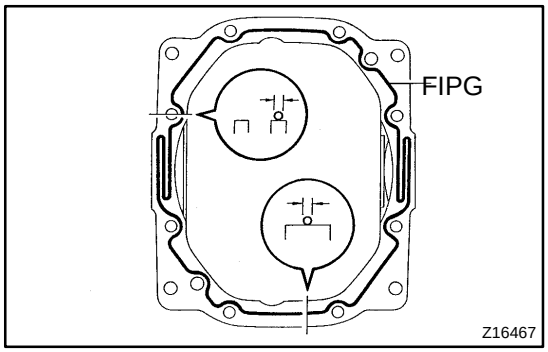

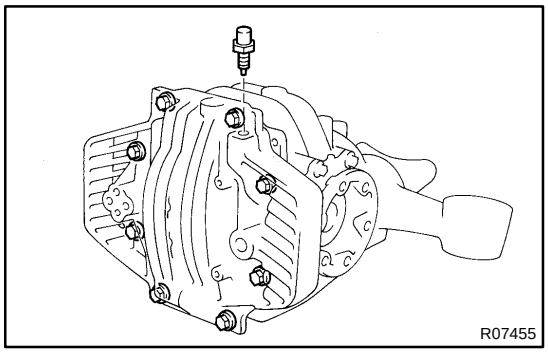

33. INSTALL DIFFERENTIAL CARRIER COVER

(a) Clean the contact surfaces of the carrier and cover of any residual FIPG material using cleaner.

(b) Coat FIPG to the carrier or cover.
FIPG:
Part No. 08826-00090, THREE BOND 1281 or equivalent

NOTICE:

After installing the cover, wait at least 1 hour before filling it with oil or running the vehicle.

(c) Install the carrier cover to the carrier with the 8 bolts.

	Torque
2JZ-GTE M/T	78 N·m (800 kgf·cm, 58 ft·lbf)
Others	47 N·m (475 kgf·cm, 34 ft·lbf)

(d) Install the breather plug.
Torque: 21 N·m (210 kgf·cm, 15 ft·lbf)

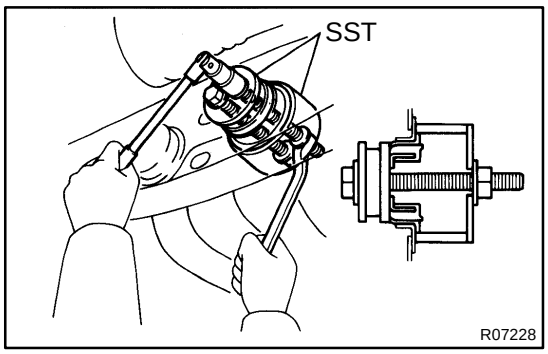

DIFFERENTIAL MOUNTING CUSHION

SA0Q3-01

REPLACEMENT

1. REMOVE DIFFERENTIAL ASSEMBLY
(See page SA-65)

2. REMOVE DIFFERENTIAL MOUNT CUSHION

Using SST, remove the differential mount cushion.

SST 09316-12010, 09570-24010

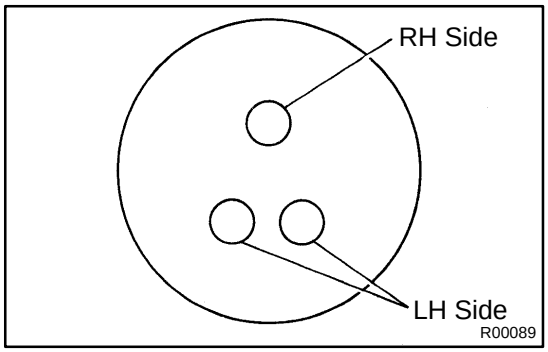

NOTICE:

When driving out the mount cushion, be careful not to touch the member with the SST. Align the SST straight so that the bolt of the SST is parallel with the center line of the mount cushion. When installing the bolts to the LH and RH differential mount cushions, make sure the bolts are passed through the correct holes in the SST, as shown in the illustration.

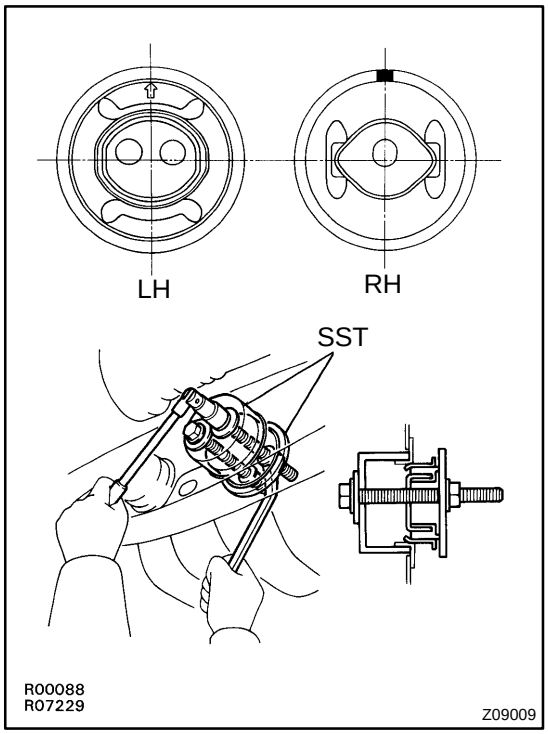

3. INSTALL DIFFERENTIAL MOUNT CUSHION

Using SST, install the cushion so that the marks are positioned, as shown in the illustration.

SST 09570-24010

NOTICE:

Do not make a mistake with left and right sides or top and bottom. Set the SST after temporarily installing the differential mount cushion into the member so as not to be installed at an angle. To confirm that the differential mount cushion is aligned straight in relation to the member, check that the SST is fully in contact with all of the cushion.

4. INSTALLATION DIFFERENTIAL ASSEMBLY
(See page SA-87)

REAR SHOCK ABSORBER

SA0Q4-02

COMPONENTS

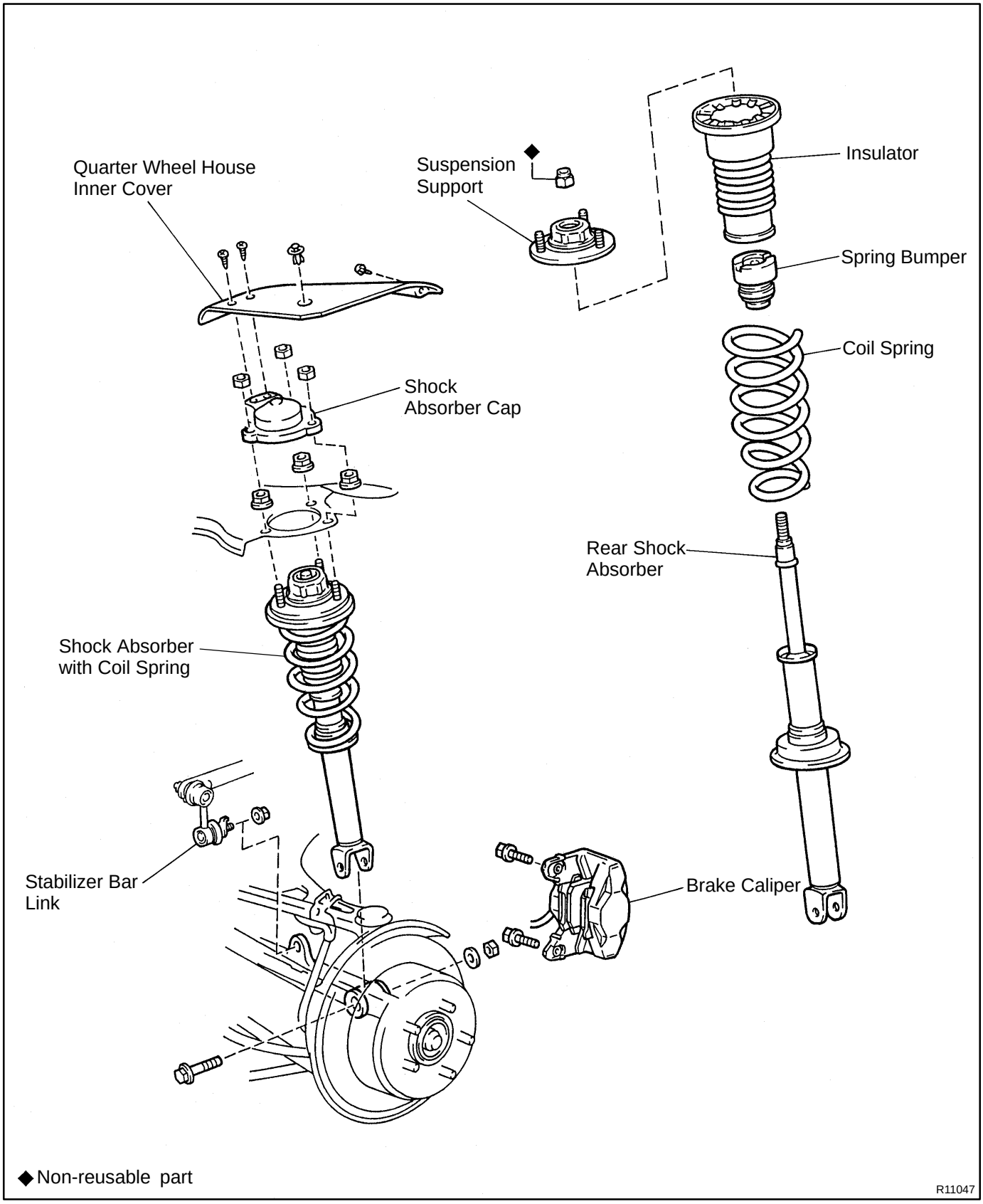

SA0Q5-01

REMOVAL

1. w/ SPORT ROOF:

REMOVE THESE PARTS:

(See page BO-38)

★ Rear seat cushion
★ Rear seatback
★ Tonneau cover retainer
★ Holder garnish and holder
★ Speaker grille
★ Quarter trim board

2. REMOVE REAR WHEEL

Torque: 103 N·m (1,050 kgf·cm, 76 ft·lbf)

3. REMOVE REAR BRAKE CALIPER

(a) Remove the 2 bolts and brake caliper from the rear axle carrier.

Torque: 104 N·m (1,065 kgf·cm, 77 ft·lbf)

(b) Support the brake caliper securely.

4. DISCONNECT REAR STABILIZER BAR LINK

Remove the nut and disconnect the stabilizer bar link from the lower suspension arm No.2.

Torque: 74 N·m (750 kgf·cm, 54 ft·lbf)

5. REMOVE SHOCK ABSORBER WITH COIL SPRING

(a) Remove the nut and bolt on lower side of the shock absorber.

Torque: 137 N·m (1,400 kgf·cm, 101 ft·lbf)

HINT:

At the time of installation, after stabilizing the suspension, torque the nut.

(b) Remove the quarter wheel house inner cover.

(c) Remove the 3 nuts and the shock absorber cap.

Torque: 10 N·m (105 kgf·cm, 8 ft·lbf)

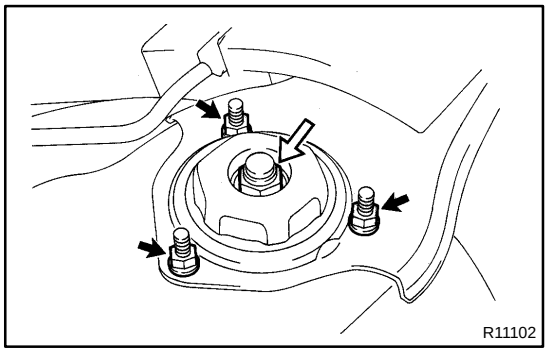

(d) Loosen the nut in the middle of the suspension support.

NOTICE:

Do not remove the nut.

Torque: 27 N·m (280 kgf·cm, 20 ft·lbf)

(e) Remove the 3 nuts and shock absorber with the coil spring.

Torque: 26 N·m (260 kgf·cm, 19 ft·lbf)

SA0Q6-01

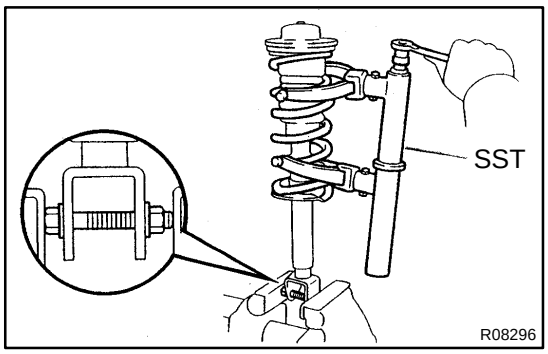

DISASSEMBLY

1. REMOVE SUSPENSION SUPPORT AND COIL SPRING

(a) Using SST, compress the coil spring.
SST 09727-30021

NOTICE:

Do not use an impact wrench. It will damage the SST.

(b) Remove the suspension support nut.

(c) Remove the suspension support, coil spring and insulator.

2. REMOVE SPRING BUMPER

SA0Q7-01

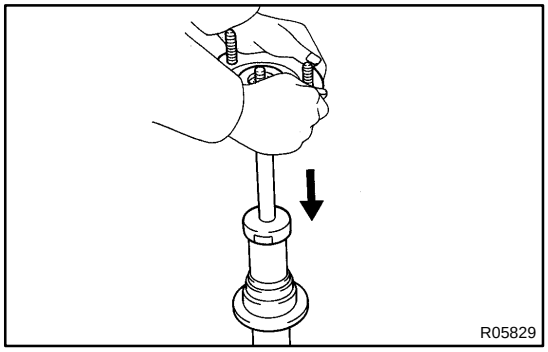

INSPECTION

INSPECT SHOCK ABSORBER

Compress and extend the shock absorber rod and check that there is no abnormal resistance or unusual operation sound.

If there is any abnormality, replace the shock absorber with a new one.

NOTICE:

When discarding the shock absorber, see DISPOSAL on page SA-93 .

SA0Q8-01

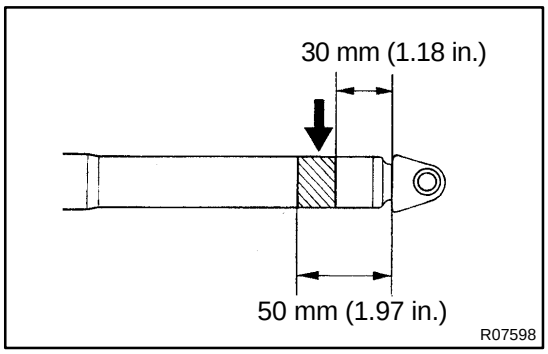

DISPOSAL

1. FULLY EXTEND SHOCK ABSORBER ROD

2. DRILL HOLE TO REMOVE GAS FROM CYLINDER

Using a drill, make a hole in the cylinder within the shaded region to remove the gas inside.

CAUTION:

The discharged gas is harmless, but be careful of chips which may fly up when drilling.

SA0Q9-01

REASSEMBLY

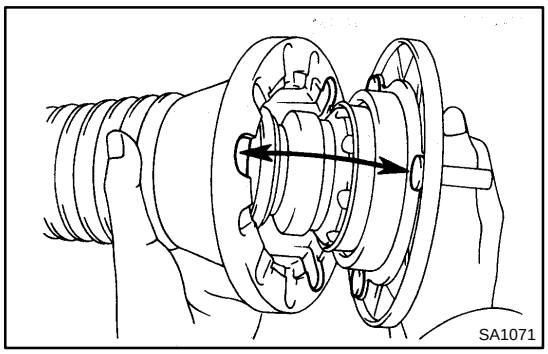

1. INSTALL SUSPENSION SUPPORT AND COIL SPRING

(a) Install the spring bumper to the suspension support.

(b) Install the insulator to the suspension support.

HINT:

Match the bolt of the suspension support with the cut-off part of the insulator.

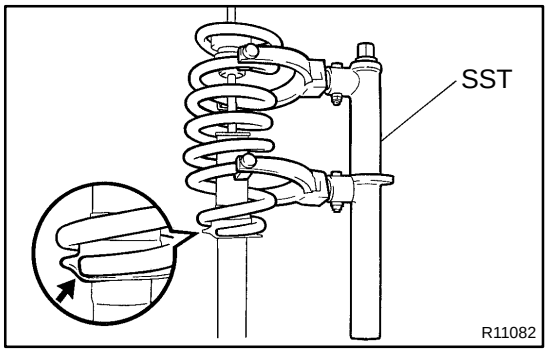

2. INSTALL COIL SPRING AND SUSPENSION SUPPORT

(a) Using SST, compress the coil spring.

SST 09727-30021

NOTICE:

Do not use an impact wrench. It will damage the SST.

(b) Install the coil spring to the shock absorber.

HINT:

Fit the lower end of the coil spring into the recess of the shock absorber's spring seat.

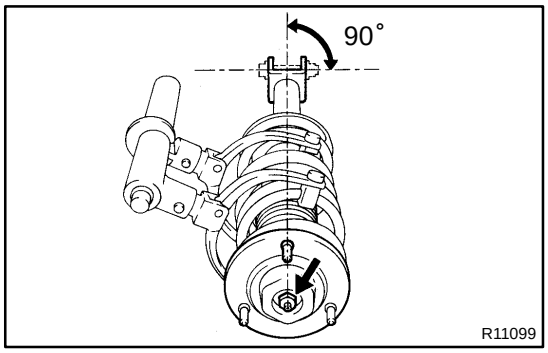

(c) Install the suspension support to the rod and temporarily tighten a new nut.

(d) Rotate the suspension support so that the rod and one of the bolts on suspension support are aligned with the lower bracket.

(e) Remove the SST.

SST 09727-30021

HINT:

After removing the SST, recheck the direction of the suspension support.

SA0QA-01

INSTALLATION

Installation is in the reverse order of removal (See page SA-90).
AFTER INSTALLATION, CHECK REAR WHEEL ALIGNMENT (See page SA-8)

REAR UPPER SUSPENSION ARM

COMPONENTS

SA0QB-02

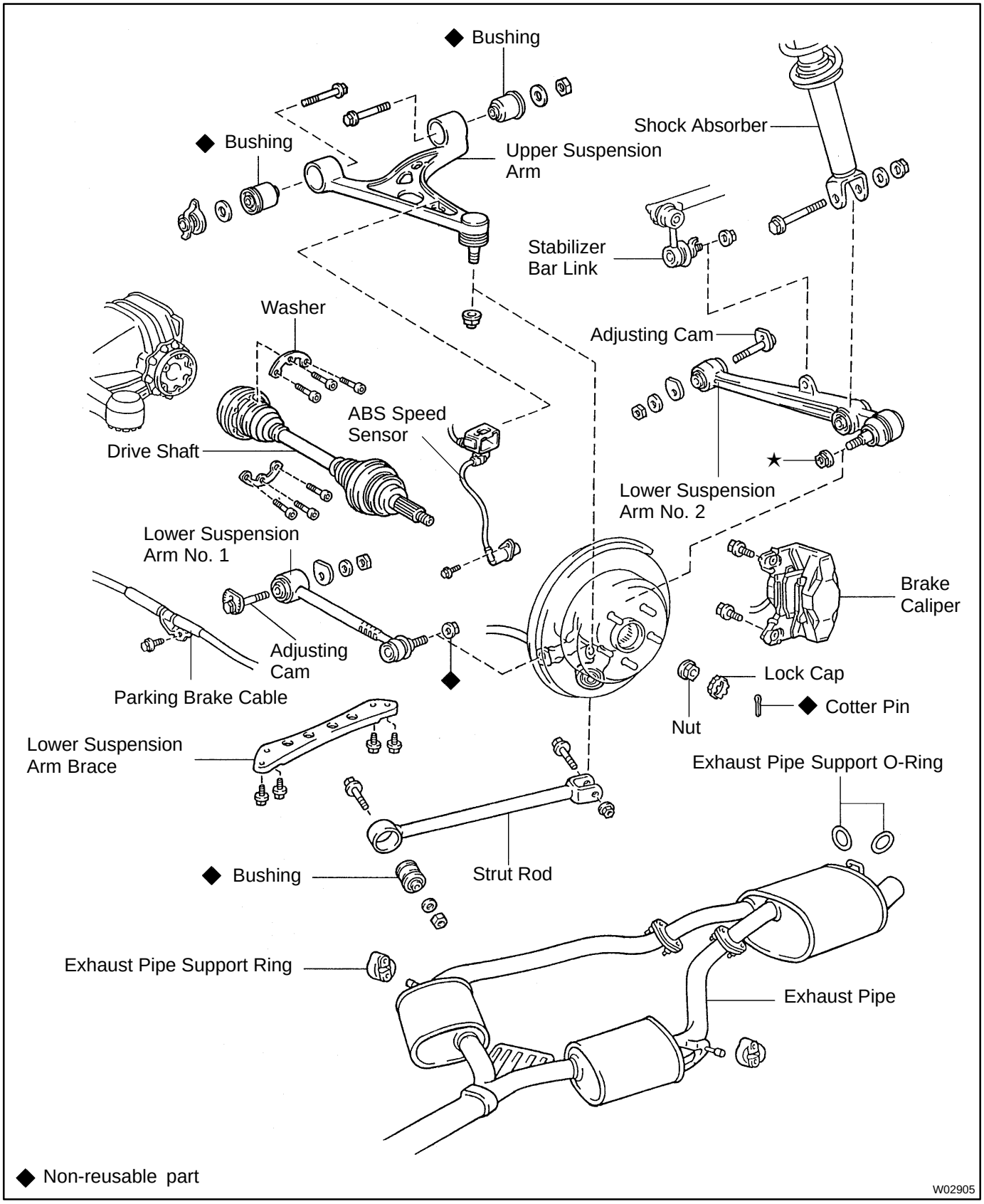

SA0QC-01

REMOVAL

1. REMOVE REAR WHEEL

Torque: 103 N·m (1,050 kgf·cm, 76 ft·lbf)

2. REMOVE DRIVE SHAFT (See page SA-51)

3. REMOVE BRAKE CALIPER

(a) Remove the 2 bolts and brake caliper from the rear axle carrier.

Torque: 104 N·m (1,065 kgf·cm, 77 ft·lbf)

(b) Support the brake caliper securely.

4. DISCONNECT ABS SPEED SENSOR AND WIRE HARNESS

(a) Remove the bolt and disconnect the speed sensor from the axle carrier.

Torque: 7.8 N·m (80 kgf·cm, 69 in.·lbf)

(b) Disconnect the speed sensor wire harness clamp from the upper suspension arm.

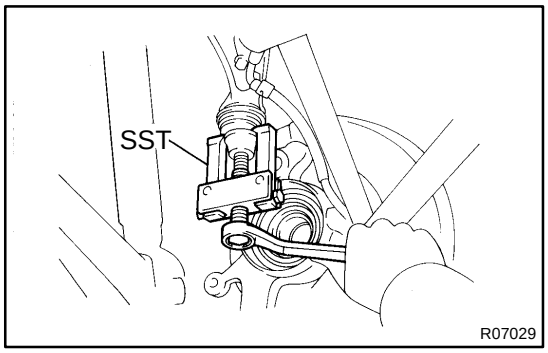

5. REMOVE UPPER SUSPENSION ARM

(a) Remove the nut from the upper suspension arm.

Torque: 108 N·m (1,100 kgf·cm, 80 ft·lbf)

(b) Using SST, disconnect the upper suspension arm from the axle carrier.

SST 09628-6201 1

NOTICE:

Be careful not to damage the dust cover.

(c) Remove the nuts, washers, bolts and upper suspension arm.

Torque: 164 N·m (1,670 kgf·cm, 121 ft·lbf)

HINT:

★ At the time of installation, after stabilizing the suspension, torque the bolt and nut.

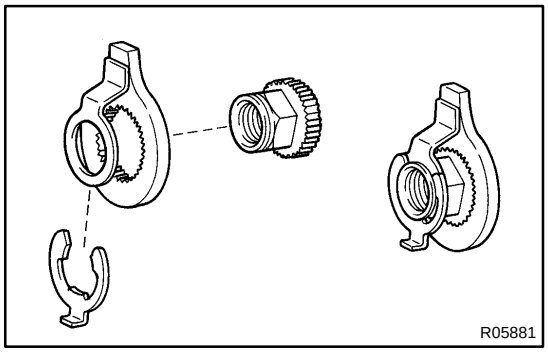

★ If replacing the front nut, assemble the nut and E-ring to the washer with lock protrusion before installing.

SA0QD-01

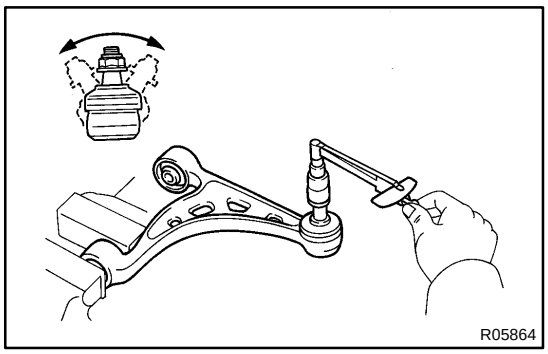

INSPECTION

INSPECT UPPER BALL JOINT FOR ROTATION CONDITION

(a) As shown in the illustration flip the ball joint stud back and forth 5 times, before installing the nut.

(b) Using torque wrench, turn the nut continuously one turn every 2 - 4 seconds and take the torque reading on the 5th turn.

Turning torque:

1.0 - 3.4 N·m (10 - 35 kgf·cm, 9 - 30 in.·lbf)

SA0QE-02

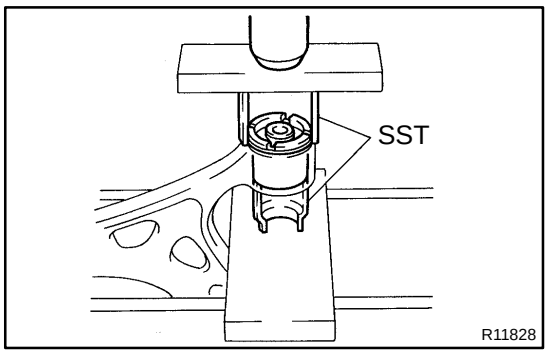

REPLACEMENT

1. REMOVE BUSHING

Using SST, remove the bushing.

SST 09710-26010 (09710-05070),
09710-30020 (09710-03030)

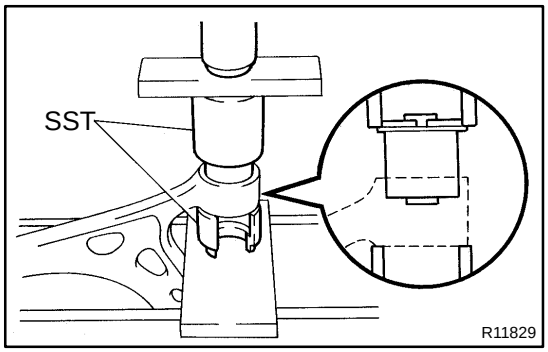

2. INSTALL NEW BUSHING

Using SST, install a new bushing.

SST 09710-26010 (09710-05050),
09710-30020 (09710-03120)

REAR LOWER SUSPENSION ARM AND STRUT ROD

SA0QG-02

COMPONENTS

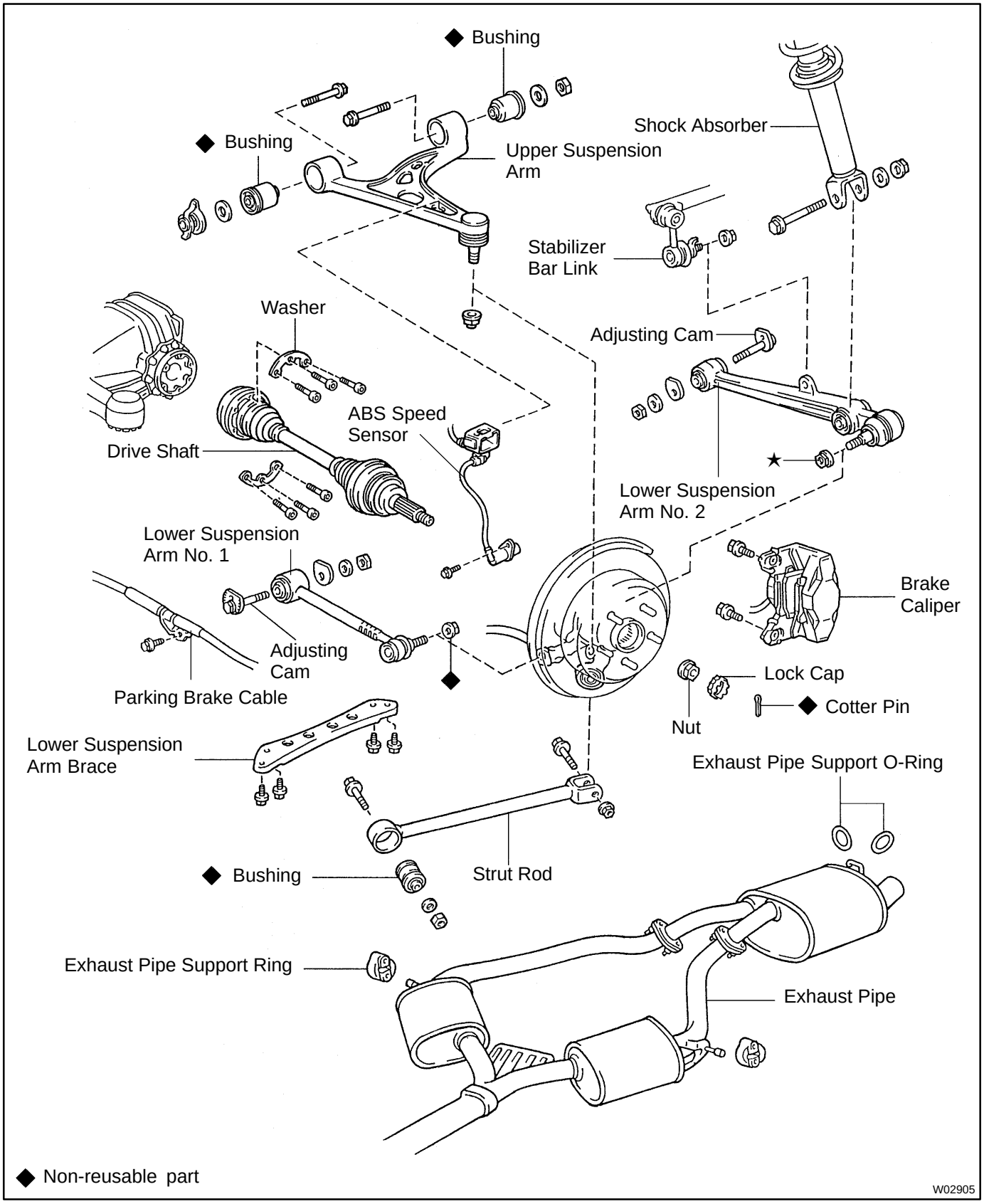

SA0QH-01

REMOVAL

1. REMOVE REAR WHEEL

Torque: 103 N·m (1,050 kgf·cm, 76 ft·lbf)

2. REMOVE REAR DRIVE SHAFT (See page SA-51)

3. REMOVE BRAKE CALIPER

(a) Remove the 2 bolts and brake caliper from the rear axle carrier.

Torque: 104 N·m (1,065 kgf·cm, 77 ft·lbf)

(b) Support the brake caliper securely.

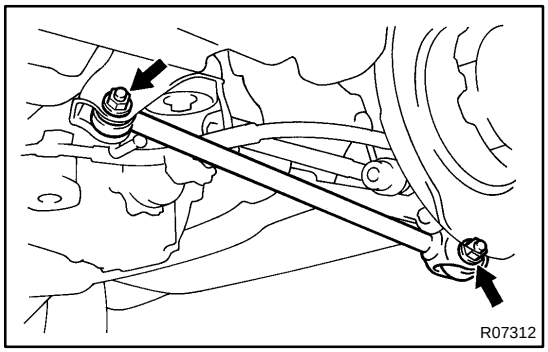

4. REMOVE STRUT ROD

Remove the 2 nuts, washer, bolts and strut rod.

Torque: 184 N·m (1,880 kgf·cm, 136 ft·lbf)

HINT:

At the time of installation, after stabilizing the suspension, torque the bolts.

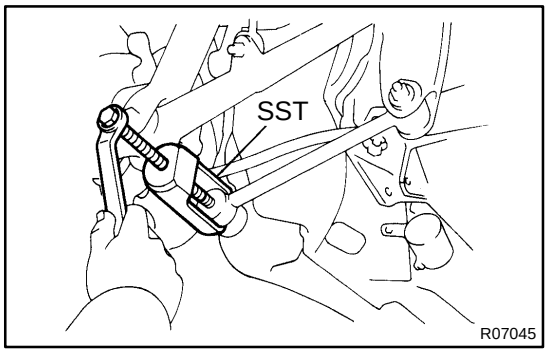

5. REMOVE LOWER SUSPENSION ARM NO.1

(a) Remove the nut.

Torque: 59 N·m (600 kgf·cm, 43 ft·lbf)

(b) Using SST, disconnect the lower suspension arm No.1 from the rear axle carrier.

SST 09610-20012

NOTICE:

Be careful not to damage the dust boot.

(c) Remove the bolt and disconnect the parking brake cable bracket.

Torque: 19 N·m (190 kgf·cm, 14 ft·lbf)

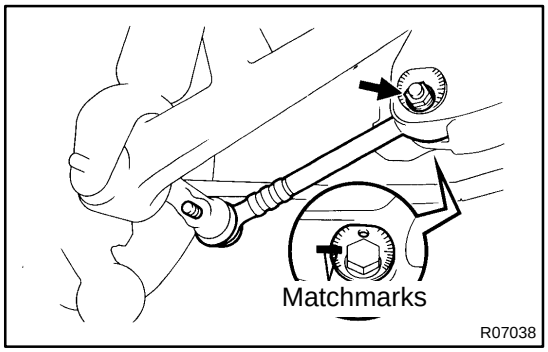

(d) Place matchmarks on the adjusting cam No.1 and sub-frame.

(e) Remove the nut, washer, adjusting cam plate No.1 and adjusting cam No.1.

Torque: 184 N·m (1,880 kgf·cm, 136 ft·lbf)

HINT:

At the time of installation, after stabilizing the suspension, torque the nut.

(f) Remove the lower suspension arm No.1.

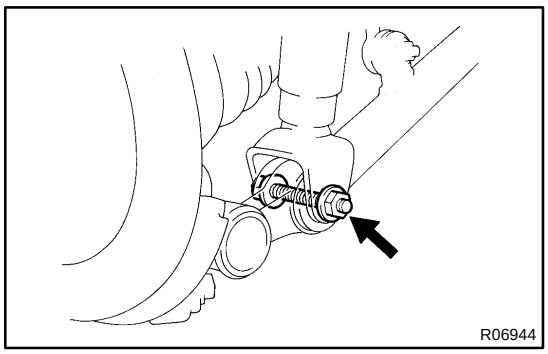

6. REMOVE LOWER SUSPENSION ARM NO.2

(a) Remove the nut, washer and bolt, then disconnect the shock absorber from the lower suspension arm No.2.
Torque: 137 N·m (1,400 kgf·cm, 101 ft·lbf)

HINT:
At the time of installation, after stabilizing the suspension, torque the nuts.

(b) Remove the nut and disconnect the stabilizer bar link from the lower suspension arm No.2.
Torque: 74 N·m (750 kgf·cm, 54 ft·lbf)

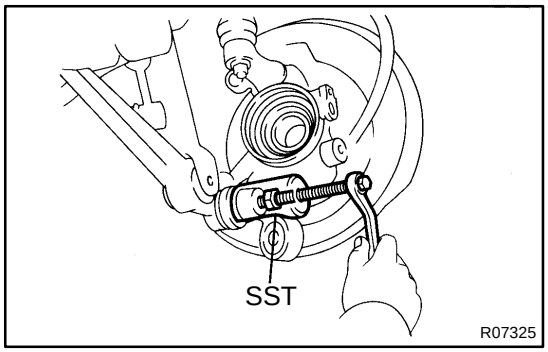

(c) Loosen the nut.
Torque: 150 N·m (1,525 kgf·cm, 110 ft·lbf)

(d) Using SST, disconnect the lower suspension arm No.2 from the rear axle carrier.
SST 09610-20012

NOTICE:
Be careful not to damage the ball joint bolt.

(e) Remove the nut.

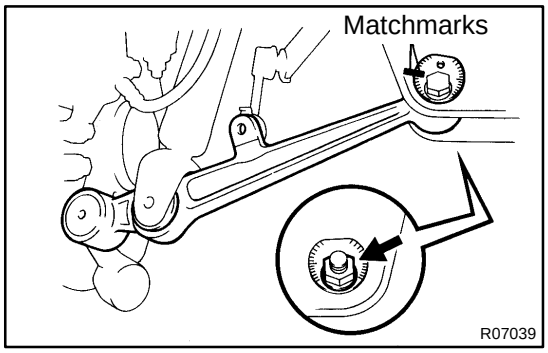

(f) Place matchmarks on the adjusting cam No.2 and sub-frame.

(g) Remove the nut, washer, adjusting cam palate No.2, adjusting cam No.2 and lower suspension arm No.2.
Torque: 184 N·m (1,880 kgf·cm, 136 ft·lbf)

HINT:
At the time of installation, after stabilizing the suspension, torque the nut.

SA0QI-01

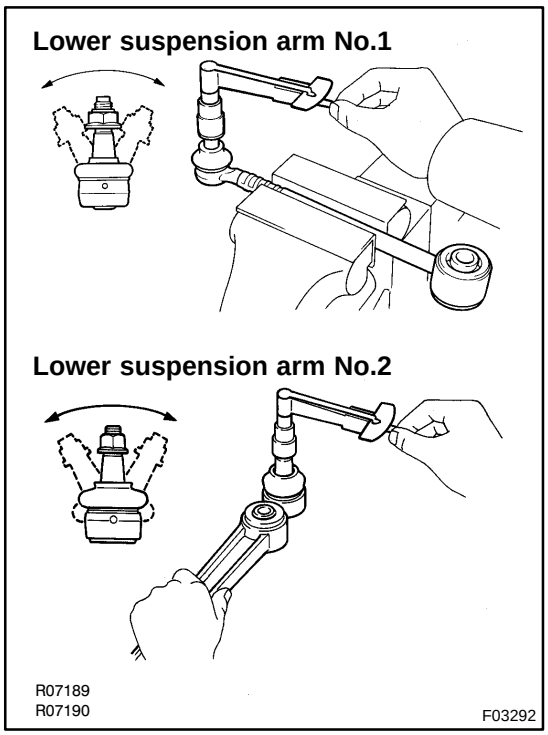

INSPECTION

INSPECT LOWER BALL JOINT FOR ROTATION CONDITION

(a) As shown in the illustration, flip the ball joint stud back and forth 5 times, before installing the nut.

(b) Using a torque wrench, turn the nut continuously one turn every 2 - 4 seconds and take the torque reading on the 5th turn.

Turning torque:
Lower suspension arm No.1 and No.2:
1.0 - 3.4 N·m (10 - 35 kgf·cm, 9 - 30 in.·lbf)

SA0QJ-01

REPLACEMENT

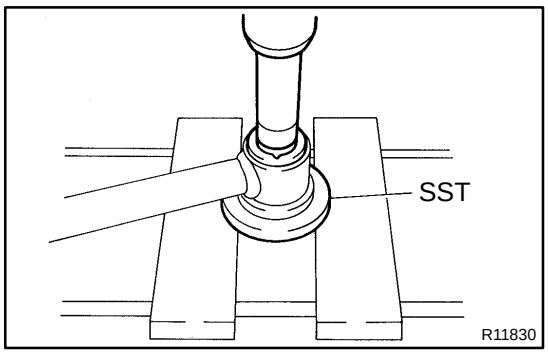

1. REMOVE BUSHING

Using SST and a deep socket wrench, remove the bushing.

SST 09506-35010

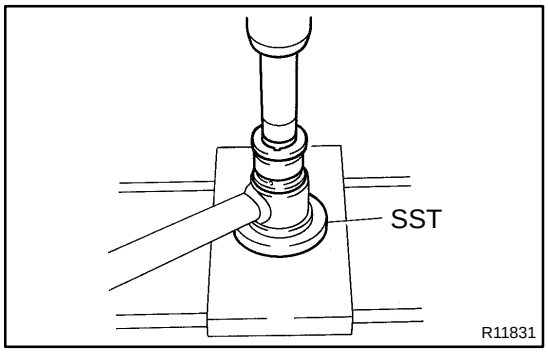

2. INSTALL NEW BUSHING

Using SST and a deep socket wrench, install a new bushing.

SST 09506-35010

HINT:

Do not apply grease or oil to the bushing.

REAR STABILIZER BAR

COMPONENTS

SA0QL-02

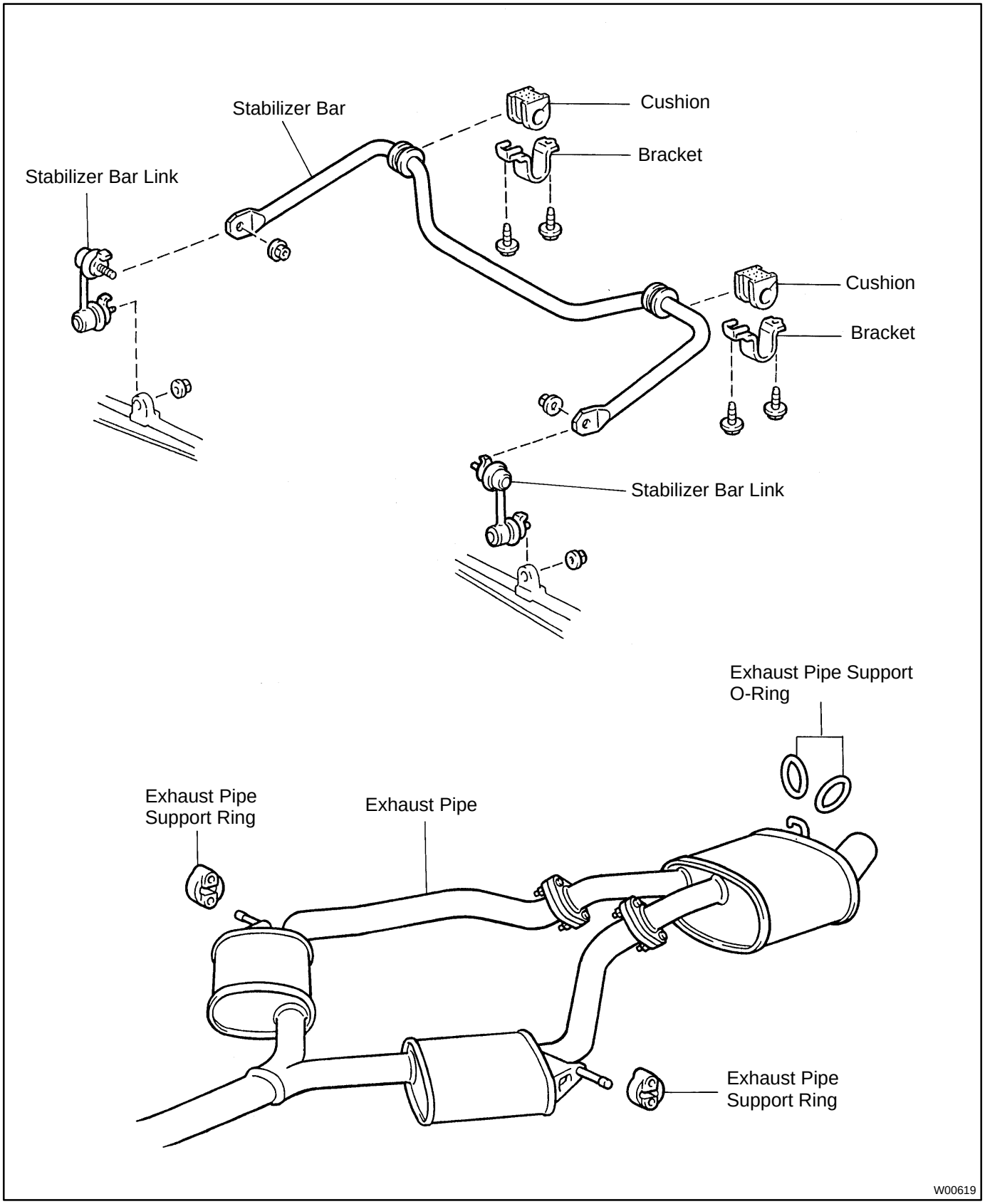

SA0QM-01

REMOVAL

1. DISCONNECT EXHAUST PIPE SUPPORTS
(See page SA-51)

2. REMOVE BOTH STABILIZER BAR LINKS

Remove the 4 nuts and 2 stabilizer bar links.

Torque: 74 N·m (750 kgf·cm, 54 ft·lbf)

3. REMOVE BOTH STABILIZER BAR BRACKETS

Remove the 4 bolts and both stabilizer bar brackets from the sub-frame.

Torque: 31 N·m (320 kgf·cm, 23 ft·lbf)

4. REMOVE BOTH CUSHIONS AND BRACKETS

Remove the 2 cushions and brackets from the stabilizer bar.

HINT:

At the time of installation, install the cushion to the outside of the bush stopper.

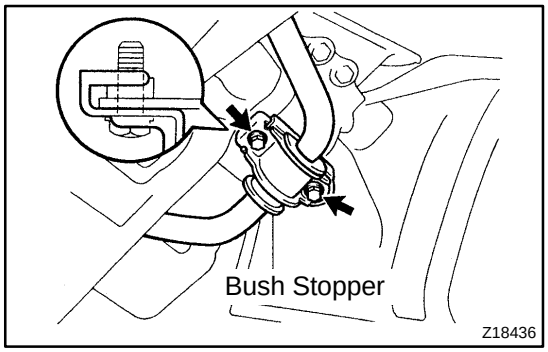

SA0QN-01

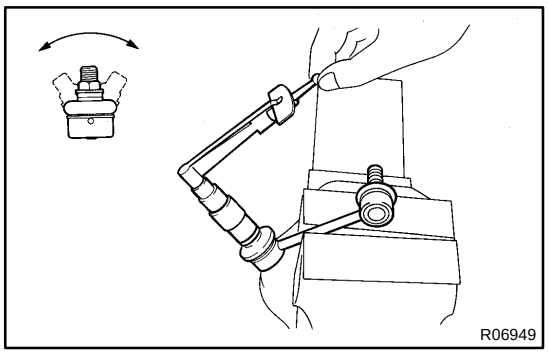

INSPECTION

INSPECT STABILIZER BAR LINK BALL JOINT FOR ROTATION CONDITION

(a) As shown in the illustration, flip the ball joint stud back and forth 5 times, before installing the nut.

(b) Using a torque wrench, turn the nut continuously taking 2 - 4 seconds per a turn and take the torque reading on the 5th turn.

Turning torque:
0.05 - 1.0 N·m (0.5 - 10 kgf·cm, 0.4 - 8.7 in.·lbf)