2003-05 ACCESSORIES & EQUIPMENT

Accessories Control Systems - Repair Procedures - Z4 (E85)

TROUBLESHOOTING

12 00... INSTRUCTIONS ON STARTING AID

Do not start the engine with help of starting sprays.

Preparation:

Conform with the following when starting engine with starting cable.

- Ensure that jump lead wires are to appropriate cross-section size.
- Only use fuse-protected jump leads.
- Check whether the current supplying battery has 12 V voltage.
- If engine is started from battery of another vehicle, ensure that there is no contact between the bodies of both vehicles.

CAUTION: Never touch ignition system components and current - dangerous high tension!

If the battery in the vehicle supplying power is weak, start the engine of this vehicle and let it run at idling speed.

Carrying out:

Always conform with the procedures to avoid injury to persons or damage to parts.

- On automatic transmission, select "P" setting, apply handbrake.
- Move the shift lever of vehicles with manual transmission into neutral and apply the parking brake.
- Ensure that the jump leads cannot get caught in rotating parts, e.g. fan.
- First connect positive terminals of both batteries with one jump lead (red).
- Use positive connection point in engine compartment for vehicles with one battery in trunk.
- Then attach second jump lead (black) to negative terminal of donor battery and to engine ground or body ground on vehicle to be started.

CAUTION: Never connect second jump lead (black) to negative terminal of battery in vehicle to be started. This would produce explosive gas which could be ignited by sparks.

Danger of explosion!

After engine of vehicle to be started has started up, first disconnect the jump lead on the negative terminal/ground connection. Then remove jump lead from positive terminals.

61 00... BATTERY

NOTE: Important notes and instructions for handling batteries can be found in:

- **Battery master document**
- **Disconnecting battery**
- **Battery charging**
- **Welding work**
- **12 00... Instructions On Starting Aid .**

Battery Care And Maintenance

In low-maintenance batteries, check the acid level at least once a year. If necessary, top up with distilled water up to the top marking.

The increasing number of electronic control units in the car reduces the self-discharging time of the battery (even in standby mode).

Battery Test

The battery acid density can be used to measure the charge state. However this test produces uncertainty caused by a design-related range of variation The acid density e.g. for a charged battery is 1.28 kg/l (in the tropical version the acid density is 1.23 kg/l).

Another interference factor is the acid lamination immediately after filling with distilled water.

Battery wear with partially sulfated and/or heavily contaminated plates will also lead to incorrect acid density test results.

61 00... BATTERY CHARGING

If a normal or quick charger is used to charge the battery, the battery must be disconnected from the vehicle electrical system and removed. This prevents damage to paintwork and upholstery.

Ideally, battery charging is performed with BMW-approved charging computers, refer to

SI 2 03 98 350 and

SI 2 06 02 854.

IMPORTANT: In order to prevent the intelligent battery sensor from malfunctioning, the charging terminals in the engine compartment must be used without fail in

vehicles from E60 and should be used if possible in other vehicles.

IMPORTANT: Before charging the battery while it is installed, first carry out a closed-circuit current test. If here the voltage is 10 V or less, one or more of the cells may be faulty or the entire battery may already be damaged. In this case, always remove the battery as escaping gases during charging could damage the interior equipment and trim. Attempt to regenerate faulty cells with low charging current.

If necessary, open existing plugs on the individual cells.

61 0 ...REPAIRING AIRBAG CABLES

IMPORTANT: Only repair those cables which show visible signs of damage. In the event of visible damage, make sure there is only one cable repair in effect after the repair work. If no visible damage can be identified, the entire cable must be replaced. When carrying out repairs to the airbag wiring harness, you must use the spare parts offered in the Electronic Parts Catalogue (EPC).

For safety regulations, see **AIR BAG SAFETY PRECAUTIONS** . Instructions for disconnecting and connecting battery, see **12 00... Instructions For Disconnecting And Connecting Battery** .

Procedure For Cable Repair In Event Of Non-Visible Damage To Wiring Harness : Disconnect plug connection on airbag module or on adapter plug. It is absolutely vital to disconnect the contacts in succession as there is a risk of them being mixed up! Cut through one cable after the other at an appropriate position, do not under any circumstances cut through both cables at the same time. Insulate cables remaining in wiring harness with insulating tape. Now disconnect plug connection on airbag control unit. Unpin contacts. Cut through one cable after the other at an appropriate position and insulate with insulating tape, do not under any circumstances cut through both cables at the same time. Pin contacts of repair cable for airbag control unit in control unit plug, assignment of repair cables is relevant. Lay repair cable in car parallel to existing airbag lead. Now pin in contacts for airbag control unit or contacts of adapter plug, assignment of repair cables is relevant. Cut off excess length of repair cable in proximity (visible area) of airbag module or of adapter plug. Twist open cables. With the connectors and shrink-fit hoses in the Electronic Parts Catalogue (EPC), reconnect the cables with the same cable colors. Twist cables again, open length (twist) must not exceed 40 mm. Secure interface (shrink-fit hoses) with insulating tape to prevent cables from twisting open. Instructions for cutting off, insulating, crimping cables, installing and removing contacts:

In Event Of Visible Damage : Expose cable at damaged areas. Cut through one cable after the other at an appropriate position and insulate cables no longer required in wiring harness with insulating tape, do not under any circumstances cut through both cables at the same time. Now, depending on the scope of work, unpin contacts either on airbag control unit/airbag module or on adapter plug. Cut off unpinned cables. Insulate cables remaining in wiring harness with insulating tape. Now pin in contacts of repair cable, assignment of repair cables is relevant. Lay repair lead in car parallel to existing airbag lead up to cutting point. Cut off excess length of repair lead. Twist open cables. Connect cables with connectors and shrink-fit hoses in Electronic Parts Catalogue (EPC), assignment of repair cables is relevant. Twist cables again, open length (twist) must not exceed 40 mm. Secure interface (shrink-fit hoses) with insulating tape to prevent cables from twisting open.

61 00... NOTES ON HANDLING OPTICAL FIBERS

CAUTION: To avoid damage when handling optical fibers, comply with the following points:

- **The minimum permitted bending radius is 25 mm**
- **Do not subject optical fibers to compressive and tensile load**
- **Protect optical fibers against the effects of heat GREATER THAN EQUAL TO 85°C (e.g. during welding work, drying work with infrared heater or hot air blower)**
- **Optical fibers are permitted to show only one junction point (bridge), replace optical fibers if necessary**

NOTE: The optical fibers are colored differently as follows:

- **Green=MOST (Media Oriented Systems Transport) optical fibers**
- **Yellow=ISIS (Intelligent Safety and Integration System) optical fibers**
- **Orange=repair optical fibers**

Follow instructions for processing cables and optical fibers.

61 00... SAFETY INSTRUCTIONS FOR HANDLING VEHICLE BATTERY

Battery acid is highly corrosive:

Do not allow any battery acid to come into contact with the eyes, the skin or clothing. Therefore wear protective clothing, gloves and goggles.

Do not tilt the battery, acid may emerge from the vent opening.

In event of contact with acid:

If acid is splashed into the eyes, rinse them immediately for several minutes with clear water. You must then consult a doctor without delay.

If acid is splashed onto the skin or clothing, neutralize it immediately with a soapy solution and rinse with lots of water.

Seek medical attention immediately if battery acid is accidentally swallowed.

Explosion hazard:

Strictly no flames, sparks, naked light or smoking!

A highly explosive mixture of electrolytic gas is created when batteries are charged. The rooms where charging

is carried out must therefore always be well ventilated.

Avoid the formation of sparks when handling cables, wiring and electrical devices.

Turn the ignition lock to the 0 position before disconnecting or connecting the battery.

Do not place tools or any similar object on the battery (danger of short-circuiting and explosion!).

61 13.. UNLOCKING AND DISCONNECTING DIFFERENT PLUG CONNECTIONS

NOTE: Examples of unlocking and disconnecting different plug connections.

Press lock and open clip in direction of arrow.

Disconnect plug connection.

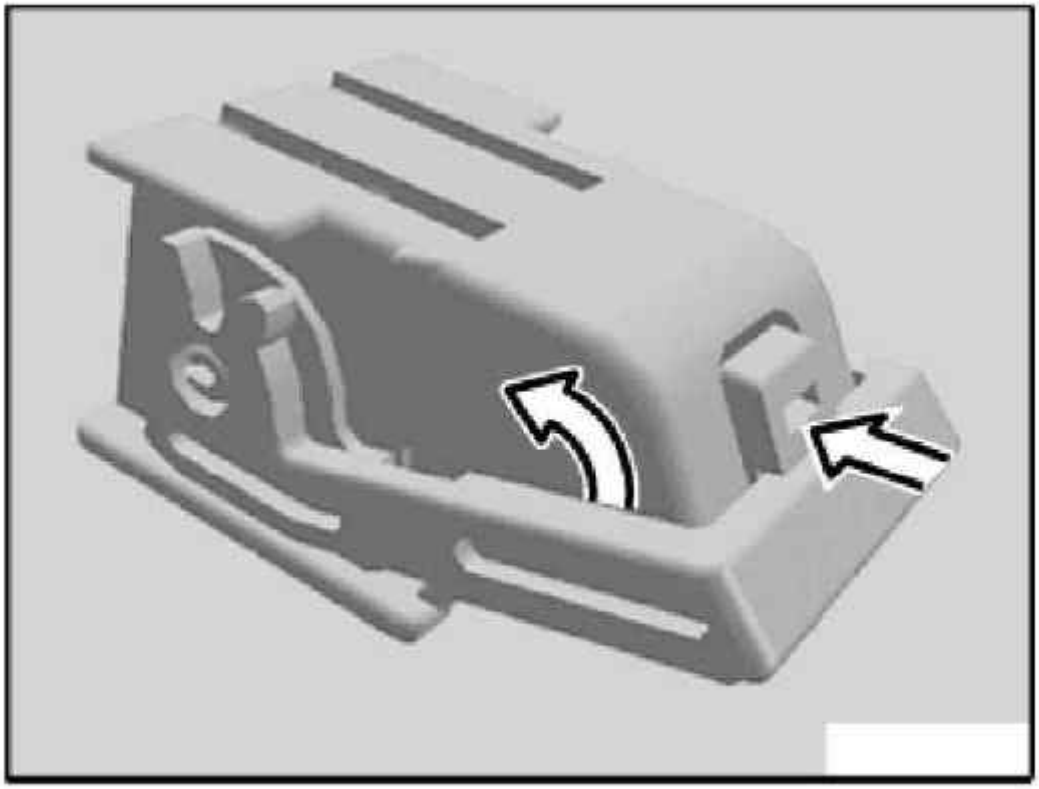

G03298391

Fig. 1: Pressing Lock And Open Clip (1 Of 2)
Courtesy of BMW OF NORTH AMERICA, INC.

Press lock and open clip in direction of arrow.

Disconnect plug connection.

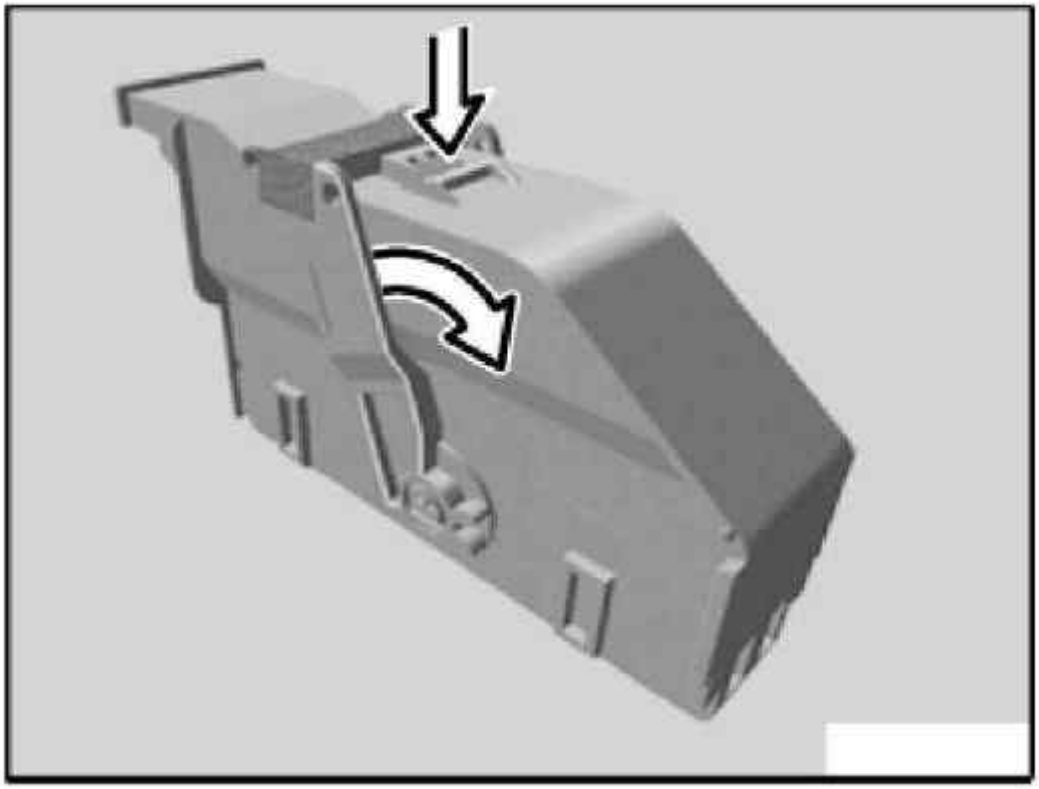

Fig. 2: Pressing Lock And Open Clip (2 Of 2)
Courtesy of BMW OF NORTH AMERICA, INC.

Open clip in direction of arrow and disconnect plug connection in direction of arrow.

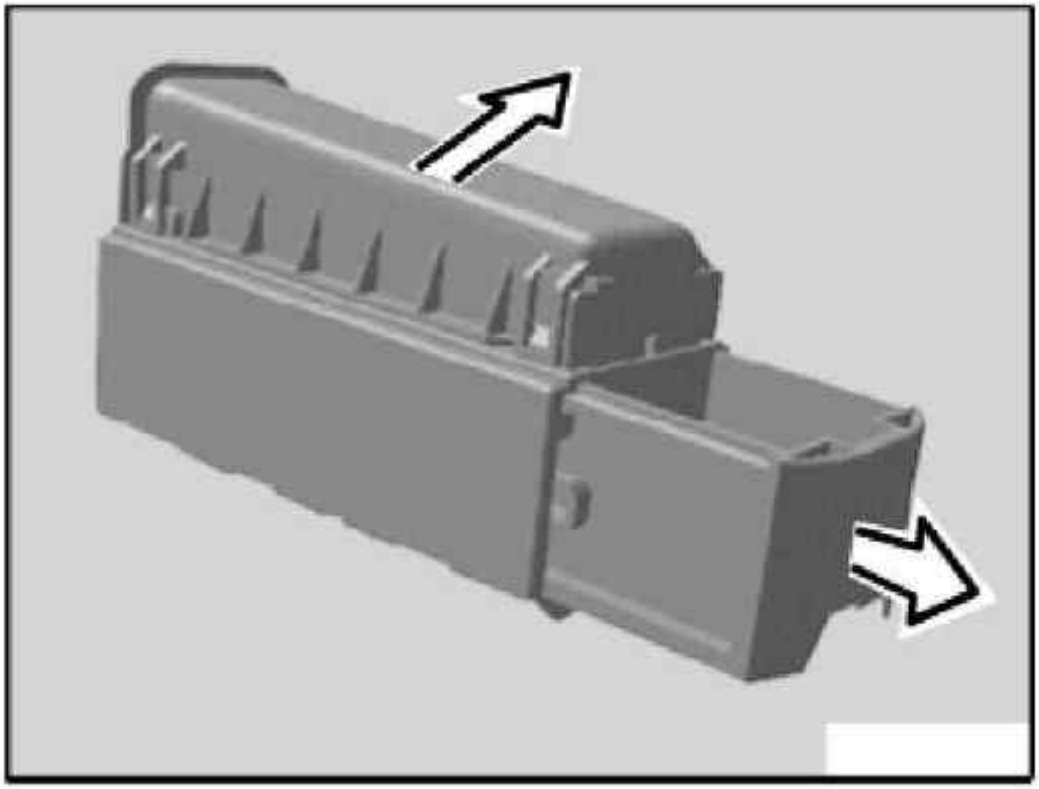

Fig. 3: Opening Clip
Courtesy of BMW OF NORTH AMERICA, INC.

Press lock and disconnect plug connection in direction of arrow.

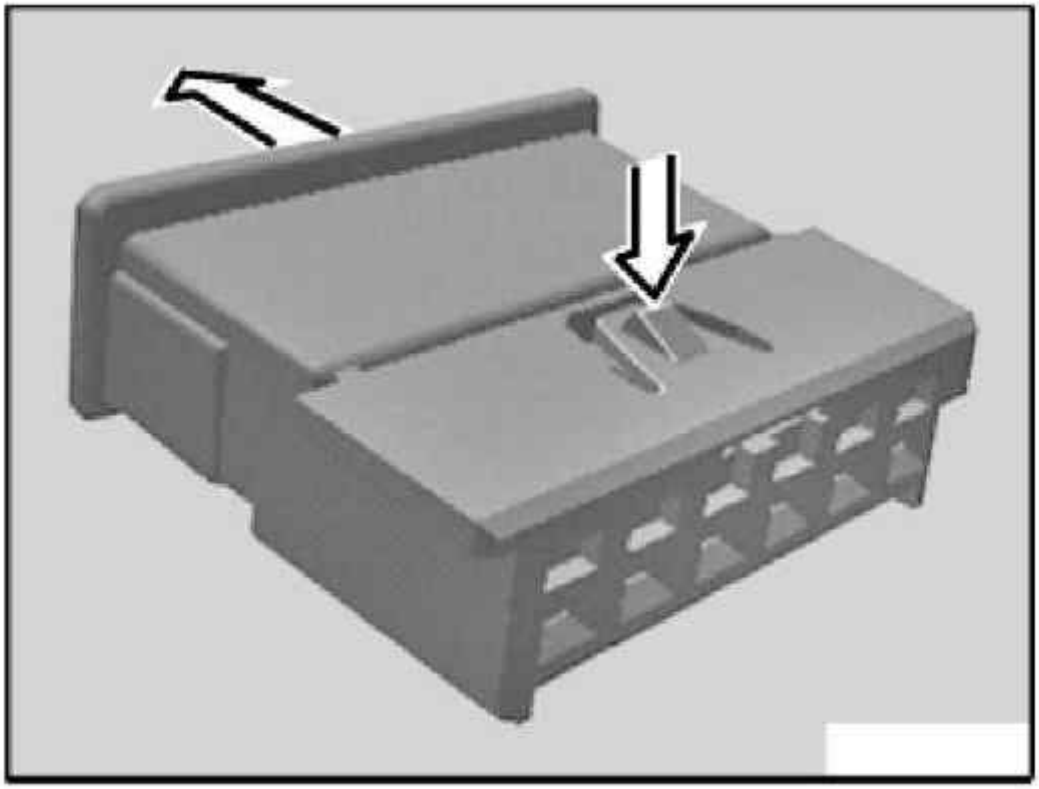

Fig. 4: Pressing Lock And Disconnecting Plug Connection (1 Of 6)
Courtesy of BMW OF NORTH AMERICA, INC.

Press lock and disconnect plug connection in direction of arrow.

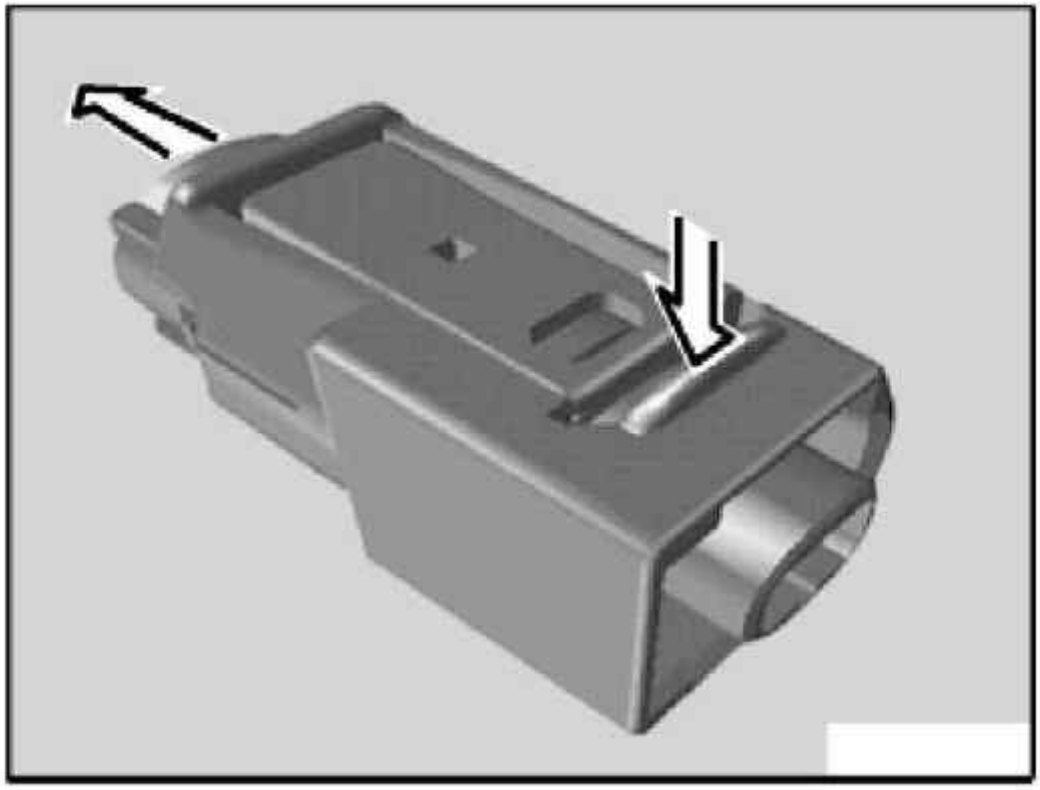

Fig. 5: Pressing Lock And Disconnecting Plug Connection (2 Of 6)
Courtesy of BMW OF NORTH AMERICA, INC.

Press lock and disconnect plug connection in direction of arrow.

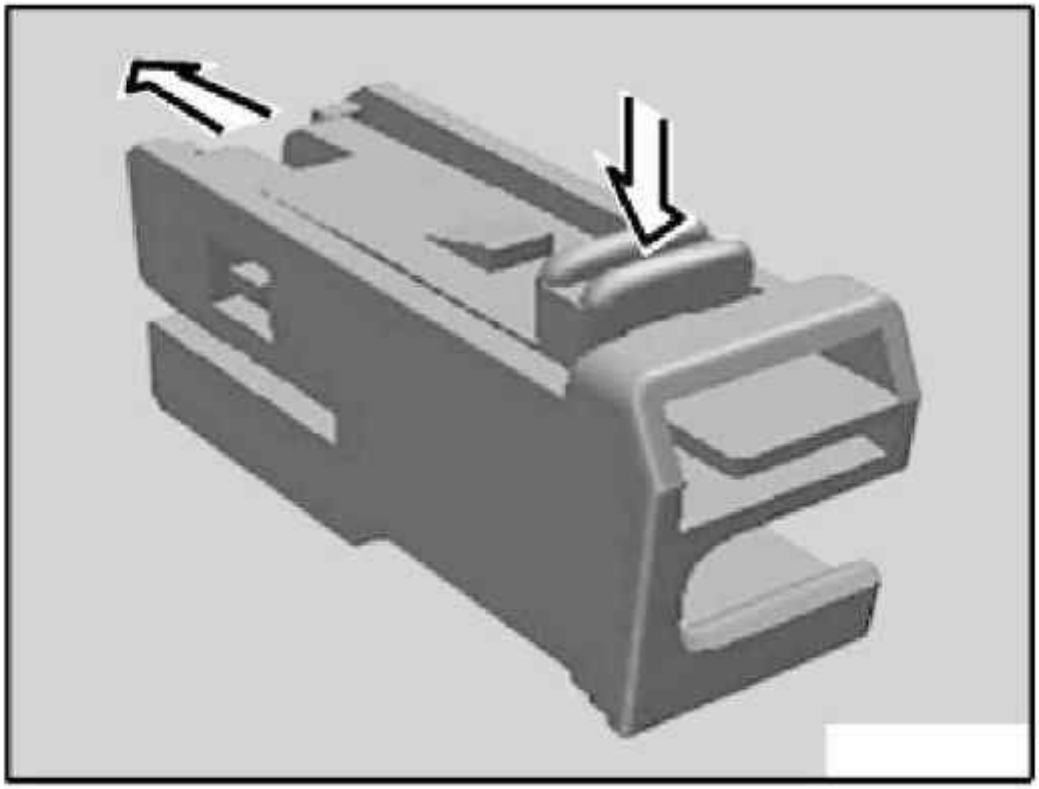

Fig. 6: Pressing Lock And Disconnecting Plug Connection (3 Of 6)
Courtesy of BMW OF NORTH AMERICA, INC.

Press lock and disconnect plug connection in direction of arrow.

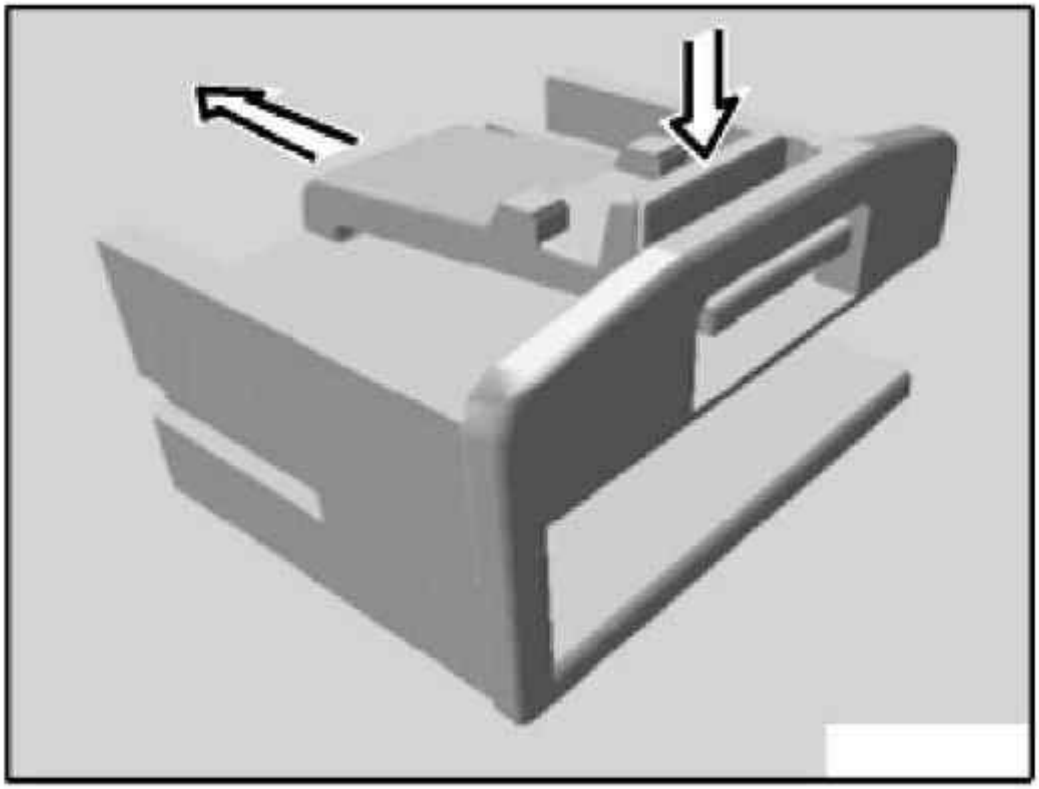

Fig. 7: Pressing Lock And Disconnecting Plug Connection (4 Of 6)
Courtesy of BMW OF NORTH AMERICA, INC.

Press lock and disconnect plug connection in direction of arrow.

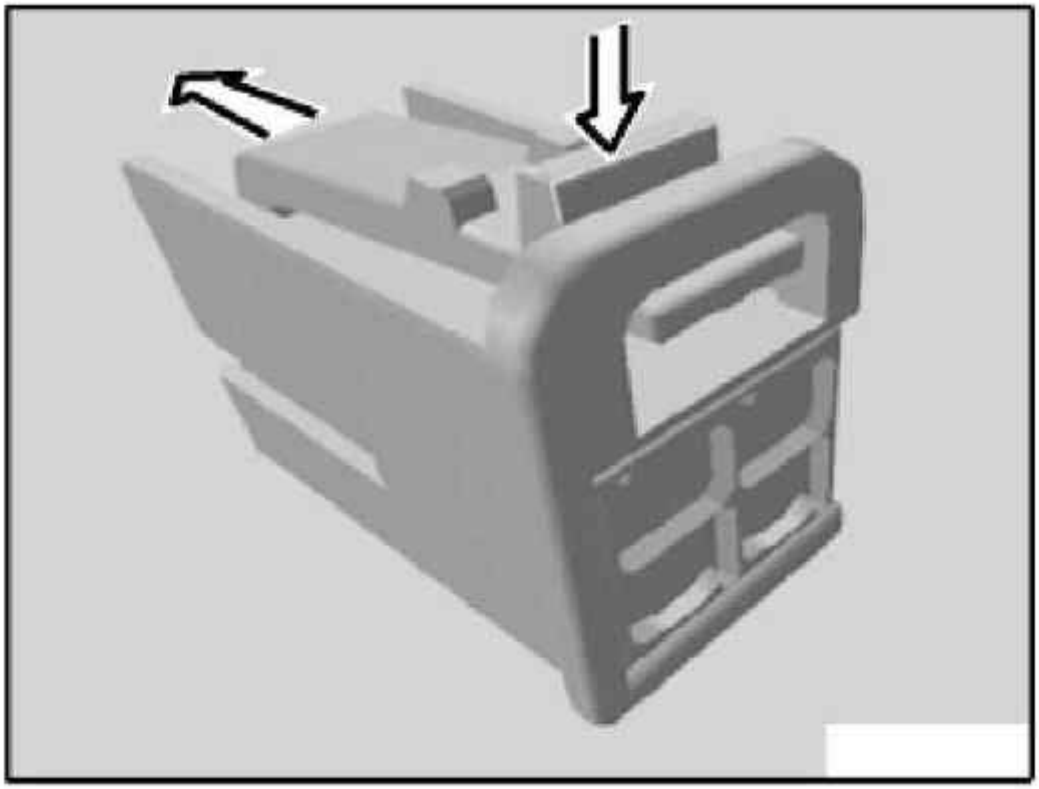

Fig. 8: Pressing Lock And Disconnecting Plug Connection (5 Of 6)
Courtesy of BMW OF NORTH AMERICA, INC.

Press lock and disconnect plug connection in direction of arrow.

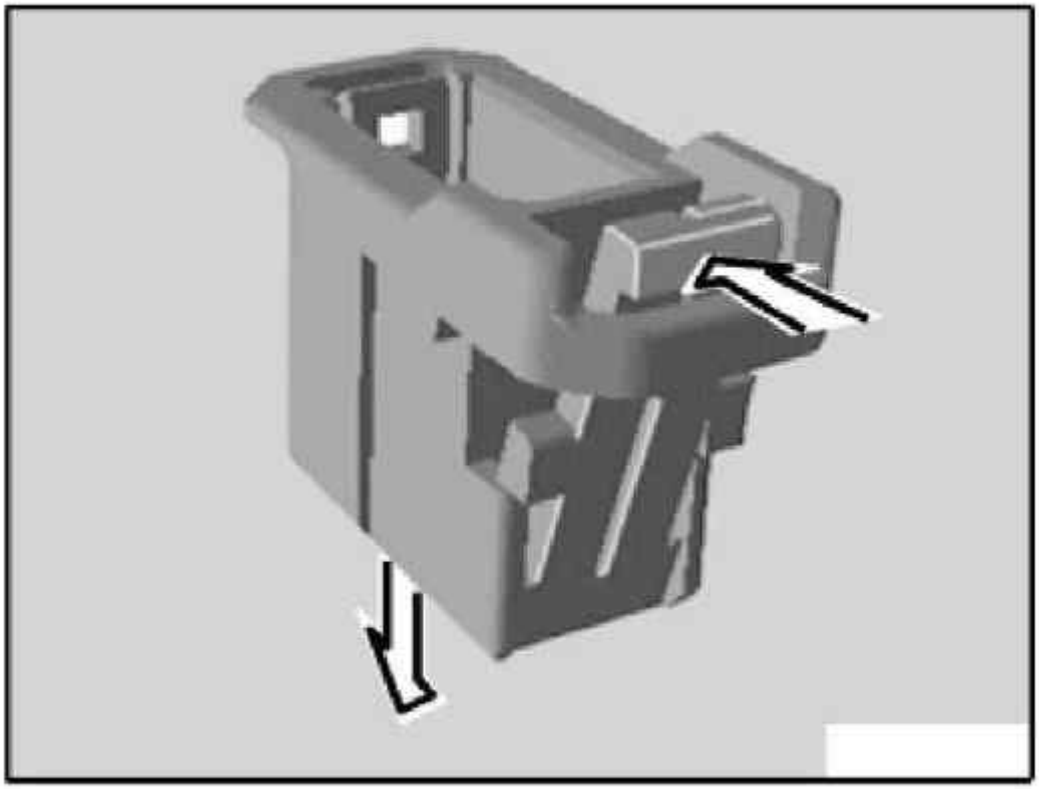

G03298399

Fig. 9: Pressing Lock And Disconnecting Plug Connection (6 Of 6)
Courtesy of BMW OF NORTH AMERICA, INC.

WIRING HARNESS

61 11... NOTES ON FRONT RIGHT REPAIR WIRING HARNESS (FROM 10/2003)

NOTE: **When installing the front right repair wiring harness, observe the following:**

- **Notes on assignment of repair connectors can be found in the DIS under COMPONENT AND SIGNAL INFORMATION/PLUG, FAN AND SOLDER CONNECTORS.**
- **US only: Unpinned cables lead to the Safety and Information Module A150a - pin them in here**

AUXILIARY CABLE

61 12 147 REPLACING LEFT WIRING HARNESS FOR FULLY AUTOMATIC EH CONVERTIBLE TOP

Necessary preliminary tasks:

- Remove convertible top. See **54 31 015 REPLACING CONVERTIBLE TOP FRAME** .

NOTE: Remove sheathing of left wiring harness in starting area up to branch.

Wiring harness consists of 3 cable looms:

- Cable loom, hydraulic unit
- Cable loom, sensors on convertible top main bearing
- Cable loom, sensor on convertible top catch

NOTE: Removal of the hydraulic unit cable loom is described in 54 34 005 REMOVING AND INSTALLING/REPLACING HYDRAULIC UNIT FOR CONVERTIBLE TOP DRIVE .

Removing cable loom for sensors on convertible top main bearing:

Installation:

Make sure sensors on left convertible top main bearing (2) to convertible top frame are correctly positioned.

Release screws (1) and remove sensors on left convertible top main bearing (2).

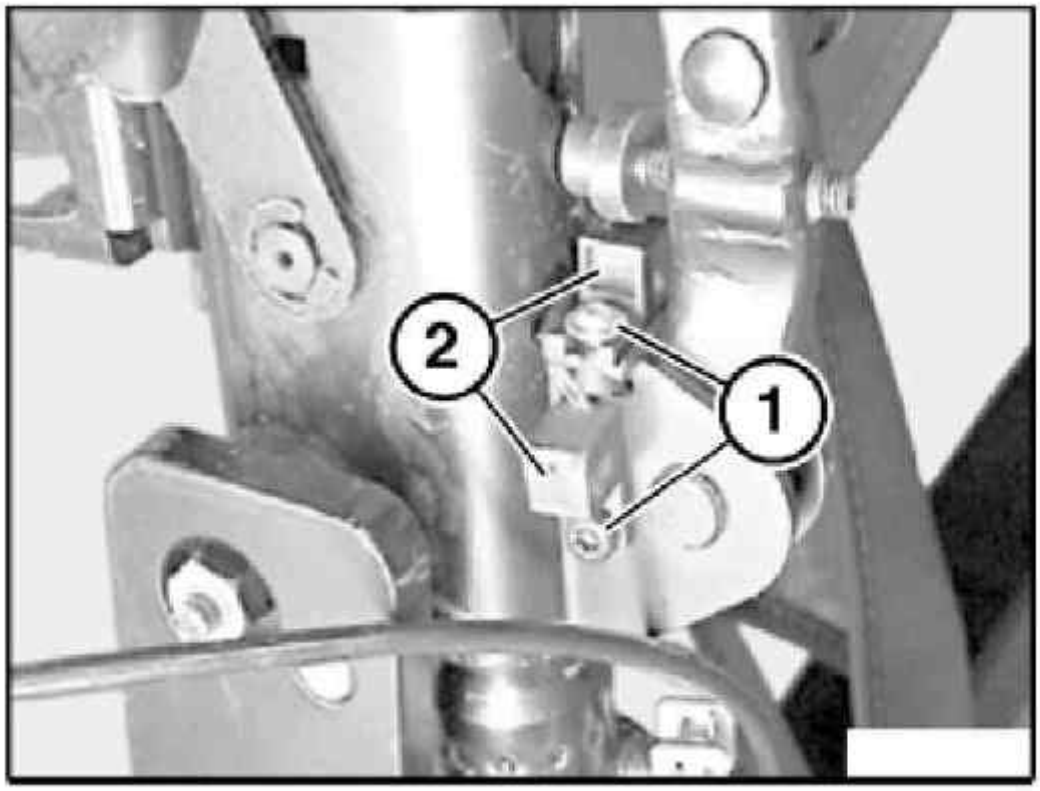

G03298400

Fig. 10: Releasing Screws
Courtesy of BMW OF NORTH AMERICA, INC.

Release screw (2).

Remove cable holder (1).

Feed cable loom for sensors on convertible top main bearing (3) out of wiring harness (4).

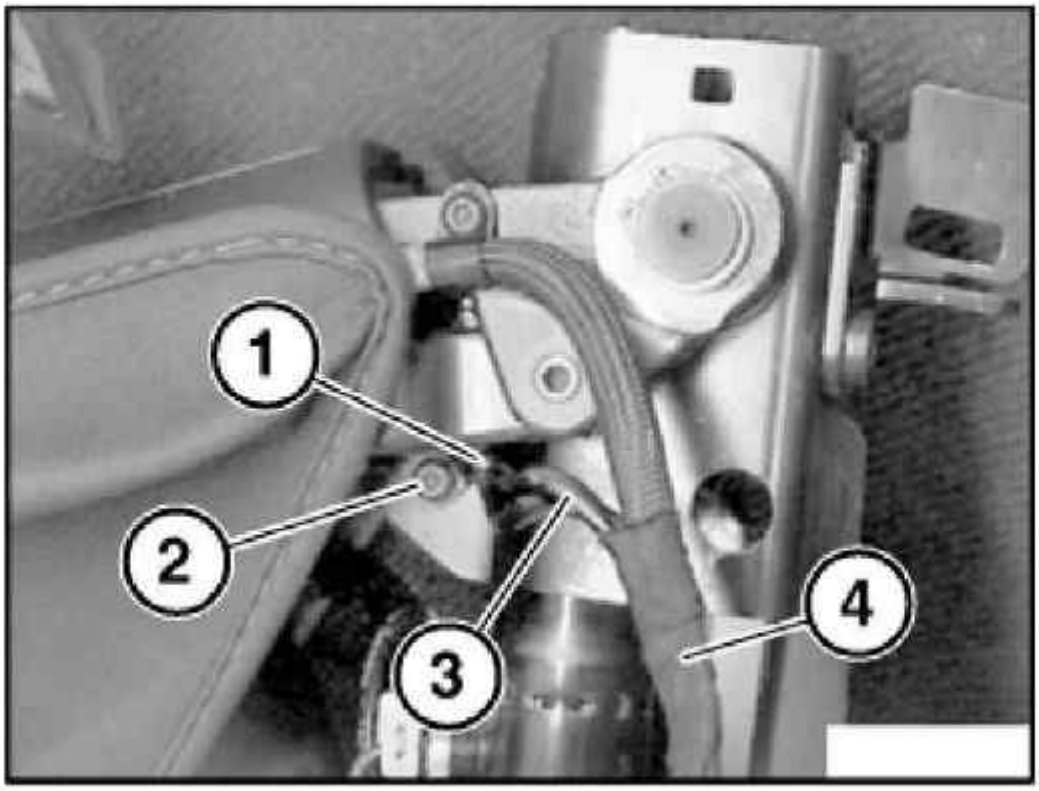

G03298401

Fig. 11: Removing Cable Holder
Courtesy of BMW OF NORTH AMERICA, INC.

Removing cable loom for sensor on convertible top catch:

Release screws (1) of front strap on convertible top strip on left.

Feed left front strap (2) out of convertible top strip.

Release the 3 screws of the cable holders behind the convertible top trim and remove the cable holders.

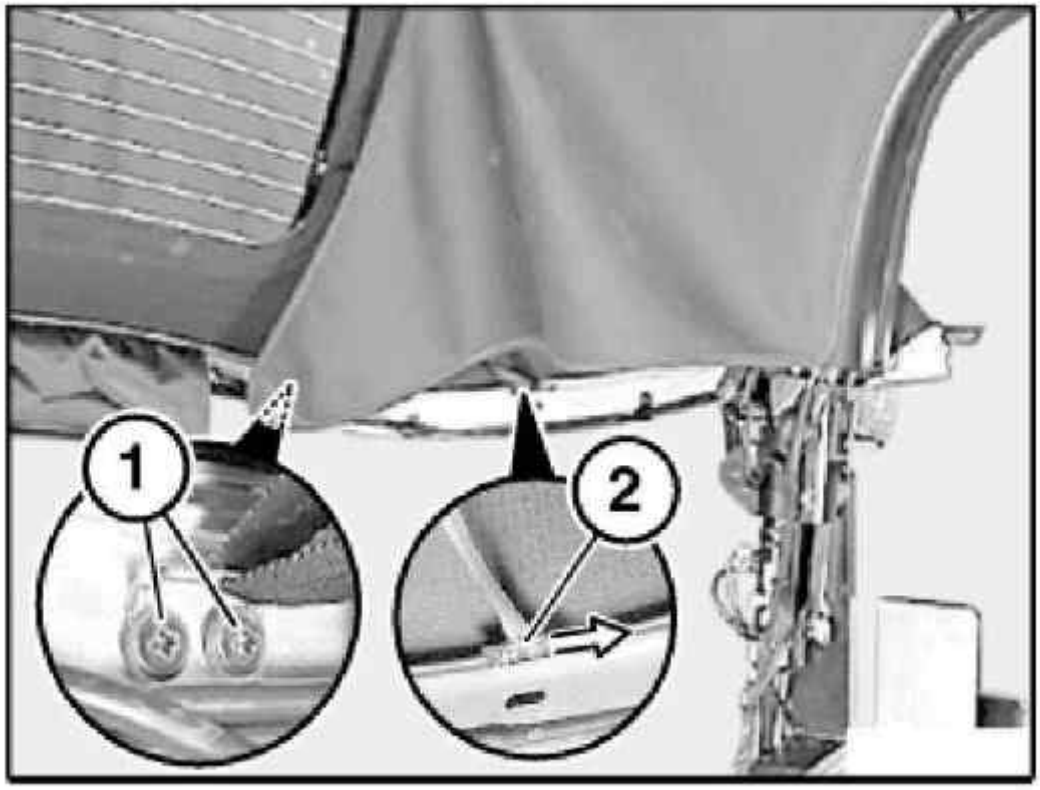

G03298402

Fig. 12: Releasing Screws Of Front Strap On Convertible Top Strip On Left
Courtesy of BMW OF NORTH AMERICA, INC.

Pull rubber seal (3) away from frame (2) as illustrated.

Cut through cable band (1) and remove cable loom (4) behind from holder.

Installation:

Lay cable loom (4) correctly and use a new cable band.

Make sure rubber seal (3) is correctly installed in groove on frame (2).

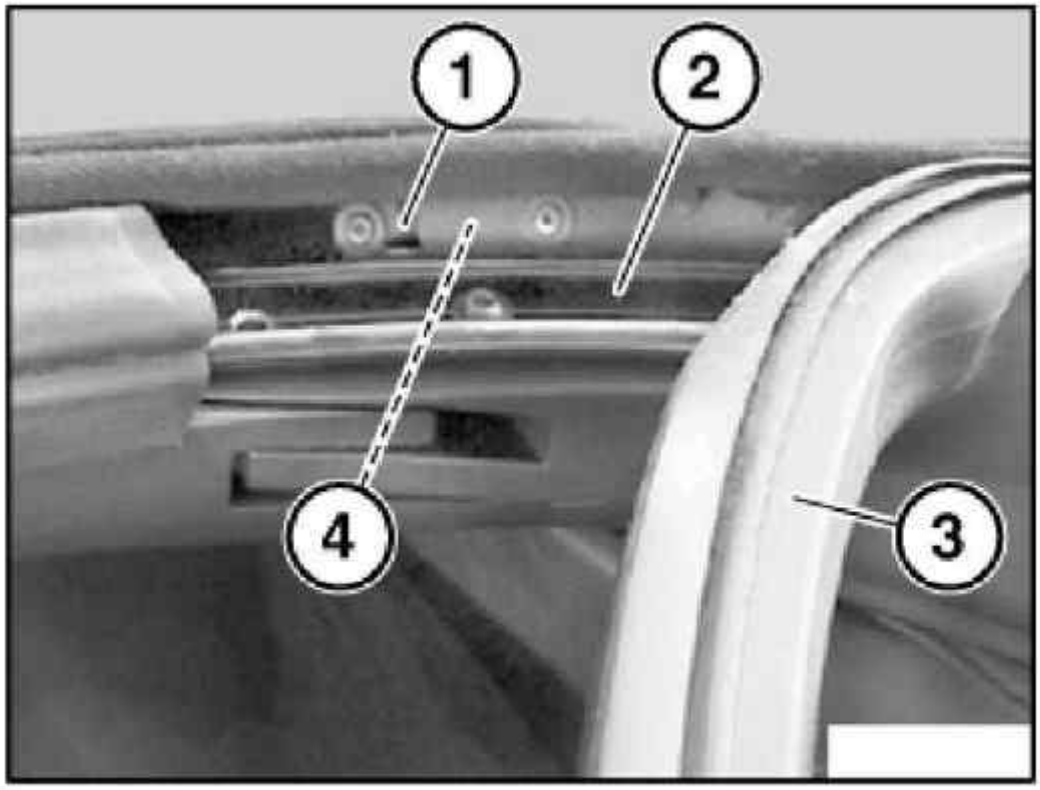

G03298403

Fig. 13: Identifying Pull Rubber Seal
Courtesy of BMW OF NORTH AMERICA, INC.

Remove trim on convertible top catch. See **54 34 125 REMOVING AND INSTALLING/REPLACING TRIM ON CONVERTIBLE TOP CATCH** .

Release screws (1) and remove cable holder.

Unlock plug connections (3) and disconnect.

Remove adhesive tape (4) and feed cable loom (2) out of convertible top.

Installation:

Adhesive tape (4) serves to secure the cable loom (2)".

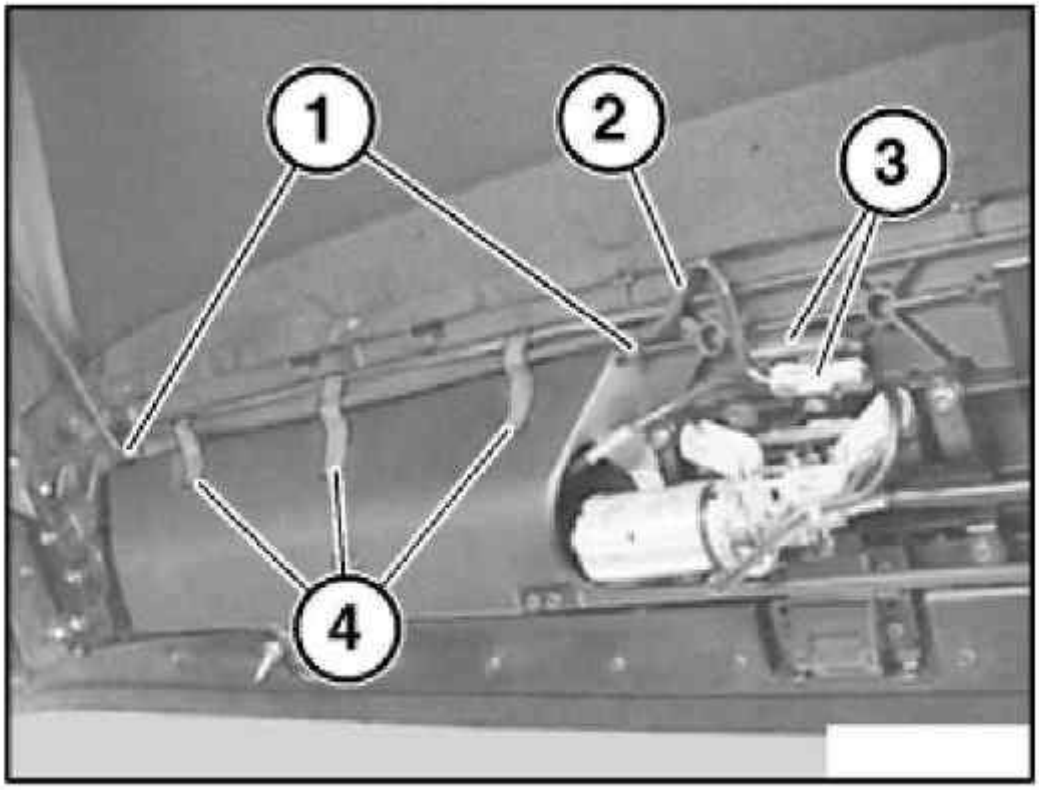

G03298404

Fig. 14: Unlocking Plug Connections And Disconnecting
Courtesy of BMW OF NORTH AMERICA, INC.

61 12 160 REPLACING WIRING HARNESS FOR HEATED REAR WINDOW

Necessary preliminary tasks:

- Remove convertible top . See **54 31 015 REPLACING CONVERTIBLE TOP FRAME** .

Disconnect plug connection (4).

Feed out cable loom (2) in direction of arrow out of pocket (1).

Release screws (3) and open cable holders (approx. 10 x) along aluminum rail.

Feed out and remove wiring harness for heated rear window.

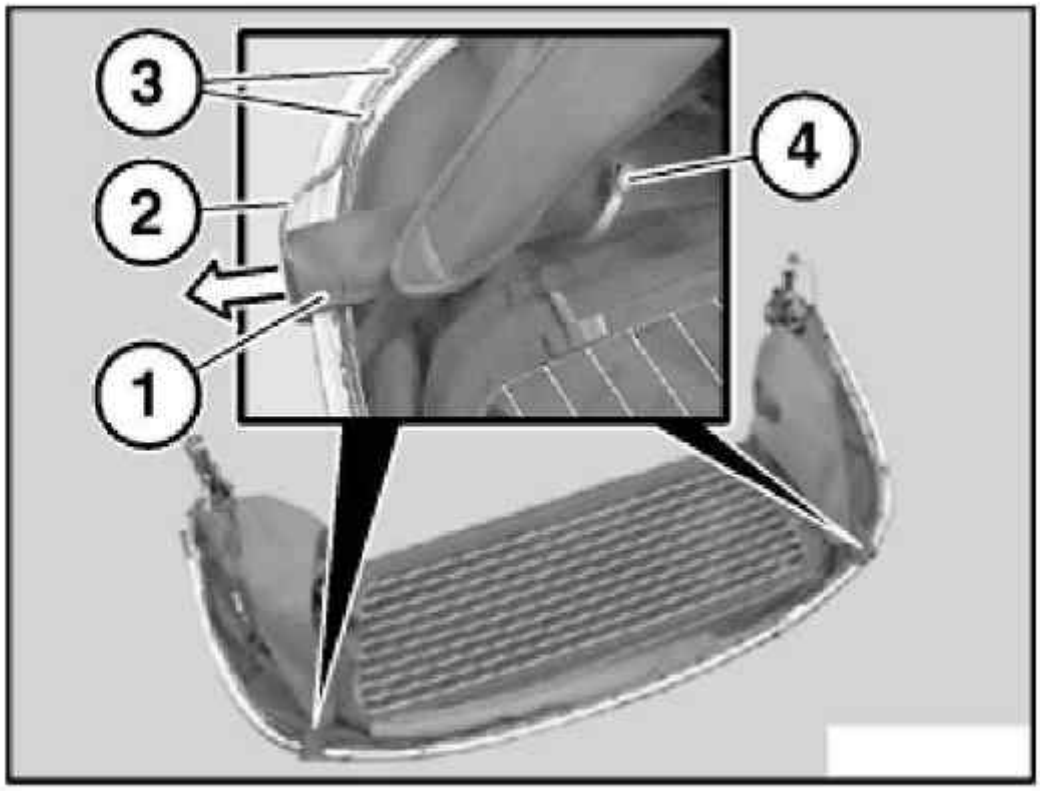

G03298405

Fig. 15: Releasing Screws
Courtesy of BMW OF NORTH AMERICA, INC.

WARNING: **Risk of trapping in the following work step (close convertible top).**

Mechanical convertible top only:

Cut open cable tie (1).

Release screw (2) and feed out microswitch (3) in direction of arrow.

To simplify this operation, move convertible top (4) into "Close" position slightly.

Installation:

Replace cable ties.

Align microswitch.

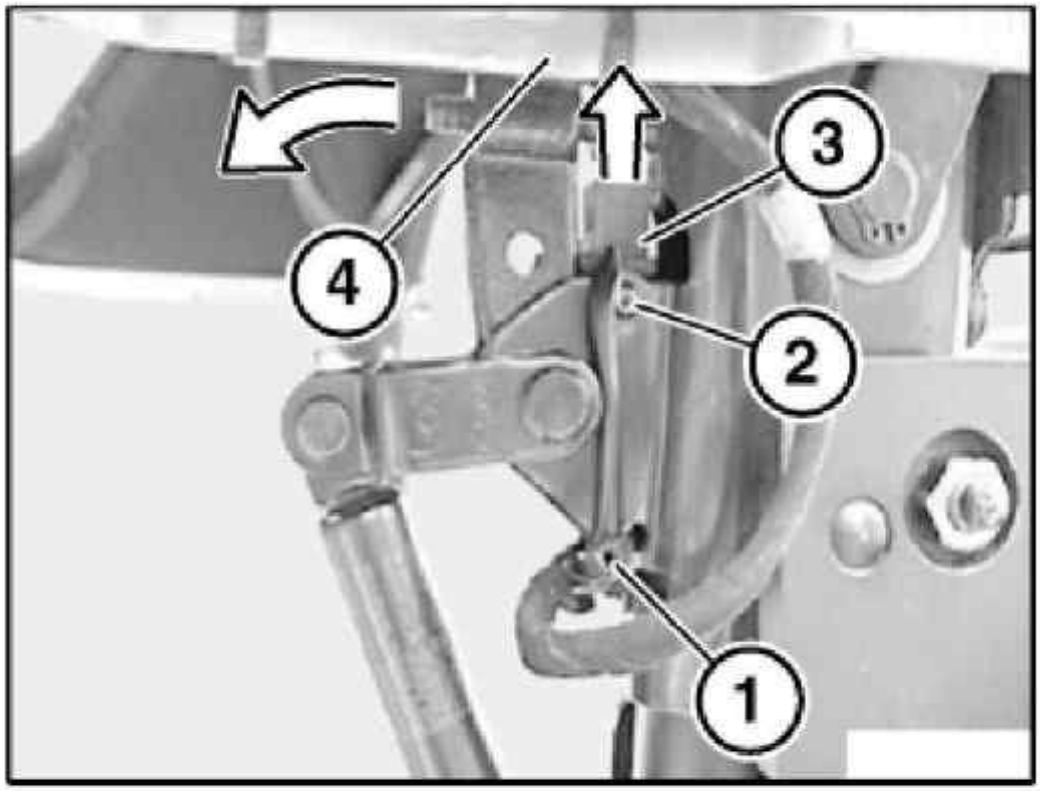

G03298406

Fig. 16: Cutting Open Cable Tie
Courtesy of BMW OF NORTH AMERICA, INC.

61 13.. UNLOCKING AND DISCONNECTING DIFFERENT PLUG CONNECTIONS

NOTE: Examples of unlocking and disconnecting different plug connections.

Press lock and open clip in direction of arrow.

Disconnect plug connection.

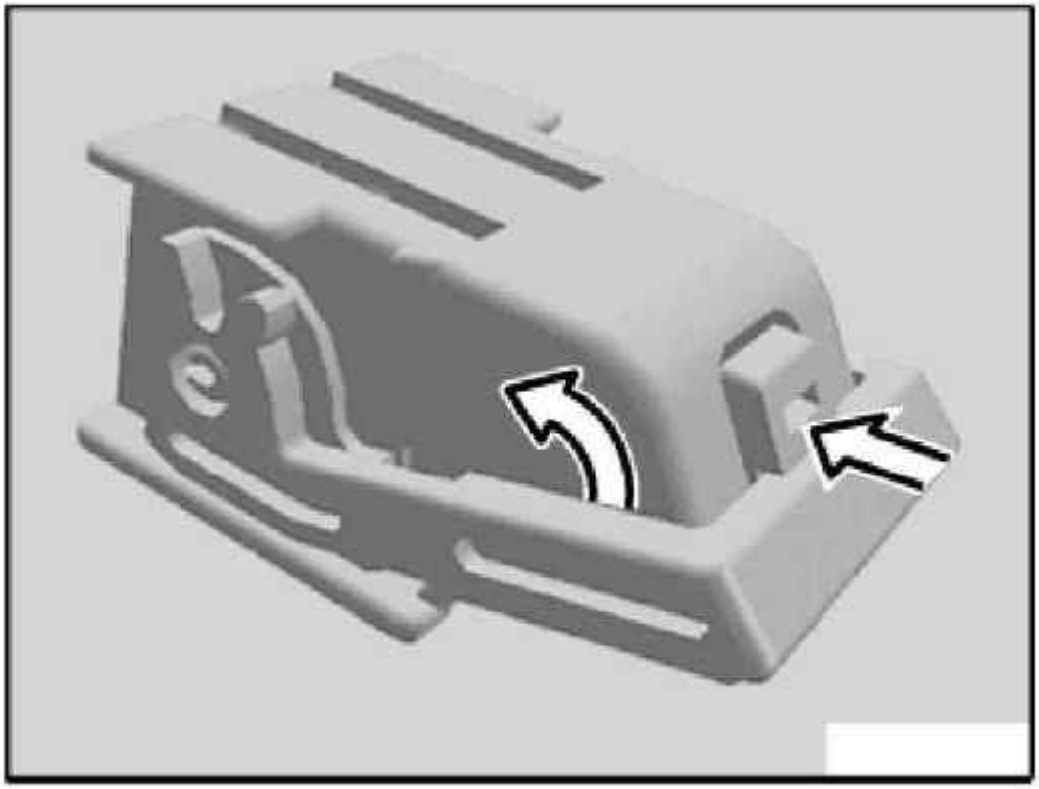

Fig. 17: Pressing Lock And Open Clip (1 Of 2)
Courtesy of BMW OF NORTH AMERICA, INC.

Press lock and open clip in direction of arrow.

Disconnect plug connection.

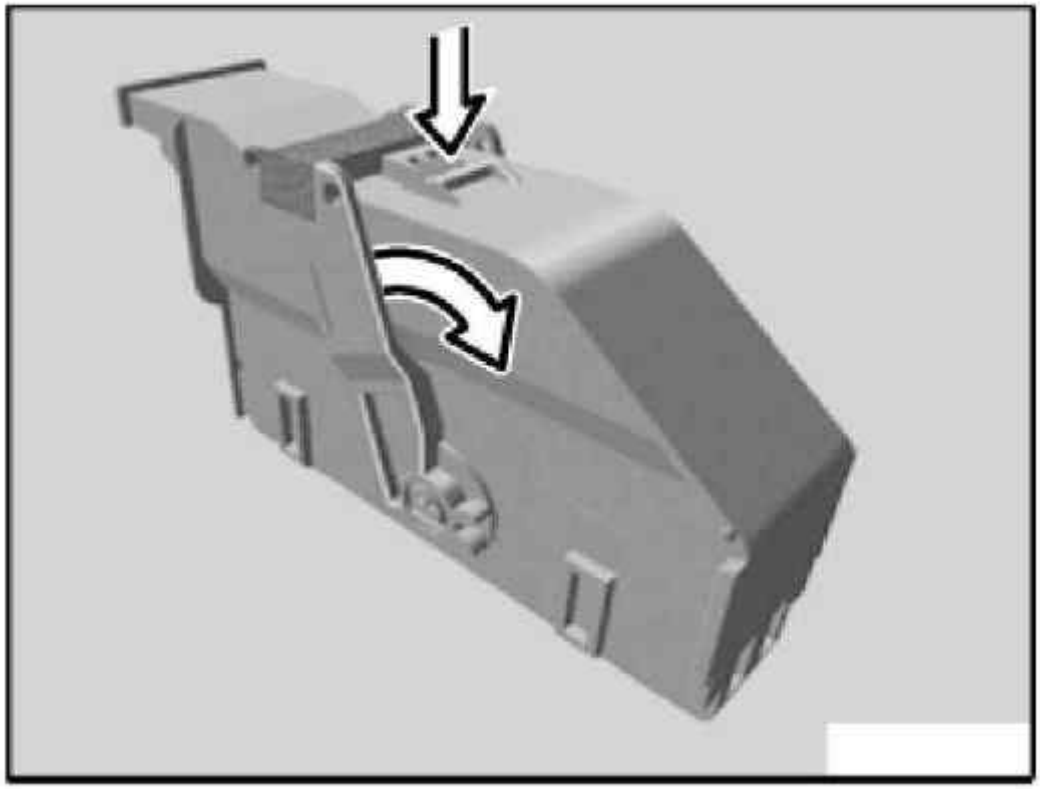

Fig. 18: Pressing Lock And Open Clip (2 Of 2)
Courtesy of BMW OF NORTH AMERICA, INC.

Open clip in direction of arrow and disconnect plug connection in direction of arrow.

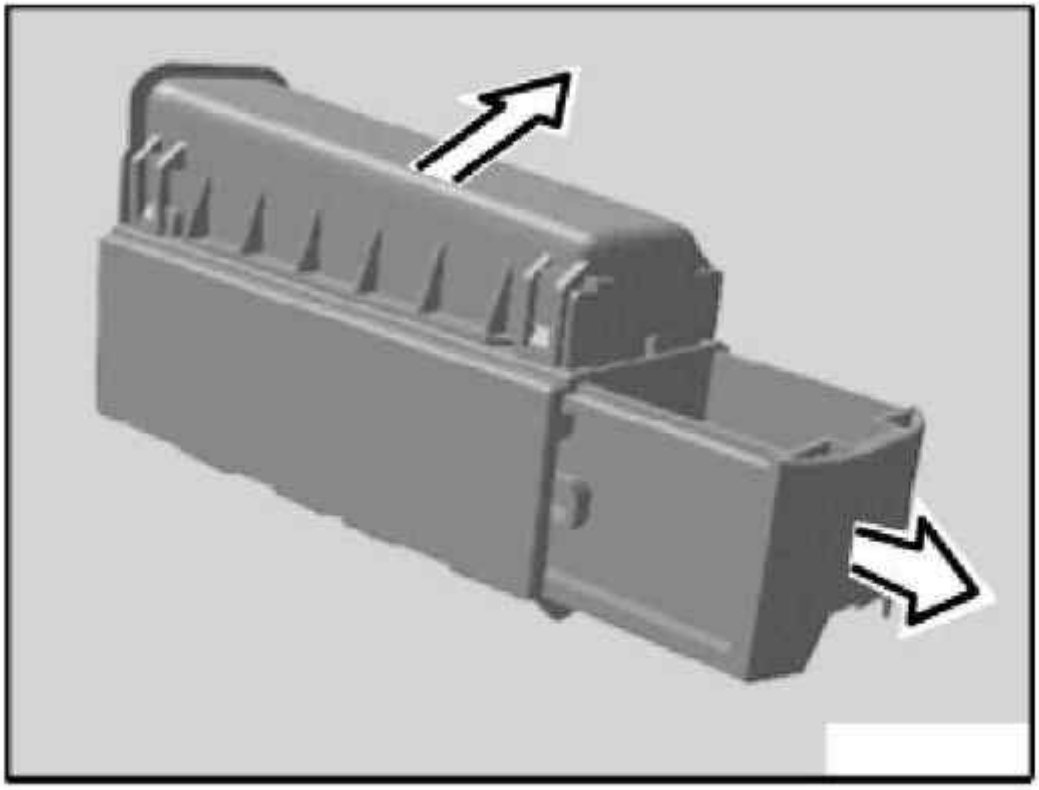

Fig. 19: Opening Clip
Courtesy of BMW OF NORTH AMERICA, INC.

Press lock and disconnect plug connection in direction of arrow.

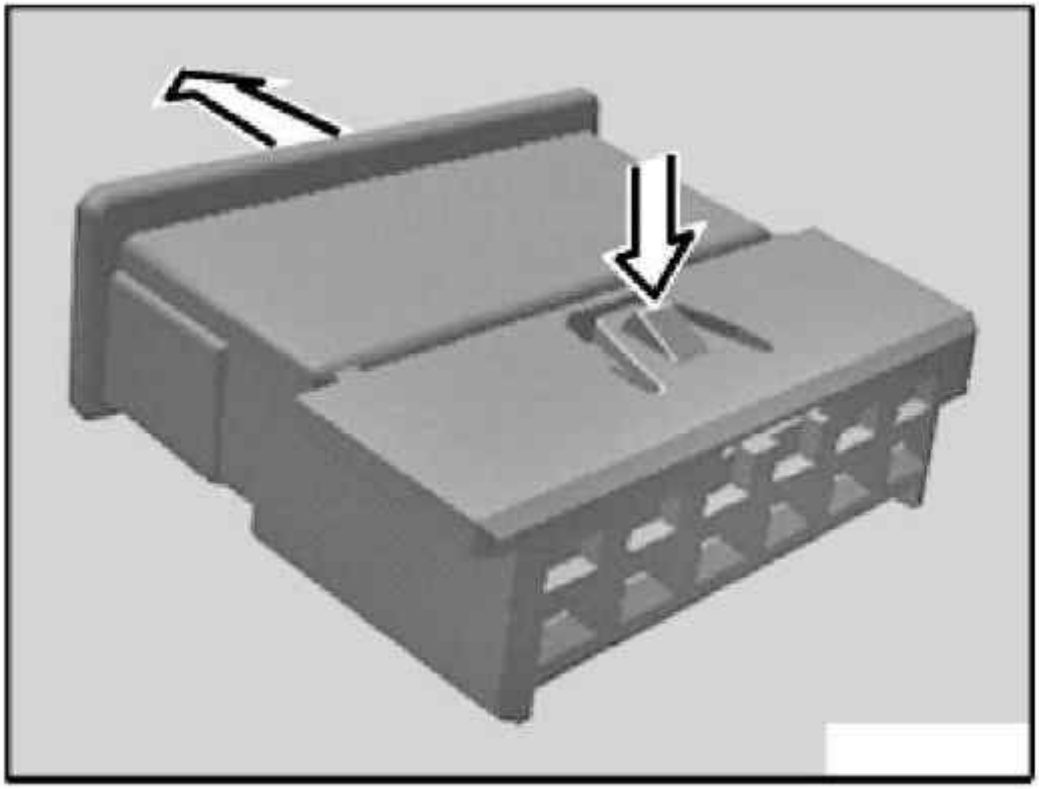

Fig. 20: Pressing Lock And Disconnecting Plug Connection (1 Of 6)
Courtesy of BMW OF NORTH AMERICA, INC.

Press lock and disconnect plug connection in direction of arrow.

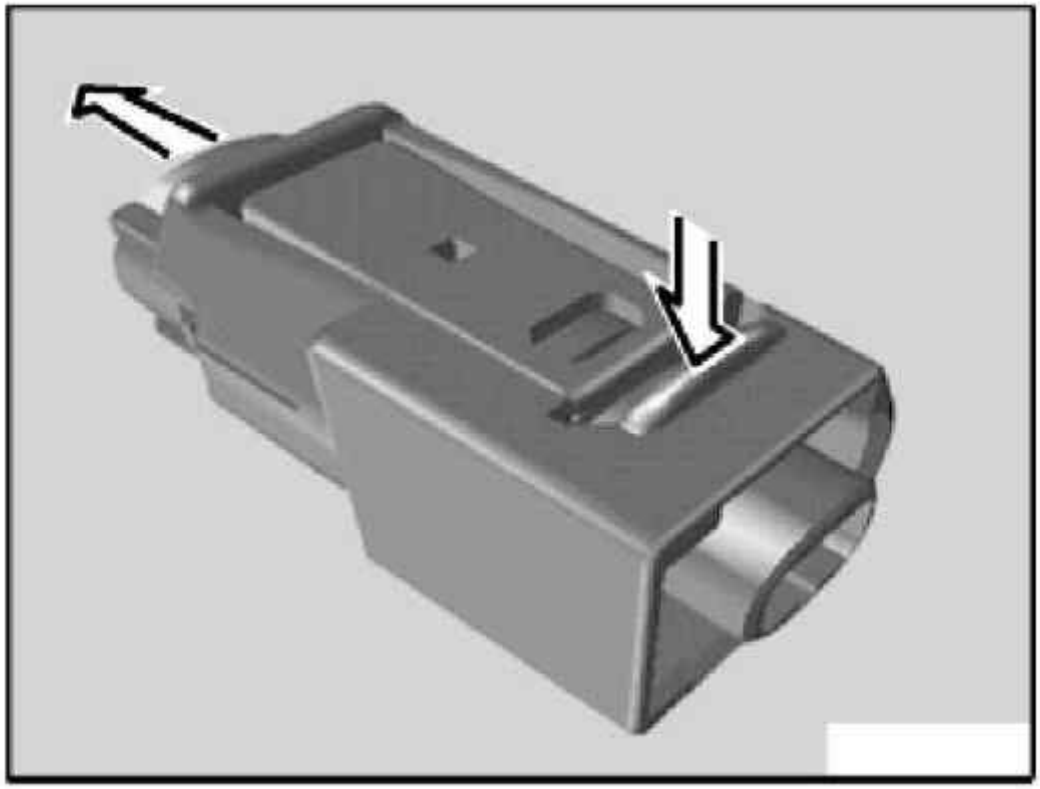

Fig. 21: Pressing Lock And Disconnecting Plug Connection (2 Of 6)
Courtesy of BMW OF NORTH AMERICA, INC.

Press lock and disconnect plug connection in direction of arrow.

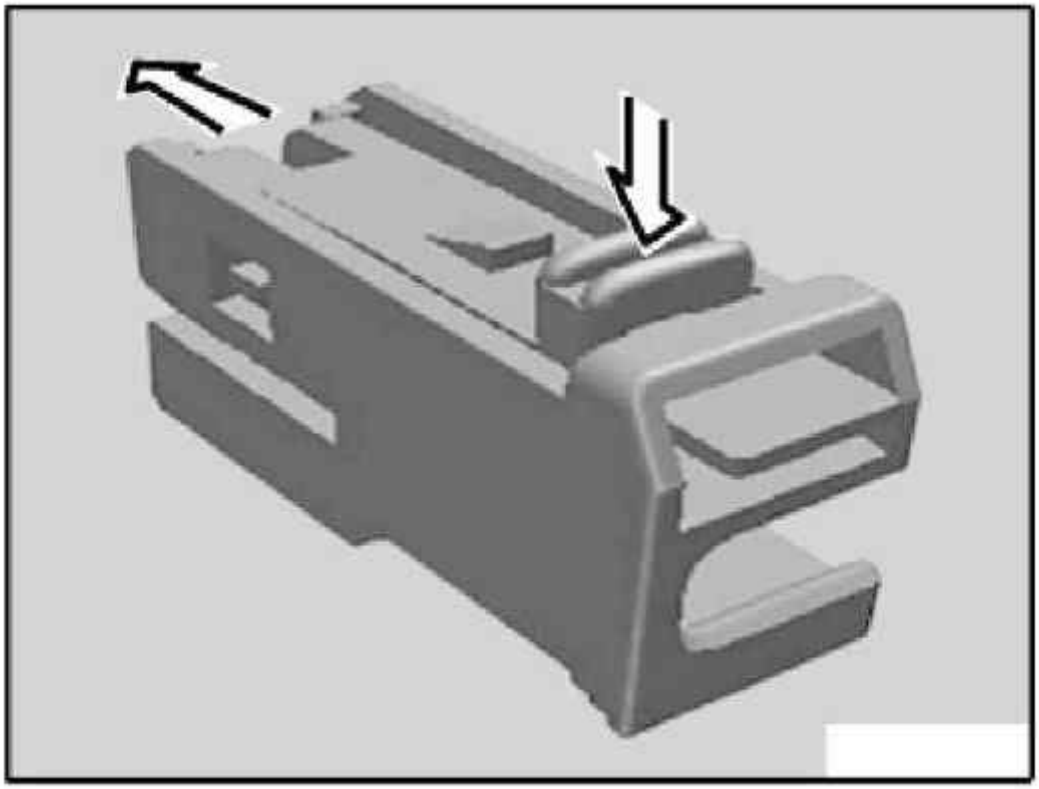

Fig. 22: Pressing Lock And Disconnecting Plug Connection (3 Of 6)
Courtesy of BMW OF NORTH AMERICA, INC.

Press lock and disconnect plug connection in direction of arrow.

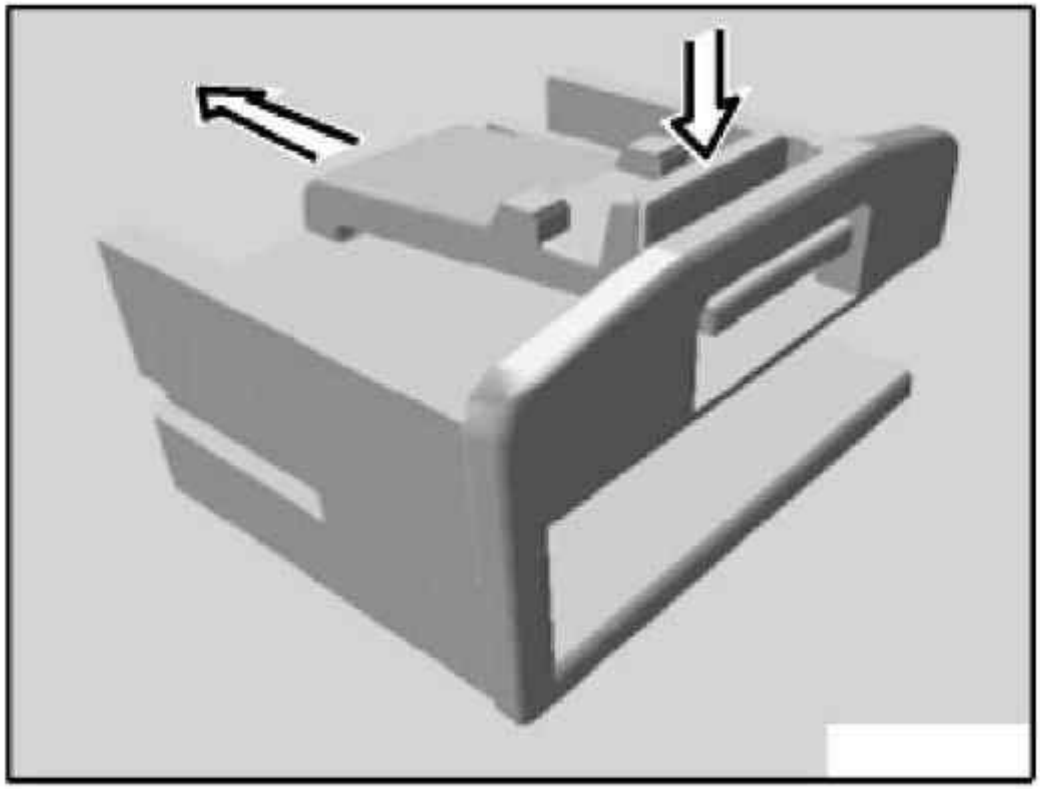

Fig. 23: Pressing Lock And Disconnecting Plug Connection (4 Of 6)
Courtesy of BMW OF NORTH AMERICA, INC.

Press lock and disconnect plug connection in direction of arrow.

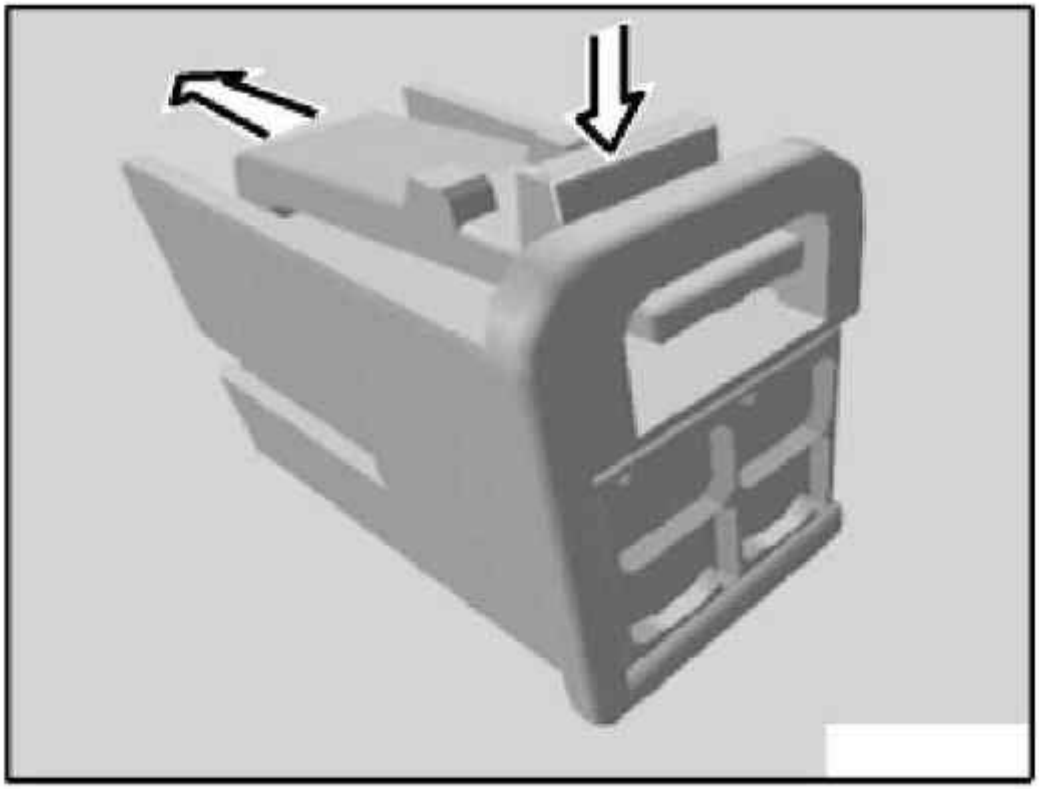

Fig. 24: Pressing Lock And Disconnecting Plug Connection (5 Of 6)
Courtesy of BMW OF NORTH AMERICA, INC.

Press lock and disconnect plug connection in direction of arrow.

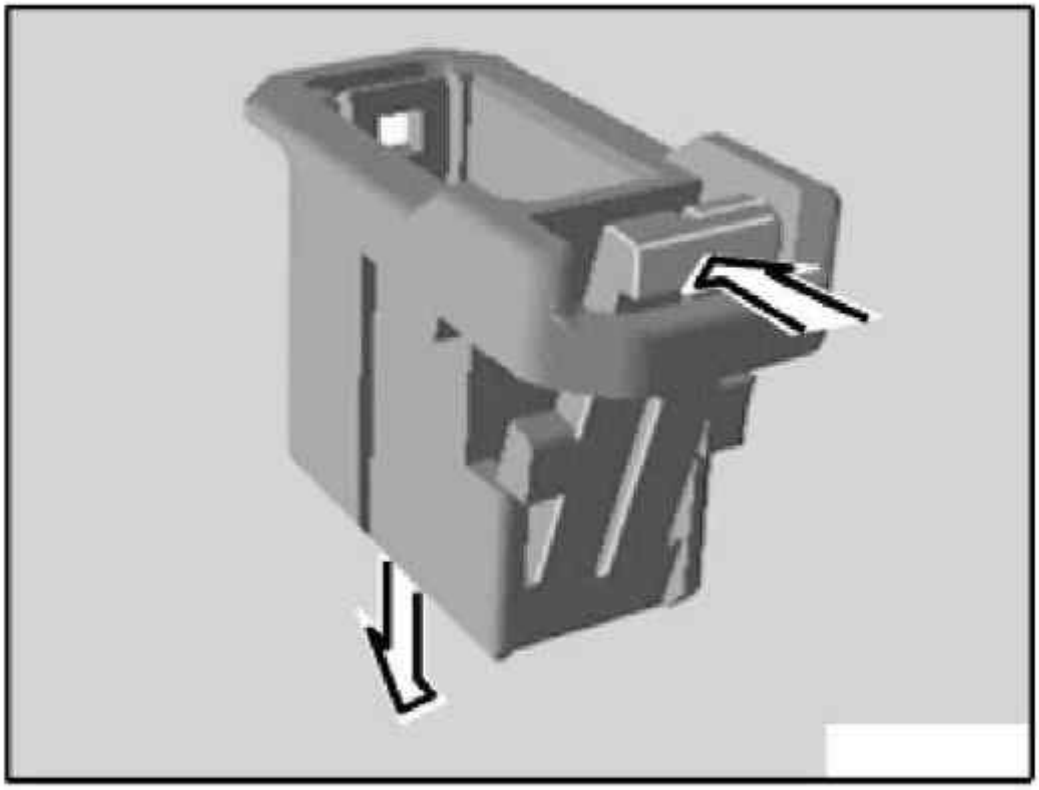

G03298415

Fig. 25: Pressing Lock And Disconnecting Plug Connection (6 Of 6)
Courtesy of BMW OF NORTH AMERICA, INC.

PLUG CONNECTION, TERMINALS

61 00... NOTES ON HANDLING OPTICAL FIBERS

CAUTION: To avoid damage when handling optical fibers, comply with the following points:

- **The minimum permitted bending radius is 25 mm**
- **Do not subject optical fibers to compressive and tensile load**
- **Protect optical fibers against the effects of heat GREATER THAN EQUAL TO 85°C (e.g. during welding work, drying work with infrared heater or hot air blower)**
- **Optical fibers are permitted to show only one junction point (bridge), replace optical fibers if necessary**

NOTE: The optical fibers are colored differently as follows:

- **Green=MOST (Media Oriented Systems Transport) optical fibers**
- **Yellow=ISIS (Intelligent Safety and Integration System) optical fibers**
- **Orange=repair optical fibers**

Follow instructions for processing cables and optical fibers.

61 13 SPECIAL TOOLS FOR WIRING HARNESS REPAIRS

Special tools required:

- 61 1 150
- 61 1 190
- 61 4 320
- 61 8 084
- 61 9 020
- 61 9 029
- 61 9 041
- 61 9 042
- 61 9 043
- 61 9 044

Repair ranges I, II, III for vehicle electrical system

I. Order No.: 81 24 9 408 080
II. Order No.: 81 24 9 408 300
III. Order No.: 81 24 9 408 400

Sourcing reference: BMW Parts.

G03298416

Fig. 26: Displaying Repair Ranges I, II, III
Courtesy of BMW OF NORTH AMERICA, INC.

Repair range IV for vehicle electrical system, special tool 61 9 020:

Contents:

- Special tool 61 9 041 (hand pliers)
- Special tool 61 9 042 (matrix)

- Special tool 61 9 043 (wire stripper)
- Special tool 61 9 044 (matrix)

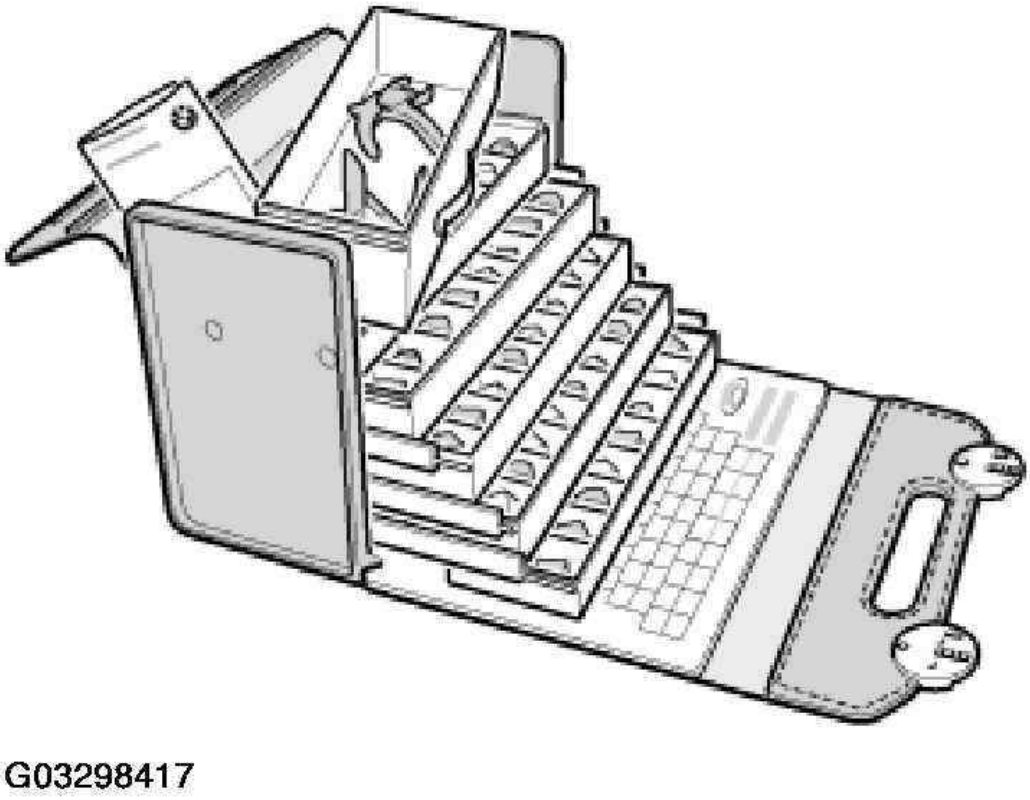

Fig. 27: Displaying Repair Range IV
Courtesy of BMW OF NORTH AMERICA, INC.

Special tool 61 9 043 (wire stripper with wire cutter) for cutting and stripping wires.

Handling:

Cutting to length and stripping insulating from cables

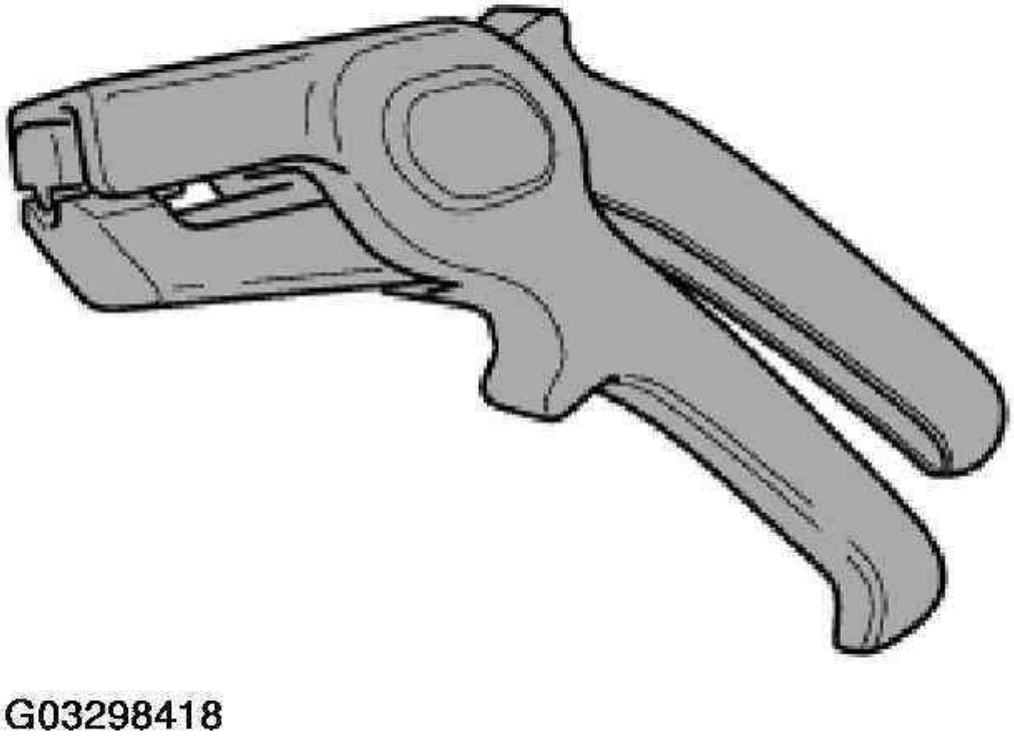

Fig. 28: Identifying Special Tool 61 9 043 Wire Stripper With Wire Cutter
Courtesy of BMW OF NORTH AMERICA, INC.

Special tool 61 9 041 (hand pliers) with special tool 61 9 042 (matrix) for crimping connectors and contact tubes for fan connectors up to a wire cross-section of 2.5 mm^2 and for pushing on contact tubes for fan connectors.

Handling:

Crimping stop parts (contacts).

Fan connector for retrofitting/repairs.

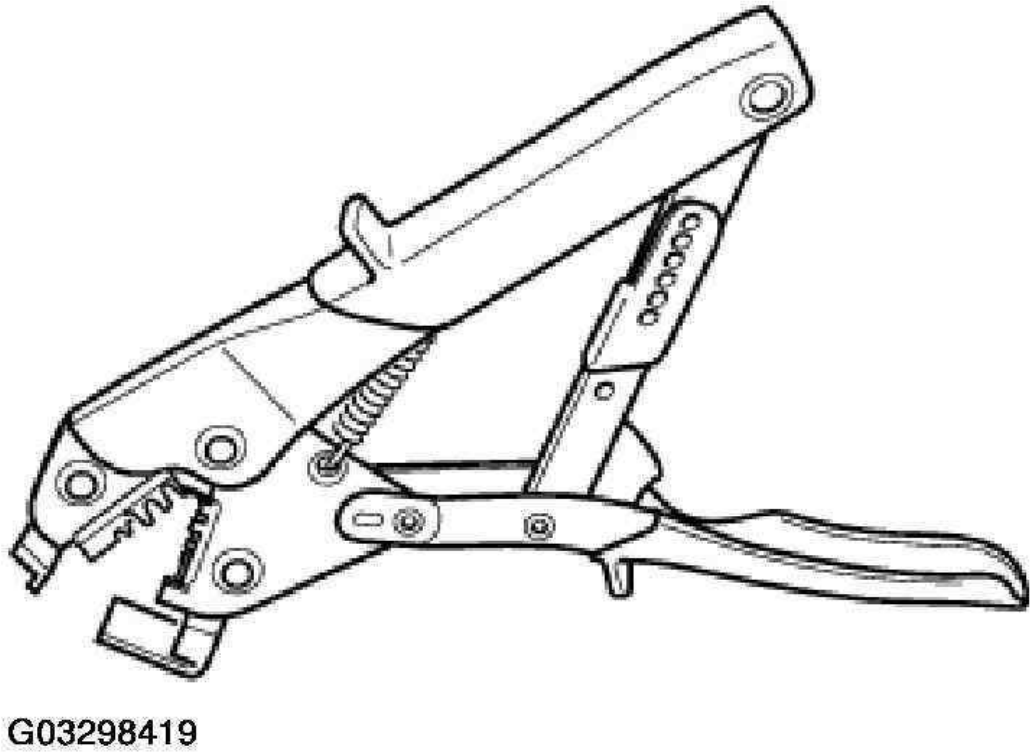

Fig. 29: Identifying Special Tool 61 9 041 Hand Pliers
Courtesy of BMW OF NORTH AMERICA, INC.

Special tool 61 9 041 (hand pliers) with special tool 61 9 044 (matrix) for crimping cable guide and strain relief device on antenna elbow plug.

Handling:

Antenna elbow plug on radio receiver.

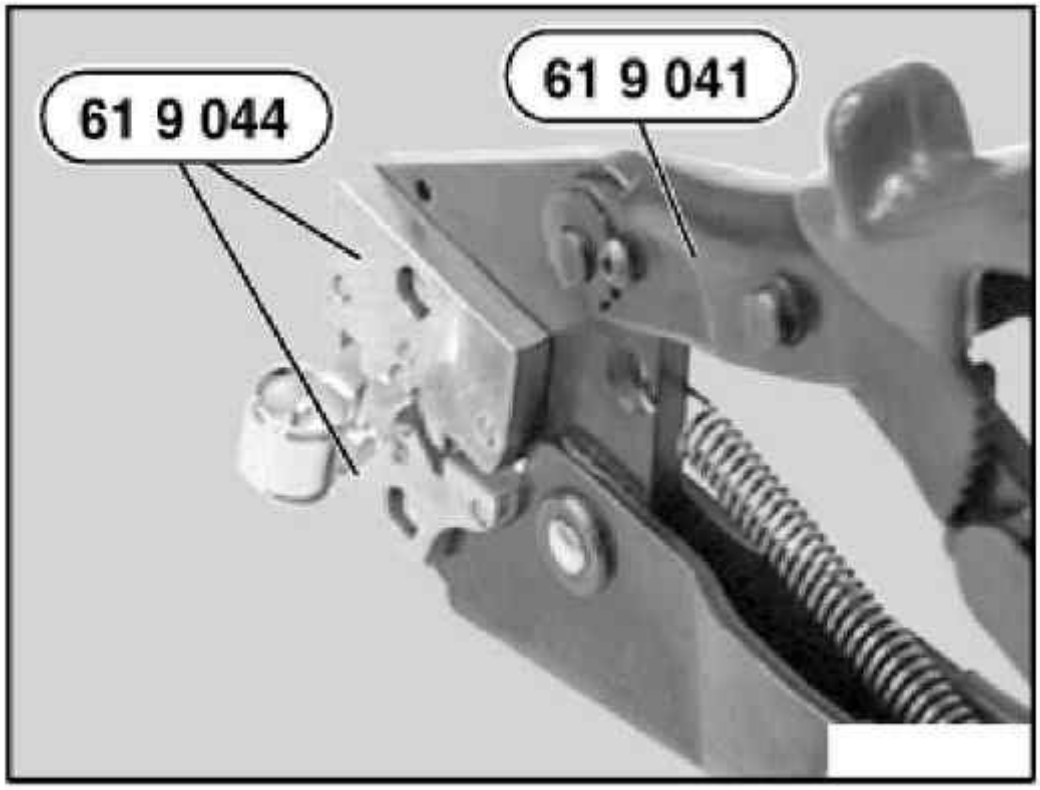

G03298420

Fig. 30: Identifying Special Tool 61 9 041 Hand Pliers With Special Tool 61 9 044
Courtesy of BMW OF NORTH AMERICA, INC.

Special tool 61 1 150 (release and pressing-out tool) for:

- releasing round plug housings
- releasing relay carriers
- pressing out contacts
- removing indicator lights

Handling:

Opening plug housings and removing contacts of different plug systems

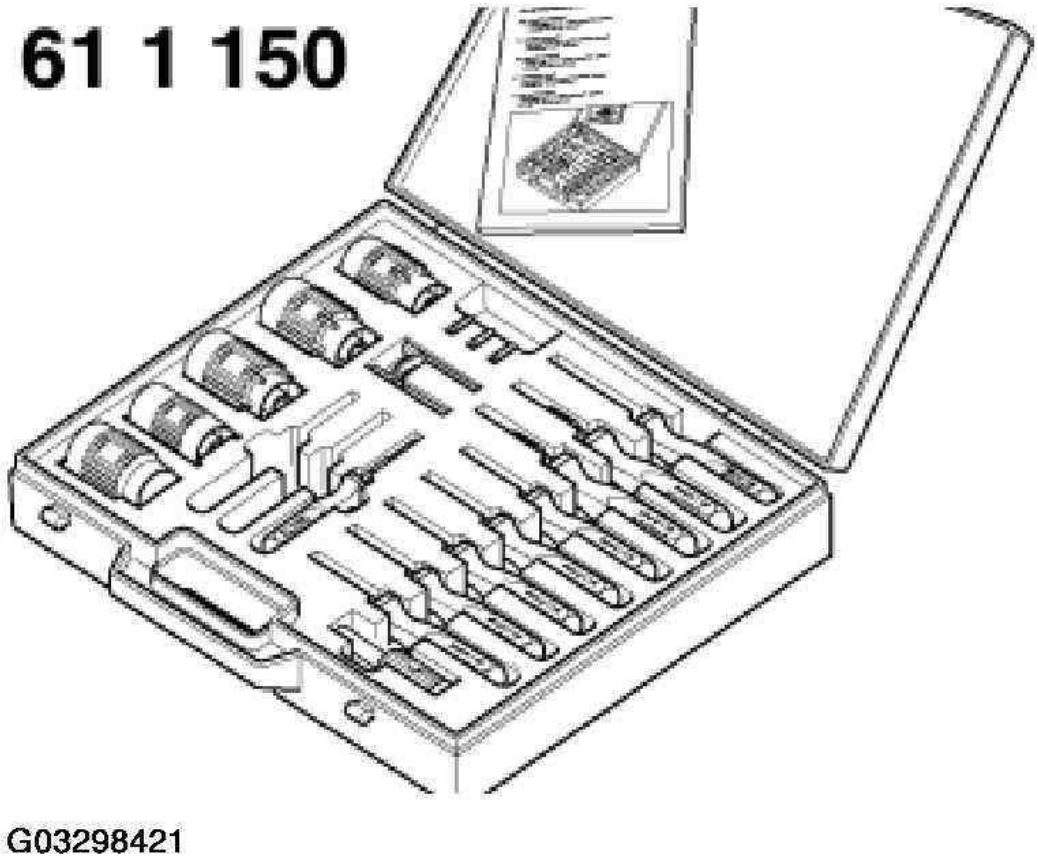

Fig. 31: Identifying Special Tool 61 1 150
Courtesy of BMW OF NORTH AMERICA, INC.

Repair kit for ignition cables and for crimping fan connector receptacles 4 mm^2

Handling:

Crimping stop parts (contacts).

Service Information 1 03 89 (037)

Fig. 32: Identifying Repair Kit
Courtesy of BMW OF NORTH AMERICA, INC.

Special tool 61 4 320 (crimping set with pliers) for:

- Cutting to length and stripping insulation from optical fibers
- Crimping optical fibers
- Crimping MPQ contacts
- Crimping MQS contacts

G03298423

Fig. 33: Identifying Special Tool 61 4 320
Courtesy of BMW OF NORTH AMERICA, INC.

Special tool 61 1 190 pliers for insulation displacement connector for repairing ribbon cables.

Handling:

Repairing ribbon cables.

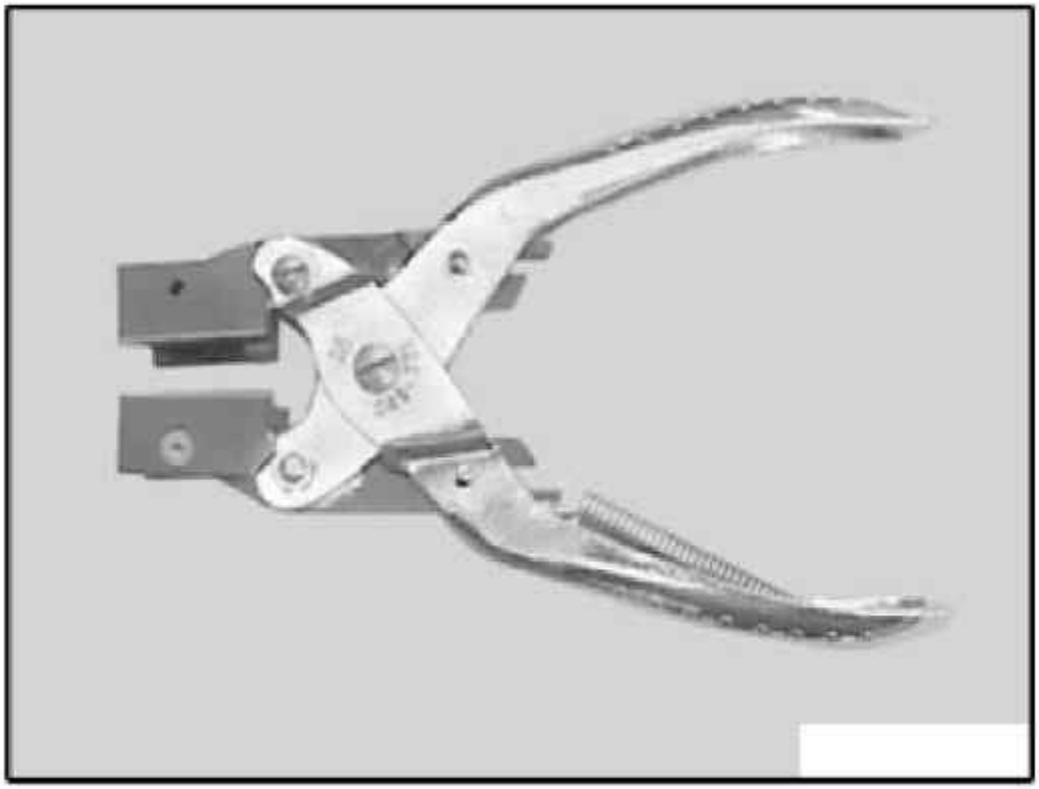

G03298424

Fig. 34: Identifying Special Tool 61 1 190 Pliers
Courtesy of BMW OF NORTH AMERICA, INC.

61 13.. UNLOCKING AND DISCONNECTING DIFFERENT PLUG CONNECTIONS

NOTE: Examples of unlocking and disconnecting different plug connections.

Press lock and open clip in direction of arrow.

Disconnect plug connection.

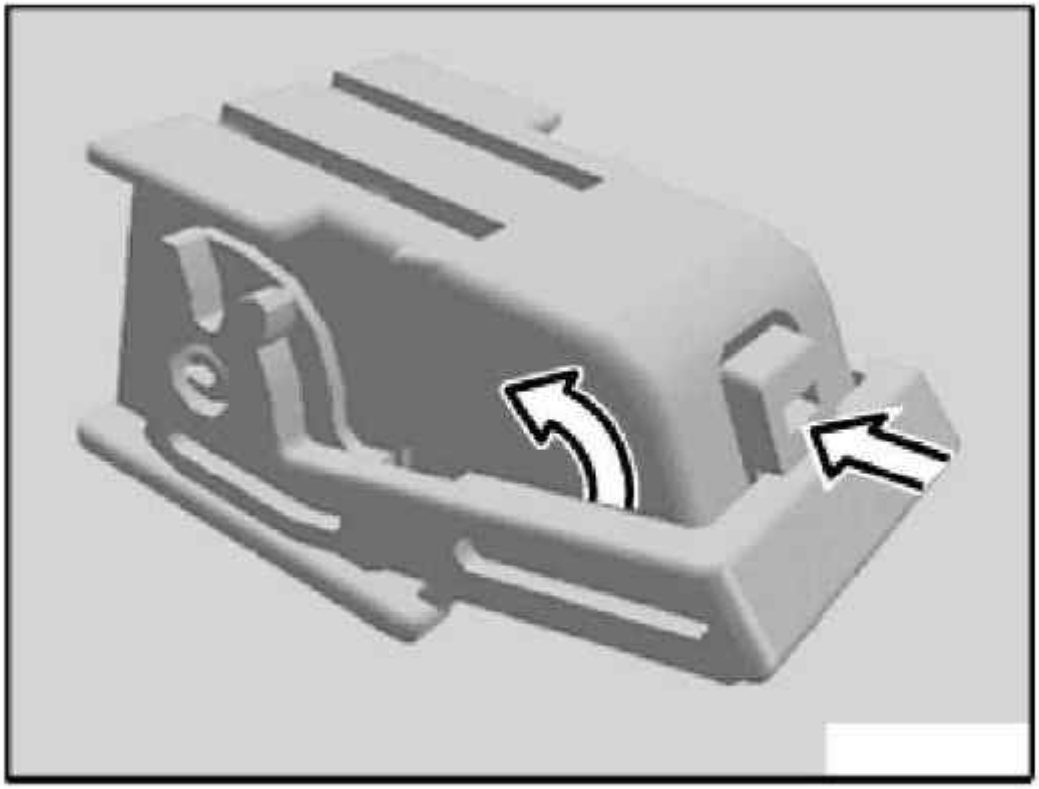

Fig. 35: Pressing Lock And Open Clip (1 Of 2)
Courtesy of BMW OF NORTH AMERICA, INC.

Press lock and open clip in direction of arrow.

Disconnect plug connection.

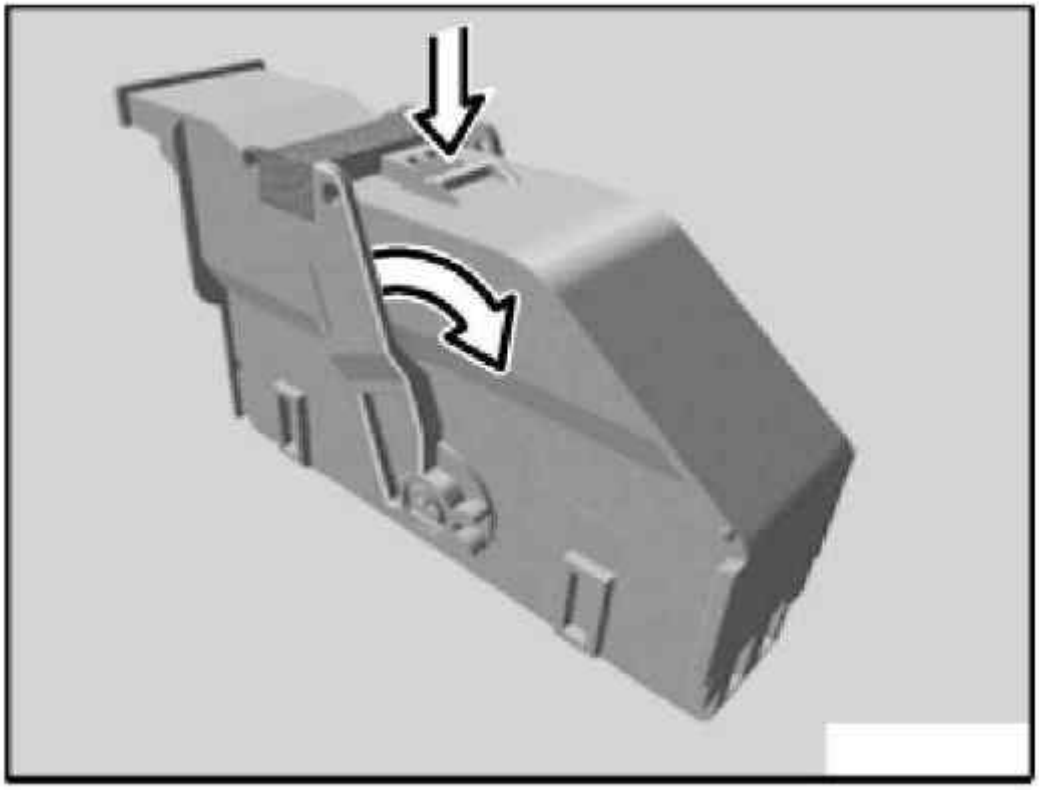

Fig. 36: Pressing Lock And Open Clip (2 Of 2)
Courtesy of BMW OF NORTH AMERICA, INC.

Open clip in direction of arrow and disconnect plug connection in direction of arrow.

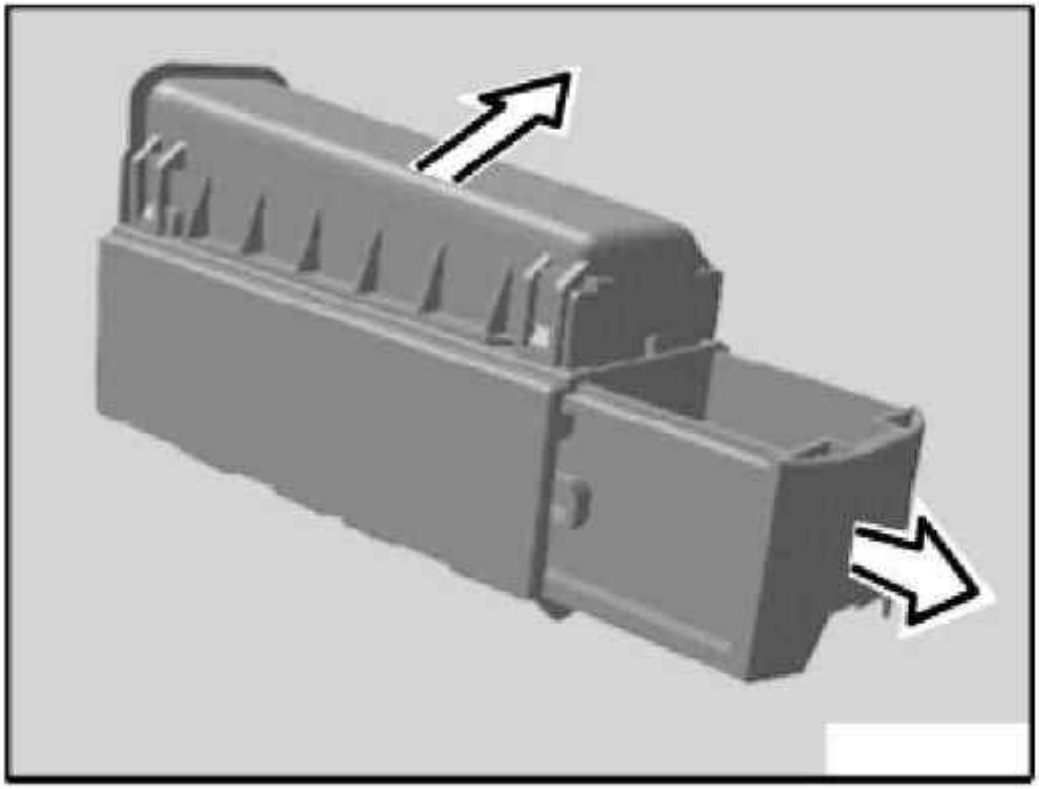

Fig. 37: Opening Clip
Courtesy of BMW OF NORTH AMERICA, INC.

Press lock and disconnect plug connection in direction of arrow.

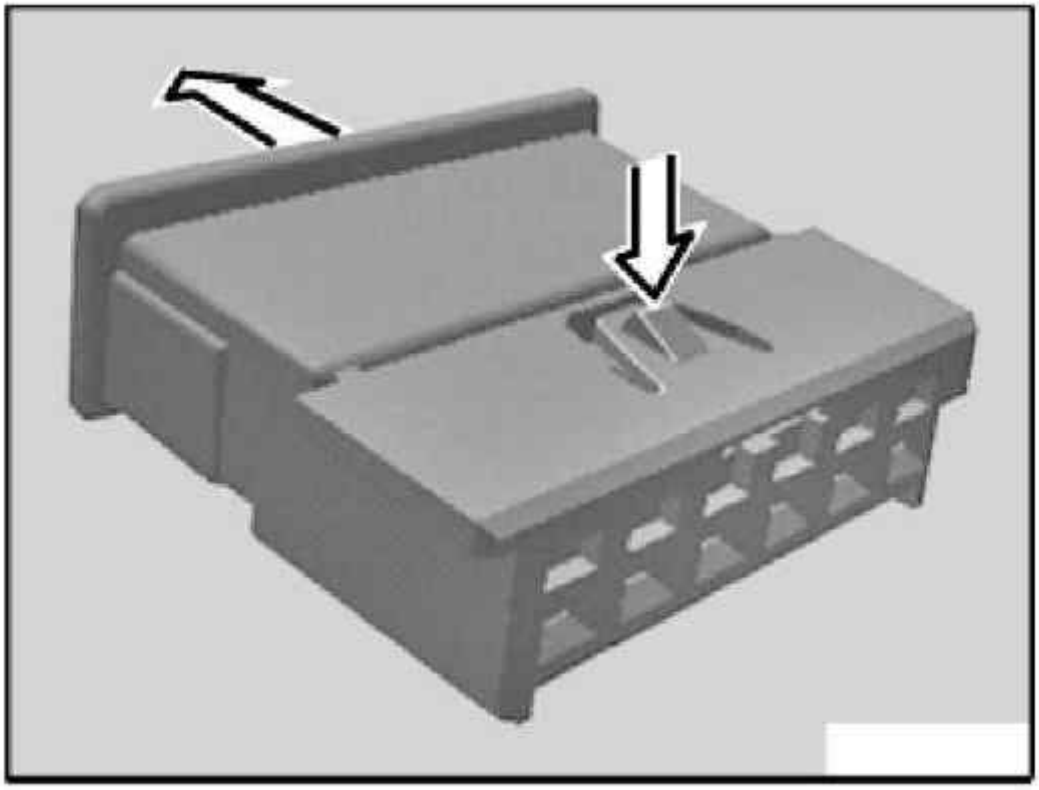

Fig. 38: Pressing Lock And Disconnecting Plug Connection (1 Of 6)
Courtesy of BMW OF NORTH AMERICA, INC.

Press lock and disconnect plug connection in direction of arrow.

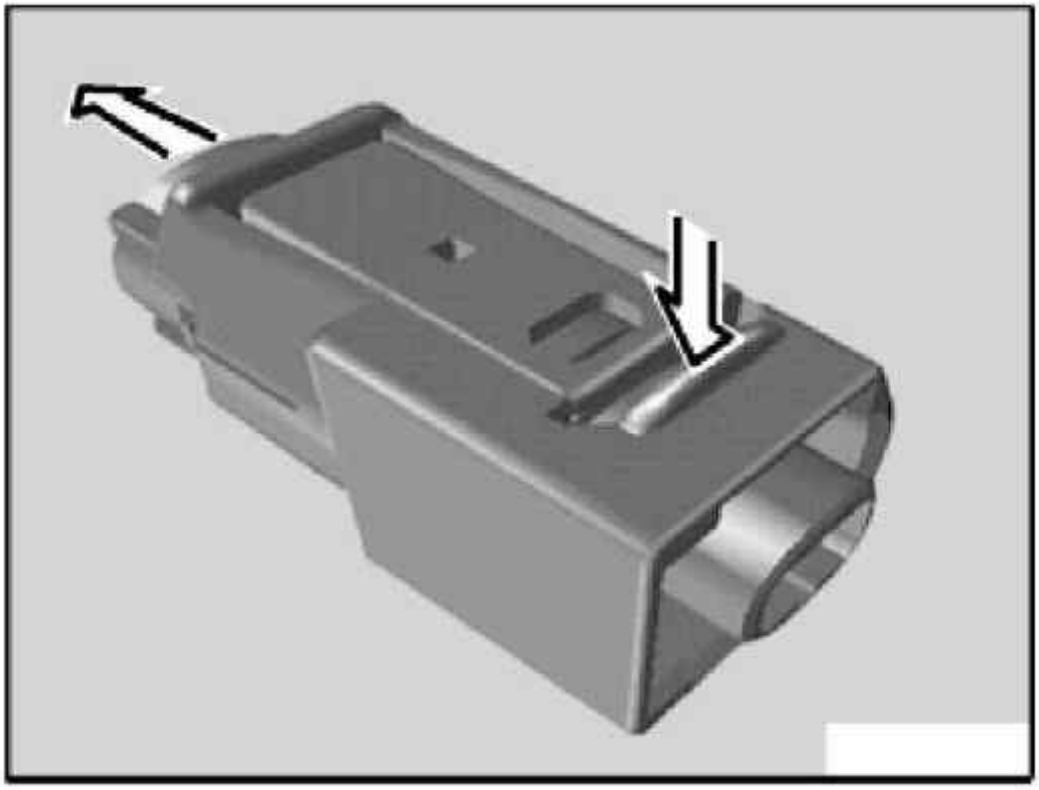

Fig. 39: Pressing Lock And Disconnecting Plug Connection (2 Of 6)
Courtesy of BMW OF NORTH AMERICA, INC.

Press lock and disconnect plug connection in direction of arrow.

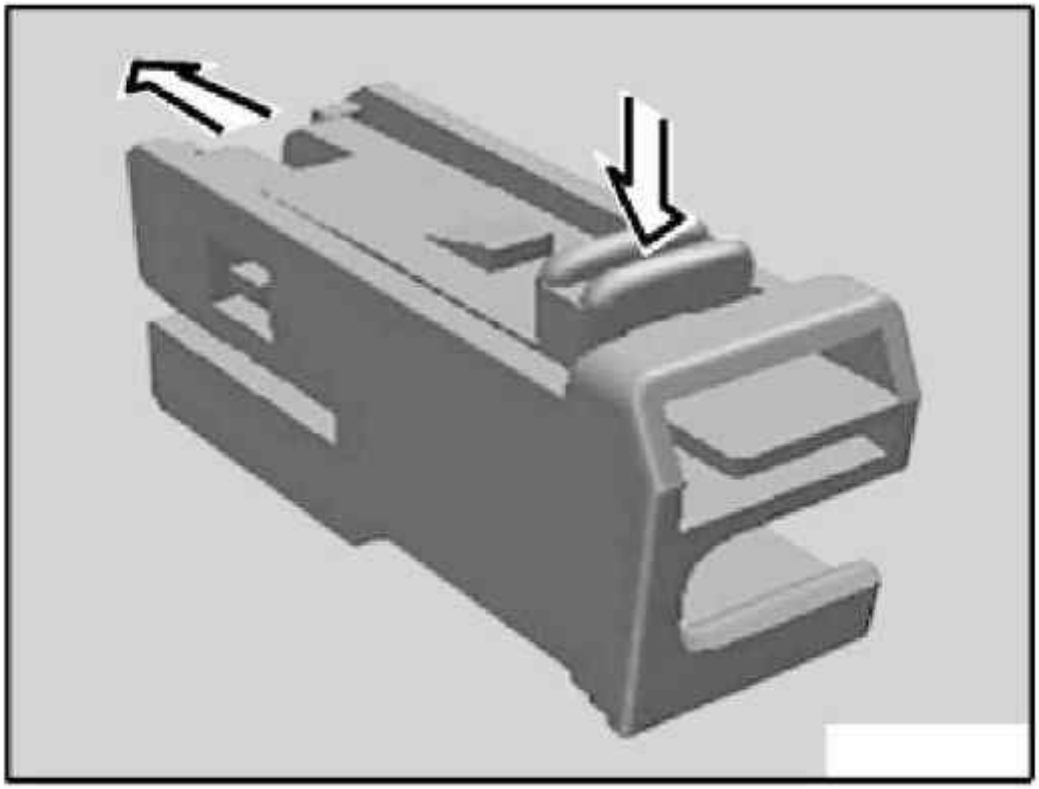

Fig. 40: Pressing Lock And Disconnecting Plug Connection (3 Of 6)
Courtesy of BMW OF NORTH AMERICA, INC.

Press lock and disconnect plug connection in direction of arrow.

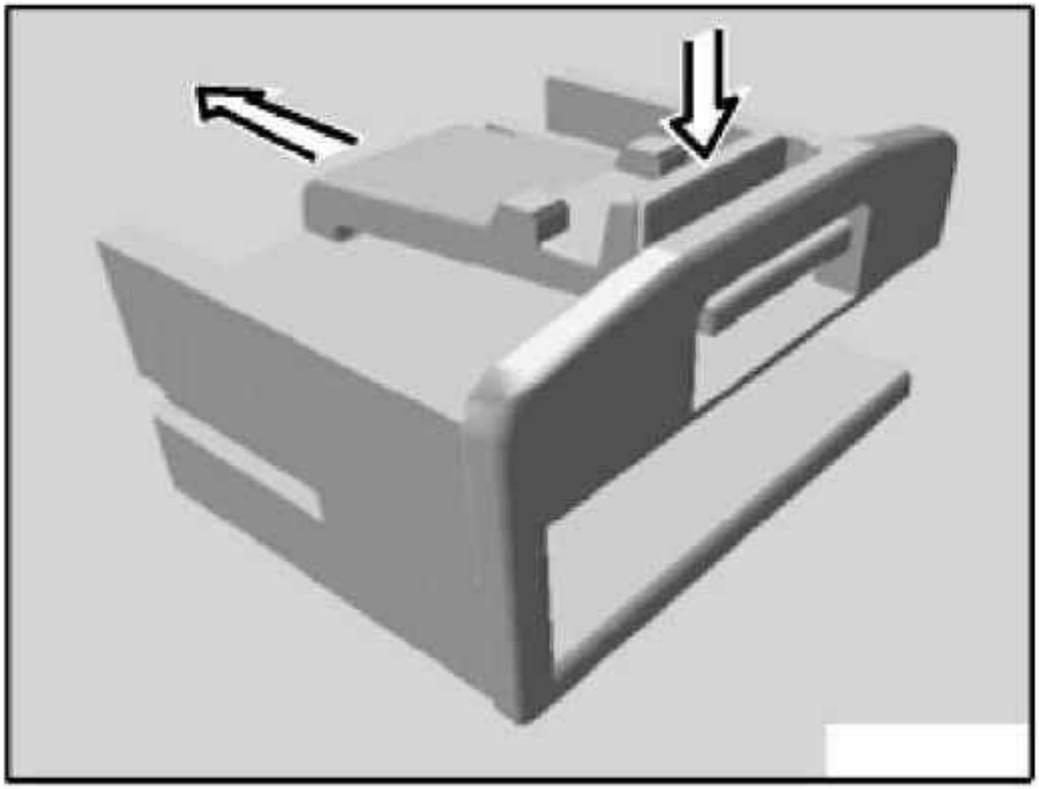

Fig. 41: Pressing Lock And Disconnecting Plug Connection (4 Of 6)
Courtesy of BMW OF NORTH AMERICA, INC.

Press lock and disconnect plug connection in direction of arrow.

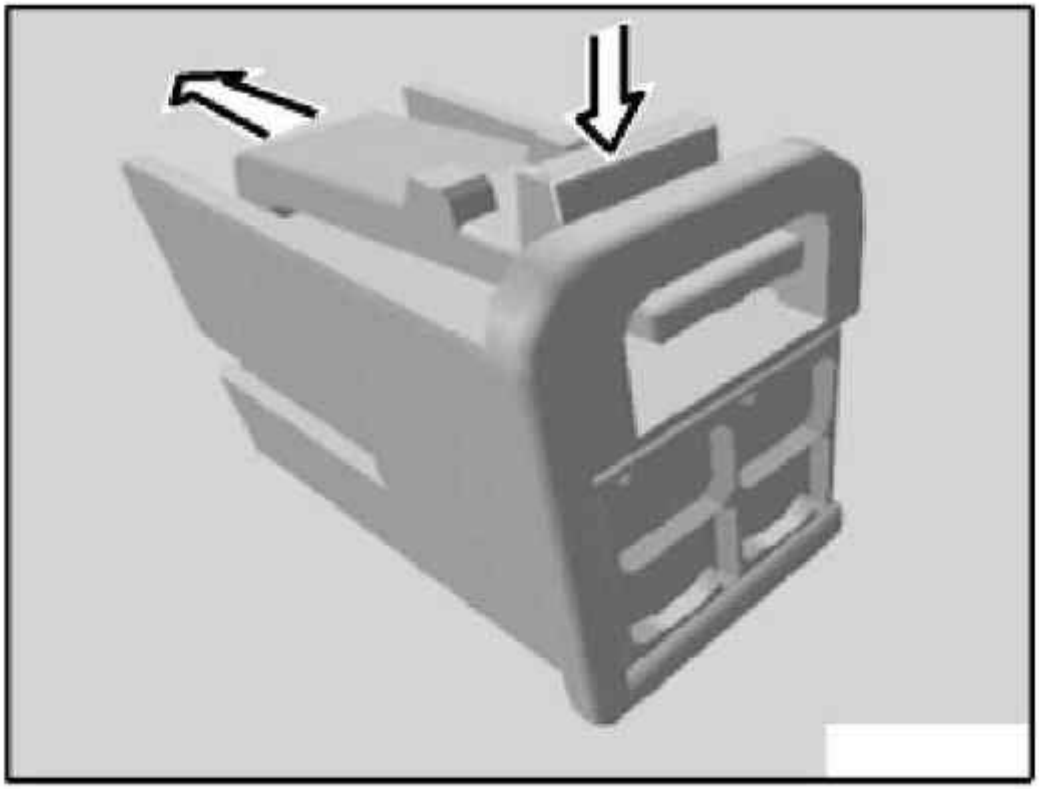

Fig. 42: Pressing Lock And Disconnecting Plug Connection (5 Of 6)
Courtesy of BMW OF NORTH AMERICA, INC.

Press lock and disconnect plug connection in direction of arrow.

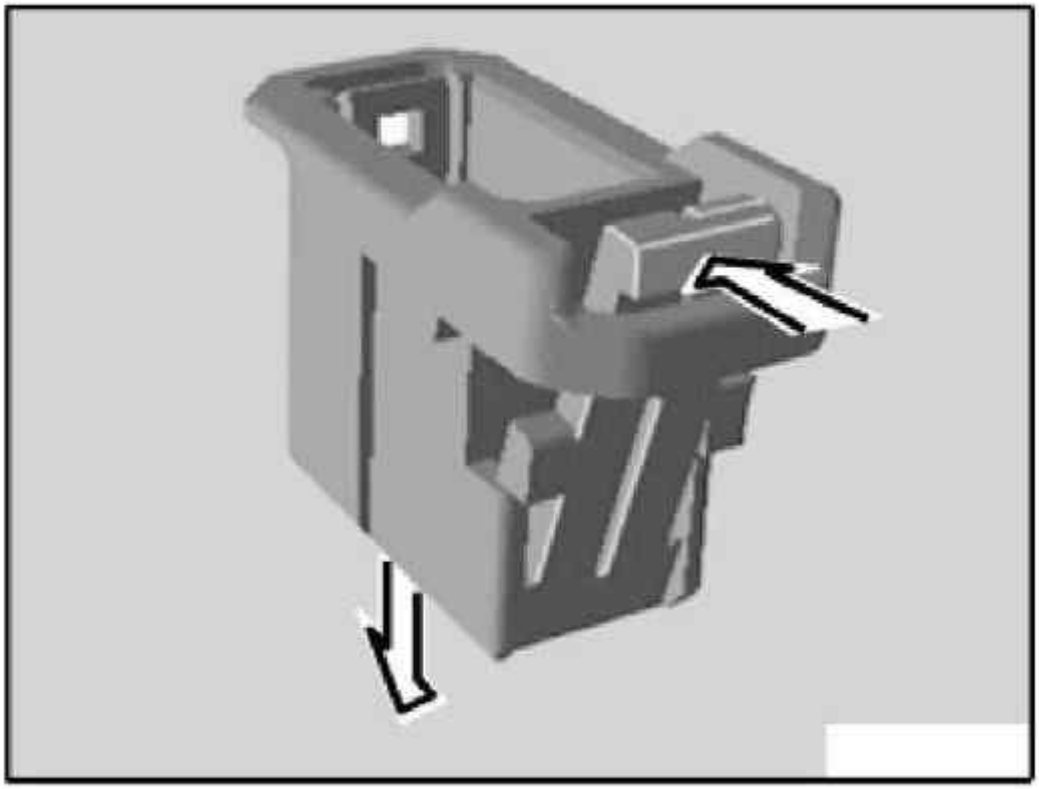

G03298433

Fig. 43: Pressing Lock And Disconnecting Plug Connection (6 Of 6)
Courtesy of BMW OF NORTH AMERICA, INC.

61 13... BASE OF TAB CONNECTOR HOUSINGS

Unlock hook (1) with special tool 61 1 360 and slide plug housing downwards out of base.

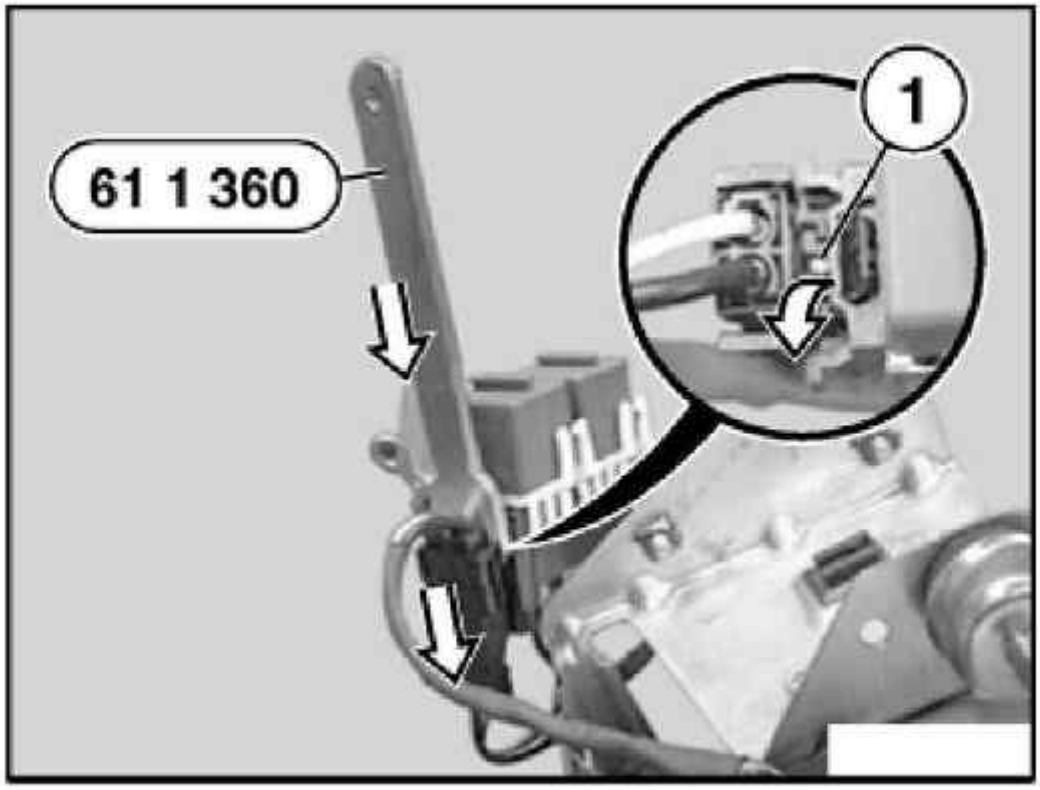

G03298441

Fig. 44: Identifying Special Tool 61 1 360
Courtesy of BMW OF NORTH AMERICA, INC.

61 13... ANTENNA ELBOW PLUG ON RADIO RECEIVER

Cut off faulty antenna angle plug directly after strain relief.

Carefully and with precision, strip insulation from antenna cable as illustrated (lengths given in mm).

Brush shield (copper braid) towards rear.

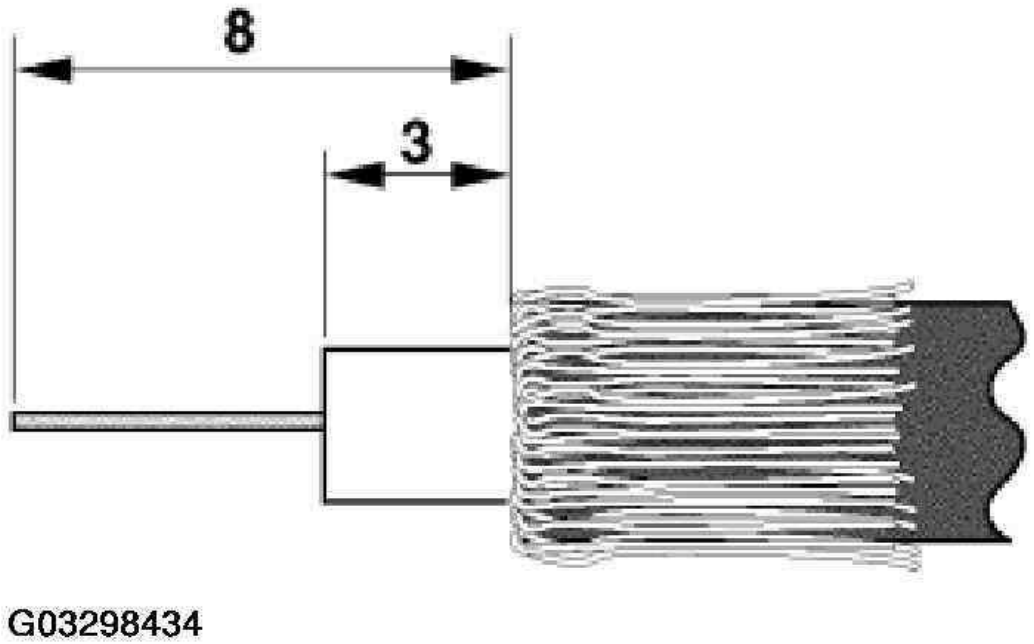

Fig. 45: Identifying Insulation Stripping
Courtesy of BMW OF NORTH AMERICA, INC.

IMPORTANT: There must be no more copper wire protruding in the direction of the inner conductor on the inner conductor insulation (risk of short circuits).

Create a loop on inner conductor.

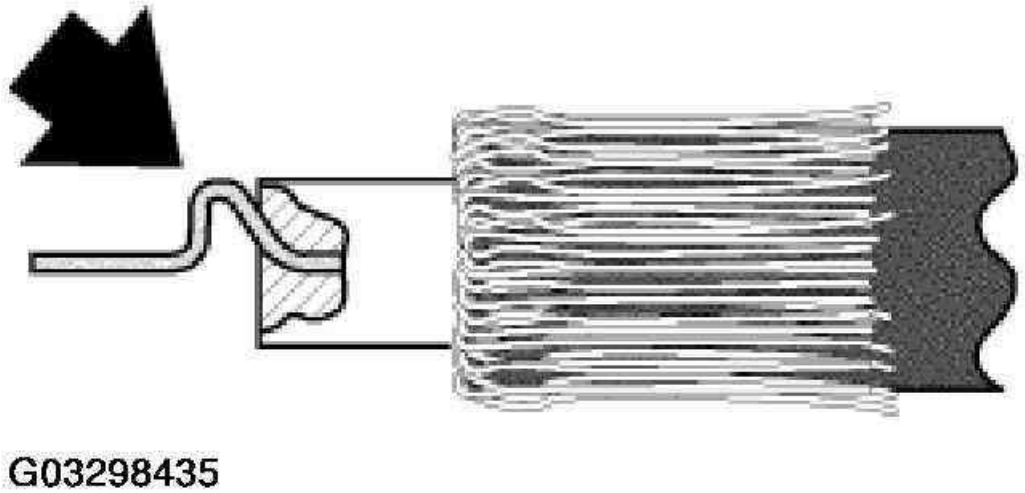

Fig. 46: Creating Loop On Inner Conductor
Courtesy of BMW OF NORTH AMERICA, INC.

IMPORTANT: Cover soldering area extensively in center console all round radio aperture. Avoid blobs of melted solder in inside area.

Tin-plate center connection on antenna angle plug and stripped inner conductor.

Solder inner conductor on center connection with a small soldering iron (max. 50 watts) and matching soldering tip (1).

Gently push insulation forward to soldering point and pay attention to correct position of loop.

NOTE: The loop must not under any circumstances come into contact with the metal parts of the antenna plug.

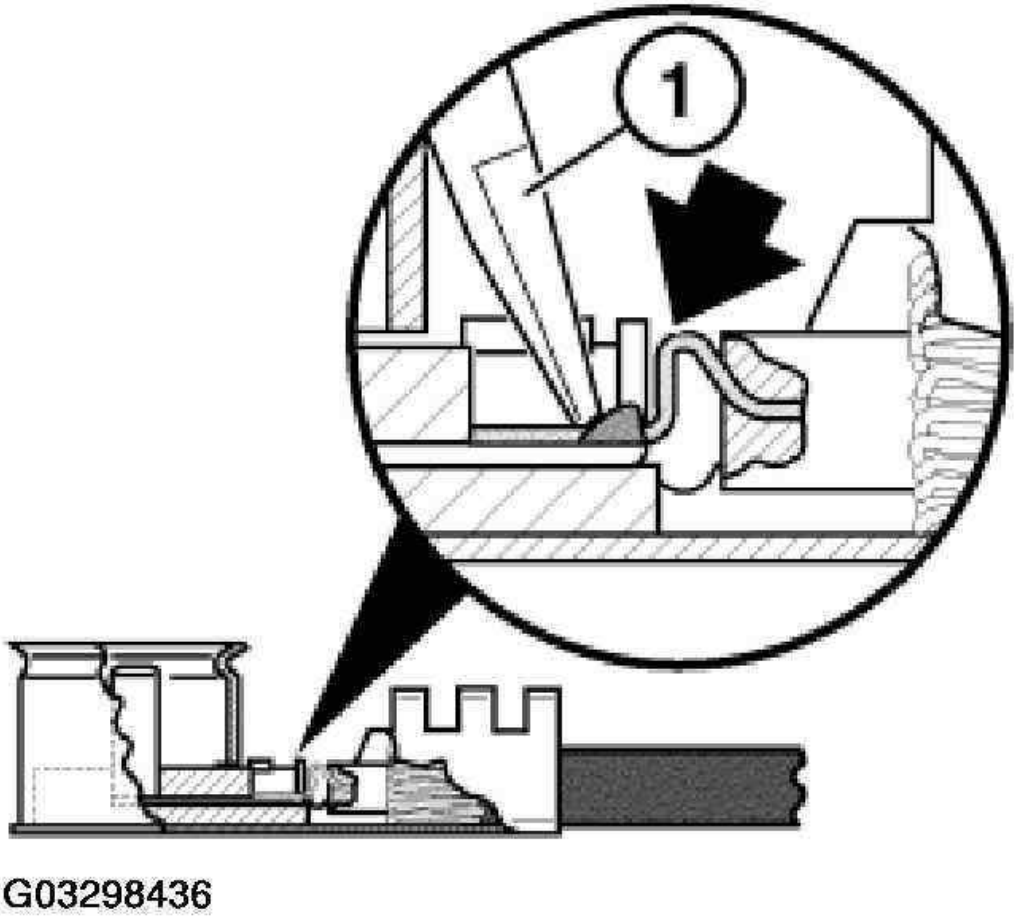

Fig. 47: Locating Matching Soldering Tip
Courtesy of BMW OF NORTH AMERICA, INC.

Special tool 61 9 041 (hand pliers) in conjunction with special tool 61 9 044 (matrix) is used to crimp antenna angle plug.

Special tools for wiring harness repairs

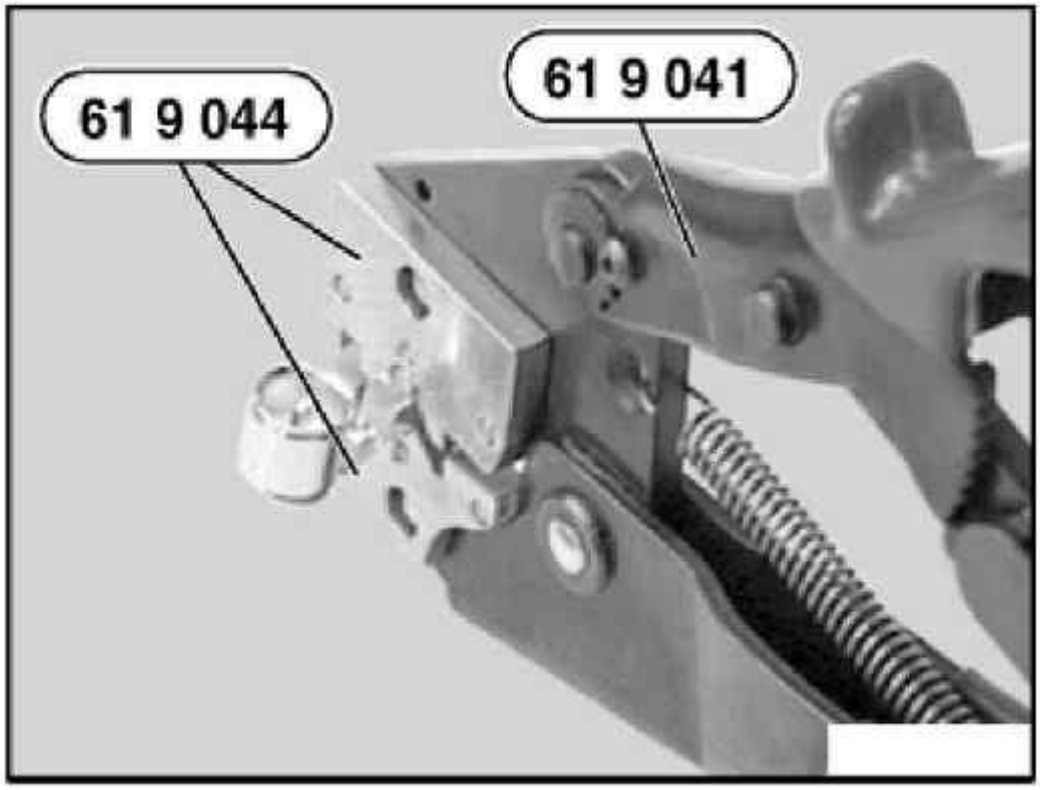

G03298437

Fig. 48: Identifying Special Tool 61 9 041 Hand Pliers In Conjunction With Special Tool 61 9 044
Courtesy of BMW OF NORTH AMERICA, INC.

Unlock special tool 61 9 041:

Squeeze grips (1) lightly and push unlocking lever (2) in direction of arrow.

OR:

Compress handles as far as they will go, tool unlocks automatically.

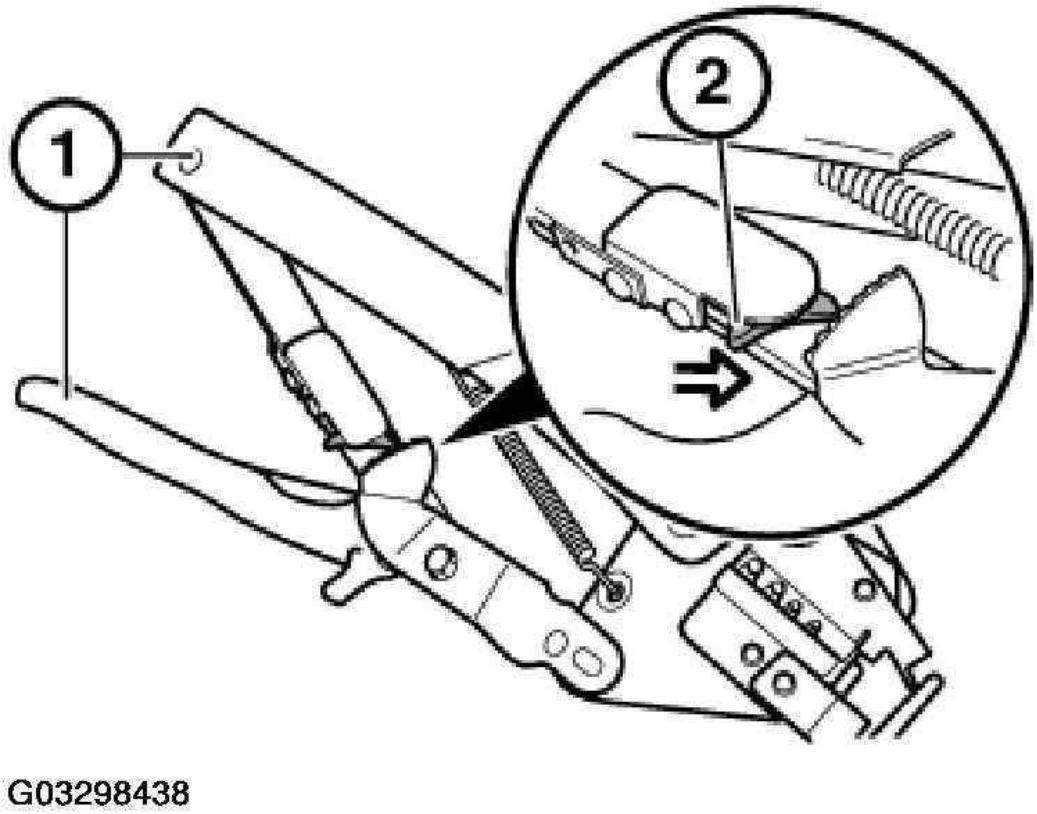

Fig. 49: Unlocking Special Tool 61 9 041
Courtesy of BMW OF NORTH AMERICA, INC.

Place antenna angle plug with cable guide and strain relief in matrix (1).

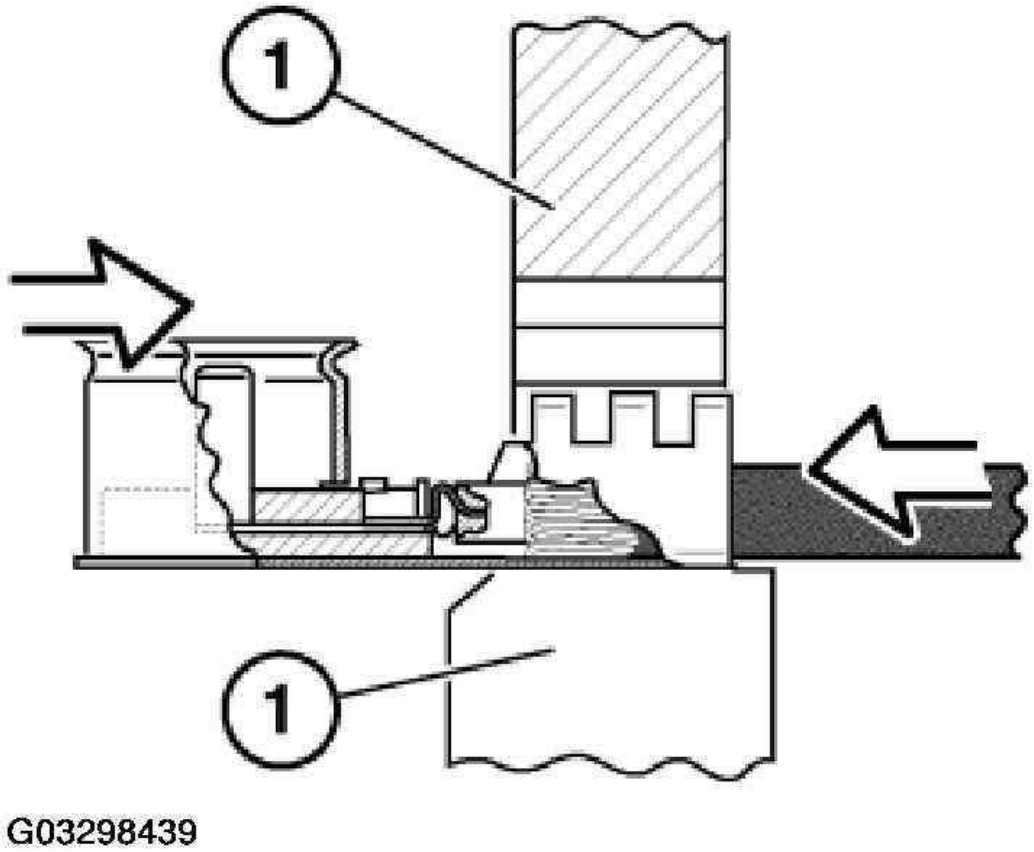

Fig. 50: Placing Antenna Angle Plug With Cable Guide
Courtesy of BMW OF NORTH AMERICA, INC.

Compress special tool 61 9 041 as far as it will go.

Special tool 61 9 041 unlocks automatically.

Remove antenna angle plug with antenna cable from special tool 61 9 044.

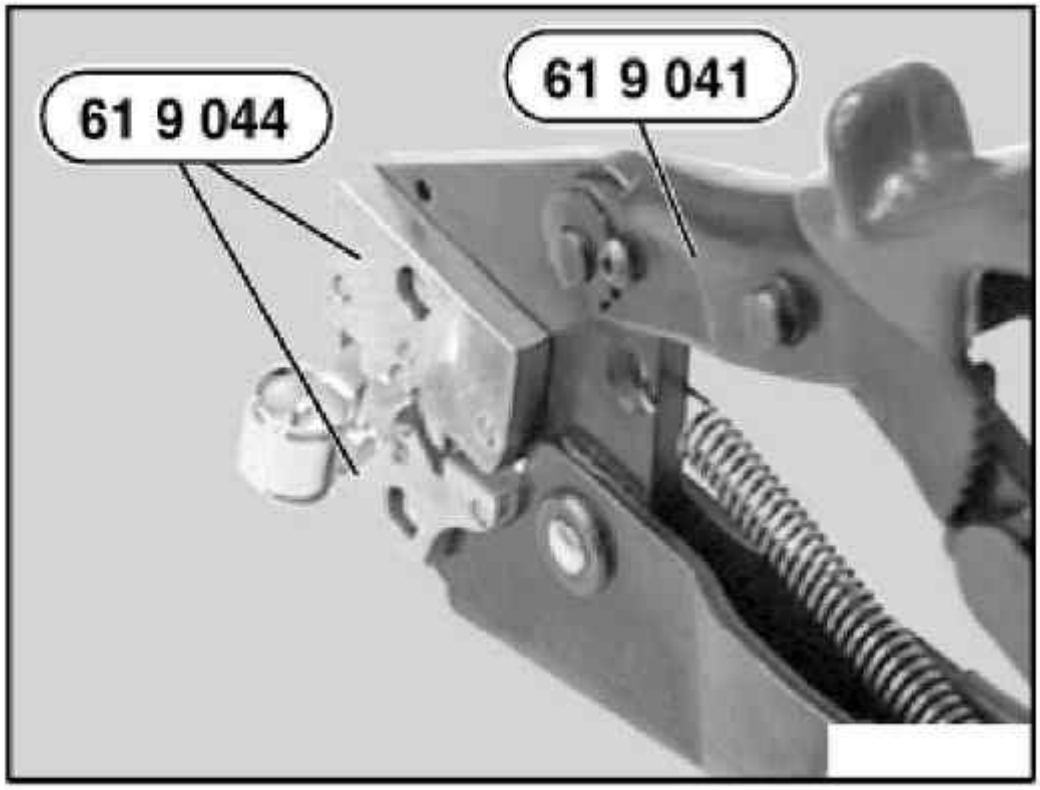

G03298440

Fig. 51: Identifying Compress Special Tool 61 9 041
Courtesy of BMW OF NORTH AMERICA, INC.

61 13... CRIMPING MICRO POWER QUADLOCK CONTACTS (MPQ)

Special Tools Required:

- 61 4 320

To crimp MPQ contacts, use pliers 61 4 321 (1) in conjunction with crimping head 61 4 325 (2) from crimping set 61 4 320.

NOTE: Pliers (1) open automatically as far as they will go when handles are pressed together.

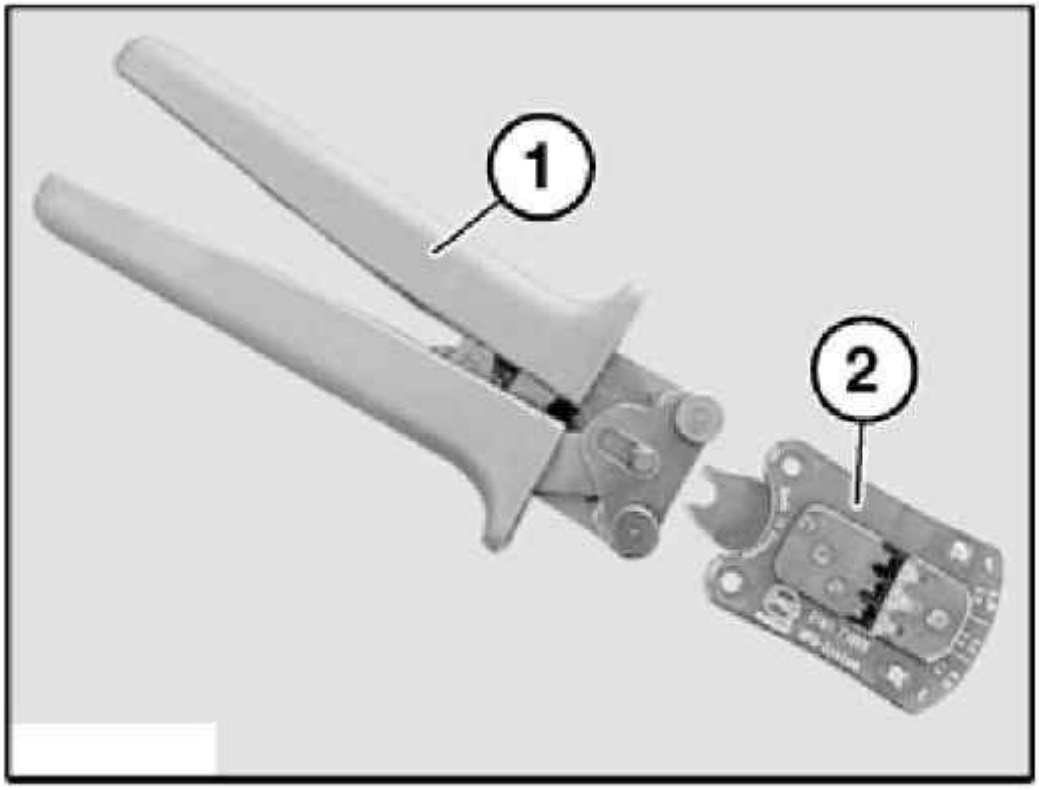

G03298442

Fig. 52: Identifying Pliers 61 4 321
Courtesy of BMW OF NORTH AMERICA, INC.

Open pliers (1).

NOTE: Place contact (2) with utmost care in designated nest (observe cable cross-section) in crimping head (3). Make sure it is exactly positioned.

Place MPQ contact (2) in crimping head (3).

Close pliers (1) one notch.

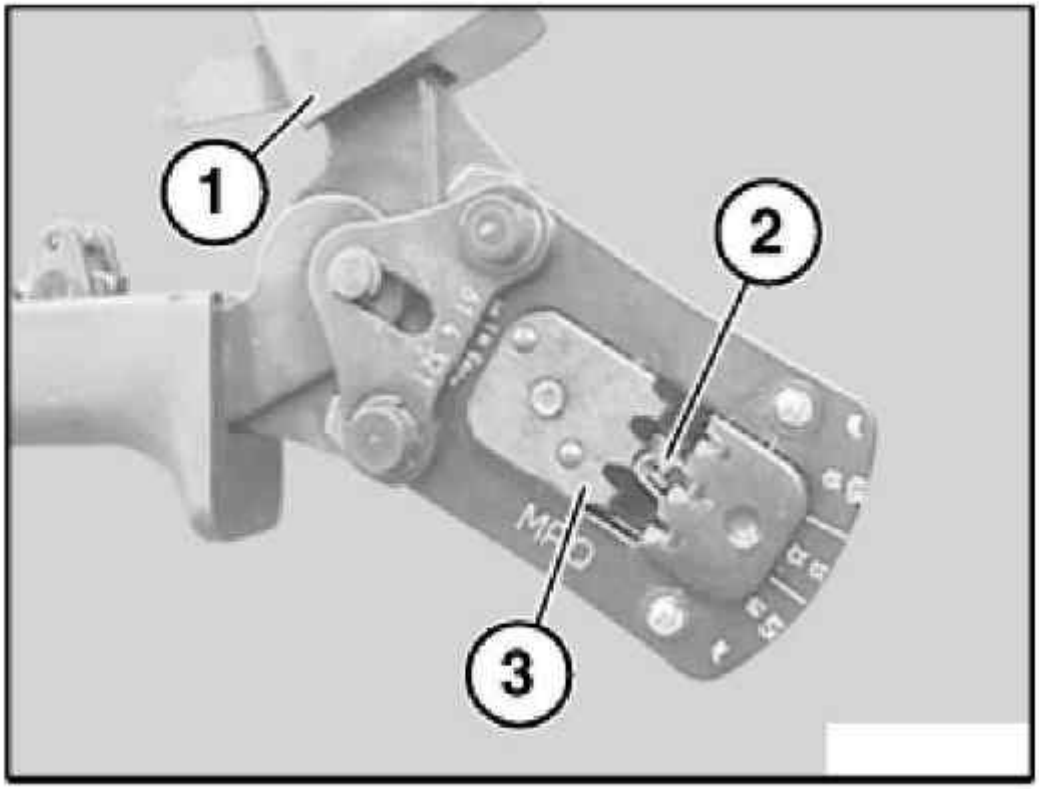

Fig. 53: Opening Pliers
Courtesy of BMW OF NORTH AMERICA, INC.

NOTE: Follow procedure for cutting and stripping insulation from cables.

Insert stripped cable (2).

Close pliers (1) fully.

Open pliers (1) and remove cable (2).

NOTE: Check contact for correct crimping.

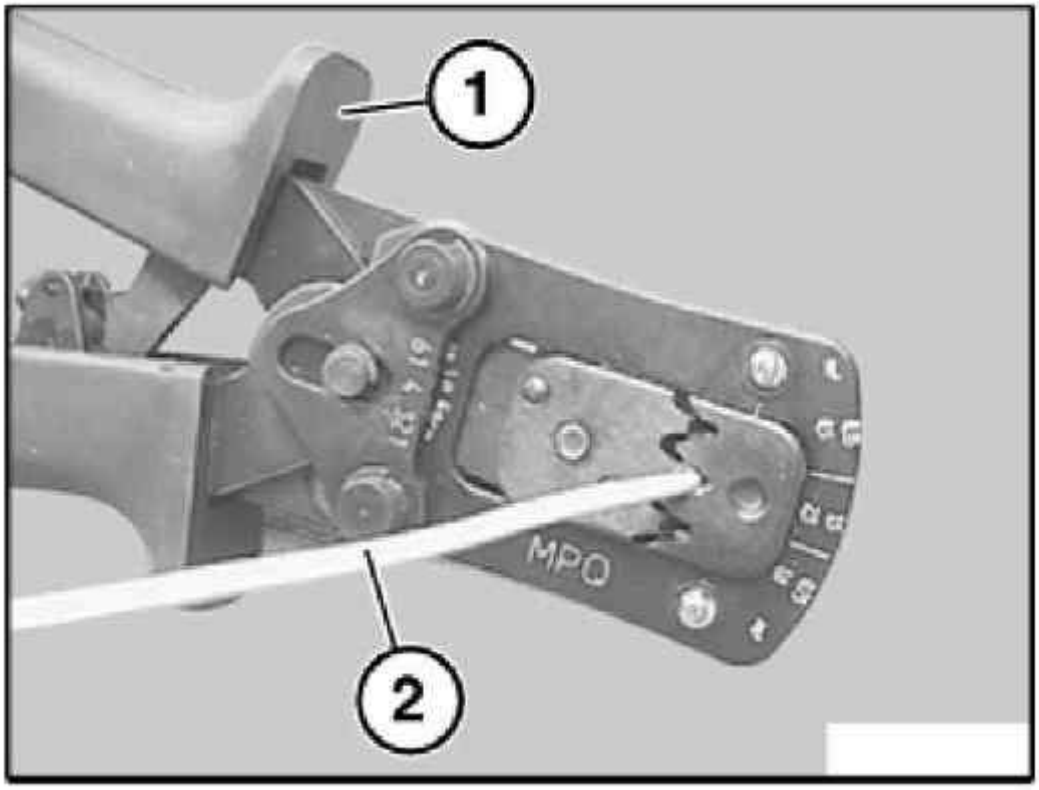

G03298444

Fig. 54: Inserting Stripped Cable
Courtesy of BMW OF NORTH AMERICA, INC.

61 13... CRIMPING MICRO QUADLOCK SYSTEM CONTACTS (MQS)

Special Tools Required:

- 61 4 320

To crimp MQS contacts, use pliers 61 4 321 (1) in conjunction with crimping head 61 4 324 (2) from crimping set 61 4 320.

NOTE: Pliers (1) open automatically as far as they will go when handles are pressed together.

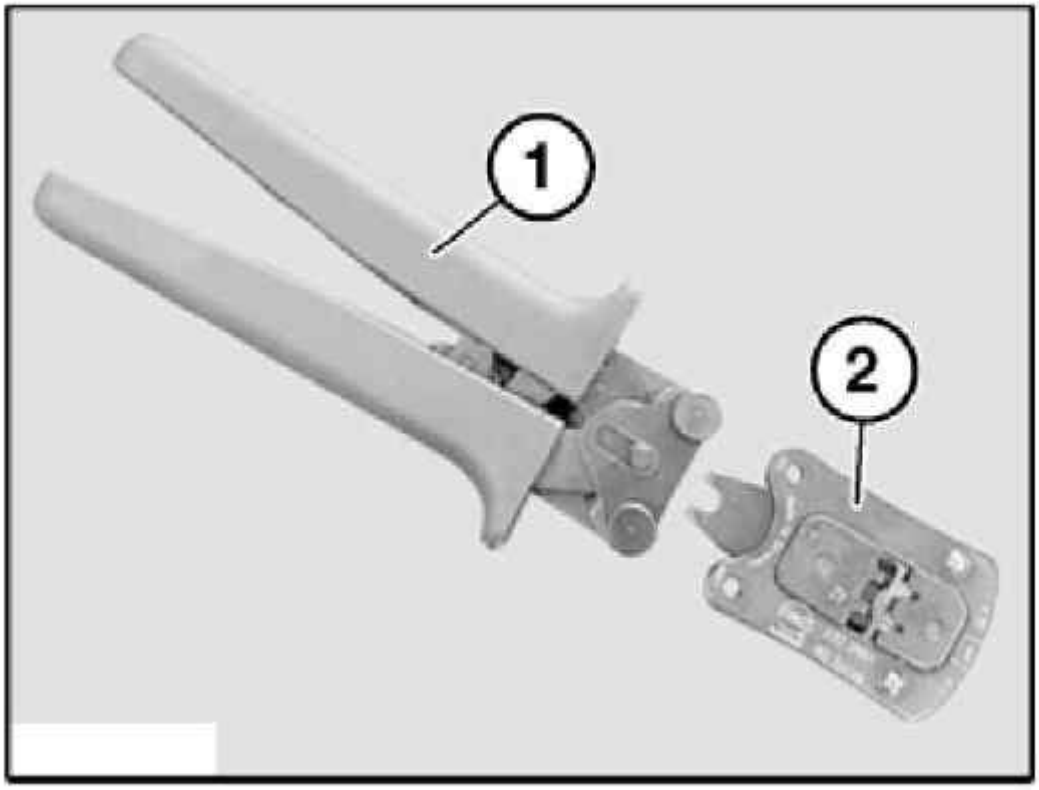

G03298445

Fig. 55: Identifying Pliers 61 4 321
Courtesy of BMW OF NORTH AMERICA, INC.

Open pliers (1).

Fold up contact carrier (2).

Insert MQS contact (3) in contact carrier (2).

Fold back contact carrier (2).

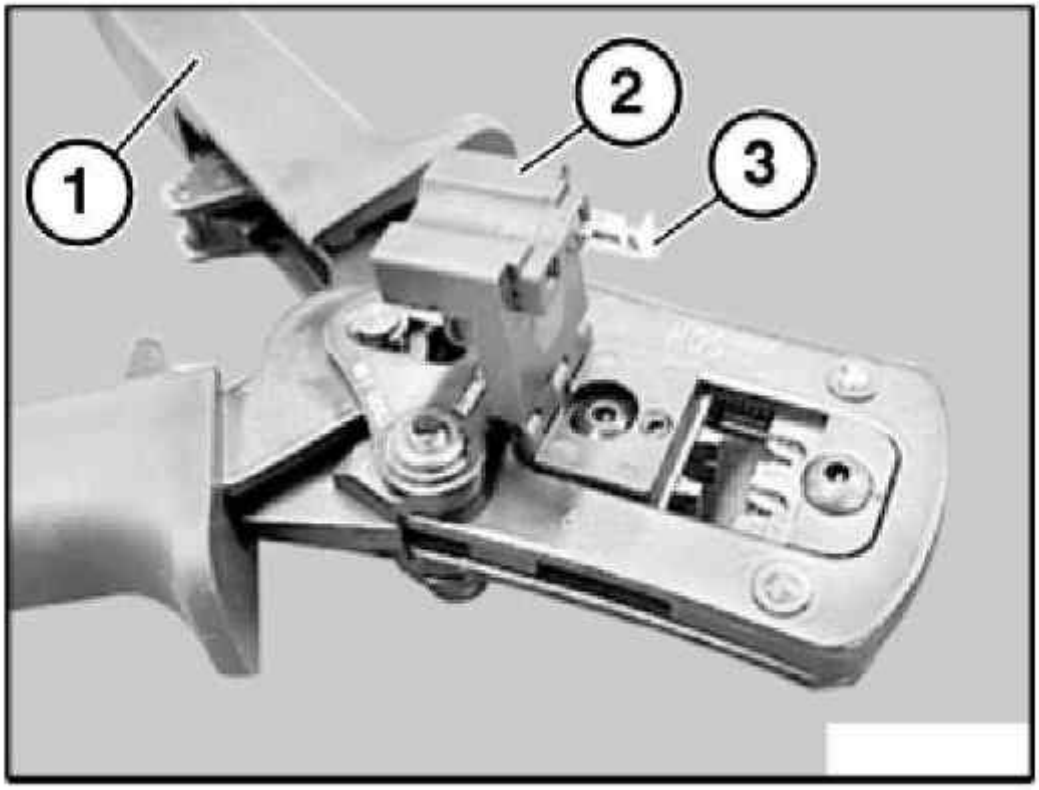

G03298446

Fig. 56: Inserting MQS Contact In Contact Carrier
Courtesy of BMW OF NORTH AMERICA, INC.

NOTE: Follow procedure for cutting and stripping insulation from cables.

Close pliers (1) one notch.

Insert stripped cable (2).

Close pliers (1) fully.

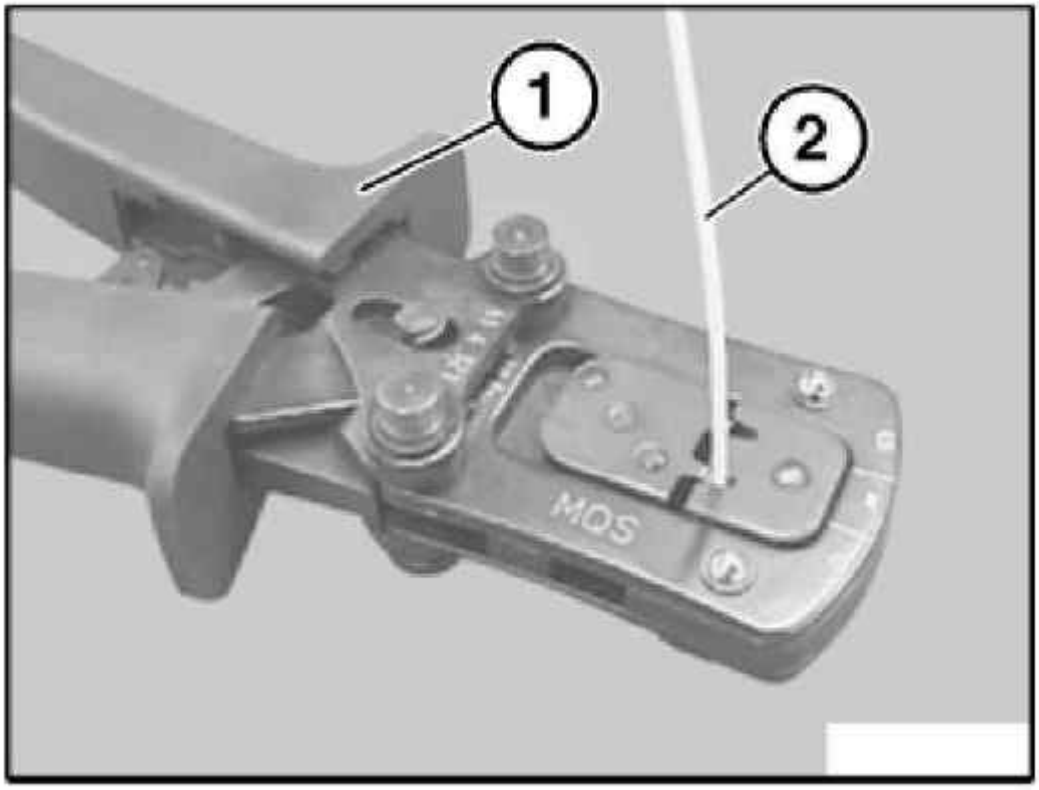

G03298447

Fig. 57: Inserting Stripped Cable
Courtesy of BMW OF NORTH AMERICA, INC.

Open pliers (1).

Open contact carrier (2) gently and carefully remove MQS contact.

NOTE: Check contact for correct crimping.

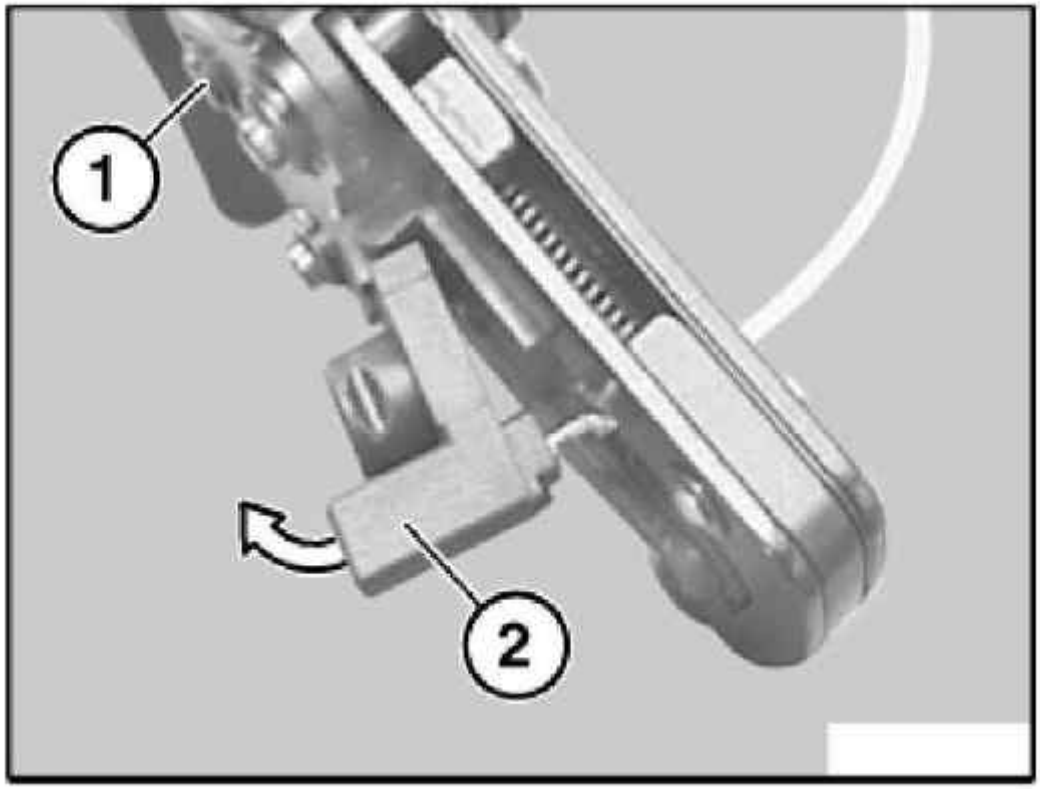

G03298448

Fig. 58: Opening Pliers
Courtesy of BMW OF NORTH AMERICA, INC.

61 13... CRIMPING ANNULAR CONTACTS

CrimpacII crimping pliers from repair kit 1 are used to crimp annular contacts.

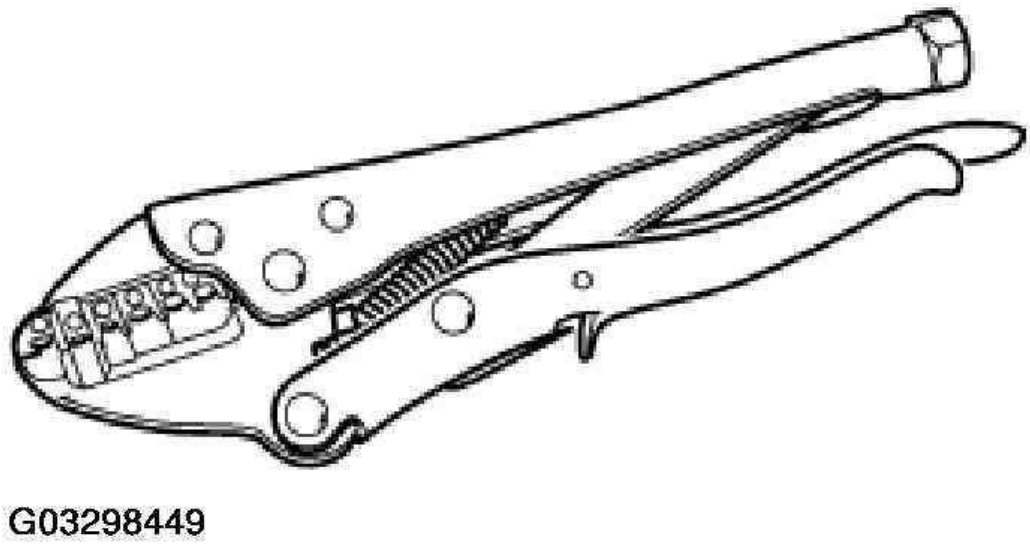

Fig. 59: Identifying CrimpacII Crimping Pliers
Courtesy of BMW OF NORTH AMERICA, INC.

Open crimping pliers (1).

NOTE: Place contact (2) in designated nest (observe wire crosssection) with particular care. Make sure it is exactly positioned.

Insert annular contact (2) in crimping pliers (1).

Close crimping pliers (1) gently and keep closed.

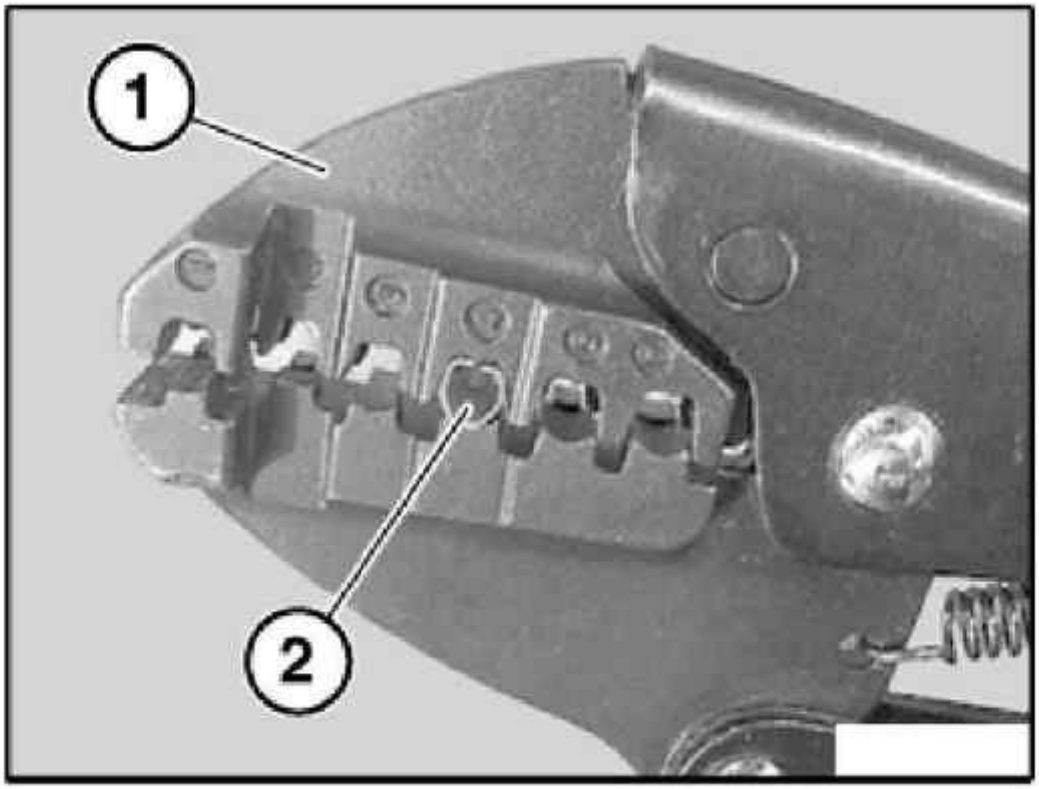

G03298450

Fig. 60: Opening Crimping Pliers
Courtesy of BMW OF NORTH AMERICA, INC.

NOTE: Follow procedure for cutting and stripping insulation from cables.

Feed stripped cable (1) into annular contact (2) completely.

Close crimping pliers (3) fully.

Open crimping pliers (3) and remove cable (2).

NOTE: Check contact for correct crimping.

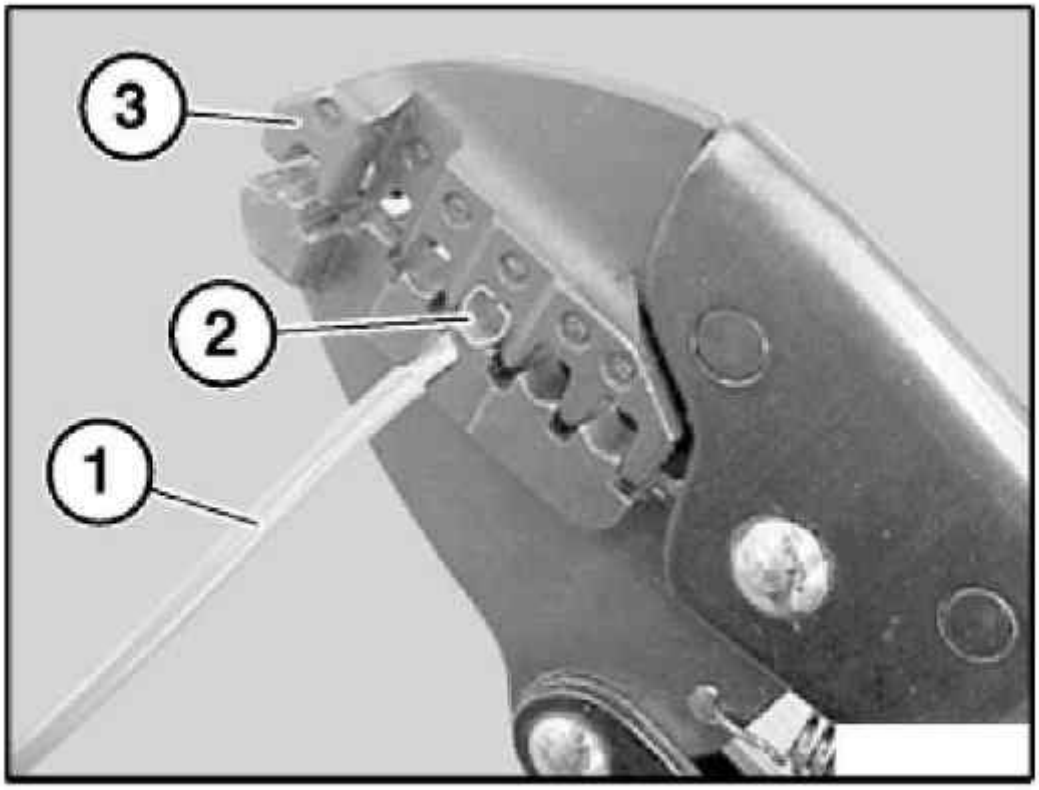

G03298451

Fig. 61: Opening Crimping Pliers
Courtesy of BMW OF NORTH AMERICA, INC.

61 13... CRIMPING OPTICAL FIBRES

Special Tools Required:

- 61 4 320

To crimp optical fibres, use pliers 61 4 321 (1) in conjunction with crimping head 61 4 323 (2) from crimping set 61 4 320.

NOTE: Pliers (1) open automatically as far as they will go when handles are pressed together.

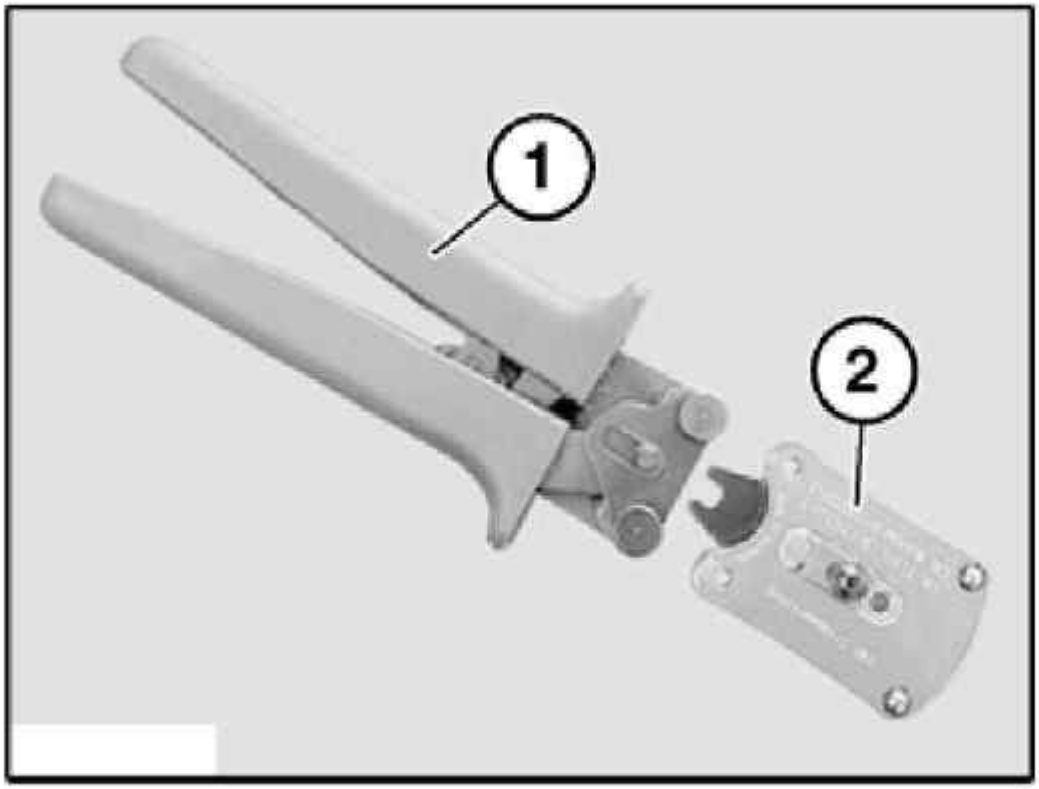

G03298452

Fig. 62: Identifying Pliers 61 4 321
Courtesy of BMW OF NORTH AMERICA, INC.

Move contact guide by means of stop lever (1) into corresponding position (pin contact or jack).

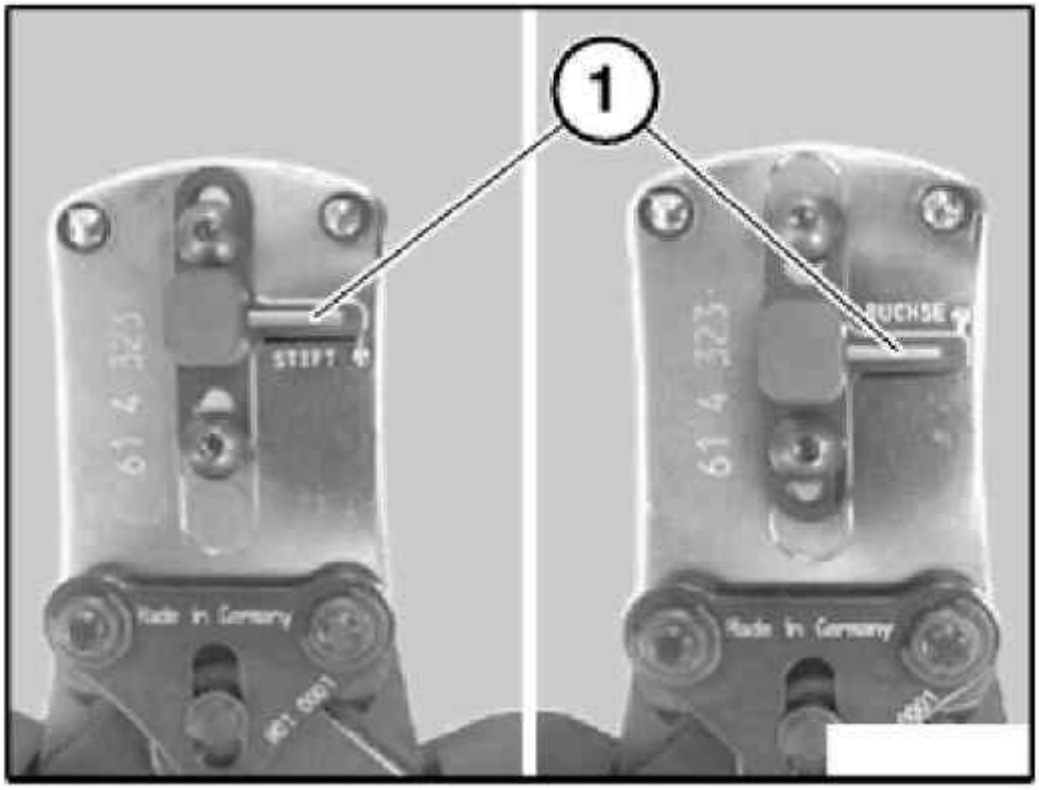

G03298453

Fig. 63: Identifying Move Contact Guide By Means Of Stop Lever
Courtesy of BMW OF NORTH AMERICA, INC.

Open pliers (2).

Place pin contact or jack (1) in crimping head and secure with locking lever (3).

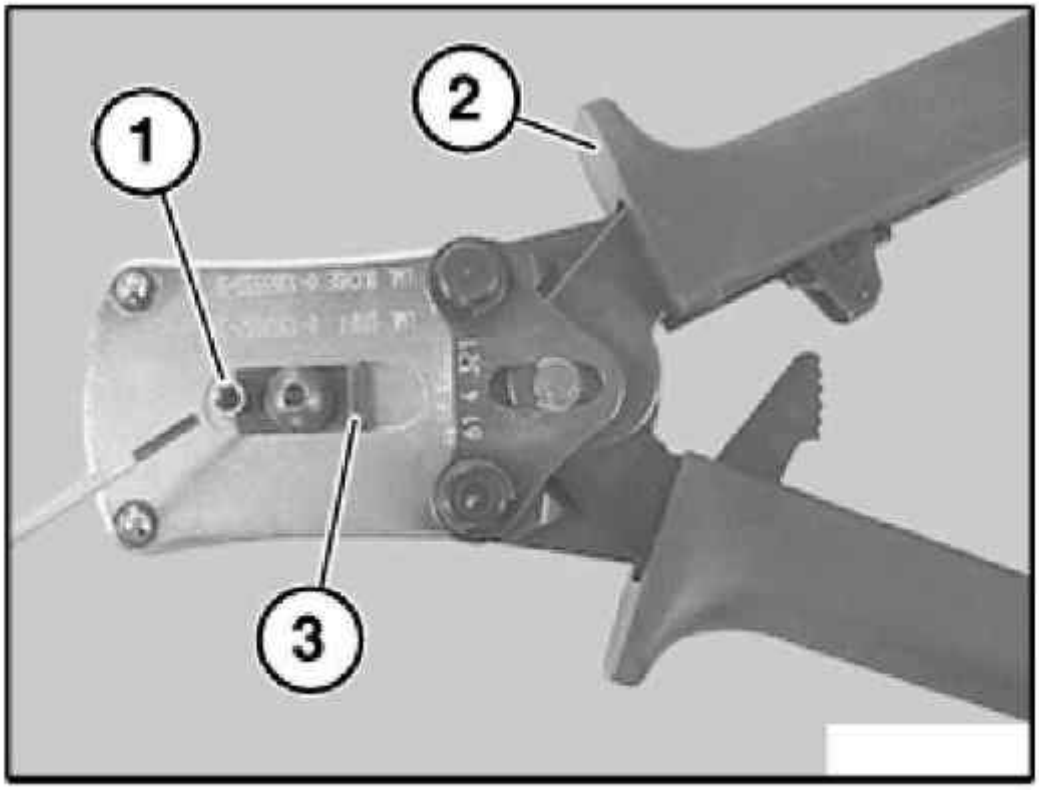

G03298454

Fig. 64: Opening Pliers
Courtesy of BMW OF NORTH AMERICA, INC.

NOTE: Follow procedure for cutting and stripping insulation from optical fibres.

Insert stripped optical fibre (1) as far as it will go into pin contact or jack (2).

Close pliers (3) fully.

Open pliers (3) and locking lever (4).

Remove optical fibre (1).

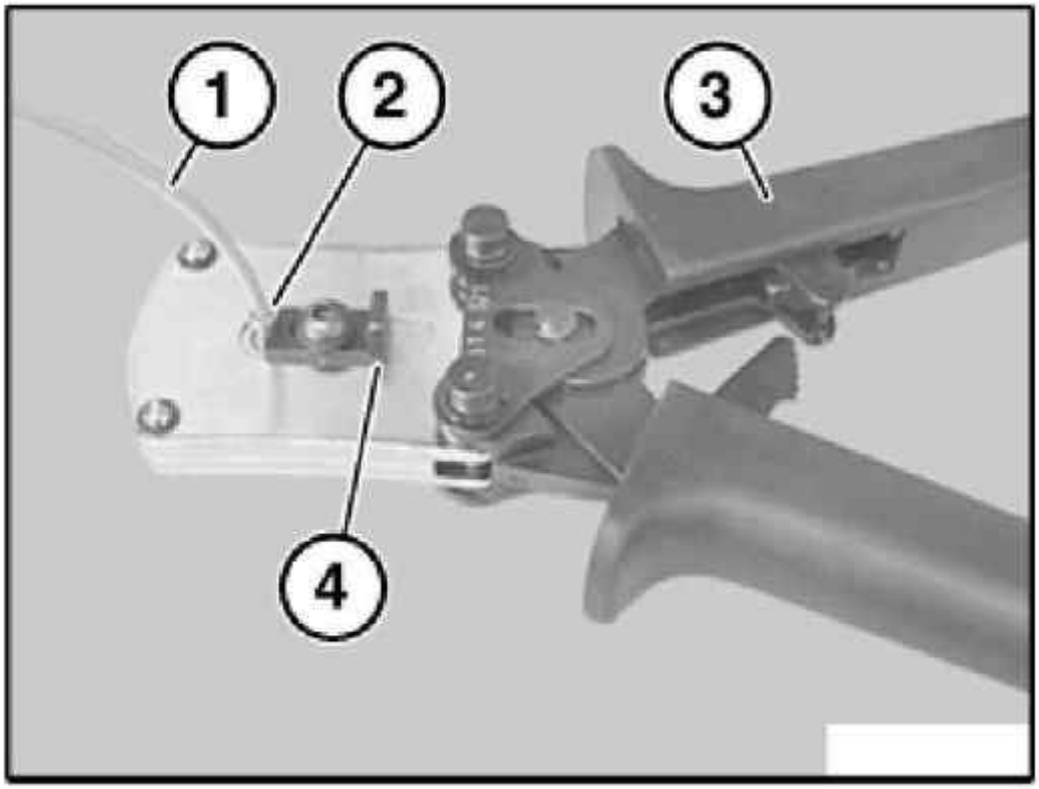

G03298455

Fig. 65: Removing Optical Fibre
Courtesy of BMW OF NORTH AMERICA, INC.

IMPORTANT: Make sure optical fibre is correctly seated in jack.

Right (A)

End of optical fibre (1) must be flush with tip of pin contact (2).

Wrong (B)

End of optical fibre (1) is not flush with tip of pin contact (2).

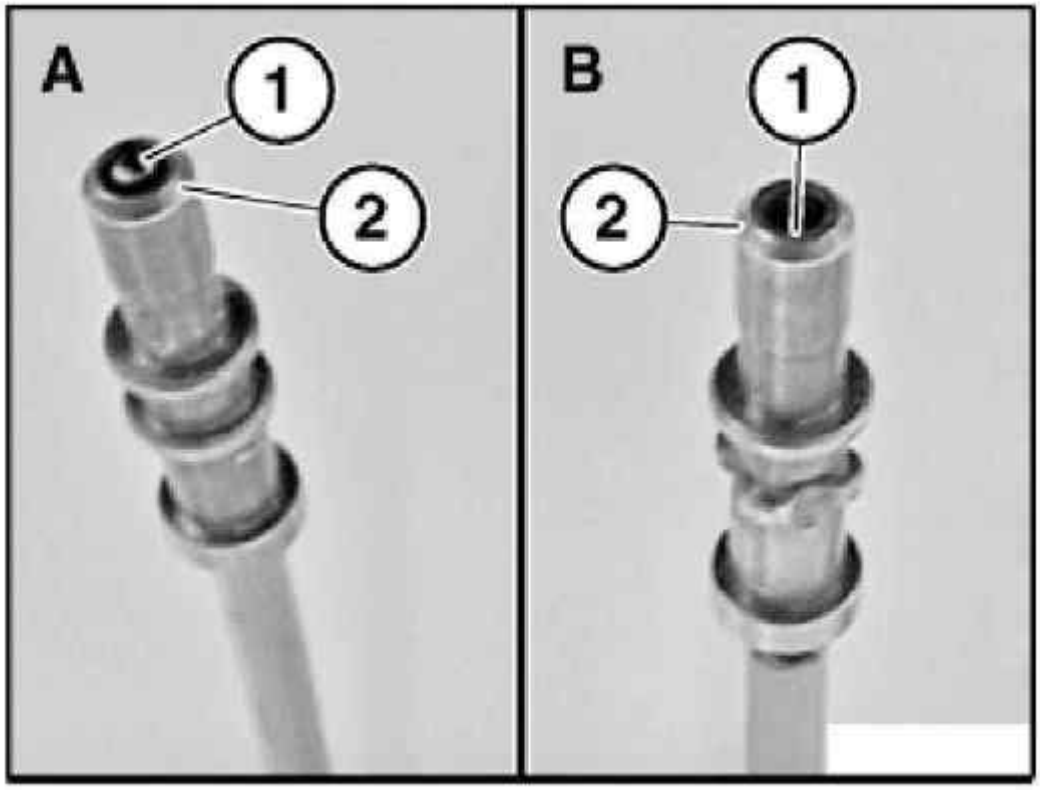

G03298456

Fig. 66: Identifying End Of Optical Fibre
Courtesy of BMW OF NORTH AMERICA, INC.

61 13... CUTTING OFF, STRIPPING INSULATION AND CUTTING OPTICAL FIBRES TO LENGTH

Special Tools Required:

- 61 4 320

To cut off, strip insulation and cut optical fibres to length, use pliers 61 4 321 (1) in conjunction with crimping head 61 4 322 (2) from crimping set 61 4 320.

NOTE: Pliers (1) open automatically as far as they will go when handles are pressed together.

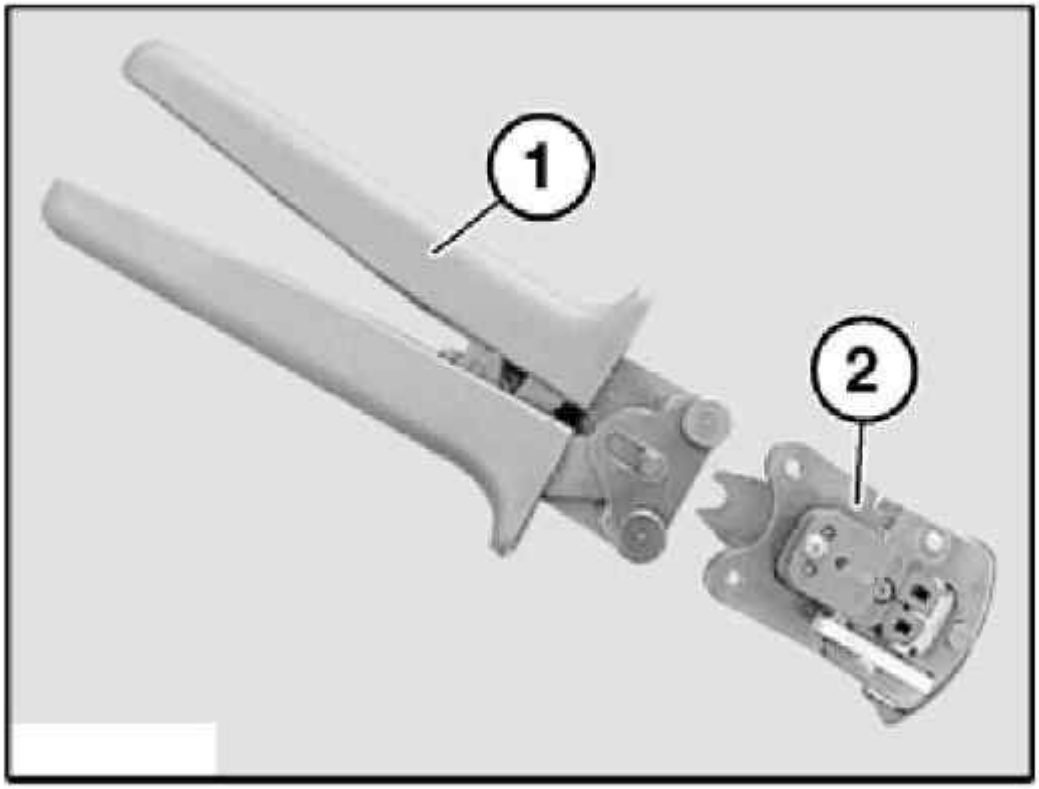

G03298457

Fig. 67: Identifying Special Tools 61 4 320
Courtesy of BMW OF NORTH AMERICA, INC.

Cutting Optical Fibre

Open pliers (1).

Place optical fibre (2) in cutting device (3).

Close pliers (1) and remove optical fibre (2).

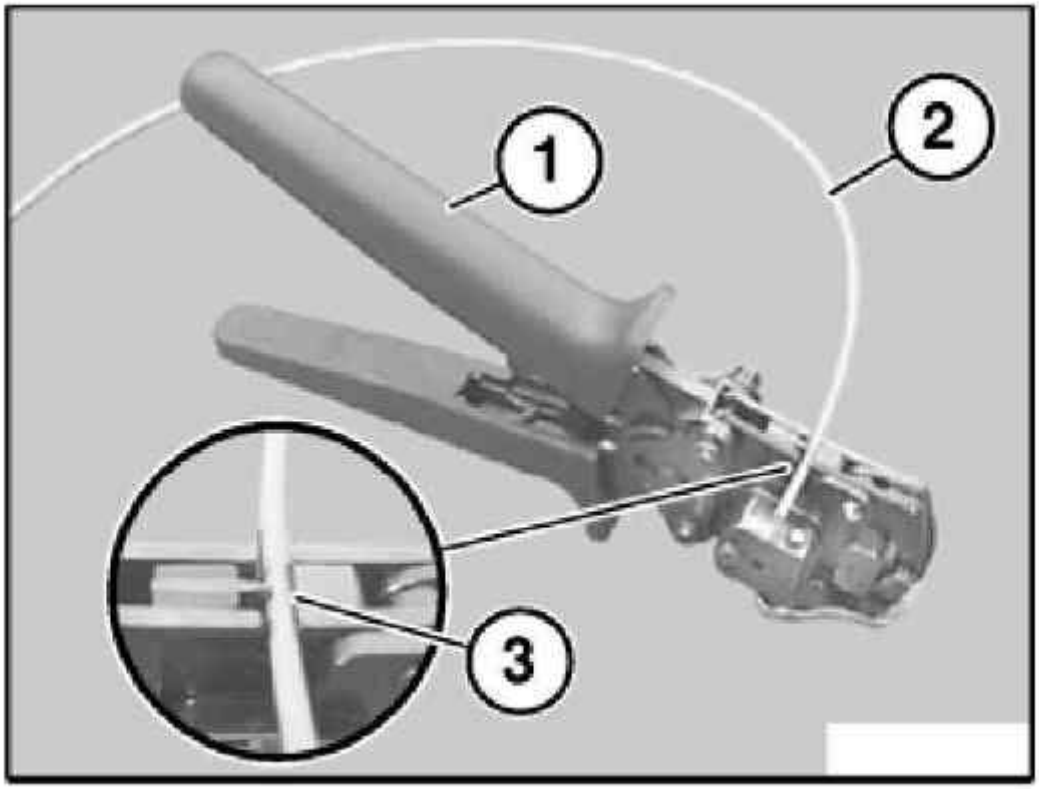

G03298458

Fig. 68: Opening Pliers
Courtesy of BMW OF NORTH AMERICA, INC.

Stripping Insulation From Optical Fibre

Open pliers (1).

Open lever (2) in direction of arrow.

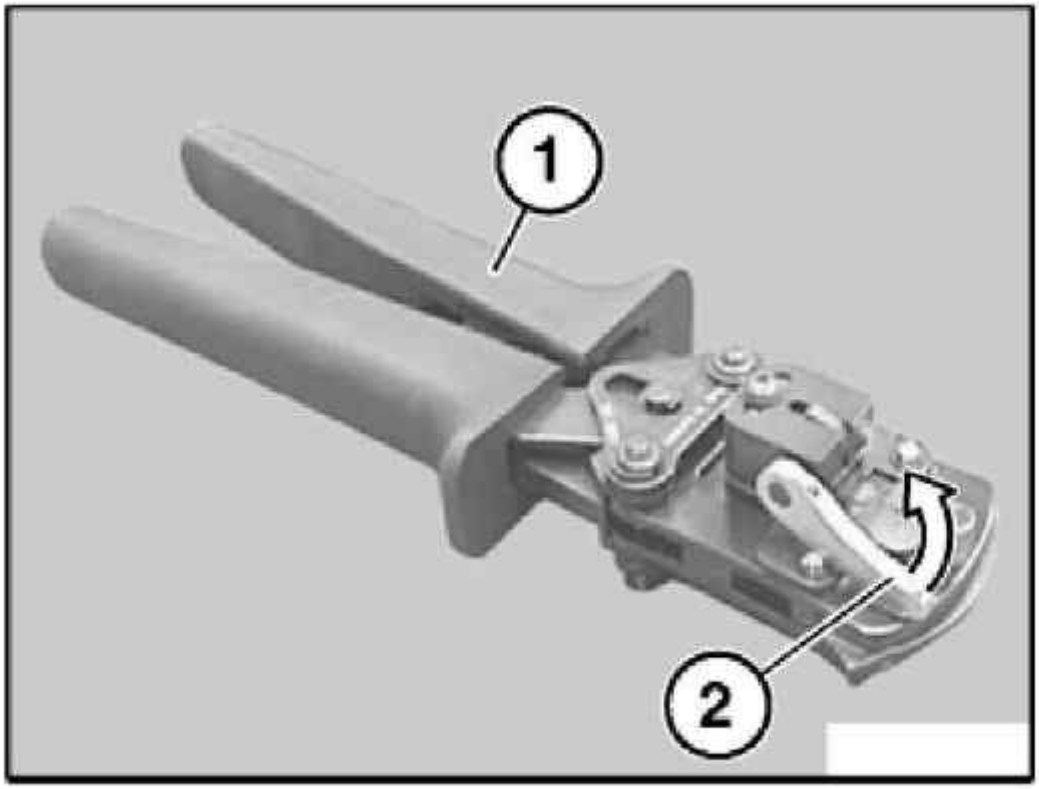

G03298459

Fig. 69: Opening Lever
Courtesy of BMW OF NORTH AMERICA, INC.

Slide optical fibre (1) into stripping device (2) until flush at point (3).

Close pliers (4) fully.

Close clamping lever (5) in direction of arrow.

Open pliers (4) by one tooth notch.

Open clamping lever (5) against direction of arrow again and remove optical fibre (1).

NOTE: A stripping replacement blade set is available under number 61 4 327.

Cutting Optical Fibre To Length

IMPORTANT: The cutting blade must be replaced prior to each cutting of the optical fibre.

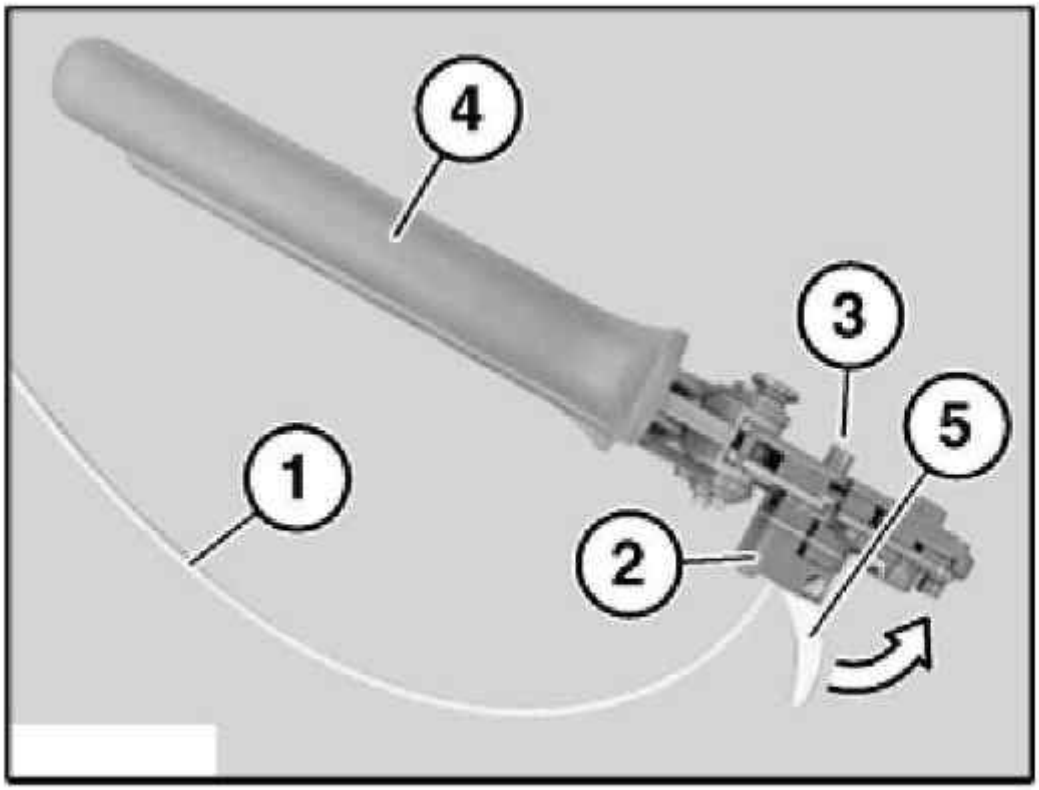

G03298460

Fig. 70: Opening Clamping Lever
Courtesy of BMW OF NORTH AMERICA, INC.

Pull pin (1) in direction of arrow.

Fold up blade retaining link (2) in direction of arrow.

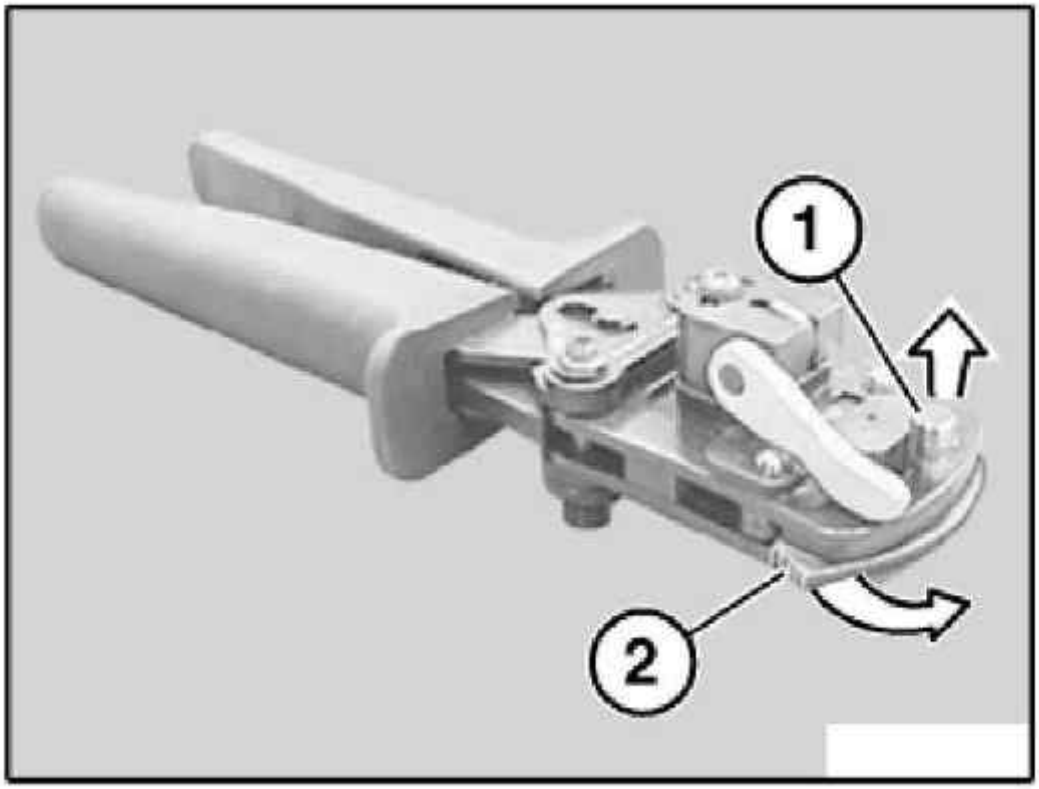

G03298461

Fig. 71: Pulling Pin
Courtesy of BMW OF NORTH AMERICA, INC.

WARNING: Risk of injury when changing the blade.

Remove blade (1) and replace.

Installation:

Make sure blade (1) is correctly seated on locating points (2).

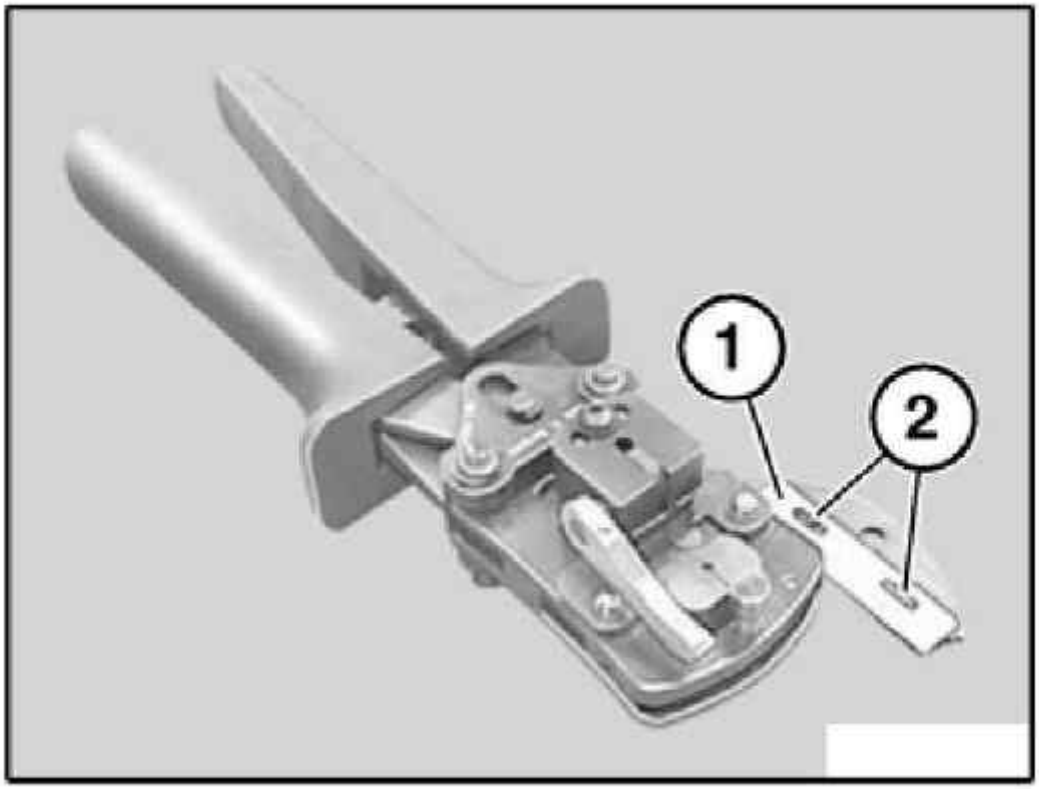

G03298462

Fig. 72: Removing Blade
Courtesy of BMW OF NORTH AMERICA, INC.

Open pliers (3).

Slide optical fibre (1) into cutting device (2) until insulation of optical fibre (1) butts against clamping device.

Close pliers (3) fully and keep closed.

Remove optical fibre (1).

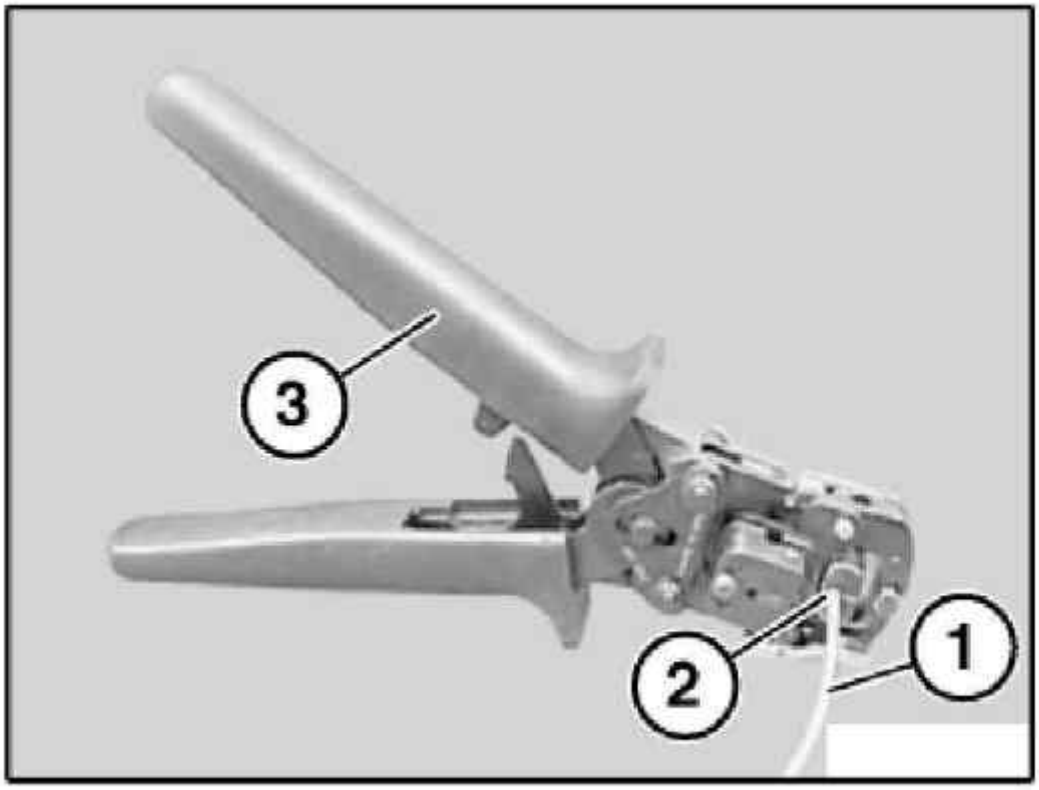

G03298463

Fig. 73: Removing Optical Fibre
Courtesy of BMW OF NORTH AMERICA, INC.

61 13... OPENING PLUG HOUSINGS AND REMOVING CONTACTS OF DIFFERENT PLUG SYSTEMS

Abbreviations And What They Mean:

ABBREVIATIONS

MDK 3plus	Miniature double flat spring contact
JPT ELA	Junior Power Timer flat spring contacts with strand sealing
DFK ELA	Double flat spring contacts with strand sealing
Elo	Electronic contacts with and without strand sealing Manufacturer: Siemens
Elo Power	Electronic contacts for heavy loads with and without strand sealing Manufacturer: Siemens
MQS	Micro Quadlock System electronic contacts with and without strand sealing Manufacturer: AMP

MPQ	Micro Power Quadlock electronic contacts for heavy loads with and without strand sealing Manufacturer: AMP
D 1.5 / 2.5	Round contacts of 1.5 mm or 2.5 mm diameter

Ultrasonic-welded connectors:

Ultrasonic-welded connectors (1) can be identified by the welds (2) on their longitudinal side.

The contacts of these connectors cannot be replaced. Replace plug completely.

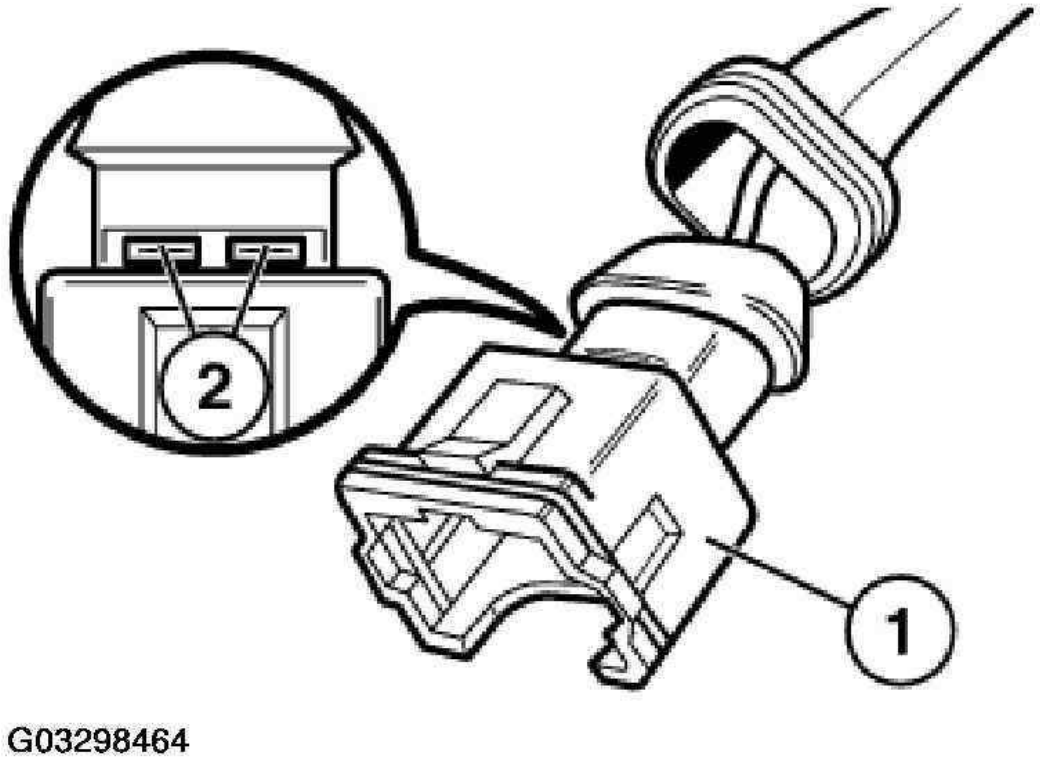

Fig. 74: Identifying Ultrasonic-Welded Connectors
Courtesy of BMW OF NORTH AMERICA, INC.

NOTE: Special tools referred to in the repair instructions below are contained in the following special tool kits:

Release and press-out tool 61 1 150

61 13... PLUG HOUSING, LCC CONTACT (LOAD CURRENT CONTACT)

Special Tools Required:

- 61 1 200

Socket housing:

Press lock (1) with suitable tool (2) in direction of arrow out of socket housing (3).

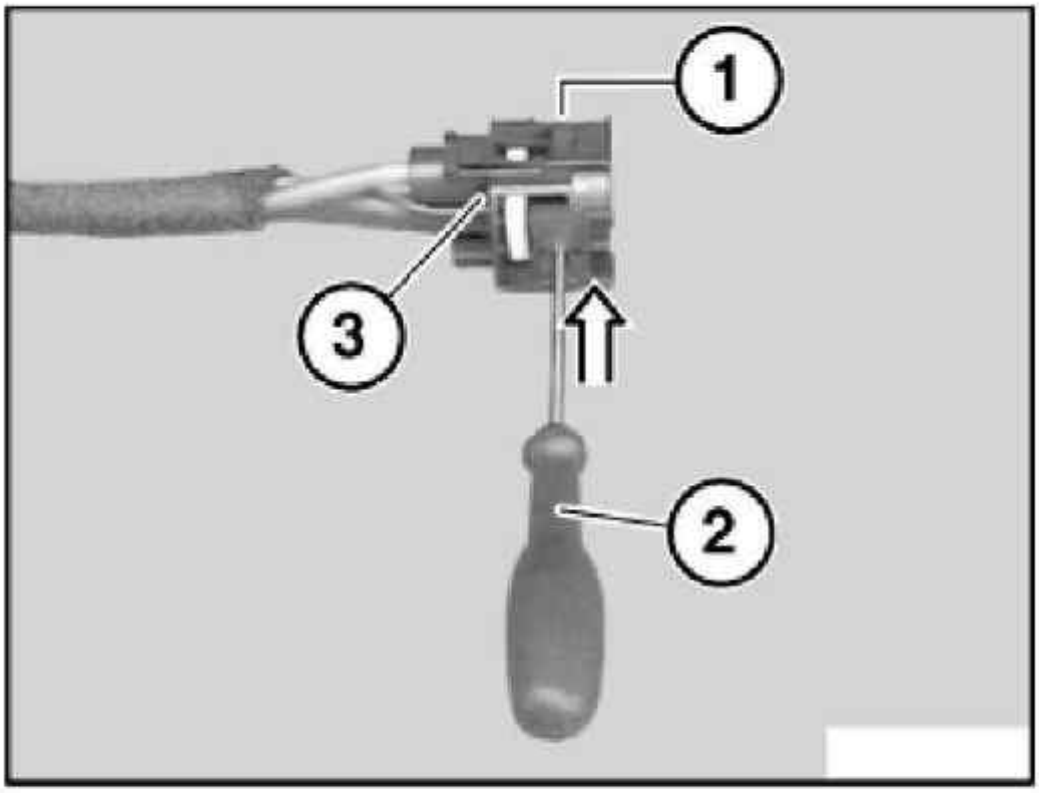

G03298465

Fig. 75: Pressing Lock
Courtesy of BMW OF NORTH AMERICA, INC.

Pull lock (1) out of socket housing (2).

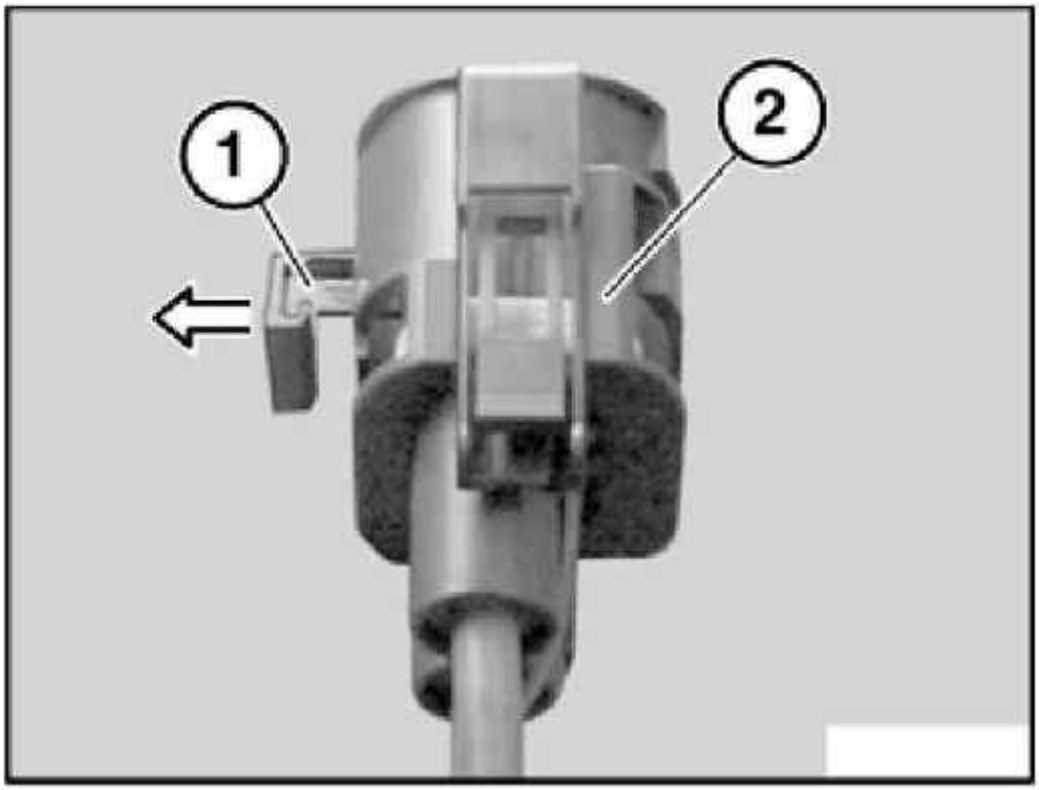

G03298466

Fig. 76: Pulling Lock Out Of Socket Housing
Courtesy of BMW OF NORTH AMERICA, INC.

Insert special tool 61 1 200 into socket housing (1) and pull out lead with LCC contact (2) in direction of arrow.

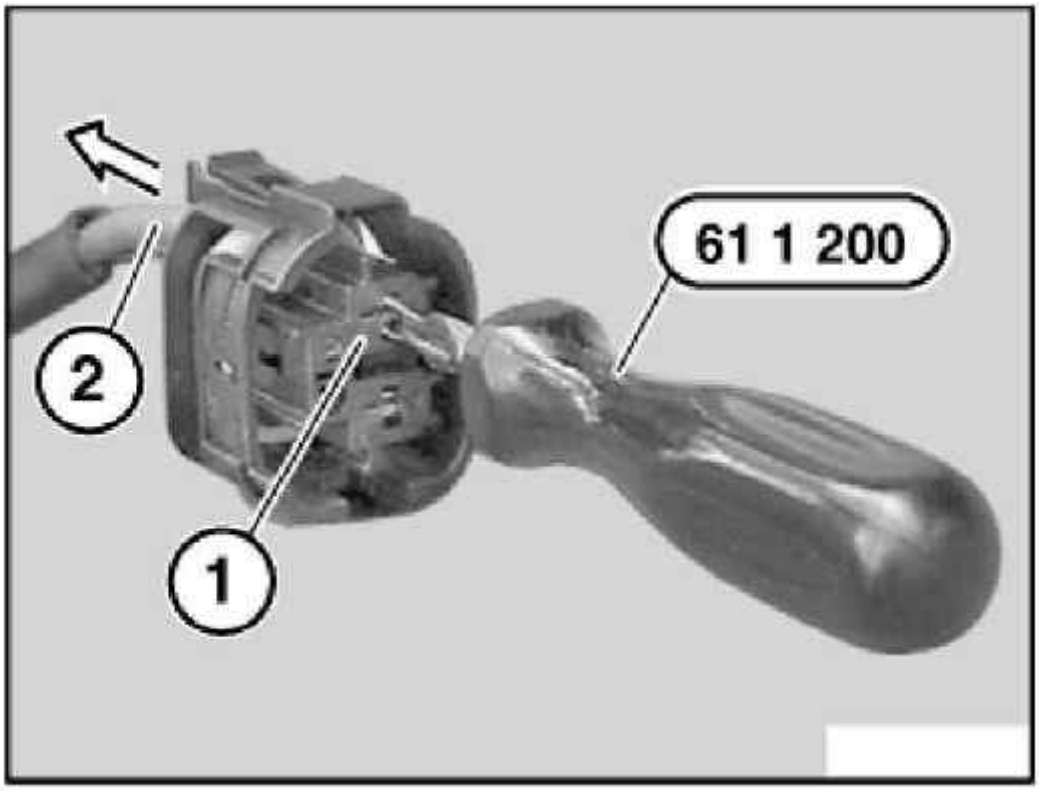

G03298467

Fig. 77: Inserting Special Tool 61 1 200
Courtesy of BMW OF NORTH AMERICA, INC.

Pin housing:

Unlock locking slide (1) of pin housing (2) with suitable tool (3) in direction of arrow.

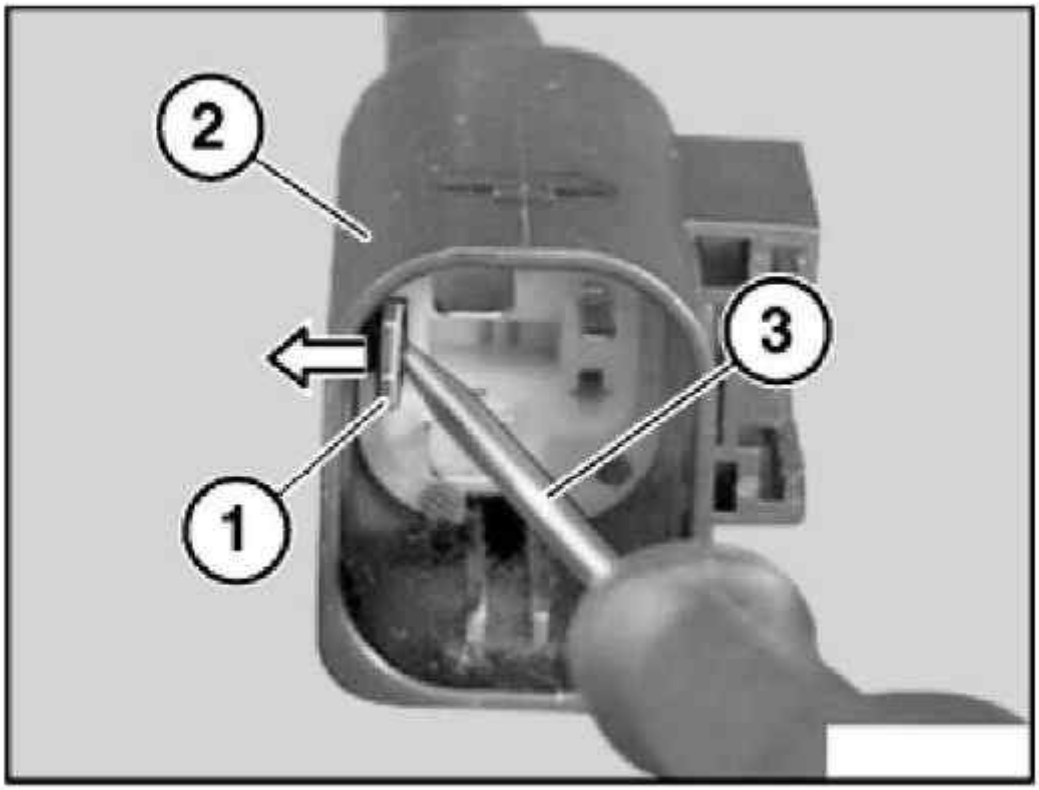

G03298468

Fig. 78: Unlocking Locking Slide Of Pin Housing
Courtesy of BMW OF NORTH AMERICA, INC.

Insert special tool 61 1 200 into pin housing (1) and pull out lead with LCC contact (2) in direction of arrow.

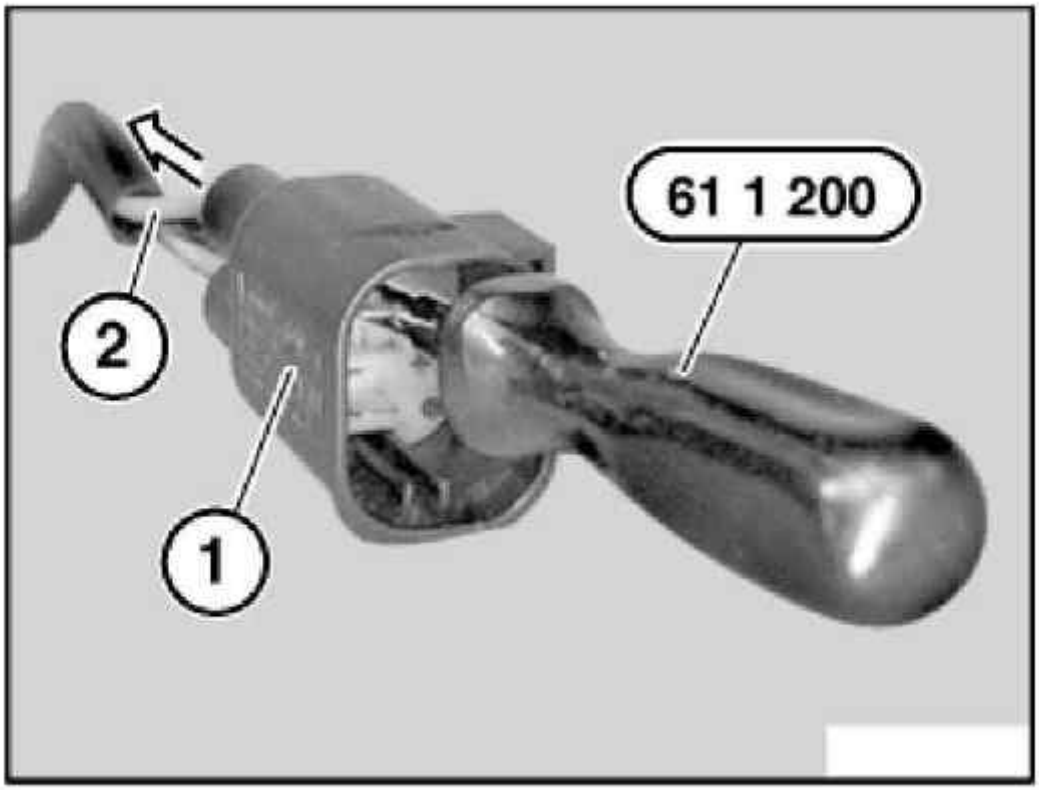

G03298469

Fig. 79: Inserting Special Tool 61 1 200 Into Pin Housing
Courtesy of BMW OF NORTH AMERICA, INC.

61 13... RELAY CARRIER

Place special tool 61 1 153 on relay carrier (1) and carefully pull in direction of arrow until retaining lugs (2) on relay carrier are raised.

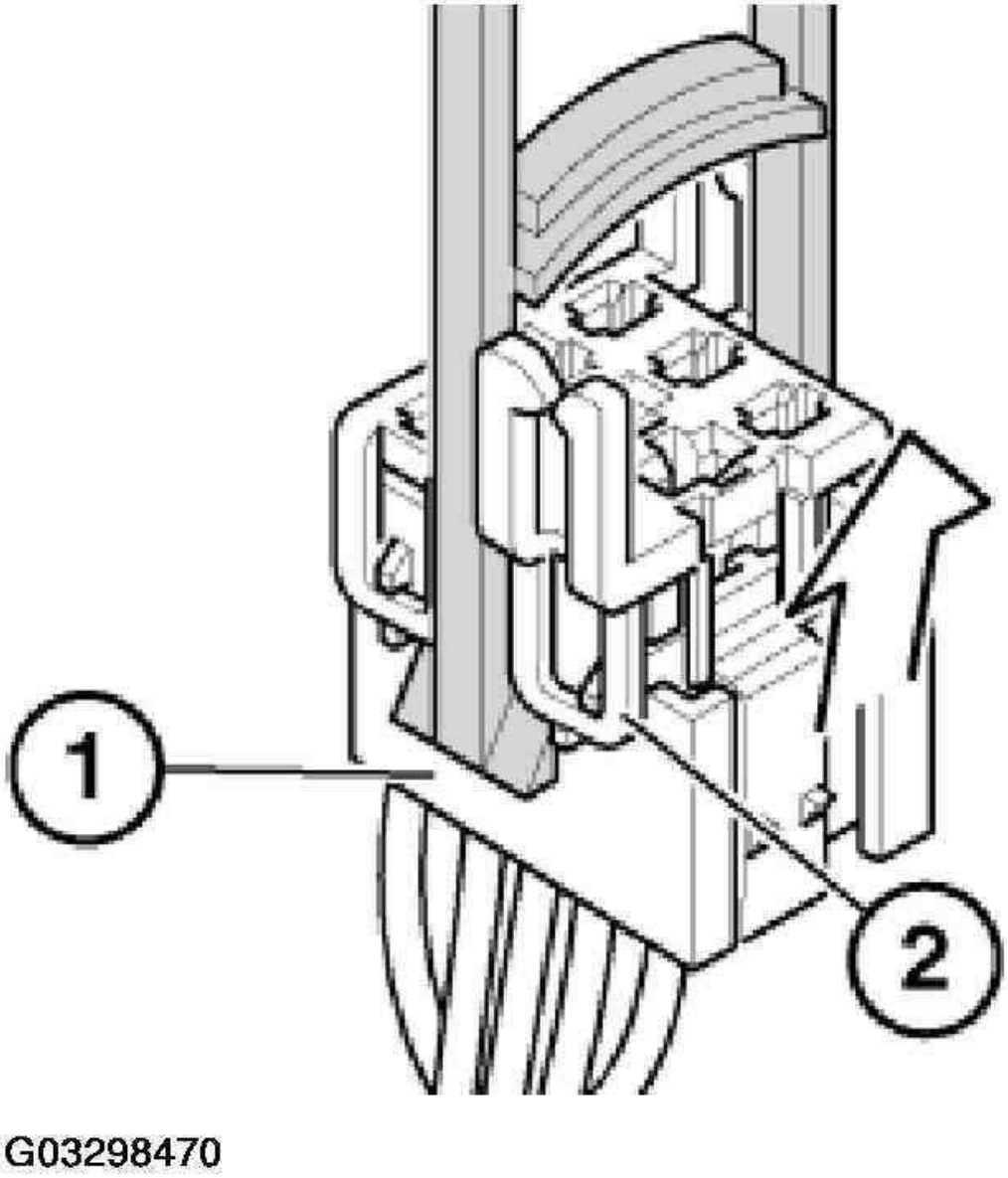

Fig. 80: Placing Special Tool 61 1 153 On Relay Carrier
Courtesy of BMW OF NORTH AMERICA, INC.

Pull relay carrier (2) in direction of arrow into first catch (3).

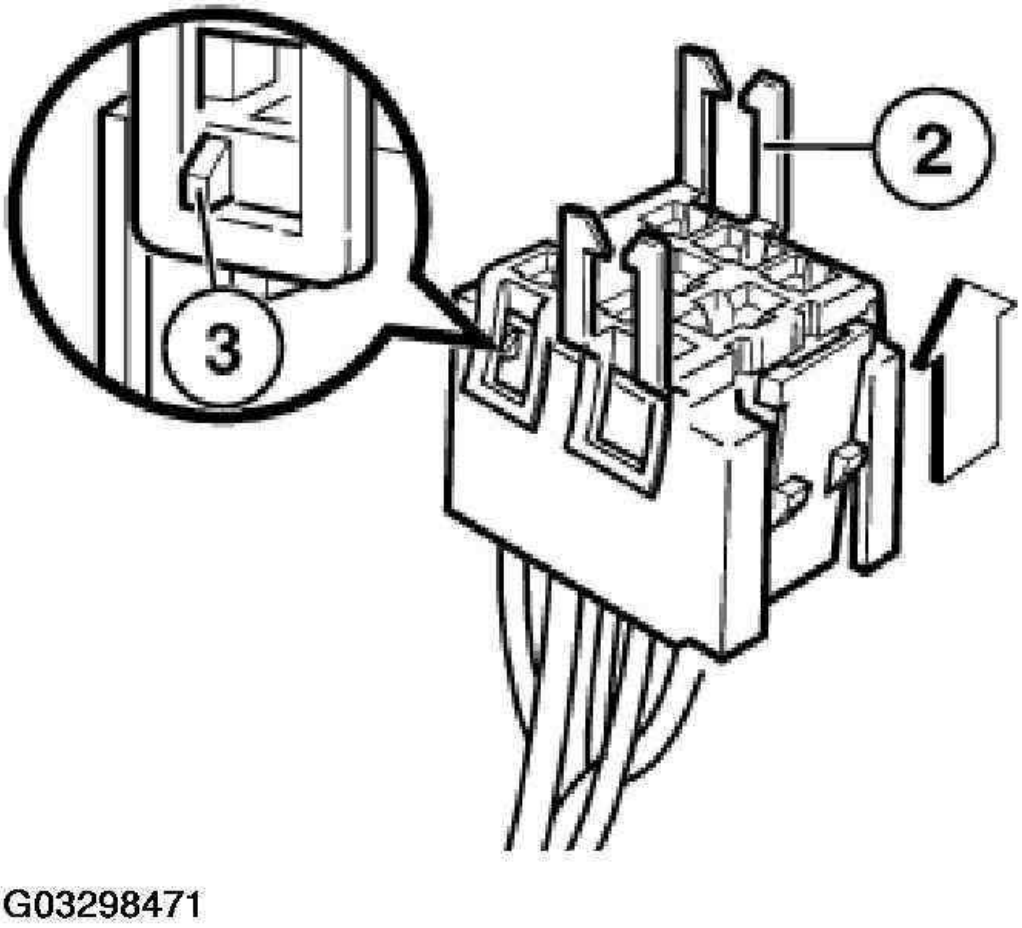

Fig. 81: Pulling Relay Carrier
Courtesy of BMW OF NORTH AMERICA, INC.

Press down arrester hook (4) of appropriate contact and pull out cable with contact.

Press out double flat spring contact with special tool 61 1 136 or 61 1 137 (ejector).

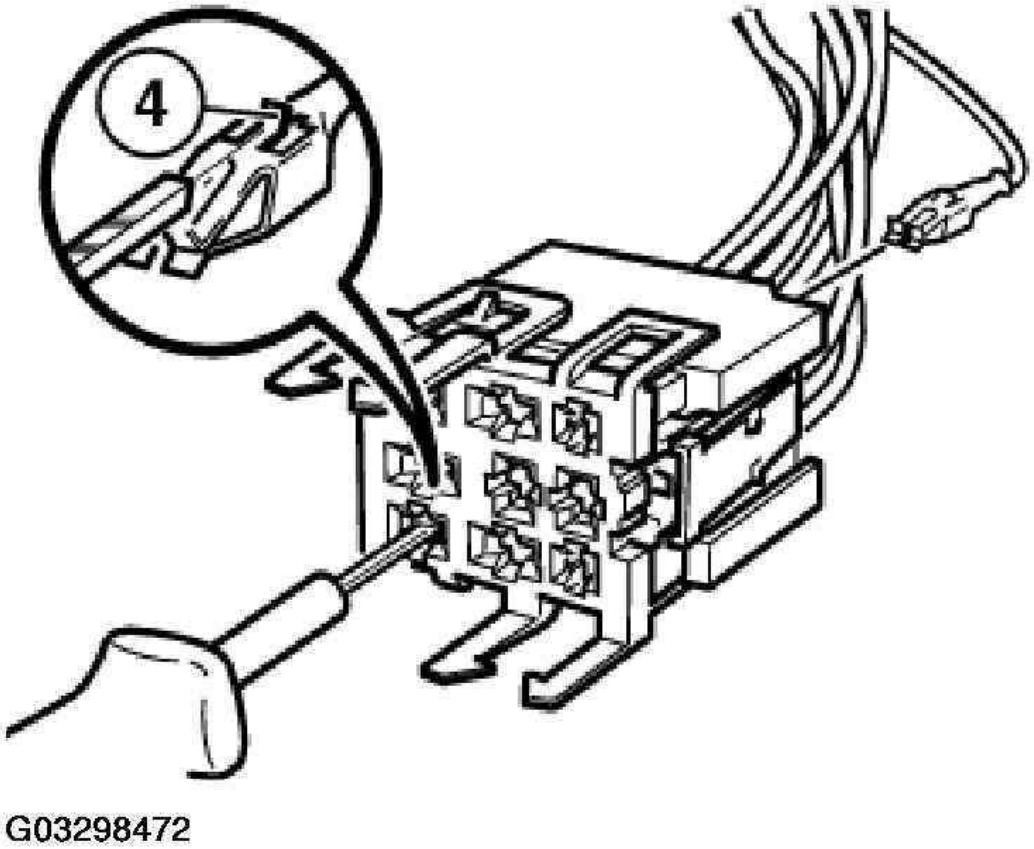

Fig. 82: Pressing Down Arrester Hook
Courtesy of BMW OF NORTH AMERICA, INC.

61 13... REPAIRING RIBBON CABLES

Special Tools Required:

- 61 1 190

Place ribbon cables (1) in connector housing (2) and close cover (3).

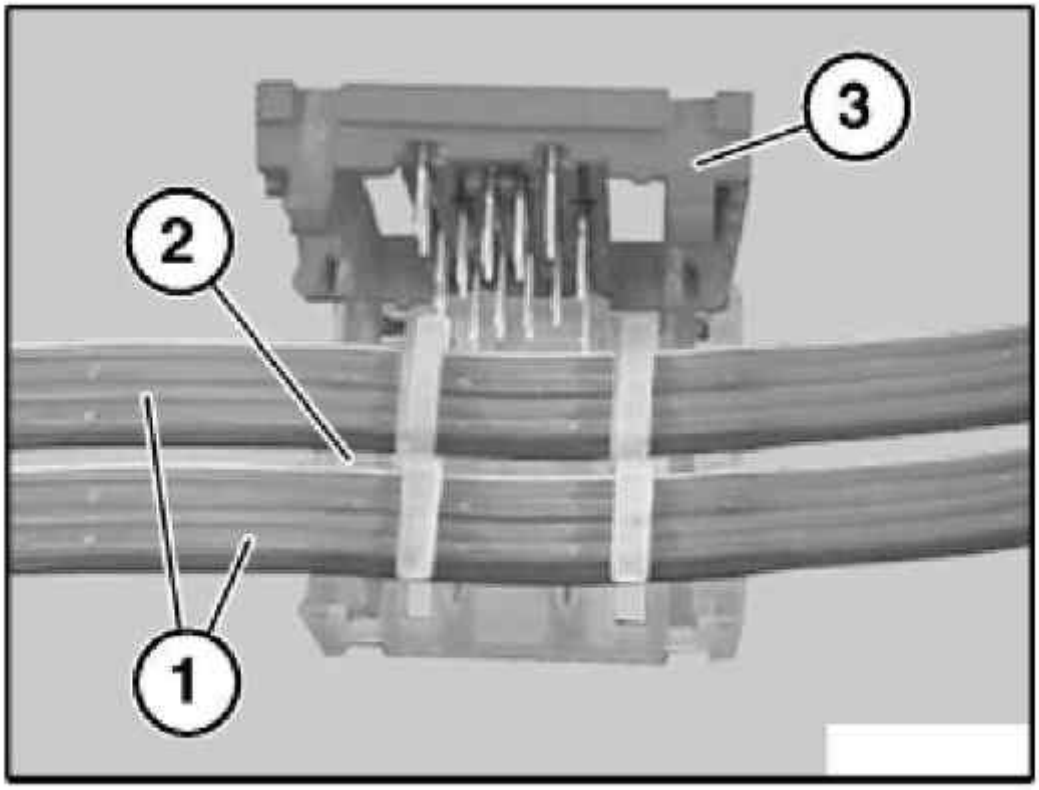

G03298473

Fig. 83: Identifying Special Tools 61 1 190
Courtesy of BMW OF NORTH AMERICA, INC.

Place connector housing (1) in pliers (2) 61 1 190.

Close pliers (2).

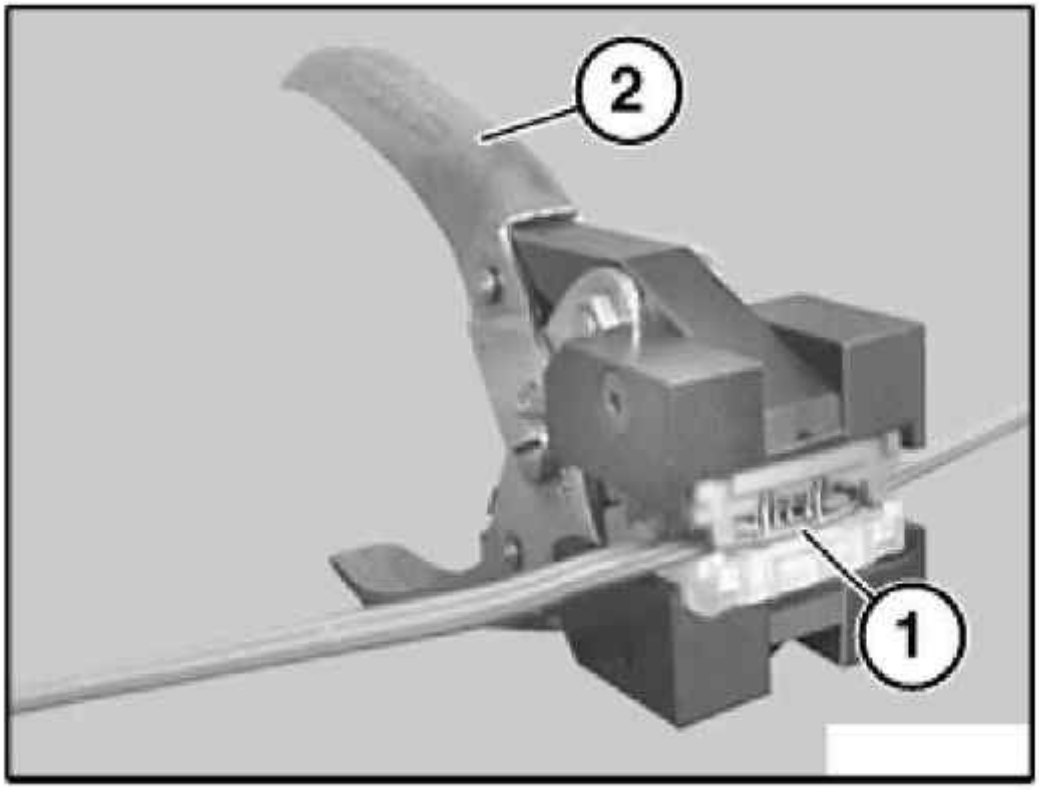

G03298474

Fig. 84: Placing Connector Housing In Pliers 61 1 190
Courtesy of BMW OF NORTH AMERICA, INC.

61 13... RETAINING BRACKET

Pull relevant fuse out of fuse block (1).

NOTE: Mark positions when removing fuses.

Pull locking slide (2) out of fuse block (1) as far as it will go.

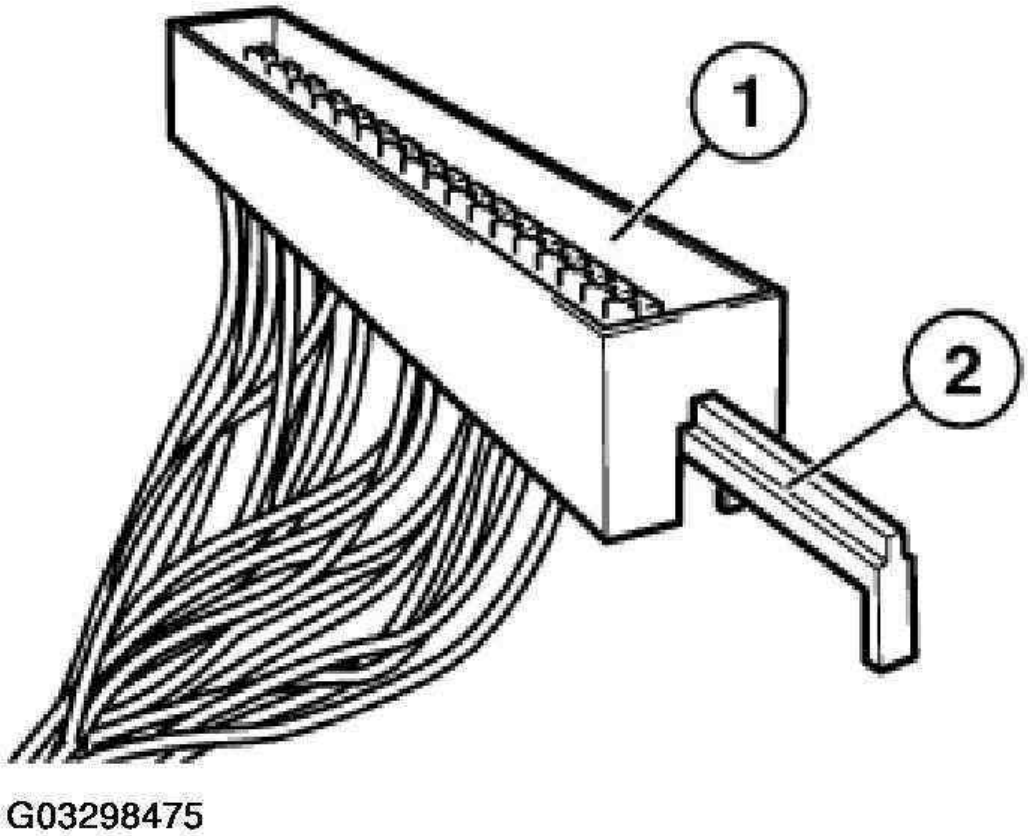

Fig. 85: Pulling Locking Slide
Courtesy of BMW OF NORTH AMERICA, INC.

With special tool 61 1 136 or 61 1 137 (ejector), press back arrester hook (3) of appropriate contact and pull out cable.

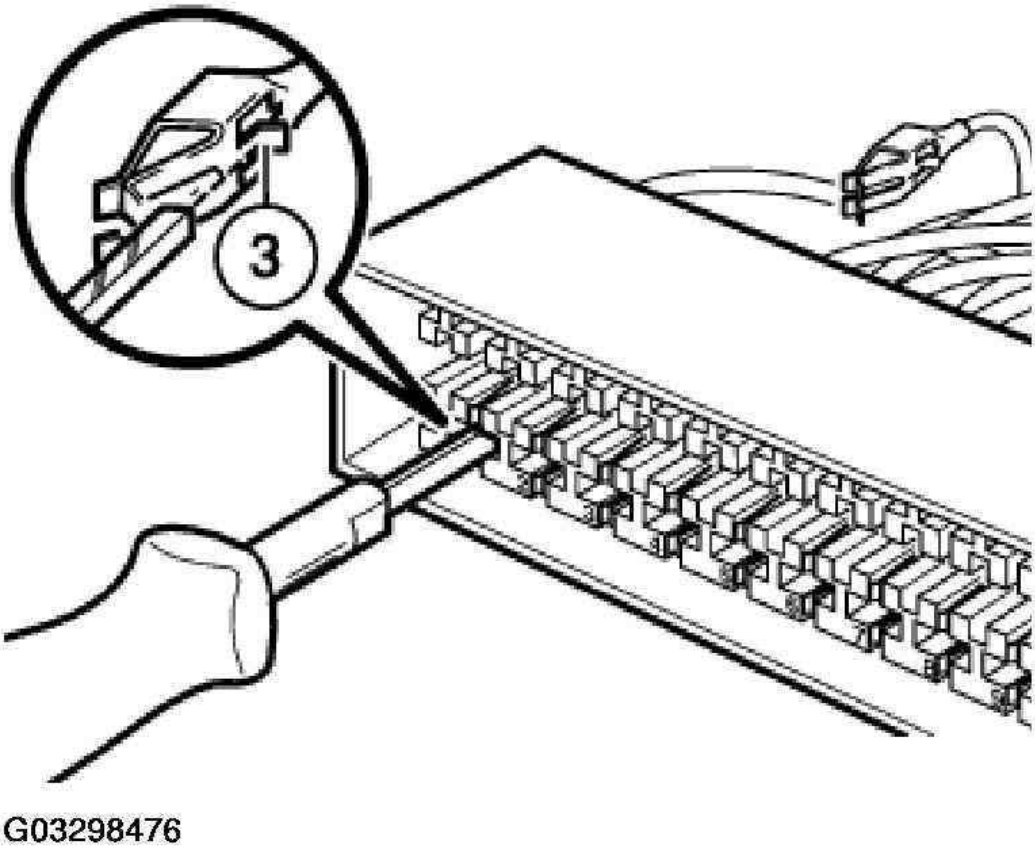

Fig. 86: Identifying Special Tool 61 1 136 Or 61 1 137
Courtesy of BMW OF NORTH AMERICA, INC.

61 13... SOCKET HOUSING (RADIO PLUG), HYBRID SYSTEM MQS/MPQ

Manufactured by AMP: The following contact types without strand sealing can be fitted in the plug housings:

- MQS (Micro Quadlock System)
- MPQ, width 2.8 mm (Micro Power Quadlock)
- MPQ, width 5.2 mm (Micro Power Quadlock)

Removing MPQ contacts from radio plug:

Press lock (1) in direction of arrow.

Detach secondary lock (2) from radio plug.

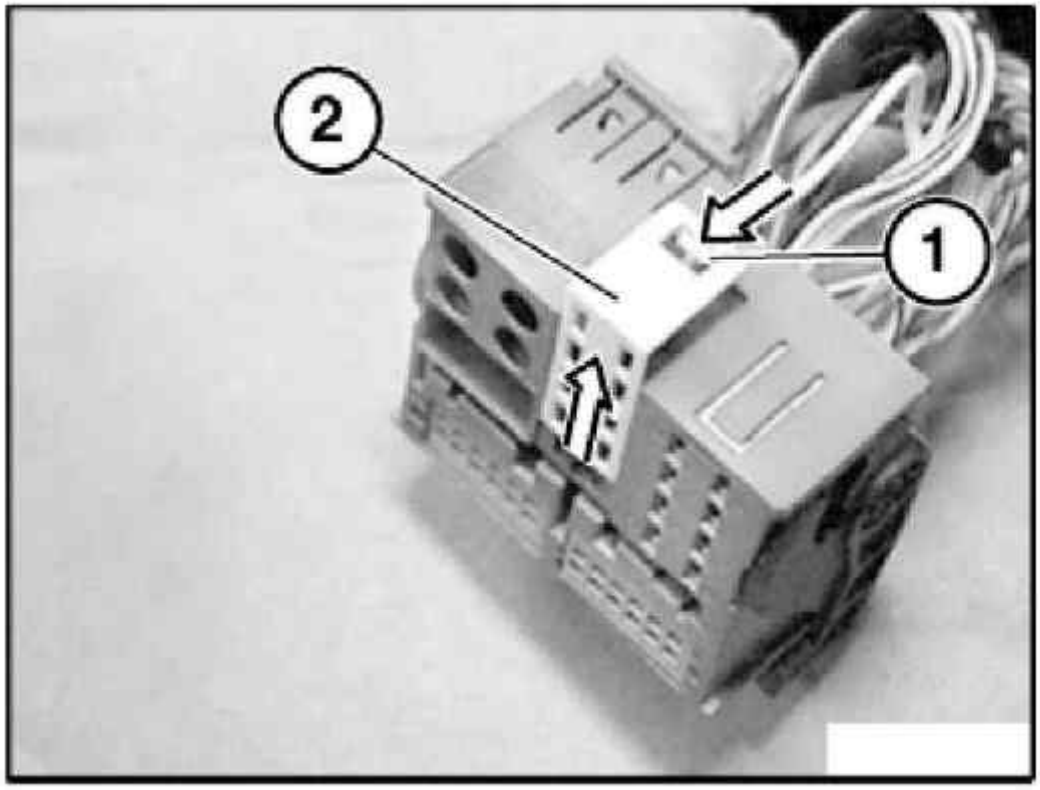

G03298477

Fig. 87: Pressing Lock
Courtesy of BMW OF NORTH AMERICA, INC.

Feed special tool 61 1 135 past side of contact.

Press special tool 61 1 135 in direction of arrow.

Pull wire (1) with socket contact out of radio plug (2).

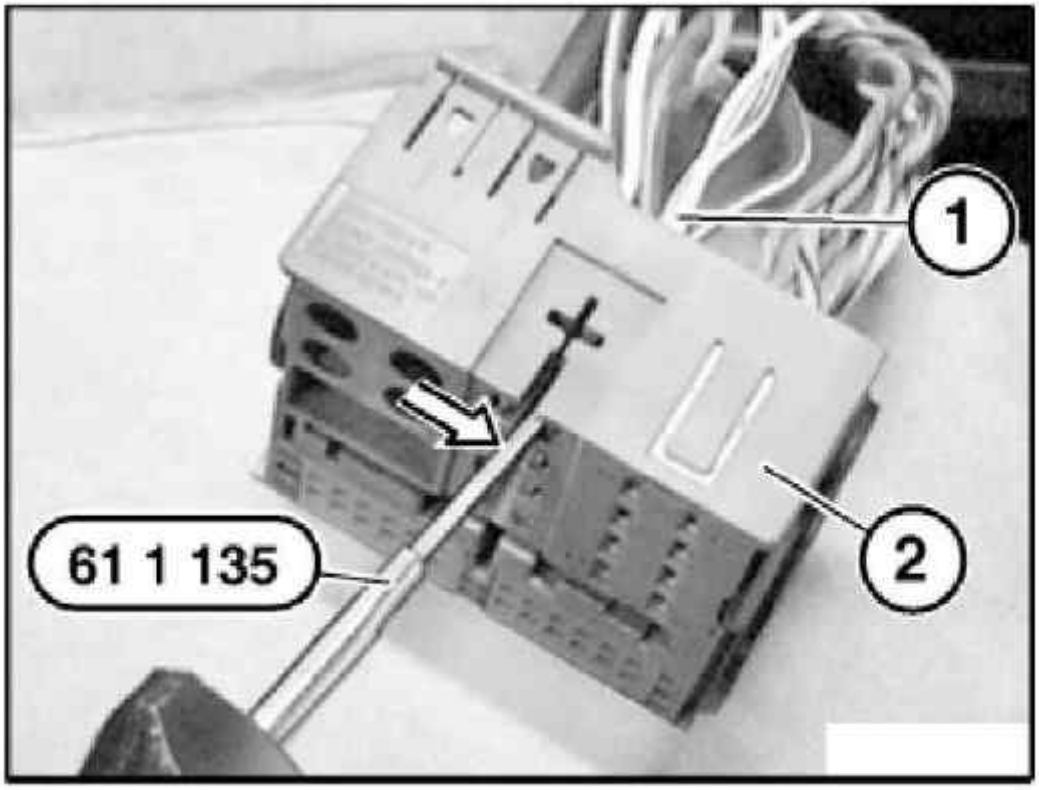

G03298478

Fig. 88: Pressing Special Tool 61 1 135
Courtesy of BMW OF NORTH AMERICA, INC.

Removing MQS contacts from contact carrier:

Press lock (1) in direction of arrow and pull housing (2) out of radio plug.

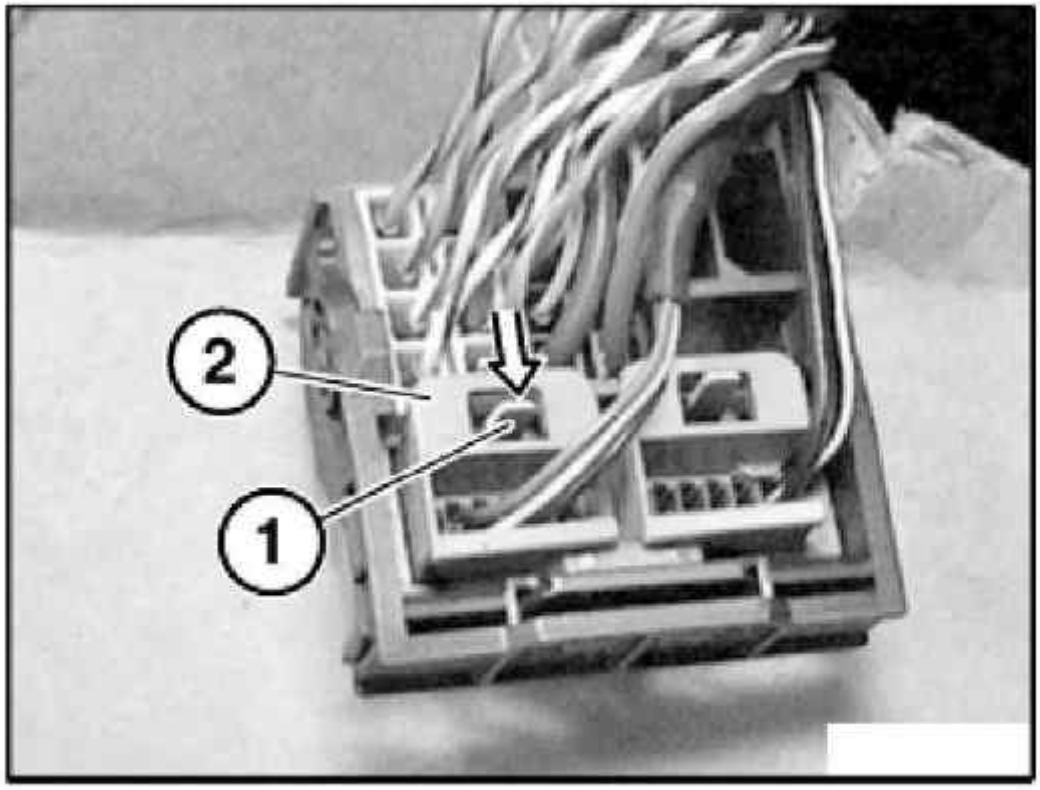

G03298479

Fig. 89: Pressing Lock
Courtesy of BMW OF NORTH AMERICA, INC.

Press lock (1) in direction of arrow. Pull contact carrier (2) out of housing (3).

NOTE: **When the contact carrier is pulled out, the secondary locks of the socket contacts are raised.**

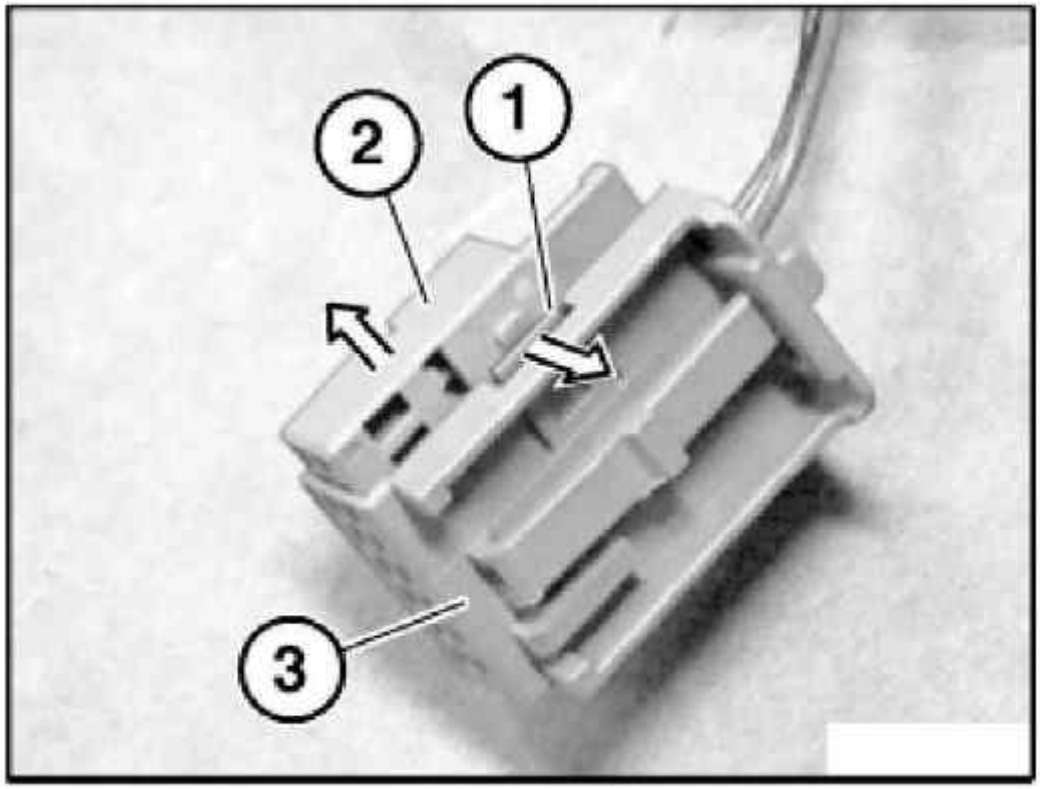

G03298480

Fig. 90: Pulling Contact Carrier
Courtesy of BMW OF NORTH AMERICA, INC.

Hold down retaining hook (1) of socket contact in opening of contact carrier with a small screwdriver.

Pull wire with socket contact in direction of arrow as far as secondary lock (2).

NOTE: The illustration shows an 8-pin socket housing where removal of the contacts is identical.

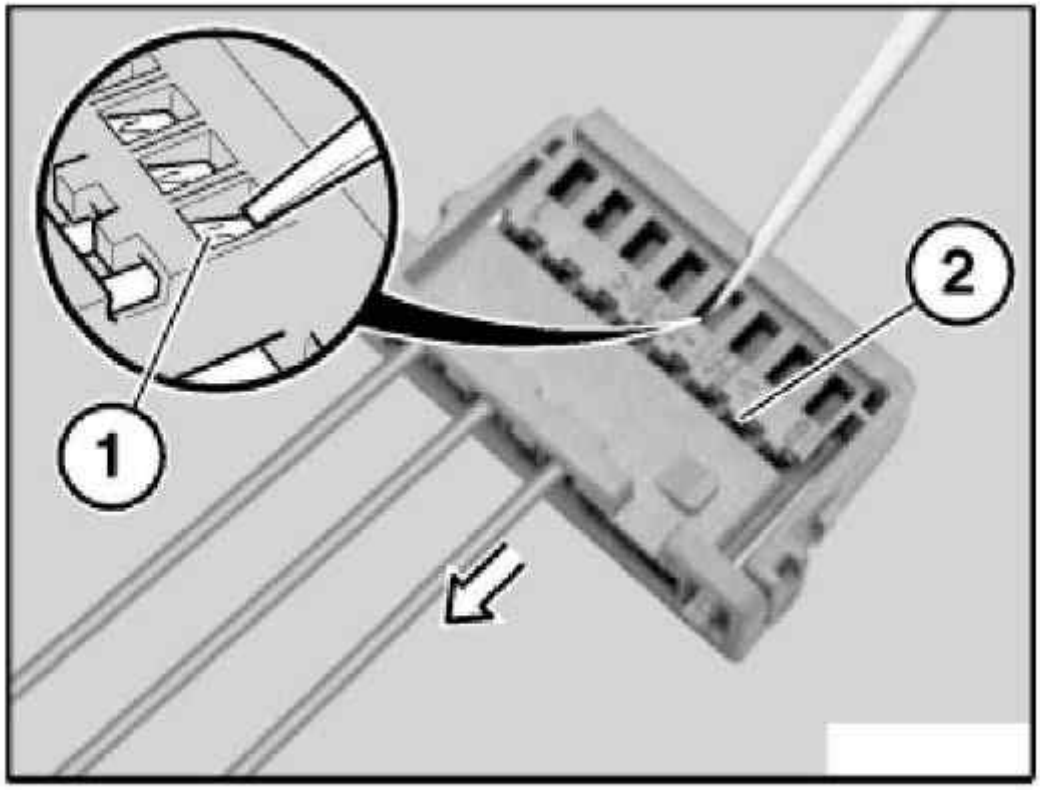

G03298481

Fig. 91: Pulling Wire With Socket Contact
Courtesy of BMW OF NORTH AMERICA, INC.

Hold down arrester hook in secondary lock (1) again. Pull wire with socket contact (2) out of contact carrier (3).

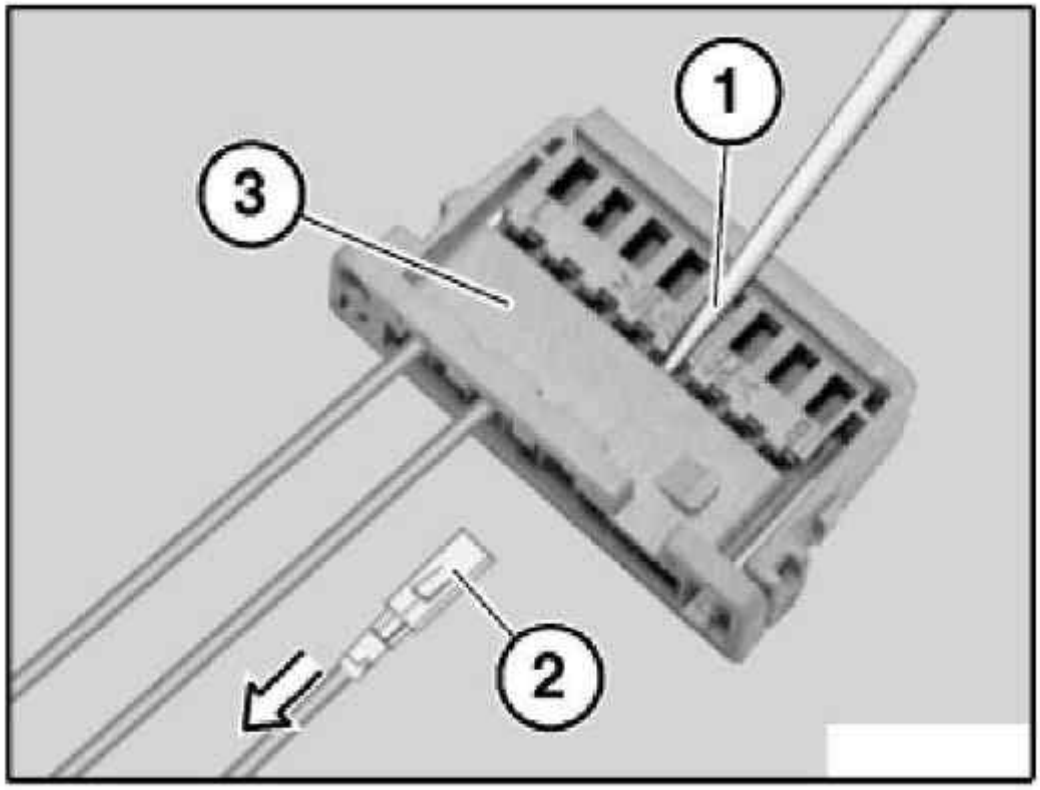

G03298482

Fig. 92: Pulling Wire With Socket Contact
Courtesy of BMW OF NORTH AMERICA, INC.

Removing MPQ contacts from contact carrier:

Remove contact carrier (1) with MQS contacts from radio plug.

Raise lock (2) on radio plug.

Pull contact carrier (3) out of radio plug.

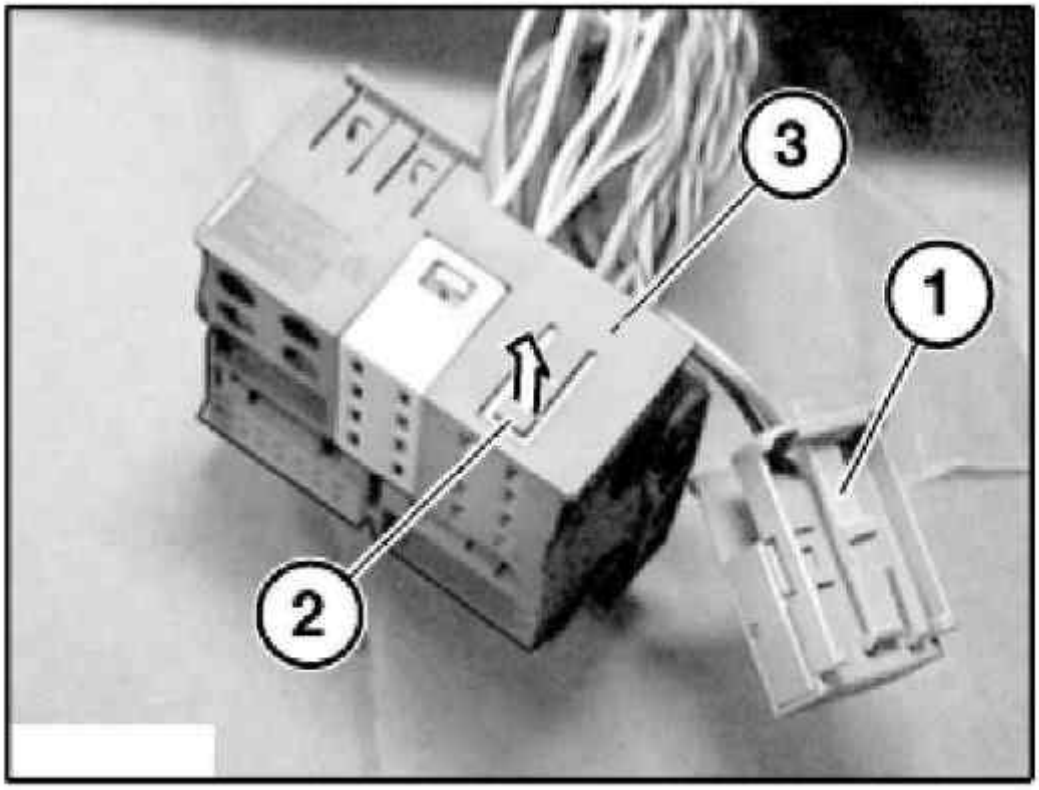

G03298483

Fig. 93: Pulling Contact Carrier
Courtesy of BMW OF NORTH AMERICA, INC.

Press lock (1) in direction of arrow.

Pull secondary lock (2) in direction of arrow completely out of contact carrier (3).

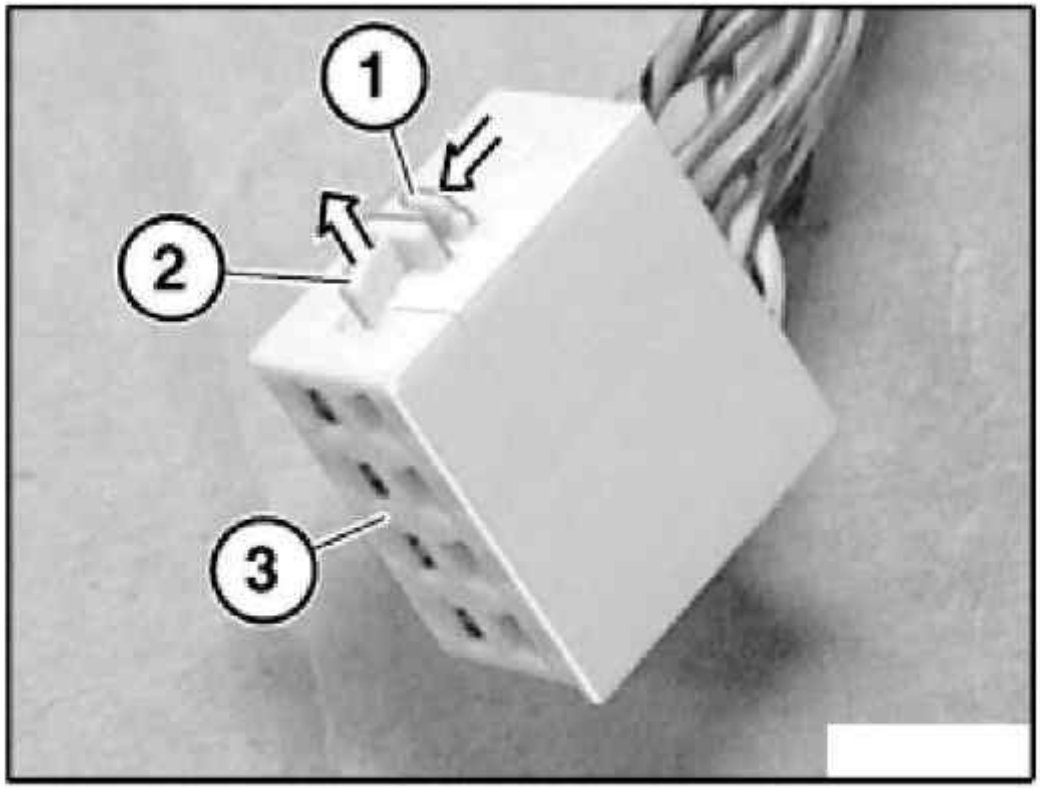

G03298484

Fig. 94: Pressing Lock
Courtesy of BMW OF NORTH AMERICA, INC.

Press special tool 61 1 135 on inside of contact into contact carrier (2).

Pull wire with socket contact (1) out of contact carrier (2).

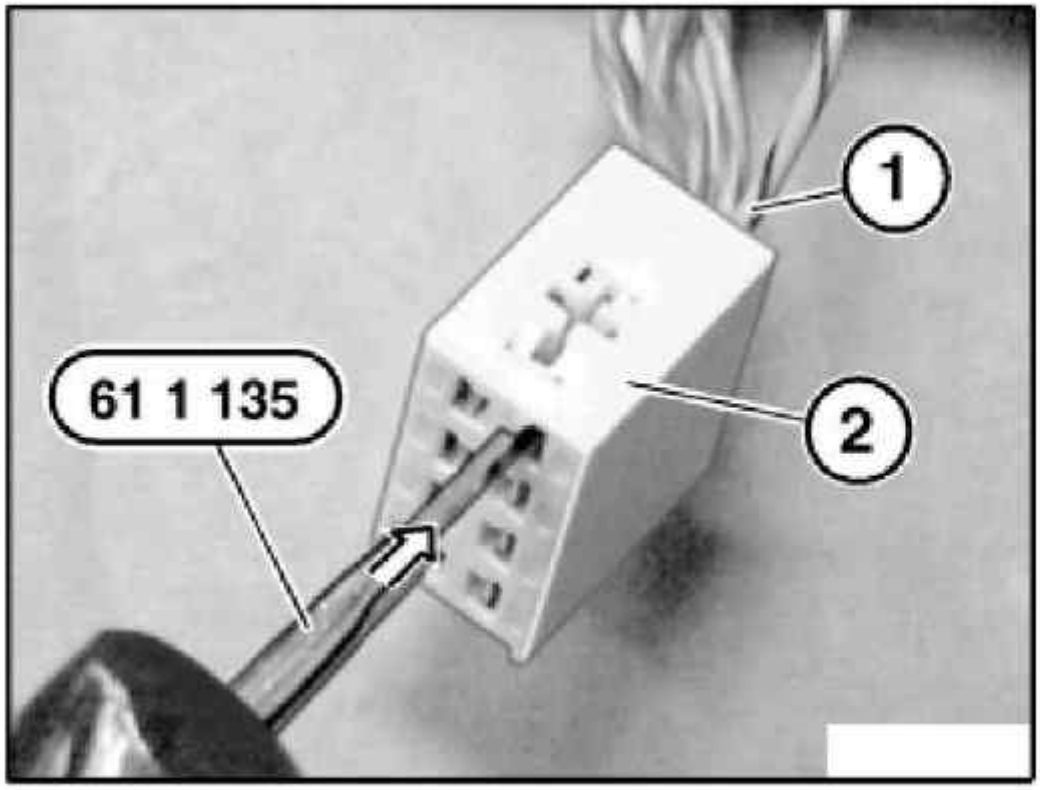

G03298485

Fig. 95: Pressing Special Tool 61 1 135
Courtesy of BMW OF NORTH AMERICA, INC.

BATTERY

12 00... INSTRUCTIONS ON STARTING AID

Do not start the engine with help of starting sprays.

Preparation:

Conform with the following when starting engine with starting cable.

- Ensure that jump lead wires are to appropriate cross-section size.
- Only use fuse-protected jump leads.
- Check whether the current supplying battery has 12 V voltage.
- If engine is started from battery of another vehicle, ensure that there is no contact between the bodies of

both vehicles.

CAUTION: Never touch ignition system components and current - dangerous high tension!

If the battery in the vehicle supplying power is weak, start the engine of this vehicle and let it run at idling speed.

Carrying out:

Always conform with the procedures to avoid injury to persons or damage to parts.

- On automatic transmission, select "P" setting, apply handbrake.
- Move the shift lever of vehicles with manual transmission into neutral and apply the parking brake.
- Ensure that the jump leads cannot get caught in rotating parts, e.g. fan.
- First connect positive terminals of both batteries with one jump lead (red).
- Use positive connection point in engine compartment for vehicles with one battery in trunk.
- Then attach second jump lead (black) to negative terminal of donor battery and to engine ground or body ground on vehicle to be started.

CAUTION: Never connect second jump lead (black) to negative terminal of battery in vehicle to be started. This would produce explosive gas which could be ignited by sparks.

Danger of explosion!

After engine of vehicle to be started has started up, first disconnect the jump lead on the negative terminal/ground connection. Then remove jump lead from positive terminals.

61 00... BATTERY

NOTE: important notes and instructions for handling batteries can be found in:

- Battery master document
- **Disconnecting Battery**
- **Battery Charging**
- Welding work
- **External Jump-Starting Aid**

Battery Care And Maintenance

In low-maintenance batteries, check the acid level at least once a year. If necessary, top up with distilled water up to the top marking.

The increasing number of electronic control units in the car reduces the self-discharging time of the battery (even in standby mode).

Battery Test

The battery acid density can be used to measure the charge state. However this test produces uncertainty caused by a design-related range of variation. The acid density e.g. for a charged battery is 1.28 kg/l (in the tropical version the acid density is 1.23 kg/l).

Another interference factor is the acid lamination immediately after filling with distilled water.

Battery wear with partially sulfated and/or heavily contaminated plates will also lead to incorrect acid density test results.

61 00... BATTERY CHARGING

If a normal or quick charger is used to charge the battery, the battery must be disconnected from the vehicle electrical system and removed. This prevents damage to paintwork and upholstery.

IMPORTANT: In order to prevent the intelligent battery sensor from malfunctioning, the charging terminals in the engine compartment must be used without fail in vehicles from E60 and should be used if possible in other vehicles.

IMPORTANT: Before charging the battery while it is installed, first carry out a closed-circuit current test. If here the voltage is 10 V or less, one or more of the cells may be faulty or the entire battery may already be damaged. In this case, always remove the battery as escaping gases during charging could damage the interior equipment and trim. Attempt to regenerate faulty cells with low charging current.

If necessary, open existing plugs on the individual cells.

61 00... SAFETY INSTRUCTIONS FOR HANDLING VEHICLE BATTERY

Battery acid is highly corrosive:

Do not allow any battery acid to come into contact with the eyes, the skin or clothing. Therefore wear protective clothing, gloves and goggles.

Do not tilt the battery, acid may emerge from the vent opening.

In event of contact with acid:

If acid is splashed into the eyes, rinse them immediately for several minutes with clear water. You must then consult a doctor without delay.

If acid is splashed onto the skin or clothing, neutralize it immediately with a soapy solution and rinse with lots of water.

Seek medical attention immediately if battery acid is accidentally swallowed.

Explosion hazard:

Strictly no flames, sparks, naked light or smoking!

A highly explosive mixture of electrolytic gas is created when batteries are charged. The rooms where charging is carried out must therefore always be well ventilated.

Avoid the formation of sparks when handling cables, wiring and electrical devices.

Turn the ignition lock to the 0 position before disconnecting or connecting the battery.

Do not place tools or any similar object on the battery (danger of short-circuiting and explosion!).

61 20... BATTERY OPEN-CIRCUIT CURRENT TEST

NOTE: Observe safety instructions for handling vehicle battery.

G03298486

Fig. 96: Identifying Battery Open-Circuit Current Test
Courtesy of BMW OF NORTH AMERICA, INC.

The open-circuit current test is performed using the Diagnosis and Information System (DIS).

12 00... INSTRUCTIONS FOR DISCONNECTING AND CONNECTING BATTERY

Observe safety instructions for handling vehicle battery. See **BATTERY** .

Before disconnecting battery:

Switch off ignition.

NOTE: **If the ignition is not turned off when the battery is disconnected, fault memories may be set in some control units.**

IMPORTANT:

- **There is a danger of mixing up battery leads: If the battery positive and negative leads are the same color and you are in doubt, follow the polarity to the battery, then mark and cover the leads.**
- **On vehicles with radio code: After disconnecting the battery, the radio code must be re-entered. Therefore obtain the radio code card from the customer beforehand. Note stored stations and restore them after connecting the battery.**
- **Stored settings of the on-board computer and clock will also be lost.**
- **All available central keys must be recoded for cars with first generation infrared transmitter locking systems.**

General notes on disconnecting battery:

- Do not disconnect battery leads and leads from alternator and starter motor while engine is running.
- Cars with IBS on battery negative terminal:

  Do not under any circumstances pull/lever off pole shoes by force.

  Do not under any circumstances release socket-head cap screw of IBS.

- Detach battery negative terminal from car battery. Cover battery negative terminal(s) and secure.
- When work is carried out on the electrical system, faults may be caused in the fault memories of some control units when the battery is connected.
- When fitting terminal for battery negative lead: Tightening torque, see 61 21 1AZ in **GENERAL ELECTRICAL SYSTEM - TIGHTENING TORQUE** .

After connecting battery:

IMPORTANT: **After a power supply interruption some equipment is disabled and must be reactivated.**
Likewise, individual settings are lost and must be activated.
Example:

- **Activate sliding sunroof**
- **Vehicles with AFS only: Activate steering angle**
- **If necessary, activate power windows**
- **If necessary, activate mirror with compass**

BATTERY/VAPOR SEPARATOR

DISCONNECTING & CONNECTING BATTERY NEGATIVE LEAD

See **Battery** .

REMOVING & INSTALLING BATTERY

See **Battery** .

SWITCH

61 31. OVERVIEW OF SWITCHES

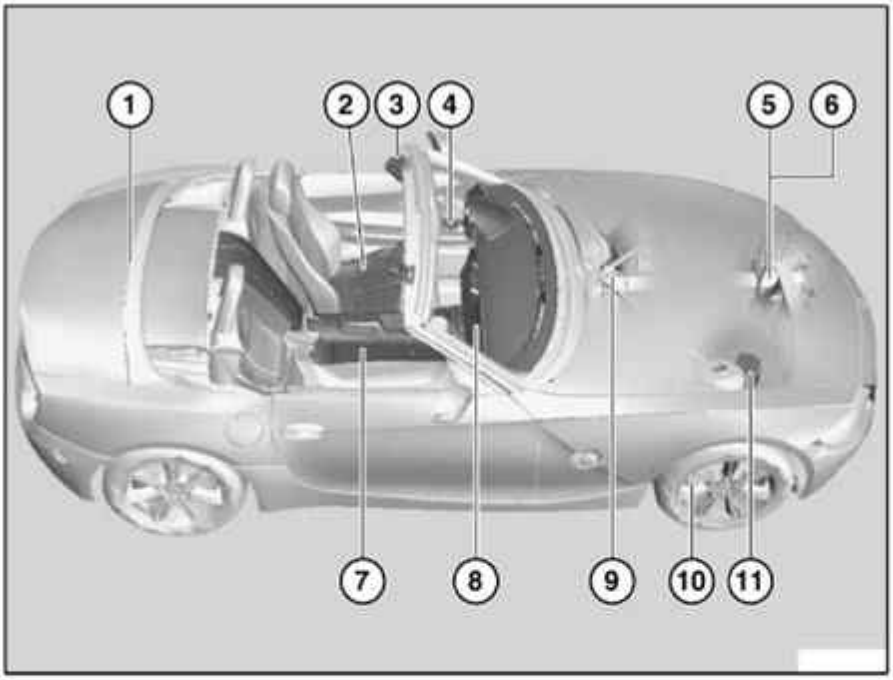

1 Microswitch, convertible top compartment
2 Switch combination for seat adjustment
3 Sensor on left convertible top catch
4 Door mirror switch
Rocker switch for window operation
5 Temperature switch for heated windshield spray jets
6 Outside temperature sensor
7 Overview of switches in center console/panel for rear storage box
8 Overview of switches in instrument panel/driver's footwell
9 Engine hood contact switch
10 Brake-pad-wear sensor
11 Level switch for windshield washer system

G03298487

Fig. 97: Overview Of Switches
Courtesy of BMW OF NORTH AMERICA, INC.

61 31.. OVERVIEW OF SWITCHES IN INSTRUMENT PANEL/DRIVER'S FOOTWELL

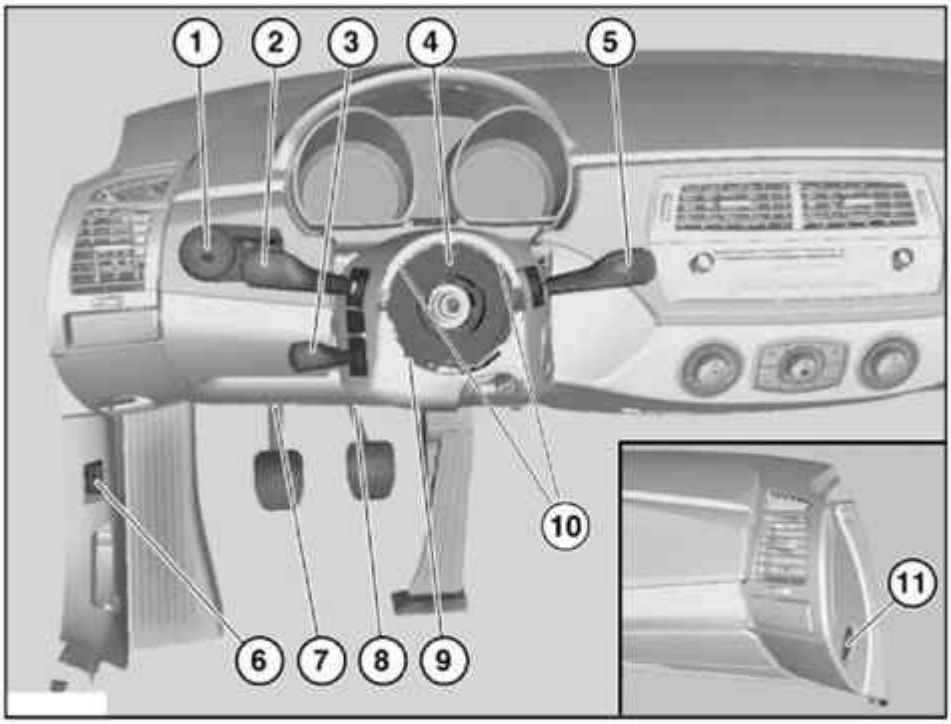

1 Light switch unit
2 Turn signal/headlight dipping stalk
3 Cruise control switch
4 Fixture for steering column stalk
5 Windshield wiper switch
6 Rear lid unlocking switch
7 Clutch switch module
8 Brake-light switch
9 Ignition starter switch
10 Shifters for SMG transmission
11 Front passenger airbag deactivation switch

G03298488

Fig. 98: Overview Of Switches In Instrument Panel/Driver's Footwell
Courtesy of BMW OF NORTH AMERICA, INC.

61 31.. OVERVIEW OF SWITCHES ON CENTER CONSOLE OR PANEL FOR STORAGE BOX AT REAR

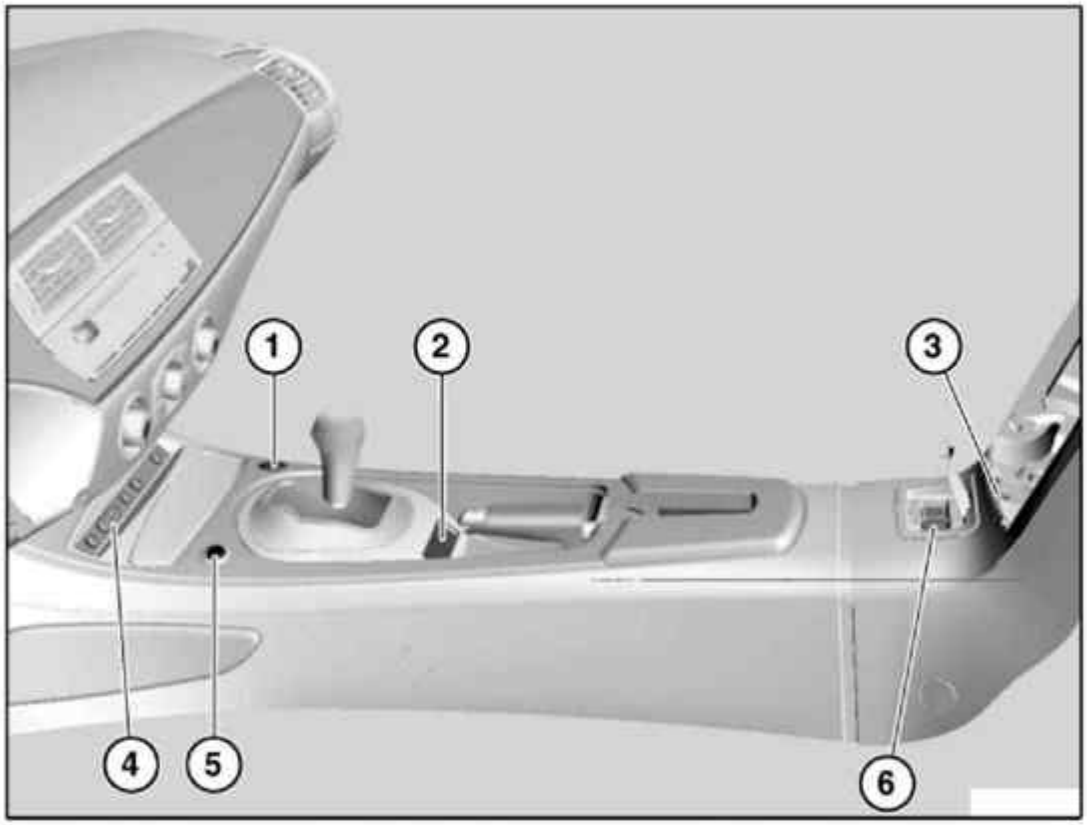

1 Indicator for passenger airbag deactivation
2 Switch for hazard warning system/central locking
3 Microswitch for storage box lighting
4 Switch unit on center console
5 Driving dynamics switch
6 Emergency call button

G03298489

Fig. 99: Overview Of Switches On Center Console Or Panel For Storage Box At Rear
Courtesy of BMW OF NORTH AMERICA, INC.

61 31 005 REMOVING AND INSTALLING/REPLACING FIXTURE FOR STEERING COLUMN STALK

WARNING: **Move wheels into straight-ahead position and do not alter this position during the repair work.**

Necessary preliminary tasks:

- Remove **STEERING WHEEL**
- Remove **UPPER SECTION OF STEERING COLUMN COVER** and **LOWER SECTION OF STEERING COLUMN COVER** .

WARNING: **Do not under any circumstances twist the cover of the fixture for the**

steering column stalk (2) out of its centered position.

Release screws (1).

Pull back fixture for steering column stalk (2).

Unlock associated plug connections and disconnect.

Remove fixture for steering column stalk (2).

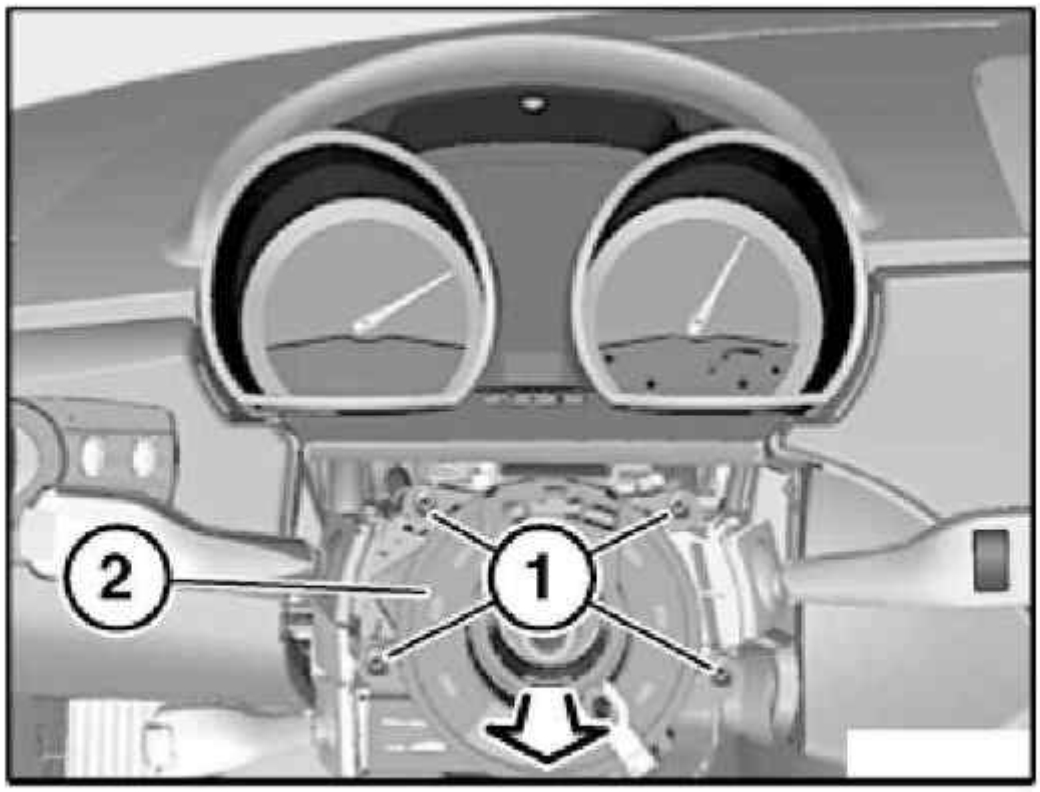

G03298490

Fig. 100: Pulling Back Fixture For Steering Column Stalk
Courtesy of BMW OF NORTH AMERICA, INC.

WARNING: **When removed, the cover (1) of the fixture for the steering column stalk (2) is secured against turning/twisting by the lock (3).**

Do not under any circumstances twist the cover (1) out of its centered position against the fixture for the

steering column stalk (2).

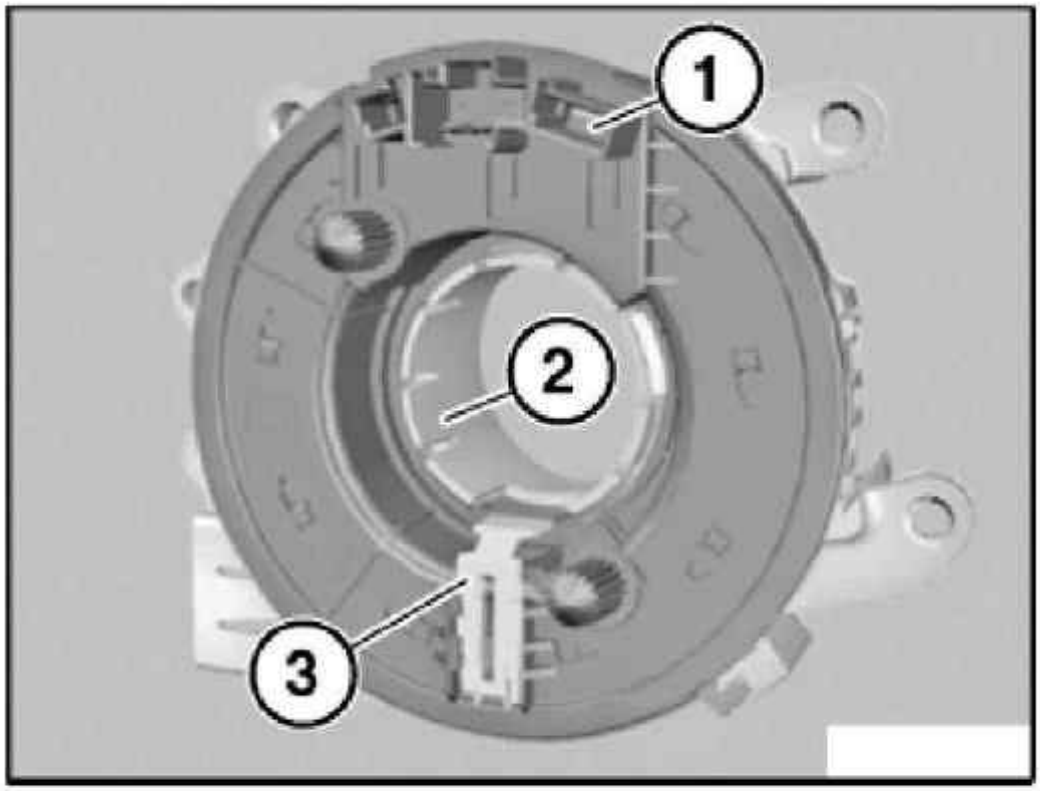

G03298491

Fig. 101: Identifying Steering Column Stalk
Courtesy of BMW OF NORTH AMERICA, INC.

Replacement:

Remove **Turn Indicator/Headlight Dipping Stalk** .

Remove **Stalk For Windshield Wipers** .

61 31 016 REMOVING AND INSTALLING/REPLACING TURN INDICATOR/HEADLIGHT DIPPING SWITCH

Necessary preliminary tasks:

- Remove **Fixture For Steering Column Stalk** .
- **E85 only:** Remove **Cruise Control Switch** .

Press locks (1) and feed direction indicator/dipping stalk (2) in direction of arrow out of **Fixture For Steering Column Stalk** .

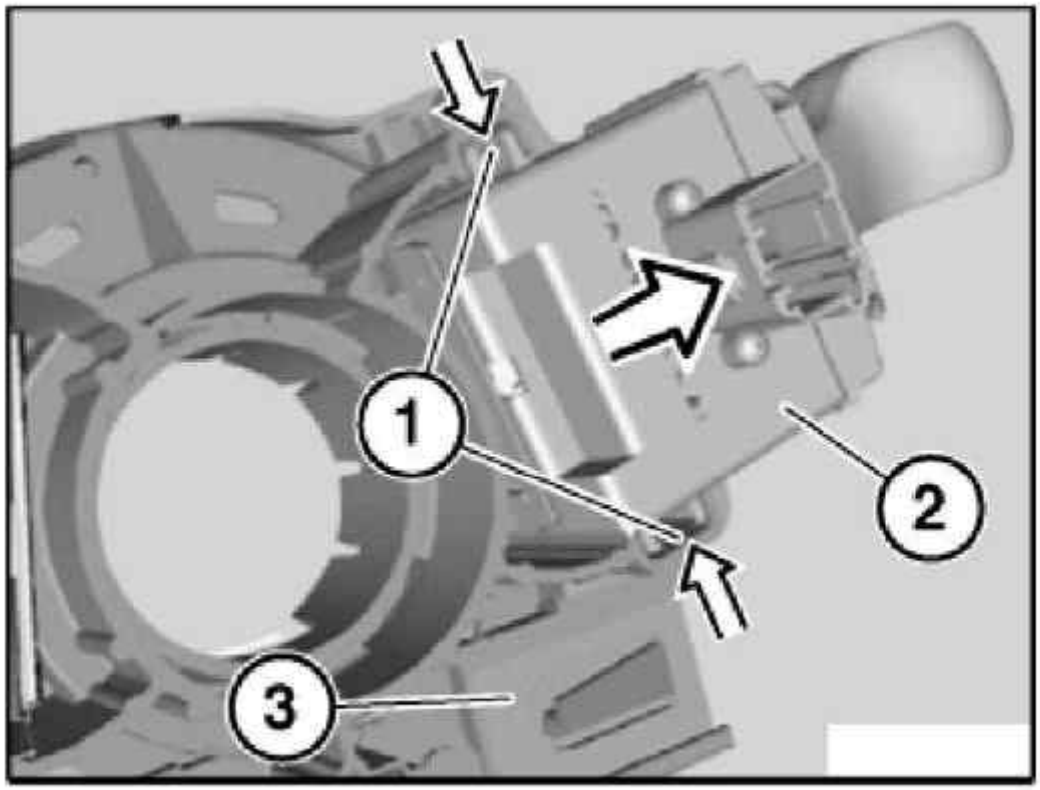

G03298492

Fig. 102: Pressing Locks And Feed Direction Indicator/Dipping Stalk
Courtesy of BMW OF NORTH AMERICA, INC.

61 31 018 REMOVING AND INSTALLING/REPLACING CRUISE CONTROL SWITCH

Necessary preliminary tasks:

- Remove **LOWER SECTION OF STEERING COLUMN COVER** .

NOTE: For purposes of clarity, the illustration shows the steering wheel removed.

Open lock (1) and feed cruise control switch (2) in direction of arrow out of **Fixture For Steering Column Stalk** .

Disconnect associated plug connection (4) and remove cruise control switch (2).

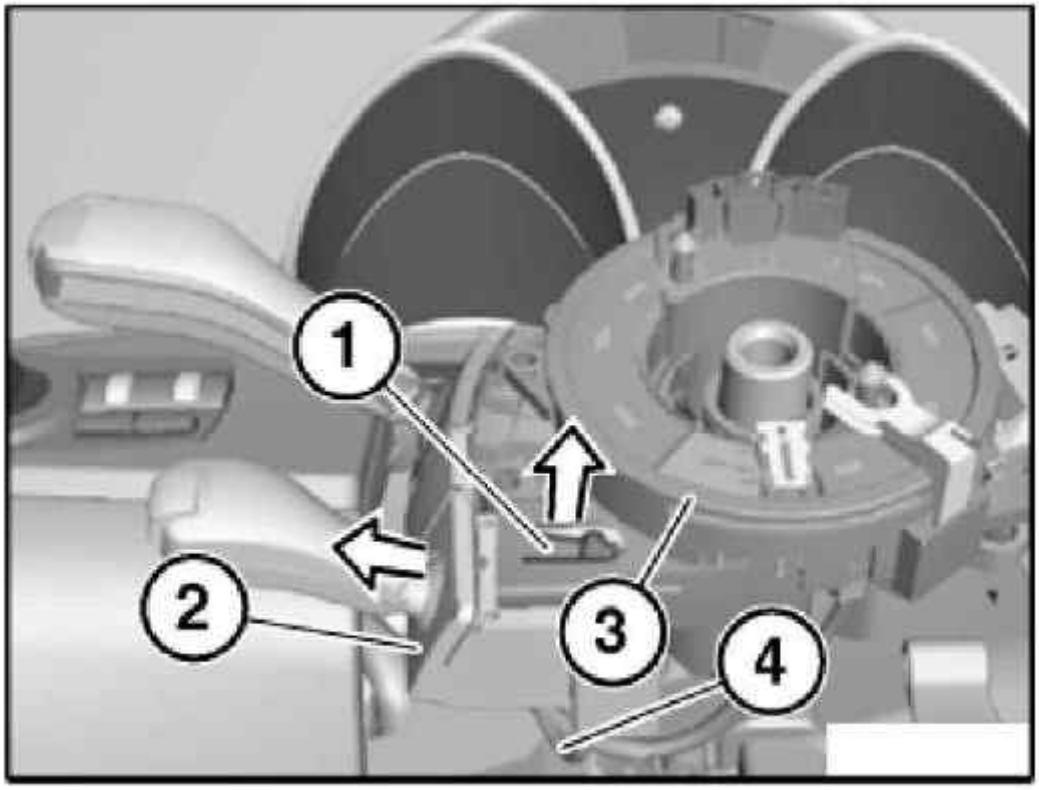

G03298493

Fig. 103: Opening Lock And Feed Cruise Control Switch
Courtesy of BMW OF NORTH AMERICA, INC.

61 31 020 REMOVING AND INSTALLING/REPLACING IGNITION STARTER SWITCH

Necessary preliminary tasks:

- Disconnect negative battery lead.
- Remove **LOWER SECTION OF STEERING COLUMN COVER** .

Remove sealing varnish and release headless setscrews (1).

Detach ignition starter switch (2) in direction of arrow.

Installation:

Secure headless setscrews (1) with sealing varnish.

Open lock (3) in direction of arrow and disconnect plug (4) from ignition starter switch (2).

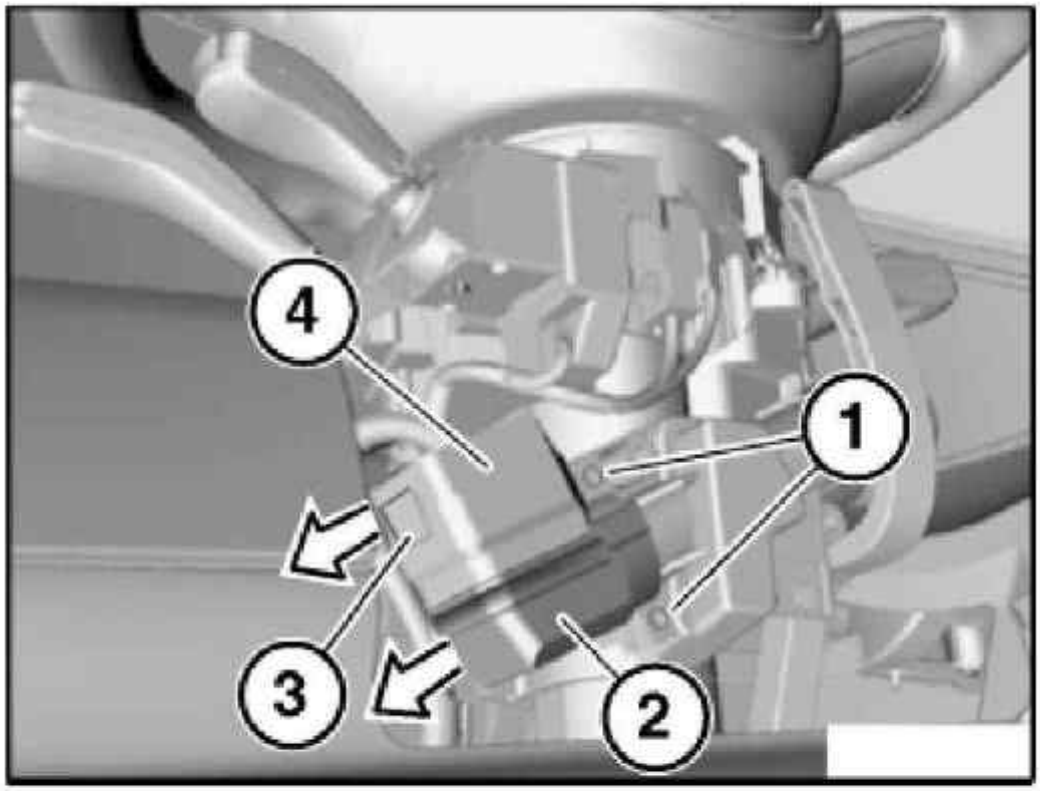

G03298494

Fig. 104: Opening Lock
Courtesy of BMW OF NORTH AMERICA, INC.

61 31 033 REMOVING AND INSTALLING/REPLACING LIGHT SWITCH UNIT

Necessary preliminary tasks:

- Remove finisher on left instrument panel trim **51 16... REPLACING FINISHER ON LEFT INSTRUMENT PANEL** .

Release screws (1).

Unlock internal plug connection and disconnect.

Pull out light switch unit (2) in direction of arrow and remove.

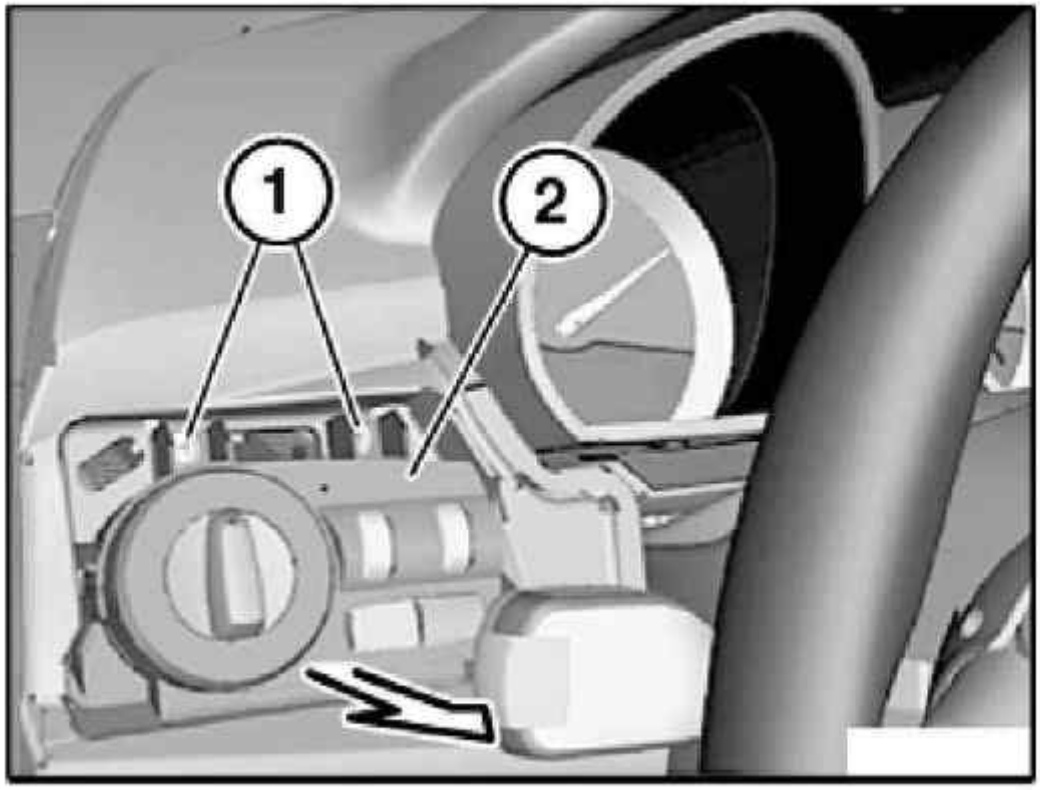

G03298495

Fig. 105: Pulling Out Light Switch Unit
Courtesy of BMW OF NORTH AMERICA, INC.

Replacement:

Carry out coding/programming.

Observe following IDC specifications:

- Programming
- Coding
- If necessary, car & key memory
- CD "CIP"

G03298496

Fig. 106: Identifying Carry Out Coding/Programming
Courtesy of BMW OF NORTH AMERICA, INC.

61 31 040 REMOVING AND INSTALLING/REPLACING SWITCH FOR WINDSHIELD WIPERS

Necessary preliminary tasks:

- Remove **Fixture For Steering Column Stalk** .

Press locks (1) and windshield wiper stalk (2) in direction of arrow out of fixture for steering column stalk (3).

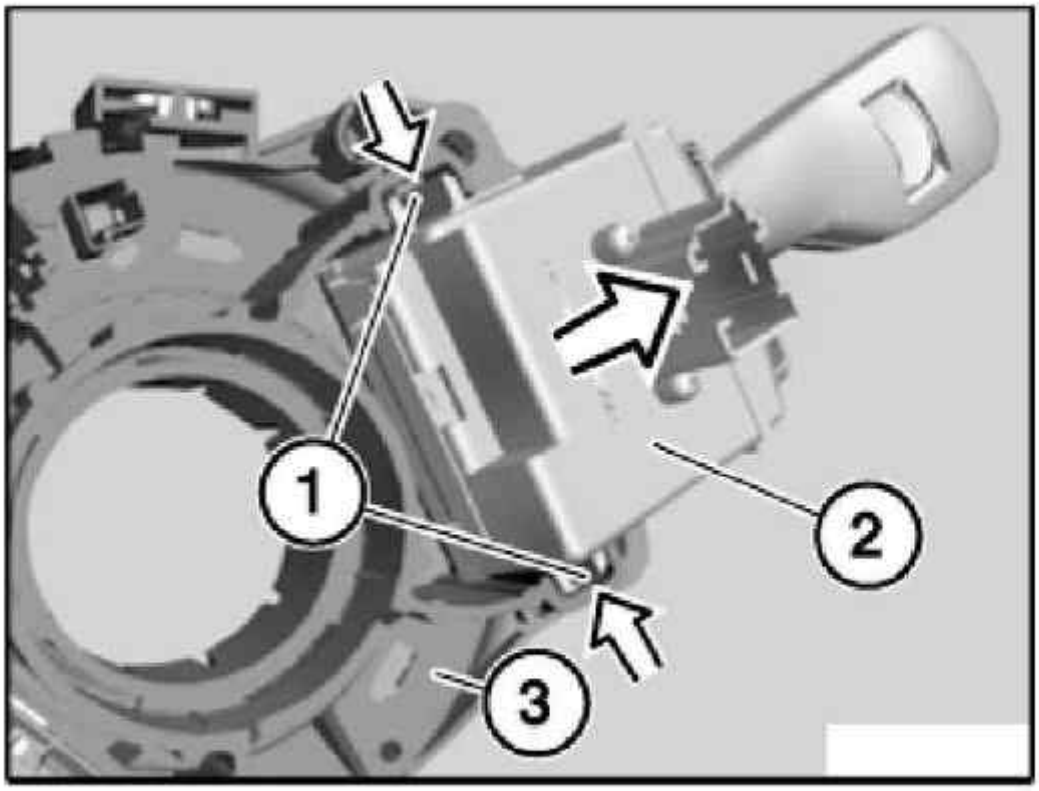

G03298497

Fig. 107: Pressing Locks And Windshield Wiper Stalk
Courtesy of BMW OF NORTH AMERICA, INC.

61 31 056 REMOVING AND INSTALLING/REPLACING SHIFTERS FOR SMG TRANSMISSION

Necessary preliminary tasks:

- Remove **DRIVER-SIDE AIR BAG MODULE** .

Unfasten plug connection (1) and disconnect.

Loosen screws (2).

NOTE: Both shifters for SMG transmission (3) are connected to each other by wiring harness (4).

Detach both shifters for SMG transmission (3) towards front.

Feed wiring harness (4) out of steering column cover upper section (5) and remove both shifters for SMG transmission (3).

Installation:

Make sure wiring harness (4) is correctly routed under steering column cover upper section (5).

Make sure shifters for SMG transmission (3) are correctly seated.

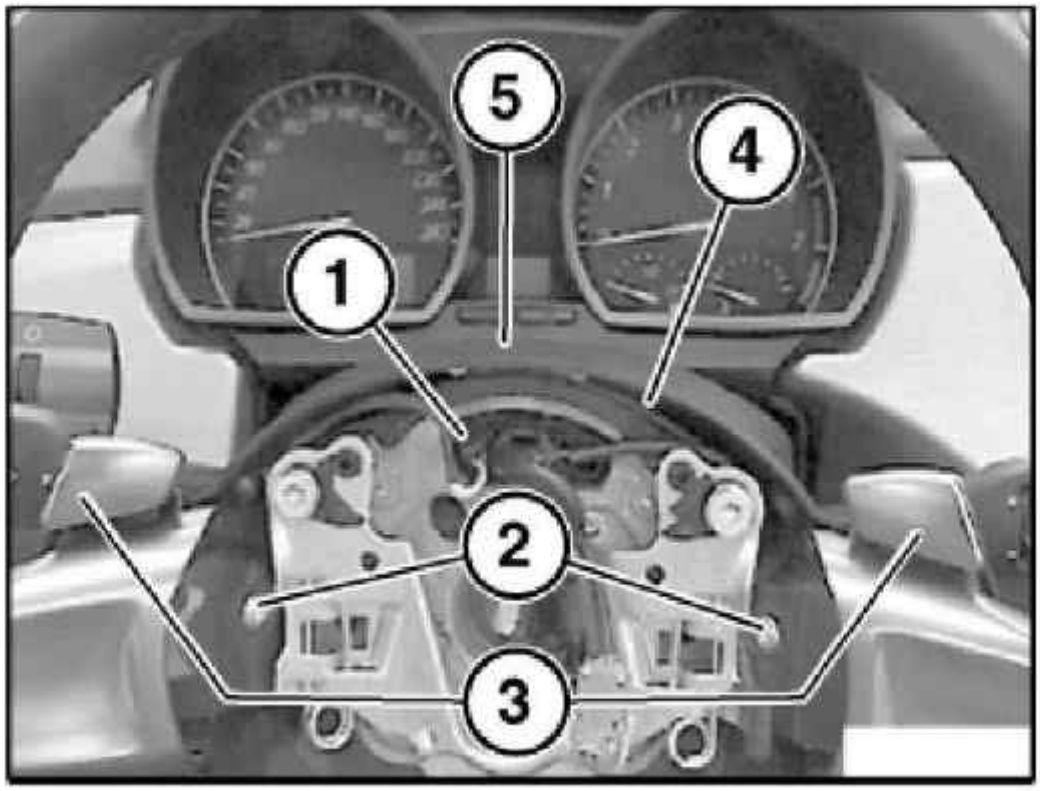

G03298498

Fig. 108: Loosening Screws
Courtesy of BMW OF NORTH AMERICA, INC.

61 31 057 REMOVING AND INSTALLING/REPLACING SWITCH UNIT IN CENTER CONSOLE

Open cover (1).

Remove ashtray insert (2) in direction of arrow from center console function carrier (3).

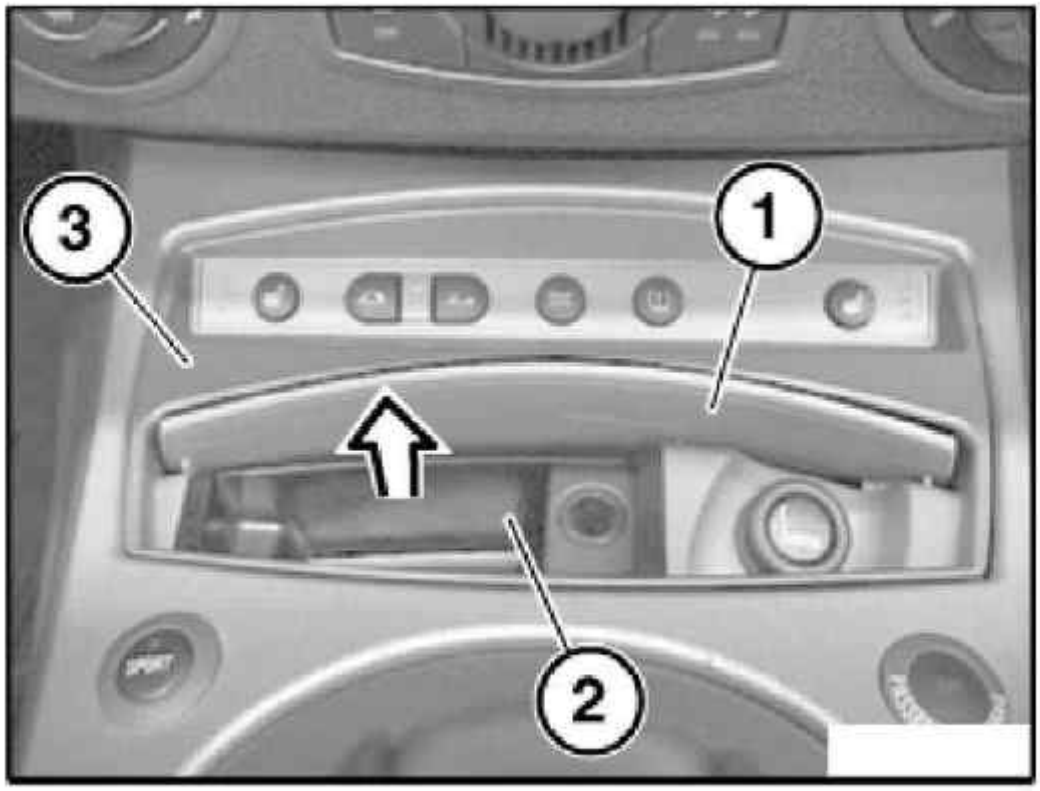

G03298499

Fig. 109: 61 31 057 Removing And Installing/Replacing Switch Unit In Center Console
Courtesy of BMW OF NORTH AMERICA, INC.

Unscrew bolt (1).

Unclip side guides (2) and raise center console function carrier (3).

Feed center console function carrier (3) out of front guides (5) and pull back a little.

Unlock associated plug connections, disconnect and remove center console function carrier (3) from center console (4).

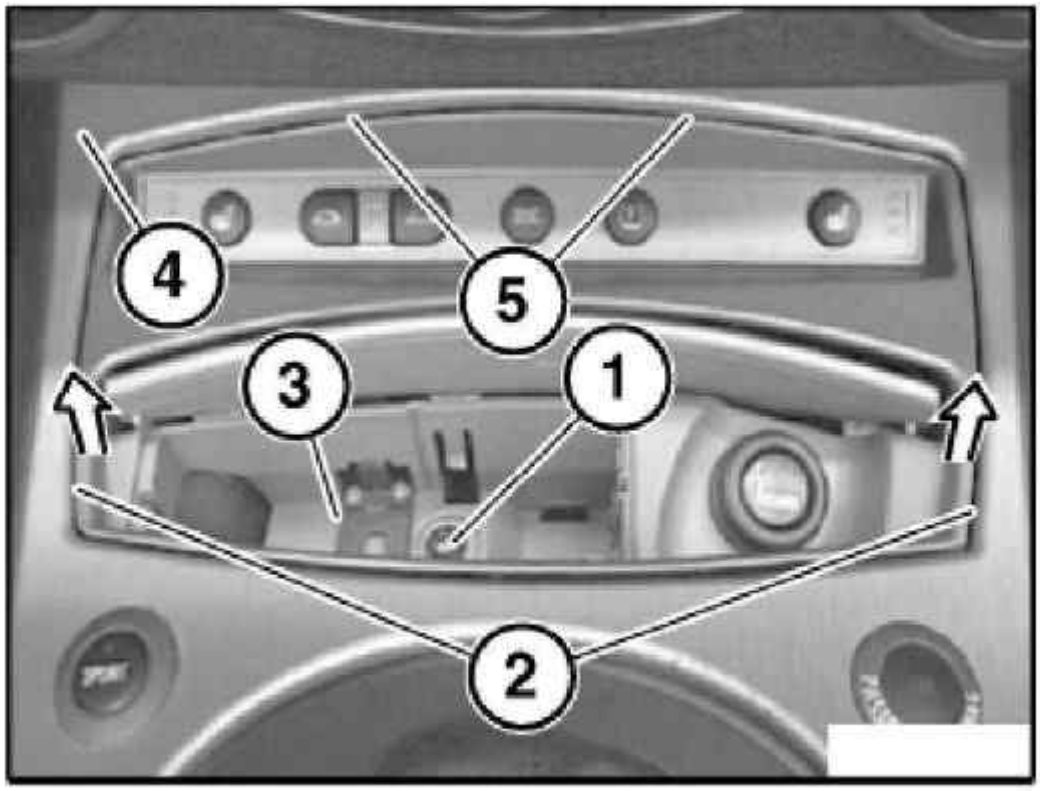

G03298500

Fig. 110: Unscrewing Bolt
Courtesy of BMW OF NORTH AMERICA, INC.

Installation:

Make sure front guides (1) of center console function carrier (3) are correctly seated.

Make sure side guides (2) of center console function carrier (3) snap into place correctly.

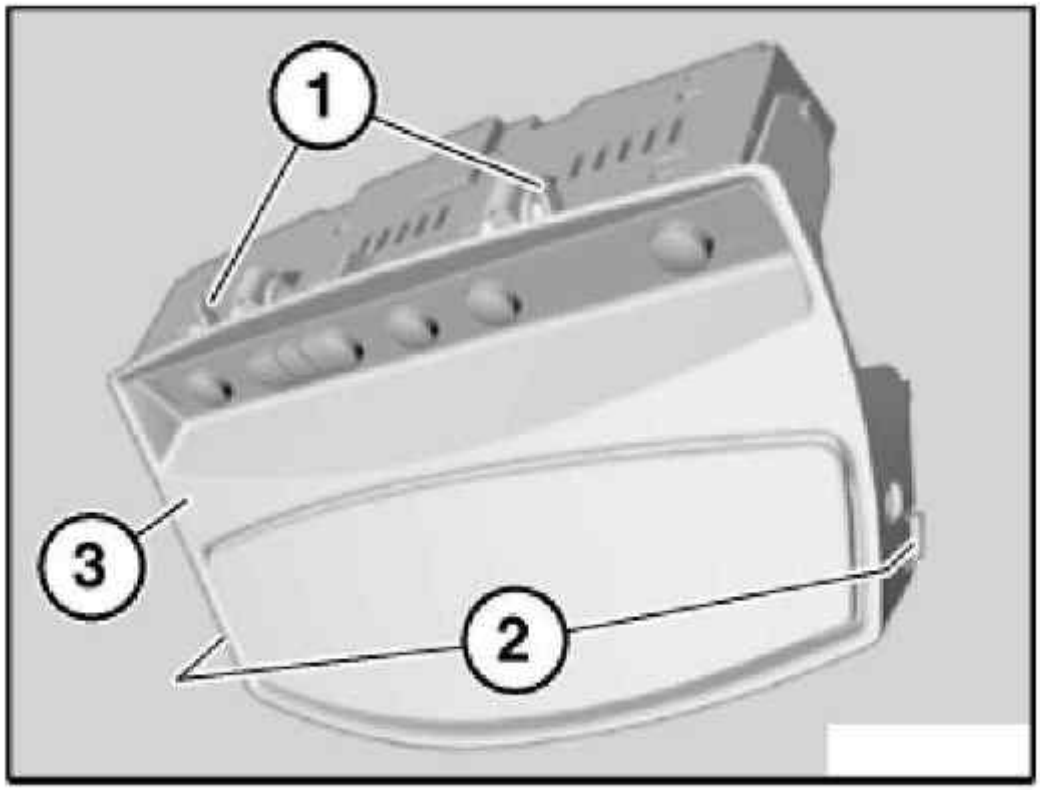

G03298501

Fig. 111: Installing Side Guides Of Center Console Function Carrier
Courtesy of BMW OF NORTH AMERICA, INC.

Replacement:

Unlock plug (1) and unclip in direction of arrow from center console switch unit (4).

Release screws (3) and remove switch unit on center console (4) in direction of arrow from center console function carrier (2).

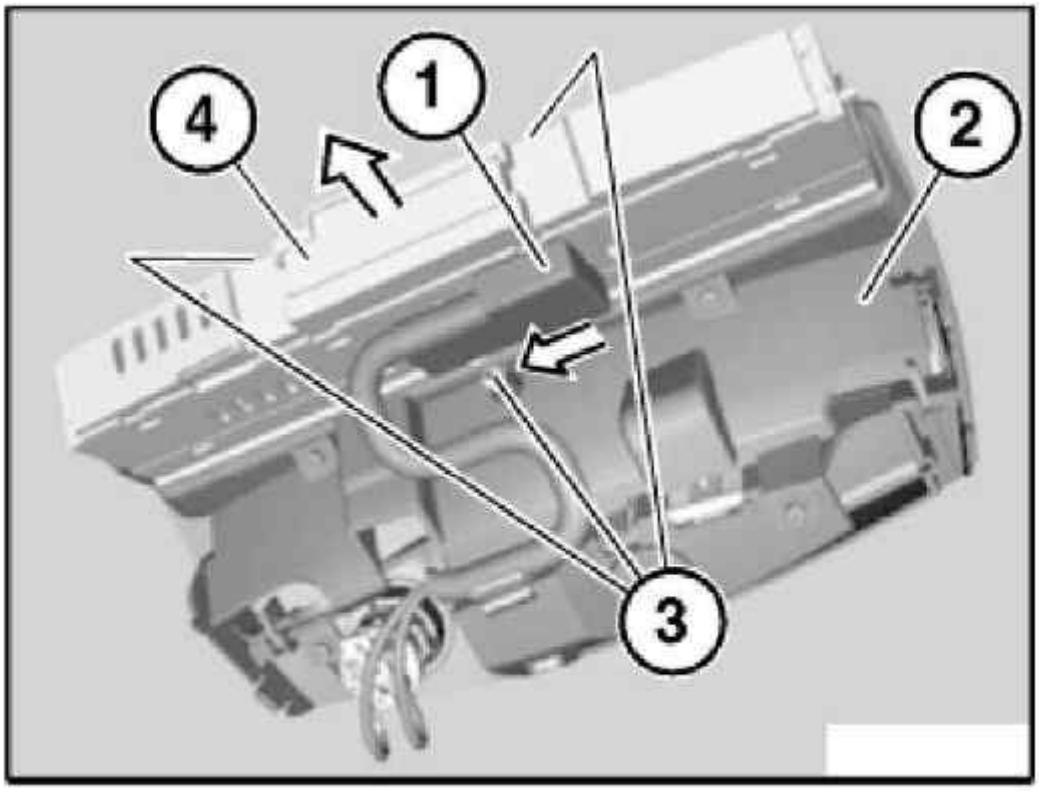

G03298502

Fig. 112: Releasing Screws
Courtesy of BMW OF NORTH AMERICA, INC.

61 31 068 REMOVING AND INSTALLING/REPLACING SWITCH FOR PASSENGER AIRBAG DEACTIVATION

Necessary preliminary tasks:

- Remove right fresh-air grille. Use instructions for removing left fresh-air grille. See **64 22 135 REMOVING AND INSTALLING/REPLACING LEFT FRESH AIR GRILLE** .
- Disconnect negative battery lead.

WARNING: **Read and comply with safety regulations for handling airbag modules and pyrotechnical belt tensioners.**
Incorrect handling can activate airbag and cause injury.

Unfasten plug connection (1) and disconnect.

Press catches (4) and remove switch for front passenger airbag deactivation (2) in direction of arrow out of instrument panel trim (3).

Installation:

Make sure switch for front passenger airbag deactivation (2) is in correct installation position (plug connection (1) at top).

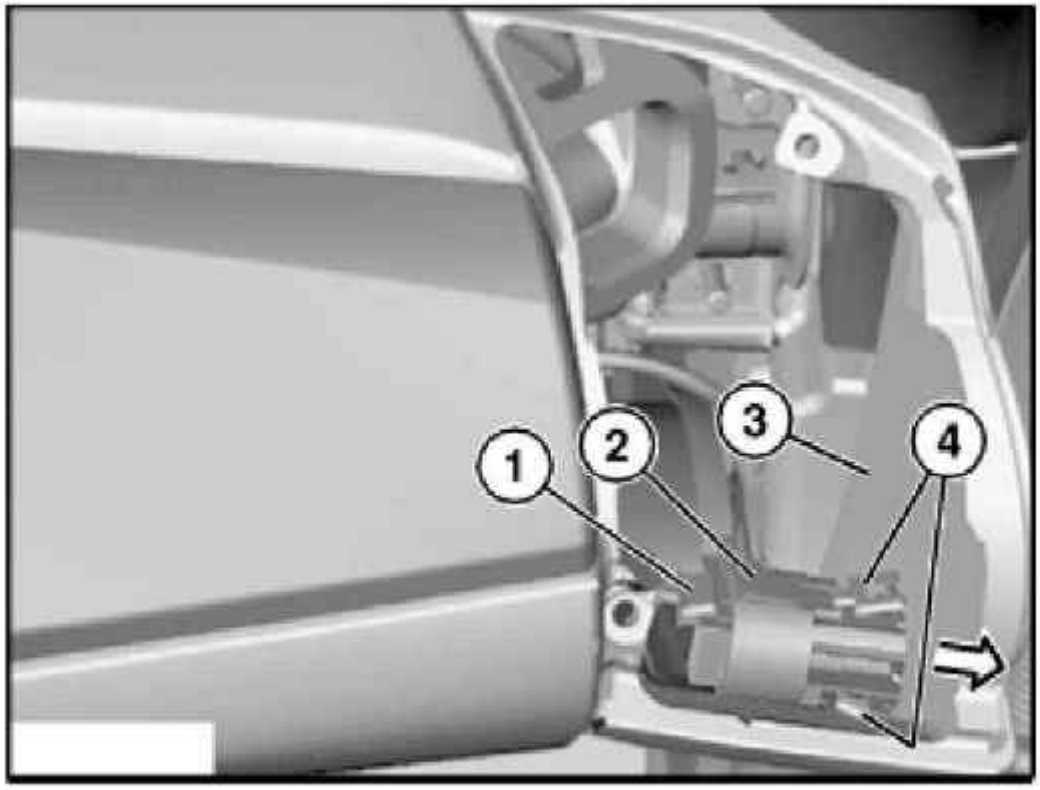

G03298503

Fig. 113: Pressing Catches
Courtesy of BMW OF NORTH AMERICA, INC.

61 31 069 REMOVING AND INSTALLING/REPLACING INDICATOR FOR FRONT PASSENGER AIRBAG DEACTIVATION

Necessary preliminary tasks:

- Remove trim for preselector lever. See **51 16 210 REMOVING AND INSTALLING/REPLACING TRIM FOR PRESELECTOR LEVER** .

Press indicator for front passenger airbag deactivation (1) in direction of arrow out of center console (2).

Disconnect plug connection (3) and remove indicator for front passenger airbag deactivation (1).

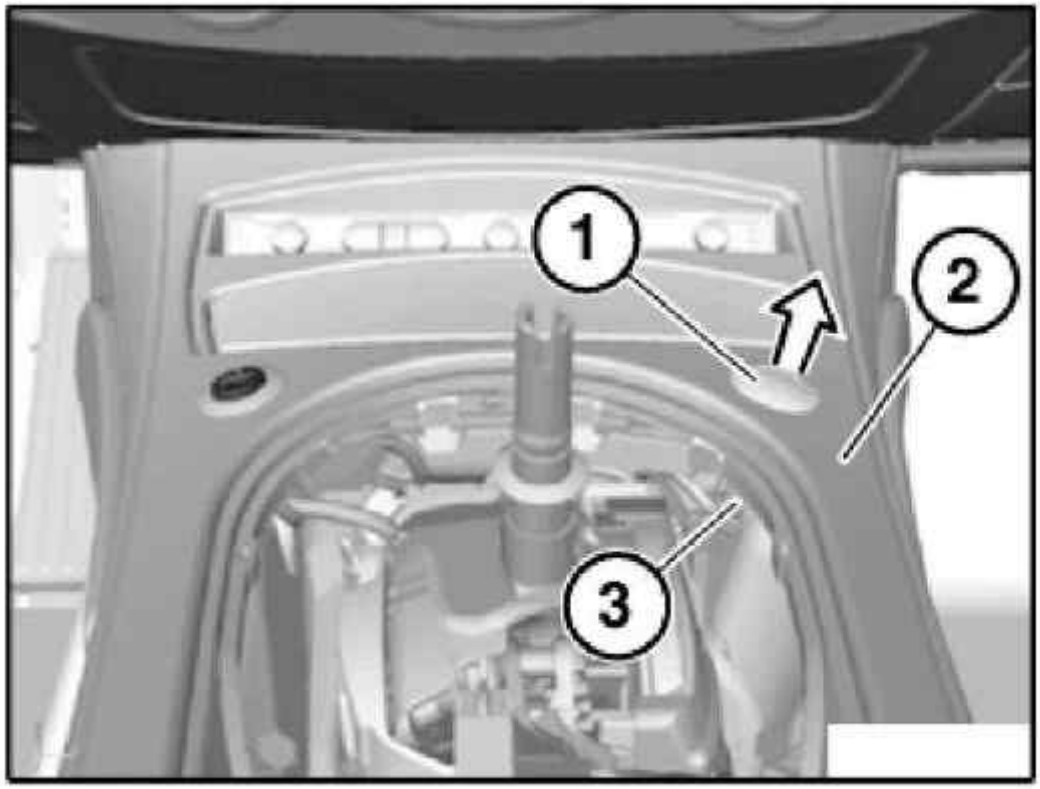

G03298504

Fig. 114: Disconnecting Plug Connection
Courtesy of BMW OF NORTH AMERICA, INC.

61 31 079 REMOVING AND INSTALLING/REPLACING SWITCH FOR HAZARD WARNING FLASHERS/CENTRAL LOCKING

Necessary preliminary tasks:

- Remove trim for preselector lever. See **51 16 210 REMOVING AND INSTALLING/REPLACING TRIM FOR PRESELECTOR LEVER** .

Press catches (1) and remove switch for hazard warning flashers/central locking (2) in direction of arrow from trim for preselector lever (3).

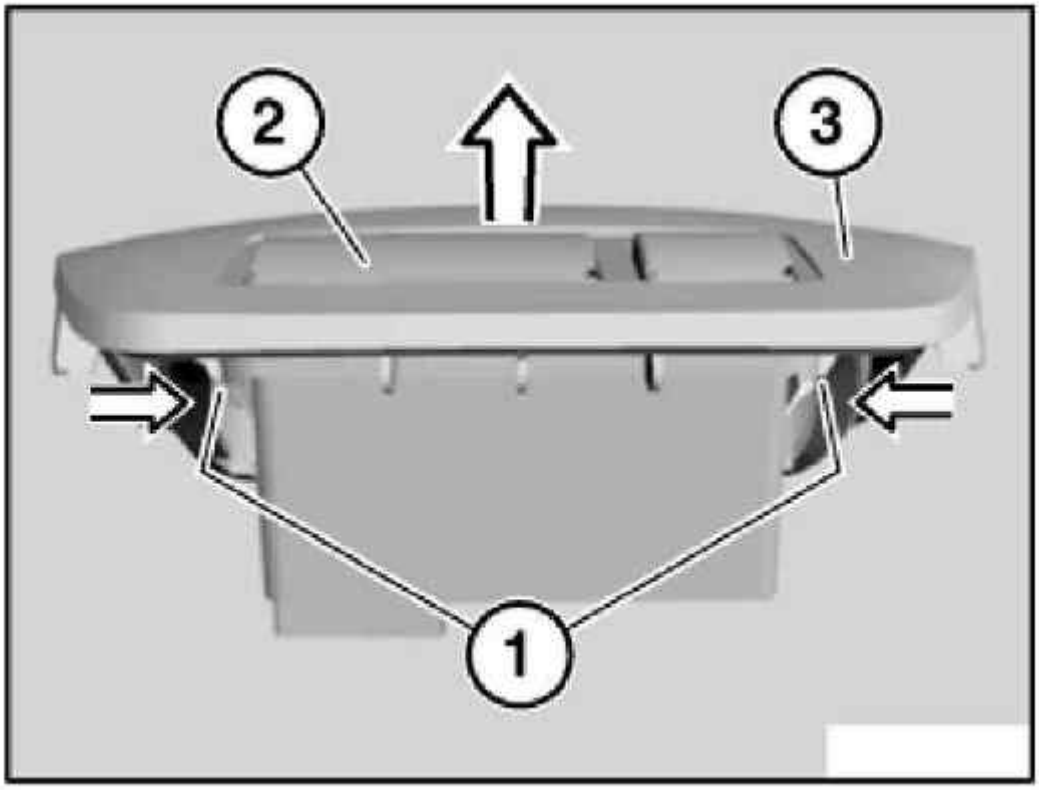

G03298505

Fig. 115: Pressing Catches
Courtesy of BMW OF NORTH AMERICA, INC.

61 31 083 REMOVING AND INSTALLING/REPLACING SWITCH FOR UNLOCKING REAR LID

NOTE: To unclip switch for unlocking rear lid (4), partially detach mucket (1).

Grip from outside behind footwell side trim panel on A-pillar on left (2).

Press retaining lugs (3) together and feed switch for unlocking rear lid (4) out of footwell side trim panel on A-pillar on left (2).

Disconnect associated plug connection and remove switch for unlocking rear lid (4).

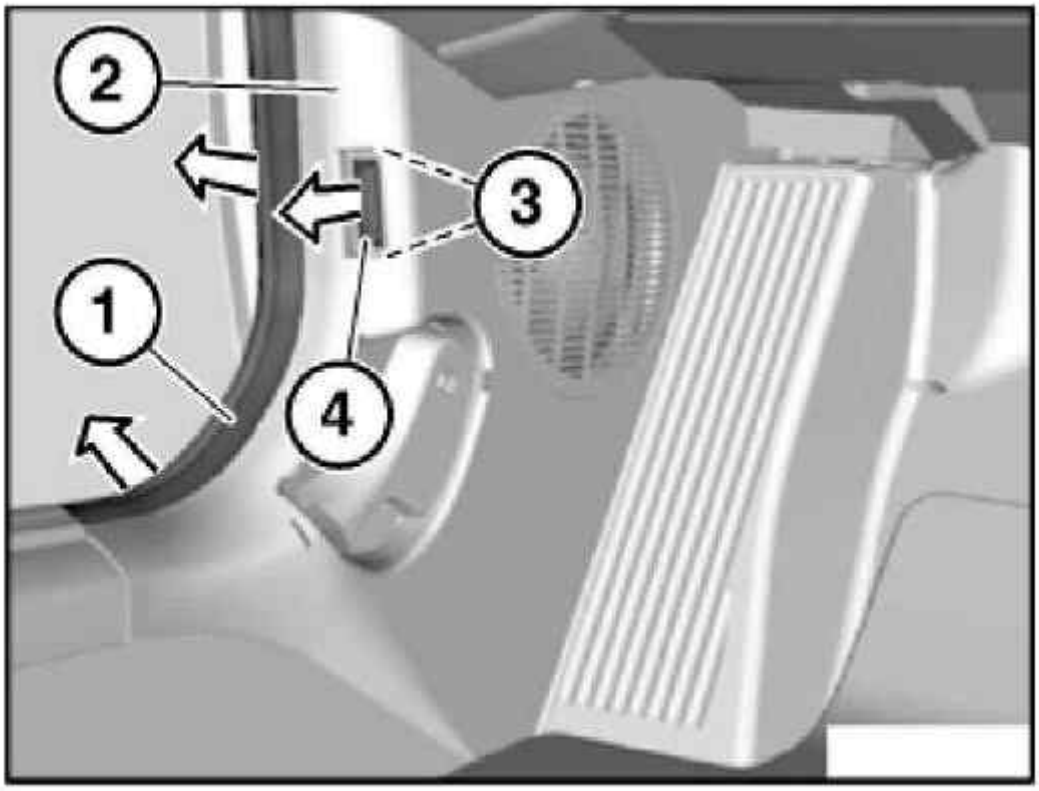

G03298506

Fig. 116: Pressing Retaining Lugs
Courtesy of BMW OF NORTH AMERICA, INC.

61 31 115 REPLACING ROCKER SWITCH FOR SIDE-WINDOW OPERATION

This operation is described under:

"Replacing switch for wing mirror". See **61 31 255 Replacing Switch For Door Mirror** .

61 31 176 REMOVING AND INSTALLING/REPLACING EMERGENCY CALL BUTTON

Special tools required:

- 00 9 317

Lever out housing (1) with special tool 00 9 317 as illustrated.

Unlock emergency call button plug connection underneath and disconnect.

Remove complete housing (1) from panel for rear storage box (2).

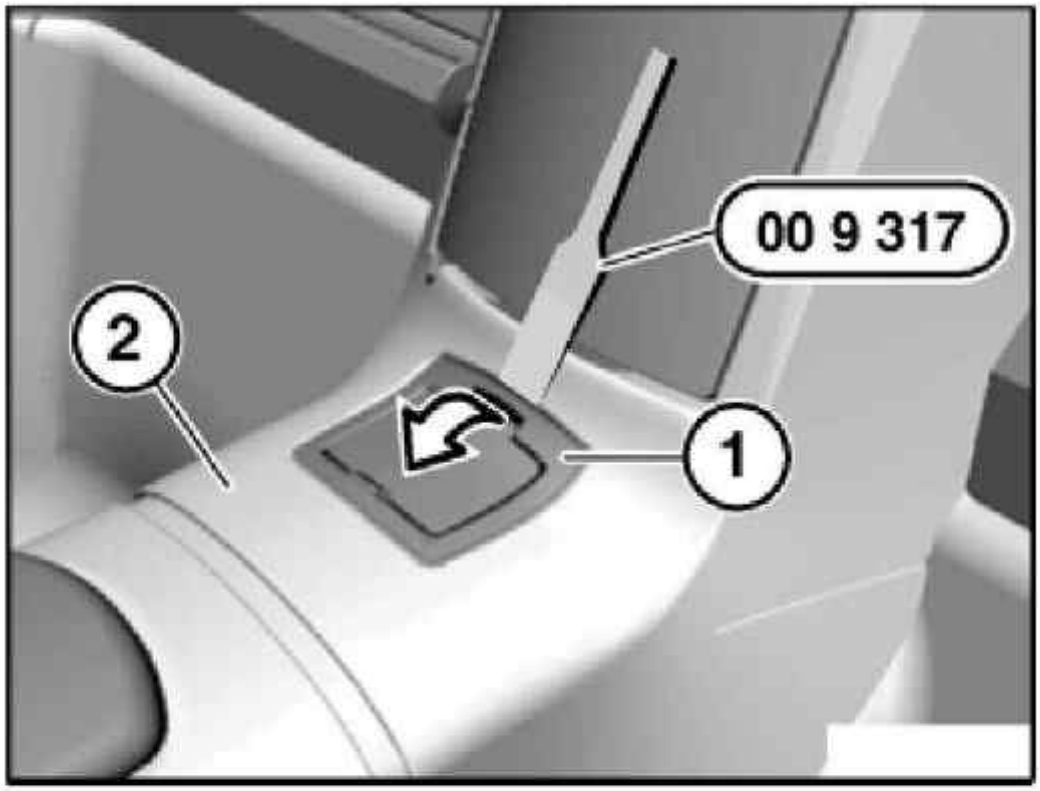

G03298507

Fig. 117: Removing Complete Housing
Courtesy of BMW OF NORTH AMERICA, INC.

Unclip emergency call button (1) in direction of arrow from housing (2) and remove.

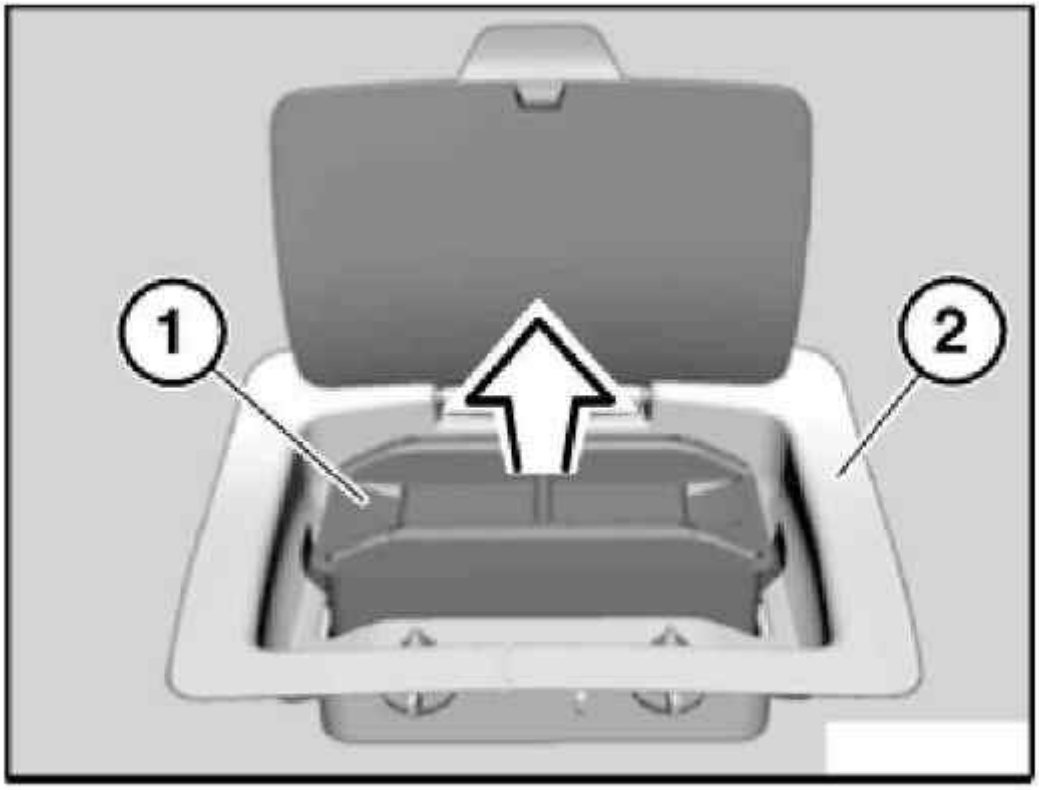

G03298508

Fig. 118: Uncliping Emergency Call Button
Courtesy of BMW OF NORTH AMERICA, INC.

61 31 204 REPLACING SWITCH COMBINATION FOR SEAT ADJUSTMENT

This operation is described under:

"Removing outer cover on front seat". See **52 13 040 REMOVING AND INSTALLING/REPLACING OUTER COVER** .

Carry out coding/programming.

Observe following IDC specifications:

- Programming
- Coding
- If necessary, car & key memory

- CD "CIP"

G03298509

Fig. 119: 61 31 204 Replacing Switch Combination For Seat Adjustment
Courtesy of BMW OF NORTH AMERICA, INC.

61 31 220 REMOVING AND INSTALLING/REPLACING MULTIFUNCTION STEERING WHEEL SWITCH

Necessary preliminary tasks:

- Remove **DRIVER-SIDE AIR BAG MODULE** .

NOTE: Illustrations show multifunction steering wheel (3) removed.

The two multifunction steering wheel switches (2) can be removed independently of each other.

Release associated screw (1).

Unclip corresponding multifunction steering wheel switch (2) in direction of arrow from multifunction steering wheel (3).

Disconnect associated plug connections and remove multifunction steering wheel switch (2).

Installation:

Make sure electrical leads are correctly routed.

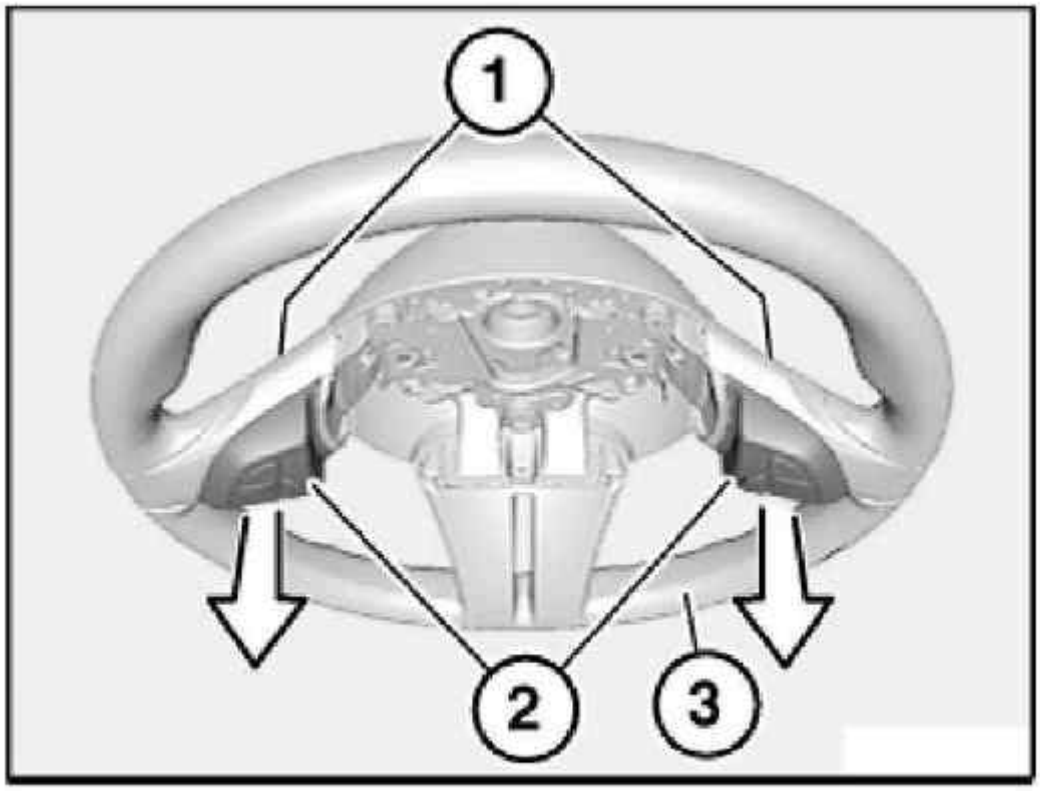

G03298510

Fig. 120: Releasing Associated Screw
Courtesy of BMW OF NORTH AMERICA, INC.

61 31 241 REMOVING AND INSTALLING/REPLACING ENGINE HOOD CONTACT SWITCH

Unfasten plug connection (1) and disconnect.

Press catches (2) together and feed hood contact switch (4) in direction of arrow out of fixture (3).

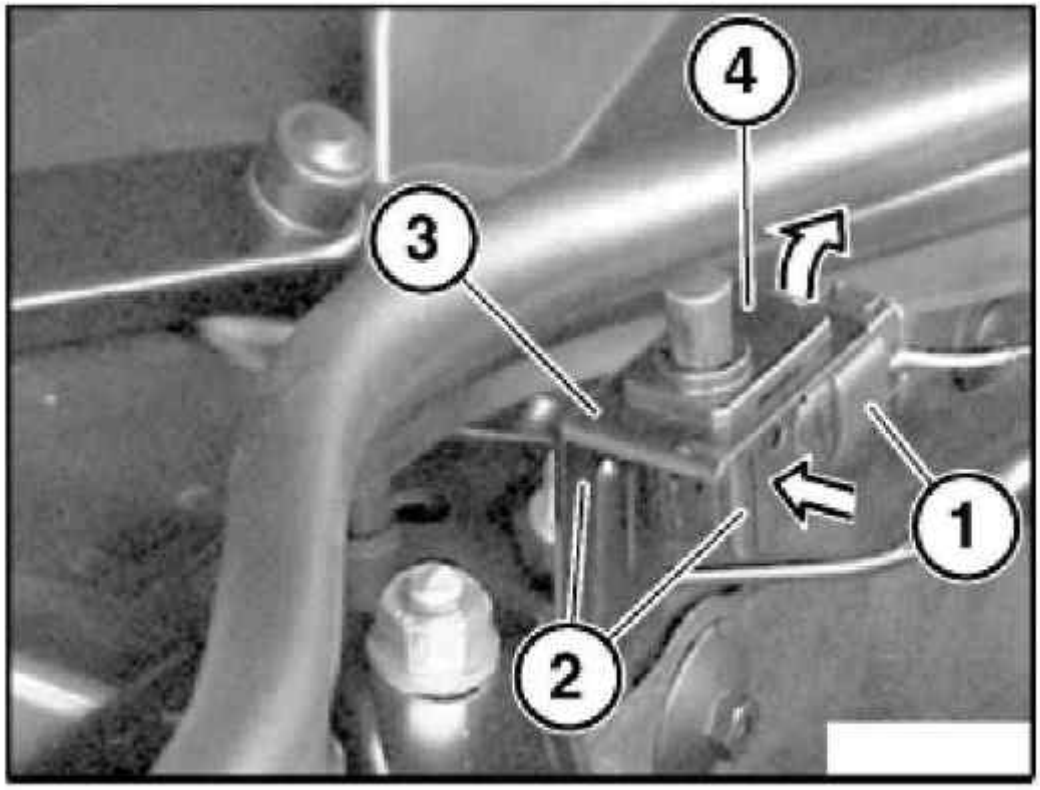

G03298511

Fig. 121: Pressing Catches
Courtesy of BMW OF NORTH AMERICA, INC.

61 31 255 REPLACING SWITCH FOR DOOR MIRROR

Special tools required:

- 00 9 317

Fit special tool 00 9 317 as illustrated and lever out switch for door mirror (1).

Feed out switch for wing mirror (1) in direction of arrow from door trim panel (2).

Unlock and disconnect associated plug connections, remove switch for door mirror (1).

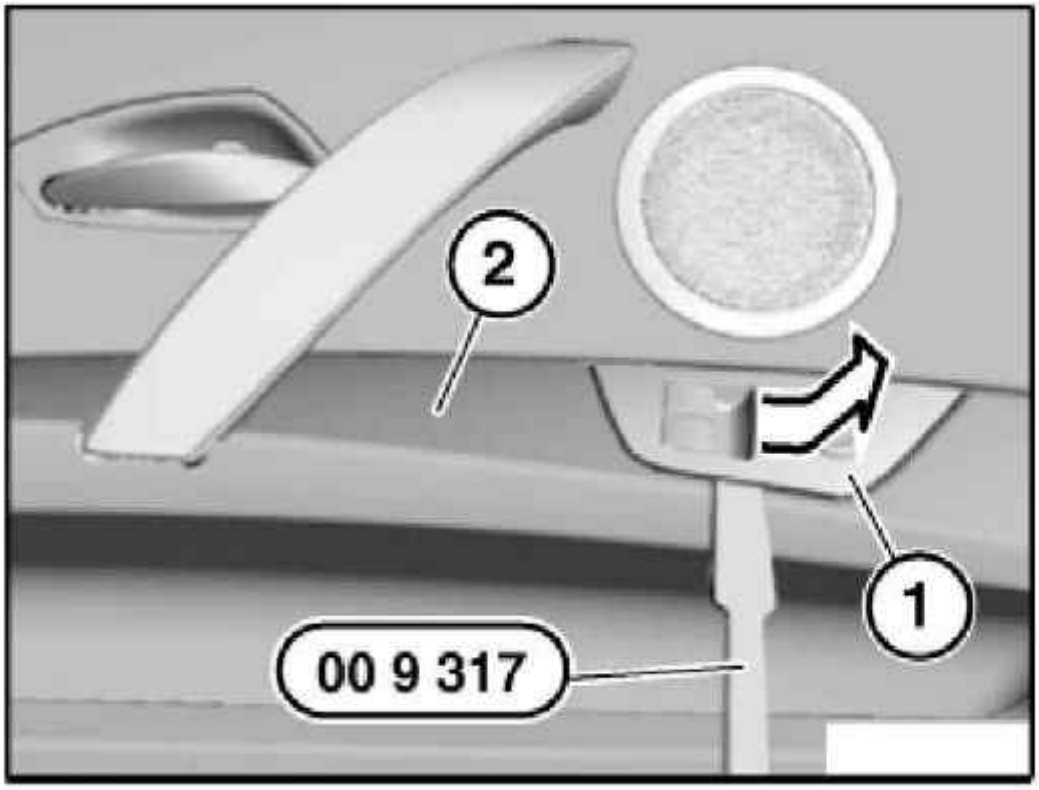

G03298512

Fig. 122: Unlocking And Disconnecting Associated Plug Connections
Courtesy of BMW OF NORTH AMERICA, INC.

61 31 270 REMOVING AND INSTALLING/REPLACING SWITCH FOR REVERSING LIGHT (DME)

If necessary, remove rear underbody protection.

Unfasten plug connection (1) and disconnect. Release switch for reversing light (2).

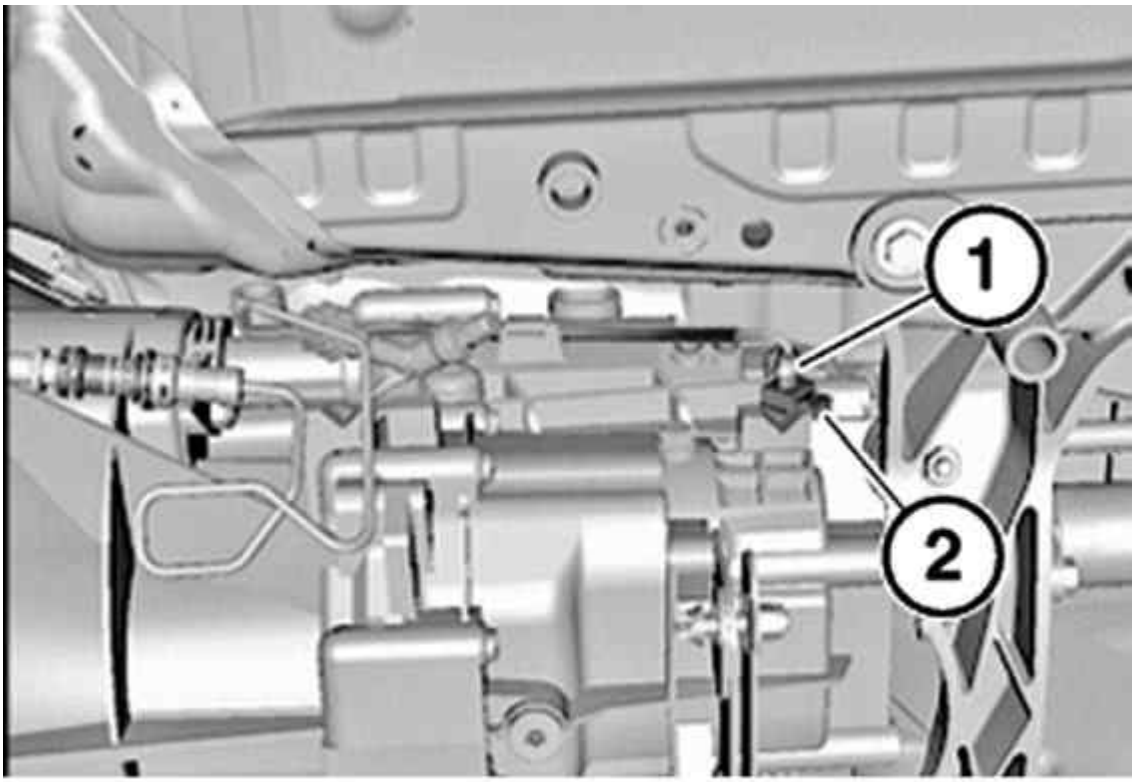

G00400033

Fig. 123: Removing Switch For Reversing Light
Courtesy of BMW OF NORTH AMERICA, INC.

61 31 287 REMOVING AND INSTALLING/REPLACING DRIVING DYNAMICS SWITCH

Necessary preliminary tasks:

- Remove trim for preselector lever (shift lever). See **51 16 210 REMOVING AND INSTALLING/REPLACING TRIM FOR PRESELECTOR LEVER** .

Press driving dynamics switch (1) in direction of arrow out of center console (2).

Disconnect plug connection (3) and remove driving dynamics switch (1).

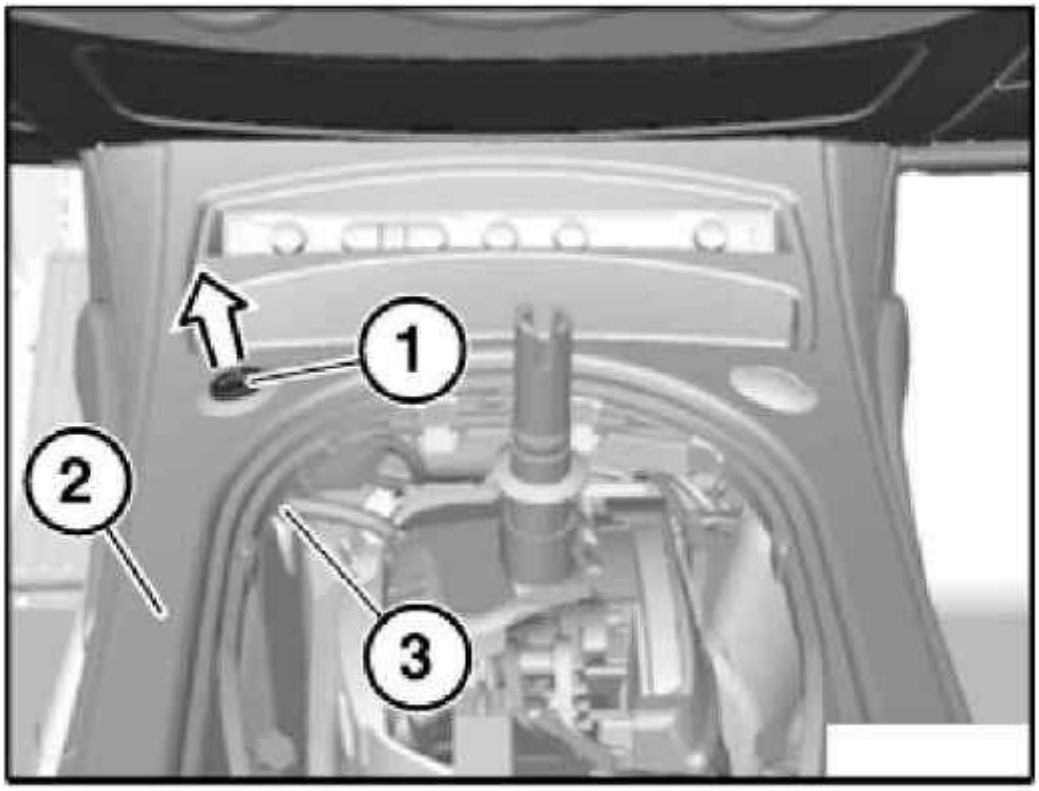

G03298513

Fig. 124: Disconnecting Plug Connection
Courtesy of BMW OF NORTH AMERICA, INC.

61 31 299 REMOVING AND INSTALLING/REPLACING CLUTCH SWITCH MODULE

Necessary preliminary tasks:

- Remove trim panel for pedal assembly. See **51 45 185 REMOVING AND INSTALLING/REPLACING TRIM FOR PEDAL ASSEMBLY** .

NOTE: For purposes of clarity, the clutch master cylinder is shown removed.

Lever out clutch switch module (1) from clutch master cylinder (2) with screwdriver.

Unlock plug (4) and disconnect from housing (3).

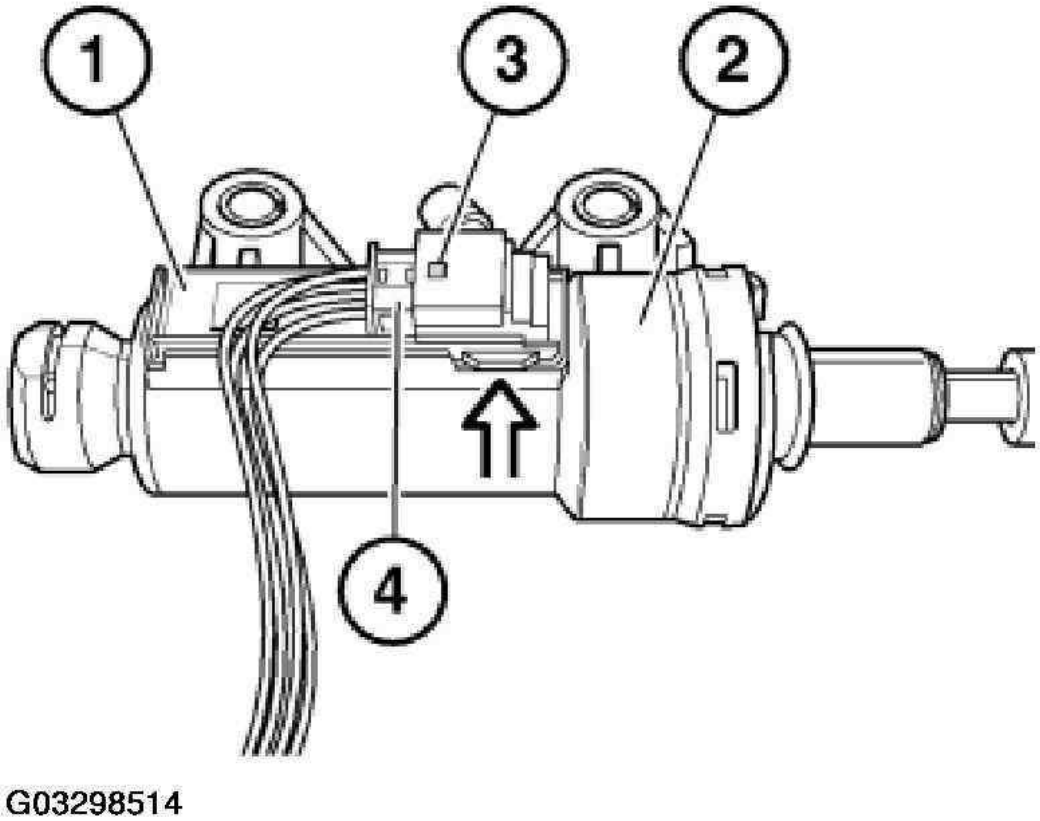

Fig. 125: Unlocking Plug
Courtesy of BMW OF NORTH AMERICA, INC.

Installation:

Clutch switch module is secured against incorrect installation.

Clutch switch module must snap audibly into place.

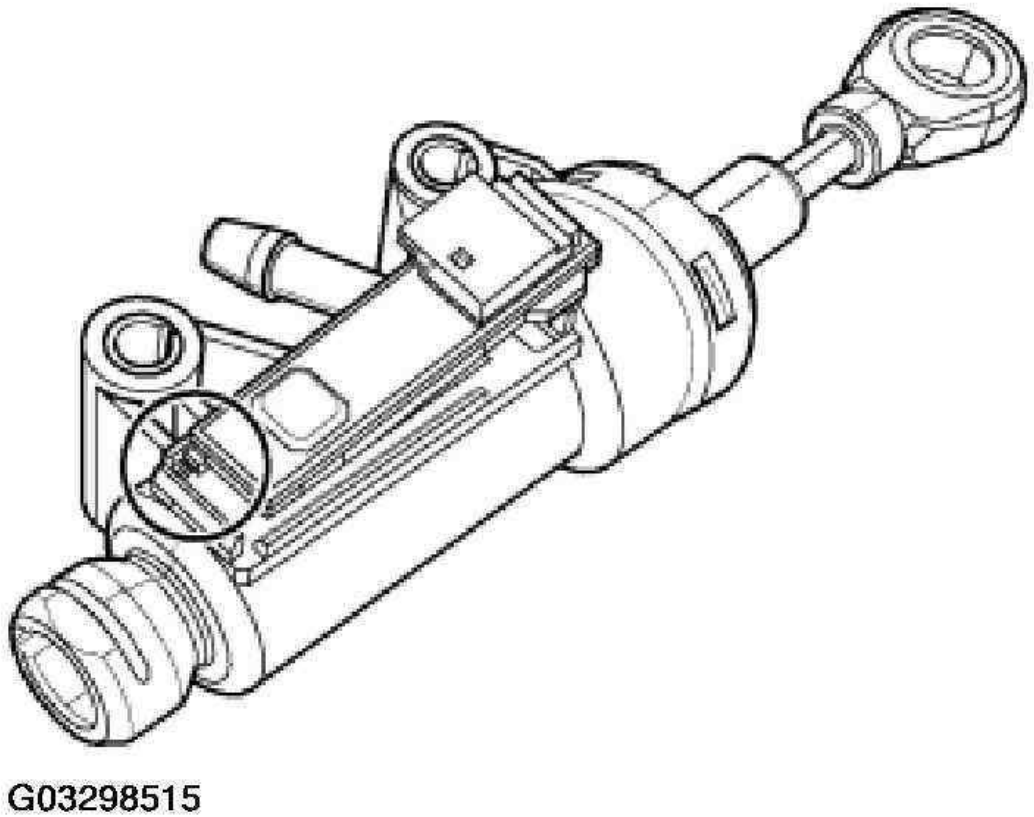

Fig. 126: Installing Clutch Switch Module
Courtesy of BMW OF NORTH AMERICA, INC.

61 31 310 REPLACING BRAKE LIGHT SWITCH

Necessary preliminary tasks:

- Remove trim panel for pedal assembly. See **51 45 185 REMOVING AND INSTALLING/REPLACING TRIM FOR PEDAL ASSEMBLY** .

Unfasten plug connection (1) and disconnect.

Pull brake light switch (2) in direction of arrow out of brake light switch holder (4).

Installation:

- Press brake pedal (3) to floor.
- Slide brake light switch (2) as far as it will go into brake light switch holder (4).

- Grip brake light switch holder (4), slowly return brake pedal (3) to starting position and pull back to stop.

NOTE: Removing brake light switch holder (4):

Press brake pedal (3).

Press catches together and unclip holder for brake light switch (4) from carrier.

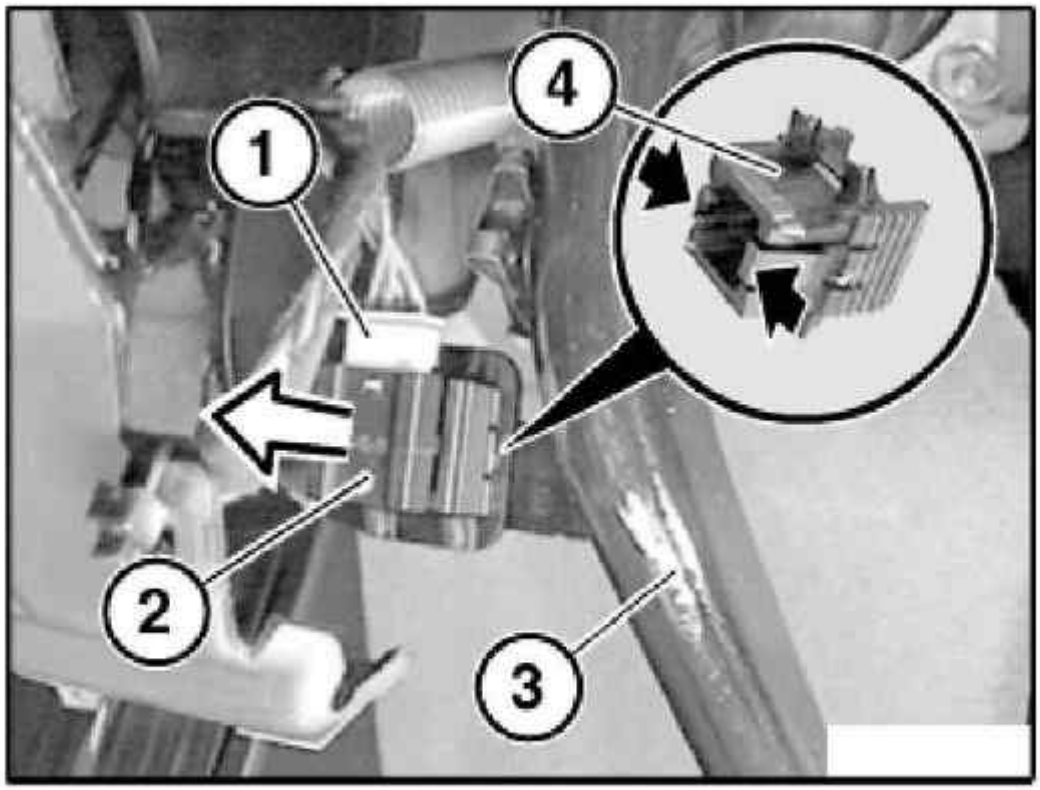

Fig. 127: Pressing Brake Pedal
Courtesy of BMW OF NORTH AMERICA, INC.

61 31 345 REMOVING AND INSTALLING/REPLACING MICROSWITCH FOR STORAGE BOX LIGHTING

Necessary preliminary tasks:

- Remove lid on rear storage box. See **51 16 239 REMOVING AND INSTALLING/REPLACING LID**

ON REAR STORAGE BOX .

Lever out cover (1).

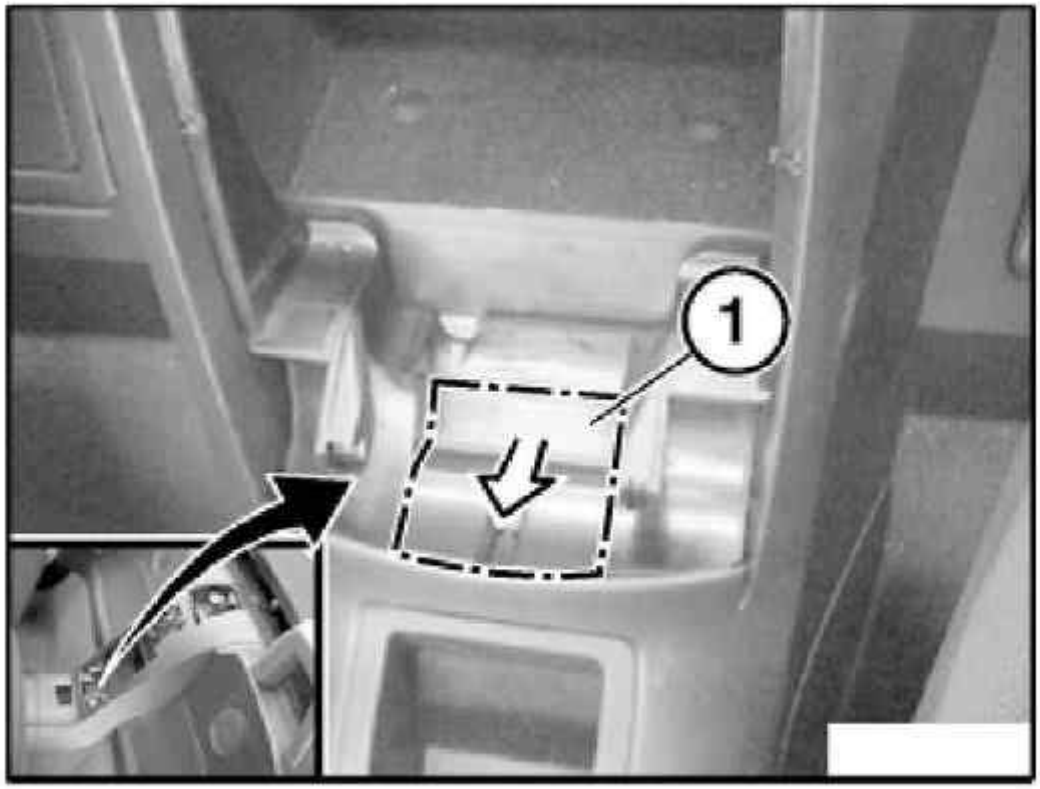

Fig. 128: Removing Lever Out Cover
Courtesy of BMW OF NORTH AMERICA, INC.

Installation:

Catches (1) and (2) on cover (3) must not be damaged.

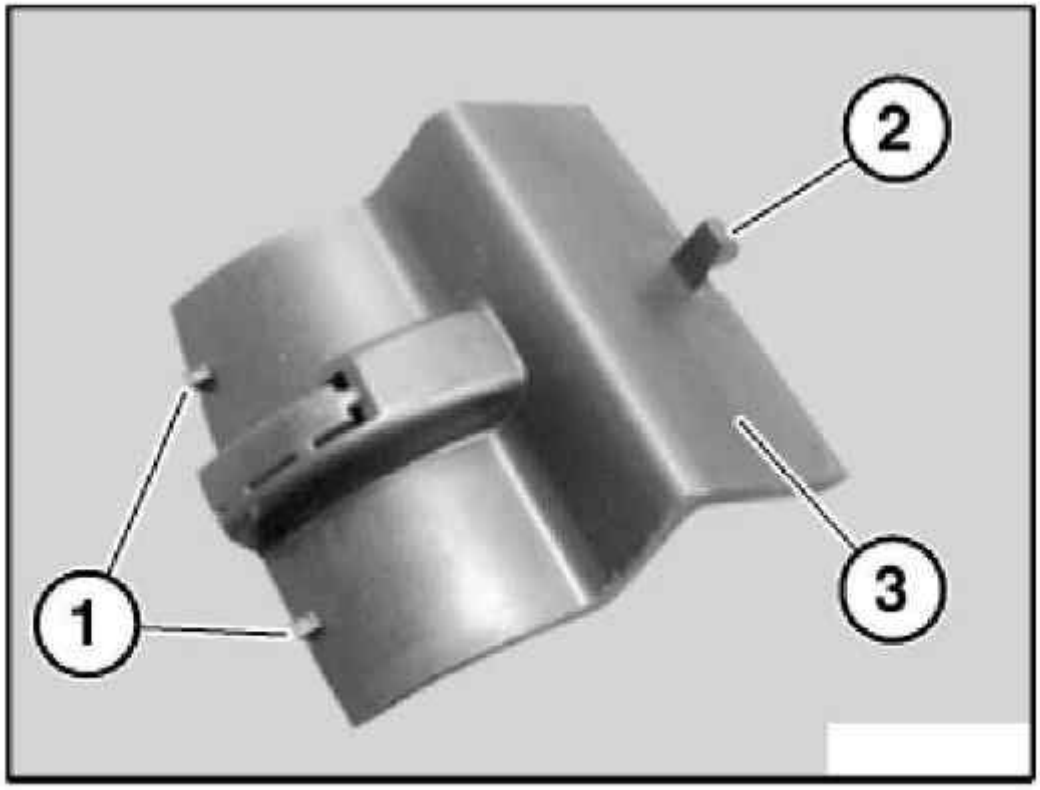

G03298518

Fig. 129: Removing Catches
Courtesy of BMW OF NORTH AMERICA, INC.

Remove microswitch for storage box lighting (1) in direction of arrow from fixture (2).

Unlock associated plug connection (3) and disconnect.

NOTE: **If plug connection (3) is not accessible, if necessary release rear screws on center console.**

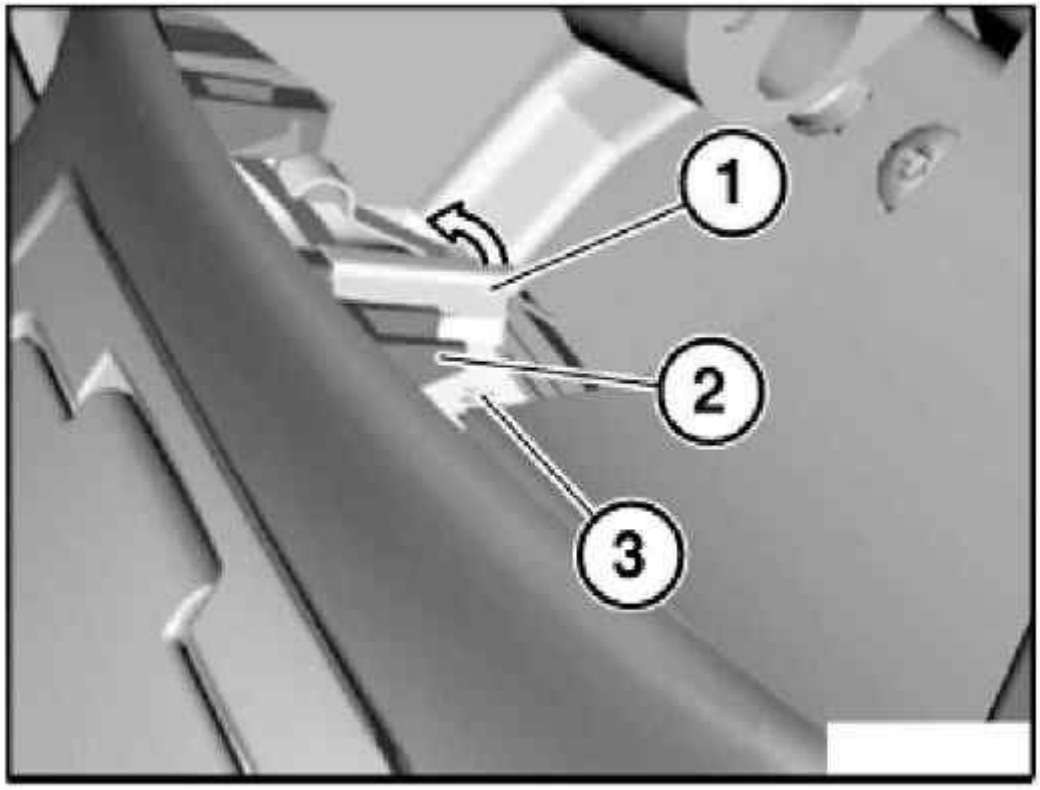

G03298519

Fig. 130: Unlocking Associated Plug Connection
Courtesy of BMW OF NORTH AMERICA, INC.

Replacement:

Open clip (1) and remove from microswitch for storage box lighting (2) in direction of arrow.

Installation:

Make sure clip (1) is correctly seated.

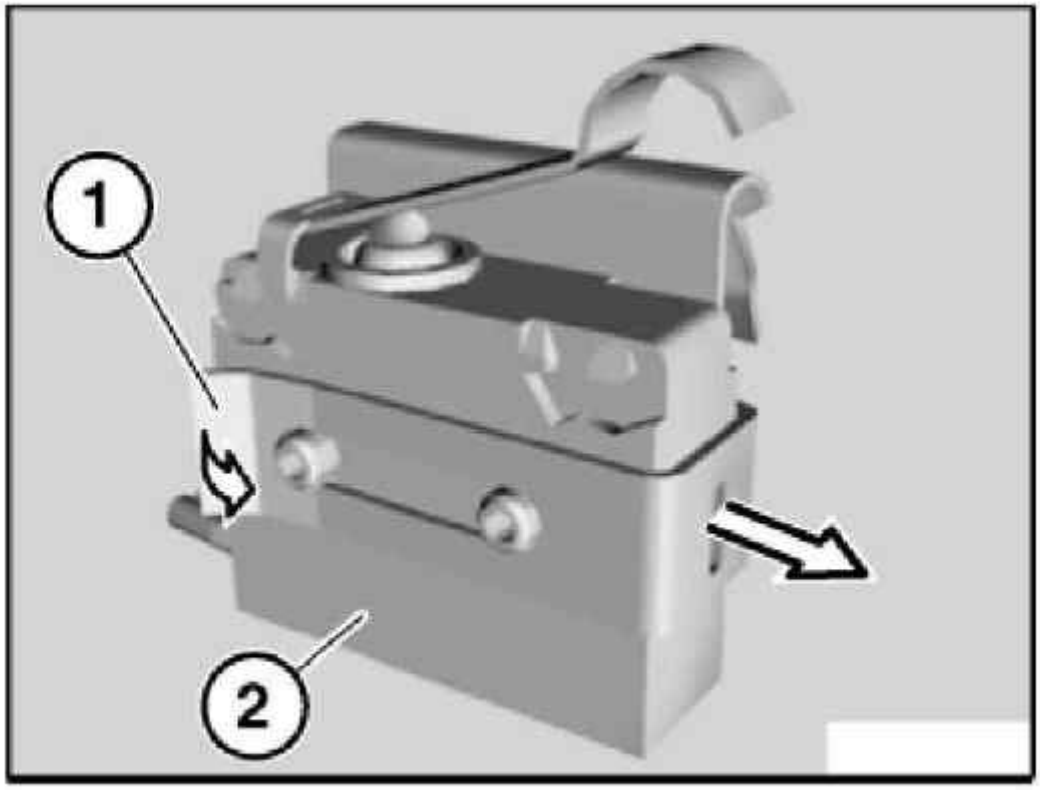

G03298520

Fig. 131: Opening Clip
Courtesy of BMW OF NORTH AMERICA, INC.

61 31 382 REPLACING LEVEL SWITCH FOR COOLANT

Warning! Danger of scalding! Only perform this work after engine has cooled down.

Important! Do not damage connected water hoses. Reposition coolant expansion tank (2) as far as possible until coolant level switch forms the highest point. This will prevent coolant from escaping on opening. If necessary, catch escaping coolant and feed back in later.

Unscrew nuts (1). Pull coolant expansion tank (2) in direction of arrow out of grommet (3) underneath.
Installation: Make sure coolant expansion tank (2) is correctly seated in grommet.

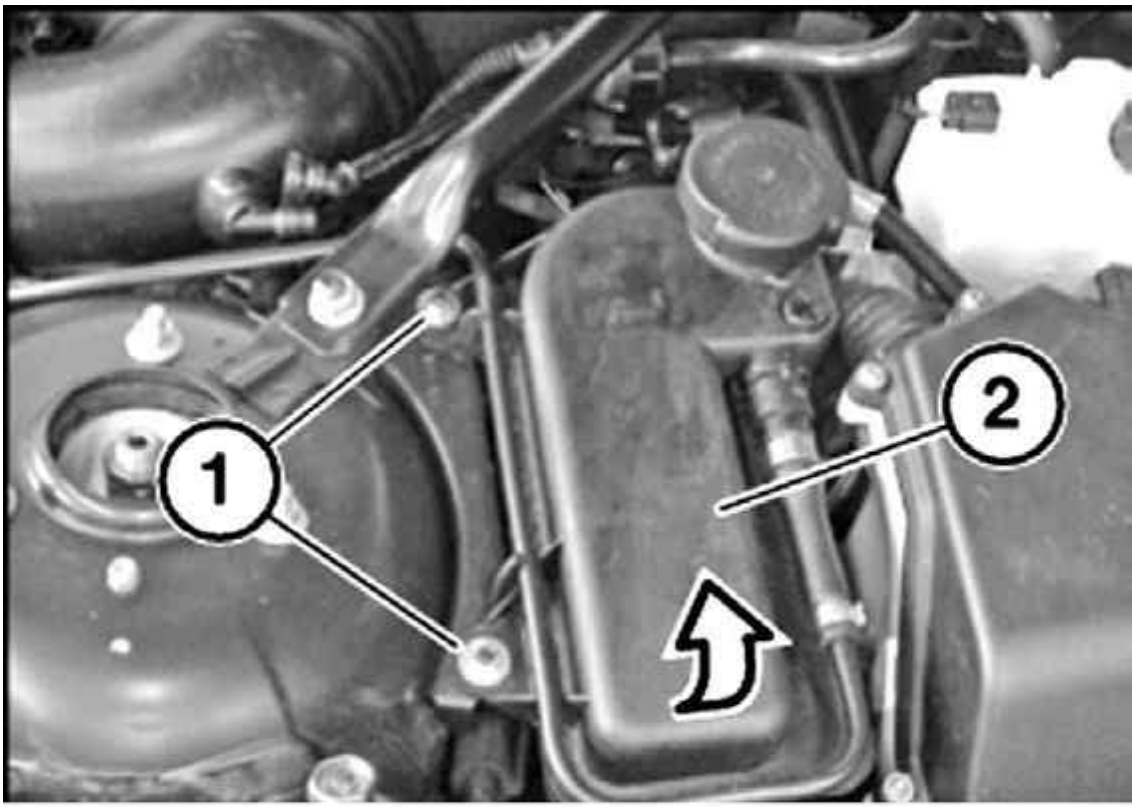

G00400034

Fig. 132: Pulling Coolant Expansion Tank In Direction Of Arrow Out Of Grommet
Courtesy of BMW OF NORTH AMERICA, INC.

Disconnect plug connection (1) from level switch (2). Turn level switch (2) in direction of arrow, pull downwards out of coolant expansion tank and remove.

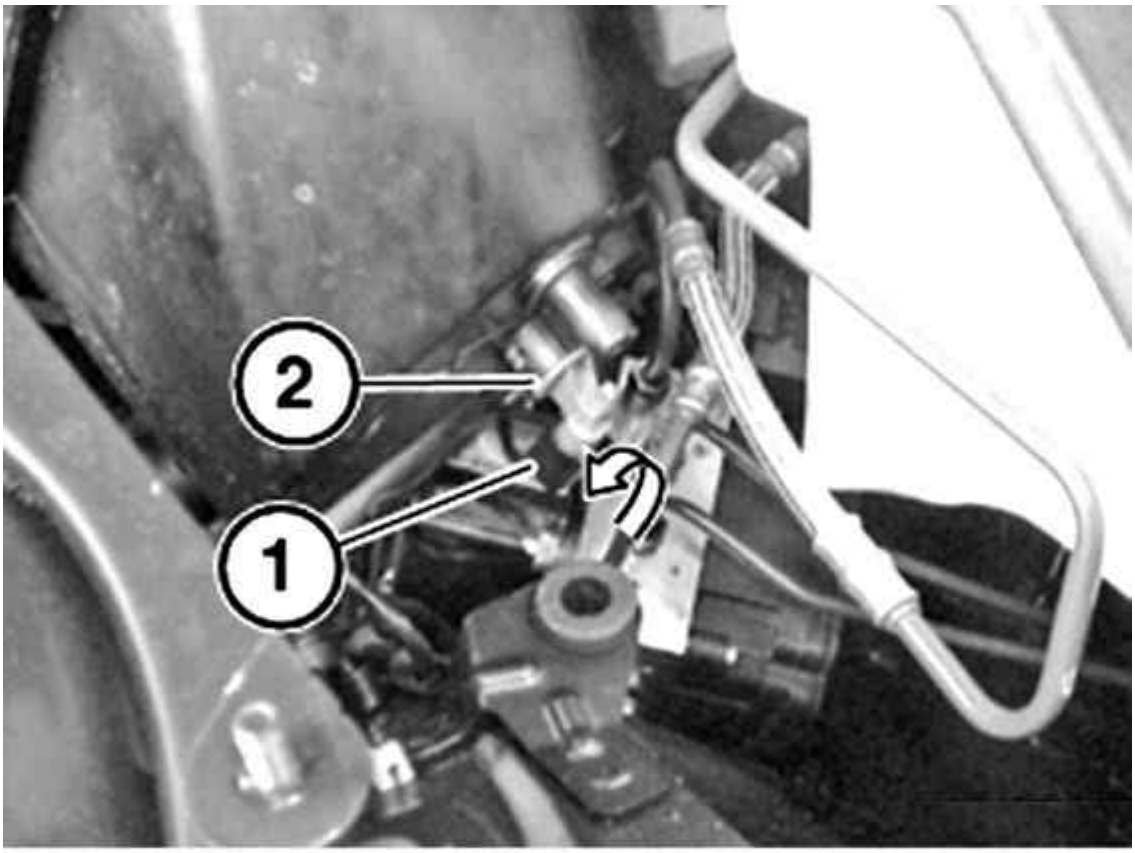

G00400035

Fig. 133: Disconnecting Plug Connection From Level Switch
Courtesy of BMW OF NORTH AMERICA, INC.

61 31 440 REMOVING AND INSTALLING/REPLACING TEMPERATURE SWITCH FOR HEATED WINDSHIELD SPRAY JETS

NOTE: Front wheel removed for purposes of clarity.

Unlock fasteners (1) by turning counterclockwise through 180° and fold up cover (2) in direction of arrow.

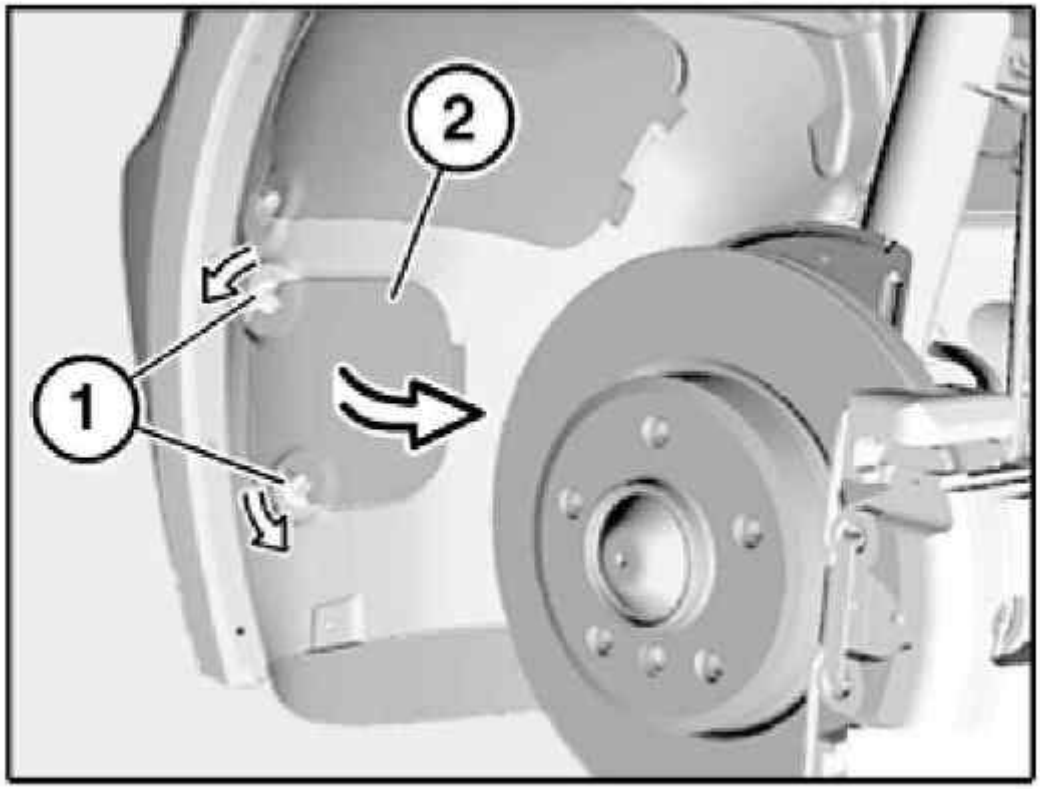

G03298521

Fig. 134: Unlocking Fasteners
Courtesy of BMW OF NORTH AMERICA, INC.

Unlock temperature switch for heated windshield spray jets (1) in direction of arrow and press upwards out of cover (2).

Through folded-up cover in wheel arch, unlock and disconnect plug connection of temperature switch for heated windshield spray jets.

Remove temperature switch for heated windshield spray jets (1).

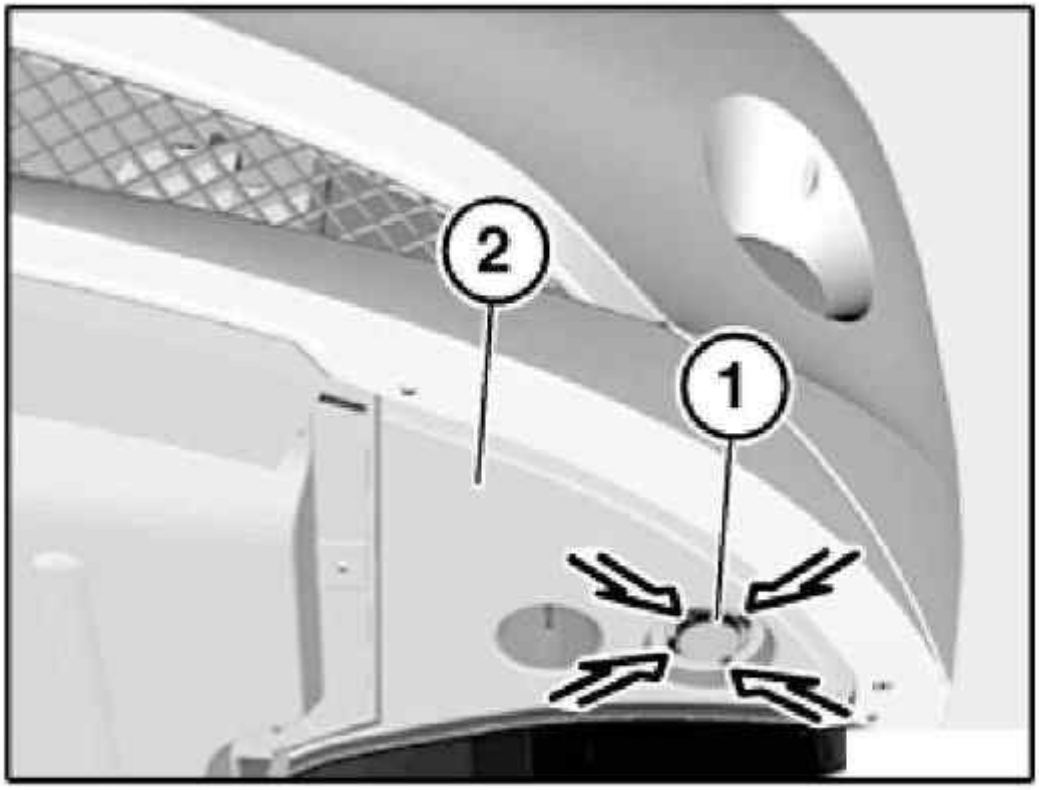

G03298522

Fig. 135: Removing Temperature Switch For Heated Windshield Spray Jets
Courtesy of BMW OF NORTH AMERICA, INC.

61 31 492 REPLACING LEVEL SWITCH FOR WINDSHIELD WASHER SYSTEM

NOTE: Front wheel removed for purposes of clarity.

Turn fasteners (1) in direction of arrow through approx. 180°.

Fold up cover (2) in direction of arrow.

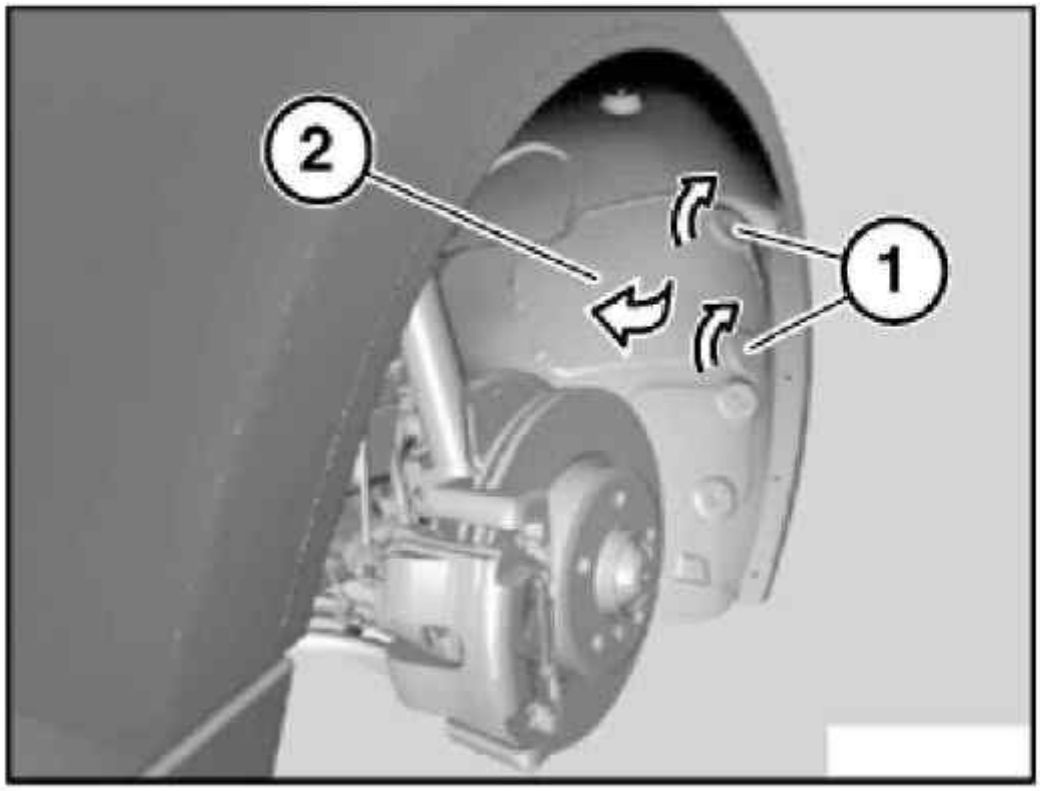

G03298523

Fig. 136: Turning Fasteners
Courtesy of BMW OF NORTH AMERICA, INC.

Unlock plug connection (1) and disconnect.

Turn level switch for windshield washing system (2) in direction of arrow through approx. 90° and pull out downwards.

Installation:

Make sure level switch for windshield washing system (2) is correctly seated.

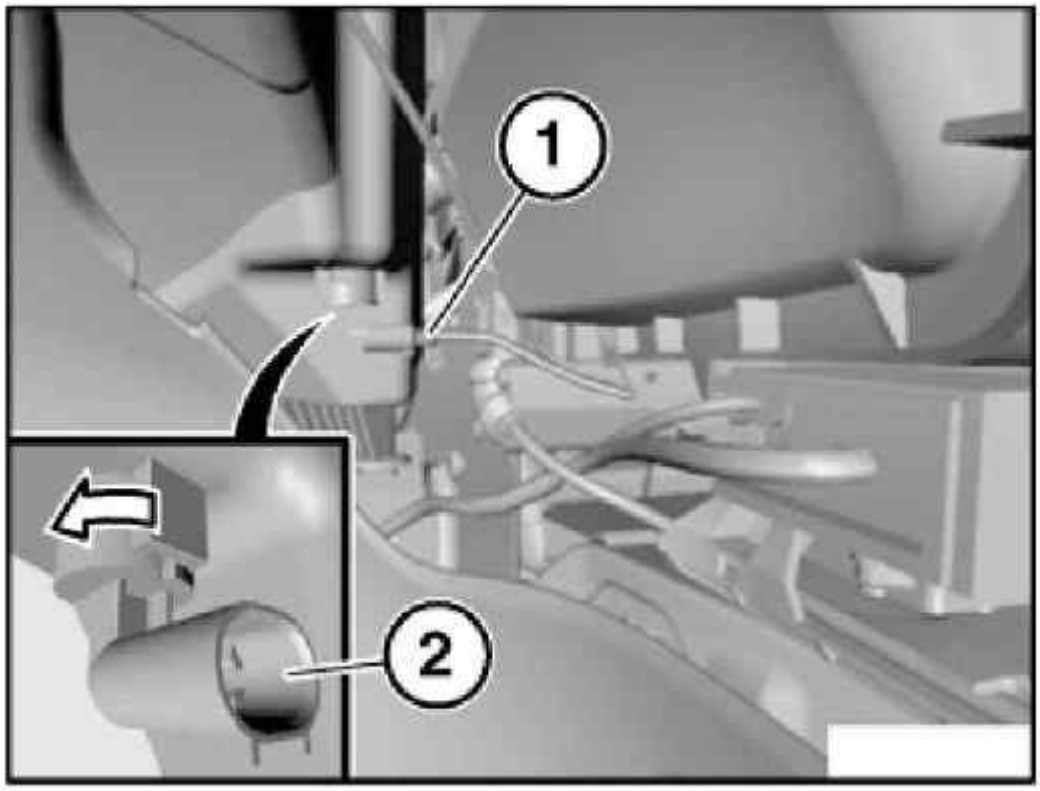

G03298524

Fig. 137: Unlocking Plug Connection
Courtesy of BMW OF NORTH AMERICA, INC.

61 31 798 REMOVING AND INSTALLING/REPLACING SENSOR ON LEFT CONVERTIBLE TOP CATCH

Necessary preliminary tasks:

- Remove trim on convertible top catch. See **54 34 125 REMOVING AND INSTALLING/REPLACING TRIM ON CONVERTIBLE TOP CATCH** .
- Remove cover. See **54 34 159 REMOVING AND INSTALLING/REPLACING LEFT CONVERTIBLE TOP LATCH** .

Unlock plug (1) and detach from housing (2).

Unlock housing (2) and detach in direction of arrow from plug connection (3).

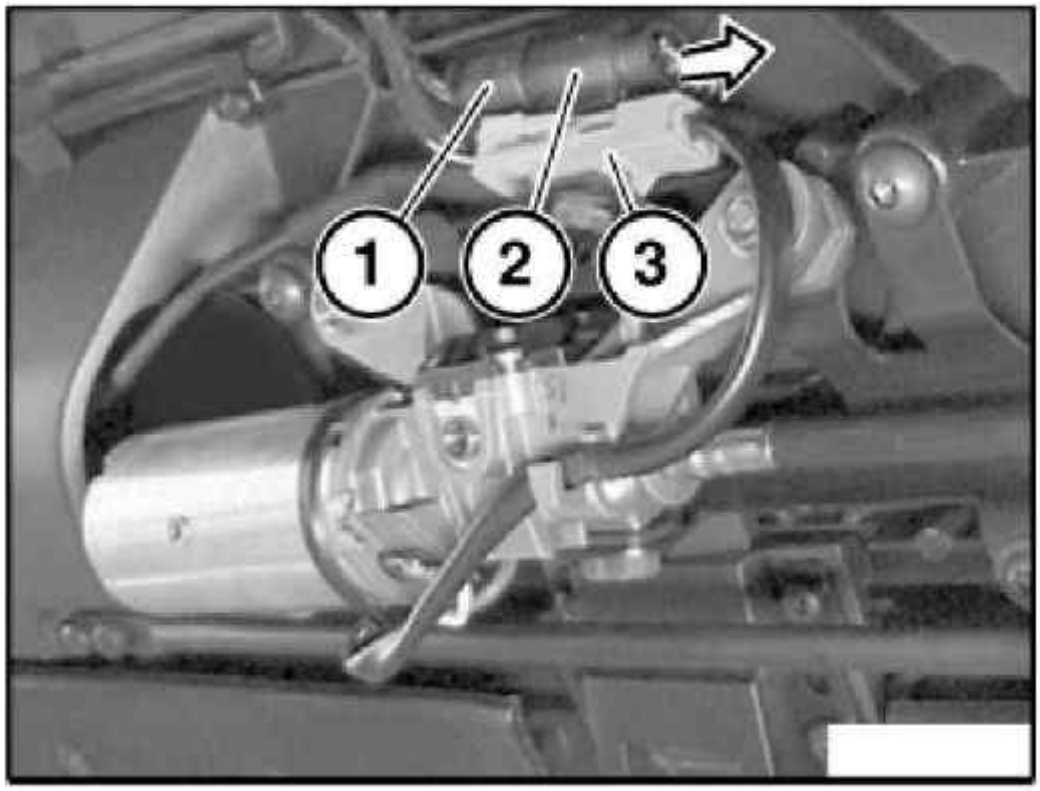

G03298525

Fig. 138: Unlocking Plug
Courtesy of BMW OF NORTH AMERICA, INC.

Release screws (1).

Remove two-part sensor (2) from convertible top catch (3).

Installation:

Note different cable lengths of two-part sensor (2).

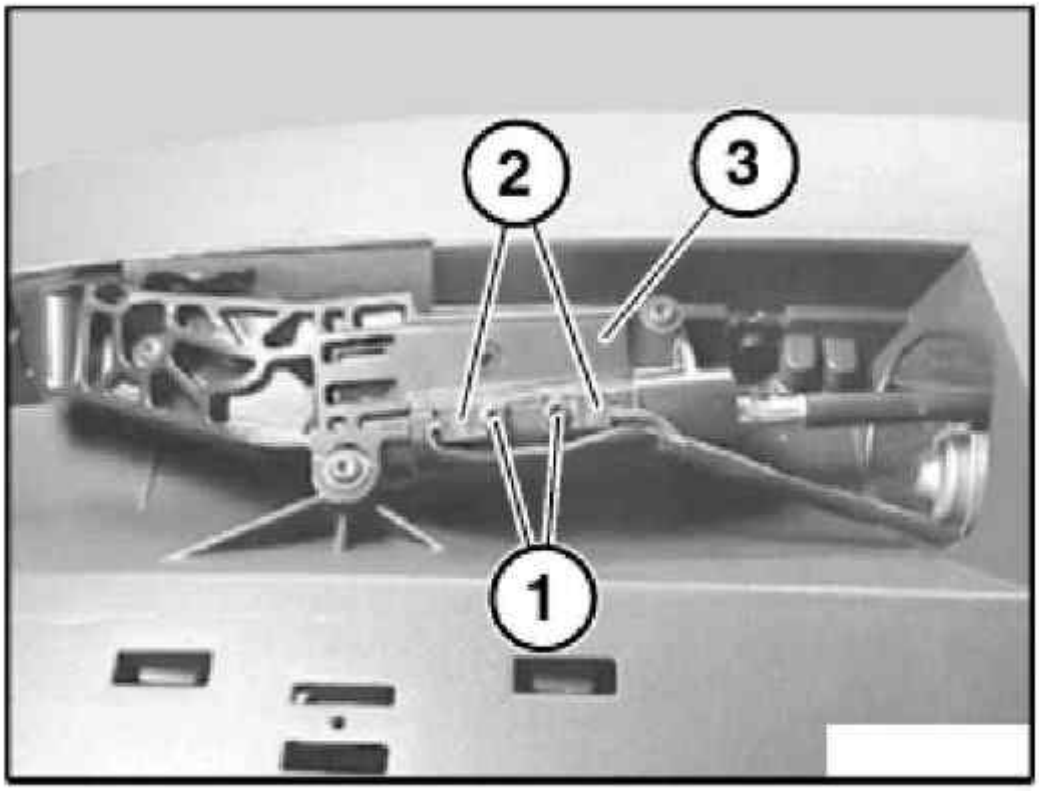

G03298526

Fig. 139: Releasing Screws
Courtesy of BMW OF NORTH AMERICA, INC.

61 31 799 REMOVING AND INSTALLING/REPLACING MICROSWITCH CONVERTIBLE TOP COMPARTMENT-

Necessary preliminary tasks:

- Remove center mount for convertible top compartment floor. See **54 31 070 REMOVING AND INSTALLING OR REPLACING BASE PLATE** .

Detach convertible top compartment microswitch in direction of arrow from center mount for convertible top compartment floor.

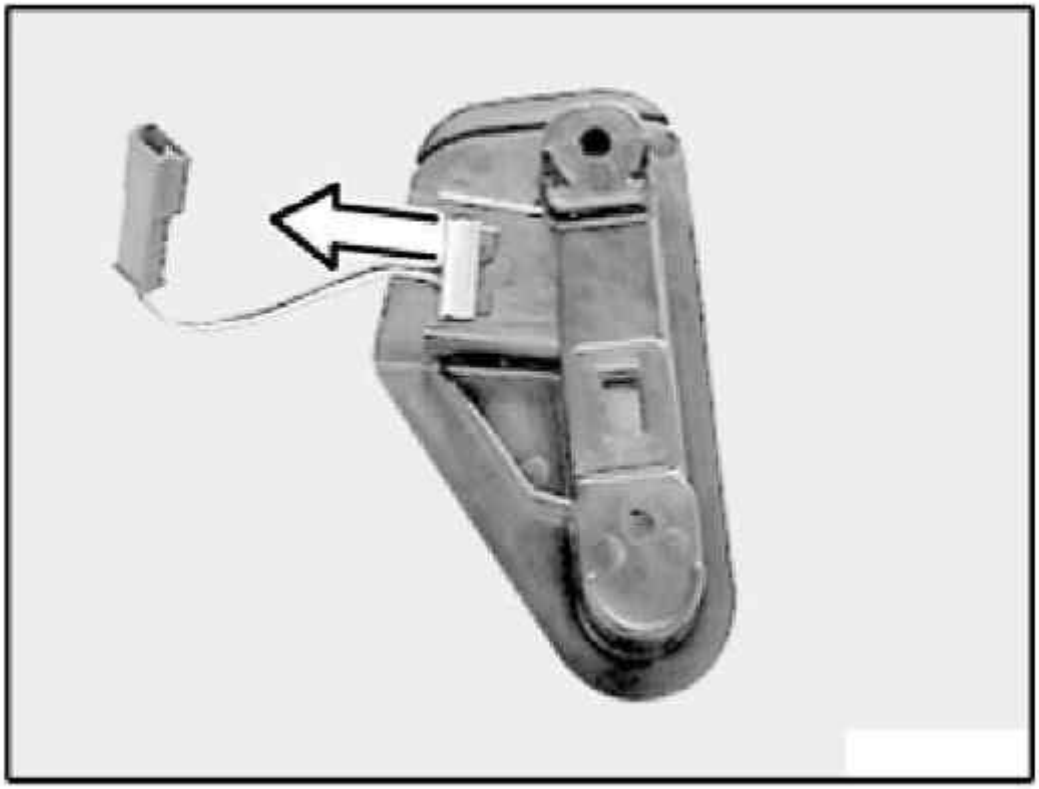

G03298527

Fig. 140: Detaching Convertible Top Compartment Microswitch
Courtesy of BMW OF NORTH AMERICA, INC.

61 31 807 REPLACING BOTH SENSORS ON LEFT CONVERTIBLE TOP MAIN BEARING

Necessary preliminary tasks:

- Remove convertible top. See **54 34 120 REPLACING CONVERTIBLE TOP FABRIC** .

NOTE: Remove sheathing of left wiring harness in starting area up to branch.

Wiring harness consists of 3 cable looms:

- Cable loom, hydraulic unit
- Cable loom, sensors on convertible top main bearing
- Cable loom, sensor on convertible top catch

NOTE: Sensors on left convertible top main bearing (2) can also be replaced individually.

Installation:

Make sure sensors on left convertible top main bearing (2) to convertible top frame are correctly positioned.

Release screws (1) and remove sensors on left convertible top main bearing (2).

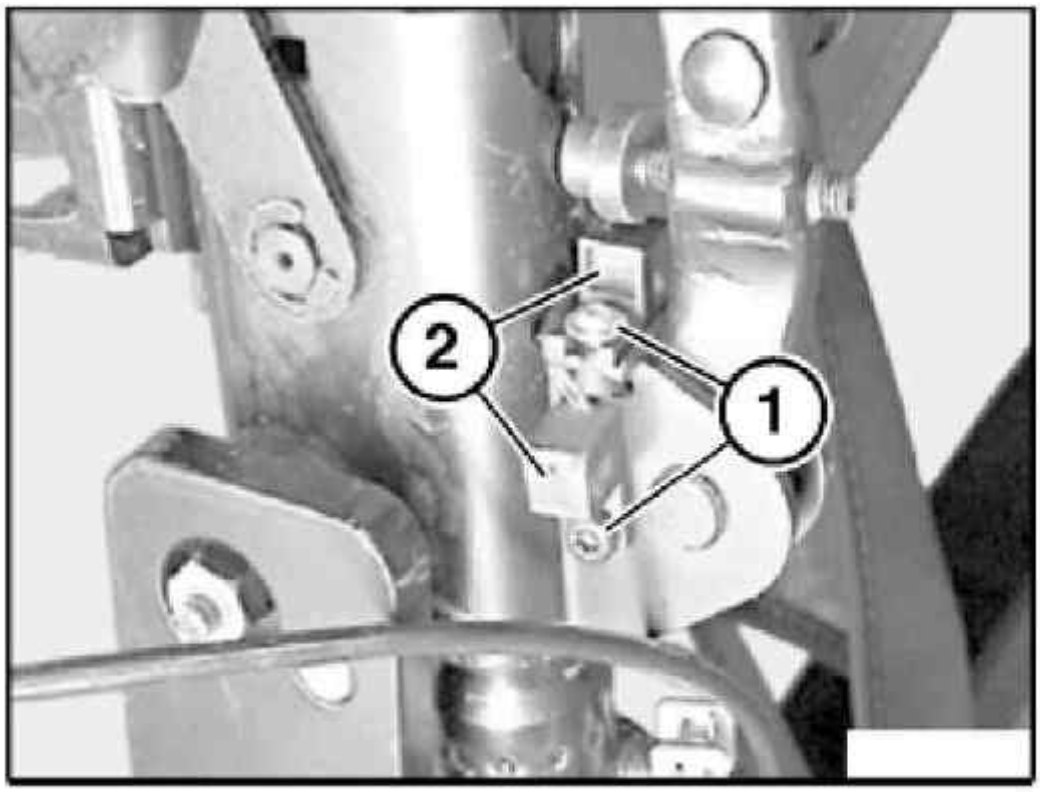

G03298528

Fig. 141: Releasing Screws
Courtesy of BMW OF NORTH AMERICA, INC.

Release screw (2).

Remove cable holder (1).

Feed cable loom for sensors on left convertible top main bearing (3) out of wiring harness (4).

Disconnect exposed cable loom for sensors on left convertible top main bearing (3) close to plug connection.

Installation:

Wiring is carried out with connectors.

Make sure complete wiring harness (4) is correctly secured.

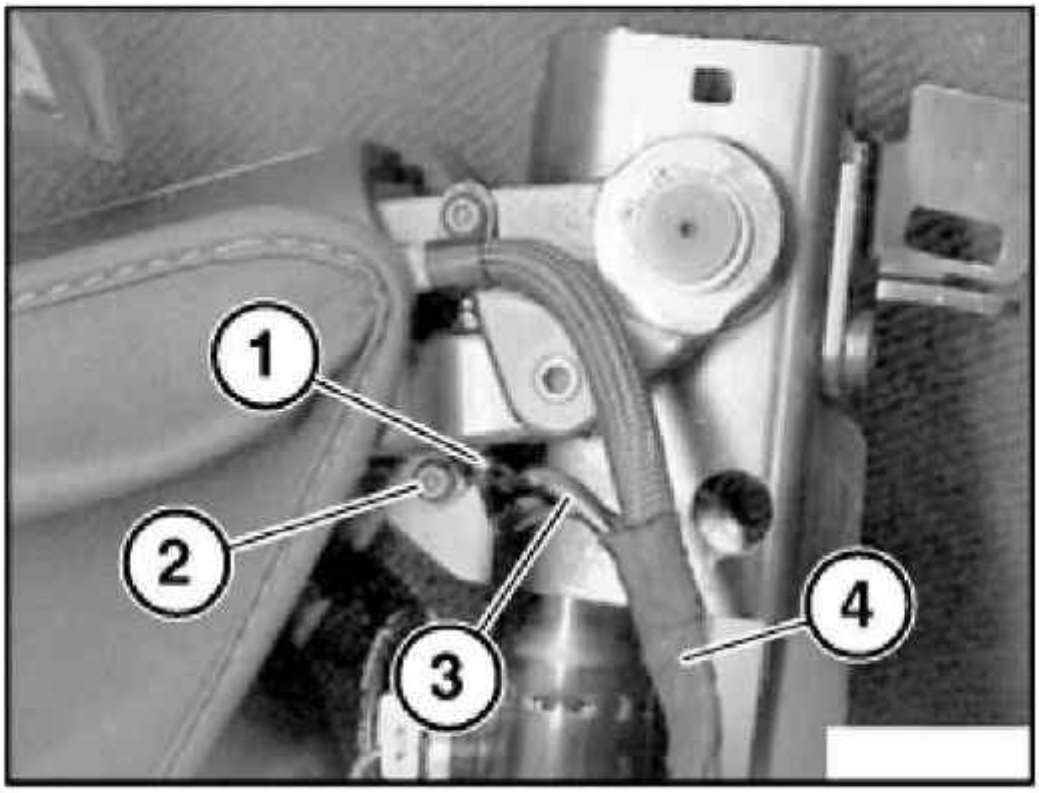

Fig. 142: Identifying Complete Wiring Harness
Courtesy of BMW OF NORTH AMERICA, INC.

STEERING ANGLE SENSOR ADJUSTMENT

In vehicles with active front steering, steering angle sensor adjustment is integrated in the BMW scan tool service function INITIAL OPERATION/ADJUSTMENT FOR ACTIVE FRONT STEERING and must not be carried out separately.

Note: Steering angle sensor adjustment must be carried out:

- After adjustment work on the front axle/steering
- After all mechanical work on the steering system
- After the following components have been replaced/coded:
  a. Steering column switch cluster.
  b. DSC control unit.
  c. ARS control unit.

Connect vehicle to BMW diagnosis system. Select and carry out steering angle sensor adjustment under SERVICE FUNCTIONS.

HORN

61 33 000 REPLACING HORN (ANTI-THEFT SYSTEM)

Necessary preliminary tasks:

- Remove rear bumper trim by removing screws at bottom of bumper. Release expansion rivets on left and right of rear wheel housing. Unclip bumper trim on left/right. Pull bumper trim a little rearward and disconnect plug connections on license plate lights. Remove bumper trim with aid of a second person.

Unfasten plug connection (2) and disconnect.

Release nut (1) and remove horn (3) in direction of arrow from mounting (4).

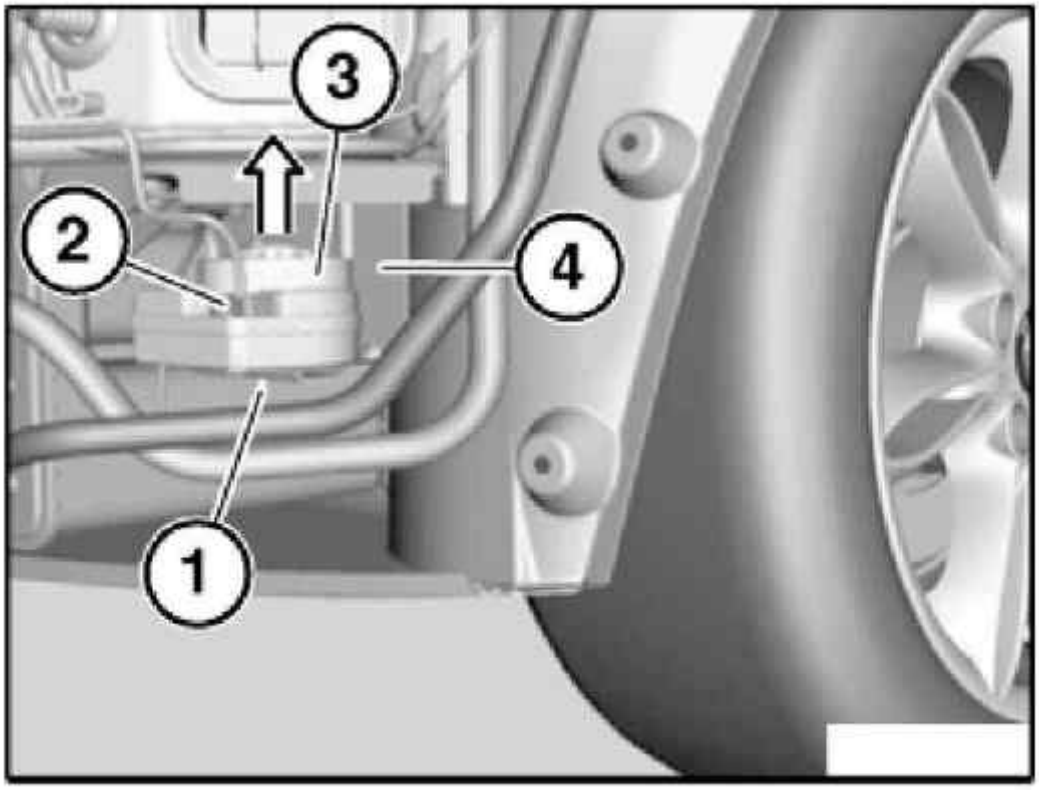

G03298530

Fig. 143: Releasing Nut
Courtesy of BMW OF NORTH AMERICA, INC.

61 33 040 REMOVING AND INSTALLING/REPLACING A FANFARE HORN

NOTE: Front wheel removed for purposes of clarity.

Unlock fasteners (1) by turning counterclockwise through 180° and fold up cover (2) in direction of arrow.

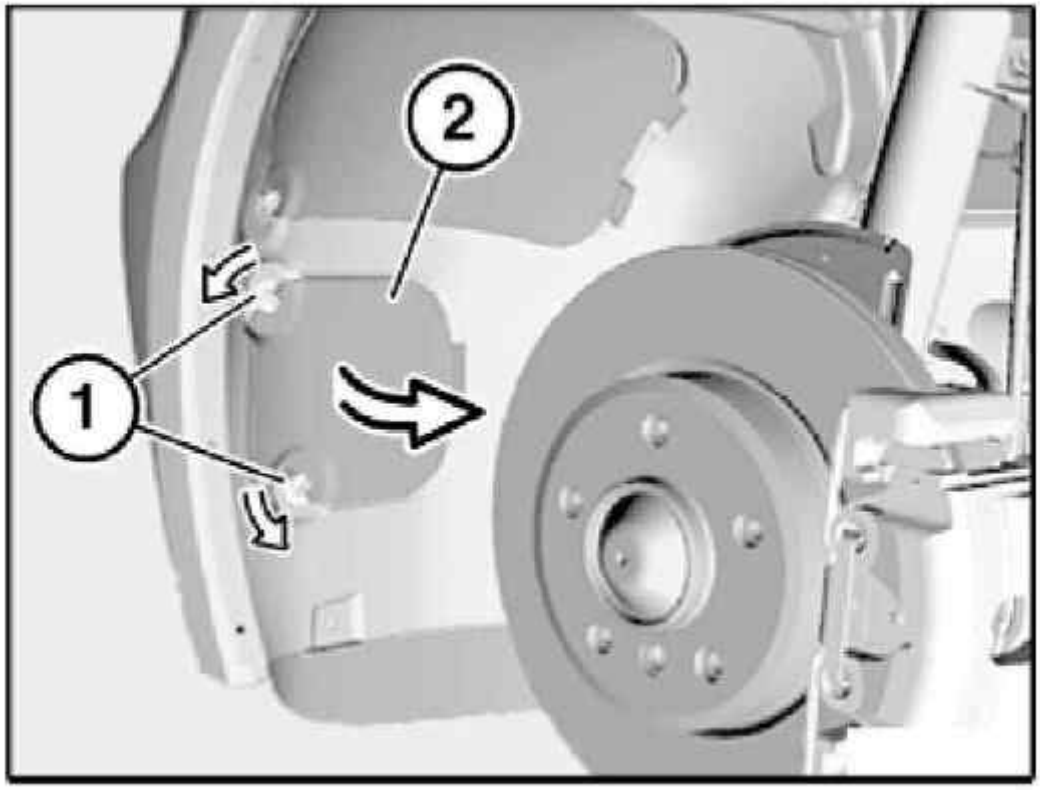

G03298531

Fig. 144: Unlocking Fasteners
Courtesy of BMW OF NORTH AMERICA, INC.

Unlock plug connection (1) and disconnect.

Release nut (2) and remove air horn complete with holder in direction of arrow.

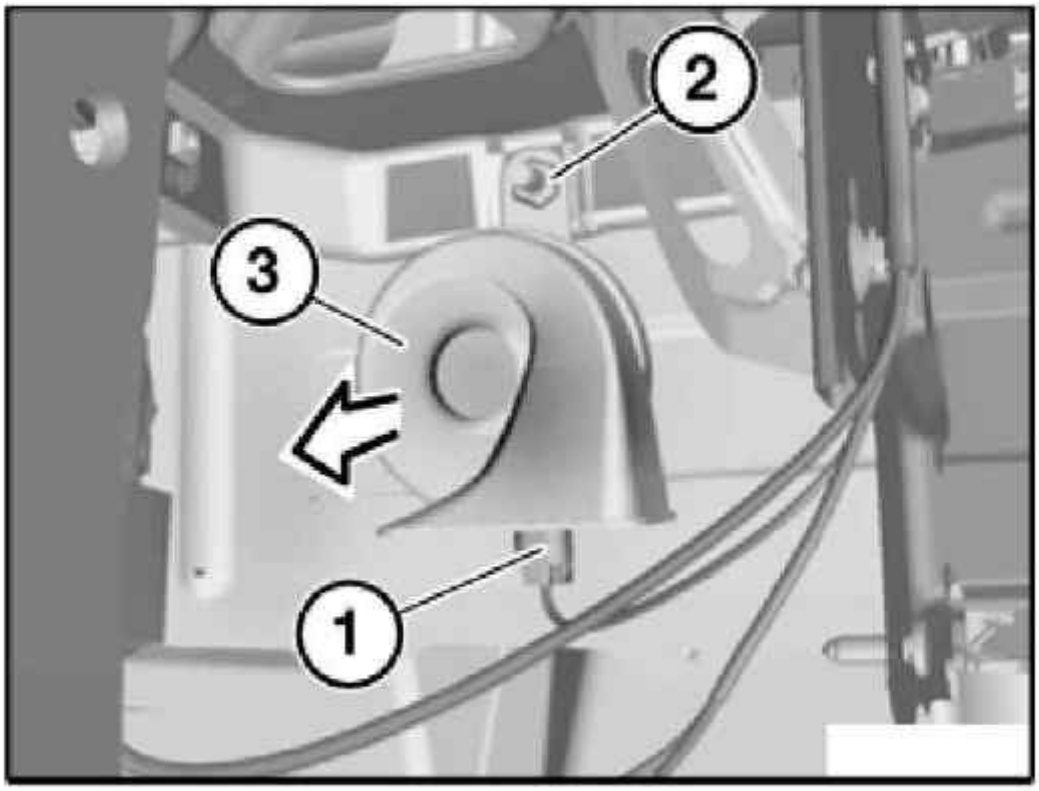

G03298532

Fig. 145: Unlocking Plug Connection
Courtesy of BMW OF NORTH AMERICA, INC.

Replacement:

Unscrew nut (1).

Remove holder (2) from air horn (3).

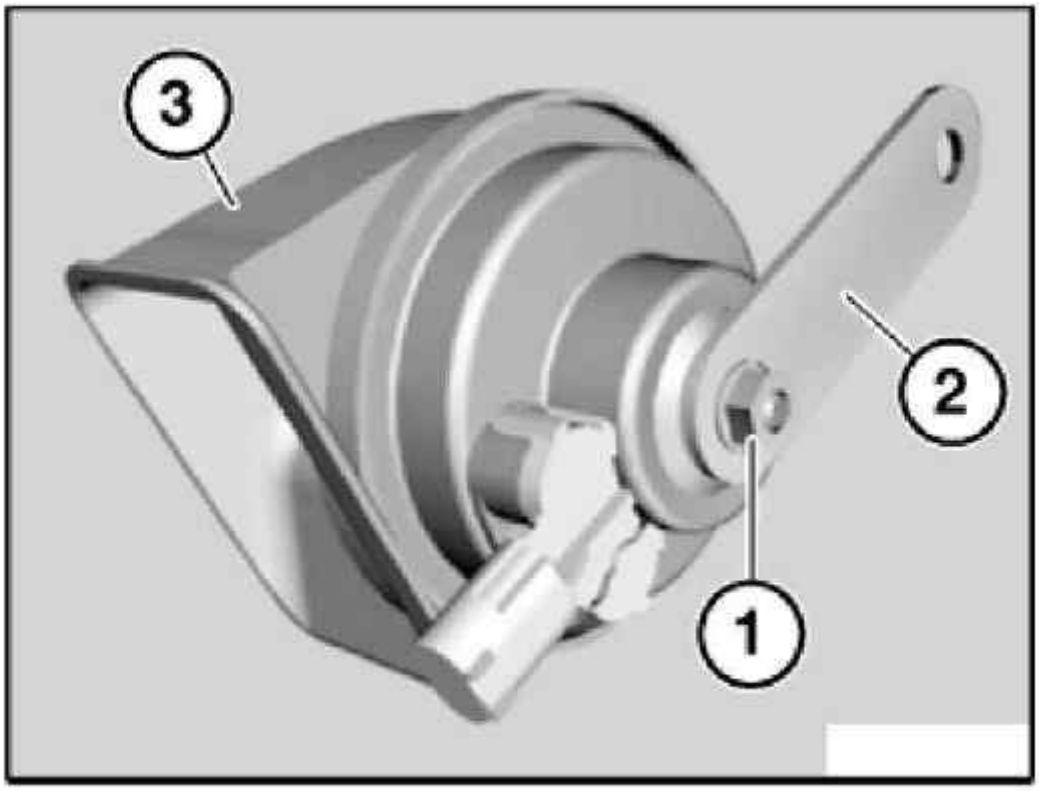

G03298533

Fig. 146: Unscrewing Nut
Courtesy of BMW OF NORTH AMERICA, INC.

ECU MODULES

61 35.. OVERVIEW OF CONTROL UNITS, MODULES

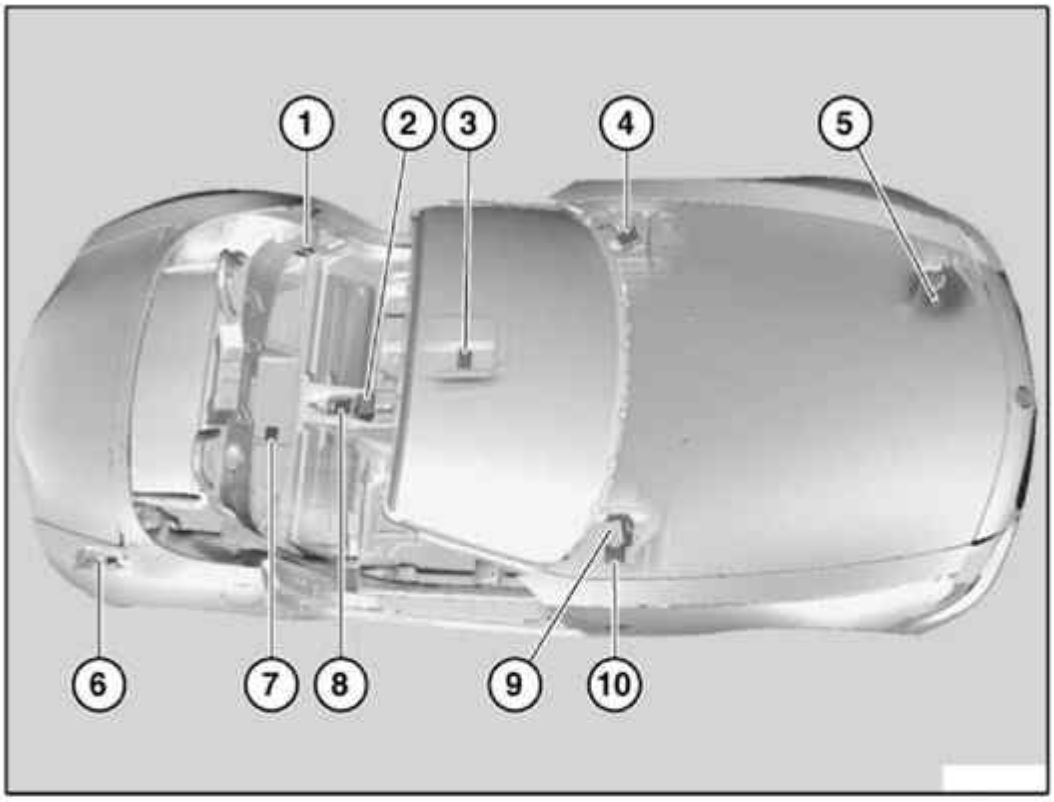

1 Convertible top module
2 Module for interior sensor
3 Rain/light sensor
4 Control unit of electronic immobilizer
5 Outside temperature sensor
6 Control unit (PDC)
7 Pitch/tilt sensor
8 Airbag control unit
9 Module for folding door mirror
10 General module

G03298534

Fig. 147: Overview Of Control Units, Modules
Courtesy of BMW OF NORTH AMERICA, INC.

61 35... NOTES ON ESD PROTECTION (ELECTRO STATIC DISCHARGE)

Special tools required:

- 12 7 060

NOTE: Electrical components which are particularly sensitive to electrostatic discharge (electronic control units, sensors, etc.) are marked with the ESD warning symbol.

E -Electro

S -Static

D -Discharge

Statically charged persons can discharge by touching electrical components.

NOTE: Humans can only detect a discharge starting from a level of approx. 3000 V.

The danger threshold for electrical components already starts from a level of approx. 100 V.

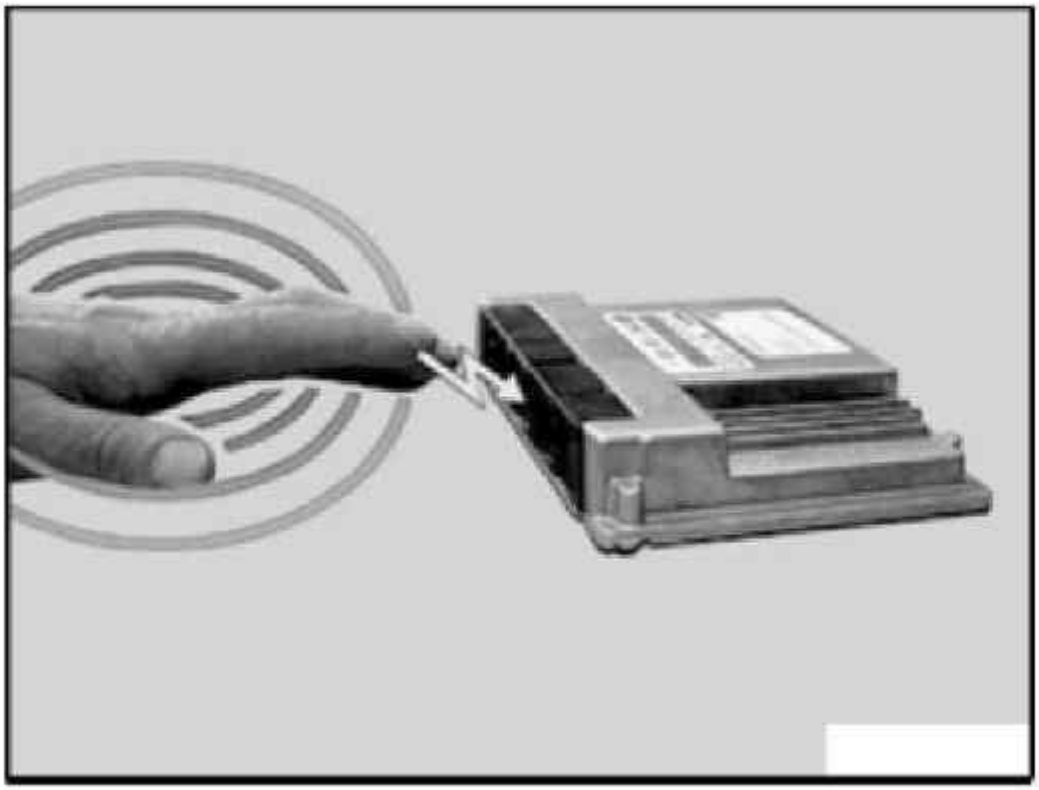

G03298535

Fig. 148: Identifying Electrical Components (1 Of 2)
Courtesy of BMW OF NORTH AMERICA, INC.

Fig. 149: Identifying Electrical Components (2 Of 2)
Courtesy of BMW OF NORTH AMERICA, INC.

IMPORTANT: Do not touch pins or multi-pin connectors directly!

Touch electrical components by their housings only.

IMPORTANT: To prevent electrical components from being damaged or destroyed by electrostatic discharge, it is absolutely essential to comply with the following instructions:

- **When replacing electrical components, leave the replacement components in their original packaging until immediately before they are to be installed**
- **If necessary, always return a removed component in its original packaging (always pack the component away immediately)**
- **Read and comply with user information on using the associated ESD special tool 12 7 060**

61 35 070 REMOVING AND INSTALLING/REPLACING MODULE FOR FOLDING DOOR MIRROR

Necessary preliminary tasks:

- Disconnect battery negative lead.
- Remove trim for instrument panel, bottom left. See **51 45 181 REMOVING AND INSTALLING/REPLACING TRIM FOR INSTRUMENT PANEL** .

Detach relay carrier (1) in direction of arrow and lay to one side.

Unfasten plug connection (2) and disconnect.

Release nuts (3) and remove module for folding door mirror (4).

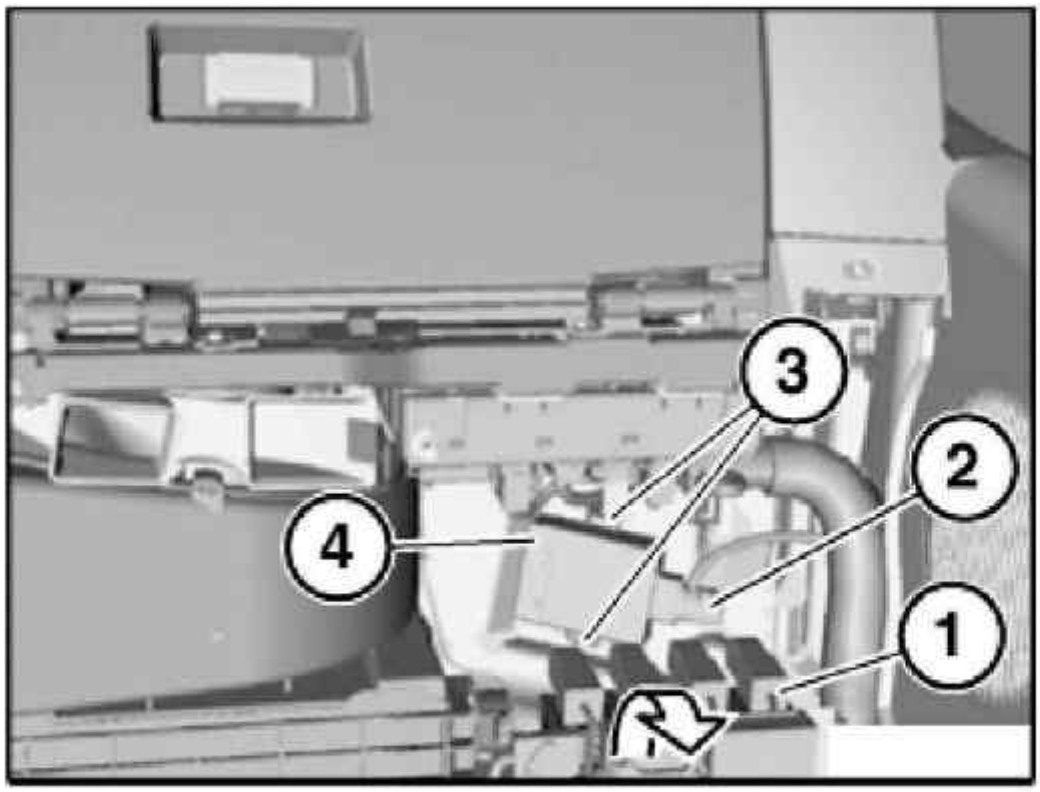

Fig. 150: Releasing Nuts
Courtesy of BMW OF NORTH AMERICA, INC.

61 35 147 REMOVING AND INSTALLING/REPLACING CONVERTIBLE TOP MODULE

Special tools required:

- 00 9 323

Necessary preliminary tasks:

- Disconnect and cover battery negative lead.

Lever out cover (1) with special tool 00 9 323 and remove.

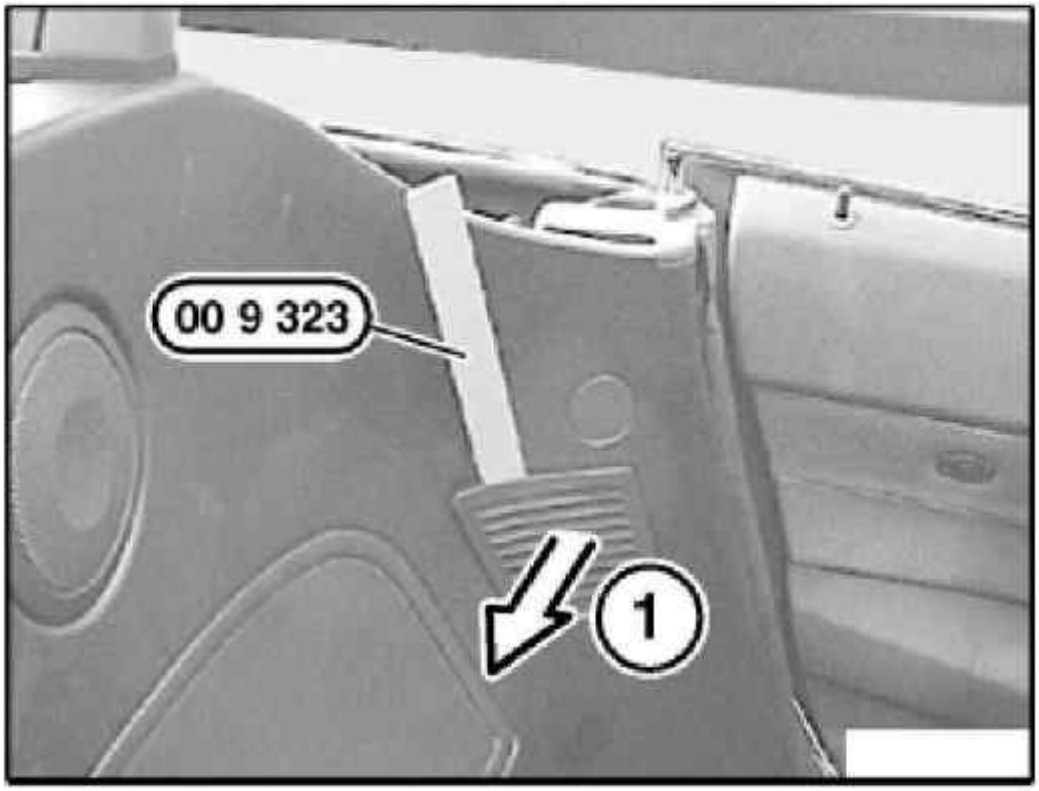

Fig. 151: Disconnecting And Cover Battery Negative Lead
Courtesy of BMW OF NORTH AMERICA, INC.

NOTE: For purposes of clarity, the rear side trim is shown removed.

Unscrew nut (1).

Feed out convertible top module (3) through created opening.

Unlock plug connections (2) and disconnect.

Remove convertible top module (3).

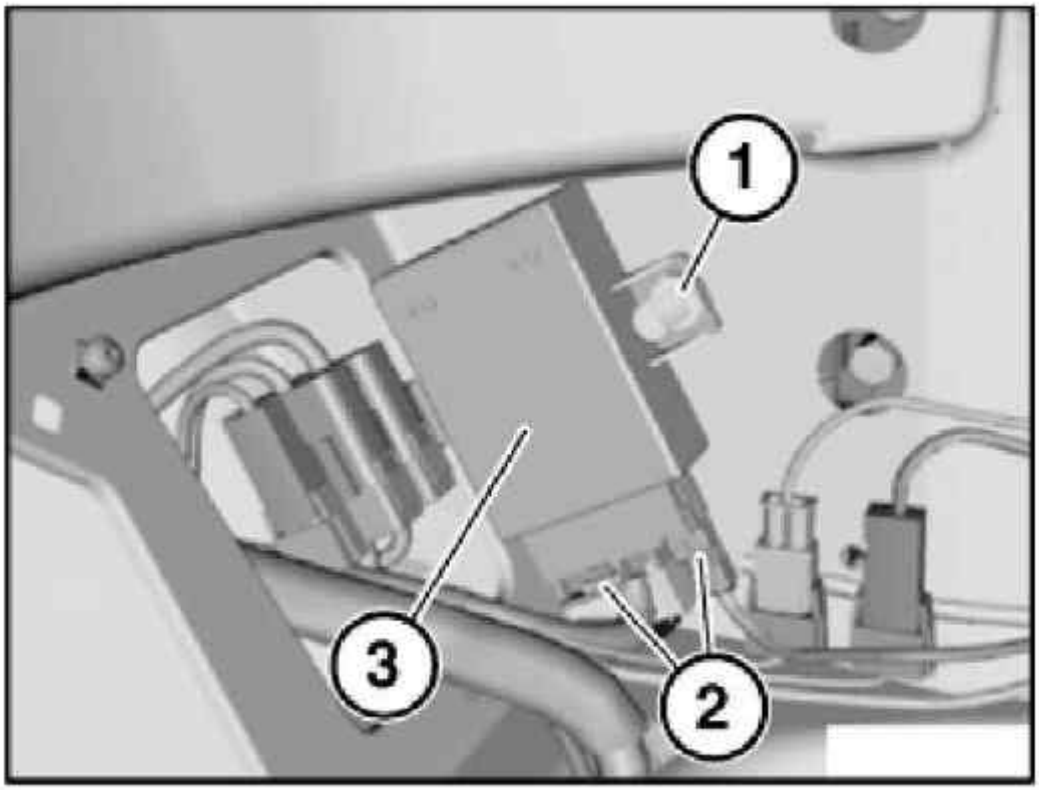

G03298539

Fig. 152: Unlocking Plug Connections
Courtesy of BMW OF NORTH AMERICA, INC.

Replacement:

Carry out coding/programming.

Observe following IDC specifications:

- Programming
- Coding
- If necessary, car & key memory
- CD "CIP"

G03298540

Fig. 153: Identifying Carry Out Coding/Programming
Courtesy of BMW OF NORTH AMERICA, INC.

61 35 177 REMOVING AND INSTALLING (REPLACING) RAIN/LIGHT SENSOR

Expand two-part mirror base cover (1) by pressing from below and detach.

Feed out two-part mirror base cover (1) and remove.

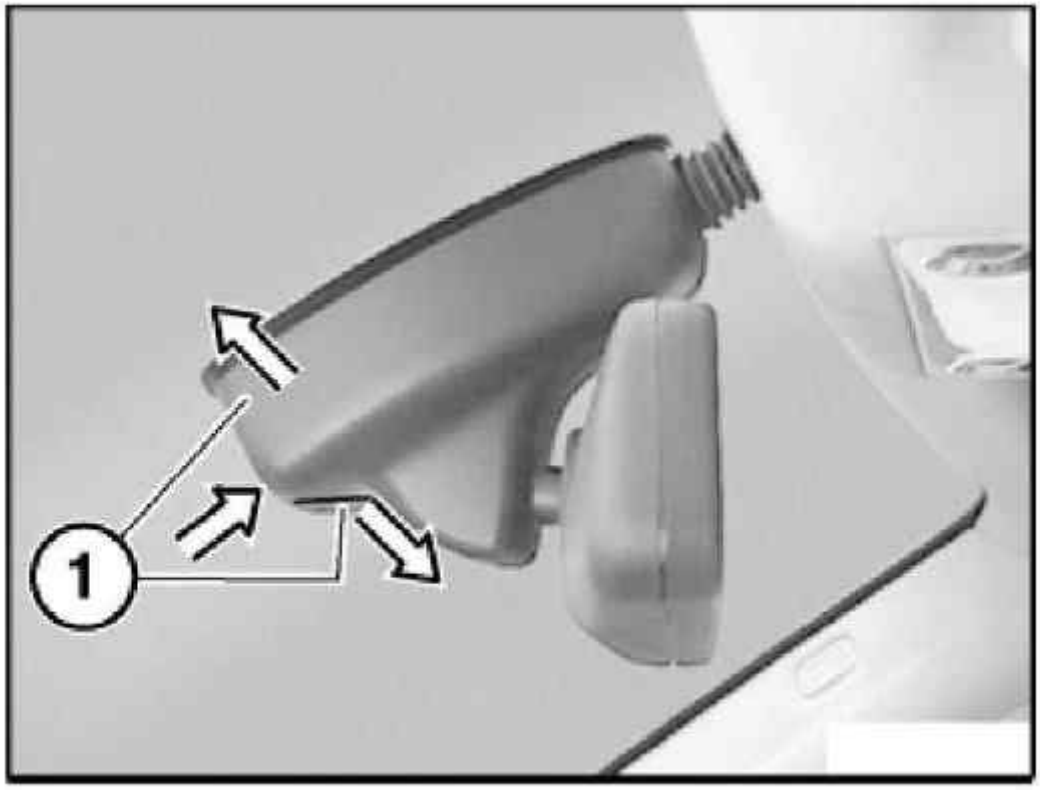

G03298541

Fig. 154: Removing Feed Out Two-Part Mirror Base Cover
Courtesy of BMW OF NORTH AMERICA, INC.

Disconnect plug connection (3).

Press locks (1) in direction of arrow and remove rain/light sensor (2) towards bottom.

Installation:

Do not damage optical element covered by rain/light sensor (2).

If necessary, use BMW scan tool to initialize rain/light sensor.

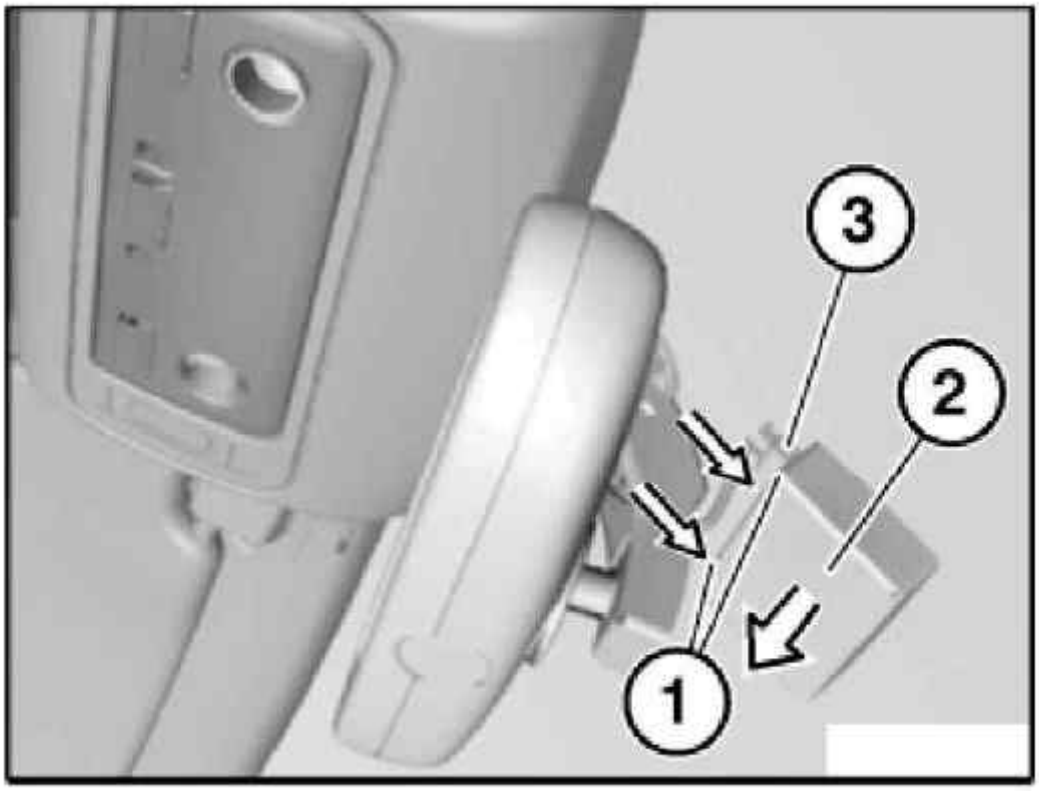

G03298542

Fig. 155: Pressing Locks
Courtesy of BMW OF NORTH AMERICA, INC.

Replacement:

Carry out programming/coding.

61 35 622 REMOVING AND INSTALLING/REPLACING GENERAL MODULE

Necessary preliminary tasks:

- Remove trim for instrument panel, bottom left . See **51 45 181 REMOVING AND INSTALLING/REPLACING TRIM FOR INSTRUMENT PANEL** .

Release screws (1).

Remove general module (3) from instrument panel trim at bottom right (4).

Installation:

Make sure general module (3) is correctly seated in guides (2).

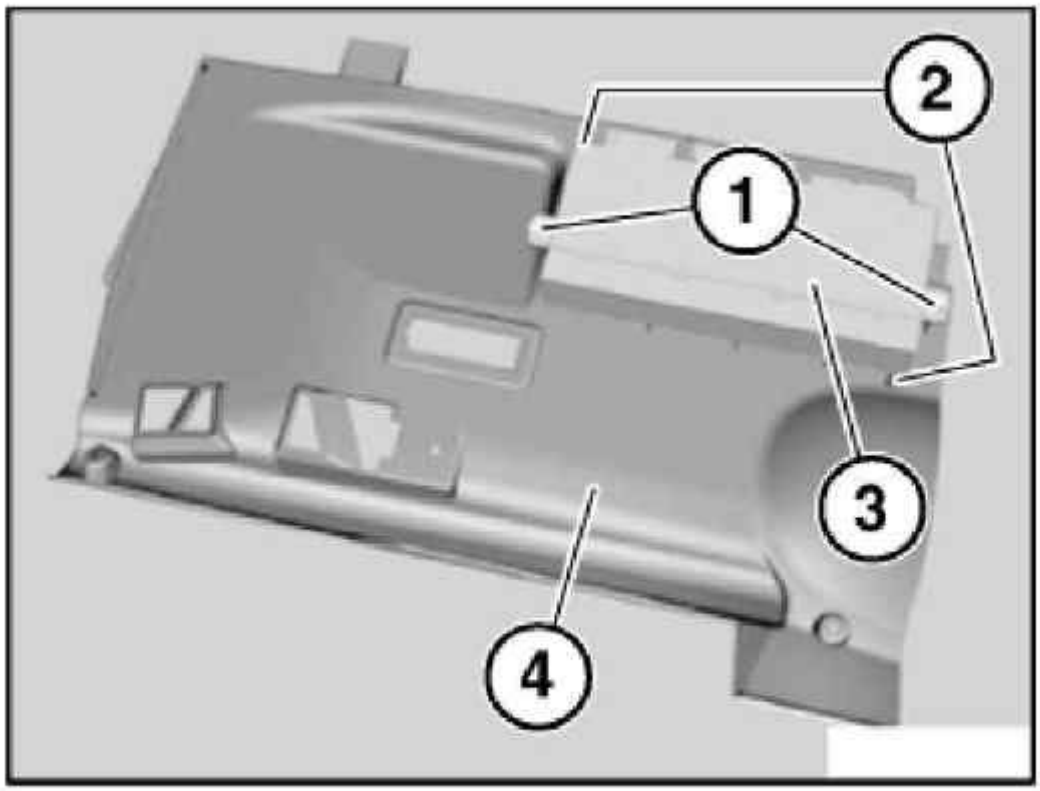

G03298543

Fig. 156: Releasing Screws
Courtesy of BMW OF NORTH AMERICA, INC.

Replacement:

Carry out coding/programming.

Observe following IDC specifications:

- Programming
- Coding
- If necessary, car & key memory
- CD "CIP"

G03298544

Fig. 157: Identifying Carry Out Coding/Programming
Courtesy of BMW OF NORTH AMERICA, INC.

61 35 679 INITIALIZING RAIN/LIGHT SENSOR

NOTE: **Initialization is necessary:**

- **After replacing windshield**
- **When installing a used rain/light sensor**

NOTE:

- **Connect BMW diagnosis system**
- **Initialize rain/light sensor.**

61 35 900 REMOVING AND INSTALLING/REPLACING RING ANTENNA OF ELECTRONIC IMMOBILIZER

Special Tools Required:

- 61 3 300

Necessary preliminary tasks:

- Remove **UPPER SECTION OF STEERING COLUMN COVER** .

Slide in special tool 61 3 300 with flattened end (A) facing ring antenna and lever out ring antenna.

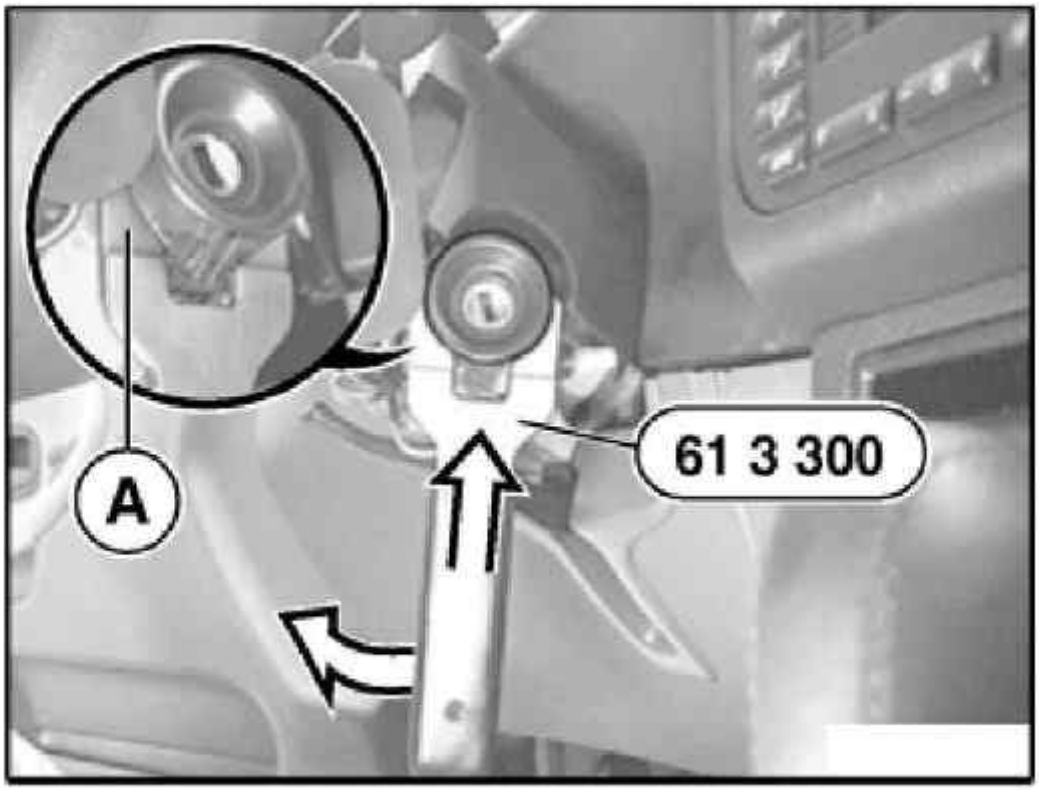

G03298545

Fig. 158: Identifying Slide In Special Tool 61 3 300
Courtesy of BMW OF NORTH AMERICA, INC.

61 35 910 REMOVING AND INSTALLING/REPLACING CONTROL UNIT OF ELECTRONIC IMMOBILIZER

Necessary preliminary tasks:

- Disconnect battery negative lead.
- Remove trim panel for pedal assembly. See **51 45 185 REMOVING AND INSTALLING/REPLACING TRIM FOR PEDAL ASSEMBLY** .

Unfasten plug connection (2) and disconnect.

Release nuts (1) and remove control unit of electronic immobilizer (3).

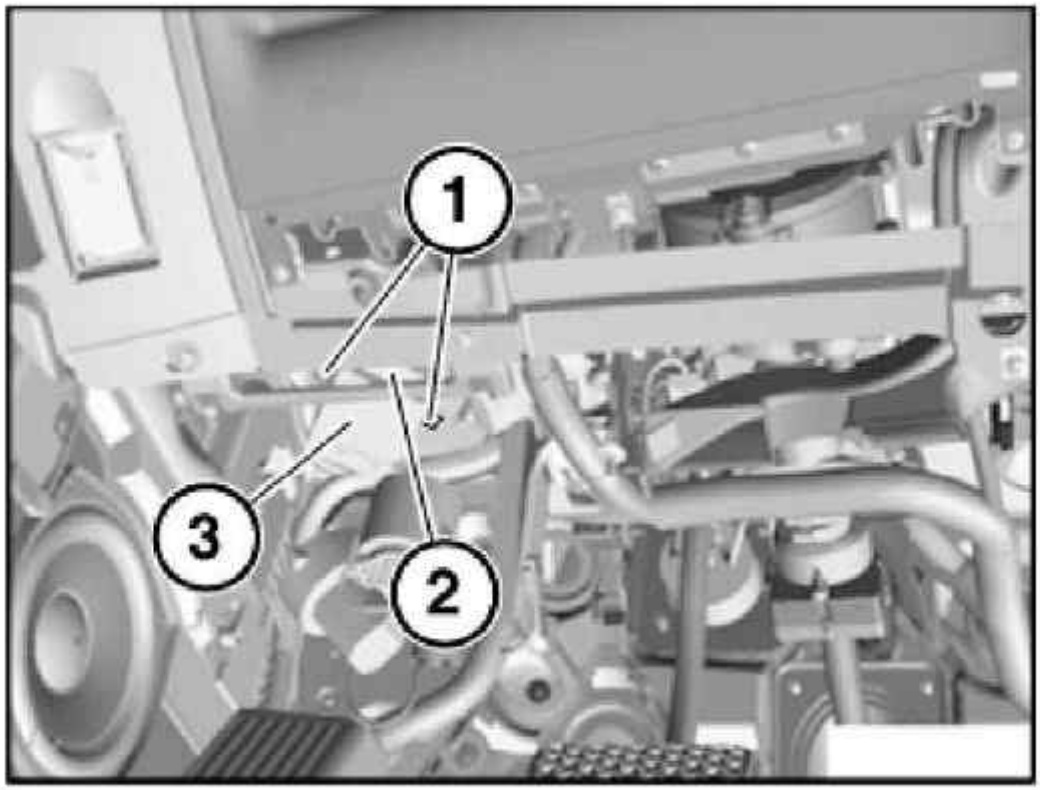

G03298546

Fig. 159: Unfastening Plug Connection
Courtesy of BMW OF NORTH AMERICA, INC.

Replacement:

Carry out coding/programming.

Observe following IDC specifications:

- Programming
- Coding
- If necessary, car & key memory
- CD "CIP"

G03298547

Fig. 160: Identifying Carry Out Coding/Programming
Courtesy of BMW OF NORTH AMERICA, INC.

DIAGNOSIS PROGRAMMING/CODING

Using the current TIS CD:

- Document type: Select SI Diagnosis Coding.
- Index number 11: Select Programming Information to display the table of contents.
- Select the current IDC for the appropriate vehicle.

RELAYS

61 13... RELAY CARRIER

Place special tool 61 1 153 on relay carrier (1) and carefully pull in direction of arrow until retaining lugs (2) on relay carrier are raised.

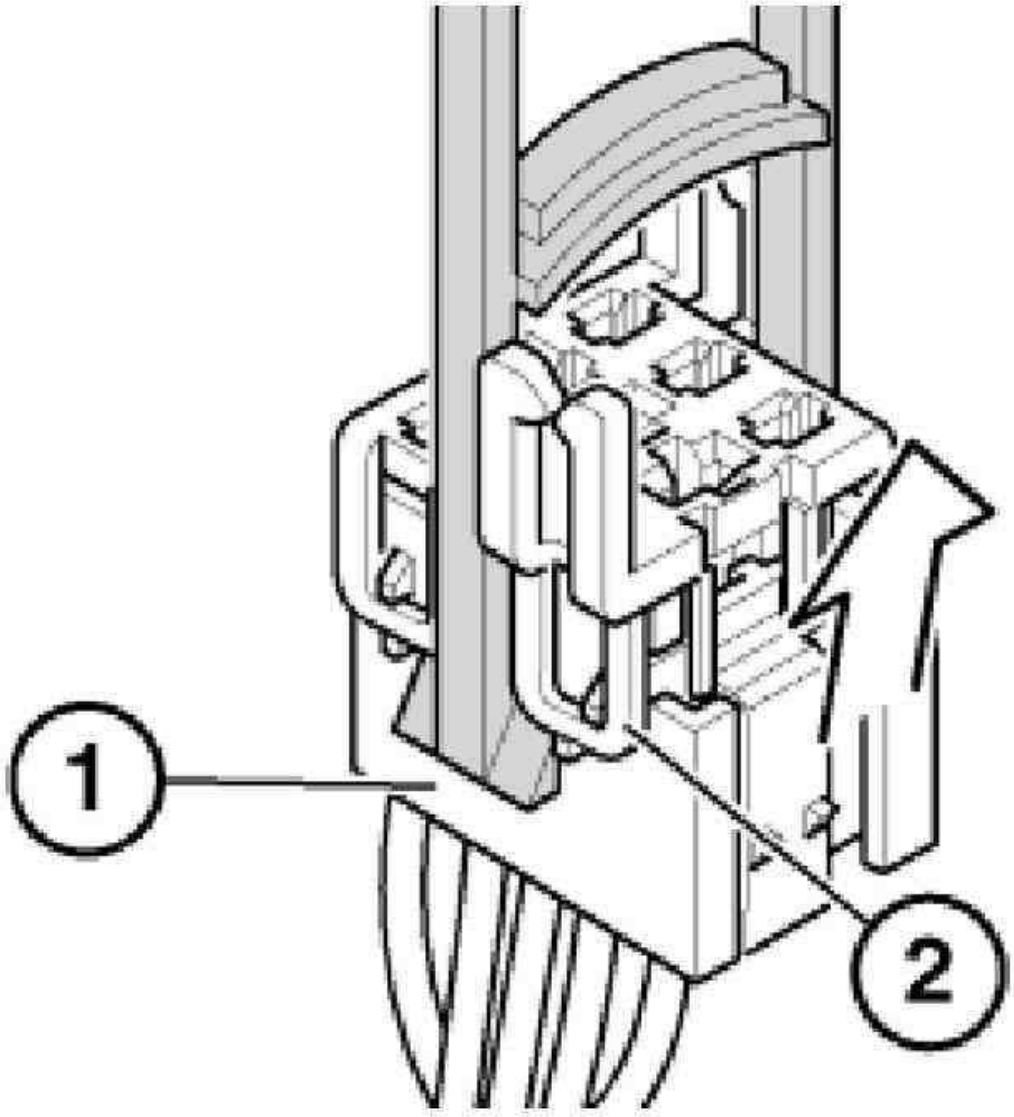

G03298548

Fig. 161: Placing Special Tool 61 1 153 On Relay Carrier
Courtesy of BMW OF NORTH AMERICA, INC.

Pull relay carrier (2) in direction of arrow into first catch (3).

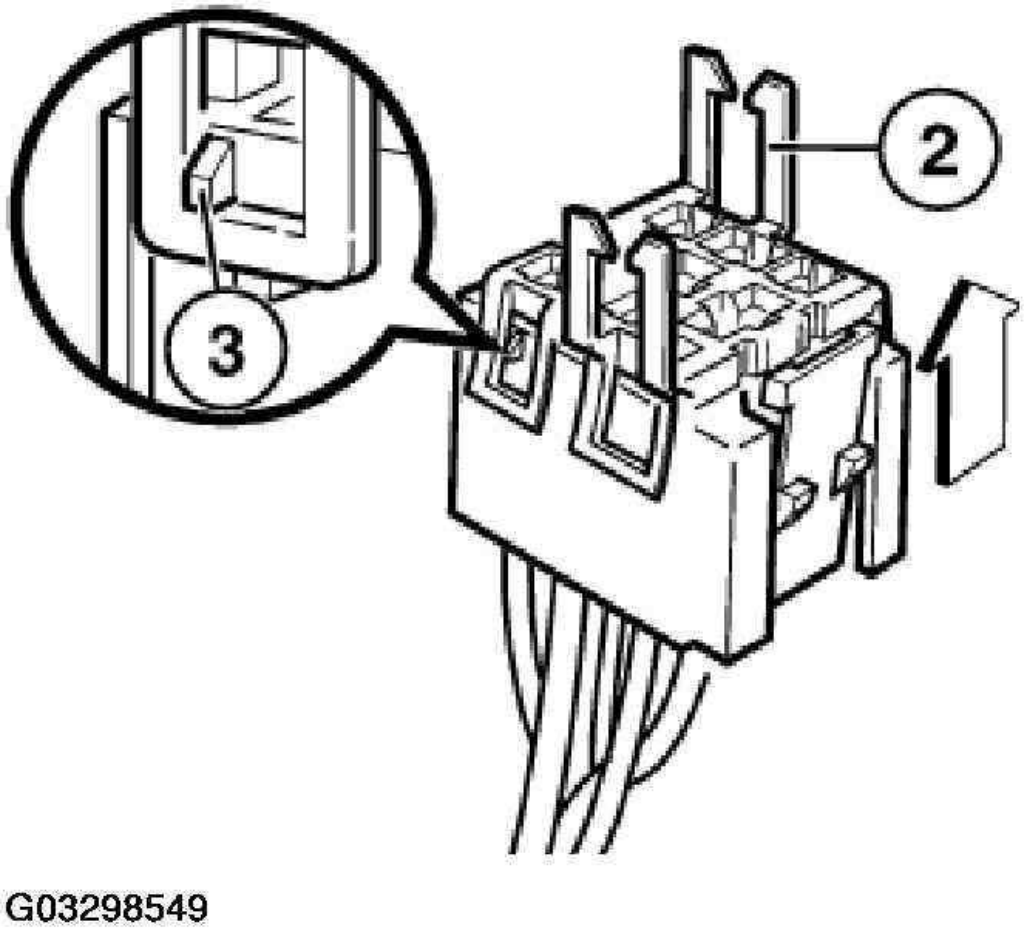

Fig. 162: Pulling Relay Carrier
Courtesy of BMW OF NORTH AMERICA, INC.

Press down arrester hook (4) of appropriate contact and pull out cable with contact.

Press out double flat spring contact with special tool 61 1 136 or 61 1 137 (ejector).

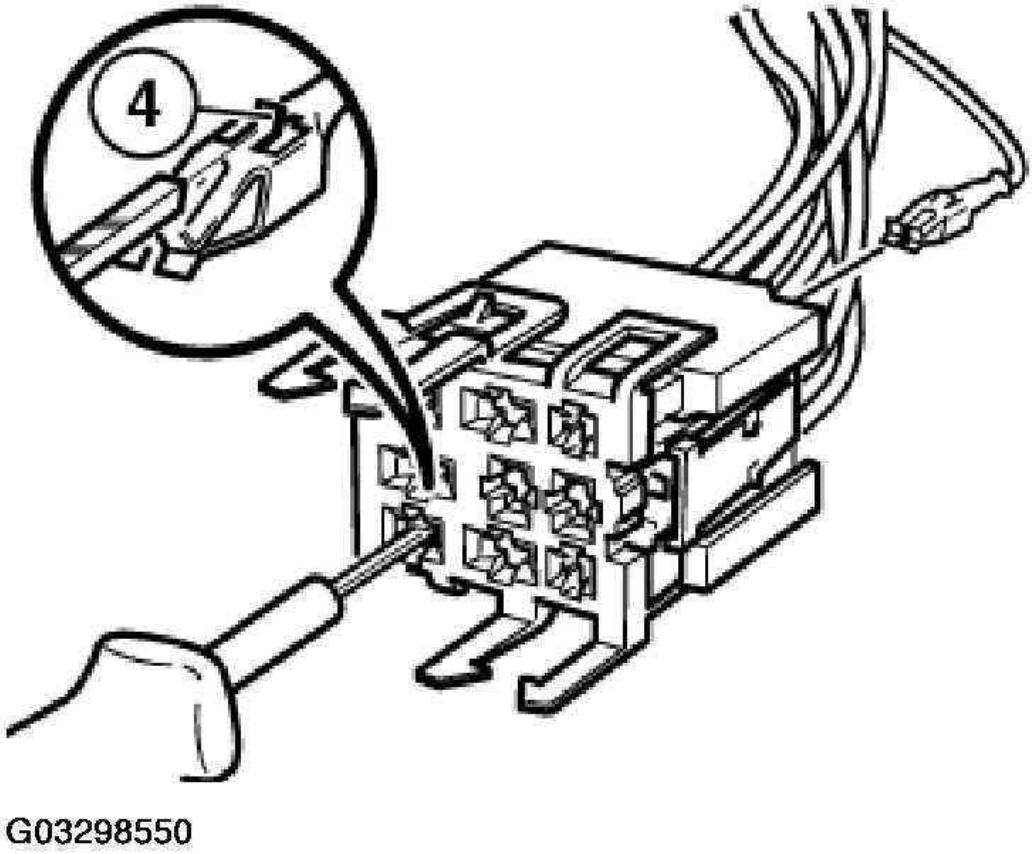

Fig. 163: Pressing Down Arrester Hook
Courtesy of BMW OF NORTH AMERICA, INC.

WINDSHIELD WIPERS

61 61... OVERVIEW OF WINDSHIELD WASHER SYSTEM AND HEADLIGHT CLEANING SYSTEM (SRA)

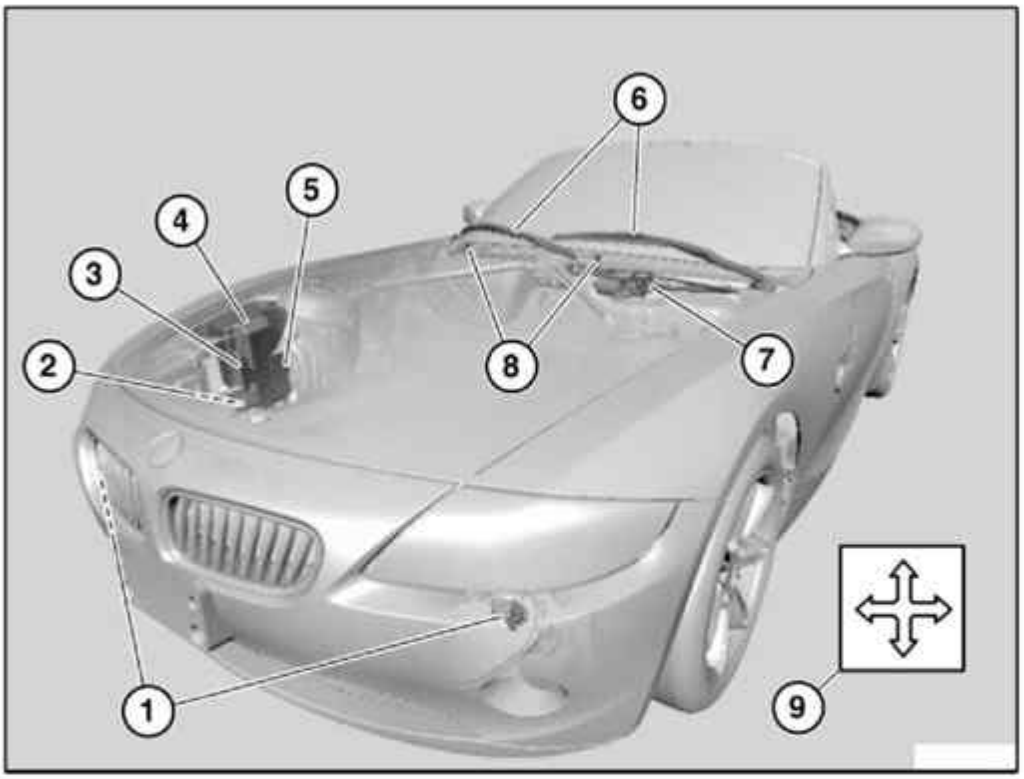

1 High-pressure nozzles of SRA
2 Level switch for windshield washer system
3 Washer pump of headlight cleaning system
4 Fluid reservoir for windshield washer system
5 Windshield washer pump
6 Windshield wiper arms
7 Bracket for windshield wiper system
8 Spray nozzles of windshield washer system
9 Checking and adjusting

G03298551

Fig. 164: Identifying Overview Of Windshield Washer System And Headlight Cleaning System (SRA)
Courtesy of BMW OF NORTH AMERICA, INC.

61 61 010 CHECKING/ADJUSTING APPROACH ANGLE OF WINDSHIELD WIPER ARMS ON FRONT WINDSCREEN

Special tools required:

- 00 9 221
- 00 9 222
- 00 9 331

NOTE: **Wiping quality is increased if the approach angle of the windshield wiper arms is precisely adjusted.**
Before checking contact angle, briefly lift wiper arms off windshield.

Place special tool 00 9 331 in rest position next to pivot point of wiper blade on windshield.

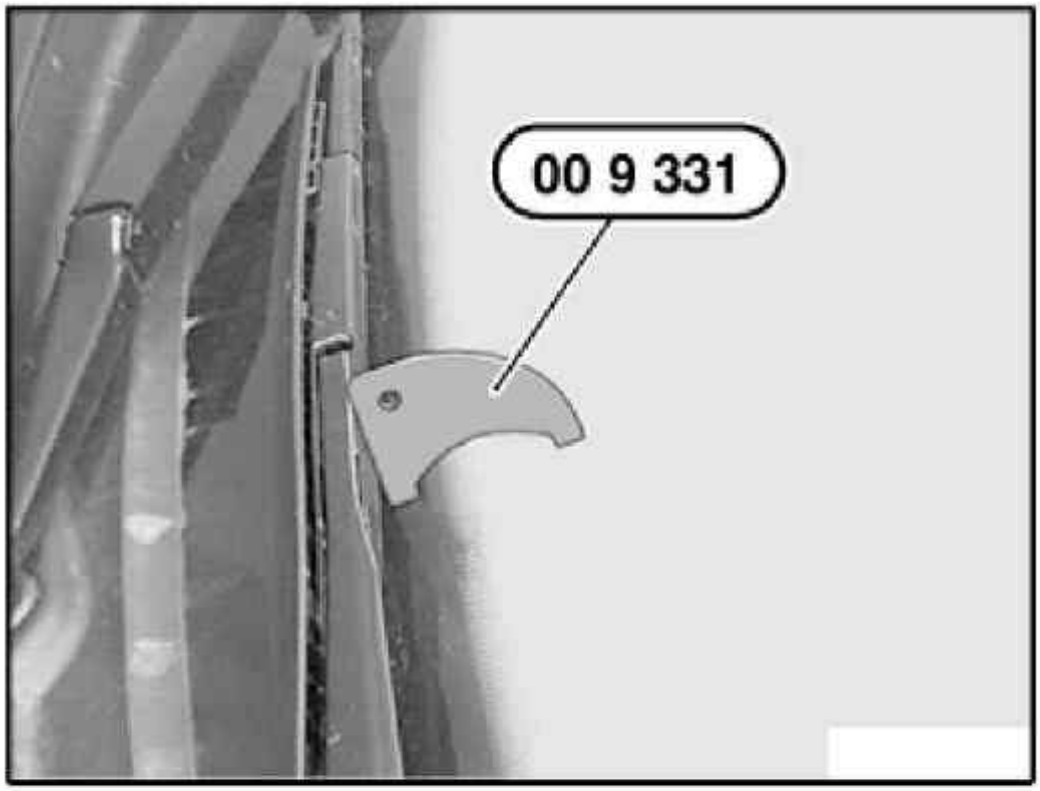

G03298552

Fig. 165: Placing Special Tool 00 9 331
Courtesy of BMW OF NORTH AMERICA, INC.

IMPORTANT: Before adjusting, cover wiper arm in area of special tools 00 9 221 and 00 9 222 with adhesive tape.

Contact angle too large (light gap at top between gauge and wiper blade):

Grip wiper arm with special tool 00 9 222 and turn with special tool 00 9 221 in direction of arrow.

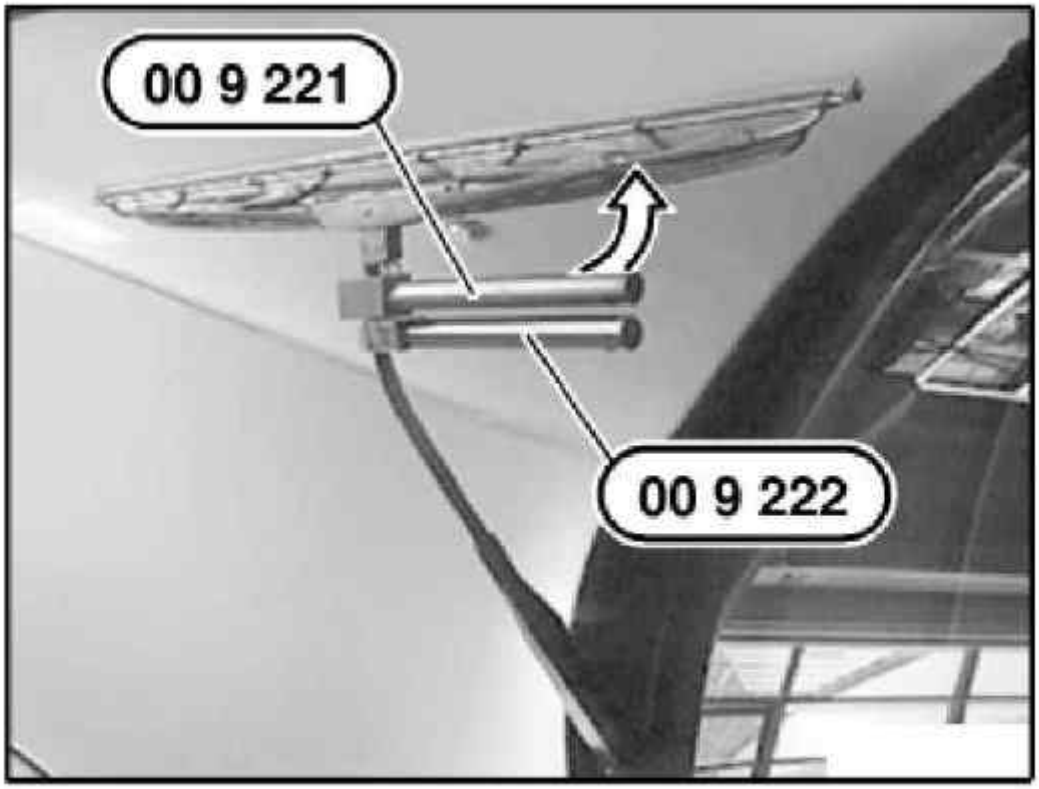

G03298553

Fig. 166: Identifying Special Tool 00 9 222 And Turn With Special Tool 00 9 221
Courtesy of BMW OF NORTH AMERICA, INC.

Contact angle too small (light gap at bottom between gauge and wiper blade):

Grip wiper arm with special tool 00 9 222 and turn with special tool 00 9 221 in direction of arrow.

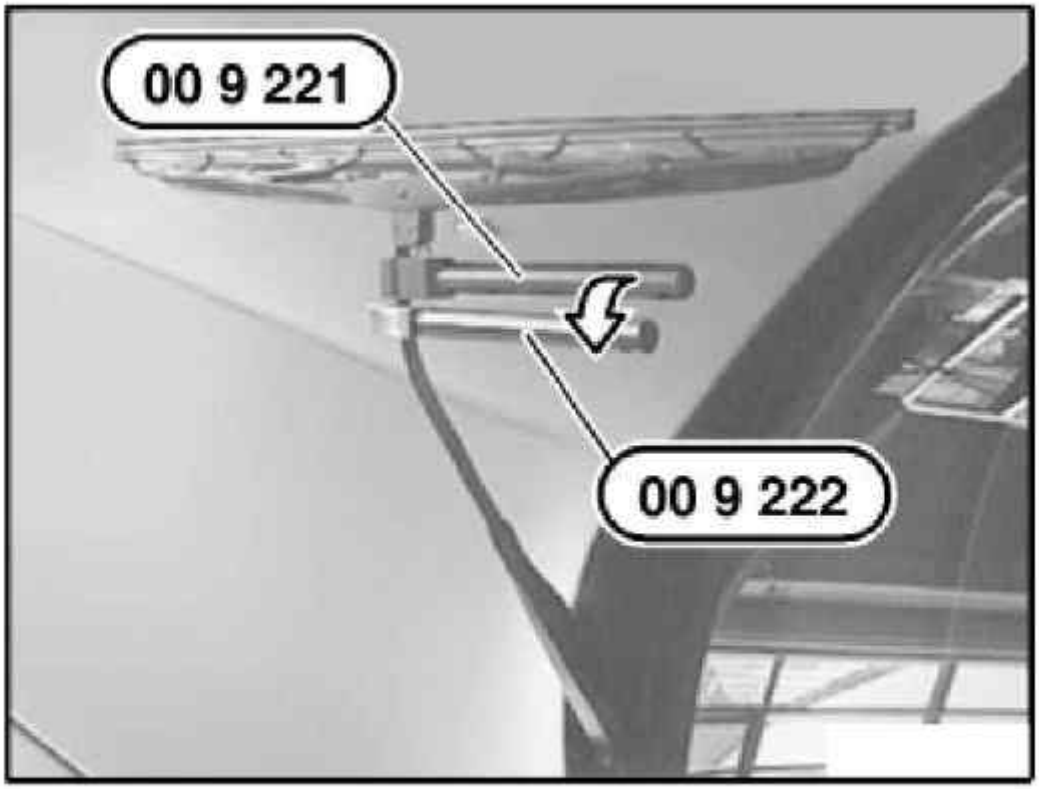

G03298554

Fig. 167: Identifying Grip Wiper Arm With Special Tool 00 9 222
Courtesy of BMW OF NORTH AMERICA, INC.

61 61 041 REPLACING BOTH WINDSHIELD WIPER BLADES

Press retaining spring in direction of arrow. Pull windshield wiper blade towards wiper arm and feed out. See **Fig. 168** .

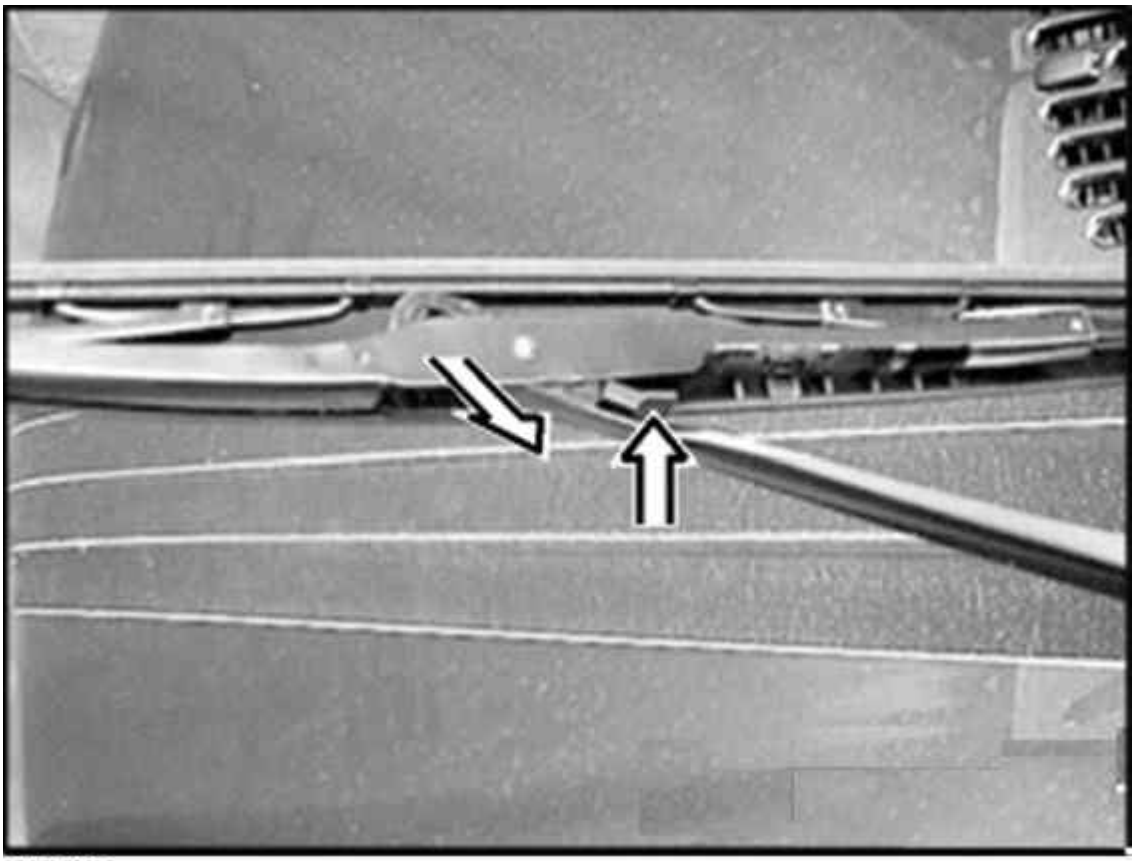

G00400032

Fig. 168: Removing Wiper Blades
Courtesy of BMW OF NORTH AMERICA, INC.

61 61 100 REMOVING AND INSTALLING/REPLACING BOTH WINDSHIELD WIPER ARMS

Special tools required:

- 61 6 060

Remove cover (1).

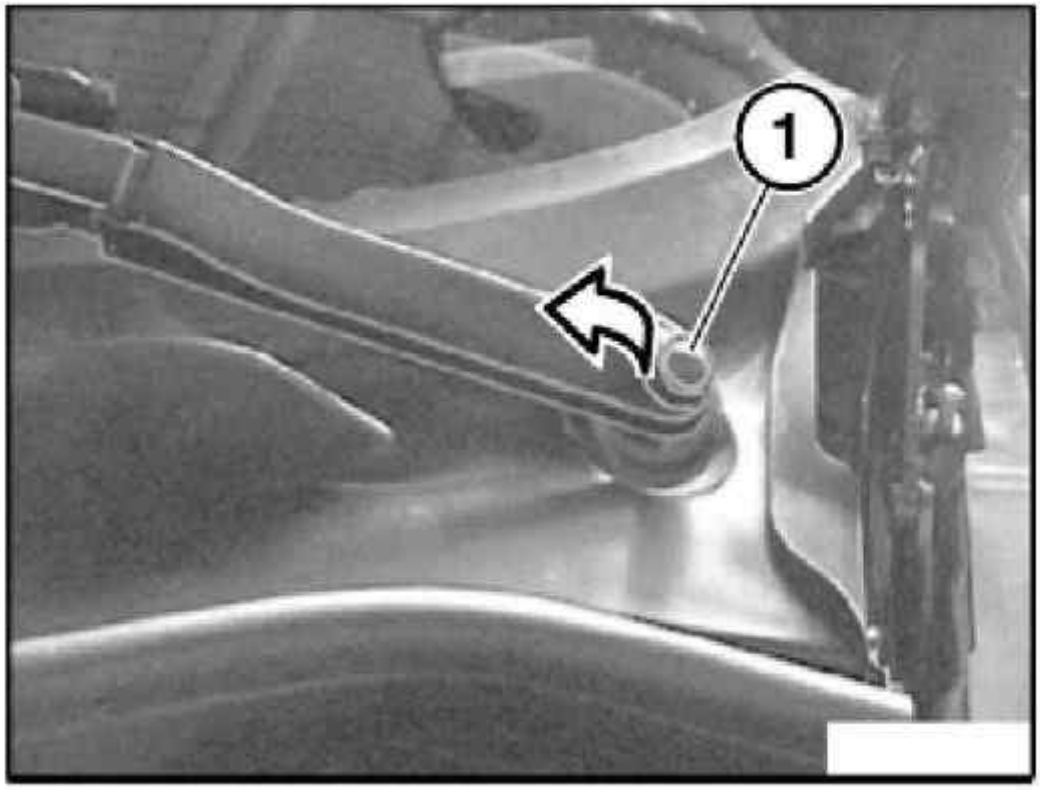

G03298555

Fig. 169: Removing Cover
Courtesy of BMW OF NORTH AMERICA, INC.

Release nut (1). For tightening torque, see 61 61 11AZ in **GENERAL ELECTRICAL SYSTEM - TIGHTENING TORQUE** .

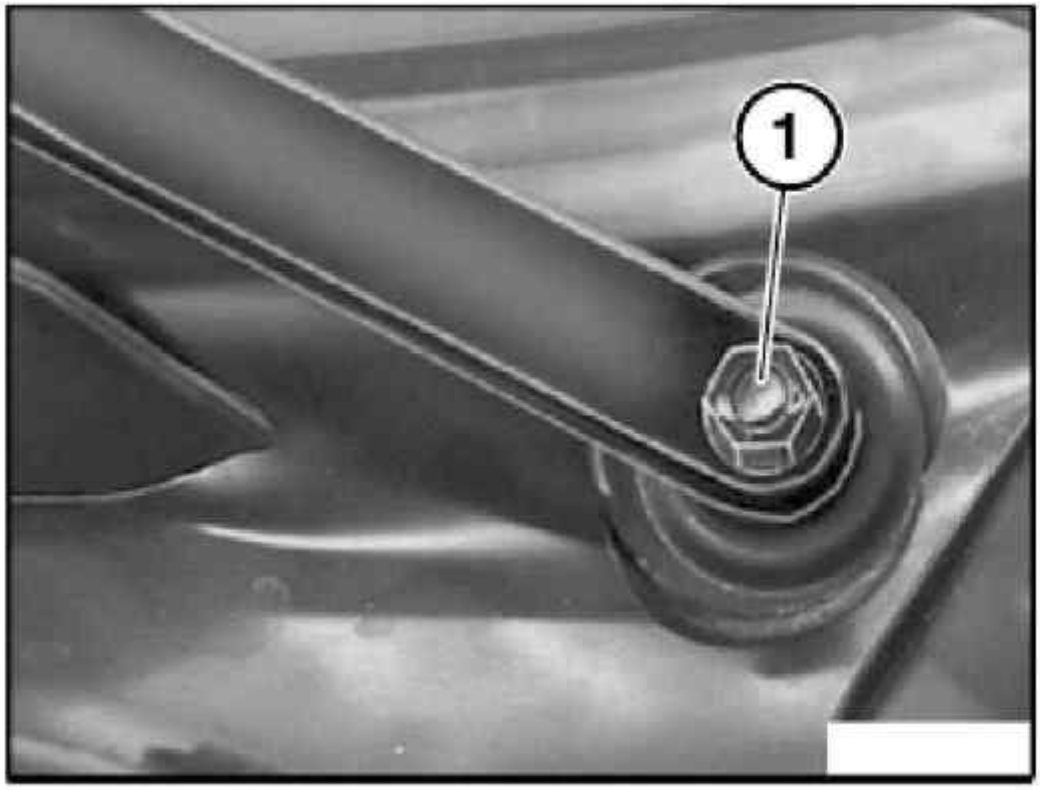

G03298556

Fig. 170: Release Nut
Courtesy of BMW OF NORTH AMERICA, INC.

IMPORTANT: Do not bend wiper arm (1) when removing it (risk of breakage).

Detach wiper arm (1) with special tool 61 6 060.

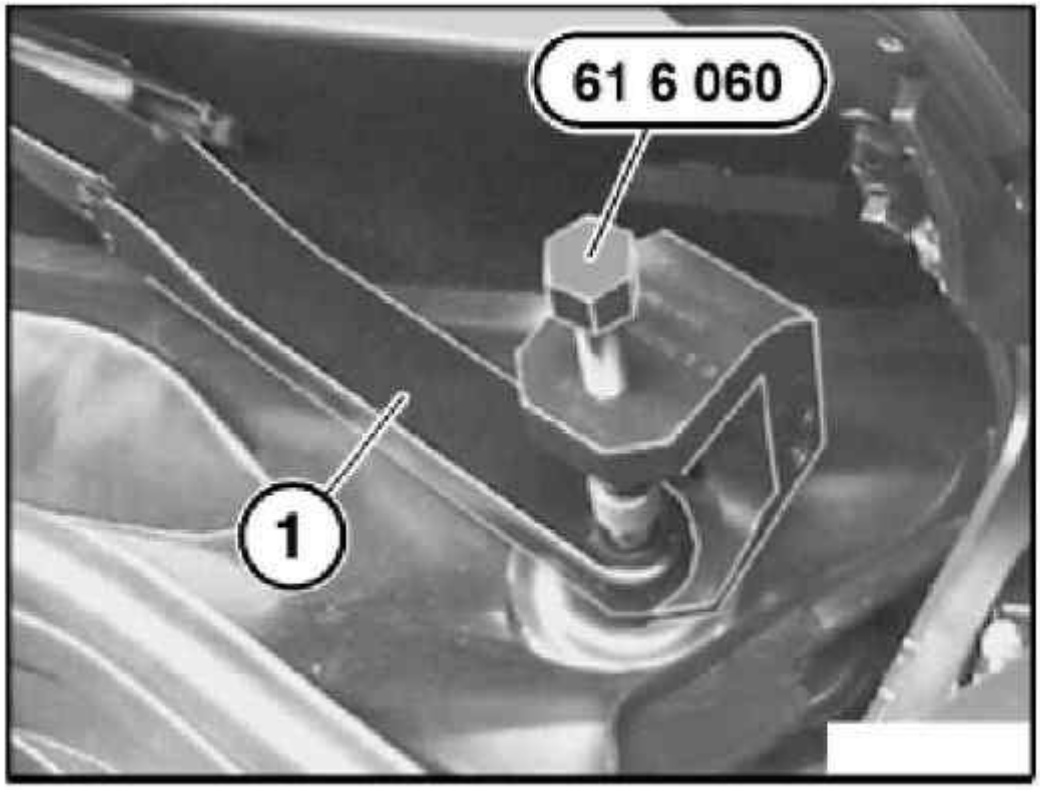

G03298557

Fig. 171: Detaching Wiper Arm With Special Tool 61 6 060
Courtesy of BMW OF NORTH AMERICA, INC.

If necessary, fit wiper blades on new wiper arms.

Always fit wiper blade with spoiler on left.

NOTE: The driver's side wiper arm is shown.

Installation:

Adjust position of relevant wiper arm in rest position.

The gap between wiper lip (1) and the top edge of cowl panel cover (3) at the attachment point (2) of the wiper blade is measured.

Then tighten down wiper arm and check position of relevant wiper arm again.

Adjustment measurements:

- Driver's side: 52+/-2 mm
- Passenger side: 57+/-2 mm

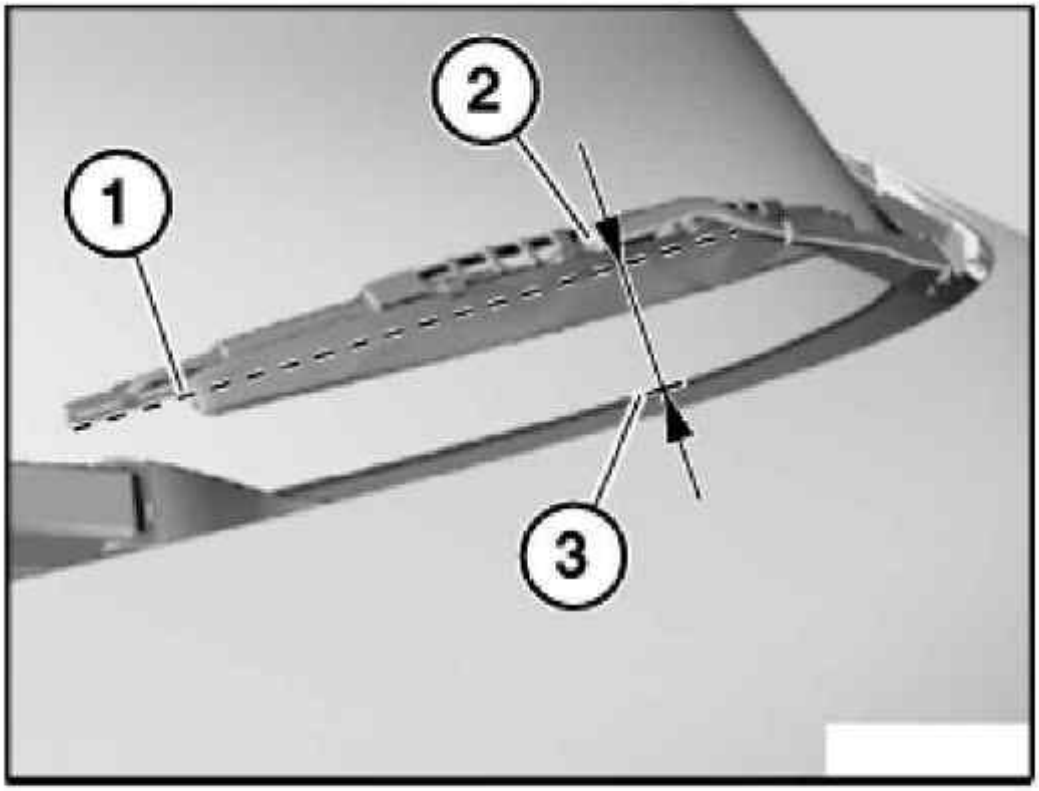

G03298558

Fig. 172: Identifying Gap Between Wiper Lip And Top Edge Of Cowl Panel Cover
Courtesy of BMW OF NORTH AMERICA, INC.

61 61 270 REMOVING AND INSTALLING/REPLACING BRACKET FOR WINDSHIELD WIPER SYSTEM COMPLETE WITH MOTOR

Necessary preliminary tasks:

- Remove cowl panel cover. See **51 13 115 REMOVING AND INSTALLING/REPLACING COWL PANEL COVER** .

Unlock plug connection (1) and disconnect.

Unclip and remove clamping lever (2).

Installation:

If necessary, replace clamping lever (2).

Release screws (3).

Installation:

Tightening torque = 10 Nm.

Remove wiper bracket (4) upwards.

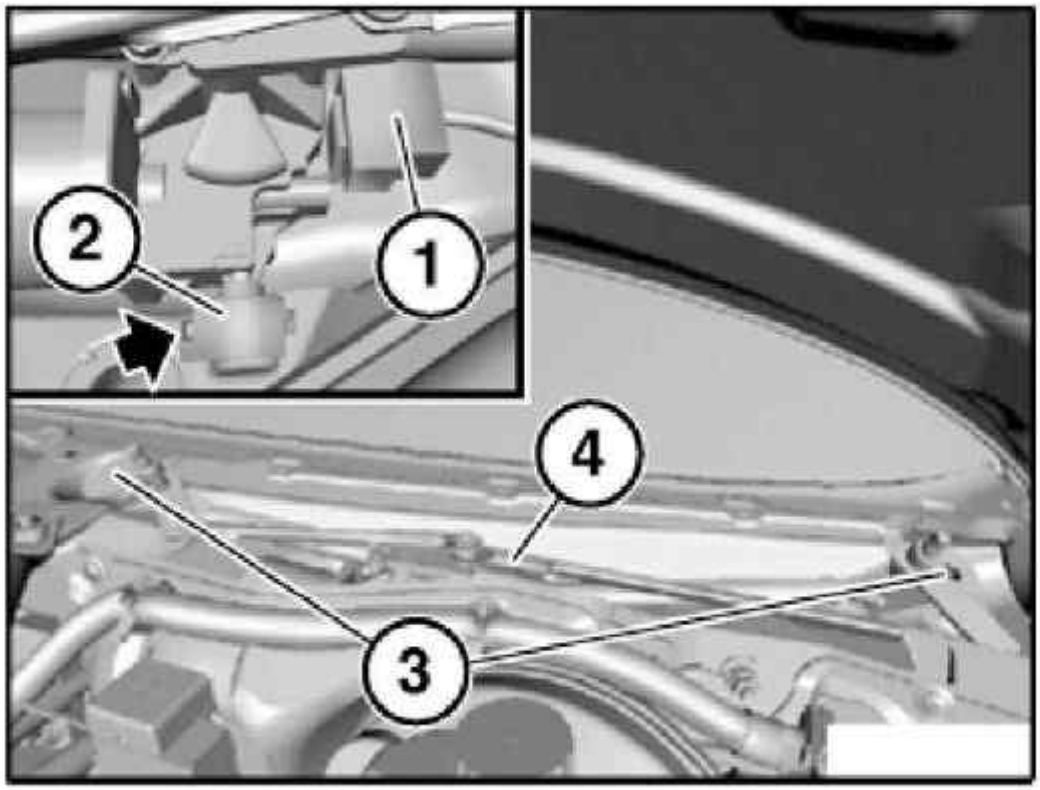

G03298559

Fig. 173: Removing Wiper Bracket
Courtesy of BMW OF NORTH AMERICA, INC.

Installation:

Before fitting the wiper arms, allow the windshield wiper motor to run into the rest position.

To ensure that the windshield wiper system functions properly, check/adjust the contact angle of the wiper arms to the windshield.

HEADLIGHT WASHER SYSTEM

61 61... OVERVIEW OF WINDSHIELD WASHER SYSTEM AND HEADLIGHT CLEANING SYSTEM (SRA)

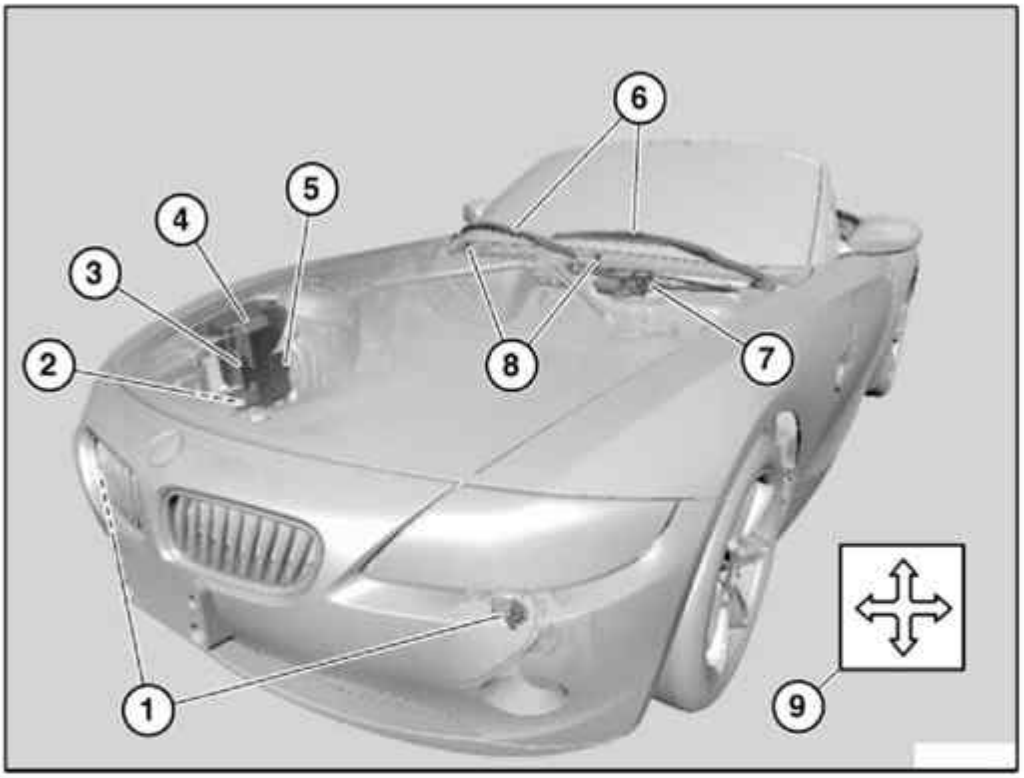

1 High-pressure nozzles of SRA
2 Level switch for windshield washer system
3 Washer pump of headlight cleaning system
4 Fluid reservoir for windshield washer system
5 Windshield washer pump
6 Windshield wiper arms
7 Bracket for windshield wiper system
8 Spray nozzles of windshield washer system
9 Checking and adjusting

G03298560

Fig. 174: Identifying Windshield Washer System And Headlight Cleaning System (SRA)
Courtesy of BMW OF NORTH AMERICA, INC.

61 67 010 REMOVING AND INSTALLING/REPLACING WASHER PUMP OF HEADLIGHT CLEANING SYSTEM

Operation is described in:

- Remove fluid reservoir for windshield washer system. . See **61 71 061 Replacing Fluid Reservoir For Windshield Washer System** .

61 67 040 ADJUSTING SPRAY NOZZLES FOR HEADLIGHT CLEANING SYSTEM

NOTE: The spray nozzles of the headlight cleaning system have been adjusted at the factory and normally this setting is not altered (except by an accident). The nozzles therefore do not have to be adjusted.

The spray nozzles do not have to be adjusted even in the event of replacement as the nozzles themselves and the telescopic nozzle form a single unit (high-pressure nozzle) and are already preset.

61 67 083 REMOVING AND INSTALLING/REPLACING LEFT OR RIGHT HIGH-PRESSURE NOZZLE OF HEADLIGHT CLEANING SYSTEM

Necessary preliminary tasks:

- Remove front bumper trim.

Unlock high-pressure line (1) and detach from high-pressure nozzle of headlight cleaning system (3).

Pull locks (2) in direction of arrow.

Pull high-pressure nozzle of headlight cleaning system (3) in direction of arrow out of guides and feed out through opening in bumper trim.

Installation:

Make sure high-pressure nozzle of headlight cleaning system (3) is correctly seated.

New high-pressure nozzle of headlight cleaning system (3) is already preadjusted.

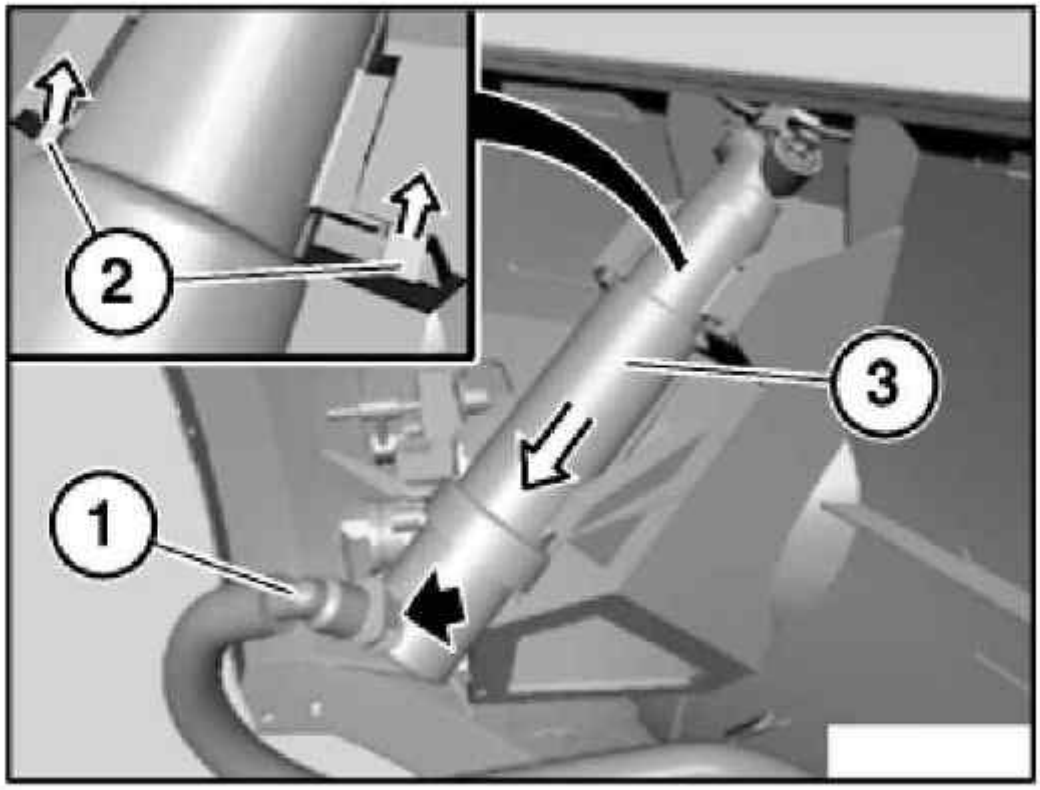

G03298561

Fig. 175: Unlocking High-Pressure Line
Courtesy of BMW OF NORTH AMERICA, INC.

Gently pull mounts (1) of trim (2) apart in direction of arrow and remove from guide (3).

Installation:

Replace trim (2) if mounts (1) are damaged.

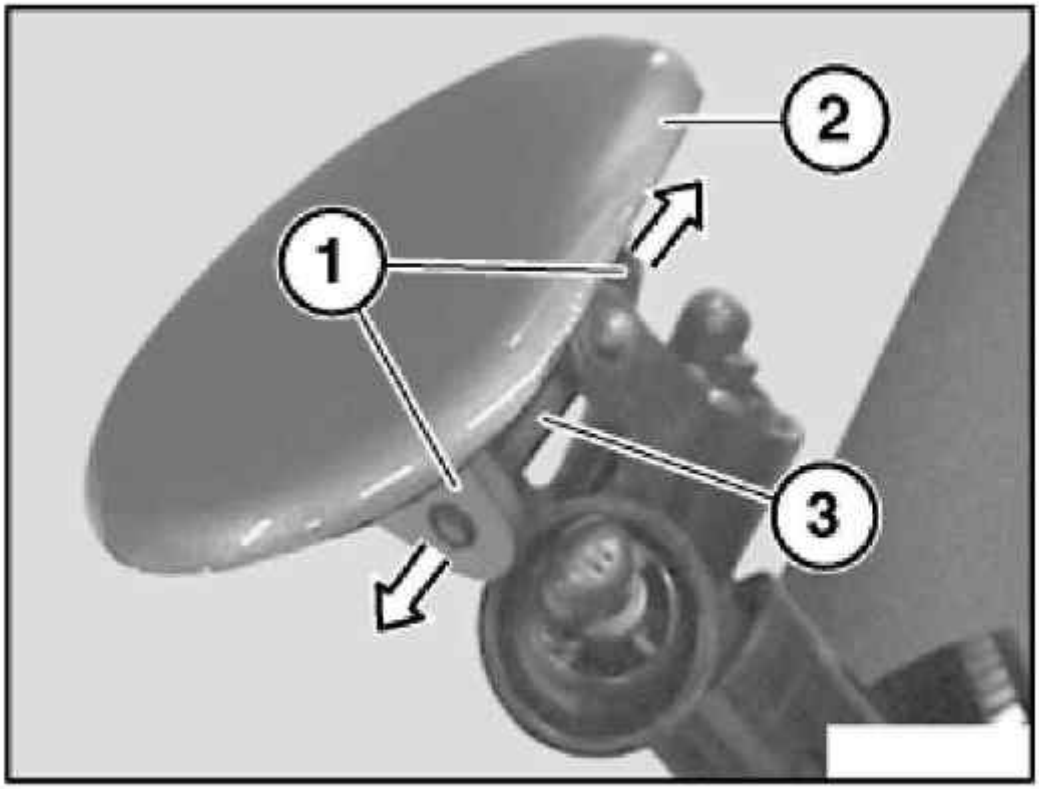

G03298562

Fig. 176: Replacing Trim
Courtesy of BMW OF NORTH AMERICA, INC.

WINDOW WASHER SYSTEM

61 61... OVERVIEW OF WINDSHIELD WASHER SYSTEM AND HEADLIGHT CLEANING SYSTEM (SRA)

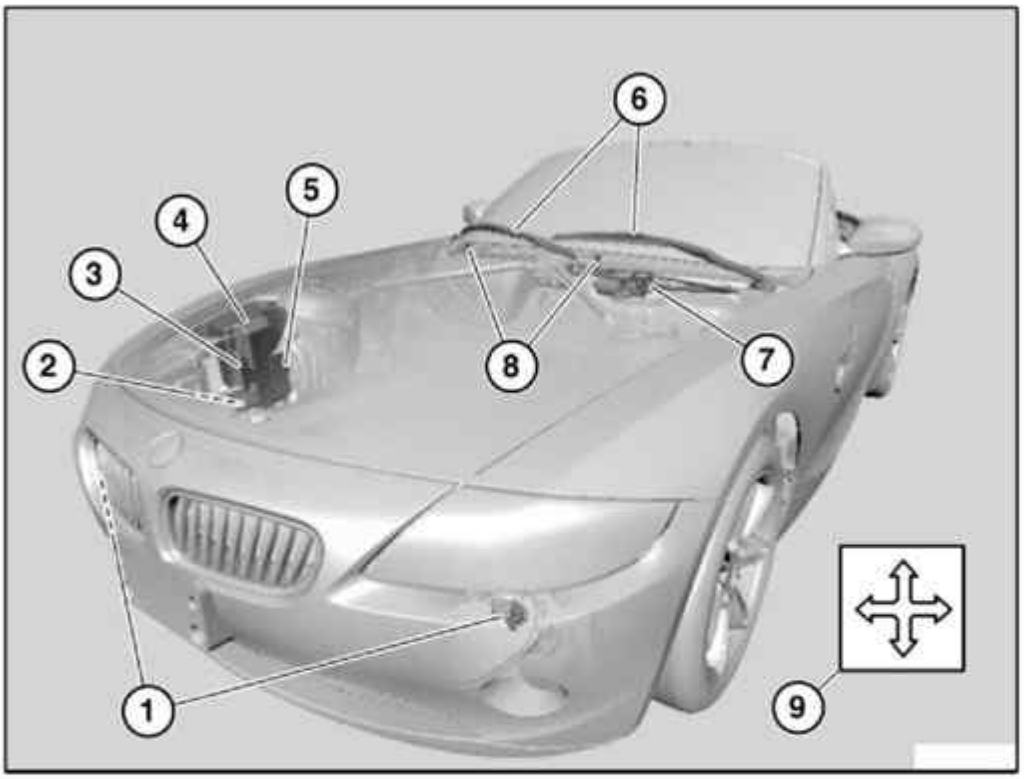

1 High-pressure nozzles of SRA
2 Level switch for windshield washer system
3 Washer pump of headlight cleaning system
4 Fluid reservoir for windshield washer system
5 Windshield washer pump
6 Windshield wiper arms
7 Bracket for windshield wiper system
8 Spray nozzles of windshield washer system
9 Checking and adjusting

G03298563

Fig. 177: Identifying Overview Of Windshield Washer System And Headlight Cleaning System (SRA)
Courtesy of BMW OF NORTH AMERICA, INC.

61 71 015 REMOVING AND INSTALLING/REPLACING A SPRAY NOZZLE IN WINDSHIELD WASHER SYSTEM

NOTE: The spray nozzles of the windshield washer system are factory set and cannot be subsequently readjusted.

Unlock plug connection (1) and disconnect.

Detach connecting piece (2) in direction of arrow from spray nozzle of windshield washer system (3).

Unlock spray nozzle (3), press out through opening and remove.

Installation:

Make sure spray nozzle of headlight cleaning system (3) is correctly seated.

Ensure hose is laid without kinks.

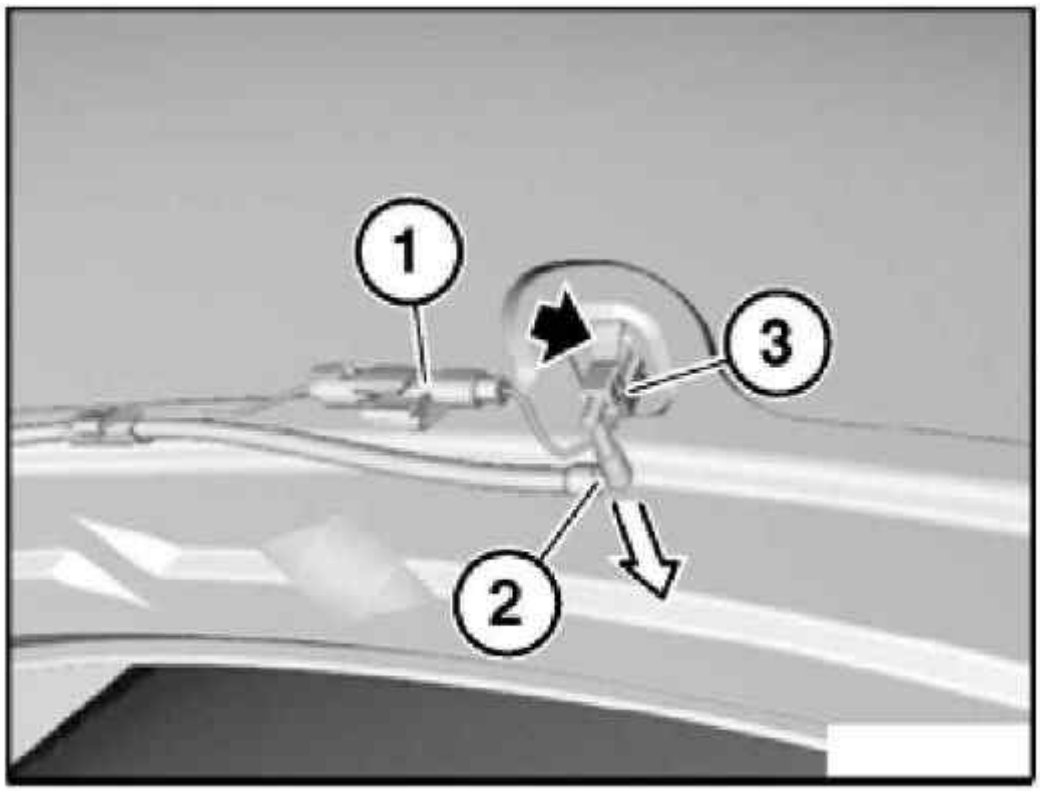

G03298564

Fig. 178: Unlocking Spray Nozzle
Courtesy of BMW OF NORTH AMERICA, INC.

61 71 061 REPLACING FLUID RESERVOIR FOR WINDSHIELD WASHER SYSTEM

Necessary preliminary tasks:

- Remove windshield washer pump. See **61 71 100 Removing And Installing/Replacing Windshield Washer Pump** .
- Remove level switch for windshield washer system. See **61 31 492 Replacing Level Switch For Windshield Washer System** .

Version with headlight cleaning system:

Unlock plug connection (1) and disconnect.

Unlock hose (2) and detach from washer pump of headlight cleaning system.

Installation:

Make sure hose (2) is laid without kinks.

All:

Release screw (3).

Feed out fluid reservoir for windshield washer system (4) and remove in direction of arrow.

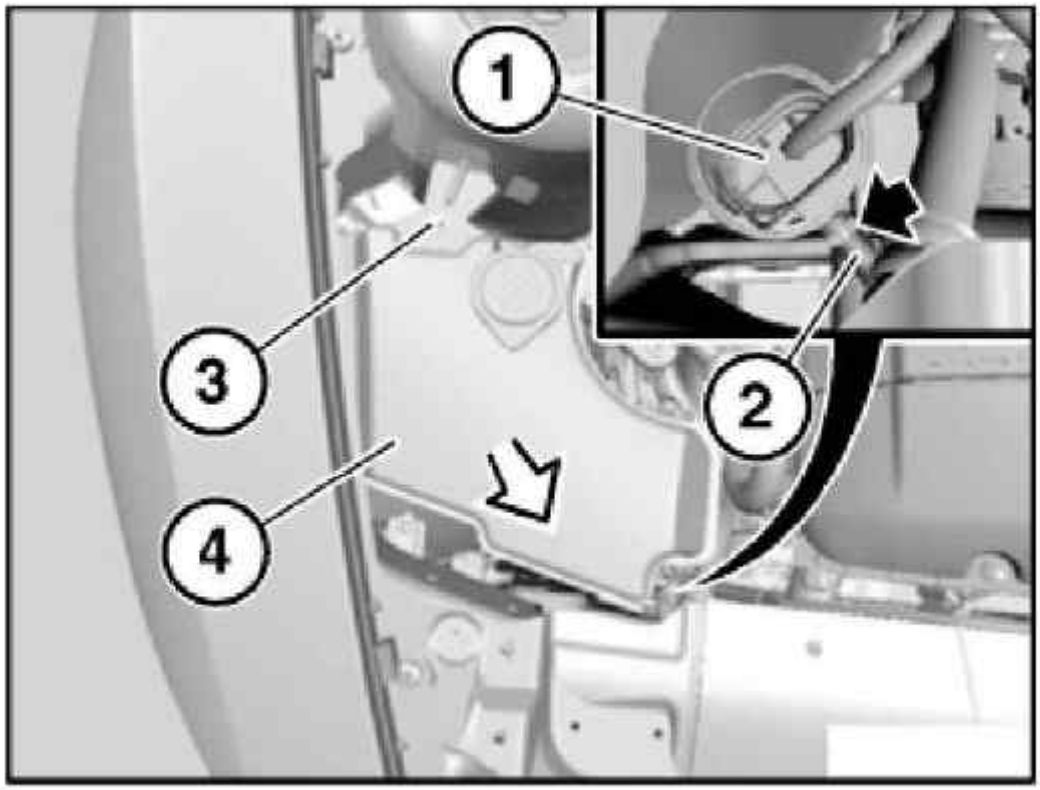

G03298565

Fig. 179: Releasing Screw
Courtesy of BMW OF NORTH AMERICA, INC.

Installation:

Make sure fluid reservoir for windshield washer system (1) is correctly seated in guide (2).

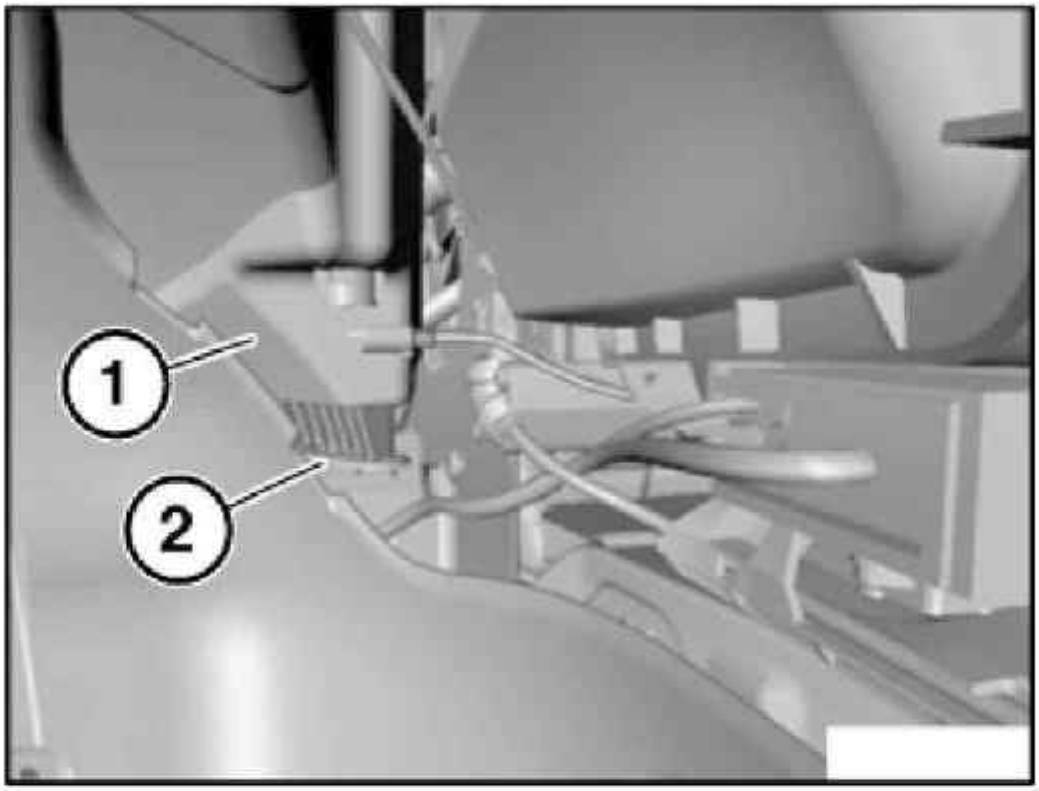

G03298566

Fig. 180: Installing Windshield Washer System
Courtesy of BMW OF NORTH AMERICA, INC.

Version with headlight cleaning system:

Withdraw washer pump of headlight cleaning system (1) in direction of arrow.

Installation:

Replace sealing ring and strainer in washer pump.

Coat sealing ring of washer pump with antiseize agent.

All:

Remove cover for windshield washing reservoir (2) and pull out strainer underneath.

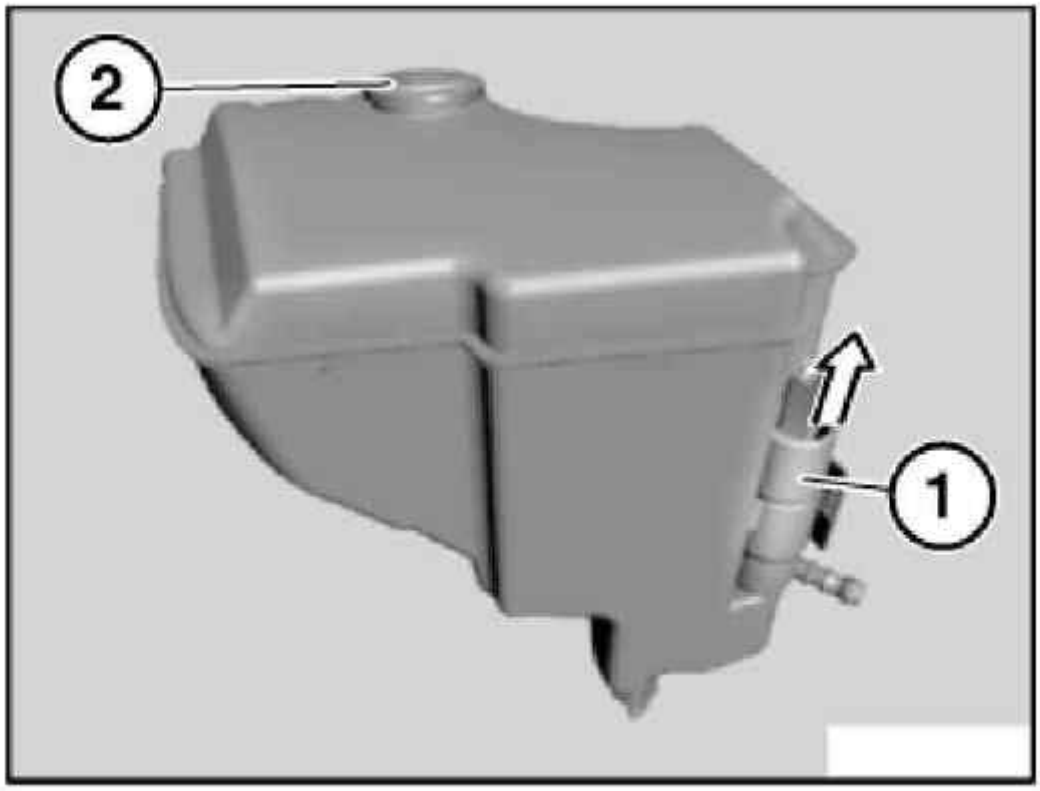

G03298567

Fig. 181: Removing Cover For Windshield Washing Reservoir
Courtesy of BMW OF NORTH AMERICA, INC.

61 71 100 REMOVING AND INSTALLING/REPLACING WINDSHIELD WASHER PUMP

NOTE: **Drain fluid reservoir for windshield washer system. See 61 71 061 Replacing Fluid Reservoir For Windshield Washer System .**

Unlock plug connection (1) and disconnect.

Detach hose (2) from windshield washer pump (4).

Unclip cover (3) and lay to one side.

Installation:

Make sure cover (3) is correctly seated.

Make sure hose (2) is laid without kinks.

Turn windshield washer pump (4) in direction of arrow through approx. 90° and pull up and out of fluid reservoir for windshield washer system.

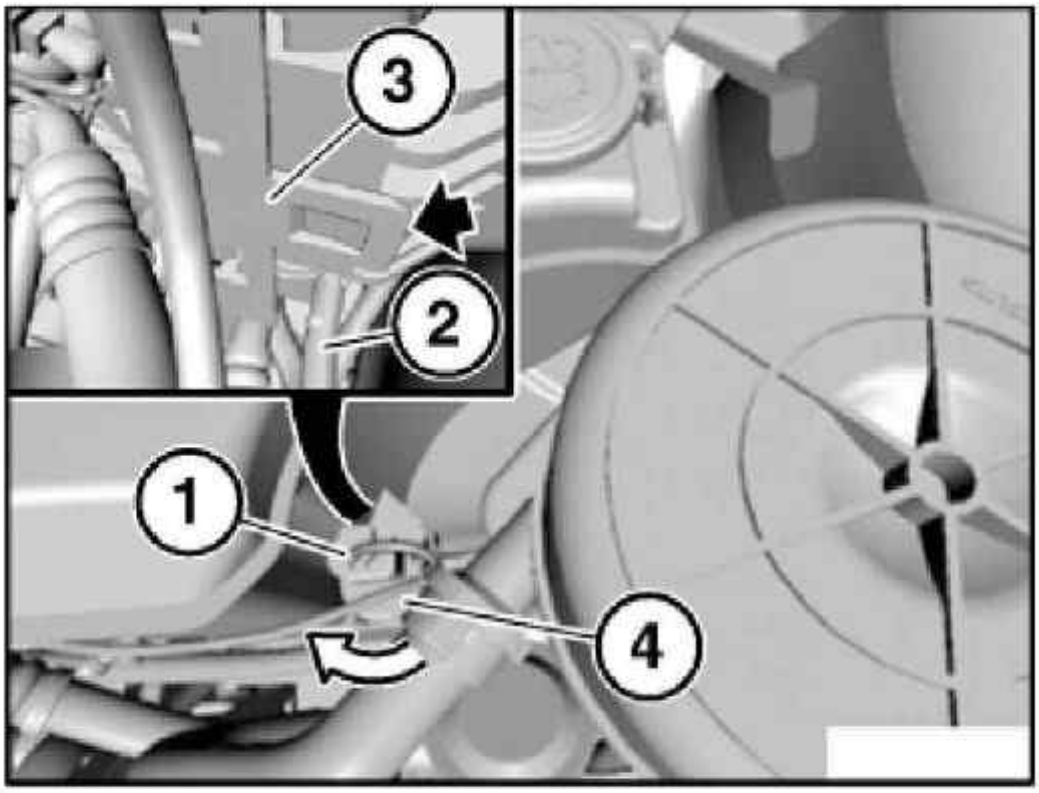

G03298568

Fig. 182: Uncliping Cover
Courtesy of BMW OF NORTH AMERICA, INC.

Installation:

Replace sealing ring and strainer in windshield washer pump.

Coat sealing ring of windshield washer pump with antiseize agent.

Fill fluid reservoir for windshield washer system.