REFRIGERANT LINE

COMPONENTS

550XT-01

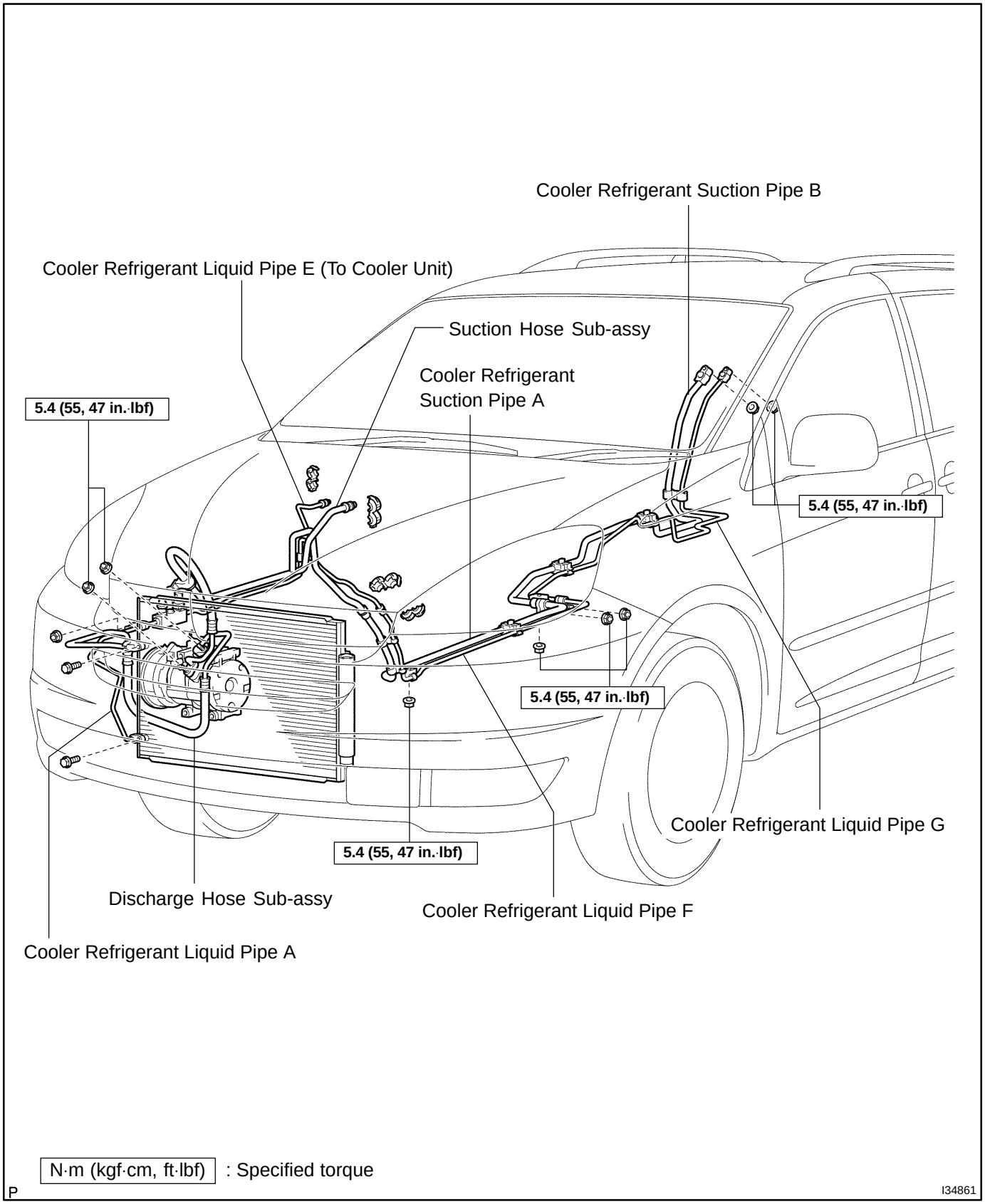

INTEGRATION CONTROL & PANEL ASSY

550XU-01

COMPONENTS

Manual A/C:

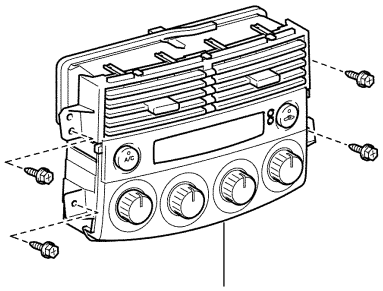

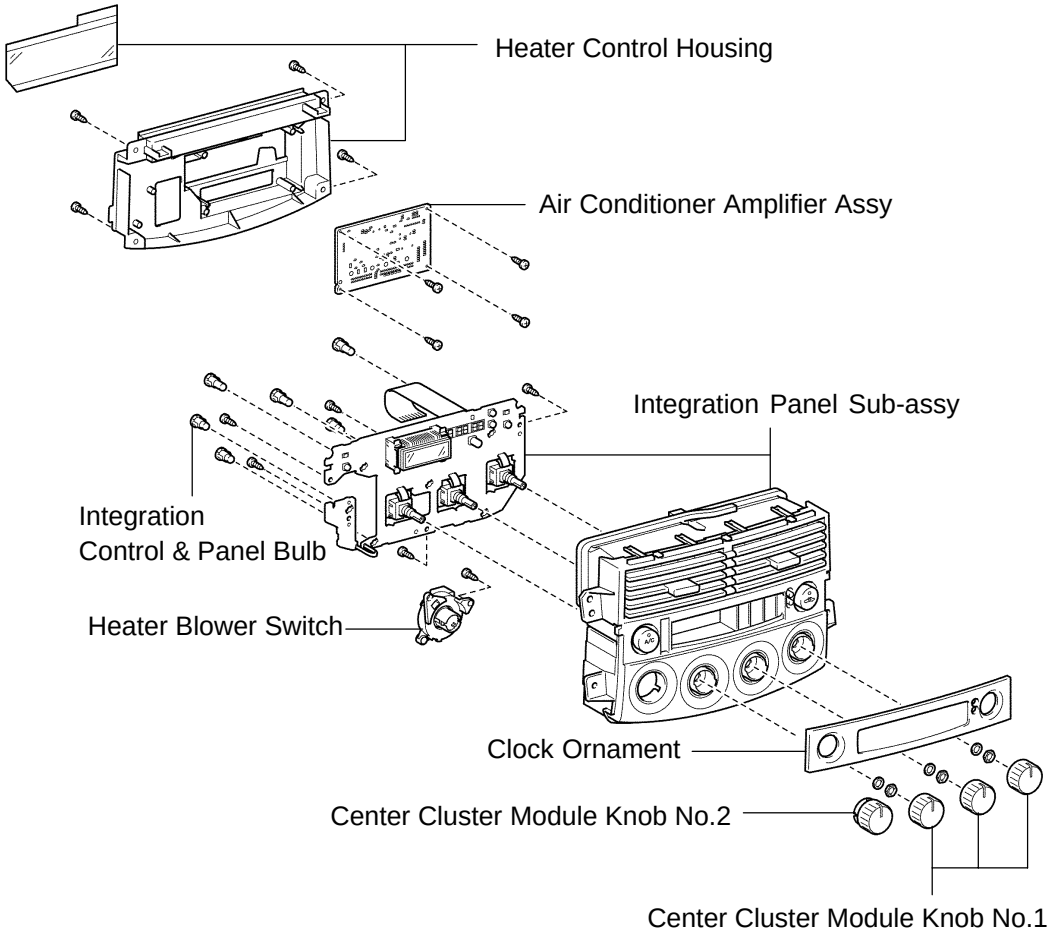

P

I35739

Auto A/C:

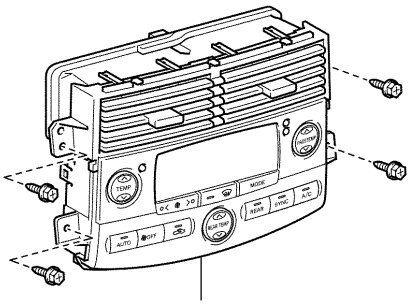

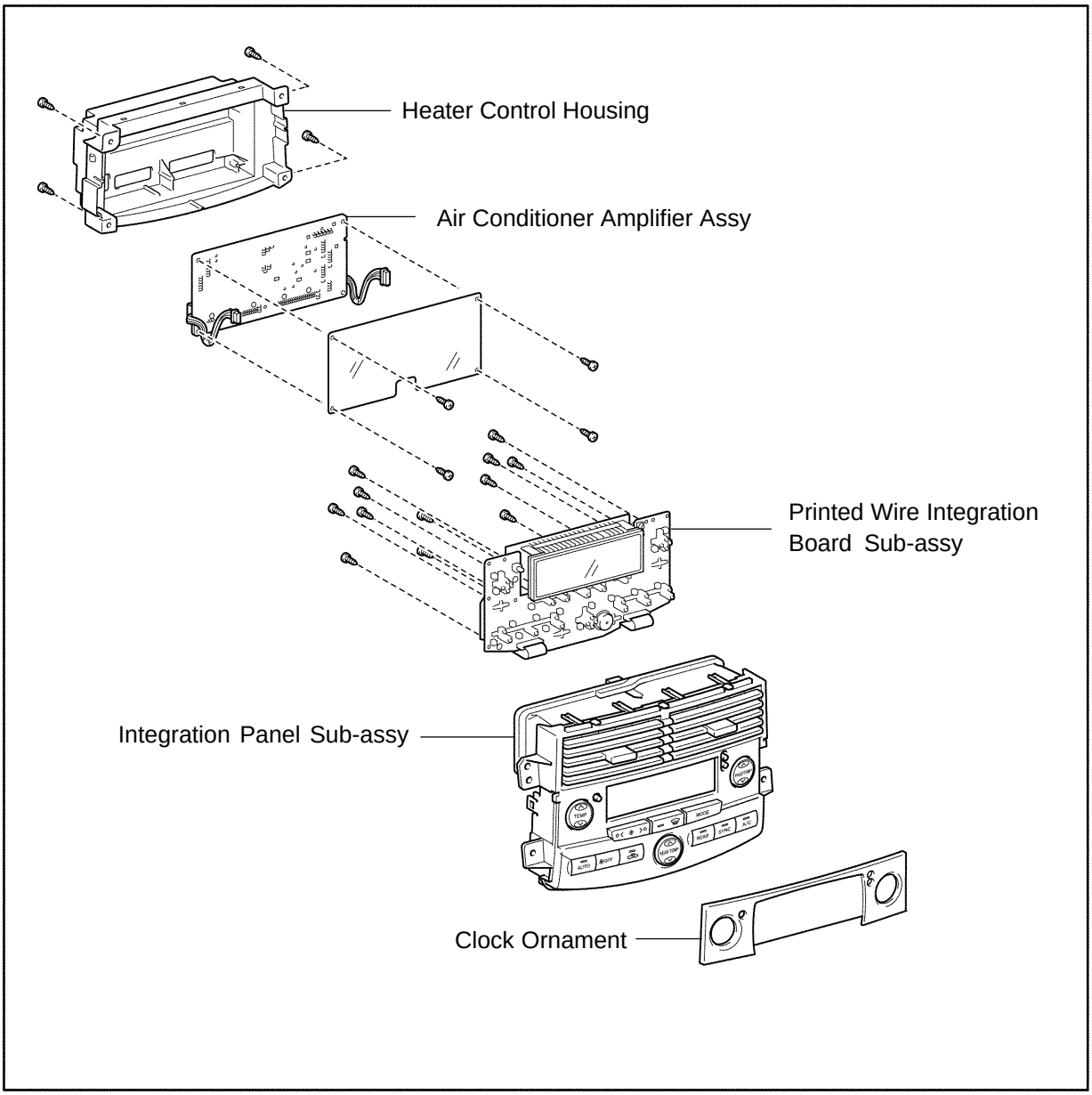

P

I35740

AIR CONDITIONING RADIATOR ASSY

550XX-02

COMPONENTS

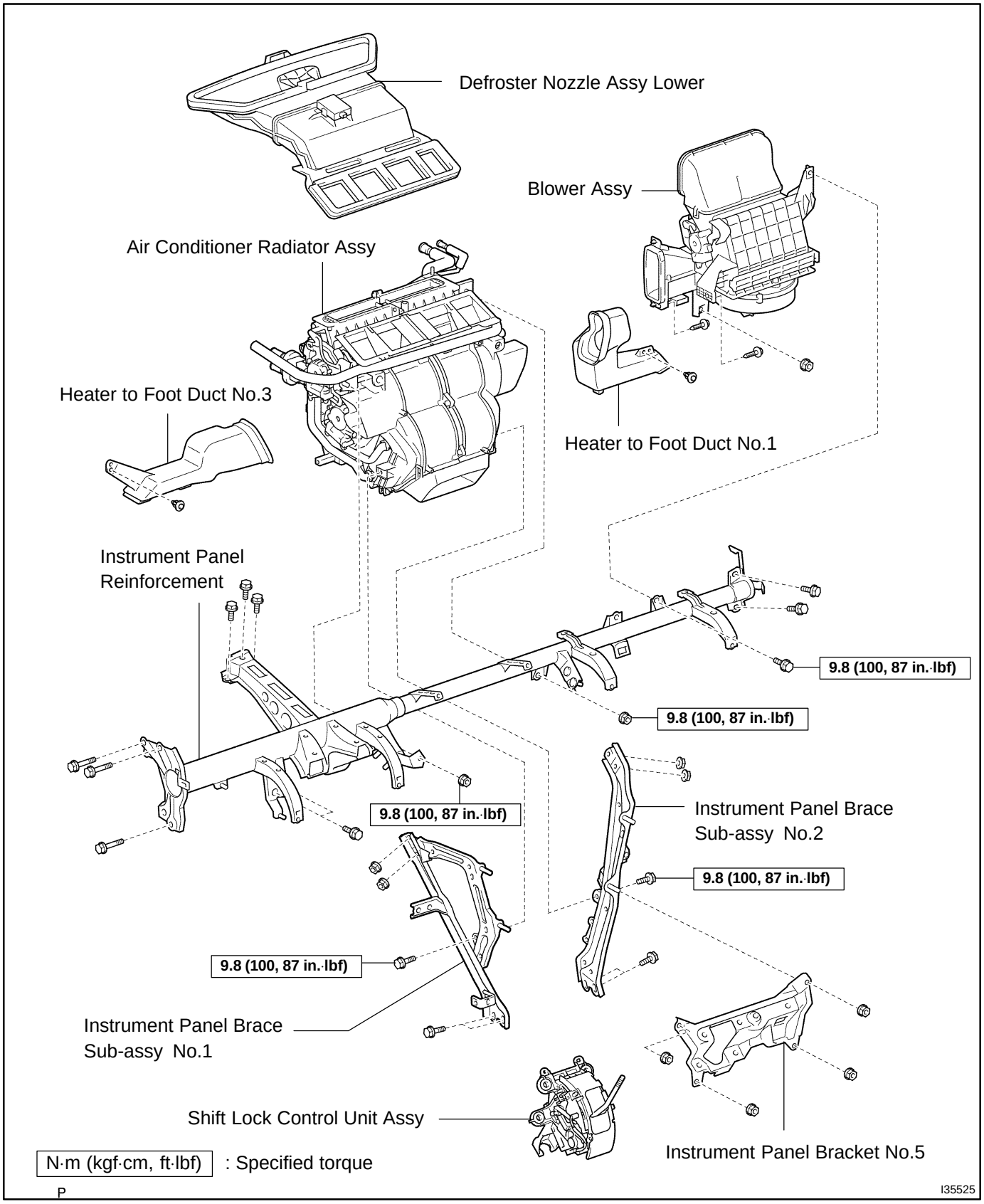

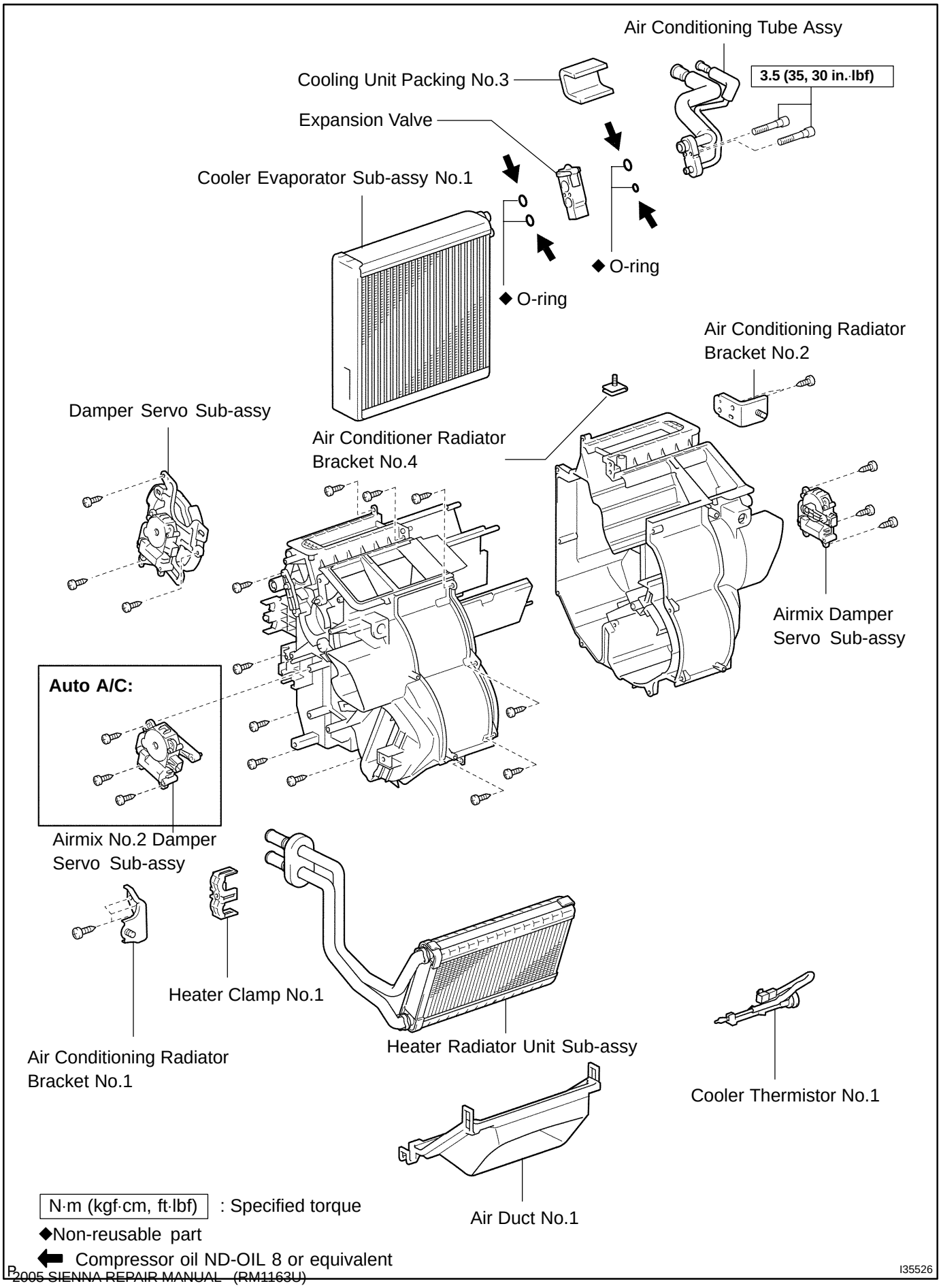
Air Conditioning Tube Assy
3.5 (35, 30 in.·lbf)
Cooling Unit Packing No.3
Expansion Valve
Cooler Evaporator Sub-assy No.1
◆ O-ring
◆ O-ring
Air Conditioning Radiator Bracket No.2
Damper Servo Sub-assy
Air Conditioner Radiator Bracket No.4
Airmix Damper Servo Sub-assy
Auto A/C:
Airmix No.2 Damper Servo Sub-assy
Heater Clamp No.1
Air Conditioning Radiator Bracket No.1
Heater Radiator Unit Sub-assy
Cooler Thermistor No.1
Air Duct No.1
N·m (kgf·cm, ft·lbf) : Specified torque
◆Non-reusable part
Compressor oil ND-OIL 8 or equivalent
I35526

BLOWER ASSY

COMPONENTS

550Y2-01

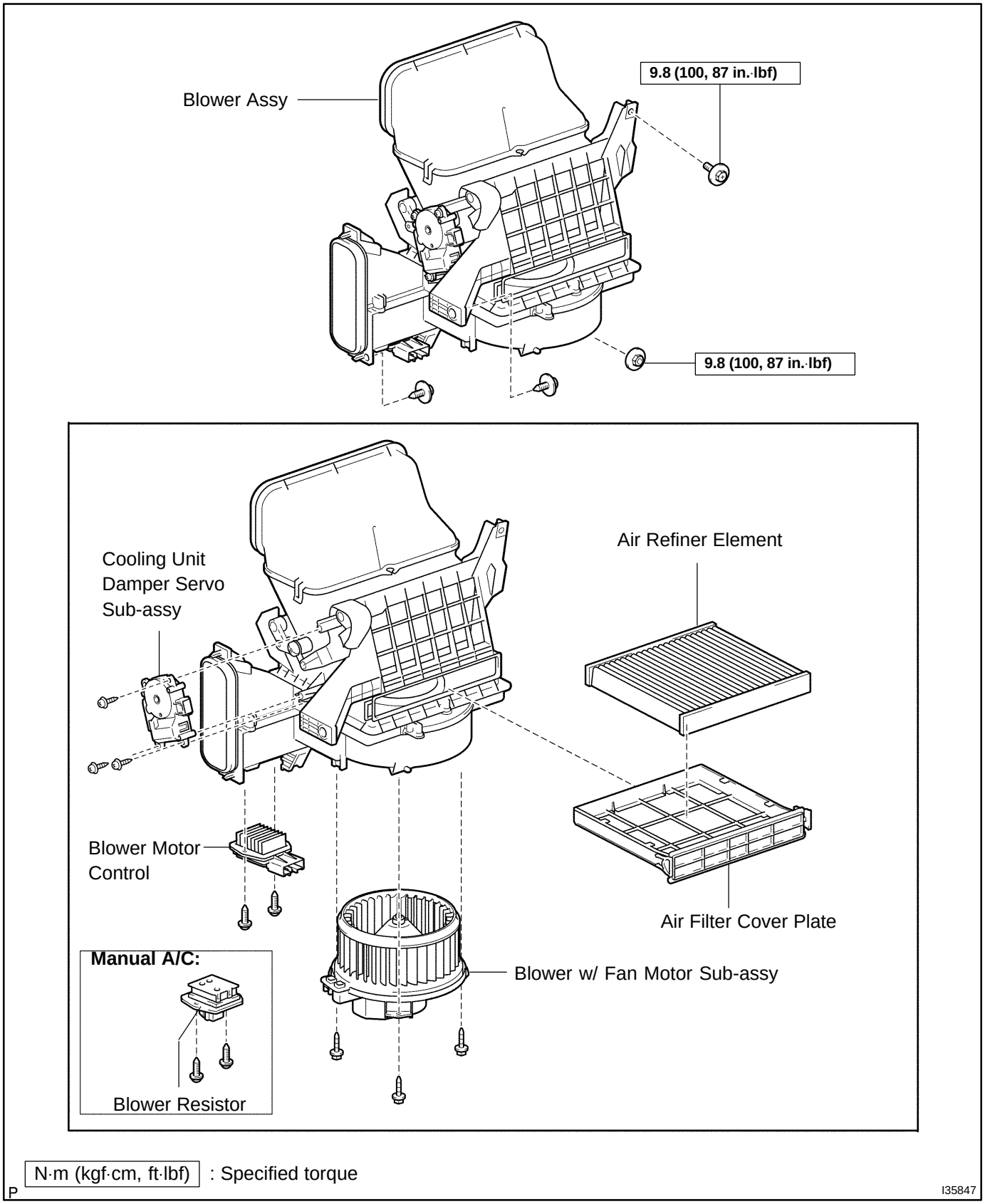

AIR CONDITIONING BLOWER ASSY

COMPONENTS

550Y3-02

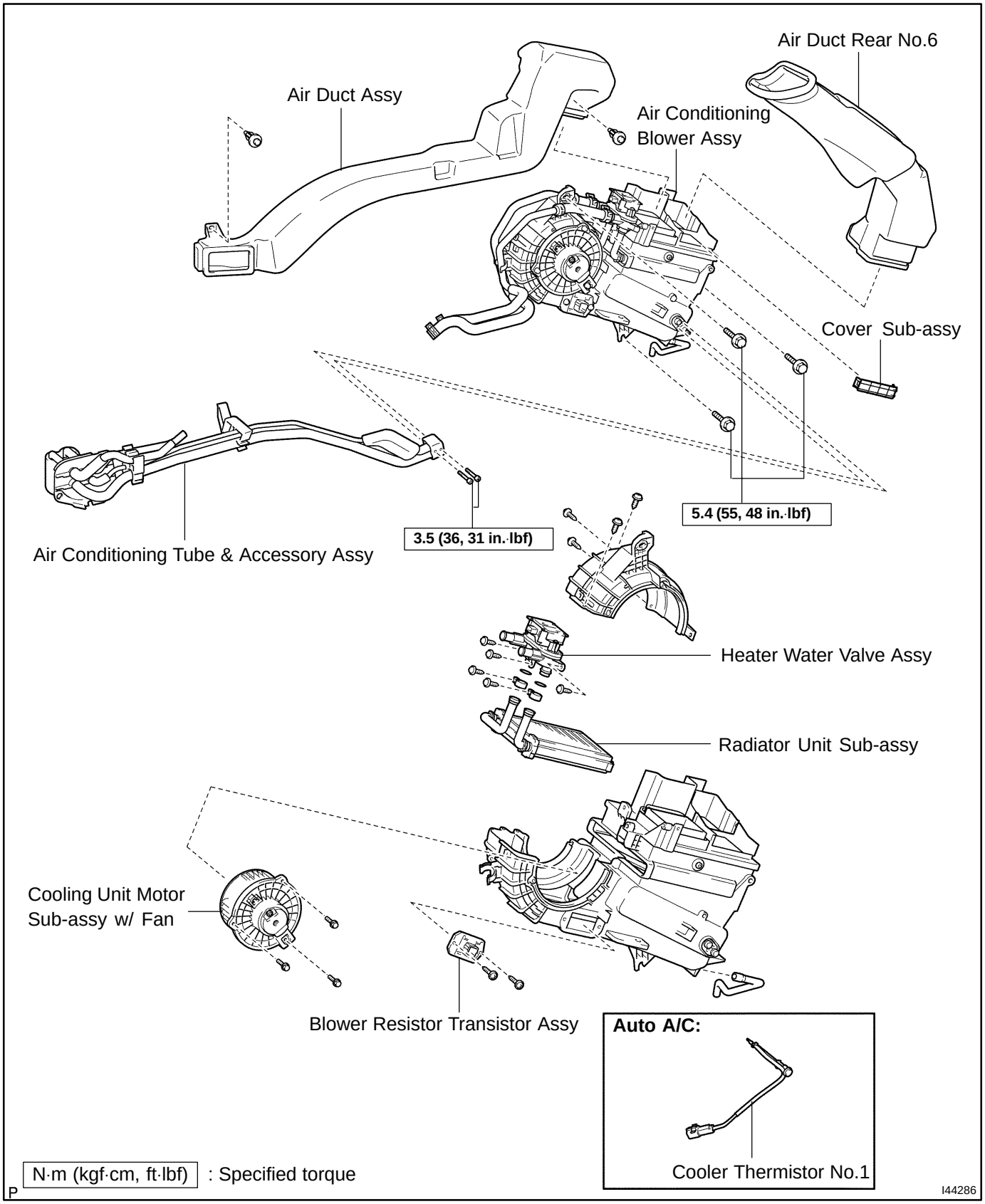

COOLER COMPRESSOR ASSY

COMPONENTS

550Y6-01

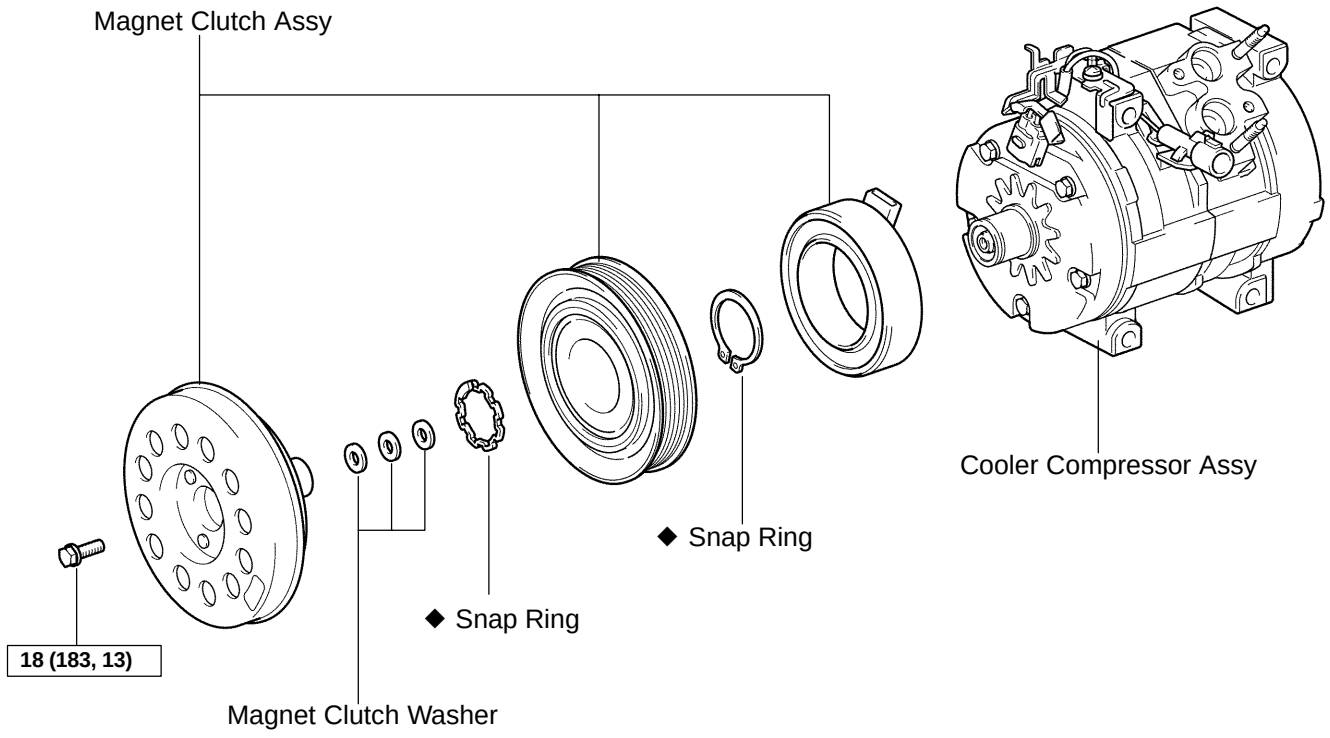

N·m (kgf·cm, ft·lbf) : Specified torque

◆ Non-reusable part

P

I35480

550Y9-02

COMPONENTS

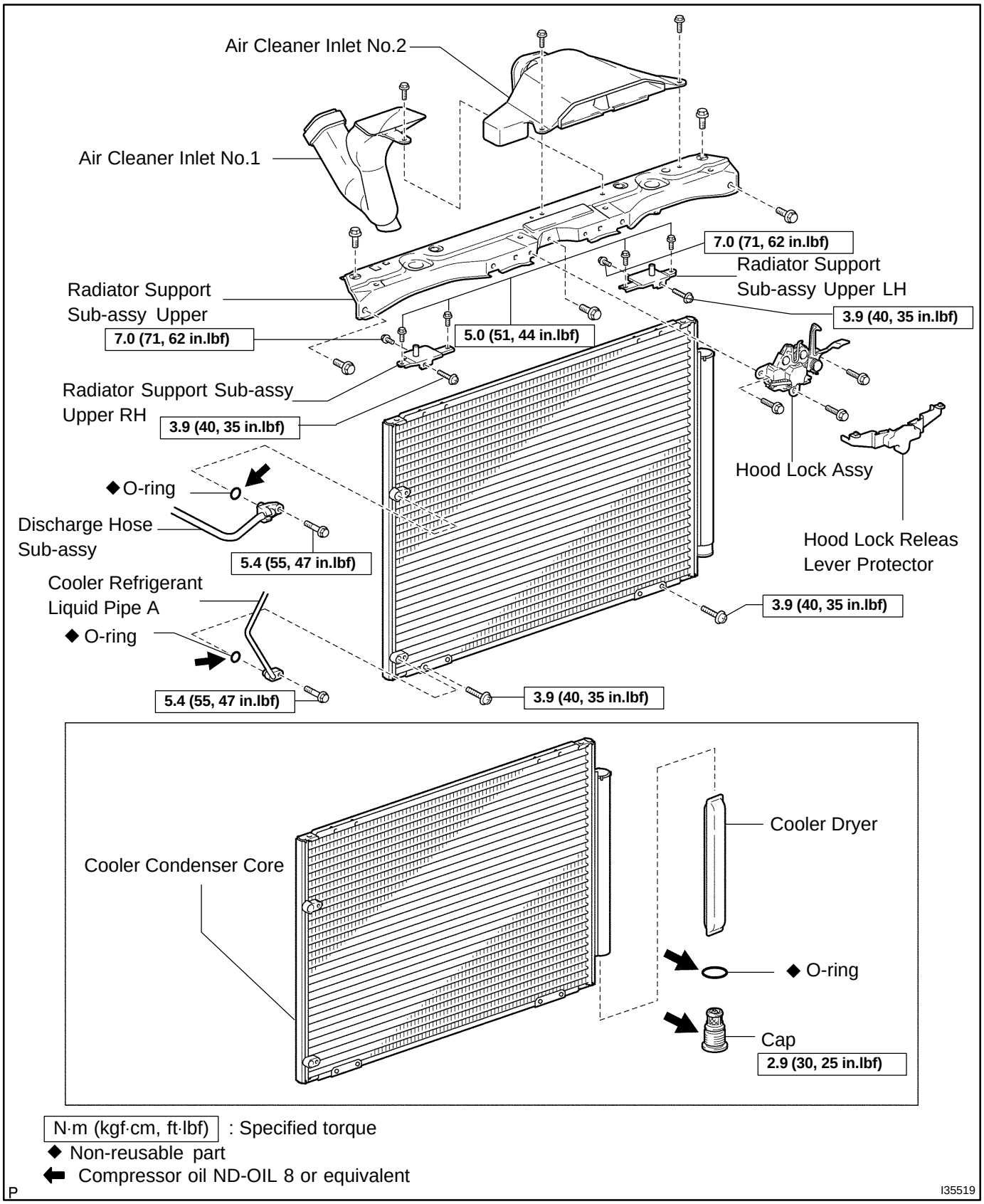

550XP-03

INSPECTION

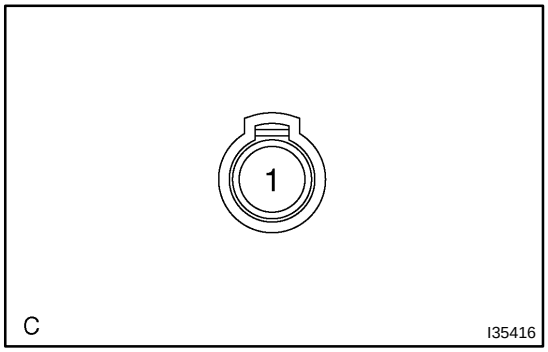

1. INSPECT COOLER COMPRESSOR ASSY (MANUAL AIR CONDITIONING)

(a) Connect the positive (+) lead from the battery to terminal 1 and the negative (-) lead to the body ground.

(b) Check that the magnetic clutch is engaged.

If operation is not as specified, replace the magnet clutch assy.

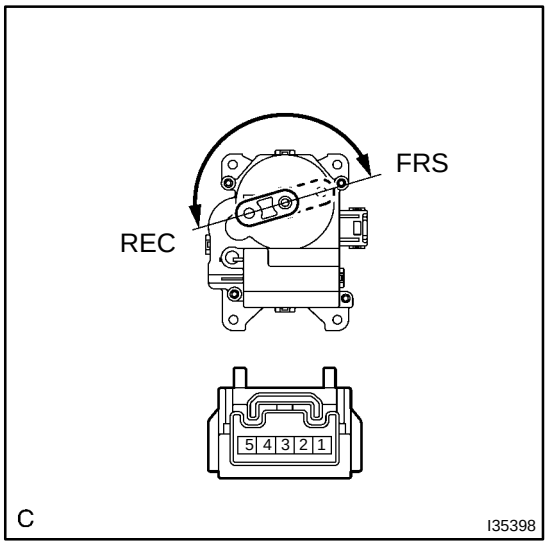

2. INSPECT COOLING UNIT DAMPER SERVO SUB-ASSY (MANUAL AIR CONDITIONING)

(a) Inspect servomotor operation.

(1) Connect the positive (+) lead from the battery to terminal 5 and negative (-) lead to terminal 2, then check that the arm turns to ”FRS” side smoothly.

(2) Connect the positive (+) lead from the battery to terminal 5 and negative (-) lead to terminal 1, then check that the arm turns to ”REC” side smoothly.

If operations are not as specified, replace the servomotor.

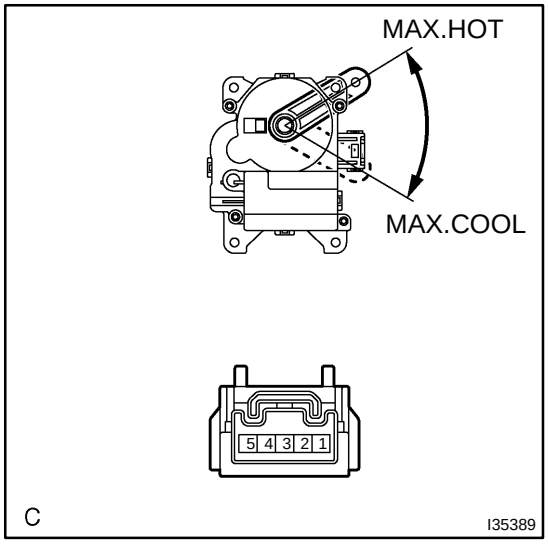

3. INSPECT AIRMIX DAMPER SERVO SUB- ASSY (MANUAL AIR CONDITIONING)

(a) Inspect servomotor operation.

(1) Connect the positive (+) lead from the battery to terminal 4 and negative (-) lead to terminal 5, then check that the arm turns to ”COOL” side smoothly.

(2) Connect the positive (+) lead from the battery to terminal 5 and negative (-) lead to terminal 4, then check that the arm turns to ”HOT” side smoothly.

If operations are not as specified, replace the servomotor.

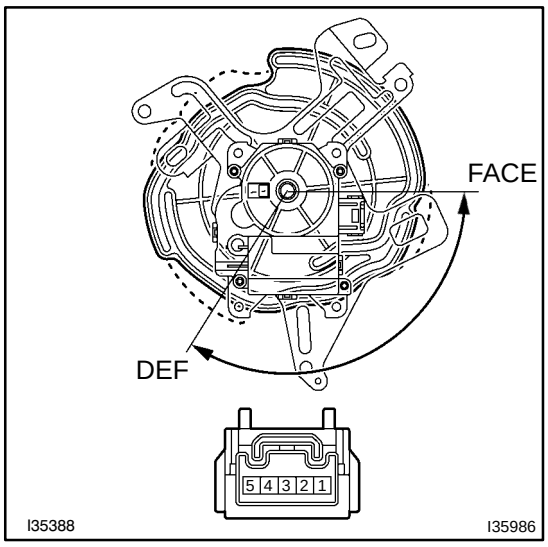

4. INSPECT MODE DAMPER SERVO SUB- ASSY (MANUAL AIR CONDITIONING)

(a) Inspect servomotor operation.

(1) Connect the positive (+) lead from the battery to terminal 5 and negative (-) lead to terminal 5, then check that the arm turns to ”DEF” side smoothly.

(2) Connect the positive (+) lead from the battery to terminal 5 and negative (-) lead to terminal 4, then check that the arm turns to ”FACE” side smoothly.

If operations are not as specified, replace the servomotor.

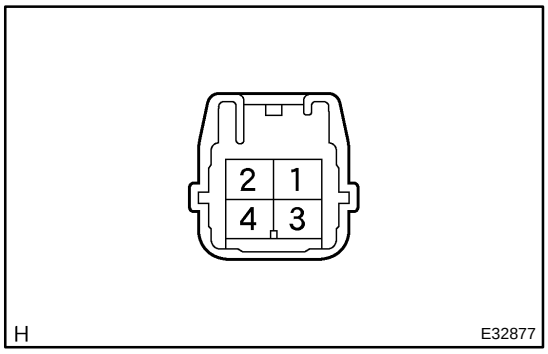

5. INSPECT BLOWER RESISTOR (MANUAL AIR CONDITIONING)

(a) Measure resistance between terminals, as shown in the table.

Tester connection	Specified condition
1 - 2	0.320 to 0.353 Ω
1 - 3	1.070 to 1.231 Ω
1 - 4	2.558 to 2.943 Ω

If resistance is not as specified, replace the blower resistor.

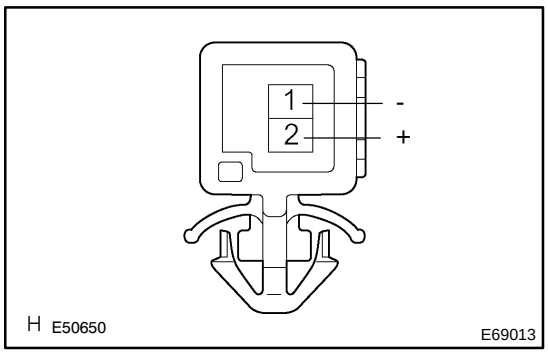

6. INSPECT COOLER THERMISTOR NO.1 (MANUAL AIR CONDITIONING)

(a) Check the resistance between terminal 1 and 2 of cooler thermistor No.1 as shown in the graph.

Standard:

5.3 to 5.4 kΩ at 0°C (32°F)

2.6 to 2.7 kΩ at 15°C (59°F)

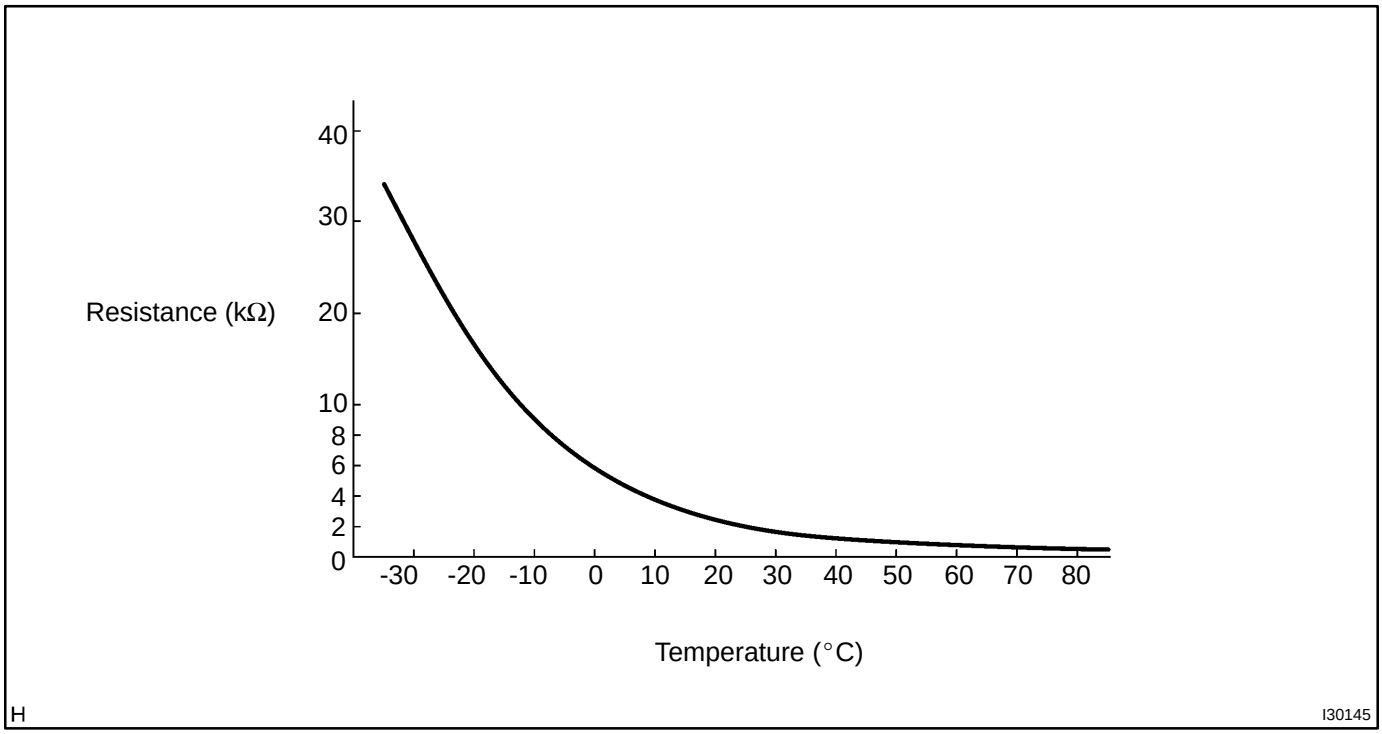

If resistance value is not as specified, replace the sensor.

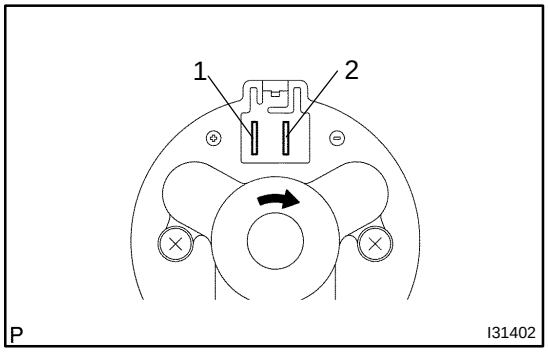

7. INSPECT BLOWER W/FAN MOTOR SUB- ASSY (MANUAL AIR CONDITIONING)

(a) Connect the positive (+) lead from the battery to terminal 1 and negative (-) to terminal 2, then check that the motor operates smoothly.

If operation is not as specified, replace the blower motor.

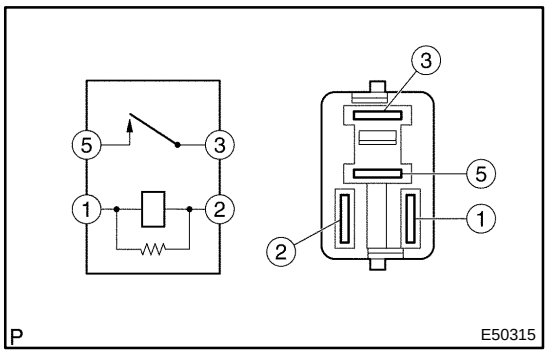

8. INSPECT MAGNET-CLUTCH RELAY (MANUAL AIR CONDITIONING)

Standard:

Terminal No.	Specified condition
3 to 5	No continuity
	Less than 1 Ω (When battery voltage is applied to terminals 1 and 2)

If continuity is not as specified, replace the heater relay.

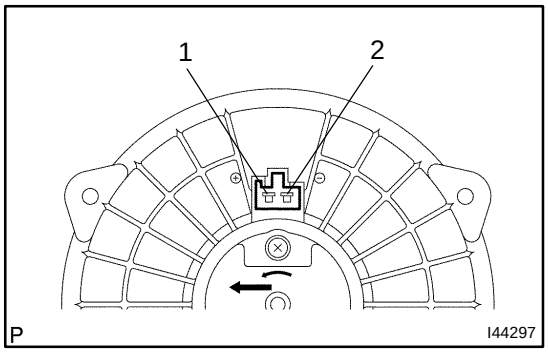

9. INSPECT COOLING UNIT MOTOR SUB-ASSY W/FAN (MANUAL AIR CONDITIONING)

(a) Connect the positive (+) lead from the battery to terminal 1 and negative (-) to terminal 2, then check that the motor operates smoothly.

If operation is not as specified, replace the blower motor.

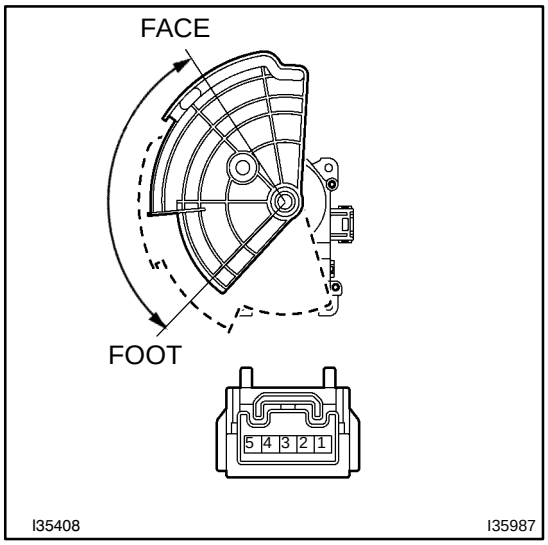

10. INSPECT AIR OUTLET SERVOMOTOR

(a) Inspect servomotor operation.

(1) Connect the positive (+) lead from the battery to terminal 4 and negative (-) lead to terminal 5, then check that the arm turns to ”FACE” side smoothly.

(2) Connect the positive (+) lead from the battery to terminal 5 and negative (-) lead to terminal 4, then check that the arm turns to ”FOOT” side smoothly.

If operations are not as specified, replace the servomotor.

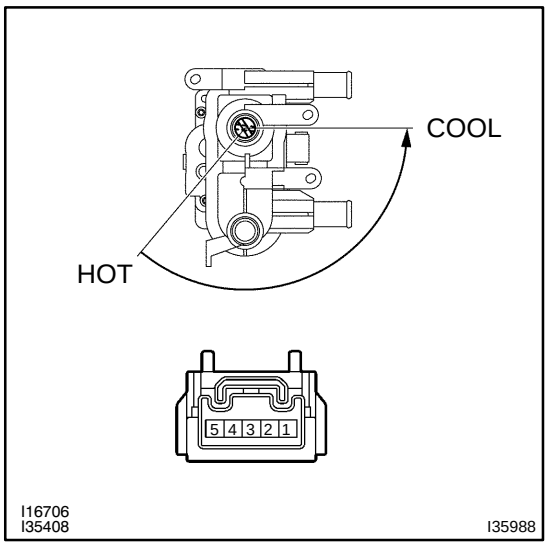

11. INSPECT HEATER RADIATOR UNIT SUB-ASSY

(a) Inspect servomotor operation.

(1) Connect the positive (+) lead from the battery to terminal 5 and negative (-) lead to terminal 5, then check that the arm turns to ”HOT” side smoothly.

(2) Connect the positive (+) lead from the battery to terminal 5 and negative (-) lead to terminal 4, then check that the arm turns to ”COOL” side smoothly.

If operations are not as specified, replace the servomotor.

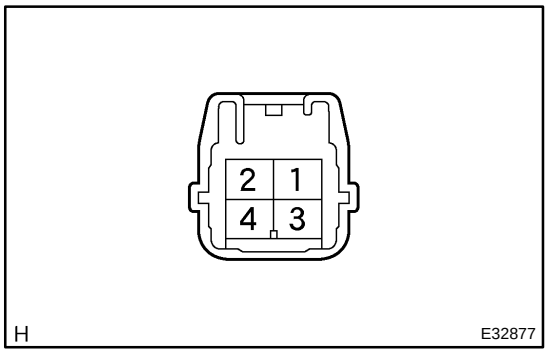

12. INSPECT BLOWER RESISTOR TRANSISTOR ASSY (MANUAL AIR CONDITIONING)

(a) Measure resistance between terminals 3 and 4.

Standard: 2.0 to 2.4 kΩ

If resistance is not as specified, replace the blower resistor transistor assy.

(b) Inspect blower resistor transistor assy.

(1) Connect the positive (-) lead to terminal 4 through a 12 V to 3.4 W test bulb and negative (-) lead to terminal 2.

(2) Check the test bulb lights up when another positive (+) lead is connected to terminal 2 through a 12 V to 3.4 W test bulb.

If operation is not as specified, replace the blower resistor transistor assy.

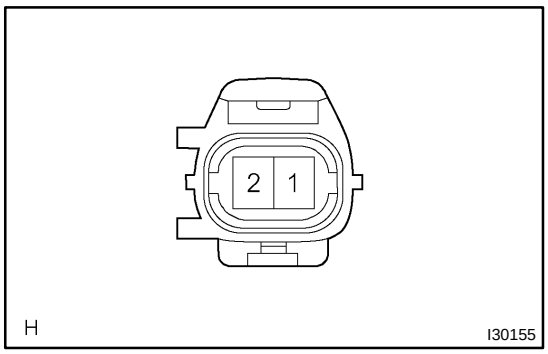

13. INSPECT COOLER (AMBIENT TEMP. SENSOR) THERMISTOR (MANUAL AIR CONDITIONING)

(a) Check resistance between terminal 1 and 2 of cooler (ambient temp. sensor) thermistor as shown in the graph.
Standard:
1,615 to 1,785 Ω at 25°C (77°F)

HINT:
As the temperature increases, the resistance decreases.

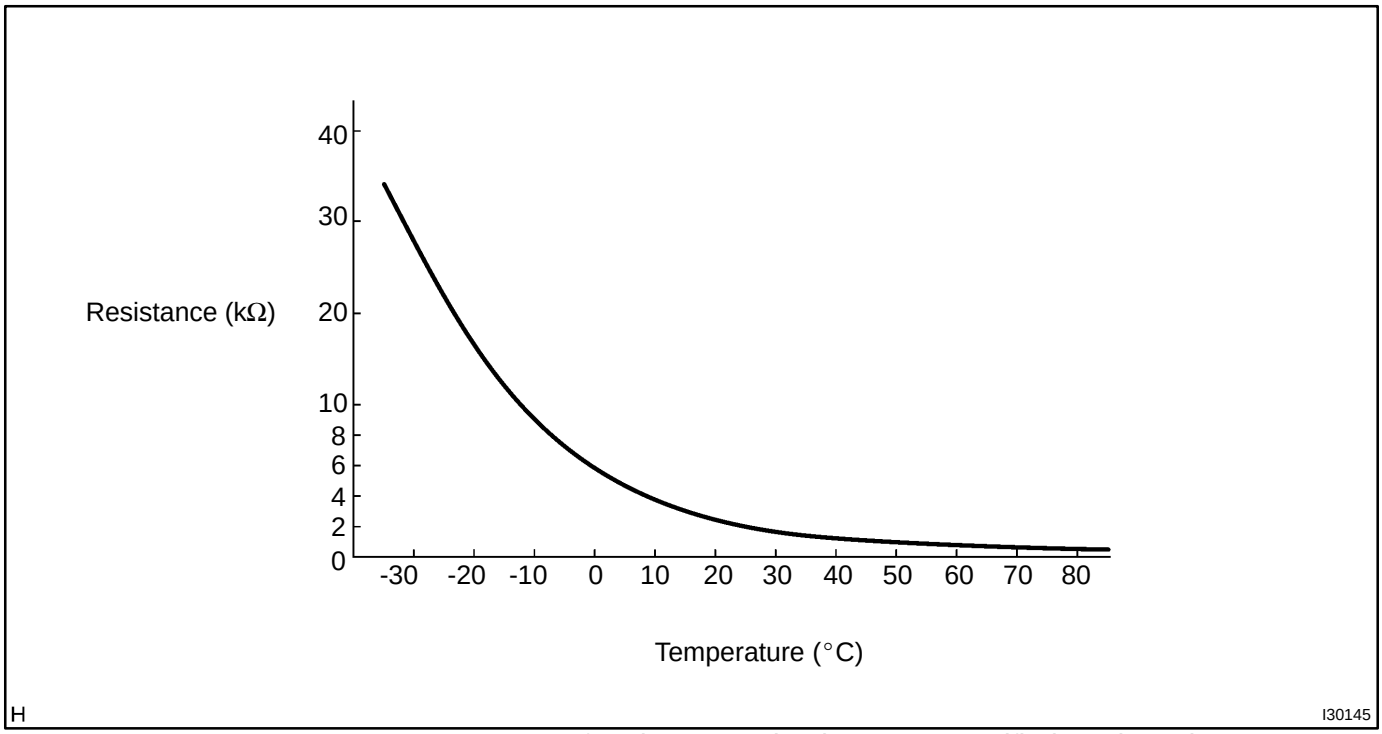

If resistance value is not as specified, replace the sensor.

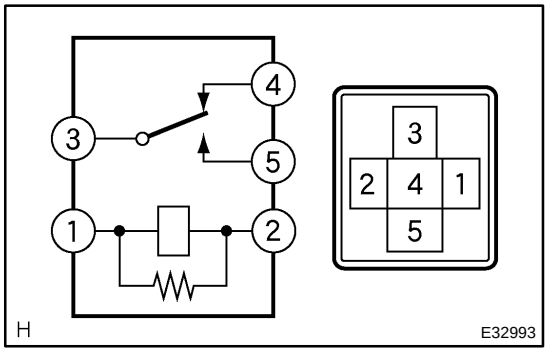

14. INSPECT HEATER RELAY NO.1 (MANUAL AIR CONDITIONING)

Terminal No.	Specified condition
3 - 5	No continuity
	Less than 1 Ω (When battery voltage applied to terminals 1 and 2)
3 - 4	No continuity
	Less than 1 Ω (When battery voltage applied to terminals 1 and 2)

If continuity is not as specified, replace the heater relay No.1.

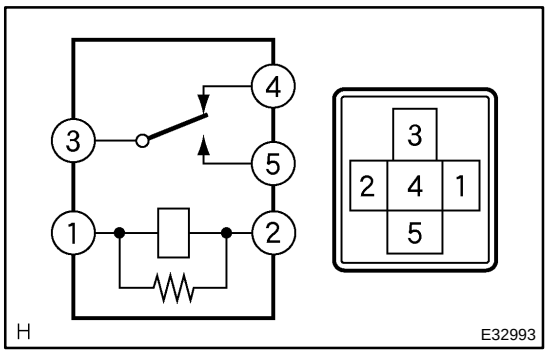

15. INSPECT REAR COOLER RELAY (MANUAL AIR CONDITIONING)

Terminal No.	Specified condition
3 - 5	No continuity
	Less than 1 Ω (When battery voltage applied to terminals 1 and 2)
3 - 4	No continuity
	Less than 1 Ω (When battery voltage applied to terminals 1 and 2)

If continuity is not as specified, replace the rear cooler relay.

550XO-03

ON-VEHICLE INSPECTION

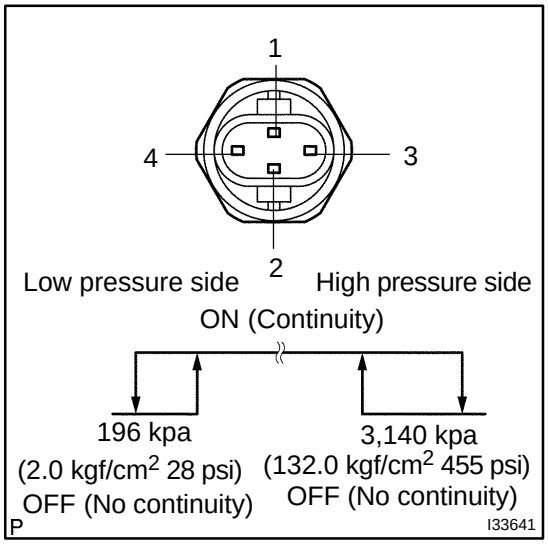

1. INSPECT PRESSURE SWITCH NO. 1

(a) Magnetic clutch control:
Inspect pressure switch operation.
(1) Set on the manifold gauge set.
(2) Connect the positive (+) lead from the ohmmeter to terminal 2 and the negative (-) lead to terminal 1.
(3) Check continuity between terminals when refrigerant pressure is changed, as shown in the illustration.

If operation is not as specified, replace the pressure switch.

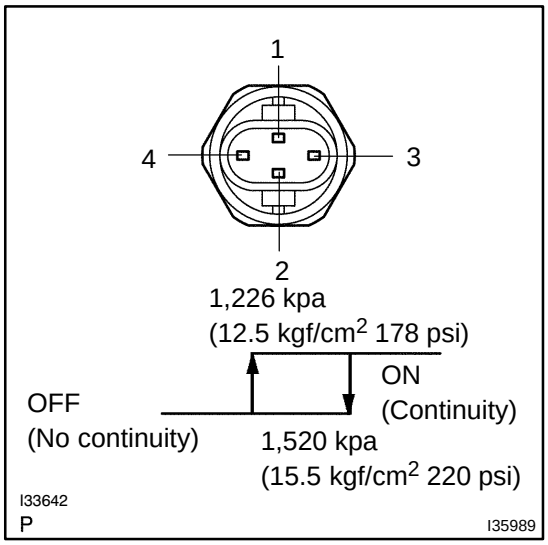

(b) Cooling fan control:
Inspect pressure switch operation.
(1) Connect the positive (+) lead from the ohmmeter to terminal 4 and the negative (-) lead to terminal 3.
(2) Check continuity between terminals when refrigerant pressure is changed, as shown in the illustration.

If operation is not as specified, replace the pressure switch.

2. INSPECT INTEGRATION CONTROL & PANEL ASSY

(a) Disconnect the connector from integration control & panel assy and inspect the connector on wire harness side, as shown in the table.

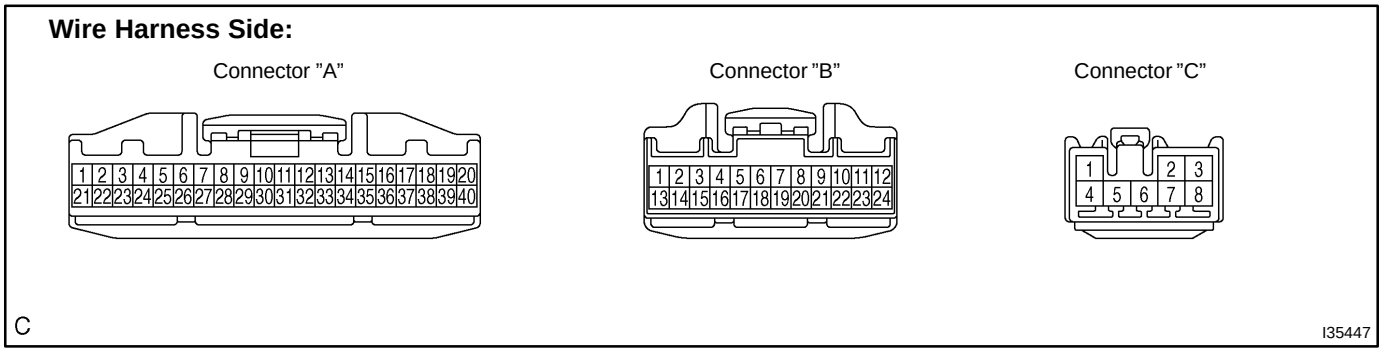

Symbols (Terminal No.)	Condition	Specification
GND (A1) - Body ground	Always	Continuity
+B (A11) - GND (A1)	Always	10 to 14 V
IG+ (A12) - GND (A1)	Ignition switch: LOCK → ON	0 → 10 to 14 V
ACC (A40) - GND (A1)	Ignition switch: LOCK → ACC	0 → 10 to 14 V

If circuit is not as specified, try to replace the integration control & panel assy with a new one. If the circuit is not as specified, inspect the circuits connected to the other parts.

(b) Connect the connector to integration control & panel assy and inspect wire harness side connector from the back side, as shown in the table.

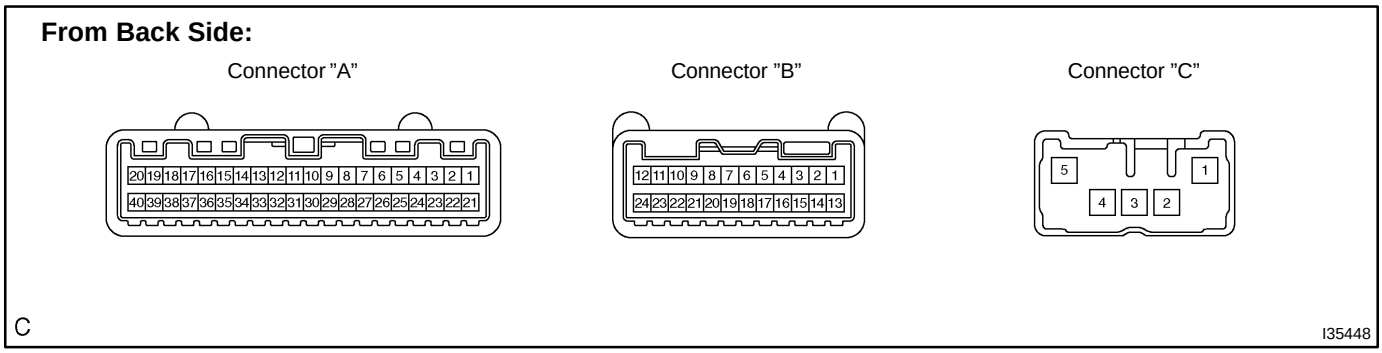

Symbols (Terminal No.)	Condition	Specification
REC (B11) - GND (A1)	Ignition switch: ON R/F switch: OFF → ON	0 → 10 to 14 V
FRS (B10) - GND (A1)	Ignition switch: ON R/F switch: ON → OFF	0 → 10 to 14 V
ILL- (A37) - Body ground	Always	Continuity
A/C (A6) - GND (A1)	Ignition switch: ON A/C switch: OFF → ON	0 → 10 to 14 V
ILL+ (A39) - GND (A1)	Ignition switch: ON Turn light control switch: OFF → ON	0 → 10 to 14 V
MPX+ (A2) - GND (A1)	Communication circuit	-
MPX- (A3) - GND (A1)	Communication circuit	-

Symbols (Terminal No.)	Condition	Specification
FTIN (A4) - GND (A1)	Ignition switch: ON FOOT switch: OFF → ON	5.0 → Below 1.0 V
BLIN (A5) - GND (A1)	Ignition switch: ON B/L switch: OFF → ON	5.0 → Below 1.0 V
FCIN (A6) - GND (A1)	Ignition switch: ON FACE switch: OFF → ON	5.0 → Below 1.0 V
TE (A7) - SG-4 (A25)	Evaporator temperature 25°C (77°F)	1.5 KΩ
BLWC (A8) - GND (A1)	IG SW: ON Rear A/C blower: Operate	1.0 to 8.0 V
VMC (A9) - GND (A1)	IG SW: ON Rear A/C blower: Operate	0 to 10 V
S5-2 (A10) - SG-1 (A22)	Ignition switch: ON	5.0 V
AOD (A13) - GND (A1)	Ignition switch: ON Mode control dial DEF	10 to 14 V
AOF (A14) - GND (A1)	Ignition switch: ON Mode control dial FACE	10 to 14 V
THOT (A15) - GND (A1)	Ignition switch: ON Temperature control dial MAX HOT	10 to 14 V
TCOL (A16) - GND (A1)	Ignition switch: ON Temperature control dial MAX COOL	10 to 14 V
MHH (A17) - GND (A1)	Ignition switch: ON Rear temperature control dial MAX HOT	10 to 14 V
MCH (A18) - GND (A1)	Ignition switch: ON Rear temperature control dial MAX COOL	10 to 14 V
FOOT (A19) - GND (A1)	Ignition switch: ON Rear mode switch FOOT	10 to 14 V
FACE (A20) - GND (A1)	Ignition switch: ON Rear mode switch FACE	10 to 14 V
SG-2 (A21) - Body ground	Always	Continuity
SG-1 (A22) - Body ground	Always	Continuity
SG-6 (A23) - Body ground	Always	Continuity
SG-8 (A24) - Body ground	Always	Continuity
SG-4 (A25) - Body ground	Always	Continuity
BSTR (A26) - SG-8 (A24)	IG SW: ON Rear A/C blower: Operate	0 to 5.0 V
TSTR (A27) - SG-8 (A24)	Ignition switch: ON Rear temperature control dial: Operate	0 to 5.0 V
TPM (A28) - G-6 (A23)	Ignition switch: ON Rear mode switch FOOT → FACE	1 → 4.0 V
TPO (A29) - SG-2 (A21)	Ignition switch: ON Mode control dial DEF → FACE	1 → 4.0 V
S5-A (A30) - SG-2 (A21)	Ignition switch: ON	5.0 V
S5-6 (A31) - SG-6 (A23)	Ignition switch: ON	5.0 V
S5-8 (A32) - SG-8 (A24)	Ignition switch: ON	5.0 V
TPH (A33) - SG-6 (A23)	Ignition switch: ON Rear temperature control dial MAX HOT → MAX COOL	1 → 4.0 V
TP (A34) - SG-1 (A22)	Ignition switch: ON Temperature control dial MAX HOT → MAX COOL	1 → 4.0 V
A/CB (B6) - GND (A1)	Ignition switch: ON A/C switch: OFF → ON	0 → 12 V
HRC (B9) - GND (A1)	Ignition switch: ON Rear A/C: OFF → ON	0 → 12 V
GND (CI) - Body ground	Always	Continuity

Symbols (Terminal No.)	Condition	Specification
HI (C4) - GND (C1)	Ignition switch: ON Blower dial: OFF → H1	No continuity → Continuity
M2 (C3) - GND (C1)	Ignition switch: ON Blower dial: OFF → M2	No continuity → Continuity
M1 (C2) - GND (C1)	Ignition switch: ON Blower dial: OFF → M1	No continuity → Continuity
LO (C5) - GND (C1)	Ignition switch: ON Blower dial: OFF → LO	No continuity → Continuity

If circuit is not as specified, try to replace the integration control & panel assy with a new one. If circuit is not as specified, inspect the circuits connected to other parts.

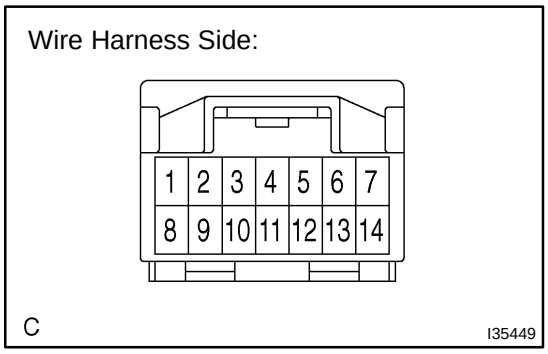

3. INSPECT AIR CONDITIONER NO.2 CONTROL ASSY

(a) Disconnect the connector from the air conditioner No.2 control assy and inspect the connector on wire harness side, as shown in the table.

Symbols (Terminal No.)	Condition	Specification
IG (11) - RG (9)	Ignition switch: LOOK → ON	0 → 10 to 14 V
RG (9) - Body ground	Always	Continuity

If circuit is as specified, try replacing the air conditioner No.2 control assy with a new one. If circuit is not as specified, inspect the circuits connected to the other parts.

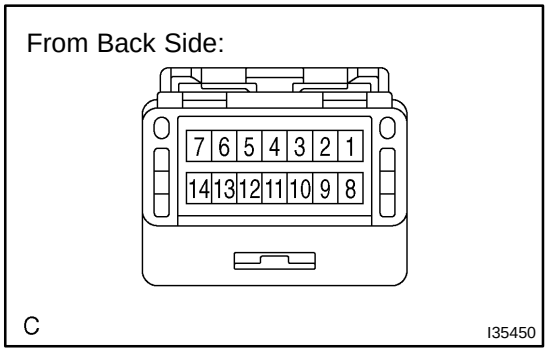

(b) Connect the connector to air conditioner No.2 control assy and inspect wire harness side connector from the back side, as shown in the table.

Symbols (Terminal No.)	Condition	Specification
ILL (1) - RG (9)	Always	Continuity
FOOT (2) - RG (9)	Ignition switch: ON FOOT switch: OFF → ON	5.0 → Below 1.0 V

Symbols (Terminal No.)	Condition	Specification
B/L (3) - RG (9)	Ignition switch: ON B/L switch: OFF → ON	5.0 → Below 1.0 V
FACE (4) - RG (9)	Ignition switch: ON FACE switch: OFF → ON	5.0 → Below 1.0 V
SG (5) - Body ground	Always	Continuity
S5 (6) - RG (9)	Ignition switch: ON	5.0 V
TSET (7) - RG (9)	IG SW: ON Rear A/C blower: Operate	1.0 to 8.0 v
BSET (8) - RG (9)	Ignition switch: ON Rear temperature control dial: Operate	10 to 14 V
ILL+ (10) - RG (9)	Ignition switch: ON Light control switch: OFF → TAIL	0 → 12 V

If circuit is not as specified, replace the air conditioning amplifier assy with a new one. If circuit is not as specified, inspect the circuits connected to other parts.

REFRIGERANT

ON-VEHICLE INSPECTION

550XR-03

1. INSPECT REFRIGERANT PRESSURE WITH MANIFOLD GAUGE SET

(a) This is a method in which the trouble is located by using a manifold gauge set. Read the manifold gauge pressure when these conditions are established.

Test conditions:

- Temperature at the air inlet with the switch set at RECIRC is 30 to 35 °C (86 to 95 °F)
- Engine running at 1500 rpm
- Blower speed control switch at "HI" position
- Temperature control dial at "COOL" position
- A/C switch ON
- Fully open doors

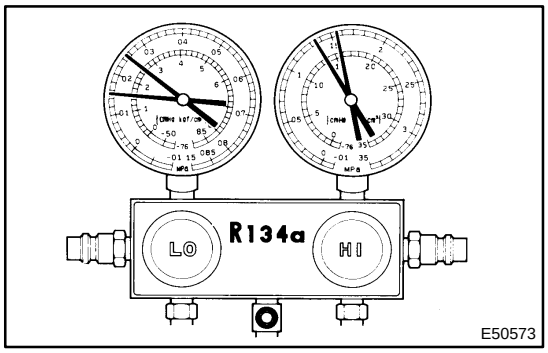

E50573

(1) The refrigeration system functions normally.

Gauge reading:

Low pressure side:

0.15 to 0.25 MPa (1.5 to 2.5 kgf/cm^2)

High pressure side:

1.37 to 1.57 MPa (14 to 16 kgf/cm^2)

(2) Moisture present in refrigeration system.

Condition : Periodically cools and then fails to cool

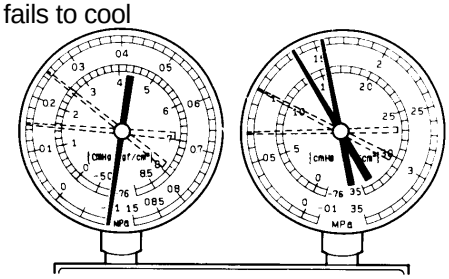
I22117

Symptom	Probable cause	Diagnosis	Remedy
During operation, pressure on low pressure side cycles between normal and vacuum	Moisture in refrigerating system freezes at expansion valve orifice causing a temporary stop of cycle, however, when it melts, normal state is restored.	• Drier in over saturected state • Moisture in refrigerating system freezes at expansion valve orifice and blocks circulation of refrigerant	(1) Replace condenser (2) Remove moisture in cycle by repeatedly evacuating air (3) Supply proper amount of new refrigerant

(3) Insufficient cooling

Condition: Cooling system does not function effectively.

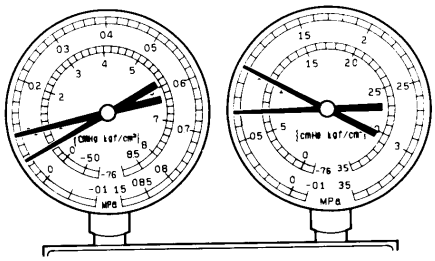

I22118

Symptom	Probable cause	Diagnosis	Corrective Actions
• Pressure low on both low and high pressure sides • Insufficient cooling performance	Gas leakage in refrigeration system	• Insufficient refrigerant • Refrigerant leaking	(1) Check for gas leakage and repair if necessary (2) Supply proper amount of new refrigerant (3) If indicated pressure value is close to a 0 when connected to gauge, create the vacuum after inspecting and repairing location of leak

(4) Poor circulation of refrigerant

Condition: Cooling system does not function effectively.

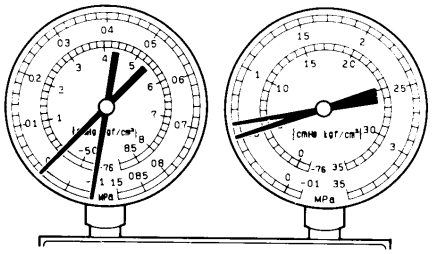

I22119

Symptom	Probable cause	Diagnosis	Corrective Action
• Pressure low on both low and high pressure sides • Frost on pipe from condenser to unit	Refrigerant flow obstructed by dirt in receiver	Receiver clogged	Replace condenser

(5) Refrigerant does not circulate

Condition: Cooling system does not function. (Sometimes it may function)

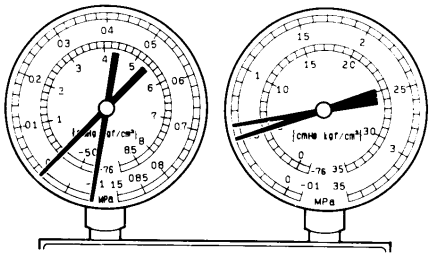

I22120

Symptom	Probable cause	Diagnosis	Corrective Actions
• Vacuum indicated on low pressure side, very low pressure indicated on high pressure side • Frost or dew seen on piping before and after receiver/ drier or expansion valve	• Refrigerant flow obstructed by moisture or dirt in refrigerating system • Refrigerant flow obstructed by gas leaked from expansion valve	Refrigerant does not circulate	(1) Check expansion valve (2) Clean out dirt in expansion valve by air blowing (3) Replace condenser (4) Evaporate air and supply proper amount of new refrigerant. (5) For gas leakage from expansion valve, replace expansion valve

(6) Refrigerant overcharged or insufficient cooling of condenser

Condition: Cooling system does not function effectively.

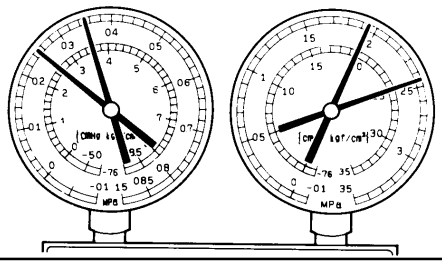

I22121

Symptom	Probable cause	Diagnosis	Remedy
• Pressure too high on both low and high pressure sides	• Unable to develop sufficient performance due to excessive use of refrigerating system • Insufficient cooling of condenser	• Excessive refrigerant in cycle→too much refrigerant supplied • Condenser cooling insufficient→condenser fins clogged at cooling fan	(1) Clean condenser (2) Check cooling fan with cooling fan motor operation (3) If (1) and (2) are in normal state, check amount of refrigerant and supply proper amount of refrigerant

(7) Air present in refrigeration system

Condition: Cooling system does not function.

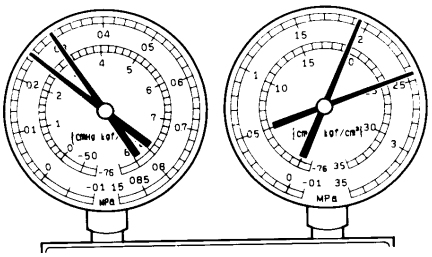

NOTE : These gauge indications occur when the refrigerating system has been opens and the refrigerant charged without vacuum purging.

I22122

Symptom	Probable cause	Diagnosis	Corrective Actions
• Pressure too high on both low and high pressure sides • The low pressure piping too hot to the touch	Air in system	• Air present in refrigerating system • Insufficient vacuum purging	(1) Check compressor oil to see if it is dirty or insufficient (2) Evacuate air and supply new refrigerant

(8) Expansion valve malfunction

Condition: Insufficient cooling.

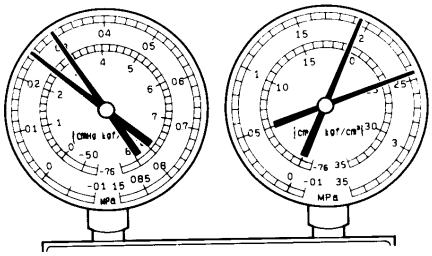

I22123

Symptom	Probable cause	Diagnosis	Corrective Actions
• Pressure too high on both low and high pressure sides • Frost or large amount of dew on piping on low pressure side	Trouble in expansion valve	• Excessive refrigerant in low pressure piping • Expansion valve opened too wide	Check expansion valve

(9) Defective compression compressor

Condition : Insufficient cooling.

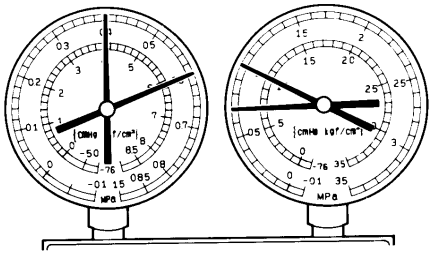

I22124

Symptom	Probable cause	Diagnosis	Corrective Actions
• Pressure too high on low pressure side • Pressure too low on high pressure side	Internal leak in compressor	• Compression failure • Leakage from valve damaged or broken sliding parts	Repair or replace compressor

Gauge readings (Reference)

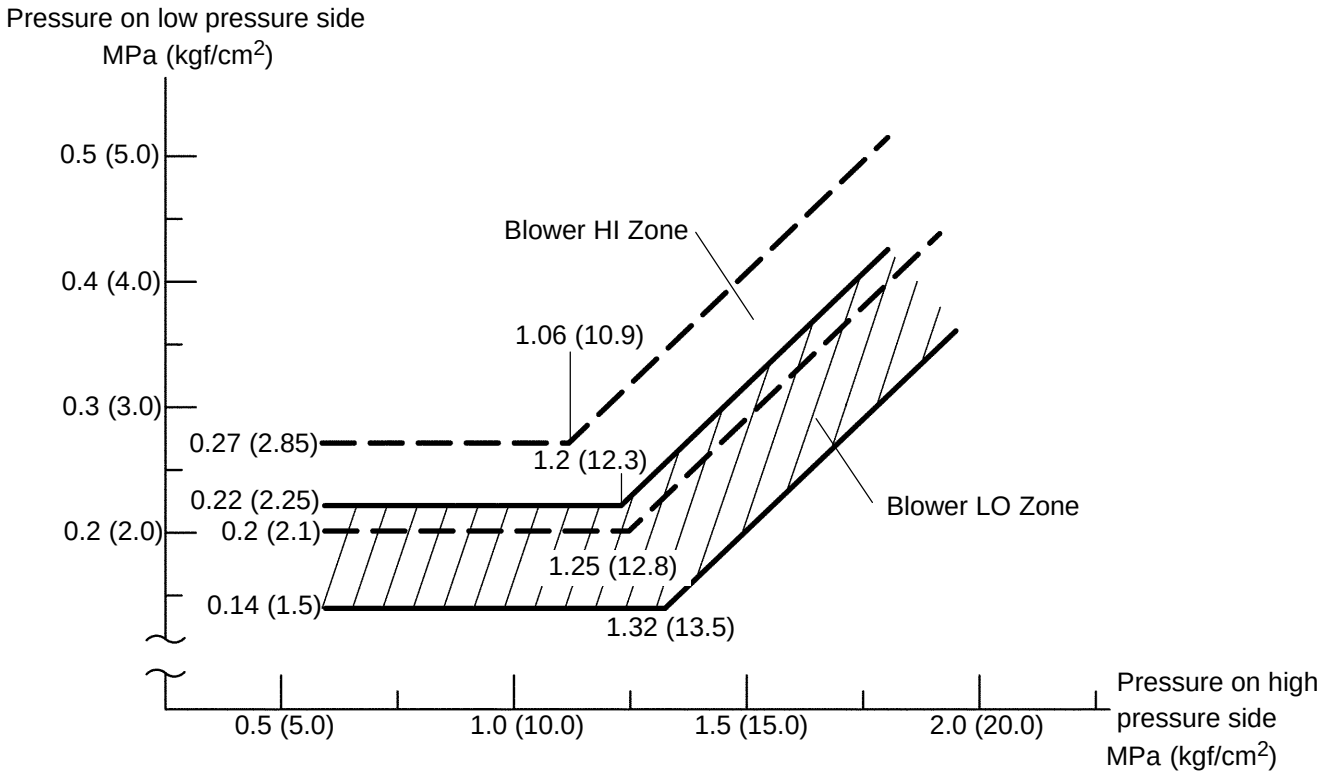

I30081

COOLER CONDENSER CORE

550Y8-01

ON-VEHICLE INSPECTION

1. INSPECT COOLER CONDENSER CORE

(a) If the fin of the cooler condenser core is dirty, clean it with water and dry it with compressed air.

NOTICE:

Do not damage the fin of the cooler condenser core.

(b) If the fin of the cooler condenser core is bent, make it straight using a screwdriver or pliers.

2. INSPECT CONDENSER FOR LEAKAGE OF REFRIGERANT

(a) Using a halogen leak detector, check the pipe joints for gas leakage.

(b) If gas leakage is detected in a joint, check the torque of the joint.

AIR CONDITIONING SYSTEM

PRECAUTION

550XN-02

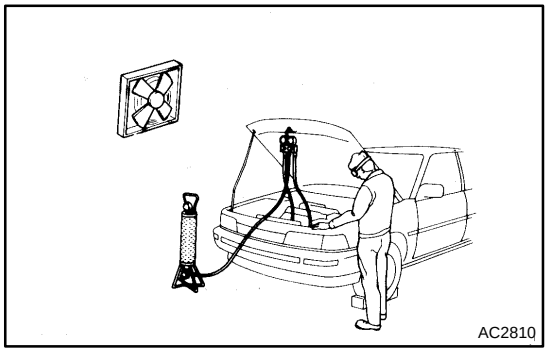

1. DO NOT HANDLE REFRIGERANT IN AN ENCLOSED AREA OR NEAR AN OPEN FLAME

2. ALWAYS WEAR EYE PROTECTION

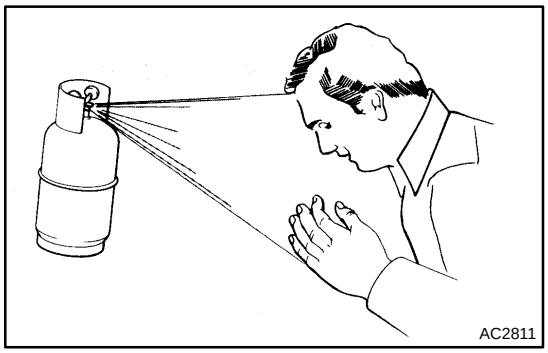

3. BE CAREFUL NOT TO GET LIQUID REFRIGERANT IN YOUR EYES OR ON YOUR SKIN

If liquid refrigerant gets in your eyes or on your skin:

(a) Wash the area with lots of cold water.

CAUTION:

Do not rub your eyes or skin.

(b) Apply clean petroleum jelly to the skin.

(c) Go immediately to hospital or see a physician for professional treatment.

4. NEVER HEAT CONTAINER OR EXPOSE IT TO NAKED FLAME

5. BE CAREFUL NOT TO DROP CONTAINER AND NOT TO APPLY PHYSICAL SHOCKS TO IT

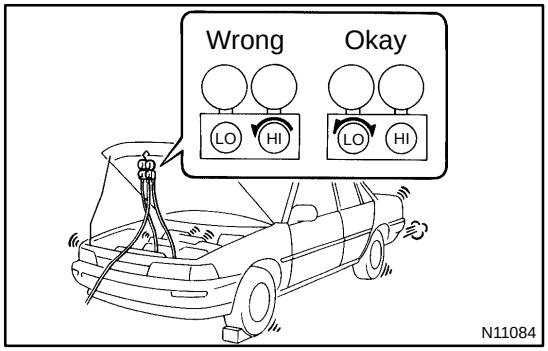

6. DO NOT OPERATE COMPRESSOR WITHOUT ENOUGH REFRIGERANT IN REFRIGERANT SYSTEM

If there is not enough refrigerant in the refrigerant system, oil lubrication will be insufficient and compressor may burnout, so take care to avoid this, necessary care should be taken.

7. DO NOT OPEN HIGH PRESSURE MANIFOLD VALVE WHILE COMPRESSOR IS OPERATING

Open and close the only low pressure valve.

If the high pressure valves are opened, refrigerant flows in the reverse direction and cause the charging cylinder to rupture.

8. BE CAREFUL NOT TO OVERCHARGE SYSTEM WITH REFRIGERANT

If refrigerant is overcharged, it causes problems such as insufficient cooling, poor fuel economy, engine overheating, etc.

550XQ-03

PROBLEM SYMPTOMS TABLE

Use the table below to find the cause of the problem. The numbers indicate the priority of the likely cause of the problem. Check each part in order. If necessary, replace these parts.

Manual A/C

Front A/C:

Symptom	Suspected Area	See page
Whole functions of the A/C system do not operate.	5. HTR fuse 6. A/C amplifier assy 7. Integration control & panel assy 8. Wire harness or connector	- 55-2 55-2 -
Air Flow Control : No blower operation	1. Blower resistor 2. Heater relay 3. Blower w/fan motor sub-assy 4. A/C amplifier assy 5. Integration control & panel assy 6. Wire harness or connector	55-7 55-7 55-7 55-2 55-2 -
Air Flow Control : No blower control	1. Blower w/fan motor sub-assy 2. Blower resistor 3. A/C amplifier assy 4. Integration control & panel assy 5. Wire harness or connector	55-7 55-7 55-2 55-2 -
Air Flow Control : Insufficient air comes out	1. Blower w/fan motor sub-assy 2. Blower resistor 3. A/C amplifier assy 4. Integration control & panel assy 5. Wire harness or connector	55-7 55-7 55-2 55-2 -
Temperature Control : No cool air comes out	1. Volume of refrigerant 2. Drive belt tension 3. Refrigerant pressure 4. Cooler compressor assy 5. Pressure switch No.1 6. Condenser fan 7. A/C amplifier assy 8. Integration control & panel assy 9. Wire harness or connector	55-16 55-29 55-16 55-7 55-2 - 55-2 55-2 -
Temperature Control : No warm air comes out	1. Engine coolant volume 2. Cooler thermistor No.1 3. A/C amplifier assy 4. Integration control & panel assy 5. Wire harness or connector	- 55-7 55-2 55-2 -
Temperature Control : Air comes out warmer or cooler than the set temperature, or response is slow.	1. Integration control & panel assy 2. Airmix damper servo sub-assy 3. Airmix level	55-2 55-7 -
Temperature Control : No temperature control	1. Integration control & panel assy 2. Airmix damper servo sub-assy 3. Airmix level	55-2 55-7 -
No air inlet control	1. Cooling unit damper servo sub-assy 2. A/C amplifier assy 3. Integration control & panel assy 4. Wire harness or connector	55-7 55-2 55-2 -
No air outlet control	1. Integration control & panel assy 2. Air outlet damper servo sub-assy 3. Air outlet lever	55-2 55-7 -

Engine idle up does not occur, or is continuous	1. Idle up switch 2. Cooler compressor assy 3. A/C amplifier assy 4. Integration control & panel assy 5. Wire harness or connector	55-7 55-7 55-2 55-2 -
Brightness does not change when rheostat volume or light control switch is operated.	1. Illumination light system 2. A/C amplifier assy 3. Integration control & panel assy 4. Wire harness or connector	- 55-2 55-2 -

Manual A/C
Rear cooler:

Symptom	Suspected Area	See page
Air Flow Control : No blower operation	1. Cooler unit blower resistor 2. Heater relay 3. Cooling unit motor sub-assy w/fan 4. Air conditioning No.2 control assy 5. Wire harness or connector	55-7 55-7 55-7 55-2 -
Air Flow Control : No blower control	1. Blower w/ fan (rear) motor sub-assy 2. Blower resistor transistor assy 3. Air conditioning No.2 control assy 4. Wire harness or connector	55-7 55-7 55-2 -
Temperature Control : No cool air comes out	1. Volume of refrigerant 2. Drive belt tension 3. Refrigerant pressure 4. Heater radiator unit sub-assy 5. Cooler compressor assy 6. Pressure switch No.1 7. Condenser fan 8. A/C amplifier assy 9. Air conditioning No.2 control assy 10.Wire harness or connector	55-16 55-29 55-16 55-7 55-7 55-2 - 55-2 55-2 -

550XV-02

OVERHAUL

HINT:

COMPONENTS: See page 55-23

1. **REMOVE INSTRUMENT CLUSTER FINISH PANEL CENTER NO.1 (See page 71-10)**
2. **REMOVE INSTRUMENT CLUSTER FINISH PANEL CENTER NO.2 (See page 71-10)**
3. **REMOVE SHIFT LEVER KNOB SUB-ASSY (See page 40-38)**
4. **REMOVE INSTRUMENT CLUSTER FINISH PANEL ASSY CENTER (See page 71-10)**
5. **REMOVE INSTRUMENT CLUSTER FINISH PANEL GARNISH (See page 71-10)**
6. **REMOVE RADIO RECEIVER ASSEMBLY W/BRACKET (W/O NAVIGATION SYSTEM) (See page 67-8)**
7. **REMOVE RADIO RECEIVER ASSEMBLY W/BRACKET (W/ NAVIGATION SYSTEM) (See page 67-9)**

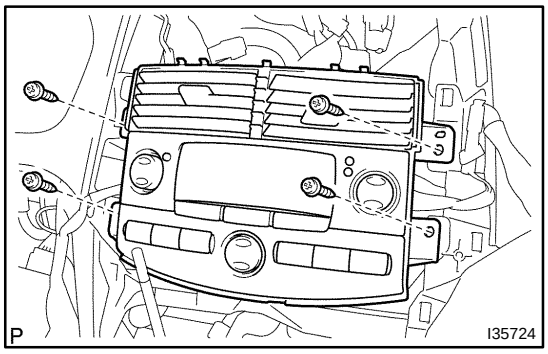

8. REMOVE INTEGRATION CONTROL & PANEL ASSY

(a) Remove the 4 screws, and release the integration control & panel assy.

(b) Disconnect the connectors and remove the integration control & panel assy.

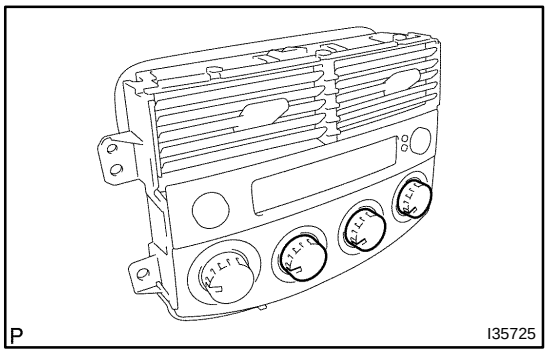

9. REMOVE CENTER CLUSTER MODULE KNOB NO.1 (MANUAL AIR CONDITIONING)

(a) Remove the center cluster module knob No.1.

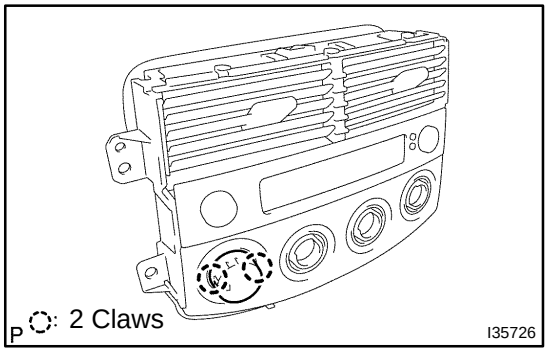

10. REMOVE CENTER CLUSTER MODULE KNOB NO.2 (MANUAL AIR CONDITIONING)

(a) Release the 2 claws fittings and remove the center cluster module knob No.2.

NOTICE:

Take care not to break the claws on the knob.

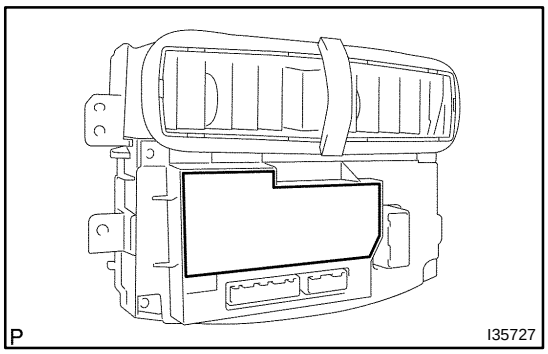

11. REMOVE AIRCONDITIONER AMPLIFIER ASSY (MANUAL AIR CONDITIONING)

(a) Remove the plate.

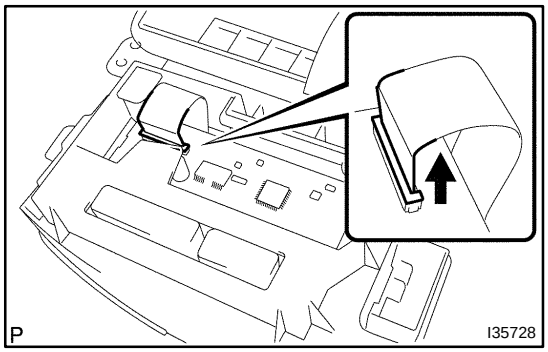

(b) Release the lock of the connector and disconnect the cable.

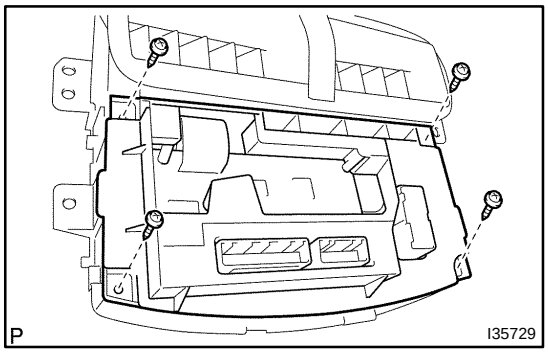

(c) Remove the 4 screws, and the heater control housing.

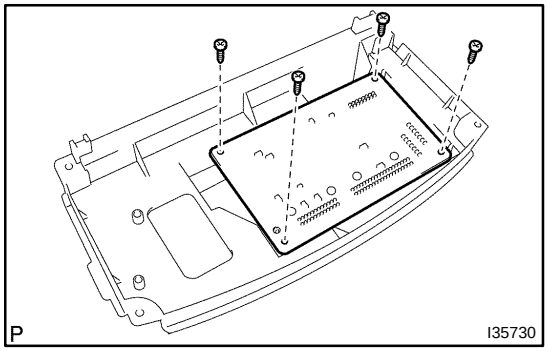

(d) Remove the 4 screws, and the air conditioner amplifier assy.

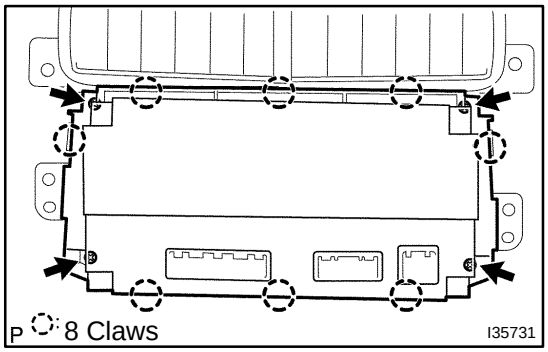

12. REMOVE AIRCONDITIONER AMPLIFIER ASSY (AUTO AIR CONDITIONING)

(a) Release the 8 claw fittings and remove the 4 screws and the heater control housing.

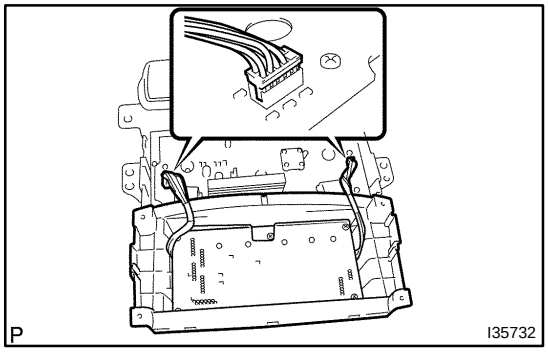

(b) Disconnect the 2 connectors.

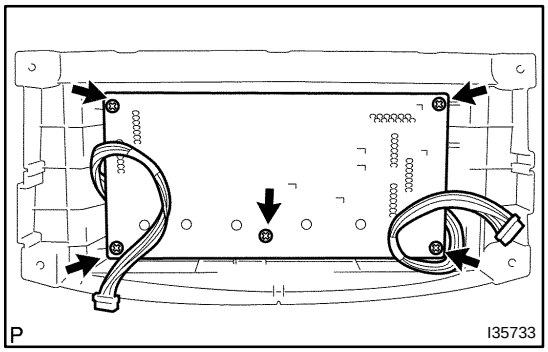

(c) Remove the 5 screws and the air conditioner amplifier assy.

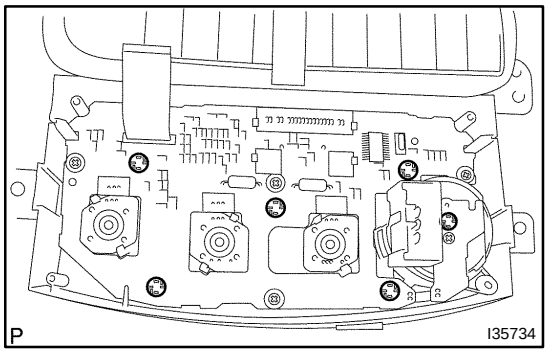

13. REMOVE INTEGRATION CONTROL & PANEL BULB (MANUAL AIR CONDITIONING)

(a) Remove the integration control & panel bulb.

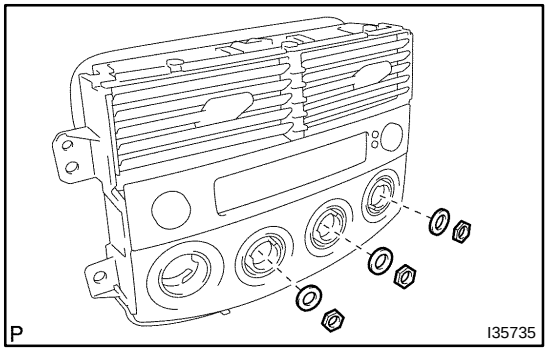

14. REMOVE HEATER BLOWER SWITCH (MANUAL AIR CONDITIONING)

(a) Remove the 3 nuts, and the 3 washers.

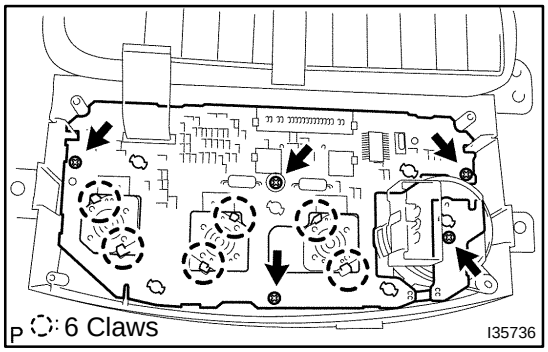

(b) Release the 6 claw fittings and remove the 5 screws and printed wire integration board sub-assy.

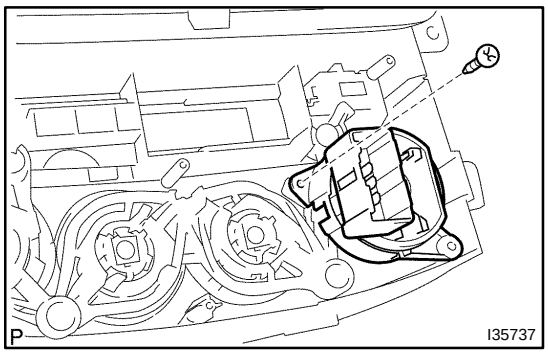

(c) Remove the screw and the heater blower switch.

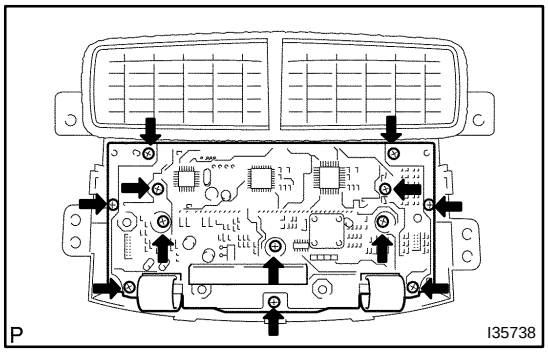

15. REMOVE PRINTED WIRE INTEGRATION BOARD SUB-ASSY (AUTO AIR CONDITIONING)

(a) Remove the 12 screws and the printed wire integration board sub-assy.

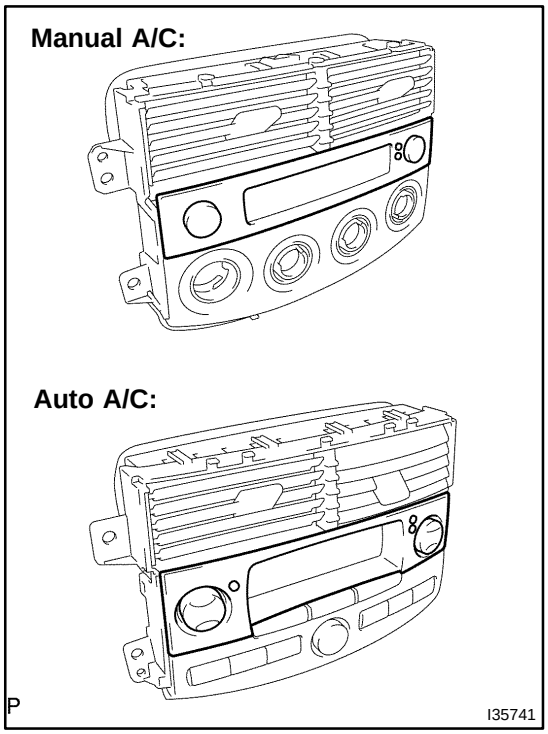

16. REMOVE CLOCK ORNAMENT

(a) Remove the clock ornament.

17. REMOVE CENTER CLUSTER MODULE KNOB NO.5 (AUTO AIR CONDITIONING)

18. REMOVE CENTER CLUSTER MODULE KNOB NO.6 (AUTO AIR CONDITIONING)

AIR CONDITIONING NO.2 CONTROL ASSY

OVERHAUL

550XW-01

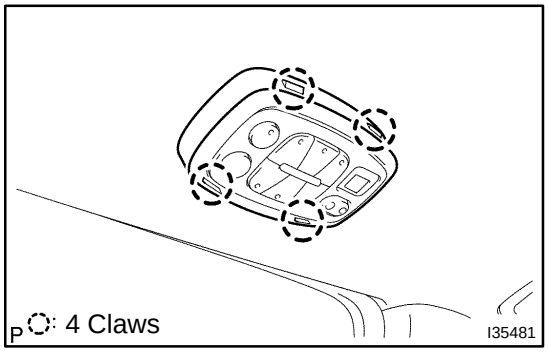

1. REMOVE AIR CONDITIONING NO.2 CONTROL ASSY

(a) Release the 4 claw fittings and release the air conditioning No.2 control assy.

(b) Disconnect the connectors and remove the air conditioning No.2 control assy.

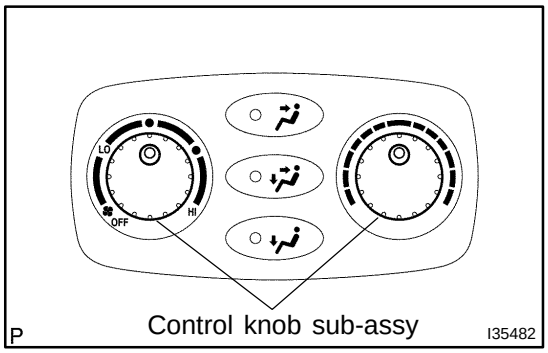

2. REMOVE CONTROL KNOB SUB-ASSY (MANUAL AIR CONDITIONING)

(a) Remove the control knob sub-assy.

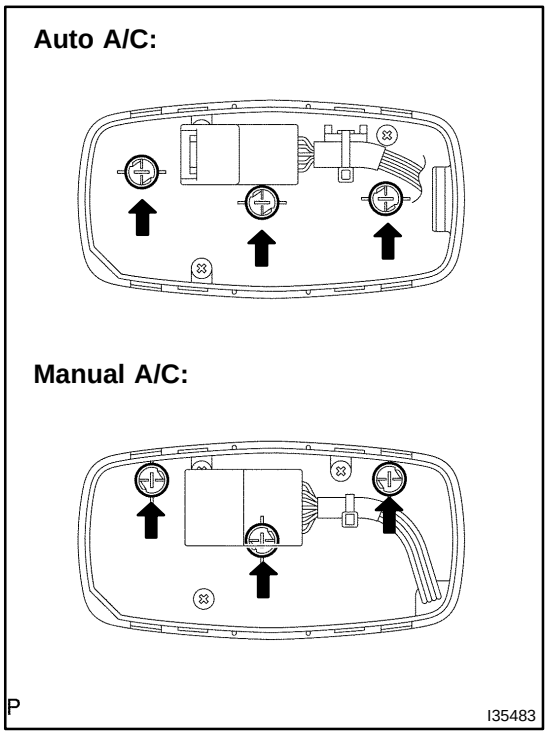

3. REMOVE AIR CONDITIONING CONTROL BULB

(a) Remove the air conditioning control bulb.

550XZ-03

OVERHAUL

HINT:

COMPONENTS: See page 55-31

1. **DISCHARGE REFRIGERANT FROM REFRIGERATION SYSTEM(See page 55-21)**
   SST 07110-58060 (07117-58080, 07117-58090, 07117-78050, 07117-88060, 07117-88070, 07117-88080)
2. **REMOVE FRONT WIPER ARM HEAD CAP(See page 66-8)**
3. **REMOVE FR WIPER ARM RH(See page 66-8)**
4. **REMOVE FR WIPER ARM LH(See page 66-8)**
5. **REMOVE COWL TOP VENTILATOR LOUVER SUB-ASSY(See page 66-8)**
6. **REMOVE WINDSHIELD WIPER MOTOR & LINK ASSY(See page 66-8)**

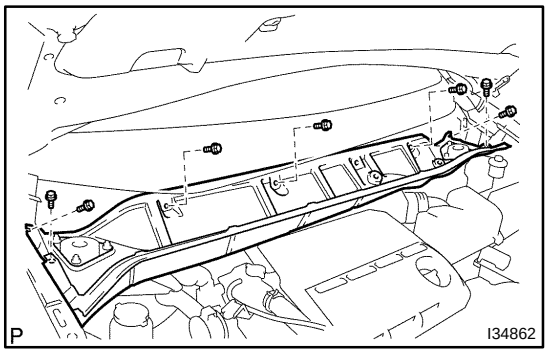

7. **REMOVE COWL TOP PANEL SUB- ASSY OUTER FRONT**
   (a) Remove the 7 bolts and disconnect the cowl top panel sub-assy .
8. **DISCONNECT COOLER REFRIGERANT LIQUID PIPE E (TO COOLER UNIT)**
   (a) Install SST on the piping clamp.
   SST 09870-00025

HINT:

Make sure the direction of the piping clamp claw and SST by checking the illustration shown on the caution label.

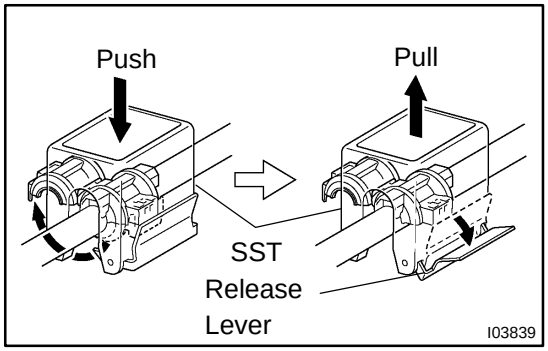

(b) Push down SST and release the clamp lock.

NOTICE:

Be careful not to deform the tube when pushing SST.

(c) Pull SST slightly and push the release lever, and then remove the piping clamp with SST.

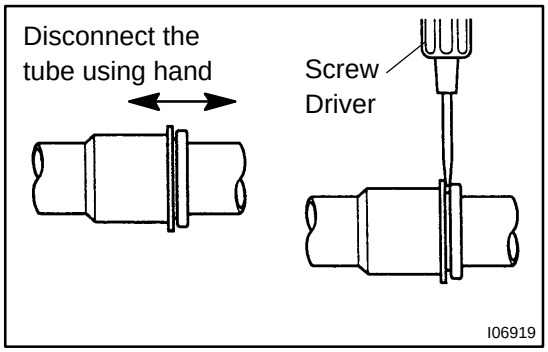

(d) Disconnect the cooler refrigerant liquid pipe (to cooler unit).

NOTICE:

- **Do not use tools like a screwdriver to remove the tube.**
- **Seal the opening of the disconnected parts using vinyl tape to prevent moisture and foreign matters from entering.**

9. DISCONNECT SUCTION HOSE SUB-ASSY

SST 09870-00015

HINT:

Disconnection of the pipe cooler refrigerant suction hose sub-assy is the same way as the cooler refrigerant liquid pipe E (to cooler unit).

10. REMOVE AIR CLEANER CAP SUB-ASSY(See page 10-7)

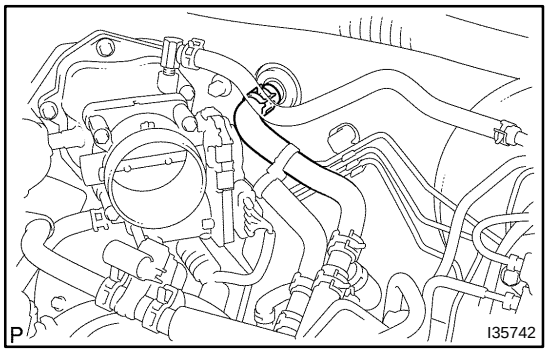

11. DISCONNECT HEATER WATER OUTLET HOSE A(FROM HEATER UNIT)

(a) Using pliers, grip the claws of the clip and slide the clip to disconnect the heater water outlet hose A (from heater unit).

12. DISCONNECT HEATER WATER INLET HOSE A

HINT:

Disconnection of the heater water inlet hose A is the same way as the heater water outlet hose A (from heater unit).

13. REMOVE INSTRUMENT PANEL SUB-ASSY W/PASSENGER AIRBAG ASSY(See page 71-10)

HINT:

Refer to the instructions for removal of the instrument panel sub-assy w/ passenger airbag assy.

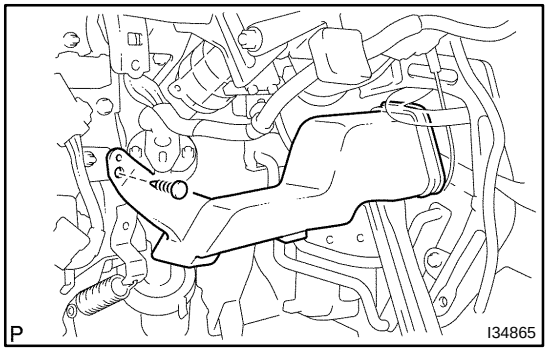

14. REMOVE HEATER TO FOOT DUCT NO.3

(a) Remove the clip and the heater to foot duct No.3.

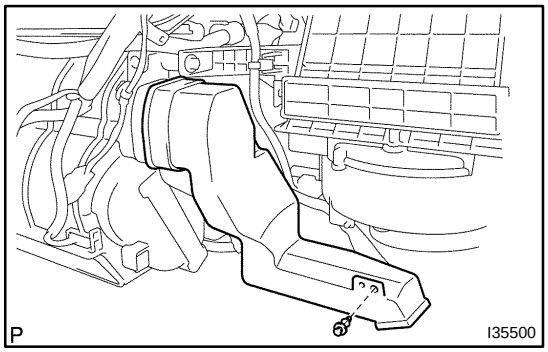

15. REMOVE HEATER TO FOOT DUCT NO.1

(a) Remove the clip and the heater to foot duct No.1.

16. DISCONNECT TRANSMISSION CONTROL CABLE ASSY(See page 40-38)

17. REMOVE SHIFT LOCK CONTROL UNIT ASSY(See page 40-38)

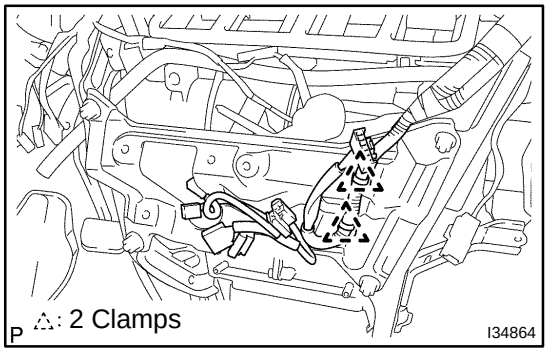

18. REMOVE INSTRUMENT PANEL BRACKET NO.5

(a) Release the 2 clamps and disconnect the connector.

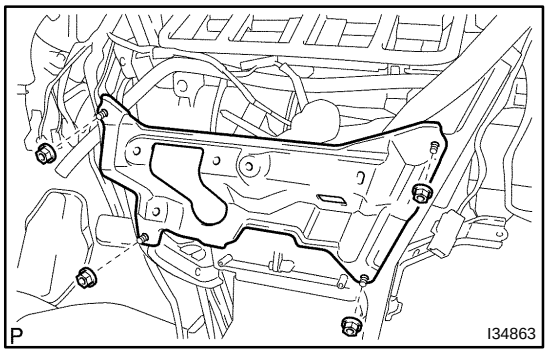

(b) Remove the 4 nuts and the instrument panel bracket No.5.

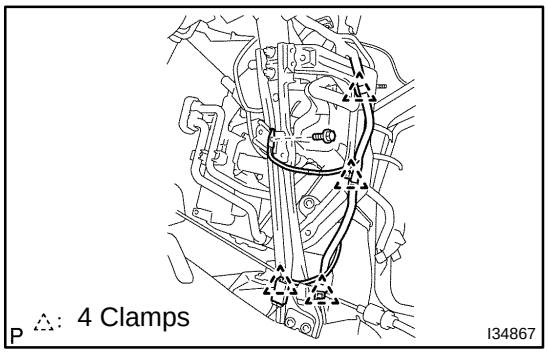

19. REMOVE INSTRUMENT PANEL BRACE SUB-ASSY NO.1

(a) Release the 4 clamps and remove the bolt and disconnect the connector.

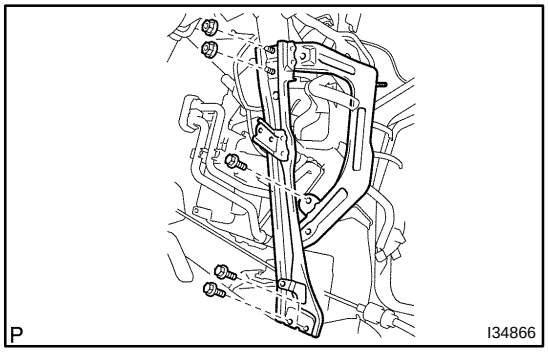

(b) Remove the 3 bolts, the 2 nuts and the instrument panel brace sub-assy No.1.

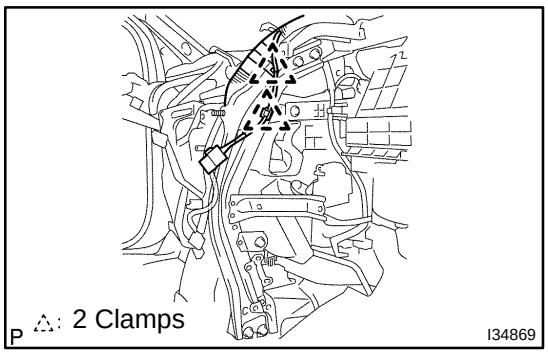

20. REMOVE INSTRUMENT PANEL BRACE SUB-ASSY NO.2

(a) Release the 2 clamps and disconnect the connector.

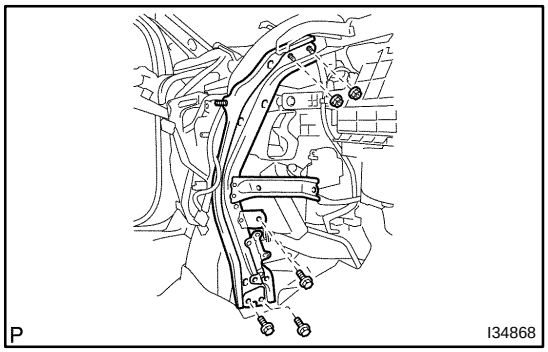

(b) Remove the 3 bolts, the 2 nuts and the instrument panel brace sub-assy No.2.

21. REMOVE STEERING COLUMN ASSY(See page 50-8)

22. REMOVE ECM(See page 10-17)

23. REMOVE STEREO COMPONENT AMPLIFIER ASSY (W/ STEREO COMPONENT AMPLIFIER) (See page 67-23)

24. REMOVE FRONT FENDER GARNISH RH(See page 76-22)

25. REMOVE INSTRUMENT PANEL REINFORCEMENT

(a) Remove the 6 nuts.

(b) Release the 13 clamps.

(c) Disconnect the connectors.

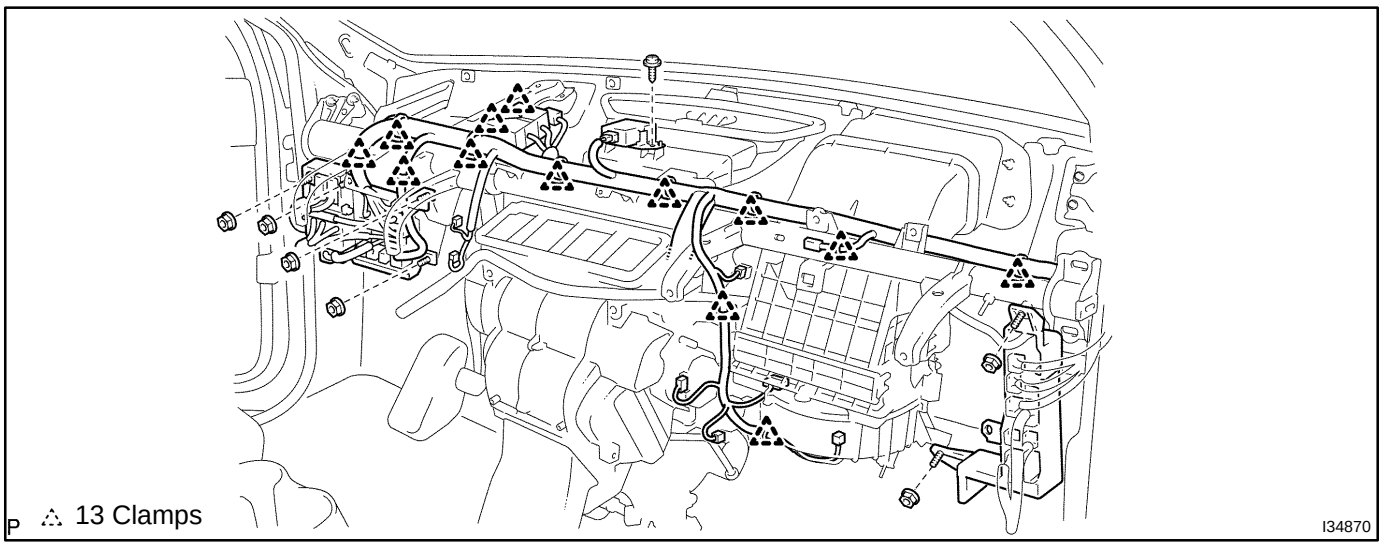

(d) Remove the 11 bolts, 2 nuts and the instrument panel reinforcement.

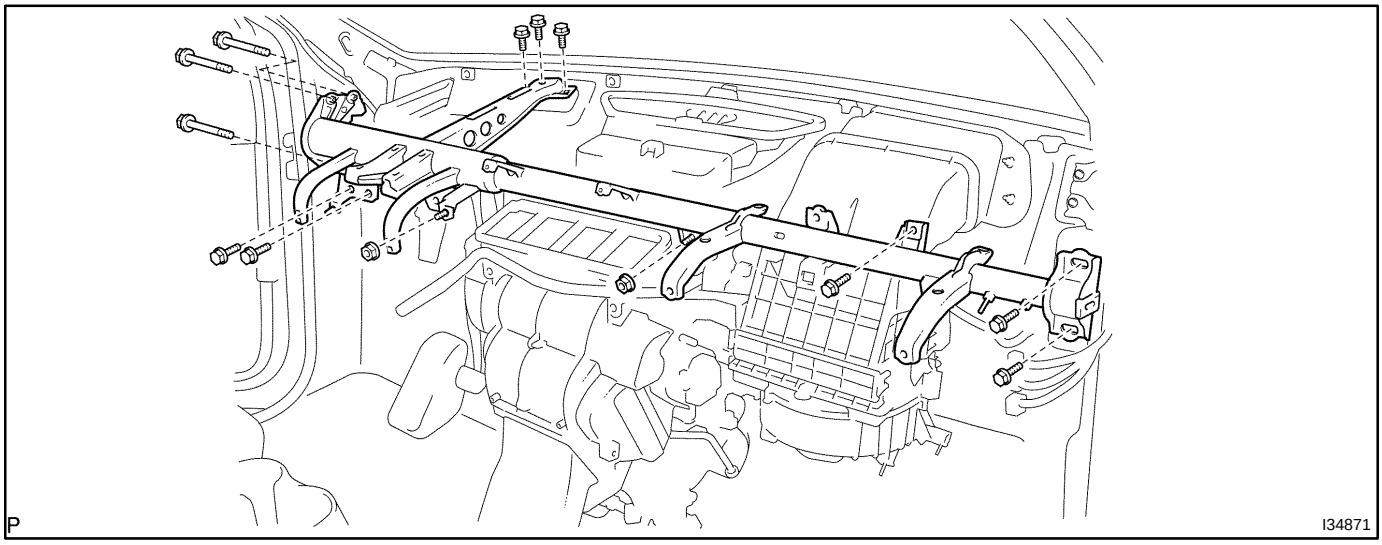

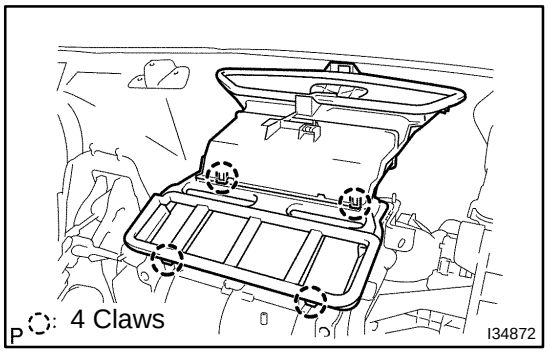

26. REMOVE DEFROSTER NOZZLE ASSY LOWER

(a) Release the 4 claw fittings and remove the defroster nozzle assy lower.

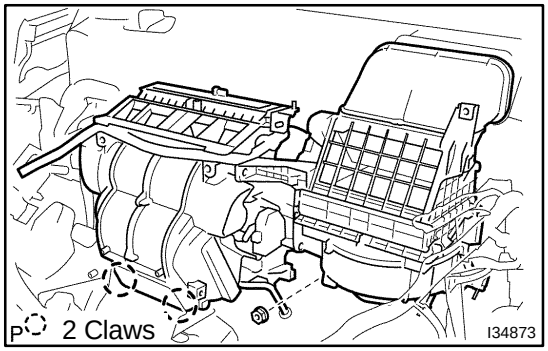

27. REMOVE AIR CONDITIONING UNIT ASSY

(a) Release the 2 claw fittings and remove the nut and the air conditioning unit assy.

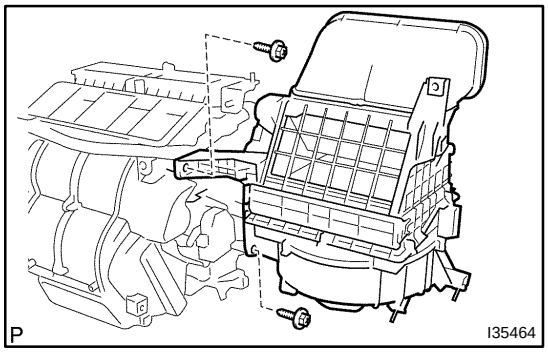

28. REMOVE BLOWER ASSY

(a) Remove the 2 screws and the blower assy.

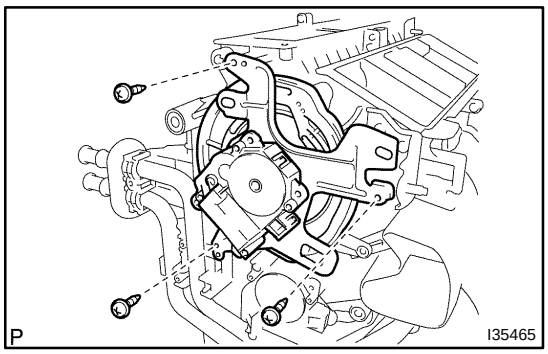

29. REMOVE MODE DAMPER SERVO SUB-ASSY

(a) Remove the 3 screws and the mode damper servo sub-assy.

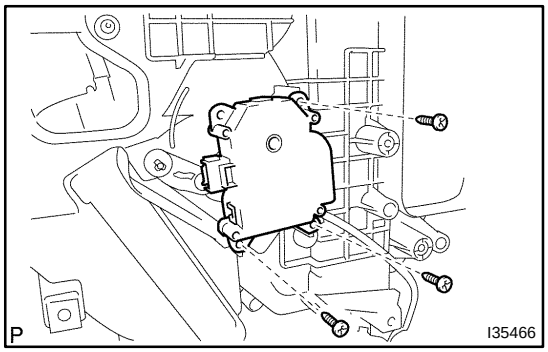

30. REMOVE AIRMIX DAMPER SERVO SUB-ASSY

(a) Remove the 3 screws and the airmix damper servo sub-assy.

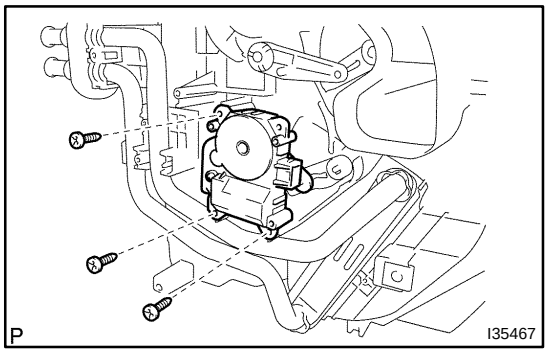

31. REMOVE AIRMIX NO.2 DAMPER SERVO SUB-ASSY (AUTO AIR CONDITIONING)

(a) Remove the 3 screws and the airmix No.2 damper servo sub-assy .

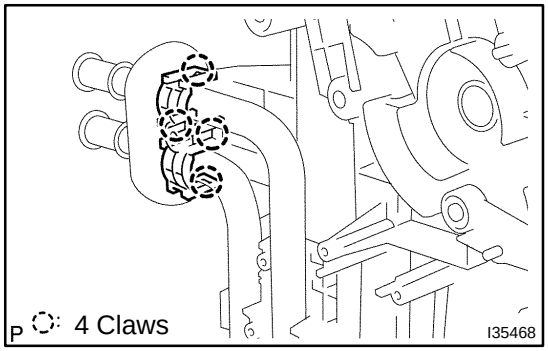

32. REMOVE HEATER CLAMP NO.1

(a) Release the 4 claw fittings and remove the heater clamp No.1.

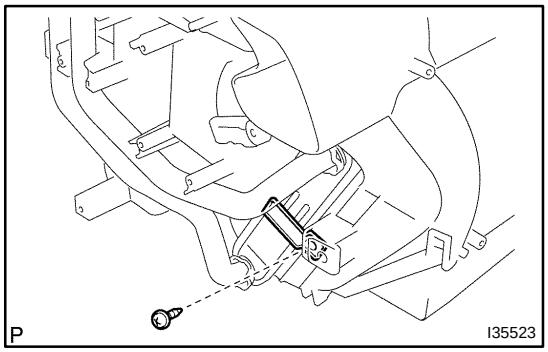

33. REMOVE AIR CONDITIONING RADIATOR BRACKET NO.3

(a) Remove the screw and the air conditioning radiator bracket No.3.

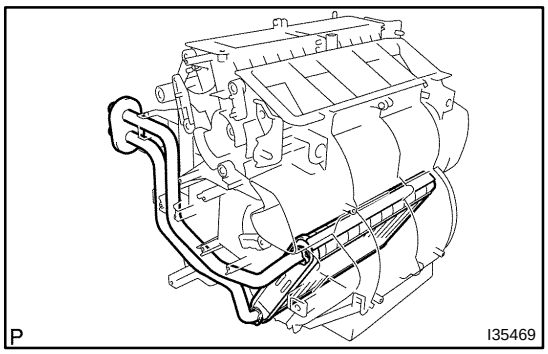

34. REMOVE HEATER RADIATOR UNIT SUB-ASSY

(a) Remove the heater radiator unit sub-assy from the air conditioning radiator assy.

35. REMOVE COOLER THERMISTOR NO.1

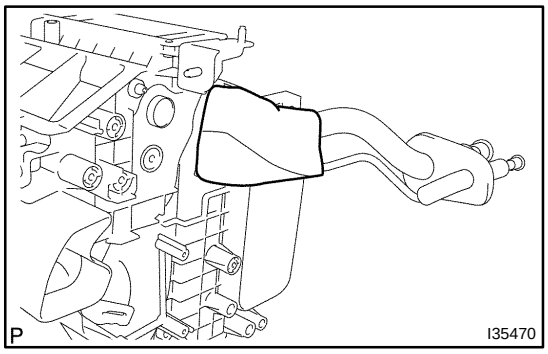

36. REMOVE COOLING UNIT PACKING NO.3

(a) Remove the cooling unit packing No.3.

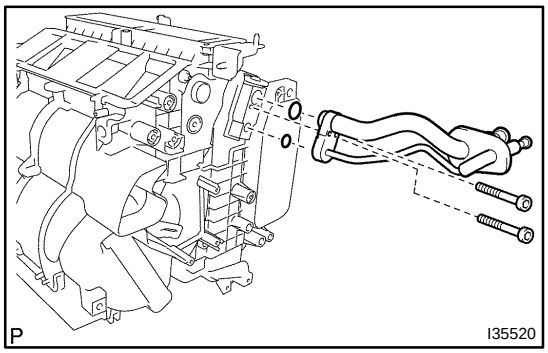

37. REMOVE AIR CONDITIONING TUBE ASSY

(a) Using a hexagon wrench 4.0 mm (0.15 in.), remove the 2 hexagon bolts and the air conditioning tube assy.

(b) Remove the 2 O-rings from the air conditioning tube assy.

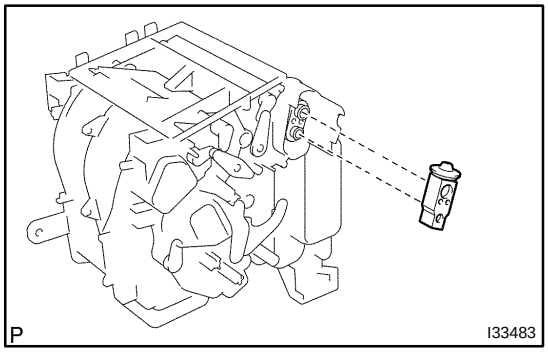

38. REMOVE COOLER EXPANSION VALVE

(a) Remove the cooler expansion valve from the cooler evaporator sub-assy No.1.

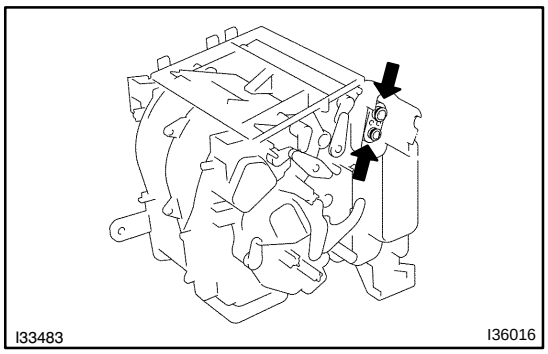

(b) Remove the 2 O-rings from the cooler evaporator Sub-assy No.1.

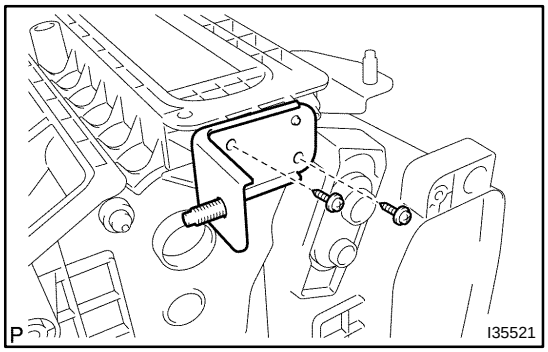

39. REMOVE AIR CONDITIONING RADIATOR BRACKET NO.2

(a) Remove the 2 screws and the air conditioning radiator bracket No.2.

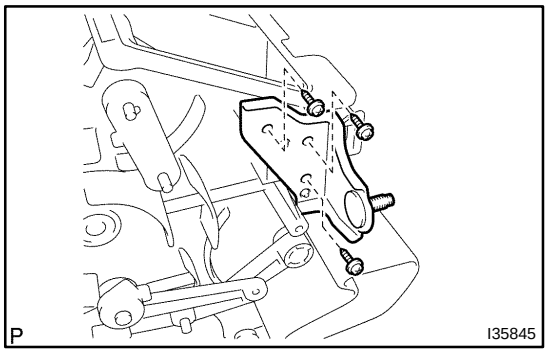

40. REMOVE AIR CONDITIONING RADIATOR BRACKET NO.1

(a) Remove the 3 screws and the air conditioning radiator bracket No.1.

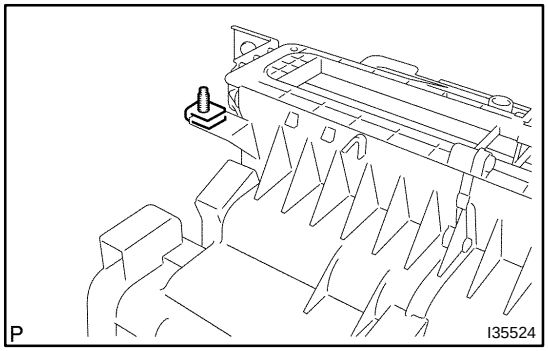

41. REMOVE AIR CONDITIONING RADIATOR BRACKET NO.4

(a) Remove the air conditioning radiator bracket No.4.

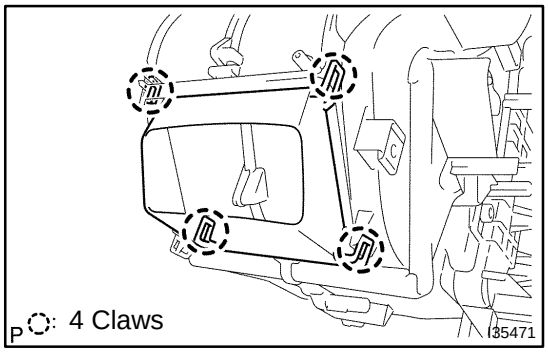

42. REMOVE AIR DUCT NO.1

(a) Release the 4 claw fittings and remove the air duct No.1.

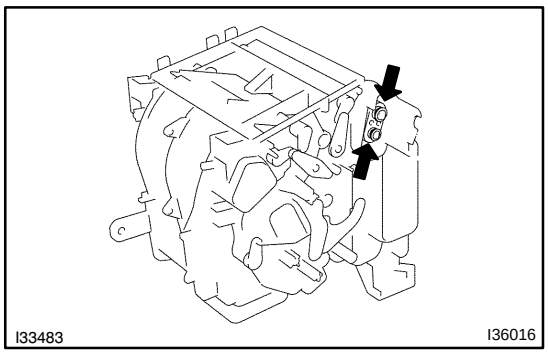

43. INSTALL COOLER EXPANSION VALVE

(a) Sufficiently apply compressor oil to 2 new O-rings and the fitting surface of the cooler evaporator sub-assy No.1.
Compressor oil: ND-OIL 8 or equivalent

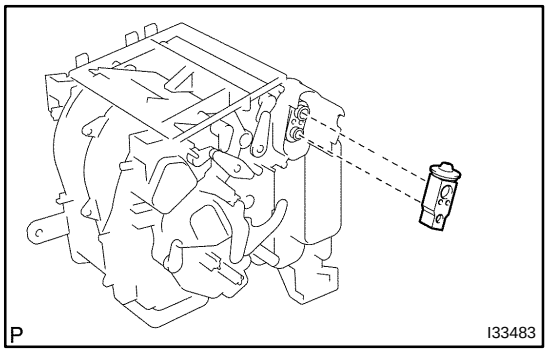

(b) Install the cooler expansion valve to the cooler evaporator sub-assy No.1.

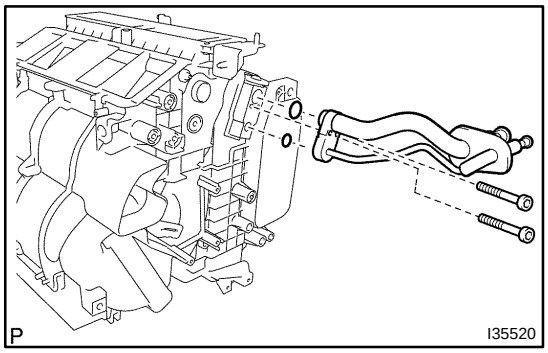

44. INSTALL AIR CONDITIONING TUBE ASSY

(a) Sufficiently apply compressor oil to 2 new O-rings and the fitting surface of the air conditioning tube assy.
Compressor oil: ND-OIL 8 or equivalent

(b) Install the 2 O-rings on the air conditioning tube assy.

(c) Using a hexagon wrench 4.0 mm (0.15 in.), install the air conditioning tube assy with the 2 hexagon bolts.
Torque: 3.5 N·m (35 kgf·cm, 30 in.·lbf)

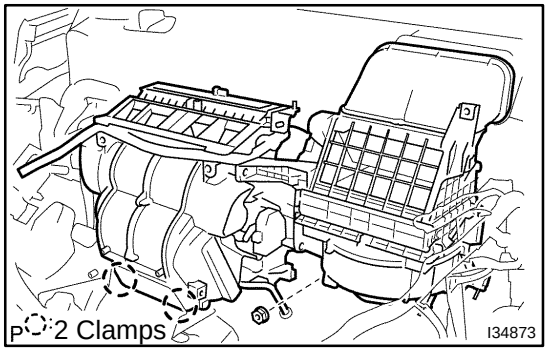

45. TEMPORARILY TIGHTEN AIR CONDITIONING UNIT ASSY

(a) Temporarily tighten the air conditioning unit assy with the nut.
Torque: 9.8 N·m (100 kgf·cm, 87 in.·lbf)

(b) Install the 2 clamps.

46. INSTALL INSTRUMENT PANEL REINFORCEMENT

(a) Install the instrument panel reinforcement with the 10 bolts.

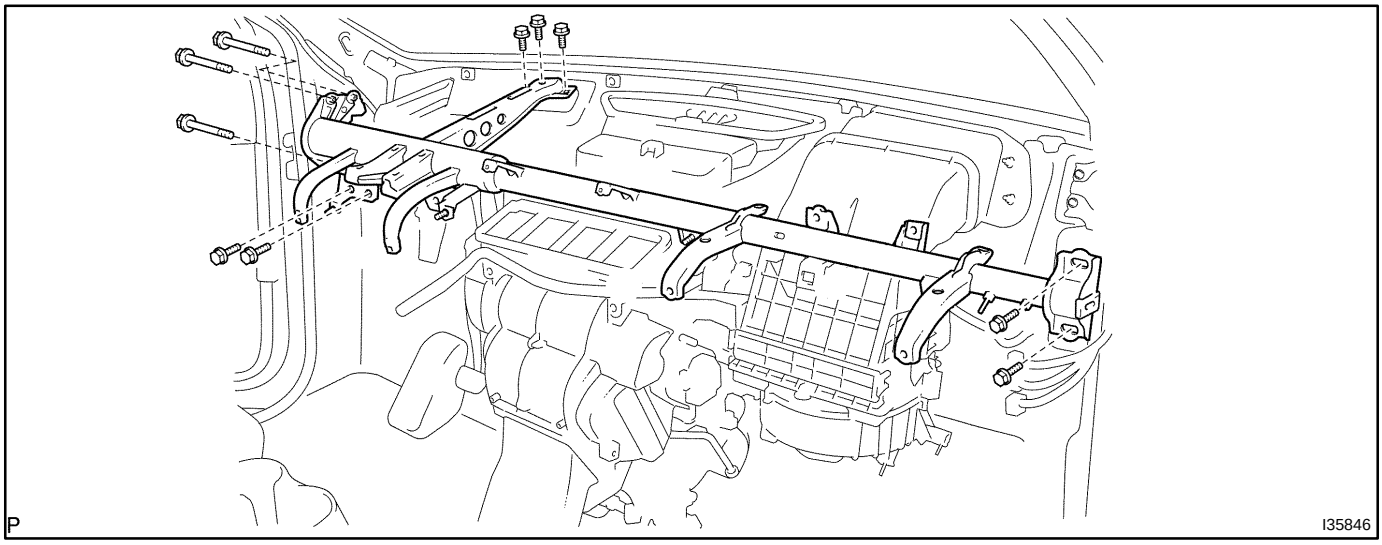

(b) Install the 13 clamps.

(c) Connect the connectors.

(d) Install the 6 nuts.

Torque: 7.3 N·m (74 kgf·cm, 65 in.·lbf)

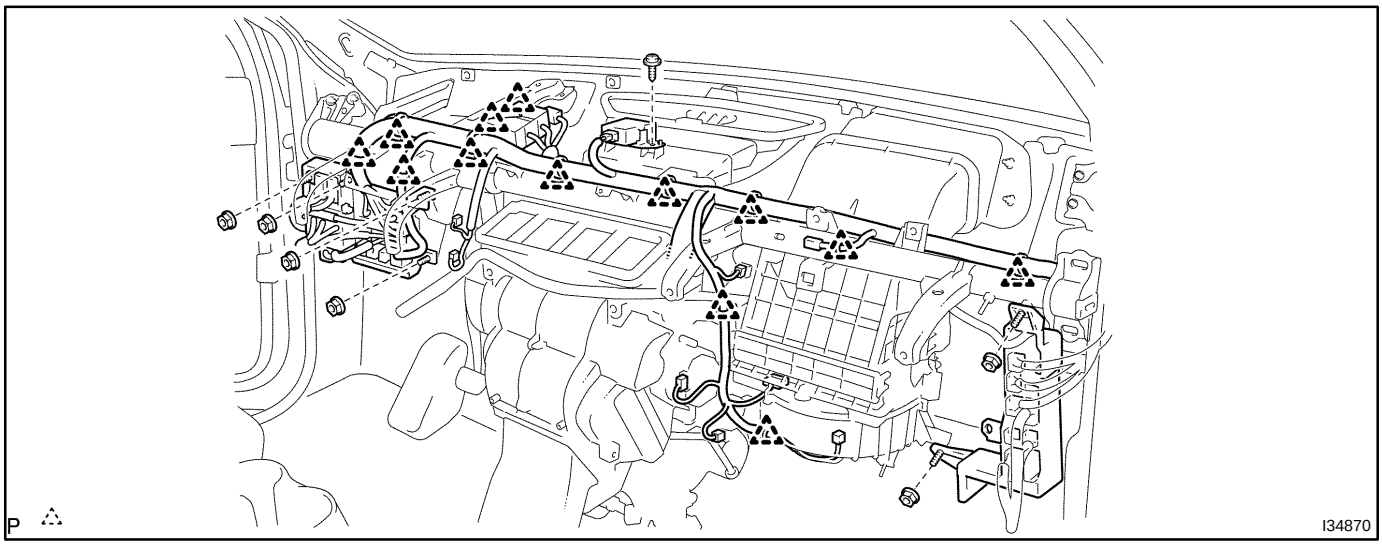

47. INSTALL AIR CONDITIONING UNIT ASSY

(a) Install the air conditioner unit assy with the 3 bolts and 2 nuts.

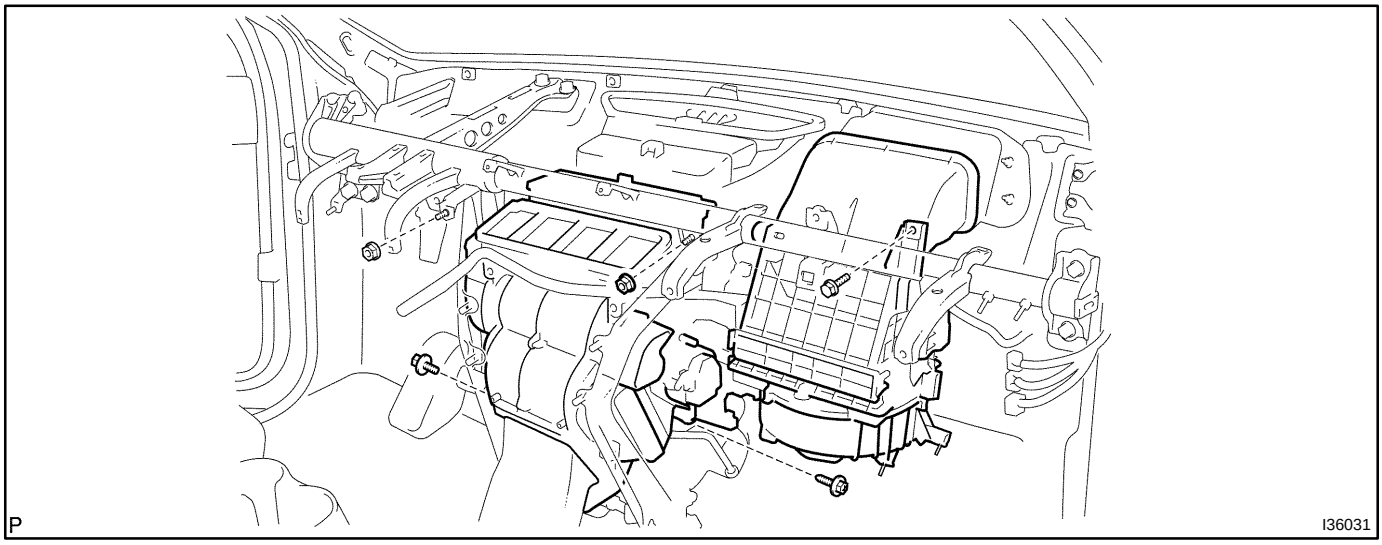

48. INSTALL SHIFT LOCK CONTROL UNIT ASSY(See page 40-38)

49. CONNECT TRANSMISSION CONTROL CABLE ASSY(See page 40-38)

50. INSTALL STEERING COLUMN ASSY(See page 50-8)

51. INSTALL INSTRUMENT PANEL SUB-ASSY W/PASSENGER AIRBAG ASSY(See page 71-10)

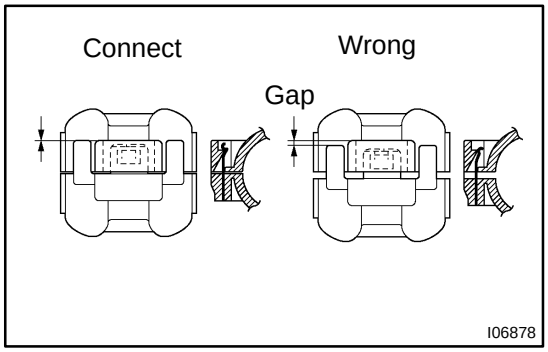

52. INSTALL SUCTION HOSE SUB-ASSY

(a) Lubricate a new O-ring with compressor oil and install it on the hose.

Compressor oil: ND-OIL 8 or equivalent

(b) Install the suction hose sub-assy and the piping clamp.

HINT:

After the connection, check the claw fitting of the piping clamp.

53. INSTALL COOLER REFRIGERANT LIQUID PIPE E (TO COOLER UNIT)

(a) Lubricate a new O-ring with compressor oil and install it to the pipe.

Compressor oil: ND-OIL 8 or equivalent

(b) Install the cooler refrigerant liquid pipe E and the piping clamp.

HINT:

After the connection, check the claw fitting of the piping clamp.

54. ADJUST SHIFT LEVER POSITION(See page 40-44)

55. INSPECT SHIFT LEVER POSITION(See page 40-44)

56. INSPECT CHECK KEY INTERLOCK OPERATION(See page 40-34)

57. INSPECT CHECK SHIFT LOCK OPERATION(See page 40-34)

58. INSPECT CHECK SHIFT LOCK RELEASE BUTTON OPERATION(See page 40-34)

59. ADD COOLANT(See page 16-8)

60. CHARGE REFRIGERANT(See page 55-21)

SST 07110-58060 (07117-58060, 07117-58070, 07117-58080, 07117-58090, 07117-78050, 07117-88060, 07117-88070, 07117-88080)

Specified amount: 780 ± 30 g (27.5 ± 1.06 oz.)

61. WARM UP ENGINE

62. CHECK FOR ENGINE COOLANT LEAKS(See page 16-1)

63. INSPECT LEAKAGE OF REFRIGERANT(See page 55-21)

550Y1-01

OVERHAUL

HINT:

COMPONENTS: See page 55-45

1. REMOVE INSTRUMENT PANEL SUB-ASSY W/PASSENGER AIRBAG ASSY (See page 71-10)

HINT:

Refer to the instructions for removal of the instrument panel sub-assy w/ passenger airbag assy.

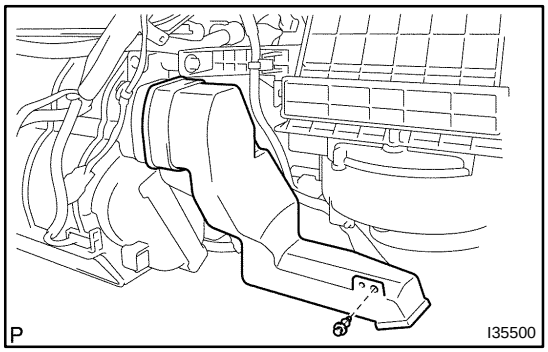

2. REMOVE HEATER TO FOOT DUCT NO.1

(a) Remove the clip and the heater to foot duct No.1.

3. REMOVE ECM (See page 10-17)

4. REMOVE STEREO COMPONENT AMPLIFIER ASSY (W/ STEREO COMPONENT AMPLIFIER) (See page 67-23)

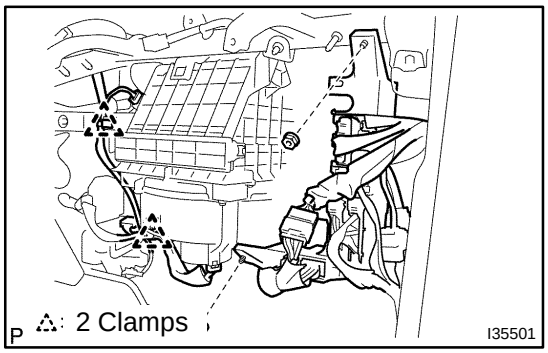

5. REMOVE BLOWER ASSY

(a) Release the 2 clamps, the 2 nuts and the wire harness.

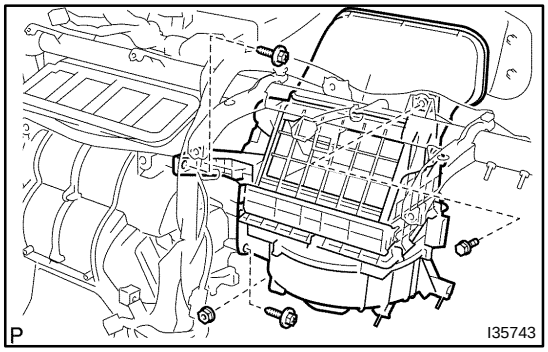

(b) Remove the bolt, the 2 screws and the nut.

(c) Remove the blower assy.

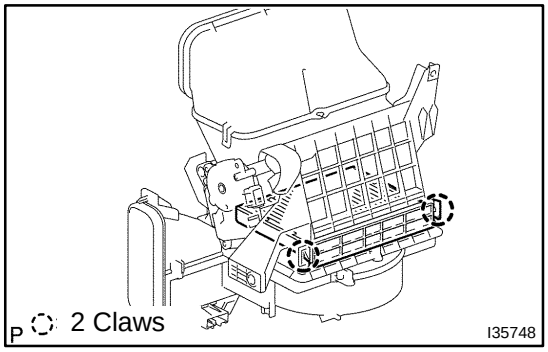

6. REMOVE AIR REFINER ELEMENT

(a) Release the 2 claw fittings and remove the air filter sub-assy.

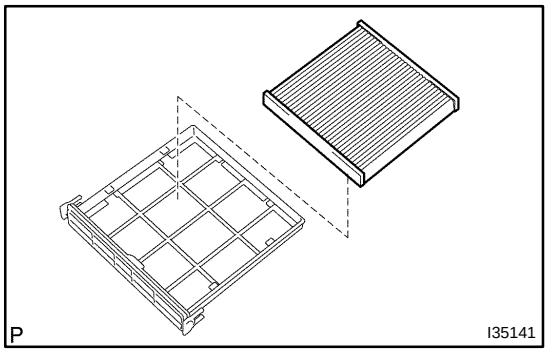

(b) Remove the air refiner element from the air filter cover plate.

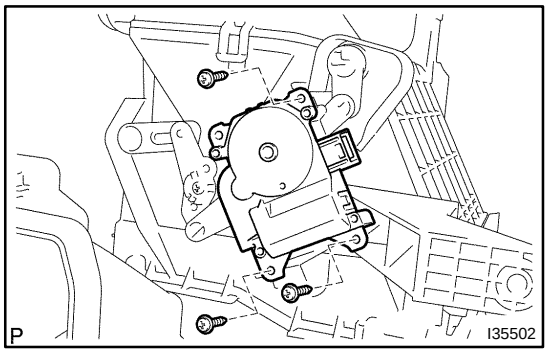

7. REMOVE COOLING UNIT DAMPER SERVO SUB-ASSY

(a) Remove the 3 screws and the cooling unit damper servo sub-assy .

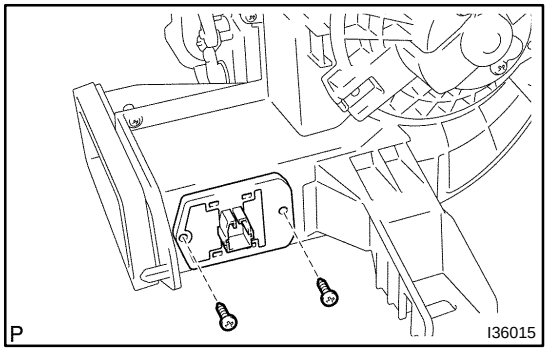

8. REMOVE BLOWER RESISTOR (MANUAL AIR CONDITIONING)

(a) Remove the 2 screws and the blower resistor.

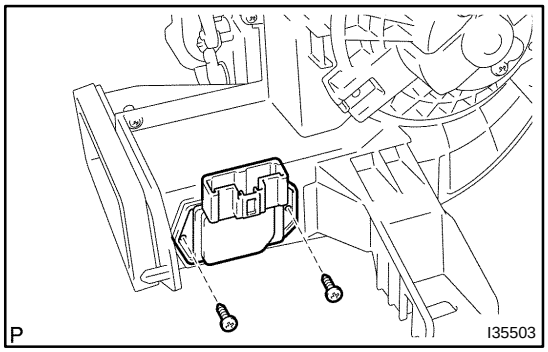

9. REMOVE BLOWER MOTOR CONTROL (AUTO AIR CONDITIONING)

(a) Remove the 2 screws and the blower motor control.

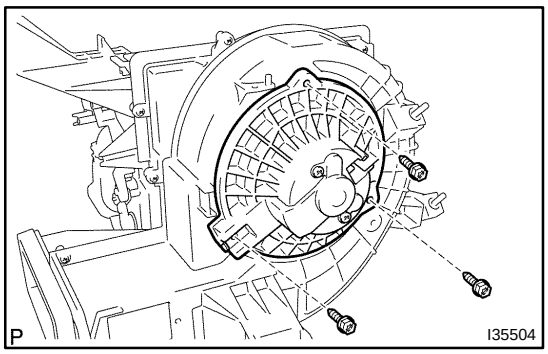

10. REMOVE BLOWER W/FAN MOTOR SUB-ASSY

(a) Remove the 3 screws and the blower w/ fan motor sub-assy.

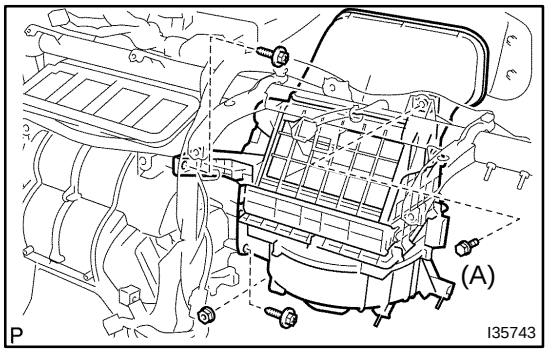

11. INSTALL BLOWER ASSY

(a) Install the blower assy.

(b) Install the bolt, the 2 screws and the nut.
Torque: 9.8 N·m (100 kgf·cm, 87 in.·lbf) (bolt A)

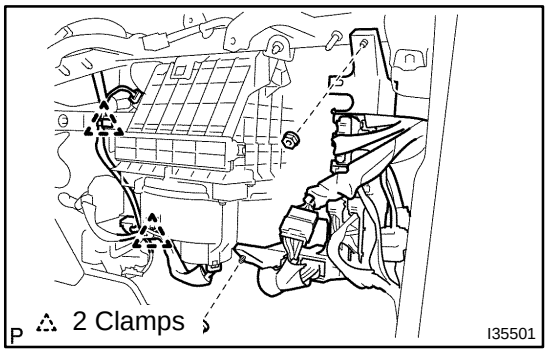

(c) Install the 2 clamps and 2 nuts and wire harness.

12. INSTALL INSTRUMENT PANEL SUB-ASSY W/PASSENGER AIRBAG ASSY
(See page 71-10)

551K9-03

OVERHAUL

HINT:

COMPONENTS: See page 55-64

1. **DISCHARGE REFRIGERANT FROM REFRIGERATION SYSTEM (See page 55-21)**
   SST 07110-58060 (07117-58080, 07117-58090, 07117-78050, 07117-88060, 07117-88070, 07117-88080)
2. **REMOVE REAR DOOR SCUFF PLATE RH (See page 76-27)**
3. **REMOVE BACK DOOR SCUFF PLATE (See page 76-27)**
4. **REMOVE QUARTER TRIM PANEL ASSY FRONT RH (See page 76-27)**
5. **REMOVE ROOF HEADLINING GARNISH REAR (See page 76-27)**
6. **REMOVE RR WINDOW SIDE GARNISH ASSY NO.2 RH (See page 76-27)**

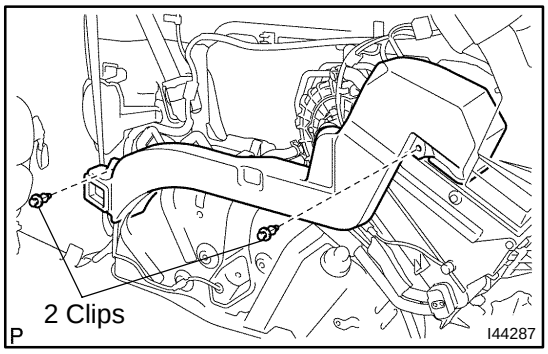

7. **REMOVE AIR DUCT ASSY**
   (a) Remove the 2 clips and the air duct assy from the air conditioning blower assy.

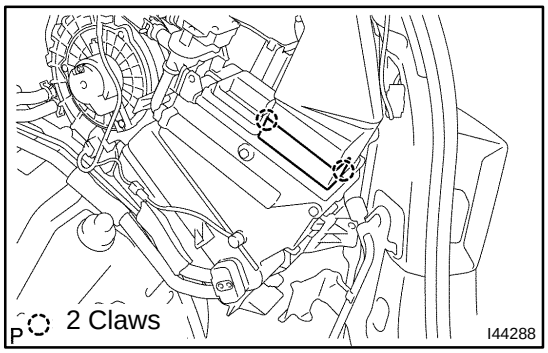

8. **REMOVE COVER SUB-ASSY**
   (a) Disengage the 2 claw fittings and remove the cover sub-assy.

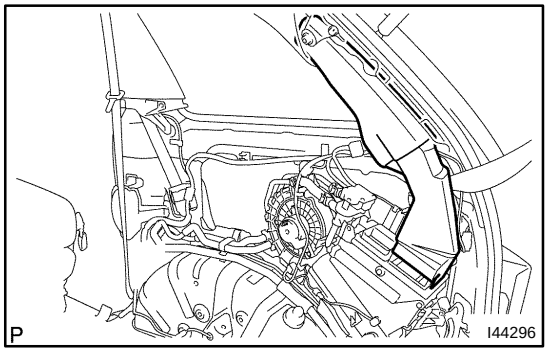

9. **REMOVE AIR DUCT ASSY**
   (a) Remove the air duct assy.

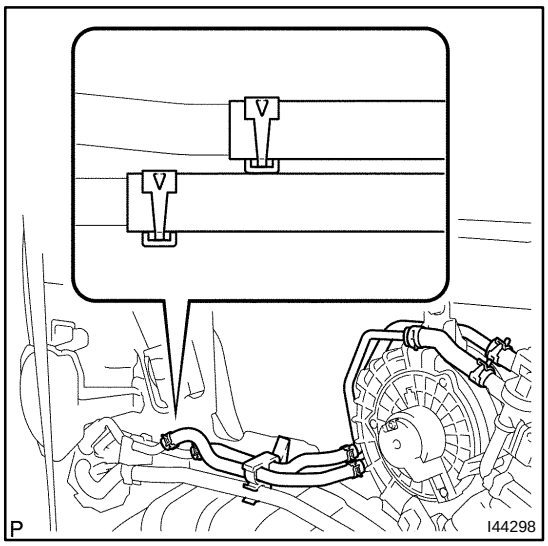

10. DISCONNECT HEATER HOSE

(a) Release the claw fittings and release the heater hose clamp.

(b) Using pliers, grip the claws of the 2 clips and slide the clip to disconnect the 2 heater hoses.

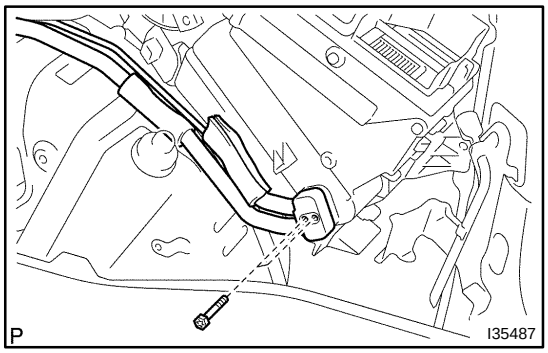

11. DISCONNECT AIR CONDITIONING TUBE & ACCESSORY ASSY

(a) Remove the 2 bolts and disconnect the air conditioning tube & accessory assy.

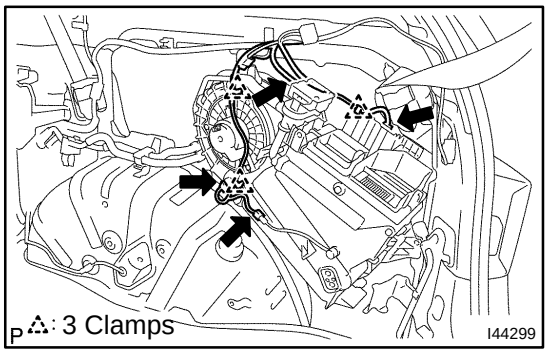

12. REMOVE AIR CONDITIONING BLOWER ASSY

(a) Disconnect the 4 connectors, release the 3 clamps and separate the wire harness.

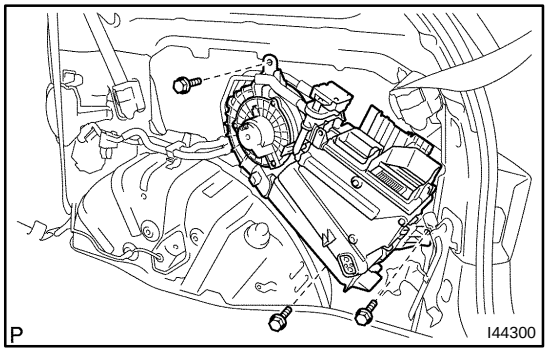

(b) Remove the 3 bolts and the air conditioning blower assy.

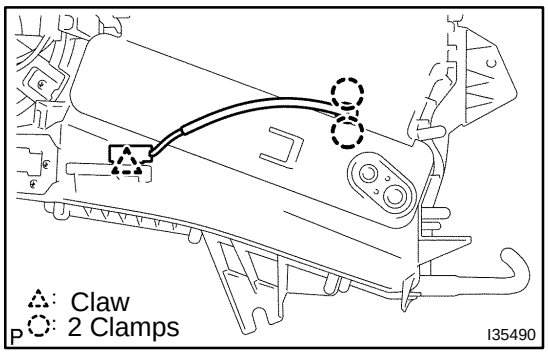

13. REMOVE COOLER THERMISTOR NO.1 (AUTO AIR CONDITIONING)

(a) Release the 2 claw fittings and the clamp and remove the cooler thermistor No.1.

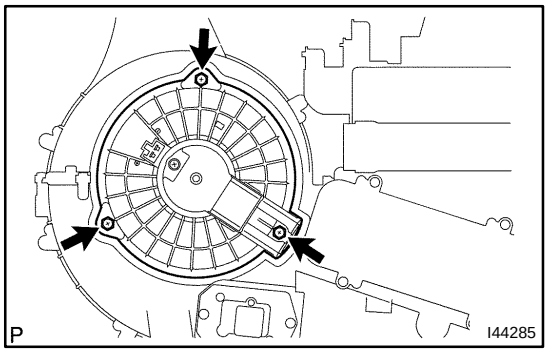

14. REMOVE COOLING UNIT MOTOR SUB-ASSY W/FAN

(a) Remove the 3 screws and the cooling unit motor sub-assy w/ fan.

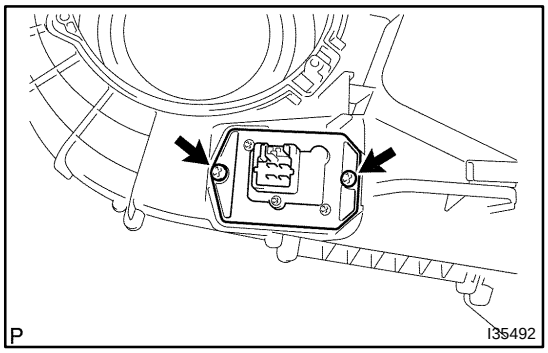

15. REMOVE BLOWER RESISTOR TRANSISTOR ASSY

(a) Remove the 2 screws and the blower resistor transistor assy.

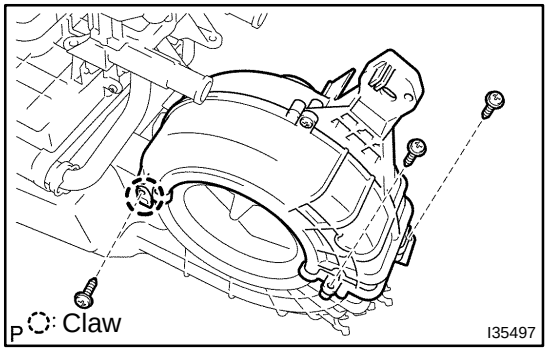

16. REMOVE HEATER RADIATOR UNIT SUB-ASSY

(a) Release the claw fitting and remove the 3 screws and blower case.

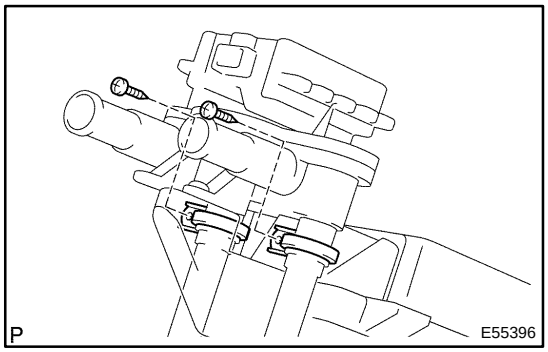

(b) Remove the 2 screws and the 2 clamps.

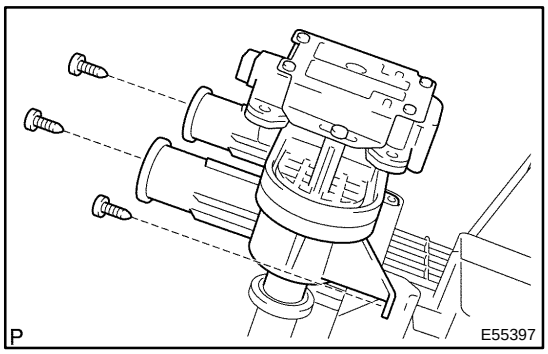

(c) Remove the 3 screws and the heater water valve assy.
(d) Remove the 2 O-rings from the heater water valve assy.

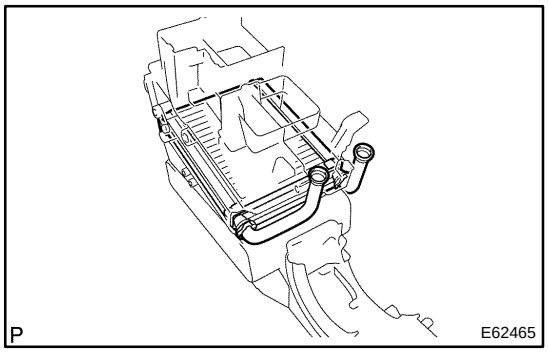

(e) Remove the heater radiator unit sub-assy from the air conditioning blower assy.

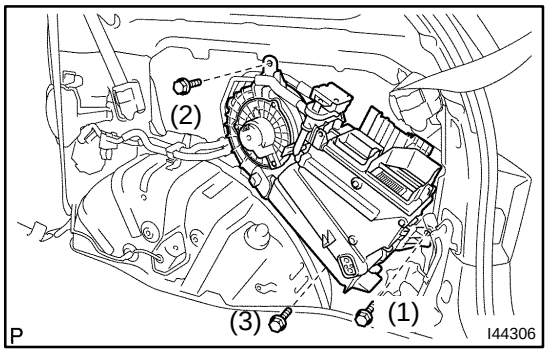

17. INSTALL AIR CONDITIONING BLOWER ASSY

(a) Install the air conditioning blower assy with the 3 bolts.
Torque: 5.4 N·m (55 kgf·cm, 48 in.·lbf)

NOTICE:
Tighten the bolts in the order shown in the illustration to install the air conditioning blower assy.

18. INSTALL AIR CONDITIONING TUBE & ACCESSORY ASSY

(a) Sufficiently apply compressor oil to 2 new O-rings and the fitting surface of the air conditioning tube & accessory assy.
Compressor oil: ND-OIL 8 or equivalent

(b) Install the 2 O-rings on the air conditioning tube & accessory assy.

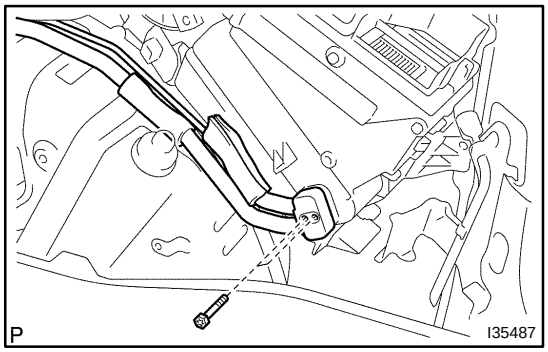

(c) Install the air conditioning tube & accessory assy with the 2 bolts.
Torque: 3.5 N·m (36 kgf·cm, 31 in.·lbf)

19. ADD COOLANT (See page 16-8)

20. CHARGE REFRIGERANT (See page 55-21)

SST 07110-58060 (07117-58060, 07117-58070, 07117-58080, 07117-58090, 07117-78050, 07117-88060, 07117-88070, 07117-88080)

21. WARM UP ENGINE

22. CHECK FOR ENGINE COOLANT LEAKS (See page 16-1)

23. INSPECT LEAKAGE OF REFRIGERANT (See page 55-21)

550XS-01

REPLACEMENT

1. DISCHARGE REFRIGERANT FROM REFRIGERATION SYSTEM

(a) Turn the A/C switch to ON.

(b) Operating the cooler compressor at the engine rpm of approx. 1,000 for 5 to 6 minutes, circulate the refrigerant and collect the compressor oil remaining in each component into the cooler compressor as much as possible.

(c) Stop the engine.

(d) Let the refrigerant gas out.

SST 07110-58060 (07117-58080, 07117-58090, 07117-78050, 07117-88060, 07117-88070, 07117-88080)

2. CHARGE REFRIGERANT

(a) Using a vacuum pump, perform a vacuum purging.

(b) Charge refrigerant, HFC-134a (R134a).

Standard: 780 ± 30 g (27.5 ± 1.06 oz.)

SST 07110-58060 (07117-58060, 07117-58070, 07117-58080, 07117-58090, 07117-78050, 07117-88060, 07117-88070, 07117-88080)

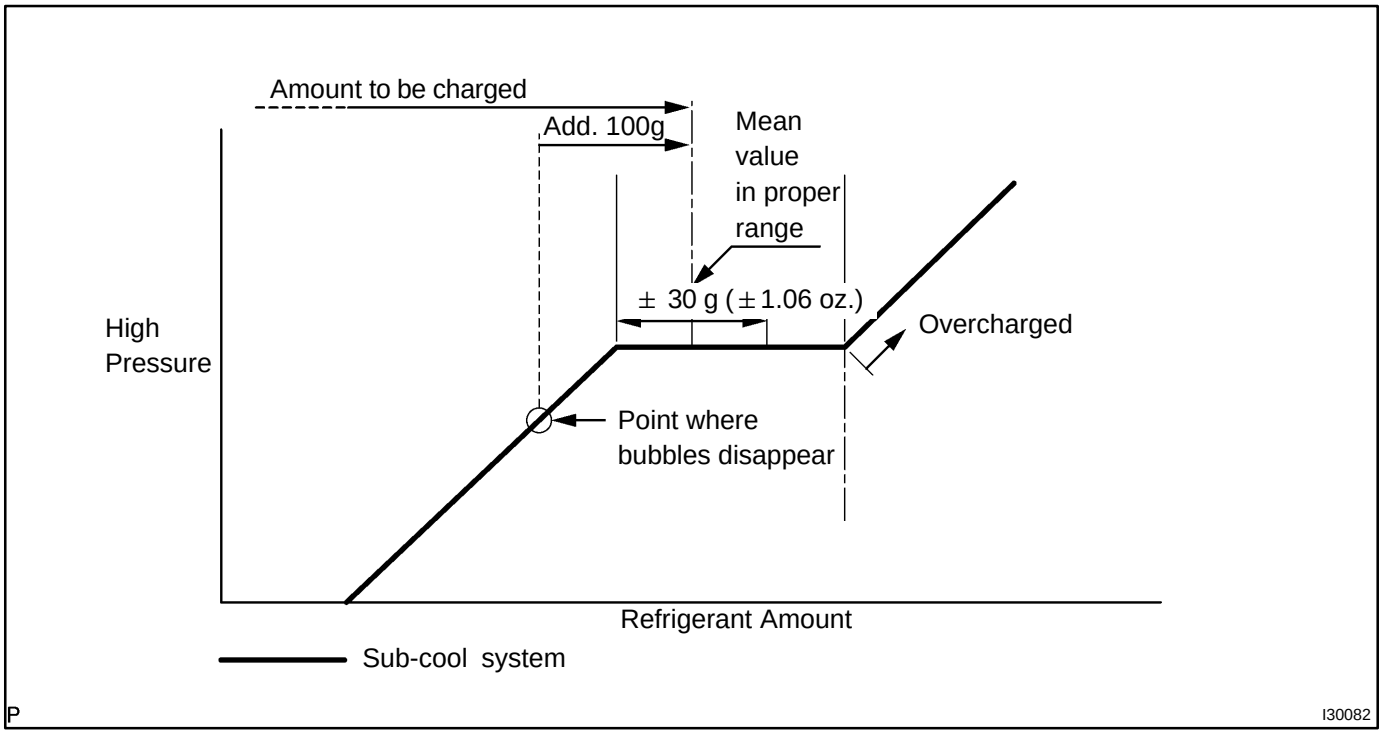

3. WARM UP ENGINE

4. INSPECT LEAKAGE OF REFRIGERANT

(a) Using a gas leak detector, check for leakage of the refrigerant.

V (COOLER COMPRESSOR TO CRANKSHAFT PULLEY) BELT NO.1

550Y5-03

REPLACEMENT

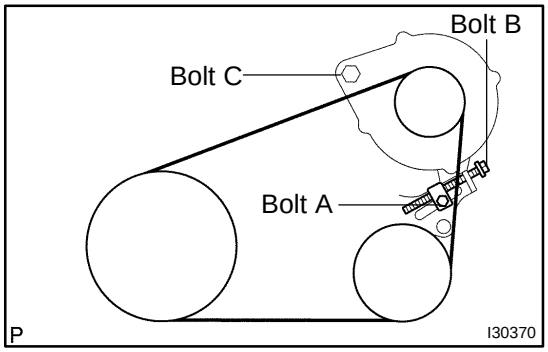

1. REMOVE V (COOLER COMPRESSOR TO CRANKSHAFT PULLEY) BELT NO.1

(a) Loosen the bolt C.

(b) Loosen the bolt A.

(c) Loosen the bolt B and remove the V (cooler compressor to crankshaft pulley)belt No. 1.

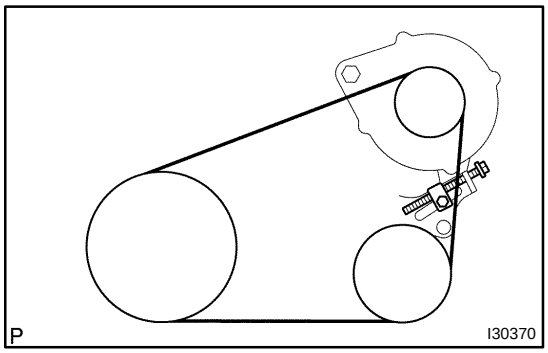

2. INSTALL V (COOLER COMPRESSOR TO CRANKSHAFT PULLEY) BELT NO.1

(a) Temporarily install the V (cooler compressor to crankshaft pulley)belt No. 1 as illustrated.

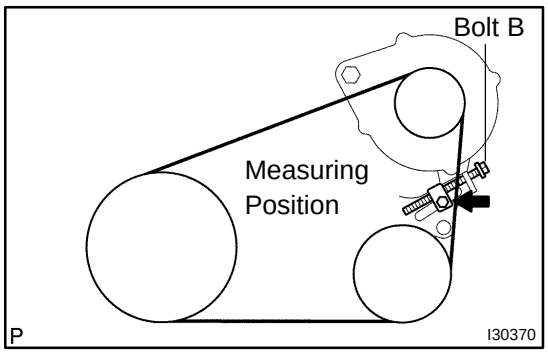

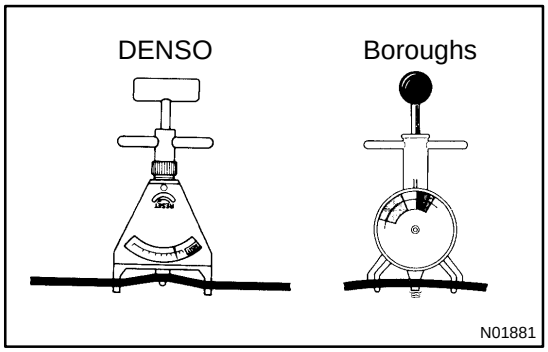

3. ADJUST V (COOLER COMPRESSOR TO CRANKSHAFT PULLEY) BELT NO.1

(a) Apply drive belt tension by turning the bolt B.

Drive Belt Tension:

New Belt: 165 ± 27 lbf

Used belt: 88 ± 22 lbf

HINT:

- ”New belt” refers to a belt which has been used less than 5 minutes on a running engine.
- ”Used belt” refers to a belt which has been used on a running engine for 5 minutes or more.

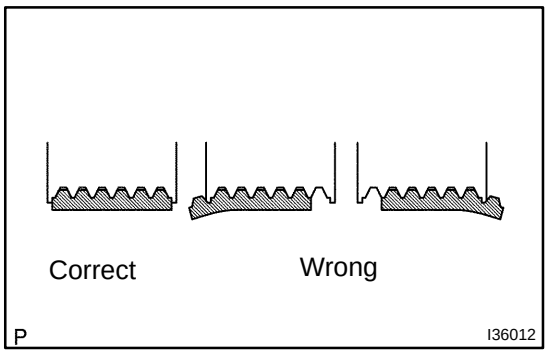

- Check that the drive belt fits properly in the ribbed grooves.

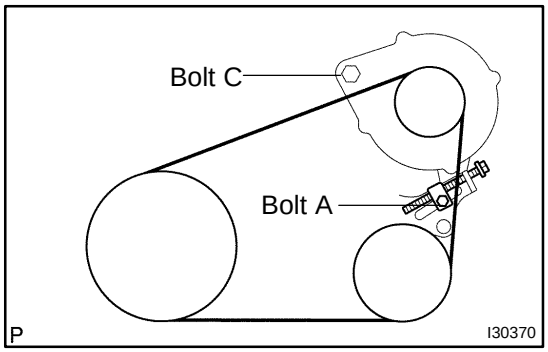

4. FULLY TIGHTEN V (COOLER COMPRESSOR TO CRANKSHAFT PULLEY) BELT NO.1

(a) Tighten the bolt A.
Torque: 17.5 N·m (178 kgf·cm, 12 ft·lbf)

(b) Tighten the bolt C.
Torque: 58 N·m (591 kgf·cm, 43 ft·lbf)

550Y7-02

REPLACEMENT

HINT:

COMPONENTS: See page 55-49

1. DISCHARGE REFRIGERANT FROM REFRIGERATION SYSTEM(See page 55-21)

SST 07110-58060 (07117-58080, 07117-58090, 07117-78050, 07117-88060, 07117-88070, 07117-88080)

2. REMOVE V (COOLER COMPRESSOR TO CRANKSHAFT PULLEY) BELT NO.1 (See page 55-29)

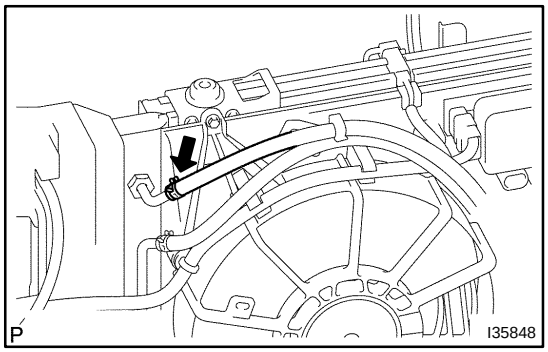

3. DISCONNECT OIL COOLER INLET HOSE NO.1

(a) Using pliers, grip the claws of the clip side to disconnect the oil cooler inlet hose No.1.

4. DISCONNECT OIL COOLER OUTLET HOSE NO.1

HINT:

Disconnection of the oil cooler outlet hose No.1 is the same way as the oil cooler inlet hose No.1.

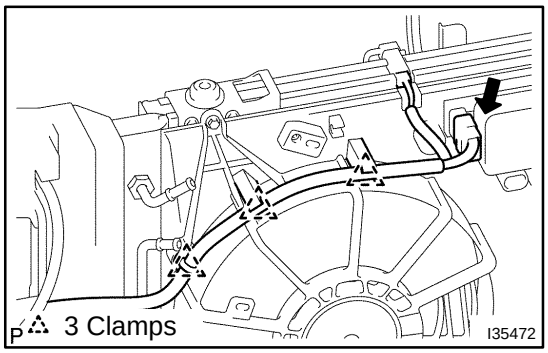

5. REMOVE FAN ASSY W/MOTOR

(a) Release the 3 clamps.

(b) Disconnect the connectors.

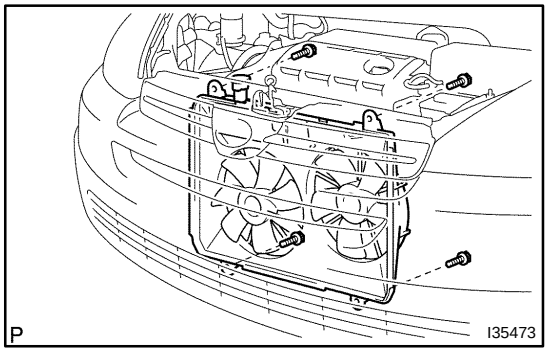

(c) Remove the 4 bolts and the fan assy w/ motor.

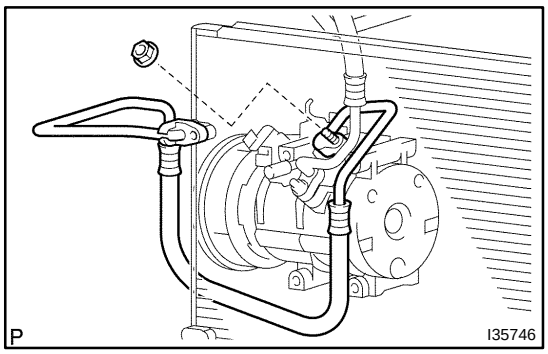

6. DISCONNECT DISCHARGE HOSE SUB-ASSY

(a) Remove the nut and disconnect the discharge hose sub-assy from the compressor and magnetic clutch.

(b) Remove the O-ring from the discharge hose sub-assy.

NOTICE:

Seal the opening of the disconnected parts using vinyl tape to prevent moisture and foreign matters from entering.

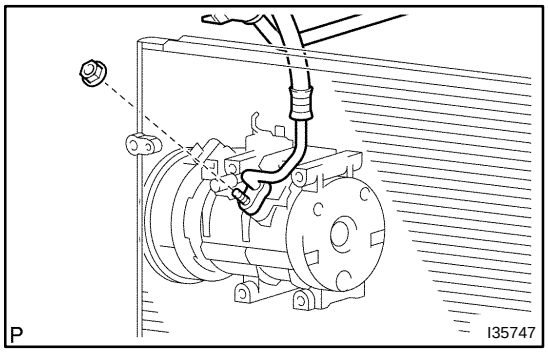

7. DISCONNECT SUCTION HOSE SUB-ASSY

(a) Remove the nut and disconnect the suction hose sub-assy from the compressor and magnetic clutch.

(b) Remove the O-ring from the suction hose sub-assy.

NOTICE:

Seal the opening of the disconnected parts using vinyl tape to prevent moisture and foreign matters from entering.

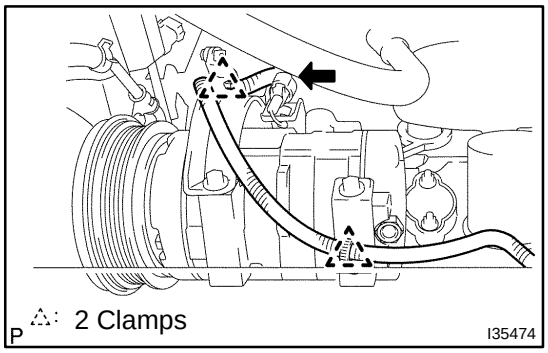

8. REMOVE COMPRESSOR AND MAGNETIC CLUTCH

(a) Disconnect the connector.

(b) Release the 2 clamps and wire harness.

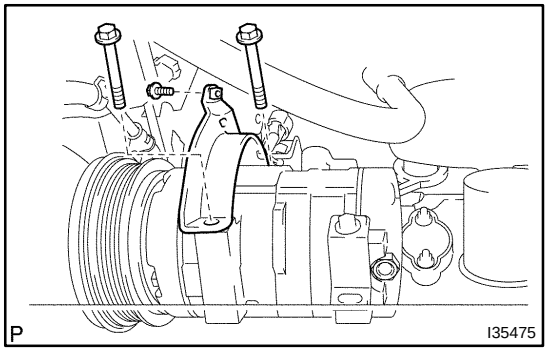

(c) Remove the 3 bolts and the cooler compressor bracket.

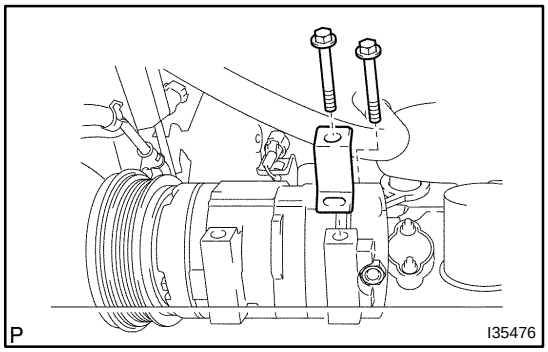

(d) Remove the 2 bolts, the stay, and the compressor and magnetic clutch.

9. REMOVE MAGNET CLUTCH ASSY

(a) Place the compressor and magnetic clutch in a vise.

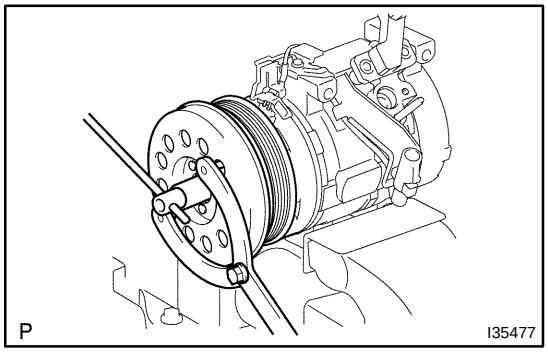

(b) Using SST, remove the bolt, the magnet clutch hub and the magnet clutch washer.
SST 09960-10010 (09962-01000, 09963-00500)

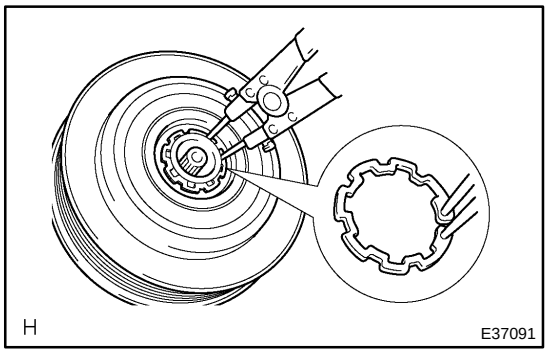

(c) Using a snap ring expander, remove the snap ring and the magnet clutch rotor.

(d) Remove the screw and disconnect the connector.

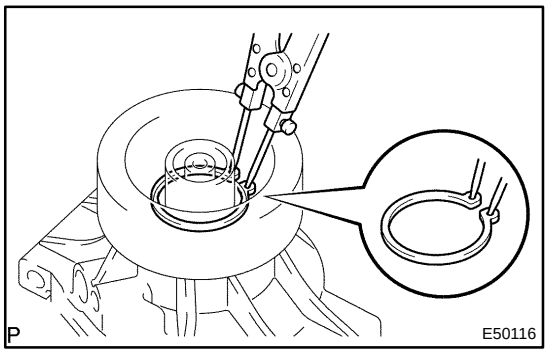

(e) Using a snap ring expander, remove the snap ring and the magnet clutch starter.

10. REMOVE COOLER COMPRESSOR ASSY

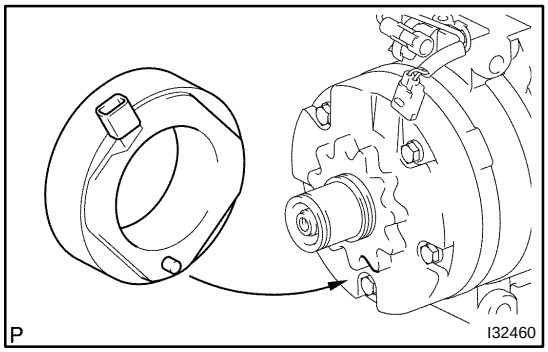

11. INSTALL MAGNET CLUTCH ASSY

(a) Fit the parts as shown in the illustration and install the magnet clutch starter.

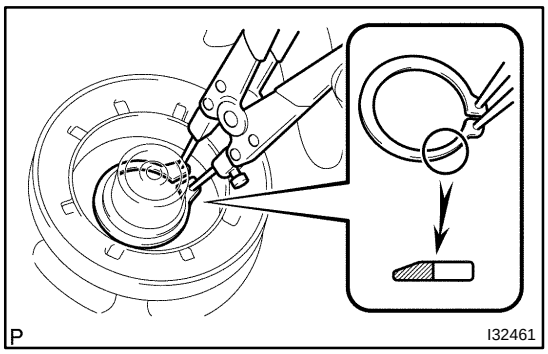

(b) Using a snap ring expander, install a new snap ring with the chamfered side facing up.

(c) Install the screw and connect the connector.

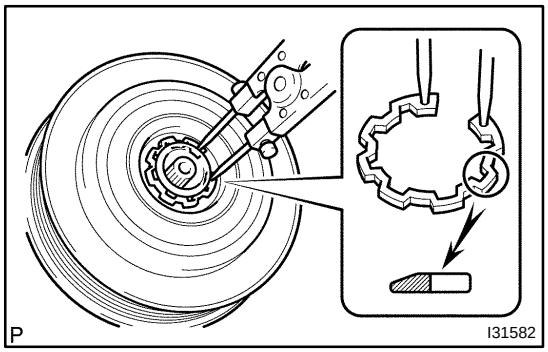

(d) Using a snap ring expander, install the magnet clutch rotor and a new snap ring with the chamfered side facing up.

(e) Install the magnet clutch washer and the magnet clutch hub.

NOTICE:

Do not change the combination of the magnet clutch washers used before disassembly.

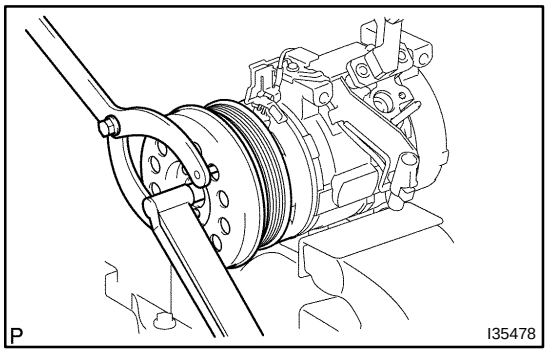

(f) Using SST, install the magnet clutch hub and the magnet clutch washer with the bolt.

SST 09960-10010 (09962-01000, 09963-00500)

Torque: 18 N·m (183 kgf·cm, 13 ft·lbf)

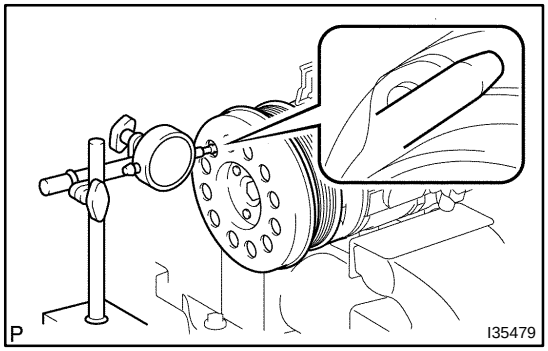

12. INSPECT MAGNETIC CLUTCH CLEARANCE

(a) Set the dial indicator to the magnet clutch hub.

(b) Connect the battery positive lead to the terminal 1 of the magnet clutch connector and the negative lead to the earth wire. Turn on and off the magnet clutch and measure the clearance.

Standard clearance:

0.35 to 0.60 mm (0.013 to 0.023 in.)

If the measured value is not within the standard range, remove the magnet clutch hub and adjust it with the magnet clutch washers.

NOTICE:

Adjustment can be performed with 3 or less magnet clutch washers.

13. INSPECT COMPRESSOR OIL

(a) When replacing the compressor and magnetic clutch with a new one, after gradually removing the refrigerant gas from the service valve, drain the following amount of oil from the new compressor and magnetic clutch before installation.

Standard:

(Oil capacity inside new compressor and magnetic clutch: 120 + 15 cc (4.0 + 0.5 fl. oz.)) - (Remaining oil amount in the removed compressor and magnetic clutch) = (Oil amount to be removed when replacing)

NOTICE:

- **When checking the compressor oil level, observe the precautions on the cooler removal/installation.**
- **Because compressor oil remains in the pipes of the vehicle, if a new compressor and magnetic clutch is installed without removing some oil inside, the oil amount becomes excessive, preventing heat exchange in the refrigerant cycle and causing refrigerant failure.**
- **If the remaining oil in the removed compressor and magnetic clutch is too small in volume, check for oil leakage.**
- **Be sure to use ND-OIL 8 for compressor oil.**

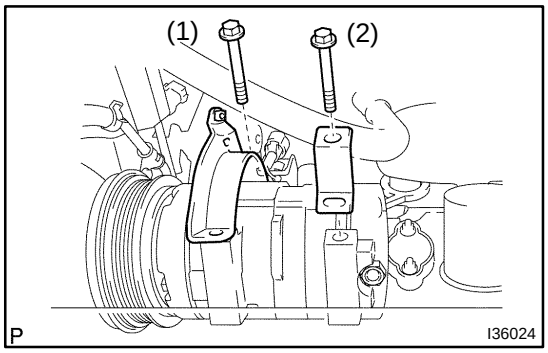

14. INSTALL COMPRESSOR AND MAGNETIC CLUTCH

(a) Install the compressor, the magnetic clutch, the stay and cooler compressor bracket with the 2 bolts.

Torque: 24 N·m (245 kgf·cm, 18 ft·lbf)

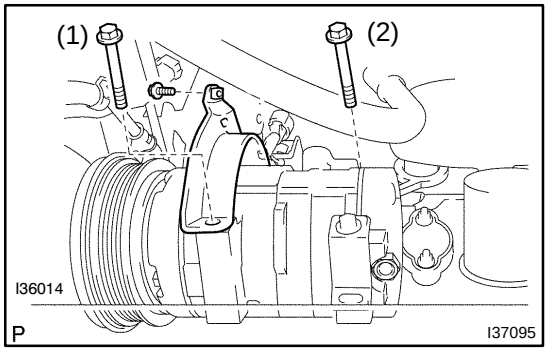

(b) Install the 3 bolts.

Torque: 24 N·m (245 kgf·cm, 18 ft·lbf)

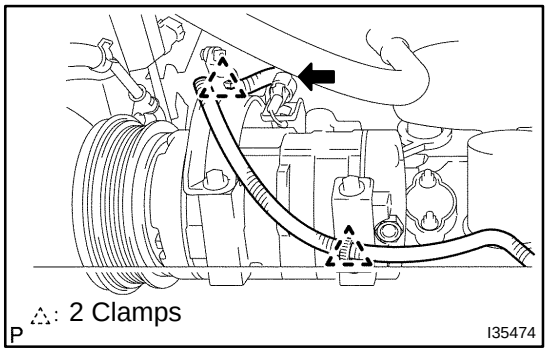

(c) Connect the 2 clamps and wire harness.

(d) Connect the connector.

15. INSTALL SUCTION HOSE SUB-ASSY

(a) Remove the attached vinyl tape from the hose.

(b) Sufficiently apply compressor oil to a new O-ring and the fitting surface of the compressor and magnetic clutch.
Compressor oil: ND-OIL 8 or equivalent

(c) Install the O-ring on the suction hose sub-assy.

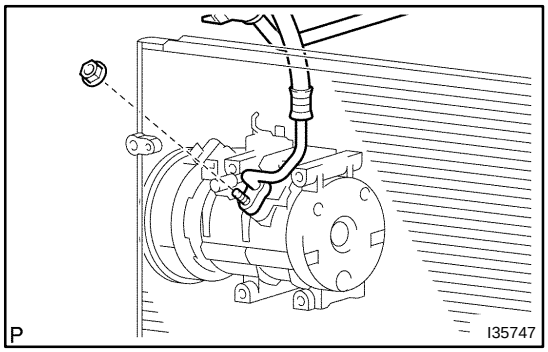

(d) Install the suction hose sub-assy on the compressor and magnetic clutch with the nut.
Torque: 5.4 N·m (55 kgf·cm, 48 in.·lbf)

16. INSTALL DISCHARGE HOSE SUB-ASSY

(a) Remove the attached vinyl tape from the hose.

(b) Sufficiently apply compressor oil to a new O-ring and the fitting surface of the compressor and magnetic clutch.
Compressor oil: ND-OIL 8 or equivalent

(c) Install the O-ring on the discharge hose sub-assy.

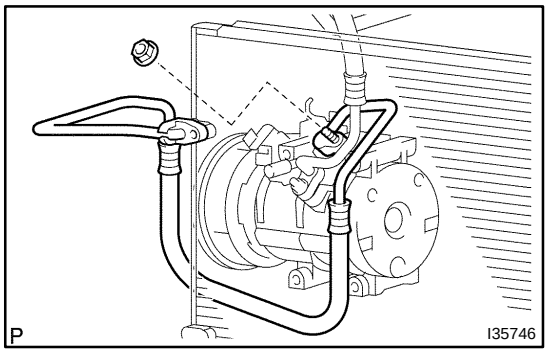

(d) Install the discharge hose sub-assy on the compressor and magnetic clutch with the nut.
Torque: 5.4 N·m (55 kgf·cm, 48 in.·lbf)

17. INSTALL V (COOLER COMPRESSOR TO CRANKSHAFT PULLEY) BELT NO.1 (See page 55-29)

18. ADJUST V (COOLER COMPRESSOR TO CRANKSHAFT PULLEY) BELT NO.1 (See page 55-29)

19. FULLY TIGHTEN V (COOLER COMPRESSOR TO CRANKSHAFT PULLEY) BELT NO.1 (See page 55-29)

20. CHARGE REFRIGERANT (See page 55-21)

SST 07110-58060 (07117-58060, 07117-58070, 07117-58080, 07117-58090, 07117-78050, 07117-88060, 07117-88070, 07117-88080)

Specified amount: 780 ± 30 g (27.5 ± 1.06 oz.)

21. WARM UP ENGINE

22. INSPECT LEAKAGE OF REFRIGERANT (See page 55-21)

550YA-01

REPLACEMENT

HINT:

COMPONENTS: See page 55-57

1. DISCHARGE REFRIGERANT FROM REFRIGERATION SYSTEM (See page 55-21)

SST 07110-58060 (07117-58080, 07117-58090, 07117-78050, 07117-88060, 07117-88070, 07117-88080)

2. REMOVE FRONT FENDER LINER LH (See page 76-2)

3. REMOVE FRONT FENDER LINER RH (See page 76-2)

4. REMOVE FRONT BUMPER COVER (See page 76-2)

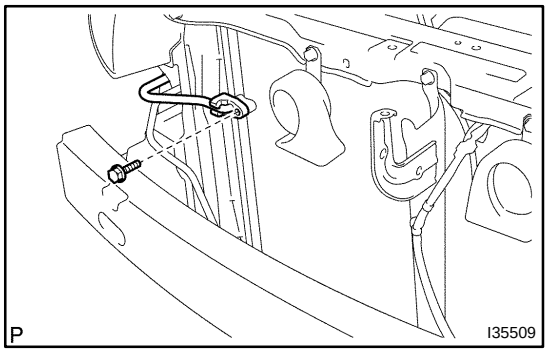

5. DISCONNECT DISCHARGE HOSE SUB-ASSY

(a) Remove the bolt and disconnect the discharge hose sub-assy from the cooler condenser core.

(b) Remove the O-ring from the discharge hose sub-assy.

NOTICE:

Seal the opening of the disconnected parts using vinyl tape to prevent moisture and foreign matters from entering.

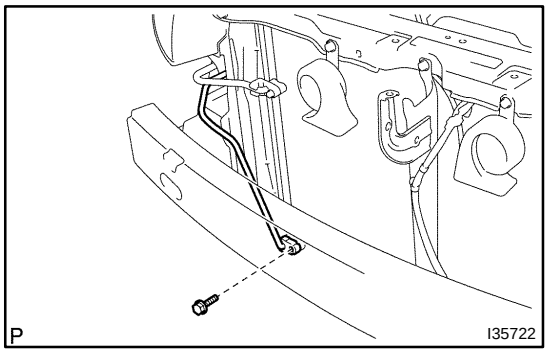

6. DISCONNECT COOLER REFRIGERANT LIQUID PIPE A

(a) Remove the bolt and disconnect the cooler refrigerant liquid pipe A from the cooler condenser core.

(b) Remove the O-ring from the cooler refrigerant liquid pipe A.

NOTICE:

Seal the opening of the disconnected parts using vinyl tape to prevent moisture and foreign matters from entering.

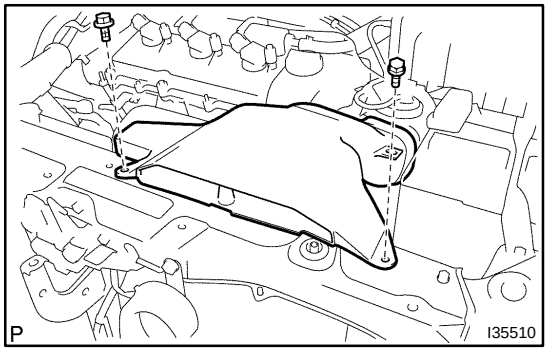

7. REMOVE AIR CLEANER INLET NO.2

(a) Remove the 2 bolts and the air cleaner inlet No.2.

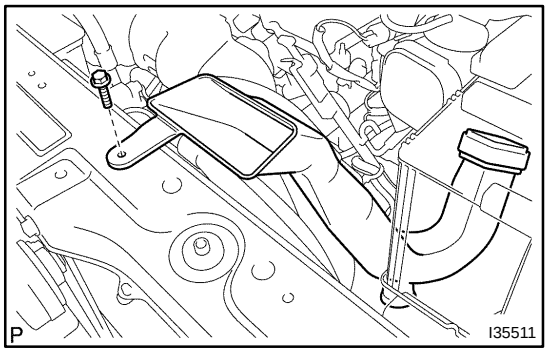

8. REMOVE AIR CLEANER INLET NO.1

(a) Remove the bolt and disconnect air cleaner inlet No.1.

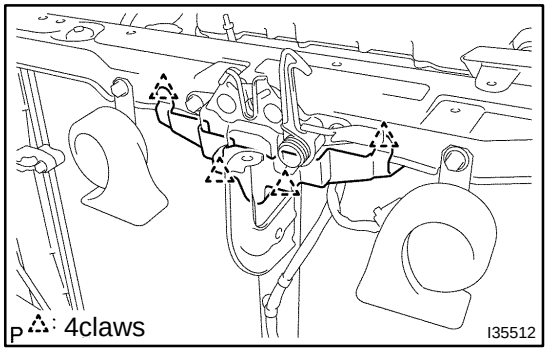

9. REMOVE HOOD LOCK RELEASE LEVER PROTECTOR

(a) Release the 4 claw fittings and remove the hood lock release lever protector.

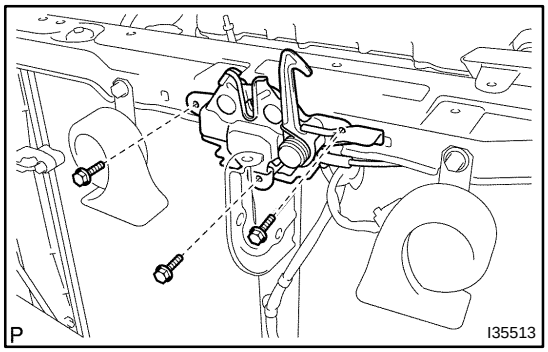

10. REMOVE HOOD LOCK ASSY

(a) Remove the 3 bolts and disconnect hood lock assy.

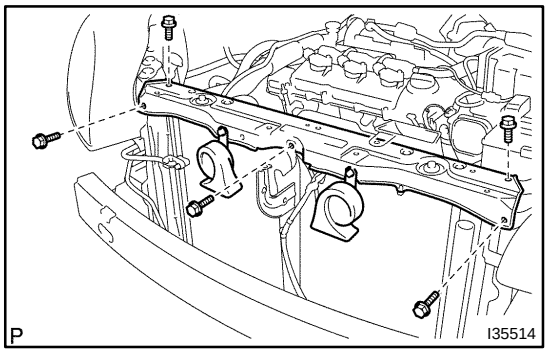

11. REMOVE RADIATOR SUPPORT SUB-ASSY UPPER

(a) Disconnect the horn connectors.

(b) Remove the 5 bolts and radiator support sub-assy upper.

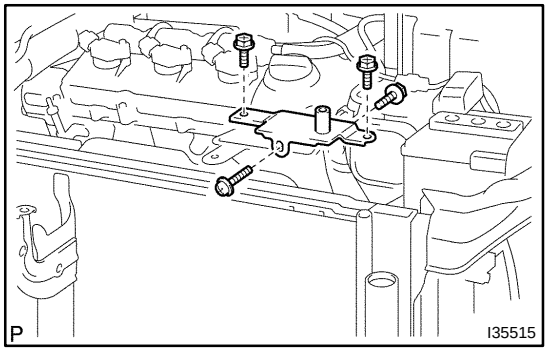

12. REMOVE RADIATOR SUPPORT SUB-ASSY UPPER LH

(a) Remove the 4 bolts and radiator support sub-assy upper LH.

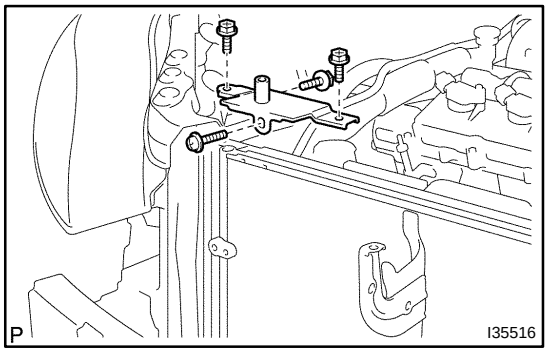

13. REMOVE RADIATOR SUPPORT SUB-ASSY UPPER RH

(a) Remove the 4 bolts and radiator support sub-assy upper No.1.

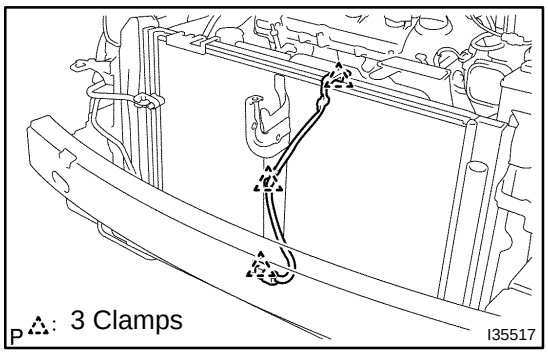

14. REMOVE COOLER CONDENSER CORE

(a) Release the 3 clamps and disconnect the connector.

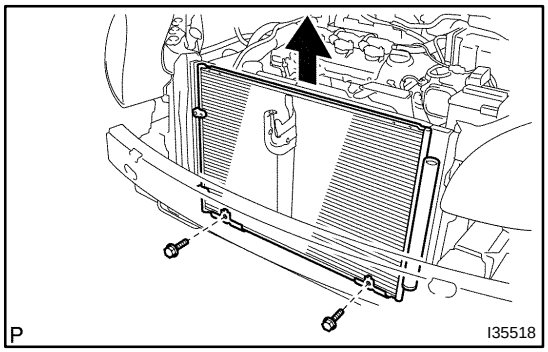

(b) Remove the 2 bolts and cooler condenser core.

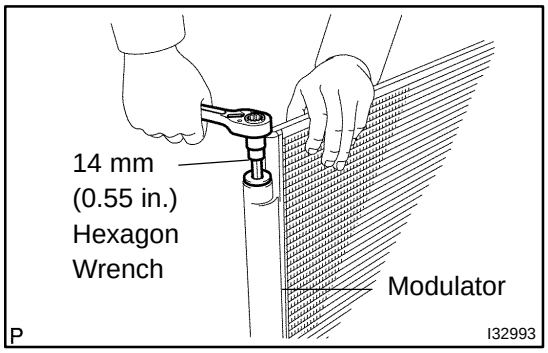

15. REMOVE COOLER DRYER

(a) Using a hexagon wrench 14 mm (0.55 in.), remove the cap from the modulator.

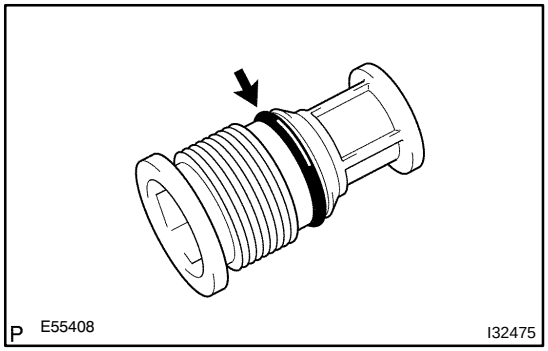

(b) Remove the O-ring from the cap.

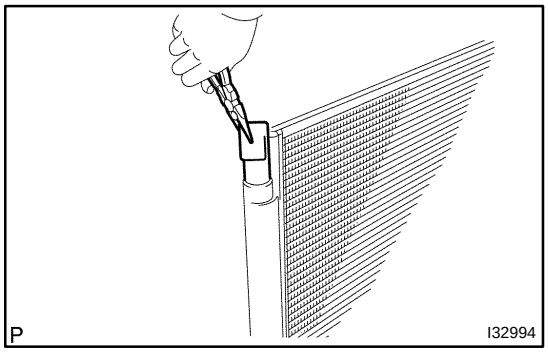

(c) Using needle nose pliers, remove the cooler dryer.

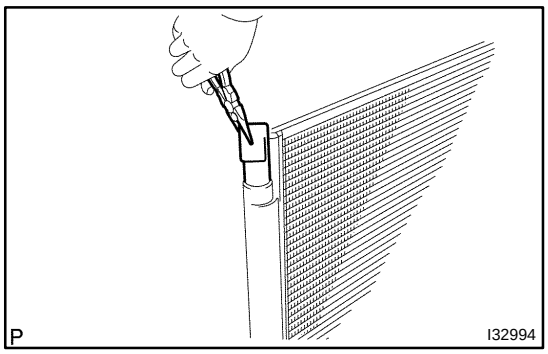

16. INSTALL DRYER

(a) Using needle nose pliers, install the cooler dryer.

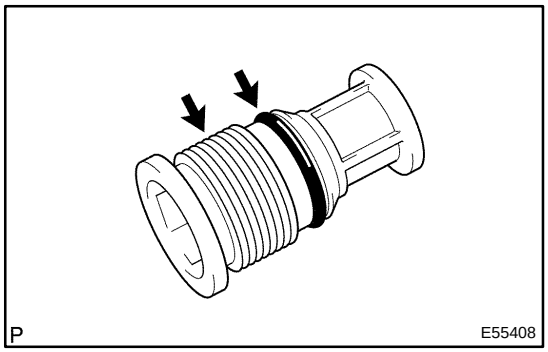

(b) Install a new O-ring on the cap.

(c) Sufficiently apply compressor oil to the fitting surfaces of the O-ring and the cap.
Compressor oil: ND-OIL 8 or equivalent

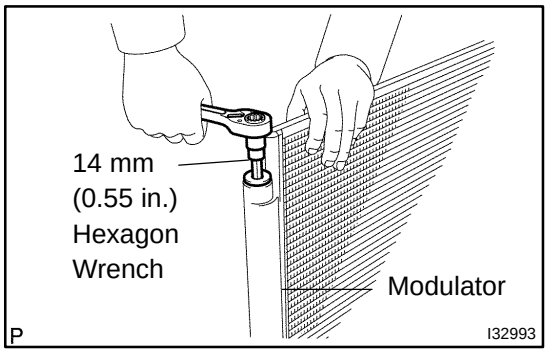

(d) Using a hexagon wrench 14 mm (0.55 in.), install the cap to the cooler condenser assy.
Torque: 2.9 N·m (30 kgf·cm, 25 in.·lbf)

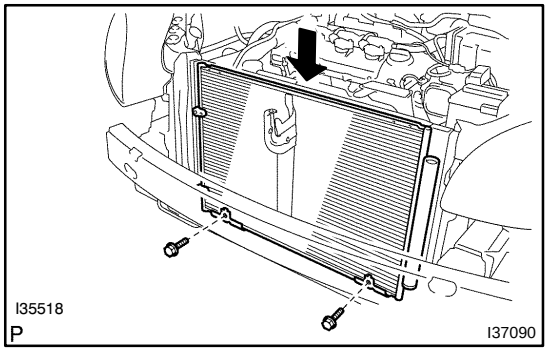

17. INSTALL COOLER CONDENSER CORE

(a) Install the cooler condenser core with the 2 bolts.
Torque: 3.9 N·m (40 kgf·cm, 35 in.·lbf)

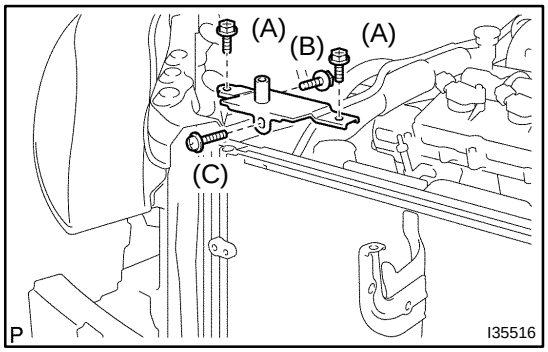

18. INSTALL RADIATOR SUPPORT SUB-ASSY UPPER RH

(a) Install the radiator support sub-assy upper with the 4 bolts.
Torque:
5.0 N·m (51 kgf·cm, 44 in.·lbf) (A)
7.0 N·m (71 kgf·cm, 62 in.·lbf) (B)
3.9 N·m (40 kgf·cm, 35 in.·lbf) (C)

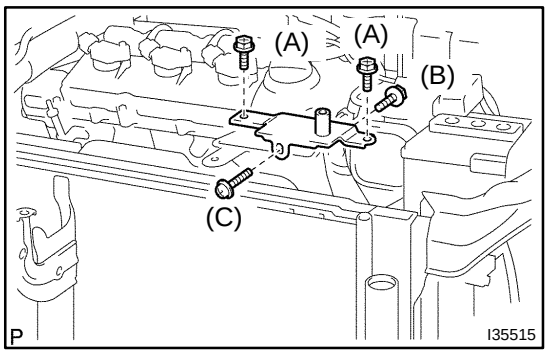

19. INSTALL RADIATOR SUPPORT SUB-ASSY UPPER LH

(a) Install the radiator support sub-assy upper LH with the 4 bolts.

Torque:
5.0 N·m (51 kgf·cm, 47 in.·lbf) (A)
7.0 N·m (71 kgf·cm, 62 in.·lbf) (B)
3.9 N·m (40 kgf·cm, 35 in.·lbf) (C)

20. INSTALL COOLER REFRIGERANT LIQUID PIPE A

(a) Remove the attached vinyl tape from the pipe and the connecting part of the cooler condenser core.

(b) Sufficiently apply compressor oil to a new O-ring and the fitting surface of the pipe joint.

Compressor oil: ND-OIL 8 or equivalent

(c) Install the O-ring on the cooler refrigerant liquid pipe A.

(d) Install the cooler refrigerant liquid pipe A on the cooler condenser core with the bolt.

Torque: 5.4 N·m (55 kgf·cm, 47 in.·lbf)

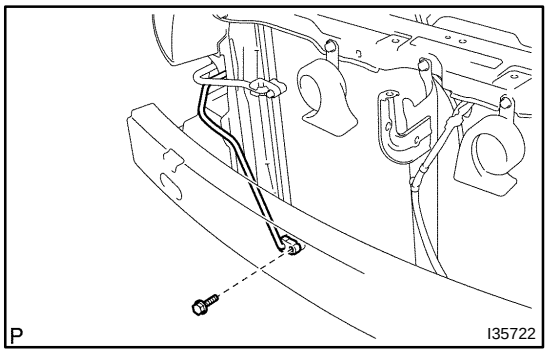

21. INSTALL DISCHARGE HOSE SUB-ASSY

(a) Remove the attached vinyl tape from the tube and the connecting part of the cooler condenser core.

(b) Sufficiently apply compressor oil to a new O-ring and the fitting surface of the hose joint.

Compressor oil: ND-OIL 8 or equivalent

(c) Install the O-ring on the discharge hose sub-assy.

(d) Install the discharge hose sub-assy on the cooler condenser core with the bolt.

Torque: 5.4 N·m (55 kgf·cm, 47 in.·lbf)

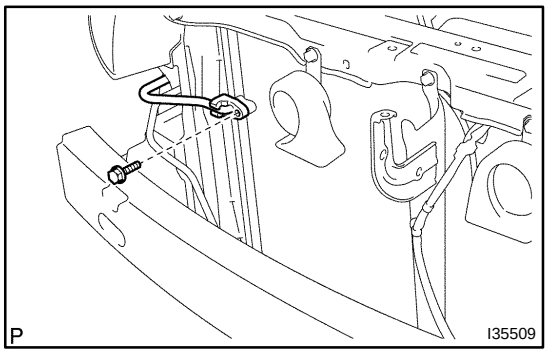

22. CHARGE REFRIGERANT (See page 55-21)

SST 07110-58060 (07117-58060, 07117-58070, 07117-58080, 07117-58090, 07117-78050, 07117-88060, 07117-88070, 07117-88080)

Specified amount: 780 ± 30 g (27.5 ± 1.06 oz.)

23. WARM UP ENGINE

24. INSPECT LEAKAGE OF REFRIGERANT (See page 55-21)