2006 Pontiac Grand Prix Owner Manual

Seats and Restraint Systems 1-1
- Front Seats 1-2
- Rear Seats 1-9
- Safety Belts 1-10
- Child Restraints 1-30
- Airbag System 1-52
- Restraint System Check 1-67

Features and Controls 2-1
- Keys 2-2
- Doors and Locks 2-10
- Windows 2-15
- Theft-Deterrent Systems 2-17
- Starting and Operating Your Vehicle 2-21
- Mirrors 2-35
- OnStar® System 2-38
- Storage Areas 2-40
- Sunroof 2-43

Instrument Panel 3-1
- Instrument Panel Overview 3-4
- Climate Controls 3-26
- Warning Lights, Gages, and Indicators 3-35
- Driver Information Center (DIC) 3-52
- Audio System(s) 3-94

Driving Your Vehicle 4-1
- Your Driving, the Road, and Your Vehicle 4-2
- Towing 4-38

Service and Appearance Care 5-1
- Service 5-3
- Fuel 5-5
- Checking Things Under the Hood 5-10
- Headlamp Aiming 5-50
- Bulb Replacement 5-53
- Windshield Replacement 5-60
- Windshield Wiper Blade Replacement 5-60
- Tires 5-60
- Appearance Care 5-99
- Vehicle Identification 5-110
- Electrical System 5-111
- Capacities and Specifications 5-118

Maintenance Schedule 6-1
- Maintenance Schedule 6-2

Customer Assistance and Information 7-1
- Customer Assistance and Information 7-2
- Reporting Safety Defects 7-13

Index 1

Downloaded from www.Manualslib.com manuals search engine

GENERAL MOTORS, GM, the GM Emblem, PONTIAC, the PONTIAC Emblem, and the names GRAND PRIX, GTP, and GXP are registered trademarks of General Motors Corporation.

This manual includes the latest information at the time it was printed. We reserve the right to make changes after that time without notice. For vehicles first sold in Canada, substitute the name “General Motors of Canada Limited” for Pontiac Division whenever it appears in this manual.

Keep this manual in the vehicle, so it will be there if it is needed while you are on the road. If the vehicle is sold, leave this manual in the vehicle.

Canadian Owners

A French language copy of this manual can be obtained from your dealer or from:

Helm, Incorporated
P.O. Box 07130
Detroit, MI 48207

How to Use This Manual

Many people read the owner manual from beginning to end when they first receive their new vehicle. If this is done, it can help you learn about the features and controls for the vehicle. Pictures and words work together in the owner manual to explain things.

Index

A good place to quickly locate information about the vehicle is the Index in the back of the manual. It is an alphabetical list of what is in the manual and the page number where it can be found.

Litho in U.S.A.
Part No. 06GRANDPRIX A First Printing

©2005 General Motors Corporation. All Rights Reserved.

Downloaded from www.Manualslib.com manuals search engine

Safety Warnings and Symbols

There are a number of safety cautions in this book. We use a box and the word CAUTION to tell about things that could hurt you if you were to ignore the warning.

⚠ CAUTION:

These mean there is something that could hurt you or other people.

In the caution area, we tell you what the hazard is. Then we tell you what to do to help avoid or reduce the hazard. Please read these cautions. If you do not, you or others could be hurt.

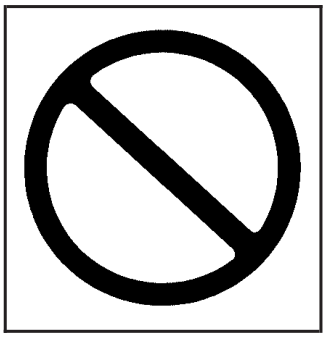

You will also find a circle with a slash through it in this book. This safety symbol means “Do Not,” “Do Not do this” or “Do Not let this happen.”

Downloaded from www.Manualslib.com manuals search engine

Vehicle Damage Warnings

Also, in this manual you will find these notices:

Notice: **These mean there is something that could damage your vehicle.**

A notice tells about something that can damage the vehicle. Many times, this damage would not be covered by your vehicle's warranty, and it could be costly. But the notice will tell what to do to help avoid the damage.

When you read other manuals, you might see CAUTION and NOTICE warnings in different colors or in different words.

There are also warning labels on the vehicle. They use the same words, CAUTION or NOTICE.

Vehicle Symbols

The vehicle has components and labels that use symbols instead of text. Symbols are shown along with the text describing the operation or information relating to a specific component, control, message, gage, or indicator.

If you need help figuring out a specific name of a component, gage, or indicator, reference the following topics:

- Seats and Restraint Systems in Section 1
- Features and Controls in Section 2
- Instrument Panel Overview in Section 3
- Climate Controls in Section 3
- Warning Lights, Gages, and Indicators in Section 3
- Audio System(s) in Section 3
- Engine Compartment Overview in Section 5

Downloaded from www.Manualslib.com manuals search engine

These are some examples of symbols that may be found on the vehicle:

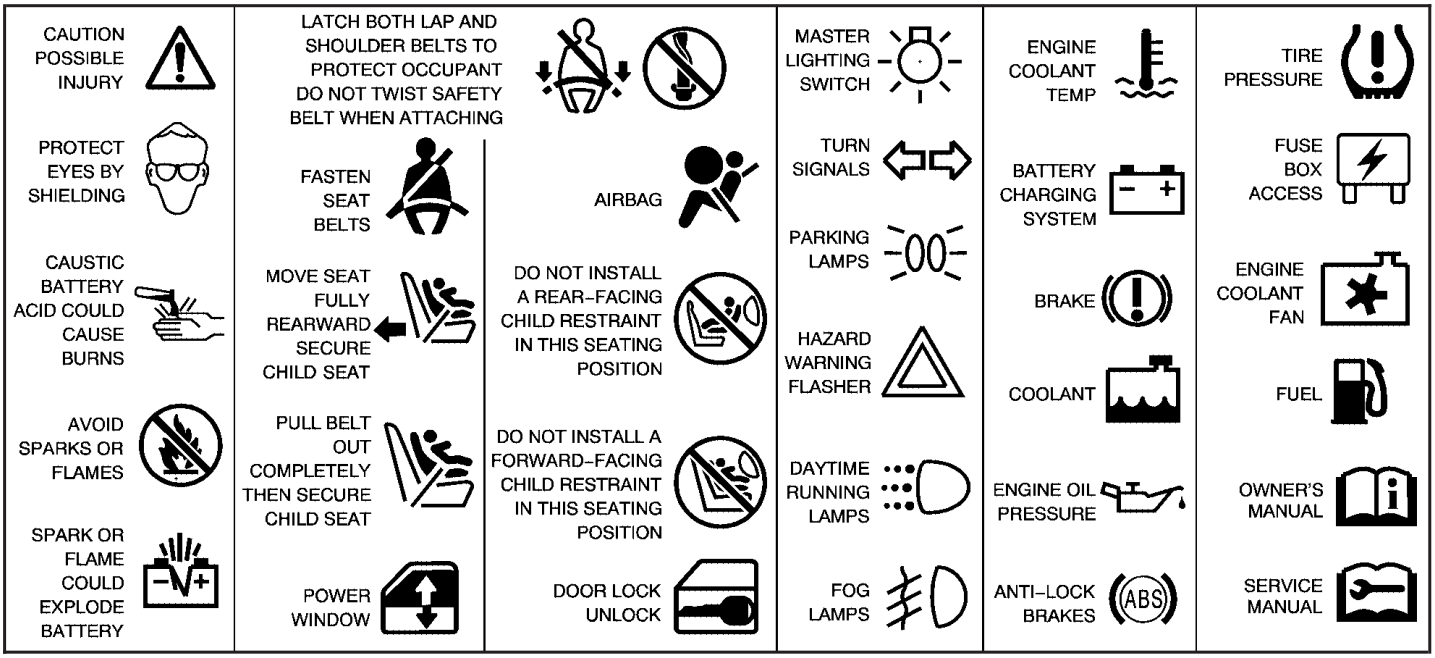

Downloaded from www.Manualslib.com manuals search engine

✍ NOTES

Downloaded from www.Manualslib.com manuals search engine

Section 1 Seats and Restraint Systems

Front Seats 1-2
Manual Passenger Seat 1-2
Six-Way Power Driver Seat 1-2
Power Lumbar 1-3
Heated Seats 1-3
Reclining Seatbacks 1-4
Head Restraints 1-6
Passenger Folding Seatback 1-7

Rear Seats 1-9
Split Folding Rear Seat 1-9

Safety Belts 1-10
Safety Belts: They Are for Everyone 1-10
Questions and Answers About Safety Belts 1-14
How to Wear Safety Belts Properly 1-15
Driver Position 1-16
Shoulder Belt Height Adjustment 1-22
Safety Belt Use During Pregnancy 1-23
Right Front Passenger Position 1-23
Rear Seat Passengers 1-23
Rear Safety Belt Comfort Guides 1-26
Safety Belt Pretensioners 1-29
Safety Belt Extender 1-29

Child Restraints 1-30
Older Children 1-30
Infants and Young Children 1-33
Child Restraint Systems 1-36
Where to Put the Restraint 1-40
Lower Anchors and Tethers for Children (LATCH) 1-41
Securing a Child Restraint in a Rear Seat Position 1-46
Securing a Child Restraint in the Right Front Seat Position 1-48

Airbag System 1-52
Where Are the Airbags? 1-55
When Should an Airbag Inflate? 1-57
What Makes an Airbag Inflate? 1-59
How Does an Airbag Restrain? 1-59
What Will You See After an Airbag Inflates? 1-60
Passenger Sensing System 1-61
Servicing Your Airbag-Equipped Vehicle 1-65
Adding Equipment to Your Airbag-Equipped Vehicle 1-66

Restraint System Check 1-67
Checking the Restraint Systems 1-67
Replacing Restraint System Parts After a Crash 1-67

Downloaded from www.Manualslib.com manuals search engine

Front Seats

Manual Passenger Seat

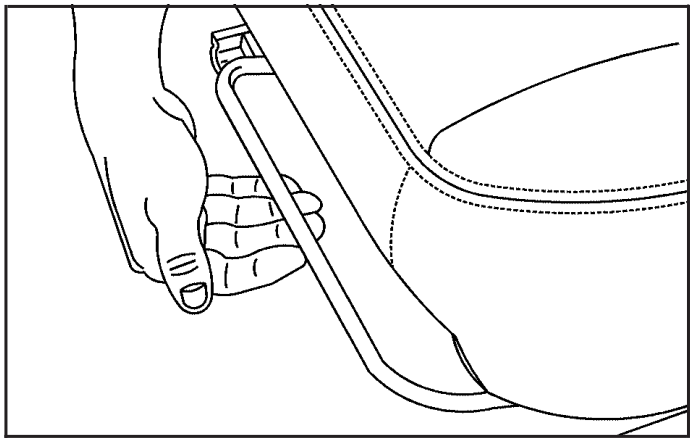

Lift the bar located under the front of the seat to unlock it. Slide the seat to where you want it and release the bar. Try to move the seat with your body to be sure the seat is locked in place.

Six-Way Power Driver Seat

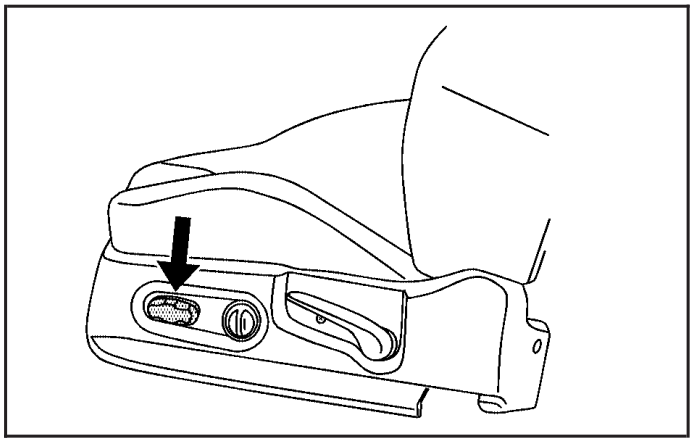

Driver's Seat with 6–way Power, Power Lumbar, and Manual Recline shown

The driver's seat power control is located on the outboard side of the seat.

- To move the seat forward or rearward, move the control forward or rearward.
- To raise or lower the seat, move the control up or down.
- To raise or lower the front of the seat, move the front of the control up or down.
- To raise or lower the rear of the seat, move the rear of the control up or down.

Downloaded from www.Manualslib.com manuals search engine

Power Lumbar

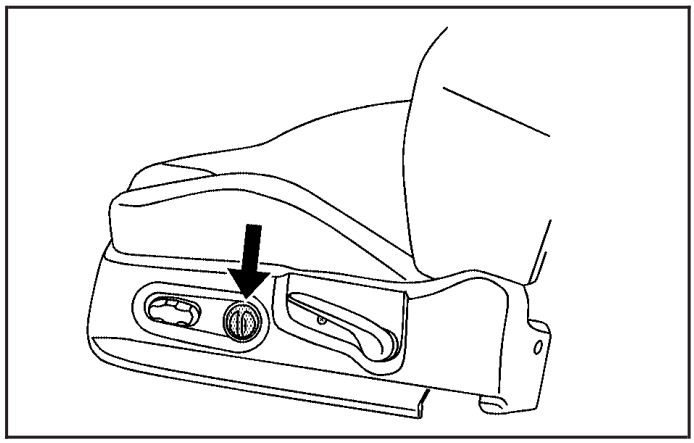

Driver's Seat with Power Lumbar, 6-way Power, and Manual Recline shown

Your driver's seat may have power lumbar. The control is located on the outboard side of the seat cushion.

Press the control forward to increase lumbar support. Press the control rearward to decrease lumbar support.

Keep in mind that as your seating position changes, as it may during long trips, so should the position of your lumbar support. Adjust the seat as needed.

Heated Seats

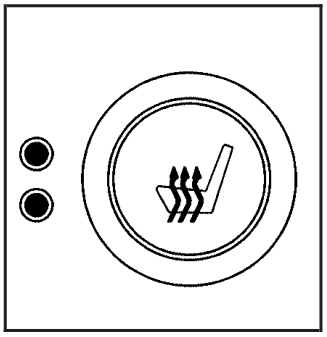

If the vehicle has this feature, the buttons are located on the climate control panel.

Press the button once to activate the high heat setting. Both indicator lights next to the button will come on.

Press the button again to select the lower temperature setting. Only the bottom indicator light will come on.

Press the button a third time to turn the heat off.

This feature only works when the ignition is on.

Downloaded from www.Manualslib.com manuals search engine

Reclining Seatbacks

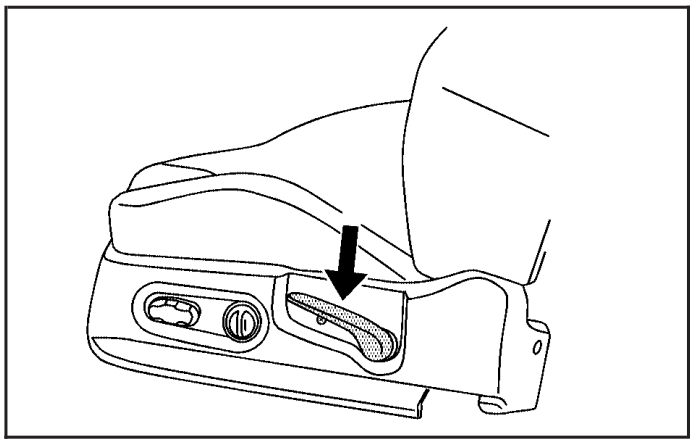

Driver's Seat with Manual Recline, 6-way Power, and Power Lumbar shown

Lift the lever located on the outboard side of the seat to release the seatback, then move the seatback to the desired position. Release the lever to lock the seatback in place.

⚠ CAUTION:

If the seatback is not locked, it could move forward in a sudden stop or crash. That could cause injury to the person sitting there. Always push and pull on the seatback to be sure it is locked.

Pull up on the lever without pushing on the seatback, and the seatback will return to an upright position.

Downloaded from www.Manualslib.com manuals search engine

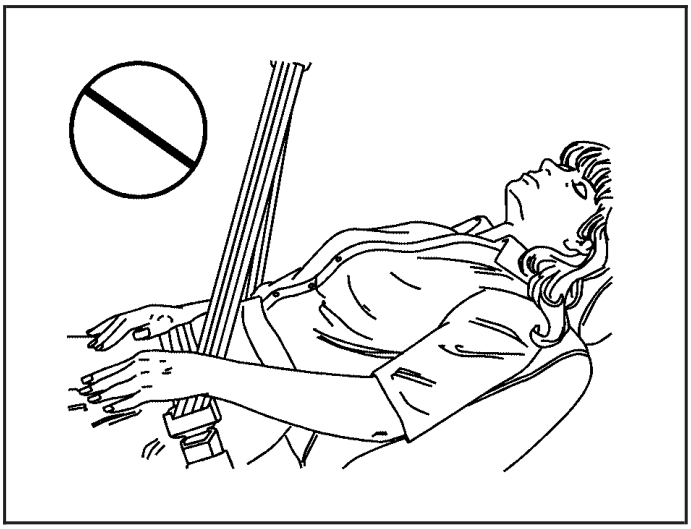

Do not have a seatback reclined if the vehicle is moving.

⚠ CAUTION:

Sitting in a reclined position when your vehicle is in motion can be dangerous. Even if you buckle up, your safety belts cannot do their job when you are reclined like this.

The shoulder belt cannot do its job because it will not be against your body. Instead, it will be in front of you. In a crash, you could go into it, receiving neck or other injuries.

The lap belt cannot do its job either. In a crash, the belt could go up over your abdomen. The belt forces would be there, not at your pelvic bones. This could cause serious internal injuries.

For proper protection when the vehicle is in motion, have the seatback upright. Then sit well back in the seat and wear your safety belt properly.

Downloaded from www.Manualslib.com manuals search engine

Head Restraints

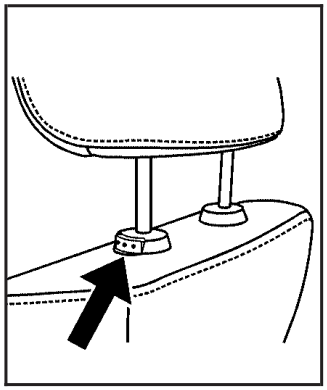

Pull up the head restraint to raise it. Press the release button, located at the base of the head restraint, and push the head restraint down to lower it.

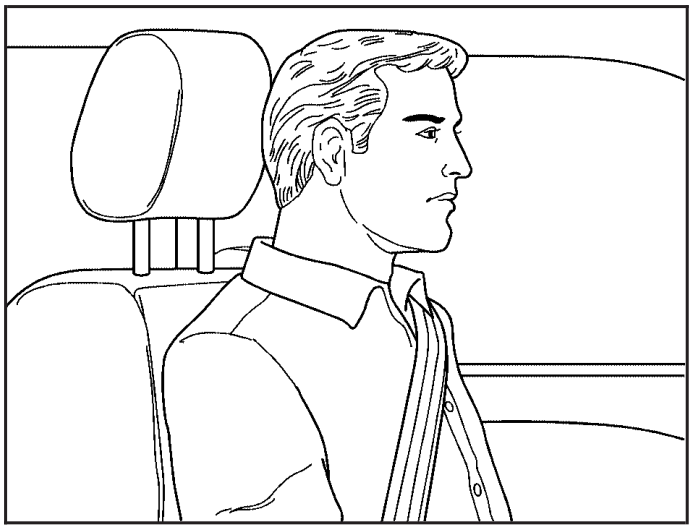

Adjust the head restraint so that the top of the restraint is closest to the top of the occupant's head. This position reduces the chance of a neck injury in a crash.

Downloaded from www.Manualslib.com manuals search engine

Passenger Folding Seatback

⚠ CAUTION:

If you fold the seatback forward to carry longer objects, such as skis, be sure any such cargo is not near an airbag. In a crash, an inflating airbag might force that object toward a person. This could cause severe injury or even death. Secure objects away from the area in which an airbag would inflate. For more information, see *Where Are the Airbags? on page 1-55* and *Loading Your Vehicle on page 4-33*.

⚠ CAUTION:

Things you put on this seatback can strike and injure people in a sudden stop or turn, or in a crash. Remove or secure all items before driving.

If the vehicle has this feature, the front passenger seat can be folded flat for more cargo space.

Downloaded from www.Manualslib.com manuals search engine

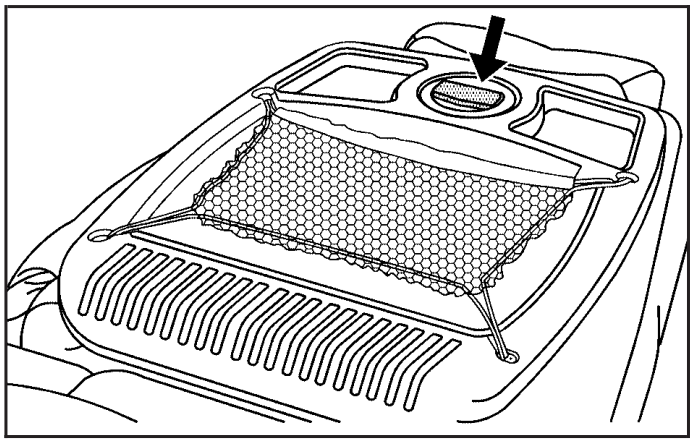

To fold the front passenger seatback flat, pull up on the lever located on back of the seat. Push the seatback forward until it locks in place.

To return the seatback to the upright position, pull up on the lever on the back of the seat. Push the seatback up until it locks in place.

⚠ CAUTION:

If the seatback is not locked, it could move forward in a sudden stop or crash. That could cause injury to the person sitting there. Always push and pull on the seatback to be sure it is locked.

Push and pull on the seatback to make sure it is locked.

Downloaded from www.Manualslib.com manuals search engine

Rear Seats

Split Folding Rear Seat

If your vehicle has this feature, both sides of the rear seatback can be folded down. This gives direct access to the trunk. Make sure the front seats are not reclined. If they are, the rear seatback(s) may not fold down all the way.

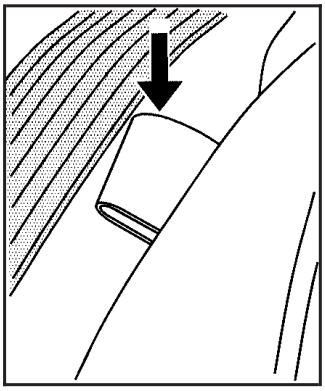

To lower the rear seatback, pull the tab located on the outboard side of the seatback and fold the seatback forward.

⚠ CAUTION:

If the seatback is not locked, it could move forward in a sudden stop or crash. That could cause injury to the person sitting there. Always push and pull on the seatback to be sure it is locked.

To raise the rear seatback, lift the seatback up until it latches. Push and pull on the seatback to be sure it is locked in position.

The seatbacks should be kept in the upright, locked position when they are not being used to extend the cargo area.

Downloaded from www.Manualslib.com manuals search engine

Safety Belts

Safety Belts: They Are for Everyone

This part of the manual tells you how to use safety belts properly. It also tells you some things you should not do with safety belts.

⚠ CAUTION:

Do not let anyone ride where he or she cannot wear a safety belt properly. If you are in a crash and you are not wearing a safety belt, your injuries can be much worse. You can hit things inside the vehicle or be ejected from it. You can be seriously injured or killed. In the same crash, you might not be, if you are buckled up. Always fasten your safety belt, and check that your passengers' belts are fastened properly too.

⚠ CAUTION:

It is extremely dangerous to ride in a cargo area, inside or outside of a vehicle. In a collision, people riding in these areas are more likely to be seriously injured or killed. Do not allow people to ride in any area of your vehicle that is not equipped with seats and safety belts. Be sure everyone in your vehicle is in a seat and using a safety belt properly.

Your vehicle has indicators to remind you and your passengers to buckle your safety belts. See *Safety Belt Reminder Light on page 3-38* and *Passenger Safety Belt Reminder Light on page 3-38*.

Downloaded from www.Manualslib.com manuals search engine

In most states and in all Canadian provinces, the law says to wear safety belts. Here is why: *They work*.

You never know if you will be in a crash. If you do have a crash, you do not know if it will be a bad one.

A few crashes are mild, and some crashes can be so serious that even buckled up, a person would not survive. But most crashes are in between. In many of them, people who buckle up can survive and sometimes walk away. Without belts they could have been badly hurt or killed.

After more than 30 years of safety belts in vehicles, the facts are clear. In most crashes buckling up does matter...a lot!

Why Safety Belts Work

When you ride in or on anything, you go as fast as it goes.

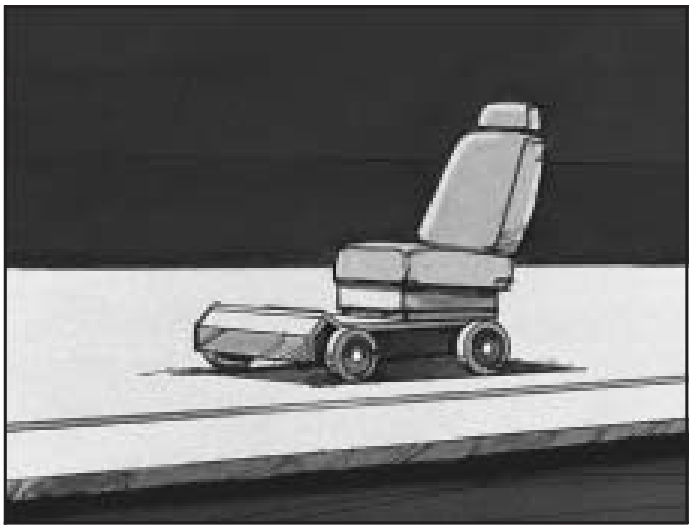

Take the simplest vehicle. Suppose it is just a seat on wheels.

Downloaded from www.Manualslib.com manuals search engine

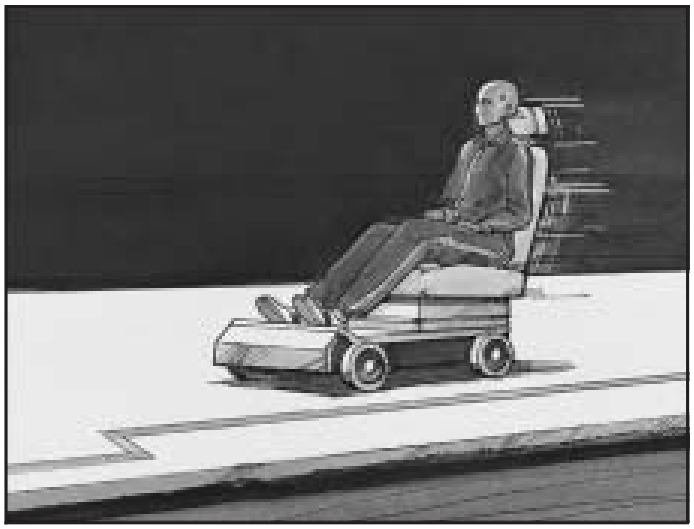

Put someone on it.

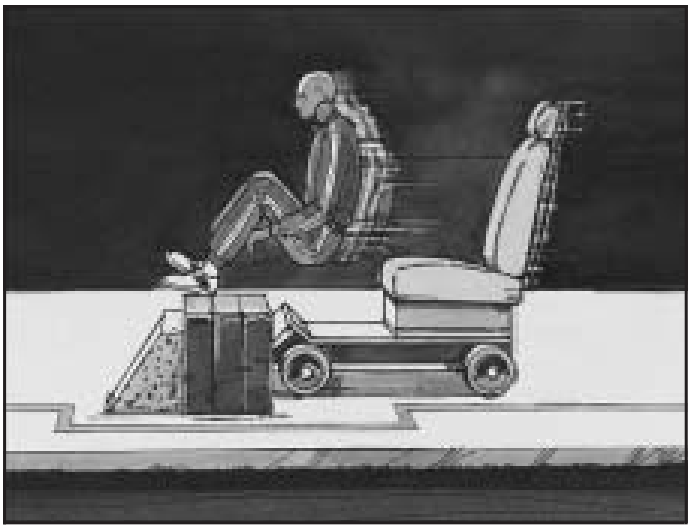

Get it up to speed. Then stop the vehicle. The rider does not stop.

Downloaded from www.Manualslib.com manuals search engine

The person keeps going until stopped by something. In a real vehicle, it could be the windshield...

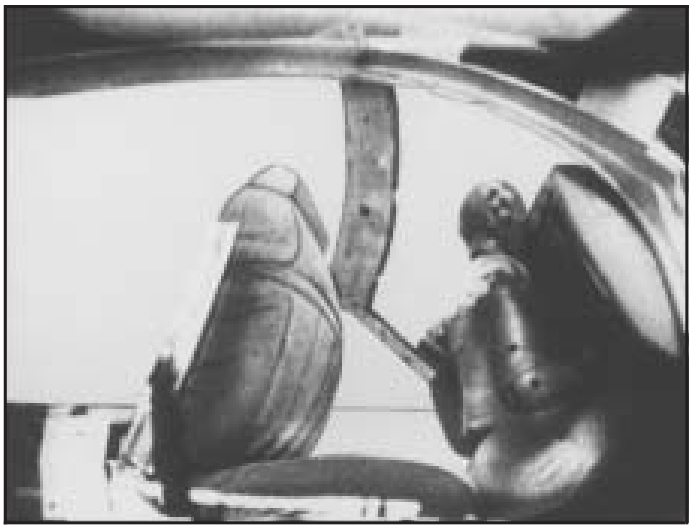

or the instrument panel...

Downloaded from www.Manualslib.com manuals search engine

or the safety belts!

With safety belts, you slow down as the vehicle does. You get more time to stop. You stop over more distance, and your strongest bones take the forces. That is why safety belts make such good sense.

Questions and Answers About Safety Belts

Q: Will I be trapped in the vehicle after an accident if I am wearing a safety belt?

A: You *could* be — whether you are wearing a safety belt or not. But you can unbuckle a safety belt, even if you are upside down. And your chance of being conscious during and after an accident, so you *can* unbuckle and get out, is *much* greater if you are belted.

Q: If my vehicle has airbags, why should I have to wear safety belts?

A: Airbags are in many vehicles today and will be in most of them in the future. But they are supplemental systems only; so they work *with* safety belts — not instead of them. Every airbag system ever offered for sale has required the use of safety belts. Even if you are in a vehicle that has airbags, you still have to buckle up to get the most protection. That is true not only in frontal collisions, but especially in side and other collisions.

Downloaded from www.Manualslib.com manuals search engine

Q: If I am a good driver, and I never drive far from home, why should I wear safety belts?

A: You may be an excellent driver, but if you are in an accident — even one that is not your fault — you and your passengers can be hurt. Being a good driver does not protect you from things beyond your control, such as bad drivers.

Most accidents occur within 25 miles (40 km) of home. And the greatest number of serious injuries and deaths occur at speeds of less than 40 mph (65 km/h).

Safety belts are for everyone.

How to Wear Safety Belts Properly

This part is only for people of adult size.

Be aware that there are special things to know about safety belts and children. And there are different rules for smaller children and babies. If a child will be riding in your vehicle, see *Older Children on page 1-30* or *Infants and Young Children on page 1-33*. Follow those rules for everyone's protection.

First, you will want to know which restraint systems your vehicle has.

We will start with the driver position.

Downloaded from www.Manualslib.com manuals search engine

Driver Position

Lap-Shoulder Belt

The driver has a lap-shoulder belt. Here is how to wear it properly.

1. Close and lock the door.
2. Adjust the seat so you can sit up straight. To see how, see “Seats” in the Index.

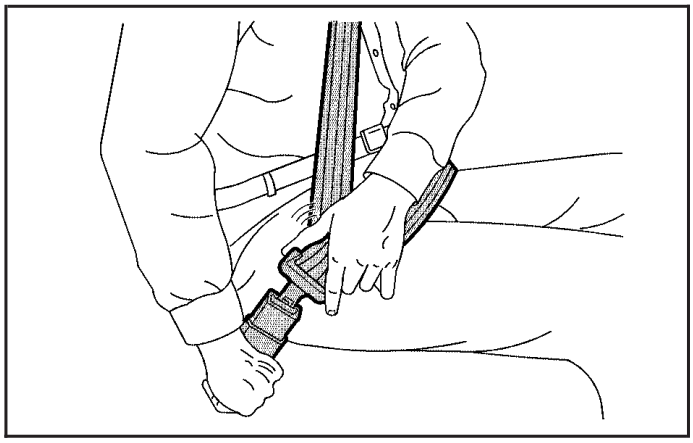

3. Pick up the latch plate and pull the belt across you. Do not let it get twisted.

   The shoulder belt may lock if you pull the belt across you very quickly. If this happens, let the belt go back slightly to unlock it. Then pull the belt across you more slowly.

4. Push the latch plate into the buckle until it clicks.

   Pull up on the latch plate to make sure it is secure. If the belt is not long enough, see *Safety Belt Extender on page 1-29*.

   Make sure the release button on the buckle is positioned so you would be able to unbuckle the safety belt quickly if you ever had to.

5. Move the shoulder belt height adjuster to the height that is right for you. See *Shoulder Belt Height Adjustment on page 1-22*.

Downloaded from www.Manualslib.com manuals search engine

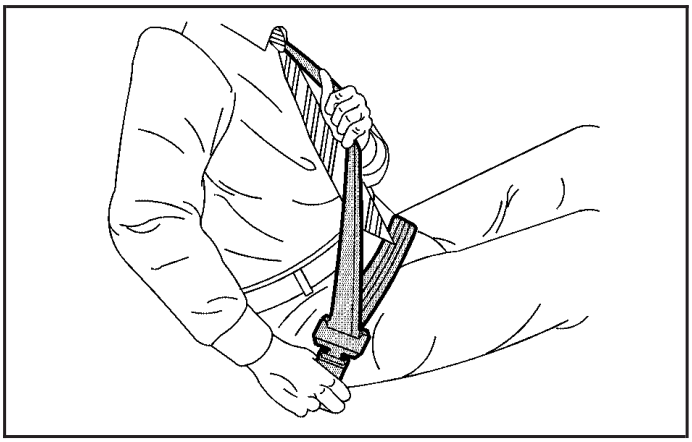

6. To make the lap part tight, pull up on the shoulder belt.

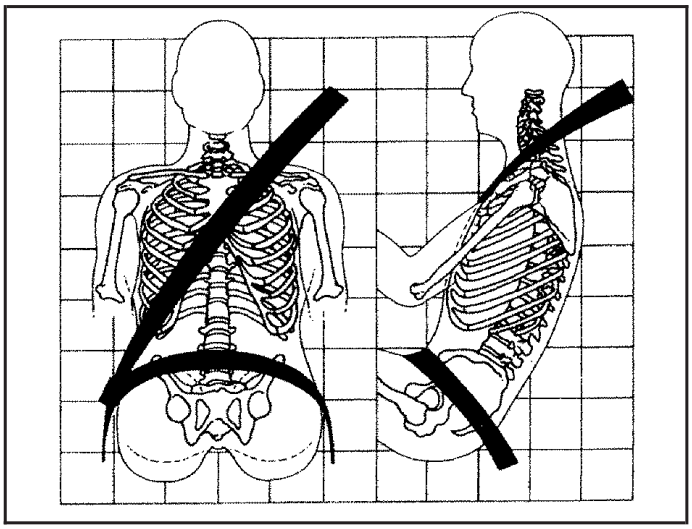

The lap part of the belt should be worn low and snug on the hips, just touching the thighs. In a crash, this applies force to the strong pelvic bones. And you would be less likely to slide under the lap belt. If you slid under it, the belt would apply force at your abdomen. This could cause serious or even fatal injuries. The shoulder belt should go over the shoulder and across the chest. These parts of the body are best able to take belt restraining forces.

The safety belt locks if there is a sudden stop or crash, or if you pull the belt very quickly out of the retractor.

Downloaded from www.Manualslib.com manuals search engine

Q: What is wrong with this?

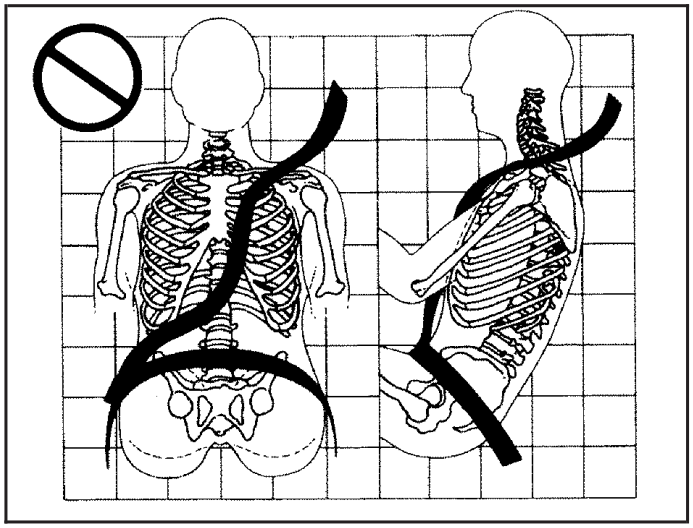

A: The shoulder belt is too loose. It will not give nearly as much protection this way.

⚠ CAUTION:

You can be seriously hurt if your shoulder belt is too loose. In a crash, you would move forward too much, which could increase injury. The shoulder belt should fit against your body.

Downloaded from www.Manualslib.com manuals search engine

Q: What is wrong with this?

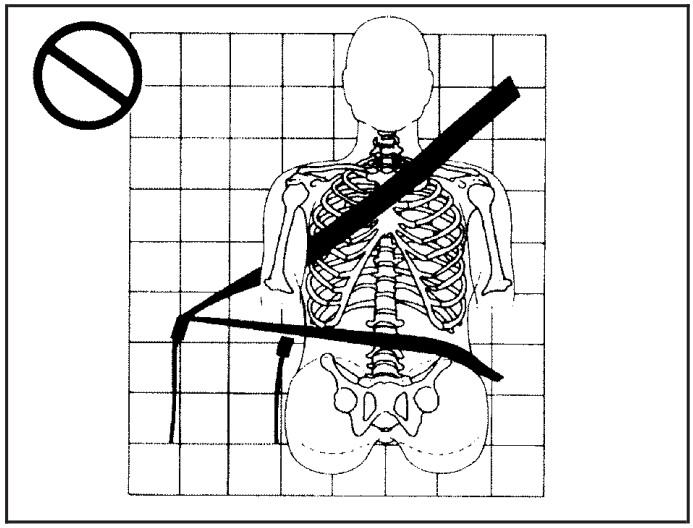

A: The belt is buckled in the wrong place.

⚠ CAUTION:

You can be seriously injured if your belt is buckled in the wrong place like this. In a crash, the belt would go up over your abdomen. The belt forces would be there, not at the pelvic bones. This could cause serious internal injuries. Always buckle your belt into the buckle nearest you.

Downloaded from www.Manualslib.com manuals search engine

Q: **What is wrong with this?**

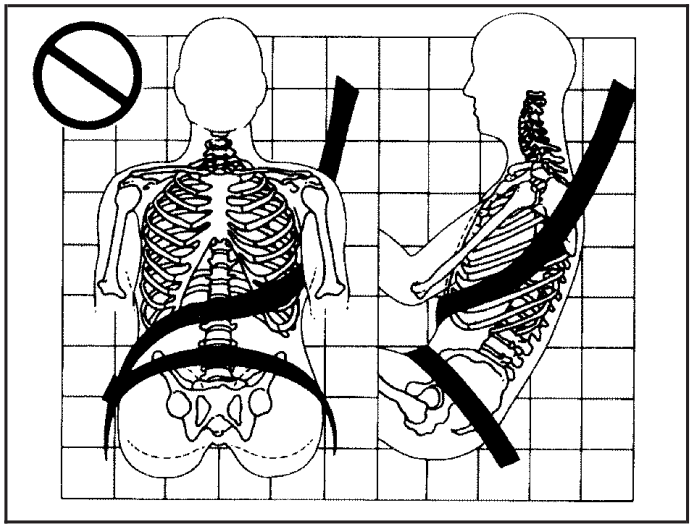

A: The shoulder belt is worn under the arm. It should be worn over the shoulder at all times.

⚠ CAUTION:

You can be seriously injured if you wear the shoulder belt under your arm. In a crash, your body would move too far forward, which would increase the chance of head and neck injury. Also, the belt would apply too much force to the ribs, which are not as strong as shoulder bones. You could also severely injure internal organs like your liver or spleen.

Downloaded from www.Manualslib.com manuals search engine

Q: What is wrong with this?

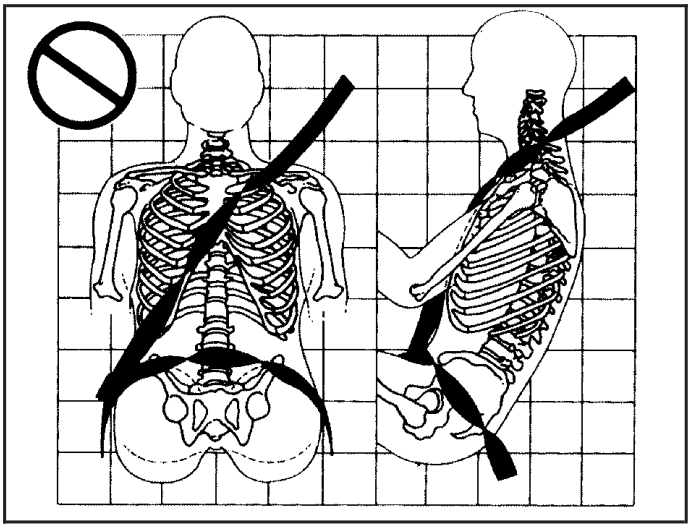

A: The belt is twisted across the body.

⚠ CAUTION:

You can be seriously injured by a twisted belt. In a crash, you would not have the full width of the belt to spread impact forces. If a belt is twisted, make it straight so it can work properly, or ask your dealer to fix it.

Downloaded from www.Manualslib.com manuals search engine

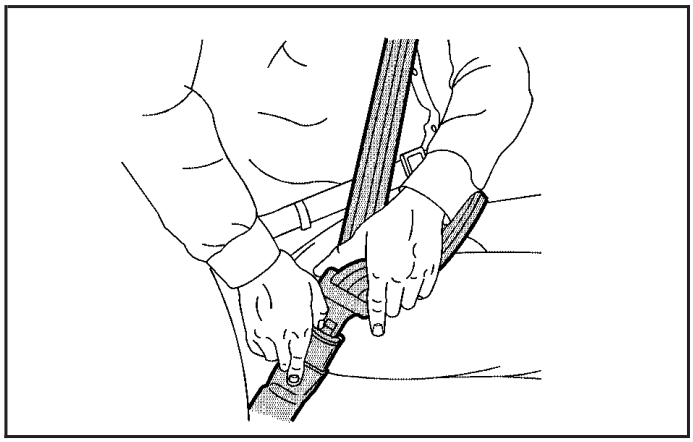

To unlatch the belt, just push the button on the buckle. The belt should go back out of the way.

Before you close the door, be sure the belt is out of the way. If you slam the door on it, you can damage both the belt and your vehicle.

Shoulder Belt Height Adjustment

Before you begin to drive, move the shoulder belt height adjuster to the height that is right for you.

Adjust the height so that the shoulder portion of the belt is centered on your shoulder. The belt should be away from your face and neck, but not falling off your shoulder.

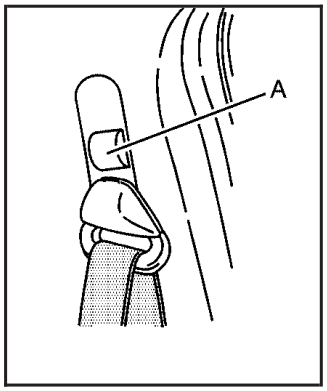

To move it down, pull the release button (A) out and move the height adjuster to the desired position. You can move the height adjuster up just by pushing up on the shoulder belt guide.

After you move the height adjuster to where you want it, try to move it down without pulling the release button to make sure it has locked into position.

Downloaded from www.Manualslib.com manuals search engine

Safety Belt Use During Pregnancy

Safety belts work for everyone, including pregnant women. Like all occupants, they are more likely to be seriously injured if they do not wear safety belts.

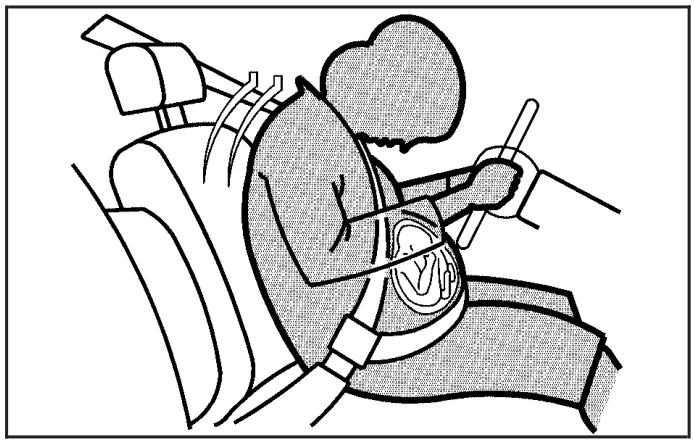

A pregnant woman should wear a lap-shoulder belt, and the lap portion should be worn as low as possible, below the rounding, throughout the pregnancy.

The best way to protect the fetus is to protect the mother. When a safety belt is worn properly, it is more likely that the fetus will not be hurt in a crash. For pregnant women, as for anyone, the key to making safety belts effective is wearing them properly.

Right Front Passenger Position

To learn how to wear the right front passenger's safety belt properly, see *Driver Position on page 1-16*.

The right front passenger's safety belt works the same way as the driver's safety belt — except for one thing. If you ever pull the shoulder portion of the belt out all the way, you will engage the child restraint locking feature. If this happens, just let the belt go back all the way and start again.

Rear Seat Passengers

It is very important for rear seat passengers to buckle up! Accident statistics show that unbelted people in the rear seat are hurt more often in crashes than those who are wearing safety belts.

Rear passengers who are not safety belted can be thrown out of the vehicle in a crash. And they can strike others in the vehicle who are wearing safety belts.

Downloaded from www.Manualslib.com manuals search engine

Lap-Shoulder Belt

All rear seat positions have lap-shoulder belts. Here is how to wear one properly.

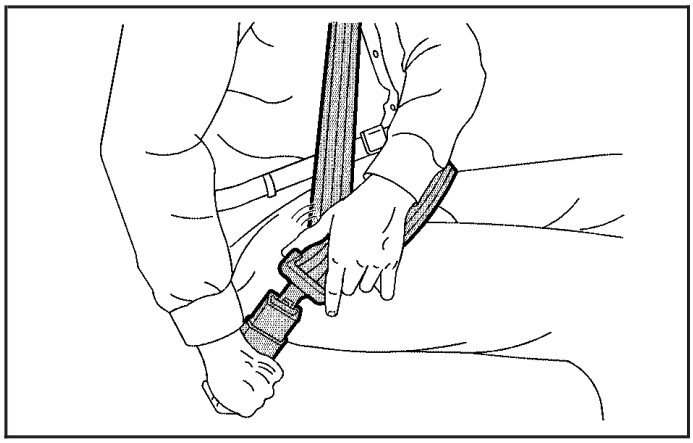

1. Pick up the latch plate and pull the belt across you. Do not let it get twisted.

   The shoulder belt may lock if you pull the belt across you very quickly. If this happens, let the belt go back slightly to unlock it. Then pull the belt across you more slowly.

2. Push the latch plate into the buckle until it clicks.

   Pull up on the latch plate to make sure it is secure.

   When the shoulder belt is pulled out all the way, it will lock. If it does, let it go back all the way and start again.

   If the belt is not long enough, see *Safety Belt Extender on page 1-29*.

   Make sure the release button on the buckle is positioned so you would be able to unbuckle the safety belt quickly if you ever had to.

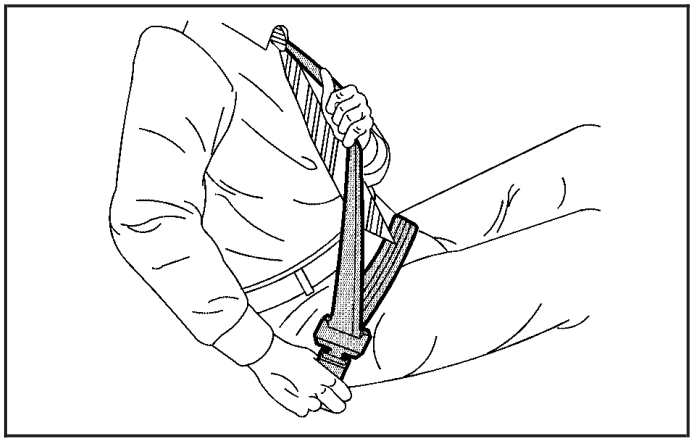

3. To make the lap part tight, pull up on the shoulder part.

Downloaded from www.Manualslib.com manuals search engine

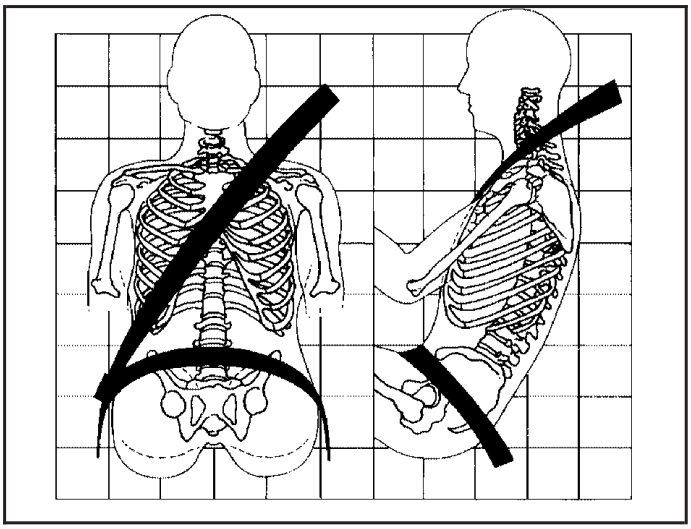

The lap part of the belt should be worn low and snug on the hips, just touching the thighs. In a crash, this applies force to the strong pelvic bones. And you would be less likely to slide under the lap belt. If you slid under it, the belt would apply force at your abdomen. This could cause serious or even fatal injuries. The shoulder belt should go over the shoulder and across the chest. These parts of the body are best able to take belt restraining forces.

The safety belt locks if there is a sudden stop or a crash, or if you pull the belt very quickly out of the retractor.

⚠ CAUTION:

You can be seriously hurt if your shoulder belt is too loose. In a crash, you would move forward too much, which could increase injury. The shoulder belt should fit against your body.

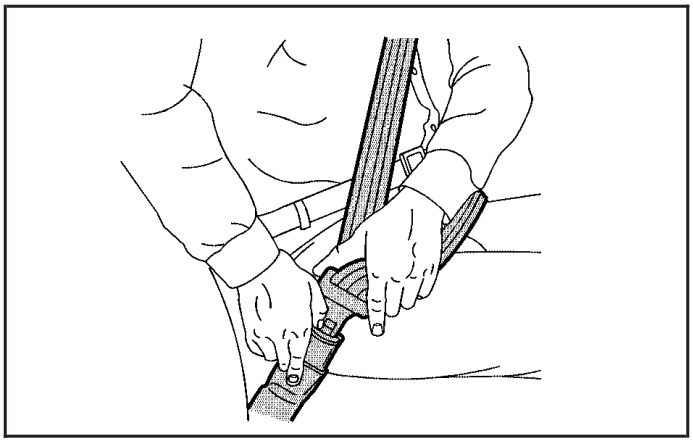

To unlatch the belt, push the button on the buckle.

Downloaded from www.Manualslib.com manuals search engine

Rear Safety Belt Comfort Guides

Rear shoulder belt comfort guides may provide added safety belt comfort for older children who have outgrown booster seats and for some adults. When installed on a shoulder belt, the comfort guide positions the belt away from the neck and head.

There is one guide for each outboard passenger position in the rear seat. Here is how to install a comfort guide and use the safety belt:

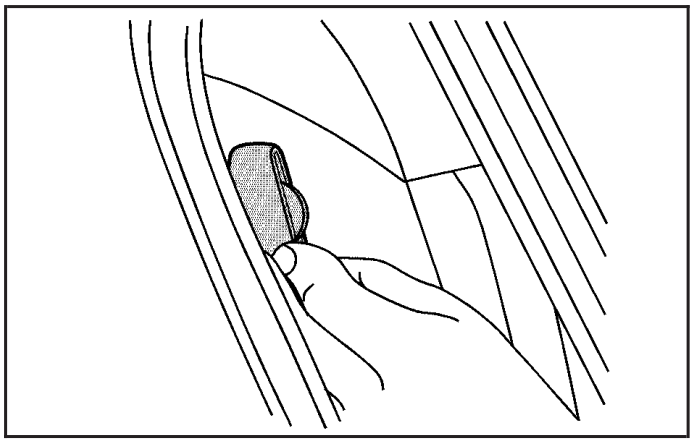

1. Pull the elastic cord out from between the edge of the seatback and the interior body to remove the guide from its storage clip.

Downloaded from www.Manualslib.com manuals search engine

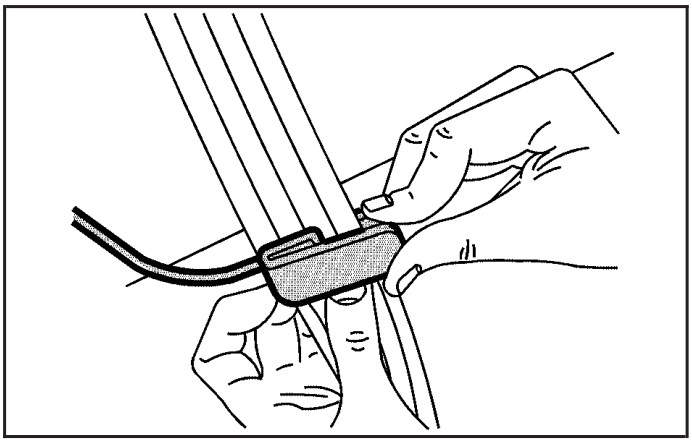

2. Slide the guide under and past the belt. The elastic cord must be under the belt. Then, place the guide over the belt, and insert the two edges of the belt into the slots of the guide.

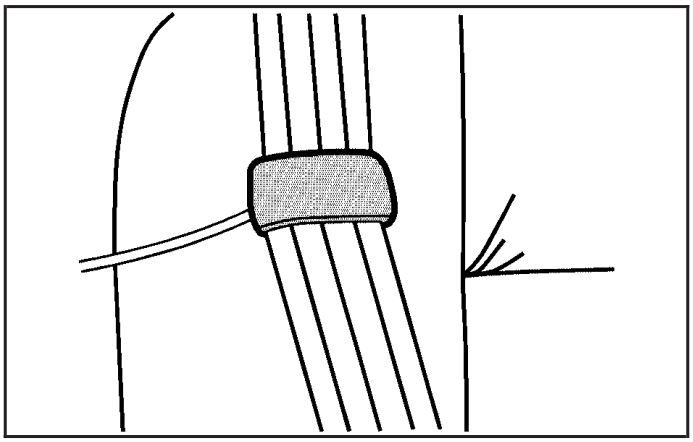

3. Be sure that the belt is not twisted and it lies flat. The elastic cord must be under the belt and the guide on top.

Downloaded from www.Manualslib.com manuals search engine

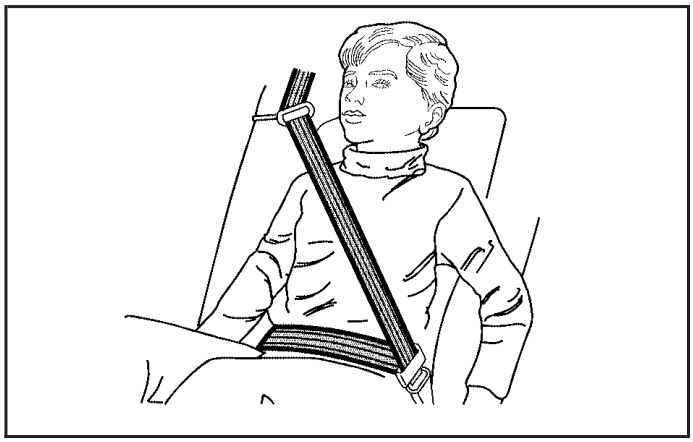

⚠ CAUTION:

A safety belt that is not properly worn may not provide the protection needed in a crash. The person wearing the belt could be seriously injured. The shoulder belt should go over the shoulder and across the chest. These parts of the body are best able to take belt restraining forces.

4. Buckle, position, and release the safety belt as described in *Rear Seat Passengers on page 1-23*. Make sure that the shoulder belt crosses the shoulder.

To remove and store the comfort guides, squeeze the belt edges together so that you can take them out of the guides. Pull the guide upward to expose its storage clip, and then slide the guide onto the clip. Turn the guide and clip inward and slide them in between the seatback and the interior body, leaving only the loop of the elastic cord exposed.

Downloaded from www.Manualslib.com manuals search engine

Safety Belt Pretensioners

Your vehicle has safety belt pretensioners for the driver and right front passenger. Although you cannot see them, they are located on the buckle end of the safety belts. They help the safety belts reduce a person's forward movement in a moderate to severe frontal and near frontal crash.

Pretensioners work only once. If they activate in a crash, you will need to get new ones, and probably other new parts for your safety belt system. See *Replacing Restraint System Parts After a Crash on page 1-67*.

Safety Belt Extender

If the vehicle's safety belt will fasten around you, you should use it.

But if a safety belt is not long enough, your dealer will order you an extender. It is free. When you go in to order it, take the heaviest coat you will wear, so the extender will be long enough for you. To help avoid personal injury, do not let someone else use it, and use it only for the seat it is made to fit. The extender has been designed for adults. Never use it for securing child seats. To wear it, just attach it to the regular safety belt. For more information, see the instruction sheet that comes with the extender.

Downloaded from www.Manualslib.com manuals search engine

Child Restraints

Older Children

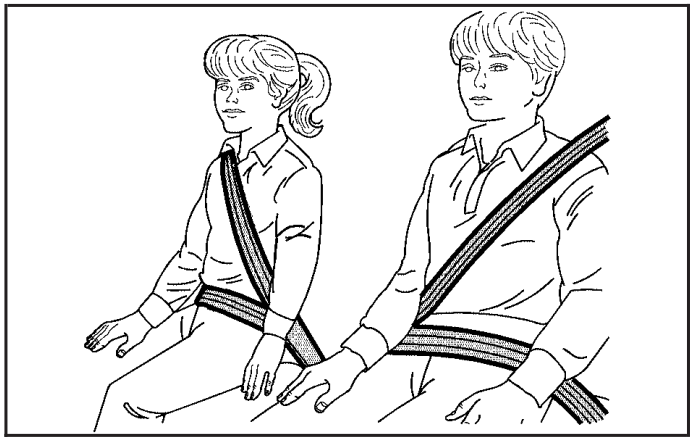

Older children who have outgrown booster seats should wear the vehicle's safety belts.

Q: What is the proper way to wear safety belts?

A: An older child should wear a lap-shoulder belt and get the additional restraint a shoulder belt can provide. The shoulder belt should not cross the face or neck. The lap belt should fit snugly below the hips, just touching the top of the thighs. It should never be worn over the abdomen, which could cause severe or even fatal internal injuries in a crash.

Accident statistics show that children are safer if they are restrained in the rear seat.

In a crash, children who are not buckled up can strike other people who are buckled up, or can be thrown out of the vehicle. Older children need to use safety belts properly.

Downloaded from www.Manualslib.com manuals search engine

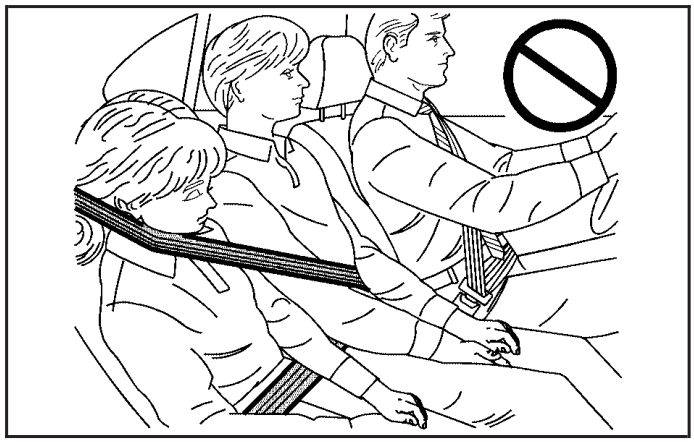

⚠ CAUTION:

Never do this.

Here two children are wearing the same belt. The belt can not properly spread the impact forces. In a crash, the two children can be crushed together and seriously injured. A belt must be used by only one person at a time.

Q: What if a child is wearing a lap-shoulder belt, but the child is so small that the shoulder belt is very close to the child's face or neck?

A: If the child is sitting in a seat next to a window, move the child toward the center of the vehicle. Also see *Rear Safety Belt Comfort Guides on page 1-26*. If the child is sitting in the center rear seat passenger position, move the child toward the safety belt buckle. In either case, be sure that the shoulder belt still is on the child's shoulder, so that in a crash the child's upper body would have the restraint the belts provide.

Downloaded from www.Manualslib.com manuals search engine

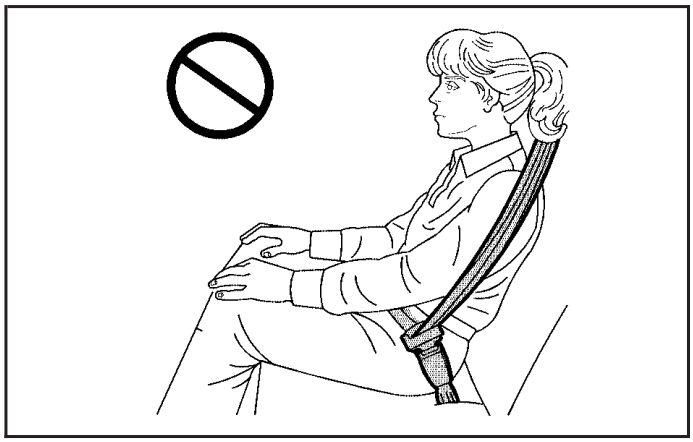

⚠ CAUTION:

Never do this.

Here a child is sitting in a seat that has a lap-shoulder belt, but the shoulder part is behind the child. If the child wears the belt in this way, in a crash the child might slide under the belt. The belt's force would then be applied right on the child's abdomen. That could cause serious or fatal injuries.

Wherever the child sits, the lap portion of the belt should be worn low and snug on the hips, just touching the child's thighs. This applies belt force to the child's pelvic bones in a crash.

Downloaded from www.Manualslib.com manuals search engine

Infants and Young Children

Everyone in a vehicle needs protection! This includes infants and all other children. Neither the distance traveled nor the age and size of the traveler changes the need, for everyone, to use safety restraints. In fact, the law in every state in the United States and in every Canadian province says children up to some age must be restrained while in a vehicle.

Every time infants and young children ride in vehicles, they should have the protection provided by appropriate restraints. Young children should not use the vehicle's adult safety belts alone, unless there is no other choice. Instead, they need to use a child restraint.

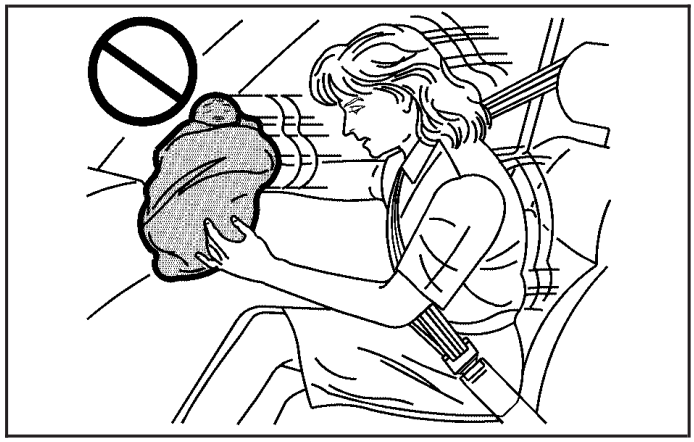

⚠ CAUTION:

People should never hold a baby in their arms while riding in a vehicle. A baby does not weigh much — until a crash. During a crash a baby will become so heavy it is not possible to hold it. For example, in a crash at only 25 mph (40 km/h), a 12 lb (5.5 kg) baby will suddenly become a 240 lb (110 kg) force on a person's arms. A baby should be secured in an appropriate restraint.

Downloaded from www.Manualslib.com manuals search engine

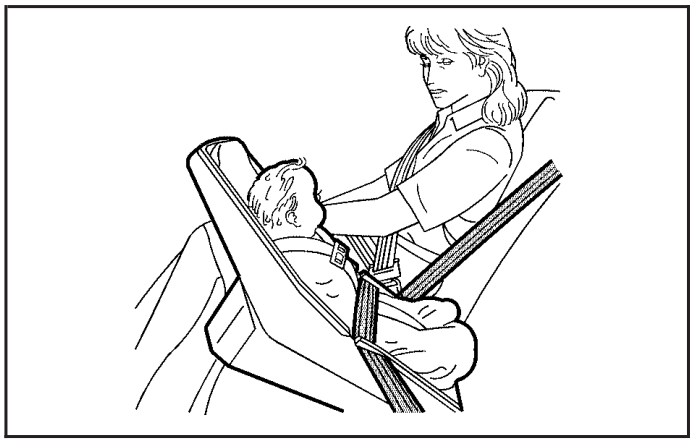

⚠ CAUTION:

Children who are up against, or very close to, any airbag when it inflates can be seriously injured or killed. Airbags plus lap-shoulder belts offer protection for adults and older children, but not for young children and infants. Neither the vehicle's safety belt system nor its airbag system is designed for them. Young children and infants need the protection that a child restraint system can provide.

Q: What are the different types of add-on child restraints?

A: Add-on child restraints, which are purchased by the vehicle's owner, are available in four basic types. Selection of a particular restraint should take into consideration not only the child's weight, height and age but also whether or not the restraint will be compatible with the motor vehicle in which it will be used.

Downloaded from www.Manualslib.com manuals search engine

For most basic types of child restraints, there are many different models available. When purchasing a child restraint, be sure it is designed to be used in a motor vehicle. If it is, the restraint will have a label saying that it meets federal motor vehicle safety standards.

The restraint manufacturer's instructions that come with the restraint, state the weight and height limitations for a particular child restraint. In addition, there are many kinds of restraints available for children with special needs.

⚠ CAUTION:

Newborn infants need complete support, including support for the head and neck. This is necessary because a newborn infant's neck is weak and its head weighs so much compared with the rest of its body. In a crash, an infant in a rear-facing seat settles into the restraint, so the crash forces can be distributed across the strongest part of an infant's body, the back and shoulders. Infants always should be secured in appropriate infant restraints.

⚠ CAUTION:

The body structure of a young child is quite unlike that of an adult or older child, for whom the safety belts are designed. A young child's hip bones are still so small that the vehicle's regular safety belt may not remain low on the hip bones, as it should. Instead, it may settle up around the child's abdomen. In a crash, the belt would apply force on a body area that is unprotected by any bony structure. This alone could cause serious or fatal injuries. Young children always should be secured in appropriate child restraints.

Downloaded from www.Manualslib.com manuals search engine

Child Restraint Systems

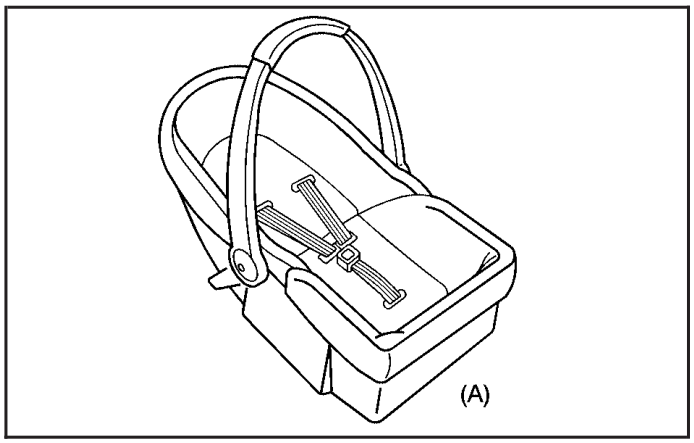

An infant car bed (A), a special bed made for use in a motor vehicle, is an infant restraint system designed to restrain or position a child on a continuous flat surface. Make sure that the infant's head rests toward the center of the vehicle.

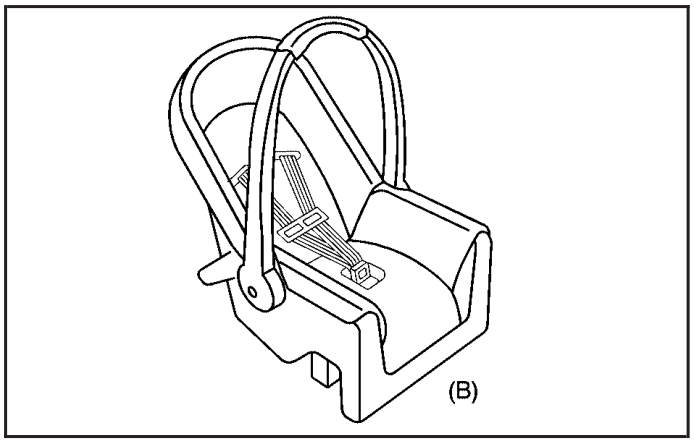

A rear-facing infant seat (B) provides restraint with the seating surface against the back of the infant. The harness system holds the infant in place and, in a crash, acts to keep the infant positioned in the restraint.

Downloaded from www.Manualslib.com manuals search engine

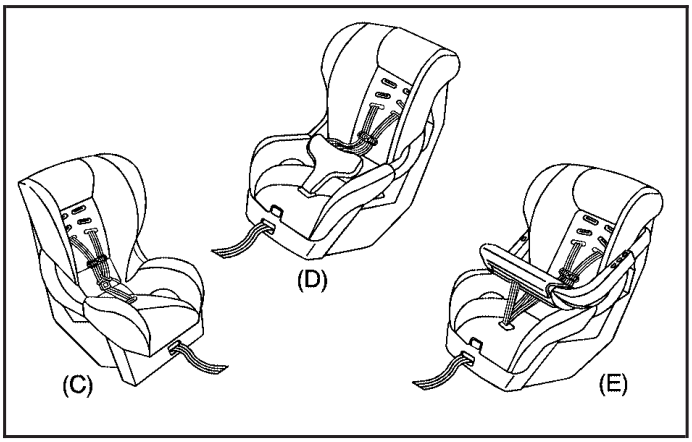

A forward-facing child seat (C-E) provides restraint for the child's body with the harness and also sometimes with surfaces such as T-shaped or shelf-like shields.

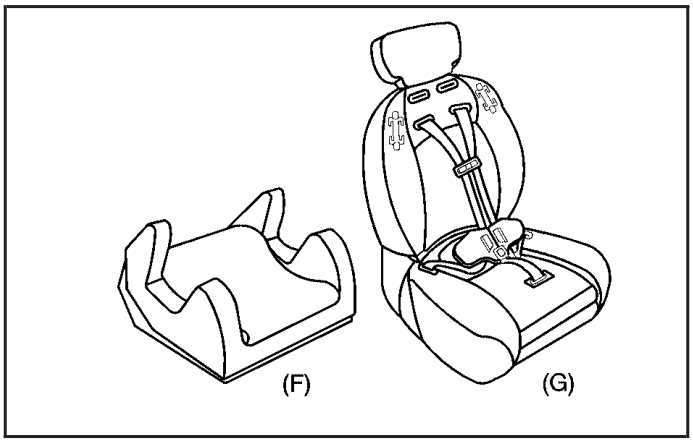

A booster seat (F-G) is a child restraint designed to improve the fit of the vehicle's safety belt system. Some booster seats have a shoulder belt positioner, and some high-back booster seats have a five-point harness. A booster seat can also help a child to see out the window.

Downloaded from www.Manualslib.com manuals search engine

Q: How Should I Use a Child Restraint?

A: A child restraint system is any device designed for use in a motor vehicle to restrain, seat, or position children. A built-in child restraint system is a permanent part of the motor vehicle. An add-on child restraint system is a portable one, which is purchased by the vehicle's owner. To help reduce injuries, an add-on child restraint must be secured in the vehicle. With built-in or add-on child restraints, the child has to be secured within the child restraint.

When choosing an add-on child restraint, be sure the child restraint is designed to be used in a vehicle. If it is, it will have a label saying that it meets federal motor vehicle safety standards. Then follow the instructions for the restraint. You may find these instructions on the restraint itself or in a booklet, or both.

Securing an Add-on Child Restraint in the Vehicle

⚠ CAUTION:

A child can be seriously injured or killed in a crash if the child restraint is not properly secured in the vehicle. Make sure the child restraint is properly installed in the vehicle using the vehicle's safety belt or LATCH system, following the instructions that came with that restraint, and also the instructions in this manual.

To help reduce the chance of injury, the child restraint must be secured in the vehicle. Child restraint systems must be secured in vehicle seats by lap belts or the lap belt portion of a lap-shoulder belt, or by the LATCH system. See *Lower Anchors and Tethers for Children (LATCH) on page 1-41* for more information. A child can be endangered in a crash if the child restraint is not properly secured in the vehicle.

Downloaded from www.Manualslib.com manuals search engine

When securing an add-on child restraint, refer to the instructions that come with the restraint which may be on the restraint itself or in a booklet, or both, and to this manual. The child restraint instructions are important, so if they are not available, obtain a replacement copy from the manufacturer.

Keep in mind that an unsecured child restraint can move around in a collision or sudden stop and injure people in the vehicle. Be sure to properly secure any child restraint in your vehicle — even when no child is in it.

Securing the Child Within the Child Restraint

There are several systems for securing the child within the child restraint. One system, the three-point harness, has straps that come down over each of the infant's shoulders and buckle together at the crotch. The five-point harness system has two shoulder straps, two hip straps, and a crotch strap. A shield may take the place of hip straps. A T-shaped shield has shoulder straps that are attached to a flat pad which rests low against the child's body. A shelf- or armrest-type shield has straps that are attached to a wide, shelf-like shield that swings up or to the side.

⚠ CAUTION:

A child can be seriously injured or killed in a crash if the child is not properly secured in the child restraint. Make sure the child is properly secured, following the instructions that came with that restraint.

Because there are different systems, it is important to refer to the instructions that come with the restraint. A child can be endangered in a crash if the child is not properly secured in the child restraint.

Downloaded from www.Manualslib.com manuals search engine

Where to Put the Restraint

Accident statistics show that children are safer if they are restrained in the rear rather than the front seat. We recommend that child restraints be secured in a rear seat, including an infant riding in a rear-facing infant seat, a child riding in a forward-facing child seat and an older child riding in a booster seat.

Your vehicle has a rear seat that will accommodate a rear-facing child restraint. A label on your sun visor says, “Never put a rear-facing child seat in the front.” This is because the risk to the rear-facing child is so great, if the airbag deploys.

⚠ CAUTION:

A child in a rear-facing child restraint can be seriously injured or killed if the right front passenger’s airbag inflates. This is because the back of the rear-facing child restraint would be very close to the inflating airbag.

CAUTION: (Continued)

CAUTION: (Continued)

Even though the passenger sensing system is designed to turn off the passenger’s frontal airbag if the system detects a rear-facing child restraint, no system is fail-safe, and no one can guarantee that an airbag will not deploy under some unusual circumstance, even though it is turned off. We recommend that rear-facing child restraints be secured in the rear seat, even if the airbag is off.

If you need to secure a forward-facing child restraint in the right front seat, always move the front passenger seat as far back as it will go. It is better to secure the child restraint in a rear seat.

Wherever you install a child restraint, be sure to secure the child restraint properly.

Keep in mind that an unsecured child restraint can move around in a collision or sudden stop and injure people in the vehicle. Be sure to properly secure any child restraint in your vehicle — even when no child is in it.

Downloaded from www.Manualslib.com manuals search engine

Lower Anchors and Tethers for Children (LATCH)

Your vehicle has the LATCH system. The LATCH system holds a child restraint during driving or in a crash. This system is designed to make installation of a child restraint easier. The LATCH system uses anchors in the vehicle and attachments on the child restraint that are made for use with the LATCH system

Make sure that a LATCH-compatible child restraint is properly installed using the anchors, or use the vehicle's safety belts to secure the restraint, following the instructions that came with that restraint, and also the instructions in this manual. When installing a child restraint with a top tether, you must also use either the lower anchors or the safety belts to properly secure the child restraint. A child restraint must never be installed using only the top tether and anchor.

In order to use the LATCH system in your vehicle, you need a child restraint equipped with LATCH attachments. The child restraint manufacturer will provide you with instructions on how to use the child restraint and its attachments. The following explains how to attach a child restraint with these attachments in your vehicle.

Your vehicle has lower anchors and top tether anchors. Your child restraint may have lower attachments and a top tether.

Not all vehicle seating positions or child restraints have lower anchors and attachments or top tether anchors and attachments.

Lower Anchors

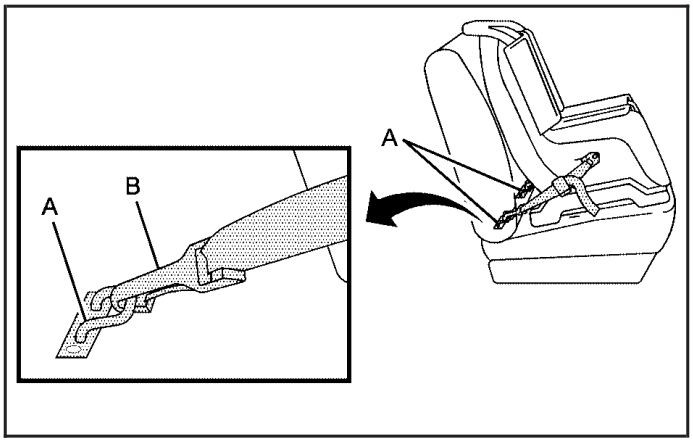

Lower anchors (A) are metal bars built into the vehicle. There are two lower anchors for each LATCH seating position that will accommodate a child restraint with lower attachments (B).

Downloaded from www.Manualslib.com manuals search engine

Top Tether Anchor

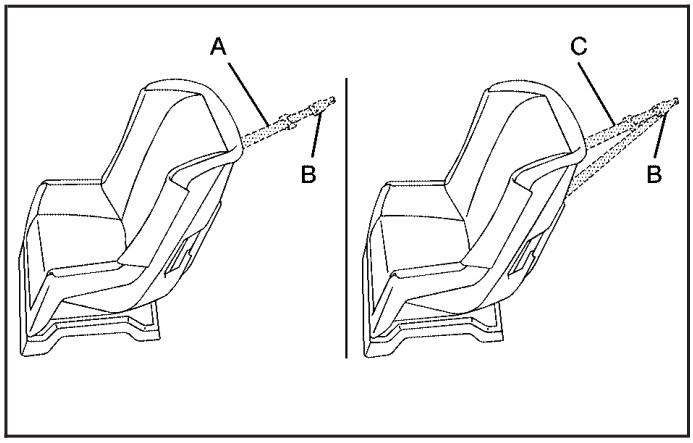

A top tether (A, C) anchors the top of the child restraint to the vehicle. A top tether anchor is built into the vehicle. The top tether attachment (B) on the child restraint connects to the top tether anchor in the vehicle in order to reduce the forward movement and rotation of the child restraint during driving or in a crash.

Your child restraint may have a single tether (A) or a dual tether (C). Either will have a single attachment (B) to secure the top tether to the anchor.

Some top tether-equipped child restraints are designed for use with or without the top tether being attached. Others require the top tether always to be attached. In Canada, the law requires that forward-facing child restraints have a top tether, and that the tether be attached. In the United States, some child restraints also have a top tether. Be sure to read and follow the instructions for your child restraint.

If the child restraint does not have a top tether, one can be obtained, in kit form, for many child restraints. Ask the child restraint manufacturer whether or not a kit is available.

Downloaded from www.Manualslib.com manuals search engine

Lower Anchor and Top Tether Anchor Locations

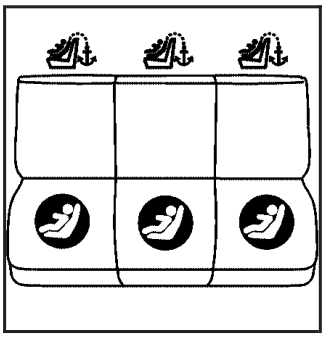

Rear Seat

(Top Tether Anchor): Seating positions with top tether anchors.

(Lower Anchor): Seating positions with two lower anchors.

To assist you in locating the lower anchors, each seating position with lower anchors has two labels, near the crease between the seatback and the seat cushion, showing where the anchors are located.

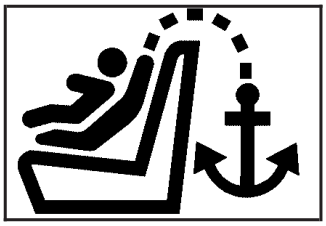

To assist you in locating the top tether anchors, the top tether anchor symbol is located on the trim cover.

The top tether anchors are located on the rear seatback filler panel. Open the trim cover to access the anchors. Be sure to use an anchor located on the same side of the vehicle as the seating position where the child restraint will be placed.

Downloaded from www.Manualslib.com manuals search engine

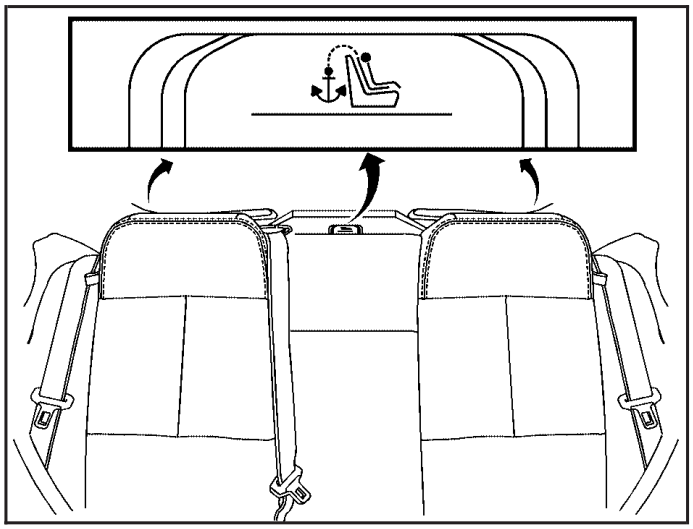

Do not secure a child restraint in the right front passenger's position if a national or local law requires that the top tether be attached, or if the instructions that come with the child restraint say that the top tether must be attached. There is no place to attach the top tether in this position.

Accident statistics show that children are safer if they are restrained in the rear rather than the front seat. See *Where to Put the Restraint on page 1-40* for additional information.

Securing a Child Restraint Designed for the LATCH System

⚠ CAUTION:

If a LATCH-type child restraint is not attached to anchors, the restraint will not be able to protect the child correctly. In a crash, the child could be seriously injured or killed. Make sure that a LATCH-type child restraint is properly installed using the anchors, or use the vehicle's safety belts to secure the restraint, following the instructions that came with that restraint, and also the instructions in this manual.

Downloaded from www.Manualslib.com manuals search engine

⚠ CAUTION:

Each top tether anchor and lower anchor in the vehicle is designed to hold only one child restraint. Attaching more than one child restraint to a single anchor could cause the anchor or attachment to come loose or even break during a crash. A child or others could be injured if this happens. To help prevent injury to people and damage to your vehicle, attach only one child restraint per anchor.

1. Attach and tighten the lower attachments to the lower anchors. If the child restraint does not have lower attachments or the desired seating position does not have lower anchors, secure the child restraint with the top tether and the safety belts. Refer to your child restraint manufacturer instructions and the instructions in this manual.
   1.1. Find the lower anchors for the desired seating position.
   1.2. Put the child restraint on the seat.
   1.3. Attach and tighten the lower attachments on the child restraint to the lower anchors.
2. If the child restraint manufacturer recommends that the top tether be attached, attach and tighten the top tether to the top tether anchor, if equipped. Refer to the child restraint instructions and the following steps:
   2.1. Find the top tether anchor.
   2.2. Pull open the top tether anchor trim cover to expose the anchor.
   2.3. Route, attach, and tighten the top tether according to your child restraint instructions and the following instructions:

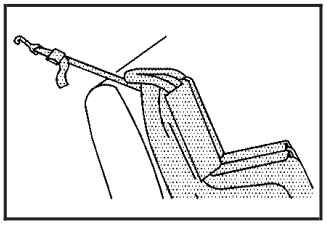

If the position you are using does not have a head restraint and you are using a single tether, route the tether over the seatback.

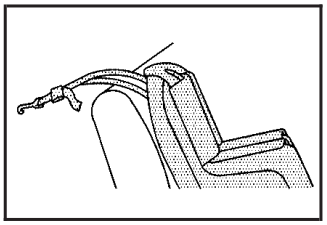

If the position you are using does not have a head restraint and you are using a dual tether, route the tether over the seatback.

Downloaded from www.Manualslib.com manuals search engine

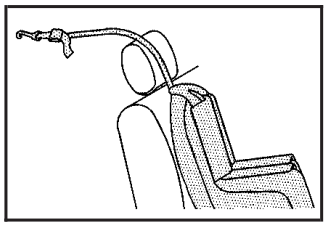

If the position you are using has a fixed head restraint and you are using a single tether, route the tether over the head restraint.

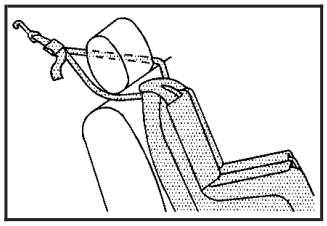

If the position you are using has a fixed head restraint and you are using a dual tether, route the tether around the head restraint.

3. Push and pull the child restraint in different directions to be sure it is secure.

Securing a Child Restraint in a Rear Seat Position

If your child restraint is equipped with the LATCH system, see *Lower Anchors and Tethers for Children (LATCH) on page 1-41*.

If your child restraint does not have the LATCH system, you will be using the lap-shoulder belt to secure the child restraint in this position. Be sure to follow the instructions that came with the child restraint. Secure the child in the child restraint when and as the instructions say.

1. Put the child restraint on the seat.
2. Pick up the latch plate, and run the lap and shoulder portions of the vehicle's safety belt through or around the restraint. The child restraint instructions will show you how.

Downloaded from www.Manualslib.com manuals search engine

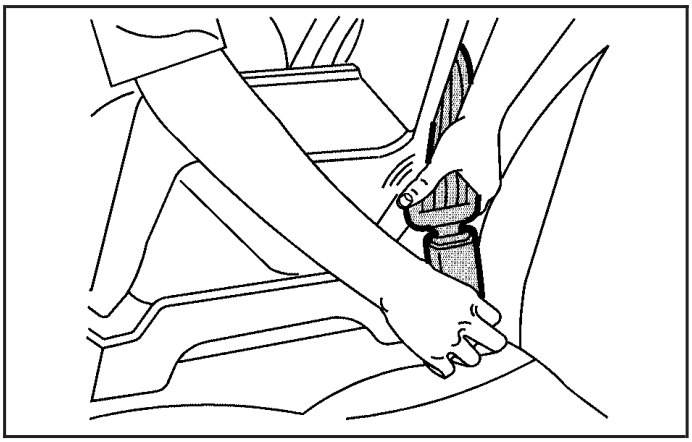

3. Buckle the belt. Make sure the release button is positioned so you would be able to unbuckle the safety belt quickly if you ever had to.

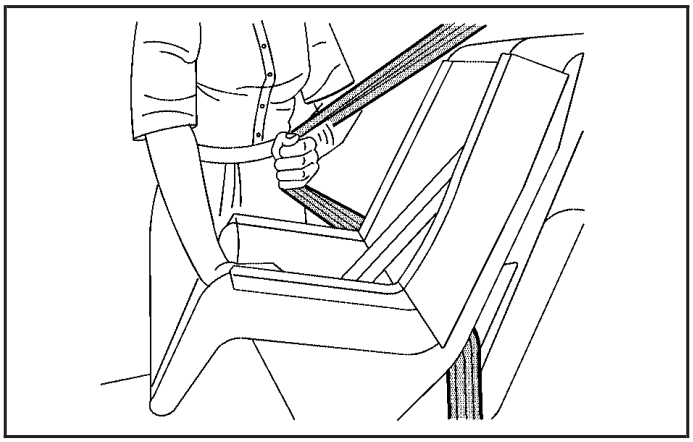

4. Pull the rest of the shoulder belt all the way out of the retractor to set the lock.

Downloaded from www.Manualslib.com manuals search engine

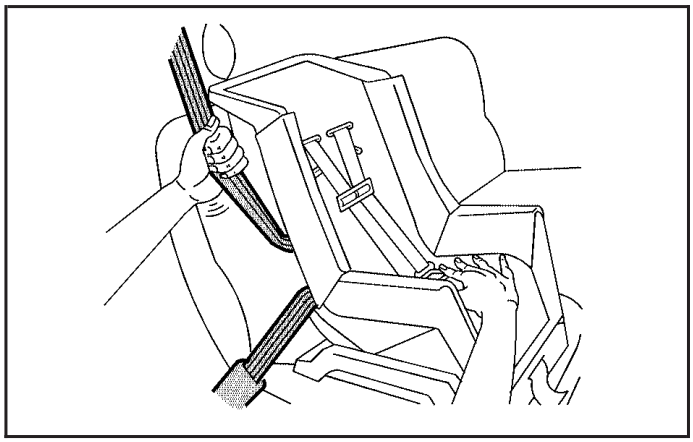

5. To tighten the belt, push down on the child restraint, pull the shoulder portion of the belt to tighten the lap portion of the belt and feed the shoulder belt back into the retractor. If you are using a forward-facing child restraint, you may find it helpful to use your knee to push down on the child restraint as you tighten the belt.
6. If your child restraint manufacturer recommends using a top tether, attach and tighten the top tether to the top tether anchor. Refer to the instructions that came with the child restraint and see *Lower Anchors and Tethers for Children (LATCH) on page 1-41*.
7. Push and pull the child restraint in different directions to be sure it is secure.

To remove the child restraint, if the top tether is attached to the top tether anchor, disconnect it. Unbuckle the vehicle's safety belt and let it go back all the way. The safety belt will move freely again and be ready to work for an adult or larger child passenger.

Securing a Child Restraint in the Right Front Seat Position

Your vehicle has a right front passenger's airbag. A rear seat is a safer place to secure a forward-facing child restraint. See *Where to Put the Restraint on page 1-40*.

In addition, your vehicle has a passenger sensing system. The passenger sensing system is designed to turn off the right front passenger's frontal airbag when an infant in a rear-facing infant seat or a small child in a forward-facing child restraint or booster seat is detected. See *Passenger Sensing System on page 1-61* and *Passenger Airbag Status Indicator on page 3-40* for more information on this including important safety information.

A label on your sun visor says, "Never put a rear-facing child seat in the front." This is because the risk to the rear-facing child is so great, if the airbag deploys.

Downloaded from www.Manualslib.com manuals search engine

⚠ CAUTION:

A child in a rear-facing child restraint can be seriously injured or killed if the right front passenger's airbag inflates. This is because the back of the rear-facing child restraint would be very close to the inflating airbag.

Even though the passenger sensing system is designed to turn off the passenger's frontal airbag if the system detects a rear-facing child restraint, no system is fail-safe, and no one can guarantee that an airbag will not deploy under some unusual circumstance, even though it is turned off. We recommend that rear-facing child restraints be secured in the rear seat, even if the airbag is off.

If you need to secure a forward-facing child restraint in the right front seat position, move the seat as far back as it will go before securing the forward-facing child restraint. See *Manual Passenger Seat on page 1-2*.

If your child restraint is equipped with the LATCH system, see *Lower Anchors and Tethers for Children (LATCH) on page 1-41*.

There is no top tether anchor at the right front seating position. Do not secure a child seat in this position if a national or local law requires that the top tether be anchored or if the instructions that come with the child restraint say that the top tether must be anchored. See *Lower Anchors and Tethers for Children (LATCH) on page 1-41* if the child restraint has a top tether.

You will be using the lap-shoulder belt to secure the child restraint in this position. Be sure to follow the instructions that came with the child restraint. Secure the child in the child restraint when and as the instructions say.

1. Your vehicle has a right front passenger's frontal airbag. See *Passenger Sensing System on page 1-61*. General Motors recommends that rear-facing child restraints be secured in a rear seat, even if the airbag is off. If your child restraint is forward-facing, move the seat as far back as it will go before securing the child restraint in this seat. See *Manual Passenger Seat on page 1-2*.

   When the passenger sensing system has turned off the right front passenger's frontal airbag, the off indicator in the passenger airbag status indicator should light and stay lit when you turn the ignition to RUN or START. See *Passenger Airbag Status Indicator on page 3-40*.

2. Put the child restraint on the seat.

Downloaded from www.Manualslib.com manuals search engine

3. Pick up the latch plate, and run the lap and shoulder portions of the vehicle's safety belt through or around the restraint. The child restraint instructions will show you how.

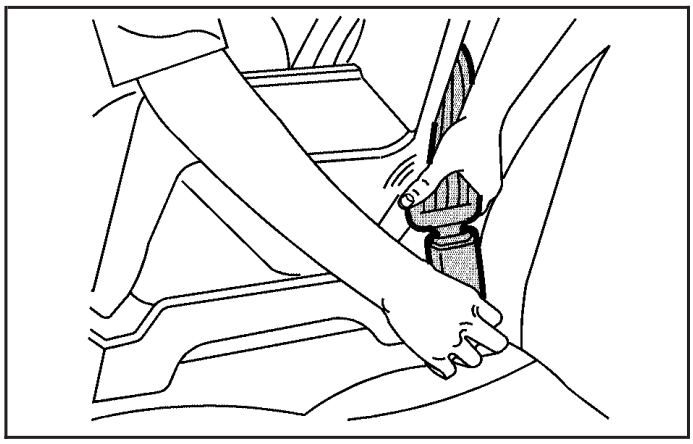

4. Buckle the belt. Make sure the release button is positioned so you would be able to unbuckle the safety belt quickly if you ever had to.

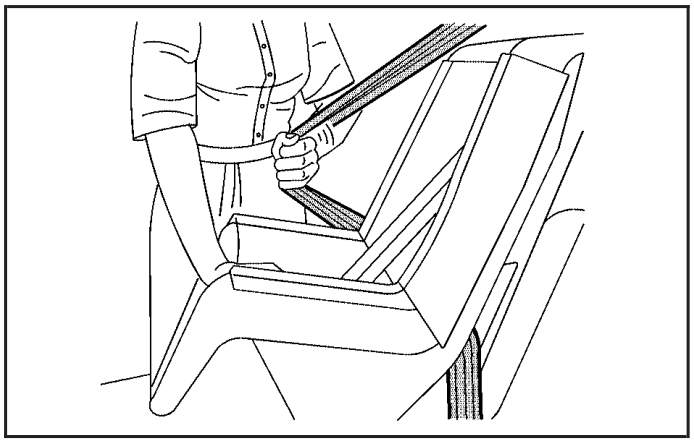

5. Pull the rest of the shoulder belt all the way out of the retractor to set the lock.

Downloaded from www.Manualslib.com manuals search engine

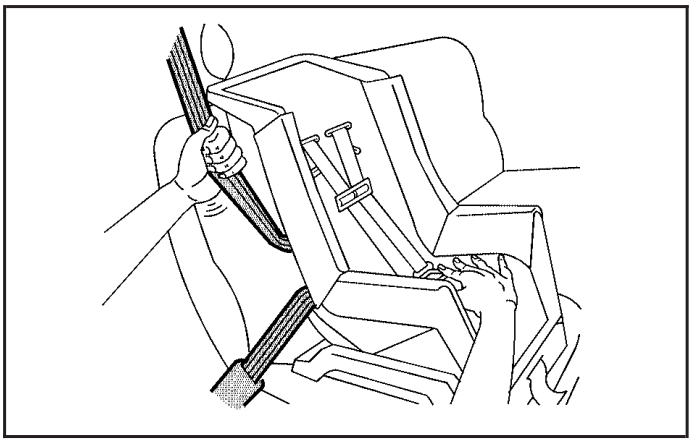

6. To tighten the belt, push down on the child restraint, pull the shoulder portion of the belt to tighten the lap portion of the belt and feed the shoulder belt back into the retractor. If you are using a forward-facing child restraint, you may find it helpful to use your knee to push down on the child restraint as you tighten the belt. You should not be able to pull more of the belt from the retractor once the lock has been set.
7. Push and pull the child restraint in different directions to be sure it is secure.
8. If the airbag is off, the off indicator on the instrument panel will be lit and stay lit when the key is turned to RUN or START.

If a child restraint has been installed and the on indicator is lit, turn the vehicle off. Remove the child restraint from the vehicle and reinstall the child restraint.

If after reinstalling the child restraint and restarting the vehicle, the on indicator is still lit, check to make sure that the vehicle's seatback is not pressing the child restraint into the seat cushion. If this happens, slightly recline the vehicle's seatback and adjust the seat cushion if possible. Also make sure the child restraint is not trapped under the vehicle head restraint. If this happens, adjust the head restraint.

If the on indicator is still lit, secure the child in the child restraint in a rear seat position in the vehicle and check with your dealer.

To remove the child restraint, just unbuckle the vehicle's safety belt and let it go back all the way. The safety belt will move freely again and be ready to work for an adult or larger child passenger.

Downloaded from www.Manualslib.com manuals search engine

Airbag System

Your vehicle has a frontal airbag for the driver and a frontal airbag for the right front passenger. Your vehicle may also have roof-mounted side impact airbags. Roof-mounted side impact airbags are available for the driver and the passenger seated directly behind the driver and for the right front passenger and the passenger seated directly behind that passenger.

If your vehicle has side impact airbags, the words AIR BAG will appear on the airbag covering on the ceiling near the driver's and right front passenger's window.

Frontal airbags are designed to help reduce the risk of injury from the force of an inflating frontal airbag. But these airbags must inflate very quickly to do their job and comply with federal regulations.

Here are the most important things to know about the airbag system:

⚠ CAUTION:

You can be severely injured or killed in a crash if you are not wearing your safety belt — even if you have airbags. Wearing your safety belt during a crash helps reduce your chance of hitting things inside the vehicle or being ejected from it. Airbags are "supplemental restraints" to the safety belts. All airbags are designed to work with safety belts but do not replace them.

CAUTION: (Continued)

Downloaded from www.Manualslib.com manuals search engine

CAUTION: (Continued)

Frontal airbags for the driver and right front passenger are designed to deploy in moderate to severe frontal and near frontal crashes. They are not designed to inflate in rollover, rear crashes, or in many side crashes. And, for some unrestrained occupants, frontal airbags may provide less protection in frontal crashes than more forceful airbags have provided in the past.

Roof-mounted side impact airbags are designed to inflate in moderate to severe crashes where something hits the side of your vehicle. They are not designed to inflate in frontal, in rollover or in rear crashes. Everyone in your vehicle should wear a safety belt properly — whether or not there is an airbag for that person.

⚠ CAUTION:

Both frontal and side impact airbags inflate with great force, faster than the blink of an eye. If you are too close to an inflating airbag, as you would be if you were leaning forward, it could seriously injure you. Safety belts help keep you in position for airbag inflation before and during a crash. Always wear your safety belt even with frontal airbags. The driver should sit as far back as possible while still maintaining control of the vehicle. Occupants should not lean on or sleep against the door.

Downloaded from www.Manualslib.com manuals search engine

⚠ CAUTION:

Anyone who is up against, or very close to, any airbag when it inflates can be seriously injured or killed. Airbags plus lap-shoulder belts offer the best protection for adults, but not for young children and infants. Neither the vehicle's safety belt system nor its airbag system is designed for them. Young children and infants need the protection that a child restraint system can provide. Always secure children properly in your vehicle. To read how, see *Older Children on page 1-30* or *Infants and Young Children on page 1-33*.

There is an airbag readiness light on the instrument panel cluster, which shows the airbag symbol.

The system checks the airbag electrical system for malfunctions. The light tells you if there is an electrical problem. See *Airbag Readiness Light on page 3-39* for more information.

Downloaded from www.Manualslib.com manuals search engine

Where Are the Airbags?

The driver's airbag is in the middle of the steering wheel.

The right front passenger's airbag is in the instrument panel on the passenger's side.

Downloaded from www.Manualslib.com manuals search engine

The side impact airbag for the driver and the person seated directly behind the driver is in the ceiling above the side windows.

The side impact airbag for the right front passenger and the person seated directly behind that passenger is in the ceiling above the side windows.

Downloaded from www.Manualslib.com manuals search engine

⚠ CAUTION:

If something is between an occupant and an airbag, the bag might not inflate properly or it might force the object into that person causing severe injury or even death. The path of an inflating airbag must be kept clear. Do not put anything between an occupant and an airbag, and do not attach or put anything on the steering wheel hub or on or near any other airbag covering. And, if your vehicle has roof-mounted side impact airbags, never secure anything to the roof of your vehicle by routing the rope or tiedown through any door or window opening. If you do, the path of an inflating side impact airbag will be blocked. The path of an inflating airbag must be kept clear.

When Should an Airbag Inflate?

The driver's and right front passenger's frontal airbags are designed to inflate in moderate to severe frontal or near-frontal crashes. But they are designed to inflate only if the impact exceeds a predetermined deployment threshold. Deployment thresholds take into account a variety of desired deployment and non-deployment events and are used to predict how severe a crash is likely to be in time for the airbags to inflate and help restrain the occupants. Whether your frontal airbags will or should deploy is not based on how fast your vehicle is traveling. It depends largely on what you hit, the direction of the impact and how quickly your vehicle slows down.

Downloaded from www.Manualslib.com manuals search engine

In addition, your vehicle has “dual-stage” frontal airbags, which adjust the restraint according to crash severity. Your vehicle is equipped with electronic frontal sensors which help the sensing system distinguish between a moderate frontal impact and a more severe frontal impact. For moderate frontal impacts, these airbags inflate at a level less than full deployment. For more severe frontal impacts, full deployment occurs. If the front of your vehicle goes straight into a wall that does not move or deform, the threshold level for the reduced deployment is about 12 to 16 mph (19 to 26 km/h), and the threshold level for a full deployment is about 18 to 24 mph (29 to 38.5 km/h). The threshold level can vary, however, with specific vehicle design, so that it can be somewhat above or below this range.

Frontal airbags may inflate at different crash speeds. For example:

- If the vehicle hits a stationary object, the airbags could inflate at a different crash speed than if the vehicle hits a moving object.
- If the vehicle hits an object that deforms, the airbags could inflate at a different crash speed than if the vehicle hits an object that does not deform.
- If the vehicle hits a narrow object (like a pole) the airbags could inflate at a different crash speed than if the vehicle hits a wide object (like a wall).
- If the vehicle goes into an object at an angle the airbags could inflate at a different crash speed than if the vehicle goes straight into the object.

Frontal airbags (driver and right front passenger) are not intended to inflate during vehicle rollovers, rear impacts, or in many side impacts.

Downloaded from www.Manualslib.com manuals search engine

Your vehicle may or may not have side impact airbags. See *Airbag System on page 1-52*. Side impact airbags are intended to inflate in moderate to severe side crashes. A side impact airbag will inflate if the crash severity is above the system's designed threshold level. The threshold level can vary with specific vehicle design. Side impact airbags are not intended to inflate in frontal or near-frontal impacts, rollovers or rear impacts. A side impact airbag is intended to deploy on the side of the vehicle that is struck.

In any particular crash, no one can say whether an airbag should have inflated simply because of the damage to a vehicle or because of what the repair costs were. For frontal airbags, inflation is determined by what the vehicle hits, the angle of the impact, and how quickly the vehicle slows down. For side impact airbags, inflation is determined by the location and severity of the impact.

What Makes an Airbag Inflate?

In an impact of sufficient severity, the airbag sensing system detects that the vehicle is in a crash. The sensing system triggers a release of gas from the inflator, which inflates the airbag. The inflator, airbag, and related hardware are all part of the airbag modules inside the steering wheel and in the instrument panel in front of the right front passenger. For vehicles with side impact airbags, there are also airbag modules in the ceiling of the vehicle, near the side windows.

How Does an Airbag Restrain?

In moderate to severe frontal or near frontal collisions, even belted occupants can contact the steering wheel or the instrument panel. In moderate to severe side collisions, even belted occupants can contact the inside of the vehicle. The airbag supplements the protection provided by safety belts. Airbags distribute the force of the impact more evenly over the occupant's upper body, stopping the occupant more gradually. But the frontal airbags would not help you in many types of collisions, including rollovers, rear impacts, and many side impacts, primarily because an occupant's motion is not toward the airbag. Side impact airbags would not help you in many types of collisions, including many frontal or near frontal collisions, and rear impacts, primarily because an occupant's motion is not toward those airbags. Airbags should never be regarded as anything more than a supplement to safety belts, and then only in moderate to severe frontal or near-frontal collisions for the driver's and right front passenger's frontal airbags, and only in moderate to severe side collisions for side impact airbags.

Downloaded from www.Manualslib.com manuals search engine

What Will You See After an Airbag Inflates?

After a frontal airbag inflates, it quickly deflates, so quickly that some people may not even realize the airbag inflated. Roof-mounted side impact airbags deflate more slowly and may still be at least partially inflated minutes after the vehicle comes to rest. Some components of the airbag module — the steering wheel hub for the driver's airbag, the instrument panel for the right front passenger's bag or the ceiling of your vehicle near the side windows — may be hot for a short time. The parts of the bag that come into contact with you may be warm, but not too hot to touch. There will be some smoke and dust coming from the vents in the deflated airbags. Airbag inflation does not prevent the driver from seeing out of the windshield or being able to steer the vehicle, nor does it stop people from leaving the vehicle.

⚠ CAUTION:

When an airbag inflates, there is dust in the air. This dust could cause breathing problems for people with a history of asthma or other breathing trouble. To avoid this, everyone in the vehicle should get out as soon as it is safe to do so. If you have breathing problems but cannot get out of the vehicle after an airbag inflates, then get fresh air by opening a window or a door. If you experience breathing problems following an airbag deployment, you should seek medical attention.

Downloaded from www.Manualslib.com manuals search engine

In many crashes severe enough to inflate an airbag, windshields are broken by vehicle deformation. Additional windshield breakage may also occur from the right front passenger airbag.

- Airbags are designed to inflate only once. After an airbag inflates, you will need some new parts for your airbag system. If you do not get them, the airbag system will not be there to help protect you in another crash. A new system will include airbag modules and possibly other parts. The service manual for your vehicle covers the need to replace other parts.
- Your vehicle is equipped with a crash sensing and diagnostic module which records information after a crash. See *Vehicle Data Collection and Event Data Recorders on page 7-9*.
- Let only qualified technicians work on your airbag system. Improper service can mean that your airbag system will not work properly. See your dealer for service.

Passenger Sensing System

Your vehicle has a passenger sensing system. The passenger airbag status indicator on the instrument panel will be visible when you turn your ignition key to RUN or START. The words ON and OFF or the symbol for on and off, will be visible during the system check. If you use remote start to start your vehicle from a distance, if equipped, you may not see the system check. When the system check is complete, either the word ON or the word OFF, or the symbol for on or the symbol for off will be visible. See *Passenger Airbag Status Indicator on page 3-40*.

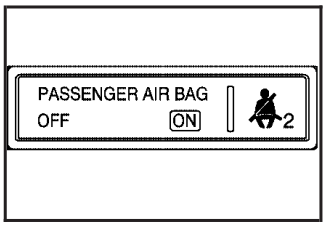

Passenger Airbag Status Indicator – United States

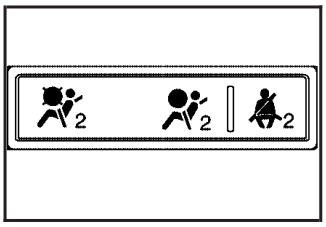

Passenger Airbag Status Indicator – Canada

The passenger sensing system will turn off the right front passenger's frontal airbag under certain conditions. The driver's airbag and the side airbags are not part of the passenger sensing system.

Downloaded from www.Manualslib.com manuals search engine

The passenger sensing system works with sensors that are part of the right front passenger's seat. The sensors are designed to detect the presence of a properly-seated occupant and determine if the passenger's frontal airbag should be enabled (may inflate) or not.

Accident statistics show that children are safer if they are restrained in the rear rather than the front seat. General Motors recommends that child restraints be secured in a rear seat, including an infant riding in a rear-facing infant seat, a child riding in a forward-facing child seat, and an older child riding in a booster seat.

Your vehicle has a rear seat that will accommodate a rear-facing child restraint. A label on your sun visor says, "Never put a rear-facing child seat in the front." This is because the risk to the rear-facing child is so great, if the airbag deploys.

⚠ CAUTION:

A child in a rear-facing child restraint can be seriously injured or killed if the right front passenger's airbag inflates. This is because the back of the rear-facing child restraint would be very close to the inflating airbag.

Even though the passenger sensing system is designed to turn off the passenger's frontal airbag if the system detects a rear-facing child restraint, no system is fail-safe, and no one can guarantee that an airbag will not deploy under some unusual circumstance, even though it is turned off. We recommend that rear-facing child restraints be secured in the rear seat, even if the airbag is off.

If you need to secure a forward-facing child restraint in the right front seat, always move the front passenger seat as far back as it will go. It is better to secure the child restraint in a rear seat.

Downloaded from www.Manualslib.com manuals search engine

The passenger sensing system is designed to turn off the right front passenger's frontal airbag if:

- the right front passenger seat is unoccupied
- the system determines that an infant is present in a rear-facing infant seat
- the system determines that a small child is present in a forward-facing child restraint
- the system determines that a small child is present in a booster seat
- a right front passenger takes his/her weight off of the seat for a period of time
- the right front passenger seat is occupied by a smaller person, such as a child who has outgrown child restraints
- or if there is a critical problem with the airbag system or the passenger sensing system.

When the passenger sensing system has turned off the right front passenger's frontal airbag, the off indicator on the instrument panel will light and stay lit to remind you that the airbag is off.

If a child restraint has been installed and the on indicator is lit, turn the vehicle off. Remove the child restraint from the vehicle and reinstall the child restraint following the child restraint manufacturer's directions and refer to *Securing a Child Restraint in the Right Front Seat Position on page 1-48*.

If after reinstalling the child restraint and restarting the vehicle, the on indicator is still lit, check to make sure that the vehicle's seatback is not pressing the child restraint into the seat cushion. If this happens, slightly recline the vehicle's seatback and adjust the seat cushion if possible. Also make sure the child restraint is not trapped under the vehicle head restraint. If this happens, adjust the head restraint.

If the on indicator is still lit, secure the child in the child restraint in a rear seat position in the vehicle and check with your dealer.

The passenger sensing system is designed to enable (may inflate) the right front passenger's frontal airbag anytime the system senses that a person of adult size is sitting properly in the right front passenger's seat. When the passenger sensing system has allowed the airbag to be enabled, the on indicator will light and stay lit to remind you that the airbag is active.

For some children who have outgrown child restraints and for very small adults, the passenger sensing system may or may not turn off the right front passenger's frontal airbag, depending upon the person's seating posture and body build. Everyone in your vehicle who has outgrown child restraints should wear a safety belt properly — whether or not there is an airbag for that person.

Downloaded from www.Manualslib.com manuals search engine

If a person of adult-size is sitting in the right front passenger's seat, but the off indicator is lit, it could be because that person is not sitting properly in the seat. If this happens, turn the vehicle off and ask the person to place the seatback in the fully upright position, then sit upright in the seat, centered on the seat cushion, with the person's legs comfortably extended. Restart the vehicle and have the person remain in this position for about two minutes. This will allow the system to detect that person and then enable the passenger's airbag.

⚠ CAUTION:

If the airbag readiness light in the instrument panel cluster ever comes on and stays on, it means that something may be wrong with the airbag system. If this ever happens, have the vehicle serviced promptly, because an adult-size person sitting in the right front passenger's seat may not have the protection of the frontal airbag. See *Airbag Readiness Light on page 3-39* for more on this, including important safety information.

A thick layer of additional material such as a blanket, or aftermarket equipment such as seat covers, seat heaters, and seat massagers, can affect how well the passenger sensing system operates. Remove any additional material from the seat cushion before reinstalling or securing the child restraint and before a small occupant, including a small adult, sits in the passenger position.

Downloaded from www.Manualslib.com manuals search engine

You may want to consider not using seat covers or other aftermarket equipment if your vehicle has the passenger sensing system. See *Adding Equipment to Your Airbag-Equipped Vehicle on page 1-66* for more information about modifications that can affect how the system operates.

The passenger sensing system may suppress the airbag deployment when liquid is soaked into the seat. If this happens, the off indicator in the passenger airbag status indicator and the airbag readiness light on the instrument panel will be lit. The system should resume normal operation after the seat is allowed to dry. If the system operates incorrectly after the seat has dried, have your dealer check the system.

⚠ CAUTION:

Stowing of articles under the passenger's seat or between the passenger's seat cushion and seatback may interfere with the proper operation of the passenger sensing system.

Servicing Your Airbag-Equipped Vehicle

Airbags affect how your vehicle should be serviced. There are parts of the airbag system in several places around your vehicle. You do not want the system to inflate while someone is working on your vehicle. Your dealer and the service manual have information about servicing your vehicle and the airbag system. To purchase a service manual, see *Service Publications Ordering Information on page 7-14*.

⚠ CAUTION:

For up to 10 seconds after the ignition key is turned off and the battery is disconnected, an airbag can still inflate during improper service. You can be injured if you are close to an airbag when it inflates. Avoid yellow connectors. They are probably part of the airbag system. Be sure to follow proper service procedures, and make sure the person performing work for you is qualified to do so.

The airbag system does not need regular maintenance.

Downloaded from www.Manualslib.com manuals search engine

Adding Equipment to Your Airbag-Equipped Vehicle

Q: Is there anything I might add to the front or sides of the vehicle that could keep the airbags from working properly?

A: Yes. If you add things that change your vehicle's frame, bumper system, front end or side sheet metal or height, they may keep the airbag system from working properly. Also, the airbag system may not work properly if you relocate any of the airbag sensors. If you have any questions about this, you should contact Customer Service before you modify your vehicle. The phone numbers and addresses for Customer Assistance are in Step Two of the Customer Satisfaction Procedure in this manual. See *Customer Satisfaction Procedure on page 7-2*.

Q: Because I have a disability, I have to get my vehicle modified. How can I find out whether this will affect my airbag system?

A: Changing or moving any parts of the front seats, safety belts, the airbag sensing and diagnostic module (located under the right front passenger's seat), or the instrument panel can affect the operation of the airbag system. If you have questions, call Customer Assistance. The phone numbers and addresses for Customer Assistance are in Step Two of the Customer Satisfaction Procedure in this manual. See *Customer Satisfaction Procedure on page 7-2*.

Downloaded from www.Manualslib.com manuals search engine

Restraint System Check

Checking the Restraint Systems

Now and then, make sure the safety belt reminder light and all your belts, buckles, latch plates, retractors and anchorages are working properly. Look for any other loose or damaged safety belt system parts. If you see anything that might keep a safety belt system from doing its job, have it repaired.

Torn or frayed safety belts may not protect you in a crash. They can rip apart under impact forces. If a belt is torn or frayed, get a new one right away.

Also look for any opened or broken airbag covers, and have them repaired or replaced. (The airbag system does not need regular maintenance.)

Notice: **If you damage the covering for the driver's or the right front passenger's airbag, or the side impact airbag covering (if equipped) on the ceiling near the side windows, the airbag may not work properly. You may have to replace the airbag module in the steering wheel, both the airbag module and the instrument panel for the right front passenger's airbag, or side impact airbag module and ceiling covering for roof-mounted side impact airbags (if equipped.) Do not open or break the airbag coverings.**

Replacing Restraint System Parts After a Crash

⚠ CAUTION:

A crash can damage the restraint systems in your vehicle. A damaged restraint system may not properly protect the person using it, resulting in serious injury or even death in a crash. To help make sure your restraint systems are working properly after a crash, have them inspected and any necessary replacements made as soon as possible.

If you have had a crash, do you need new belts or LATCH system parts?

After a very minor collision, nothing may be necessary. But if the belts were stretched, as they would be if worn during a more severe crash, then you need new parts.

Downloaded from www.Manualslib.com manuals search engine

If the LATCH system was being used during a more severe crash, you may need new LATCH system parts.

If belts are cut or damaged, replace them. Collision damage also may mean you will need to have LATCH system, safety belt or seat parts repaired or replaced. New parts and repairs may be necessary even if the belt or LATCH system was not being used at the time of the collision.

If an airbag inflates, you will need to replace airbag system parts. See the part on the airbag system earlier in this section.

If the frontal airbags inflate, you will also need to replace the driver's and right front passenger's safety belt buckle assembly. Be sure to do so. Then the new buckle assembly will be there to help protect you in a collision.

After a crash you may need to replace the driver and front passenger's safety belt buckle assemblies, even if the frontal airbags have not deployed. The driver and front passenger's safety belt buckle assemblies contain the safety belt pretensioners. Have your safety belt pretensioners checked if your vehicle has been in a collision, or if your airbag readiness light stays on after you start your vehicle or while you are driving. See *Airbag Readiness Light on page 3-39*.

Downloaded from www.Manualslib.com manuals search engine

Section 2 Features and Controls

Keys 2-2
Remote Keyless Entry System 2-3
Remote Keyless Entry System Operation 2-4

Doors and Locks 2-10
Door Locks 2-10
Power Door Locks 2-11
Delayed Locking 2-11
Programmable Automatic Door Locks 2-12
Rear Door Security Locks 2-12
Lockout Protection 2-13
Trunk 2-13

Windows 2-15
Power Windows 2-16
Sun Visors 2-17

Theft-Deterrent Systems 2-17
Content Theft-Deterrent 2-17
PASS-Key® III 2-19
PASS-Key® III Operation 2-20

Starting and Operating Your Vehicle 2-21
New Vehicle Break-In 2-21
Ignition Positions 2-22
Retained Accessory Power (RAP) 2-22
Starting the Engine 2-23
Engine Coolant Heater 2-24
Displacement on Demand™ (DoD™) (5.3L Engine) 2-25
Automatic Transaxle Operation 2-25
Parking Brake 2-30
Shifting Into Park (P) 2-31
Shifting Out of Park (P) 2-32
Parking Over Things That Burn 2-33
Engine Exhaust 2-33
Running the Engine While Parked 2-34

Mirrors 2-35
Manual Rearview Mirror with OnStar® 2-35
Automatic Dimming Rearview Mirror with Compass and Temperature Display 2-35
Outside Power Mirrors 2-37
Outside Convex Mirror 2-38

OnStar® System 2-38

Storage Areas 2-40
Glove Box 2-40
Cupholder(s) 2-41
Overhead Console 2-42
Front Seat Storage Net 2-42
Center Console Storage Area 2-42
Assist Handles 2-42
Convenience Net 2-43

Sunroof 2-43

Downloaded from www.Manualslib.com manuals search engine

Keys

⚠ CAUTION:

Leaving children in a vehicle with the ignition key is dangerous for many reasons. They could operate the power windows or other controls or even make the vehicle move. The children or others could be badly injured or even killed. Do not leave the keys in a vehicle with children.

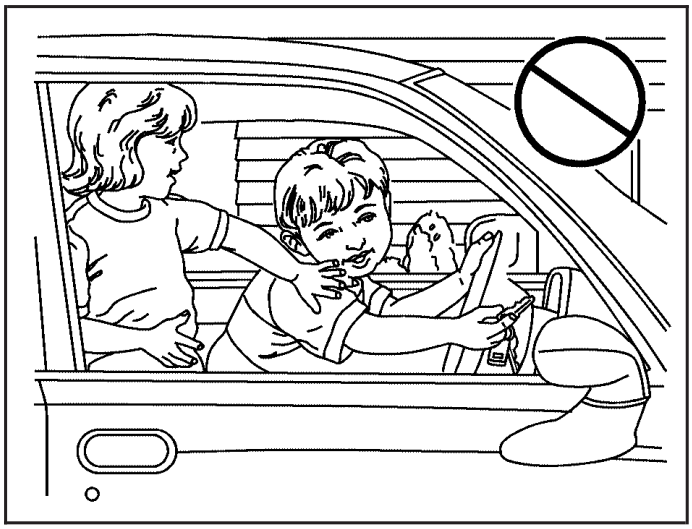

Downloaded from www.Manualslib.com manuals search engine

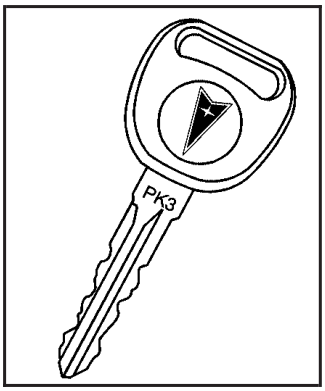

The key can be used for the ignition, as well as the driver's door lock and storage compartments.

The key comes with a bar coded tag attached to the key ring. Keep this bar coded tag and give it to your dealer if a new key needs to be made.

The vehicle has the PASS-Key® III vehicle theft system. The key has a transponder in the key head that matches a decoder in the vehicle's instrument panel. The key will have PK3 stamped on it. If a replacement key or an additional key is needed, it must be purchased from your dealer.

Any new PASS-Key® III key must be programmed before it will start the vehicle. See *PASS-Key® III on page 2-19* for more information on programming a new key.

In an emergency, contact Roadside Assistance. See *Roadside Assistance Program on page 7-6* for more information.

Notice: **If you ever lock your keys in your vehicle, you may have to damage the vehicle to get in. Be sure you have spare keys.**

If the vehicle has the OnStar ® system with an active subscription, and the keys are locked inside the vehicle, OnStar ® may be able to send a command to unlock the vehicle. See *OnStar® System on page 2-38* for more information.

Remote Keyless Entry System

Your keyless entry system operates on a radio frequency subject to Federal Communications Commission (FCC) Rules and with Industry Canada.

This device complies with Part 15 of the FCC Rules. Operation is subject to the following two conditions:

1. This device may not cause interference.
2. This device must accept any interference received, including interference that may cause undesired operation of the device.

Downloaded from www.Manualslib.com manuals search engine

This device complies with RSS-210 of Industry Canada. Operation is subject to the following two conditions:

1. This device may not cause interference.
2. This device must accept any interference received, including interference that may cause undesired operation of the device.

Changes or modifications to this system by other than an authorized service facility could void authorization to use this equipment.

At times you may notice a decrease in range. This is normal for any remote keyless entry system. If the transmitter does not work or if you have to stand closer to your vehicle for the transmitter to work, try this:

- Check the distance. You may be too far from your vehicle. You may need to stand closer during rainy or snowy weather.
- Check the location. Other vehicles or objects may be blocking the signal. Take a few steps to the left or right, hold the transmitter higher, and try again.
- Check to determine if battery replacement is necessary. See “Battery Replacement” under *Remote Keyless Entry System Operation on page 2-4*.
- If you are still having trouble, see your dealer or a qualified technician for service.

Remote Keyless Entry System Operation

The vehicle’s doors can be locked and unlocked, and the trunk can be opened from approximately 3 feet (1 m) up to 60 feet (18 m) away with the remote keyless entry transmitter.

If your vehicle has the remote vehicle start feature, you can also start the vehicle’s engine with the remote keyless entry transmitter.

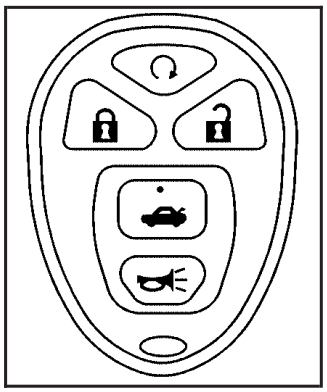

Remote Keyless Entry with Remote Start

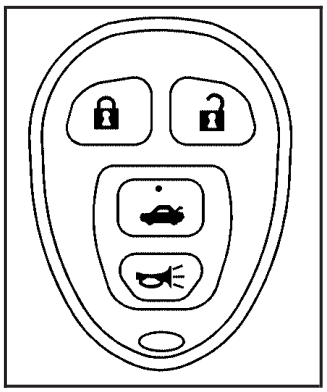

Remote Keyless Entry without Remote Start

Downloaded from www.Manualslib.com manuals search engine

The following functions may be available with your vehicle's remote keyless entry system:

(Remote Vehicle Start): If your vehicle has this feature, the engine may be started from outside the vehicle using the remote keyless entry transmitter. See "Remote Vehicle Start" later in this section for more detailed information.

(Lock): Press the lock button to lock all the doors. If enabled through the Driver Information Center (DIC), the parking lamps may flash once and the horn may chirp once to indicate locking has occurred. See "REMOTE LOCKS FEEDBACK" under *DIC Controls and Displays (Base Level DIC) on page 3-52* or *DIC Controls and Displays (Uplevel DIC with Trip Computer) on page 3-60* for programming information. Pressing the lock button will arm the content theft-deterrent system. See *Content Theft-Deterrent on page 2-17* for more information.

(Unlock): Press the unlock button one time to unlock the driver's door. Press the unlock button again within five seconds to unlock the other doors. The interior lamps will come on and stay on for 20 seconds or until the ignition is turned on. If enabled through the DIC, the parking lamps may flash once and the horn may chirp once to indicate unlocking has occurred. See "REMOTE LOCKS FEEDBACK" under *DIC Controls and Displays (Base Level DIC) on page 3-52* or *DIC Controls and Displays (Uplevel DIC with Trip Computer) on page 3-60*. Pressing the unlock button on the remote keyless entry transmitter will disarm the content theft-deterrent system. See *Content Theft-Deterrent on page 2-17* for more details.

(Trunk Release): Press this button to release the trunk lid. The transaxle must be in PARK (P) for this feature to operate.

(Panic Alarm): Press this button to activate the alarm. The ignition must be in OFF for the remote alarm to work. When the remote alarm button is pressed the headlamps will flash and the horn will sound repeatedly for two minutes. The alarm will turn off when the ignition is moved to RUN or the remote alarm button is pressed again.

Downloaded from www.Manualslib.com manuals search engine

Matching Transmitter(s) to Your Vehicle

Each remote keyless entry transmitter is coded to prevent another transmitter from unlocking your vehicle. If a transmitter is lost or stolen, a replacement can be purchased through your GM dealer. Remember to bring any additional transmitters with you when you go to your dealer. When the dealer matches the replacement transmitter to your vehicle, any remaining transmitters must also be matched. Once your dealer has coded the new transmitter, the lost transmitter cannot unlock your vehicle. The vehicle can have a maximum of four transmitters matched to it.

Battery Replacement

Under normal use, the battery in the remote keyless entry transmitter should last about four years.

If the battery is weak the transmitter will not work within its normal range. It is probably time to change the battery if you have to be very close to the vehicle before the transmitter works.

The KEY FOB BATTERY LOW message, in the vehicle's DIC, will display, if the remote keyless entry transmitter battery is low.

Notice: **When replacing the battery, use care not to touch any of the circuitry. Static from your body transferred to these surfaces may damage the transmitter.**

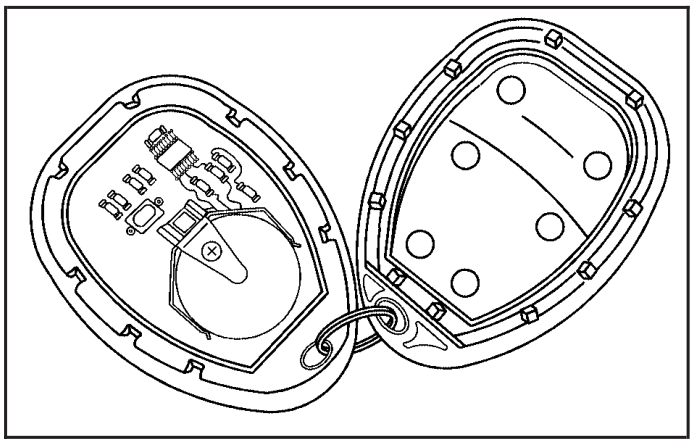

To replace the battery in the remote keyless entry transmitter, do the following:

1. Insert a flat object with a thin edge into the notch, located below the panic alarm button, and separate the bottom half from the top half of the transmitter.

Downloaded from www.Manualslib.com manuals search engine

2. Remove the old battery and replace it with the new one. Make sure the positive side (+) of the battery faces up. Use one three-volt, CR2032 battery, or equivalent type.
3. Put the two halves back together. Make sure the cover is on tight so water will not get inside the transmitter.
4. Test the operation of the transmitter with the vehicle.

Remote Vehicle Start

Your vehicle may have a remote start feature. This feature allows you to start the engine from outside the vehicle. It may also start the vehicle's heating or air conditioning systems and rear window defogger. When the remote start system is active, the climate control system will heat or cool the inside of the vehicle based on the outside temperature. The rear window defogger will be turned on by the climate control system when it is heating the inside of the vehicle. Normal operation of the system will return after the key is turned to RUN.

Laws in some communities may restrict the use of remote starters. For example, some laws may require a person using remote start to have the vehicle in view when doing so. Check local regulations for any requirements on remote starting of vehicles.

Do not use the remote start feature if your vehicle is low on fuel. Your vehicle may run out of fuel.

The remote start feature provides two separate starts per ignition cycle, each with 10 minutes of engine running time.

The remote start system needs to be reset after your vehicle's engine is started two times using the transmitter's remote start button. The remote start system is reset by inserting the vehicle's key into the ignition switch and turning to RUN. See *Ignition Positions on page 2-22* for information regarding the ignition positions on your vehicle.

Your remote keyless entry transmitter with the remote start button provides an increased range of operation. You can start your vehicle from approximately 492 feet (150 m) away. However, the range may be less while the vehicle is running, and as a result you may need to be closer to your vehicle to turn it off than you were to turn it on.

There are other conditions which can affect the performance of the transmitter, see *Remote Keyless Entry System on page 2-3* for additional information.

Downloaded from www.Manualslib.com manuals search engine

(Remote Start): If your vehicle has the remote vehicle start feature, the keyless entry transmitter will have a button with this symbol on it.

To start the vehicle using the remote start feature, do the following:

1. Aim the transmitter at the vehicle.
2. Press and release the transmitter's lock button, then immediately press and hold the transmitter's remote start button for 4 seconds or until the vehicle's turn signal lamps flash. The vehicle's doors will be locked.
3. When the vehicle starts, the parking lamps will turn on and remain on while the engine is running, and the DIC will display REMOTE START ACTIVE PRESS HAZARD SWITCH TO CANCEL.

   The engine will shut off automatically after 10 minutes, unless a time extension has been done or the vehicle's key is inserted into the ignition switch and turned to RUN.

   If you enter the vehicle after a remote start, and the engine is still running, insert the key into the ignition switch and turn to RUN to drive the vehicle.
4. To manually shut off a remote start, do any of the following. The parking lamps will turn off.
   - Aim the remote keyless entry transmitter at the vehicle, and press the remote start button.
   - Turn on the hazard warning flashers.
   - Turn the ignition switch to RUN and then to OFF.

Your vehicle's engine can be started two times using the transmitter's remote start feature. If only one remote start procedure has been done, since last driving the vehicle, or resetting the remote start system, the engine may be started again remotely by following the remote start procedure a second time.

If the remote start procedure is used again before the first 10 minute time frame has ended, the first 10 minutes will immediately expire and the second 10 minute time frame will start.

Downloaded from www.Manualslib.com manuals search engine

The remote vehicle start feature will not operate if any of the following occur:

- The remote start system is disabled through the DIC.
- The vehicle's key is in the ignition.
- A door on the vehicle is open.
- The vehicle's hood is open.
- The hazard warning flashers are on.
- There is an emission control system malfunction.
- The engine coolant temperature is too high.
- The oil pressure is low.
- Two remote vehicle starts have already been provided for that ignition cycle.

If a remote start is attempted and is unsuccessful, the Driver Information Center (DIC) will display REMOTE START DISABLED.

Vehicles that have the remote vehicle start feature are shipped from the factory with the remote start system enabled. The system may be enabled/disabled through the DIC. See "REMOTE START" under *DIC Controls and Displays (Base Level DIC) on page 3-52* or *DIC Controls and Displays (Uplevel DIC with Trip Computer) on page 3-60* for additional information.

Remote Start Ready

If your vehicle does not have the remote vehicle start feature, it may have the remote start ready feature. This feature allows your dealer to add the manufacturer's remote vehicle start feature.

If the keyless entry transmitter has a plus (+) symbol on the back cover, your vehicle has the remote start ready feature. You can lock or unlock your vehicle from approximately 492 feet (150 m) away.

See your dealer if you would like to add the manufacturer's remote vehicle start feature to your vehicle.

Downloaded from www.Manualslib.com manuals search engine

Doors and Locks

Door Locks

⚠ CAUTION:

Unlocked doors can be dangerous.

- **Passengers — especially children — can easily open the doors and fall out of a moving vehicle. When a door is locked, the handle will not open it. You increase the chance of being thrown out of the vehicle in a crash if the doors are not locked. So, wear safety belts properly and lock the doors whenever you drive.**
- **Young children who get into unlocked vehicles may be unable to get out. A child can be overcome by extreme heat and can suffer permanent injuries or even death from heat stroke. Always lock your vehicle whenever you leave it.**
- **Outsiders can easily enter through an unlocked door when you slow down or stop your vehicle. Locking your doors can help prevent this from happening.**

There are several ways to lock and unlock the vehicle.

From the outside, use the key or remote keyless entry transmitter.

From the inside, use the manual or power door locks.

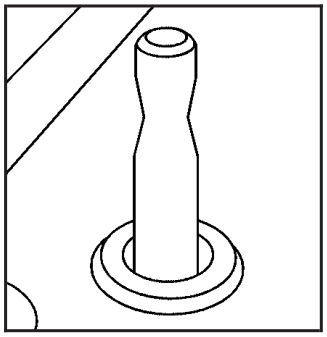

To manually lock or unlock the doors from inside the vehicle, push down or pull up on the door lock pin located on the top of each door panel.

Downloaded from www.Manualslib.com manuals search engine

Power Door Locks

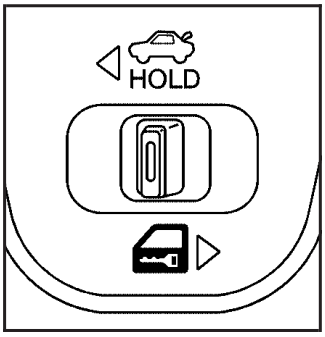

Driver's Side

To lock or unlock all doors from inside the vehicle, use the power door lock switch located on either front door.

Move the switch on the driver's door to the right to lock or to the left to unlock the doors. Move the switch on the passenger's door to the left to lock or to the right to unlock the doors.

If the vehicle has the content theft-deterrent system, the vehicle may be programmed to arm the system with the power door lock switch. See "Lock Switch Arm" under *DIC Controls and Displays (Base Level DIC) on page 3-52* or *DIC Controls and Displays (Uplevel DIC with Trip Computer) on page 3-60* for more information on programming the system.

Delayed Locking

This feature delays the locking of the vehicle's doors for five seconds after the last door is closed. Two chimes will sound when the power door lock switch or the LOCK button on the remote keyless entry transmitter is pressed when a door is open. The chimes indicate that the delayed locking feature is on.

The doors can be locked immediately by pressing the power door lock switch or the LOCK button on the transmitter a second time.

The delayed locking feature will not activate when the ignition is in RUN or ACC.

You can program this feature on or off through the Driver Information Center (DIC) See "Personal Programming Mode Screens" under *DIC Controls and Displays (Base Level DIC) on page 3-52* or *DIC Controls and Displays (Uplevel DIC with Trip Computer) on page 3-60*.

Downloaded from www.Manualslib.com manuals search engine

Programmable Automatic Door Locks

The vehicle's doors are programmed from the factory to lock when the shift lever is moved into a forward gear, and to unlock when the shift lever is moved into PARK (P).

If someone needs to get in or out of the vehicle after the doors have been locked, place the shift lever into PARK (P). You may also unlock all doors using the power door lock switch or unlock one door using the inside manual door lock.

To program other door locking/unlocking combinations, see "Personal Programming Mode Screens" under *DIC Controls and Displays (Base Level DIC) on page 3-52* or *DIC Controls and Displays (Uplevel DIC with Trip Computer) on page 3-60*.

Rear Door Security Locks

Your vehicle may have rear door security locks. These prevent passengers from opening the rear doors from the inside.

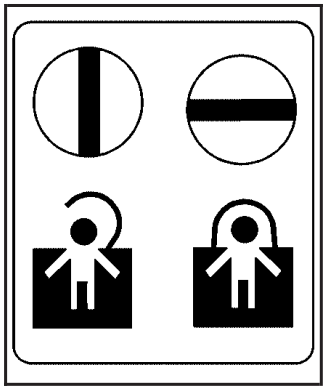

The rear door security locks are located on the inside edge of each rear door. You must open the rear doors to access them.

To set the locks, do the following:

1. Insert the key into the security lock slot and turn it so the slot is in the horizontal position.
2. Close the door.

Downloaded from www.Manualslib.com manuals search engine

When you want to open a rear door when the security lock is on, do the following:

1. Unlock the door using the remote keyless entry transmitter, if equipped, the power door lock switch, or by lifting the rear door manual lock.
2. Open the door from the outside.

To cancel the rear door security lock, do the following:

1. Unlock the door and open it from the outside.
2. Insert the key into the security lock slot and turn it so the slot is in the vertical position.

Lockout Protection

The lockout protection feature makes it more difficult to lock the key in the vehicle. If the driver's door is open while the key is in the ignition, the door cannot be locked with the power door lock switch.

This feature cannot guarantee that you will never be locked out of the vehicle. If the key is not left in the ignition, or, if the manual door lock pin is used, the key could still be locked inside the vehicle. Always remember to take the key with you.

Trunk

⚠ CAUTION:

It can be dangerous to drive with the trunk lid open because carbon monoxide (CO) gas can come into your vehicle. You cannot see or smell CO. It can cause unconsciousness and even death. If you must drive with the trunk lid open or if electrical wiring or other cable connections must pass through the seal between the body and the trunk lid:

- **Make sure all other windows are shut.**
- **Turn the fan on your heating or cooling system to its highest speed and select the control setting that will force outside air into your vehicle. See Climate Control System.**
- **If you have air outlets on or under the instrument panel, open them all the way.**

See *Engine Exhaust on page 2-33*.

To unlock and open the trunk from the outside, press the trunk button on the remote keyless entry transmitter. See *Remote Keyless Entry System Operation on page 2-4*.

Downloaded from www.Manualslib.com manuals search engine

To open the trunk from the inside, use the power door lock switch located on the driver's or front passenger's door. See "Remote Trunk Release" following.

The vehicle must be in PARK (P) in order for the trunk to open.

If the vehicle has lost power, you can open the trunk by lowering the rear seat and pulling the emergency trunk release handle located in the trunk. See *Split Folding Rear Seat on page 1-9* and "Emergency Trunk Release Handle" following.

Remote Trunk Release

This feature is used to unlock the trunk from inside the vehicle using the power door lock switch.

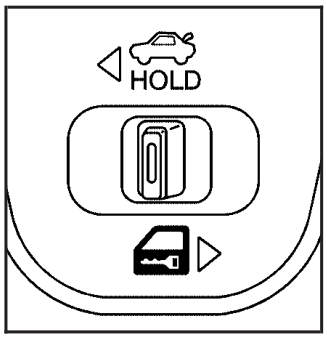

Driver's Side

Press and hold the driver's side power door lock switch to the left, or the passenger's side power door lock switch to the right to unlock the trunk.

Emergency Trunk Release Handle

Notice: **Do not use the emergency trunk release handle as a tie-down or anchor point when securing items in the trunk as it could damage the handle. The emergency trunk release handle is only intended to aid a person trapped in a latched trunk, enabling them to open the trunk from the inside.**

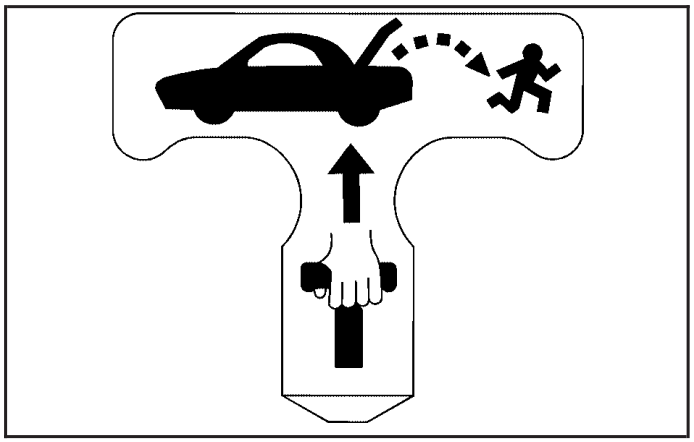

There is a glow-in-the-dark emergency trunk release handle located on the trunk latch of the trunk lid. This handle will glow following exposure to light. If ever needed, pull the emergency trunk release handle to open the trunk from the inside.

Downloaded from www.Manualslib.com manuals search engine

Windows

⚠ CAUTION:

Leaving children, helpless adults, or pets in a vehicle with the windows closed is dangerous. They can be overcome by the extreme heat and suffer permanent injuries or even death from heat stroke. Never leave a child, a helpless adult, or a pet alone in a vehicle, especially with the windows closed in warm or hot weather.

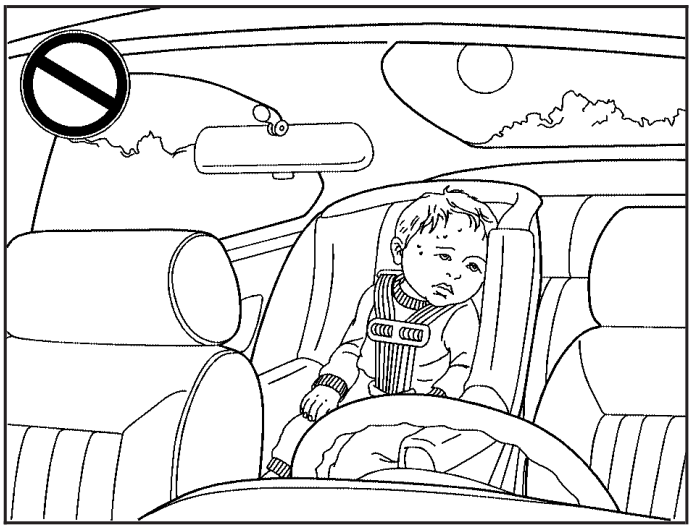

Downloaded from www.Manualslib.com manuals search engine

Power Windows

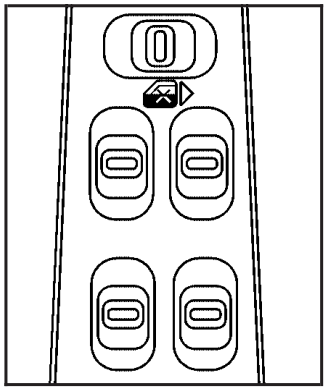

Use the switches on the driver's door armrest to operate each of the windows.

Push the switch rearward or forward to open or close the window. The top switches operate the front windows, and the bottom switches operate the rear windows. Each passenger door also has a switch that operates that window.

The power window switches only work if the ignition is on or in ACC, or while Retained Accessory Power (RAP) is active. See *Retained Accessory Power (RAP) on page 2-22* for more information.

Express-Down Window

The driver's window switch has an express-down feature. This allows the window to open fully without having to continuously hold the switch. Tap the switch rearward, and the driver's window will open a small amount. Press the switch fully rearward and release and the window will go all the way down.

To stop the window while it is lowering, press the front of the switch. To raise the window, press and hold the front of the switch.

Window Lockout

(Window Lockout): The driver's window switch includes a lockout feature located above the power window switches on the driver's door armrest. Move the switch to the right to prevent the passengers sitting in the rear from using their window switches. The driver can still control all the windows with the lockout on. Move the switch to the left to disengage the lockout feature.

Downloaded from www.Manualslib.com manuals search engine

Sun Visors

To help block out glare, pull the sun visors down. Pull on the inside edges of the sun visors to swing them from the front windshield to the side window.

Visor Vanity Mirror

Raise the cover on the top of the sun visor to expose the vanity mirror. If the vehicle has lighted vanity mirrors, the lamps come on when the cover is opened.

Theft-Deterrent Systems

Vehicle theft is big business, especially in some cities. Although your vehicle has a number of theft-deterrent features, we know that nothing we put on it can make it impossible to steal.

Content Theft-Deterrent

The vehicle has a content theft-deterrent alarm system.

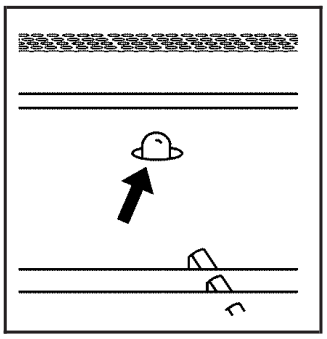

A red light located on top of the instrument panel, toward the center of the vehicle and near the windshield, will flash slowly when the system is armed.

The theft-deterrent alarm system needs to be activated through the Driver's Information Center (DIC). See "Theft Deterrent" under the Personal Programming Mode Screens in *DIC Controls and Displays (Base Level DIC) on page 3-52* or *DIC Controls and Displays (Uplevel DIC with Trip Computer) on page 3-60*. While armed, the doors will not unlock with the power door lock switch. The remote alarm will sound if someone tampers with the trunk or enters the vehicle without using the remote keyless entry transmitter or key to unlock the doors. The horn will sound and the headlamps will flash for up to two minutes. The system will also cut off the fuel supply, preventing the vehicle from being driven.

Downloaded from www.Manualslib.com manuals search engine

Arming with the Power Lock Switch

The vehicle's content theft-deterrent alarm system can be activated when the key is removed from the ignition and the power door lock switch of either the driver's or front passenger's door is used to lock the vehicle. The door needs to be in the open position when pressing the power door lock switch. The alarm system will not activate if the door is closed and the power door lock switch is pressed. This system can be activated through the Driver's Information Center (DIC). See "Lock Switch Arm" under the Personal Programming Mode Screens in *DIC Controls and Displays (Base Level DIC) on page 3-52* or *DIC Controls and Displays (Uplevel DIC with Trip Computer) on page 3-60*.

When the doors are locked using the power door lock switch of either front door, the red light, on top of the instrument panel will start flashing indicating that the system is arming. After all the doors are closed there will be a time delay and then the red light will begin to flash at a very slow rate indicating the system is armed.

Arming with the Remote Keyless Entry Transmitter

The alarm system will arm when the remote keyless entry transmitter is used to lock the doors after the key is removed from the ignition. The red light will come on to indicate that the system is arming. After all doors are closed and locked, and after a time delay, the red light will begin flashing at a very slow rate to show the system is armed.

Arming Confirmation

A red light located on top of the instrument panel, towards the center of the vehicle and near the windshield, will flash slowly to confirm when the system is armed.

Downloaded from www.Manualslib.com manuals search engine

Disarming with the Remote Keyless Entry Transmitter

The alarm system will disarm when the remote keyless entry transmitter is used to unlock the doors. The red light will go out to show that the system is disarmed.

Disarming with Your Key

The alarm system will disarm when the key is used to unlock the doors. The red light will stop flashing when the system is disarmed. If you would like the key to disarm the alarm system, see “Personal Programming Mode Screens” under *DIC Controls and Displays (Base Level DIC) on page 3-52* or *DIC Controls and Displays (Uplevel DIC with Trip Computer) on page 3-60* for more information.

PASS-Key® III

Your PASS-Key® III system operates on a radio frequency subject to Federal Communications Commission (FCC) Rules and with Industry Canada.

This device complies with Part 15 of the FCC Rules. Operation is subject to the following two conditions:

1. This device may not cause harmful interference.
2. This device must accept any interference received, including interference that may cause undesired operation.

This device complies with RSS-210 of Industry Canada. Operation is subject to the following two conditions:

1. This device may not cause interference.
2. This device must accept any interference received, including interference that may cause undesired operation of the device.

Changes or modifications to this system by other than an authorized service facility could void authorization to use this equipment.

PASS-Key® III uses a radio frequency transponder in the key that matches a decoder in your vehicle.

Downloaded from www.Manualslib.com manuals search engine

PASS-Key® III Operation

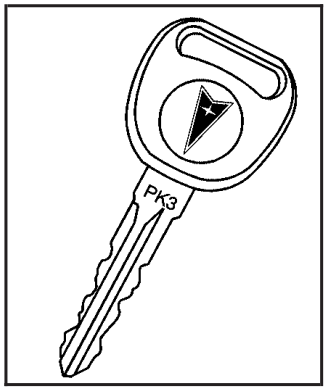

The vehicle is equipped with PASS-Key® III (Personalized Automotive Security System) theft-deterrent system. PASS-Key® III is a passive theft-deterrent system. This means nothing special needs to be done to arm or disarm the system. It works when the key is inserted or removed from the ignition.

PASS-Key® III uses a transponder in the ignition key that matches a decoder in the vehicle.

When the PASS-Key® III system senses that the wrong key has been inserted into the ignition, it shuts down the vehicle's starter and fuel systems. The starter will not work and fuel will stop flowing to the engine. If someone tries to start the vehicle again with the wrong key, the vehicle will not start. Anyone using a trial-and-error method to start the vehicle will be discouraged to do so because of the high number of electrical key codes.

When trying to start the vehicle, if the engine does not start and the STARTING DISABLED DUE TO THEFT SYSTEM warning message on the Driver Information Center (DIC) comes on, the key may have a damaged transponder. Turn the ignition off and try again.

If the engine still does not start, and the key appears to be undamaged, try another ignition key. At this time, you may also want to check the fuse. See *Fuses and Circuit Breakers on page 5-112*. If the engine still does not start with the other key, the vehicle needs service. If the vehicle does start, the first key may be faulty. See your dealer who can service the PASS-Key® III to have a new key made. In an emergency, contact Roadside Assistance. See *Roadside Assistance Program on page 7-6* for more information.

It is possible for the PASS-Key® III decoder to accept the transponder value of a new or replacement key. Up to 10 keys may be programmed for the vehicle. If all the programmed keys are lost or do not operate, see your GM dealer or a locksmith who can service PASS-Key® III to have keys made and programmed to the system.

Canadian Owners: If all the keys are lost or damaged, only a GM dealer can service PASS-Key® III to have new keys made and programmed to the system.

Downloaded from www.Manualslib.com manuals search engine

The following procedure is for programming a new or replacement key when you have at least one already programmed key. To program the new key do the following:

1. Verify that the new key has PK3 stamped on it.
2. Insert the master key in the ignition and start the engine. If the engine will not start, see your dealer for service.
3. After the engine has started, turn the key to OFF, and remove the key.
4. Insert the key to be programmed and turn it to RUN within five seconds of removing the original key.
5. The STARTING DISABLED DUE TO THEFT SYSTEM warning message on the DIC will turn off, once the key has been programmed. It may not be apparent that the SERVICE THEFT SYSTEM warning message went on due to how quickly the key is programmed.
6. Repeat Steps 1 through 5 if additional keys are to be programmed.

If the STARTING DISABLED DUE TO THEFT SYSTEM warning message appears and stays on the DIC while the vehicle is being driven, the engine will be able to be restarted if it is turned off. Your PASS-Key® III system, however, is not working properly and must be serviced by your dealer. The vehicle is not protected by the PASS-Key® III system at this time. If the PASS-Key® III key is lost or stolen, see your dealer or a locksmith who can service PASS-Key® III to have a new key made.

Starting and Operating Your Vehicle

New Vehicle Break-In

Notice: **Your vehicle does not need an elaborate break-in. But it will perform better in the long run if you follow these guidelines:**

- **Do not drive at any one constant speed, fast or slow, for the first 500 miles (805 km). Do not make full-throttle starts. Avoid downshifting to brake, or slow, the vehicle.**
- **Avoid making hard stops for the first 200 miles (322 km) or so. During this time your new brake linings are not yet broken in. Hard stops with new linings can mean premature wear and earlier replacement. Follow this breaking-in guideline every time you get new brake linings.**
- **Do not tow a trailer during break-in. See *Towing a Trailer on page 4-40* for the trailer towing capabilities of your vehicle and more information.**

Following break-in, engine speed and load can be gradually increased.

Downloaded from www.Manualslib.com manuals search engine

Ignition Positions

The ignition switch is located on the instrument panel, to the right of the steering column.

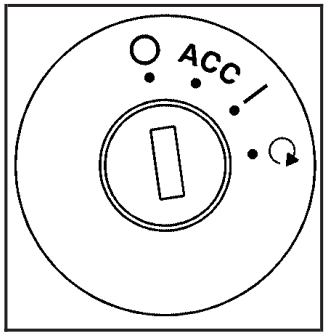

There are four different positions. Insert the key in the ignition and turn it to the right for each position.

(OFF): This position locks the ignition, steering wheel and transaxle. It is a theft-deterrent feature. This is the only position from which the key can be removed.

Notice: **Using a tool to force the key from the ignition switch could cause damage or break the key. Use the correct key and turn the key only with your hand. Make sure the key is all the way in. If it is, turn the steering wheel left and right while you turn the key hard. If none of this works, then your vehicle needs service.**

ACC (ACCESSORY): This position allows things like the radio and windshield wipers to operate while the engine is off.

(RUN): This position is where the key returns to after the vehicle is started. With the engine off, the RUN position displays some of the warning and indicator lights.

(START): This position starts the engine. Let go of the key when the engine starts. The key will return to the RUN for normal driving.

A continuous warning chime will sound and a KEY IN IGNITION message will display on the Driver Information Center (DIC) if the key is turned to OFF or ACC and the driver's door is opened.

Retained Accessory Power (RAP)

If the vehicle has Retained Accessory Power (RAP), certain features will continue to operate for up to 10 minutes after the ignition key is turned to OFF unless a door is opened.

Downloaded from www.Manualslib.com manuals search engine

Starting the Engine

Move your shift lever to PARK (P) or NEUTRAL (N). The engine will not start in any other position — that is a safety feature. To restart when you are already moving, use NEUTRAL (N) only.

Notice: **Shifting into PARK (P) with the vehicle moving could damage the transaxle. Shift into PARK (P) only when your vehicle is stopped.**

1. With your foot off the accelerator pedal, turn the ignition key to START. When the engine starts, let go of the key. The idle speed will go down as the engine gets warm.

Notice: **Holding your key in START for longer than 15 seconds at a time will cause your battery to be drained much sooner. And the excessive heat can damage your starter motor. Wait about 15 seconds between each try to help avoid draining your battery or damaging your starter.**

2. If the engine does not start within 10 seconds, hold your key in START for about 10 seconds at a time until the engine starts. Wait about 15 seconds between each try.

   When your engine has run for about 10 seconds to warm up, your vehicle is ready to be driven. Do not race your engine when it is cold.

   If the weather is below freezing (32°F or 0°C), let the engine run for a few minutes to warm up.

3. If your engine still will not start, or starts but then stops, it could be flooded with too much gasoline. Try pushing your accelerator pedal all the way to the floor and holding it there as you hold the key in START for about three seconds. If the vehicle starts briefly but then stops again, do the same thing. This time keep the pedal down for five or six seconds to clear the extra gasoline from the engine. After waiting about 15 seconds, repeat the normal starting procedure.

Notice: **Your engine is designed to work with the electronics in your vehicle. If you add electrical parts or accessories, you could change the way the engine operates. Before adding electrical equipment, check with your dealer. If you do not, your engine might not perform properly. Any resulting damage would not be covered by your vehicle's warranty.**

Downloaded from www.Manualslib.com manuals search engine

Engine Coolant Heater

The vehicle may be equipped with an engine coolant heater. In very cold weather, 0°F (–18°C) or colder, the engine coolant heater can help. The vehicle will start easier and get better fuel economy during engine warm-up. Usually, the coolant heater should be plugged in a minimum of four hours prior to starting the vehicle. At temperatures above 32°F (0°C), use of the coolant heater is not required. Your vehicle may also have an internal thermostat in the plug end of the cord. This will prevent operation of the engine coolant heater when the temperature is at or above 0°F (–18°C) as noted on the cord.

To Use the Engine Coolant Heater

1. Turn off the engine.
2. Open the hood and unwrap the electrical cord. The cord is located above the engine air cleaner/filter. See *Engine Compartment Overview on page 5-12* for more information on location.
3. Plug the cord into a normal, grounded 110-volt AC outlet.

⚠ CAUTION:

Plugging the cord into an ungrounded outlet could cause an electrical shock. Also, the wrong kind of extension cord could overheat and cause a fire. You could be seriously injured. Plug the cord into a properly grounded three-prong 110-volt AC outlet. If the cord will not reach, use a heavy-duty three-prong extension cord rated for at least 15 amps.

4. Before starting the engine, be sure to unplug and store the cord as it was before, making sure to keep it away from moving engine parts. If this is not done, the cord could be damaged.

How long should the coolant heater be kept plugged in? The answer depends on the outside temperature, the kind of oil that is in the vehicle, and some other things. Instead of trying to list everything here, we ask that you contact your dealer in the area where the vehicle will be parked. The dealer can give you the best advice for that particular area.

Downloaded from www.Manualslib.com manuals search engine

Displacement on Demand™ (DoD™) (5.3L Engine)

Your vehicle's engine may be equipped with Displacement on Demand™ (DoD™). This system allows the engine to operate on either all or half of its cylinders, depending on your driving conditions.

When less power is required, such as cruising at a constant vehicle speed, the system will operate in the half cylinder mode, allowing your vehicle to achieve better fuel economy. When greater power demands are required, such as accelerating from a stop, passing, or merging onto a freeway, the system will maintain full-cylinder operation.

When greater power demands are required, such as accelerating from a stop, passing, or merging onto a freeway, the system will maintain eight-cylinder operation. When less power is required, such a cruising at a constant vehicle speed, the system will automatically enable the four-cylinder mode, allowing your vehicle to achieve better fuel economy.

Automatic Transaxle Operation

The shift lever for the automatic transaxle is located on the console between the seats.

Maximum engine speed is limited when the vehicle is in PARK (P) or NEUTRAL (N) to protect driveline components from improper operation.

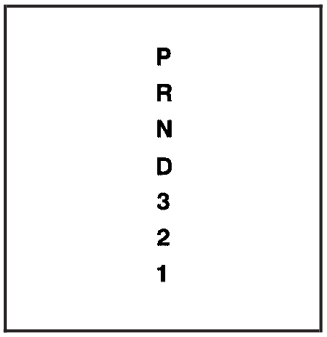

3800 V6 Engine

There are several different positions for the shift lever.

Downloaded from www.Manualslib.com manuals search engine

PARK (P): This position locks the front wheels. It is the best position to use when the engine is started because the vehicle cannot move easily.

> ⚠ **CAUTION:**
>
> **It is dangerous to get out of your vehicle if the shift lever is not fully in PARK (P) with the parking brake firmly set. Your vehicle can roll.**
>
> **Do not leave your vehicle when the engine is running unless you have to. If you have left the engine running, the vehicle can move suddenly. You or others could be injured. To be sure your vehicle will not move, even when you are on fairly level ground, always set your parking brake and move the shift lever to PARK (P). See *Shifting Into Park (P) on page 2-31*. If you are pulling a trailer, see *Towing a Trailer on page 4-40*.**

Make sure the shift lever is fully in PARK (P) before starting the engine. The vehicle has an automatic transaxle shift lock control system.

The regular brakes must be fully applied and the shift control button, located on the front of the shift lever, must be pressed before the vehicle can be shifted from PARK (P) when the ignition is in RUN. If the vehicle cannot be shifted out of PARK (P), ease pressure on the shift lever by pushing it all the way into PARK (P) while keeping the brake pedal pushed down. Release the shift lever button. Then move the shift lever out of PARK (P), being sure to press the shift lever button. See *Shifting Out of Park (P) on page 2-32*.

REVERSE (R): Use this gear to back up.

Notice: **Shifting to REVERSE (R) while your vehicle is moving forward could damage the transaxle. The repairs would not be covered by your warranty. Shift to REVERSE (R) only after your vehicle is stopped.**

To rock the vehicle back and forth to get out of snow, ice or sand without damaging the transaxle, see *If Your Vehicle is Stuck in Sand, Mud, Ice or Snow on page 4-32*.

NEUTRAL (N): In this position, the engine does not connect with the wheels. To restart when the vehicle is already moving, use NEUTRAL (N) only. Also, use NEUTRAL (N) when the vehicle is being towed.

Downloaded from www.Manualslib.com manuals search engine

⚠ CAUTION:

Shifting into a drive gear while your engine is running at high speed is dangerous. Unless your foot is firmly on the brake pedal, your vehicle could move very rapidly. You could lose control and hit people or objects. Do not shift into a drive gear while your engine is running at high speed.

Notice: **Shifting out of PARK (P) or NEUTRAL (N) while the engine is running at high speed may damage the transaxle. The repairs would not be covered by your warranty. Be sure the engine is not running at high speeds when shifting your vehicle.**

AUTOMATIC OVERDRIVE (D): This position is for normal driving. If the vehicle needs more power for passing, and it is:

- Going less than 35 mph (55 km/h), push the accelerator pedal about halfway down.
- Going about 35 mph (55 km/h) or more, push the accelerator pedal all the way down.

The vehicle will shift down to the next gear and have more power.

Notice: **If your vehicle seems to start up rather slowly or not shift gears when you go faster, and you continue to drive your vehicle that way, you could damage the transaxle. Have your vehicle serviced right away. You can drive in SECOND (2) when you are driving less than 35 mph (55 km/h) and AUTOMATIC OVERDRIVE (D) for higher speeds until then.**

THIRD (3): This position is also used for normal driving, but it offers more power and lower fuel economy than AUTOMATIC OVERDRIVE (D).

Here are some times THIRD (3) could be used instead of AUTOMATIC OVERDRIVE (D):

- When driving on hilly, winding roads.
- When towing a trailer, so there is less shifting between gears.
- When going down a steep hill.
- When driving in non-highway scenarios (i.e. city streets, etc.).

Downloaded from www.Manualslib.com manuals search engine

SECOND (2): This position gives the vehicle more power but lower fuel economy than THIRD (3). SECOND (2) can be used on hills. It can help control the vehicle's speed as it goes down steep mountain roads, but then you would also want to use the brakes off and on.

Notice: **Driving in SECOND (2) for more than 25 miles (40 km) or at speeds over 55 mph (90 km/h), can cause damage to your engine and/or transaxle. Also, shifting into SECOND (2) at speeds above 65 mph (105 km/h) can cause damage. Drive in AUTOMATIC OVERDRIVE (D) instead of SECOND (2).**

FIRST (1): This position gives the vehicle even more power but lower fuel economy than SECOND (2). It can be used on very steep hills, or in deep snow or mud. If the shift lever is moved to FIRST (1), the transaxle will not shift into first gear until the vehicle is going slowly enough.

Notice: **Spinning the tires or holding the vehicle in one place on a hill using only the accelerator pedal may damage the transaxle. If you are stuck, do not spin the tires. When stopping on a hill, use the brakes, or parking brake to hold the vehicle in place.**

Performance Shifting with TAP-Shift®

If the vehicle is equipped with the 3800 V6 Supercharged engine or the 5.3L V8 engine, your vehicle may have this feature. It allows you to change gears similar to a manual transaxle.

To fully use this feature, do the following:

1. The MANUAL (M) position can be selected while the vehicle is moving. The current transaxle position will continue to be displayed on the Driver Information Center (DIC) and Head-Up Display (HUD), if equipped.

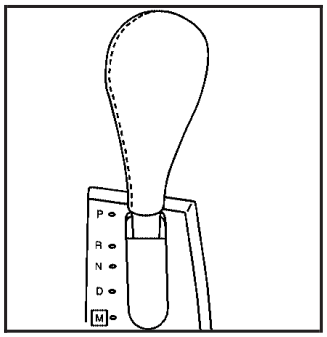

2. Move the shift lever to the MANUAL (M).

Downloaded from www.Manualslib.com manuals search engine

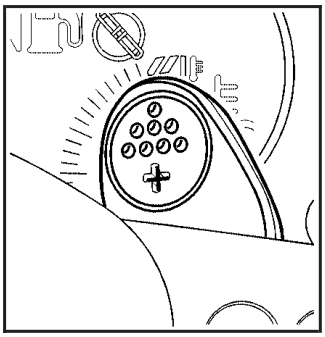

3. The paddles are located on the steering wheel. They are used to up-shift or down-shift the transaxle.

4. Push either paddle once to up-shift to the next gear. Pull either paddle once to down-shift to the next gear.

   The vehicle will begin moving in first gear upon acceleration. For better control in icy or slippery conditions, the vehicle may start out in SECOND (2), rather than FIRST (1). This will only occur if you have “tapped up” to second gear.

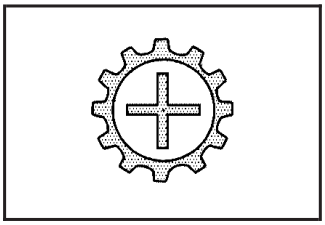

The up-shift light on the instrument panel cluster, or the up-shift symbol on the HUD, if equipped, is given as a prompt to use the TAP-Shift® paddle.

For more information, see *Up-Shift Light on page 3-42*.

The up-shift light will only appear in the instrument panel cluster if the HUD is off or if the vehicle does not have HUD.

This prompt to up-shift, as needed, will be given throughout acceleration. If up-shifting does not occur when prompted, the vehicle speed will be limited to protect the engine.

The gear position will display on the DIC and HUD, if equipped, when in manual mode.

Pressing the accelerator while driving in the highest gear (FOURTH (4)) between 20 mph (32 km/h) and 50 mph (80 km/h), will make the transaxle automatically downshift. As your speed gets closer to 50 mph (80 km/h), you will need to increase accelerator pedal travel to get the vehicle to downshift. At 50 mph (80 km/h), even with the accelerator fully depressed, the transaxle will always remain in FOURTH (4). The transaxle will also automatically downshift as the vehicle decelerates and comes to a stop.

If a paddle is pushed or pulled and the vehicle cannot respond to a transaxle gear change, a chime will sound. The system will not allow either an up-shift or a down-shift if the vehicle speed is too fast or too slow, nor will it allow a start from THIRD (3) or higher gear.

Downloaded from www.Manualslib.com manuals search engine

Parking Brake

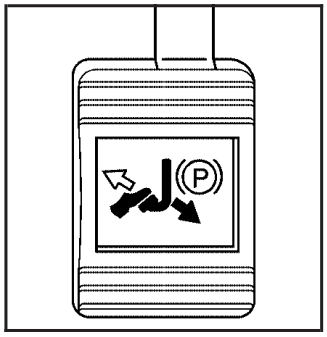

The parking brake is located to the left of the brake pedal near the driver's door. To set the parking brake, hold the regular brake pedal down with the right foot. Push down on the parking brake pedal, with the left foot.

To release the parking brake, hold the regular brake pedal down with the right foot and push the parking brake pedal with the left foot. When the left foot is lifted, the parking brake pedal will lift to the released position.

A warning chime will sound if the parking brake is set, the ignition is on, and the shift lever is not in PARK (P) or NEUTRAL (N).

The brake light will also appear on the instrument panel cluster when the parking brake is set. It will stay on if the parking brake does not release fully.

The PARKING BRAKE ON message will also appear in the Driver Information Center (DIC) when the parking brake is set. See *DIC Warnings and Messages on page 3-72* for more information.

Notice: **Driving with the parking brake on can overheat the brake system and cause premature wear or damage to brake system parts. Verify that the parking brake is fully released and the brake warning light is off before driving.**

If the vehicle is towing a trailer and parked on a hill, see *Towing a Trailer on page 4-40*. That section shows what to do first to keep the trailer from moving.

Downloaded from www.Manualslib.com manuals search engine

Shifting Into Park (P)

⚠ CAUTION:

It can be dangerous to get out of your vehicle if the shift lever is not fully in PARK (P) with the parking brake firmly set. Your vehicle can roll. If you have left the engine running, the vehicle can move suddenly. You or others could be injured. To be sure your vehicle will not move, even when you are on fairly level ground, use the steps that follow. If you are pulling a trailer, see *Towing a Trailer on page 4-40*.

1. Hold the brake pedal down with your right foot and set the parking brake.
2. Move the shift lever into PARK (P) by holding in the button on the shift lever and pushing the shift lever all the way toward the front of the vehicle.
3. Turn the ignition key to OFF.
4. Remove the key and take it with you. If you can leave your vehicle with the ignition key in your hand, your vehicle is in PARK (P).

Leaving Your Vehicle With the Engine Running

⚠ CAUTION:

It can be dangerous to leave your vehicle with the engine running. Your vehicle could move suddenly if the shift lever is not fully in PARK (P) with the parking brake firmly set. And, if you leave the vehicle with the engine running, it could overheat and even catch fire. You or others could be injured. Do not leave your vehicle with the engine running.

If you have to leave your vehicle with the engine running, be sure your vehicle is in PARK (P) and your parking brake is firmly set before you leave it. After you have moved the shift lever into PARK (P), hold the regular brake pedal down. Then, see if you can move the shift lever away from PARK (P) without first pushing the button.

If you can, it means that the shift lever was not fully locked in PARK (P).

Downloaded from www.Manualslib.com manuals search engine

Torque Lock

If you are parking on a hill and you do not shift your transaxle into PARK (P) properly, the weight of the vehicle may put too much force on the parking pawl in the transaxle. You may find it difficult to pull the shift lever out of PARK (P). This is called torque lock.
To prevent torque lock, set the parking brake and then shift into PARK (P) properly before you leave the driver's seat. To find out how, see *Shifting Into Park (P) on page 2-31*.

When you are ready to drive, move the shift lever out of PARK (P) *before* you release the parking brake.

If torque lock does occur, you may need to have another vehicle push your vehicle a little uphill to take some of the pressure from the parking pawl in the transaxle, so you can pull the shift lever out of PARK (P).

Shifting Out of Park (P)

The vehicle has an automatic transaxle shift lock control system which locks the shift lever in PARK (P) when the ignition is in OFF. In addition, the regular brakes must be fully applied before shifting from PARK (P) while the ignition is in RUN. See *Automatic Transaxle Operation on page 2-25*.

If the vehicle cannot be shifted out of PARK (P), ease pressure on the shift lever and push the shift lever all the way up into PARK (P) as brake application is maintained. Then move the shift lever into the desired gear.

If the brake pedal is held down but the vehicle still cannot be shifted out of PARK (P), try this:

1. Turn the key to ACC.
2. Apply and hold the brake until the end of Step 4.
3. Shift the transaxle to NEUTRAL (N).
4. Start the vehicle and then shift to the desired transaxle gear.
5. Have the system fixed as soon as possible.

Downloaded from www.Manualslib.com manuals search engine

Parking Over Things That Burn

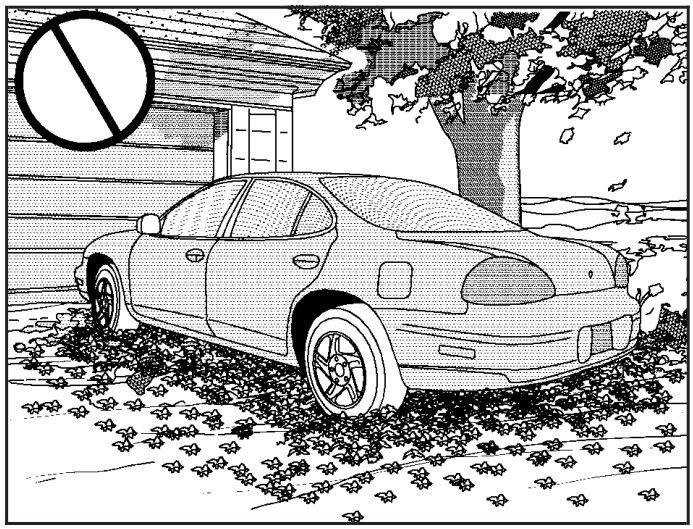

⚠ CAUTION:

Things that can burn could touch hot exhaust parts under your vehicle and ignite. Do not park over papers, leaves, dry grass, or other things that can burn.

Engine Exhaust

⚠ CAUTION:

Engine exhaust can kill. It contains the gas carbon monoxide (CO), which you cannot see or smell. It can cause unconsciousness and death.

You might have exhaust coming in if:

- **Your exhaust system sounds strange or different.**
- **Your vehicle gets rusty underneath.**
- **Your vehicle was damaged in a collision.**
- **Your vehicle was damaged when driving over high points on the road or over road debris.**
- **Repairs were not done correctly.**
- **Your vehicle or exhaust system had been modified improperly.**

If you ever suspect exhaust is coming into your vehicle:

- **Drive it only with all the windows down to blow out any CO; and**
- **Have your vehicle fixed immediately.**

Downloaded from www.Manualslib.com manuals search engine

Running the Engine While Parked

It is better not to park with the engine running. But if you ever have to, here are some things to know.

⚠ CAUTION:

Idling the engine with the climate control system off could allow dangerous exhaust into your vehicle. See the earlier caution under *Engine Exhaust on page 2-33*.

Also, idling in a closed-in place can let deadly carbon monoxide (CO) into your vehicle even if the climate control fan is at the highest setting. One place this can happen is a garage. Exhaust — with CO — can come in easily. NEVER park in a garage with the engine running.

Another closed-in place can be a blizzard. See *Winter Driving on page 4-28*.

⚠ CAUTION:

It can be dangerous to get out of your vehicle if the shift lever is not fully in PARK (P) with the parking brake firmly set. Your vehicle can roll. Do not leave your vehicle when the engine is running unless you have to. If you have left the engine running, the vehicle can move suddenly. You or others could be injured. To be sure your vehicle will not move, even when you are on fairly level ground, always set your parking brake and move the shift lever to PARK (P).

Follow the proper steps to be sure your vehicle will not move. See *Shifting Into Park (P) on page 2-31*.

If you are parking on a hill and if you are pulling a trailer, also see *Towing a Trailer on page 4-40*.

Downloaded from www.Manualslib.com manuals search engine

Mirrors

Manual Rearview Mirror with OnStar®

Your vehicle has this feature located at the bottom of the mirror, to change the mirror from the day to the night position. To reduce the glare of headlamps from behind, turn the control counterclockwise. To return the mirror to the day position, turn the control clockwise.

There are also three OnStar® buttons located at the bottom of the mirror face. See your dealer for more information on the system and how to subscribe to OnStar®. See *OnStar® System on page 2-38* for more information about the services OnStar® provides.

Automatic Dimming Rearview Mirror with Compass and Temperature Display

If the vehicle has this feature, the automatic dimming mirror automatically dims to the proper level to minimize glare at night from lights behind your vehicle.

The mirror also has a dual display in the upper right corner of the mirror that shows the compass reading and the outside temperature.

On/Off: Press this button to operate the automatic dimming, compass and temperature features.

Automatic Dimming Mirror Operation

The automatic dimming mirror function is turned on each time the ignition is started. A light near the on/off button will come on to indicate the automatic dimming is on.

If the automatic dimming function is off, press and hold the on/off button for four seconds to manually turn the system back on.

Temperature and Compass Display

Press the on/off button, located in the center, to cycle between °F, °C and off. If the display reads CAL, the compass needs to be calibrated. For more information, see “Compass Calibration” later in this section.

If an abnormal temperature reading is displayed for an extended period of time, please consult your dealer. Under certain circumstances, a delay in updating the temperature is normal.

Downloaded from www.Manualslib.com manuals search engine

Compass Variance

Compass variance is the difference between earth's magnetic north and true geographic north. If not adjusted to account for compass variance, the mirror's compass could give false readings. The mirror is set in zone eight upon leaving the factory. It will be necessary to adjust the compass to compensate for compass variance if you live outside zone eight. Under certain circumstances, as during a long distance cross-country trip, it will be necessary to adjust for compass variance.

To adjust for compass variance:

1. Find the current location and variance zone number on the following zone map.
2. Press and hold the on/off button for five seconds until the word ZONE appears in the display. The compass is now in zone mode.
3. Press and release the on/off button within five seconds until the new zone number appears in the display. The display will show a compass direction within a few seconds.

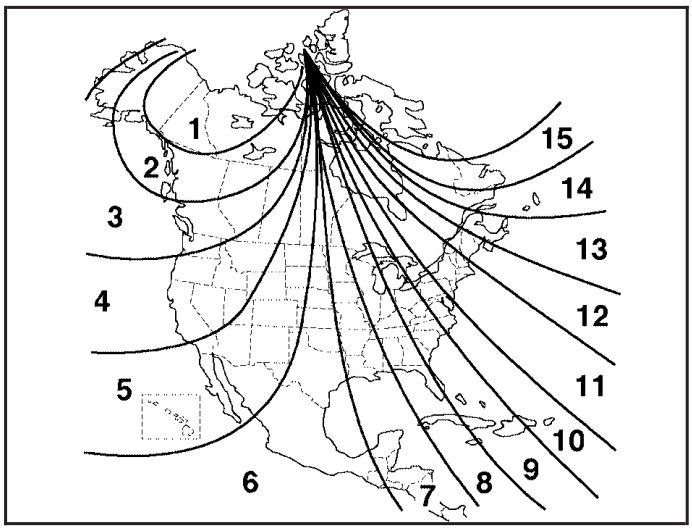

Downloaded from www.Manualslib.com manuals search engine

Compass Calibration

The compass may need calibration if one of the following occurs:

- If CAL is displayed while driving in the vehicle.
- After approximately five seconds, the display does not show a compass heading (N for North, for example), there may be a strong magnetic field interfering with the compass. Such interference may be caused by a magnetic antenna mount, magnetic note pad holder, or a similar magnetic item.
- The compass does not display the correct heading and the compass zone variance is set correctly.

In order to calibrate, CAL must be displayed in the mirror compass windows. If CAL is not displayed, push in the on/off button for approximately eight seconds or until CAL is displayed.

The compass can be calibrated by driving the vehicle in circles at 5 mph (8 km/h) or less until the display reads a direction.

Cleaning the Mirror

When cleaning the mirror, use a paper towel or similar material dampened with glass cleaner. Do not spray glass cleaner directly on the mirror as that may cause the liquid cleaner to enter the mirror housing.

Outside Power Mirrors

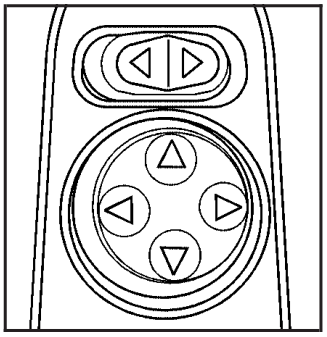

The power mirror controls are located near the driver's window, on the driver's door armrest.

Move the top control to the left to adjust the driver's side outside mirror. Move the control to the right to adjust the passenger's side mirror. The center position turns the power control off and will not allow the mirrors to move if the control pad is touched.

The round control pad adjusts the angle of the selected outside mirror. Press the arrows on the control pad to adjust the angle of the mirror. Adjust each mirror so that the sides and the area behind the vehicle can be seen.

Downloaded from www.Manualslib.com manuals search engine

Outside Convex Mirror

⚠ CAUTION:

A convex mirror can make things (like other vehicles) look farther away than they really are. If you cut too sharply into the right lane, you could hit a vehicle on your right. Check your inside mirror or glance over your shoulder before changing lanes.

The passenger's outside rearview mirror is convex. The surface is curved so more area can be seen from the driver's seat. It also make things look farther away than they really are.

OnStar® System

OnStar® uses global positioning system (GPS) satellite technology, wireless communications, and live advisors to provide you with a wide range of safety, security, information, and convenience services. If your airbags deploy, the system is designed to make an automatic call to OnStar® Emergency where we can request emergency services be sent to your location. If you lock your keys in the car, call OnStar® at 1-888-4-ONSTAR and they can send a signal to unlock your doors. If you need roadside assistance, press the OnStar® button and they will get you the help you need.

Downloaded from www.Manualslib.com manuals search engine

A complete OnStar® User's Guide and the Terms and Conditions of the OnStar® Subscription Service Agreement are included in the vehicle's glove box literature. For more information, visit www.onstar.com or www.onstar.ca. Contact OnStar® at 1-888-4-ONSTAR (1-888-466-7827), or press the OnStar® button to speak to an OnStar® advisor 24 hours a day, 7 days a week.

Terms and conditions of the Subscription Service Agreement can be found at www.onstar.com or www.onstar.ca.

OnStar® Services

For new vehicles equipped with OnStar®, the Safe and Sound Plan is included for one year from the date of purchase. You can extend this plan beyond the first year, or upgrade to the Directions and Connections® Plan to meet your needs. For more information, press the OnStar® button to speak to an advisor.

Safe and Sound Plan

- Automatic Notification of Airbag Deployment
- Emergency Services
- Roadside Assistance
- Stolen Vehicle Tracking
- AccidentAssist
- Remote Door Unlock/Vehicle Alert
- Remote Diagnostics
- Online Concierge

Directions and Connections® Plan

- All Safe and Sound Plan Services
- Driving Directions
- RideAssist
- Information and Convenience Services

Downloaded from www.Manualslib.com manuals search engine

OnStar® Personal Calling

As an OnStar® subscriber, the Personal Calling capability allows you to make hands-free calls using a wireless system that is integrated into the vehicle. Calls can be placed nationwide using simple voice commands with no additional contracts and no additional roaming charges. To find out more about OnStar® Personal Calling, refer to the OnStar® User's Guide in the vehicle's glove box, visit www.onstar.com or www.onstar.ca, or speak to an OnStar® advisor by pressing the OnStar® button or calling 1-888-4-ONSTAR (1-888-466-7827).

OnStar® Virtual Advisor

Your vehicle may have Virtual Advisor. It is a feature of OnStar® Personal Calling that uses minutes to access weather, local traffic reports, and stock quotes. By pressing the phone button and giving a few simple voice commands, you can browse through the various topics. Customize your information profile at www.myonstar.com. See the OnStar® User's Guide for more information.

OnStar® Steering Wheel Controls

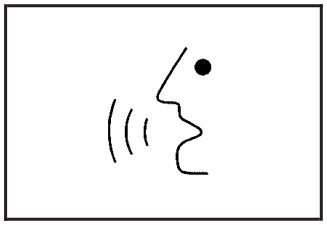

Your vehicle may be equipped with a Talk/Mute button that can be used to interact with OnStar®. See the Audio Steering Wheel Control section for your specific vehicle operation.

When calling into voice mail systems, or to dial directory numbers, press this button once, wait for the response, say the number(s) to be dialed, wait for the number(s) to be repeated and then say "dial". See the OnStar® User's Guide for more information.

Storage Areas

Glove Box

Open the glove box by lifting up on the lever. Close the glove box with a firm push.

Downloaded from www.Manualslib.com manuals search engine

Cupholder(s)

There are two cupholders in the front of the center console.

Cupholder Installation

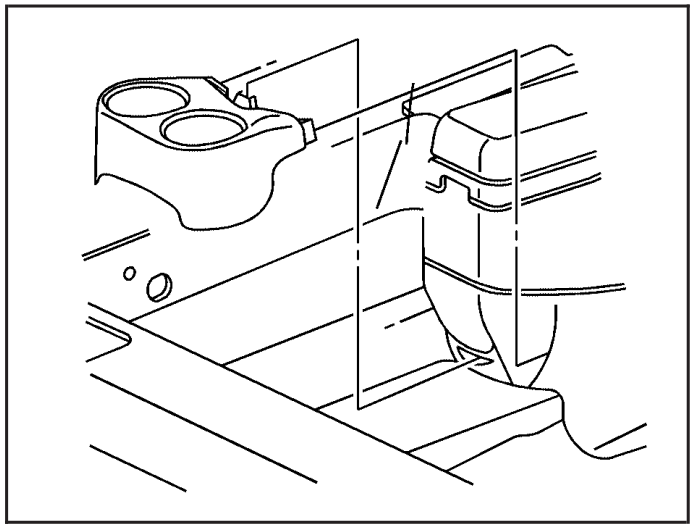

Your vehicle may also have a rear cupholder that can be installed by aligning it to the console and snapping it into place.

Cupholder Removal

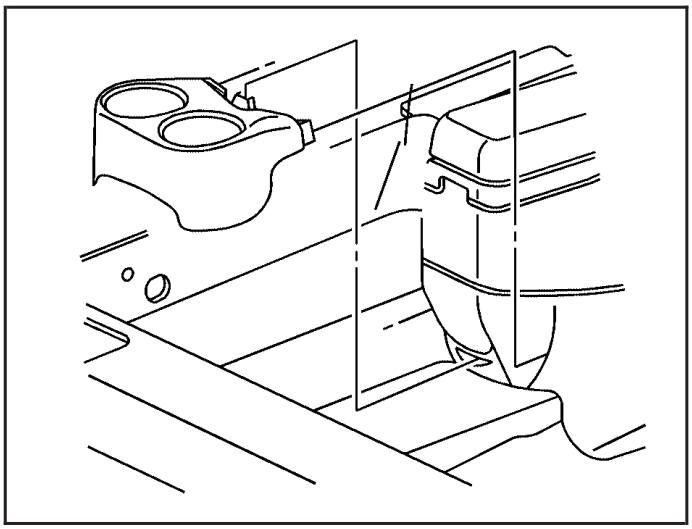

Remove the rear cupholder by pulling it from the console.

Downloaded from www.Manualslib.com manuals search engine

Overhead Console

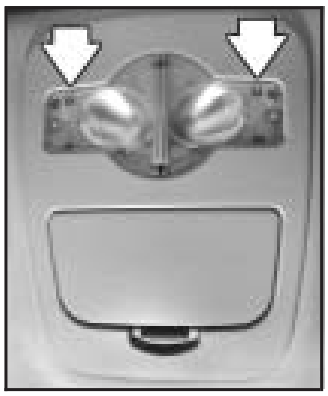

The overhead console has two reading lamps. Press the sides of each lens to turn the reading lamps on or off.

If the vehicle does not have an overhead console, it will have a dome light located in the front of the headliner.

Sunglasses Storage Compartment

Your vehicle may have a storage compartment located to the rear on the overhead console. To open the sunglasses storage compartment, press the release latch forward and pull the compartment down.

Front Seat Storage Net

If the vehicle has a fold-flat front passenger seat, a storage net is attached to the seatback. It cannot be removed from the seat.

Center Console Storage Area

To open the armrest storage area, pull up on the latch located on the front drivers side of the storage area. The storage area may have a cassette/compact disc holder.

Assist Handles

The vehicle has lighted assist handles located above the rear doors. They can be used to help passengers enter and exit the vehicle.

The lamps on the handles will come on automatically when a door is opened, and turn off when the door is closed. If the lamps have grooves on each lens, they can manually be turned on or off by pressing the sides.

Your vehicle may have a rear coat hook available under the rear assist handle on each side of the vehicle.

Downloaded from www.Manualslib.com manuals search engine

Convenience Net

The vehicle may have a convenience net located on the back wall of the trunk.

Put small loads, like grocery bags, behind the net. It can help keep them from falling over.

The net is not for larger, heavier loads. Store those in the trunk as far forward as possible.

Unhook the net so that it will lie flat when not in use.

Sunroof

If the vehicle has a sunroof, it includes a sliding glass panel and a sunshade.

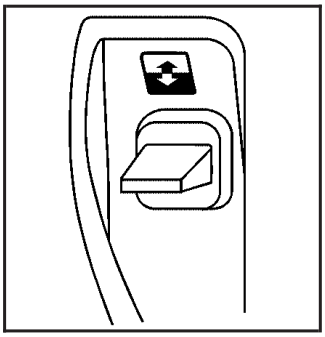

The switch to control the sunroof is located in the headliner.

The switch works only while the ignition is on, or in ACC, or Retained Accessory Power (RAP) is on. See *Retained Accessory Power (RAP) on page 2-22*.

Vent: Open the sunshade by hand. Push the switch toward the rear of the vehicle once and the sunroof will open to the vent position. Push the switch forward to close.

Open/Express-Open: Push the switch toward the rear of the vehicle a second time and the sunroof will open the remainder of the way. The sunshade will open with the sunroof if the switch is pushed toward the rear of the vehicle twice.

Close: Push and hold the front of the switch until the sunroof motor stops. The sunshade must be closed by hand.

Downloaded from www.Manualslib.com manuals search engine

✍ NOTES

Downloaded from www.Manualslib.com manuals search engine

Section 3 Instrument Panel

Instrument Panel Overview 3-4
Hazard Warning Flashers 3-6
Other Warning Devices 3-6
Horn 3-6
Tilt Wheel 3-6
Turn Signal/Multifunction Lever 3-7
Turn and Lane-Change Signals 3-7
Headlamp High/Low-Beam Changer 3-8
Flash-to-Pass 3-9
Windshield Wiper Lever 3-9
Cruise Control 3-11
Exterior Lamps 3-15
Headlamps on Reminder 3-15
Daytime Running Lamps (DRL) 3-16
Fog Lamps 3-17
Exterior Lighting Battery Saver 3-17
Interior Lamps 3-17
Instrument Panel Brightness 3-18
Courtesy Lamps 3-18
Entry Lighting 3-18
Delayed Entry Lighting 3-19
Delayed Exit Lighting 3-19
Front Reading Lamps 3-20
Overhead Console Reading Lamps 3-20
Rear Assist Handle Reading Lamps 3-20
Battery Run-Down Protection 3-20
Head-Up Display (HUD) 3-21
Accessory Power Outlet(s) 3-24
Ashtray(s) and Cigarette Lighter 3-25
Climate Controls 3-26
Climate Control System 3-26
Dual Automatic Climate Control System 3-29
Outlet Adjustment 3-33
Passenger Compartment Air Filter 3-33
Warning Lights, Gages, and Indicators 3-35
Instrument Panel Cluster 3-36
Speedometer and Odometer 3-37
Tachometer 3-37
Safety Belt Reminder Light 3-38
Passenger Safety Belt Reminder Light 3-38
Airbag Readiness Light 3-39
Passenger Airbag Status Indicator 3-40
Up-Shift Light 3-42
Brake System Warning Light 3-42
Anti-Lock Brake System Warning Light 3-44
Traction Control System (TCS) Warning Light 3-45
Enhanced Traction System Warning Light 3-45

Downloaded from www.Manualslib.com manuals search engine

Section 3 Instrument Panel

Engine Coolant Temperature Warning Light 3-46
Engine Coolant Temperature Gage 3-46
Malfunction Indicator Lamp 3-47
Oil Pressure Light 3-50
Fog Lamp Light 3-50
Cruise Control Light 3-51
Highbeam On Light 3-51
Fuel Gage 3-51

Driver Information Center (DIC) 3-52
DIC Controls and Displays (Base Level DIC) 3-52
DIC Controls and Displays (Uplevel DIC with Trip Computer) 3-60
DIC Warnings and Messages 3-72

Audio System(s) 3-94
Setting the Time 3-96
Radio with CD (Base Level) 3-96
Radio with CD (MP3) 3-107
Radio with Six-Disc CD 3-123
Navigation/Radio System 3-139
Theft-Deterrent Feature 3-139
Audio Steering Wheel Controls 3-139
Radio Reception 3-140
Care of Your CDs 3-141
Care of the CD Player 3-141
Backglass Antenna 3-141
XM™ Satellite Radio Antenna System 3-142
Chime Level Adjustment 3-142

Downloaded from www.Manualslib.com manuals search engine

✍ NOTES

Downloaded from www.Manualslib.com manuals search engine

Instrument Panel Overview

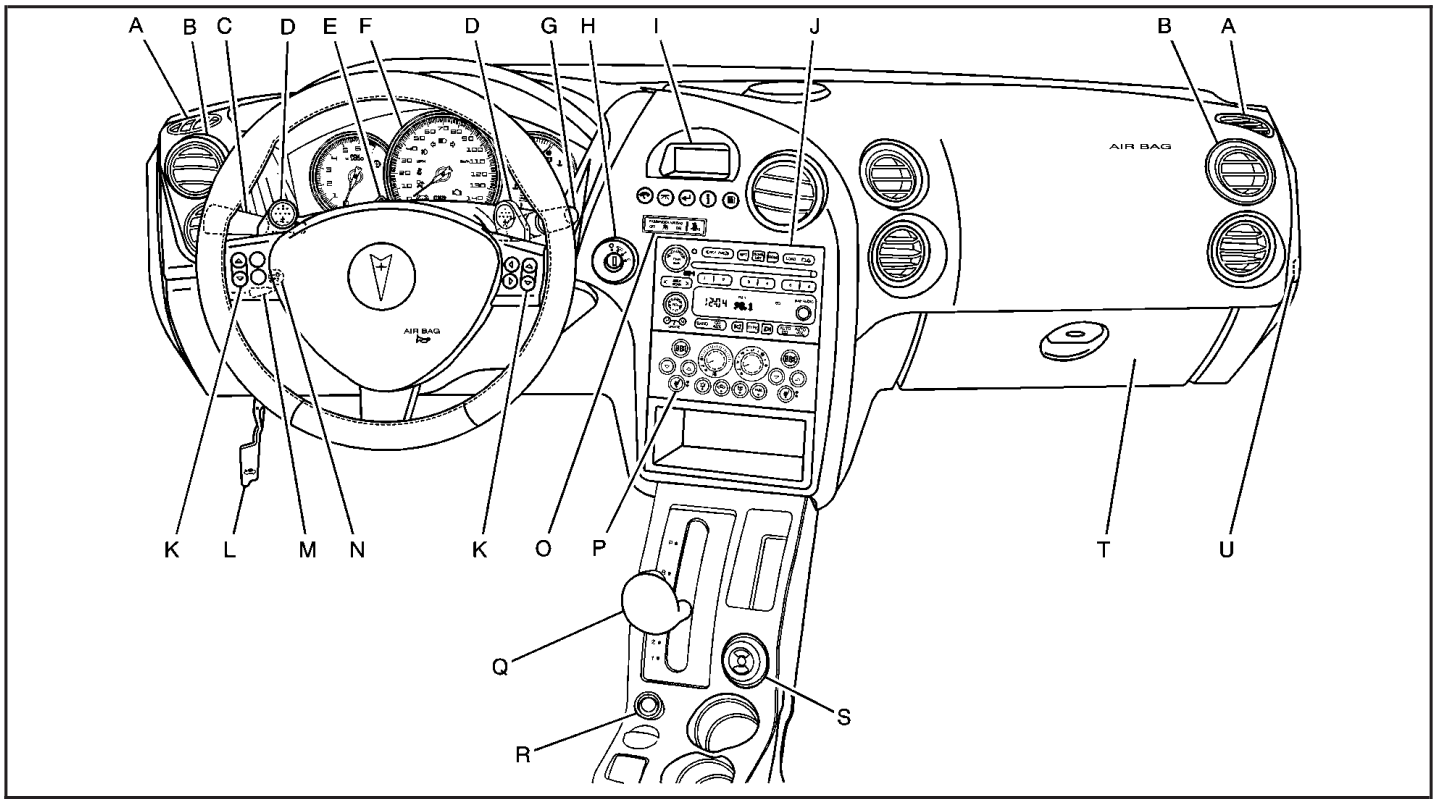

Downloaded from www.Manualslib.com manuals search engine

The main components of the instrument panel are the following:

A. Side Window Defogger Outlets. See *Outlet Adjustment on page 3-33*.

B. Air Outlets. See *Outlet Adjustment on page 3-33*.

C. Turn Signal/Multifunction Lever and Cruise Controls. See *Turn Signal/Multifunction Lever on page 3-7* and *Cruise Control on page 3-11*.

D. TAP-Shift® Control (If Equipped). See *Automatic Transaxle Operation on page 2-25*.

E. Hazard Warning Flashers Button. See *Hazard Warning Flashers on page 3-6*.

F. Instrument Panel Cluster. See *Instrument Panel Cluster on page 3-36*.

G. Windshield Wiper Lever. See *Windshield Wiper Lever on page 3-9*.

H. Ignition. See *Ignition Positions on page 2-22*.

I. Driver Information Center (DIC). See *Driver Information Center (DIC) on page 3-52*.

J. Audio System. See *Audio System(s) on page 3-94*.

K. Audio Steering Wheel Controls (If Equipped). See *Audio Steering Wheel Controls on page 3-139*.

L. Hood Release. See *Hood Release on page 5-11*.

M. Tilt Steering Wheel Lever, on Steering Column. See *Tilt Wheel on page 3-6*.

N. Interior Lamps Brightness Control. See *Interior Lamps on page 3-17*.

O. Passenger Air Bag Status Indicator. See *Passenger Airbag Status Indicator on page 3-40*.

P. Climate Controls. See *Climate Control System on page 3-26*.

Q. Shift Lever. See *Automatic Transaxle Operation on page 2-25*.

R. Traction Control Button. See *Traction Control System (TCS) on page 4-9*.

S. Head Up Display (HUD) Control. See *Head-Up Display (HUD) on page 3-21*.

T. Glove Box. See *Glove Box on page 2-40*.

U. Instrument Panel Fuse Block. See *Instrument Panel Fuse Block on page 5-112*.

Downloaded from www.Manualslib.com manuals search engine

Hazard Warning Flashers

Your hazard warning flashers let you warn others. They also let police know you have a problem. Your front and rear turn signal lamps will flash on and off.

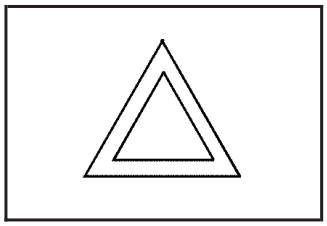

The hazard warning flasher button is located on top of the steering column.

Your hazard warning flashers work no matter what position your key is in, and even if the key is not in the ignition.

Press the button to make the front and rear turn signal lamps flash on and off. Press the button again to turn the flashers off.

When the hazard warning flashers are on, your turn signals will not work.

Other Warning Devices

If you carry reflective triangles, you can set them up at the side of the road about 300 feet (100 m) behind your vehicle.

Horn

Press the vehicle's steering wheel pad to sound the horn.

Tilt Wheel

A tilt wheel enables the position of the steering wheel to be adjusted. The lever that lets the steering wheel tilt is located on the outboard side of the steering column.

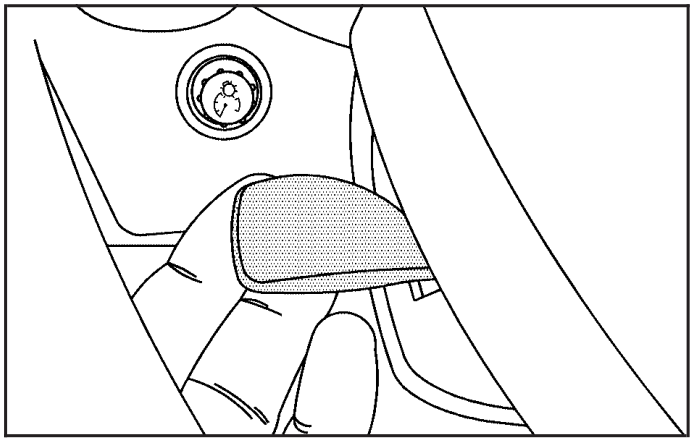

To tilt the steering wheel, hold it and pull the lever. Move the steering wheel to a comfortable driving position and release the lever to lock it into place.

Tilt the steering wheel to the highest position to give more room when exiting and entering the vehicle.

Downloaded from www.Manualslib.com manuals search engine

Turn Signal/Multifunction Lever

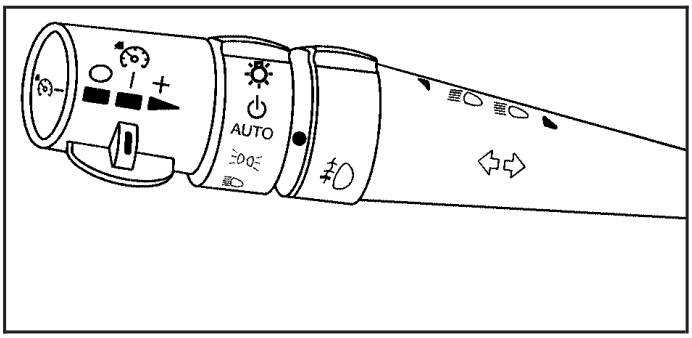

The lever on the left side of the steering column includes the following:

- Turn and Lane-Change Signals. See *Turn and Lane-Change Signals on page 3-7*.
- Headlamp High/Low-Beam Changer. See *Headlamp High/Low-Beam Changer on page 3-8*.
- Fog Lamps. See *Fog Lamps on page 3-17*.
- Flash-to-Pass Feature. See *Flash-to-Pass on page 3-9*.
- Cruise Control. See *Cruise Control on page 3-11*.
- Exterior Lamps Control. See *Exterior Lamps on page 3-15*.

Turn and Lane-Change Signals

To signal a turn, move the turn signal lever located on the left side of the steering column all the way up or down. The lever returns automatically when the turn is complete.

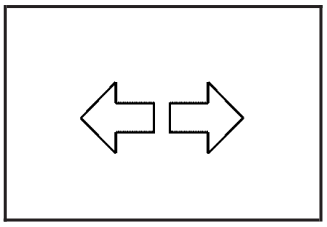

An arrow on the instrument panel cluster will flash in the direction of the turn or lane change.

If the vehicle is equipped with the Head-Up-Display (HUD), a right or left turn signal will appear in the HUD area when making turns or lane changes. See *Head-Up Display (HUD) on page 3-21* for more information.

Raise or lower the lever until the arrow starts to flash to signal a lane change. Hold it there until the lane change is complete. The lever returns to its original position when it is released.

Downloaded from www.Manualslib.com manuals search engine

Arrows that flash rapidly when signaling for a turn or lane change may be caused by a burned-out signal bulb. Other drivers will not see the signal.

Replace burned-out bulbs to help avoid possible accidents. See *Replacement Bulbs on page 5-59*, *Front Turn Signal, Parking and Fog Lamps on page 5-56*, and *Taillamps, Turn Signal, and Stoplamps on page 5-57*. Also, check the fuse for burned-out bulbs if a turn signal arrow fails to work when signaling a turn. See *Fuses and Circuit Breakers on page 5-112* for location information.

Turn Signal On Chime

If the turn signal is left on for more than 0.75 of a mile (1.21 km), a warning chime will sound and the TURN SIGNAL ON warning message will appear on the Driver Information Center (DIC) display. See “Turn Signal On” under *DIC Warnings and Messages on page 3-72*.

Headlamp High/Low-Beam Changer

Push forward on the exterior lamps control lever to change the headlamps from low to high-beam. Pull the lever back and then release it to change from high to low-beam.

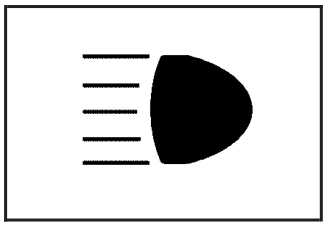

This symbol appears on the instrument panel cluster when the high-beam headlamps are on.

When the high-beam headlamps are on, the fog lamps will not be on. If the vehicle is equipped with the Head-Up-Display (HUD) an arrow will appear in the HUD area indicating that the high-beams are on. See *Head-Up Display (HUD) on page 3-21* for more information.

Downloaded from www.Manualslib.com manuals search engine

Flash-to-Pass

This feature allows the use of the high-beam headlamps to signal the driver in front of you that you want to pass.

Pull and hold the exterior lamps control lever to use this feature. When this is done, the following will occur:

- The high-beam headlamps will turn on, while the headlamps are off, in low-beam, or in Daytime Running Lamps (DRL) mode. They will stay on as long as the lever is held in this position. Release the lever to turn them off.
- The headlamps will switch to low beam if the headlamps had been in the high-beam mode. To return to high-beam, push the lever.

If the vehicle is equipped with the Head-Up Display (HUD), an arrow will appear on the display to indicate that the high beams are on.

Windshield Wiper Lever

Be sure to clear ice and snow from the wiper blades before using them. If they are frozen to the windshield, gently loosen or thaw them. Damaged wiper blades may not clear the windshield well, making it harder to see and drive safely. If the blades do become damaged, install new blades or blade inserts. For more information, see *Windshield Wiper Blade Replacement on page 5-60*.

Heavy snow or ice can overload the wiper motor. A circuit breaker will stop the motor until it cools down. Clear away snow or ice to prevent an overload.

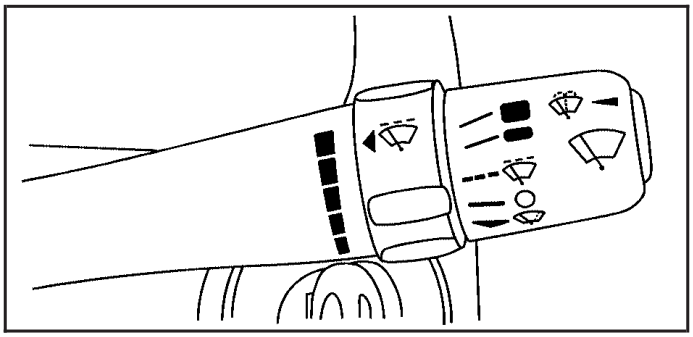

(Windshield Wipers): The lever with this symbol, located on the right side of the steering column, operates the windshield wipers.

(Off): Lower the lever to its original position to turn the wipers off.

(Delay): Push the lever up once to this position to set a delay between wiping cycles. Turn the delay adjustment band to set the length of the delay.

Downloaded from www.Manualslib.com manuals search engine

(Delay Adjustment): Turn the band, located on the left of the windshield wiper lever, to set the length of the delay between wiper cycles when using the delay feature. There are five delay adjustment settings. Turn the band up to make the delays shorter in between wiper cycles. Turn the band down to make the delays longer between wiper cycles. The windshield wiper lever must be in delay for this feature to work.

(Low Speed): Push the lever up to the second position for steady wiping cycles at a slow speed.

(High Speed): Push the lever up to the third position for steady wiping cycles at a high speed.

(Mist): For a single wiping cycle, push the lever down once and let go. The wipers will stop after one cycle. For additional cycles, hold the lever down.

About 30 seconds after the wipers are on, the headlamps, taillamps, and instrument panel lighting will come on, and the Driver Information Center (DIC) back lighting will decrease to the night time mode. About ten seconds after the wipers are turned off, all the lamps will go back to the AUTO (Automatic) mode. See *Exterior Lamps on page 3-15*.

Windshield Washer

⚠ CAUTION:

In freezing weather, do not use your washer until the windshield is warmed. Otherwise the washer fluid can form ice on the windshield, blocking your vision.

The windshield washer button is located at the end of the windshield wiper lever.

(Washer Fluid): Press this button to activate the washer fluid to spray onto the windshield. The wipers will run for a few cycles to clear the windshield. For more wash cycles, press and hold the button.

If the vehicle is low on washer fluid, the LOW WASHER FLUID message will appear on the Driver Information Center (DIC) display. See “LOW WASHER FLUID” under *DIC Warnings and Messages on page 3-72* for more information.

Downloaded from www.Manualslib.com manuals search engine

Cruise Control

⚠ CAUTION:

Cruise control can be dangerous where you cannot drive safely at a steady speed. So, do not use your cruise control on winding roads or in heavy traffic.

Cruise control can be dangerous on slippery roads. On such roads, fast changes in tire traction can cause needless wheel spinning, and you could lose control. Do not use cruise control on slippery roads.

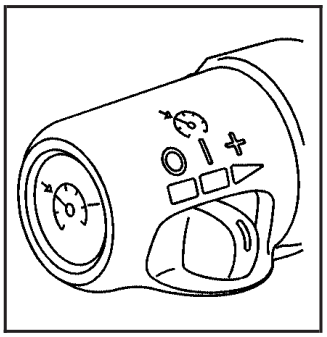

○ **(Off):** This position turns the system off.

| **(On):** This position activates the system.

+ (Resume/Accelerate): Move the lever to this symbol to make the vehicle accelerate or resume to a previously set speed.

(Set): Press this button to set the speed.

With cruise control, you can maintain a speed of about 25 mph (40 km/h) or more without keeping your foot on the accelerator. This can really help on long trips. Cruise control does not work at speeds below about 25 mph (40 km/h).

Downloaded from www.Manualslib.com manuals search engine

Cruise control will not work if your parking brake is set, or if the master cylinder brake fluid level is low.

⚠ CAUTION:

Cruise control can be dangerous where you cannot drive safely at a steady speed. So, do not use your cruise control on winding roads or in heavy traffic.

Cruise control can be dangerous on slippery roads. On such roads, fast changes in tire traction can cause needless wheel spinning, and you could lose control. Do not use cruise control on slippery roads.

If your vehicle is in cruise control when the traction control system (if equipped) begins to limit wheel spin, the cruise control will automatically disengage. See *Traction Control System (TCS) on page 4-9*. When road conditions allow you to safely use it again, you may turn cruise control back on.

Setting Cruise Control

⚠ CAUTION:

If you leave your cruise control on when you are not using cruise, you might hit a button and go into cruise when you do not want to. You could be startled and even lose control. Keep the cruise control switch off until you want to use cruise control.

1. Move the cruise control switch to on.
2. Get up to the speed you want.
3. Press in the set button at the end of the lever and release it.
4. Take your foot off the accelerator pedal.

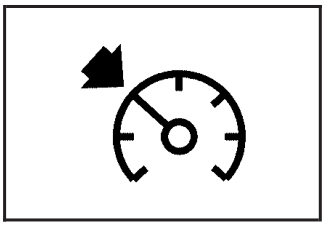

This symbol, along with the CRUISE SET message, will briefly appear in the Driver Information Center (DIC) when the cruise control is set.

Downloaded from www.Manualslib.com manuals search engine

The CRUISE SET message will also appear briefly on the Head-Up Display (HUD), if equipped, when the cruise control lever is pushed to the minus (set/coast/decelerate) or the plus (resume/accelerate) positions.

A cruise control light will also appear on the instrument panel cluster when the cruise control is on. This light will disappear when the brakes are applied or the cruise control is cancelled. It will reappear when the set cruise speed is resumed. The light will go out when the cruise control is turned off. See *Cruise Control Light on page 3-51*.

Resuming a Set Speed

Once you're going about 25 mph (40 km/h) or more, you can move the cruise control switch briefly from on to resume/accelerate.

Your vehicle will go right back up to your chosen speed and stay there.

If you hold the switch at resume/accelerate the vehicle will keep going faster until you release the switch or apply the brake. So unless you want to go faster, don't hold the switch at resume/accelerate.

Increasing Speed While Using Cruise Control

There are two ways to go to a higher speed:

- Use the accelerator pedal to get to the higher speed. Press the set button at the end of the lever, then release the button and the accelerator pedal. You'll now cruise at the higher speed. If the accelerator pedal is held longer than 60 seconds, cruise control will turn off.
- Move the cruise switch from on to resume/accelerate. Hold it there until you get up to the speed you want, and then release the switch. To increase your speed in very small amounts, move the switch briefly to resume/accelerate. Each time you do this, your vehicle will go about 1 mph (1.6 km/h) faster.

The acceleration feature will only work after the cruise control speed has been set by pushing the cruise control set button.

Downloaded from www.Manualslib.com manuals search engine

Reducing Speed While Using Cruise Control

There are two ways to reduce the vehicle's speed while using cruise control:

- Press and hold the set button until you reach the lower speed you want, then release it.
- To slow down in very small amounts, briefly press the set button. Each time you do this your vehicle will slow down approximately one mph (1.6 km/h).

Passing Another Vehicle While Using Cruise Control

Use the accelerator pedal to increase the vehicle's speed. When you take your foot off the pedal, the vehicle will slow down to the cruise control speed set earlier.

Using Cruise Control on Hills

How well the cruise control will work on hills depends upon the vehicle's speed, its load, and the steepness of the hills. When going up steep hills, the accelerator pedal might have to be used in order to maintain the vehicle's speed. When going downhill, the brakes might have to be applied, or the transaxle might have to be shifted to a lower gear to keep the vehicle's speed down. Doing either of these things will take the vehicle out of cruise. It may be better not to use the cruise control if the brakes constantly have to be applied, or the vehicle continuously needs to be shifted to a lower gear.

Ending Cruise Control

There are two ways to turn off the cruise control:

- Step lightly on the brake pedal
- Move the cruise control switch to off

Erasing Speed Memory

When the cruise control or the ignition is turned off, the cruise control set speed memory is erased.

Downloaded from www.Manualslib.com manuals search engine

Exterior Lamps

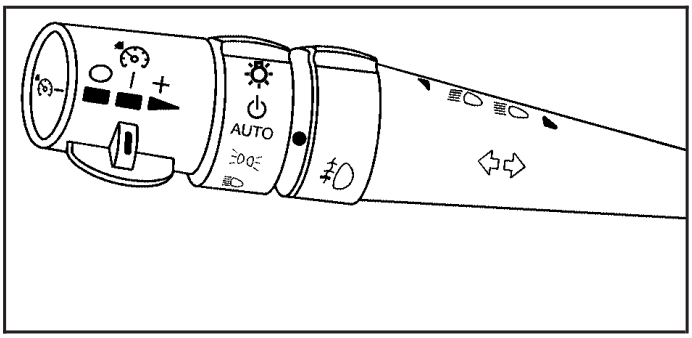

The exterior lamp control is located to the left of the steering wheel on the multifunction lever.

(Exterior Lamp Control): Turn the band with this symbol on it to operate the exterior lamps.

The exterior lamp band has four positions:

(Off): Turning the band to this position turns off all lamps.

AUTO (Automatic): Turning the band to this position sets the exterior lamps in automatic mode. AUTO mode will turn the exterior lamps on and off depending on how much light is available outside the vehicle.

To override AUTO mode, turn the control to off.

To reset to AUTO mode turn the control to exterior lamps and then back to AUTO. Automatic mode will also reset when your vehicle is turned off and then back on again when the control is left in the AUTO position.

(Parking Lamp): Turning the band to this position turns on the parking lamps together with the following:

- Sidemarker Lamps
- Taillamps
- License Plate Lamps
- Instrument Panel Lights

The parking brake indicator light will come on and stay on when the parking lamps are on with the engine off and the ignition to ACC.

(Headlamps): Turning the control to this position turns on the headlamps, together with the previously listed lamps and lights.

Headlamps on Reminder

A warning chime will sound if the vehicle's ignition is off and the driver's door is opened when the exterior lamp control is left on in either the headlamp or parking lamp position.

Downloaded from www.Manualslib.com manuals search engine

Daytime Running Lamps (DRL)

Daytime Running Lamps (DRL) can make it easier for others to see the front of your vehicle during the day. DRL can be helpful in many different driving conditions, but they can be especially helpful in the short periods after dawn and before sunset. Daytime running lamps are required to function at all times on all vehicles first sold in Canada.

A light sensor on top of the instrument panel makes the DRL work, so be sure it is not covered.

The DRL system will make the low-beam headlamps come on at reduced brightness when the following conditions are met:

- The ignition is on.
- The exterior lamps control is off.
- The parking brake is released.

While the DRL are on, only the vehicle's low-beam headlamps will be on at reduced brightness. The turn signal, taillamps, sidemarker and other lamps will not be on. The instrument panel cluster will not be lit up either.

When it is dark enough outside, the DRL will turn off and the vehicle's headlamps and parking lamps will turn on. The other lamps that come on with the headlamps will also come on.

When it is bright enough outside, the headlamps will go off and the DRL will come on.

To idle the vehicle with the DRL off, turn the exterior lamp control off and then do one of the following:

- Turn the exterior lamp control to the parking lamp position.
- Turn the exterior lamp control to the headlamp position.
- Turn the exterior lamp control from AUTO to off and back to AUTO.

This feature is not available for vehicles first sold in Canada.

To turn off the automatic headlamp feature when it is dark outside, move the exterior lamp control to the parking lamp position. The parking lamps will remain illuminated and the headlamps will turn off. The fog lamps will also go on if they were on previously.

As with any vehicle, the regular headlamp system should be turned on when needed.

Downloaded from www.Manualslib.com manuals search engine

Fog Lamps

If equipped, fog lamps provide brighter roadway lighting for better vision in foggy or misty conditions.

(Fog Lamps): Turn the second band on the exterior lamps control lever to this position to turn the fog lamps on. The band will return to its original position.

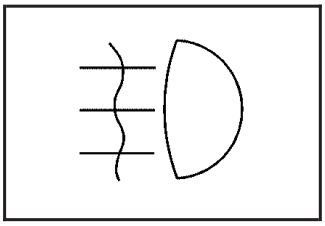

This symbol appears on the instrument panel cluster when the fog lamps are on.

To turn the fog lamps off, turn the band up to the fog lamp symbol and release it. The band will return to its original position. If the high-beam headlamps are on, the fog lamps will turn off. The fog lamps will go on again when the low-beam headlamps are turned back on.

The parking lamps must be on for the fog lamps to work.

Some localities have laws that require the headlamps to be on along with the fog lamps.

Exterior Lighting Battery Saver

If the parking lamps or headlamps have been left on after the ignition has been turned to off, the exterior lamps will turn off after approximately 10 minutes. This protects the battery from being drained.

If the lamps need to be left on for more than 10 minutes, use the exterior lamp control to turn the lamps back on.

Interior Lamps

The interior lamps can be controlled, or automatically turn on or off under certain conditions. They are explained in the following text.

Downloaded from www.Manualslib.com manuals search engine

Instrument Panel Brightness

This feature controls the brightness of the instrument panel lights.

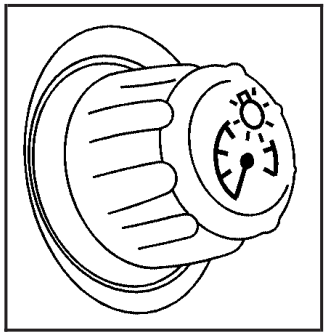

The interior lamps control is located on the instrument panel, to the left of the steering column.

Turn the control to adjust the brightness of the instrument panel lights.

Courtesy Lamps

When a door is opened, the courtesy lamps will automatically come on. These lamps will also come on when the interior lamps control is fully turned clockwise.

Entry Lighting

The entry lighting feature turns the interior lights on before anyone enters the vehicle. The interior lamps will come on for 40 seconds when the doors are unlocked using the remote keyless entry transmitter and the ignition is in OFF. After 40 seconds have elapsed, the interior lamps will slowly fade out. The lamps will fade out before 40 seconds have elapsed if one of the following is done:

- Lock all doors using the remote keyless entry transmitter.
- Lock the doors using the power door lock switch.

When any door is opened, entry lighting is cancelled. The interior lamps will stay on while any door is opened and slowly fade out when all doors are closed. The interior lamps may stay on for up to 25 seconds after all doors have been closed if they have not been locked.

Downloaded from www.Manualslib.com manuals search engine

Delayed Entry Lighting

The delayed lighting feature will continue to light the interior of the vehicle for 25 seconds after all the doors have been closed. Delayed lighting will not occur while the ignition is in RUN or ACC. After 25 seconds have elapsed, the interior lamps will slowly fade out. The lamps will fade out before the 25 seconds have elapsed if one of the following is done:

- The ignition is turned to RUN or ACC.
- The doors are locked using the remote keyless entry transmitter.
- The doors are locked using the power door lock switch.

To turn the delayed lighting feature off or on, see "Personal Programming Modes" under *DIC Controls and Displays (Base Level DIC) on page 3-52* or *DIC Controls and Displays (Uplevel DIC with Trip Computer) on page 3-60* DIC Controls and Displays.

Delayed Exit Lighting

For exiting the vehicle at night, the vehicle is equipped with the delayed exit lighting feature. After the key is removed from the ignition, the interior lamps will light for up the amount of seconds set in the Driver Information Center (DIC). See "Personal Programming Mode Screens" under *DIC Controls and Displays (Base Level DIC) on page 3-52* or *DIC Controls and Displays (Uplevel DIC with Trip Computer) on page 3-60*. After the set time has elapsed, the interior lamps will slowly fade. The lamps will fade before the set time has elapsed if one of the following is done:

- The ignition is turned to RUN or ACC.
- The doors are locked using the remote keyless entry transmitter.
- The doors are locked using the power door lock switch.

When any door is opened, delayed exit lighting is cancelled. The interior lamps will stay on while any door is opened and will slowly fade out when all the doors are closed. The interior lamps will stay on for the set time after all the doors have been closed if they have not been locked.

To turn the delayed exit lighting feature off or on, see "Personal Programming Mode Screens" under *DIC Controls and Displays (Base Level DIC) on page 3-52* or *DIC Controls and Displays (Uplevel DIC with Trip Computer) on page 3-60*.

Downloaded from www.Manualslib.com manuals search engine

Front Reading Lamps

If the vehicle has a sunroof, there are reading lamps in front of the sunroof switch located on the headliner. These lamps will come on when the doors are opened. Press the side of each reading lamp to turn them on and off when the doors are closed.

Overhead Console Reading Lamps

The vehicle may have reading lamps on the overhead console. These lamps will turn on when the doors are opened. When the doors are closed, press the side of each lamp to turn them on and off.

Rear Assist Handle Reading Lamps

If the vehicle has a reading lamp on each rear assist handle, press the side of each lamp to turn it on or off.

Battery Run-Down Protection

The vehicle has a feature to help prevent the battery from draining in case the interior, trunk, or underhood lamps are accidentally left on. If any of these lamps are left on while the ignition is in OFF, they will automatically turn off after 10 minutes. The lamps will not come back on again until any of the following are done:

- The ignition is turned to RUN or ACC.
- The interior lamps control is turned completely to the right, then back slightly to the left.
- Open, or close and reopen, a door that is closed.

If the vehicle has less than 15 miles (25 km) on the odometer, the battery saver will turn off the lamps after only three minutes.

Downloaded from www.Manualslib.com manuals search engine

Head-Up Display (HUD)

⚠ CAUTION:

If the HUD image is too bright or too high in your field of view, it may take you more time to see things you need to see when it is dark outside. Be sure to keep the HUD image dim and placed low in your field of view.

If the vehicle has the Head-Up Display (HUD), some information concerning the operation of the vehicle is projected onto the windshield. This includes the speedometer reading, transaxle positions, compass direction, outside air temperature, the tap shift gear and the upshift symbol if active, and a brief display of the current radio station, including XM information or CD track. It will also display turn-by-turn navigation information if the vehicle is equipped with a navigation radio. The images are projected by the HUD lens located on the driver's side of the instrument panel.

The tap shift gear and the upshift symbol will also appear on the HUD if the vehicle is equipped with tap shift and it is active.

The HUD information can be displayed in one of three languages, English, French, or Spanish. The speedometer reading and other numerical values can be displayed in either English or metric units.

The language selection and the units of measurement are changed through the trip computer in the Driver Information Center (DIC). See "Options" under *DIC Controls and Displays (Base Level DIC) on page 3-52* or *DIC Controls and Displays (Uplevel DIC with Trip Computer) on page 3-60*.

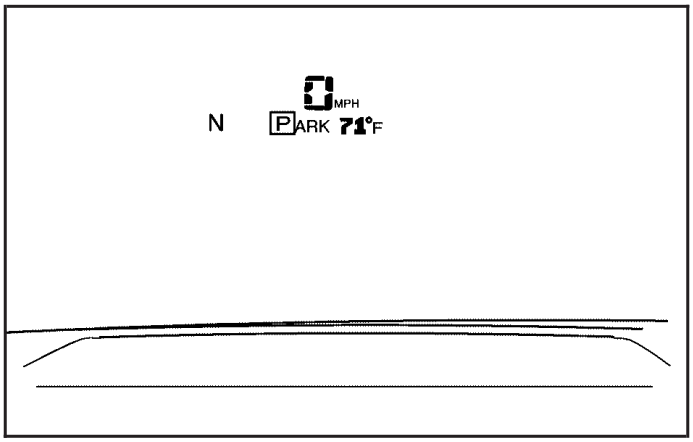

The HUD information appears as an image focused out toward the front of the vehicle.

Downloaded from www.Manualslib.com manuals search engine

When the ignition key is turned to RUN, the HUD will display an introductory message for a short time, until the HUD has warmed up.

The following indicator lights come on the instrument panel when activated and will also appear on the HUD:

- Turn Signal Indicators
- High-Beam Indicator Symbol

The HUD will temporarily display CHECK TRIP COMPUTER when there are messages on the DIC trip computer.

The HUD will also display the following messages when these systems, if equipped, are active:

- TRACTION CONTROL ACTIVE
- STABILITY CONTROL ACTIVE

The HUD will temporarily display the TRACTION CONTROL OFF message when the traction control system is turned off.

The HUD will temporarily display the CRUISE SET message when cruise control is activated or cruise speed is increased.

Notice: **If you try to use the HUD image as a parking aid, you may misjudge the distance and damage your vehicle. Do not use the HUD image as a parking aid.**

When the HUD is on, the speedometer reading will continually be displayed. The current radio station or CD track number will display for a short period of time after the radio or CD track status changes. This will happen whenever one of the radio controls is pressed.

The speedometer size will be reduced when radio, CD information, warnings, or turn-by-turn navigation information are displayed on the HUD.

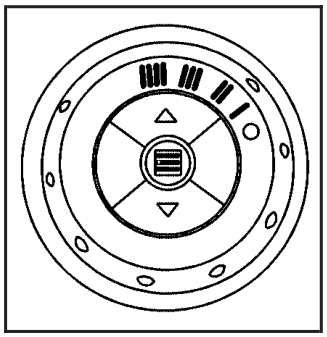

The HUD control is located on the console.

To adjust the HUD image so that items are properly displayed, do the following:

1. Adjust the driver's seat to a comfortable position.
2. Start the engine.
3. Adjust the HUD controls.

Downloaded from www.Manualslib.com manuals search engine

Use the following settings to adjust the HUD.

◯ **(Off):** Rotate the outer ring on the HUD control to this position to turn the HUD off.

I II III IIII (Brightness): Turn the outer ring on the HUD control clockwise to dim the display and counterclockwise to brighten it.

△ **(Up):** Press this portion of the switch on the HUD control to move the image up.

▽ **(Down):** Press this portion of the switch on the HUD control to move the image down. Move the image as low as possible on the windshield, keeping it in full view.

(Page): Press this button to select the display formats. Release the page button when the format number with the desired display is shown on the HUD.

- **Format One:** This display gives the speedometer reading (in English or metric units), transaxle positions, compass direction, and the outside air temperature.
- **Format Two:** This display includes the information in Format One without the compass direction and the outside air temperature.
- **Format Three:** This display includes all the information in Format One, but turns the instrument cluster lighting off. Format three is only available at night.

All formats will show the turn-by-turn navigation information. It will display the next turn, direction, street name, and distance to the selected destination. When you near your destination, the HUD will display a distance bar that will fill in the closer you get to your destination. All navigation information is provided to the HUD by the navigation radio, if equipped.

The warning indicators still appear on the instrument panel when required. The HUD will display Stealth Mode On.

The HUD will store the last display format selected. If the last format displayed was Format One or Format Three, then Format One will be displayed when the vehicle is started.

If the last format was Format Two, then Format Two will be displayed.

The HUD image displayed on the windshield will automatically dim and brighten to compensate for outside lighting.

The HUD image can temporarily light up depending on the angle and position of the sunlight on the HUD display. This is normal and will change when the angle of the sunlight on the HUD display changes.

Polarized sunglasses could make the HUD image harder to see.

Downloaded from www.Manualslib.com manuals search engine

Care of the HUD

Clean the inside of the windshield as needed to remove any dirt or film that could reduce the sharpness or clarity of the HUD image.

To clean the HUD lens, use a soft, clean cloth that has household glass cleaner sprayed on it. Wipe the HUD lens gently, then dry it. Do not spray cleaner directly on the lens because the cleaner could leak into the unit.

If You Cannot See the HUD Image When the Ignition Is On

- Is anything covering the HUD lens?
- Is the HUD dimmer setting bright enough?
- Is the HUD image adjusted to the proper height?
- Are you wearing polarized sunglasses?
- Still no HUD image? Check the fuse in the instrument panel fuse block. See *Instrument Panel Fuse Block on page 5-112*.

If the HUD Image Is Not Clear

- Is the HUD image too bright?
- Are the windshield and HUD lens clean?

If the HUD image is not correct, contact your dealer.

Keep in mind that the windshield is part of the HUD system. See *Windshield Replacement on page 5-60*.

Accessory Power Outlet(s)

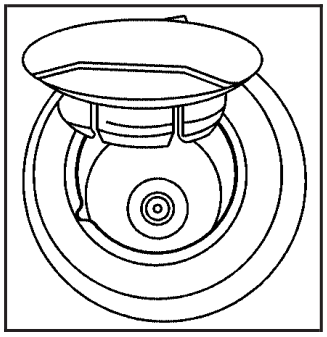

The vehicle has two 12-volt outlets which can be used to plug in electrical equipment.

One accessory power outlet is located on the center console, below the front edge of the storage console. The other is located inside the console.

Remove the tethered cap to use the outlet. When not using the outlet, be sure to cover it with the protective cap.

Notice: **Leaving electrical equipment on for extended periods will drain the battery. Always turn off electrical equipment when not in use and do not plug in equipment that exceeds the maximum amperage rating.**

Downloaded from www.Manualslib.com manuals search engine

Certain electrical accessories may not be compatible with the accessory power outlet and could result in blown vehicle or adapter fuses. See your dealer for additional information on accessory power outlets.

Notice: **Adding any electrical equipment to your vehicle may damage it or keep other components from working as they should. The repairs would not be covered by your warranty. Do not use equipment exceeding maximum amperage rating. Check with your dealer before adding electrical equipment.**

When adding electrical equipment, be sure to follow the proper installation instructions included with it.

Notice: **Improper use of the power outlet can cause damage not covered by your warranty. Do not hang any type of accessory or accessory bracket from the plug because the power outlets are designed for accessory power plugs only.**

Ashtray(s) and Cigarette Lighter

Ashtray

Notice: **If you put papers, pins, or other flammable items in the ashtray, hot cigarettes or other smoking materials could ignite them and possibly damage your vehicle. Never put flammable items in the ashtray.**

If your vehicle is equipped, the ashtray is located to the right of the transaxle shift lever on the center console. To open it, push and release the rear of the cover.

To empty the ashtray, lift the side tab and pull up to remove the ashtray from the center console. To reinstall, push the tray back into place.

Cigarette Lighter

Notice: **Holding a cigarette lighter in while it is heating will not allow the lighter to back away from the heating element when it is hot. Damage from overheating may occur to the lighter or heating element, or a fuse could be blown. Do not hold a cigarette lighter in while it is heating.**

If your vehicle is equipped with a cigarette lighter, it is located on the center console.

Push the lighter to activate the heating element and release it. Once the heating element is hot, it will pop out by itself.

Downloaded from www.Manualslib.com manuals search engine

Climate Controls

Climate Control System

The climate control system allows manual control of the heating, cooling, and ventilation in the vehicle.

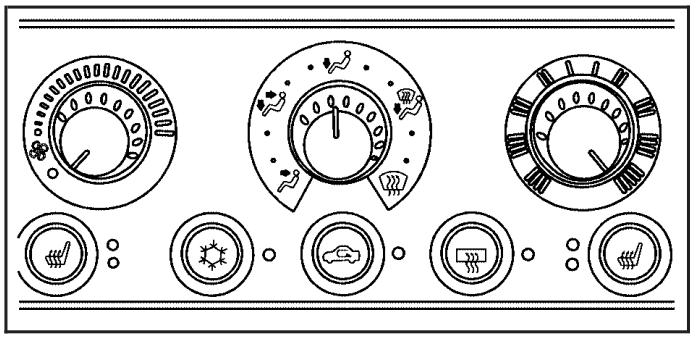

Fan

(Fan): Turn the knob by this symbol, located on the left side of the climate control panel, clockwise or counterclockwise to increase or decrease the fan speed. The fan speed will be temporarily reduced between the transition to a new mode. The fan will resume the original speed when the transition to the new mode is complete.

(Off): Turn the knob to this position to turn the climate control system off. Only the heated seat and/or rear defrost can be operated when the fan is off.

Mode

Turn the middle knob to select the following modes:

(Vent) (Outside Air): This mode directs outside air to the instrument panel outlets. If driving in city traffic, and the vehicle is stopped and idling, or the weather is hot, press the recirculation button. To prevent the air inside the vehicle from becoming stale, be sure to turn off recirculation periodically.

(Bi-Level): This mode directs half of the air to the instrument panel outlets, and the remaining air to the floor outlets. Some air may be directed toward the windshield. Slightly cooler air is directed to the instrument panel outlets and warmer air is directed to the floor outlets.

(Floor): This mode directs most of the air to the floor outlets with some air directed toward the side window outlets and a little air directed to the windshield.

In this mode, the system will automatically use outside air. The air conditioning compressor will be engaged unless the outside temperature is 40°F (4°C) or below.

Downloaded from www.Manualslib.com manuals search engine

Recirculation cannot be selected when in this mode even though the indicator light comes on when the recirculation button is pressed.

The middle knob on the climate control panel can also be used to select the defog or defrost mode.

Defogging and Defrosting

Fog on the inside of the vehicle is a result of high humidity causing moisture to condense on the cool window glass. This can be minimized if the climate control system is used properly. There are two modes to clear frost or fog from the windshield. Use the defog mode to clear the windows of condensation and to warm the vehicle's occupants. Use the defrost mode to remove frost or condensation from the windshield quickly.

See "Rear Window Defogger" later in this section for information on clearing the rear window of fog or ice.

(Floor/Defog): Use the floor/defog mode to clear the windows of fog or moisture and to warm the passengers. This mode directs the air equally between the windshield and the floor outlets, along with some directed to the side window outlets.

This mode will automatically use outside air. The air conditioning compressor will be engaged unless the outside temperature is 40°F (4°C) or below. Recirculation cannot be selected when in this mode even though the indicator light comes on when the recirculation button is pressed.

(Defrost): Use the defrost mode to remove fog or frost from the windshield more quickly. This mode directs most of the air to the windshield and the side window outlets, with some air directed to the floor outlets. This mode has a timer and will shut off after five minutes.

This mode will automatically use outside air. The air conditioning compressor will be engaged unless the outside temperature is 40°F (4°C) or below. Recirculation cannot be selected when in this mode even though the indicator light comes on when the recirculation button is pressed.

Temperature

The knob on the right of the climate control panel is the temperature adjustment that can be used with any of the climate control modes.

Turn the knob clockwise for warmer settings and counterclockwise for colder settings.

Downloaded from www.Manualslib.com manuals search engine

Air Conditioning

(Air Conditioner): Press this button to turn the air conditioning compressor on or off. An indicator light to the right of the button will come on. This button has no control over the air conditioning compressor when in Floor/Defog and Defrost modes. The instrument panel brightness control may have to be adjusted to the highest setting in order to see the indicator. See *Instrument Panel Brightness on page 3-18* for additional information.

On hot days during the vehicle's initial start-up, open the windows to let hot inside air escape; then close them. This helps to reduce the time it takes for the vehicle to cool down. It also helps the system to operate more efficiently.

For quicker cool down on hot days, do the following:

1. Select any mode setting between vent and the setting before defrost.
2. Select the air conditioner.
3. Select the coolest temperature.
4. Select the highest climate control fan speed.

Using these settings will set recirculation for quicker cool down (the light indicator will light). If outside air is desired, press the recirculation button (light indicator will turn off).

Using these settings together for long periods of time may cause the air inside the vehicle to become too dry. To prevent this from happening, after five minutes the recirculation door will open slightly to allow some outside air into the vehicle.

The air conditioning system removes moisture from the air, so sometimes there may be a small amount of water dripping underneath the vehicle while it is idling or after the engine is turned off. This is normal.

Recirculation

(Recirculation): Press this button to activate the recirculation mode. With this selection, inside air is recirculated into the vehicle. This mode reduces outside air and odors from entering the vehicle. It may also help to heat or cool the air inside the vehicle more quickly.

An indicator light to the right of the button will come on to show that the recirculation button has been pressed. The instrument panel brightness control may have to be adjusted to the highest setting to see the indicator.

The recirculation mode has a timer. After five minutes, the system's air inlet door will move slightly to allow for ten percent fresh outside air to maintain interior air quality. The only way to reset the system to full recirculation is to restart the five minute timer by selecting vent/outside air and recirculation again.

Downloaded from www.Manualslib.com manuals search engine

Rear Window Defogger

The rear window defogger uses a warming grid to remove fog or frost from the rear window. Be sure to clear as much snow from the rear window as possible.

Notice: **Do not use a razor blade or sharp object to clear the inside rear window. Do not adhere anything to the defogger grid lines in the rear glass. These actions may damage the rear defogger. Repairs would not be covered by your warranty.**

(Rear Window Defogger): Press this button to turn the rear window defogger on or off.

An indicator light to the right of the button will come on to show that the rear window defogger is on. The instrument panel brightness control may have to be adjusted to the highest setting during the daytime in order to see the indicator light.

The rear window defogger will turn off approximately 20 minutes after the button is pressed. If the button is pressed again, it will run another 20 minutes. The defogger can be turned off by pressing the button again or by turning off the engine.

Do not drive the vehicle until all windows are clear.

Dual Automatic Climate Control System

With this system you can control the heating, cooling and ventilation for your vehicle.

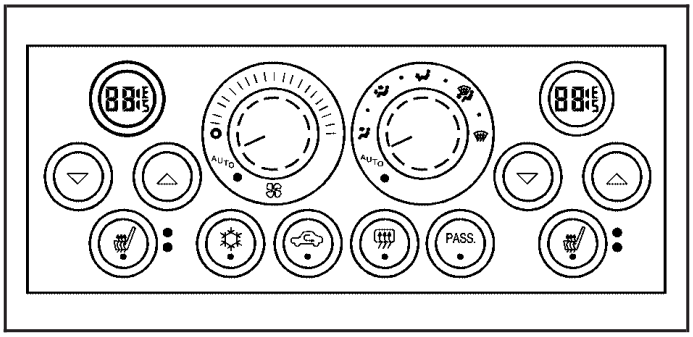

Automatic Operation

AUTO (Automatic): Turn both the fan and mode knob to AUTO for automatic control of the inside temperature, the air delivery mode and the fan speed. You may notice a delay of two to three minutes before the fan comes on when the automatic operation is used in cold weather. For the automatic system to function, the temperature must be set between 60°F (15°C) and 90°F (32°C).

1. Adjust the temperature to a comfortable setting.

Downloaded from www.Manualslib.com manuals search engine

2. Press the PASS. button to turn the passenger climate control system on and off. When the passenger system is off, the driver's temperature setting is also used for the passenger and the passenger display is off.

   In cold weather, the system will start at reduced fan speeds to avoid blowing cold air into your vehicle until warmer air is available. The system will start out blowing air at the floor but may change modes automatically as the vehicle warms up to maintain the chosen temperature setting. The length of time needed for the air to warm up will depend on the outside temperature and the length of time that has elapsed since your vehicle was last driven.

3. Wait for the system to regulate. This may take from 10 to 30 minutes. Then adjust the temperature, if necessary.

Do not cover the solar sensor located in the center of the instrument panel, near the windshield. For more information on the solar sensor, see "Sensors" later in this section.

Manual Operation

▽ △ **(Temperature):** To manually adjust the temperature inside the vehicle, press the up arrow on the temperature control to raise the temperature and press the down arrow to lower the temperature. The display will show your selection.

When one temperature is displayed, the driver temperature is set. When both temperatures are displayed, the temperature for both the driver and passenger are set. Pressing PASS. will turn the passenger temperature setting on and off. If only the driver temperature is set, the driver temperature is used for the passenger and the passenger display is off.

(Fan): Turn the fan knob clockwise to increase the fan speed and counterclockwise to decrease the fan speed. Turning the fan knob cancels the automatic fan operation and places the system in manual. Turn the knob to AUTO to return to automatic fan operation. If the airflow seems low when the fan is at the highest setting, the passenger compartment air filter, if equipped, may need to be replaced. See *Passenger Compartment Air Filter on page 3-33* for additional information.

Downloaded from www.Manualslib.com manuals search engine

(Off): Turning the fan knob off will turn the controller completely off. Only the rear window defogger and heated seats will function when the fan knob is off.

Air Flow: This control has several settings to control the direction of airflow.

To change the current mode, select one of the following:

AUTO: This mode is automatically set depending on the temperature in the vehicle and solar sensor information.

(Vent): This mode directs air to the instrument panel outlets.

(Bi-Level): This mode directs airflow to the instrument panel outlets and to the floor outlets. A small amount of air is also directed to the windshield and the side window outlets.

(Floor): This mode directs most of the air to the floor outlets with some air directed to the side window outlets, and a little air directed to the windshield.

(Air Conditioning): Press this button to turn the air conditioning compressor on or off. The indicator light on the button will come on when the air conditioning is on.

The indicator light on the air condition button will light every time the vehicle is started. The air conditioner may be turned off by pressing the air conditioner button.

(Recirculation): Press this button to turn the recirculation mode on or off. This mode keeps outside air from coming in the vehicle. It can be used to prevent outside air and odors from entering your vehicle or to help cool the air inside your vehicle more quickly.

Recirculation is not available in defrost or floor/defog mode. Pressing the recirculation button will turn on the indicator light.

Using recirculation for long periods of time may cause the air inside your vehicle to become too dry. To prevent this from happening, after the air in your vehicle has cooled, turn the recirculation mode off.

(Heated Seats): Press this button to turn the heated seats on and off. The button on the left controls the driver's seat and the button on the right controls the passenger's seat. See *Heated Seats on page 1-3* for additional information.

Downloaded from www.Manualslib.com manuals search engine

Sensors

The solar sensor on your vehicle monitors the solar radiation and the air inside of your vehicle, then uses the information to maintain the selected temperature by initiating needed adjustments to the temperature, the fan speed and the air delivery system. The system may also supply cooler air to the side of the vehicle facing the sun. The recirculation mode will also be activated, as necessary. Do not cover the solar sensor located in the center of the instrument panel, near the windshield, or the system will not work properly.

Defogging and Defrosting

Fog on the inside of windows is a result of high humidity (moisture) condensing on the cool window glass. This can be minimized if the climate control system is used properly. There are two modes to clear fog or frost from your windshield. Use the floor/defog mode to clear the windows of fog or moisture and warm the passengers. Use defrost to remove fog or frost from the windshield more quickly.

(Floor/Defog): This mode directs the air between the windshield, floor outlets and side windows. When you select this mode, the system turns off recirculation and runs the air-conditioning compressor unless the outside temperature is near or below freezing. Pressing the recirculation button, while in this mode, will have no effect other than turning on the indicator light.

(Defrost): This mode directs most of the air to the windshield, with some air directed to the side windows. In this mode, the system will automatically turn off the recirculation and run the air conditioning compressor, unless the outside temperature is near or below freezing. Pressing the recirculation button, while in this mode, will have no affect other than turning on the indicator light.

Rear Window Defogger

The rear window defogger uses a warming grid to remove fog or frost from the rear window.

The rear window defogger will only work when the engine is running.

Downloaded from www.Manualslib.com manuals search engine

(Rear Window Defogger): Press this button to turn the rear window defogger on and off. Be sure to clear as much snow from the rear window as possible.

The rear window defogger will turn off approximately 20 minutes after the button is pressed. If turned on again, the defogger will only run for approximately 20 minutes before turning off. The defogger can also be turned off by pressing the button again or by turning off the engine.

Do not drive the vehicle until all the windows are clear.

Notice: **Do not use anything sharp on the inside of the rear window. If you do, you could cut or damage the warming grid, and the repairs would not be covered by your warranty. Do not attach a temporary vehicle license, tape, a decal or anything similar to the defogger grid.**

Outlet Adjustment

Rotate and turn the air outlets, located in the middle and at each outboard side of the instrument panel, to adjust the direction of the airflow.

Operation Tips

- Clear away any ice, snow, or leaves from the air inlets at the base of the windshield that may block the flow of air into the vehicle.
- Use of non-GM approved hood deflectors may adversely affect the performance of the system.
- Keep the path under the front seats clear of objects to help circulate the air inside of the vehicle more effectively.
- If the airflow seems low when the fan is at the highest setting, the passenger compartment air filter may need to be replaced. See “Passenger Compartment Air Filter” following, for more information.

Passenger Compartment Air Filter

The passenger compartment air filter is located near the passenger’s side windshield wiper arm, underneath the inlet grille.

The filter traps most of the pollen from entering the climate control system. Similar to the engine’s air filter, it may need to be changed periodically to insure system performance. See *Scheduled Maintenance on page 6-4* for more information.

Downloaded from www.Manualslib.com manuals search engine

To change the passenger compartment air filter, do the following:

1. Turn the ignition to ACC and the windshield wipers on.
2. Turn the ignition to OFF when the windshield wipers are in the upright position.
3. Raise the hood.
4. Disconnect the windshield washer pump hose from the fender rail and the air inlet grille.
5. Remove the hood weather-strip from the passenger's side of the vehicle, peeling it back halfway.

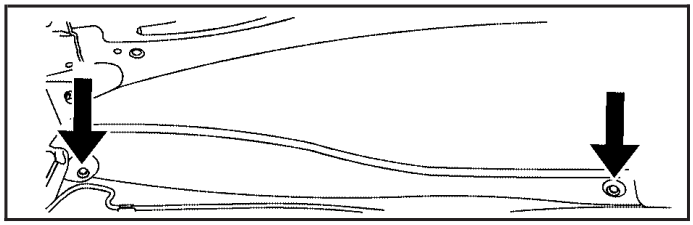

6. Remove the two air inlet grille retainers using a flat tool to first pry up on the center post and then the remainder of the fastener can be pulled out.
7. Remove the air inlet grille by sliding it down to disengage the two tabs that hold it to the bottom of the windshield glass. Place the grille on the windshield while you remove the filter. Do not try to remove the grille from the vehicle because it is still attached on the right side by a fastener.

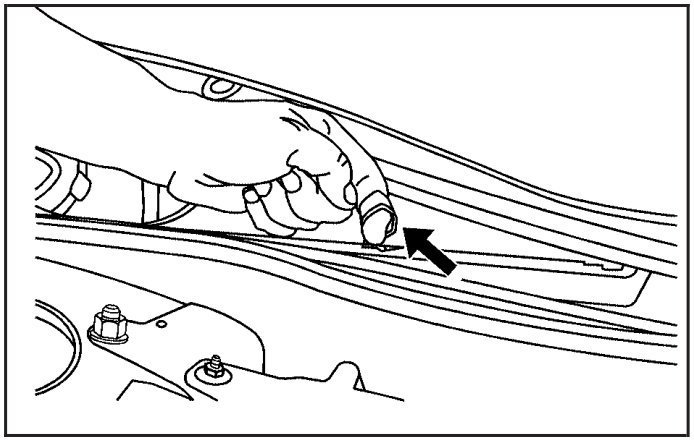

8. Remove the passenger compartment air filter by pulling on the tab.
9. Install a new passenger compartment air filter. Make sure it slides under the compartment retainers. Be sure the long rubber water deflector above the filter stays in place.
10. Reverse steps 1 through 7.

Downloaded from www.Manualslib.com manuals search engine

Warning Lights, Gages, and Indicators

This part describes the warning lights and gages that may be on the vehicle. The pictures help to locate them.

Warning lights and gages can signal that something is wrong before it becomes serious enough to cause an expensive repair or replacement. Paying attention to the warning lights and gages could also save you or others from injury.

Warning lights come on when there may be or is a problem with one of the vehicle's functions. As the details show on the next few pages, some warning lights come on briefly when the engine is started just to indicate they are working. If you are familiar with this section, you should not be alarmed when this happens.

Gages can indicate when there may be or is a problem with one of the vehicle's functions. Often gages and warning lights work together to indicate when there is a problem with the vehicle.

When one of the warning lights comes on and stays on while the vehicle is being driven, or when one of the gages shows there may be a problem, check the section that tells you what to do about it. Follow this manual's advice. Waiting to do repairs can be costly – and even dangerous. So please get to know the vehicle's warning lights and gages. They can be a big help.

The vehicle also has a Driver Information Center (DIC) that works along with the warning lights and gages. See *Driver Information Center (DIC) on page 3-52* for more information.

Downloaded from www.Manualslib.com manuals search engine

Instrument Panel Cluster

The instrument panel cluster is designed to show at a glance how the vehicle is running. It will show how fast the vehicle is going, about how much fuel is in the fuel tank, and many other things needed to drive the vehicle safely and economically.

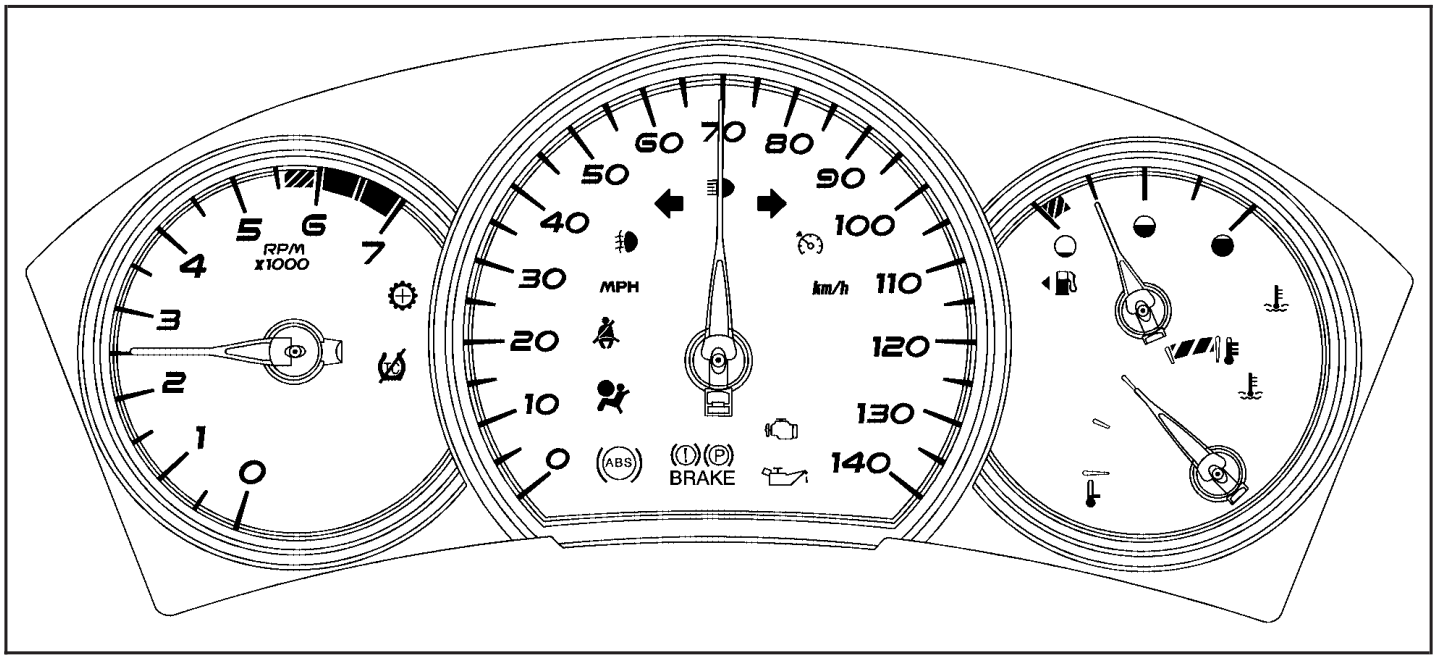

United States version shown, Canada similar

Downloaded from www.Manualslib.com manuals search engine

The vehicle is equipped with this cluster or one very similar to it. It has indicator warning lights that are explained on the following pages. Be sure to read about them.

Speedometer and Odometer

The speedometer shows the vehicle's speed in both miles per hour (mph) and kilometers per hour (km/h). The odometer, located on the Driver Information Center (DIC) display, shows how far the vehicle has been driven, in either miles or kilometers. See *DIC Controls and Displays (Base Level DIC) on page 3-52* or *DIC Controls and Displays (Uplevel DIC with Trip Computer) on page 3-60* for more information.

If the vehicle has the Head-Up Display (HUD) the speed will also be displayed on the HUD screen.

If a vehicle has to have a new odometer installed, a new one can be set to the mileage total of the old odometer, if that can be done. If it cannot, than it will be set at zero and a label must be put on the driver's door to show the old mileage reading when the new odometer was installed.

Trip Odometer

The trip odometer, located in the Driver Information Center (DIC), tells how far the vehicle has driven since it was last reset. The miles (kilometers) for two different trips can be viewed. See *DIC Controls and Displays (Base Level DIC) on page 3-52* or *DIC Controls and Displays (Uplevel DIC with Trip Computer) on page 3-60* for more information on setting the trip odometer.

Tachometer

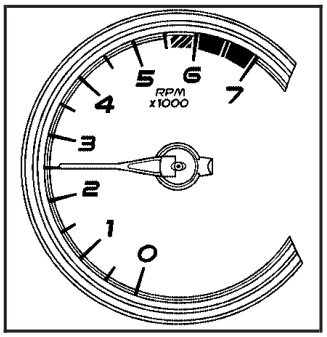

The tachometer displays the engine speed in revolutions per minute (rpm).

Notice: **If you operate the engine with the tachometer in the shaded warning area, your vehicle could be damaged, and the damages would not be covered by your warranty. Do not operate the engine with the tachometer in the shaded warning area.**

Downloaded from www.Manualslib.com manuals search engine

Safety Belt Reminder Light

When the key is turned to RUN or START, a chime will sound for several seconds to remind you and your passengers to buckle your safety belts. The driver safety belt light will also come on and stay on for several seconds, then it will flash for several more. You should buckle your seat belt.

If the driver's belt is buckled, neither the chime nor the light will come on.

Passenger Safety Belt Reminder Light

Several seconds after the key is turned to RUN or START, a chime will sound for several seconds to remind the front passenger to buckle their safety belt. This would only occur if the passenger airbag is enabled. See *Passenger Sensing System on page 1-61* for more information. The passenger safety belt light will also come on and stay on for several seconds, then it will flash for several more.

If the passenger's safety belt is buckled, neither the chime nor the light will come on.

Downloaded from www.Manualslib.com manuals search engine

Airbag Readiness Light

There is an airbag readiness light on the instrument panel, which shows the airbag symbol. The system checks the airbag's electrical system for malfunctions. The light indicates if there is an electrical problem. The system check includes the airbag sensors, the airbag modules, the wiring, and the diagnostic module. For more information on the airbag system, see *Airbag System on page 1-52*.

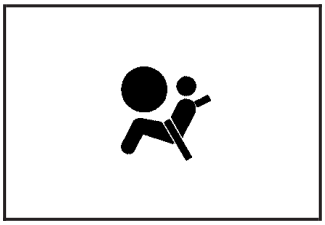

This light will come on when the vehicle is started, and it will flash for a few seconds. Then the light should go out. This means the system is functioning properly.

If the airbag readiness light stays on after the vehicle is started, or comes on as the vehicle is being driven, the airbag system may not work properly. Have the vehicle serviced right away.

⚠ CAUTION:

If the airbag readiness light stays on after you start your vehicle, it means the airbag system may not be working properly. The airbags in your vehicle may not inflate in a crash, or they could even inflate without a crash. To help avoid injury to yourself or others, have your vehicle serviced right away if the airbag readiness light stays on after you start your vehicle.

The airbag readiness light should flash for a few seconds when the ignition key is turned to RUN. If the light does not come on then, have it fixed so it will be ready to warn you if there is a problem.

Downloaded from www.Manualslib.com manuals search engine

Passenger Airbag Status Indicator

Your vehicle has the passenger sensing system. Your instrument panel has a passenger airbag status indicator.

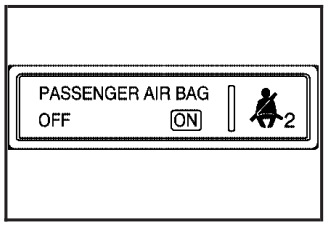

Passenger Airbag Status Indicator – United States

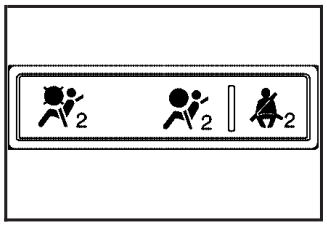

Passenger Airbag Status Indicator – Canada

When the ignition key is turned to RUN or START, the passenger airbag status indicator will light ON and OFF, or the symbol for on and off, for several seconds as a system check. If you use remote start to start your vehicle from a distance (if equipped), you may not see the system check. Then, after several more seconds, the status indicator will light either ON or OFF, or either the on or off symbol to let you know the status of the right front passenger's frontal airbag.

If the word ON or the on symbol is lit on the passenger airbag status indicator, it means that the right front passenger's frontal airbag is enabled (may inflate).

⚠ CAUTION:

If the on indicator comes on when you have a rear-facing child restraint installed in the right front passenger's seat, it means that the passenger sensing system has not turned off the passenger's frontal airbag. A child in a rear-facing child restraint can be seriously injured or killed if the right front passenger's airbag inflates. This is because the back of the rear-facing child restraint would be very close to the inflating airbag. Do not use a rear-facing child restraint in the right front passenger's seat if the airbag is turned on.

Your vehicle has a rear seat that will accommodate a rear-facing child restraint. A label on your sun visor says, "Never put a rear-facing child seat in the front." This is because the risk to the rear-facing child is so great, if the airbag deploys.

Downloaded from www.Manualslib.com manuals search engine

⚠ CAUTION:

Even though the passenger sensing system is designed to turn off the passenger's frontal airbag if the system detects a rear-facing child restraint, no system is failsafe, and no one can guarantee that an airbag will not deploy under some unusual circumstance, even though it is turned off. We recommend that rear-facing child restraints be secured in the rear seat, even if the airbag is off.

If the word OFF or the off symbol is lit on the airbag status indicator, it means that the passenger sensing system has turned off the right front passenger's frontal airbag. See *Passenger Sensing System on page 1-61* for more on this, including important safety information.

If, after several seconds, all status indicator lights remain on, or if there are no lights at all, there may be a problem with the lights or the passenger sensing system. See your dealer for service.

⚠ CAUTION:

If the off indicator and the airbag readiness light ever come on together, it means that something may be wrong with the airbag system. If this ever happens, have the vehicle serviced promptly, because an adult-size person sitting in the right front passenger seat may not have the protection of the frontal airbag. See *Airbag Readiness Light on page 3-39*.

Downloaded from www.Manualslib.com manuals search engine

Up-Shift Light

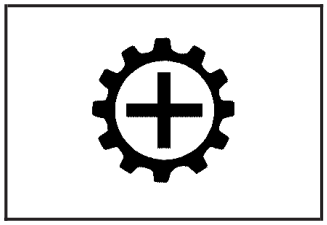

This symbol can appear on the instrument panel if the vehicle has a V8 or supercharged engine and the shift lever is in the manual transaxle position.

It will appear as a prompt to up-shift to the next gear using one of the Tap-Shift® paddles located on the steering wheel.

If equipped, this symbol will appear on the Head Up Display (HUD) only.

See *Automatic Transaxle Operation on page 2-25* and *Head-Up Display (HUD) on page 3-21* for more information.

Brake System Warning Light

The vehicle's hydraulic brake system is divided into two parts. If one part is not working, the other part can still work and stop the vehicle. For good braking, though, both parts should be working well.

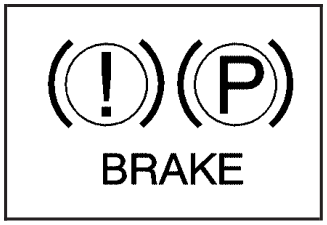

United States

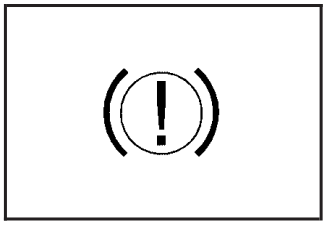

Canada

This light should come on briefly when the ignition key is turned to RUN. If it does not come on then, have it fixed so it will be ready to warn you if there is a problem.

Downloaded from www.Manualslib.com manuals search engine

When the ignition is on, the brake system warning light will also come on when the parking brake is set. The light will stay on if the parking brake does not release fully. If it stays on after the parking brake is fully released, it means the vehicle has a brake problem.

The PARKING BRAKE ON message will also appear in the Driver Information Center (DIC) when the parking brake is set and the vehicle is going faster than 5 mph. See *DIC Warnings and Messages on page 3-72* for more information.

The brake warning light may also come on when the brake fluid is low. If this occurs, the LOW BRAKE FLUID message will also appear in the Driver Information Center (DIC). See *DIC Warnings and Messages on page 3-72* for more information.

If the brake warning light comes on while the vehicle is being driven, pull off the road and stop carefully. The brake pedal may be harder to push, or it may go closer to the floor. It may also take the vehicle longer to stop. If the light is still on, have the vehicle towed for service. See *Towing Your Vehicle on page 4-38*.

⚠ CAUTION:

Your brake system may not be working properly if the brake system warning light is on. Driving with the brake system warning light on can lead to an accident. If the light is still on after you have pulled off the road and stopped carefully, have the vehicle towed for service.

Downloaded from www.Manualslib.com manuals search engine

Anti-Lock Brake System Warning Light

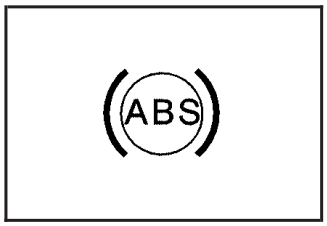

If the vehicle has the Anti-lock Brake System (ABS), this light will come on when the engine is started and may stay on for several seconds. That is normal.

If the ABS warning light comes on and stays on, there may be a problem with the anti-lock portion of the brake system. If the brake system warning light is not on, the vehicle still has brakes, but it does not have anti-lock brakes. See *Brake System Warning Light on page 3-42*.

If the light stays on, the vehicle needs service. If the light comes on while the vehicle is being driven, stop as soon as possible and turn the ignition off. Then start the vehicle again to reset the system. If the light still stays on, or comes on again while driving, the vehicle needs service. If the regular brake system warning light is not on, the vehicle still has brakes, but it does not have anti-lock brakes. If the brake system warning light is also on, the vehicle does not have anti-lock brakes and there is a problem with the regular brakes. See *Brake System Warning Light on page 3-42*. If both the brake system warning light and the anti-lock brake system light is on, pull off the road and have the vehicle towed for service.

The anti-lock brake system warning light will come on briefly when the ignition key is turned to RUN. This is normal. If the light does not come on then, have it fixed so it will be ready to warn you if there is a problem.

Downloaded from www.Manualslib.com manuals search engine

Traction Control System (TCS) Warning Light

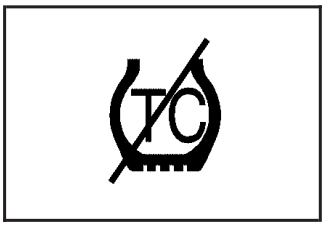

If the vehicle has the 3800 supercharged V6 engine or the 5300 V8 engine and the Traction Control System (TCS), this light may come on for the following reasons:

- The Traction Control button, located on the center console, is pressed, turning the system off. The light will stay on. To turn the system back on, press the button again and the warning light should go out. See *Traction Control System (TCS) on page 4-9* for more information.
- If there is a brake system problem that is specifically related to traction control, the TCS will turn off and the warning light will come on.
- If the brakes begin to overheat, the TCS will turn off and the warning light will come on until the brakes cool down.

If the traction control system warning light comes on and stays on for an extended period of time when the system is turned on, the vehicle needs service.

Enhanced Traction System Warning Light

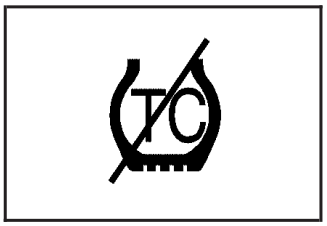

If the vehicle is equipped with the Enhanced Traction System (ETS), this light may come on for the following reasons:

- If the Traction Control button located on the center console is pressed, turning the system off. This light will come on and stay on. To turn the system back on, press the button again and the warning light should turn off. See *Enhanced Traction System (ETS) on page 4-11*.
- If the system is affected by an engine-related problem, the system will turn off and the warning light will come on.

If the light comes on and stays on for an extended period of time when the system is turned on, the vehicle needs service.

Downloaded from www.Manualslib.com manuals search engine

Engine Coolant Temperature Warning Light

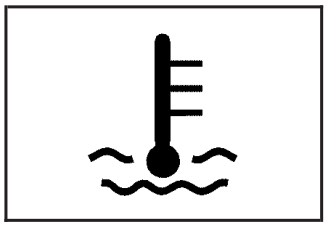

This light indicates that the engine coolant has overheated or the radiator cooling fan is not working.

If the vehicle has been operating under normal driving conditions, pull off the road, stop the vehicle, and turn off the engine as soon as possible.

See *Cooling System on page 5-30* for more information.

Engine Coolant Temperature Gage

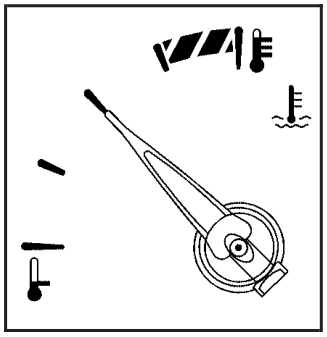

The vehicle has a gage that shows the engine coolant temperature.

If the gage pointer moves into the shaded area, the engine is too hot. That reading means the engine coolant has overheated. If you have been operating the vehicle under normal driving conditions, you should pull off the road, stop the vehicle, and turn off the engine as soon as possible.

See *Cooling System on page 5-30* for more information.

Downloaded from www.Manualslib.com manuals search engine

Malfunction Indicator Lamp

Check Engine Light

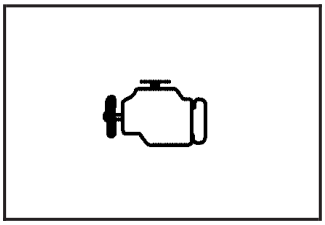

Your vehicle is equipped with a computer which monitors operation of the fuel, ignition, and emission control systems.

This system is called OBD II (On-Board Diagnostics-Second Generation) and is intended to assure that emissions are at acceptable levels for the life of the vehicle, helping to produce a cleaner environment. The check engine light comes on to indicate that there is a problem and service is required. Malfunctions often will be indicated by the system before any problem is apparent. This may prevent more serious damage to your vehicle. This system is also designed to assist your service technician in correctly diagnosing any malfunction.

Notice: **If you keep driving your vehicle with this light on, after awhile, your emission controls may not work as well, your fuel economy may not be as good, and your engine may not run as smoothly. This could lead to costly repairs that may not be covered by your warranty.**

Notice: **Modifications made to the engine, transaxle, exhaust, intake, or fuel system of your vehicle or the replacement of the original tires with other than those of the same Tire Performance Criteria (TPC) can affect your vehicle's emission controls and may cause this light to come on. Modifications to these systems could lead to costly repairs not covered by your warranty. This may also result in a failure to pass a required Emission Inspection/Maintenance test. See *Accessories and Modifications on page 5-3*.**

This light should come on, as a check to show you it is working, when the ignition is on and the engine is not running. If the light does not come on, have it repaired. This light will also come on during a malfunction in one of two ways:

- **Light Flashing** — A misfire condition has been detected. A misfire increases vehicle emissions and may damage the emission control system on your vehicle. Diagnosis and service may be required.
- **Light On Steady** — An emission control system malfunction has been detected on your vehicle. Diagnosis and service may be required.

Downloaded from www.Manualslib.com manuals search engine

If the Light is Flashing

The following may prevent more serious damage to your vehicle:

- Reducing vehicle speed
- Avoiding hard accelerations
- Avoiding steep uphill grades
- If you are towing a trailer, reduce the amount of cargo being hauled as soon as it is possible

If the light stops flashing and remains on steady, see “If the Light Is On Steady” following.

If the light continues to flash, when it is safe to do so, stop the vehicle. Find a safe place to park your vehicle. Turn the key off, wait at least 10 seconds and restart the engine. If the light remains on steady, see “If the Light Is On Steady” following. If the light is still flashing, follow the previous steps, and see your dealer for service as soon as possible.

If the Light Is On Steady

You may be able to correct the emission system malfunction by considering the following:

Did you recently put fuel into your vehicle?

If so, reinstall the fuel cap, making sure to fully install the cap. See *Filling the Tank on page 5-7*. The diagnostic system can determine if the fuel cap has been left off or improperly installed. A loose or missing fuel cap will allow fuel to evaporate into the atmosphere. A few driving trips with the cap properly installed should turn the light off.

Did you just drive through a deep puddle of water?

If so, your electrical system may be wet. The condition will usually be corrected when the electrical system dries out. A few driving trips should turn the light off.

Downloaded from www.Manualslib.com manuals search engine

Have you recently changed brands of fuel?

If so, be sure to fuel your vehicle with quality fuel. See *Gasoline Octane on page 5-5*. Poor fuel quality will cause your engine not to run as efficiently as designed. You may notice this as stalling after start-up, stalling when you put the vehicle into gear, misfiring, hesitation on acceleration, or stumbling on acceleration. (These conditions may go away once the engine is warmed up.) This will be detected by the system and cause the light to turn on.

If you experience one or more of these conditions, change the fuel brand you use. It will require at least one full tank of the proper fuel to turn the light off.

If none of the above steps have made the light turn off, your dealer can check the vehicle. Your dealer has the proper test equipment and diagnostic tools to fix any mechanical or electrical problems that may have developed.

Emissions Inspection and Maintenance Programs

Some state/provincial and local governments have or may begin programs to inspect the emission control equipment on your vehicle. Failure to pass this inspection could prevent you from getting a vehicle registration.

Here are some things you need to know to help your vehicle pass an inspection:

Your vehicle will not pass this inspection if the check engine light is on or not working properly.

Your vehicle will not pass this inspection if the OBD (on-board diagnostic) system determines that critical emission control systems have not been completely diagnosed by the system. The vehicle would be considered not ready for inspection. This can happen if you have recently replaced your battery or if your battery has run down. The diagnostic system is designed to evaluate critical emission control systems during normal driving. This may take several days of routine driving. If you have done this and your vehicle still does not pass the inspection for lack of OBD system readiness, your GM dealer can prepare the vehicle for inspection.

Downloaded from www.Manualslib.com manuals search engine

Oil Pressure Light

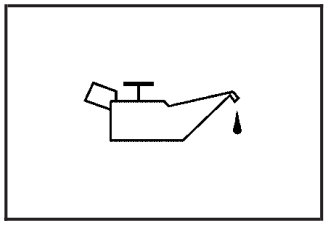

If there is a problem with the vehicle's oil pressure, this light may stay on when the engine is started, or it may come on while the vehicle is being driven.

This indicates that oil is not going through the engine quickly enough to keep it lubricated. The engine could be low on oil or could have some other oil problem. Have it fixed right away.

The oil light could also come on in two other situations:

- When the ignition is on but the engine is not running, the light will come on as a test to indicate it is working. The light will go out when the ignition is turned to RUN. If it does not come on while the ignition is in the on position, there may be a problem with the fuse or bulb. See *Fuses and Circuit Breakers on page 5-112*.
- If the brakes are applied quickly and the vehicle makes a hard stop, the light may come on for a moment. This is normal.

⚠ CAUTION:

Do not keep driving if the oil pressure is low. If you do, your engine can become so hot that it catches fire. You or others could be burned. Check your oil as soon as possible and have your vehicle serviced.

Notice: **Lack of proper engine oil maintenance may damage the engine. The repairs would not be covered by your warranty. Always follow the maintenance schedule in this manual for changing engine oil.**

Fog Lamp Light

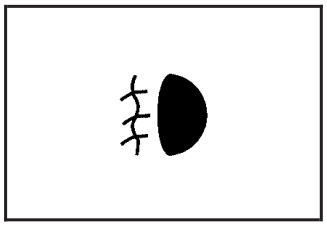

This light will come on when the fog lamps are in use.

The light will go out when the fog lamps are turned off. See *Fog Lamps on page 3-17* for more information.

Downloaded from www.Manualslib.com manuals search engine

Cruise Control Light

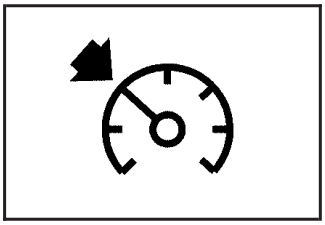

This light comes on whenever you set your cruise control.

The light will go out when the cruise control is turned off. See *Cruise Control on page 3-11* for more information.

Highbeam On Light

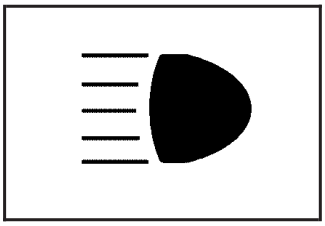

This light comes on whenever the high-beam headlamps are on.

See “Headlamp High/Low-Beam Changer” under *Exterior Lamps on page 3-15* for additional information.

Fuel Gage

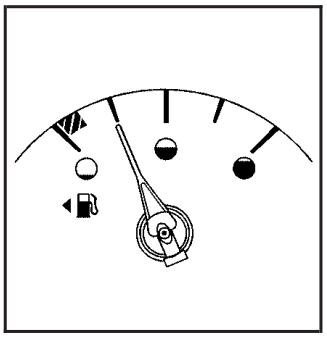

The fuel gage shows about how much fuel is left in the fuel tank when the ignition is on.

When the indicator nears empty, there is still a little fuel left, but you should get more soon.

Here are four things owners usually ask about the fuel gage. All these situations are normal and do not indicate a problem with the fuel gage:

- At the gas station the pump shuts off before the gage reads full.
- It takes more or less fuel to fill up than the gage indicates. For example, the gage reads half full, but it took more or less than half the tank’s capacity to fill it.
- The gage pointer may move while cornering, braking or speeding up.
- The gage may not indicate full when the ignition is turned off.

Downloaded from www.Manualslib.com manuals search engine

Driver Information Center (DIC)

The Driver Information Center (DIC) gives important safety and maintenance facts. When the vehicle's ignition is turned on, all of the DIC lights illuminate for a few seconds and an introductory message will appear. After this, the DIC will begin working.

DIC Controls and Displays (Base Level DIC)

The Driver Information Center (DIC) control buttons and the message display screen are located above the radio. The DIC gives important safety and maintenance facts concerning the vehicle. The status of many of the vehicle's systems along with driver personal programming mode menus and warning messages about the vehicle's systems may display on the DIC screen.

The vehicle's transaxle position will also appear.

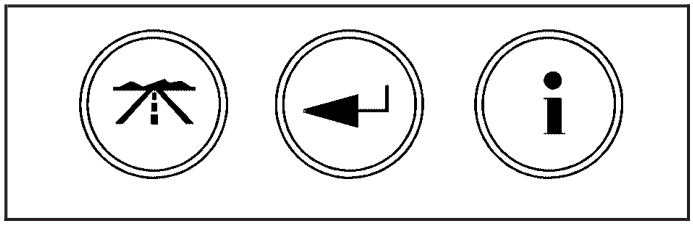

The buttons on the base level are trip odometer, set/reset, and options.

Trip Odometer

(Trip Odometer): Press this button to access the odometer and trip distance modes.

The first menu on the DIC screen will be the odometer reading, or cumulative mileage of the vehicle. The odometer cannot be reset.

Press the trip odometer button to advance to the next menu.

Trip Distances: This menu shows the distances that the vehicle has driven between specific points. The trip odometer will record the number of miles up to 9,999.9 miles or 9 999.9 km travelled for up to two trips. When 9,999.9 miles or 9 999.9 km is reached for either trip, the odometer for that trip will go back to zero.

Press the trip odometer button again to access TRIP A. Press the trip odometer button again to access TRIP B. To reset the trip odometer(s) back to zero miles or kilometers, access the trip to reset and press the set/reset button.

The trip odometer has a feature called the retro-active reset. This can be used to set the trip odometer to the number of miles or kilometers driven since the ignition was last turned on. This can be used if the trip odometer was not reset at the beginning of the trip.

Downloaded from www.Manualslib.com manuals search engine

To use the retro-active reset feature, press and hold the set/reset button for at least three seconds. The trip odometer will display the number of miles or kilometers driven since the ignition was last turned on and the vehicle began moving. Once the vehicle has begun moving, the trip odometer will accumulate mileage. For example, if the vehicle was driven 5.0 miles (8.0 km) before the vehicle is started again, and then the retro-active reset feature is activated, the display will show 5.0 miles (8.0 km). As the vehicle begins moving, the display will increase to 5.1 miles (8.2 km), 5.2 miles (8.4 km), etc.

If the retro-active reset feature is activated after the vehicle is started, but before it begins moving, the display will show the number of miles or kilometers that were driven during the last ignition cycle.

Press the trip odometer button again to access the odometer.

Set/Reset

(Set/Reset): Press this button to set or reset a menu item when using the trip odometer or options buttons.

Options

i (Options): Press this button to access the Date, Language, Display Units, Daytime Display Enhancements, Engine Oil Monitor System, Tire Inflation Monitor System, and Personal Programming modes.

Date: This menu sets the date.

The time is set through the radio. See *Setting the Time on page 3-96* for more information.

To set the date, use the following procedure:

1. Press the options button until the date is displayed on the DIC.
2. Press the set/reset button to access the RESET YEAR screen. The second position in the year will be selected. Press and hold the set/reset button to scroll through the available digits. Release the button when the correct digit appears.
3. Press the options button to advance to the first position in the year. Press and hold the set/reset button to scroll through the available digits. Release the button when the correct digit appears.
4. Press the options button to advance to the months of the year.

Downloaded from www.Manualslib.com manuals search engine

5. Press the set/reset button to scroll through the months of the year, releasing the button when the correct month appears.
6. Press the options button to advance to the days of the month.
7. Press the set/reset button to scroll through the days of the month, releasing the button when the correct day appears.
8. Press the options button again to advance to the main date screen. The screen will now display the new date.

Language: This menu allows the selection of the language in which the DIC messages will appear. The DIC can be programmed to one of three languages: English, French or Spanish. The message on the HUD, if equipped, will also appear in the language selected. See *Head-Up Display (HUD) on page 3-21*.

To change the language, use the following procedure:

1. Press the options button to enter the language screen.
2. Press the set/reset button to scroll through and set the language choice.
3. Press the options button again to advance to the next screen.

Display Units: This menu allows selection of measurements to be displayed in English or metric units. The messages on the HUD, if equipped, and the instrument panel cluster will also appear with the type of measurement selected.

To set the measurement when Display Units is shown, use the following procedure:

1. Press the set/reset button to select ENGLISH or METRIC.
2. Press the options button again to advance to the next screen.

DAYTIME DISPLAY ENHANCEMENTS: This menu allows selection of the color of the display message. When ON is selected for the daytime enhancement, the messages will appear black on a red screen. This combination makes it easier to see the DIC messages during the daytime. When OFF is selected, or when the headlamps are on, the messages will appear red on a black background.

To set the daytime display enhancements, use the following procedure:

1. Press the set/reset button to select OFF or ON.
2. Press the options button again to advance to the next screen.

Downloaded from www.Manualslib.com manuals search engine

ENGINE OIL MONITOR SYSTEM: This menu allows the engine oil monitor system to be reset. To reset the engine oil monitor system, see *Engine Oil Life System on page 5-19*.

Tire Inflation Monitor System: If the vehicle has ABS, this menu sets the tire inflation monitor system. See "Tire Inflation Monitor System" under *Inflation - Tire Pressure on page 5-67* for more information.

To set or reset the tire inflation monitor system, use the following procedure:

1. Press the set/reset button to reset the tire inflation monitor system. The message, TIRE INFLATION HAS BEEN SET, will appear on the screen if the Check Tire Pressure message, indicating an irregularity in the pressure of one of the tires, had previously appeared on the DIC. If the Check Tire Pressure message did not appear and the set/reset button is pressed, the system will reset, but no acknowledgment message will appear on the screen.
2. Press the options button again to advance to the next screen.

Select the set/reset button to return to the main (date) screen.

PERSONAL PROGRAMMING MODE: This menu allows you to customize several features on your vehicle. These adjustments can only be made while the vehicle is in PARK (P). Press the set/reset button to display the first screen.

Personal Programming Mode Screens

Press the options button to access these modes:

EXTERIOR LIGHTING DELAY: This screen allows this feature to be turned off or allows the selection of the number of seconds the headlamps, sidelamps, taillamps, fog lamps, and back-up lamps are turned on after the key is removed from the ignition, or the vehicle is unlocked using the remote keyless entry transmitter.

If OFF is selected, the exterior lamps will not turn on.

If a time delay is chosen, the lamps will turn on for the selected time. The time delay will be cancelled and the exterior lamps will turn on automatically when the key is removed from the ignition, or the vehicle is unlocked using the remote keyless entry transmitter.

To program this mode, use the following procedure:

1. Press and release the set/reset button to scroll to the selection to be programmed. Choose from OFF, 15, 30, 60, or 90 seconds.
2. Press the options button again to advance to the next screen.

Downloaded from www.Manualslib.com manuals search engine

INTERIOR LIGHTS WHEN DOOR CLOSED: This screen allows this feature to be turned OFF or ON.

If OFF is selected, the interior lamps will turn off immediately when the ignition is turned off and the last door is closed.

If ON is selected, the interior lamps will stay on for about 25 seconds after the vehicle's ignition is turned off and the last door is closed.

To program this mode, use the following procedure:

1. Press and release the set/reset button to scroll to either OFF or ON.
2. Press the options button again to advance to the next screen.

INTERIOR LIGHTS WHEN KEY REMOVED: This screen allows this feature to be turned OFF or ON. This feature enables the interior lamps in the vehicle to turn on for about 25 seconds after the key is removed from the ignition.

If OFF is selected, removing the key from the ignition will not cause the interior lamps to turn on.

If ON is selected, removing the key from the ignition will cause the interior lamps to be turned on for about 25 seconds.

To program this mode, use the following procedure:

1. Press and release the set/reset button to scroll to either OFF or ON.
2. Press the options button again to advance to the next screen.

AUTO DOOR LOCK: This screen allows this feature to be turned OFF or ON.

If OFF is selected, all automatic door locking is disabled. The doors will always need to be locked manually before driving, to increase occupant safety.

If ON is selected, the vehicle's doors automatically lock when the doors are closed and the vehicle is shifted into DRIVE (D).

To program this mode, use the following procedure:

1. Press and release the set/reset button to scroll to either OFF or ON.
2. Press the options button again to advance to the next screen.

AUTO DOOR UNLOCK: This screen can be used if ON was selected for the AUTO DOOR LOCK feature. This screen allows this feature to be turned off, used for the driver's door only, or for all the doors.

If OFF is selected, none of the doors will unlock when the vehicle's transaxle is shifted into PARK (P).

Downloaded from www.Manualslib.com manuals search engine

If DRIVER is selected, only the driver's door will unlock when the vehicle's transaxle is shifted into PARK (P).

If ALL is selected, all the doors will unlock when the vehicle's transaxle is shifted into PARK (P).

To program this mode, use the following procedure:

1. Press and release the set/reset button to scroll to either OFF, DRIVER, or ALL.
2. Press the options button again to advance to the next screen.

AUTO DOOR UNLOCK ON: If DRIVER or ALL was selected on the AUTO DOOR UNLOCK screen, this screen allows selection of when the vehicle's doors will unlock. The choices are when the key is removed from the ignition or when the vehicle is shifted into PARK (P).

If KEY-OUT is selected, the auto door unlock will function when the key is taken out of the ignition.

If PARK is selected, the auto door unlock will function when the transaxle is shifted into PARK (P).

To program this mode, use the following procedure:

1. Press and release the set/reset button to scroll to either KEY-OUT or PARK.
2. Press the options button again to advance to the next screen.

DELAYED LOCKING: This screen allows this feature to be turned OFF or ON. The key must be out of the ignition for this feature to work.

If OFF is selected, there will be no delayed locking of the vehicle's doors.

If ON is selected, the locking of the vehicle's doors will be delayed by five seconds after a power door lock switch is pressed when a door is open, or the LOCK button on the remote keyless entry transmitter is pressed while a door is open.

To program this mode, use the following procedure:

1. Press and release the set/reset button to scroll to either OFF or ON.
2. Press the options button again to advance to the next screen.

REMOTE LOCKS FEEDBACK: This screen allows selection for this option to be turned OFF, or gives the choice of two methods of verification; LIGHTS or LIGHTS and HORN; that indicate the vehicle's doors are locked when the LOCK button on the remote keyless entry transmitter is pressed.

If OFF is selected, this feature will not be programmed.

If LIGHTS is selected, the exterior lamps will flash when the LOCK button on the remote keyless entry transmitter is pressed.

Downloaded from www.Manualslib.com manuals search engine

If LIGHTS and HORN are selected, the exterior lamps will flash when the LOCK button on the remote keyless entry transmitter is pressed and the horn will sound when the LOCK button on the remote keyless entry transmitter is pressed again within five seconds of the previous command.

To program this mode, use the following procedure:

1. Press the set/reset button to scroll to OFF, LIGHTS, or LIGHTS and HORN.
2. Press the options button again to advance to the next screen.

If the vehicle does not have a content theft-deterrent system, the next screens with PROGRAMMING FINISHED and DISPLAY OFF will appear.

If the vehicle does have a content theft-deterrent system, the next screen will appear.

THEFT DETERRENT: The vehicle may have a content theft-deterrent system. Once it is turned on, the system will activate if someone tries to enter the vehicle without using the remote keyless entry transmitter or the correct key. This screen allows this feature to be turned OFF or ON.

If OFF is selected, the theft-deterrent system will not function.

If ON is selected, the theft-deterrent system will be activated.

To program this mode, use the following procedure:

1. Press the set/reset button to scroll to OFF or ON.
2. Press the options button again to advance to the next screen.

KEY CYLINDER DISARM: If the vehicle has a content theft-deterrent system, this screen allows this feature to be turned OFF or ON.

If OFF is selected, the content theft-deterrent system will not disarm when the vehicle is unlocked using the door lock, or when someone tampers with the door lock.

If ON is selected, the content theft-deterrent system will disarm when the vehicle is unlocked using the door key. This makes the vehicle more resistant to key lock tampering.

To program this mode, use the following procedure:

1. Press the set/reset button to scroll to OFF or ON.
2. Press the options button again to advance to the next screen.

Downloaded from www.Manualslib.com manuals search engine

LOCK SWITCH ARM: If the vehicle has the content theft-deterrent system and ON was selected on the THEFT DETERRENT screen, this screen allows this feature to be turned OFF or ON. If ON is selected, the content theft-deterrent system starts the arming process when a door lock switch is pressed while a door is open.

If OFF is selected, the theft-deterrent system will not activate this feature.

If ON is selected, the content theft-deterrent system will arm when the doors are locked with the door lock switch. The key must be removed from the ignition when the doors are locked or the content theft-deterrent system will not arm.

To program this mode, use the following procedure:

1. Press the set/reset button to scroll to OFF or ON.
2. Press the options button again to advance to the next screen.

REMOTE START: If your vehicle has the remote start feature, this screen allows this feature to be turned OFF or ON. The remote start feature allows you to start the engine from outside of the vehicle using your remote keyless entry transmitter. See “Remote Vehicle Start” under *Remote Keyless Entry System Operation on page 2-4* for more information.

If OFF is selected, the remote start feature will be disabled.

If ON is selected, the remote start feature will be enabled.

To program this mode, use the following procedure:

1. Press the set/reset button to scroll to OFF or ON.
2. Press the options button again to advance to the next screen.

PROGRAMMING FINISHED will appear on the next screen. This confirms that the personal options programming is complete.

DISPLAY OFF will appear on the next screen. The screen will count down and then go blank. Press the options button to advance to a new screen.

Downloaded from www.Manualslib.com manuals search engine

DIC Controls and Displays (Uplevel DIC with Trip Computer)

The Driver Information Center (DIC) control buttons and the message display screen are located above the radio. The DIC gives important safety and maintenance facts concerning the vehicle. The status of many of the vehicle's systems along with driver personalization menus and warning messages about the vehicle's systems may display on the DIC screen.

The outside temperature automatically appears on the bottom right corner of the DIC display screen. If the outside temperature is below 38°F (3°C), the temperature reading will toggle between displaying the outside temperature and the word ICE for two minutes. If there is a problem with the system that controls the temperature display, the letters OC (Open Circuit) or SC (Short Circuit) will appear on the display. If this occurs, have the vehicle serviced by your GM dealer.

The vehicle's transaxle position and the direction the vehicle is traveling will also appear on the DIC screen.

The compass is self-calibrating, which eliminates the need to manually set the compass. However, under certain circumstances, such as during a long distance cross-country trip, it will be necessary to compensate for compass variance and reset the zone through the DIC. See "Setting the Compass" later in this section for more information.

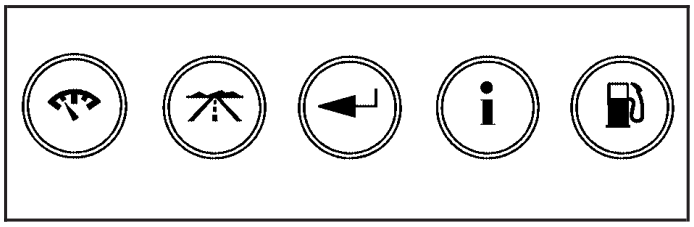

The buttons on the DIC trip computer are gages, trip odometer, set/reset, options, and fuel.

Gages

(Gages): Press this button to access the OIL LIFE REMAINING, TRANSMISSION FLUID TEMPERATURE, BATTERY, ENGINE HOURS, ENGINE BOOST, and MAXIMUM Gs modes.

Downloaded from www.Manualslib.com manuals search engine

OIL LIFE REMAINING: Press the gages button until OIL LIFE REMAINING is displayed. This screen indicates the percentage of oil life in the vehicle's engine that has not degraded. See *Engine Oil on page 5-16* for more information.

After the oil has been changed in the vehicle, reset the ENGINE OIL MONITOR screen in the options menu. To reset the engine oil monitor system, see *Engine Oil Life System on page 5-19*.

Press the gages button again to advance to the next screen.

TRANSMISSION FLUID TEMP: This screen displays this message along with the temperature (F° or C°) of the transmission fluid.

Press the gages button again to advance to the next screen.

BATTERY: This screen displays the amount of volts the battery is generating.

Your vehicle's charging system regulates voltage based on the state of the battery. The battery voltage may fluctuate when viewing this information on the DIC. This is normal.

Press the gages button again to advance to the next screen.

ENGINE HOURS: This screen shows the number of cumulative hours the engine has operated while the key was in the RUN position. This screen cannot be reset.

Press the gages button to scroll to the next screen.

ENGINE BOOST: If the vehicle has the supercharged engine, this screen will appear. It shows a graphic that indicates the amount of boost the engine is receiving.

Press the gages button again to scroll to the next screen.

MAXIMUM Gs: If you have the GXP option, this screen will appear. The DIC monitors and keeps track of the maximum levels for acceleration, deceleration, and lateral-acceleration achieved since the screen was last reset. If you try to select this screen while the vehicle is moving, the message MAXIMUM Gs NOT AVAILABLE WHILE MOVING will display. To view the maximum accelerations achieved since last reset, you must bring the vehicle to a stop. Then the values will be displayed. To reset the values to zero, press and hold the set/reset button.

Press the gages button again to scroll to the next screen.

Downloaded from www.Manualslib.com manuals search engine

Trip Odometer

(Trip Odometer): Press this button to access the Odometer, Trip Distances, AVERAGE SPEED, and TIME ELAPSED modes.

Odometer: When the trip odometer button is pressed, the first menu displayed on the DIC screen is the odometer reading, or cumulative mileage of the vehicle. The odometer cannot be reset.

Press the trip odometer button again to advance to the next menu.

Trip Distances: This menu shows the distances that the vehicle has driven between specific points. The trip odometer will record the number of miles up to 9,999.9 miles or 9 999.9 km travelled for up to two trips. When 9,999.9 miles or 9 999.9 km is reached for either trip, the odometer for that trip will go back to zero.

To reset the trip distances, use the following procedures:

1. Press the trip odometer button again to access TRIP A. Press the trip odometer button again to access TRIP B. To reset the trip odometer(s) back to zero miles or to zero kilometers, access the trip that needs to be reset and press the set/reset button.
2. Press the trip odometer button again to access the odometer.

The trip odometer has a feature called the retro-active reset. This can be used to set the trip odometer to the number of miles (kilometers) driven since the ignition was last turned on. This can be used if the trip odometer is not reset at the beginning of the trip.

To use the retro-active reset feature, press and hold the set/reset button for at least three seconds. The trip odometer will display the number of miles or kilometers driven since the ignition was last turned on and the vehicle was moving. Once the vehicle begins moving, the trip odometer will accumulate mileage. For example, if the vehicle was driven 5.0 miles (8.0 km) before it is started again, and then the retro-active reset feature is activated, the display will show 5.0 miles (8.0 km). As the vehicle begins moving, the display will then increase to 5.1 miles (8.2 km), 5.2 miles (8.4 km), etc.

If the retro-active reset feature is activated after the vehicle is started, but before it begins moving, the display will show the number of miles or kilometers that were driven during the last ignition cycle.

Average Speed: The average speed is displayed in miles per hour (mph) or kilometers per hour (km/h). The average speed is calculated from the various vehicle speeds recorded since the last reset of this menu item. To reset the average speed, press the set/reset button. The display will return to zero.

Press the trip odometer button again to advance to the next screen.

Downloaded from www.Manualslib.com manuals search engine

Time Elapsed: This screen can be used as a stopwatch. The display can show the hours, minutes and seconds. The elapsed time indicator will record up to 99 hours, 59 minutes and 59 seconds, then it will reset to zero and continue counting.

To set the time elapsed function, use the following procedures:

1. Press the set/reset button for less than two seconds to start or stop the timer.
2. Press and hold the set/reset button for more than two seconds to reset the timer back to zero.

Set/Reset

(Set/Reset): Press this button to set or reset a mode item when using the trip odometer or option buttons.

Options

(Options): Press this button to access the Date, Language, Display Units, Daytime Display Enhancements, Engine Oil Monitor System, Tire Inflation Monitor System, Compass Calibration, and the Personal Programming modes.

Date: This menu sets the date.

The time is set through the radio. See *Setting the Time on page 3-96* for more information.

To set the date, use the following procedure:

1. Press the options button until the date is displayed on the DIC.
2. Press the set/reset button to access the RESET YEAR screen. The second position in the year will be selected. Press and hold the set/reset button to scroll through the available digits. Release the button when the correct digit appears.
3. Press the options button to advance to the first position in the year. Press and hold the set/reset button to scroll through the available digits. Release the button when the correct digit appears.
4. Press the options button to advance to the months of the year.
5. Press the set/reset button to scroll through the months of the year, releasing the button when the correct month appears.
6. Press the options button to advance to the days of the month.
7. Press the set/reset button to scroll through the days of the month, releasing the button when the correct day appears.
8. Press the options button again to advance to the main date screen. The screen will now display the new date.

Downloaded from www.Manualslib.com manuals search engine

Language: This menu allows selection of the language in which the DIC messages will appear. The DIC can be programmed in one of three languages: English, French, or Spanish. The message on the HUD, if equipped, will also appear in the language selected. See *Head-Up Display (HUD) on page 3-21*.

To change the language, use the following procedure:

1. Press the options button to enter the language screen.
2. Press the set/reset button to scroll through and set the language choice.
3. Press the options button again to advance to the next screen.

Display Units: This menu allows selection of measurements to be displayed in English or metric units. The messages on the HUD, if equipped, and the instrument panel cluster will also appear in the type of measurement selected.

To set the display units function, use the following procedure:

1. Press the set/reset button to select ENGLISH or METRIC.
2. Press the options button to advance to the next screen.

DAYTIME DISPLAY ENHANCEMENTS: This menu allows selection of the color of the display message. When ON is selected for the daytime enhancement, the messages will appear black on a red screen. This combination makes it easier to see the DIC messages during the daytime. When OFF is selected, or when the headlamps are on, the messages will appear red on a black background.

To set the daytime display enhancements function, use the following procedure:

1. Press the set/reset button to select OFF or ON.
2. Press the options button to advance to the next screen.

ENGINE OIL MONITOR SYSTEM: This menu allows the engine oil monitor system to be reset. To reset the engine oil monitor system, see *Engine Oil Life System on page 5-19*.

Tire Inflation Monitor System: If the vehicle has ABS, this menu allows the tire inflation monitor system to be reset. See “Tire Inflation Monitor System” under *Inflation - Tire Pressure on page 5-67* for more information.

Downloaded from www.Manualslib.com manuals search engine

To set or reset the tire inflation monitor system, use the following procedures:

1. Press the set/reset button to reset the tire inflation monitor system. TIRE INFLATION HAS BEEN SET will appear on the screen If the “Check Tire Pressure” message, indicating an irregularity in the pressure of one of the tires, had previously appeared on the DIC. If the “Check Tire Pressure” message did not appear, and the set/reset button is pressed, the system will reset, but no acknowledgment message will appear on the screen.
2. Press the options button again to advance to the next screen.

   Select the set/reset button to return to the main (date) screen.

COMPASS CALIBRATION MODE: This menu allows you to adjust for compass variance.

Setting the Compass

The compass is self-calibrating, which eliminates the need to manually set the compass.

However, under certain circumstances, such as during a long distance cross-country trip, it will be necessary to compensate for compass variance and reset the zone through the DIC.

Compass variance is the difference between the earth’s magnetic north and true geographic north. If not adjusted to account for compass variance, the compass in the vehicle could give false readings.

In order to do this, the compass must be set or calibrated to the variance zone in which the vehicle is travelling.

Downloaded from www.Manualslib.com manuals search engine

To adjust for compass variance, use the following procedure:

1. Find the vehicle's current location and variance zone number on the map.

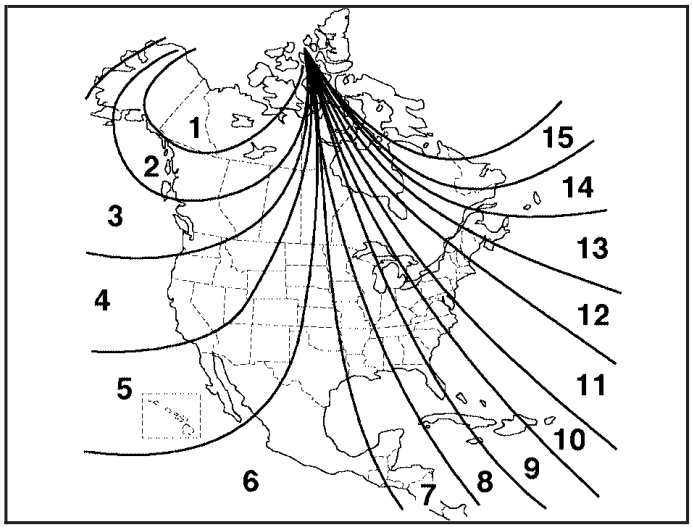

2. Press the set/reset button to scroll through and select the appropriate variance zone.
3. Press the options button to advance to the calibration screen.
4. Drive the vehicle in a circle two times to activate the compass.

The direction the vehicle is moving will be displayed in the bottom left corner of the screen, and will appear in the gages, fuel, trip, and some of the options modes.

Press the options button again to advance to the next screen.

Personal Programming Mode Screens

PERSONAL PROGRAMMING MODE: This menu allows you to customize several features on your vehicle. These adjustments can only be made while the vehicle is in PARK (P). Press the set/reset button to display the first screen.

Press the options button to access these modes:

EXTERIOR LIGHTING DELAY: This screen allows this feature to be turned off, or allows the selection of the number of seconds the headlamps, sidelamps, taillamps, fog lamps, and back-up lamps are turned on after the key is removed from the ignition, or the vehicle is unlocked using the remote keyless entry transmitter.

If OFF is selected, the exterior lamps will not turn on.

If a time delay is chosen, the lamps will turn on for the selected time. The time delay will be cancelled and the exterior lamps will turn on automatically when the key is removed from the ignition, or the vehicle is unlocked using the remote keyless entry transmitter.

Downloaded from www.Manualslib.com manuals search engine

To program this mode, use the following procedure:

1. Press and release the set/reset button to scroll to the selection you want to program. Choose from OFF, 15, 30, 60, or 90 seconds.
2. Press the options button again to advance to the next screen.

INTERIOR LIGHTS WHEN DOOR CLOSED: This screen allows this feature to be turned OFF or ON.

If OFF is selected, the interior lamps will turn off immediately when the ignition is turned off and the last open door is closed.

If ON is selected, the interior lamps will stay on for about 25 seconds after the vehicle's ignition is off and the last open door is closed.

To program this mode, use the following procedure:

1. Press and release the set/reset button to scroll to either OFF or ON.
2. Press the options button again to advance to the next screen.

INTERIOR LIGHTS WHEN KEY REMOVED: This screen allows this feature to be turned OFF or ON. This feature enables the interior lamps in the vehicle to turn on for about 25 seconds after the key is removed from the ignition.

If OFF is selected, removing the key from the ignition will not cause the interior lamps to turn on.

If ON is selected, removing the key from the ignition will cause the interior lamps to be turned on for about 25 seconds.

To program this mode, use the following procedure:

1. Press and release the set/reset button to scroll to either OFF or ON.
2. Press the options button again to advance to the next screen.

AUTO DOOR LOCK: This screen allows this feature to be turned OFF or ON.

If OFF is selected, all automatic door locking is disabled. The doors will always need to be locked manually before driving, to increase occupant safety.

If ON is selected, the vehicle's doors automatically lock when the doors are closed and the vehicle is shifted into DRIVE (D).

To program this mode, use the following procedure:

1. Press and release the set/reset button to scroll to either OFF or ON.
2. Press the options button again to advance to the next screen.

Downloaded from www.Manualslib.com manuals search engine

AUTO DOOR UNLOCK: This screen can be used if ON was selected for the AUTO DOOR LOCK feature. This screen allows this feature to be turned off, used for the driver's door only, or for all the doors.

If OFF is selected, none of the doors will unlock when the vehicle's transaxle is shifted into PARK (P).

If DRIVER is selected, only the driver's door will unlock when the vehicle's transaxle is shifted into PARK (P).

If ALL is selected, all the doors will unlock when the vehicle's transaxle is shifted into PARK (P).

To program this mode, use the following procedure:

1. Press and release the set/reset button to scroll to either OFF, DRIVER, or ALL.
2. Press the options button again to advance to the next screen.

AUTO DOOR UNLOCK ON: If DRIVER or ALL was selected on the AUTO DOOR UNLOCK screen, this screen allows selection of when the vehicle's doors will unlock. The choices are when the key is removed from the ignition or when the vehicle is shifted into PARK (P).

If KEY-OUT is selected, the auto door unlock will function when the key is taken out of the ignition.

If PARK is selected, the auto door unlock will function when the transaxle is shifted into PARK (P).

To program this mode, use the following procedure:

1. Press and release the set/reset button to scroll to either KEY-OUT or PARK.
2. Press the options button again to advance to the next screen.

DELAYED LOCKING: This screen allows this feature to be turned OFF or ON. The key must be out of the ignition for this feature to work.

If OFF is selected, there will be no delayed locking of the vehicle's doors.

If ON is selected, the locking of the vehicle's doors will be delayed by five seconds after a power door lock switch is pressed while the door is open, or the LOCK button on the remote keyless entry transmitter is pressed while any door is open.

To program this mode, use the following procedure:

1. Press and release the set/reset button to scroll to either OFF or ON.
2. Press the options button again to advance to the next screen.

Downloaded from www.Manualslib.com manuals search engine

REMOTE LOCKS FEEDBACK: This screen allows this option to be turned OFF, or gives the choice of two methods of verification, LIGHTS or LIGHTS and HORN, that indicate the vehicle's doors are locked when the LOCK button on the remote keyless entry transmitter is pressed.

If OFF is selected, this feature will not be programmed.

If LIGHTS is selected, the exterior lamps will flash when the LOCK button on the remote keyless entry transmitter is pressed.

If LIGHTS and HORN is selected, the exterior lamps will flash when the LOCK button on the remote keyless entry transmitter is pressed, and the horn will sound when the LOCK button on the remote keyless entry transmitter is pressed again within five seconds of the previous command.

To program this mode, use the following procedure:

1. Press the set/reset button to scroll to OFF, LIGHTS, or LIGHTS and HORN.
2. Press the options button again to advance to the next screen.

If the vehicle does not have a content theft-deterrent system, the next screens with PROGRAMMING FINISHED and DISPLAY OFF will appear.

If the vehicle does have a content theft-deterrent system, the next screen will appear.

THEFT DETERRENT: The vehicle may have a content theft-deterrent system. Once it is turned on, the system will activate if someone tries to enter the vehicle without using the remote keyless entry transmitter or the correct key. This screen allows this feature to be turned OFF or ON.

If OFF is selected, the content theft-deterrent system will not function.

If ON is selected, the content theft-deterrent system will be activated.

To program this mode, use the following procedure:

1. Press the set/reset button to scroll to OFF or ON.
2. Press the options button again to advance to the next screen.

KEY CYLINDER DISARM: This screen allows this feature to be turned OFF or ON. This mode arms the vehicle's ignition so that if a key other than the one that came with the vehicle is used to try to start it, the horn will sound.

If OFF is selected, the content theft-deterrent system will not disarm when the vehicle is unlocked using the door lock, or if someone tampers with the door lock.

Downloaded from www.Manualslib.com manuals search engine

If ON is selected, the content theft-deterrent system will disarm when the vehicle is unlocked using the door key. This makes the vehicle more resistant to key lock tampering.

To program this mode, use the following procedure:

1. Press the set/reset button to scroll to OFF or ON.
2. Press the options button again to advance to the next screen.

LOCK SWITCH ARM: If the vehicle has the content theft-deterrent system and ON was selected on the THEFT DETERRENT screen, this screen allows this feature to be turned OFF or ON.

If OFF is selected, the content theft-deterrent system will not activate this feature, which arms the system when the doors are locked with the door lock switch.

If ON is selected, the content theft-deterrent system will arm when the doors are locked with the door lock switch. The key must be removed from the ignition when the doors are locked or the content theft-deterrent system will not arm.

To program this mode, use the following procedure:

1. Press the set/reset button to scroll to OFF or ON.
2. Press the options button again to advance to the next screen.

REMOTE START: If your vehicle has the remote start feature, this screen allows it to be turned OFF or ON. The remote start feature allows you to start the engine from outside of the vehicle using your remote keyless entry transmitter. See “Remote Vehicle Start” under *Remote Keyless Entry System Operation on page 2-4* for more information.

If OFF is selected, the remote start feature will be disabled.

If ON is selected, the remote start feature will be enabled.

To program this mode, use the following procedure:

1. Press the set/reset button to scroll to OFF or ON.
2. Press the options button again to advance to the next screen.

PROGRAMMING FINISHED will appear on the next screen. This confirms that the personal options programming is complete.

DISPLAY OFF will appear on the next screen. This screen will count down and then go blank. Press the options button to advance to a new screen.

Downloaded from www.Manualslib.com manuals search engine

Fuel

(Fuel): Press this button to access the Average Fuel Economy, Instantaneous Fuel Economy, and Fuel Range modes.

AVG ECONOMY (Average Fuel Economy): This screen will display the approximate average miles per gallon (mpg) or liters per 100 kilometers (L/100 km). This number is calculated based on the number of mpg (L/100 km) recorded since the last time this menu item was reset.

To reset the average fuel economy for the vehicle, follow this procedure:

1. Press the set/reset button to reset to zero.
2. Press the fuel button again to advance to the next screen.

INST ECONOMY (Instantaneous Fuel Economy): This screen displays the current fuel economy at a particular moment and will change frequently as driving conditions change. Unlike average fuel economy, this screen cannot be reset.

Press the fuel button again to advance to the next screen.

RANGE: This screen displays the approximate number of remaining miles or kilometers the vehicle can be driven without refueling. This estimate is based on the average fuel economy for the amount of fuel remaining in the fuel tank and the current driving conditions. This estimate will change if driving conditions change. For example, if driving in traffic and making frequent stops, the display may read one number, but if the vehicle is driven on a freeway the number may change even though the same amount of fuel is in the fuel tank. This is because different driving conditions produce different fuel economies. Generally, freeway driving produces better fuel economy than city driving.

If the fuel tank contains less than 2 gallons (7.6 L), the LOW FUEL message will appear on the DIC screen. Fill the fuel tank as soon as possible to avoid running out of fuel. See “Low Fuel” under *DIC Warnings and Messages on page 3-72*.

Downloaded from www.Manualslib.com manuals search engine

DIC Warnings and Messages

These messages will appear if there is a problem in one of the vehicle's systems. They will override any other mode or screen the Driver Information Center (DIC) may be in.

Some messages can be cleared from the DIC screen. In order to do this the message must be acknowledged. To acknowledge or clear the message from the screen, press the set/reset button on the DIC. See *DIC Controls and Displays (Base Level DIC) on page 3-52* or *DIC Controls and Displays (Uplevel DIC with Trip Computer) on page 3-60* for DIC button descriptions.

Other warning messages are not allowed to be cleared until the problem indicated by the warning message is taken care of. When the problem indicated by the message is resolved, it can be acknowledged and the screen can be reset.

Be sure to take any message that appears on the DIC screen seriously and remember that clearing the messages that are able to be acknowledged, will only make the message disappear, not the problem.

A/C OFF FOR ENGINE PROTECTION

This warning message comes on when the engine coolant becomes hotter than the normal operating temperature. To avoid added strain on a hot engine, the air conditioning compressor is automatically turned off. When the coolant temperature returns to normal, the air conditioning compressor will turn back on. The vehicle can then continue to be driven.

This message comes on while the ignition is in RUN. A chime will sound for two seconds when this message is displayed. Press the set/reset button to acknowledge this warning message and to clear it from the screen.

This message will continue to display for three seconds if it has not been acknowledged when the engine is turned off. It will also re-display for three seconds if the message has been acknowledged, but the condition still exists when the engine is turned off.

If the condition still exists, the message will re-appear when the engine is turned on.

Downloaded from www.Manualslib.com manuals search engine

AJAR

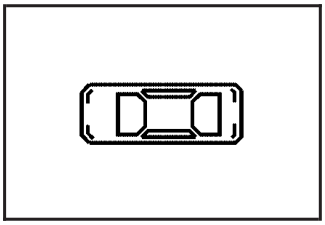

This symbol appears with the AJAR warning message.

This warning message comes on when a door, the trunk, or the hood of the vehicle is not properly closed. The graphic will highlight the hood or trunk if either one is not closed properly. The graphic will indicate a highlighted, open door to show which door or doors are not properly closed.

This message will display while the ignition is in RUN. A chime will sound for two seconds when the ignition is shifted out of PARK (P). Press the set/reset button to acknowledge this message and to clear it from the screen.

This message will continue to display for three seconds if it has not been acknowledged when the engine is turned off. It will also re-display for three seconds if the message has been acknowledged, but the condition still exists when the engine is turned off.

If the condition still exists, the message will re-appear when the engine is turned on.

BATTERY SAVER ACTIVE

This message appears when the system detects that the battery voltage is dropping beyond a reasonable level. The battery saver system will start reducing certain features of the vehicle which you may not be able to notice. At the point that the features are disabled, this message is displayed. It means that the vehicle is trying to save the charge in the battery. Turn off all unnecessary accessories to allow the battery to recharge. The normal battery voltage range is 11.5 to 15.5 volts. If you have the uplevel DIC, you can monitor battery voltage on the DIC by pressing the gages button until BATTERY appears.

CHANGE OIL SOON

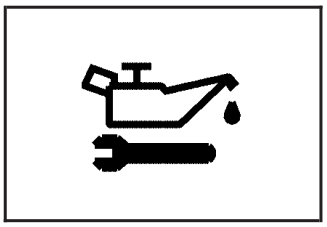

This symbol comes on with the CHANGE OIL SOON warning message.

This warning message indicates that service is required for the vehicle. See your GM dealer. See *Engine Oil on page 5-16* and *Scheduled Maintenance on page 6-4* for more information.

Downloaded from www.Manualslib.com manuals search engine

The CHANGE OIL SOON message is reset by acknowledging the message. The ENGINE OIL MONITOR SYSTEM screen under the options menu on the DIC must also be reset. See “Engine Oil Monitor System” in options under *DIC Controls and Displays (Base Level DIC) on page 3-52* or *DIC Controls and Displays (Uplevel DIC with Trip Computer) on page 3-60* for more information.

This message will display while the ignition is in RUN. Press the set/reset button to acknowledge this message and to clear it from the screen.

This message will continue to display for three seconds if it has not been acknowledged when the engine is turned off. It will also re-display for three seconds if the message has been acknowledged, but the condition still exists when the engine is turned off.

If the condition still exists, the message will re-appear when the engine is turned on.

CHARGING SYSTEM FAILURE

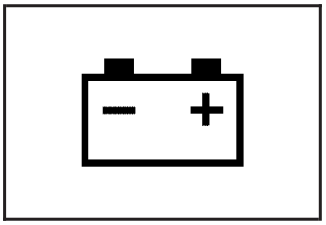

This symbol comes on with the CHARGING SYSTEM FAILURE warning message.

This warning message indicates that there is a problem with the generator and battery charging systems. Have the electrical system checked by your GM dealer as soon as possible.

This message will display while the ignition is in RUN. A chime will sound for two seconds when this message is displayed. Press the set/reset button to acknowledge this message and to clear it from the screen.

This message will continue to display if it has not been acknowledged when the engine is turned off. It will also re-display for three seconds if the message has been acknowledged, but the condition still exists when the engine is turned off.

If the condition still exists, the message will re-appear when the engine is turned on.

Downloaded from www.Manualslib.com manuals search engine

CHECK GAS CAP

This warning message comes on when the gas cap is not on, or is not fully tightened. Check the gas cap to ensure it is on and properly tightened. The diagnostic system can determine if the fuel cap has been left off or improperly installed. A loose or missing fuel cap will allow fuel to evaporate into the atmosphere. A few driving trips with the cap properly installed should turn this message off. See *Filling the Tank on page 5-7* for more information.

This message will display while the ignition is in RUN. A chime will sound for two seconds when this message is displayed and then the message continues to display. Press the set/reset button to acknowledge this message and to clear it from the screen.

This message will continue to display for three seconds if it has not been acknowledged when the engine is turned off. It will also re-display for three seconds if the message has been acknowledged, but the condition still exists when the engine is turned off.

If the condition still exists, the message will re-appear when the engine is turned on.

CHECK TIRE PRESSURE

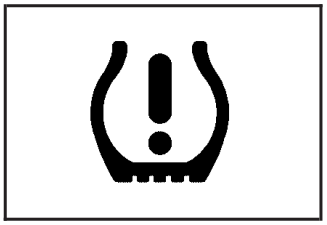

This symbol comes on with the CHECK TIRE PRESSURE warning message.

If the vehicle has ABS brakes, this warning message will appear when the air pressure in one of the tires is too low or too high. Check the vehicle's tire pressure as soon as possible, and fill or deflate the affected tire to the appropriate level. The correct tire inflation pressure should be set to those shown on the tire-loading information label on the vehicle. See *Loading Your Vehicle on page 4-33* for more information. The CHECK TIRE PRESSURE screen is reset when it is acknowledged. However, the TIRE INFLATION MONITOR SYSTEM screen, located under the option menu in the DIC, must also be reset. See "Tire Inflation Monitor System" in the options section under *DIC Controls and Displays (Base Level DIC) on page 3-52* or *DIC Controls and Displays (Uplevel DIC with Trip Computer) on page 3-60* for more information.

Downloaded from www.Manualslib.com manuals search engine

This message will display while the ignition is in RUN. A chime will sound for two seconds when this message is displayed. Press the set/reset button to acknowledge this message and to clear it from the screen.

This message will continue to display for three seconds if it has not been acknowledged when the engine is turned off. It will also re-display for three seconds if the message has been acknowledged, but the condition still exists when the engine is turned off.

If the condition still exists, the message will re-appear when the engine is turned on.

CRUISE SET

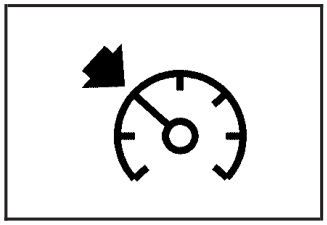

This symbol comes on with the CRUISE SET message.

This message and symbol come on briefly whenever the cruise control is set. The cruise control light on the instrument panel cluster will also come on when cruise control is set. See *Cruise Control Light on page 3-51*. CRUISE SET will also appear briefly in the Head-Up Display (HUD), if your vehicle has this feature. This message will display when the ignition is in RUN. See *Cruise Control on page 3-11* for more information.

This message does not need to be acknowledged.

DELAYED LOCKING

This message comes on when the doors of the vehicle are closed and the delayed locking feature has been programmed through the DIC. See “Delayed Locking” in the options menu under *DIC Controls and Displays (Base Level DIC) on page 3-52* or *DIC Controls and Displays (Uplevel DIC with Trip Computer) on page 3-60* for more information.

This message will appear when the ignition is in OFF. A chime will sound for two seconds when this message is displayed.

This message cannot be acknowledged.

Downloaded from www.Manualslib.com manuals search engine

HEADLAMPS SUGGESTED

This message comes on when the amount of available light outside the vehicle is low and the exterior lamps control has been turned off. This condition happens when the headlamps are turned off at night or the Daytime Running Lamps (DRL) are turned off during the day. This message informs the driver that it has become dark enough outside to require the headlamps to be turned on. When the headlamps are turned on, this message will clear from the screen. See *Exterior Lamps on page 3-15* and *Daytime Running Lamps (DRL) on page 3-16* for more information.

This message will display while the ignition is in RUN. A chime will sound for two seconds when this message is displayed. Press the set/reset button to acknowledge this warning message and to clear it from the screen.

This message will continue to display if it has not been acknowledged when the engine is turned off. It will also re-display for three seconds if the message has been acknowledged, but the condition still exists when the engine is turned off.

If the condition still exists, the message will re-appear when the engine is turned on.

HOT COOLANT

Notice: **If the HOT COOLANT warning message appears on the DIC display, stop the vehicle as soon as possible. Do not increase the engine speed above normal idling speed. Severe engine damage can result from driving a vehicle with an overheated engine. See *Engine Overheating on page 5-28* for more information.**

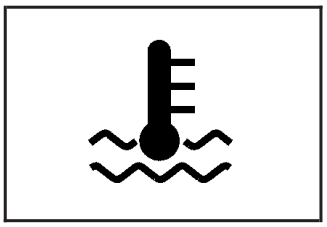

This symbol comes on with the HOT COOLANT warning message.

This warning message will appear while the engine coolant temperature is too hot. The hot coolant temperature warning light will also appear on the instrument panel cluster. Also, the engine coolant temperature gage will read in the red or hot area. See *Engine Coolant Temperature Warning Light on page 3-46* and *Engine Coolant Temperature Gage on page 3-46* for more information.

To avoid added strain, turn off the air conditioner if it is on. When the coolant temperature returns to normal, the air conditioner can be turned back on.

Downloaded from www.Manualslib.com manuals search engine

This message will display only while the ignition is in RUN. A chime will sound continuously when this message is displayed. Press the set/reset button to acknowledge this message and to clear it from the screen.

This message will continue to display if it has not been acknowledged when the engine is turned off. It will also re-display for three seconds if the message has been acknowledged, but the condition still exists when the engine is turned off.

If the condition still exists, the message will re-appear when the engine is turned on.

HOT ENGINE OIL. REDUCE SPEED

On some vehicles, this warning message comes on when the vehicle's engine oil is above the proper engine operating temperature. Reduce the speed of the vehicle. If the warning message continues to display, have the vehicle serviced by your GM dealer as soon as possible. A chime will sound continuously when this message is displayed. Press the set/reset button to acknowledge this warning message. This clears it from the screen.

If the condition still exists, the message will re-appear when the engine is turned on.

HOT TRANS FLUID

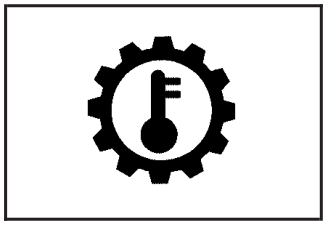

This symbol comes on with the HOT TRANS FLUID warning message.

This warning message will appear when the transaxle fluid in the vehicle is too hot. Stop the vehicle and allow it to idle until it cools down. If the warning message continues to display, have the vehicle serviced by your GM dealer as soon as possible.

If the vehicle has the Uplevel Trip Computer DIC, you can determine the actual temperature of the transaxle fluid using the vehicle's gages button. See *DIC Controls and Displays (Base Level DIC) on page 3-52* or *DIC Controls and Displays (Uplevel DIC with Trip Computer) on page 3-60* for more information.

This message will display while the ignition is in RUN. A chime will sound for two seconds when this message is displayed. Press the set/reset button to acknowledge this message and to clear it from the screen.

Downloaded from www.Manualslib.com manuals search engine

This message will continue to display if it has not been acknowledged when the engine is turned off. It will also re-display for three seconds if the message has been acknowledged, but the condition still exists when the engine is turned off.

If the condition still exists, the message will re-appear when the engine is turned on.

KEY FOB BATTERY LOW

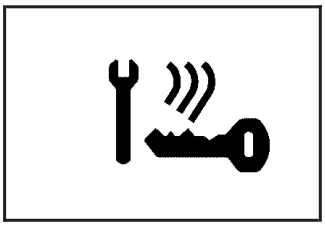

This symbol comes on with the KEY FOB BATTERY LOW warning message.

This warning message will appear when the battery in the remote keyless entry transmitter needs to be replaced. See *Remote Keyless Entry System Operation on page 2-4* for more information.

This message will display while the ignition is in RUN. A chime will sound for two seconds when this message is displayed. Press the set/reset button to acknowledge this message and to clear it from the screen.

This message will continue to display if it has not been acknowledged when the engine is turned off. It will also re-display for three seconds if the message has been acknowledged, but the condition still exists when the engine is turned off.

The message will re-appear when the engine is turned on and the condition still exists.

KEY IN IGNITION

This warning message comes on and a chime will sound continuously when the driver exits the vehicle while the key is in the ignition after the engine is turned off.

This message cannot be acknowledged.

This message will disappear and the chiming will stop when the key is removed from the ignition.

LEFT FRONT TURN LAMP OUT

This warning message comes on when the left front turn signal lamp needs to be replaced. See *Taillamps, Turn Signal, and Stoplamps on page 5-57* for replacement procedures.

This message will display while the ignition is in RUN. A chime will sound for two seconds when this message is displayed. Press the set/reset button to acknowledge this message and to clear it from the screen.

Downloaded from www.Manualslib.com manuals search engine

This message will continue to display if it has not been acknowledged when the engine is turned off. It will also re-display for three seconds if the message has been acknowledged, but the condition still exists when the engine is turned off.

If the condition still exists, the message will re-appear when the engine is turned on.

LEFT REAR TURN LAMP OUT

This warning message comes on when the left rear turn signal lamp needs to be replaced. See *Taillamps, Turn Signal, and Stoplamps on page 5-57* for replacement procedures.

This message will display while the ignition is in RUN. A chime will sound for two seconds when this message is displayed. Press the set/reset button to acknowledge this message and to clear it from the screen.

This message will continue to display if it has not been acknowledged when the engine is turned off. It will also re-display for three seconds if the message has been acknowledged, but the condition still exists when the engine is turned off.

If the condition still exists, the message will re-appear when the engine is turned on.

LOW BRAKE FLUID

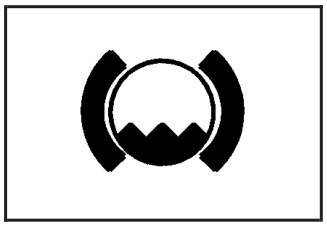

This symbol comes on with the LOW BRAKE FLUID warning message.

This warning message will appear when the brake fluid level is low. Have the brake system serviced by your GM dealer as soon as possible. See *Brakes on page 5-42*.

The brake light will also appear on the instrument panel cluster when this message appears on the DIC. See *Brake System Warning Light on page 3-42*.

This message will display only while the ignition is in RUN. A chime will sound for two seconds while this message is displayed. Press the set/reset button to acknowledge this message and to clear it from the screen.

This message will continue to display if it has not been acknowledged when the engine is turned off. It will also re-display for three seconds if the message has been acknowledged, but the condition still exists when the engine is turned off.

If the condition exists, the message will re-appear when the engine is turned on.

Downloaded from www.Manualslib.com manuals search engine

LOW FUEL

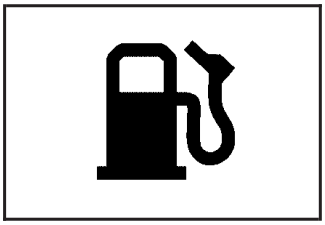

This symbol comes on with the LOW FUEL warning message.

This warning message will appear when the vehicle is low on fuel. Refill the fuel tank as soon as possible.

This message will display while the ignition is in RUN. A chime will sound for two seconds when this message is displayed. Press the set/reset button to acknowledge this message and to clear it from the screen.

This message will continue to display if it has not been acknowledged when the engine is turned off. It will also re-display for three seconds if the message has been acknowledged, but the condition still exists when the engine is turned off.

If the condition still exists, the message will re-appear when the engine is turned on.

LOW OIL LEVEL

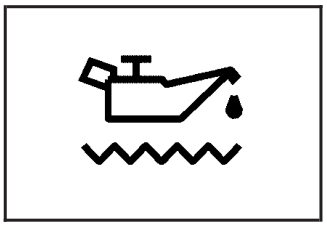

This symbol comes on with the LOW OIL LEVEL warning message.

On some vehicles, this warning message appears when the vehicle's engine oil is low. Fill the oil to the proper level as soon as possible. See *Engine Compartment Overview on page 5-12* for engine oil fill location. Also, see *Engine Oil on page 5-16* for information on the kind of oil to use and proper oil level. See *Supercharger Oil on page 5-20* if the vehicle has a supercharged engine for information on the kind of oil to use and proper oil level.

This message will display while the ignition is in RUN. A chime will sound for two seconds when this message is displayed. Press the set/reset button to acknowledge this message and to clear it from the screen.

This message will continue to display if it has not been acknowledged when the engine is turned off. It will also re-display for three seconds if the message has been acknowledged, but the condition still exists when the engine is turned off.

If the condition still exists, the message will re-appear when the engine is turned on.

Downloaded from www.Manualslib.com manuals search engine

LOW OIL PRESSURE

Notice: **If the LOW OIL PRESSURE warning message appears on the DIC display, stop the vehicle immediately. Do not drive the vehicle until the cause of the low oil pressure is corrected. Severe engine damage can result from driving a vehicle with low oil pressure. See *Engine Oil on page 5-16* for more information.**

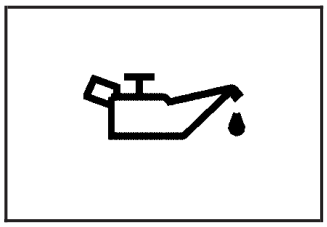

This symbol comes on with the LOW OIL PRESSURE warning message.

This warning message will appear when the vehicle's engine oil pressure is low. The low oil pressure warning light will also appear on the instrument panel.

Stop the vehicle immediately, as engine damage can result from driving a vehicle with low oil pressure. Have the vehicle serviced by your GM dealer as soon as possible when this warning message is displayed.

This message will display only while the ignition is in RUN. A chime will sound continuously when this message is displayed. Press the set/reset button to acknowledge this message and to clear it from the screen.

This message will continue to display if it has not been acknowledged when the engine is turned off. It will also re-display for three seconds if the message has been acknowledged, but the condition still exists when the engine is turned off.

If the condition still exists, the message will re-appear when the engine is turned on.

LOW WASHER FLUID

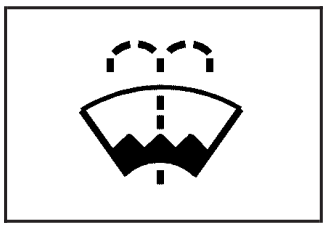

This symbol comes on with the LOW WASHER FLUID warning message.

This warning message appears when the windshield washer fluid is low. Fill the windshield washer reservoir as soon as possible. See *Engine Compartment Overview on page 5-12* for location of the windshield washer reservoir. Also, see *Windshield Washer Fluid on page 5-41* for more information.

This message will display only while the ignition is in RUN. A chime will sound for two seconds when this message is displayed. Press the set/reset button to acknowledge this message and to clear it from the screen.

Downloaded from www.Manualslib.com manuals search engine

This message will continue to display if it has not been acknowledged when the engine is turned off. It will also re-display for three seconds if the message has been acknowledged, but the condition still exists when the engine is turned off.

If the condition still exists, the message will re-appear when the engine is turned on.

PARKING BRAKE ON

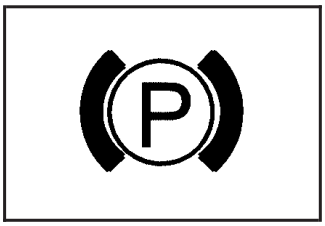

This symbol comes on with the PARKING BRAKE ON warning message.

This warning message appears to alert the driver when the vehicle's parking brake is on, the ignition is in RUN, and the vehicle speed is greater than 5 mph (8 km/h). See *Parking Brake on page 2-30* for more information.

The brake light will also appear on the instrument panel cluster when this message appears on the DIC.

A chime will sound continuously while this message is displayed if driving above 5 mph (8 km/h). Press the set/reset button to acknowledge this message and to clear it from the screen.

This message will continue to display for three seconds if it has not been acknowledged when the engine is turned off. It will also re-display for three seconds if the message has been acknowledged, but the condition still exists when the engine is turned off.

If the condition still exists, the message will re-appear when the engine is turned on.

PARK LAMPS ON

This warning message will come on to alert the driver when the parking lamps are on, the ignition is in OFF, and the key is removed. A chime will sound continuously while this message is displayed. This message cannot be acknowledged.

Downloaded from www.Manualslib.com manuals search engine

REDUCED ENGINE POWER

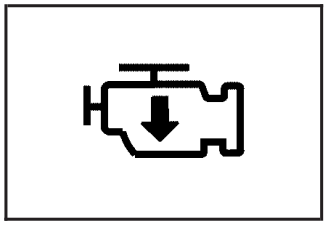

This symbol comes on with the REDUCED ENGINE POWER warning message.

This warning message appears when the vehicle's engine power is reduced. If this happens during driving conditions, such as climbing a steep hill, the transaxle may overwork in a gear that may cause damage to the vehicle's engine or transaxle. Reduced engine power can affect the vehicle's ability to accelerate.

This message will display only when the ignition is in RUN. A chime will sound for two seconds while this message is displayed. Press the set/reset button to acknowledge this message and to clear it from the screen.

This message will continue to display if it has not been acknowledged when the engine is turned off. It will also re-display for three seconds if the message has been acknowledged, but the condition still exists when the engine is turned off.

If the condition still exists, the message will re-appear when the engine is turned on.

REMOTE START ACTIVE PRESS HAZARD SWITCH TO CANCEL

This warning message will come on when a remote start is initiated. If you would like to cancel the remote start, turn on the hazard warning flashers. See *Hazard Warning Flashers on page 3-6*.

REMOTE START DISABLED

This warning message will come on if a remote start attempt is unsuccessful. This may be caused if any of the following conditions are true when a remote start attempt is made:

- The remote start system is disabled through the DIC.
- The key is in the ignition.
- The hood or the doors are not closed.
- There is an emission control system malfunction.
- The engine coolant temperature is too high.
- The oil pressure is low.
- The hazard warning flashers are turned on.
- The maximum number of remote starts or remote start attempts between ignition cycles has been reached.
- The content theft-deterrent alarm is on while attempting to remote start the vehicle.

Downloaded from www.Manualslib.com manuals search engine

See “REMOTE START” under *DIC Controls and Displays (Base Level DIC) on page 3-52* or *DIC Controls and Displays (Uplevel DIC with Trip Computer) on page 3-60* and “Remote Vehicle Start” under *Remote Keyless Entry System Operation on page 2-4* for more information.

RIGHT FRONT TURN LAMP OUT

This warning message will come on when the vehicle’s right front turn signal needs to be replaced. See *Front Turn Signal, Parking and Fog Lamps on page 5-56* for bulb replacement procedures.

This message will display only while the ignition is in RUN. A chime will sound for two seconds while this message is displayed. Press the set/reset button to acknowledge this message and to clear it from the screen.

This message will continue to display if it has not been acknowledged when the engine is turned off. It will also re-display for three seconds if the message has been acknowledged, but the condition still exists when the engine is turned off.

If the condition still exists, the message will re-appear when the engine is turned on.

RIGHT REAR TURN LAMP OUT

This warning message will come on when the vehicle’s right rear turn signal needs to be replaced. See *Taillamps, Turn Signal, and Stoplamps on page 5-57* for bulb replacement procedures.

This message will display only while the ignition is in RUN. A chime will sound for two seconds while this message is displayed. Press the set/reset button to acknowledge this message and to clear it from the screen.

This message will continue to display if it has not been acknowledged when the engine is turned off. It will also re-display for three seconds if the message has been acknowledged, but the condition still exists when the engine is turned off.

If the condition still exists, the message will re-appear when the engine is turned on.

Downloaded from www.Manualslib.com manuals search engine

SERVICE ABS SYSTEM

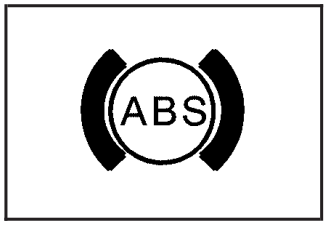

This symbol comes on with the SERVICE ABS SYSTEM warning message.

If the vehicle has the Anti-Lock Brake System (ABS), this warning message will appear when the vehicle's brakes are not functioning properly. Have the brake system serviced by your GM dealer as soon as possible.

This message will display only while the ignition is in RUN. A chime will sound for two seconds while this message is displayed. Press the set/reset button to acknowledge this message and to clear it from the screen.

This message will continue to display if it has not been acknowledged when the engine is turned off. It will also re-display for three seconds if the message has been acknowledged, but the condition still exists when the engine is turned off.

If the condition still exists, the message will re-appear when the engine is turned on.

SERVICE BRAKE SYSTEM

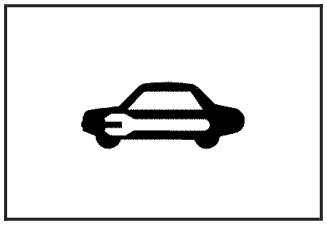

This symbol comes on with the SERVICE BRAKE SYSTEM warning message.

This warning message will appear when the vehicle's brakes are not functioning properly. Have the brake system serviced by your GM dealer as soon as possible.

This message will display only while the ignition is in RUN. A chime will sound for two seconds while this message is displayed. Press the set/reset button to acknowledge this message and to clear it from the screen.

This message will continue to display if it has not been acknowledged when the engine is turned off. It will also re-display for three seconds if the message has been acknowledged, but the condition still exists when the engine is turned off.

If the condition still exists, the message will re-appear when the engine is turned on.

Downloaded from www.Manualslib.com manuals search engine

SERVICE BRAKE APPLY SENSOR

This message will come on when the brake apply sensor is not functioning properly. The vehicle still has brakes when this warning message displays, but you should have the vehicle serviced by your GM dealer as soon as possible.

This message will display only while the ignition is in RUN. A chime will sound for two seconds while this message is displayed. Press the set/reset button to acknowledge this message and to clear it from the screen.

This message will continue to display if it has not been acknowledged when the engine is turned off. It will also re-display for three seconds if the message has been acknowledged, but the condition still exists when the engine is turned off.

If the condition still exists, the message will re-appear when the engine is turned on.

SERVICE PARK LAMPS

This warning message will come on if one of the vehicle's parking lamps needs to be replaced. See *Front Turn Signal, Parking and Fog Lamps on page 5-56* for bulb replacement procedures.

This message will display only while the ignition is in RUN. A chime will sound for two seconds while this message is displayed. Press the set/reset button to acknowledge this message and to clear it from the screen.

This message will continue to display if it has not been acknowledged when the engine is turned off. It will also re-display for three seconds if the message has been acknowledged, but the condition still exists when the engine is turned off.

If the condition still exists, the message will re-appear when the engine is turned on.

Downloaded from www.Manualslib.com manuals search engine

SERVICE STABILITY SYSTEM

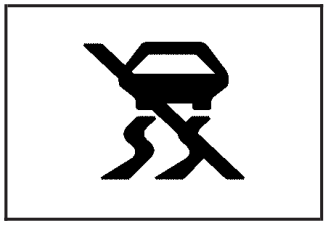

This symbol comes on with the SERVICE STABILITY SYSTEM warning message.

If the vehicle has the StabiliTrak® Plus system, this warning message will appear when it is not functioning properly. A warning light will also appear on the instrument panel cluster. See *Traction Control System (TCS) Warning Light on page 3-45* or *Enhanced Traction System Warning Light on page 3-45*. See *StabiliTrak® Plus System on page 4-12* for more information. Have the StabiliTrak® Plus system serviced by your GM dealer as soon as possible.

This message will display only while the ignition is in RUN. A chime will sound for two seconds while this message is displayed. Press the set/reset button to acknowledge this message and to clear it from the screen.

This message will continue to display if it has not been acknowledged when the engine is turned off. It will also re-display for three seconds if the message has been acknowledged, but the condition still exists when the engine is turned off.

If the condition still exists, the message will re-appear when the engine is turned on.

Downloaded from www.Manualslib.com manuals search engine

SERVICE THEFT SYSTEM

This warning message comes on if there is a problem with the theft-deterrent system programmed in the key. A fault has been detected in the system which means that the system is disabled and it is not protecting the vehicle. The vehicle usually restarts; however, you may want to take the vehicle to your GM dealer before turning off the engine. See *Keys on page 2-2* for information on the PASS-Key® III system.

This message will display only while the ignition is in RUN. A chime will sound for two seconds while this message is displayed. Press the set/reset button to acknowledge this message and to clear it from the screen.

This message will continue to display if it has not been acknowledged when the engine is turned off. It will also re-display for three seconds if the message has been acknowledged, but the condition still exists when the engine is turned off.

If the condition still exists, the message will re-appear when the engine is turned on.

SERVICE TRACTION SYSTEM

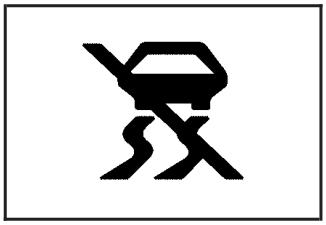

This symbol will come on with the SERVICE TRACTION SYSTEM warning message.

If the vehicle has the traction control system, this warning message appears when the system is not functioning properly. A warning light will also appear on the instrument panel cluster. See *Traction Control System (TCS) Warning Light on page 3-45* or *Enhanced Traction System Warning Light on page 3-45*. See *Traction Control System (TCS) on page 4-9* for more information. Have the traction control system serviced by your GM dealer as soon as possible.

This message will display only while the ignition is in RUN. A chime will sound for two seconds while this message is displayed. Press the set/reset button to acknowledge this message and to clear it from the screen.

Downloaded from www.Manualslib.com manuals search engine

This message will continue to display if it has not been acknowledged when the engine is turned off. It will also re-display for three seconds if the message has been acknowledged, but the condition still exists when the engine is turned off.

If the condition still exists, the message will re-appear when the engine is turned on.

SERVICE VARIABLE EFFORT STEERING

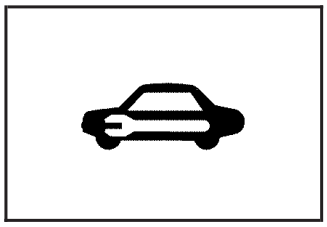

This symbol comes on with the SERVICE VARIABLE EFFORT STEERING warning message.

If the vehicle has the variable effort steering system, this warning message will display if this system is not functioning properly. See *Steering on page 4-13* for more information. Have your system serviced by your GM dealer as soon as possible.

This message will display only while the ignition is in RUN. A chime will sound for two seconds while this message is displayed. Press the set/reset button to acknowledge this message and to clear it from the screen.

This message will continue to display if it has not been acknowledged when the engine is turned off. It will also re-display for three seconds if the message has been acknowledged, but the condition still exists when the engine is turned off.

If the condition still exists, the message will re-appear when the engine is turned on.

Downloaded from www.Manualslib.com manuals search engine

SERVICE VEHICLE SOON

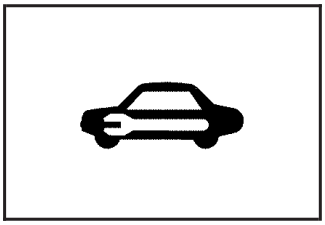

This symbol comes on with the SERVICE VEHICLE SOON warning message.

This warning message displays when a non-emissions related malfunction occurs. Have the vehicle serviced by your GM dealer as soon as possible.

This message will display only while the ignition is in RUN. A chime will sound for two seconds while this message is displayed. Press the set/reset button to acknowledge this message and to clear it from the screen.

This message will continue to display if it has not been acknowledged when the engine is turned off. It will also re-display for three seconds if the message has been acknowledged, but the condition still exists when the engine is turned off.

If the condition still exists, the message will re-appear when the engine is turned on.

STABILITY CONTROL ACTIVE

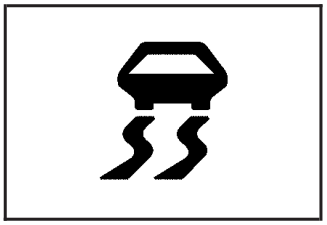

This symbol comes on with the STABILITY CONTROL ACTIVE warning message.

If the vehicle has the StabiliTrak® Plus system, this warning message appears when the system is engaged and actively assisting the driver with directional control of the vehicle. Slippery road conditions may exist when this warning message is displayed, so driving should be adjusted accordingly. STABILITY CONTROL ACTIVE will also appear in the Head-Up Display (HUD), if your vehicle has this feature.

This message will display only while the ignition is in RUN. This message stays on until road conditions change and StabiliTrak® Plus is not active.

This message cannot be acknowledged and cleared from the screen.

Downloaded from www.Manualslib.com manuals search engine

STABILITY CONTROL OFF

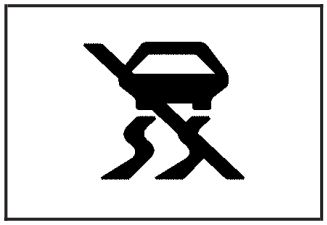

This symbol comes on with the STABILITY CONTROL OFF warning message.

If the vehicle has the StabiliTrak® Plus system, this warning message will appear when the system turns off. This message will display only while the ignition is in RUN. A chime will sound once and the message will stay on for three seconds and then disappear. A warning light indicating that this system is deactivated will also appear on the instrument panel cluster. See *Traction Control System (TCS) Warning Light on page 3-45* or *Enhanced Traction System Warning Light on page 3-45*.

When the StabiliTrak® Plus system is off, the system will not be engaged and will not actively assist the driver with directional control of the vehicle. See *StabiliTrak® Plus System on page 4-12*.

Any of the following conditions may cause the StabiliTrak® Plus system to turn off:

- The StabiliTrak® Plus system on the GXP option is manually turned off. See *StabiliTrak® Plus System on page 4-12* for more information.
- The battery is low.
- There is a StabiliTrak® Plus system failure. See your GM dealer for service.

STARTING DISABLED DUE TO ELECTRONIC THROTTLE CONTROL

This warning message comes on when there is a malfunction with the electronic throttle control which prevents the vehicle from starting. Have the vehicle serviced by your GM dealer.

This message will only appear while the ignition is in RUN, and will not disappear until the problem is resolved. A chime will sound for two seconds. This message cannot be acknowledged.

Downloaded from www.Manualslib.com manuals search engine

STARTING DISABLED DUE TO THEFT SYSTEM

This warning message comes on when the system detects a malfunction in the content theft-deterrent system and prevents the vehicle from starting.

This message will only appear while the ignition is in RUN, and will not disappear until the problem is resolved. A chime will sound for two seconds. This message cannot be acknowledged.

TRACTION CONTROL ACTIVE

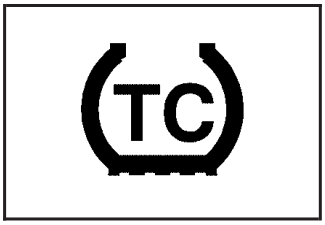

This symbol comes on with the TRACTION CONTROL ACTIVE message.

If the vehicle has the traction control system, this message will appear when the system is on. TRACTION CONTROL ACTIVE will also appear in the Head-Up Display (HUD), if your vehicle has this feature.

This message only displays while the ignition is in RUN and will not disappear until driving conditions change and the traction control is no longer active.

This message cannot be acknowledged or cleared from the screen.

TRACTION CONTROL OFF

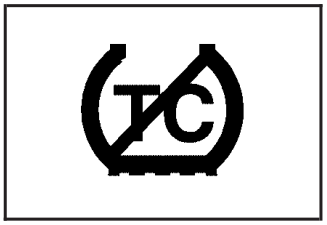

This symbol comes on with the TRACTION CONTROL OFF message.

If the vehicle has the traction control system, this message will appear when the traction control system turns off. TRACTION CONTROL OFF will also appear in the Head-Up Display (HUD), if your vehicle has this feature. This message will only display while the ignition is in RUN and will disappear after three seconds. A chime will sound once and the message will stay on for three seconds and then disappear. A warning light indicating that this system is deactivated will also appear on the instrument panel cluster. See *Traction Control System (TCS) Warning Light on page 3-45* or *Enhanced Traction System Warning Light on page 3-45*.

Downloaded from www.Manualslib.com manuals search engine

Any of the following conditions may cause the traction control system to turn off:

- The traction control system is turned off by pressing the TC (traction control) button located on the center console. See *Traction Control System (TCS) on page 4-9* or *Enhanced Traction System (ETS) on page 4-11* for more information.
- The battery is low.
- There is a traction control system failure. See your GM dealer for service.

TURN SIGNAL ON

This message comes on if the vehicle is driven for more than 0.75 mile (1.21 km) while one of the turn signals are on. It appears as a reminder to turn off the turn signal.

This message only displays when the ignition is in RUN. A chime will sound for two seconds and the message will not disappear until the turn signal is manually turned off, or a turn is completed.

Audio System(s)

Determine which radio your vehicle has and then read the pages following to familiarize yourself with its features.

Driving without distraction is a necessity for a safer driving experience. See *Defensive Driving on page 4-2*. By taking a few moments to read this manual and get familiar with your vehicle's audio system, you can use it with less effort, as well as take advantage of its features. While your vehicle is parked, set up your audio system by presetting your favorite radio stations, setting the tone and adjusting the speakers. Then, when driving conditions permit, you can tune to your favorite stations using the presets and steering wheel controls (if equipped).

⚠ CAUTION:

This system provides you with a far greater access to audio stations and song listings. Giving extended attention to entertainment tasks while driving can cause a crash and you or others can be injured or killed. Always keep your eyes on the road and your mind on the drive — avoid engaging in extended searching while driving.

Downloaded from www.Manualslib.com manuals search engine

Keeping your mind on the drive is important for safe driving. For more information, see *Defensive Driving on page 4-2*. Get familiar with your vehicle's audio system so you can use it with less effort and take full advantage of its features.

Here are some ways in which you can help avoid distraction while driving.

While your vehicle is parked:

- Familiarize yourself with all of its controls.
- Familiarize yourself with its operation.
- Set up your audio system by presetting your favorite radio stations, setting the tone, and adjusting the speakers. Then, when driving conditions permit, you can tune to your favorite radio stations using the presets and steering wheel controls (if equipped).

Notice: **Before adding any sound equipment to your vehicle, such as an audio system, CD player, CB radio, mobile telephone, or two-way radio, make sure that it can be added by checking with your dealer. Also, check federal rules covering mobile radio and telephone units. If sound equipment can be added, it is very important to do it properly. Added sound equipment may interfere with the operation of your vehicle's engine, radio, or other systems, and even damage them. Your vehicle's systems may interfere with the operation of sound equipment that has been added.**

Notice: **The chime signals related to seat belts, parking brake, and other functions of your vehicle operate through the GM radio/entertainment system. If that equipment is replaced or additional equipment is added to your vehicle, the chimes may not work. Make sure that replacement or additional equipment is compatible with your vehicle before installing it. See *Accessories and Modifications on page 5-3*.**

Your vehicle has a feature called Retained Accessory Power (RAP). With RAP, the audio system can be played even after the ignition is turned off. See *Retained Accessory Power (RAP) on page 2-22* for more information.

Downloaded from www.Manualslib.com manuals search engine

Setting the Time

The radio may have a button marked with an H or HR to represent hours and an M or MIN to represent minutes.

Press and hold the hour button until the correct hour appears on the display. AM will appear for morning hours. Press and hold the minute button until the correct minute appears on the display. The time can be set with the ignition on or off.

To synchronize the time with an FM station broadcasting Radio Data System (RDS) information, press and hold the hour and minute buttons at the same time until UPDATED appears on the display. If the time is not available from the station, NO UPDATE will appear on the display.

RDS time is broadcast once a minute. After tuning to an RDS broadcast station, it may take a few minutes for the time to update.

Radio with CD (Base Level)

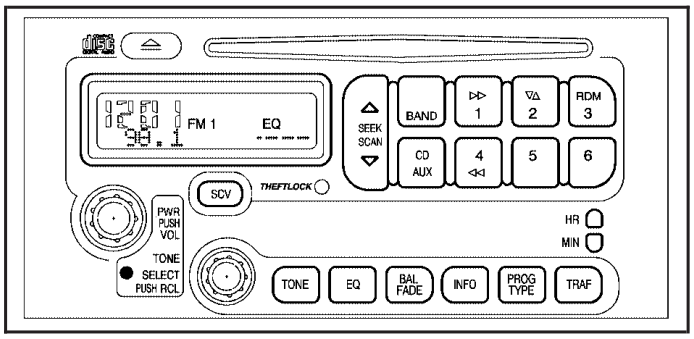

Radio Data System (RDS)

The audio system has a Radio Data System (RDS). RDS features are available for use only on FM stations that broadcast RDS information.

With RDS, the radio can do the following:

- Seek to stations broadcasting the selected type of programming
- Receive announcements concerning local and national emergencies
- Display messages from radio stations
- Seek to stations with traffic announcements

Downloaded from www.Manualslib.com manuals search engine

This system relies upon receiving specific information from these stations and will only work when the information is available. In rare cases, a radio station may broadcast incorrect information that will cause the radio features to work improperly. If this happens, contact the radio station.

While the radio is tuned to an RDS station, the station name or call letters will appear on the display instead of the frequency. RDS stations may also provide the time of day, a program type (PTY) for current programming, and the name of the program being broadcast.

XM™ Satellite Radio Service

XM™ is a satellite radio service that is based in the 48 contiguous United States and in Canada (if available). XM™ offers over 100 coast-to-coast channels including music, news, sports, talk, and children's programming. XM™ provides digital quality audio and text information that includes song title and artist name. A service fee is required in order to receive the XM™ service. For more information, contact XM™ at www.xmradio.com or call 1-800-852-XMXM (9696).

Playing the Radio

PWR (Power): Push this knob to turn the system on and off.

VOL (Volume): Turn this knob to increase or to decrease the volume.

SCV (Speed-Compensated Volume): With SCV, the audio system adjusts automatically to make up for road and wind noise as you drive.

Set the volume at the desired level. Press this button to select MIN, MED, or MAX. Each higher setting will allow for more volume compensation at faster vehicle speeds. Then, as you drive, SCV automatically increases the volume, as necessary, to overcome noise at any speed. The volume level should always sound the same to you as you drive. To turn SCV off, press this button until OFF appears on the display.

RCL (Recall): Push this knob to switch the display between the radio station frequency and the time. When the ignition is off, push this knob to display the time.

For RDS, push the RCL knob to change what appears on the display while using RDS. The display options are station name, RDS station frequency, PTY, and the name of the program (if available).

For XM™ (if equipped), push the RCL knob while in XM™ mode to retrieve four different categories of information related to the current song or channel: Artist, Song Title, Category or PTY, Channel Number/Channel Name.

To change the default on the display, push the RCL knob until you see the display you want, then hold the knob until the display flashes. The selected display will now be the default.

Downloaded from www.Manualslib.com manuals search engine

Finding a Station

BAND: Press this button to switch between FM1, FM2, AM, or XM1 or XM2 (if equipped). The display will show the selection.

TUNE: Turn this knob to select radio stations.

△ **SEEK** ▽**:** Press the up or the down arrow to go to the next or to the previous station and stay there.

The radio will only seek stations with a strong signal that are in the selected band.

△ **SCAN** ▽**:** Press and hold either arrow for two seconds until SCAN appears on the display and you hear a beep. The radio will go to a station, play for a few seconds, then go on to the next station. Press either arrow again to stop scanning.

To scan preset stations, press and hold either SCAN arrow for more than four seconds until PSCAN and the preset number appear on the display and you hear two beeps. The radio will go to the first preset station stored on the pushbuttons, play for a few seconds, then go on to the next preset station. Press either SCAN arrow again to stop scanning presets.

The radio will only scan stations with a strong signal that are in the selected band.

Setting Preset Stations

Up to 30 stations (six FM1, six FM2, and six AM, six XM1 and six XM2 (if equipped)), can be programmed on the six numbered pushbuttons, by performing the following steps:

1. Turn the radio on.
2. Press BAND to select FM1, FM2, AM, or XM1 or XM2.
3. Tune in the desired station.
4. Press EQ to select the equalization.
5. Press and hold one of the six numbered pushbuttons until you hear a beep. Whenever that numbered pushbutton is pressed, the station that was set will return and the equalization that was selected will be stored for that pushbutton.
6. Repeat the steps for each pushbutton.

Downloaded from www.Manualslib.com manuals search engine

Setting the Tone (Bass/Midrange/Treble)

TONE: Press and release this button until BASS, MID, or TREB appears on the display. The SELECT LED indicator will light to show that the tone control can be adjusted. Turn the SELECT knob to increase or to decrease. If a station is weak or noisy, decrease the treble.

To return all of the tone controls to the middle position, press and hold the TONE button until FLAT appears on the display

EQ (Equalizer): Press this button to select customized equalization settings.

Up to six customized equalization settings, can be programmed, by performing the following steps:

1. Turn the radio on.
2. Use the TONE button and the SELECT knob to create the equalization.
3. Press and hold the EQ button for two seconds. SELECT EQ # will appear on the display and the EQ symbol will flash.
4. Press EQ or turn the SELECT knob to select the EQ number.
5. Press and hold the EQ button or push the SELECT knob to store the equalization setting and the number. EQ SAVED will appear on the display and you will hear a beep.
6. Repeat the steps for the other EQ settings and numbers.

EQ 5 has been programmed at the factory for use with talk radio, but it can be preset to a different tone.

Adjusting the Speakers (Balance/Fade)

BAL (Balance): To adjust the balance between the right and the left speakers, press and release this button until BAL appears on the display. The SELECT LED indicator will light to show that the speakers can be adjusted. Turn the SELECT knob to move the sound toward the right or the left speakers.

FADE: To adjust the fade between the front and the rear speakers, press and release this button until FADE appears on the display. The SELECT LED indicator will light to show that the speakers can be adjusted. Turn the SELECT knob to move the sound toward the front or the rear speakers.

Pressing and holding the BAL FADE button for two seconds will return all speaker settings to the middle position.

Downloaded from www.Manualslib.com manuals search engine

Finding a Program Type (PTY) Station (RDS and XM™)

To select and find a desired PTY perform the following:

1. Press the PROG TYPE button to activate program type select mode. PTY will appear on the display.
2. Turn the SELECT knob to select a PTY.
3. Once the desired PTY is displayed, press either SEEK arrow to select the PTY and take you to the PTY's first station.
4. To go to another station within that PTY, while the PTY is displayed, press either SEEK arrow once. If the PTY is not displayed, press either SEEK arrow twice to display the PTY and then to go to another station.
5. Press PROG TYPE to exit program type select mode.

   If PTY times out and is no longer on the display, go back to Step 1.

If both PTY and TRAF are on, the radio will search for stations with the selected PTY and traffic announcements.

SCAN: Scan the stations within a PTY by performing the following:

1. Press PROG TYPE to activate program type select mode. PTY will appear on the display.
2. Turn the SELECT knob to select a PTY.
3. Once the desired PTY is displayed, press and hold either SCAN arrow, and the radio will begin scanning the stations in the PTY.
4. Press either SCAN arrow to stop at a station.

If both PTY and TRAF are on, the radio will scan for stations with the selected PTY and traffic announcements.

BAND (Alternate Frequency): Alternate frequency allows the radio to switch to a stronger station with the same program type. To turn alternate frequency on, press and hold BAND for two seconds. AF ON will appear on the display. The radio may switch to stations with a stronger frequency.

To turn alternate frequency off, press and hold BAND again for two seconds. AF OFF will appear on the display. The radio will not switch to other stations.

This function does not apply for XM™ Satellite Radio Service.

Downloaded from www.Manualslib.com manuals search engine

Setting Preset PTYs (RDS Only)

These pushbuttons have factory PTY presets. Up to 12 PTYs (six FM1 and six FM2), can be programmed on the six numbered pushbuttons, by performing the following steps:

1. Press BAND to select FM1 or FM2.
2. Press PROG TYPE to activate program type select mode. PTY will appear on the display.
3. Turn the SELECT knob to select a PTY.
4. Press and hold one of the six numbered pushbuttons until you hear a beep. Whenever that numbered pushbutton is pressed, the PTY that was set will return, if program type select mode is activated.
5. Repeat the steps for each pushbutton.

RDS Messages

ALERT!: Alert warns of local or national emergencies. When an alert announcement comes on the current radio station, ALERT! will appear on the display. You will hear the announcement, even if the volume is low or a CD is playing. If a CD is playing, play will stop during the announcement. Alert announcements cannot be turned off.

ALERT! will not be affected by tests of the emergency broadcast system. This feature is not supported by all RDS stations.

INFO (Information): If the current station has a message, INFO will appear on the display. Press this button to see the message. The message may display the artist, song title, call in phone numbers, etc.

If the entire message is not displayed, parts of the message will appear every three seconds. To scroll through the message, press and release the INFO button. A new group of words will appear on the display after every press of the button. Once the complete message has been displayed, INFO will disappear from the display until another new message is received. The last message can be displayed by pressing the INFO button. You can view the last message until a new message is received or a different station is tuned to.

Downloaded from www.Manualslib.com manuals search engine

TRAF (Traffic): If TRAF appears on the display, the tuned station broadcasts traffic announcements. To receive the traffic announcement from the tuned station, press this button. Brackets will be displayed around TRAF and when a traffic announcement comes on the tuned radio station you will hear it.

If the station does not broadcast traffic announcements, press the TRAF button and the radio will seek to a station that does. When a station that broadcasts traffic announcements is found, the radio will stop seeking and brackets will be displayed around TRAF. If no station is found that broadcasts traffic announcements, NO TRAFFIC will appear on the display.

If the brackets are on the display and TRAF is not, press the TRAF button to remove the brackets or use the TUNE knob or the SEEK arrows to go to a station that supports traffic announcements.

The radio will play the traffic announcement if the volume is low. The radio will interrupt the play of a CD if the last tuned station broadcasts traffic announcements and the brackets are displayed.

This function does not apply to XM™ Satellite Radio Service.

Radio Messages

CALIBRATE: The audio system has been calibrated for your vehicle from the factory. If CALIBRATE appears on the display it means that the radio has not been configured properly for your vehicle and must be returned your GM dealer for service.

LOCKED: This message is displayed when the THEFTLOCK® system has locked up. Take the vehicle to your GM dealer for service.

If any error occurs repeatedly or if an error cannot be corrected, contact your dealer.

Downloaded from www.Manualslib.com manuals search engine

XM™ Radio Messages

Radio Display Message	Condition	Action Required
XL (Explicit Language Channels)	XL on the radio display, after the channel name, indicates content with explicit language.	These channels, or any others, can be blocked at a customer's request, by calling 1-800-852-XMXM (9696).
Updating	Updating encryption code	The encryption code in the receiver is being updated, and no action is required. This process should take no longer than 30 seconds.
No Signal	Loss of signal	The system is functioning correctly, but the vehicle is in a location that is blocking the XM™ signal. When the vehicle moves into an open area, the signal should return.
Loading XM	Acquiring channel audio (after a four second delay)	The audio system is acquiring and processing audio and text data. No action is needed. This message should disappear shortly.
CH Off Air	Channel not in service	This channel is not currently in service. Tune to another channel.
CH Unavail	Channel no longer available	This previously assigned channel is no longer assigned. Tune to another station. If this station was one of the presets, choose another station for that preset button.
No Info	Artist Name/Feature not available	No artist information is available at this time on this channel. The system is working properly.

Downloaded from www.Manualslib.com manuals search engine

XM™ Radio Messages (cont'd)

Radio Display Message	Condition	Action Required
No Info	Song/Program Title not available	No song title information is available at this time on this channel. The system is working properly.
No Info	Category Name not available	No category information is available at this time on this channel. The system is working properly.
No Info	No Text/Informational message available	No text or informational messages are available at this time on this channel. The system is working properly.
Not Found	No channel available for the chosen category	There are no channels available for the selected category. The system is working properly.
XM Locked	Theft lock active	The XM™ receiver in the vehicle may have previously been in another vehicle. For security purposes, XM™ receivers cannot be swapped between vehicles. If this message is received after having your vehicle serviced, check with the servicing facility.
Radio ID	Radio ID label (channel 0)	If tuned to channel 0, this message will alternate with the XM™ Radio eight digit radio ID label. This label is needed to activate the service.
Unknown	Radio ID not known (should only be if hardware failure)	If this message is received when tuned to channel 0, there may be a receiver fault. Consult with your GM dealer.
Chk XMRcvr	Hardware failure	If this message does not clear within a short period of time, the receiver may have a fault. Consult with your GM dealer.

Downloaded from www.Manualslib.com manuals search engine

Playing a CD

Insert a CD partway into the slot, label side up. The player will pull it in and the CD should begin playing. If you want to insert a CD when the ignition is off, first press the eject button or push the RCL knob. If you insert a CD with the radio off and the ignition on, it will start to play.

The CD symbol will appear on the display when a CD is loaded. The track number will appear on the display, as each new track starts to play.

If the ignition or the radio is turned off with a CD in the player, it will stay in the player. When the ignition or the radio is turned on, the CD will start playing where it stopped, if it was the last selected audio source.

The CD player can play the smaller 3 inch (8 cm) single CDs with an adapter ring. Full-size CDs and the smaller CDs are loaded in the same manner.

If playing a CD-R, the sound quality may be reduced due to CD-R quality, the method of recording, the quality of the music that has been recorded, and the way the CD-R has been handled. There may be an increase in skipping, difficulty in finding tracks, and/or difficulty in loading and ejecting. If these problems occur, check the bottom surface of the CD. If the surface of the CD is damaged, such as cracked, broken, or scratched, the CD will not play properly. If the surface of the CD is soiled, see *Care of Your CDs on page 3-141* for more information.

If there is no apparent damage, try a known good CD.

Do not add any label to a CD, it could get caught in the CD player. If a CD is recorded on a personal computer and a description label is needed, try labeling the top of the recorded CD with a marking pen instead.

Notice: **If you add any label to a CD, insert more than one CD into the slot at a time, or attempt to play scratched or damaged CDs, you could damage the CD player. When using the CD player, use only CDs in good condition without any label, load one CD at a time, and keep the CD player and the loading slot free of foreign materials, liquids, and debris.**

If an error appears on the display, see “CD Messages” later in this section.

▷▷ **1 (Forward):** Press and hold this pushbutton to advance quickly within a track. You will hear sound at a reduced volume. Release this pushbutton to play the passage. The elapsed time of the track will appear on the display.

RDM 3 (Random): Press this pushbutton to hear the tracks in random, rather than sequential, order. RDM and the track number will appear on the display. Press RDM again to turn off random play.

Downloaded from www.Manualslib.com manuals search engine

4 ◁◁ (Reverse): Press and hold this pushbutton to reverse quickly within a track. You will hear sound at a reduced volume. Release this pushbutton to play the passage. The elapsed time of the track will appear on the display.

EQ (Equalizer): Press EQ to select the desired customized equalization setting while playing a CD. The equalization will be automatically set whenever you play a CD. See “EQ” listed previously for more information.

△ SEEK ▽: Press the down arrow to go to the start of the current track if more than eight seconds have played. Press the up arrow to go to the next track. If either arrow is held or pressed more than once, the player will continue moving backward or forward through the CD.

△ SCAN ▽: Press and hold either arrow for more than two seconds until SCAN and the track number appear on the display and you hear a beep. The CD will go to the next track, play for a few seconds, then go on to the next track. Press either arrow again to stop scanning.

RCL (Recall): Push this knob to see how long the current track has been playing. To change the default on the display, track and elapsed time, push the knob until you see the display you want, then hold the knob until the display flashes. The selected display will now be the default. While elapsed time is showing, CD TIME will appear on the display.

BAND: Press this button to listen to the radio when a CD is playing. The inactive CD will remain safely inside the radio for future listening.

CD AUX (Auxiliary): Press this button to play a CD when listening to the radio. The CD symbol will appear on the display when a CD is loaded.

⏏ (Eject): Press this button to eject a CD. Eject may be activated with either the ignition or radio off. CDs may be loaded with the ignition and radio off, if this button is pressed first.

Downloaded from www.Manualslib.com manuals search engine

CD Messages

CHECK CD: If this message appears on the display and/or the CD comes out, it could be for one of the following reasons:

- It is very hot. When the temperature returns to normal, the CD should play.
- You are driving on a very rough road. When the road becomes smoother, the CD should play.
- The CD is dirty, scratched, wet, or upside down.
- The air is very humid. If so, wait about an hour and try again.
- There may have been a problem while burning the CD.
- The label may be caught in the CD player.

If the CD is not playing correctly, for any other reason, try a known good CD.

If any error occurs repeatedly or if an error cannot be corrected, contact your GM dealer. If the radio displays an error message, write it down and provide it to your dealer when reporting the problem.

Radio with CD (MP3)

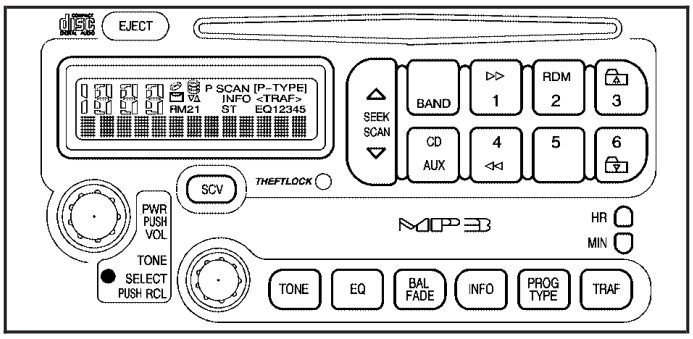

Radio Data System (RDS)

The audio system has a Radio Data System (RDS). RDS features are available for use only on FM stations that broadcast RDS information.

With RDS, the radio can do the following:

- Seek to stations broadcasting the selected type of programming
- Receive announcements concerning local and national emergencies
- Display messages from radio stations
- Seek to stations with traffic announcements

Downloaded from www.Manualslib.com manuals search engine

This system relies upon receiving specific information from these stations and will only work when the information is available. In rare cases, a radio station may broadcast incorrect information that will cause the radio features to work improperly. If this happens, contact the radio station.

While the radio is tuned to an RDS station, the station name or the call letters will appear on the display instead of the frequency. RDS stations may also provide the time of day, a program type (PTY) for current programming, and the name of the program being broadcast.

XM™ Satellite Radio Service

XM™ is a satellite radio service that is based in the 48 contiguous United States and in Canada (if available). XM™ offers over 100 coast-to-coast channels including music, news, sports, talk, and children's programming. XM™ provides digital quality audio and text information that includes song title and artist name. A service fee is required in order to receive the XM™ service. For more information, contact XM™ at www.xmradio.com or call 1-800-852-XMXM (9696).

Playing the Radio

PWR (Power): Push this knob to turn the system on and off.

VOL (Volume): Turn this knob to increase or to decrease the volume.

RCL (Recall): Push this knob to switch the display between the radio station frequency and the time. When the ignition is turned off, push this knob to display the time.

For XM™ (if equipped), push the RCL knob while in XM™ mode to retrieve four different categories of information related to the current song or channel: Artist, Song Title, Category or PTY, Channel Number/Channel Name.

To change the default on the display, push the RCL knob until you see the display you want, then hold the knob until the display flashes. The selected display will now be the default.

SCV (Speed-Compensated Volume): With SCV, the audio system adjusts automatically to make up for road and wind noise as you drive.

Set the volume at the desired level. Press this button to select MIN, MED, or MAX. Each higher setting allows for more volume compensation at faster vehicle speeds. Then, as you drive, SCV automatically increases the volume, as necessary, to overcome noise at any speed. The volume level should always sound the same to you as you drive. To turn SCV off, press this button until OFF appears on the display.

Downloaded from www.Manualslib.com manuals search engine

Finding a Station

BAND: Press this button to switch between FM1, FM2, AM, or XM1 or XM2 (if equipped). The display will show the selection.

TUNE: Turn this knob to select radio stations.

△ **SEEK** ▽**:** Press the up or the down arrow to go to the next or to the previous station and stay there.

The radio will only seek stations with a strong signal that are in the selected band.

△ **SCAN** ▽**:** Press and hold either SCAN arrow for two seconds until SCAN appears on the display and you hear a beep. The radio will go to a station, play for a few seconds, then go on to the next station. Press either SCAN arrow again to stop scanning.

To scan preset stations, press and hold either SCAN arrow for more than four seconds until PSCAN and the preset number appear on the display and you will hear a double beep. The radio will go to the first preset station, play for a few seconds, then go on to the next preset station. Press either SCAN arrow again to stop scanning presets.

The radio will only scan stations with a strong signal that are in the selected band.

Setting Preset Stations

Up to 30 stations (six FM1, six FM2, and six AM, six XM1 and six XM2 (if equipped)), can be programmed on the six numbered pushbuttons, by performing the following steps:

1. Turn the radio on.
2. Press BAND to select FM1, FM2, AM, or XM1 or XM2.
3. Tune in the desired station.
4. Press EQ to select the equalization.
5. Press and hold one of the six numbered pushbuttons until you hear a beep. Whenever that numbered pushbutton is pressed, the station that was set will return and the equalization that was selected will be stored for that pushbutton.
6. Repeat the steps for each pushbutton.

Setting the Tone (Bass/Midrange/Treble)

TONE: Press and release this button until BASS, MID, or TREB appears on the display. The SELECT LED indicator will light to show that the tone control can be adjusted. Turn the SELECT knob to increase or to decrease. If a station is weak or noisy, decrease the treble.

Downloaded from www.Manualslib.com manuals search engine

Pressing and holding the TONE button until FLAT appears on the display will return all of the tone controls to the middle position.

EQ (Equalizer): Press this button to select customized bass, midrange, and treble equalization settings.

Up to six customized equalization settings, can be programmed on the six numbered pushbuttons, by performing the following steps:

1. Turn the radio on.
2. Use the TONE button and the SELECT knob to create the desired equalization.
3. Press and hold the EQ button for two seconds. SELECT EQ # will appear on the display and the EQ symbol will flash.
4. Press EQ or turn the SELECT knob to select the desired EQ number.
5. Press and hold the EQ button or push the SELECT knob to store the equalization setting and the number. You will hear a beep and EQ SAVED will appear on the display.
6. Repeat the steps for the other EQ settings and numbers.

EQ 5 has been programmed at the factory for use with talk radio, but it can be set to a different tone.

Adjusting the Speakers (Balance/Fade)

BAL (Balance): To adjust the balance between the right and the left speakers, press and release this button until BAL appears on the display. The SELECT LED indicator will light to show that the speakers can be adjusted. Turn the SELECT knob to move the sound toward the right or the left speakers.

FADE: To adjust the fade between the front and the rear speakers, press and release this button until FADE appears on the display. The SELECT LED indicator will light to show that the speakers can be adjusted. Turn the SELECT knob to move the sound toward the front or the rear speakers.

Pressing and holding the BAL FADE button for two seconds will return all speaker settings to the middle position.

Downloaded from www.Manualslib.com manuals search engine

Finding a Program Type (PTY) Station (RDS and XM™)

To select and find a desired PTY perform the following:

1. Press PROG TYPE to activate program type select mode. The PTY symbol will appear on the display.
2. Turn the SELECT knob to select a PTY.
3. Once the desired PTY is displayed, press either SEEK arrow to select the PTY and to take you to the PTY's first station.
4. To go to another station within that PTY, and the PTY is displayed, press either SEEK arrow once. If the PTY is not displayed, press either SEEK arrow twice to display the PTY and then to go to another station.
5. Press PROG TYPE to exit program type select mode.

   If PTY times out and is no longer on the display, go back to Step 1.

If both PTY and TRAF are on, the radio will search for stations with the selected PTY and traffic announcements.

△ **SCAN** ▽**:** Scan the stations within a PTY by performing the following:

1. Press PROG TYPE to activate program type select mode. The PTY symbol will appear on the display.
2. Turn the SELECT knob to select a PTY.
3. Once the desired PTY is displayed, press and hold either SCAN arrow, and the radio will begin scanning the stations in the PTY.
4. Press either SCAN arrow to stop at a station.

If both PTY and TRAF are on, the radio will scan for stations with the selected PTY and traffic announcements.

BAND (Alternate Frequency): Alternate frequency allows the radio to switch to a stronger station with the same program type. To turn alternate frequency on, press and hold BAND for two seconds. AF ON will appear on the display. The radio may switch to stations with a stronger frequency.

To turn alternate frequency off, press and hold BAND again for two seconds. AF OFF will appear on the display. The radio will not switch to other stations.

This function does not apply for XM™ Satellite Radio Service.

Downloaded from www.Manualslib.com manuals search engine

Setting Preset PTYs (RDS Only)

These pushbuttons have factory PTY presets. Up to 12 PTYs (six FM1 and six FM2), can be programmed on the six numbered pushbuttons, by performing the following steps:

1. Press BAND to select FM1 or FM2.
2. Press PROG TYPE to activate program type select mode. The PTY symbol will appear on the display.
3. Turn the SELECT knob to select a PTY.
4. Press and hold one of the six numbered pushbuttons until you hear a beep. Whenever that numbered pushbutton is pressed, the PTY that was set will return, if program type select mode is activated.
5. Repeat the steps for each pushbutton.

RDS Messages

ALERT!: Alert warns of local or national emergencies. When an alert announcement comes on the current radio station, ALERT! will appear on the display. You will hear the announcement, even if the volume is low or a CD is playing. If a CD is playing, play will stop during the announcement. Alert announcements cannot be turned off.

ALERT! will not be affected by tests of the emergency broadcast system. This feature is not supported by all RDS stations.

INFO (Information): If the current station has a message, INFO will appear on the display. Press this button to see the message. The message may display the artist, song title, call in phone numbers, etc.

Downloaded from www.Manualslib.com manuals search engine

If the entire message is not displayed, parts of the message will appear every three seconds. To scroll through the message, press and release the INFO button. A new group of words will appear on the display after every press of this button. Once the complete message has been displayed, the information symbol will disappear from the display until another new message is received. The last message can be displayed by pressing the INFO button. You can view the last message until a new message is received or a different station is tuned to.

TRAF (Traffic): If TRAF appears on the display, the tuned station broadcasts traffic announcements. To receive the traffic announcement from the tuned station, press this button. Brackets will be displayed around TRAF and when a traffic announcement comes on the tuned radio station you will hear it.

If the station does not broadcast traffic announcements, press the TRAF button and the radio will seek to a station that does. When a station that broadcasts traffic announcements is found, the radio will stop seeking and brackets will be displayed around TRAF. If no station is found that broadcasts traffic announcements, NO TRAFFIC will appear on the display.

If the brackets are on the display and TRAF is not, press the TRAF button to remove the brackets or use the TUNE knob or the SEEK arrows to go to a station that supports traffic announcements. If no station is found that broadcasts traffic announcements, NO TRAFFIC will appear on the display.

The radio will play the traffic announcement if the volume is low. The radio will interrupt the play of a CD if the last tuned station broadcasts traffic announcements and the brackets are displayed.

This function does not apply to XM™ Satellite Radio Service.

Radio Messages

CALIBRATE: The audio system has been calibrated for your vehicle from the factory. If CALIBRATE appears on the display it means that the radio has not been configured properly for your vehicle and it must be returned to your GM dealer for service.

Downloaded from www.Manualslib.com manuals search engine

XM™ Radio Messages

Radio Display Message	Condition	Action Required
XL (Explicit Language Channels)	XL on the radio display, after the channel name, indicates content with explicit language.	These channels, or any others, can be blocked at a customer's request, by calling 1-800-852-XMXM (9696).
Updating	Updating encryption code	The encryption code in the receiver is being updated, and no action is required. This process should take no longer than 30 seconds.
No Signal	Loss of signal	The system is functioning correctly, but the vehicle is in a location that is blocking the XM signal. When the vehicle is moved into an open area, the signal should return.
Loading XM	Acquiring channel audio (after 4 second delay)	The radio system is acquiring and processing audio and text data. No action is needed. This message should disappear shortly.
CH Off Air	Channel not in service	This channel is not currently in service. Tune to another channel.
CH Unavail	Channel no longer available	This previously assigned channel is no longer assigned. Tune to another station. If this station was one of the presets, choose another station for that preset button.
No Info	Artist Name/Feature not available	No artist information is available at this time on this channel. The system is working properly.

Downloaded from www.Manualslib.com manuals search engine

XM™ Radio Messages (cont'd)

Radio Display Message	Condition	Action Required
No Info	Song/Program Title not available	No song title information is available at this time on this channel. The system is working properly.
No Info	Category Name not available	No category information is available at this time on this channel. The system is working properly.
No Info	No Text/Informational message available	No text or informational messages are available at this time on this channel. The system is working properly.
Not Found	No channel available for the chosen category	There are no channels available for the selected category. The system is working properly.
XM Locked	Theft lock active	The XM receiver in your vehicle may have previously been in another vehicle. For security purposes, XM receivers cannot be swapped between vehicles. If this message is received after having your vehicle serviced, check with your GM dealer.
Radio ID	Radio ID label (channel 0)	If tuned to channel 0, this message will alternate with the XM Radio 8 digit radio ID label. This label is needed to activate the service.
Unknown	Radio ID not known (should only be if hardware failure)	If this message is received when tuned to channel 0, there may be a receiver fault. Consult with your GM dealer.
Chk XMRcvr	Hardware failure	If this message does not clear within a short period of time, the receiver may have a fault. Consult with your GM dealer.

Downloaded from www.Manualslib.com manuals search engine

Playing a CD

Insert a CD partway into the slot, label side up. The player will pull it in and READING DISC and the CD symbol will appear on the display. If you want to insert a CD with the ignition off, first press the EJECT button or push the RCL knob.

If the ignition or radio is turned off with a CD in the player it will stay in the player. When the ignition or radio is turned on, the CD will start to play where it stopped, if it was the last selected audio source.

When the CD is inserted, the CD symbol will appear on the display. As each new track starts to play, the track number will appear on the display.

The CD player can play the smaller 3 inch (8 cm) single CDs with an adapter ring. Full-size CDs and the smaller CDs are loaded in the same manner.

If playing a CD-R, the sound quality may be reduced due to CD-R quality, the method of recording, the quality of the music that has been recorded, and the way the CD-R has been handled. There may be an increase in skipping, difficulty in finding tracks, and/or difficulty in loading and ejecting. If these problems occur, check the bottom surface of the CD. If the surface of the CD is damaged, such as cracked, broken, or scratched, the CD will not play properly. If the surface of the CD is soiled, see *Care of Your CDs on page 3-141* for more information.

If there is no apparent damage, try a known good CD.

Do not add any label to a CD, it could get caught in the CD player. If a CD is recorded on a personal computer and a description label is needed, try labeling the top of the recorded CD with a marking pen instead.

Notice: **If you add any label to a CD, insert more than one CD into the slot at a time, or attempt to play scratched or damaged CDs, you could damage the CD player. When using the CD player, use only CDs in good condition without any label, load one CD at a time, and keep the CD player and the loading slot free of foreign materials, liquids, and debris.**

If an error appears on the display, see “CD Messages” later in this section.

▷▷ **1 (Forward):** Press and hold this pushbutton to advance quickly within a track. You will hear sound at a reduced volume. Release this pushbutton to play the passage. The elapsed time of the track will appear on the display.

RDM 2 (Random): Press this pushbutton to hear the tracks in random, rather than sequential, order. RDM and the track number will appear on the display. Press RDM again to turn off random play.

Downloaded from www.Manualslib.com manuals search engine

3 (Next Folder): This button does not have a function for non-MP3 CDs.

4 (Reverse): Press and hold this pushbutton to reverse quickly within a track. You will hear sound at a reduced volume. Release this pushbutton to play the passage. The elapsed time of the track will appear on the display.

6 (Previous Folder): This button does not have a function for non-MP3 CDs.

EQ (Equalizer): Press EQ to select the desired customized equalization setting while playing a CD. The equalization will be automatically set whenever a CD is played. See “EQ” listed previously for more information.

SEEK : Press the up arrow to go to the start of the next track. Press the down arrow to go to the start of the previous track. Pressing either arrow for more than two seconds will search the previous or next tracks at two tracks per second. When the track number that you would like to play appears on the display, release the arrow to stop searching and to play the track.

SCAN : Press and hold either arrow for more than two seconds until SCAN and the track number appear on the display and you hear a beep. The CD will go to the next track, play for a few seconds, then go on to the next track. Press either arrow again to stop scanning.

RCL (Recall): Push this knob to see how long the current track has been playing. To change the default on the display, track and elapsed time, push the knob until you see the display you want, then hold the knob until the display flashes. The selected display will now be the default. While elapsed time appears on the display, CD TIME will appear on the display.

BAND: Press this button to listen to the radio when a CD is playing. The inactive CD will remain safely inside the radio for future listening.

CD AUX (Auxiliary): Press this button to play a CD when listening to the radio. The CD symbol will appear on the display when a CD is loaded.

EJECT: Press this button to eject a CD. Eject may be activated with either the ignition or radio off. CDs may be loaded with the radio and ignition off if this button is pressed first.

Downloaded from www.Manualslib.com manuals search engine

Using an MP3 CD

MP3 Format

If you burn your own MP3 disc on a personal computer:

- Make sure the MP3 files are recorded on a CD-R disc.
- Make sure to finalize the disc when burning an MP3 disc, using multiple sessions. It is usually better to burn the disc all at once.
- Files can be recorded with a variety of fixed or variable bit rates. Song title, artist name, and album will be available for display by the radio when recorded using ID3 tags version 1 and 2.
- Do not mix standard audio and MP3 files on one disc.
- Make sure playlists have a.pls, or.m3u, or.rmp extension, other file extensions may not work.

The player will be able to read and play a maximum of 50 folders, 50 playlists, 10 sessions, and 255 files. Long file names, folder names, or playlist names may use more disc memory space than necessary. To conserve space on the disc, minimize the length of the file, folder or playlist names. You can also play an MP3 CD that was recorded using no file folders.

The system can support up to 11 folders in depth, though, keep the depth of the folders to a minimum in order to keep down the complexity and confusion in trying to locate a particular folder during playback. If a CD contains more than the maximum of 50 folders, 50 playlists, 10 sessions, and 255 files the player will let you access and navigate up to the maximum, but all items over the maximum will be ignored.

Root Directory

The root directory will be treated as a folder. If the root directory has compressed audio files, the directory will be displayed as F1 ROOT. All files contained directly under the root directory will be accessed prior to any root directory folders. However, playlists (Px) will always be accessed before root folders or files.

Empty Directory or Folder

If a root directory or a folder exists somewhere in the file structure that contains only folders/subfolders and no compressed files directly beneath them, the player will advance to the next folder in the file structure that contains compressed audio files and the empty folder will not be displayed or numbered.

Downloaded from www.Manualslib.com manuals search engine

No Folder

When the CD contains only compressed files, the files will be located under the root folder. The next and previous folder functions will have no function on a CD that was recorded without folders or playlists. When displaying the name of the folder the radio will display ROOT.

When the CD contains only playlists and compressed audio files, but no folders, all files will be located under the root folder. The folder down and the folder up buttons will search playlists (Px) first and then go to the root folder. When the radio displays the name of the folder the radio will display ROOT.

Order of Play

Tracks will be played in the following order:

- Play will begin from the first track in the first playlist and will continue sequentially through all tracks in each playlist. When the last track of the last playlist has been played, play will continue from the first track of the first playlist.
- If the CD does not contain any playlists, then play will begin from the first track under the root directory. When all tracks from the root directory have been played, play will continue from files according to their numerical listing. After playing the last track from the last folder, play will begin again at the first track of the first folder or root directory.

When play enters a new folder, the display will not automatically show the new folder name unless you have chosen the folder mode as the default display. See RCL later in this section for more information. The new track name will appear on the display.

File System and Naming

The song name that will be displayed will be the song name that is contained in the ID3 tag. If the song name is not present in the ID3 tag, then the radio will display the file name without the extension (such as .mp3) as the track name.

Track names longer than 32 characters or 4 pages will be shortened. The display will not show parts of words on the last page of text and the extension of the filename will not be displayed.

Preprogrammed Playlists

You can access preprogrammed playlists which were created by WinAmp™, MusicMatch™, or Real Jukebox™ software, however, you will not have editing capability. These playlists will be treated as special folders containing compressed audio song files.

Downloaded from www.Manualslib.com manuals search engine

Playing an MP3

Insert a CD partway into the slot, label side up. The player will pull it in, and READING will appear on the display. The CD should begin playing and the CD symbol will appear on the display. If you want to insert a CD with the ignition off, first press the EJECT button or the RCL knob.

If the ignition or radio is turned off with a CD in the player it will stay in the player. When the ignition or radio is turned on, the CD will start to play where it stopped, if it was the last selected audio source.

As each new track starts to play, the track number will appear on the display.

The CD player can play the smaller 3 inch (8 cm) single CDs with an adapter ring. Full-size CDs and the smaller CDs are loaded in the same manner.

If playing a CD-R, the sound quality may be reduced due to CD-R quality, the method of recording, the quality of the music that has been recorded, and the way the CD-R has been handled. There may be an increase in skipping, difficulty in finding tracks, and/or difficulty in loading and ejecting. If these problems occur, check the bottom surface of the CD. If the surface of the CD is damaged, such as cracked, broken, or scratched, the CD will not play properly. If the surface of the CD is soiled, see *Care of Your CDs on page 3-141* for more information.

If there is no apparent damage, try a known good CD.

Do not add any label to a CD, it could get caught in the CD player. If a CD is recorded on a personal computer and a description label is needed, try labeling the top of the recorded CD with a marking pen instead.

Notice: **If you add any label to a CD, insert more than one CD into the slot at a time, or attempt to play scratched or damaged CDs, you could damage the CD player. When using the CD player, use only CDs in good condition without any label, load one CD at a time, and keep the CD player and the loading slot free of foreign materials, liquids, and debris.**

If an error appears on the display, see “CD Messages” later in this section.

▷▷ **1 (Forward):** Press and hold this pushbutton to advance quickly within a track. Press and hold this pushbutton for less than two seconds to advance at 10 times the normal playing speed. Press and hold it for more than two seconds to advance at 20 times the normal playing speed. Release this pushbutton to play the track. FWD and the elapsed time of the track will appear on the display.

Downloaded from www.Manualslib.com manuals search engine

RDM 2 (Random): To repeat the tracks in the current folder or playlist, press and release this pushbutton. FOLDER RANDOM will appear on the display. Once all of the tracks in the current folder or playlist have been played, the system will move on to the next folder or playlist and play all of the tracks in random order.

To repeat the tracks on the CD, press and hold this pushbutton for two seconds. You will hear a beep and DISC RANDOM will appear on the display. This feature will not work with playlists.

When in random, pressing and releasing either SEEK arrow will take you to the next or previous random track.

Press and release this pushbutton again to turn off random play. NO RANDOM will appear on the display.

3 (Next Folder): Press this pushbutton to go to the first track in the next folder or playlist. If the disc contains playlists, it will go through the playlist, then the folders. Pressing this button while in folder random mode will take you to the next folder and random the tracks in that folder. This function will not work on a CD that does not contain folders or playlists.

4 REV (Reverse): Press and hold this pushbutton to reverse quickly within a track. Press and hold this pushbutton for less than two seconds to reverse at 10 times the normal playing speed. Press and hold it for more than two seconds to reverse at 20 times the normal playing speed. Release this pushbutton to play the track. REV and the elapsed time of the track will appear on the display. If this pushbutton is pressed for more than 20 seconds, the radio will stop reversing and begin to play.

6 (Previous Folder): Press this pushbutton to go to the first track in the previous folder or playlist. If the disc contains playlists, it will go through the playlist, then the folders. Pressing this pushbutton while in folder random mode will take you to the previous folder and random the tracks in that folder. This function will not work on a CD that does not contain folders or playlists.

△ SEEK ▽: Press the up arrow to go to the start of the next track. Press the down arrow to go to the start of the previous track. Pressing either arrow for more than two seconds will search the previous or next tracks at two tracks per second. When the track number that you would like to play appears on the display, release the arrow to stop searching and to play the track.

Downloaded from www.Manualslib.com manuals search engine

TUNE: Turn this knob to fast track reverse or advance through tracks in all folders or playlists. The track number and file name will appear on the display for each track. Turn this knob while in random to fast track reverse or advance the tracks in sequential order.

RCL (Recall): Push this knob to switch between track mode, folder/playlist mode, and time of day mode. The display will show only 13 characters, but there can be up to three pages of text. If there are more than 13 characters in the song, folder, or playlist name pushing this knob within two seconds will take you to the next page of text. If there are no other pages to be shown, pushing this knob within two seconds will take you to the next display mode.

Track mode will display the current track number and the ID3 tag song name.

Folder/playlist mode will display the current folder or playlist number and the folder/playlist name.

Time of day mode will display the time of day and the ID3 tag song name.

To change the default on the display, push this knob until you see the display you want, then hold this knob for two seconds. The radio will produce one beep and the selected display will now be the default.

INFO (Information): INFO will appear on the display whenever a current track has ID3 tag information. Press this button to display the artist name and album contained in the tag. INFO will disappear from the display when the information in the ID3 tag has finished.

BAND: Press this button to listen to the radio when a CD is playing. The inactive CD will remain safely inside the radio for future listening.

CD AUX (Auxiliary): Press this button to play a CD when listening to the radio. The CD symbol will appear on the display when a CD is loaded.

EJECT: Press this button to eject a CD. Eject may be activated with either the ignition or radio off. CDs may be loaded with the radio and ignition off if this button is pressed first.

Downloaded from www.Manualslib.com manuals search engine

CD Messages

CHECK CD: If this message appears on the display and/or the CD comes out, it could be for one of the following reasons:

- It is very hot. When the temperature returns to normal, the CD should play.
- You are driving on a very rough road. When the road becomes smoother, the CD should play.
- The CD is dirty, scratched, wet, or upside down.
- The air is very humid. If so, wait about an hour and try again.
- The format of the CD may not be compatible. See “MP3 Format” earlier in this section.
- There may have been a problem while burning the CD.
- The label may be caught in the CD player.

If the CD is not playing correctly, for any other reason, try a known good CD.

If any error occurs repeatedly or if an error cannot be corrected, contact your GM dealer. If the radio displays an error message, write it down and provide it to your GM dealer when reporting the problem.

Radio with Six-Disc CD

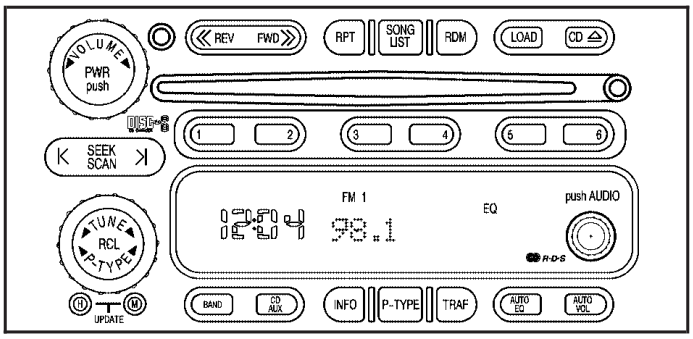

If your vehicle has the Monsoon audio system, included are nine speakers and an eight channel amplifier. The radio will display MONSOON when the radio or the ignition is turned on. See your GM dealer for details.

Radio Data System (RDS)

The audio system has a Radio Data System (RDS). RDS features are available for use only on FM stations that broadcast RDS information.

Downloaded from www.Manualslib.com manuals search engine

With RDS, the radio can do the following:

- Seek to stations broadcasting the selected type of programming
- Receive announcements concerning local and national emergencies
- Display messages from radio stations
- Seek to stations with traffic announcements

This system relies upon receiving specific information from these stations and will only work when the information is available. In rare cases, a radio station may broadcast incorrect information that will cause the radio features to work improperly. If this happens, contact the radio station.

While the radio is tuned to an RDS station, the station name or call letters will appear on the display instead of the frequency. RDS stations may also provide the time of day, a program type (PTY) for current programming, and the name of the program being broadcast.

XM™ Satellite Radio Service

XM™ is a satellite radio service that is based in the 48 contiguous United States and in Canada (if available). XM™ offers over 100 coast-to-coast channels including music, news, sports, talk, and children's programming. XM™ provides digital quality audio and text information that includes song title and artist name. A service fee is required in order to receive the XM™ service. For more information, contact XM™ at www.xmradio.com or call 1-800-852-XMXM (9696).

Playing the Radio

PWR (Power): Push this knob to turn the system on and off.

VOLUME: Turn this knob to increase or to decrease the volume.

RCL (Recall): Press this knob to switch the display between the radio station frequency and the time. When the ignition is off, press this knob to display the time.

Downloaded from www.Manualslib.com manuals search engine

For RDS, press the RCL knob to change what appears on the display while using RDS. The display options are station name, RDS station frequency, PTY, and the name of the program (if available).

For XM™ (if equipped), press the RCL knob while in XM mode to retrieve four different categories of information related to the current song or channel: Artist, Song Title, Category or PTY, Channel Number/Channel Name.

To change the default on the display, press the RCL knob until you see the display you want, then hold the knob until the display flashes. The selected display will now be the default.

AUTO VOL (Automatic Volume): With automatic volume, the audio system adjusts automatically to make up for road and wind noise as you drive.

Set the volume at the desired level. Press this button to select MIN, MED, or MAX. Each higher setting will allow for more volume compensation at faster vehicle speeds. Then, as you drive, automatic volume increases the volume, as necessary, to overcome noise at any speed. The volume level should always sound the same to you as you drive. To turn automatic volume off, press this button until OFF appears on the display.

Finding a Station

BAND: Press this button to switch between FM1, FM2, AM, or XM1 or XM2 (if equipped). The display will show the selection.

TUNE: Turn this knob to select radio stations.

⊲ SEEK ⊳ : Press the right or the left arrow to go to the next or to the previous station and stay there.

The radio will only seek stations with a strong signal that are in the selected band.

⊲ SCAN ⊳ : Press and hold either SCAN arrow for two seconds until SC appears on the display and you hear a beep. The radio will go to a station, play for a few seconds, then go on to the next station. Press either SCAN arrow again to stop scanning.

To scan preset stations, press and hold either SCAN arrow for more than four seconds. PRESET SCAN will appear on the display and you will hear a double beep. The radio will go to the first preset station stored on the pushbuttons, play for a few seconds, then go on to the next preset station. Press either SCAN arrow again to stop scanning presets.

The radio will only scan stations with a strong signal that are in the selected band.

Downloaded from www.Manualslib.com manuals search engine

Setting Preset Stations

Up to 30 stations (six FM1, six FM2, and six AM, six XM1 and six XM2 (if equipped)), can be programmed on the six numbered pushbuttons, by performing the following steps:

1. Turn the radio on.
2. Press BAND to select FM1, FM2, AM, or XM1 or XM2.
3. Tune in the desired station.
4. Press AUTO EQ to select the equalization.
5. Press and hold one of the six numbered pushbuttons until you hear a beep. Whenever that numbered pushbutton is pressed, the station that was set will return and the equalization that was selected will be stored for that pushbutton.
6. Repeat the steps for each pushbutton.

Setting the Tone (Bass/Midrange/Treble)

AUDIO: Push the AUDIO knob until BASS, MID, or TREB appears on the display. Turn the knob to increase or to decrease. If a station is weak or noisy, decrease the treble.

To adjust bass, midrange, or treble to the middle position, select BASS, MID, or TREB and push and hold the AUDIO knob. The display level will be adjusted to the middle position and you will hear a beep.

To adjust all tone and speaker controls to the middle position, push and hold the AUDIO knob when no tone or speaker control is displayed. CENTERED will appear on the display and you will hear one beep.

AUTO EQ (Automatic Equalization): Press this button to select customized equalization settings designed for country, jazz, talk, pop, rock, and classical.

To return to the manual mode, press the AUTO EQ button until CUSTOM appears on the display. Then manually adjust the bass, midrange, and treble using the AUDIO knob.

Downloaded from www.Manualslib.com manuals search engine

Adjusting the Speakers (Balance/Fade)

AUDIO: To adjust the balance between the right and the left speakers, push the AUDIO knob until BAL appears on the display. Turn the knob to move the sound toward the right or the left speakers.

To adjust the fade between the front and rear speakers, push and hold the AUDIO knob until FAD appears on the display. Turn the knob to move the sound toward the front or the rear speakers.

To adjust the balance and the fade to the middle position, select balance or fade and push and hold the AUDIO knob. The display level will be adjusted to the middle position and you will hear a beep.

To adjust all tone and speaker controls to the middle position, push and hold the AUDIO knob when no tone or speaker controls are displayed. CENTERED will appear on the display and you will hear one beep.

Finding a Program Type (PTY) Station (RDS and XM™)

To select and find a desired PTY perform the following:

1. Press the P-TYPE button to activate program type select mode. P-TYPE and the last selected PTY will appear on the display.
2. Turn the P-TYPE knob to select a PTY.
3. Once the desired PTY is displayed, press either SEEK arrow to select and to take you to the PTY's first station.
4. To go to another station within that PTY, and the PTY is displayed, press either SEEK arrow once. If the PTY is not displayed, press either SEEK arrow twice to display the PTY and then to go to another station.
5. Press P-TYPE to exit program type select mode.

   If PTY times out and is no longer on the display, go back to Step 1.

If both P-TYPE and TRAF are on, the radio will search for stations with the selected PTY and traffic announcements.

Downloaded from www.Manualslib.com manuals search engine

To use the PTY interrupt feature, press and hold the P-TYPE button until you hear a beep on the PTY you want to interrupt with. When selected, an asterisk will appear beside that PTY on the display. You may select multiple interrupts, if desired. When you are listening to a CD, the last selected RDS station will interrupt play, if that selected program type format is broadcast.

SCAN: Scan the stations within a PTY by performing the following:

1. Press the P-TYPE button to activate program type select mode. P-TYPE and the last selected PTY will appear on the display.
2. Turn the P-TYPE knob to select a PTY.
3. Once the desired PTY is displayed, press and hold either SCAN arrow, and the radio will begin scanning the stations in the PTY.
4. Press either SCAN arrow to stop at a station.

If both P-TYPE and TRAF are on, the radio will scan for stations with the selected PTY and traffic announcements.

BAND (Alternate Frequency): Alternate frequency allows the radio to switch to a stronger station with the same program type. To turn alternate frequency on, press and hold BAND for two seconds. AF ON will appear on the display. The radio may switch to stations with a stronger frequency.

To turn alternate frequency off, press and hold BAND again for two seconds. AF OFF will appear on the display. The radio will not switch to other stations.

This function does not apply for XM™ Satellite Radio Service.

Downloaded from www.Manualslib.com manuals search engine

Setting Preset PTYs (RDS Only)

These buttons have factory PTY presets. Up to 12 PTYs (six FM1 and six FM2), can be programmed on the six numbered pushbuttons, by performing the following steps:

1. Press BAND to select FM1 or FM2.
2. Press the P-TYPE button to activate program type select mode. P-TYPE and the last selected PTY will appear on the display.
3. Turn the P-TYPE knob to select a PTY.
4. Press and hold one of the six numbered pushbuttons until you hear a beep. Whenever that numbered pushbutton is pressed, the PTY that was set will return.
5. Repeat the steps for each pushbutton.

RDS Messages

ALERT!: Alert warns of local or national emergencies. When an alert announcement comes on the current radio station, ALERT! will appear on the display. You will hear the announcement, even if the volume is low or a CD is playing. If a CD is playing, play will stop during the announcement. Alert announcements cannot be turned off.

ALERT! will not be affected by tests of the emergency broadcast system. This feature is not supported by all RDS stations.

INFO (Information): If the current station has a message, INFO will appear on the display. Press this button to see the message. The message may display the artist, song title, call in phone numbers, etc.

Downloaded from www.Manualslib.com manuals search engine

If the entire message is not displayed, parts of the message will appear every three seconds. To scroll through the message, press and release the INFO button. A new group of words will appear on the display after every press of this button. Once the complete message has been displayed, INFO will disappear from the display until another new message is received. The last message can be displayed by pressing the INFO button. You can view the last message until a new message is received or a different station is tuned to.

TRAF (Traffic): If TRAF appears on the display, the tuned station broadcasts traffic announcements. To receive the traffic announcement from the tuned station, press this button. Brackets will be displayed around TRAF and when a traffic announcement comes on the tuned radio station you will hear it.

If the current tuned station does not broadcast traffic announcements, press the TRAF button and the radio will seek to a station that does. When a station that broadcasts traffic announcements is found, the radio will stop seeking and brackets will be displayed around TRAF. If no station is found, NO TRAFFIC will appear on the display.

If the brackets are on the display and TRAF is not, press the TRAF button to remove the brackets or use the TUNE knob or the SEEK arrows to go to a station that supports traffic announcements. If no station is found that broadcasts traffic announcements, NO TRAFFIC will appear on the display.

The radio will play the traffic announcement if the volume is low. The radio will interrupt the play of a CD if the last tuned station broadcasts traffic announcements and the brackets are displayed.

This function does not apply to XM™ Satellite Radio Service.

Radio Messages

CAL ERR (Calibration Error): The audio system has been calibrated for your vehicle from the factory. If CAL ERR appears on the display it means that the radio has not been configured properly for the vehicle and it must be returned to your GM dealer for service.

LOCKED: This message is displayed when the THEFTLOCK® system has locked up. Take your vehicle to your GM dealer for service.

If any error occurs repeatedly or if an error cannot be corrected, contact your GM dealer.

Downloaded from www.Manualslib.com manuals search engine

XM™ Radio Messages

Radio Display Message	Condition	Action Required
XL (Explicit Language Channels)	XL on the radio display, after the channel name, indicates content with explicit language.	These channels, or any others, can be blocked at a customer's request, by calling 1-800-852-XMXM (9696).
Updating	Updating encryption code	The encryption code in the receiver is being updated, and no action is required. This process should take no longer than 30 seconds.
No Signal	Loss of signal	The system is functioning correctly, but the vehicle is in a location that is blocking the XM signal. When the vehicle is moved into an open area, the signal should return.
Loading XM	Acquiring channel audio (after 4 second delay)	The audio system is acquiring and processing audio and text data. No action is needed. This message should disappear shortly.
CH Off Air	Channel not in service	This channel is not currently in service. Tune to another channel.
CH Unavail	Channel no longer available	This previously assigned channel is no longer assigned. Tune to another station. If this station was one of the presets, choose another station for that preset button.
No Info	Artist Name/Feature not available	No artist information is available at this time on this channel. The system is working properly.

Downloaded from www.Manualslib.com manuals search engine

XM™ Radio Messages (cont'd)

Radio Display Message	Condition	Action Required
No Info	Song/Program Title not available	No song title information is available at this time on this channel. The system is working properly.
No Info	Category Name not available	No category information is available at this time on this channel. The system is working properly.
No Info	No Text/Informational message available	No text or informational messages are available at this time on this channel. The system is working properly.
Not Found	No channel available for the chosen category	There are no channels available for the selected category. The system is working properly.
XM Locked	Theft lock active	The XM receiver in the vehicle may have previously been in another vehicle. For security purposes, XM receivers cannot be swapped between vehicles. If this message is received after having your vehicle serviced, check with your GM dealer.
Radio ID	Radio ID label (channel 0)	If tuned to channel 0, this message will alternate with the XM Radio 8 digit radio ID label. This label is needed to activate the service.
Unknown	Radio ID not known (should only be if hardware failure)	If this message is received when tuned to channel 0, there may be a receiver fault. Consult with your GM dealer.
Chk XMRcvr	Hardware failure	If this message does not clear within a short period of time, the receiver may have a fault. Consult with your GM dealer.

Downloaded from www.Manualslib.com manuals search engine

Playing a CD

If the ignition or radio is turned off, with a CD in the player, it will stay in the player. When the ignition or radio is turned on, the CD will start playing where it stopped, if it was the last selected audio source.

When a CD is inserted, the CD symbol will appear on the CD. As each new track starts to play, the track number will appear on the display.

The CD player can play the smaller 3 inch (8 cm) single CDs with an adapter ring. Full-size CDs and the smaller CDs are loaded in the same manner.

If playing a CD-R, the sound quality may be reduced due to CD-R quality, the method of recording, the quality of the music that has been recorded, and the way the CD-R has been handled. There may be an increase in skipping, difficulty in finding tracks, and/or difficulty in loading and ejecting. If these problems occur, check the bottom surface of the CD. If the surface of the CD is damaged, such as cracked, broken, or scratched, the CD will not play properly. If the surface of the CD is soiled, see *Care of Your CDs on page 3-141* for more information.

If there is no apparent damage, try a known good CD.

Do not add any label to a CD, it could get caught in the CD player. If a CD is recorded on a personal computer and a description label is needed, try labeling the top of the recorded CD with a marking pen instead.

Notice: **If you add any label to a CD, insert more than one CD into the slot at a time, or attempt to play scratched or damaged CDs, you could damage the CD player. When using the CD player, use only CDs in good condition without any label, load one CD at a time, and keep the CD player and the loading slot free of foreign materials, liquids, and debris.**

If an error appears on the display, see “CD Messages” later in this section.

LOAD CD ⏏ : Press the LOAD side of this button to load CDs into the CD player. This CD player will hold up to six CDs.

To insert one CD, do the following:

1. Turn the ignition on.
2. Press and release the LOAD button.
3. Wait for the light, located to the right of the slot, to turn green.
4. Load a CD. Insert the CD partway into the slot, label side up. The player will pull the CD in.

Downloaded from www.Manualslib.com manuals search engine

To insert multiple CDs, do the following:

1. Turn the ignition on.
2. Press and hold the LOAD button for two seconds.

   You will hear a beep and the light, located to the right of the slot, will begin to flash.
3. Once the light stops flashing and turns green, load a CD. Insert the CD partway into the slot, label side up. The player will pull the CD in.
4. Once the CD is loaded, the light will begin flashing again. Press the LOAD button again. Once the light turns green, load the next disc. Repeat this procedure for each CD. The CD player takes up to six CDs. Do not try to load more than six.

To load more than one CD but less than six, complete Steps 1 through 3. When finished loading CDs, the radio will begin to play the last CD loaded.

If more than one CD has been loaded, a number for each CD will be displayed.

Playing a Specific Loaded CD

For every CD loaded, a number will appear on the display. To play a specific CD, first press the CD AUX button, then press the numbered pushbutton that corresponds to the CD. A small bar will appear under the CD number that is playing and the track number will appear.

If an error appears on the display, see “CD Messages” later in this section.

LOAD CD ⏏ (Eject): Press the CD eject side of this button to eject a CD(s). You will hear a beep and the indicator light will flash to let you know when a CD is being ejected.

REMOVE CD will appear on the display. The CD can be removed. If the CD is not removed, after 25 seconds, the CD will be automatically pulled back into the player. If the CD is pushed back into the player, before the 25 second time period is complete, the player will sense an error and will try to eject the CD several times before stopping.

Downloaded from www.Manualslib.com manuals search engine

Do not repeatedly press the CD eject button to eject a CD after trying to push it in manually. The player's 25-second eject timer will reset at each press of eject, causing the player to not eject the CD until the 25-second time period has elapsed.

Once the player stops and the CD is ejected, remove the CD. After removing the CD, push the PWR knob off and then on again, or wait for the system to reset. This will clear the CD-sensing feature and enable CDs to be loaded into the player again.

≪ **REV (Reverse):** Press and hold this button to reverse quickly within a track. You will hear sound at a reduced volume. Release this button to play the passage. The elapsed time of the track will appear on the display.

FWD ≫ (Forward): Press and hold this button to advance quickly within a track. You will hear sound at a reduced volume. Release this button to play the passage. The elapsed time of the track will appear on the display.

RPT (Repeat): With repeat, one track or an entire CD can be repeated.

To use repeat, do the following:

- To repeat the track you are listening to, press and release the RPT button. RPT will appear on the display. Press RPT again to turn off repeat play.
- To repeat the CD you are listening to, press and hold the RPT button for two seconds. RPT will appear on the display. Press RPT again to turn off repeat play.

RDM (Random): With random, you can listen to the tracks in random, rather than sequential, order, on one CD or on all of the CDs.

To use random, do one of the following:

- To play the tracks on the CD you are listening to in random order, press and release the RDM button. RANDOM ONE will appear on the display. Press RDM again to turn off random play.
- To play the tracks on all of the CDs that are loaded, in random order, press and hold RDM for more than two seconds. You will hear a beep and RANDOM ALL will appear on the display. Press RDM again to turn off random play.

Downloaded from www.Manualslib.com manuals search engine

AUTO EQ (Automatic Equalization): Press AUTO EQ to select the desired equalization setting while playing a CD. The equalization will be set whenever a CD is played. For more information on AUTO EQ, see “AUTO EQ” listed previously in this section.

⊢ SEEK ⊣ : Press the left arrow to go to the start of the current track, if more than ten seconds have played. Press the right arrow to go to the next track. If either arrow is held or pressed more than once, the player will continue moving backward or forward through the CD.

⊢ SCAN ⊣ : To scan one CD, press and hold either SCAN arrow for more than two seconds until SCAN appears on the display and you hear a beep. Use this feature to listen to 10 seconds of each track of the currently selected CD. Press either SCAN arrow again, to stop scanning.

To scan all loaded CDs, press and hold either SCAN arrow for more than four seconds until CD SCAN appears on the display and you hear a beep. Use this feature to listen to 10 seconds of the first track of each loaded CD. Press either SCAN arrow again, to stop scanning.

RCL (Recall): Press this knob to see how long the current track has been playing. To change the default on the display, track and elapsed time, press the knob until you see the display you want, then hold the knob until the display flashes. The selected display will now be the default.

BAND: Press this button to play the radio when a CD is playing. The inactive CD(s) will remain safely inside the radio for future listening.

CD AUX (Auxiliary): Press this button to play a CD when listening to the radio.

Downloaded from www.Manualslib.com manuals search engine

Using Song List Mode

The six-disc CD changer has a feature called song list. This feature is capable of saving 20 track selections.

To save tracks into the song list feature, perform the following steps:

1. Turn the CD player on and load it with at least one CD. See “LOAD CD” listed previously in this section for more information.
2. Check to see that the CD changer is not in song list mode. S-LIST should not appear in the display. If S-LIST is present, press the SONG LIST button to turn it off.
3. Select the desired CD by pressing the numbered pushbutton and then use the SEEK SCAN right arrow to locate the track to be saved. The track will begin to play.
4. Press and hold the SONG LIST button to save the track into memory. When SONG LIST is pressed, one beep will be heard immediately. After two seconds of continuously pressing the SONG LIST button, two beeps will be heard to confirm that the track has been saved.
5. Repeat Steps 3 and 4 for saving other selections.

S-LIST FULL will appear on the display if you try to save more than 20 selections.

To play the song list, press the SONG LIST button. One beep will be heard and S-LIST will appear on the display. The recorded tracks will begin to play in the order they were saved.

Seek through the song list by using the SEEK SCAN arrows. Seeking past the last saved track will return the song list to the first saved track.

To delete tracks from the song list, perform the following steps:

1. Turn the CD player on.
2. Press the SONG LIST button to turn song list on. S-LIST will appear on the display.
3. Press the SEEK SCAN arrows to select the desired track to be deleted.
4. Press and hold the SONG LIST button for two seconds. When SONG LIST is pressed, one beep will be heard immediately. After two seconds of continuously pressing the SONG LIST button, two beeps will be heard to confirm that the track has been deleted.

After a track has been deleted, the remaining tracks are moved up the list. When another track is added to the song list, the track will be added to the end of the list.

Downloaded from www.Manualslib.com manuals search engine

To delete the entire song list, perform the following steps:

1. Turn the CD player on.
2. Press the SONG LIST button to turn song list on. S-LIST will appear on the display.
3. Press and hold the SONG LIST button for more than four seconds. One beep will be heard, followed by two beeps after two seconds, and a final beep will be heard after four seconds. S-LIST EMPTY will appear on the display indicating the song list has been deleted.

If a CD is ejected, and the song list contains saved tracks from that CD, those tracks are automatically deleted from the song list. Any tracks saved to the song list again are added to the bottom of the list.

To end song list mode, press the SONG LIST button. One beep will be heard and S-LIST will be removed from the display.

CD Messages

CHECK CD: If this message appears on the display and/or the CD comes out, it could be for one of the following reasons:

- It is very hot. When the temperature returns to normal, the CD should play.
- You are driving on a very rough road. When the road becomes smoother, the CD should play.
- The CD is dirty, scratched, wet, or upside down.
- The air is very humid. If so, wait about an hour and try again.
- There may have been a problem while burning the CD.
- The label may be caught in the CD player.

If the CD is not playing correctly, for any other reason, try a known good CD.

If any error occurs repeatedly or if an error cannot be corrected, contact your GM dealer. If the radio displays an error message, write it down and provide it to your GM dealer when reporting the problem.

Downloaded from www.Manualslib.com manuals search engine

Navigation/Radio System

Your vehicle may have a navigation radio system.

The navigation system has built-in features intended to minimize driver distraction. Technology alone, no matter how advanced, can never replace your own judgment. See the navigation system manual for some tips to help you reduce distractions while driving.

Theft-Deterrent Feature

THEFTLOCK® is designed to discourage theft of your vehicle's radio. The feature works automatically by learning a portion of the Vehicle Identification Number (VIN). If the radio is moved to a different vehicle, it will not operate and LOCKED will appear on the display.

When the radio and vehicle are turned off, the blinking red light indicates that THEFTLOCK® is armed.

With THEFTLOCK® activated, the radio will not operate if stolen.

Audio Steering Wheel Controls

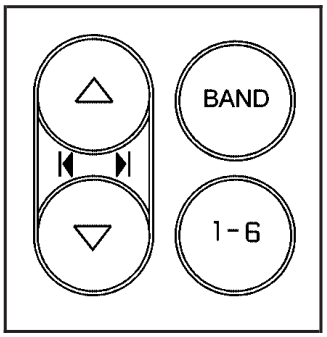

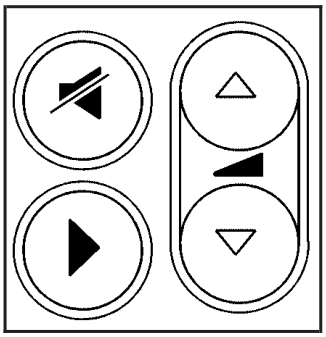

If your vehicle has this feature, some audio controls can be adjusted at the steering wheel. They include the following:

△|◀ ▶| ▽ **(Seek):** Press the up or the down arrow to go to the next or previous station and stay there.

To scan stations, press and hold either arrow for two seconds until FREQUENCY SCAN appears on the display. The radio will go to a station, play for a few seconds, then go to the next station. Press either arrow again to stop scanning.

The sound will mute while seeking or scanning. The radio will only seek or scan stations with a strong signal that are in the selected band.

Downloaded from www.Manualslib.com manuals search engine

When a CD is playing, press either arrow to go to the previous or next track, if more than eight seconds have played. If either arrow is held or pressed more than once, the player will continue moving backward or forward through the CD.

BAND: Press this button to switch between FM1, FM2, AM, or XM1 or XM2 (if equipped).

1 - 6: Press this button to scan the stations that are programmed on the radio preset pushbuttons. The radio will go to the next preset station stored on the pushbuttons, play for a few seconds, then go on to the next preset station. Press this button again to stop scanning. The radio will only scan preset stations with a strong signal that are in the selected band.

(Mute/OnStar®): Press and release this button to silence the audio system. Press it again, or any other radio button to turn the sound on.

If your vehicle is equipped with OnStar, press and hold this button to interact with the OnStar system. See the *OnStar® System on page 2-38* in this manual for more information.

(Play): When listening to the radio, press this button to play a cassette tape or CD.

(Volume): Press the up or down arrow to increase or decrease the volume.

Radio Reception

You may experience frequency interference and static during normal radio reception if items such as cellphone chargers, vehicle convenience accessories, and external electronic devices are plugged into the accessory power outlet. If there is interference or static, unplug the item from the accessory power outlet.

AM

The range for most AM stations is greater than for FM, especially at night. The longer range can cause station frequencies to interfere with each other.
For better radio reception, most AM radio stations will boost the power levels during the day, and then reduce these levels during the night. Static can also occur when things like storms and power lines interfere with radio reception. When this happens, try reducing the treble on your radio.

FM Stereo

FM stereo will give the best sound, but FM signals will reach only about 10 to 40 miles (16 to 65 km). Tall buildings or hills can interfere with FM signals, causing the sound to fade in and out.

Downloaded from www.Manualslib.com manuals search engine

XM™ Satellite Radio Service

XM™ Satellite Radio Service gives digital radio reception from coast-to-coast in the 48 contiguous United States, and in Canada (if available). Just as with FM, tall buildings or hills can interfere with satellite radio signals, causing the sound to fade in and out. In addition, traveling or standing under heavy foliage, bridges, garages, or tunnels may cause loss of the XM™ signal for a period of time. The radio may display NO SIGNAL to indicate interference.

Care of Your CDs

Handle CDs carefully. Store them in their original cases or other protective cases and away from direct sunlight and dust. The CD player scans the bottom surface of the disc. If the surface of a CD is damaged, such as cracked, broken, or scratched, the CD will not play properly or not at all. If the surface of a CD is soiled, take a soft, lint free cloth or dampen a clean, soft cloth in a mild, neutral detergent solution mixed with water, and clean it. Make sure the wiping process starts from the center to the edge.

Do not touch the bottom side of a CD while handling it; this could damage the surface. Pick up CDs by grasping the outer edges or the edge of the hole and the outer edge.

Care of the CD Player

The use of CD lens cleaners for CD players is not advised, due to the risk of contaminating the internal lens of the CD optics with lubricants.

Backglass Antenna

The AM-FM antenna is integrated with the rear window defogger, located in the rear window. Be sure that the inside surface of the rear window is not scratched and that the lines on the glass are not damaged. If the inside surface is damaged, it could interfere with radio reception. Also, for proper radio reception, the antenna connector at the top-center of the rear window needs to be properly attached to the post on the glass.

Notice: **Using a razor blade or sharp object to clear the inside rear window may damage the rear window antenna and/or the rear window defogger. Repairs would not be covered by your warranty. Do not clear the inside rear window with sharp objects.**

Notice: **Do not apply aftermarket glass tinting with metallic film. The metallic film in some tinting materials will interfere with or distort the incoming radio reception. Any damage caused to your backglass antenna due to metallic tinting materials will not be covered by your warranty.**

Downloaded from www.Manualslib.com manuals search engine

Because this antenna is built into your rear window, there is a reduced risk of damage caused by car washes and vandals.

If you choose to add a cellular telephone to your vehicle, and the antenna needs to be attached to the glass, be sure that you do not damage the grid lines for the AM-FM antenna. There is enough space between the lines to attach a cellular telephone antenna without interfering with radio reception.

Do not apply aftermarket glass tinting to the back glass. The metallic film in some tinting materials will interfere with or distort the incoming radio reception. Care must be taken when cleaning the rear window because it breaks in the resistive material heating element and will adversely affect radio and defogger performance. See your dealer for details.

XM™ Satellite Radio Antenna System

The XM™ Satellite Radio antenna is located on the roof of your vehicle. Keep this antenna clear of snow and ice build up for clear radio reception.

If your vehicle has a sunroof, the performance of the XM™ system may be affected if the sunroof is open.

Loading items onto the roof of your vehicle can interfere with the performance of the XM™ system. Make sure the XM™ Satellite Radio antenna is not obstructed.

Chime Level Adjustment

The radio is used to adjust the vehicle's chime level. To change the volume level of the chime, press and hold pushbutton 6 with the ignition on and the radio power off. The volume level will change from the normal level to loud, and LOUD will appear on the radio display. To change back to the default or normal setting, press and hold pushbutton 6 again. The volume level will change from the loud level to normal, and NORMAL will appear on the radio display. Each time the chime volume is changed, three chimes will sound as an example of the new volume selected. Removing the radio and not replacing it with a factory radio or chime module will disable vehicle chimes.

Downloaded from www.Manualslib.com manuals search engine

Section 4 Driving Your Vehicle

Your Driving, the Road, and Your Vehicle 4-2
Defensive Driving 4-2
Drunken Driving 4-3
Control of a Vehicle 4-5
Braking 4-6
Anti-Lock Brake System (ABS) 4-7
Braking in Emergencies 4-8
Traction Control System (TCS) 4-9
Enhanced Traction System (ETS) 4-11
StabiliTrak® Plus System 4-12
Steering 4-13
Off-Road Recovery 4-16
Passing 4-16
Loss of Control 4-18
Driving at Night 4-19
Driving in Rain and on Wet Roads 4-20
City Driving 4-22
Freeway Driving 4-23
Before Leaving on a Long Trip 4-24
Highway Hypnosis 4-25
Hill and Mountain Roads 4-26
Winter Driving 4-28
If Your Vehicle is Stuck in Sand, Mud, Ice or Snow 4-32
Rocking Your Vehicle to Get It Out 4-33
Loading Your Vehicle 4-33
Towing 4-38
Towing Your Vehicle 4-38
Recreational Vehicle Towing 4-38
Towing a Trailer 4-40

Downloaded from www.Manualslib.com manuals search engine

Your Driving, the Road, and Your Vehicle

Defensive Driving

The best advice anyone can give about driving is: Drive defensively.

Please start with a very important safety device in your vehicle: Buckle up. See *Safety Belts: They Are for Everyone on page 1-10*.

⚠ CAUTION:

Defensive driving really means "Be ready for anything." On city streets, rural roads, or expressways, it means "Always expect the unexpected." Assume that pedestrians or other drivers are going to be careless and make mistakes. Anticipate what they might do and be ready. Rear-end collisions are about the most preventable of accidents. Yet they are common. Allow enough following distance. Defensive driving requires that a driver concentrate on the driving task. Anything that distracts from the driving task makes proper defensive driving more difficult and can even cause a collision, with resulting injury. Ask a passenger to help do these things, or pull off the road in a safe place to do them. These simple defensive driving techniques could save your life.

Downloaded from www.Manualslib.com manuals search engine

Drunken Driving

Death and injury associated with drinking and driving is a national tragedy. It is the number one contributor to the highway death toll, claiming thousands of victims every year.

Alcohol affects four things that anyone needs to drive a vehicle:

- Judgment
- Muscular Coordination
- Vision
- Attentiveness

Police records show that almost half of all motor vehicle-related deaths involve alcohol. In most cases, these deaths are the result of someone who was drinking and driving. In recent years, more than 16,000 annual motor vehicle-related deaths have been associated with the use of alcohol, with more than 300,000 people injured.

Many adults — by some estimates, nearly half the adult population — choose never to drink alcohol, so they never drive after drinking. For persons under 21, it is against the law in every U.S. state to drink alcohol. There are good medical, psychological, and developmental reasons for these laws.

The obvious way to eliminate the leading highway safety problem is for people never to drink alcohol and then drive. But what if people do? How much is “too much” if someone plans to drive? It is a lot less than many might think. Although it depends on each person and situation, here is some general information on the problem.

The Blood Alcohol Concentration (BAC) of someone who is drinking depends upon four things:

- The amount of alcohol consumed
- The drinker’s body weight
- The amount of food that is consumed before and during drinking
- The length of time it has taken the drinker to consume the alcohol

Downloaded from www.Manualslib.com manuals search engine

According to the American Medical Association, a 180 lb (82 kg) person who drinks three 12 ounce (355 ml) bottles of beer in an hour will end up with a BAC of about 0.06 percent. The person would reach the same BAC by drinking three 4 ounce (120 ml) glasses of wine or three mixed drinks if each had 1-1/2 ounces (45 ml) of liquors like whiskey, gin, or vodka.

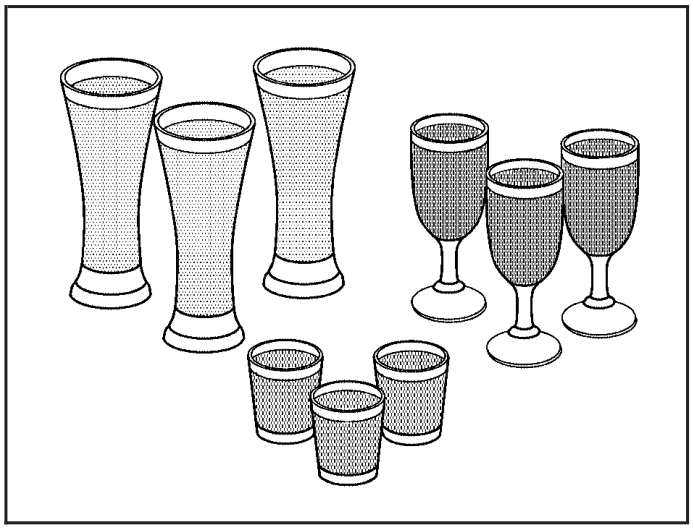

It is the amount of alcohol that counts. For example, if the same person drank three double martinis (3 ounces or 90 ml of liquor each) within an hour, the person's BAC would be close to 0.12 percent. A person who consumes food just before or during drinking will have a somewhat lower BAC level.

There is a gender difference, too. Women generally have a lower relative percentage of body water than men. Since alcohol is carried in body water, this means that a woman generally will reach a higher BAC level than a man of her same body weight will when each has the same number of drinks.

The law in most U.S. states, and throughout Canada, sets the legal limit at 0.08 percent. In some other countries, the limit is even lower. For example, it is 0.05 percent in both France and Germany. The BAC limit for all commercial drivers in the United States is 0.04 percent.

The BAC will be over 0.10 percent after three to six drinks (in one hour). Of course, as we have seen, it depends on how much alcohol is in the drinks, and how quickly the person drinks them.

But the ability to drive is affected well below a BAC of 0.10 percent. Research shows that the driving skills of many people are impaired at a BAC approaching 0.05 percent, and that the effects are worse at night. All drivers are impaired at BAC levels above 0.05 percent.

Downloaded from www.Manualslib.com manuals search engine

Statistics show that the chance of being in a collision increases sharply for drivers who have a BAC of 0.05 percent or above. A driver with a BAC level of 0.06 percent has doubled his or her chance of having a collision. At a BAC level of 0.10 percent, the chance of this driver having a collision is 12 times greater; at a level of 0.15 percent, the chance is 25 times greater!

The body takes about an hour to rid itself of the alcohol in one drink. No amount of coffee or number of cold showers will speed that up. “I will be careful” is not the right answer. What if there is an emergency, a need to take sudden action, as when a child darts into the street? A person with even a moderate BAC might not be able to react quickly enough to avoid the collision.

There is something else about drinking and driving that many people do not know. Medical research shows that alcohol in a person’s system can make crash injuries worse, especially injuries to the brain, spinal cord, or heart. This means that when anyone who has been drinking — driver or passenger — is in a crash, that person’s chance of being killed or permanently disabled is higher than if the person had not been drinking.

⚠ CAUTION:

Drinking and then driving is very dangerous. Your reflexes, perceptions, attentiveness, and judgment can be affected by even a small amount of alcohol. You can have a serious — or even fatal — collision if you drive after drinking. Please do not drink and drive or ride with a driver who has been drinking. Ride home in a cab; or if you are with a group, designate a driver who will not drink.

Control of a Vehicle

You have three systems that make your vehicle go where you want it to go. They are the brakes, the steering, and the accelerator. All three systems have to do their work at the places where the tires meet the road.

Downloaded from www.Manualslib.com manuals search engine

Sometimes, as when you are driving on snow or ice, it is easy to ask more of those control systems than the tires and road can provide. That means you can lose control of your vehicle. See *Traction Control System (TCS) on page 4-9* and *Enhanced Traction System (ETS) on page 4-11*.

Adding non-GM accessories can affect your vehicle's performance. See *Accessories and Modifications on page 5-3*.

Braking

See *Brake System Warning Light on page 3-42*.

Braking action involves perception time and reaction time.

First, you have to decide to push on the brake pedal. That is perception time. Then you have to bring up your foot and do it. That is reaction time.

Average reaction time is about three-fourths of a second. But that is only an average. It might be less with one driver and as long as two or three seconds or more with another. Age, physical condition, alertness, coordination, and eyesight all play a part. So do alcohol, drugs, and frustration. But even in three-fourths of a second, a vehicle moving at 60 mph (100 km/h) travels 66 feet (20 m). That could be a lot of distance in an emergency, so keeping enough space between your vehicle and others is important.

And, of course, actual stopping distances vary greatly with the surface of the road, whether it is pavement or gravel; the condition of the road, whether it is wet, dry, or icy; tire tread; the condition of your brakes; the weight of the vehicle; and the amount of brake force applied.

Avoid needless heavy braking. Some people drive in spurts — heavy acceleration followed by heavy braking — rather than keeping pace with traffic. This is a mistake. Your brakes may not have time to cool between hard stops. Your brakes will wear out much faster if you do a lot of heavy braking. If you keep pace with the traffic and allow realistic following distances, you will eliminate a lot of unnecessary braking. That means better braking and longer brake life.

If your engine ever stops while you are driving, brake normally but do not pump your brakes. If you do, the pedal may get harder to push down. If your engine stops, you will still have some power brake assist. But you will use it when you brake. Once the power assist is used up, it may take longer to stop and the brake pedal will be harder to push.

Adding non-GM accessories can affect your vehicle's performance. See *Accessories and Modifications on page 5-3*.

Downloaded from www.Manualslib.com manuals search engine

Anti-Lock Brake System (ABS)

Your vehicle may have anti-lock brakes. ABS is an advanced electronic braking system that will help prevent a braking skid.

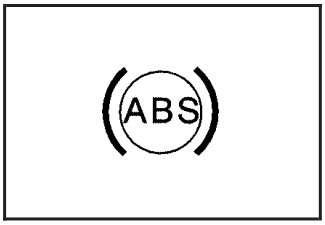

If your vehicle has anti-lock brakes, this warning light on the instrument panel will come on briefly when you start your vehicle.

When you start your engine, or when you begin to drive away, your anti-lock brake system will check itself. You may hear a momentary motor or clicking noise while this test is going on, and you may even notice that your brake pedal moves or pulses a little. This is normal.

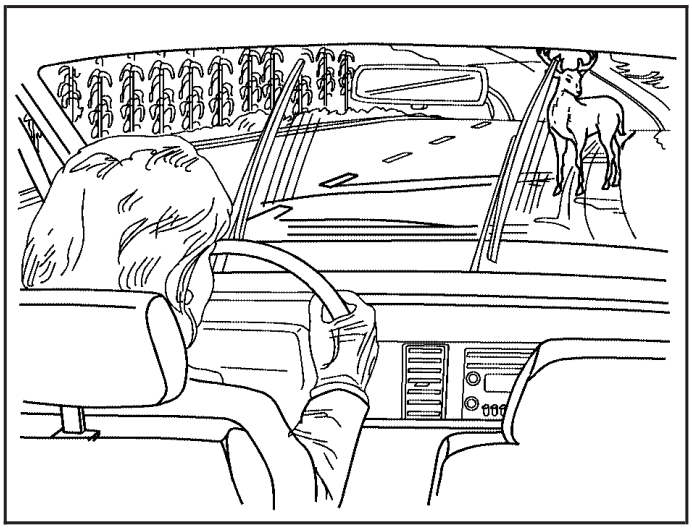

Let us say the road is wet and you are driving safely. Suddenly, an animal jumps out in front of you. You slam on the brakes and continue braking. Here is what happens with ABS:

A computer senses that wheels are slowing down. If one of the wheels is about to stop rolling, the computer will separately work the brakes at each wheel.

Downloaded from www.Manualslib.com manuals search engine

The anti-lock system can change the brake pressure faster than any driver could. The computer is programmed to make the most of available tire and road conditions. This can help you steer around the obstacle while braking hard.

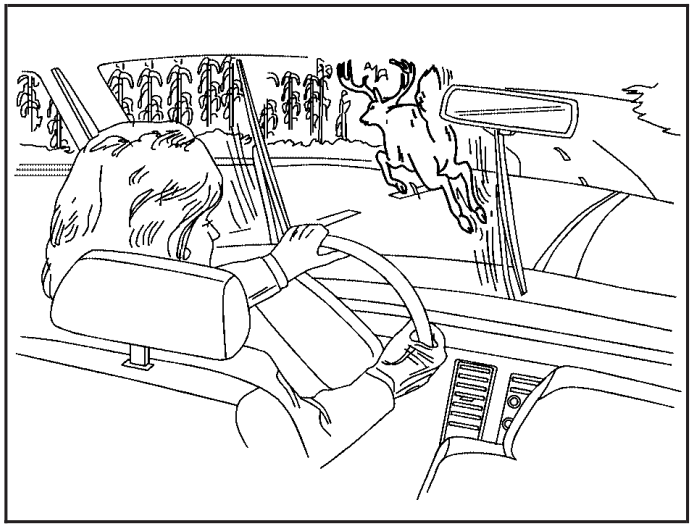

As you brake, your computer keeps receiving updates on wheel speed and controls braking pressure accordingly.

Remember: Anti-lock does not change the time you need to get your foot up to the brake pedal or always decrease stopping distance. If you get too close to the vehicle in front of you, you will not have time to apply your brakes if that vehicle suddenly slows or stops. Always leave enough room up ahead to stop, even though you have anti-lock brakes.

Using Anti-Lock

Do not pump the brakes. Just hold the brake pedal down firmly and let anti-lock work for you. You may feel a slight brake pedal pulsation or notice some noise, but this is normal.

Braking in Emergencies

At some time, nearly every driver gets into a situation that requires hard braking.

If you have anti-lock brakes, you can steer and brake at the same time. However, if you do not have anti-lock brakes, your first reaction — to hit the brake pedal hard and hold it down — may be the wrong thing to do. Your wheels can stop rolling. Once they do, the vehicle cannot respond to your steering. Momentum will carry it in whatever direction it was headed when the wheels stopped rolling. That could be off the road, into the very thing you were trying to avoid, or into traffic.

Downloaded from www.Manualslib.com manuals search engine

If you do not have anti-lock brakes, use a “squeeze” braking technique. This will give you maximum braking while maintaining steering control. You can do this by pushing on the brake pedal with steadily increasing pressure.

In an emergency, you will probably want to squeeze the brakes hard without locking the wheels. If you hear or feel the wheels sliding, ease off the brake pedal. This will help you retain steering control. If you do have anti-lock brakes, it is different. See *Anti-Lock Brake System (ABS) on page 4-7*.

In many emergencies, steering can help you more than even the very best braking.

Traction Control System (TCS)

If the vehicle has the 3800 Supercharged V6 engine or the 5.3L V8 engine, it has a Traction Control System (TCS) that limits wheel spin. This is especially useful in slippery road conditions. The system operates only if it senses that one or both of the front wheels are spinning or beginning to lose traction. When this happens, the system works the front brakes and reduces engine power to limit wheel spin.

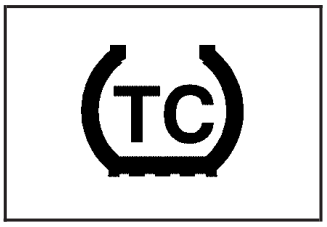

This symbol, along with the TRACTION CONTROL ACTIVE message, comes on the DIC screen when the system is active.

You may feel or hear the system working, but this is normal.

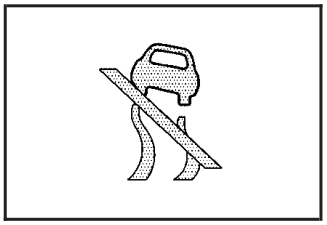

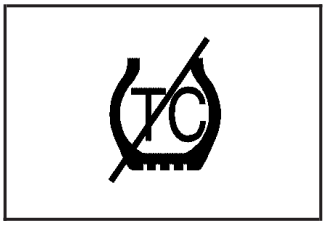

When the traction control system is not working, one of these symbols will come on the instrument panel cluster.

Downloaded from www.Manualslib.com manuals search engine

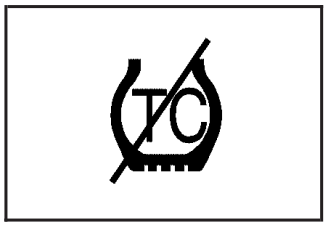

This symbol, along with the message TRACTION CONTROL OFF will display in the DIC for three seconds when the traction control system is disabled.

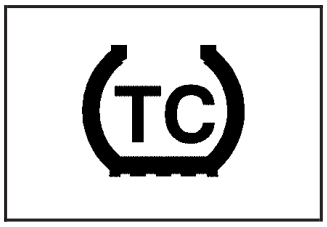

Press the traction control button located on the console to turn the system off.

If there is a problem with the system, the service traction system will also appear on the DIC. When these symbols and messages appear on the instrument panel and the DIC, the system will not limit wheel spin. Adjust driving accordingly.

The traction control system automatically comes on whenever the vehicle is started. To limit wheel spin, especially in slippery road conditions, always leave the system on. But the traction control system can be turned off if needed. The system should be turned off if the vehicle ever gets stuck in sand, mud, or snow and rocking the vehicle is required. See *Rocking Your Vehicle to Get It Out on page 4-33* and *If Your Vehicle is Stuck in Sand, Mud, Ice or Snow on page 4-32* for more information.

If the system is limiting wheel spin when the traction control button is pressed, the system will turn off instantly. Turn the system back on at any time by pressing the button again.

If the vehicle is in cruise control when the traction control system begins to limit wheel spin, the cruise control will automatically disengage. When road conditions allow safe use of it, the cruise control can be used again. See *Cruise Control on page 3-11*.

Adding non-GM accessories can affect your vehicle's performance. See *Accessories and Modifications on page 5-3* for more information.

Downloaded from www.Manualslib.com manuals search engine

Enhanced Traction System (ETS)

If the vehicle has the 3800 V6 engine and anti-lock brakes, it has an Enhanced Traction System (ETS) that limits wheel spin. This is especially useful in slippery road conditions. The system operates only if it senses that one or both of the front wheels are spinning or beginning to lose traction. When this happens, the system reduces engine power and may also upshift the transaxle to limit wheel spin.

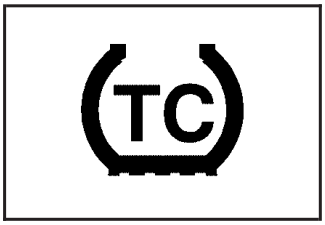

This symbol comes on the Driver Information Center (DIC) when the ETS is limiting wheel spin.

If the vehicle is in cruise control when ETS begins to limit wheel spin, the cruise control will automatically disengage. When road conditions allow safe use of it, the cruise control can be used again. See *Cruise Control on page 3-11*.

ETS operates in all transaxle shift lever positions. But the system can upshift the transaxle only as high as the chosen shift lever position, so use the lower gears only when necessary. See *Automatic Transaxle Operation on page 2-25*.

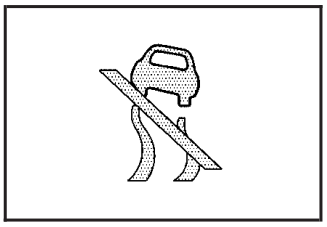

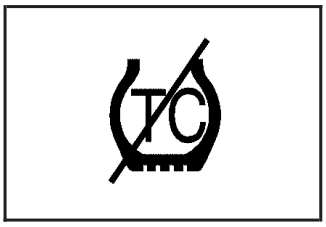

One of these lights will appear on the instrument panel to indicate that the ETS is not on.

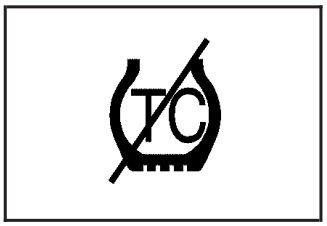

This symbol, along with the message TRACTION CONTROL OFF will display on the DIC for three seconds when the ETS is not on.

If there is a problem with the system, the service traction system will also come on in the DIC. See *Enhanced Traction System Warning Light on page 3-45*. When this warning light is on, the system will not limit wheel spin. Adjust driving accordingly.

Downloaded from www.Manualslib.com manuals search engine

To limit wheel spin, especially in slippery road conditions, the ETS should always be left on. But the system can be turned off. The system should be turned off if the vehicle ever gets stuck in sand, mud, or snow and rocking the vehicle is required. See *Rocking Your Vehicle to Get It Out on page 4-33* and *If Your Vehicle is Stuck in Sand, Mud, Ice or Snow on page 4-32* for more information.

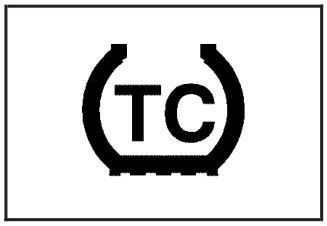

Press the traction control button located on the console to turn the system off.

If the system is limiting wheel spin when the button is pressed, the system will turn off instantly. Press the traction control button again to turn the system on.

StabiliTrak® Plus System

The vehicle may have a vehicle stability enhancement system called StabiliTrak® Plus. It is an advanced computer controlled system that assists with directional control of the vehicle in difficult driving conditions.

StabiliTrak® Plus comes on whenever the vehicle is started. It activates when the computer senses a discrepancy between the intended path and the direction the vehicle is actually traveling. StabiliTrak® Plus selectively applies braking pressure at any one of the vehicle's brakes to help control the vehicle in the steering direction.

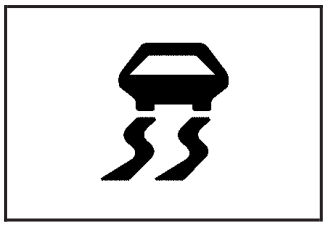

This symbol, along with the STABILITY CONTROL ACTIVE message comes on the Driver Information Center (DIC).

See *DIC Warnings and Messages on page 3-72*. You may also hear a noise or feel vibration in the brake pedal. This is normal. Continue to steer the vehicle in the desired direction.

Downloaded from www.Manualslib.com manuals search engine

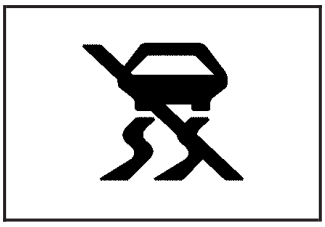

If there is a problem detected with StabiliTrak® Plus, this symbol along with the SERVICE STABILITY SYSTEM warning message will come on the DIC.

See *DIC Warnings and Messages on page 3-72*. When this message is displayed, the system is not operational. Driving should be adjusted accordingly.

To turn the StabiliTrak® system off (GXP only), press and hold the traction control button for more than five seconds. A message will appear on the DIC indicating that StabiliTrak® has been turned off. You can turn the system back on at any time by pressing the button again.

If the vehicle is in cruise control when StabiliTrak® Plus activates, the cruise control will automatically disengage. When road conditions allow safe use of it, the cruise control can be used again. See *Cruise Control on page 3-11* for more information.

Steering

Power Steering

If you lose power steering assist because the engine stops or the system is not functioning, you can steer but it will take much more effort.

Variable Effort Steering

If your vehicle has this steering system, the system provides less steering effort for parking and when driving at speeds below 20 mph (32 km/h). Steering effort will increase at higher speeds for improved road feel.

Steering Tips

It is important to take curves at a reasonable speed.

A lot of the “driver lost control” accidents mentioned on the news happen on curves. Here is why:

Experienced driver or beginner, each of us is subject to the same laws of physics when driving on curves. The traction of the tires against the road surface makes it possible for the vehicle to change its path when you turn the front wheels. If there is no traction, inertia will keep the vehicle going in the same direction. If you have ever tried to steer a vehicle on wet ice, you will understand this.

Downloaded from www.Manualslib.com manuals search engine

The traction you can get in a curve depends on the condition of your tires and the road surface, the angle at which the curve is banked, and your speed. While you are in a curve, speed is the one factor you can control.

Suppose you are steering through a sharp curve. Then you suddenly apply the brakes. Both control systems — steering and braking — have to do their work where the tires meet the road. Unless you have four-wheel anti-lock brakes, adding the hard braking can demand too much of those places. You can lose control.

The same thing can happen if you are steering through a sharp curve and you suddenly accelerate. Those two control systems — steering and acceleration — can overwhelm those places where the tires meet the road and make you lose control. See *Traction Control System (TCS) on page 4-9* or *Enhanced Traction System (ETS) on page 4-11*.

What should you do if this ever happens? Ease up on the brake or accelerator pedal, steer the vehicle the way you want it to go, and slow down.

Speed limit signs near curves warn that you should adjust your speed. Of course, the posted speeds are based on good weather and road conditions. Under less favorable conditions you will want to go slower.

If you need to reduce your speed as you approach a curve, do it before you enter the curve, while your front wheels are straight ahead.

Try to adjust your speed so you can “drive” through the curve. Maintain a reasonable, steady speed. Wait to accelerate until you are out of the curve, and then accelerate gently into the straightaway.

Adding non-GM accessories can affect your vehicle’s performance. See *Accessories and Modifications on page 5-3*.

Downloaded from www.Manualslib.com manuals search engine

Steering in Emergencies

There are times when steering can be more effective than braking. For example, you come over a hill and find a truck stopped in your lane, or a car suddenly pulls out from nowhere, or a child darts out from between parked cars and stops right in front of you. You can avoid these problems by braking — if you can stop in time. But sometimes you cannot; there is not room. That is the time for evasive action — steering around the problem.

Your vehicle can perform very well in emergencies like these. First apply your brakes.

See *Braking on page 4-6*. It is better to remove as much speed as you can from a possible collision. Then steer around the problem, to the left or right depending on the space available.

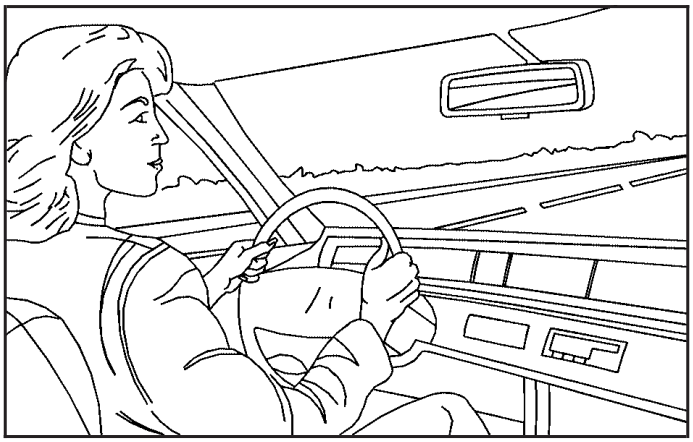

An emergency like this requires close attention and a quick decision. If you are holding the steering wheel at the recommended 9 and 3 o'clock positions, you can turn it a full 180 degrees very quickly without removing either hand. But you have to act fast, steer quickly, and just as quickly straighten the wheel once you have avoided the object.

The fact that such emergency situations are always possible is a good reason to practice defensive driving at all times and wear safety belts properly.

Downloaded from www.Manualslib.com manuals search engine

Off-Road Recovery

You may find that your right wheels have dropped off the edge of a road onto the shoulder while you are driving.

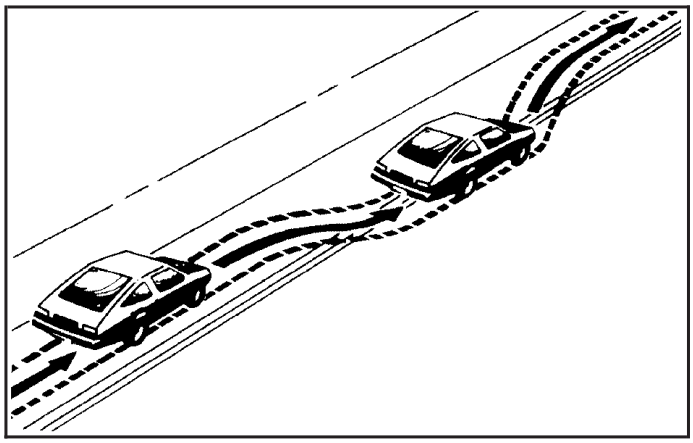

If the level of the shoulder is only slightly below the pavement, recovery should be fairly easy. Ease off the accelerator and then, if there is nothing in the way, steer so that your vehicle straddles the edge of the pavement. You can turn the steering wheel up to one-quarter turn until the right front tire contacts the pavement edge. Then turn your steering wheel to go straight down the roadway.

Passing

The driver of a vehicle about to pass another on a two-lane highway waits for just the right moment, accelerates, moves around the vehicle ahead, then goes back into the right lane again. A simple maneuver?

Not necessarily! Passing another vehicle on a two-lane highway is a potentially dangerous move, since the passing vehicle occupies the same lane as oncoming traffic for several seconds. A miscalculation, an error in judgment, or a brief surrender to frustration or anger can suddenly put the passing driver face to face with the worst of all traffic accidents — the head-on collision.

So here are some tips for passing:

- Drive ahead. Look down the road, to the sides and to crossroads for situations that might affect your passing patterns. If you have any doubt whatsoever about making a successful pass, wait for a better time.
- Watch for traffic signs, pavement markings and lines. If you can see a sign up ahead that might indicate a turn or an intersection, delay your pass. A broken center line usually indicates it is all right to pass, providing the road ahead is clear. Never cross a solid line on your side of the lane or a double solid line, even if the road seems empty of approaching traffic.

Downloaded from www.Manualslib.com manuals search engine

- Do not get too close to the vehicle you want to pass while you are awaiting an opportunity. For one thing, following too closely reduces your area of vision, especially if you are following a larger vehicle. Also, you will not have adequate space if the vehicle ahead suddenly slows or stops. Keep back a reasonable distance.
- When it looks like a chance to pass is coming up, start to accelerate but stay in the right lane and do not get too close. Time your move so you will be increasing speed as the time comes to move into the other lane. If the way is clear to pass, you will have a running start that more than makes up for the distance you would lose by dropping back. And if something happens to cause you to cancel your pass, you need only slow down and drop back again and wait for another opportunity.
- If other vehicles are lined up to pass a slow vehicle, wait your turn. But take care that someone is not trying to pass you as you pull out to pass the slow vehicle. Remember to glance over your shoulder and check the blind spot.
- Check your mirrors, glance over your shoulder, and start your left lane change signal before moving out of the right lane to pass. When you are far enough ahead of the passed vehicle to see its front in your inside mirror, activate your right lane change signal and move back into the right lane. Remember that your passenger side outside mirror is convex. The vehicle you just passed may seem to be farther away from you than it really is.
- Try not to pass more than one vehicle at a time on two-lane roads. Reconsider before passing the next vehicle.
- Do not overtake a slowly moving vehicle too rapidly. Even though the brake lamps are not flashing, it may be slowing down or starting to turn.
- If you are being passed, make it easy for the following driver to get ahead of you. Perhaps you can ease a little to the right.

Downloaded from www.Manualslib.com manuals search engine

Loss of Control

Let us review what driving experts say about what happens when the three control systems — brakes, steering, and acceleration — do not have enough friction where the tires meet the road to do what the driver has asked.

In any emergency, do not give up. Keep trying to steer and constantly seek an escape route or area of less danger.

Skidding

In a skid, a driver can lose control of the vehicle. Defensive drivers avoid most skids by taking reasonable care suited to existing conditions, and by not overdriving those conditions. But skids are always possible.

The three types of skids correspond to your vehicle's three control systems. In the braking skid, your wheels are not rolling. In the steering or cornering skid, too much speed or steering in a curve causes tires to slip and lose cornering force. And in the acceleration skid, too much throttle causes the driving wheels to spin.

A cornering skid is best handled by easing your foot off the accelerator pedal.

If you do not have the Enhanced Traction System (ETS) or the Traction Control System (TCS), or if the system is off, then an acceleration skid is also best handled by easing your foot off the accelerator pedal. See *Enhanced Traction System (ETS) on page 4-11* or *Traction Control System (TCS) on page 4-9*.

If your vehicle starts to slide, ease your foot off the accelerator pedal and quickly steer the way you want the vehicle to go. If you start steering quickly enough, your vehicle may straighten out. Always be ready for a second skid if it occurs.

Of course, traction is reduced when water, snow, ice, gravel, or other material is on the road. For safety, you will want to slow down and adjust your driving to these conditions. It is important to slow down on slippery surfaces because stopping distance will be longer and vehicle control more limited.

While driving on a surface with reduced traction, try your best to avoid sudden steering, acceleration, or braking, including engine braking by shifting to a lower gear. Any sudden changes could cause the tires to slide. You may not realize the surface is slippery until your vehicle is skidding. Learn to recognize warning clues — such as enough water, ice, or packed snow on the road to make a mirrored surface — and slow down when you have any doubt.

If you have the Anti-Lock Brake System (ABS), remember: It helps avoid only the braking skid. If you do not have ABS, then in a braking skid, where the wheels are no longer rolling, release enough pressure on the brakes to get the wheels rolling again. This restores steering control. Push the brake pedal down steadily when you have to stop suddenly. As long as the wheels are rolling, you will have steering control.

Downloaded from www.Manualslib.com manuals search engine

Driving at Night

Night driving is more dangerous than day driving. One reason is that some drivers are likely to be impaired — by alcohol or drugs, with night vision problems, or by fatigue.

Here are some tips on night driving.

- Drive defensively.
- Do not drink and drive.
- Adjust the inside rearview mirror to reduce the glare from headlamps behind you.
- Since you cannot see as well, you may need to slow down and keep more space between you and other vehicles.
- Slow down, especially on higher speed roads. Your vehicle's headlamps can light up only so much road ahead.
- In remote areas, watch for animals.
- If you are tired, pull off the road in a safe place and rest.

No one can see as well at night as in the daytime. But as we get older these differences increase. A 50-year-old driver may require at least twice as much light to see the same thing at night as a 20-year-old.

What you do in the daytime can also affect your night vision. For example, if you spend the day in bright sunshine you are wise to wear sunglasses. Your eyes will have less trouble adjusting to night. But if you are driving, do not wear sunglasses at night. They may cut down on glare from headlamps, but they also make a lot of things invisible.

You can be temporarily blinded by approaching headlamps. It can take a second or two, or even several seconds, for your eyes to re-adjust to the dark. When you are faced with severe glare, as from a driver who does not lower the high beams, or a vehicle with misaimed headlamps, slow down a little. Avoid staring directly into the approaching headlamps.

Keep the windshield and all the glass on your vehicle clean — inside and out. Glare at night is made much worse by dirt on the glass. Even the inside of the glass can build up a film caused by dust. Dirty glass makes lights dazzle and flash more than clean glass would, making the pupils of your eyes contract repeatedly.

Remember that the headlamps light up far less of a roadway when you are in a turn or curve. Keep your eyes moving; that way, it is easier to pick out dimly lighted objects. Just as the headlamps should be checked regularly for proper aim, so should your eyes be examined regularly. Some drivers suffer from night blindness — the inability to see in dim light — and are not even aware of it.

Downloaded from www.Manualslib.com manuals search engine

Driving in Rain and on Wet Roads

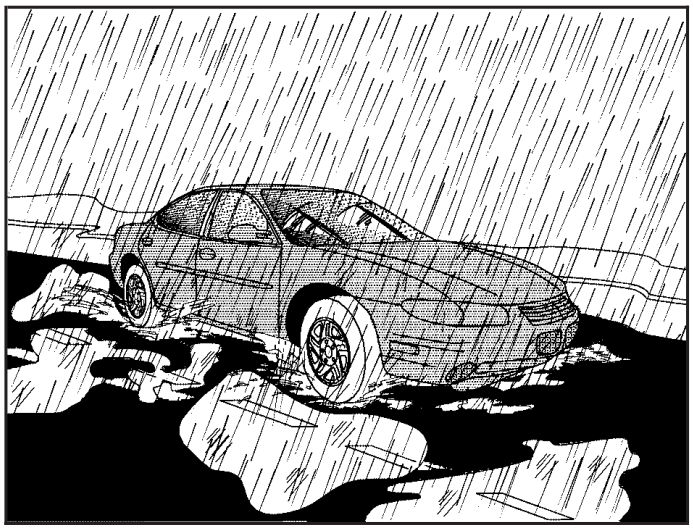

Rain and wet roads can mean driving trouble. On a wet road, you cannot stop, accelerate, or turn as well because your tire-to-road traction is not as good as on dry roads. And, if your tires do not have much tread left, you will get even less traction. It is always wise to go slower and be cautious if rain starts to fall while you are driving. The surface may get wet suddenly when your reflexes are tuned for driving on dry pavement.

The heavier the rain, the harder it is to see. Even if your windshield wiper blades are in good shape, a heavy rain can make it harder to see road signs and traffic signals, pavement markings, the edge of the road, and even people walking.

It is wise to keep your windshield wiping equipment in good shape and keep your windshield washer fluid reservoir filled with washer fluid. Replace your windshield wiper inserts when they show signs of streaking or missing areas on the windshield, or when strips of rubber start to separate from the inserts.

⚠ CAUTION:

Wet brakes can cause accidents. They will not work as well in a quick stop and may cause pulling to one side. You could lose control of the vehicle.

After driving through a large puddle of water or a car wash, apply your brake pedal lightly until your brakes work normally.

Driving too fast through large water puddles or even going through some car washes can cause problems, too. The water may affect your brakes. Try to avoid puddles. But if you cannot, try to slow down before you hit them.

Downloaded from www.Manualslib.com manuals search engine

Hydroplaning

Hydroplaning is dangerous. So much water can build up under your tires that they can actually ride on the water. This can happen if the road is wet enough and you are going fast enough. When your vehicle is hydroplaning, it has little or no contact with the road.

Hydroplaning does not happen often. But it can if your tires do not have much tread or if the pressure in one or more is low. It can happen if a lot of water is standing on the road. If you can see reflections from trees, telephone poles, or other vehicles, and raindrops dimple the water's surface, there could be hydroplaning.

Hydroplaning usually happens at higher speeds. There just is not a hard and fast rule about hydroplaning. The best advice is to slow down when it is raining.

Driving Through Deep Standing Water

Notice: **If you drive too quickly through deep puddles or standing water, water can come in through your engine's air intake and badly damage your engine. Never drive through water that is slightly lower than the underbody of your vehicle. If you cannot avoid deep puddles or standing water, drive through them very slowly.**

Driving Through Flowing Water

⚠ CAUTION:

Flowing or rushing water creates strong forces. If you try to drive through flowing water, as you might at a low water crossing, your vehicle can be carried away. As little as six inches of flowing water can carry away a smaller vehicle. If this happens, you and other vehicle occupants could drown. Do not ignore police warning signs, and otherwise be very cautious about trying to drive through flowing water.

Some Other Rainy Weather Tips

- Besides slowing down, allow some extra following distance. And be especially careful when you pass another vehicle. Allow yourself more clear room ahead, and be prepared to have your view restricted by road spray.
- Have good tires with proper tread depth. See *Tires on page 5-60*.

Downloaded from www.Manualslib.com manuals search engine

City Driving

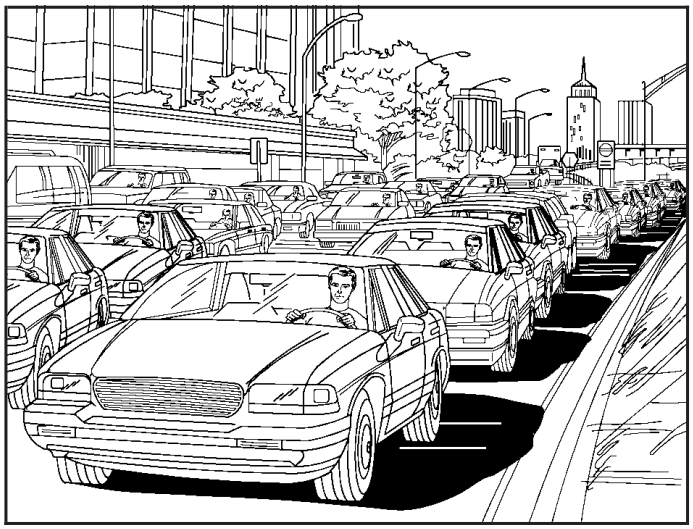

One of the biggest problems with city streets is the amount of traffic on them. You will want to watch out for what the other drivers are doing and pay attention to traffic signals.

Here are ways to increase your safety in city driving:

- Know the best way to get to where you are going. Get a city map and plan your trip into an unknown part of the city just as you would for a cross-country trip.
- Try to use the freeways that rim and crisscross most large cities. You will save time and energy. See *Freeway Driving on page 4-23*.
- Treat a green light as a warning signal. A traffic light is there because the corner is busy enough to need it. When a light turns green, and just before you start to move, check both ways for vehicles that have not cleared the intersection or may be running the red light.

Downloaded from www.Manualslib.com manuals search engine

Freeway Driving

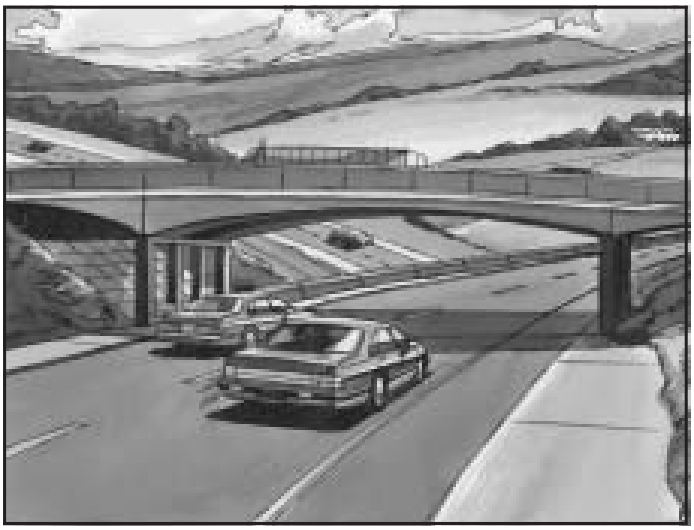

Mile for mile, freeways — also called thruways, parkways, expressways, turnpikes, or superhighways — are the safest of all roads. But they have their own special rules.

The most important advice on freeway driving is: Keep up with traffic and keep to the right. Drive at the same speed most of the other drivers are driving. Too-fast or too-slow driving breaks a smooth traffic flow. Treat the left lane on a freeway as a passing lane.

At the entrance, there is usually a ramp that leads to the freeway. If you have a clear view of the freeway as you drive along the entrance ramp, you should begin to check traffic. Try to determine where you expect to blend with the flow. Try to merge into the gap at close to the prevailing speed. Switch on your turn signal, check your mirrors, and glance over your shoulder as often as necessary. Try to blend smoothly with the traffic flow.

Once you are on the freeway, adjust your speed to the posted limit or to the prevailing rate if it is slower. Stay in the right lane unless you want to pass.

Before changing lanes, check your mirrors. Then use your turn signal.

Downloaded from www.Manualslib.com manuals search engine

Just before you leave the lane, glance quickly over your shoulder to make sure there is not another vehicle in your blind spot.

Once you are moving on the freeway, make certain you allow a reasonable following distance.

Expect to move slightly slower at night.

When you want to leave the freeway, move to the proper lane well in advance. If you miss your exit, do not, under any circumstances, stop and back up. Drive on to the next exit.

The exit ramp can be curved, sometimes quite sharply. The exit speed is usually posted. Reduce your speed according to your speedometer, not to your sense of motion. After driving for any distance at higher speeds, you may tend to think you are going slower than you actually are.

Before Leaving on a Long Trip

Make sure you are ready. Try to be well rested. If you must start when you are not fresh — such as after a day's work — do not plan to make too many miles that first part of the journey. Wear comfortable clothing and shoes you can easily drive in.

Is your vehicle ready for a long trip? If you keep it serviced and maintained, it is ready to go. If it needs service, have it done before starting out. Of course, you will find experienced and able service experts in GM dealerships all across North America. They will be ready and willing to help if you need it.

Downloaded from www.Manualslib.com manuals search engine

Here are some things you can check before a trip:

- *Windshield Washer Fluid:* Is the reservoir full? Are all windows clean inside and outside?
- *Wiper Blades:* Are they in good shape?
- *Fuel, Engine Oil, Other Fluids:* Have you checked all levels?
- *Lamps:* Are they all working? Are the lenses clean?
- *Tires:* They are vitally important to a safe, trouble-free trip. Is the tread good enough for long-distance driving? Are the tires all inflated to the recommended pressure?
- *Weather Forecasts:* What is the weather outlook along your route? Should you delay your trip a short time to avoid a major storm system?
- *Maps:* Do you have up-to-date maps?

Highway Hypnosis

Is there actually such a condition as highway hypnosis? Or is it just plain falling asleep at the wheel? Call it highway hypnosis, lack of awareness, or whatever.

There is something about an easy stretch of road with the same scenery, along with the hum of the tires on the road, the drone of the engine, and the rush of the wind against the vehicle that can make you sleepy. Do not let it happen to you! If it does, your vehicle can leave the road in less than a second, and you could crash and be injured.

What can you do about highway hypnosis? First, be aware that it can happen.

Then here are some tips:

- Make sure your vehicle is well ventilated, with a comfortably cool interior.
- Keep your eyes moving. Scan the road ahead and to the sides. Check your rearview mirrors and your instruments frequently.
- If you get sleepy, pull off the road into a rest, service, or parking area and take a nap, get some exercise, or both. For safety, treat drowsiness on the highway as an emergency.

Downloaded from www.Manualslib.com manuals search engine

Hill and Mountain Roads

Driving on steep hills or mountains is different from driving in flat or rolling terrain.

If you drive regularly in steep country, or if you are planning to visit there, here are some tips that can make your trips safer and more enjoyable.

- Keep your vehicle in good shape. Check all fluid levels and also the brakes, tires, cooling system, and transaxle. These parts can work hard on mountain roads.

⚠ CAUTION:

If you do not shift down, your brakes could get so hot that they would not work well. You would then have poor braking or even none going down a hill. You could crash. Shift down to let your engine assist your brakes on a steep downhill slope.

Downloaded from www.Manualslib.com manuals search engine

⚠ CAUTION:

Coasting downhill in NEUTRAL (N) or with the ignition off is dangerous. Your brakes will have to do all the work of slowing down. They could get so hot that they would not work well. You would then have poor braking or even none going down a hill. You could crash. Always have your engine running and your vehicle in gear when you go downhill.

- Know how to go down hills. The most important thing to know is this: let your engine do some of the slowing down. Shift to a lower gear when you go down a steep or long hill.
- Know how to go uphill. You may want to shift down to a lower gear. The lower gears help cool your engine and transaxle, and you can climb the hill better.
- Stay in your own lane when driving on two-lane roads in hills or mountains. Do not swing wide or cut across the center of the road. Drive at speeds that let you stay in your own lane.
- As you go over the top of a hill, be alert. There could be something in your lane, like a stalled car or an accident.
- You may see highway signs on mountains that warn of special problems. Examples are long grades, passing or no-passing zones, a falling rocks area, or winding roads. Be alert to these and take appropriate action.

Downloaded from www.Manualslib.com manuals search engine

Winter Driving

Here are some tips for winter driving:

- Have your vehicle in good shape for winter.
- You may want to put winter emergency supplies in your trunk.

Also see *Tires on page 5-60*.

Include an ice scraper, a small brush or broom, a supply of windshield washer fluid, a rag, some winter outer clothing, a small shovel, a flashlight, a red cloth, and a couple of reflective warning triangles. And, if you will be driving under severe conditions, include a small bag of sand, a piece of old carpet, or a couple of burlap bags to help provide traction. Be sure you properly secure these items in your vehicle.

Downloaded from www.Manualslib.com manuals search engine

Driving on Snow or Ice

Most of the time, those places where the tires meet the road probably have good traction.

However, if there is snow or ice between the tires and the road, you can have a very slippery situation. You will have a lot less traction, or grip, and will need to be very careful.

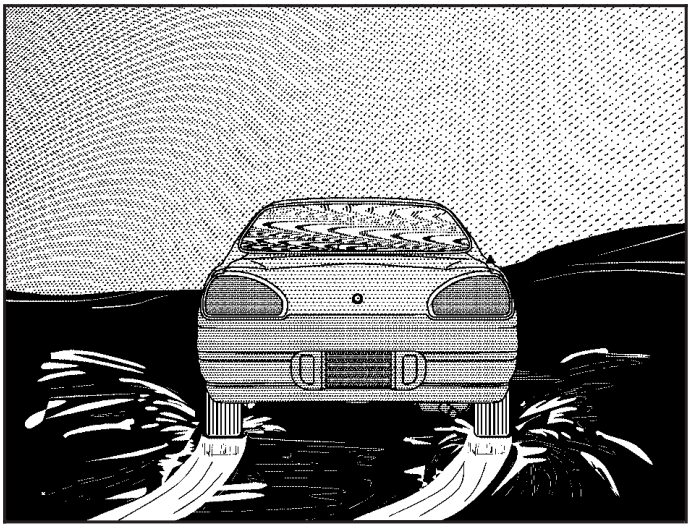

What is the worst time for this? Wet ice. Very cold snow or ice can be slick and hard to drive on. But wet ice can be even more trouble because it may offer the least traction of all. You can get wet ice when it is about freezing, 32°F (0°C), and freezing rain begins to fall. Try to avoid driving on wet ice until salt and sand crews can get there.

Whatever the condition — smooth ice, packed, blowing, or loose snow — drive with caution.

If you have the Traction Control System (TCS) or the Enhanced Traction System (ETS), it will improve your ability to accelerate when driving on a slippery road. Even though your vehicle has a traction system you will want to slow down and adjust your driving to the road conditions. Under certain conditions, you may want to turn the TCS or ETS off, such as when driving through deep snow and loose gravel, to help maintain vehicle motion at lower speeds. See *Traction Control System (TCS) on page 4-9* or *Enhanced Traction System (ETS) on page 4-11*.

If you do not have TCS or ETS, accelerate gently. Try not to break the fragile traction. If you accelerate too fast, the drive wheels will spin and polish the surface under the tires even more.

Unless you have the Anti-Lock Brake System (ABS), you will want to brake very gently, too. If you do have ABS, see *Anti-Lock Brake System (ABS) on page 4-7*. This system improves your vehicle's stability when you make a hard stop on a slippery road. Whether you have ABS or not, you will want to begin stopping sooner than you would on dry pavement.

Downloaded from www.Manualslib.com manuals search engine

Without ABS, if you feel your vehicle begin to slide, let up on the brakes a little. Push the brake pedal down steadily to get the most traction you can.

Remember, unless you have ABS, if you brake so hard that your wheels stop rolling, you will just slide. Brake so your wheels always keep rolling and you can still steer.

- Whatever your braking system, allow greater following distance on any slippery road.
- Watch for slippery spots. The road might be fine until you hit a spot that is covered with ice. On an otherwise clear road, ice patches may appear in shaded areas where the sun cannot reach, such as around clumps of trees, behind buildings, or under bridges. Sometimes the surface of a curve or an overpass may remain icy when the surrounding roads are clear. If you see a patch of ice ahead of you, brake before you are on it. Try not to brake while you are actually on the ice, and avoid sudden steering maneuvers.

If You Are Caught in a Blizzard

If you are stopped by heavy snow, you could be in a serious situation. You should probably stay with your vehicle unless you know for sure that you are near help and you can hike through the snow. Here are some things to do to summon help and keep yourself and your passengers safe:

- Turn on your hazard flashers.
- Tie a red cloth to your vehicle to alert police that you have been stopped by the snow.
- Put on extra clothing or wrap a blanket around you. If you do not have blankets or extra clothing, make body insulators from newspapers, burlap bags, rags, floor mats — anything you can wrap around yourself or tuck under your clothing to keep warm.

Downloaded from www.Manualslib.com manuals search engine

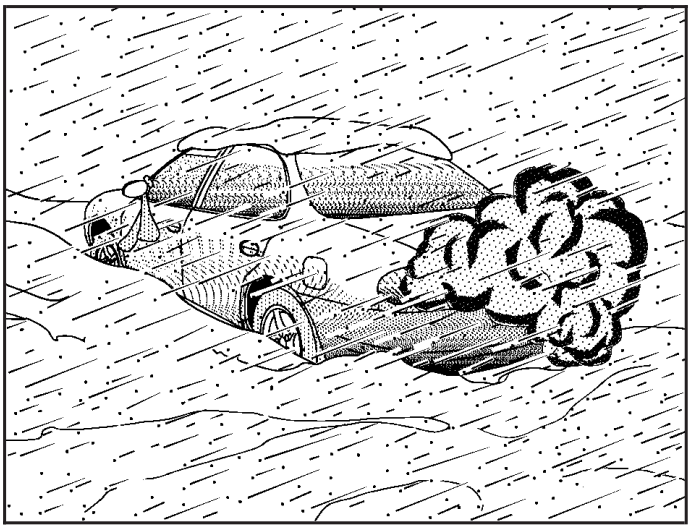

You can run the engine to keep warm, but be careful.

⚠ CAUTION:

Snow can trap exhaust gases under your vehicle. This can cause deadly CO (carbon monoxide) gas to get inside. CO could overcome you and kill you. You cannot see it or smell it, so you might not know it is in your vehicle. Clear away snow from around the base of your vehicle, especially any that is blocking your exhaust pipe. And check around again from time to time to be sure snow does not collect there.

Open a window just a little on the side of the vehicle that is away from the wind. This will help keep CO out.

Run your engine only as long as you must. This saves fuel. When you run the engine, make it go a little faster than just idle. That is, push the accelerator slightly. This uses less fuel for the heat that you get and it keeps the battery charged. You will need a well-charged battery to restart the vehicle, and possibly for signaling later on with your headlamps. Let the heater run for a while.

Downloaded from www.Manualslib.com manuals search engine

Then, shut the engine off and close the window almost all the way to preserve the heat. Start the engine again and repeat this only when you feel really uncomfortable from the cold. But do it as little as possible. Preserve the fuel as long as you can. To help keep warm, you can get out of the vehicle and do some fairly vigorous exercises every half hour or so until help comes.

If Your Vehicle is Stuck in Sand, Mud, Ice or Snow

In order to free your vehicle when it is stuck, you will need to spin the wheels, but you do not want to spin your wheels too fast. The method known as rocking can help you get out when you are stuck, but you must use caution.

⚠ CAUTION:

If you let your tires spin at high speed, they can explode, and you or others could be injured. And, the transaxle or other parts of the vehicle can overheat. That could cause an engine compartment fire or other damage. When you are stuck, spin the wheels as little as possible. Do not spin the wheels above 35 mph (55 km/h) as shown on the speedometer.

Notice: **Spinning your wheels can destroy parts of your vehicle as well as the tires. If you spin the wheels too fast while shifting your transaxle back and forth, you can destroy your transaxle. See *Rocking Your Vehicle to Get It Out on page 4-33*.**

For information about using tire chains on your vehicle, see *Tire Chains on page 5-77*.

Downloaded from www.Manualslib.com manuals search engine

Rocking Your Vehicle to Get It Out

First, turn your steering wheel left and right. That will clear the area around your front wheels. If your vehicle has traction control, you should turn your traction control system off. See *Traction Control System (TCS) on page 4-9*. Then shift back and forth between REVERSE (R) and a forward gear, spinning the wheels as little as possible. Release the accelerator pedal while you shift, and press lightly on the accelerator pedal when the transaxle is in gear. By slowly spinning your wheels in the forward and reverse directions, you will cause a rocking motion that may free your vehicle. If that does not get you out after a few tries, you may need to be towed out. If you do need to be towed out, see *Towing Your Vehicle on page 4-38*.

Loading Your Vehicle

It is very important to know how much weight your vehicle can carry. Two labels on your vehicle show how much weight it may properly carry, the Tire and Loading Information label and the Vehicle Certification label.

⚠ CAUTION:

Do not load your vehicle any heavier than the Gross Vehicle Weight Rating (GVWR), or either the maximum front or rear Gross Axle Weight Rating (GAWR). If you do, parts on your vehicle can break, and it can change the way your vehicle handles. These could cause you to lose control and crash. Also, overloading can shorten the life of your vehicle.

Downloaded from www.Manualslib.com manuals search engine

Tire and Loading Information Label

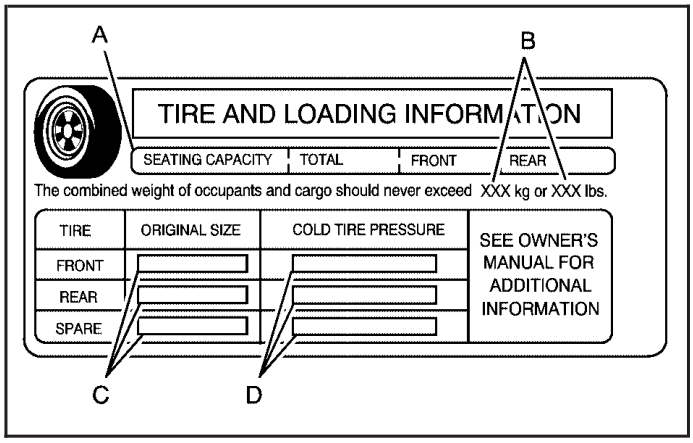

Label Example

A vehicle specific Tire and Loading Information label is attached to the vehicle's center pillar (B-pillar). With the driver's door open, you will find the label attached below the door lock post (striker). The tire and loading information label lists the number of occupant seating positions (A), and the maximum vehicle capacity weight (B) in kilograms and pounds.

The Tire and Loading Information label also lists the tire size of the original equipment tires (C) and the recommended cold tire inflation pressures (D). For more information on tires and inflation, see *Tires on page 5-60* and *Inflation - Tire Pressure on page 5-67*.

There is also important loading information on the Certification label. It tells you the Gross Vehicle Weight Rating (GVWR) and the Gross Axle Weight Rating (GAWR) for the front and rear axle, see "Certification Label" later in this section.

Steps for Determining Correct Load Limit

1. Locate the statement "The combined weight of occupants and cargo should never exceed XXX kg or XXX lbs" on your vehicle's placard.
2. Determine the combined weight of the driver and passengers that will be riding in your vehicle.
3. Subtract the combined weight of the driver and passengers from XXX kg or XXX lbs.

Downloaded from www.Manualslib.com manuals search engine

4. The resulting figure equals the available amount of cargo and luggage load capacity. For example, if the “XXX” amount equals 1400 lbs and there will be five 150 lb passengers in your vehicle, the amount of available cargo and luggage load capacity is 650 lbs (1400 – 750 (5 x 150) = 650 lbs).
5. Determine the combined weight of luggage and cargo being loaded on the vehicle. That weight may not safely exceed the available cargo and luggage load capacity calculated in Step 4.
6. If your vehicle will be towing a trailer, the load from your trailer will be transferred to your vehicle. Consult this manual to determine how this reduces the available cargo and luggage load capacity for your vehicle.

If your vehicle can tow a trailer, see *Towing a Trailer on page 4-40* for important information on towing a trailer, towing safety rules, and trailering tips.

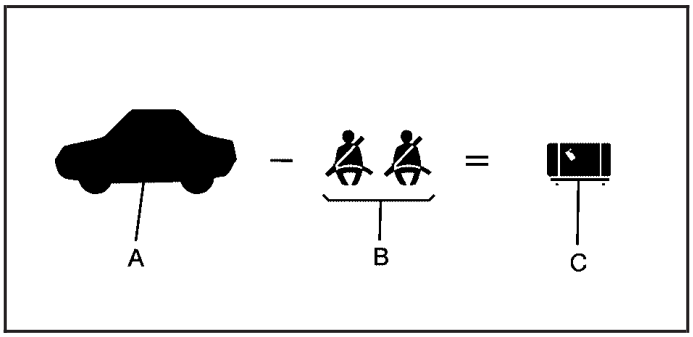

Example 1

Item	Description	Total
A	Maximum Vehicle Capacity Weight for Example 1 =	1,000 lbs (453 kg)
B	Subtract Occupant Weight 150 lbs (68 kg) × 2 =	300 lbs (136 kg)
C	Available Occupant and Cargo Weight =	700 lbs (317 kg)

Downloaded from www.Manualslib.com manuals search engine

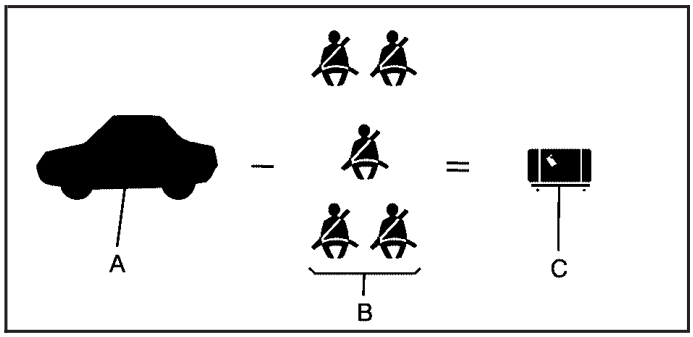

Example 2

Item	Description	Total
A	Maximum Vehicle Capacity Weight for Example 2 =	1,000 lbs (453 kg)
B	Subtract Occupant Weight 150 lbs (68 kg) × 5 =	750 lbs (340 kg)
C	Available Cargo Weight =	250 lbs (113 kg)

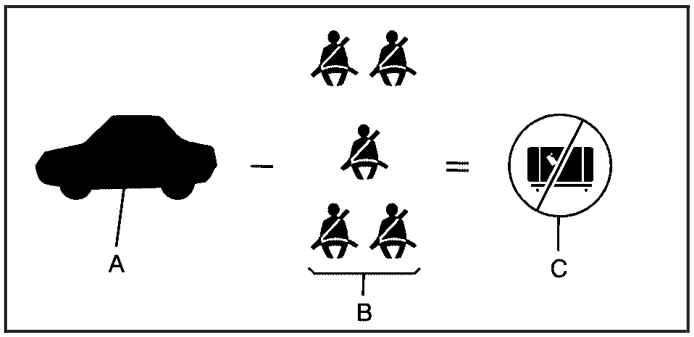

Example 3

Item	Description	Total
A	Maximum Vehicle Capacity Weight for Example 3 =	1,000 lbs (453 kg)
B	Subtract Occupant Weight 200 lbs (91 kg) × 5 =	1,000 lbs (453 kg)
C	Available Cargo Weight =	0 lbs (0 kg)

Refer to your vehicle's tire and loading information label for specific information about your vehicle's maximum vehicle capacity weight and seating positions. The combined weight of the driver, passengers, and cargo should never exceed your vehicle's maximum vehicle capacity weight.

Downloaded from www.Manualslib.com manuals search engine

Certification Label

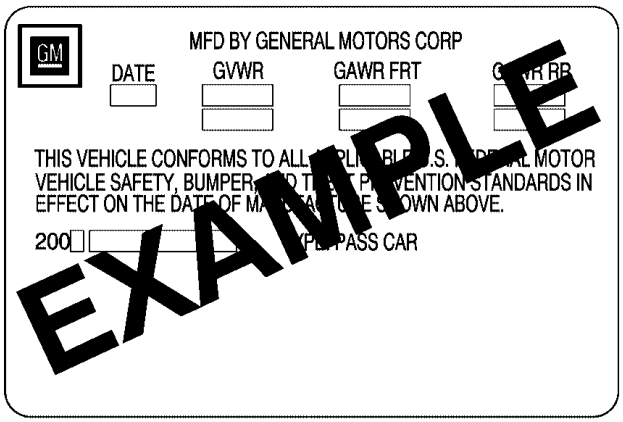

A vehicle specific Certification label is found on the rear edge of the driver's door.

The label shows the gross weight capacity of your vehicle, called the Gross Vehicle Weight Rating (GVWR). The GVWR includes the weight of the vehicle, all occupants, fuel, and cargo.

Never exceed the GVWR for your vehicle or the Gross Axle Weight Rating (GAWR) for either the front or rear axle.

If the vehicle is going to carry a heavy load, spread it out. Do not carry more than 167 lbs (76 kg) in the trunk.

⚠ CAUTION:

Do not load your vehicle any heavier than the Gross Vehicle Weight Rating (GVWR), or either the maximum front or rear Gross Axle Weight Rating (GAWR). If you do, parts on your vehicle can break, and it can change the way your vehicle handles. These could cause you to lose control and crash. Also, overloading can shorten the life of your vehicle.

Notice: **Overloading your vehicle may cause damage. Repairs would not be covered by your warranty. Do not overload your vehicle.**

Downloaded from www.Manualslib.com manuals search engine

If things like suitcases, tools, packages, or anything else are put inside the vehicle, they will go as fast as the vehicle goes. If you have to stop or turn quickly, or if there is a crash, they will keep going.

⚠ CAUTION:

Things you put inside your vehicle can strike and injure people in a sudden stop or turn, or in a crash.

- **Put things in the trunk of your vehicle. In a trunk, put them as far forward as you can. Try to spread the weight evenly.**
- **Never stack heavier things, like suitcases, inside the vehicle so that some of them are above the tops of the seats.**
- **Do not leave an unsecured child restraint in your vehicle.**
- **When you carry something inside the vehicle, secure it whenever you can.**
- **Do not leave a seat folded down unless you need to.**

Towing

Towing Your Vehicle

Consult your dealer or a professional towing service if you need to have your disabled vehicle towed. See *Roadside Assistance Program on page 7-6*.

If you want to tow your vehicle behind another vehicle for recreational purposes (such as behind a motorhome), see “Recreational Vehicle Towing” following.

Recreational Vehicle Towing

Recreational vehicle towing means towing your vehicle behind another vehicle – such as behind a motorhome. The two most common types of recreational vehicle towing are known as dinghy towing, towing your vehicle with all four wheels on the ground, and dolly towing, towing your vehicle with two wheels on the ground and two wheels up on a device known as a dolly.

With the proper preparation and equipment, many vehicles can be towed in these ways. See “Dinghy Towing” and “Dolly Towing,” following.

Downloaded from www.Manualslib.com manuals search engine

Here are some important things to consider before you do recreational vehicle towing:

- What is the towing capacity of the towing vehicle? Be sure to read the tow vehicle manufacturer's recommendations.
- How far will the vehicle be towed? Some vehicles have restrictions on how far and how long they can tow.
- Do you have the proper towing equipment? See your dealer or trailering professional for additional advice and equipment recommendations.
- Is the vehicle ready to be towed? Just as you would prepare your vehicle for a long trip, you will want to make sure the vehicle is prepared to be towed. See *Before Leaving on a Long Trip on page 4-24*.

Dinghy Towing

Notice: **If you tow your vehicle with all four wheels on the ground, the drivetrain components could be damaged. The repairs would not be covered by your warranty. Do not tow your vehicle with all four wheels on the ground.**

The vehicle was not designed to be towed with all four wheels on the ground. If the vehicle must be towed, use a dolly. See "Dolly Towing" following for more information.

Dolly Towing

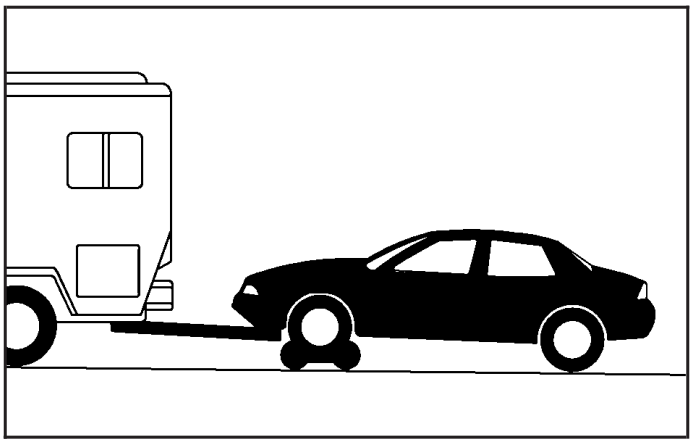

The vehicle can be towed using a dolly. To tow your vehicle using a dolly, follow these steps:

1. Put the front wheels on the dolly.
2. Put the vehicle in PARK (P).
3. Set the parking brake and then remove the key.
4. Clamp the steering wheel in a straight-ahead position.
5. Release the parking brake.

Downloaded from www.Manualslib.com manuals search engine

Towing a Trailer

⚠ CAUTION:

If you do not use the correct equipment and drive properly, you can lose control when you pull a trailer. For example, if the trailer is too heavy, the brakes may not work well — or even at all. You and your passengers could be seriously injured. You may also damage your vehicle; the resulting repairs would not be covered by your warranty. Pull a trailer only if you have followed all the steps in this section. Ask your dealer for advice and information about towing a trailer with your vehicle.

The vehicle can tow a trailer if it is equipped with the proper trailer towing equipment. To identify the trailering capacity of the vehicle, read the information in “Weight of the Trailer” that appears later in this section. Trailering is different than just driving the vehicle by itself. Trailering means changes in handling, durability, and fuel economy. Successful, safe trailering takes correct equipment, and it has to be used properly.

That is the reason for this part. In it are many time-tested, important trailering tips and safety rules. Many of these are important for your safety and that of your passengers. So please read this section carefully before pulling a trailer.

Load-pulling components such as the engine, transaxle, wheel assemblies, and tires are forced to work harder against the drag of the added weight. The engine is required to operate at relatively higher speeds and under greater loads, generating extra heat. The trailer also adds considerably to wind resistance, increasing the pulling requirements.

Downloaded from www.Manualslib.com manuals search engine

If You Do Decide To Pull A Trailer

Here are some important points:

- There are many different laws, including speed limit restrictions, having to do with trailering. Make sure your rig will be legal, not only where you live but also where you will be driving. A good source for this information can be state or provincial police.
- Consider using a sway control. Ask a hitch dealer about sway controls.
- Do not tow a trailer at all during the first 1,000 miles (1 600 km) the new vehicle is driven. The engine, axle, or other parts could be damaged.
- Then, during the first 500 miles (800 km) that the vehicle tows a trailer, do not drive over 50 mph (80 km/h) and do not make starts at full throttle. This helps the engine and other parts of the vehicle wear in at the heavier loads.
- Obey speed limit restrictions when towing a trailer. Do not drive faster than the maximum posted speed for trailers, or no more than 55 mph (90 km/h), to save wear on the vehicle's parts.

Three important considerations have to do with weight:

- The weight of the trailer
- The weight of the trailer tongue
- The total weight on your vehicle's tires

Weight of the Trailer

How heavy can a trailer safely be?

It should never weigh more than 1,000 lbs (454 kg). But even that can be too heavy.

It depends on how you plan to use your rig. For example, speed, altitude, road grades, outside temperature, and how much the vehicle is used to pull a trailer are all important. It can also depend on any special equipment that is on the vehicle, and the amount of tongue weight the vehicle can carry. See "Weight of the Trailer Tongue" later in this section for more information.

Maximum trailer weight is calculated assuming only the driver is in the tow vehicle and it has all the required trailering equipment. The weight of additional optional equipment, passengers and cargo in the tow vehicle must be subtracted from the maximum trailer weight.

Ask your dealer for our trailering information or advice, or write us at:

Pontiac-GMC Customer Assistance Center
P.O. Box 33172
Detroit, MI 48232-5172

In Canada, write to:

General Motors of Canada Limited
Customer Communication Centre, 163-005
1908 Colonel Sam Drive
Oshawa, Ontario L1H 8P7

Downloaded from www.Manualslib.com manuals search engine

Weight of the Trailer Tongue

The tongue load (A) of any trailer is an important weight to measure because it affects the total or gross weight of the vehicle. The Gross Vehicle Weight (GVW) includes the curb weight of the vehicle, any cargo in it, and the people who will be riding in the vehicle. If there are a lot of options, equipment, passengers and cargo in the vehicle, it will reduce the tongue weight the vehicle can carry, which will also reduce the trailer weight the vehicle can tow. And if towing a trailer, the tongue load must be added to the GVW because the vehicle will be carrying that weight, too. See *Loading Your Vehicle on page 4-33* for more information about your vehicle's maximum load capacity.

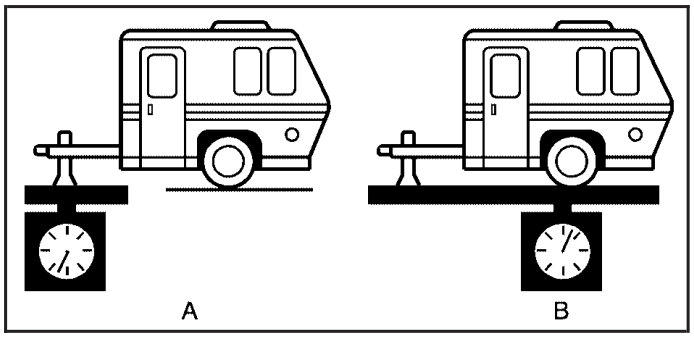

When using a weight-carrying hitch or a weight-distributing hitch, the trailer tongue (A) should weigh 10 to 15 percent of the total loaded trailer weight (B).

After the trailer is loaded, weigh the trailer and then the tongue, separately, to see if the weights are proper. The correct weight could be achieved simply by moving some items around in the trailer.

Downloaded from www.Manualslib.com manuals search engine

Total Weight on Your Vehicle's Tires

Be sure the vehicle's tires are inflated to the upper limit for cold tires. These numbers can be found on the Tire Loading Information label, that is on the inside of the trunk lid. See *Loading Your Vehicle on page 4-33*. Be sure not to go over the GVW limit for the vehicle, or the GAWR, including the weight of the trailer tongue. If a weight distribution hitch is used, make sure not to go over the rear axle limit before applying the weight distribution spring bars.

Hitches

It is important to have the correct hitch equipment. Crosswinds, large trucks going by, and rough roads are a few reasons why the correct hitch is needed. Here are some rules to follow:

- The rear bumper on the vehicle is not intended for hitches. Do not attach rental hitches or other bumper-type hitches to it. Use only a frame-mounted hitch that does not attach to the bumper.
- If any holes need to be made in the body of the vehicle to install a trailer hitch, then be sure to seal the holes later when the hitch is removed. If the holes are not sealed, deadly carbon monoxide (CO) from the exhaust can get into the vehicle. See *Engine Exhaust on page 2-33*. Dirt and water can, too.

Safety Chains

Always attach chains between the vehicle and the trailer. Cross the safety chains under the tongue of the trailer so that the tongue will not drop to the road if it becomes separated from the hitch. Instructions about safety chains may be provided by the hitch manufacturer or by the trailer manufacturer. Follow the manufacturer's recommendation for attaching safety chains and do not attach them to the bumper. Always leave just enough slack so the rig can be turned around. And, never allow safety chains to drag on the ground.

Trailer Brakes

Because the vehicle has anti-lock brakes, do not try to tap into the vehicle's brake system. If this is done, both brake systems will not work well, or at all.

Driving with a Trailer

Towing a trailer requires a certain amount of experience. Before setting out for the open road, get to know the rig. Acquaint yourself with the feel of handling and braking with the added weight of the trailer. And always keep in mind that the vehicle is now a good deal longer and not nearly as responsive as the vehicle is by itself.

Downloaded from www.Manualslib.com manuals search engine

Before starting, check the trailer hitch and platform (and attachments), safety chains, electrical connector, lamps, tires, and mirror adjustment. If the trailer has electric brakes, start the vehicle and trailer moving and then apply the trailer brake controller by hand to be sure the brakes are working. This lets you check the electrical connection at the same time.

During your trip, check occasionally to be sure that the load is secure, and that the lamps and any trailer brakes are still working.

Following Distance

Stay at least twice as far behind the vehicle ahead as when driving the vehicle without a trailer. This can prevent situations that require heavy braking and sudden turns.

Passing

More passing distance is needed up ahead when towing a trailer. And, because the vehicle and trailer are a good deal longer, distances between any vehicles that are passed must be greater, before returning to the proper lane.

Backing Up

Hold the bottom of the steering wheel with one hand. Then, to move the trailer to the left, move that hand to the left. To move the trailer to the right, move that hand to the right. Always back up slowly and, if possible, have someone guide you.

Making Turns

Notice: **Making very sharp turns while trailering could cause the trailer to come in contact with the vehicle. Your vehicle could be damaged. Avoid making very sharp turns while trailering.**

When turning with a trailer, make wider turns than normal. Do this so the trailer will not strike soft shoulders, curbs, road signs, trees, or other objects. Avoid jerky or sudden maneuvers. Signal well in advance.

Turn Signals When Towing a Trailer

When towing a trailer, the vehicle may need a different turn signal flasher and/or extra wiring. Check with your dealer. The arrows on the instrument panel will flash whenever signaling a turn or lane change. Properly hooked up, the trailer lamps will also flash, telling other drivers the vehicle and trailer are about to turn, change lanes, or stop.

Downloaded from www.Manualslib.com manuals search engine

When towing a trailer, the arrows on the instrument panel will flash for turns even if the bulbs on the trailer are burned out. You may think drivers behind you are seeing the turn signal when they are not. It is important to check occasionally to be sure the trailer bulbs are still working.

The vehicle has bulb warning lights. When a trailer lighting system is plugged into the vehicle's lighting system, its bulb warning lights may not indicate if one of the lamps goes out. So, when a trailer lighting system is plugged in, be sure to check the vehicle and trailer lamps from time to time to be sure they are all working. Once the trailer lamps have been disconnected, the bulb warning lights can once again indicate if one of the vehicle lamps is out.

Driving On Grades

Reduce speed and shift to a lower gear before starting down a long or steep downgrade. If the vehicle is not shifted down, the brakes may have to be used so much that they would get hot and no longer work well.

On a long uphill grade, shift down and reduce the vehicle's speed to around 45 mph (70 km/h) to reduce the possibility of engine and transaxle overheating.

If the vehicle has overdrive, it may be driven in THIRD (3) instead of AUTOMATIC OVERDRIVE (D).

Parking on Hills

⚠ CAUTION:

You really should not park your vehicle, with a trailer attached, on a hill. If something goes wrong, your rig could start to move. People can be injured, and both your vehicle and the trailer can be damaged.

But if the rig ever has to be parked on a hill, here is how to do it:

1. Apply the regular brakes, but do not shift into PARK (P) yet.
2. Have someone place chocks under the trailer wheels.
3. When the wheel chocks are in place, release the regular brakes until the chocks absorb the load.
4. Reapply the regular brakes. Then apply the parking brake, and then shift to PARK (P).
5. Release the regular brakes.

Downloaded from www.Manualslib.com manuals search engine

When You Are Ready to Leave After Parking on a Hill

1. Apply the regular brakes and hold the pedal down while you:
   - Start the engine
   - Shift into a gear
   - Release the parking brake
2. Let up on the brake pedal.
3. Drive slowly until the trailer is clear of the chocks.
4. Stop and have someone pick up and store the chocks.

Maintenance When Trailer Towing

The vehicle will need service more often when it pulls a trailer. See *Scheduled Maintenance on page 6-4* for more information. Things that are especially important in trailer operation are automatic transaxle fluid, which should not be overfilled, engine oil, drive belts, cooling, and brake systems. Each of these is covered in this manual, and the Index will help locate them quickly. If trailering, it is a good idea to review this information before starting on a trip.

Check periodically to see that all hitch nuts and bolts are tight.

Engine Cooling When Trailer Towing

The cooling system may temporarily overheat during severe operating conditions. See *Engine Overheating on page 5-28*.

Downloaded from www.Manualslib.com manuals search engine

Section 5 Service and Appearance Care

Service 5-3
Accessories and Modifications 5-3
California Proposition 65 Warning 5-3
Doing Your Own Service Work 5-4
Adding Equipment to the Outside of Your Vehicle 5-5

Fuel 5-5
Gasoline Octane 5-5
Gasoline Specifications 5-5
California Fuel 5-6
Additives 5-6
Fuels in Foreign Countries 5-7
Filling the Tank 5-7
Filling a Portable Fuel Container 5-9

Checking Things Under the Hood 5-10
Hood Release 5-11
Engine Compartment Overview 5-12
Engine Oil 5-16
Engine Oil Life System 5-19
Supercharger Oil 5-20
Engine Air Cleaner/Filter 5-21
Automatic Transaxle Fluid 5-23
Engine Coolant 5-25
Pressure Cap 5-28
Engine Overheating 5-28
Overheated Engine Protection Operating Mode 5-30
Cooling System 5-30
Power Steering Fluid 5-40
Windshield Washer Fluid 5-41
Brakes 5-42
Battery 5-45
Jump Starting 5-46

Headlamp Aiming 5-50

Bulb Replacement 5-53
Halogen Bulbs 5-53
Headlamps and Sidemarker Lamps 5-54
Front Turn Signal, Parking and Fog Lamps 5-56
Taillamps, Turn Signal, and Stoplamps 5-57
Back-Up Lamps 5-58
Replacement Bulbs 5-59

Windshield Replacement 5-60

Windshield Wiper Blade Replacement 5-60

Tires 5-60
Tire Sidewall Labeling 5-62
Tire Terminology and Definitions 5-64
Inflation - Tire Pressure 5-67
Tire Inflation Monitor System 5-68
Tire Inspection and Rotation 5-70

Downloaded from www.Manualslib.com manuals search engine

Section 5 Service and Appearance Care

When It Is Time for New Tires 5-71
Buying New Tires 5-72
Different Size Tires and Wheels 5-73
Uniform Tire Quality Grading 5-74
Wheel Alignment and Tire Balance 5-75
Wheel Replacement 5-75
Tire Chains 5-77
If a Tire Goes Flat 5-77
Tire Inflator Kit (GXP) 5-79
Changing a Flat Tire 5-88
Removing the Spare Tire and Tools 5-90
Removing the Flat Tire and Installing the Spare Tire 5-91
Storing a Flat or Spare Tire and Tools 5-97
Compact Spare Tire 5-99

Appearance Care 5-99
Cleaning the Inside of Your Vehicle 5-99
Fabric/Carpet 5-101
Leather 5-103
Ultra Lux Suede 5-103
Instrument Panel, Vinyl, and Other Plastic Surfaces 5-104
Care of Safety Belts 5-104
Weatherstrips 5-104
Washing Your Vehicle 5-105
Cleaning Exterior Lamps/Lenses 5-105
Finish Care 5-105
Windshield and Wiper Blades 5-106
Aluminum Wheels 5-106
Tires 5-107
Sheet Metal Damage 5-107
Finish Damage 5-107
Underbody Maintenance 5-108
Chemical Paint Spotting 5-108
Vehicle Care/Appearance Materials 5-109

Vehicle Identification 5-110
Vehicle Identification Number (VIN) 5-110
Service Parts Identification Label 5-110

Electrical System 5-111
Add-On Electrical Equipment 5-111
Headlamp Wiring 5-111
Windshield Wiper Fuses 5-111
Power Windows and Other Power Options 5-111
Fuses and Circuit Breakers 5-112
Instrument Panel Fuse Block 5-112
Underhood Fuse Block 5-114

Capacities and Specifications 5-118

Downloaded from www.Manualslib.com manuals search engine

Service

Your dealer knows your vehicle best and wants you to be happy with it. We hope you will go to your dealer for all your service needs. You will get genuine GM parts and GM-trained and supported service people.

We hope you will want to keep your GM vehicle all GM. Genuine GM parts have one of these marks:

ACDelco®

GM Parts®

GM® Goodwrench

GM® Accessories

Accessories and Modifications

When you add non-GM accessories to your vehicle they can affect your vehicle's performance and safety, including such things as, braking, stability, ride and handling, emissions systems, aerodynamics, durability, and electronic systems like antilock brakes, traction control and stability control. Some of these accessories may even cause malfunction or damage not covered by warranty.

GM Accessories are designed to complement and function with other systems on your vehicle. Your GM dealer can accessorize your vehicle using genuine GM Accessories. When you go to your GM dealer and ask for GM Accessories, you will know that GM-trained and supported service technicians will perform the work using genuine GM Accessories.

California Proposition 65 Warning

Most motor vehicles, including this one, contain and/or emit chemicals known to the State of California to cause cancer and birth defects or other reproductive harm. Engine exhaust, many parts and systems (including some inside the vehicle), many fluids, and some component wear by-products contain and/or emit these chemicals.

Downloaded from www.Manualslib.com manuals search engine

Doing Your Own Service Work

⚠ CAUTION:

You can be injured and your vehicle could be damaged if you try to do service work on a vehicle without knowing enough about it.

- **Be sure you have sufficient knowledge, experience, the proper replacement parts, and tools before you attempt any vehicle maintenance task.**
- **Be sure to use the proper nuts, bolts, and other fasteners. English and metric fasteners can be easily confused. If you use the wrong fasteners, parts can later break or fall off. You could be hurt.**

If you want to do some of your own service work, you will want to use the proper service manual. It tells you much more about how to service your vehicle than this manual can. To order the proper service manual, see *Service Publications Ordering Information on page 7-14*.

Your vehicle has an airbag system. Before attempting to do your own service work, see *Servicing Your Airbag-Equipped Vehicle on page 1-65*.

You should keep a record with all parts receipts and list the mileage and the date of any service work you perform. See *Maintenance Record on page 6-14*.

Downloaded from www.Manualslib.com manuals search engine

Adding Equipment to the Outside of Your Vehicle

Things you might add to the outside of your vehicle can affect the airflow around it. This may cause wind noise and affect windshield washer performance. Check with your dealer before adding equipment to the outside of your vehicle.

Fuel

The 8th digit of your vehicle identification number (VIN) shows the code letter or number that identifies your engine. You will find the VIN at the top left of the instrument panel. See *Vehicle Identification Number (VIN) on page 5-110*.

Gasoline Octane

If your vehicle has the 3800 V6 engine (VIN Code 2), use regular unleaded gasoline with a posted octane rating of 87 or higher. If the octane rating is less than 87, you may notice an audible knocking noise when you drive, commonly referred to as spark knock. If this occurs, use a gasoline rated at 87 octane or higher as soon as possible. If you are using gasoline rated at 87 octane or higher and you hear heavy knocking, your engine needs service.

If your vehicle has the 3800 Supercharged V6 engine (VIN Code 4) or the 5.3L V8 engine (VIN Code C), use premium unleaded gasoline with a posted octane rating of 91 or higher. You may also use regular unleaded gasoline rated at 87 octane or higher, but your vehicle's acceleration may be slightly reduced, and you may notice a slight audible knocking noise, commonly referred to as spark knock. If the octane is less than 87, you may notice a heavy knocking noise when you drive. If this occurs, use a gasoline rated at 87 octane or higher as soon as possible. Otherwise, you might damage your engine. If you are using gasoline rated at 87 octane or higher and you hear heavy knocking, your engine needs service.

Gasoline Specifications

At a minimum, gasoline should meet ASTM specification D 4814 in the United States or CAN/CGSB-3.5 in Canada. Some gasolines may contain an octane-enhancing additive called methylcyclopentadienyl manganese tricarbonyl (MMT). General Motors recommends against the use of gasolines containing MMT. See *Additives on page 5-6* for additional information.

Downloaded from www.Manualslib.com manuals search engine

California Fuel

If your vehicle is certified to meet California Emissions Standards, it is designed to operate on fuels that meet California specifications. See the underhood emission control label. If this fuel is not available in states adopting California emissions standards, your vehicle will operate satisfactorily on fuels meeting federal specifications, but emission control system performance may be affected. The malfunction indicator lamp may turn on and your vehicle may fail a smog-check test. See *Malfunction Indicator Lamp on page 3-47*. If this occurs, return to your authorized GM dealer for diagnosis. If it is determined that the condition is caused by the type of fuel used, repairs may not be covered by your warranty.

Additives

To provide cleaner air, all gasolines in the United States are now required to contain additives that will help prevent engine and fuel system deposits from forming, allowing your emission control system to work properly. In most cases, you should not have to add anything to your fuel. However, some gasolines contain only the minimum amount of additive required to meet U.S. Environmental Protection Agency regulations. To help keep fuel injectors and intake valves clean, or if your vehicle experiences problems due to dirty injectors or valves, look for gasoline that is advertised as TOP TIER Detergent Gasoline. Also, your GM dealer has additives that will help correct and prevent most deposit-related problems.

Gasolines containing oxygenates, such as ethers and ethanol, and reformulated gasolines may be available in your area. General Motors recommends that you use these gasolines if they comply with the specifications described earlier. However, E85 (85% ethanol) and other fuels containing more than 10% ethanol must not be used in vehicles that were not designed for those fuels.

Notice: **Your vehicle was not designed for fuel that contains methanol. Do not use fuel containing methanol. It can corrode metal parts in your fuel system and also damage the plastic and rubber parts. That damage would not be covered under your warranty.**

Some gasolines that are not reformulated for low emissions may contain an octane-enhancing additive called methylcyclopentadienyl manganese tricarbonyl (MMT); ask the attendant where you buy gasoline whether the fuel contains MMT. General Motors recommends against the use of such gasolines. Fuels containing MMT can reduce the life of spark plugs and the performance of the emission control system may be affected. The malfunction indicator lamp may turn on. If this occurs, return to your authorized GM dealer for service.

Downloaded from www.Manualslib.com manuals search engine

Fuels in Foreign Countries

If you plan on driving in another country outside the United States or Canada, the proper fuel may be hard to find. Never use leaded gasoline or any other fuel not recommended in the previous text on fuel. Costly repairs caused by use of improper fuel would not be covered by your warranty.

To check the fuel availability, ask an auto club, or contact a major oil company that does business in the country where you will be driving.

Filling the Tank

⚠ CAUTION:

Fuel vapor burns violently and a fuel fire can cause bad injuries. To help avoid injuries to you and others, read and follow all the instructions on the pump island. Turn off your engine when you are refueling. Do not smoke if you are near fuel or refueling your vehicle. Keep sparks, flames, and smoking materials away from fuel. Do not leave the fuel pump unattended when refueling your vehicle — this is against the law in some places. Keep children away from the fuel pump; never let children pump fuel.

Downloaded from www.Manualslib.com manuals search engine

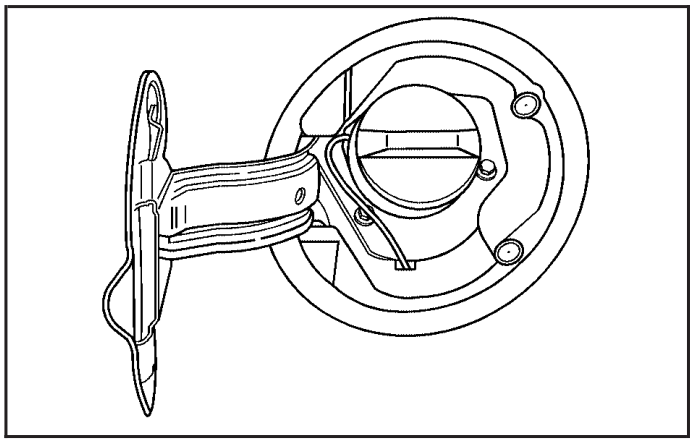

The tethered fuel cap is located behind a hinged fuel door on the driver's side of the vehicle.

To remove the fuel cap, turn it slowly counterclockwise. The fuel cap has a spring in it; if the cap is released too soon, it will spring back to the right.

While refueling, let the fuel cap hang by the tether below the fuel fill opening.

⚠ CAUTION:

If you spill fuel and then something ignites it, you could be badly burned. Fuel can spray out on you if you open the fuel cap too quickly. This spray can happen if your tank is nearly full, and is more likely in hot weather. Open the fuel cap slowly and wait for any hiss noise to stop. Then unscrew the cap all the way.

Be careful not to spill fuel. Do not top off or overfill the tank and wait a few seconds after you have finished pumping before removing the nozzle. Clean fuel from painted surfaces as soon as possible. See *Washing Your Vehicle on page 5-105*.

When replacing the fuel cap, turn it clockwise until it clicks. Make sure the cap is fully installed. The diagnostic system can determine if the fuel cap has been left off or improperly installed. This would allow fuel to evaporate into the atmosphere. See *Malfunction Indicator Lamp on page 3-47*.

Downloaded from www.Manualslib.com manuals search engine

The CHECK GAS CAP message will be displayed on the Driver Information Center (DIC) if the fuel cap is not properly installed. See *DIC Warnings and Messages on page 3-72* for more information.

⚠ CAUTION:

If a fire starts while you are refueling, do not remove the nozzle. Shut off the flow of fuel by shutting off the pump or by notifying the station attendant. Leave the area immediately.

Notice: **If you need a new fuel cap, be sure to get the right type. Your dealer can get one for you. If you get the wrong type, it may not fit properly. This may cause your malfunction indicator lamp to light and may damage your fuel tank and emissions system. See *Malfunction Indicator Lamp on page 3-47*.**

Filling a Portable Fuel Container

⚠ CAUTION:

Never fill a portable fuel container while it is in your vehicle. Static electricity discharge from the container can ignite the gasoline vapor. You can be badly burned and your vehicle damaged if this occurs. To help avoid injury to you and others:

- **Dispense gasoline only into approved containers.**
- **Do not fill a container while it is inside a vehicle, in a vehicle's trunk, pickup bed, or on any surface other than the ground.**
- **Bring the fill nozzle in contact with the inside of the fill opening before operating the nozzle. Contact should be maintained until the filling is complete.**
- **Do not smoke while pumping gasoline.**

Downloaded from www.Manualslib.com manuals search engine

Checking Things Under the Hood

⚠ CAUTION:

An electric fan under the hood can start up and injure you even when the engine is not running. Keep hands, clothing and tools away from any underhood electric fan.

⚠ CAUTION:

Things that burn can get on hot engine parts and start a fire. These include liquids like fuel, oil, coolant, brake fluid, windshield washer and other fluids, and plastic or rubber. You or others could be burned. Be careful not to drop or spill things that will burn onto a hot engine.

Downloaded from www.Manualslib.com manuals search engine

Hood Release

To open the hood, do the following:

1. Pull the hood release handle with this symbol on it. It is located inside the vehicle near the parking brake pedal.

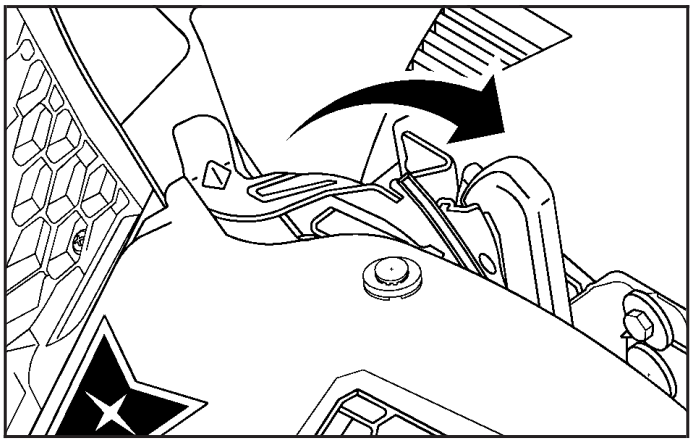

2. Go to the front of the vehicle and release the secondary hood latch, located near the center front of the engine compartment, by moving it to the right.
3. Lift the hood.

Before closing the hood, be sure all the filler caps are on properly. Then pull the hood down and close it firmly.

Downloaded from www.Manualslib.com manuals search engine

Engine Compartment Overview

When you open the hood on the 3800 V6 Supercharged engine (3800 V6 engine similar), here is what you will see:

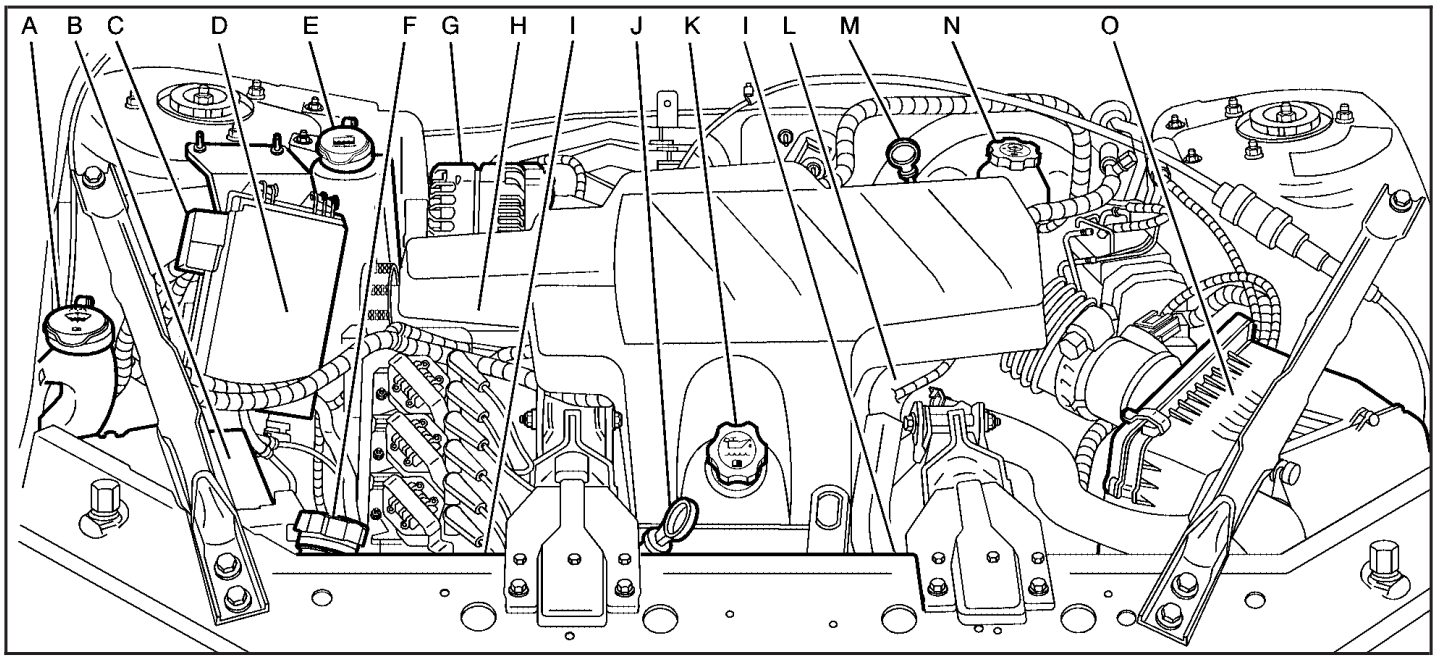

Downloaded from www.Manualslib.com manuals search engine

A. Windshield Washer Fluid Reservoir. See “Adding Washer Fluid” under *Windshield Washer Fluid on page 5-41*.

B. Battery. See *Battery on page 5-45*.

C. Remote Positive (+) Terminal. See *Jump Starting on page 5-46*.

D. Underhood Fuse Block. See *Underhood Fuse Block on page 5-114*.

E. Engine Coolant Recovery Tank. See *Cooling System on page 5-30*.

F. Pressure Cap. See *Pressure Cap on page 5-28*.

G. Power Steering Fluid Reservoir (low in engine compartment). See *Power Steering Fluid on page 5-40*.

H. Supercharger Oil Fill Location (If Equipped). See *Supercharger Oil on page 5-20*.

I. Electric Cooling Fan. See *Cooling System on page 5-30*.

J. Engine Oil Dipstick. See “Checking Engine Oil” under *Engine Oil on page 5-16*.

K. Engine Oil Fill Cap. See “When to Add Engine Oil” under *Engine Oil on page 5-16*.

L. Engine Coolant Bleed Valve. See “How to Add Coolant to the Radiator” under *Cooling System on page 5-30*.

M. Automatic Transaxle Fluid Dipstick. See “Checking the Fluid Level” under *Automatic Transaxle Fluid on page 5-23*.

N. Brake Master Cylinder Reservoir. See “Brake Fluid” under *Brakes on page 5-42*.

O. Engine Air Cleaner/Filter. See *Engine Air Cleaner/Filter on page 5-21*.

Downloaded from www.Manualslib.com manuals search engine

When you open the hood on the 5.3L V8 engine, here is what you will see:

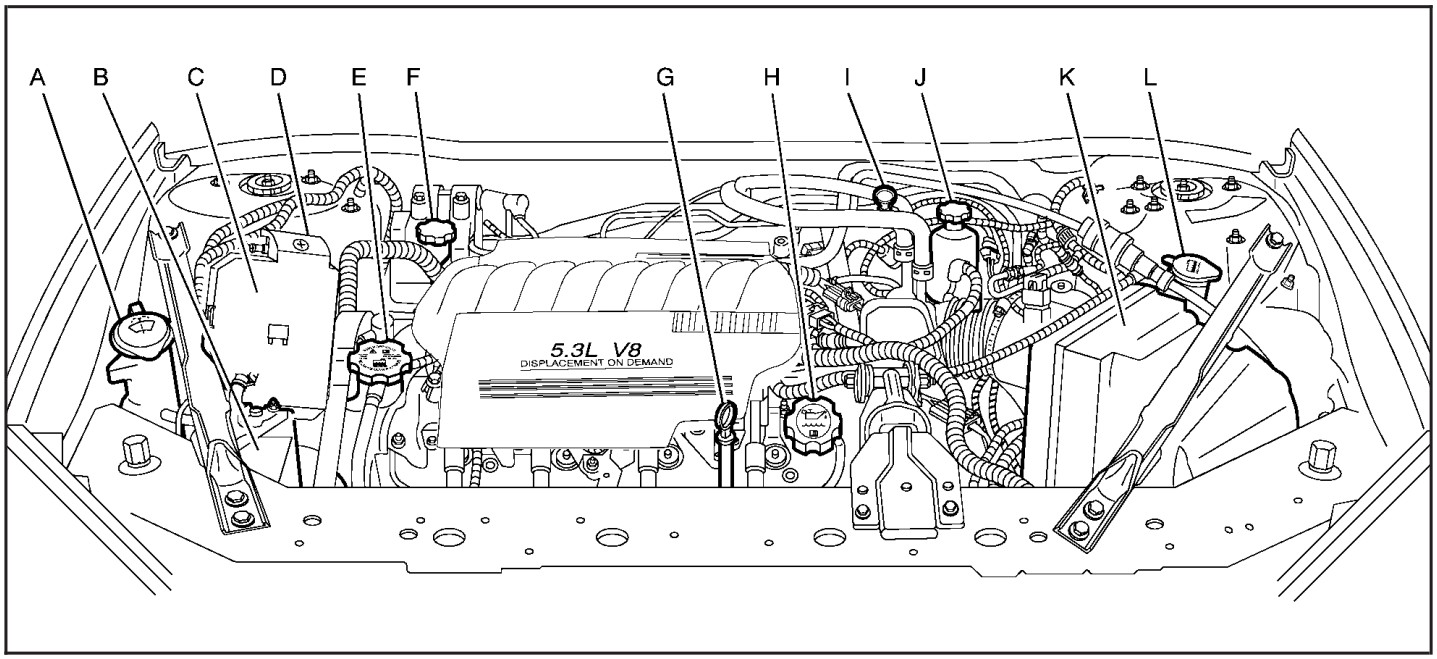

Downloaded from www.Manualslib.com manuals search engine

A. Windshield Washer Fluid Reservoir. See “Adding Washer Fluid” under *Windshield Washer Fluid on page 5-41*.

B. Battery. See *Battery on page 5-45*.

C. Underhood Fuse Block. See *Underhood Fuse Block on page 5-114*.

D. Remote Positive (+) Terminal. See *Jump Starting on page 5-46*.

E. Pressure Cap. See *Pressure Cap on page 5-28*.

F. Power Steering Fluid Reservoir. See *Power Steering Fluid on page 5-40*.

G. Engine Oil Dipstick. See “Checking Engine Oil” under *Engine Oil on page 5-16*.

H. Engine Oil Fill Cap. See “When to Add Engine Oil” under *Engine Oil on page 5-16*.

I. Automatic Transaxle Fluid Dipstick. See “Checking the Fluid Level” under *Automatic Transaxle Fluid on page 5-23*.

J. Brake Master Cylinder Reservoir. See “Brake Fluid” under *Brakes on page 5-42*.

K. Engine Air Cleaner/Filter. See *Engine Air Cleaner/Filter on page 5-21*.

L. Engine Coolant Recovery Tank. See *Cooling System on page 5-30*.

Downloaded from www.Manualslib.com manuals search engine

Engine Oil

If this symbol, along with the LOW OIL LEVEL message appears on the Driver Information Center (DIC), it means you need to check the engine oil level right away.

For more information, see LOW OIL LEVEL under *DIC Warnings and Messages on page 3-72*.

You should check the engine oil level regularly; this is an added reminder.

Checking Engine Oil

It is a good idea to check the engine oil every time you get fuel. In order to get an accurate reading, the oil must be warm and the vehicle must be on level ground.

The engine oil dipstick handle is a yellow loop. See *Engine Compartment Overview on page 5-12* for the location of the engine oil dipstick.

1. Turn off the engine and give the oil several minutes to drain back into the oil pan. If you do not do this, the oil dipstick might not show the actual level.
2. Pull out the dipstick and clean it with a paper towel or cloth, then push it back in all the way. Remove it again, keeping the tip down, and check the level.

Downloaded from www.Manualslib.com manuals search engine

When to Add Engine Oil

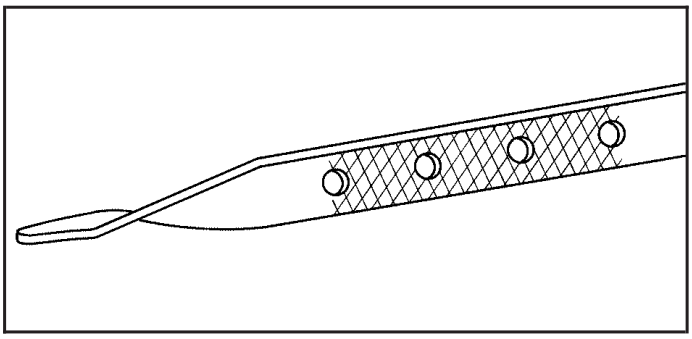

V6 Engine

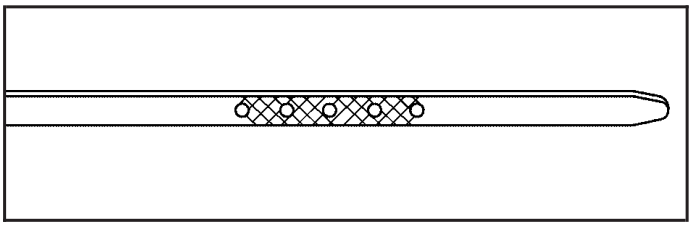

V8 Engine

If the oil is below the cross-hatched area at the tip of the dipstick, you will need to add at least one quart/liter of oil. But you must use the right kind. This section explains what kind of oil to use. For engine oil crankcase capacity, see *Capacities and Specifications on page 5-118*.

Notice: **Do not add too much oil. If the engine has so much oil that the oil level gets above the cross-hatched area that shows the proper operating range, the engine could be damaged.**

See *Engine Compartment Overview on page 5-12* for the location of the engine oil fill cap.

Be sure to add enough oil to put the level somewhere in the proper operating range in the cross-hatched area. Push the dipstick all the way back in when you are through.

Downloaded from www.Manualslib.com manuals search engine

What Kind of Engine Oil to Use

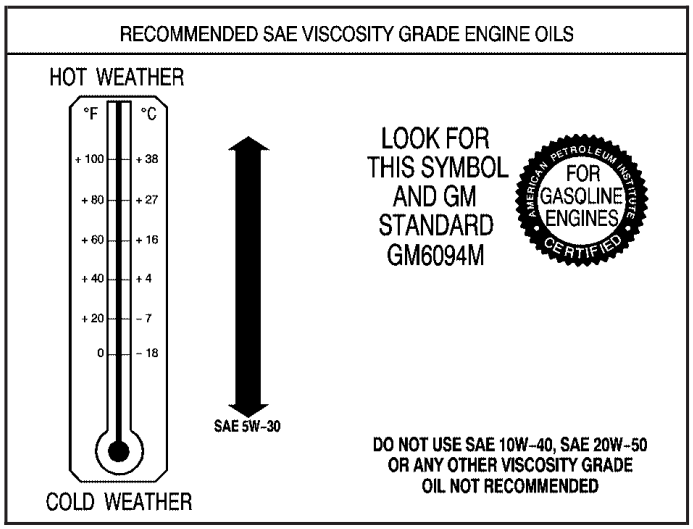

Look for two things:

- GM6094M

  Your vehicle's engine requires oil meeting GM Standard GM6094M. You should look for and use only an oil that meets GM Standard GM6094M.

- SAE 5W-30

  As shown in the viscosity chart, SAE 5W-30 is best for your vehicle.

  These numbers on an oil container show its viscosity, or thickness. Do not use other viscosity oils such as SAE 20W-50.

Oils meeting these requirements should also have the starburst symbol on the container. This symbol indicates that the oil has been certified by the American Petroleum Institute (API).

You should look for this information on the oil container, and use *only* those oils that are identified as meeting GM Standard GM6094M and have the starburst symbol on the front of the oil container.

Downloaded from www.Manualslib.com manuals search engine

Notice: **Use only engine oil identified as meeting GM Standard GM6094M and showing the American Petroleum Institute Certified For Gasoline Engines starburst symbol. Failure to use the recommended oil can result in engine damage not covered by your warranty.**

GM Goodwrench® oil meets all the requirements for your vehicle.

If you are in an area of extreme cold, where the temperature falls below –20°F (–29°C), it is recommended that you use either an SAE 5W-30 synthetic oil or an SAE 0W-30 oil. Both will provide easier cold starting and better protection for the engine at extremely low temperatures.

Engine Oil Additives

Do not add anything to your vehicle's engine oil. The recommended oils with the starburst symbol that meet GM Standard GM6094M are all you will need for good performance and engine protection.

Engine Oil Life System

When to Change Engine Oil

Your vehicle has a computer system that lets you know when to change the engine oil and filter. This is based on engine revolutions and engine temperature, and not on mileage. Based on driving conditions, the mileage at which an oil change will be indicated can vary considerably. For the oil life system to work properly, you must reset the system every time the oil is changed.

When the system has calculated that oil life has been diminished, it will indicate that an oil change is necessary. A CHANGE OIL SOON message will come on. See *DIC Warnings and Messages on page 3-72*. Change the oil as soon as possible within the next 600 miles (1 000 km). It is possible that, if you are driving under the best conditions, the oil life system may not indicate that an oil change is necessary for over a year. However, the engine oil and filter must be changed at least once a year and at this time the system must be reset. Your dealer has GM-trained service people who will perform this work using genuine GM parts and reset the system. It is also important to check the oil regularly and keep it at the proper level.

If the system is ever reset accidentally, you must change the oil at 3,000 miles (5 000 km) since the last oil change. Remember to reset the oil life system whenever the oil is changed.

Downloaded from www.Manualslib.com manuals search engine

How to Reset the Engine Oil Life System

The Engine Oil Life System calculates when to change the engine oil and filter based on vehicle use. Anytime the oil is changed, reset the system so it can calculate when the next oil change is required. If a situation occurs where you change the oil prior to a CHANGE OIL SOON message appearing on the DIC, reset the system.

To reset the oil life system, after the oil has been changed, use the following procedure:

1. Press the options button on the DIC until ENGINE OIL MONITOR appears on the DIC screen.
2. Press the set/reset button to reset the system.

   The next screen indicates that the engine oil monitor system has been reset.

   If the vehicle is equipped with the trip computer DIC, when the gage button is pressed and the OIL LIFE REMAINING mode appears, it should read 100 percent OIL LIFE REMAINING.
3. Turn the key to OFF.

If the CHANGE OIL SOON message comes back on when you start your vehicle, the engine oil life system has not reset. Repeat the procedure.

What to Do with Used Oil

Used engine oil contains certain elements that may be unhealthy for your skin and could even cause cancer. Do not let used oil stay on your skin for very long. Clean your skin and nails with soap and water, or a good hand cleaner. Wash or properly dispose of clothing or rags containing used engine oil. See the manufacturer's warnings about the use and disposal of oil products.

Used oil can be a threat to the environment. If you change your own oil, be sure to drain all the oil from the filter before disposal. Never dispose of oil by putting it in the trash, pouring it on the ground, into sewers, or into streams or bodies of water. Instead, recycle it by taking it to a place that collects used oil. If you have a problem properly disposing of used oil, ask your dealer, a service station, or a local recycling center for help.

Supercharger Oil

Because they are technically qualified and have the proper tools, you should have your dealer perform this maintenance.

Downloaded from www.Manualslib.com manuals search engine

When to Check

See *Additional Required Services on page 6-6* for when the oil level should be checked.

What Kind of Oil to Use

Use only the recommended supercharger oil. See *Recommended Fluids and Lubricants on page 6-12*.

Engine Air Cleaner/Filter

The engine air cleaner/filter is located in the engine compartment on the driver's side of the vehicle. See *Engine Compartment Overview on page 5-12* for more information on location.

When to Inspect the Engine Air Cleaner/Filter

Inspect the air cleaner/filter at the Maintenance II intervals and replace it at the first oil change after each 50,000 mile (83 000 km) interval. See *Scheduled Maintenance on page 6-4* for more information. If you are driving in dusty/dirty conditions, inspect the filter at each engine oil change.

How to Inspect the Engine Air Cleaner/Filter

To inspect the air cleaner/filter, remove the filter from the vehicle and lightly shake the filter to release loose dust and dirt. If the filter remains caked with dirt, a new filter is required.

To inspect or replace the engine air cleaner/filter do the following:

3800 V6 Supercharged Engine shown, 3800 V6 Engine similar

Downloaded from www.Manualslib.com manuals search engine

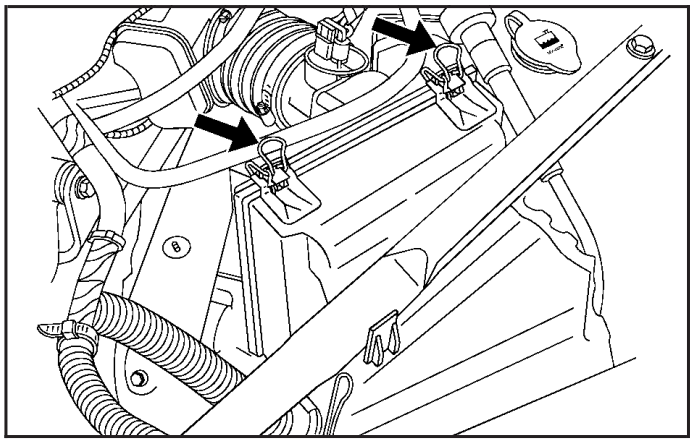

5.3L V8 Engine

1. Lift the filter cover tabs on top of the engine air cleaner/filter housing.
2. Push the filter cover housing toward the engine.
3. Pull out the filter.
4. Inspect or replace the engine air cleaner/filter.
5. To reinstall the cover, position the tabs through the slots on the housing. If your vehicle has one of the 3800 V6 engines, a notch on the sides of the filter cover will indicate the correct engagement.
6. Push the cover tabs on top of the housing to lock the cover in place.

⚠ CAUTION:

Operating the engine with the air cleaner/filter off can cause you or others to be burned. The air cleaner not only cleans the air; it helps to stop flames if the engine backfires. If it is not there and the engine backfires, you could be burned. Do not drive with it off, and be careful working on the engine with the air cleaner/filter off.

Notice: **If the air cleaner/filter is off, a backfire can cause a damaging engine fire. And, dirt can easily get into your engine, which will damage it. Always have the air cleaner/filter in place when you are driving.**

Downloaded from www.Manualslib.com manuals search engine

Automatic Transaxle Fluid

When to Check and Change Automatic Transaxle Fluid

A good time to check the automatic transaxle fluid level is when the engine oil is changed.

Change the fluid and filter at the intervals listed in *Additional Required Services on page 6-6*, and be sure to use the transaxle fluid listed in *Recommended Fluids and Lubricants on page 6-12*.

How to Check Automatic Transaxle Fluid

Because this operation can be a little difficult, you may choose to have this done at the dealership service department.

If you do it yourself, be sure to follow all the instructions here, or you could get a false reading on the dipstick.

Notice: **Too much or too little fluid can damage the transaxle. Too much can mean that some of the fluid could come out and fall on hot engine or exhaust system parts, starting a fire. Too little fluid could cause the transaxle to overheat. Be sure to get an accurate reading if you check the transaxle fluid.**

Wait at least 30 minutes before checking the transaxle fluid level if you have been driving:

- When outside temperatures are above 90°F (32°C).
- At high speed for quite a while.
- In heavy traffic — especially in hot weather.
- While pulling a trailer.

To get the right reading, the fluid should be at normal operating temperature, which is 180°F to 200°F (82°C to 93°C).

Get the vehicle warmed up by driving about 15 miles (24 km) when outside temperatures are above 50°F (10°C). If it is colder than 50°F (10°C), you may have to drive longer.

Downloaded from www.Manualslib.com manuals search engine

Checking the Fluid Level

Prepare the vehicle as follows:

1. Park the vehicle on a level place. Keep the engine running.
2. With the parking brake applied, place the shift lever in PARK (P).
3. With your foot on the brake pedal, move the shift lever through each gear, pausing for about three seconds in each one. Then, position the shift lever in PARK (P).
4. Let the engine run at idle for three to five minutes.

Then, without shutting off the engine, follow these steps:

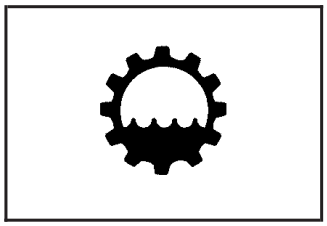

The transaxle fluid dipstick handle has this symbol on it, and is located near the rear of the engine compartment. See *Engine Compartment Overview on page 5-12* for more information on location.

1. Pull out the dipstick and wipe it with a clean rag or paper towel.
2. Push it back in all the way, wait three seconds and then pull it back out again.

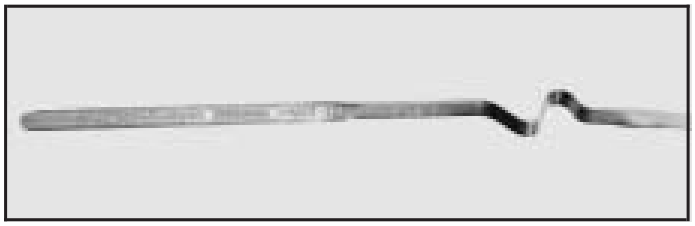

3. Check both sides of the dipstick, and read the lower level. The fluid level must be in the crosshatched area.
4. If the fluid level is in the acceptable range, push the dipstick back in all the way.

Downloaded from www.Manualslib.com manuals search engine

How to Add Automatic Transaxle Fluid

Refer to the Maintenance Schedule to determine what kind of transaxle fluid to use. See *Recommended Fluids and Lubricants on page 6-12*.

If the fluid level is low, add only enough of the proper fluid to bring the level into the crosshatched area on the dipstick.

1. Pull out the dipstick.
2. Using a long-neck funnel, add enough fluid at the dipstick hole to bring it to the proper level.

   It does not take much fluid, generally less than one pint (0.5 L). Do not overfill.

Notice: **Use of the incorrect automatic transaxle fluid may damage your vehicle, and the damages may not be covered by your warranty. Always use the automatic transaxle fluid listed in *Recommended Fluids and Lubricants on page 6-12*.**

3. After adding fluid, recheck the fluid level as described under "How to Check Automatic Transaxle Fluid," earlier in this section.
4. When the correct fluid level is obtained, push the dipstick back in all the way.

Engine Coolant

The cooling system in the vehicle is filled with DEX-COOL® engine coolant. This coolant is designed to remain in the vehicle for five years or 150,000 miles (240 000 km), whichever occurs first, if only DEX-COOL® extended life coolant is added.

The following explains the cooling system and how to add coolant when it is low. If there is a problem with engine overheating or if coolant needs to be added to the radiator, see *Engine Overheating on page 5-28*.

A 50/50 mixture of clean, drinkable water and DEX-COOL® engine coolant will:

- Give freezing protection down to –34°F (–37°C).
- Give boiling protection up to 265°F (129°C).
- Protect against rust and corrosion.
- Help keep the proper engine temperature.
- Let the warning lights and gages work as they should.

Notice: **Using coolant other than DEX-COOL® may cause premature engine, heater core, or radiator corrosion. In addition, the engine coolant may require changing sooner, at the first maintenance service after each 25,000 miles (41 500 km) or 24 months, whichever occurs first. Any repairs would not be covered by your warranty. Always use DEX-COOL® (silicate-free) coolant in your vehicle.**

Downloaded from www.Manualslib.com manuals search engine

What to Use

Use a mixture of one-half clean, drinkable water and one-half DEX-COOL® engine coolant which will not damage aluminum parts. If this coolant mixture is used, nothing else needs to be added.

⚠ CAUTION:

Adding only plain water to your cooling system can be dangerous. Plain water, or some other liquid such as alcohol, can boil before the proper coolant mixture will. Your vehicle's coolant warning system is set for the proper coolant mixture. With plain water or the wrong mixture, your engine could get too hot but you would not get the overheat warning. Your engine could catch fire and you or others could be burned. Use a 50/50 mixture of clean, drinkable water and DEX-COOL® coolant.

Notice: **If you use an improper coolant mixture, your engine could overheat and be badly damaged. The repair cost would not be covered by your warranty. Too much water in the mixture can freeze and crack the engine, radiator, heater core and other parts.**

If coolant needs to be added more than four times a year, have your dealer check the cooling system.

Notice: **If you use extra inhibitors and/or additives in your vehicle's cooling system, you could damage your vehicle. Use only the proper mixture of the engine coolant listed in this manual for the cooling system. See *Recommended Fluids and Lubricants on page 6-12* for more information.**

Downloaded from www.Manualslib.com manuals search engine

Checking Coolant

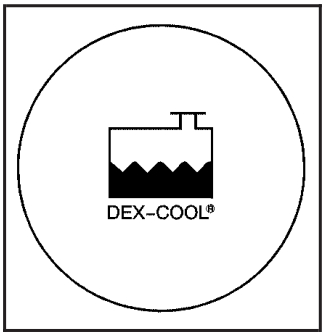

The coolant recovery tank cap has this symbol on it.

See *Engine Compartment Overview on page 5-12* for more information on the location of the coolant recovery tank.

The vehicle must be on a level surface when checking the coolant level.

When the engine is cold, the coolant level should be at the cold fill line or a little higher. The cold fill line is marked with the same symbol as the coolant recovery tank cap.

Adding Coolant

If more coolant is needed, add the proper DEX-COOL® coolant mixture at the coolant recovery tank, but be careful not to spill it.

If the coolant recovery tank is completely empty, add coolant to the radiator. See *Engine Overheating on page 5-28*.

⚠ CAUTION:

Turning the pressure cap when the engine and radiator are hot can allow steam and scalding liquids to blow out and burn you badly. With the coolant recovery tank, you will almost never have to add coolant at the radiator. Never turn the pressure cap — even a little — when the engine and radiator are hot.

⚠ CAUTION:

You can be burned if you spill coolant on hot engine parts. Coolant contains ethylene glycol, and it will burn if the engine parts are hot enough. Do not spill coolant on a hot engine.

Occasionally check the coolant level in the radiator. For information on how to add coolant to the radiator, see *Cooling System on page 5-30*.

Downloaded from www.Manualslib.com manuals search engine

Pressure Cap

Notice: **If the pressure cap is not tightly installed, coolant loss and possible engine damage may occur. Be sure the cap is properly and tightly secured.**

See *Engine Compartment Overview on page 5-12* for more information on location.

Engine Overheating

There is a coolant temperature gage and a warning light on the instrument panel that indicate an overheated engine condition. See *Engine Coolant Temperature Gage on page 3-46* and *Engine Coolant Temperature Warning Light on page 3-46*.

If Steam Is Coming From Your Engine

⚠ CAUTION:

Steam from an overheated engine can burn you badly, even if you just open the hood. Stay away from the engine if you see or hear steam coming from it. Just turn it off and get everyone away from the vehicle until it cools down. Wait until there is no sign of steam or coolant before you open the hood.

If you keep driving when your engine is overheated, the liquids in it can catch fire. You or others could be badly burned. Stop your engine if it overheats, and get out of the vehicle until the engine is cool.

See *Overheated Engine Protection Operating Mode on page 5-30* for information on driving to a safe place in an emergency.

Downloaded from www.Manualslib.com manuals search engine

Notice: **If your engine catches fire because you keep driving with no coolant, your vehicle can be badly damaged. The costly repairs would not be covered by your warranty. See *Overheated Engine Protection Operating Mode on page 5-30* for information on driving to a safe place in an emergency.**

If No Steam is Coming From Your Engine

An overheat warning can indicate a serious problem.

If you get an engine overheat warning but see or hear no steam, the problem may not be too serious. Sometimes the engine can get a little too hot when you:

- Climb a long hill on a hot day.
- Stop after high-speed driving.
- Idle for long periods in traffic.
- Tow a trailer.

If an overheat warning occurs without any sign of steam, try this for a minute or so:

1. In heavy traffic, let the engine idle in NEUTRAL (N) while stopped. If it is safe to do so, pull off the road, shift to PARK (P) or NEUTRAL (N) and let the engine idle.
2. Set the heater at the highest setting and the fan at the highest speed and open the windows as necessary.

If the overheat warning no longer exists, the vehicle can be driven. Just to be safe, drive slower for about 10 minutes. If the warning does not come back on, the vehicle can be driven normally.

If the warning continues, and you have not stopped, pull over, stop, and park the vehicle right away.

If there is still no sign of steam, idle the engine for three minutes while parked. If the warning is still there, turn off the engine and get everyone out of the vehicle until it cools down. Also, see “Overheated Engine Protection Operating Mode” later in this section.

You may decide not to lift the hood but to get service help right away.

Downloaded from www.Manualslib.com manuals search engine

Overheated Engine Protection Operating Mode

The overheated engine protection operating mode allows the vehicle to be driven to a safe place in an emergency situation. If an overheated engine condition exists, this protection mode alternates firing groups of cylinders to help prevent engine damage. In this mode, there will be a significant loss in power and engine performance. The engine coolant temperature gage indicator will move to the shaded area, and the engine coolant temperature warning light will come on, showing that an overheated engine condition exists. Driving extended miles (km) and/or towing a trailer in the overheated engine protection mode should be avoided.

Notice: **After driving in the overheated engine protection operating mode, to avoid engine damage, allow the engine to cool before attempting any repair. The engine oil will be severely degraded. Repair the cause of coolant loss, change the oil and reset the oil life system. See *Engine Oil on page 5-16*.**

Cooling System

When you decide it is safe to lift the hood, here is what you will see:

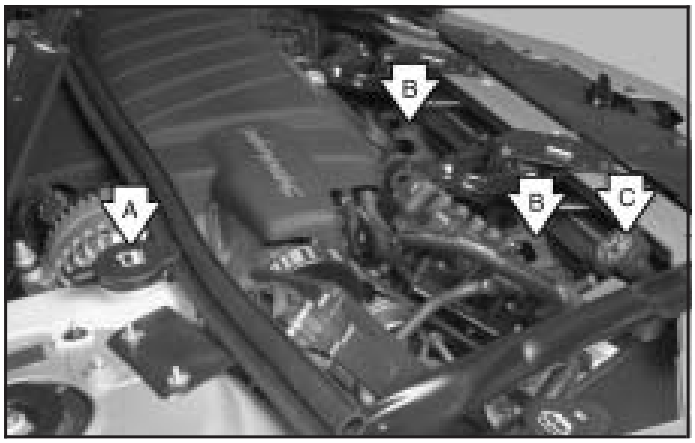

3800 V6 Supercharged Engine shown, 3800 V6 Engine similar

A. Coolant Recovery Tank
B. Electric Engine Cooling Fan(s)
C. Pressure Cap

Downloaded from www.Manualslib.com manuals search engine

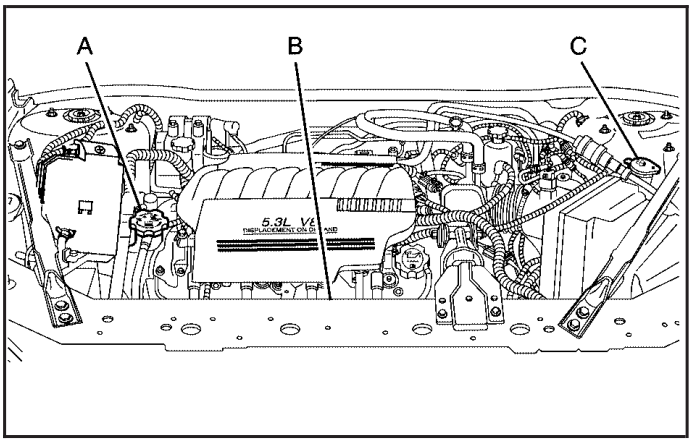

5.3L V8 Engine

A. Pressure Cap
B. Electric Engine Cooling Fans
C. Coolant Recovery Tank

⚠ CAUTION:

An electric engine cooling fan under the hood can start up even when the engine is not running and can injure you. Keep hands, clothing and tools away from any underhood electric fan.

If the coolant inside the coolant recovery tank is boiling, do not do anything else until it cools down. The vehicle should be parked on a level surface.

The coolant recovery tank is located in the rear of the engine compartment on the passenger's side of the vehicle on the 3800 V6 engines. The coolant recovery tank on the 5.3L V8 engine is located in the rear of the engine compartment on the driver's side of the vehicle, behind the engine air cleaner/filter.

Downloaded from www.Manualslib.com manuals search engine

When the engine is cold, the coolant level should be at or above the cold fill line on the coolant recovery tank. To check the coolant level, look for the cold fill line on the side of the coolant recovery tank that faces the engine. If the level is not correct, there may be a leak at the pressure cap or in the radiator hoses, heater hoses, radiator, water pump, or somewhere else in the cooling system.

⚠ CAUTION:

Heater and radiator hoses, and other engine parts, can be very hot. Do not touch them. If you do, you can be burned.

Do not run the engine if there is a leak. If you run the engine, it could lose all coolant. That could cause an engine fire, and you could be burned. Get any leak fixed before you drive the vehicle.

If there seems to be no leak, with the engine on, check to see if the electric engine cooling fan(s) are running. If the engine is overheating, the fan(s) should be running. If the fan(s) are not running, the vehicle needs service.

Notice: **Engine damage from running your engine without coolant is not covered by your warranty. See *Overheated Engine Protection Operating Mode on page 5-30* for information on driving to a safe place in an emergency.**

Notice: **Using coolant other than DEX-COOL® may cause premature engine, heater core or radiator corrosion. In addition, the engine coolant may require changing sooner, at 30,000 miles (50 000 km) or 24 months, whichever occurs first. Any repairs would not be covered by your warranty. Always use DEX-COOL® (silicate-free) coolant in your vehicle.**

Downloaded from www.Manualslib.com manuals search engine

How to Add Coolant to the Coolant Recovery Tank

⚠ CAUTION:

Adding only plain water to your cooling system can be dangerous. Plain water, or some other liquid such as alcohol, can boil before the proper coolant mixture will. Your vehicle's coolant warning system is set for the proper coolant mixture. With plain water or the wrong mixture, your engine could get too hot but you would not get the overheat warning. Your engine could catch fire and you or others could be burned. Use a 50/50 mixture of clean, drinkable water and DEX-COOL® coolant.

If you have not found a problem yet, but the coolant level is not at the cold fill line, add a 50/50 mixture of clean, drinkable water and DEX-COOL® engine coolant at the coolant recovery tank. See *Engine Coolant on page 5-25* for more information.

Notice: **In cold weather, water can freeze and crack the engine, radiator, heater core and other parts. Use the recommended coolant and the proper coolant mixture.**

⚠ CAUTION:

You can be burned if you spill coolant on hot engine parts. Coolant contains ethylene glycol and it will burn if the engine parts are hot enough. Do not spill coolant on a hot engine.

When the coolant level in the coolant recovery tank is at the cold fill line, start the vehicle.

Downloaded from www.Manualslib.com manuals search engine

If the overheat warning continues, there is one more thing you can try. You can add the proper coolant mixture directly to the radiator, but be sure the system is cool before you do it.

⚠ CAUTION:

Steam and scalding liquids from a hot cooling system can blow out and burn you badly. They are under pressure, and if you turn the pressure cap — even a little — they can come out at high speed. Never turn the cap when the cooling system, including the pressure cap, is hot. Wait for the cooling system and pressure cap to cool if you ever have to turn the pressure cap.

How to Add Coolant to the Radiator (3800 V6 Engines)

Notice: **Your engine has a specific radiator fill procedure. Failure to follow this procedure could cause your engine to overheat and be severely damaged.**

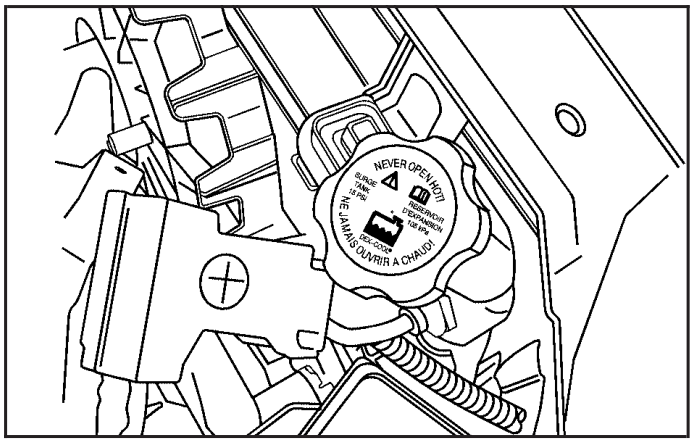

3800 V6 Supercharged Engine shown, 3800 V6 Engine similar

1. You can remove the pressure cap when the cooling system, including the pressure cap and upper radiator hose, is no longer hot. Turn the cap slowly counterclockwise.

   If you hear a hiss, wait for that to stop. A hiss means there is still some pressure left.

2. Then keep turning the pressure cap and remove it.

Downloaded from www.Manualslib.com manuals search engine

⚠ CAUTION:

You can be burned if you spill coolant on hot engine parts. Coolant contains ethylene glycol and it will burn if the engine parts are hot enough. Do not spill coolant on a hot engine.

3. Remove the Series III V6 engine cover shield to access the bleed valve.
   3.1. Clean the area around the engine oil fill tube and cap before removing. Twist the oil fill tube, with cap attached, counterclockwise and remove it.

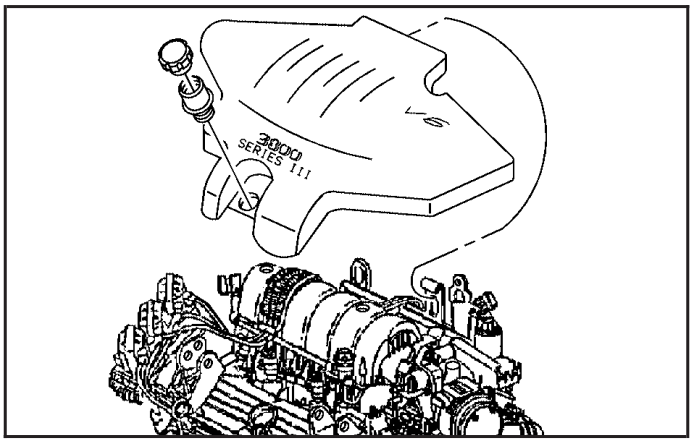

3800 V6 Engine

Downloaded from www.Manualslib.com manuals search engine

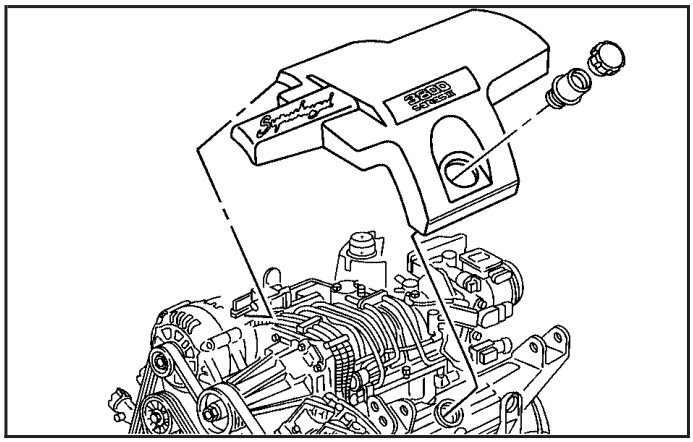

3800 V6 Supercharged Engine

3.2. Lift the engine cover shield at the front, slide the catch tab out of the engine bracket and remove the cover shield.

3.3. Put the oil fill tube, with cap attached, in the valve cover oil fill hole until you are ready to replace the cover shield.

Thermostat Housing

4. After the engine cools, open the coolant air bleed valve located on the thermostat housing near the heater hose.

Downloaded from www.Manualslib.com manuals search engine

3800 V6 Supercharged Engine shown, 3800 V6 Engine similar

5. Fill the radiator with the proper DEX-COOL® coolant mixture, up to the base of the filler neck. See *Engine Coolant on page 5-25* for more information about the proper coolant mixture.

   If you see a stream of coolant coming from the air bleed valve, close the valve. Otherwise, close the valve after the radiator is filled.

6. Rinse or wipe any spilled coolant from the engine and the compartment.
7. Replace the 3800 Series III V6 engine cover shield.
   - 7.1. Remove the oil fill tube, with cap attached, from the valve cover.
   - 7.2. Insert the catch tab on the cover shield under the bracket on the engine.
   - 7.3. Place the hole in the cover shield over the hole in the valve cover. Install oil fill tube and cap by twisting clockwise.
8. Then fill the coolant recovery tank to the cold fill line.
9. Put the cap back on the coolant recovery tank, but leave the pressure cap off.

Downloaded from www.Manualslib.com manuals search engine

3800 V6 Supercharged Engine shown, 3800 V6 Engine similar

10. Start the engine and let it run until you can feel the upper radiator hose getting hot. Watch out for the engine cooling fan(s).
11. By this time, the coolant level inside the radiator filler neck may be lower. If the level is lower, add more of the proper DEX-COOL® coolant mixture through the filler neck until the level reaches the base of the filler neck.
12. Then replace the pressure cap. At any time during this procedure if coolant begins to flow out of the filler neck, reinstall the pressure cap. Be sure the pressure cap is hand-tight and fully seated.
13. Check the coolant in the recovery tank. The level in the coolant recovery tank should be at the cold fill line when the engine is cold.

Downloaded from www.Manualslib.com manuals search engine

How to Add Coolant to the Cooling System (5.3L V8 Engine)

Notice: **Your engine has a specific cooling system drain and fill procedure. Failure to follow this procedure could cause your engine to overheat and be severely damaged. If your engine's cooling system needs to be drained and re-filled, please see your dealer.**

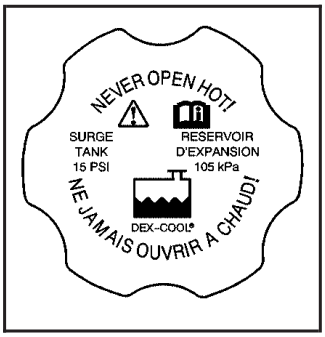

You can remove the pressure cap when the cooling system, including the pressure cap and upper radiator hose is no longer hot. Turn the pressure cap slowly counterclockwise.

1. If you hear a hiss, wait for that to stop. A hiss means that there is still some pressure left.
2. Then keep turning the pressure cap to remove the pressure cap.

⚠ CAUTION:

You can be burned if you spill coolant on hot engine parts. Coolant contains ethylene glycol and it will burn if the engine parts are hot enough. Do not spill coolant on a hot engine.

3. Fill the cooling system with the proper DEX-COOL® coolant mixture, up to the base of the filler neck. See *Engine Coolant on page 5-25* for more information about the proper coolant mixture.
4. Rinse or wipe any spilled coolant from the engine and the compartment.
5. Then fill the coolant recovery tank to the cold fill line.
6. Install the coolant recovery tank cap and the pressure cap.
7. If the coolant in the recovery tank is constantly low, you should have a dealership service department inspect your vehicle for leaks.

Downloaded from www.Manualslib.com manuals search engine

Power Steering Fluid

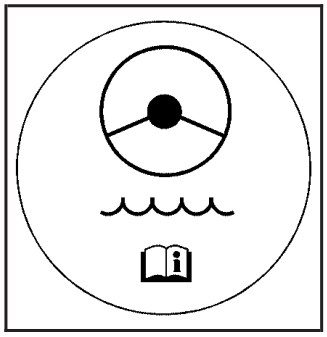

See *Engine Compartment Overview on page 5-12* for reservoir location.

When to Check Power Steering Fluid

It is not necessary to regularly check power steering fluid unless a leak is suspected in the system, or an unusual noise is heard. A fluid loss in this system could indicate a problem. Have the system inspected and repaired.

How to Check Power Steering Fluid

To check the power steering fluid, do the following:

1. Turn the key off and let the engine compartment cool down.
2. Wipe the cap and the top of the reservoir clean.
3. Unscrew the cap and wipe the dipstick with a clean rag.
4. Replace the cap and completely tighten it.
5. Remove the cap again and look at the fluid level on the dipstick

The fluid level should be between the ADD and HOT marks when the engine is cold.

When the engine compartment is hot, the level should be at the HOT mark.

If the fluid is at the ADD mark when the engine is cold or hot, power steering fluid should be added.

What to Use

To determine what kind of fluid to use, see *Recommended Fluids and Lubricants on page 6-12*. Always use the proper fluid. Failure to use the proper fluid can cause leaks and damage hoses and seals.

Downloaded from www.Manualslib.com manuals search engine

Windshield Washer Fluid

What to Use

When you need windshield washer fluid, be sure to read the manufacturer's instructions before use. If you will be operating the vehicle in an area where the temperature may fall below freezing, use a fluid that has sufficient protection against freezing.

Adding Washer Fluid

When the windshield washer fluid reservoir is low, a LOW WASHER FLUID message along with the washer symbol, comes on in the Driver Information Center (DIC). See *DIC Warnings and Messages on page 3-72* for more information.

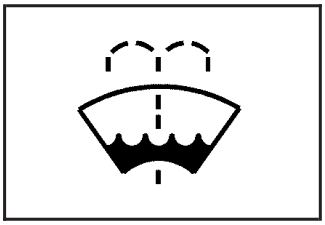

Open the cap with the washer symbol on it. Add washer fluid until the tank is full. See *Engine Compartment Overview on page 5-12* for reservoir location.

Notice:

- **When using concentrated washer fluid, follow the manufacturer's instructions for adding water.**
- **Do not mix water with ready-to-use washer fluid. Water can cause the solution to freeze and damage your washer fluid tank and other parts of the washer system. Also, water does not clean as well as washer fluid.**
- **Fill your washer fluid tank only three-quarters full when it is very cold. This allows for expansion if freezing occurs, which could damage the tank if it is completely full.**
- **Do not use engine coolant (antifreeze) in your windshield washer. It can damage your washer system and paint.**

Downloaded from www.Manualslib.com manuals search engine

Brakes

Brake Fluid

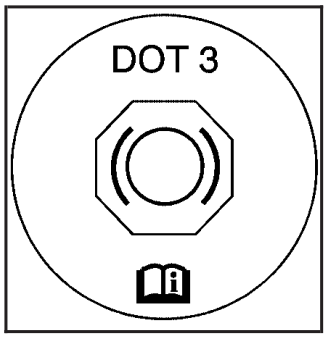

Your brake master cylinder reservoir is filled with DOT-3 brake fluid. See *Engine Compartment Overview on page 5-12* for the location of the reservoir.

There are only two reasons why the brake fluid level in the reservoir might go down. The first is that the brake fluid goes down to an acceptable level during normal brake lining wear. When new linings are put in, the fluid level goes back up. The other reason is that fluid is leaking out of the brake system. If it is, you should have your brake system fixed, since a leak means that sooner or later your brakes will not work well, or will not work at all.

So, it is not a good idea to top off your brake fluid. Adding brake fluid will not correct a leak. If you add fluid when your linings are worn, then you will have too much fluid when you get new brake linings. You should add or remove brake fluid, as necessary, only when work is done on the brake hydraulic system.

⚠ CAUTION:

If you have too much brake fluid, it can spill on the engine. The fluid will burn if the engine is hot enough. You or others could be burned, and your vehicle could be damaged. Add brake fluid only when work is done on the brake hydraulic system.

When your brake fluid falls to a low level, your brake warning light will come on. See *Brake System Warning Light on page 3-42*.

Downloaded from www.Manualslib.com manuals search engine

What to Add

When you do need brake fluid, use only DOT-3 brake fluid. Use new brake fluid from a sealed container only. See *Recommended Fluids and Lubricants on page 6-12*.

Always clean the brake fluid reservoir cap and the area around the cap before removing it. This will help keep dirt from entering the reservoir.

⚠ CAUTION:

With the wrong kind of fluid in your brake system, your brakes may not work well, or they may not even work at all. This could cause a crash. Always use the proper brake fluid.

Notice:

- **Using the wrong fluid can badly damage brake system parts. For example, just a few drops of mineral-based oil, such as engine oil, in your brake system can damage brake system parts so badly that they will have to be replaced. Do not let someone put in the wrong kind of fluid.**
- **If you spill brake fluid on your vehicle's painted surfaces, the paint finish can be damaged. Be careful not to spill brake fluid on your vehicle. If you do, wash it off immediately. See *Washing Your Vehicle on page 5-105*.**

Downloaded from www.Manualslib.com manuals search engine

Brake Wear

Your vehicle has four-wheel disc brakes.

Disc brake pads have built-in wear indicators that make a high-pitched warning sound when the brake pads are worn and new pads are needed. The sound may come and go or be heard all the time your vehicle is moving, except when you are pushing on the brake pedal firmly.

⚠ CAUTION:

The brake wear warning sound means that soon your brakes will not work well. That could lead to an accident. When you hear the brake wear warning sound, have your vehicle serviced.

Notice: **Continuing to drive with worn-out brake pads could result in costly brake repair.**

Some driving conditions or climates may cause a brake squeal when the brakes are first applied or lightly applied. This does not mean something is wrong with your brakes.

Properly torqued wheel nuts are necessary to help prevent brake pulsation. When tires are rotated, inspect brake pads for wear and evenly tighten wheel nuts in the proper sequence to GM torque specifications.

Brake linings should always be replaced as complete axle sets.

Brake Pedal Travel

See your dealer if the brake pedal does not return to normal height, or if there is a rapid increase in pedal travel. This could be a sign of brake trouble.

Brake Adjustment

Every time you apply the brakes, with or without the vehicle moving, your brakes adjust for wear.

Downloaded from www.Manualslib.com manuals search engine

Replacing Brake System Parts

The braking system on a vehicle is complex. Its many parts have to be of top quality and work well together if the vehicle is to have really good braking. Your vehicle was designed and tested with top-quality GM brake parts. When you replace parts of your braking system — for example, when your brake linings wear down and you need new ones put in — be sure you get new approved GM replacement parts. If you do not, your brakes may no longer work properly. For example, if someone puts in brake linings that are wrong for your vehicle, the balance between your front and rear brakes can change — for the worse. The braking performance you have come to expect can change in many other ways if someone puts in the wrong replacement brake parts.

Battery

Your vehicle has a maintenance free battery. When it is time for a new battery, get one that has the replacement number shown on the original battery's label. We recommend an ACDelco® replacement battery. See *Engine Compartment Overview on page 5-12* for battery location.

Warning: Battery posts, terminals, and related accessories contain lead and lead compounds, chemicals known to the State of California to cause cancer and reproductive harm. Wash hands after handling.

If the battery has a very low charge or is dead, you may not be able to remove the ignition key from the ignition switch or shift out of PARK (P). Refer to *Shifting Out of Park (P) on page 2-32*.

Vehicle Storage

If you are not going to drive your vehicle for 25 days or more, remove the black, negative (–) cable from the battery. This will help keep the battery from running down.

⚠ CAUTION:

Batteries have acid that can burn you and gas that can explode. You can be badly hurt if you are not careful. See *Jump Starting on page 5-46* for tips on working around a battery without getting hurt.

Downloaded from www.Manualslib.com manuals search engine

Jump Starting

If your vehicle's battery has run down, you may want to use another vehicle and some jumper cables to start your vehicle. Be sure to use the following steps to do it safely.

⚠ CAUTION:

Batteries can hurt you. They can be dangerous because:

- **They contain acid that can burn you.**
- **They contain gas that can explode or ignite.**
- **They contain enough electricity to burn you.**

If you do not follow these steps exactly, some or all of these things can hurt you.

Notice: **Ignoring these steps could result in costly damage to your vehicle that would not be covered by your warranty.**

Trying to start your vehicle by pushing or pulling it will not work, and it could damage your vehicle.

1. Check the other vehicle. It must have a 12-volt battery with a negative ground system.

Notice: **If the other vehicle's system is not a 12-volt system with a negative ground, both vehicles can be damaged. Only use vehicles with 12-volt systems with negative grounds to jump start your vehicle.**

2. Get the vehicles close enough so the jumper cables can reach, but be sure the vehicles are not touching each other. If they are, it could cause a ground connection you do not want. You would not be able to start your vehicle, and the bad grounding could damage the electrical systems.

   To avoid the possibility of the vehicles rolling, set the parking brake firmly on both vehicles involved in the jump start procedure. Put an automatic transaxle in PARK (P) or a manual transaxle in NEUTRAL before setting the parking brake.

Downloaded from www.Manualslib.com manuals search engine

Notice: **If you leave your radio or other accessories on during the jump starting procedure, they could be damaged. The repairs would not be covered by your warranty. Always turn off your radio and other accessories when jump starting your vehicle.**

3. Turn off the ignition on both vehicles. Unplug unnecessary accessories plugged into the cigarette lighter or the accessory power outlet. Turn off the radio and all lamps that are not needed. This will avoid sparks and help save both batteries. And it could save the radio!
4. Open the hood on the other vehicle and locate the positive (+) and negative (–) terminal locations on that vehicle.

   You will not use your vehicle's battery for jump starting. It has a remote positive (+) jump starting terminal, located on the underhood fuse block, for that purpose.

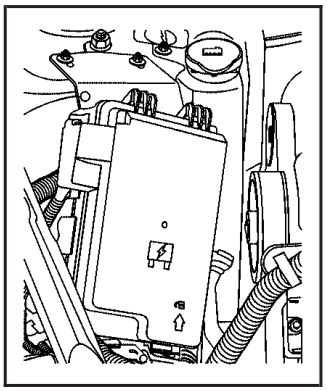

3800 V6 and 3800 V6 Supercharged Engines

If your vehicle has one of the 3800 V6 engines, to uncover the remote positive (+) terminal, press the tab at the bottom of the fuse block and lift the cover up.

Downloaded from www.Manualslib.com manuals search engine

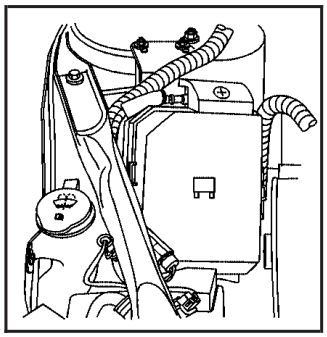

5.3L V8 Engine

If your vehicle has the 5.3L V8 engine, to uncover the remote positive (+) terminal, remove the fuse block cover.

Always use the remote positive (+) terminal instead of the positive (+) terminal on the battery. See *Engine Compartment Overview on page 5-12* for more information on location.

⚠ CAUTION:

An electric fan can start up even when the engine is not running and can injure you. Keep hands, clothing and tools away from any underhood electric fan.

⚠ CAUTION:

Fans or other moving engine parts can injure you badly. Keep your hands away from moving parts once the engine is running.

⚠ CAUTION:

Using a match near a battery can cause battery gas to explode. People have been hurt doing this, and some have been blinded. Use a flashlight if you need more light.

Be sure the battery has enough water. You do not need to add water to the battery installed in your new vehicle. But if a battery has filler caps, be sure the right amount of fluid is there. If it is low, add water to take care of that first. If you do not, explosive gas could be present.

Battery fluid contains acid that can burn you. Do not get it on you. If you accidentally get it in your eyes or on your skin, flush the place with water and get medical help immediately.

Downloaded from www.Manualslib.com manuals search engine

5. Check that the jumper cables do not have loose or missing insulation. If they do, you could get a shock. The vehicles could be damaged too.

   Before you connect the cables, here are some basic things you should know. Positive (+) will go to positive (+) or to a remote positive (+) terminal if the vehicle has one. Negative will go to a heavy, unpainted metal engine part or to a remote negative (–) terminal if the vehicle has one.

   Do not connect positive (+) to negative (–), or you will get a short that would damage the battery and maybe other parts too. And do not connect the negative (–) cable to the negative (–) terminal on the dead battery because this can cause sparks.

6. Connect the red positive (+) cable to the positive (+) terminal location on the vehicle with the dead battery. Use a remote positive (+) terminal if the vehicle has one.

7. Do not let the other end touch metal. Connect it to the positive (+) terminal location on the vehicle with the good battery. Use a remote positive (+) terminal if the vehicle has one.

8. Now connect the black negative (–) cable to the negative (–) terminal location on the vehicle with the good battery. Use a remote negative (–) terminal if the vehicle has one.

   Do not let the other end touch anything until the next step. The other end of the negative (–) cable does not go to the dead battery. It goes to a heavy, unpainted metal engine part or to a remote negative (–) terminal on the vehicle with the dead battery.

9. Connect the other end of the negative (–) cable at least 18 inches (45 cm) away from the dead battery, but not near engine parts that move. The electrical connection is just as good there, and the chance of sparks getting back to the battery is much less.

10. Now start the vehicle with the good battery and run the engine for a while.

11. Try to start the vehicle that had the dead battery. If it will not start after a few tries, it probably needs service.

Downloaded from www.Manualslib.com manuals search engine

Notice: **If the jumper cables are connected or removed in the wrong order, electrical shorting may occur and damage the vehicle. The repairs would not be covered by your warranty. Always connect and remove the jumper cables in the correct order, making sure that the cables do not touch each other or other metal.**

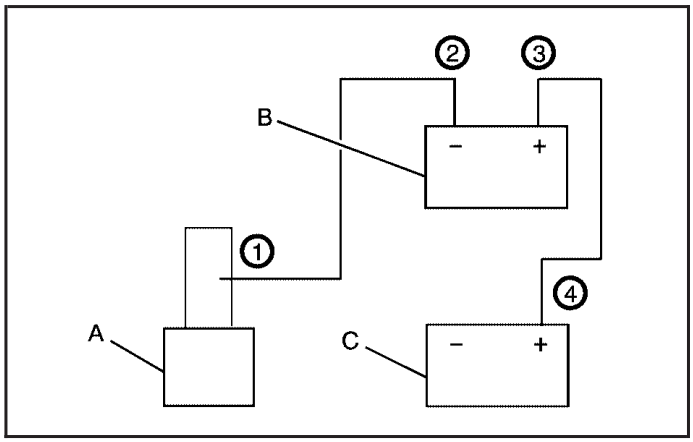

Jumper Cable Removal

A. Heavy, Unpainted Metal Engine Part or Remote Negative (–) Terminal

B. Good Battery or Remote Positive (+) and Remote Negative (–) Terminals

C. Dead Battery or Remote Positive (+) Terminal

To disconnect the jumper cables from both vehicles, do the following:

1. Disconnect the black negative (–) cable from the vehicle that had the dead battery.
2. Disconnect the black negative (–) cable from the vehicle with the good battery.
3. Disconnect the red positive (+) cable from the vehicle with the good battery.
4. Disconnect the red positive (+) cable from the other vehicle.
5. Return the remote positive (+) terminal cover to its original position.

Headlamp Aiming

The vehicle has a visual optical headlamp aiming system. The aim has been preset at the factory and should need no further adjustment.

However, If the vehicle is damaged in an accident, the headlamp aim may be affected and adjustment may be necessary.

If oncoming vehicles flash their high beams at you, this may also mean the vertical aim needs to be adjusted.

Downloaded from www.Manualslib.com manuals search engine

It is recommended that the vehicle is taken to your dealer for service if the headlamps need to be re-aimed. It is possible however, to re-aim the headlamps as described in the following procedure.

The vehicle should be properly prepared as follows:

- The vehicle should be placed so the headlamps are 25 ft. (7.6 m) from a light colored wall or other flat surface.
- The vehicle must have all four tires on a perfectly level surface which is level all the way to the wall or other flat surface.
- The vehicle should be placed so it is perpendicular to the wall or other flat surface.
- The vehicle should not have any snow, ice, or mud on it.
- The vehicle should be fully assembled and all other work stopped while headlamp aiming is being done.
- The vehicle should be normally loaded with a full tank of fuel and one person or 160 lbs (75 kg) sitting on the driver's seat.
- Tires should be properly inflated.

Headlamp aiming is done with the low-beam headlamps. The high-beam headlamps will be correctly aimed if the low-beam headlamps are aimed properly.

To adjust the vertical aim, do the following:

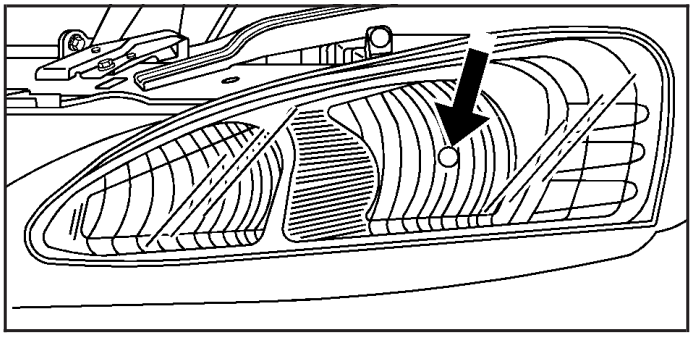

1. Find the aim dot on the lens of the low-beam lamp.
2. Measure the distance from the ground to the aim dot on the lamp. Record the distance.
3. At the wall or other flat surface, measure from the ground upward the recorded distance from Step 2 and draw or tape a horizontal line the width of the vehicle.

Downloaded from www.Manualslib.com manuals search engine

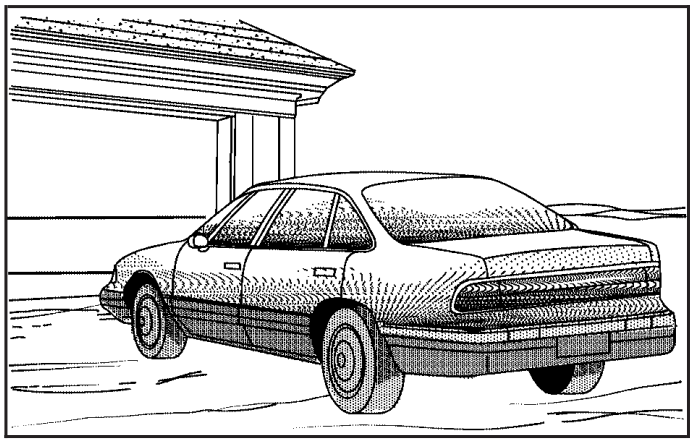

4. Turn on the low-beam headlamps and place a piece of cardboard or equivalent in front of the headlamp not being aimed. This should allow only the beam of light from the headlamp being aimed to be seen on the flat surface.

Notice: **Do not cover a headlamp to improve beam cut-off when aiming. Covering a headlamp may cause excessive heat build-up which may cause damage to the headlamp.**

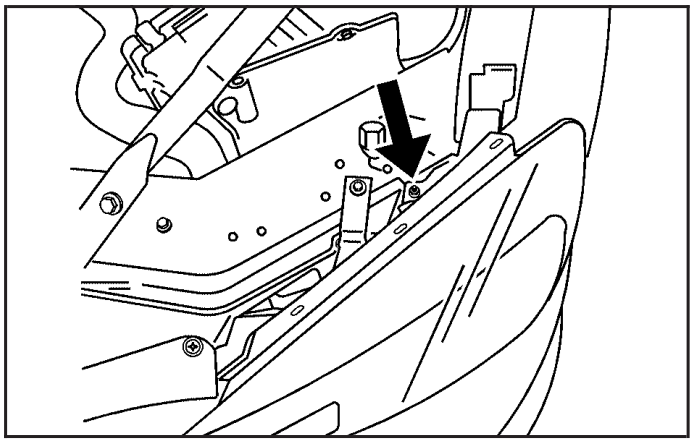

Driver's Side shown

5. Locate the vertical headlamp aiming screws, which are under the hood, near the headlamps. Turn the vertical aiming screw until the headlamp beam is aimed to the horizontal tape line.

   The adjustment screws can be turned with a 6 mm hex key bit socket or a 6 mm hex key.

Downloaded from www.Manualslib.com manuals search engine

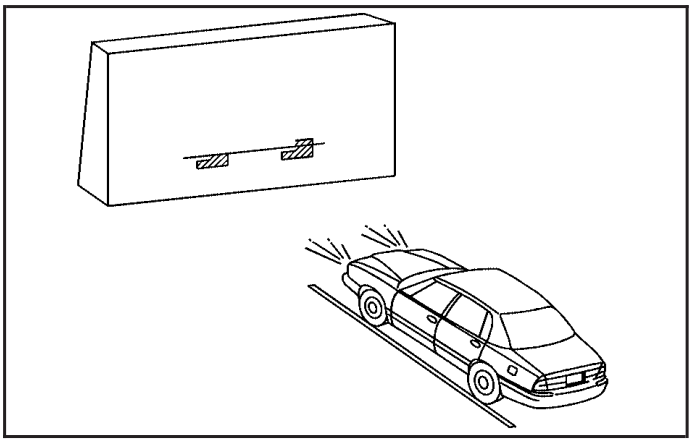

6. Ensure the top edge of the cut-off is positioned at the bottom edge of the horizontal tape line.
7. Repeat Steps 4 through 6 for the opposite headlamp.

Bulb Replacement

For the proper type of replacement bulbs, see *Replacement Bulbs on page 5-59*.

For any bulb changing procedure not listed in this section, contact your dealer.

Halogen Bulbs

⚠ CAUTION:

Halogen bulbs have pressurized gas inside and can burst if you drop or scratch the bulb. You or others could be injured. Be sure to read and follow the instructions on the bulb package.

Downloaded from www.Manualslib.com manuals search engine

Headlamps and Sidemarker Lamps

To replace a headlamp or sidemarker bulb, do the following:

1. Open the hood. See *Hood Release on page 5-11* for more information.

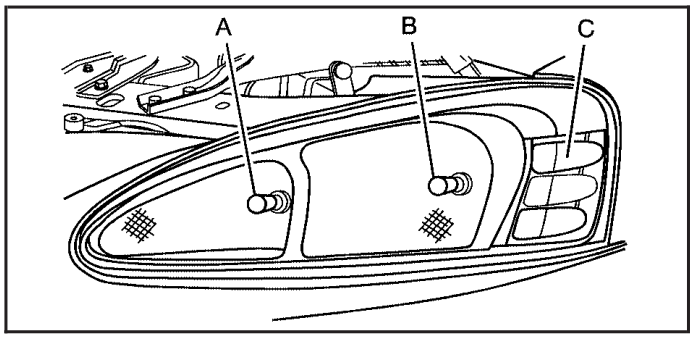

A. High-Beam Headlamp
B. Low-Beam Headlamp
C. Sidemarker Lamp

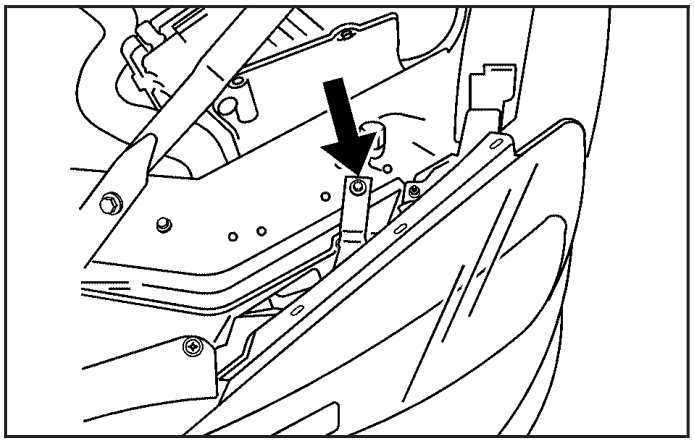

2. Locate the metal retaining clip. Remove the bolt.
3. Pull up half-way on the metal retaining clip while pushing rearward on the headlamp.

   Align the square cut-out on the retaining clip with the notch on the headlamp.

Downloaded from www.Manualslib.com manuals search engine

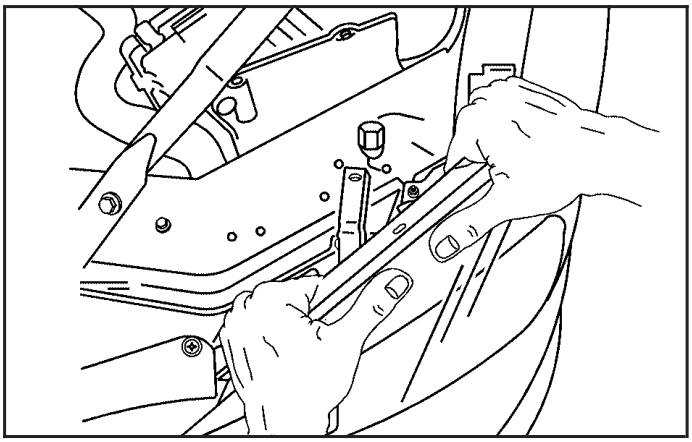

4. Pull the headlamp assembly straight out from the vehicle. (Moving the headlamp up and down slightly may help with its removal.)

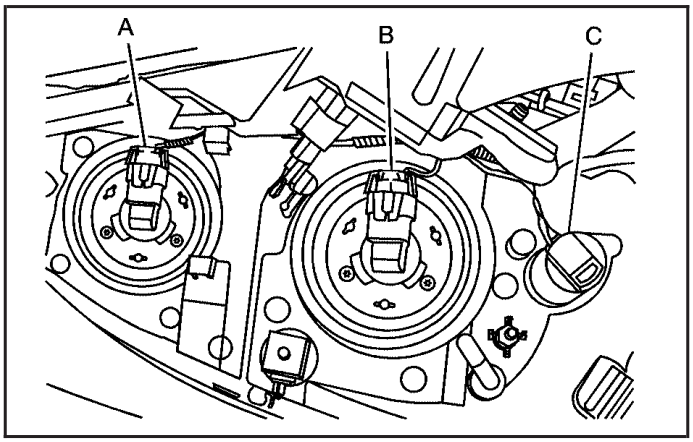

A. High-Beam Headlamp
B. Low-Beam Headlamp
C. Sidemarker Lamp

5. Turn the bulb socket ring one-quarter of a turn counterclockwise to remove it from the headlamp assembly.
6. Pull the old bulb from the socket.
7. Place the new bulb into the socket.
8. Turn the bulb socket ring one-quarter turn clockwise to reinstall it back into the headlamp assembly.

Downloaded from www.Manualslib.com manuals search engine

9. Carefully reinstall the headlamp assembly.
10. Push down on the metal retaining clip while pushing rearward on the headlamp, making sure the headlamp assembly is secure.
11. Reinstall the bolt and tighten to secure.

Front Turn Signal, Parking and Fog Lamps

The front turn signal, parking, and fog lamps (if equipped) are located below the headlamp assembly.

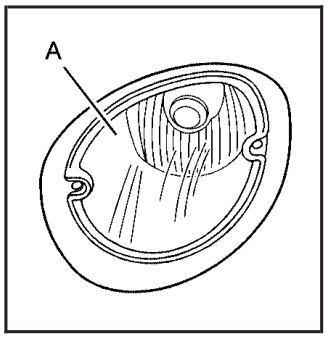

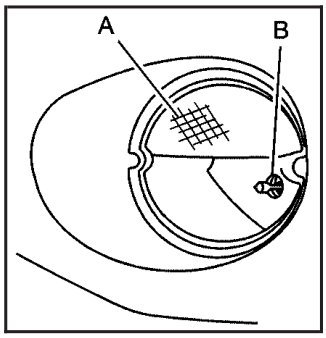

A. Front Turn Signal/Parking Lamp
B. Fog Lamp (If Equipped)

To replace one of these bulbs, do the following:

1. Follow Steps 1 through 4 of the headlamp replacement procedure. See *Headlamps and Sidemarker Lamps on page 5-54* for more information.

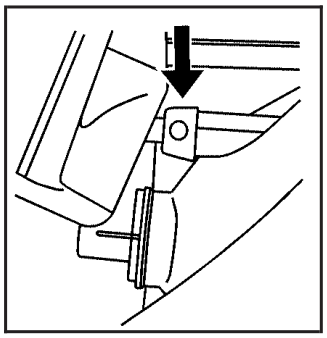

2. Locate the front turn signal/parking lamp (all models) and fog lamp bulbs (if equipped), which are located below the headlamp assembly.

   The arrow indicates which is the turn signal/parking lamp bulb. The fog lamp bulb is below it, if your vehicle has this bulb. If you need to have fog lamp bulb replaced, see your dealer for service.

3. Turn the bulb socket one-quarter of a turn counterclockwise to remove it from its assembly.
4. Pull the old bulb from the socket and replace it with a new one.
5. Turn the bulb socket a quarter turn clockwise to reinstall it.

Downloaded from www.Manualslib.com manuals search engine

6. Reinstall the headlamp assembly.
7. Push down on the metal retaining clip while pushing rearward on the headlamp, making sure the headlamp assembly is secure.
8. Reinstall the bolt and tighten to secure.

Taillamps, Turn Signal, and Stoplamps

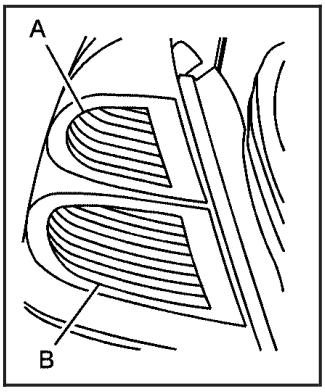

A. Taillamp
B. Taillamps, Turn Signal and Stoplamps

1. Open the trunk. See *Trunk on page 2-13* for more information.
2. Remove the convenience net, if equipped, by removing the net hook attachments.
3. Remove the plastic cap from the trunk trim.
4. Pull the trunk trim and carpet away from the back of the trunk.
5. Remove the bottom bolt and two nuts.

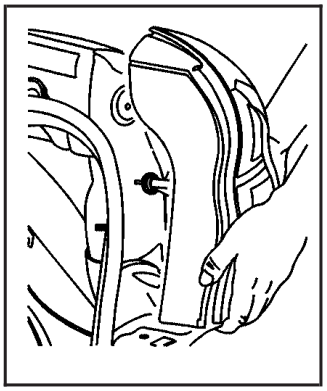

6. Remove the taillamp assembly by pulling it out from the vehicle.

Downloaded from www.Manualslib.com manuals search engine

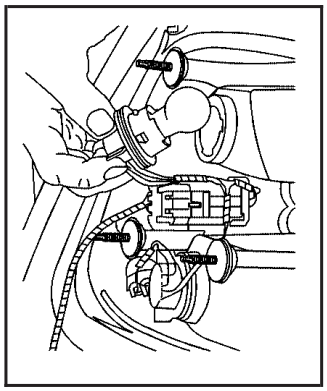

7. Turn the appropriate lamp socket a quarter turn counterclockwise and remove it.
8. Remove the old bulb.
9. Replace with a new bulb into the socket and turn the lamp socket clockwise to install it.
10. Reinstall the taillamp assembly by reversing Steps 2 through 5.

Back-Up Lamps

The back-up lamps are located on the trunk lid.

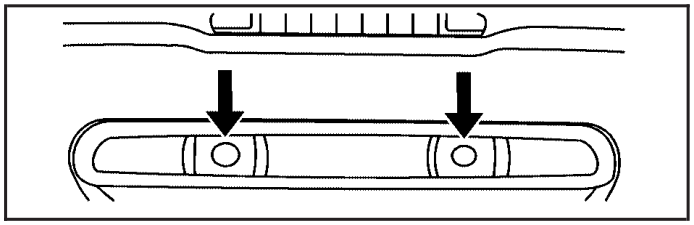

To replace the back-up lamp bulb(s), do the following:

1. Open the trunk. See *Trunk on page 2-13* for more information.

Downloaded from www.Manualslib.com manuals search engine

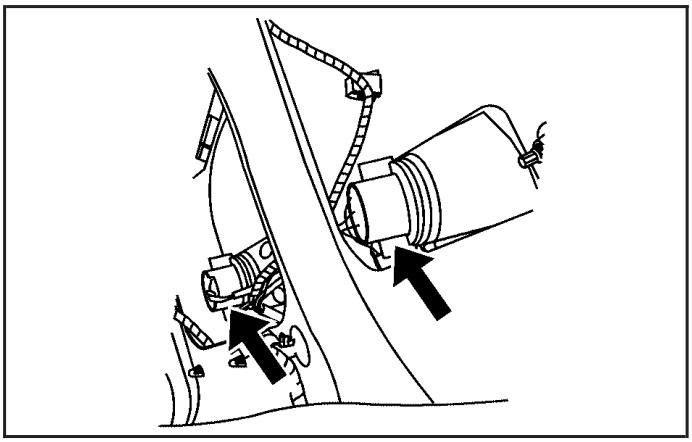

2. Turn the appropriate lamp socket a quarter turn counterclockwise and remove it.
3. Remove the old bulb.
4. Put the new bulb into the lamp socket.
5. Turn the bulb a quarter turn clockwise to reinstall it.

Replacement Bulbs

Exterior Lamps	Bulb Number
Back-Up Lamp	3157
Front Parking/Turn Signal Lamp	3757 KA* or 5702 KA**
Front Sidemarker	194
Headlamps	
High-Beam Halogen	9005
Low-Beam Halogen	9006
Stop/Taillamp/Turn Signal Lamps	3057
* GT and Base Models with the Optional Fog Lamps * For Lamps Not Equipped with the Fog Function and GXP Models	

For replacement bulbs not listed here, contact your dealer.

Downloaded from www.Manualslib.com manuals search engine

Windshield Replacement

If your vehicle is equipped with the Head-Up Display (HUD) system, keep in mind that your windshield is part of the HUD system. If you ever have to get your windshield replaced, be sure to get one that is designed for HUD or your HUD image may look blurred or out of focus.

Windshield Wiper Blade Replacement

Windshield wiper blades should be inspected for wear or cracking. See *Scheduled Maintenance on page 6-4* for more information on wiper blade inspection.

Replacement blades come in different types and are removed in different ways. For the proper type and length, see *Normal Maintenance Replacement Parts on page 6-13*. Here's how to remove the wiper blade:

1. Pull the windshield wiper arm connector away from the windshield.

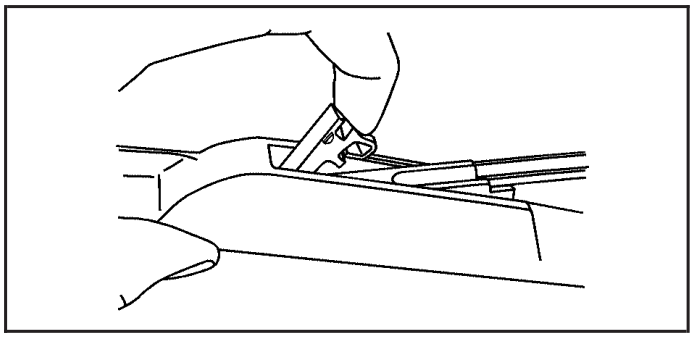

2. While holding the wiper arm, pull the clip up from the blade connecting point, and pull the blade assembly down toward the windshield to remove it from the wiper arm.
3. Install the new wiper blade onto the wiper arm and snap the clip into place.

Tires

Your new vehicle comes with high-quality tires made by a leading tire manufacturer. If you ever have questions about your tire warranty and where to obtain service, see your GM Warranty booklet for details. For additional information refer to the tire manufacturer's booklet included with your vehicle's owner manual.

Downloaded from www.Manualslib.com manuals search engine

⚠ CAUTION:

Poorly maintained and improperly used tires are dangerous.

- **Overloading your tires can cause overheating as a result of too much friction. You could have an air-out and a serious accident. See *Loading Your Vehicle on page 4-33*.**
- **Underinflated tires pose the same danger as overloaded tires. The resulting accident could cause serious injury. Check all tires frequently to maintain the recommended pressure. Tire pressure should be checked when your tires are cold. See *Inflation - Tire Pressure on page 5-67*.**
- **Overinflated tires are more likely to be cut, punctured, or broken by a sudden impact — such as when you hit a pothole. Keep tires at the recommended pressure.**
- **Worn, old tires can cause accidents. If your tread is badly worn, or if your tires have been damaged, replace them.**

Low-Profile Performance Tire (GXP)

If your vehicle has P255/45R18 size tires on the front wheels and P225/50R18 size tires on the rear wheels, they are classified as low-profile performance tires. These tires are designed for very responsive driving on wet or dry pavement. You may also notice more road noise with low-profile performance tires and that they tend to wear faster.

Notice: **If your vehicle has low-profile tires, they are more susceptible to damage from road hazards or curb impact than standard profile tires. Tire and/or wheel assembly damage can occur when coming into contact with road hazards like, potholes, or sharp edged objects, or when sliding into a curb. Your GM warranty does not cover this type of damage. Keep tires set to the correct inflation pressure and, when possible avoid contact with curbs, potholes, and other road hazards.**

Downloaded from www.Manualslib.com manuals search engine

Tire Sidewall Labeling

Useful information about a tire is molded into its sidewall. The examples below show a typical passenger vehicle tire and a compact spare tire sidewall.

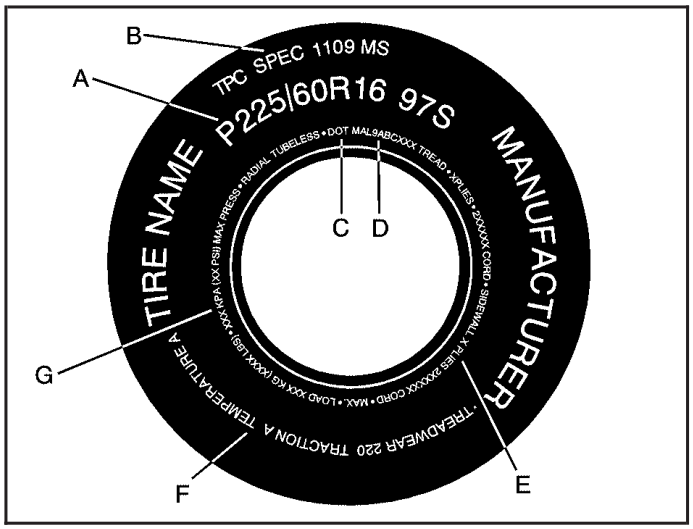

Passenger (P-Metric) Tire Example

(A) Tire Size: The tire size is a combination of letters and numbers used to define a particular tire's width, height, aspect ratio, construction type, and service description. See the "Tire Size" illustration later in this section for more detail.

(B) TPC Spec (Tire Performance Criteria Specification): Original equipment tires designed to GM's specific tire performance criteria have a TPC specification code molded onto the sidewall. GM's TPC specifications meet or exceed all federal safety guidelines.

(C) DOT (Department of Transportation): The Department of Transportation (DOT) code indicates that the tire is in compliance with the U.S. Department of Transportation Motor Vehicle Safety Standards.

(D) Tire Identification Number (TIN): The letters and numbers following DOT (Department of Transportation) code is the Tire Identification Number (TIN). The TIN shows the manufacturer and plant code, tire size, and date the tire was manufactured. The TIN is molded onto both sides of the tire, although only one side may have the date of manufacture.

(E) Tire Ply Material: The type of cord and number of plies in the sidewall and under the tread.

(F) Uniform Tire Quality Grading (UTQG): Tire manufacturers are required to grade tires based on three performance factors: treadwear, traction, and temperature resistance. For more information see *Uniform Tire Quality Grading on page 5-74*.

(G) Maximum Cold Inflation Load Limit: Maximum load that can be carried and the maximum pressure needed to support that load.

Downloaded from www.Manualslib.com manuals search engine

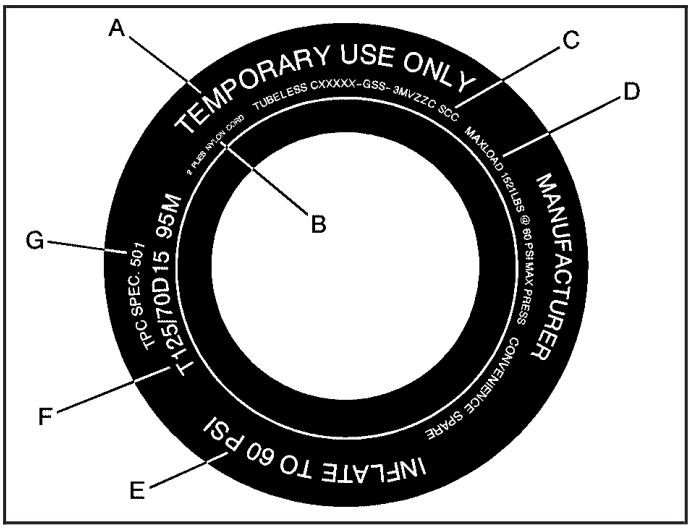

Compact Spare Tire Example

(A) Temporary Use Only: The compact spare tire or temporary use tire has a tread life of approximately 3,000 miles (5 000 km) and should not be driven at speeds over 65 mph (105 km/h). The compact spare tire is for emergency use when a regular road tire has lost air and gone flat. If your vehicle has a compact spare tire, see *Compact Spare Tire on page 5-99* and *If a Tire Goes Flat on page 5-77*.

(B) Tire Ply Material: The type of cord and number of plies in the sidewall and under the tread.

(C) Tire Identification Number (TIN): The letters and numbers following the DOT (Department of Transportation) code is the Tire Identification Number (TIN). The TIN shows the manufacturer and plant code, tire size, and date the tire was manufactured. The TIN is molded onto both sides of the tire, although only one side may have the date of manufacture.

(D) Maximum Cold Inflation Load Limit: Maximum load that can be carried and the maximum pressure needed to support that load.

(E) Tire Inflation: The temporary use tire or compact spare tire should be inflated to 60 psi (420 kPa). For more information on tire pressure and inflation see *Inflation - Tire Pressure on page 5-67*.

(F) Tire Size: A combination of letters and numbers define a tire's width, height, aspect ratio, construction type and service description. The letter T as the first character in the tire size means the tire is for temporary use only.

(G) TPC Spec (Tire Performance Criteria Specification): Original equipment tires designed to GM's specific tire performance criteria have a TPC specification code molded onto the sidewall. GM's TPC specifications meet or exceed all federal safety guidelines.

Downloaded from www.Manualslib.com manuals search engine

Tire Size

The following illustration shows an example of a typical passenger vehicle tire size.

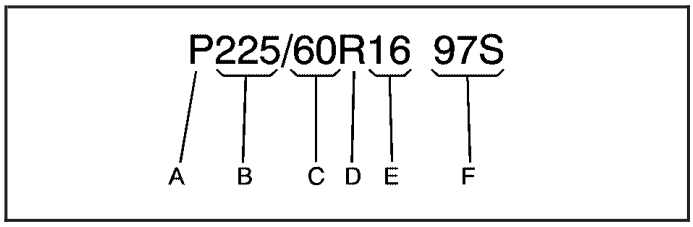

(A) Passenger (P-Metric) Tire: The United States version of a metric tire sizing system. The letter P as the first character in the tire size means a passenger vehicle tire engineered to standards set by the U.S. Tire and Rim Association.

(B) Tire Width: The three-digit number indicates the tire section width in millimeters from sidewall to sidewall.

(C) Aspect Ratio: A two-digit number that indicates the tire height-to-width measurements. For example, if the tire size aspect ratio is 60, as shown in item C of the illustration, it would mean that the tire's sidewall is 60 percent as high as it is wide.

(D) Construction Code: A letter code is used to indicate the type of ply construction in the tire. The letter R means radial ply construction; the letter D means diagonal or bias ply construction; and the letter B means belted-bias ply construction.

(E) Rim Diameter: Diameter of the wheel in inches.

(F) Service Description: These characters represent the load range and speed rating of the tire. The load index represents the load carry capacity a tire is certified to carry. The load index can range from 1 to 279. The speed rating is the maximum speed a tire is certified to carry a load. Speed ratings range from A to Z.

Tire Terminology and Definitions

Air Pressure: The amount of air inside the tire pressing outward on each square inch of the tire. Air pressure is expressed in pounds per square inch (psi) or kilopascal (kPa).

Accessory Weight: This means the combined weight of optional accessories. Some examples of optional accessories are, automatic transmission, power steering, power brakes, power windows, power seats, and air conditioning.

Aspect Ratio: The relationship of a tire's height to its width.

Downloaded from www.Manualslib.com manuals search engine

Belt: A rubber coated layer of cords that is located between the plies and the tread. Cords may be made from steel or other reinforcing materials.

Bead: The tire bead contains steel wires wrapped by steel cords that hold the tire onto the rim.

Bias Ply Tire: A pneumatic tire in which the plies are laid at alternate angles less than 90 degrees to the centerline of the tread.

Cold Inflation Pressure: The amount of air pressure in a tire, measured in pounds per square inch (psi) or kilopascals (kPa) before a tire has built up heat from driving. See *Inflation - Tire Pressure on page 5-67*.

Curb Weight: This means the weight of a motor vehicle with standard and optional equipment including the maximum capacity of fuel, oil and coolant, but without passengers and cargo.

DOT Markings: A code molded into the sidewall of a tire signifying that the tire is in compliance with the U.S. Department of Transportation (DOT) motor vehicle safety standards. The DOT code includes the Tire Identification Number (TIN), an alphanumeric designator which can also identify the tire manufacturer, production plant, brand and date of production.

GVWR: Gross Vehicle Weight Rating, see *Loading Your Vehicle on page 4-33*.

GAWR FRT: Gross Axle Weight Rating for the front axle, see *Loading Your Vehicle on page 4-33*.

GAWR RR: Gross Axle Weight Rating for the rear axle, see *Loading Your Vehicle on page 4-33*.

Intended Outboard Sidewall: The side of an asymmetrical tire, that must always face outward when mounted on a vehicle.

Kilopascal (kPa): The metric unit for air pressure.

Light Truck (LT-Metric) Tire: A tire used on light duty trucks and some multipurpose passenger vehicles.

Load Index: An assigned number ranging from 1 to 279 that corresponds to the load carrying capacity of a tire.

Maximum Inflation Pressure: The maximum air pressure to which a cold tire may be inflated. The maximum air pressure is molded onto the sidewall.

Maximum Load Rating: The load rating for a tire at the maximum permissible inflation pressure for that tire.

Maximum Loaded Vehicle Weight: The sum of curb weight; accessory weight; vehicle capacity weight; and production options weight.

Normal Occupant Weight: The number of occupants a vehicle is designed to seat multiplied by 150 lbs (68 kg). See *Loading Your Vehicle on page 4-33*.

Downloaded from www.Manualslib.com manuals search engine

Occupant Distribution: Designated seating positions.

Outward Facing Sidewall: The side of an asymmetrical tire that has a particular side that faces outward when mounted on a vehicle. The side of the tire that contains a whitewall, bears white lettering, or bears manufacturer, brand, and/or model name molding that is higher or deeper than the same moldings on the other sidewall of the tire.

Passenger (P-Metric) Tire: A tire used on passenger cars and some light duty trucks and multipurpose vehicles.

Recommended Inflation Pressure: Vehicle manufacturer's recommended tire inflation pressure and shown on the tire placard. See *Inflation - Tire Pressure on page 5-67* and *Loading Your Vehicle on page 4-33*.

Radial Ply Tire: A pneumatic tire in which the ply cords that extend to the beads are laid at 90 degrees to the centerline of the tread.

Rim: A metal support for a tire and upon which the tire beads are seated.

Sidewall: The portion of a tire between the tread and the bead.

Speed Rating: An alphanumeric code assigned to a tire indicating the maximum speed at which a tire can operate.

Traction: The friction between the tire and the road surface. The amount of grip provided.

Tread: The portion of a tire that comes into contact with the road.

Treadwear Indicators: Narrow bands, sometimes called wear bars, that show across the tread of a tire when only 1/16 inch (1.6 mm) of tread remains. See *When It Is Time for New Tires on page 5-71*.

UTQGS (Uniform Tire Quality Grading Standards): A tire information system that provides consumers with ratings for a tire's traction, temperature, and treadwear. Ratings are determined by tire manufacturers using government testing procedures. The ratings are molded into the sidewall of the tire. See *Uniform Tire Quality Grading on page 5-74*.

Vehicle Capacity Weight: The number of designated seating positions multiplied by 150 lbs (68 kg) plus the rated cargo load. See *Loading Your Vehicle on page 4-33*.

Vehicle Maximum Load on the Tire: Load on an individual tire due to curb weight, accessory weight, occupant weight, and cargo weight.

Vehicle Placard: A label permanently attached to a vehicle showing the vehicle's capacity weight and the original equipment tire size and recommended inflation pressure. See "Tire and Loading Information Label" under *Loading Your Vehicle on page 4-33*.

Downloaded from www.Manualslib.com manuals search engine

Inflation - Tire Pressure

Tires need the correct amount of air pressure to operate effectively.

Notice: **Do not let anyone tell you that under-inflation or over-inflation is all right. It is not. If your tires do not have enough air (under-inflation), you can get the following:**

- **Too much flexing**
- **Too much heat**
- **Tire overloading**
- **Premature or irregular wear**
- **Poor handling**
- **Reduced fuel economy**

If your tires have too much air (over-inflation), you can get the following:

- **Unusual wear**
- **Poor handling**
- **Rough ride**
- **Needless damage from road hazards**

A Tire and Loading Information label is attached to the vehicle's center pillar (B-pillar), below the driver's door latch. This label shows your vehicle's original equipment tires and the correct inflation pressures for your tires when they are cold. The recommended cold tire inflation pressure, shown on the label, is the minimum amount of air pressure needed to support your vehicle's maximum load carrying capacity.

For additional information regarding how much weight your vehicle can carry, and an example of the tire and loading information label, see *Loading Your Vehicle on page 4-33*. How you load your vehicle affects vehicle handling and ride comfort, never load your vehicle with more weight than it was designed to carry.

When to Check

Check your tires once a month or more. Do not forget to check the compact spare tire, it should be at 60 psi (420 kPa). For additional information regarding the compact spare tire, see *Compact Spare Tire on page 5-99*.

Downloaded from www.Manualslib.com manuals search engine

How to Check

Use a good quality pocket-type gage to check tire pressure. You cannot tell if your tires are properly inflated simply by looking at them. Radial tires may look properly inflated even when they are under-inflated. Check the tire's inflation pressure when the tires are cold. Cold means your vehicle has been sitting for at least three hours or driven no more than 1 mile (1.6 km).

Remove the valve cap from the tire valve stem. Press the tire gage firmly onto the valve to get a pressure measurement. If the cold tire inflation pressure matches the recommended pressure on the Tire and Loading Information label, no further adjustment is necessary. If the inflation pressure is low, add air until you reach the recommended amount.

If you overfill the tire, release air by pushing on the metal stem in the center of the tire valve. Re-check the tire pressure with the tire gage.

Be sure to put the valve caps back on the valve stems. They help prevent leaks by keeping out dirt and moisture.

Tire Inflation Monitor System

Your vehicle may have the Tire Inflation Monitor System (TIMS). The system is designed to alert the driver when there is a large air pressure change in one tire, while the vehicle is being driven. TIMS detects differences in tire rotation speeds that are caused by changes in tire pressure. The system can alert you about a low tire but it does not replace normal tire maintenance. See *Tires on page 5-60*. The TIMS learns the pressure at each tire throughout the operating speed range of the vehicle. The system normally takes between 45 and 90 minutes of driving to learn the tire pressures. This time may be longer depending on individual driving habits. Learning need not be accumulated during a single trip. Once learned, the system will remember the tire pressures until the system is reset.

Downloaded from www.Manualslib.com manuals search engine

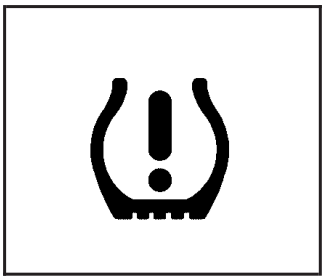

This symbol, along with the CHECK TIRE PRESSURE warning message, will appear in the Driver Information Center (DIC) if the pressure in one tire becomes 12 psi (83 kPa) lower than the other three tires.

See *DIC Warnings and Messages on page 3-72* for more information.

The tire inflation monitor system will not alert you if the pressure in more than one tire is low, if the system is not properly calibrated, or if the vehicle is moving faster than 70 mph (110 km/h).

When the CHECK TIRE PRESSURE warning message comes on, stop as soon as possible and check all the tires for damage. If a tire is flat, see *If a Tire Goes Flat on page 5-77*. Also, check the tire pressure in all four tires as soon as possible. See *Inflation - Tire Pressure on page 5-67*.

The CHECK TIRE PRESSURE warning message will also be displayed, while the ignition is on, until the system is reset. To reset the system, see “Tire Inflation Monitor System” under the options mode in *DIC Controls and Displays (Base Level DIC) on page 3-52* or *DIC Controls and Displays (Uplevel DIC with Trip Computer) on page 3-60*.

Do not reset the tire inflation monitor system without first correcting the cause of the problem and checking and adjusting the pressure in all four tires. If the system is reset when the tire pressures are incorrect, the system will not work properly and may not respond when a tire is low.

The tire inflation monitor system will need to be reset any time a tire’s pressure is adjusted, the tires are rotated, or one or more tires is repaired or replaced. The system will also need to be reset when new tires are purchased for the vehicle and when the battery has been disconnected.

Downloaded from www.Manualslib.com manuals search engine

Tire Inspection and Rotation

Tire rotation is not recommended if your vehicle is a GXP model equipped with P255/45R18 size tires on the front wheels and P225/50R18 size tires on the rear wheels. Different tire sizes front to rear should not be rotated.

Tire rotation is recommended if the original equipment tires installed on your vehicle are of the same size and type on all four tire/wheel positions. Original equipment tires of the same size and type should be rotated every 5,000 to 8,000 miles (8 000 to 13 000 km).

Any time you notice unusual wear, rotate your vehicle's tires as soon as possible and check the wheel alignment. Also check for damaged tires or wheels. See *When It Is Time for New Tires on page 5-71* and *Wheel Replacement on page 5-75* for more information.

The purpose of regular rotation is to achieve more uniform wear for all tires on the vehicle. The first rotation is the most important. See *Scheduled Maintenance on page 6-4* for scheduled rotation intervals.

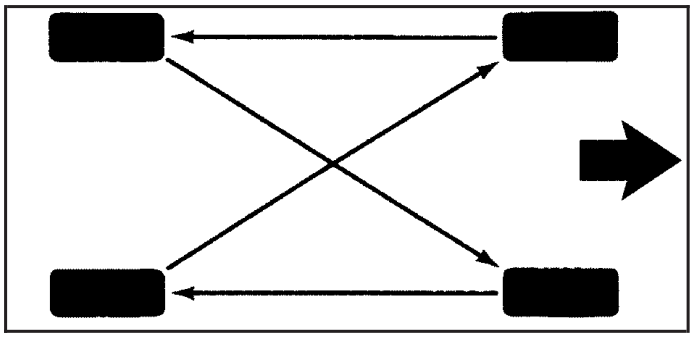

Rotation Pattern for Non-GXP Tires Only

The correct rotation pattern shown here is only for non-GXP tires.

Do not include the compact spare tire, if equipped, in your vehicle's tire rotation.

After the tires have been rotated, adjust the front and rear inflation pressures as shown on the Tire and Loading Information label, and reset the Tire Inflation Monitor System. See *Tire Inflation Monitor System on page 5-68* for additional information.

Downloaded from www.Manualslib.com manuals search engine

Make certain that all wheel nuts are properly tightened. See “Wheel Nut Torque” under *Capacities and Specifications on page 5-118*.

⚠ CAUTION:

Rust or dirt on a wheel, or on the parts to which it is fastened, can make wheel nuts become loose after a time. The wheel could come off and cause an accident. When you change a wheel, remove any rust or dirt from places where the wheel attaches to the vehicle. In an emergency, you can use a cloth or a paper towel to do this; but be sure to use a scraper or wire brush later, if needed, to get all the rust or dirt off. See *Changing a Flat Tire on page 5-88*.

When It Is Time for New Tires

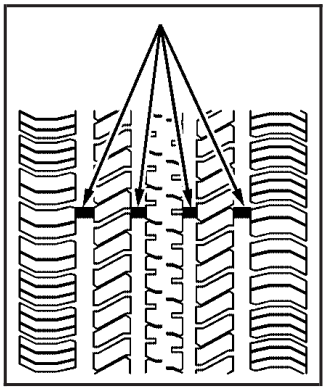

One way to tell when it is time for new tires is to check the treadwear indicators, which will appear when your tires have only 1/16 inch (1.6 mm) or less of tread remaining.

You need a new tire if any of the following statements are true:

- You can see the indicators at three or more places around the tire.
- You can see cord or fabric showing through the tire’s rubber.
- The tread or sidewall is cracked, cut, or snagged deep enough to show cord or fabric.
- The tire has a bump, bulge, or split.
- The tire has a puncture, cut or other damage that cannot be repaired well because of the size or location of the damage.

Downloaded from www.Manualslib.com manuals search engine

Buying New Tires

GM has developed and matched specific tires for your vehicle. The original equipment tires installed on your vehicle, when it was new, were designed to meet General Motors Tire Performance Criteria Specification (TPC spec) system rating. If you need replacement tires, GM strongly recommends that you get tires with the same TPC Spec rating. This way, your vehicle will continue to have tires that are designed to give the same performance and vehicle safety, during normal use, as the original tires.

GM's exclusive TPC Spec system considers over a dozen critical specifications that impact the overall performance of your vehicle, including brake system performance, ride and handling, traction control, and tire pressure monitoring performance. GM's TPC Spec number is molded onto the tire's sidewall by the tire manufacturer. If the tires have an all-season tread design, the TPC spec number will be followed by an MS for mud and snow. See *Tire Sidewall Labeling on page 5-62* for additional information.

⚠ CAUTION:

Mixing tires could cause you to lose control while driving. If you mix tires of different sizes (other than those originally installed on your vehicle), brands, or types (radial and bias-belted tires), the vehicle may not handle properly, and you could have a crash. Using tires of different sizes (other than those originally installed on your vehicle) may also cause damage to your vehicle. Be sure to use the correct size, brand, and type tires on all wheels. If your vehicle has a compact spare tire, it is all right to drive your vehicle with the compact spare temporarily. It was developed for use on your vehicle. See *Compact Spare Tire on page 5-99*.

Downloaded from www.Manualslib.com manuals search engine

⚠ CAUTION:

If you use bias-ply tires on your vehicle, the wheel rim flanges could develop cracks after many miles of driving. A tire and/or wheel could fail suddenly, causing a crash. Use only radial-ply tires with the wheels on your vehicle.

If you must replace your vehicle's tires with those that do not have a TPC Spec number, make sure they are the same size, load range, speed rating, and construction type (radial and bias-belted tires) as your vehicle's original tires.

Your vehicle's original equipment tires are listed on the Tire and Loading Information Label. This label is attached to the vehicle's center pillar (B-pillar). See *Loading Your Vehicle on page 4-33*, for more information about the Tire and Loading Information Label and its location on your vehicle.

Different Size Tires and Wheels

If you add wheels or tires that are a different size than your original equipment wheels and tires, this may affect the way your vehicle performs, including its braking, ride and handling characteristics, stability and resistance to rollover. Additionally, if your vehicle has electronic systems such as, antilock brakes; traction control; and electronic stability control, the performance of these systems can be affected.

⚠ CAUTION:

If you add different sized wheels, your vehicle may not provide an acceptable level of performance and safety if tires not recommended for those wheels are selected. You may increase the chance that you will crash and suffer serious injury. Only use GM specific wheel and tire systems developed for your vehicle, and have them properly installed by a GM certified technician.

See *Buying New Tires on page 5-72* and *Accessories and Modifications on page 5-3* for additional information.

Downloaded from www.Manualslib.com manuals search engine

Uniform Tire Quality Grading

Quality grades can be found where applicable on the tire sidewall between tread shoulder and maximum section width. For example:

Treadwear 200 Traction AA Temperature A

The following information relates to the system developed by the United States National Highway Traffic Safety Administration, which grades tires by treadwear, traction and temperature performance. (This applies only to vehicles sold in the United States.) The grades are molded on the sidewalls of most passenger car tires. The Uniform Tire Quality Grading system does not apply to deep tread, winter-type snow tires, space-saver or temporary use spare tires, tires with nominal rim diameters of 10 to 12 inches (25 to 30 cm), or to some limited-production tires.

While the tires available on General Motors passenger cars and light trucks may vary with respect to these grades, they must also conform to federal safety requirements and additional General Motors Tire Performance Criteria (TPC) standards.

Treadwear

The treadwear grade is a comparative rating based on the wear rate of the tire when tested under controlled conditions on a specified government test course. For example, a tire graded 150 would wear one and a half (1.5) times as well on the government course as a tire graded 100. The relative performance of tires depends upon the actual conditions of their use, however, and may depart significantly from the norm due to variations in driving habits, service practices and differences in road characteristics and climate.

Traction – AA, A, B, C

The traction grades, from highest to lowest, are AA, A, B, and C. Those grades represent the tire's ability to stop on wet pavement as measured under controlled conditions on specified government test surfaces of asphalt and concrete. A tire marked C may have poor traction performance. Warning: The traction grade assigned to this tire is based on straight-ahead braking traction tests, and does not include acceleration, cornering, hydroplaning, or peak traction characteristics.

Downloaded from www.Manualslib.com manuals search engine

Temperature – A, B, C

The temperature grades are A (the highest), B, and C, representing the tire's resistance to the generation of heat and its ability to dissipate heat when tested under controlled conditions on a specified indoor laboratory test wheel. Sustained high temperature can cause the material of the tire to degenerate and reduce tire life, and excessive temperature can lead to sudden tire failure. The grade C corresponds to a level of performance which all passenger car tires must meet under the Federal Motor Vehicle Safety Standard No. 109. Grades B and A represent higher levels of performance on the laboratory test wheel than the minimum required by law.

Warning: The temperature grade for this tire is established for a tire that is properly inflated and not overloaded. Excessive speed, underinflation, or excessive loading, either separately or in combination, can cause heat buildup and possible tire failure.

Wheel Alignment and Tire Balance

The tires and wheels on your vehicle were aligned and balanced carefully at the factory to give you the longest tire life and best overall performance. Adjustments to wheel alignment and tire balancing will not be necessary on a regular basis. However, if you notice unusual tire wear or your vehicle pulling to one side or the other, the alignment may need to be checked. If you notice your vehicle vibrating when driving on a smooth road, your tires and wheels may need to be rebalanced. See your dealer for proper diagnosis.

Wheel Replacement

Replace any wheel that is bent, cracked or badly rusted or corroded. If wheel nuts keep coming loose, the wheel, wheel bolts and wheel nuts should be replaced. If the wheel leaks air, replace it (except some aluminum wheels, which can sometimes be repaired). See your dealer if any of these conditions exist.

Your dealer will know the kind of wheel you need.

Downloaded from www.Manualslib.com manuals search engine

Each new wheel should have the same load-carrying capacity, diameter, width, offset and be mounted the same way as the one it replaces.

If you need to replace any of your wheels, wheel bolts or wheel nuts, replace them only with new GM original equipment parts. This way, you will be sure to have the right wheel, wheel bolts and wheel nuts for your vehicle.

⚠ CAUTION:

Using the wrong replacement wheels, wheel bolts, or wheel nuts on your vehicle can be dangerous. It could affect the braking and handling of your vehicle, make your tires lose air and make you lose control. You could have a collision in which you or others could be injured. Always use the correct wheel, wheel bolts and wheel nuts for replacement.

Notice: **The wrong wheel can also cause problems with bearing life, brake cooling, speedometer or odometer calibration, headlamp aim, bumper height, vehicle ground clearance, and tire or tire chain clearance to the body and chassis.**

See *Changing a Flat Tire on page 5-88* for more information.

Used Replacement Wheels

⚠ CAUTION:

Putting a used wheel on your vehicle is dangerous. You cannot know how it has been used or how far it has been driven. It could fail suddenly and cause a crash. If you have to replace a wheel, use a new GM original equipment wheel.

Downloaded from www.Manualslib.com manuals search engine

Tire Chains

⚠ CAUTION:

If your vehicle has P225/55R17, P255/45R18 or P225/50R18 size tires, do not use tire chains, there is not enough clearance.

Tire chains used on a vehicle without the proper amount of clearance can cause damage to the brakes, suspension or other vehicle parts. The area damaged by the tire chains could cause you to lose control of your vehicle and you or others may be injured in a crash.

Use another type of traction device only if its manufacturer recommends it for use on your vehicle and tire size combination and road conditions. Follow that manufacturer's instructions. To help avoid damage to your vehicle, drive slowly, readjust or remove the device if it is contacting your vehicle, and do not spin your wheels.

If you do find traction devices that will fit, install them on the front tires.

Notice: **If your vehicle does not have P225/55R17, P255/45R18 or P225/50R18 size tires, use tire chains only where legal and only when you must. Use only SAE Class S-type chains that are the proper size for your tires. Install them on the front tires and tighten them as tightly as possible with the ends securely fastened. Drive slowly and follow the chain manufacturer's instructions. If you can hear the chains contacting your vehicle, stop and retighten them. If the contact continues, slow down until it stops. Driving too fast or spinning the wheels with chains on will damage your vehicle.**

If a Tire Goes Flat

It is unusual for a tire to blowout while you are driving, especially if you maintain your tires properly. See *Tires on page 5-60*. If air goes out of a tire, it is much more likely to leak out slowly. But if you should ever have a blowout, here are a few tips about what to expect and what to do:

If a front tire fails, the flat tire will create a drag that pulls the vehicle toward that side. Take your foot off the accelerator pedal and grip the steering wheel firmly. Steer to maintain lane position, and then gently brake to a stop well out of the traffic lane.

Downloaded from www.Manualslib.com manuals search engine

A rear blowout, particularly on a curve, acts much like a skid and may require the same correction you'd use in a skid. In any rear blowout, remove your foot from the accelerator pedal. Get the vehicle under control by steering the way you want the vehicle to go. It may be very bumpy and noisy, but you can still steer. Gently brake to a stop, well off the road if possible.

If a tire goes flat, and your vehicle has a spare tire, see *Changing a Flat Tire on page 5-88*. This information shows you how to use your vehicle's tire changing equipment and how to change a flat tire safely.

⚠ CAUTION:

Lifting a vehicle and getting under it to do maintenance or repairs is dangerous without the appropriate safety equipment and training. The jack provided with your vehicle is designed only for changing a flat tire. If it is used for anything else, you or others could be badly injured or killed if the vehicle slips off the jack. Use the jack provided with your vehicle only for changing a flat tire.

If a Tire Goes Flat (GXP)

GXP models have no spare tire, no tire changing equipment, and no place for storing a spare or flat tire. If a tire goes flat, avoid further tire and wheel damage by driving slowly to a level place and stopping. Then do this:

1. Turn on the hazard warning flashers. See *Hazard Warning Flashers on page 3-6*.
2. Park your vehicle. Set the parking brake firmly and put the shift lever in PARK (P). See *Shifting Into Park (P) on page 2-31* for additional information.
3. Turn off the engine.
4. Inspect the flat tire.

If the tire has been separated from the wheel or has damaged sidewalls or large tears that allow rapid air loss, call a tire repair facility. See *Roadside Assistance Program on page 7-6*.

If the flat tire is due to a slow leak caused by a nail or other similar road hazard, the tire inflator kit may be used to temporarily repair the damaged tire. The kit uses a liquid tire sealant to seal small punctures in the tread area of the tire. The flat tire is then inflated to at least 30 psi (207 kPa) and driven to evenly distribute the tire sealant.

Downloaded from www.Manualslib.com manuals search engine

The tire pressure is checked after driving for a maximum of five miles (8.0 km) to see if the slow leak has been stopped. If the tire pressure is 19 psi (131 kPa) or more, inflate the tire up to the standard operating pressure as shown on the tire and loading information label. This label is attached to the vehicle's center-pillar below the driver's door latch. See *Inflation - Tire Pressure on page 5-67*.

Notice: **If the tire pressure has dropped below 19 psi (131 kPa), the vehicle should not be driven. Damage to the tire may be severe and the sealant will not be effective. Contact Roadside Assistance, see *Roadside Assistance Program on page 7-6*.**

You should have the damaged tire repaired as soon as possible. The tire sealant is a temporary repair only. If the tire has been filled with tire sealant, take the tire to a GM dealer for inspection and repair. See *Tire Inflator Kit (GXP) on page 5-79* for additional information.

Tire Inflator Kit (GXP)

Your vehicle may have a tire inflator kit. The kit uses a liquid tire sealant and air at the same time to seal small punctures in the tread area of the tire. Be sure to read and follow all the tire inflator kit instructions. The kit includes the following:

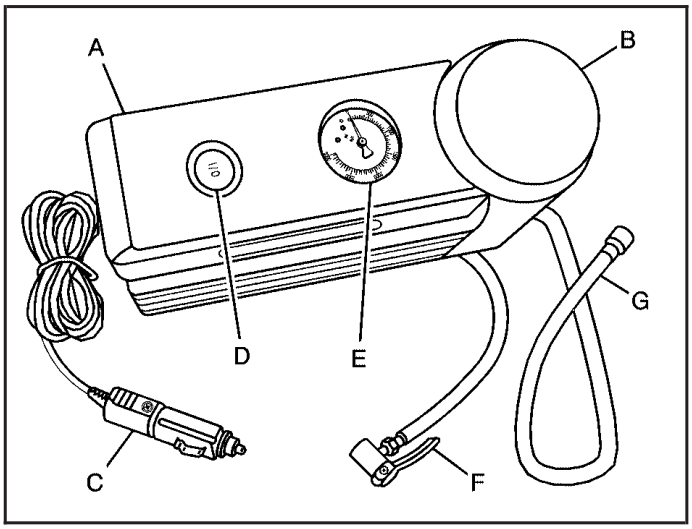

A. Air Compressor
B. Tire Sealant Canister
C. Air Compressor Accessory Plug
D. On/Off Switch
E. Air Pressure Gage
F. Air Compressor Inflator Hose
G. Sealant Filling Hose

If the flat tire is due to a slow leak caused by a nail or other similar road hazard, the tire inflator kit may be used to temporarily repair the damaged tire.

After temporarily repairing a tire with the tire inflator kit, take your vehicle to an authorized GM dealer to have the tire inspected and repaired.

Downloaded from www.Manualslib.com manuals search engine

Accessing the Tire Inflator Kit

To access the tire inflator kit, do the following:

1. Open the trunk. See *Trunk on page 2-13* for more information.
2. Locate the tire inflator kit by lifting up the carpet.

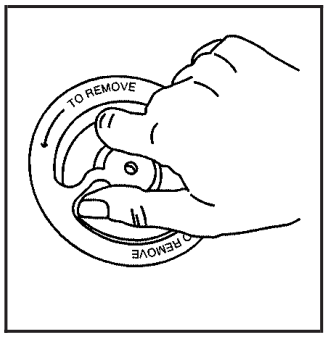

3. Remove the inflator kit cover by turning the center nut counterclockwise.

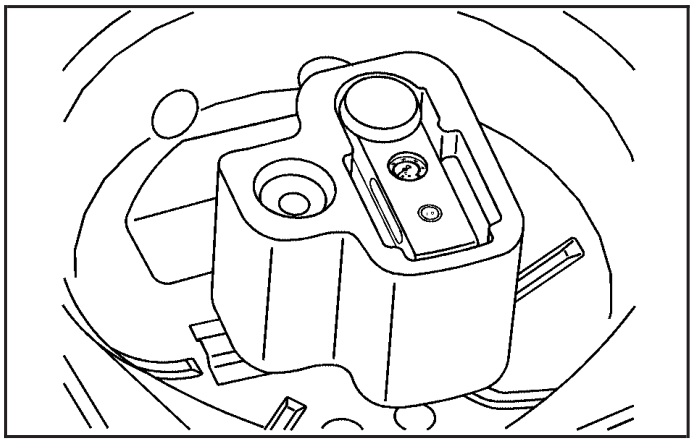

4. Remove the inflator kit by pulling it straight out of the foam container.

Downloaded from www.Manualslib.com manuals search engine

Tire Sealant

The kit contains a liquid sealant that when injected into a flat tire, may temporarily repair nail holes or cuts in the tread area of the tire. The tire sealant cannot repair tire damage caused while driving on a flat tire or a tire that has had a “blow out” or a tire that has punctures in the sidewall areas. The tire sealant solution is to be used for a single tire and can only be used once.

Check the tire sealant expiration date on the sealant canister. The sealant may not be as effective beyond the expiration date. If needed, see your GM dealer for a replacement canister.

After temporarily repairing a tire using the tire sealant, take your vehicle to an authorized GM dealer to have the tire inspected and repaired.

Using the Tire Inflator Kit

To use the tire inflator kit, do the following:

1. Place the inflator kit on the ground and unwrap the sealant filling hose from the compressor.
2. Remove the air compressor accessory plug from the unit. To do this, pull the top portion of the wrapped cord out first, then the bottom, then unsnap the plug. Do not insert the plug into an accessory outlet yet.
3. Remove the valve stem cap from the flat tire by turning it counterclockwise.

   If an object, such as a nail, has penetrated the tire, do not remove it.

Downloaded from www.Manualslib.com manuals search engine

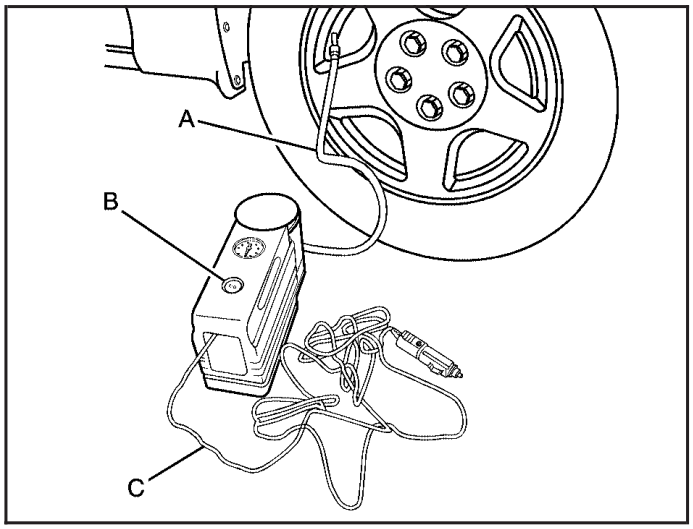

4. Attach the sealant filling hose (A) onto the tire valve stem. Turn it clockwise until it is tight.

   Make sure the inflator kit on/off switch (B) is in the O (off) position.

5. Plug the air compressor accessory plug (C) into an accessory power outlet in the vehicle. See *Accessory Power Outlet(s) on page 3-24* for more information.

⚠ CAUTION:

Idling the engine in a closed-in place or with the climate control system off can cause deadly carbon monoxide (CO). See *Engine Exhaust on page 2-33*.

6. Start the vehicle. See *Starting the Engine on page 2-23* for more information. The vehicle must be running while using the air compressor.

⚠ CAUTION:

Inflating something too much can make it explode, and you or others could be injured. Be sure to read the inflator instructions, and inflate the tire to its recommended pressure. Do not exceed 36 psi (248 kPa).

7. Move the inflator kit switch to the I (on) position.

   The inflator kit will force sealant and air into the tire. Sealant may leak from the puncture hole until the vehicle is driven and the hole has sealed.

Downloaded from www.Manualslib.com manuals search engine

8. Make sure there is a proper connection between the tire valve stem and the sealant filling hose by looking at the air pressure gage. If there is not a pressure reading while the compressor is running, the connection between the inflator kit and the tire is bad.

   Check the attachment between the sealant filling hose and the tire valve stem.

9. Inflate the tire up to the recommended inflation pressure, found on the Tire and Loading Information label located on the vehicle's center pillar (B-pillar) below the vehicle's door latch, using the air pressure gage on the top of the unit as a guide.

   The pressure gage reading is slightly high while the compressor is on. Turn the compressor off to get an accurate pressure reading.

Notice: **If the recommended pressure cannot be reached after 15 minutes, the vehicle should not be driven farther. Damage to the tire is severe and the sealant will not be effective. Remove the air compressor plug from the accessory power outlet and unscrew the inflating hose from the tire valve. See *Roadside Assistance Program on page 7-6*.**

10. Move the inflator kit switch to the O (off) position once the correct tire pressure is obtained.

11. Turn off the engine.

12. Unplug the air compressor accessory plug from the accessory power outlet in the vehicle.

13. Disconnect the sealant filling hose from the tire valve stem, by turning it counterclockwise, and replace the tire valve stem cap.

    Be careful when handling the tire inflator components as they may be hot after usage.

14. Wrap the sealant filling hose around the air compressor channel to stow it in its original location.

Downloaded from www.Manualslib.com manuals search engine

15. Stow the air compressor accessory plug back in the air compressor. To do this, wrap the air compressor accessory plug, snap in the plug, and then push in the bottom and then the top of the wrapped air compressor accessory plug.

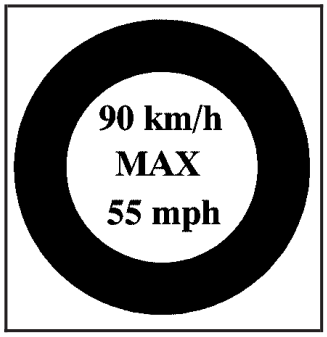

16. If the flat tire was able to inflate to the recommended inflation pressure, remove the maximum speed label from the sealant canister.

Place it in a highly visible location such as the inside of the upper left corner of the windshield or to the face of the radio/clock.

The maximum speed label reminds you to drive cautiously and not to exceed 55 mph (90 km/h) until you have the damaged tire inspected and repaired.

⚠ CAUTION:

Storing the tire inflator kit or other equipment in the passenger compartment of the vehicle could cause injury. In a sudden stop or collision, loose equipment could strike someone. Store the tire inflator kit in the proper place.

17. Return the equipment to the proper storage location in the trunk of your vehicle.

Downloaded from www.Manualslib.com manuals search engine

18. Immediately drive the vehicle 5 miles (8 km) to distribute the sealant evenly in the tire. Stop at a safe location and check the tire pressure. Refer to Steps 1 through 8 under “Using the Air Compressor without Sealant” next in this section. If the tire pressure has fallen more than 10 psi (68 kPa) below the recommended inflation pressure, stop driving the vehicle. The tire is too damaged for the sealant to work. See *Roadside Assistance Program on page 7-6*.

    If the tire pressure has not dropped more than 10 psi (68 kPa) from the recommended inflation pressure, you can inflate the tire back up to the recommended inflation pressure.

19. Dispose of the sealant canister at a local GM dealer or in accordance with your local state codes and practices.

    After using the sealant canister, replace it with a new canister from a GM dealer.

20. After temporarily repairing a tire with the emergency flat tire repair kit, take your vehicle to an authorized GM dealer to have the tire inspected and repaired.

Using the Air Compressor without Sealant

To use the air compressor by itself to inflate a tire, do the following:

1. Remove the air compressor accessory plug from the air compressor.

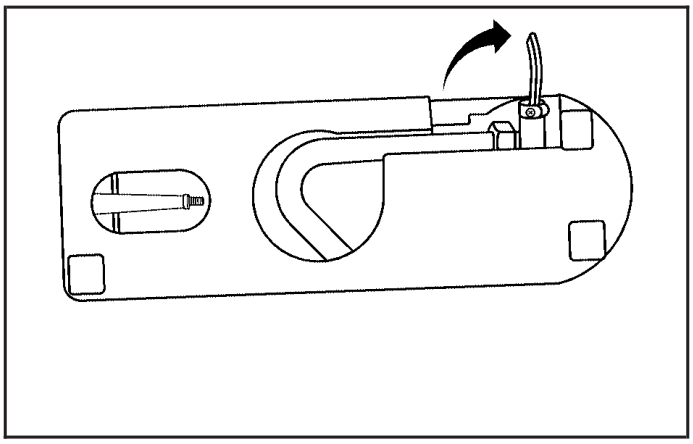

2. Unlock the air compressor hose from the sealant canister by pulling up on the lever.

Downloaded from www.Manualslib.com manuals search engine

3. Pull the air compressor inflator hose from the sealant canister.
4. Push the air compressor inflator hose onto the tire valve stem and push the lever down to secure in place.
5. Plug the air compressor accessory plug into an accessory power outlet in the vehicle. See *Accessory Power Outlet(s) on page 3-24* for more information.

⚠ CAUTION:

Idling the engine in a closed-in place or with the climate control system off can cause deadly carbon monoxide (CO). See *Engine Exhaust on page 2-33*.

6. Start the vehicle. See *Starting the Engine on page 2-23* for more information. The vehicle must be running while using the air compressor.

⚠ CAUTION:

Inflating something too much can make it explode, and you or others could be injured. Be sure to read the inflator instructions, and inflate the tire to its recommended pressure. Do not exceed 36 psi (248 kPa).

7. Move the inflator kit switch to the I (on) position.
8. Make sure there is a proper connection between the tire valve stem and the air compressor hose by looking at the air pressure gage. If there is not a pressure reading while the compressor is running, the connection between the inflator kit and the tire is bad.

   Check the attachment between the air compressor hose and the tire valve stem.
9. Inflate the tire up to the recommended inflation pressure using the air pressure gage on the top of the unit as a guide.
10. Turn off the air compressor by moving the switch to the O (off) position.

Downloaded from www.Manualslib.com manuals search engine

⚠ CAUTION:

Storing the tire inflator kit or other equipment in the passenger compartment of the vehicle could cause injury. In a sudden stop or collision, loose equipment could strike someone. Store the tire inflator kit in the proper place.

11. Disconnect the compressor inflator hose and wrap the hose in the bottom of the inflator kit.
12. Place the equipment in the original location in the trunk of your vehicle.

Removal and Installation of the Sealant Canister

To remove the sealant canister, do the following:

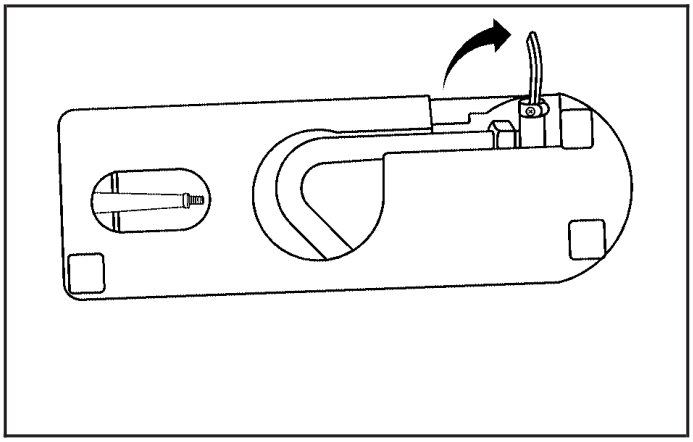

1. Unlock the air compressor inflator hose from the sealant canister by pulling the lever up.
2. Disconnect the air compressor inflator hose from the sealant canister.
3. Unwrap the sealant filling hose from the compressor.

Downloaded from www.Manualslib.com manuals search engine

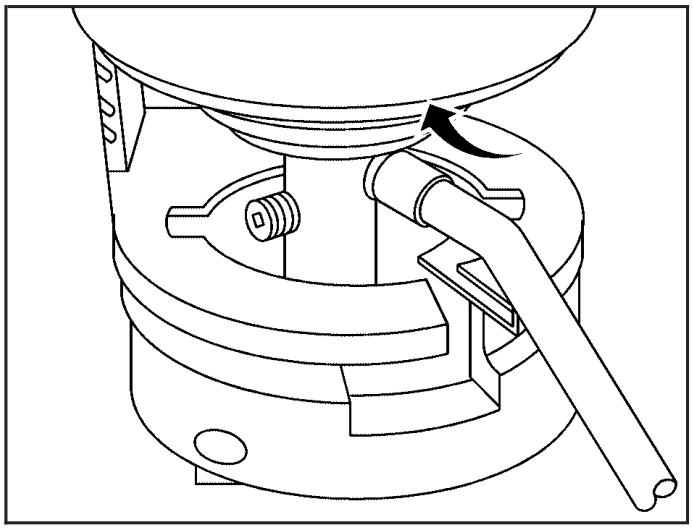

4. Turn the sealant canister so the inflator filling hose is aligned with the slot in the compressor.
5. Lift the sealant canister from the air compressor and replace with a new sealant canister. See your GM dealer for more information.

To install a new sealant canister, do the following:

1. Align the sealant filling hose with the slot in the air compressor.
2. Push the sealant canister down and rotate it clockwise.
3. Wrap the sealant filling hose around the air compressor channel to stow it in its original location.
4. Push the air compressor inflator hose onto the sealant canister inlet and push the lever down.

Changing a Flat Tire

If a tire goes flat, avoid further tire and wheel damage by driving slowly to a level place. Turn on your vehicle's hazard warning flashers. See *Hazard Warning Flashers on page 3-6* for more information.

Downloaded from www.Manualslib.com manuals search engine

⚠ CAUTION:

Changing a tire can be dangerous. The vehicle can slip off the jack and roll over or fall on you or other people. You and they could be badly injured or even killed. Find a level place to change your tire. To help prevent the vehicle from moving:

1. **Set the parking brake firmly.**
2. **Put the shift lever in PARK (P).**
3. **Turn off the engine and do not restart while the vehicle is raised.**
4. **Do not allow passengers to remain in the vehicle.**

To be even more certain the vehicle will not move, you should put blocks at the front and rear of the tire farthest away from the one being changed. That would be the tire, on the other side, at the opposite end of the vehicle.

When your vehicle has a flat tire, use the following example as a guide to assist you in the placement of wheel blocks.

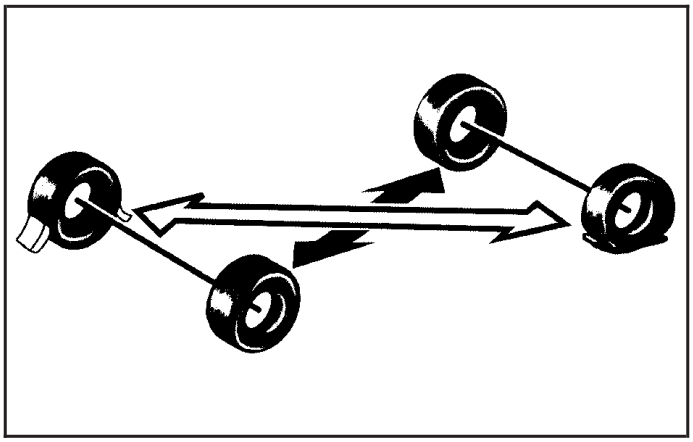

The following information will tell you next how to use the jack and change a tire.

Downloaded from www.Manualslib.com manuals search engine

Removing the Spare Tire and Tools

The equipment needed to change a tire is located in the trunk.

1. Open the trunk. See *Trunk on page 2-13* for more information.
2. Remove the convenience net, if equipped, by removing the net hook attachments.
3. Lift up the carpet.

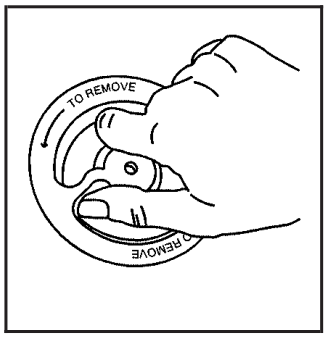

4. Turn the center nut on the compact spare tire cover counterclockwise to remove it.
5. Remove the cover.
6. Remove the compact spare tire. See *Compact Spare Tire on page 5-99* for more information.

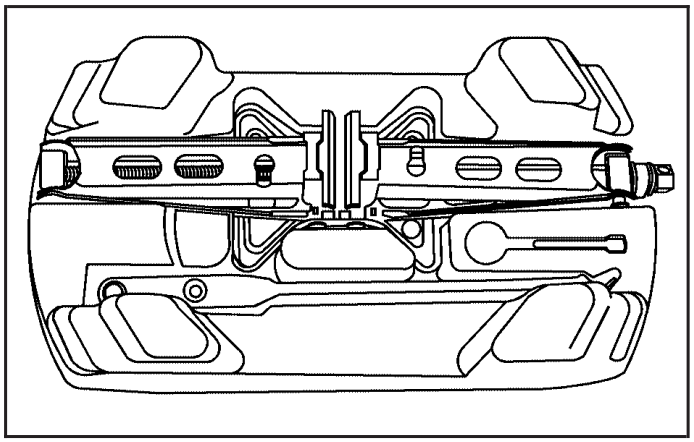

7. Turn the nut holding the jack counterclockwise and remove it. Then remove the jack and wrench.

Downloaded from www.Manualslib.com manuals search engine

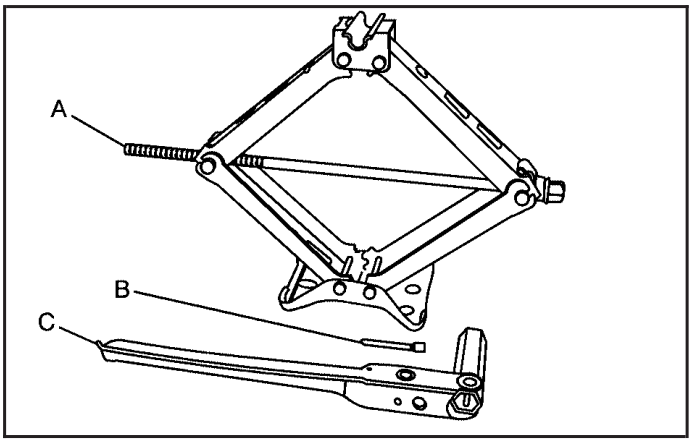

8. The tools you will be using include the jack (A), extension and protector/guide (B) and the wheel wrench (C).

Removing the Flat Tire and Installing the Spare Tire

Your vehicle may have aluminum wheels. If so, you will see exposed stainless steel wheel nuts. Use the wheel wrench to loosen all the wheel nuts. Do not remove them yet.

Or, your vehicle may have steel wheel covers.

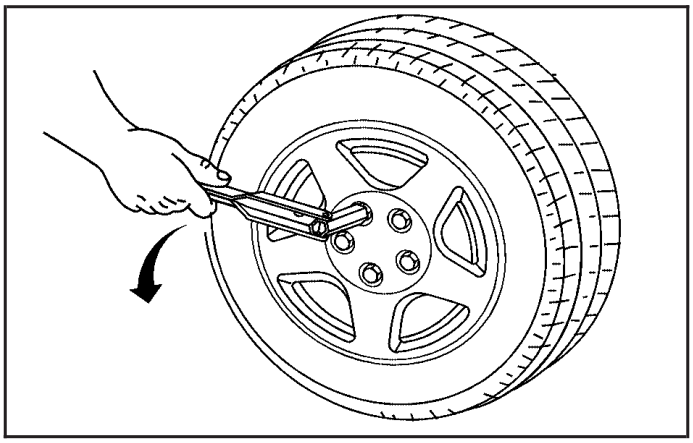

To remove the steel wheel covers and wheel nut caps, loosen the plastic nut caps with the wheel wrench in a counterclockwise direction. If needed, you can finish loosening them with your fingers. The plastic nut caps will not come off.

Downloaded from www.Manualslib.com manuals search engine

Use the flat end of the wheel wrench and pry along the edge of the cover until it comes off. The edge of the wheel cover could be sharp, so do not try to remove it with your bare hands. Do not drop the cover or lay it face down, as it could become scratched or damaged.

Once you have removed the wheel cover, use the following procedure to remove the flat tire and install the spare tire.

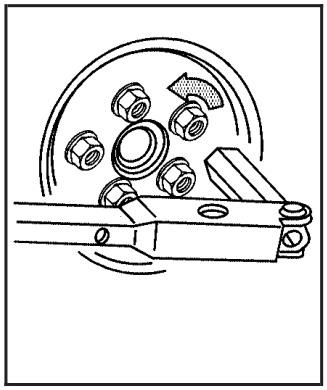

1. Turn the wheel wrench once on each wheel nut to loosen them. Do not remove them yet.

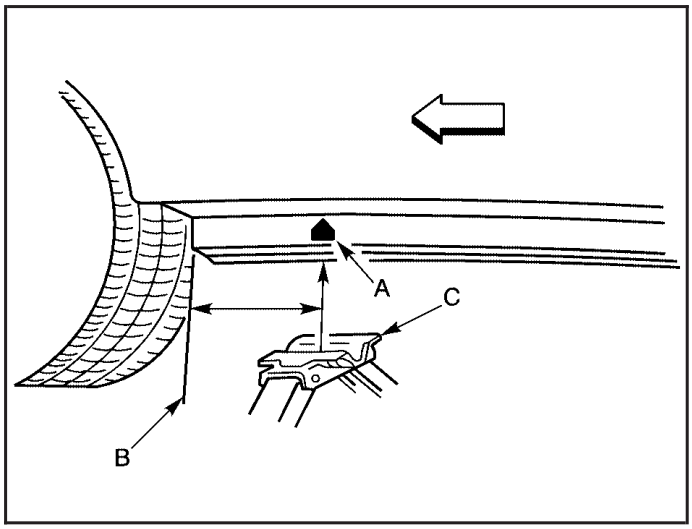

2. Find the jacking location using the diagram. For jacking at the vehicle's front location, put the jack lift head (C) about 6 inches (15 cm) from the rear edge of the front wheel opening (B). Line up the jack with the arrow (A) as shown.

Downloaded from www.Manualslib.com manuals search engine

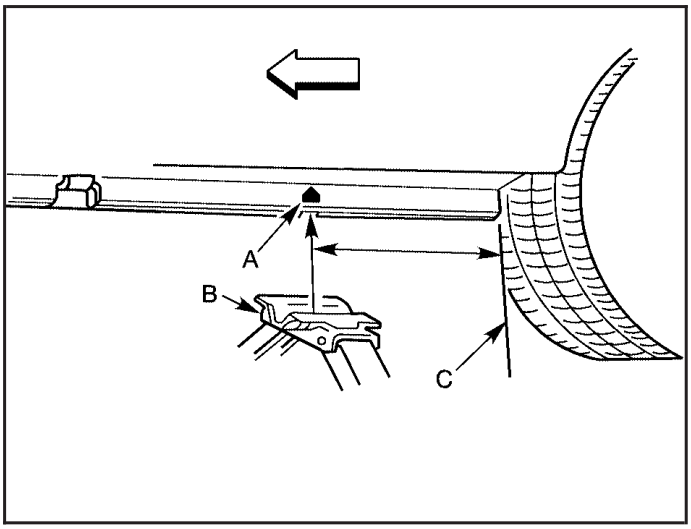

For jacking at the vehicle's rear location, put the jack lift head (B) about 9 inches (23 cm) from the front edge of the rear wheel opening (C). Line up the jack with the arrow (A) as shown.

3. Put the compact spare tire near you.

⚠ CAUTION:

Getting under a vehicle when it is jacked up is dangerous. If the vehicle slips off the jack you could be badly injured or killed. Never get under a vehicle when it is supported only by a jack.

⚠ CAUTION:

Raising your vehicle with the jack improperly positioned can damage the vehicle and even make the vehicle fall. To help avoid personal injury and vehicle damage, be sure to fit the jack lift head into the proper location before raising the vehicle.

Downloaded from www.Manualslib.com manuals search engine

⚠ CAUTION:

Lifting a vehicle and getting under it to do maintenance or repairs is dangerous without the appropriate safety equipment and training. The jack provided with your vehicle is designed only for changing a flat tire. If it is used for anything else, you or others could be badly injured or killed if the vehicle slips off the jack. Use the jack provided with your vehicle only for changing a flat tire.

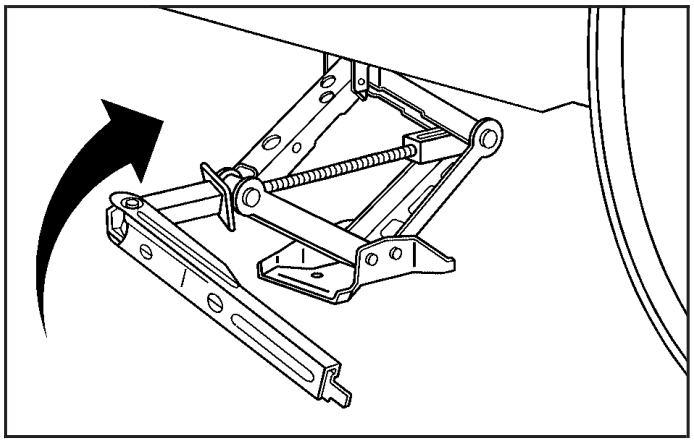

4. Raise the vehicle by turning the jack handle clockwise. Raise the vehicle far enough off the ground for the compact spare tire to fit underneath the wheel well of the vehicle.
5. Remove all wheel nuts and take off the flat tire.

Downloaded from www.Manualslib.com manuals search engine

⚠ CAUTION:

Rust or dirt on the wheel, or on the parts to which it is fastened, can make the wheel nuts become loose after a time. The wheel could come off and cause an accident. When you change a wheel, remove any rust or dirt from the places where the wheel attaches to the vehicle. In an emergency, you can use a cloth or a paper towel to do this; but be sure to use a scraper or wire brush later, if needed, to get all the rust or dirt off.

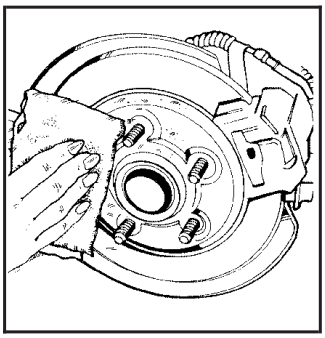

6. Remove any rust or dirt from the wheel bolts, mounting surfaces and spare wheel.

7. Install the compact spare tire.

⚠ CAUTION:

Never use oil or grease on studs or nuts. If you do, the nuts might come loose. Your wheel could fall off, causing a serious accident.

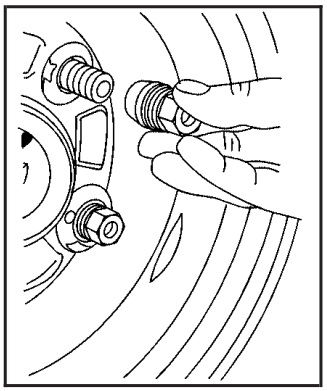

8. Reinstall the wheel nuts with the rounded end of the nuts toward the wheel. Tighten each nut by hand until the wheel is held against the hub.

Downloaded from www.Manualslib.com manuals search engine

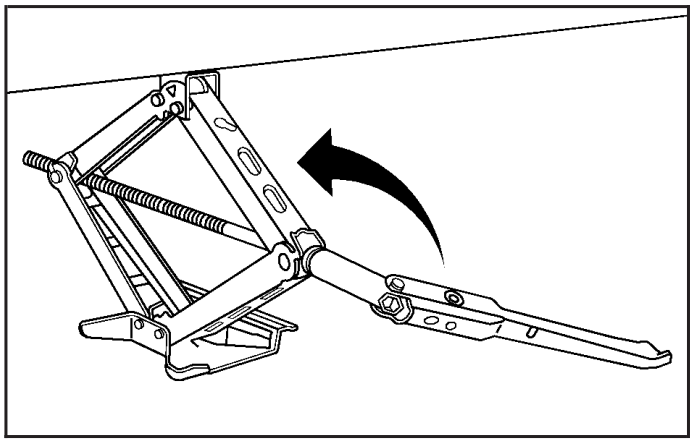

9. Lower the vehicle by turning the jack handle counterclockwise. Lower the jack completely.

⚠ CAUTION:

Incorrect wheel nuts or improperly tightened wheel nuts can cause the wheel to come loose and even come off. This could lead to an accident. Be sure to use the correct wheel nuts. If you have to replace them, be sure to get new GM original equipment wheel nuts. Stop somewhere as soon as you can and have the nuts tightened with a torque wrench to the proper torque specification. See *Capacities and Specifications on page 5-118* for wheel nut torque specification.

Notice: **Improperly tightened wheel nuts can lead to brake pulsation and rotor damage. To avoid expensive brake repairs, evenly tighten the wheel nuts in the proper sequence and to the proper torque specification. See *Capacities and Specifications on page 5-118* for the wheel nut torque specification.**

Downloaded from www.Manualslib.com manuals search engine

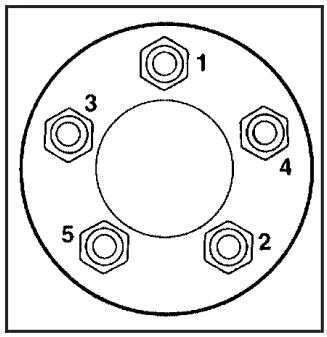

10. Tighten the wheel nuts firmly in a crisscross sequence as shown.

Notice: **Wheel covers will not fit on your compact spare. If you try to put a wheel cover on the compact spare, you could damage the cover or the spare.**

Do not try to put the wheel cover on the compact spare tire. It will not fit. Store the wheel cover in the trunk until the flat tire is repaired or replaced.

Storing a Flat or Spare Tire and Tools

⚠ CAUTION:

Storing a jack, a tire, or other equipment in the passenger compartment of the vehicle could cause injury. In a sudden stop or collision, loose equipment could strike someone. Store all these in the proper place.

After the compact spare tire is put on the vehicle, store the flat tire in the trunk. Use the following procedure to secure it in the trunk. When storing a full-size tire, use the extension and protector/guide, located in the foam holder to help avoid wheel surface damage.

Downloaded from www.Manualslib.com manuals search engine

To store a full-size tire, do the following:

1. Install the tools in their original location in the trunk area and secure.
2. Place the tire in the trunk with the valve stem facing down, and the protector/guide placed through a wheel bolt hole.
3. Remove the protector and attach the retainer securely.
4. Place the protector/guide back in the foam holder when putting the compact spare back in the trunk. Store the cover as far forward as possible.

The compact spare tire is for temporary use only. Replace the compact spare tire with a full-size tire as soon as possible. See *Compact Spare Tire on page 5-99* for more information. Use the following as a guide for storing the compact spare tire and tools.

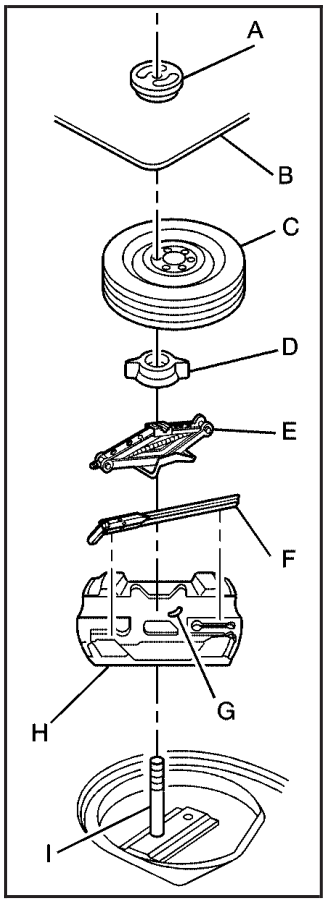

A. Retainer
B. Cover
C. Compact Spare Tire
D. Nut
E. Jack
F. Wheel Wrench
G. Extension and Protective Guide
H. Foam Holder
I. Bolt Screw

Downloaded from www.Manualslib.com manuals search engine

Compact Spare Tire

Although the compact spare tire was fully inflated when the vehicle was new, it can lose air after a time. Check the inflation pressure regularly. It should be 60 psi (420 kPa).

After installing the compact spare on the vehicle, stop as soon as possible and make sure the spare tire is correctly inflated. The compact spare is made to perform well at speeds up to 65 mph (105 km/h) for distances up to 3,000 miles (5 000 km), so you can finish your trip and have the full-size tire repaired or replaced at your convenience. Of course, it is best to replace the spare with a full-size tire as soon as possible. The spare tire will last longer and be in good shape in case it is needed again.

Notice: **When the compact spare is installed, do not take your vehicle through an automatic car wash with guide rails. The compact spare can get caught on the rails. That can damage the tire and wheel, and maybe other parts of your vehicle.**

Do not use the compact spare on other vehicles.

And do not mix the compact spare tire or wheel with other wheels or tires. They will not fit. Keep the spare tire and its wheel together.

Notice: **Tire chains will not fit your compact spare. Using them can damage your vehicle and can damage the chains too. Do not use tire chains on your compact spare.**

Appearance Care

Cleaning the Inside of Your Vehicle

Your vehicle's interior will continue to look its best if it is cleaned often. Although not always visible, dust and dirt can accumulate on your upholstery. Dirt can damage carpet, fabric, leather, and plastic surfaces. Regular vacuuming is recommended to remove particles from your upholstery. It is important to keep your upholstery from becoming and remaining heavily soiled. Soils should be removed as quickly as possible. Your vehicle's interior may experience extremes of heat that could cause stains to set rapidly.

Lighter colored interiors may require more frequent cleaning. Use care because newspapers and garments that transfer color to your home furnishings may also transfer color to your vehicle's interior.

When cleaning your vehicle's interior, only use cleaners specifically designed for the surfaces being cleaned. Permanent damage may result from using cleaners on surfaces for which they were not intended. Use glass cleaner only on glass. Remove any accidental over-spray from other surfaces immediately. To prevent over-spray, apply cleaner directly to the cleaning cloth.

Downloaded from www.Manualslib.com manuals search engine

Notice: **If you use abrasive cleaners when cleaning glass surfaces on your vehicle, you could scratch the glass and/or cause damage to the integrated radio antenna and the rear window defogger. When cleaning the glass on your vehicle, use only a soft cloth and glass cleaner.**

Many cleaners contain solvents that may become concentrated in your vehicle's breathing space. Before using cleaners, read and adhere to all safety instructions on the label. While cleaning your vehicle's interior, maintain adequate ventilation by opening your vehicle's doors and windows.

Dust may be removed from small buttons and knobs using a small brush with soft bristles.

Your GM dealer has a product for cleaning your vehicle's glass. Should it become necessary, you can also obtain a product from your GM dealer to remove odors from your vehicle's upholstery.

Do not clean your vehicle using the following cleaners or techniques:

- Never use a knife or any other sharp object to remove a soil from any interior surface.
- Never use a stiff brush. It can cause damage to your vehicle's interior surfaces.
- Never apply heavy pressure or rub aggressively with a cleaning cloth. Use of heavy pressure can damage your interior and does not improve the effectiveness of soil removal.
- Use only mild, neutral-pH soaps. Avoid laundry detergents or dishwashing soaps with degreasers. Using too much soap will leave a residue that leaves streaks and attracts dirt. For liquid cleaners, about 20 drops per gallon (3.78 L) of water is a good guide.
- Do not heavily saturate your upholstery while cleaning.
- Damage to your vehicle's interior may result from the use of many organic solvents such as naptha, alcohol, etc.

Downloaded from www.Manualslib.com manuals search engine

Fabric/Carpet

Cleaning Fabric/Carpet

Use a vacuum cleaner often to get rid of dust and loose dirt. Wipe vinyl, leather, plastic, and painted surfaces with a clean, damp cloth.

Your GM dealer has cleaners for the cleaning of fabric and carpet. They will clean normal spots and stains very well.

If the vehicle has the Ultra Lux® suede fabric, follow the listed procedures except do not use any solvents or dry cleaning products.

Here are some cleaning tips:

- Always read the instructions on the cleaner label.
- Clean up stains as soon as you can, before they set.
- Carefully scrape off any excess stain.
- Use a clean cloth or sponge, and change to a clean area often. A soft brush may be used if stains are stubborn.
- To avoid forming a ring on fabric after spot cleaning, clean the entire area immediately or it will set.

Most stains can be removed with club soda water. To clean, use the following instructions:

1. For liquids: blot with a clean, soft white cloth.

   For solids: remove as much as possible and then vacuum or brush.
2. Apply club soda water to a clean, soft white cloth. Do not over-saturate; the cloth should not drip water.
3. Clean the entire area. Avoid getting the fabric too wet.
4. Start cleaning from the seams into the stain to avoid a ring effect.
5. Continue cleaning, using a clean area of the cloth each time it becomes soiled.
6. When the stain is removed, blot the cleaned area with another dry clean, soft white cloth.

Downloaded from www.Manualslib.com manuals search engine

Using Cleaner on Fabric

1. First, try the cleaner in an inconspicuous area to make sure the cleaner does not affect the color of the fabric.
2. For liquids: blot the stain with a clean, soft white cloth.

   For solids: remove as much as possible and then vacuum or brush.
3. Spray a small amount of the cleaner onto a clean, soft white cloth. Do not apply spray directly to the fabric.
4. Start cleaning from the seams into the stain to avoid a ring effect.
5. Continue cleaning, using a clean area of the cloth each time it becomes soiled.
6. When the stain is removed, blot the cleaned area with another dry clean, soft white cloth.
7. If the cleaner leaves a ring effect, follow up with the club soda water instructions given earlier in this section.

Special Fabric Cleaning Problems

Stains caused by such things as catsup, coffee, tea, milk, fruit, fruit juice, jelly, cheese, chocolate, vomit, urine, and blood can be removed using the club soda water instructions given earlier in this section. If an odor lingers after cleaning vomit or urine, treat the area with a water and baking soda solution: 1 teaspoon (5 ml) of baking soda to 1 cup (250 ml) of lukewarm water. Let dry.

Stains caused by oil and grease can be cleaned with an approved GM cleaner and a clean, white cloth.

1. Carefully scrape off excess stain.
2. Clean with cool water and allow to dry completely.
3. If a stain remains, follow the cleaner instructions described earlier.

Downloaded from www.Manualslib.com manuals search engine

Leather

A soft cloth dampened with water may be used to remove dust. If a more thorough cleaning is necessary, a soft cloth dampened with a mild soap solution can be used. Allow the leather to dry naturally. Do not use heat to dry. Never use steam to clean leather. Never use spot lifters or spot removers on leather. Many commercial leather cleaners and coatings that are sold to preserve and protect leather may permanently change the appearance and feel of your leather and are not recommended. Do not use silicone or wax-based products, or those containing organic solvents to clean your vehicle's interior because they can alter the appearance by increasing the gloss in a non-uniform manner. Never use shoe polish on your leather.

Ultra Lux Suede

Cleaning Ultra Lux Suede

Use a mild solution of lukewarm water and a neutral dish soap on a soft cloth or sponge. For the following stains, follow these instructions:

Coffee, Tea, and Milk: Blot with a clean, soft, white cloth. Then clean with mild soapy water and a clean white cloth.

Cosmetics: Clean with mild soapy water and a clean white cloth.

Jelly, Syrup, and Fruit: Remove most of the solids, then clean with warm tap water and a clean white cloth.

Oil and Grease: Sprinkle baking soda on the spot, brush, then wipe with a clean white cloth.

Downloaded from www.Manualslib.com manuals search engine

Instrument Panel, Vinyl, and Other Plastic Surfaces

A soft cloth dampened with water may be used to remove dust. If a more thorough cleaning is necessary, a clean soft cloth dampened with a mild soap solution can be used to gently remove dust and dirt. Never use spot lifters or removers on plastic surfaces. Many commercial cleaners and coatings that are sold to preserve and protect soft plastic surfaces may permanently change the appearance and feel of your interior and are not recommended. Do not use silicone or wax-based products, or those containing organic solvents to clean your vehicle's interior because they can alter the appearance by increasing the gloss in a non-uniform manner.

Some commercial products may increase gloss on your instrument panel. The increase in gloss may cause annoying reflections in the windshield and even make it difficult to see through the windshield under certain conditions.

Care of Safety Belts

Keep belts clean and dry.

⚠ CAUTION:

Do not bleach or dye safety belts. If you do, it may severely weaken them. In a crash, they might not be able to provide adequate protection. Clean safety belts only with mild soap and lukewarm water.

Weatherstrips

Silicone grease on weatherstrips will make them last longer, seal better, and not stick or squeak. Apply silicone grease with a clean cloth. During very cold, damp weather frequent application may be required. See *Recommended Fluids and Lubricants on page 6-12*.

Downloaded from www.Manualslib.com manuals search engine

Washing Your Vehicle

The paint finish on the vehicle provides beauty, depth of color, gloss retention, and durability.

The best way to preserve the vehicle's finish is to keep it clean by washing it often with lukewarm or cold water.

Do not wash the vehicle in the direct rays of the sun. Use a car washing soap. Do not use strong soaps or chemical detergents. Be sure to rinse the vehicle well, removing all soap residue completely. GM-approved cleaning products can be obtained from your dealer. See *Vehicle Care/Appearance Materials on page 5-109*. Do not use cleaning agents that are petroleum based, or that contain acid or abrasives. All cleaning agents should be flushed promptly and not allowed to dry on the surface, or they could stain. Dry the finish with a soft, clean chamois or an all-cotton towel to avoid surface scratches and water spotting.

High pressure car washes may cause water to enter the vehicle.

Cleaning Exterior Lamps/Lenses

Use only lukewarm or cold water, a soft cloth and a car washing soap to clean exterior lamps and lenses. Follow instructions under *Washing Your Vehicle on page 5-105*.

Finish Care

Occasional waxing or mild polishing of the vehicle by hand may be necessary to remove residue from the paint finish. GM-approved cleaning products can be obtained from your dealer. See *Vehicle Care/Appearance Materials on page 5-109*.

Notice: **Machine compounding or aggressive polishing on a basecoat/clearcoat paint finish may damage it. Use only non-abrasive waxes and polishes that are made for a basecoat/clearcoat paint finish on your vehicle.**

The vehicle has a "basecoat/clearcoat" paint finish. The clearcoat gives more depth and gloss to the colored basecoat. Always use waxes and polishes that are non-abrasive and made for a basecoat/clearcoat paint finish.

Downloaded from www.Manualslib.com manuals search engine

Foreign materials such as calcium chloride and other salts, ice melting agents, road oil and tar, tree sap, bird droppings, chemicals from industrial chimneys, etc., can damage the vehicle's finish if they remain on painted surfaces. Wash the vehicle as soon as possible. If necessary, use non-abrasive cleaners that are marked safe for painted surfaces to remove foreign matter.

Exterior painted surfaces are subject to aging, weather, and chemical fallout that can take their toll over a period of years. To help keep the paint finish looking new, keep the vehicle in a garage or covered whenever possible.

Windshield and Wiper Blades

If the windshield is not clear after using the windshield washer, or if the wiper blade chatters when running, wax, sap, or other material may be on the blade or windshield.

Clean the outside of the windshield with a glass cleaning liquid or powder and water solution. The windshield is clean if beads do not form when it is rinsed with water.

Grime from the windshield will stick to the wiper blades and affect their performance. Clean the blade by wiping vigorously with a cloth soaked in full-strength windshield washer solvent. Then rinse the blade with water.

Check the wiper blades and clean them as necessary; replace blades that look worn.

Aluminum Wheels

Notice: **If you use strong soaps, chemicals, abrasive polishes, cleaners, brushes, or cleaners that contain acid on aluminum or chrome-plated wheels, you could damage the surface of the wheel(s). The repairs would not be covered by your warranty. Use only GM-approved cleaners on aluminum or chrome-plated wheels.**

Keep the wheels clean using a soft clean cloth with mild soap and water. Rinse with clean water. After rinsing thoroughly, dry with a soft clean towel. A wax may then be applied.

Downloaded from www.Manualslib.com manuals search engine

Notice: **Using chrome polish on aluminum wheels could damage the wheels. The repairs would not be covered by your warranty. Use chrome polish on chrome wheels only.**

The surface of these wheels is similar to the painted surface of the vehicle. Do not use strong soaps, chemicals, abrasive polishes, abrasive cleaners, cleaners with acid, or abrasive cleaning brushes on them because the surface could be damaged. Do not use chrome polish on aluminum wheels.

Notice: **If you drive your vehicle through an automatic car wash that has silicone carbide tire cleaning brushes, you could damage the aluminum or chrome-plated wheels. The repairs would not be covered by your warranty. Never drive a vehicle equipped with aluminum or chrome-plated wheels through an automatic car wash that uses silicone carbide tire cleaning brushes.**

Do not take the vehicle through an automatic car wash that has silicone carbide tire cleaning brushes. These brushes can also damage the surface of these wheels.

Tires

To clean the tires, use a stiff brush with tire cleaner.

Notice: **Using petroleum-based tire dressing products on your vehicle may damage the paint finish and/or tires. When applying a tire dressing, always wipe off any overspray from all painted surfaces on your vehicle.**

Sheet Metal Damage

If the vehicle is damaged and requires sheet metal repair or replacement, make sure the body repair shop applies anti-corrosion material to parts repaired or replaced to restore corrosion protection.

Original manufacturer replacement parts will provide the corrosion protection while maintaining the warranty.

Finish Damage

Any stone chips, fractures or deep scratches in the finish should be repaired right away. Bare metal will corrode quickly and may develop into major repair expense.

Minor chips and scratches can be repaired with touch-up materials available from your GM dealer. Larger areas of finish damage can be corrected in your GM dealer's body and paint shop.

Downloaded from www.Manualslib.com manuals search engine

Underbody Maintenance

Chemicals used for ice and snow removal and dust control can collect on the underbody. If these are not removed, corrosion and rust can develop on the underbody parts such as fuel lines, frame, floor pan, and exhaust system even though they have corrosion protection.

At least every spring, flush these materials from the underbody with plain water. Clean any areas where mud and debris can collect. Dirt packed in close areas of the frame should be loosened before being flushed. Your dealer or an underbody car washing system can do this for you.

Chemical Paint Spotting

Some weather and atmospheric conditions can create a chemical fallout. Airborne pollutants can fall upon and attack painted surfaces on the vehicle. This damage can take two forms: blotchy, ring-shaped discolorations, and small, irregular dark spots etched into the paint surface.

Although no defect in the paint job causes this, GM will repair, at no charge to the owner, the surfaces of new vehicles damaged by this fallout condition within 12 months or 12,000 miles (20 000 km) of purchase, whichever occurs first.

Downloaded from www.Manualslib.com manuals search engine

Vehicle Care/Appearance Materials

Description	Usage
Polishing Cloth Wax-Treated	Interior and exterior polishing cloth.
Tar and Road Oil Remover	Removes tar, road oil, and asphalt.
Chrome Cleaner and Polish	Use on chrome or stainless steel.
White Sidewall Tire Cleaner	Removes soil and black marks from whitewalls.
Vinyl Cleaner	Cleans vinyl.
Glass Cleaner	Removes dirt, grime, smoke and fingerprints.
Chrome and Wire Wheel Cleaner	Removes dirt and grime from chrome wheels and wire wheel covers.
Finish Enhancer	Removes dust, fingerprints, and surface contaminants. Spray on and wipe off.

Description	Usage
Swirl Remover Polish	Removes swirl marks, fine scratches, and other light surface contamination.
Cleaner Wax	Removes light scratches and protects finish.
Foaming Tire Shine Low Gloss	Cleans, shines, and protects in one step. No wiping necessary.
Wash Wax Concentrate	Medium foaming shampoo. Cleans and lightly waxes. Biodegradable and phosphate free.
Spot Lifter	Quickly removes spots and stains from carpets, vinyl, and cloth upholstery.
Odor Eliminator	Odorless spray odor eliminator used on fabrics, vinyl, leather and carpet.

Downloaded from www.Manualslib.com manuals search engine

Vehicle Identification

Vehicle Identification Number (VIN)

This is the legal identifier for your vehicle. It appears on a plate in the front corner of the instrument panel, on the driver's side. You can see it if you look through the windshield from outside your vehicle. The VIN also appears on the Vehicle Certification and Service Parts labels and the certificates of title and registration.

Engine Identification

The eighth character in the VIN is the engine code. This code will help you identify your vehicle's engine, specifications, and replacement parts.

Service Parts Identification Label

You will find this label in the trunk. It is very helpful if you ever need to order parts. On this label, you will find the following:

- VIN
- Model designation
- Paint information
- Production options and special equipment

Be sure that this label is not removed from the vehicle.

Downloaded from www.Manualslib.com manuals search engine

Electrical System

Add-On Electrical Equipment

Notice: **Don't add anything electrical to your vehicle unless you check with your dealer first. Some electrical equipment can damage your vehicle and the damage wouldn't be covered by your warranty. Some add-on electrical equipment can keep other components from working as they should.**

Your vehicle has an airbag system. Before attempting to add anything electrical to your vehicle, see *Servicing Your Airbag-Equipped Vehicle on page 1-65*.

Headlamp Wiring

The headlamp circuit is protected by individual fuses in the underhood fuse block. An electrical overload will cause the fuse to blow. If this happens, have the headlamp system checked right away.

Windshield Wiper Fuses

The windshield wiper motor is protected by a circuit breaker and a fuse. If the motor overheats due to heavy snow, etc., the wiper will stop until the motor cools. If the overload is caused by some electrical problem, have it fixed.

Power Windows and Other Power Options

Circuit breakers in the fuse panel protect the power windows and other power accessories. When the current load is too heavy, the circuit breaker opens and closes, protecting the circuit until the problem is fixed.

Downloaded from www.Manualslib.com manuals search engine

Fuses and Circuit Breakers

The wiring circuits in the vehicle are protected from short circuits by a combination of fuses, circuit breakers and fusible thermal links in the wiring itself. This greatly reduces the chance of fires caused by electrical problems.

Look at the silver-colored band inside the fuse. If the band is broken or melted, replace the fuse. Be sure to replace a bad fuse with a new one of the identical size and rating. Spare fuses and a fuse puller are located in the underhood fuse block. See *Underhood Fuse Block* later in this section.

Instrument Panel Fuse Block

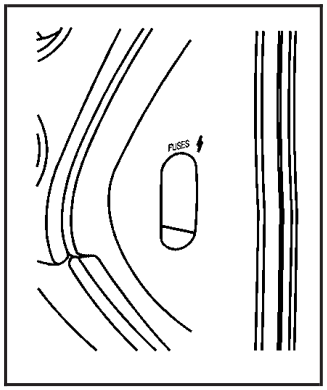

Some fuses are in a fuse block located on the end of the instrument panel on the passenger side.

To get to the fuse block lift up on the side panel. A fuse usage chart is on the inside of this panel.

Downloaded from www.Manualslib.com manuals search engine

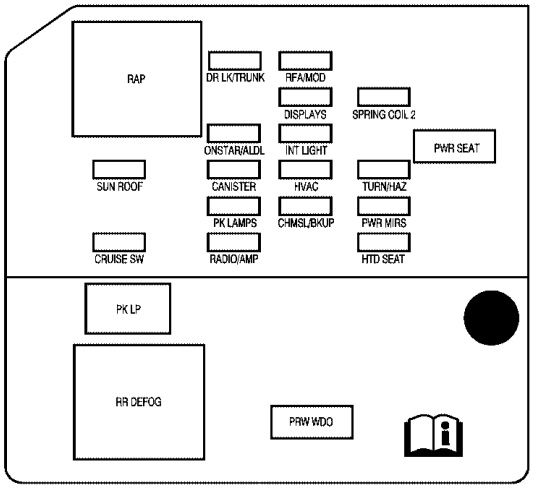

Fuse	Usage
RAP	Retained Accessory Power
SUN ROOF	Sunroof
CRUISE SW	Cruise Switch
PK LP	Parking Lamps
RR DEFOG	Rear Window Defogger
DR LK/TRUNK	Door Lock/Trunk
ONSTAR/ALDL	Onstar®/Diagnostic Link

Fuse	Usage
CANISTER	Fuel Tank Solenoid Canister
PK LAMPS	Parking Lamps
RADIO/AMP	Radio Amplifier
RFA/MOD	Remote Function Activator (Remote Keyless Entry)
DISPLAYS	Instrument Panel Displays/Head-Up Display (HUD), Driver Information Center (DIC)
INT LIGHT	Interior Lamps
HVAC	Climate Controls
CHMSL/BKUP	Center High Mounted Stop Lamp/Back-Up Lamps
PWR WDO	Power Windows
SPRING COIL 2	Steering Wheel Control Switches
PWR SEAT	Power Seat
TURN/HAZ	Turn Signals/Hazard Warning Lamps
PWR MIRS	Power Mirrors
HTD SEAT	Heated Seat

To reinstall the end panel, position the lower section with the edge of the instrument panel, and press the sides of the panel until it snaps into place.

Downloaded from www.Manualslib.com manuals search engine

Underhood Fuse Block

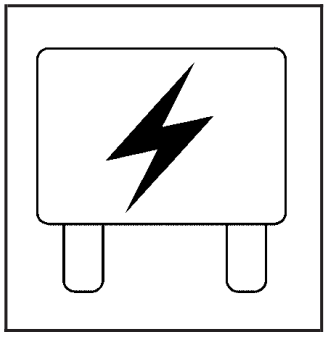

The underhood fuse block is located on the passenger's side of the vehicle in the engine compartment.

To remove the fuse block cover, press in on the tab at the bottom of the cover and pull up.

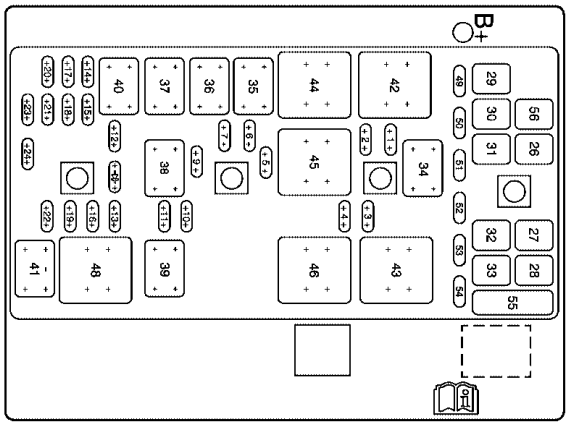

V6 Engine

Fuses	Usage
1	Driver's Side High-Beam Headlamp
2	Passenger's Side High-Beam Headlamp
3	Driver's Side Low-Beam Headlamp
4	Passenger's Side Low-Beam Headlamp
5	Windshield Wipers/Washer
6	Washer/Remote Vehicle Current
7	Fog Lamps (Option)
9	Airbag
10	Accessory Power
11	Horn

Downloaded from www.Manualslib.com manuals search engine

Fuses	Usage
12	Emission
13	Air Conditioning Clutch
14	Oxygen Sensor
15	Powertrain Control Module
16	Powertrain Control Module/Electronic Throttle Control
17	Electronic Throttle Control
18	Display
19	Anti-lock Brake Solenoid
20	Fuel Injection
21	Transmission Solenoid
22	Fuel Pump
23	Anti-lock Brakes
24	Electronic Ignition
26	Battery Main 1
27	Battery Main 2
28	Battery Main 3
29	Fan 1
30	Battery Main 4
31	Anti-lock Brake Motor
32	Fan 2
33	Starter
56	Air Pump

Relays	Usage
34	High-Beam Headlamps
35	Low-Beam Headlamps
36	Fog Lamps (Option)
37	Ignition 1
38	Air Conditioner Compressor
39	Horn
40	Powertrain
41	Fuel Pump
42	Fan 1
43	Fan 3
44	Windshield Wiper/High
45	Windshield Wiper
46	Fan 2
48	Crank
49	Spare Fuse
50	Spare Fuse
51	Spare Fuse
52	Blank
53	Blank
54	Blank
55	Fuse Puller
	Air Conditioning Clutch

Downloaded from www.Manualslib.com manuals search engine

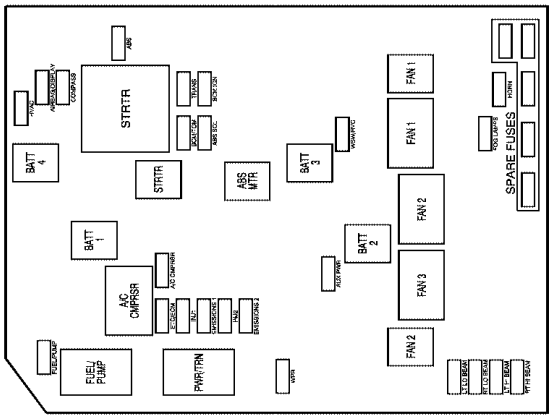

V8 Engine

Fuses	Usage
HVAC	Climate Control System
FUEL/PUMP	Fuel Pump
AIRBAG/ DISPLAY	Airbag, Display
COMPASS	Compass
ABS	Anti-lock Brake System
ETC/ECM	Electronic Throttle Control, Engine Control Module

Fuses	Usage
A/C CMPRSR	Air Conditioning Compressor
INJ 1	Injectors 1
BCM/TCM	Body Control Module, Transmission Control Module
TRANS	Transaxle
EMISSIONS1	Emissions 1
ABS SOL	Anti-lock Brake Solenoid
BCM IGN	Body Control Module, Ignition
INJ 2	Injectors 2
EMISSIONS2	Emissions 2
WPR	Windshield Wipers
AUX PWR	Auxiliary Power
WSW/RVC	Windshield Washer, Regulated Voltage Control
LT LO BEAM	Driver's Side Low Beam
RT LO BEAM	Passenger's Side Low Beam
FOG LAMPS	Fog Lamps (Option)
LT HI BEAM	Driver's Side High Beam

Downloaded from www.Manualslib.com manuals search engine

Fuses	Usage
HORN	Horn
RT HI BEAM	Passenger's Side High Beam
SPARE	Spare
SPARE	Spare
SPARE	Spare
SPARE	Spare

Relays	Usage
BATT 4	Battery 4
FUEL/PUMP	Fuel Pump
BATT 1	Battery 1
A/C CMPRSR	Air Conditioning Compressor

Relays	Usage
STRTR	Starter
PWR/TRN	Powertrain
STRTR	Starter
ABS MTR	Anti-lock Brake System Motor
BATT 3	Battery 3
BATT 2	Battery 2
FAN 2	Cooling Fan 2
FAN 3	Cooling Fan 3
FAN 2	Cooling Fan 2
FAN 1	Cooling Fan 1
FAN 1	Cooling Fan 1

Downloaded from www.Manualslib.com manuals search engine

Capacities and Specifications

The following approximate capacities are given in English and metric conversions. See *Recommended Fluids and Lubricants on page 6-12* for more information.

Capacities and Specifications

Application	Capacities	
	English	Metric
Automatic Transaxle	7.4 qt	7.0 L
Cooling System Including Reservoir		
3800 V6 Engine	11.2 qt	10.6 L
3800 V6 Supercharged Engine	11.2 qt	10.6 L
5.3L V8 Engine	13.0 qt	12.3 L
Engine Oil with Filter		
3800 V6 Engine	4.5 qt	4.3 L
3800 V6 Supercharged Engine	4.5 qt	4.3 L
5.3L V8 Engine	6 qt	5.7 L
Fuel Tank	17.5 gal	66.3 L
Wheel Nut Torque	100 ft lb	140 N•m
All capacities are approximate. When adding fluid, be sure to fill to the appropriate level, as recommended in this manual. Recheck fluid level after filling.		

Downloaded from www.Manualslib.com manuals search engine

Engine Specifications

Engine	VIN Code	Transaxle	Spark Plug Gap
3800 V6 (3.8L L26)	2	Automatic	.060 inches (1.52 mm)
3800 V6 Supercharged (3.8L L32)	4	Automatic	.060 inches (1.52 mm)
5.3L V8 Engine	C	Automatic	.040 inches (1.01 mm)

Downloaded from www.Manualslib.com manuals search engine

✍ NOTES

Downloaded from www.Manualslib.com manuals search engine

Section 6 Maintenance Schedule

Maintenance Schedule 6-2
Introduction 6-2
Maintenance Requirements 6-2
Your Vehicle and the Environment 6-2
Using the Maintenance Schedule 6-2
Scheduled Maintenance 6-4
Additional Required Services 6-6
Maintenance Footnotes 6-7
Owner Checks and Services 6-8
At Each Fuel Fill 6-9
At Least Once a Month 6-9
At Least Once a Year 6-10
Recommended Fluids and Lubricants 6-12
Normal Maintenance Replacement Parts 6-13
Maintenance Record 6-14

Downloaded from www.Manualslib.com manuals search engine

Maintenance Schedule

Introduction

Important: Keep engine oil at the proper level and change as recommended.

Have you purchased the GM Protection Plan? The Plan supplements your new vehicle warranties. See your Warranty and Owner Assistance booklet or your dealer for details.

Maintenance Requirements

Notice: **Maintenance intervals, checks, inspections, replacement parts, and recommended fluids and lubricants as prescribed in this manual are necessary to keep your vehicle in good working condition. Any damage caused by failure to follow scheduled maintenance may not be covered by warranty.**

Your Vehicle and the Environment

Proper vehicle maintenance not only helps to keep your vehicle in good working condition, but also helps the environment. All recommended maintenance is important. Improper vehicle maintenance can even affect the quality of the air we breathe. Improper fluid levels or the wrong tire inflation can increase the level of emissions from your vehicle. To help protect our environment, and to keep your vehicle in good condition, be sure to maintain your vehicle properly.

Using the Maintenance Schedule

We at General Motors want to help you keep your vehicle in good working condition. But we do not know exactly how you will drive it. You may drive very short distances only a few times a week. Or you may drive long distances all the time in very hot, dusty weather. You may use your vehicle in making deliveries. Or you may drive it to work, to do errands, or in many other ways.

Because of all the different ways people use their vehicles, maintenance needs vary. You may need more frequent checks and replacements. So please read the following and note how you drive. If you have any questions on how to keep your vehicle in good condition, see your GM Goodwrench® dealer.

Downloaded from www.Manualslib.com manuals search engine

This schedule is for vehicles that:

- carry passengers and cargo within recommended limits. You will find these limits on the tire and loading information label. See *Loading Your Vehicle on page 4-33*.
- are driven on reasonable road surfaces within legal driving limits.
- use the recommended fuel. See *Gasoline Octane on page 5-5*.

The services in *Scheduled Maintenance on page 6-4* should be performed when indicated. See *Additional Required Services on page 6-6* and *Maintenance Footnotes on page 6-7* for further information.

⚠ CAUTION:

Performing maintenance work on a vehicle can be dangerous. In trying to do some jobs, you can be seriously injured. Do your own maintenance work only if you have the required know-how and the proper tools and equipment for the job. If you have any doubt, see your GM Goodwrench® dealer to have a qualified technician do the work.

Some maintenance services can be complex. So, unless you are technically qualified and have the necessary equipment, you should have your GM Goodwrench® dealer do these jobs.

When you go to your GM Goodwrench® dealer for your service needs, you will know that GM-trained and supported service technicians will perform the work using genuine GM parts.

If you want to purchase service information, see *Service Publications Ordering Information on page 7-14*.

Owner Checks and Services on page 6-8 tells you what should be checked, when to check it, and what you can easily do to help keep your vehicle in good condition.

The proper replacement parts, fluids, and lubricants to use are listed in *Recommended Fluids and Lubricants on page 6-12* and *Normal Maintenance Replacement Parts on page 6-13*. When your vehicle is serviced, make sure these are used. All parts should be replaced and all necessary repairs done before you or anyone else drives the vehicle. We recommend the use of genuine GM parts.

Downloaded from www.Manualslib.com manuals search engine

Scheduled Maintenance

When the CHANGE OIL SOON message comes on, it means that service is required for your vehicle. See *DIC Warnings and Messages on page 3-72*. Have your vehicle serviced as soon as possible within the next 600 miles (1 000 km). It is possible that, if you are driving under the best conditions, the engine oil life system may not indicate that vehicle service is necessary for over a year. However, your engine oil and filter must be changed at least once a year and at this time the system must be reset. Your GM Goodwrench® dealer has GM-trained service technicians who will perform this work using genuine GM parts and reset the system.

If the engine oil life system is ever reset accidentally, you must service your vehicle within 3,000 miles (5 000 km) since your last service. Remember to reset the oil life system whenever the oil is changed. See *Engine Oil Life System on page 5-19* for information on the Engine Oil Life System and resetting the system.

When the CHANGE OIL SOON message appears, certain services, checks, and inspections are required. Required services are described in the following for "Maintenance I" and "Maintenance II." Generally, it is recommended that your first service be Maintenance I, your second service be Maintenance II, and that you alternate Maintenance I and Maintenance II thereafter. However, in some cases, Maintenance II may be required more often.

Maintenance I — Use Maintenance I if the CHANGE OIL SOON message comes on within 10 months since the vehicle was purchased or Maintenance II was performed.

Maintenance II — Use Maintenance II if the previous service performed was Maintenance I. Always use Maintenance II whenever the message comes on 10 months or more since the last service or if the message has not come on at all for one year.

Downloaded from www.Manualslib.com manuals search engine

Scheduled Maintenance

Service	Maintenance I	Maintenance II
Change engine oil and filter. See *Engine Oil on page 5-16*. Reset oil life system. See *Engine Oil Life System on page 5-19*. *An Emission Control Service.*	•	•
Visually check for any leaks or damage. *See footnote (k).*	•	•
Inspect engine air cleaner filter. If necessary, replace filter. See *Engine Air Cleaner/Filter on page 5-21*. *See footnote (m).*		•
Rotate tires and check inflation pressures and wear. See *Tire Inspection and Rotation on page 5-70* and “Tire Wear Inspection” in *At Least Once a Month on page 6-9*.	•	•
Inspect brake system. *See footnote (a).*	•	•
Check engine coolant and windshield washer fluid levels and add fluid as needed.	•	•
Perform any needed additional services. See “Additional Required Services” in this section.	•	•
Inspect suspension and steering components. *See footnote (b).*		•
Inspect engine cooling system. *See footnote (c).*		•
Inspect wiper blades. *See footnote (d).*		•
Inspect restraint system components. *See footnote (e).*		•
Lubricate body components. *See footnote (f).*		•
Check transaxle fluid level and add fluid as needed.		•
Replace passenger compartment air filter. *See footnote (g).*		•
Inspect throttle system. *See footnote (j).*		•

Downloaded from www.Manualslib.com manuals search engine

Additional Required Services

The following services should be performed at the first maintenance service (I or II) after the indicated miles (kilometers) shown for each item.

Additional Required Services

Service and Miles (Kilometers)	25,000 (41 500)	50,000 (83 000)	75,000 (125 000)	100,000 (166 000)	125,000 (207 500)	150,000 (240 000)
Inspect fuel system for damage or leaks.	•	•	•	•	•	•
Inspect exhaust system for loose or damaged components.	•	•	•	•	•	•
Replace engine air cleaner filter. See *Engine Air Cleaner/Filter on page 5-21*.		•		•		•
Supercharger service, if equipped. *An Emission Control Service. See footnotes † and (l).*	•	•	•	•	•	•
Change automatic transaxle fluid and filter (severe service). *See footnote (h).*		•		•		•
Change automatic transaxle fluid and filter (normal service).				•		
Replace spark plugs and inspect spark plug wires. *An Emission Control Service.*				•		
Engine cooling system service (or every five years, whichever occurs first). *An Emission Control Service. See footnote (i).*						•
Inspect engine accessory drive belt. *An Emission Control Service. See footnote (n).*						•

Downloaded from www.Manualslib.com manuals search engine

Maintenance Footnotes

† *The U.S. Environmental Protection Agency or the California Air Resources Board has determined that the failure to perform this maintenance item will not nullify the emission warranty or limit recall liability prior to the completion of the vehicle's useful life. We, however, urge that all recommended maintenance services be performed at the indicated intervals and the maintenance be recorded.*

(a) *Visually inspect brake lines and hoses for proper hook-up, binding, leaks, cracks, chafing, etc. Inspect disc brake pads for wear and rotors for surface condition. Inspect other brake parts, including calipers, parking brake, etc.*

(b) *Visually inspect front and rear suspension and steering system for damaged, loose, or missing parts or signs of wear. Inspect power steering lines and hoses for proper hook-up, binding, leaks, cracks, chafing, etc.*

(c) *Visually inspect hoses and have them replaced if they are cracked, swollen, or deteriorated. Inspect all pipes, fittings, and clamps; replace with genuine GM parts as needed. To help ensure proper operation, a pressure test of the cooling system and pressure cap and cleaning the outside of the radiator and air conditioning condenser is recommended at least once a year.*

(d) *Visually inspect wiper blades for wear or cracking. Replace wiper blades that appear worn or damaged or that streak or miss areas of the windshield.*

(e) *Make sure the safety belt reminder light and all belts, buckles, latch plates, retractors, and anchorages are working properly. Look for any other loose or damaged safety belt system parts. If you see anything that might keep a safety belt system from doing its job, have it repaired. Have any torn or frayed safety belts replaced. Also look for any opened or broken airbag coverings, and have them repaired or replaced. The airbag system does not need regular maintenance.*

(f) *Lubricate all key lock cylinders. Lubricate all hinges and latches, including those for the body doors, hood, secondary latch, pivots, spring anchor, release pawl, rear compartment, glove box door, console door, and any folding seat hardware. More frequent lubrication may be required when exposed to a corrosive environment. Applying silicone grease on weatherstrips with a clean cloth will make them last longer, seal better, and not stick or squeak.*

(g) *If you drive regularly under dusty conditions, the filter may require replacement more often.*

Downloaded from www.Manualslib.com manuals search engine

(h) *Change automatic transaxle fluid and filter if the vehicle is mainly driven under one or more of these conditions:*

- *In heavy city traffic where the outside temperature regularly reaches 90°F (32°C) or higher.*
- *In hilly or mountainous terrain.*
- *When doing frequent trailer towing.*
- *Uses such as found in taxi, police, or delivery service.*

(i) *Drain, flush, and refill cooling system. This service can be complex; you should have your dealer perform this service. See Engine Coolant on page 5-25 for what to use. Inspect hoses. Clean radiator, condenser, pressure cap, and filler neck. Pressure test the cooling system and pressure cap.*

(j) *Check throttle system for interference or binding and for damaged or missing parts. Replace parts as needed. Replace any components that have high effort or excessive wear. Do not lubricate accelerator or cruise control cables.*

(k) *A fluid loss in any vehicle system could indicate a problem. Have the system inspected and repaired and the fluid level checked. Add fluid if needed.*

(l) *For supercharged engines only: Have your dealer check the supercharger oil level and add the proper supercharger oil as needed (or every 36 months, whichever occurs first). See Recommended Fluids and Lubricants on page 6-12*.

(m) *If you drive regularly under dusty conditions, inspect the filter at each engine oil change.*

(n) *Visually inspect belt for fraying, excessive cracks, or obvious damage. Replace belt if necessary.*

Owner Checks and Services

These owner checks and services should be performed at the intervals specified to help ensure the safety, dependability, and emission control performance of your vehicle. Your GM Goodwrench® dealer can assist you with these checks and services.

Be sure any necessary repairs are completed at once. Whenever any fluids or lubricants are added to your vehicle, make sure they are the proper ones, as shown in *Recommended Fluids and Lubricants on page 6-12*.

Downloaded from www.Manualslib.com manuals search engine

At Each Fuel Fill

It is important to perform these underhood checks at each fuel fill.

Engine Oil Level Check

Check the engine oil level and add the proper oil if necessary. See *Engine Oil on page 5-16* for further details.

Notice: **It is important to check your oil regularly and keep it at the proper level. Failure to keep your engine oil at the proper level can cause damage to your engine not covered by your warranty.**

Engine Coolant Level Check

Check the engine coolant level and add DEX-COOL® coolant mixture if necessary. See *Engine Coolant on page 5-25* for further details.

Windshield Washer Fluid Level Check

Check the windshield washer fluid level in the windshield washer fluid reservoir and add the proper fluid if necessary.

At Least Once a Month

Tire Inflation Check

Visually inspect your vehicle's tires and make sure they are inflated to the correct pressures. Do not forget to check the spare tire. See *Tires on page 5-60* for further details. Check to make sure the spare tire is stored securely. See *Changing a Flat Tire on page 5-88*.

Tire Wear Inspection

Tire rotation may be required for high mileage highway drivers prior to the Engine Oil Life System service notification. Check the tires for wear and, if necessary, rotate the tires. See *Tire Inspection and Rotation on page 5-70*.

Downloaded from www.Manualslib.com manuals search engine

At Least Once a Year

Starter Switch Check

⚠ CAUTION:

When you are doing this inspection, the vehicle could move suddenly. If the vehicle moves, you or others could be injured.

1. Before you start, be sure you have enough room around the vehicle.
2. Firmly apply both the parking brake and the regular brake. See *Parking Brake on page 2-30*.

   Do not use the accelerator pedal, and be ready to turn off the engine immediately if it starts.
3. Try to start the engine in each gear. The vehicle should start only in PARK (P) or NEUTRAL (N). If the vehicle starts in any other position, contact your GM Goodwrench® dealer for service.

Automatic Transaxle Shift Lock Control System Check

⚠ CAUTION:

When you are doing this inspection, the vehicle could move suddenly. If the vehicle moves, you or others could be injured.

1. Before you start, be sure you have enough room around the vehicle. It should be parked on a level surface.
2. Firmly apply the parking brake. See *Parking Brake on page 2-30*.

   Be ready to apply the regular brake immediately if the vehicle begins to move.
3. With the engine off, turn the ignition to RUN, but do not start the engine. Without applying the regular brake, try to move the shift lever out of PARK (P) with normal effort. If the shift lever moves out of PARK (P), contact your GM Goodwrench® dealer for service.

Downloaded from www.Manualslib.com manuals search engine

Ignition Transaxle Lock Check

While parked, and with the parking brake set, try to turn the ignition to OFF in each shift lever position.

- The ignition should turn to OFF only when the shift lever is in PARK (P).
- The key should come out only in OFF.

Contact your GM Goodwrench® dealer if service is required.

Parking Brake and Automatic Transaxle Park (P) Mechanism Check

⚠ CAUTION:

When you are doing this check, your vehicle could begin to move. You or others could be injured and property could be damaged. Make sure there is room in front of your vehicle in case it begins to roll. Be ready to apply the regular brake at once should the vehicle begin to move.

Park on a fairly steep hill, with the vehicle facing downhill. Keeping your foot on the regular brake, set the parking brake.

- To check the parking brake's holding ability: With the engine running and transaxle in NEUTRAL (N), slowly remove foot pressure from the regular brake pedal. Do this until the vehicle is held by the parking brake only.
- To check the PARK (P) mechanism's holding ability: With the engine running, shift to PARK (P). Then release the parking brake followed by the regular brake.

Contact your GM Goodwrench® dealer if service is required.

Underbody Flushing Service

At least every spring, use plain water to flush any corrosive materials from the underbody. Take care to clean thoroughly any areas where mud and other debris can collect.

Downloaded from www.Manualslib.com manuals search engine

Recommended Fluids and Lubricants

Fluids and lubricants identified below by name, part number, or specification may be obtained from your dealer.

Usage	Fluid/Lubricant
Engine Oil	Engine oil which meets GM Standard GM6094M and displays the American Petroleum Institute Certified for Gasoline Engines starburst symbol. GM Goodwrench® oil meets all the requirements for your vehicle. To determine the proper viscosity for your vehicle's engine, see *Engine Oil on page 5-16*.
Engine Coolant	50/50 mixture of clean, drinkable water and use only DEX-COOL® Coolant. See *Engine Coolant on page 5-25*.
Hydraulic Brake System	Delco® Supreme 11 Brake Fluid or equivalent DOT-3 brake fluid.
Windshield Washer	GM Optikleen® Washer Solvent.

Usage	Fluid/Lubricant
Power Steering System	GM Power Steering Fluid (GM Part No. U.S. 89021184, in Canada 89021186).
Automatic Transaxle	DEXRON®-VI Automatic Transmission Fluid.
Key Lock Cylinders	Multi-Purpose Lubricant, Superlube (GM Part No. U.S. 12346241, in Canada 10953474).
Supercharger	Supercharger Oil (GM Part No. U.S. 12345982, in Canada 10953513). See *Supercharger Oil on page 5-20*.
Hood Latch Assembly, Secondary Latch, Pivots, Spring Anchor, and Release Pawl	Lubriplate Lubricant Aerosol (GM Part No. U.S. 12346293, in Canada 992723) or lubricant meeting requirements of NLGI #2, Category LB or GC-LB.
Hood and Door Hinges	Multi-Purpose Lubricant, Superlube (GM Part No. U.S. 12346241, in Canada 10953474).
Weatherstrip Conditioning	Dielectric Silicone Grease (GM Part No. U.S. 12345579, in Canada 992887).

Downloaded from www.Manualslib.com manuals search engine

Normal Maintenance Replacement Parts

Replacement parts identified below by name, part number, or specification can be obtained from your GM dealer.

Normal Maintenance Replacement Parts

Part	GM Part Number	ACDelco® Part Number
Engine Air Cleaner/Filter		
3800 V6 Engine	15221217	—
5.3L V8 Engine	10350737	—
Engine Oil Filter		
3800 V6 Engine	25010792	PF-47
5.3L V8 Engine	88984215	PF-46
Passenger Compartment Air Filter	15284938	CF132
Spark Plugs		
3800 V6 Engine	12568387	41-101
5.3L V8 Engine	12571164	41-985
Windshield Wiper Blades 19.7 inches (55.0 cm)		
Driver Side	15146562	—
Passenger Side	15146563	—

Downloaded from www.Manualslib.com manuals search engine

Maintenance Record

After the scheduled services are performed, record the date, odometer reading, who performed the service, and the type of services performed in the boxes provided. See *Maintenance Requirements on page 6-2*. Any additional information from *Owner Checks and Services on page 6-8* can be added on the following record pages. You should retain all maintenance receipts.

Maintenance Record

Date	Odometer Reading	Serviced By	Maintenance I or Maintenance II	Services Performed

Downloaded from www.Manualslib.com manuals search engine

Maintenance Record (cont'd)

Date	Odometer Reading	Serviced By	Maintenance I or Maintenance II	Services Performed

Downloaded from www.Manualslib.com manuals search engine

Maintenance Record (cont'd)

Date	Odometer Reading	Serviced By	Maintenance I or Maintenance II	Services Performed

Downloaded from www.Manualslib.com manuals search engine

Section 7 Customer Assistance and Information

Customer Assistance and Information 7-2
Customer Satisfaction Procedure 7-2
Online Owner Center 7-3
Customer Assistance for Text Telephone (TTY) Users 7-4
Customer Assistance Offices 7-4
GM Mobility Reimbursement Program 7-5
Roadside Assistance Program 7-6
Courtesy Transportation 7-7
Vehicle Data Collection and Event Data Recorders 7-9
Collision Damage Repair 7-10
Reporting Safety Defects 7-13
Reporting Safety Defects to the United States Government 7-13
Reporting Safety Defects to the Canadian Government 7-14
Reporting Safety Defects to General Motors 7-14
Service Publications Ordering Information 7-14

Downloaded from www.Manualslib.com manuals search engine

Customer Assistance and Information

Customer Satisfaction Procedure

Your satisfaction and goodwill are important to your dealer and to Pontiac. Normally, any concerns with the sales transaction or the operation of your vehicle will be resolved by your dealer's sales or service departments. Sometimes, however, despite the best intentions of all concerned, misunderstandings can occur. If your concern has not been resolved to your satisfaction, the following steps should be taken:

STEP ONE: Discuss your concern with a member of dealership management. Normally, concerns can be quickly resolved at that level. If the matter has already been reviewed with the sales, service or parts manager, contact the owner of the dealership or the general manager.

STEP TWO: If after contacting a member of dealership management, it appears your concern cannot be resolved by the dealership without further help, contact the Pontiac Customer Assistance Center by calling 1-800-762-2737. In Canada, contact GM of Canada Customer Communication Centre in Oshawa by calling 1-800-263-3777 (English) or 1-800-263-7854 (French).

We encourage you to call the toll-free number in order to give your inquiry prompt attention. Please have the following information available to give the Customer Assistance Representative:

- Vehicle Identification Number (VIN). This is available from the vehicle registration or title, or the plate at the top left of the instrument panel and visible through the windshield.
- Dealership name and location.
- Vehicle delivery date and present mileage.

When contacting Pontiac, please remember that your concern will likely be resolved at a dealer's facility. That is why we suggest you follow Step One first if you have a concern.

STEP THREE: Both General Motors and your dealer are committed to making sure you are completely satisfied with your new vehicle. However, if you continue to remain unsatisfied after following the procedure outlined in Steps One and Two, you should file with the BBB Auto Line Program to enforce any additional rights you may have. Canadian owners refer to your Warranty and Owner Assistance Information booklet for information on the Canadian Motor Vehicle Arbitration Plan (CAMVAP).

Downloaded from www.Manualslib.com manuals search engine

The BBB Auto Line Program is an out of court program administered by the Council of Better Business Bureaus to settle automotive disputes regarding vehicle repairs or the interpretation of the New Vehicle Limited Warranty. Although you may be required to resort to this informal dispute resolution program prior to filing a court action, use of the program is free of charge and your case will generally be heard within 40 days. If you do not agree with the decision given in your case, you may reject it and proceed with any other venue for relief available to you.

You may contact the BBB Auto Line Program using the toll-free telephone number or write them at the following address:

BBB Auto Line Program
Council of Better Business Bureaus, Inc.
4200 Wilson Boulevard
Suite 800
Arlington, VA 22203-1838

Telephone: 1-800-955-5100

This program is available in all 50 states and the District of Columbia. Eligibility is limited by vehicle age, mileage and other factors. General Motors reserves the right to change eligibility limitations and/or discontinue its participation in this program.

Online Owner Center

The Owner Center is a resource for your GM ownership needs. Specific vehicle information can be found in one place.

The Online Owner Center allows you to:

- Get e-mail service reminders.
- Access information about your specific vehicle, including tips and videos and an electronic version of this owner's manual (United States only).
- Keep track of your vehicle's service history and maintenance schedule.
- Find GM dealers for service nationwide.
- Receive special promotions and privileges only available to members (United States only).

Refer to the web for updated information.

To register your vehicle, visit www.MyGMLink.com (United States) or My GM Canada within www.gmcanada.com (Canada).

Downloaded from www.Manualslib.com manuals search engine

Customer Assistance for Text Telephone (TTY) Users

To assist customers who are deaf, hard of hearing, or speech-impaired and who use Text Telephones (TTYs), Pontiac has TTY equipment available at its Customer Assistance Center. Any TTY user can communicate with Pontiac by dialing: 1-800-833-PONT (7668). (TTY users in Canada can dial 1-800-263-3830.)

Customer Assistance Offices

Pontiac encourages customers to call the toll-free number for assistance. However, if a customer wishes to write or e-mail Pontiac, refer to the addresses below.

United States — Customer Assistance

Pontiac Customer Assistance Center
P.O. Box 33172
Detroit, MI 48232-5172

www.Pontiac.com
1-800-762-2737 or
1-800-833-7668 (For Text Telephone devices (TTYs))
Roadside Assistance: 1-800-ROADSIDE (762-3743)
Fax Number: 313-381-0022

From Puerto Rico:
1-800-496-9992 (English)
1-800-496-9993 (Spanish)
Fax Number: 313-381-0022

From U.S. Virgin Islands:
1-800-496-9994
Fax Number: 313-381-0022

Canada — Customer Assistance

General Motors of Canada Limited
Customer Communication Centre, 163-005
1908 Colonel Sam Drive
Oshawa, Ontario L1H 8P7

1-800-263-3777 (English)
1-800-263-7854 (French)
1-800-263-3830 (For Text Telephone devices (TTYs))
Roadside Assistance: 1-800-268-6800

Downloaded from www.Manualslib.com manuals search engine

Overseas — Customer Assistance

Please contact the local General Motors Business Unit.

Mexico, Central America and Caribbean Islands/Countries (Except Puerto Rico and U.S. Virgin Islands) — Customer Assistance

General Motors de Mexico, S. de R.L. de C.V.
Customer Assistance Center
Paseo de la Reforma #2740
Col. Lomas de Bezares
C.P. 11910, Mexico, D.F.
01-800-508-0000
Long Distance: 011-52-53 29 0 800

GM Mobility Reimbursement Program

GM MOBILITY℠

This program, available to qualified applicants, can reimburse you up to $1,000 of the cost of eligible aftermarket adaptive equipment required for your vehicle, such as hand controls or a wheelchair/scooter lift.

The offer is available for a very limited period of time from the date of vehicle purchase/lease. For more details, or to determine your vehicle's eligibility, visit gmmobility.com or call the GM Mobility Assistance Center at 1-800-323-9935. Text telephone (TTY) users, call 1-800-833-9935.

GM of Canada also has a Mobility Program. Call 1-800-GM-DRIVE (463-7483) for details. TTY users call 1-800-263-3830.

Downloaded from www.Manualslib.com manuals search engine

Roadside Assistance Program

As the owner of a new Pontiac vehicle, you are automatically enrolled in the Pontiac Roadside Assistance program. This value-added service is intended to provide you with peace of mind as you drive in the city or travel the open road. Contact Pontiac's Roadside Assistance toll-free at **1-800-ROADSIDE (762-3743)**. Roadside Assistance Representatives are available 24 hours a day, 365 days a year.

We will provide the following services during the Bumper-to-Bumper warranty period, at no expense to you:

- **Fuel Delivery:** Delivery of enough fuel ($5 maximum) for the customer to get to the nearest service station.
- **Lock-out Service (identification required):** Replacement keys or locksmith service will be covered at no charge if you are unable to gain entry into your vehicle. Delivery of the replacement key will be covered within 10 miles (16 km).
- **Emergency Tow:** Tow to the nearest dealership for warranty service or in the event of a vehicle-disabling accident. Assistance provided when the vehicle is mired in sand, mud, or snow.
- **Flat Tire Change:** Installation of a spare tire will be covered at no charge. The customer is responsible for the repair or replacement of the tire if not covered by a warrantable failure.
- **Jump Start:** No-start occurrences which require a battery jump start will be covered at no charge.
- **Dealer Locator Service**

In many instances, mechanical failures are covered under Pontiac's Bumper-to-Bumper warranty. However, when other services are utilized, our Roadside Assistance Representatives will explain any payment obligations you might incur.

For prompt and efficient assistance when calling, please provide the following to the Roadside Assistance Representative:

- Your name, home address, and home telephone number.
- Telephone number of your location.
- Location of the vehicle.
- Model, year, color, and license plate number of the vehicle.
- Mileage, Vehicle Identification Number (VIN), and delivery date of the vehicle.
- Description of the problem.

Downloaded from www.Manualslib.com manuals search engine

While we hope you never have the occasion to use our service, it is added security while traveling for you and your family. Remember, we are only a phone call away. Pontiac Roadside Assistance: **1-800-ROADSIDE (762-3743)**, text telephone (TTY) users, call **1-888-889-2438**.

Pontiac reserves the right to limit services or reimbursement to an owner or driver when, in Pontiac's judgement, the claims become excessive in frequency or type of occurrence.

Roadside Assistance is not part of or included in the coverage provided by the New Vehicle Limited Warranty. Pontiac reserves the right to make any changes or discontinue the Roadside Assistance program at any time without notification.

Canadian Roadside Assistance

Vehicles purchased in Canada have an extensive roadside assistance program accessible from anywhere in Canada or the United States. Please refer to the Warranty and Owner Assistance Information book.

Courtesy Transportation

To enhance your ownership experience, we and our participating dealers are proud to offer Courtesy Transportation, a customer support program for new vehicles.

The Courtesy Transportation program is offered to customers in conjunction with the Bumper-to-Bumper coverage provided by the New Vehicle Limited Warranty. Several transportation options are available when warranty repairs are required. This will reduce your inconvenience during warranty repairs.

Scheduling Service Appointments

When your vehicle requires warranty service, you should contact your dealer and request an appointment. By scheduling a service appointment and advising your service consultant of your transportation needs, your dealer can help minimize your inconvenience.

If your vehicle cannot be scheduled into the service department immediately, keep driving it until it can be scheduled for service, unless, of course, the problem is safety-related. If it is, please call your dealership, let them know this, and ask for instructions.

If the dealer requests that you simply drop the vehicle off for service, you are urged to do so as early in the work day as possible to allow for the same day repair.

Downloaded from www.Manualslib.com manuals search engine

Transportation Options

Warranty service can generally be completed while you wait. However, if you are unable to wait, GM helps to minimize your inconvenience by providing several transportation options. Depending on the circumstances, your dealer can offer you one of the following:

Shuttle Service

Participating dealers can provide you with shuttle service to get you to your destination with minimal interruption of your daily schedule. This includes one-way or round trip shuttle service to a destination up to 10 miles (16 km) from the dealership.

Public Transportation or Fuel Reimbursement

If your vehicle requires overnight warranty repairs, reimbursement of public transportation expenses may be available, for up to a maximum of five days. In addition, should you arrange transportation through a friend or relative, reimbursement for reasonable fuel expenses may be available, up to a five-day maximum. Claim amounts should reflect actual costs and be supported by original receipts.

Courtesy Rental Vehicle

Your dealer may arrange to provide you with a courtesy rental vehicle or reimburse you for a rental vehicle that you obtain if your vehicle is kept for a warranty repair. Reimbursement will be limited to a maximum amount per day and must be supported by receipts. This requires that you sign and complete a rental agreement and meet state, local and rental vehicle provider requirements. Requirements vary and may include minimum age requirements, insurance coverage, credit card, etc. You are responsible for fuel usage charges and may also be responsible for taxes, levies, usage fees, excessive mileage or rental usage beyond the completion of the repair.

Generally it is not possible to provide a like-vehicle as a courtesy rental.

Additional Program Information

Courtesy Transportation is available during the Bumper-to-Bumper warranty coverage period, but it is not part of the New Vehicle Limited Warranty. A separate booklet entitled *Warranty and Owner Assistance Information* furnished with each new vehicle provides detailed warranty coverage information.

Downloaded from www.Manualslib.com manuals search engine

Courtesy Transportation is available only at participating dealers and all program options, such as shuttle service, may not be available at every dealer. Please contact your dealer for specific information about availability. All Courtesy Transportation arrangements will be administered by appropriate dealer personnel.

Canadian Vehicles: For warranty repairs during the Complete Vehicle Coverage period of the General Motors of Canada New Vehicle Limited Warranty, alternative transportation may be available under the Courtesy Transportation Program. Please consult your dealer for details.

General Motors reserves the right to unilaterally modify, change or discontinue Courtesy Transportation at any time and to resolve all questions of claim eligibility pursuant to the terms and conditions described herein at its sole discretion.

Vehicle Data Collection and Event Data Recorders

Your vehicle, like other modern motor vehicles, has a number of sophisticated computer systems that monitor and control several aspects of the vehicle's performance. Your vehicle uses on-board vehicle computers to monitor emission control components to optimize fuel economy, to monitor conditions for airbag deployment and, if so equipped, to provide anti-lock braking and to help the driver control the vehicle in difficult driving situations. Some information may be stored during regular operations to facilitate repair of detected malfunctions; other information is stored only in a crash event by computer systems, such as those commonly called event data recorders (EDR).

In a crash event, computer systems, such as the Airbag Sensing and Diagnostic Module (SDM) in your vehicle may record information about the condition of the vehicle and how it was operated, such as data related to engine speed, brake application, throttle position, vehicle speed, safety belt usage, airbag readiness, airbag performance, and the severity of a collision. If your vehicle is equipped with StabiliTrak®, steering performance, including yaw rate, steering wheel angle, and lateral acceleration, is also recorded. This information has been used to improve vehicle crash performance and may be used to improve crash performance of future vehicles and driving safety. Unlike the data recorders on many airplanes, these on-board systems do not record sounds, such as conversation of vehicle occupants.

Downloaded from www.Manualslib.com manuals search engine

To read this information, special equipment is needed and access to the vehicle or the device that stores the data is required. GM will not access information about a crash event or share it with others other than:

- with the consent of the vehicle owner or, if the vehicle is leased, with the consent of the lessee,
- in response to an official request of police or similar government office,
- as part of GM's defense of litigation through the discovery process, or
- as required by law.

In addition, once GM collects or receives data, GM may:

- use the data for GM research needs,
- make it available for research where appropriate confidentiality is to be maintained and need is shown, or
- share summary data which is not tied to a specific vehicle with non-GM organizations for research purposes.

Others, such as law enforcement, may have access to the special equipment that can read the information if they have access to the vehicle or the device that stores the data.

If your vehicle is equipped with OnStar®, please check the OnStar® subscription service agreement or manual for information on its operations and data collection.

Collision Damage Repair

If your vehicle is involved in a collision and it is damaged, have the damage repaired by a qualified technician using the proper equipment and quality replacement parts. Poorly performed collision repairs will diminish your vehicle's resale value, and safety performance can be compromised in subsequent collisions.

Collision Parts

Genuine GM Collision parts are new parts made with the same materials and construction methods as the parts with which your vehicle was originally built. Genuine GM Collision parts are your best choice to assure that your vehicle's designed appearance, durability and safety are preserved. The use of Genuine GM parts can help maintain your GM New Vehicle Warranty.

Recycled original equipment parts may also be used for repair. These parts are typically removed from vehicles that were total losses in prior accidents. In most cases, the parts being recycled are from undamaged sections of the vehicle. A recycled original equipment GM part, may be an acceptable choice to maintain your vehicle's originally designed appearance and safety performance, however, the history of these parts is not known. Such parts are not covered by your GM New Vehicle Limited Warranty, and any related failures are not covered by that warranty.

Downloaded from www.Manualslib.com manuals search engine

Aftermarket collision parts are also available. These are made by companies other than GM and may not have been tested for your vehicle. As a result, these parts may fit poorly, exhibit premature durability/corrosion problems, and may not perform properly in subsequent collisions. Aftermarket parts are not covered by your GM New Vehicle Limited Warranty, and any vehicle failure related to such parts are not covered by that warranty.

Repair Facility

GM also recommends that you choose a collision repair facility that meets your needs before you ever need collision repairs. Your GM dealer may have a collision repair center with GM-trained technicians and state of the art equipment, or be able to recommend a collision repair center that has GM-trained technicians and comparable equipment.

Insuring Your Vehicle

Protect your investment in your GM vehicle with comprehensive and collision insurance coverage. There are significant differences in the quality of coverage afforded by various insurance policy terms. Many insurance policies provide reduced protection to your GM vehicle by limiting compensation for damage repairs by using aftermarket collision parts. Some insurance companies will not specify aftermarket collision parts. When purchasing insurance, we recommend that you assure your vehicle will be repaired with GM original equipment collision parts. If such insurance coverage is not available from your current insurance carrier, consider switching to another insurance carrier.

If your vehicle is leased, the leasing company may require you to have insurance that assures repairs with Genuine GM Original Equipment Manufacturer (OEM) parts or Genuine Manufacturer replacement parts. Read your lease carefully, as you may be charged at the end of your lease for poor quality repairs.

Downloaded from www.Manualslib.com manuals search engine

If an Accident Occurs

Here is what to do if you are involved in an accident.

- Try to relax and then check to make sure you are all right. If you are uninjured, make sure that no one else in your vehicle, or the other vehicle, is injured.
- If there has been an injury, call 911 for help. Do not leave the scene of an accident until all matters have been taken care of. Move your vehicle only if its position puts you in danger or you are instructed to move it by a police officer.
- Give only the necessary and requested information to police and other parties involved in the accident. Do not discuss your personal condition, mental frame of mind, or anything unrelated to the accident. This will help guard against post-accident legal action.
- If you need roadside assistance, call GM Roadside Assistance. See *Roadside Assistance Program on page 7-6* for more information.
- If your vehicle cannot be driven, know where the towing service will be taking it. Get a card from the tow truck operator or write down the driver's name, the service's name, and the phone number.
- Remove any valuables from your vehicle before it is towed away. Make sure this includes your insurance information and registration if you keep these items in your vehicle.
- Gather the important information you will need from the other driver. Things like name, address, phone number, driver's license number, vehicle license plate, vehicle make, model and model year, Vehicle Identification Number (VIN), insurance company and policy number, and a general description of the damage to the other vehicle.
- If possible, call your insurance company from the scene of the accident. They will walk you through the information they will need. If they ask for a police report, phone or go to the police department headquarters the next day and you can get a copy of the report for a nominal fee. In some states with "no fault" insurance laws, a report may not be necessary. This is especially true if there are no injuries and both vehicles are driveable.
- Choose a reputable collision repair facility for your vehicle. Whether you select a GM dealer or a private collision repair facility to fix the damage, make sure you are comfortable with them. Remember, you will have to feel comfortable with their work for a long time.
- Once you have an estimate, read it carefully and make sure you understand what work will be performed on your vehicle. If you have a question, ask for an explanation. Reputable shops welcome this opportunity.

Downloaded from www.Manualslib.com manuals search engine

Managing the Vehicle Damage Repair Process

In the event that your vehicle requires damage repairs, GM recommends that you take an active role in its repair. If you have a pre-determined repair facility of choice, take your vehicle there, or have it towed there. Specify to the facility that any required replacement collision parts be original equipment parts, either new Genuine GM parts or recycled original GM parts. Remember, recycled parts will not be covered by your GM vehicle warranty.

Insurance pays the bill for the repair, but you must live with the repair. Depending on your policy limits, your insurance company may initially value the repair using aftermarket parts. Discuss this with your repair professional, and insist on Genuine GM parts. Remember if your vehicle is leased you may be obligated to have the vehicle repaired with Genuine GM parts, even if your insurance coverage does not pay the full cost.

If another party's insurance company is paying for the repairs, you are not obligated to accept a repair valuation based on that insurance company's collision policy repair limits, as you have no contractual limits with that company. In such cases, you can have control of the repair and parts choices as long as cost stays within reasonable limits.

Reporting Safety Defects

Reporting Safety Defects to the United States Government

If you believe that your vehicle has a defect which could cause a crash or could cause injury or death, you should immediately inform the National Highway Traffic Safety Administration (NHTSA), in addition to notifying General Motors.

If NHTSA receives similar complaints, it may open an investigation, and if it finds that a safety defect exists in a group of vehicles, it may order a recall and remedy campaign. However, NHTSA cannot become involved in individual problems between you, your dealer, or General Motors.

To contact NHTSA, you may either call the Auto Safety Hotline toll-free at 1-800-424-9393 (or 366-0123 in the Washington, D.C. area) or write to:

NHTSA, U.S. Department of Transportation
Washington, D.C. 20590

You can also obtain other information about motor vehicle safety from the hotline.

Downloaded from www.Manualslib.com manuals search engine

Reporting Safety Defects to the Canadian Government

If you live in Canada, and you believe that your vehicle has a safety defect, you should immediately notify Transport Canada, in addition to notifying General Motors of Canada Limited. You may call them at 1-800-333-0510 or write to:

Transport Canada
Place de Ville Tower C
330 Sparks Street
Ottawa, Ontario K1A 0N5

Reporting Safety Defects to General Motors

In addition to notifying NHTSA (or Transport Canada) in a situation like this, we certainly hope you'll notify us. Please call us at 1-800-762-2737, or write:

Pontiac Customer Assistance Center
P.O. Box 33172
Detroit, MI 48232-5172

In Canada, please call us at 1-800-263-3777 (English) or 1-800-263-7854 (French). Or, write:

General Motors of Canada Limited
Customer Communication Centre, 163-005
1908 Colonel Sam Drive
Oshawa, Ontario L1H 8P7

Service Publications Ordering Information

Service Manuals

Service Manuals have the diagnosis and repair information on engines, transmission, axle suspension, brakes, electrical, steering, body, etc.

Transmission, Transaxle, Transfer Case Unit Repair Manual

This manual provides information on unit repair service procedures, adjustments, and specifications for GM transmissions, transaxles, and transfer cases.

Service Bulletins

Service Bulletins give technical service information needed to knowledgeably service General Motors cars and trucks. Each bulletin contains instructions to assist in the diagnosis and service of your vehicle.

In Canada, information pertaining to Product Service Bulletins can be obtained by contacting your General Motors dealer or by calling 1-800-GM-DRIVE (1-800-463-7483).

Downloaded from www.Manualslib.com manuals search engine

Owner's Information

Owner publications are written specifically for owners and intended to provide basic operational information about the vehicle. The owner's manual will include the Maintenance Schedule for all models.

In-Portfolio: Includes a Portfolio, Owner's Manual, and Warranty Booklet.

RETAIL SELL PRICE: $35.00

Without Portfolio: Owner's Manual only.

RETAIL SELL PRICE: $25.00

Current and Past Model Order Forms

Service Publications are available for current and past model GM vehicles. To request an order form, please specify year and model name of the vehicle.

ORDER TOLL FREE: 1-800-551-4123
Monday-Friday 8:00 AM - 6:00 PM
Eastern Time

For Credit Card Orders Only
(VISA-MasterCard-Discover), visit Helm, Inc. on the World Wide Web at: www.helminc.com

Or you can write to:

Helm, Incorporated
P.O. Box 07130
Detroit, MI 48207

Prices are subject to change without notice and without incurring obligation. Allow ample time for delivery.

Note to Canadian Customers: All listed prices are quoted in U.S. funds. Canadian residents are to make checks payable in U.S. funds.

Downloaded from www.Manualslib.com manuals search engine

✍ NOTES

Downloaded from www.Manualslib.com manuals search engine

A

Accessories and Modifications 5-3
Accessory Power Outlet(s) 3-24
Adding Equipment to Your Airbag-Equipped
  Vehicle 1-66
Additives, Fuel 5-6
Add-On Electrical Equipment 5-111
Air Cleaner/Filter, Engine 5-21
Air Conditioning 3-26, 3-29
Airbag
  Passenger Status Indicator 3-40
  Readiness Light 3-39
Airbag Sensing and Diagnostic Module (SDM) 7-9
Airbag System 1-52
  Adding Equipment to Your Airbag-Equipped
    Vehicle 1-66
  How Does an Airbag Restrain? 1-59
  Passenger Sensing System 1-61
  Servicing Your Airbag-Equipped Vehicle 1-65
  What Makes an Airbag Inflate? 1-59
  What Will You See After an Airbag Inflates? 1-60
  When Should an Airbag Inflate? 1-57
  Where Are the Airbags? 1-55
Antenna, Backglass 3-141
Antenna, XM™ Satellite Radio
  Antenna System 3-142
Anti-Lock Brake System (ABS) 4-7
Anti-Lock Brake, System Warning Light 3-44
Appearance Care
  Aluminum Wheels 5-106
  Care of Safety Belts 5-104
  Chemical Paint Spotting 5-108
  Cleaning Exterior Lamps/Lenses 5-105
  Cleaning the Inside of Your Vehicle 5-99
  Fabric/Carpet 5-101
  Finish Care 5-105
  Finish Damage 5-107
  Instrument Panel, Vinyl, and Other
    Plastic Surfaces 5-104
  Leather 5-103
  Sheet Metal Damage 5-107
  Tires 5-107
  Ultra Lux Suede 5-103
  Underbody Maintenance 5-108
  Vehicle Care/Appearance Materials 5-109
  Washing Your Vehicle 5-105
  Weatherstrips 5-104
  Windshield and Wiper Blades 5-106
Ashtray(s) 3-25
Assist Handles 2-42
Audio System(s) 3-94
  Audio Steering Wheel Controls 3-139
  Backglass Antenna 3-141
  Care of Your CD Player 3-141
  Care of Your CDs 3-141
  Chime Level Adjustment 3-142

Downloaded from www.Manualslib.com manuals search engine

Audio System(s) (cont.)
Navigation/Radio System, see
Navigation Manual 3-139
Radio with CD 3-96, 3-107
Radio with Six-Disc CD 3-123
Setting the Time 3-96
Theft-Deterrent Feature 3-139
Understanding Radio Reception 3-140
XM™ Satellite Radio Antenna System 3-142
Automatic Transaxle
Fluid 5-23
Operation 2-25

B

Backglass Antenna 3-141
Battery 5-45
Exterior Lighting Battery Saver 3-17
Run-Down Protection 3-20
Before Leaving on a Long Trip 4-24
Brake
Anti-Lock Brake System (ABS) 4-7
Emergencies 4-8
Parking 2-30
System Warning Light 3-42
Brakes 5-42
Braking 4-6
Braking in Emergencies 4-8
Break-In, New Vehicle 2-21
Bulb Replacement 5-53
Back-Up Lamps 5-58
Front Turn Signal, Parking and Fog Lamps 5-56
Halogen Bulbs 5-53
Headlamp Aiming 5-50
Replacement Bulbs 5-59
Taillamps, Turn Signal, and Stoplamps 5-57
Buying New Tires 5-72

C

California Fuel 5-6
California Proposition 65 Warning 5-3
Canadian Owners ii
Capacities and Specifications 5-118
Carbon Monoxide 2-13, 2-33, 4-28, 4-40
Care of
Safety Belts 5-104
Your CD Player 3-141
Your CDs 3-141
Center Console Storage Area 2-42
Chains, Tire 5-77
Check
Engine Light 3-47
Checking Things Under the Hood 5-10
Chemical Paint Spotting 5-108
Child Restraints
Child Restraint Systems 1-36
Infants and Young Children 1-33

Downloaded from www.Manualslib.com manuals search engine

Child Restraints (cont.)
Lower Anchors and Tethers for Children 1-41
Older Children 1-30
Securing a Child Restraint in a Rear Seat Position 1-46
Securing a Child Restraint in the Right Front Seat Position 1-48
Where to Put the Restraint 1-40
Chime Level Adjustment 3-142
Cigarette Lighter 3-25
Cleaning
Aluminum Wheels 5-106
Exterior Lamps/Lenses 5-105
Fabric/Carpet 5-101
Finish Care 5-105
Inside of Your Vehicle 5-99
Instrument Panel, Vinyl, and Other Plastic Surfaces 5-104
Leather 5-103
Tires 5-107
Ultra Lux Suede 5-103
Underbody Maintenance 5-108
Washing Your Vehicle 5-105
Weatherstrips 5-104
Windshield and Wiper Blades 5-106
Climate Control System 3-26
Air Filter, Passenger Compartment 3-33
Dual Automatic 3-29
Outlet Adjustment 3-33
Collision Damage Repair 7-10
Comfort Guides, Rear Safety Belt 1-26
Compact Spare Tire 5-99
Content Theft-Deterrent 2-17
Control of a Vehicle 4-5
Convenience Net 2-43
Coolant
Engine Temperature Gage 3-46
Engine Temperature Warning Light 3-46
Heater, Engine 2-24
Cooling System 5-30
Courtesy Lamps 3-18
Cruise Control 3-11
Cruise Control Light 3-51
Cupholder(s) 2-41
Customer Assistance Information
Courtesy Transportation 7-7
Customer Assistance for Text Telephone (TTY) Users 7-4
Customer Assistance Offices 7-4
Customer Satisfaction Procedure 7-2
GM Mobility Reimbursement Program 7-5
Reporting Safety Defects to General Motors 7-14
Reporting Safety Defects to the Canadian Government 7-14
Reporting Safety Defects to the United States Government 7-13
Roadside Assistance Program 7-6
Service Publications Ordering Information 7-14

Downloaded from www.Manualslib.com manuals search engine

D

Daytime Running Lamps 3-16
Defensive Driving 4-2
Delayed Entry Lighting 3-19
Delayed Exit Lighting 3-19
Delayed Locking 2-11
Displacement on Demand™ (DoD™) 2-25
Doing Your Own Service Work 5-4
Door
  Delayed Locking 2-11
  Locks 2-10
  Power Door Locks 2-11
  Programmable Automatic Door Locks 2-12
  Rear Door Security Locks 2-12
Driver
  Position, Safety Belt 1-16
  Six-Way Power Seat 1-2
Driver Information Center (DIC) 3-52
  DIC Controls and Displays 3-52, 3-60
  DIC Warnings and Messages 3-72
Driving
  At Night 4-19
  City 4-22
  Defensive 4-2
  Drunken 4-3
  Freeway 4-23
  Hill and Mountain Roads 4-26
  In Rain and on Wet Roads 4-20
Driving (cont.)
  Rocking Your Vehicle to Get it Out 4-33
  Winter 4-28
Dual Automatic Climate Control System 3-29

E

Electrical System
  Add-On Equipment 5-111
  Fuses and Circuit Breakers 5-112
  Headlamp Wiring 5-111
  Instrument Panel Fuse Block 5-112
  Power Windows and Other Power Options 5-111
  Underhood Fuse Block 5-114
  Windshield Wiper Fuses 5-111
Engine
  Air Cleaner/Filter 5-21
  Battery 5-45
  Check and Service Engine Soon Light 3-47
  Coolant 5-25
  Coolant Heater 2-24
  Coolant Temperature Gage 3-46
  Coolant Temperature Warning Light 3-46
  Engine Compartment Overview 5-12
  Exhaust 2-33
  Oil 5-16
  Oil Life System 5-19
  Overheated Protection Operating Mode 5-30

Downloaded from www.Manualslib.com manuals search engine

Engine (cont.)
Overheating 5-28
Starting 2-23
Supercharger Oil 5-20
Enhanced Traction System (ETS) 4-11
Warning Light 3-45
Entry Lighting 3-18
Event Data Recorders (EDR) 7-9
Extender, Safety Belt 1-29
Exterior Lamps 3-15
Exterior Lighting Battery Saver 3-17

F

Filter
Engine Air Cleaner 5-21
Finish Damage 5-107
Flash-to-Pass 3-9
Flat Tire 5-77
Flat Tire, Changing 5-88
Flat Tire, Storing 5-97
Fluid
Automatic Transaxle 5-23
Power Steering 5-40
Windshield Washer 5-41
Fog Lamp Light 3-50
Fog Lamps 3-17
Folding Rear Seat 1-9
Folding Seatback, Passenger 1-7
Front Reading Lamps 3-20
Front Seat Storage Net 2-42
Fuel 5-5
Additives 5-6
California Fuel 5-6
Filling a Portable Fuel Container 5-9
Filling Your Tank 5-7
Fuels in Foreign Countries 5-7
Gage 3-51
Gasoline Octane 5-5
Gasoline Specifications 5-5
Fuses
Fuses and Circuit Breakers 5-112
Instrument Panel Fuse Block 5-112
Underhood Fuse Block 5-114
Windshield Wiper 5-111

G

Gage
Engine Coolant Temperature 3-46
Fuel 3-51
Speedometer 3-37
Tachometer 3-37
Gasoline
Octane 5-5
Specifications 5-5
Glove Box 2-40
GM Mobility Reimbursement Program 7-5

Downloaded from www.Manualslib.com manuals search engine

H

Hazard Warning Flashers 3-6
Head Restraints 1-6
Headlamp
  Aiming 5-50
Headlamp Wiring 5-111
Headlamps
  Bulb Replacement 5-53
  Daytime Running Lamps 3-16
  Flash-to-Pass 3-9
  Front Turn Signal, Parking and Fog Lamps 5-56
  Halogen Bulbs 5-53
  Headlamps and Sidemarker Lamps 5-54
  High/Low Beam Changer 3-8
  On Reminder 3-15
Headlamps and Sidemarker Lamps 5-54
Head-Up Display (HUD) 3-21
Heated Seats 1-3
Heater 3-26
Heater 3-29
Highbeam On Light 3-51
Highway Hypnosis 4-25
Hill and Mountain Roads 4-26
Hood
  Checking Things Under 5-10
  Release 5-11
Horn 3-6
How to Use This Manual ii
How to Wear Safety Belts Properly 1-15

I

Ignition Positions 2-22
Infants and Young Children, Restraints 1-33
Inflation -- Tire Pressure 5-67
Inflator Kit, Tire 5-79
Instrument Panel
  Overview 3-4
Instrument Panel (I/P)
  Brightness 3-18
  Cluster 3-36
Interior Lamps 3-17

J

Jump Starting 5-46

K

Keyless Entry System 2-3
Keys 2-2

Downloaded from www.Manualslib.com manuals search engine

L

Labeling, Tire Sidewall 5-62
Lamps
  Battery Run-Down Protection 3-20
  Courtesy 3-18
  Exterior 3-15
  Exterior Lighting Battery Saver 3-17
  Fog 3-17
  Front Reading 3-20
  Interior 3-17
  Overhead Console Reading 3-20
  Rear Assist Handle Reading 3-20
LATCH System
  Child Restraints 1-41
Light
  Airbag Readiness 3-39
  Anti-Lock Brake System Warning 3-44
  Brake System Warning 3-42
  Cruise Control 3-51
  Engine Coolant Temperature Warning 3-46
  Enhanced Traction System (ETS)
    Warning Light 3-45
  Fog Lamp 3-50
  Highbeam On 3-51
Light (cont.)
  Malfunction Indicator 3-47
  Oil Pressure 3-50
  Passenger Airbag Status Indicator 3-40
  Passenger Safety Belt Reminder 3-38
  Safety Belt Reminder 3-38
  TCS Warning Light 3-45
  Traction Control System (TCS) Warning 3-45
  Up-Shift 3-42
Lighting
  Delayed Entry 3-19
  Delayed Exit 3-19
  Entry 3-18
Loading Your Vehicle 4-33
Lockout Protection 2-13
Locks
  Delayed Locking 2-11
  Door 2-10
  Lockout Protection 2-13
  Power Door 2-11
  Programmable Automatic Door Locks 2-12
  Rear Door Security Locks 2-12
Loss of Control 4-18
Lumbar
  Power Controls 1-3

Downloaded from www.Manualslib.com manuals search engine

M

Maintenance Schedule
- Additional Required Services 6-6
- At Each Fuel Fill 6-9
- At Least Once a Month 6-9
- At Least Once a Year 6-10
- Introduction 6-2
- Maintenance Footnotes 6-7
- Maintenance Record 6-14
- Maintenance Requirements 6-2
- Normal Maintenance Replacement Parts 6-13
- Owner Checks and Services 6-8
- Recommended Fluids and Lubricants 6-12
- Scheduled Maintenance 6-4
- Using 6-2
- Your Vehicle and the Environment 6-2

Malfunction Indicator Light 3-47
Manual Passenger Seat 1-2
Message
- DIC Warnings and Messages 3-72

Mirrors
- Automatic Dimming Rearview with Compass and Temperature Display 2-35
- Manual Rearview Mirror with OnStar® 2-35
- Outside Convex Mirror 2-38
- Outside Power Mirrors 2-37

MyGMLink.com 7-3

N

Navigation/Radio System, see Navigation Manual 3-139
New Vehicle Break-In 2-21
Normal Maintenance Replacement Parts 6-13

O

Odometer 3-37
Off-Road Recovery 4-16
Oil
- Engine 5-16
- Pressure Light 3-50
- Supercharger, Engine 5-20

Oil, Engine Oil Life System 5-19
Older Children, Restraints 1-30
Online Owner Center 7-3
OnStar® System, see OnStar® Manual 2-38
Other Warning Devices 3-6
Outlet Adjustment 3-33
Outside
- Convex Mirror 2-38
- Power Mirrors 2-37

Overhead Console 2-42
Overhead Console Reading Lamps 3-20
Overheated Engine Protection Operating Mode 5-30
Owner Checks and Services 6-8
Owners, Canadian ii

Downloaded from www.Manualslib.com manuals search engine

P

Park (P)
  Shifting Into 2-31
  Shifting Out of 2-32
Parking
  Brake 2-30
  Over Things That Burn 2-33
Passenger Airbag Status Indicator 3-40
Passenger Compartment Air Filter 3-33
Passenger Sensing System 1-61
Passing 4-16
PASS-Key® III 2-19
PASS-Key® III Operation 2-20
Power 1-2
  Accessory Outlet(s) 3-24
  Door Locks 2-11
  Electrical System 5-111
  Lumbar Controls 1-3
  Retained Accessory (RAP) 2-22
  Steering Fluid 5-40
  Windows 2-16
Pressure Cap 5-28
Pretensioners, Safety Belt 1-29
Programmable Automatic Door Locks 2-12

Q

Questions and Answers About Safety Belts 1-14

R

Radios 3-94
  Care of Your CD Player 3-141
  Care of Your CDs 3-141
  Navigation/Radio System, see
    Navigation Manual 3-139
  Radio with CD 3-96, 3-107
  Radio with Six-Disc CD 3-123
  Setting the Time 3-96
  Theft-Deterrent 3-139
  Understanding Reception 3-140
Rear Assist Handle Reading Lamps 3-20
Rear Door Security Locks 2-12
Rear Safety Belt Comfort Guides 1-26
Rear Seat Passengers, Safety Belts 1-23
Rearview Mirror, Automatic Dimming with
  Compass and Temperature Display 2-35
Rearview Mirror with OnStar® 2-35
Reclining Seatbacks 1-4

Downloaded from www.Manualslib.com manuals search engine

Recommended Fluids and Lubricants 6-12
Recreational Vehicle Towing 4-38
Remote Keyless Entry System 2-3
Remote Keyless Entry System, Operation 2-4
Removing the Flat Tire and Installing the Spare Tire 5-91
Removing the Spare Tire and Tools 5-90
Replacement Bulbs 5-59
Replacement, Windshield 5-60
Reporting Safety Defects
  Canadian Government 7-14
  General Motors 7-14
  United States Government 7-13
Restraint System Check
  Checking the Restraint Systems 1-67
  Replacing Restraint System Parts After a Crash 1-67
Retained Accessory Power (RAP) 2-22
Right Front Passenger Position, Safety Belts 1-23
Roadside
  Assistance Program 7-6
Rocking Your Vehicle to Get it Out 4-33
Running the Engine While Parked 2-34

S

Safety Belt
  Passenger Reminder Light 3-38
  Pretensioners 1-29
  Reminder Light 3-38
Safety Belts
  Care of 5-104
  Driver Position 1-16
  How to Wear Safety Belts Properly 1-15
  Questions and Answers About Safety Belts 1-14
  Rear Safety Belt Comfort Guides 1-26
  Rear Seat Passengers 1-23
  Right Front Passenger Position 1-23
  Safety Belt Extender 1-29
  Safety Belt Use During Pregnancy 1-23
  Safety Belts Are for Everyone 1-10
  Shoulder Belt Height Adjuster 1-22
Safety Warnings and Symbols iii
Scheduled Maintenance 6-4
Seatback, Folding Passenger 1-7

Downloaded from www.Manualslib.com manuals search engine

Seats
Head Restraints 1-6
Heated Seats 1-3
Manual Passenger 1-2
Passenger Folding Seatback 1-7
Power Lumbar 1-3
Reclining Seatbacks 1-4
Six-Way Power Driver 1-2
Split Folding Rear Seat 1-9
Securing a Child Restraint
Rear Seat Position 1-46
Right Front Seat Position 1-48
Service 5-3
Accessories and Modifications 5-3
Adding Equipment to the Outside of Your Vehicle 5-5
California Proposition 65 Warning 5-3
Doing Your Own Work 5-4
Engine Soon Light 3-47
Publications Ordering Information 7-14
Servicing Your Airbag-Equipped Vehicle 1-65
Setting the Time 3-96
Sheet Metal Damage 5-107
Shifting Into Park (P) 2-31
Shifting Out of Park (P) 2-32
Shoulder Belt Height Adjuster 1-22
Signals, Turn and Lane-Change 3-7
Spare Tire
Compact 5-99
Installing 5-91
Removing 5-90
Storing 5-97
Specifications, Capacities 5-118
Speedometer 3-37
Split Folding Rear Seat 1-9
StabiliTrak® Plus System 4-12
Starting Your Engine 2-23
Steering 4-13
Steering Wheel Controls, Audio 3-139
Steering Wheel, Tilt Wheel 3-6
Storage Areas
Center Console Storage Area 2-42
Convenience Net 2-43
Cupholder(s) 2-41
Front Seat Storage Net 2-42
Glove Box 2-40
Overhead Console 2-42
Stuck in Sand, Mud, Ice or Snow 4-32
Sun Visors 2-17
Sunroof 2-43

Downloaded from www.Manualslib.com manuals search engine

T

Tachometer 3-37
Taillamps
  Turn Signal, and Stoplamps 5-57
TCS Warning Light 3-45
Theft-Deterrent, Radio 3-139
Theft-Deterrent Systems 2-17
  Content Theft-Deterrent 2-17
  PASS-Key® III 2-19
  PASS-Key® III Operation 2-20
Tilt Wheel 3-6
Tires 5-60
  Aluminum Wheels, Cleaning 5-106
  Buying New Tires 5-72
  Chains 5-77
  Changing a Flat Tire 5-88
  Cleaning 5-107
  Compact Spare Tire 5-99
  Different Size 5-73
  If a Tire Goes Flat 5-77
  Inflation -- Tire Pressure 5-67
  Inspection and Rotation 5-70
  Installing the Spare Tire 5-91
  Removing the Flat Tire 5-91
  Removing the Spare Tire and Tools 5-90
  Storing a Flat or Spare Tire and Tools 5-97
Tires (cont.)
  Tire Inflator Kit 5-79
  Tire Sidewall Labeling 5-62
  Tire Terminology and Definitions 5-64
  Uniform Tire Quality Grading 5-74
  Wheel Alignment and Tire Balance 5-75
  Wheel Replacement 5-75
  When It Is Time for New Tires 5-71
Towing
  Recreational Vehicle 4-38
  Towing a Trailer 4-40
  Your Vehicle 4-38
Traction
  Control System (TCS) 4-9
  Control System Warning Light 3-45
  Enhanced Traction System (ETS) 4-11
  Enhanced Traction System (ETS) Warning
    Light 3-45
  StabiliTrak® Plus System 4-12
Transaxle
  Fluid, Automatic 5-23
Transaxle Operation, Automatic 2-25
Transmission
  Up-Shift Light 3-42
Trunk 2-13
Turn and Lane-Change Signals 3-7
Turn Signal/Multifunction Lever 3-7

Downloaded from www.Manualslib.com manuals search engine

U

Understanding Radio Reception 3-140
Uniform Tire Quality Grading 5-74
Up-Shift Light 3-42

V

Vehicle
  Control 4-5
  Damage Warnings iv
  Loading 4-33
  Symbols iv
Vehicle Data Collection and Event Data
  Recorders 7-9
Vehicle Identification
  Number (VIN) 5-110
  Service Parts Identification Label 5-110
Ventilation Adjustment 3-33
Visors 2-17

W

Warning Lights, Gages and Indicators 3-35
Warnings
  DIC Warnings and Messages 3-72
  Hazard Warning Flashers 3-6
  Other Warning Devices 3-6
  Safety and Symbols iii
  Vehicle Damage iv
Wheels
  Alignment and Tire Balance 5-75
  Different Size 5-73
  Replacement 5-75
Where to Put the Restraint 1-40
Windows 2-15
  Power 2-16
Windshield
  Wiper Blades, Cleaning 5-106
Windshield Replacement 5-60

Downloaded from www.Manualslib.com manuals search engine

Windshield Washer
Fluid 5-41
Windshield Wiper
Blade Replacement 5-60
Fuses 5-111
Windshield Wiper Lever 3-9
Winter Driving 4-28

X

XM™ Satellite Radio Antenna System 3-142

Y

Your Vehicle and the Environment 6-2

Downloaded from www.Manualslib.com manuals search engine