BRAKE SYSTEM

PRECAUTION

1. **Necessary care must be taken to replace each part properly as it could affect the brake system performance. This could cause driving hazards. Replace each part with an identical part with the same number.**
2. **It is very important to keep parts and the area clean when repairing the brake system.**
3. **If the vehicle is equipped with a mobile communication system, refer to the precautions in the INTRODUCTION section.**

SYSTEM DIAGRAM

w/ ABS:

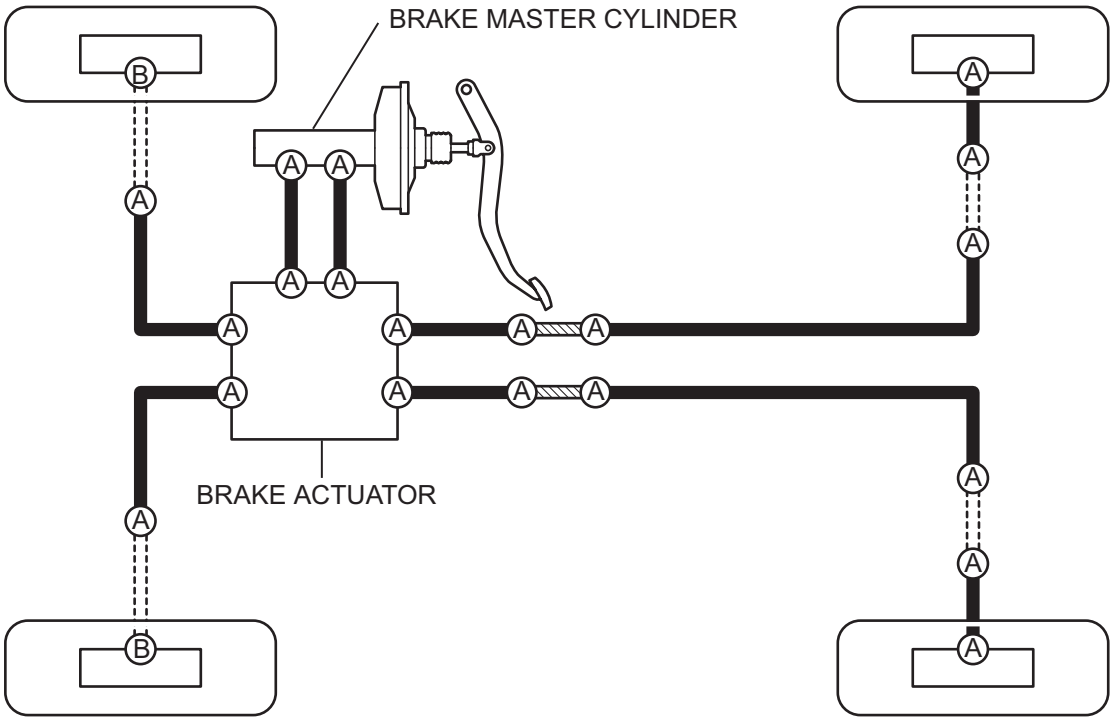

: Brake Tube

: Flexible Hose

: Brake Tube Way

Ⓐ : **for use without SST:**

Union Nut Torque: 15 N*m (155 kgf*cm, 11 ft*lbf)

for use with SST:

Union Nut Torque: 14 N*m (143 kgf*cm, 10 ft*lbf)

Ⓑ : Union Bolt Torque: 30 N*m (310 kgf*cm, 22 ft*lbf)

P

C130323E03

w/o ABS:

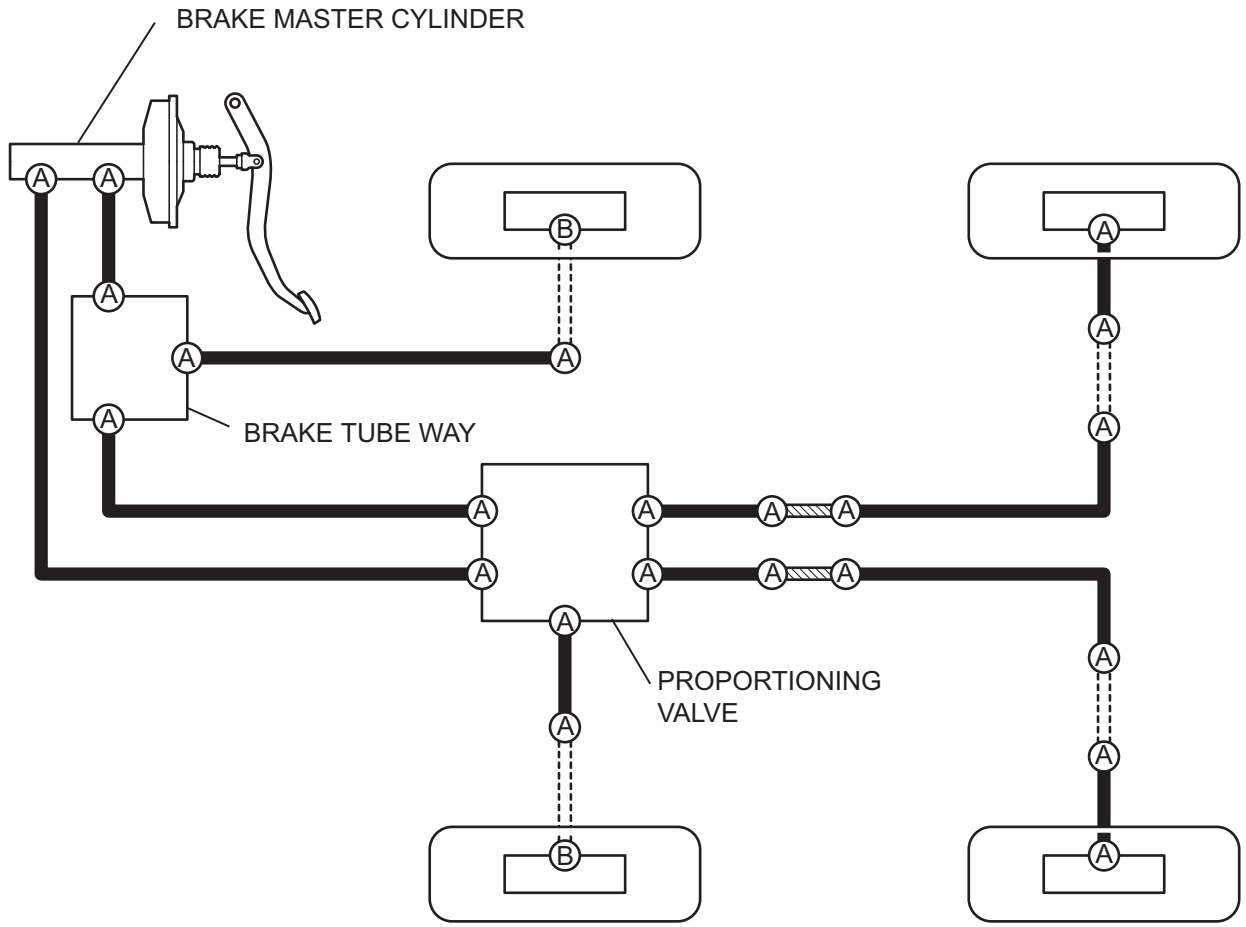

▬ : Brake Tube

- - - - : Flexible Hose

▨ : Brake Tube Way

Ⓐ : **for use without SST:**

Union Nut Torque: 15 N*m (155 kgf*cm, 11 ft*lbf)

for use with SST:

Union Nut Torque: 14 N*m (143 kgf*cm, 10 ft*lbf)

Ⓑ : Union Bolt Torque: 30 N*m (310 kgf*cm, 22 ft*lbf)

BR

P

C133161E01

PROBLEM SYMPTOMS TABLE

HINT:
Use the table below to help you find the cause of the problem. The numbers indicate the ranked order of probability of each of the possible causes. Check each part in the order suggested. If necessary, replace the applicable parts.

Symptom	Suspected area	See page
Low pedal or spongy pedal	1. Fluid leakage in brake system	-
	2. Air in brake system	BR-10
	3. Piston seal (Worn or damaged)	BR-50
	4. Wheel cylinder cup (Damaged)	BR-62
	5. Brake master cylinder (Faulty)	BR-29
Brake drag	1. Brake pedal free play (Minimum)	BR-8
	2. Parking brake lever travel (Out of adjustment)	PB-2
	3. Rear drum brake shoe clearance (Out of adjustment)	BR-67
	4. Pad (Cracked or distorted)	BR-51
	5. Brake shoe (Cracked or distorted)	BR-62
	6. Front disc brake piston (Stuck)	BR-50
	7. Piston (Stuck)	BR-62
	8. Front disc brake piston (Frozen)	BR-50
	9. Piston (Frozen)	BR-62
	10. Tension or return spring (Faulty)	BR-60
	11. Booster system (Vacuum leakage)	BR-5
	12. Brake master cylinder (Faulty)	BR-29
Brake pull	1. Front disc brake piston (Stuck)	BR-50
	2. Piston (Stuck)	BR-62
	3. Pad (Oily)	BR-51
	4. Brake shoe (Oily)	BR-62
	5. Front disc brake piston (Frozen)	BR-50
	6. Piston (Frozen)	BR-62
	7. Front disc (Scored)	BR-51
	8. Rear brake drum (Scored)	BR-62
	9. Pad (Cracked or distorted)	BR-51
	10. Brake shoe (Cracked or distorted)	BR-62
Hard pedal but braking inefficient	1. Fluid leakage in brake system	-
	2. Air in brake system	BR-10
	3. Front disc brake piston (Stuck)	BR-50
	4. Piston (Stuck)	BR-62
	5. Pad (Cracked or distorted)	BR-51
	6. Brake shoe (Cracked or distorted)	BR-62
	7. Pad (Oily)	BR-51
	8. Brake shoe (Oily)	BR-62
	9. Pad (Glazed)	BR-51
	10. Brake shoe (Glazed)	BR-62
	11. Front disc (Scored)	BR-51
	12. Rear brake drum (Scored)	BR-62
	13. Booster system (Vacuum leakage)	BR-5

Symptom	Suspected area	See page
Noise from brakes	1. Pad (Cracked or distorted)	BR-51
	2. Brake shoe (Cracked or distorted)	BR-62
	3. Installation bolt (Loose)	BR-48
	4. Front disc (Scored)	BR-51
	5. Rear brake drum (Scored)	BR-62
	6. Pad support plate (Loose)	BR-51
	7. Sliding pin (Worn)	BR-48
	8. Pad (Dirty)	BR-51
	9. Brake shoe (Dirty)	BR-62
	10. Pad (Glazed)	BR-51
	11. Brake shoe (Glazed)	BR-62
	12. Tension or return spring (Faulty)	BR-60
	13. Anti-squeal shim (Damaged)	BR-48
	14. Shoe hold down spring (Damaged)	BR-60

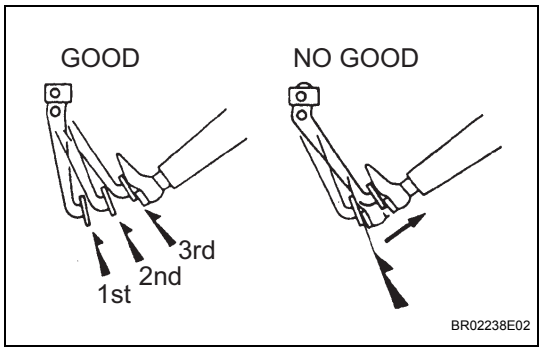

ON-VEHICLE INSPECTION

1. INSPECT BRAKE BOOSTER

(a) Check the air tightness.

(1) Start the engine and stop it after 1 or 2 minutes. Depress the brake pedal several times slowly.
HINT:
- If the pedal can be depressed to the floor on the 1st time, but cannot be depressed as far on the 2nd or 3rd times, the booster is airtight. If not, inspect the vacuum check valve.
- If the vacuum check valve is normal, replace the brake booster assembly.

(2) Depress the brake pedal while the engine is running, and stop the engine with the pedal depressed.
HINT:
- If there is no change in the pedal reserve distance after holding the pedal for 30 seconds, the booster is airtight. If not, inspect the vacuum check valve.
- If the vacuum check valve is normal, replace the brake booster assembly.

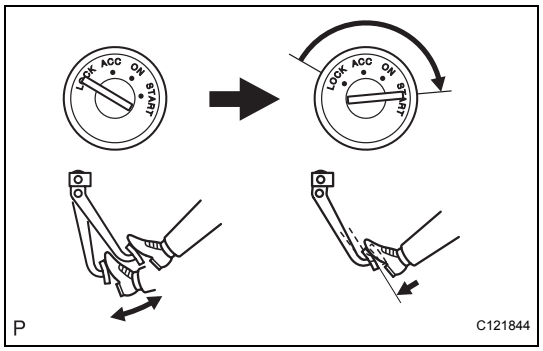

(b) Check the operation.

(1) Depress the brake pedal several times with the engine stopped and check that there is no change in the pedal reserve distance.

(2) Depress the brake pedal and start the engine.
HINT:
- If the pedal goes down slightly, the operation is normal. If not, inspect the vacuum check valve.
- If the vacuum check valve is normal, replace the brake booster assembly.

2. INSPECT VACUUM CHECK VALVE

(a) Check the vacuum check valve.

(1) Slide the clip and disconnect the vacuum hose.

(2) Remove the vacuum check valve from the brake booster.

(3) Check that there is ventilation from the booster to the engine, and no ventilation from the engine to the booster.
If any fault is found, replace the vacuum hose assembly.

(4) Install the vacuum check valve onto the brake booster.

(5) Connect the vacuum hose with the clip.

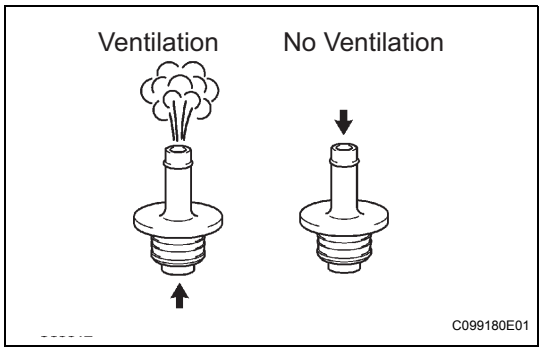

3. INSPECT PROPORTIONING VALVE (w/o ABS)

(a) Remove the bleeder plug from the front brake caliper and rear wheel cylinder.

(b) for Hatchback:

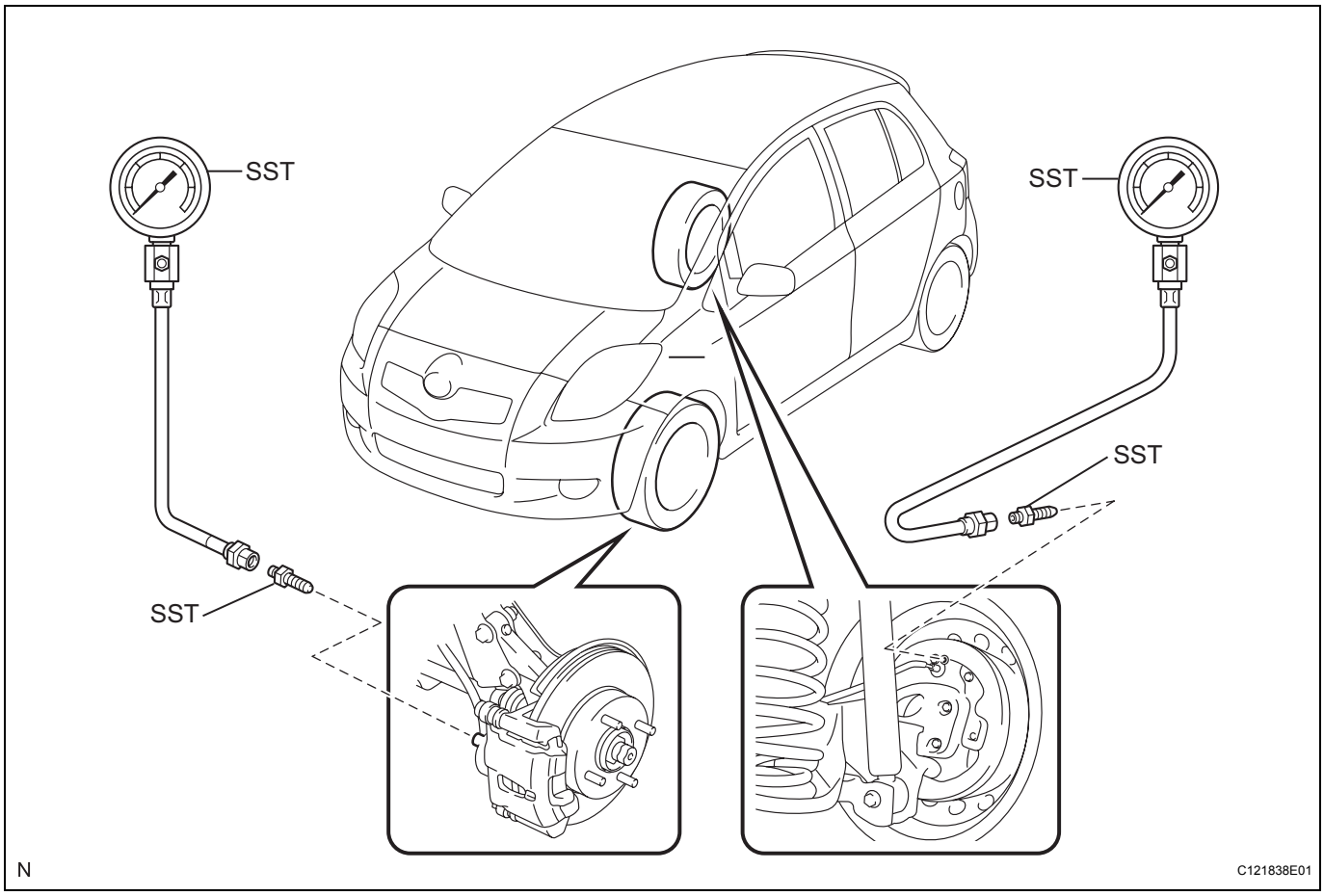

(1) Install SST and the bleed the air.
SST 09709-29018

(2) Raise the front brake caliper pressure and inspect the rear wheel cylinder pressure.

Standard fluid pressure

Front Brake Caliper Pressure	Rear Wheel Cylinder Pressure
1,500 kPa (15.3 kgf/cm^2, 218 psi)	1,500 kPa (15.3 kgf/cm^2, 218 psi)
5,000 kPa (51.0 kgf/cm^2, 725 psi)	2,350 kPa (24.0 kgf/cm^2, 341 psi)

Front Brake Caliper Pressure	Rear Wheel Cylinder Pressure
8,000 kPa (81.6 kgf/cm^2, 1,160 psi)	3,100 kPa (31.6 kgf/cm^2, 450 psi)

HINT:
When inspecting the fluid pressure, inspect the left front and right rear together, and the right front and left rear together.
If the rear wheel cylinder pressure is incorrect, replace the proportioning valve.

(3) Remove SST.

(c) for Sedan:

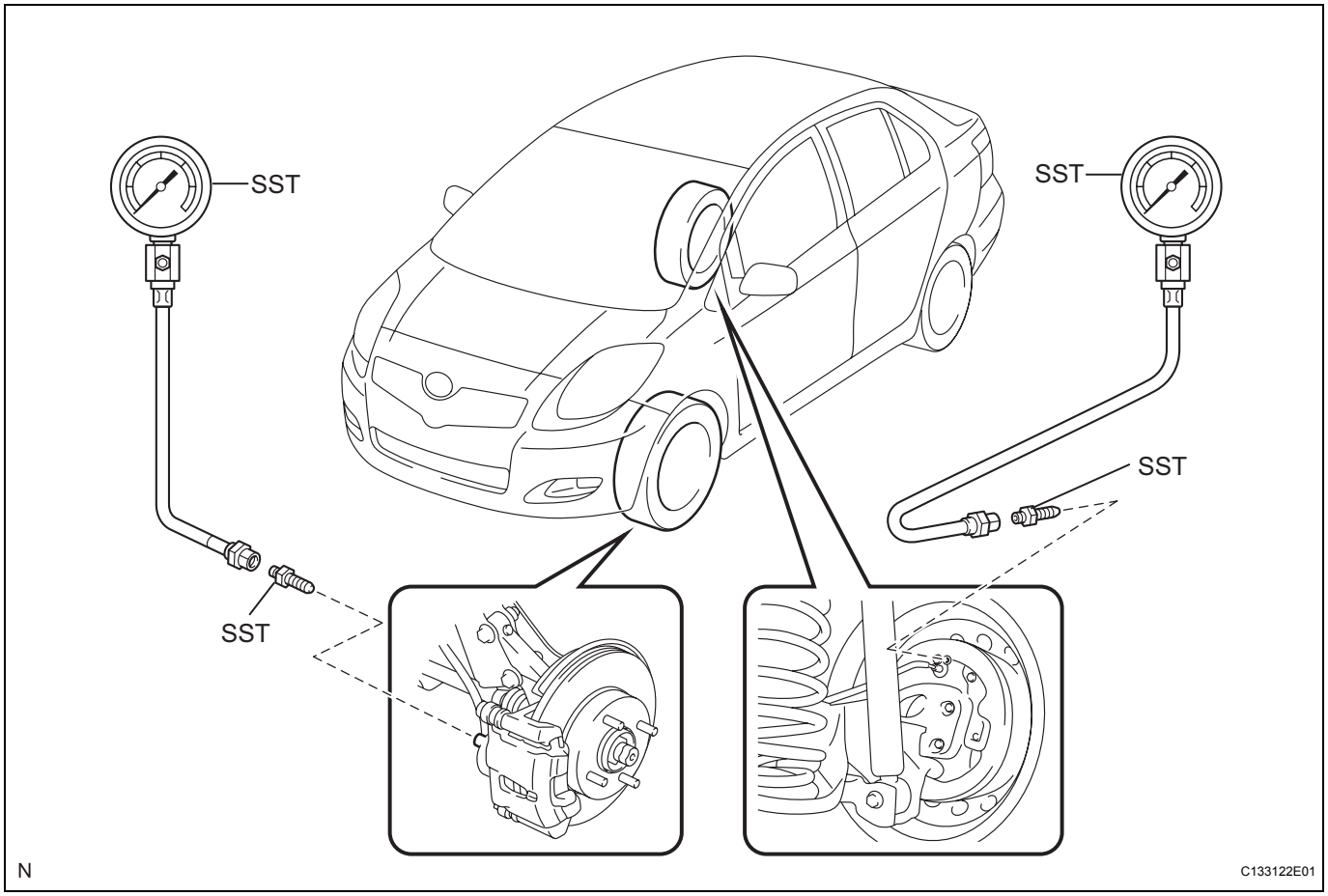

(1) Install SST and the bleed the air.
SST 09709-29018

(2) Raise the front brake caliper pressure and inspect the rear wheel cylinder pressure.

Standard fluid pressure

Front Brake Caliper Pressure	Rear Wheel Cylinder Pressure
1,500 kPa (15.3 kgf/cm^2, 218 psi)	1,500 kPa (15.3 kgf/cm^2, 218 psi)
5,000 kPa (51.0 kgf/cm^2, 725 psi)	2,350 kPa (24.0 kgf/cm^2, 341 psi)
8,000 kPa (81.6 kgf/cm^2, 1,160 psi)	3,100 kPa (31.6 kgf/cm^2, 450 psi)

HINT:
When inspecting the fluid pressure, inspect the left front and right rear together, and the right front and left rear together.

If the rear wheel cylinder pressure is incorrect, replace the proportioning valve.

(3) Remove SST.

(d) Install the bleeder plug onto the front brake caliper and rear wheel cylinder.
Torque: 8.3 N*m (85 kgf*cm, 73 in.*lbf)

(e) Bleed the brake fluid (See page BR-10).

(f) Check the brake fluid leakage.

ADJUSTMENT

1. **REMOVE INSTRUMENT PANEL UNDER COVER SUB-ASSEMBLY**
   Hatchback: (See page IP-67)
   Sedan: (See page IP-44)

2. **REMOVE LOWER INSTRUMENT PANEL FINISH PANEL SUB-ASSEMBLY**
   Hatchback: (See page IP-69)
   Sedan: (See page IP-45)

3. **INSPECT AND ADJUST BRAKE PEDAL**
   (a) Inspect the brake pedal height.
   Pedal height from floor

w/ ABS	w/o ABS
107.3 to 117.3 mm (4.224 to 4.618 in.)	107.8 to 117.8 mm (4.244 to 4.638 in.)

   If the pedal height is incorrect, adjust it.
   (b) Adjust the brake pedal height.
   (1) Disconnect the connector from the stop light switch.
   (2) Turn the stop light switch counterclockwise, and remove the stop light switch.
   (3) Loosen the push rod lock nut.
   (4) Adjust the pedal height by turning the pedal push rod.
   Pedal height from floor

w/ ABS	w/o ABS
107.3 to 117.3 mm (4.224 to 4.618 in.)	107.8 to 117.8 mm (4.244 to 4.638 in.)

   (5) Tighten the push rod lock nut.
   Torque: 26 N*m (265 kgf*cm, 19 ft.*lbf)
   (6) Insert the stop light switch into the adjuster until it just touches the brake pedal.
   NOTICE:
   Do not depress the brake pedal.

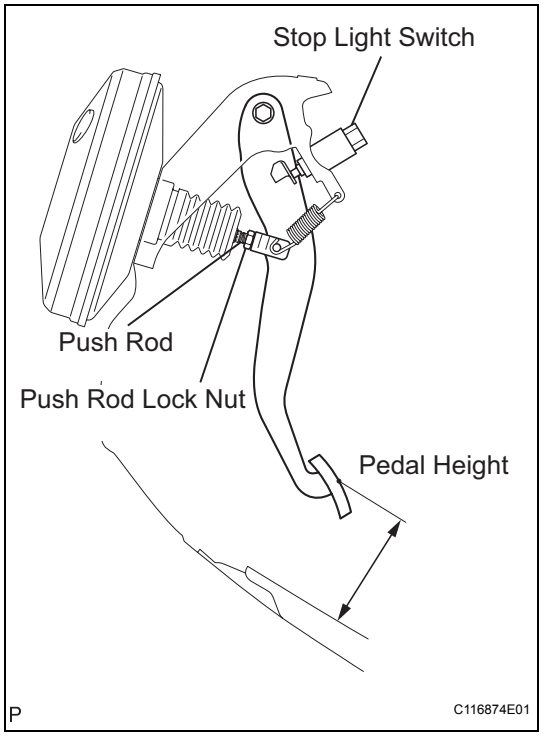

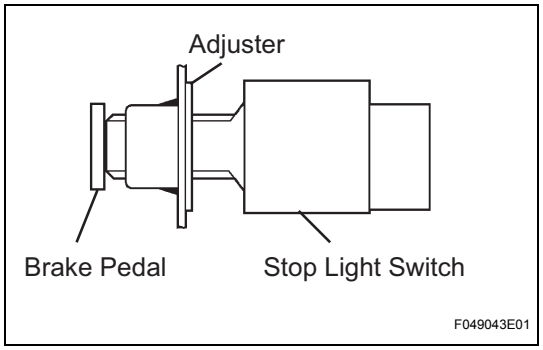

   (7) Make a quarter turn clockwise to install the stop light switch.
   NOTICE:
   Do not depress the brake pedal.
   HINT:
   The turning torque for installing the stop light switch:
   Torque: 1.5 N*m (15 kgf*cm, 13 in.*lbf) or less

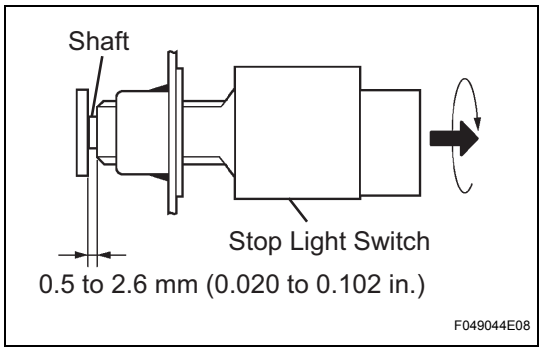

(8) Check the stop light switch clearance.
Stop light switch clearance:
0.5 to 2.6 mm (0.020 to 0.102 in.)

(9) Connect the connector to the stop light switch.

(c) Inspect the brake pedal free play.

(1) Stop the engine and depress the brake pedal several times until there is no vacuum left in the booster.

(2) Push in the pedal until the beginning of the resistance is felt. Measure the distance as shown.
Pedal free play:
1.0 to 6.0 mm (0.039 to 0.236 in.)
If incorrect, troubleshoot the brake system.

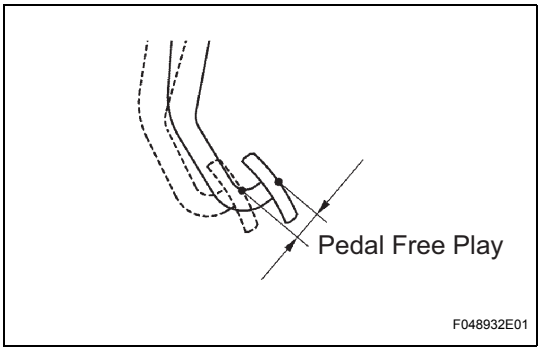

(d) Inspect the brake pedal reserve distance.

(1) Release the parking brake lever. With the engine running, depress the pedal and measure the pedal reserve distance as shown.
Pedal reserve distance from floor at 294 N (30 kgf, 66.1 lbf)

w/ ABS	w/o ABS
More than 73 mm (2.87 in.)	More than 70 mm (2.75 in.)

HINT:
Sound and resistance from the brake booster when the brake pedal is depressed without a vacuum does not indicate a problem.
If incorrect, troubleshoot the brake system.

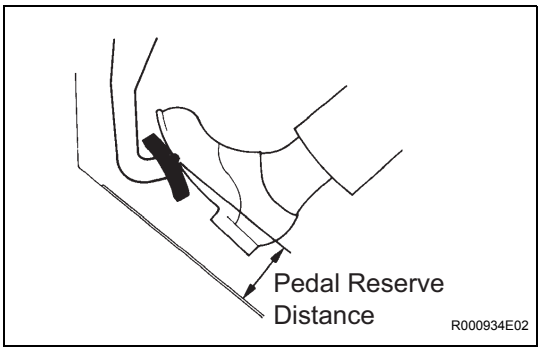

4. INSTALL LOWER INSTRUMENT PANEL FINISH PANEL SUB-ASSEMBLY
Hatchback: (See page IP-78)
Sedan: (See page IP-54)

5. INSTALL INSTRUMENT PANEL UNDER COVER SUB-ASSEMBLY
Hatchback: (See page IP-80)
Sedan: (See page IP-55)

BRAKE FLUID

BLEEDING

NOTICE:
Immediately wash off any brake fluid that comes into contact with any painted surfaces.
HINT:
If any work is done on the brake system or if air in the brake lines is suspected, bleed the air from the system.

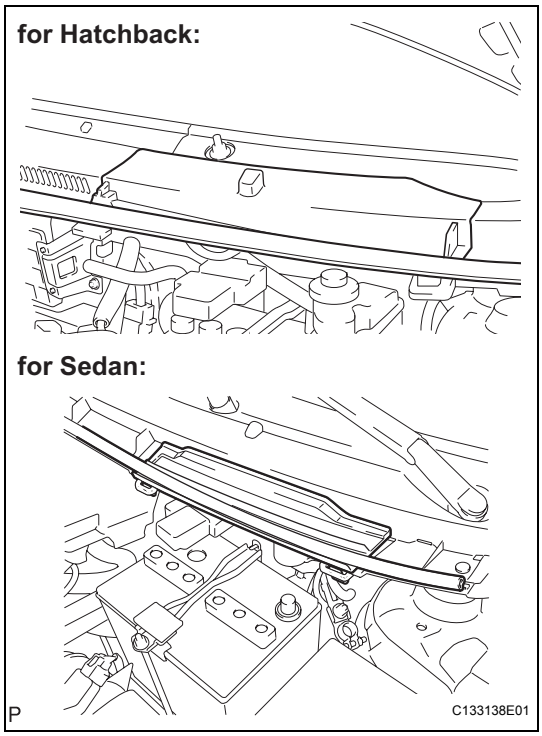

1. FILL RESERVOIR WITH BRAKE FLUID
(a) Disengage the 3 clips and separate the hood to cowl top seal.
(b) Remove the cowl top ventilator louver.

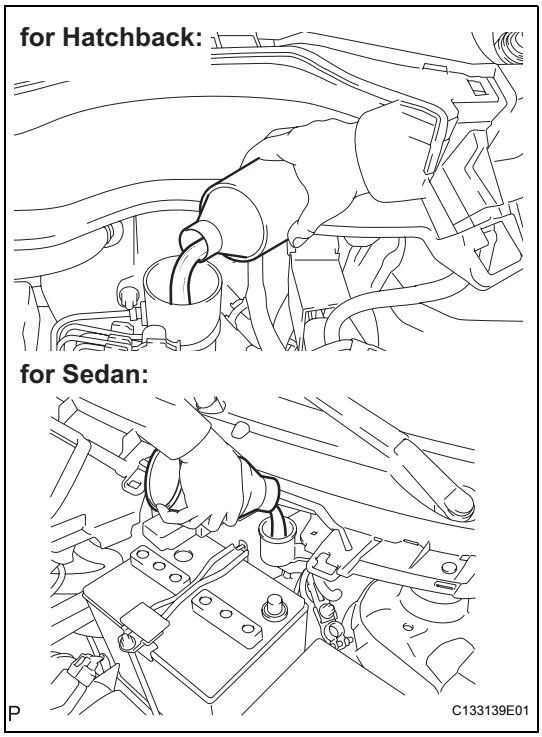

(c) Set the brake fluid can upside down on the reservoir.
Fluid:
SAE J1703 or FMVSS No. 116 DOT3

2. BLEED MASTER CYLINDER
HINT:
If the master cylinder has been disassembled or if the reservoir becomes empty, bleed the air from the master cylinder.

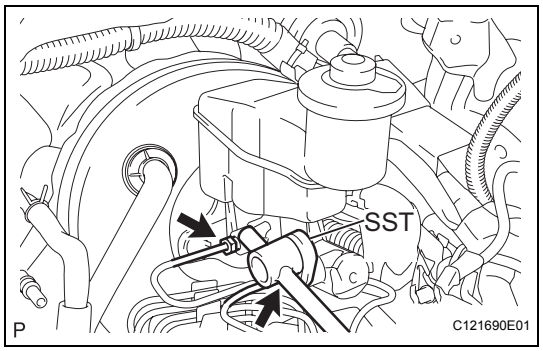

(a) Using SST, disconnect the brake tubes from the master cylinder.
SST 09023-00100

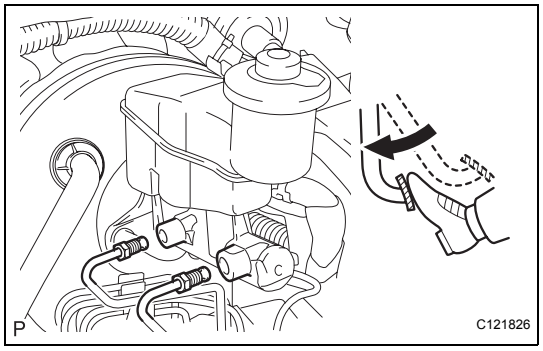

(b) Slowly depress the brake pedal and hold it there (Step A).

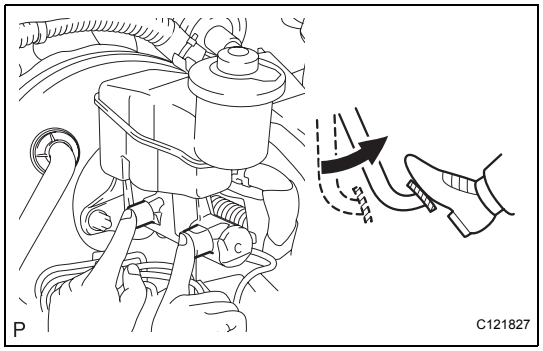

(c) Block the outer holes with your fingers, and release the brake pedal (Step B).
(d) Repeat step A and B 3 or 4 times.

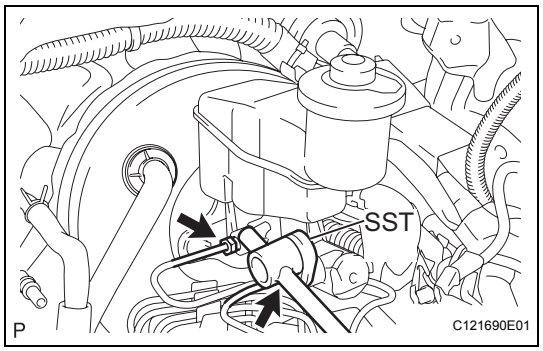

(e) Using SST, connect the brake tubes to the master cylinder.
SST 09023-00100
Torque: for use without SST
15 N*m (155 kgf*cm, 11 ft.*lbf)
for use with SST
14 N*m (143 kgf*cm, 10 ft.*lbf)
HINT:
- Use a torque wrench with a fulcrum length of 300 mm (11.81 in.).
- This torque value is effective when SST is parallel to a torque wrench.

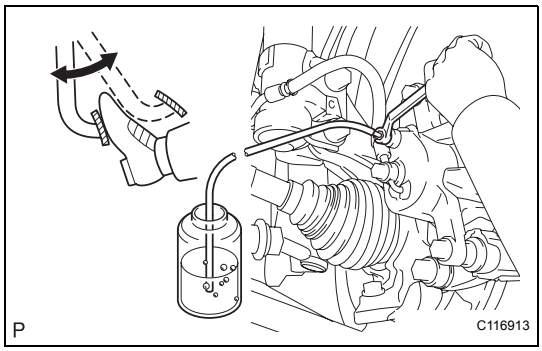

3. BLEED BRAKE LINE

(a) Connect the vinyl tube to the bleeder plug.

(b) Depress the brake pedal several times, then loosen the bleeder plug with the pedal depressed (Step C).

(c) At the point where the fluid stops coming out, tighten the bleeder plug, then release the brake pedal (Step D).

(d) Repeat step C and D until all the air in the fluid is completely bled out.

(e) Tighten the bleeder plug.
Torque: 8.3 N*m (85 kgf*cm, 73 in.*lbf)

(f) Repeat the above procedure to bleed the air out of the brake line for each wheel.

4. CHECK FLUID LEVEL IN RESERVOIR

(a) Check the fluid level and add fluid if necessary.
Fluid:
SAE J1703 or FMVSS No. 116 DOT3

BRAKE PEDAL SUPPORT

COMPONENTS

for Hatchback:

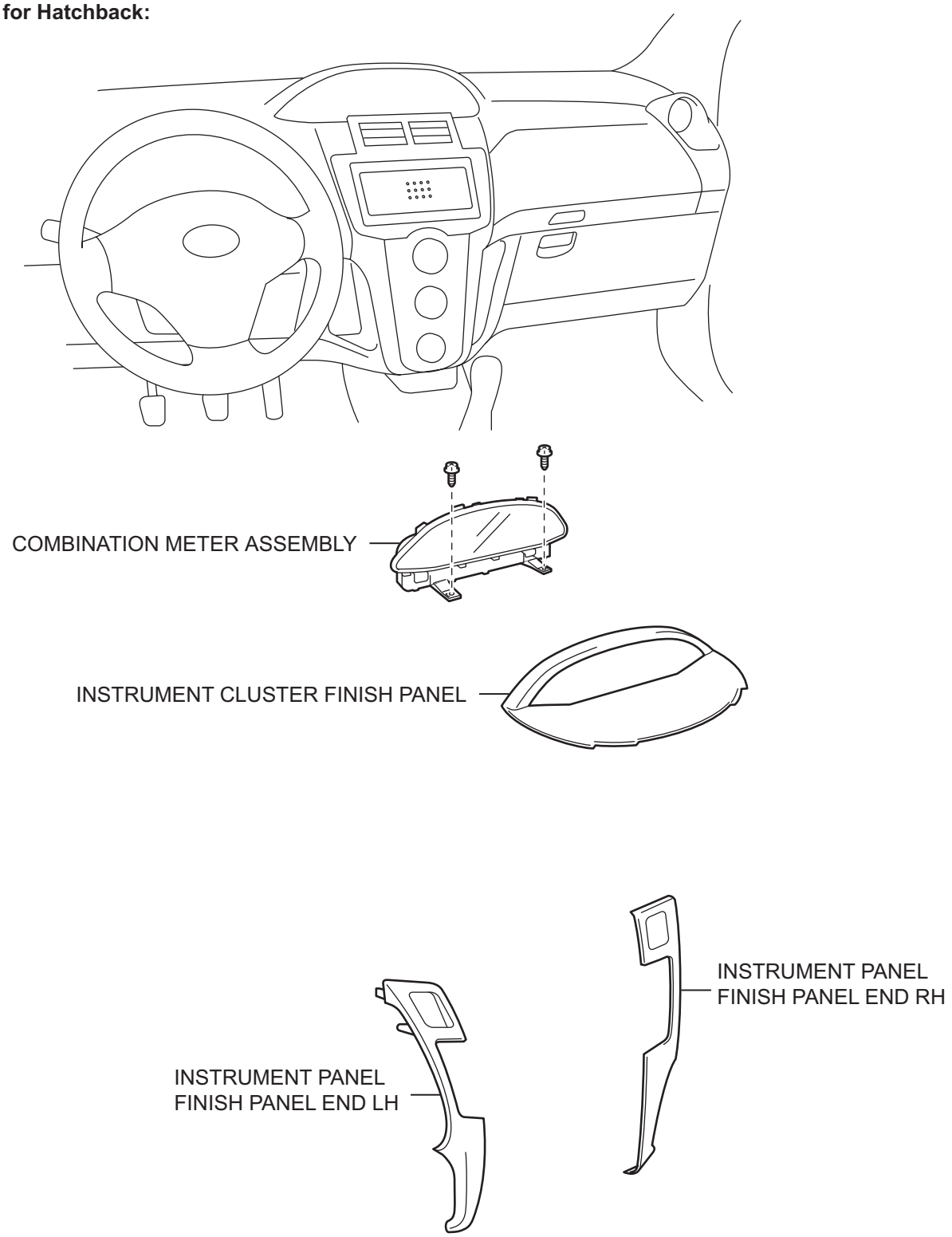

E107796E03

for Sedan:

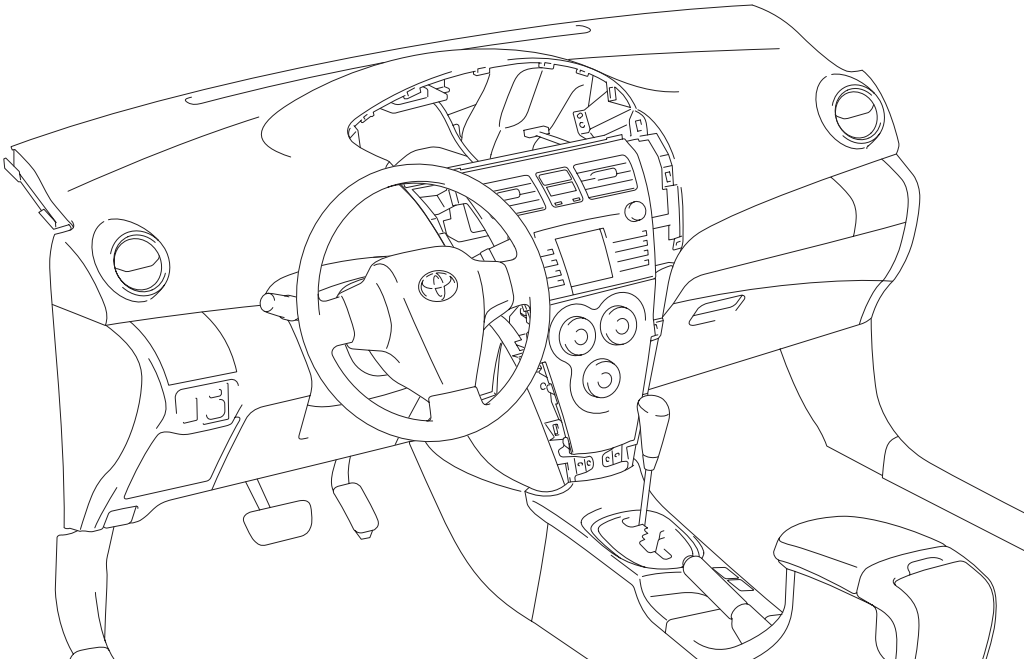

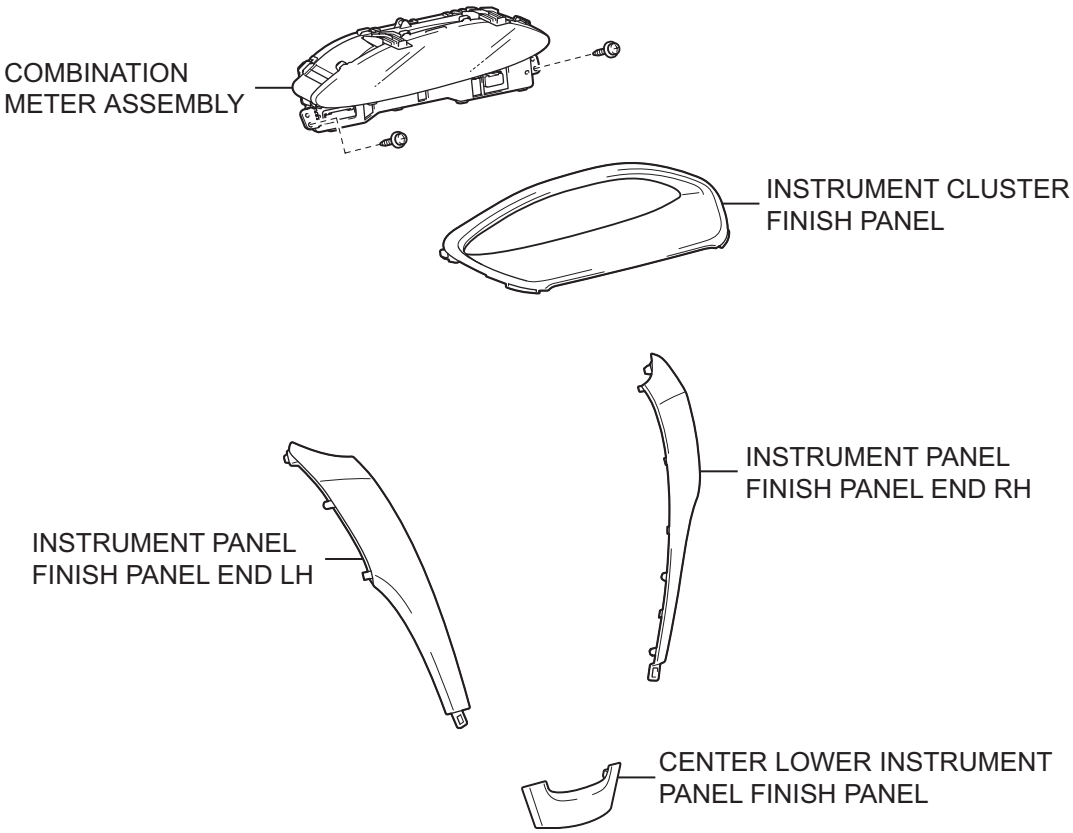

P

E116817E02

for Hatchback:

w/ Curtain Shield Airbag:

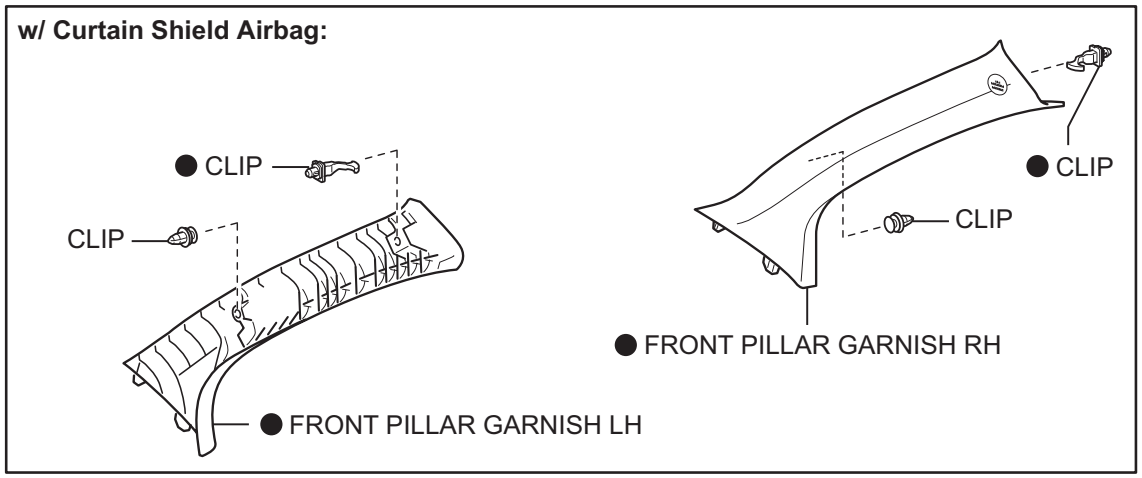

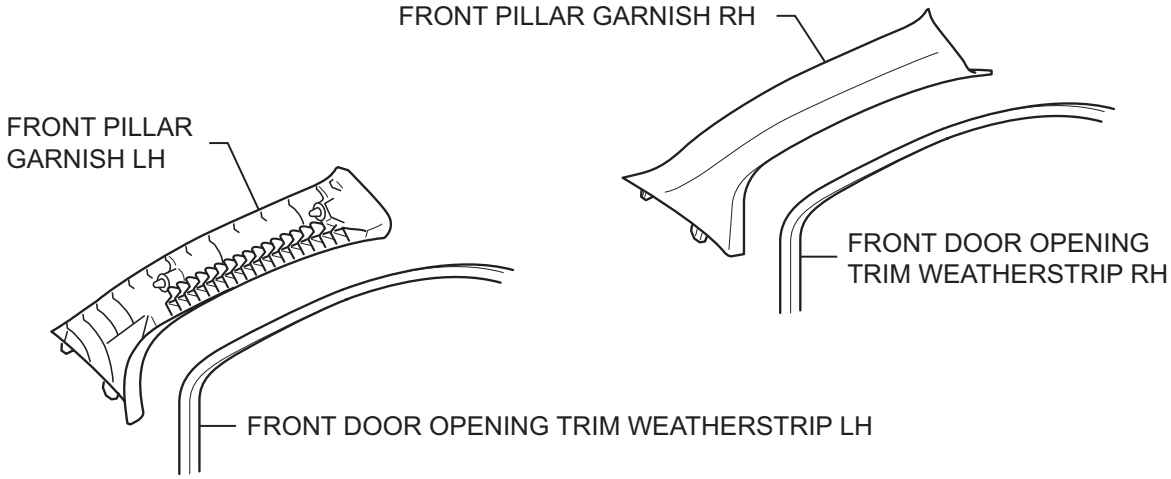

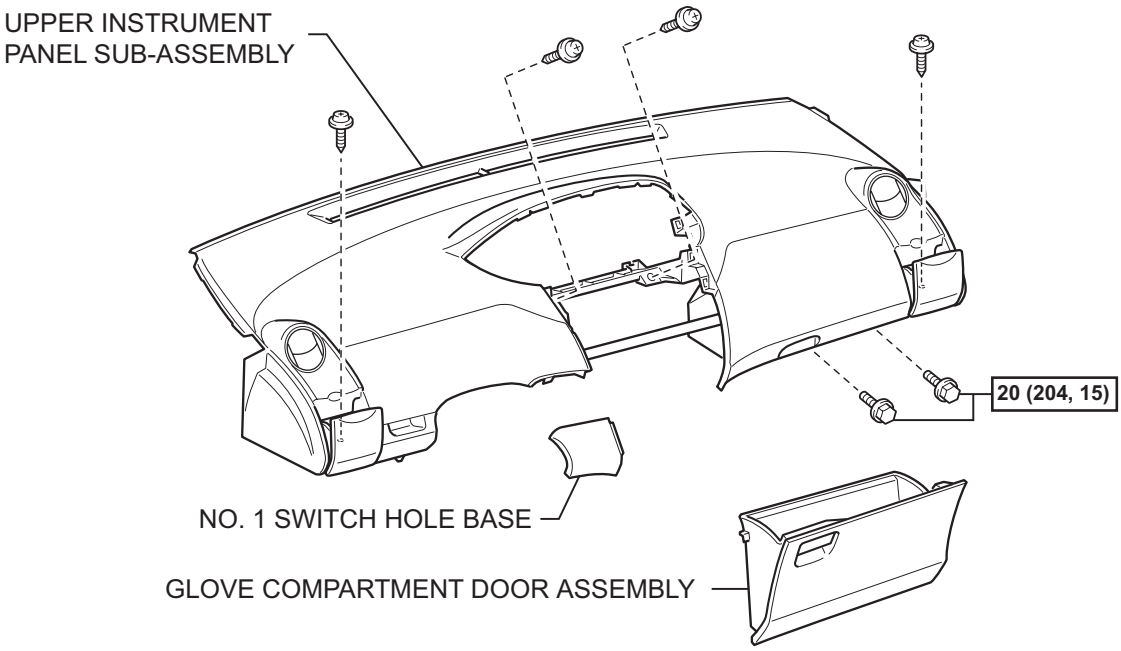

N*m (kgf*cm, ft.*lbf) : Specified torque

● Non-reusable part

O

B108209E02

BR

for Sedan:

w/ Curtain Shield Airbag:

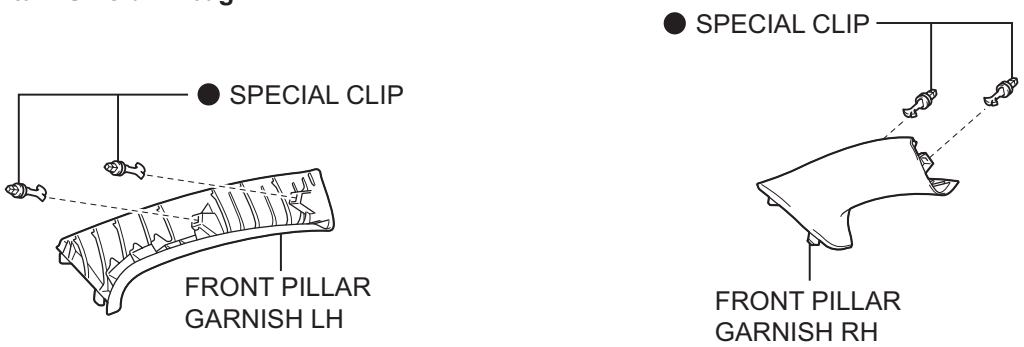

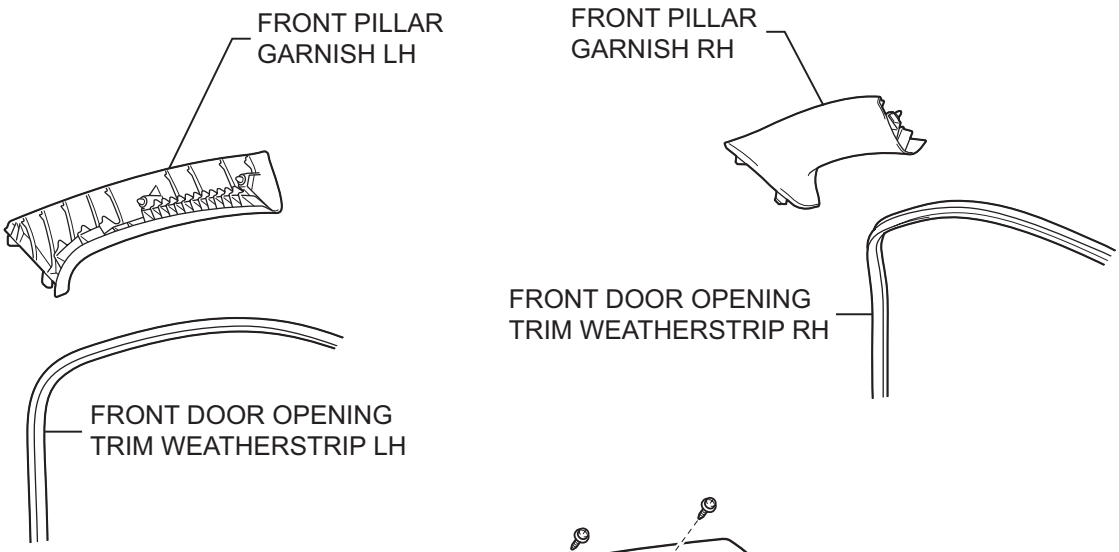

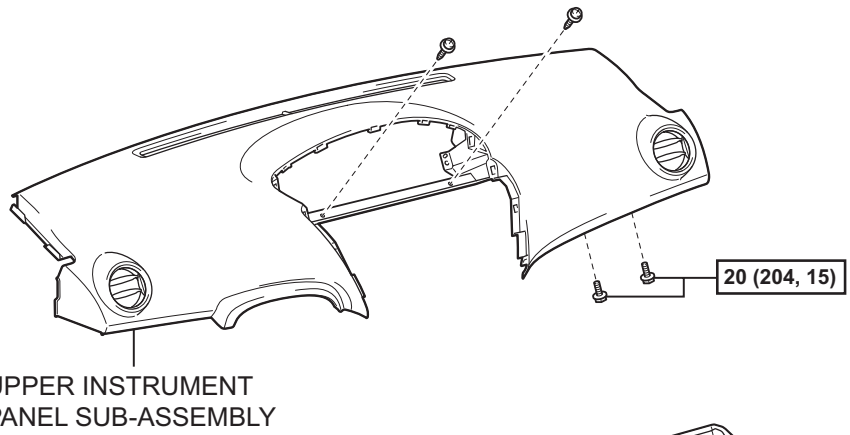

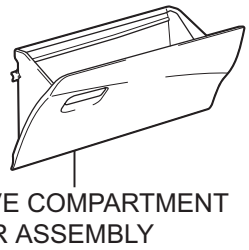

N*m (kgf*cm, ft*lbf) : Specified torque

● Non-reusable part

P

B132310E04

BR

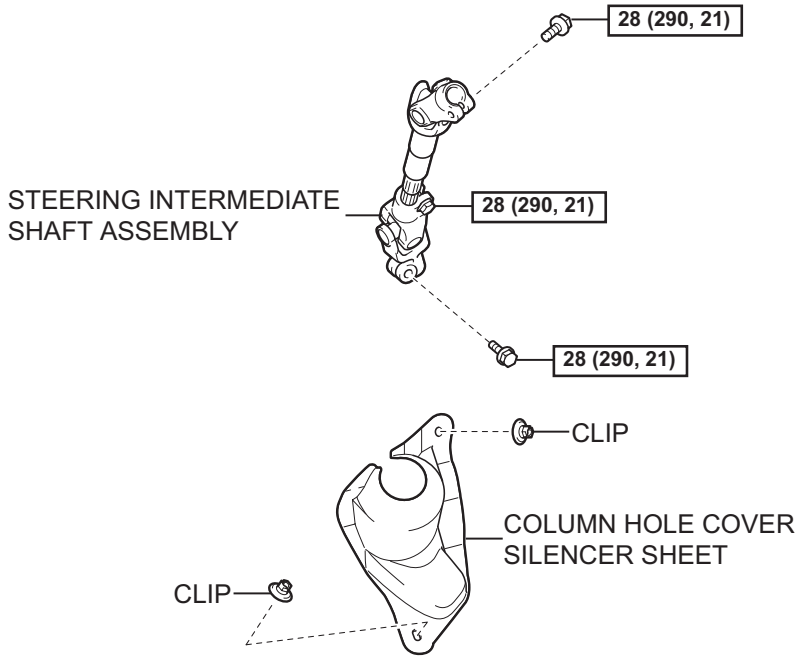

for Hatchback:

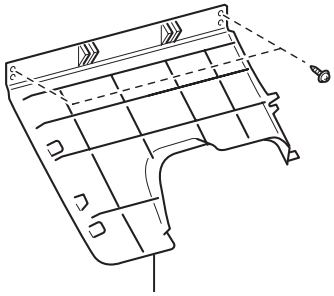

LOWER INSTRUMENT PANEL FINISH PANEL SUB-ASSEMBLY

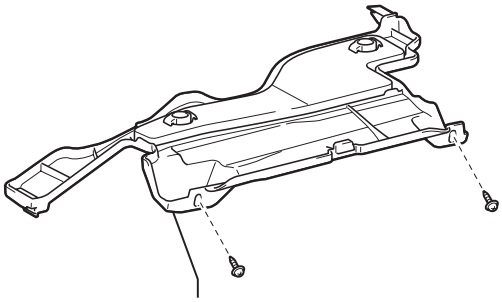

INSTRUMENT PANEL UNDER COVER SUB-ASSEMBLY

for Sedan:

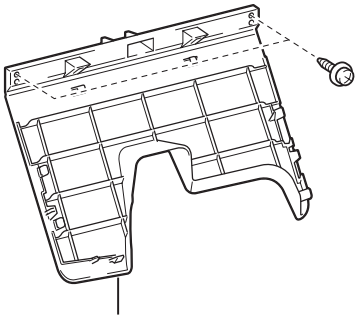

LOWER INSTRUMENT PANEL FINISH PANEL SUB-ASSEMBLY

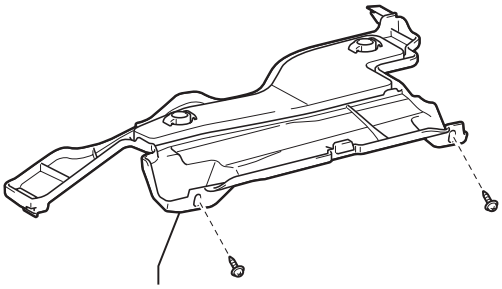

INSTRUMENT PANEL UNDER COVER SUB-ASSEMBLY

N*m (kgf*cm, ft*lbf) : Specified torque

P

C133140E01

BR

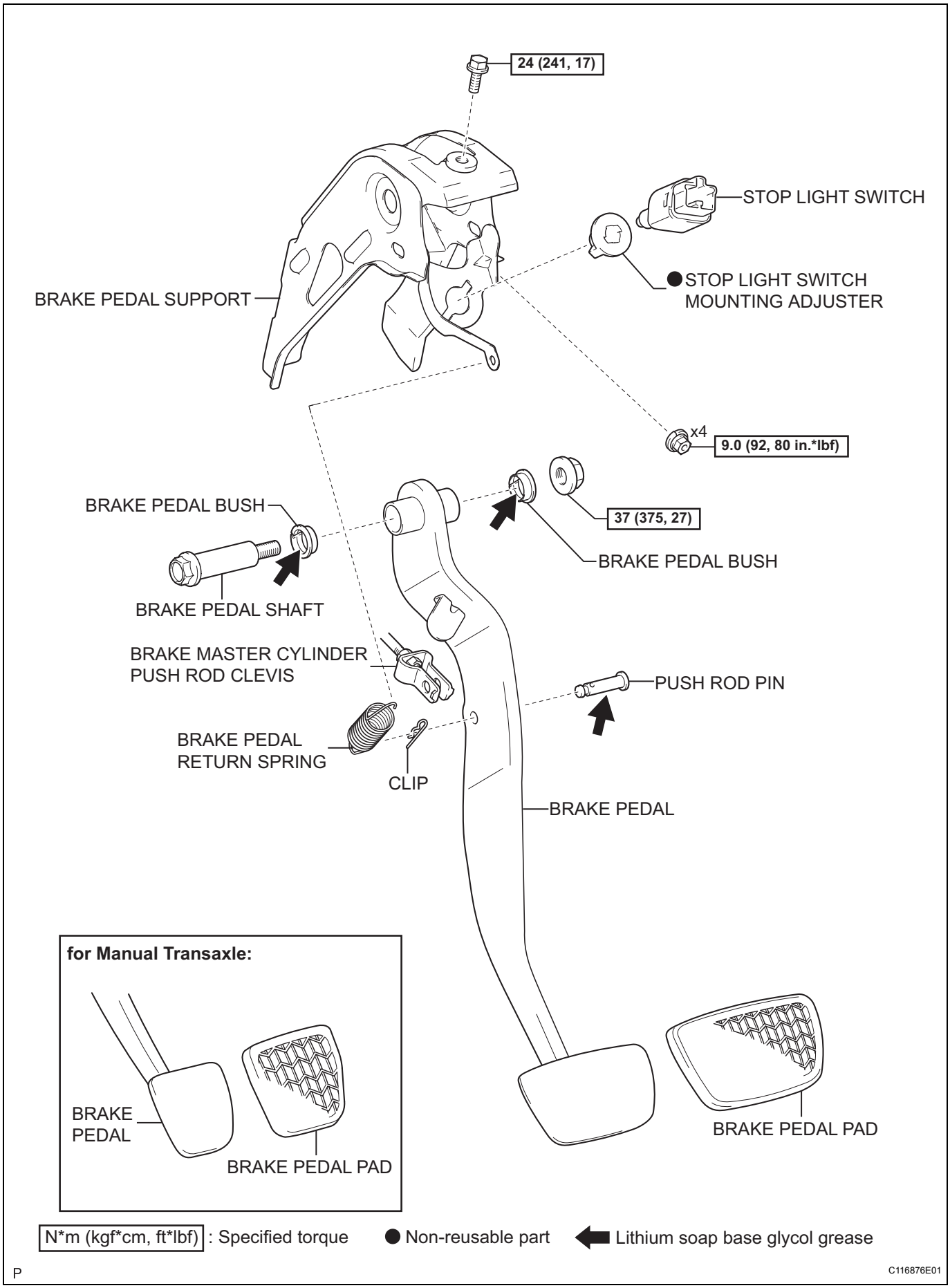
24 (241, 17)
STOP LIGHT SWITCH
STOP LIGHT SWITCH MOUNTING ADJUSTER
BRAKE PEDAL SUPPORT
x4
9.0 (92, 80 in.*lbf)
BRAKE PEDAL BUSH
37 (375, 27)
BRAKE PEDAL BUSH
BRAKE PEDAL SHAFT
BRAKE MASTER CYLINDER PUSH ROD CLEVIS
PUSH ROD PIN
BRAKE PEDAL RETURN SPRING
CLIP
BRAKE PEDAL
for Manual Transaxle:
BRAKE PEDAL
BRAKE PEDAL PAD
BRAKE PEDAL PAD
N*m (kgf*cm, ft*lbf) : Specified torque
Non-reusable part
Lithium soap base glycol grease
P
C116876E01

REMOVAL

1. **DISCONNECT CABLE FROM NEGATIVE BATTERY TERMINAL**
2. **REMOVE CENTER LOWER INSTRUMENT PANEL FINISH PANEL (for Sedan) (See page ME-138)**
3. **REMOVE INSTRUMENT PANEL FINISH PANEL END LH**
   Hatchback: (See page IP-19)
   Sedan: (See page IP-5)
4. **REMOVE INSTRUMENT PANEL FINISH PANEL END RH**
   Hatchback: (See page IP-19)
   Sedan: (See page IP-5)
5. **REMOVE INSTRUMENT CLUSTER FINISH PANEL**
   Hatchback: (See page IP-19)
   Sedan: (See page IP-5)
6. **REMOVE COMBINATION METER ASSEMBLY**
   Hatchback: (See page IP-19)
   Sedan: (See page IP-5)
7. **SEPARATE FRONT DOOR OPENING TRIM WEATHERSTRIP RH**
   Hatchback: (See page IP-19)
   Sedan: (See page IP-5)
8. **SEPARATE FRONT DOOR OPENING TRIM WEATHERSTRIP LH**
   Hatchback: (See page IP-19)
   Sedan: (See page IP-5)
9. **REMOVE FRONT PILLAR GARNISH RH**
   Hatchback: (See page IP-19)
   Sedan: (See page IP-5)
10. **REMOVE FRONT PILLAR GARNISH LH**
    Hatchback: (See page IP-19)
    Sedan: (See page IP-5)
11. **REMOVE NO. 1 SWITCH HOLE BASE (for Hatchback) (See page IP-20)**
12. **REMOVE GLOVE COMPARTMENT DOOR ASSEMBLY**
    Hatchback: (See page IP-20)
    Sedan: (See page IP-6)
13. **REMOVE UPPER INSTRUMENT PANEL SUB-ASSEMBLY**
    Hatchback: (See page IP-21)
    Sedan: (See page IP-6)
14. **REMOVE INSTRUMENT PANEL UNDER COVER SUB-ASSEMBLY**
    Hatchback: (See page IP-67)
    Sedan: (See page IP-44)

15. REMOVE LOWER INSTRUMENT PANEL FINISH PANEL SUB-ASSEMBLY
Hatchback: (See page IP-69)
Sedan: (See page IP-45)

16. REMOVE COLUMN HOLE COVER SILENCER SHEET (See page PS-74)

17. REMOVE STEERING INTERMEDIATE SHAFT ASSEMBLY (See page SR-32)

18. REMOVE STOP LIGHT SWITCH
(a) Disconnect the connector from the stop light switch.
(b) Disconnect the wire harness clamp from the pedal support.

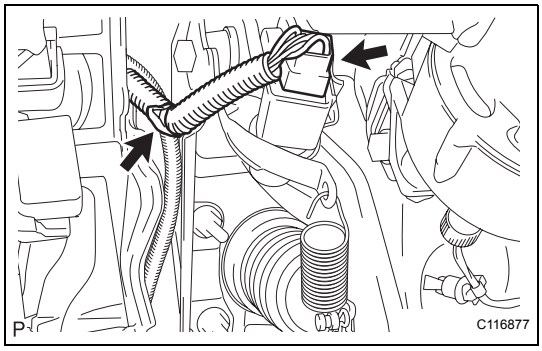

(c) Turn the stop light switch counterclockwise, and remove the stop light switch.

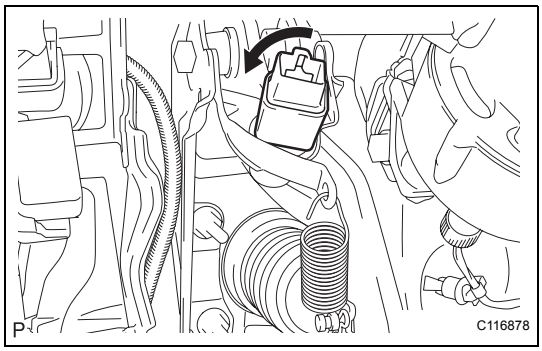

19. REMOVE STOP LIGHT SWITCH MOUNTING ADJUSTER
(a) Remove the stop light switch mounting adjuster from the pedal support.

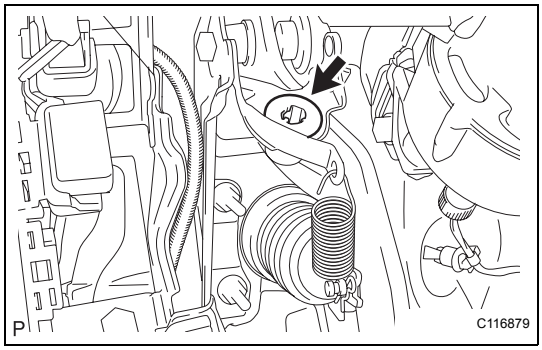

20. SEPARATE BRAKE MASTER CYLINDER PUSH ROD CLEVIS
(a) Remove the brake pedal return spring.
(b) Remove the clip and the push rod pin and separate the push rod clevis from the brake pedal.

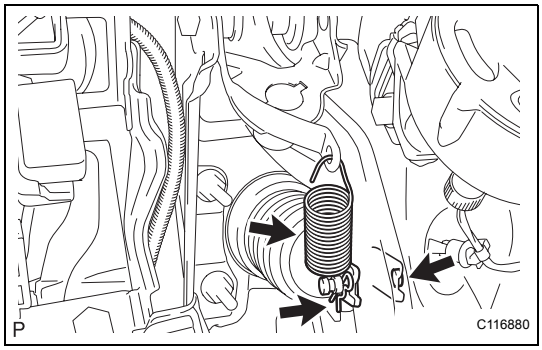

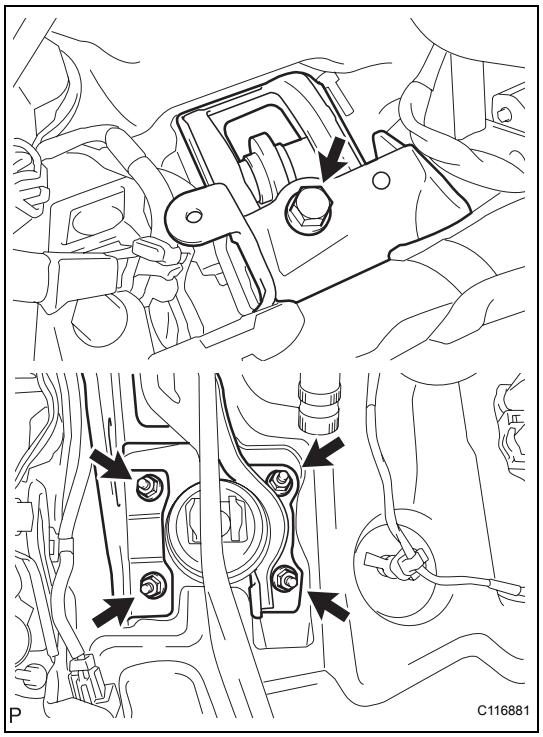

21. REMOVE BRAKE PEDAL SUPPORT

(a) Remove the 4 nuts and bolt and remove the pedal support.

22. REMOVE BRAKE PEDAL

(a) Remove the nut and brake pedal shaft and remove the brake pedal from the pedal support.

23. REMOVE BRAKE PEDAL BUSH

(a) Remove the 2 brake pedal bushes from the brake pedal.

24. REMOVE BRAKE PEDAL PAD

(a) Remove the brake pedal pad from the brake pedal.

INSTALLATION

1. INSTALL BRAKE PEDAL PAD

(a) Install the brake pedal pad onto the brake pedal.

2. INSTALL BRAKE PEDAL BUSH

(a) Apply lithium soap base glycol grease to the 2 bushes.

(b) Install the 2 bushes onto the brake pedal.

3. INSTALL BRAKE PEDAL

(a) Install the brake pedal onto the pedal support with the brake pedal shaft and nut.
Torque: 37 N*m (375 kgf*cm, 27 ft.*lbf)

4. INSTALL BRAKE PEDAL SUPPORT

(a) Install the pedal support with the bolt and 4 nuts.
Torque: Bolt
24 N*m (241 kgf*cm, 17 ft.*lbf)
Nut
9.0 N*m (92 kgf*cm, 80 in.*lbf)

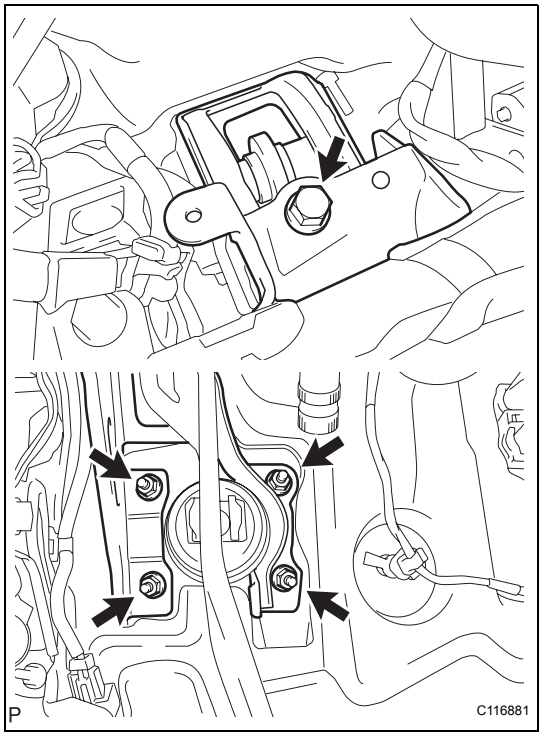

5. INSTALL BRAKE MASTER CYLINDER PUSH ROD CLEVIS

(a) Apply lithium soap base glycol grease to the push rod pin.

(b) Install the push rod clevis with the push rod pin and clip.

(c) Install the brake pedal return spring.

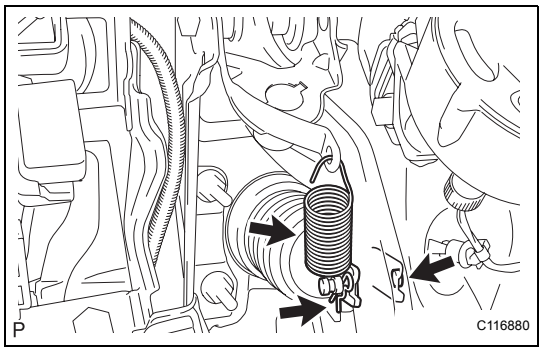

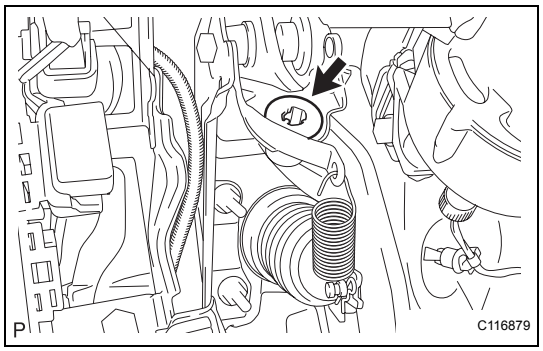

6. INSTALL STOP LIGHT SWITCH MOUNTING ADJUSTER

(a) Install a new stop light switch mounting adjuster onto the pedal support.

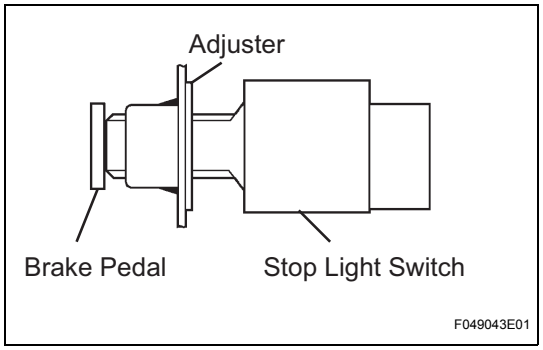

7. INSTALL STOP LIGHT SWITCH

(a) Insert the stop light switch into the adjuster until it just touches the brake pedal.
NOTICE:
Do not depress the brake pedal.

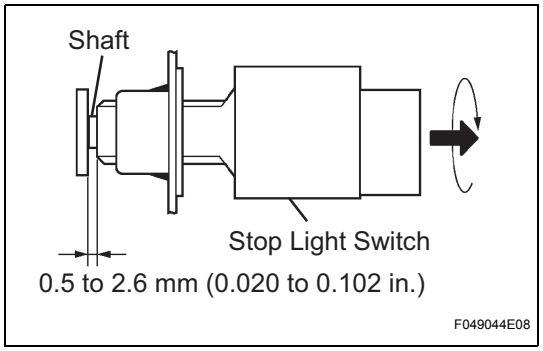

(b) Make a quarter turn clockwise to install the stop light switch.
NOTICE:
Do not depress the brake pedal.
HINT:
The turning torque for installing the stop light switch:
Torque: 1.5 N*m (15 kgf*cm, 13 in.*lbf) or less

(c) Check the stop light switch clearance.
Stop light switch clearance:
0.5 to 2.6 mm (0.020 to 0.102 in.)

(d) Connect the wire harness clamp onto the pedal support.

(e) Connect the connector to the stop light switch.

8. INSPECT AND ADJUST BRAKE PEDAL (See page BR-8)

9. INSTALL STEERING INTERMEDIATE SHAFT ASSEMBLY (See page SR-39)

10. INSTALL COLUMN HOLE COVER SILENCER SHEET (See page SR-39)

11. INSTALL LOWER INSTRUMENT PANEL FINISH PANEL SUB-ASSEMBLY
Hatchback: (See page IP-78)
Sedan: (See page IP-54)

12. INSTALL INSTRUMENT PANEL UNDER COVER SUB-ASSEMBLY
Hatchback: (See page IP-80)
Sedan: (See page IP-55)

13. INSTALL UPPER INSTRUMENT PANEL SUB-ASSEMBLY
Hatchback: (See page IP-29)

Sedan: (See page IP-11)

14. **INSTALL GLOVE COMPARTMENT DOOR ASSEMBLY**
    Hatchback: (See page IP-32)
    Sedan: (See page IP-13)

15. **INSTALL NO. 1 SWITCH HOLE BASE (for Hatchback) (See page IP-32)**

16. **INSTALL FRONT PILLAR GARNISH RH**
    Hatchback: (See page IP-32)
    Sedan: (See page IP-14)

17. **INSTALL FRONT PILLAR GARNISH LH**
    Hatchback: (See page IP-32)
    Sedan: (See page IP-14)

18. **INSTALL FRONT DOOR OPENING TRIM WEATHERSTRIP RH**
    Hatchback: (See page IP-32)
    Sedan: (See page IP-14)

19. **INSTALL FRONT DOOR OPENING TRIM WEATHERSTRIP LH**
    Hatchback: (See page IP-32)
    Sedan: (See page IP-14)

20. **INSTALL COMBINATION METER ASSEMBLY**
    Hatchback: (See page IP-32)
    Sedan: (See page IP-14)

21. **INSTALL INSTRUMENT CLUSTER FINISH PANEL**
    Hatchback: (See page IP-32)
    Sedan: (See page IP-14)

22. **INSTALL INSTRUMENT PANEL FINISH PANEL END RH**
    Hatchback: (See page IP-32)
    Sedan: (See page IP-14)

23. **INSTALL INSTRUMENT PANEL FINISH PANEL END LH**
    Hatchback: (See page IP-33)
    Sedan: (See page IP-14)

24. **INSTALL CENTER LOWER INSTRUMENT PANEL FINISH PANEL (for Sedan) (See page ME-142)**

25. **CONNECT CABLE TO NEGATIVE BATTERY TERMINAL**
    Torque: 5.4 N*m (55 kgf*cm, 48 in.*lbf)

26. **INSPECT SRS WARNING LIGHT**
    (See page RS-31)

BRAKE MASTER CYLINDER

COMPONENTS

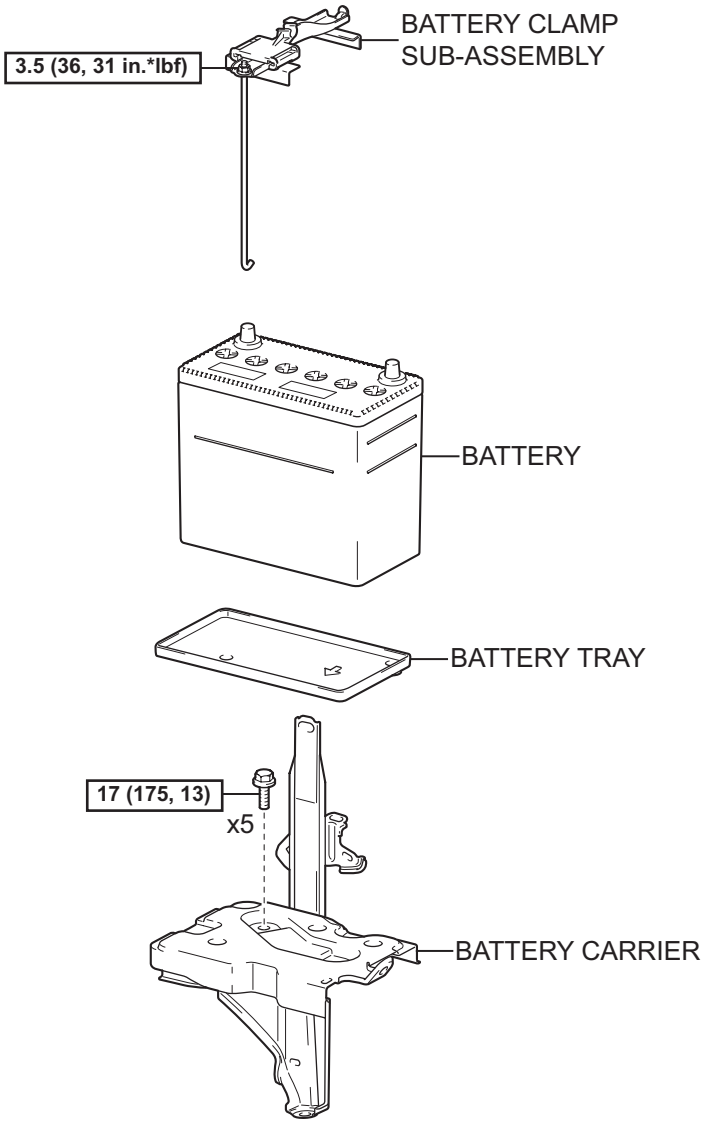

N*m (kgf*cm, ft*lbf) : Specified torque

P

C107526E05

BR

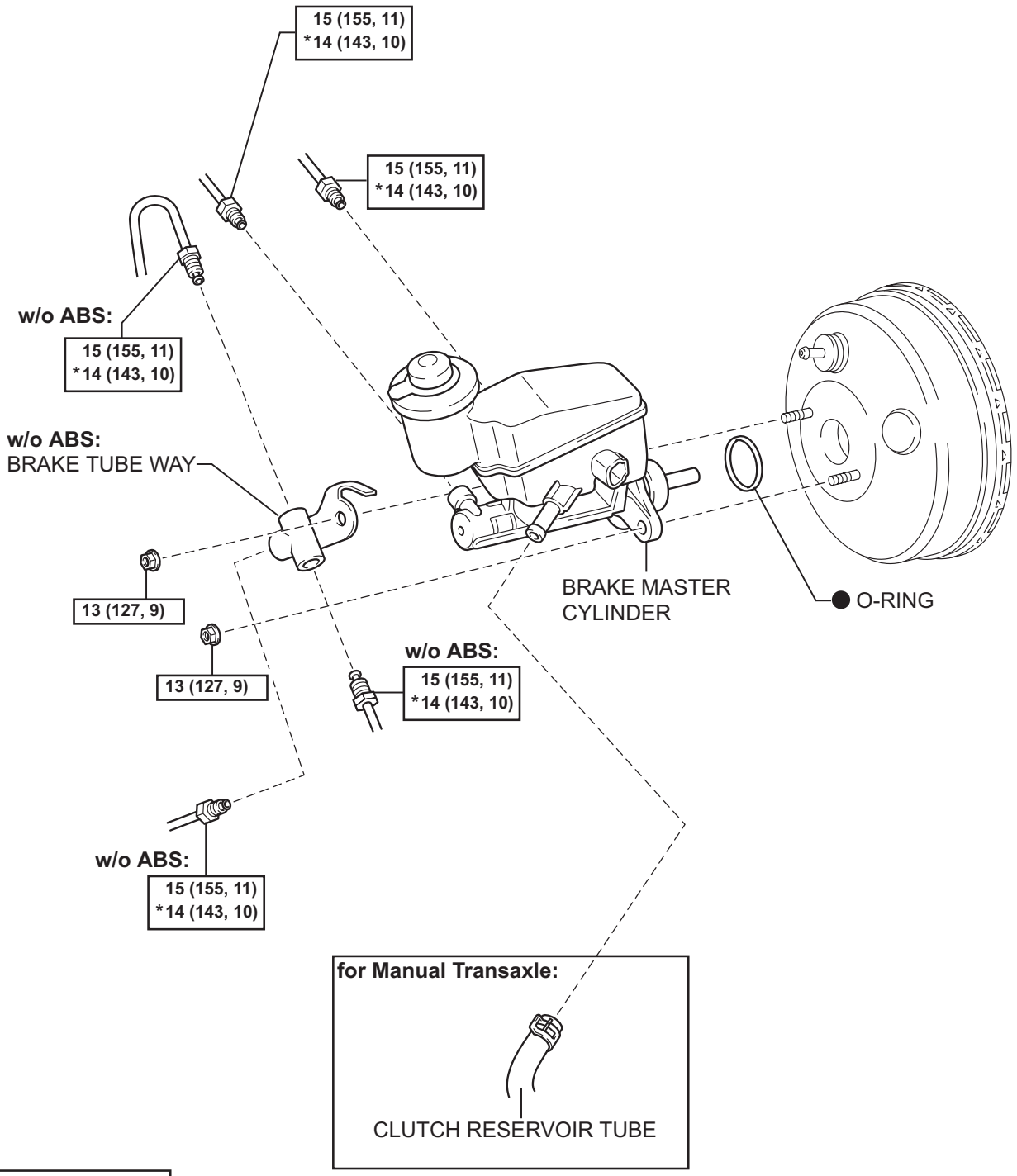

N*m (kgf*cm, ft*lbf) : Specified torque

● Non-reusable part

* For use with SST

N

C121830E03

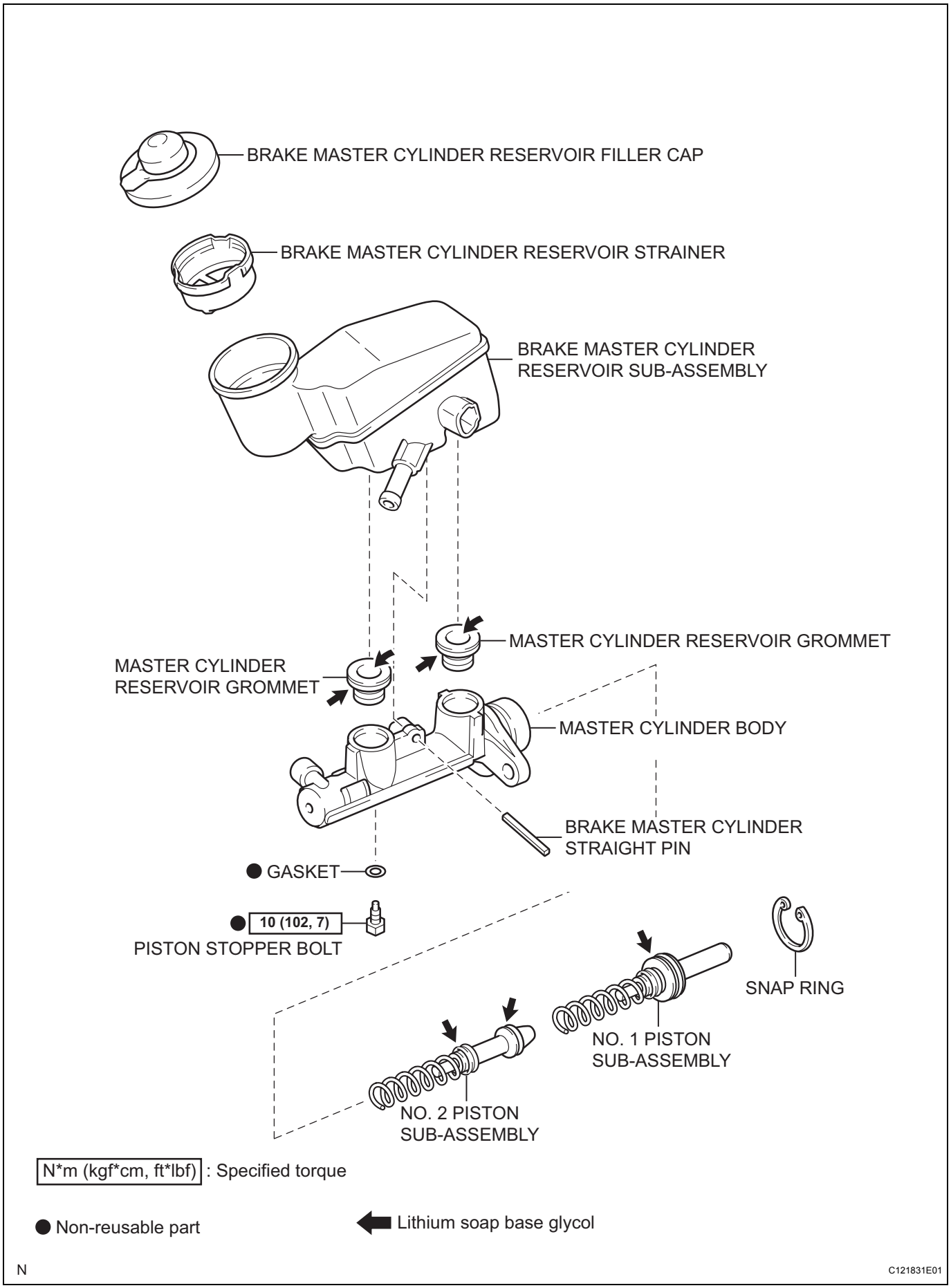
BRAKE MASTER CYLINDER RESERVOIR FILLER CAP
BRAKE MASTER CYLINDER RESERVOIR STRAINER
BRAKE MASTER CYLINDER RESERVOIR SUB-ASSEMBLY
MASTER CYLINDER RESERVOIR GROMMET
MASTER CYLINDER RESERVOIR GROMMET
MASTER CYLINDER BODY
BRAKE MASTER CYLINDER STRAIGHT PIN
● GASKET
● 10 (102, 7)
PISTON STOPPER BOLT
SNAP RING
NO. 1 PISTON SUB-ASSEMBLY
NO. 2 PISTON SUB-ASSEMBLY
N*m (kgf*cm, ft*lbf) : Specified torque
● Non-reusable part
Lithium soap base glycol
N
C121831E01

REMOVAL

1. **DRAIN BRAKE FLUID**
   NOTICE:
   Immediately wash off any brake fluid that comes into contact with any painted surfaces.

2. **REMOVE BATTERY (See page EM-122)**

3. **REMOVE BATTERY TRAY**

4. **REMOVE BATTERY CARRIER (See page EM-125)**

5. **DISCONNECT CLUTCH RESERVOIR TUBE (for Manual Transaxle)**
   (a) Slide the clip and disconnect the reservoir tube.

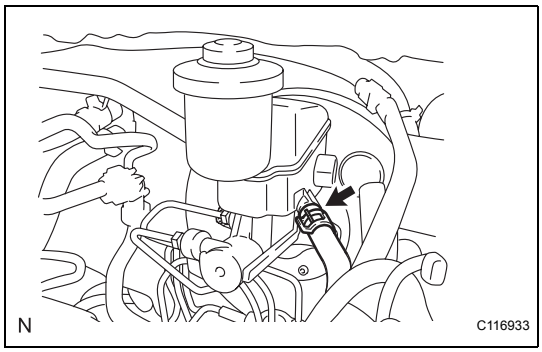

6. **REMOVE BRAKE MASTER CYLINDER**
   NOTICE:
   Remove the brake master cylinder after depressing the brake pedal several times and bleeding the vacuum pressure from inside the brake booster.
   (a) Disconnect the brake fluid level warning switch connector.

   (b) w/o ABS:
      (1) Using SST, separate the 3 brake tubes from the brake tube way.
      SST 09023-00100

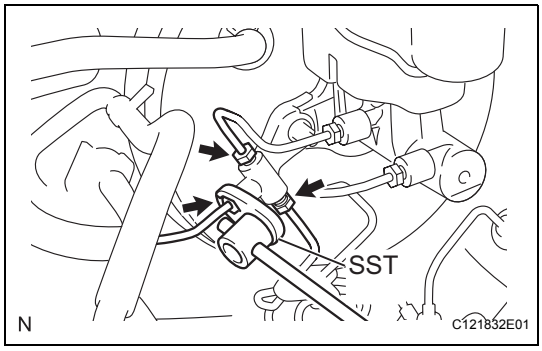

   (c) Using SST, separate the 2 brake tubes from the brake master cylinder.
   SST 09023-00100

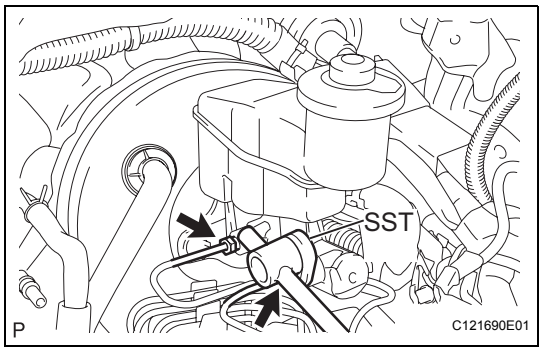

   (d) w/ ABS:
      (1) Remove the 2 nuts and remove the brake master cylinder.

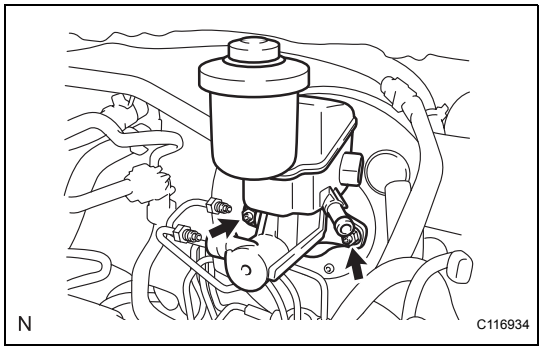

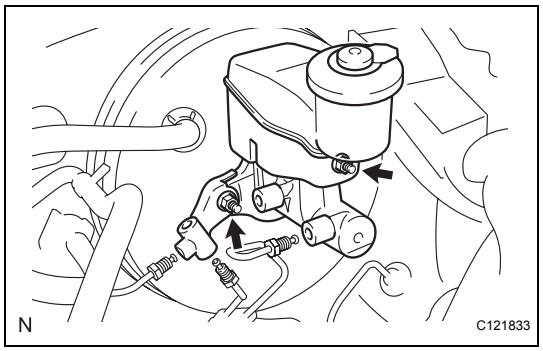

(e) w/o ABS:
  (1) Remove the 2 nuts and brake tube way and remove the brake master cylinder.
(f) Remove the O-ring from the brake master cylinder.

DISASSEMBLY

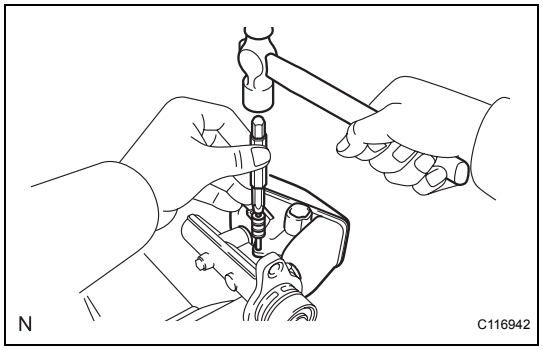

1. REMOVE BRAKE MASTER CYLINDER RESERVOIR SUB-ASSEMBLY

(a) Fix the brake master cylinder in a vise between aluminum plates.
NOTICE:
Do not overtighten the vise.
(b) Using a pin punch and hammer, tap out the straight pin.
(c) Remove the master cylinder reservoir and 2 grommets.
(d) Remove the filler cap and strainer from the master cylinder reservoir.

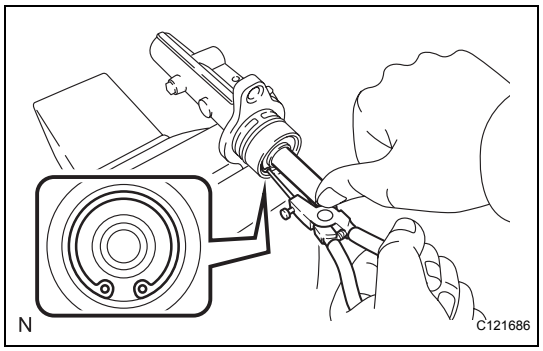

2. REMOVE BRAKE MASTER CYLINDER KIT

(a) Push in the piston and remove the snap ring using snap ring pliers.

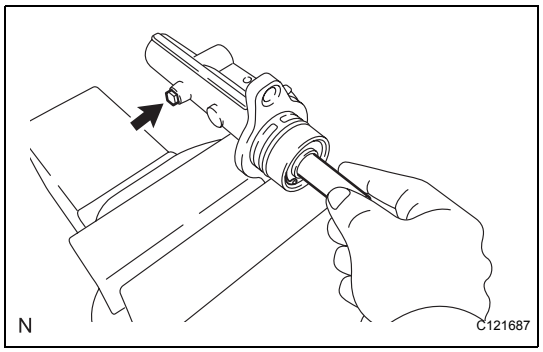

(b) Push in the piston and remove the piston stopper bolt and gasket.
(c) Remove No. 1 piston from the master cylinder body by pulling it straight out.
NOTICE:
Do not scratch the inside of the cylinder body.

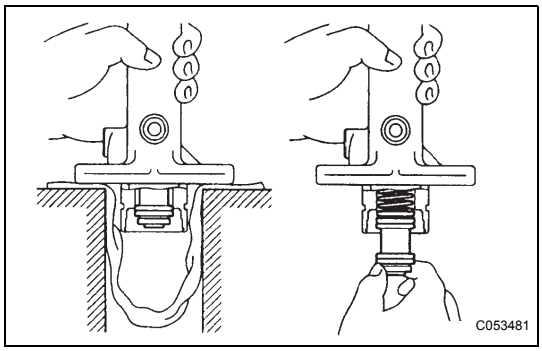

(d) Tap the flanged part against wooden blocks until the end of No. 2 piston comes out. When the end of No. 2 piston comes out, pull No. 2 piston straight out of the master cylinder body.
NOTICE:
Do not scratch the inside of the cylinder body.

INSPECTION

1. INSPECT BRAKE MASTER CYLINDER

(a) Check the inside of the master cylinder body for scratch.
If scratched, replace the brake master cylinder sub-assembly with a new one.

REASSEMBLY

1. INSTALL BRAKE MASTER CYLINDER KIT

(a) Fix the master cylinder body in a vise between aluminum plates.
NOTICE:
Do not overtighten the vise.

(b) Apply lithium soap base glycol grease to the rubber part as shown in the illustration.

(c) Install No. 1 piston and No. 2 piston onto the master cylinder body.
NOTICE:
- **Install the piston straight while being not to careful damage the inside of the cylinder.**
- **Do not damage the lip of the cylinder cup.**

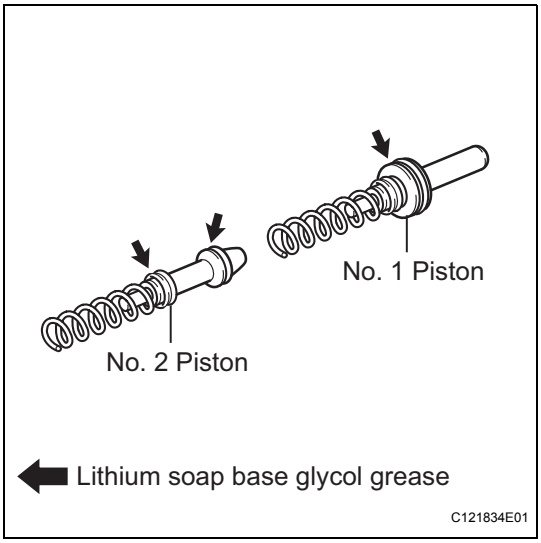

(d) Push in the piston and install a new gasket and a new piston stopper bolt.
Torque: 10 N*m (102 kgf*cm, 7 ft.*lbf)

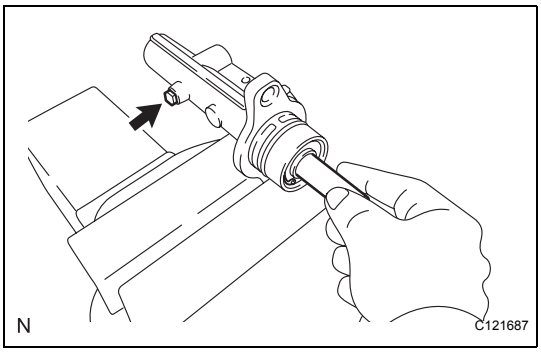

(e) Install the snap ring using snap ring pliers with the piston pushed in.
NOTICE:
Do not scratch the inside of the cylinder body.

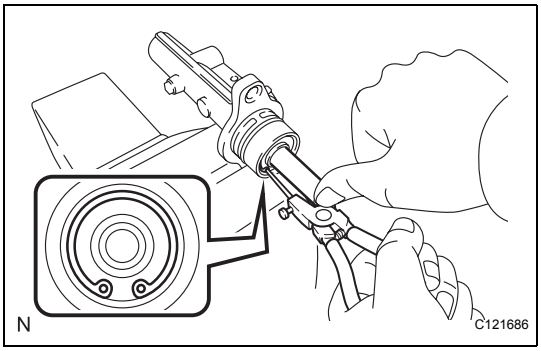

2. INSTALL BRAKE MASTER CYLINDER RESERVOIR SUB-ASSEMBLY

(a) Install the strainer and filler cap onto the master cylinder reservoir.

(b) Apply lithium soap base glycol grease to the 2 grommets and install them onto the master cylinder body.

(c) Install the master cylinder reservoir onto the master cylinder body.

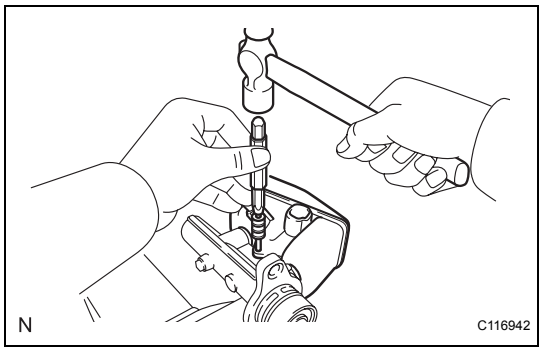

(d) Using a pin punch and hammer, tap in the straight pin.

INSTALLATION

1. INSPECT AND ADJUST BRAKE BOOSTER PUSH ROD

(a) Set SST on the master cylinder and lower the rod of SST until it just touches the piston.
SST 09737-00013

(b) Apply chalk to the flat tip of the SST rod. Turn SST upside down and measure the clearance between the brake booster push rod and SST.
Standard Clearance:
-0.21 to 0 mm (-0.0083 to 0 in.)
If there is clearance between the SST main body and the shell of the brake booster, the push rod is protruding too far. If the chalk does not stick to the tip of the brake booster push rod, the push rod protrusion is insufficient.

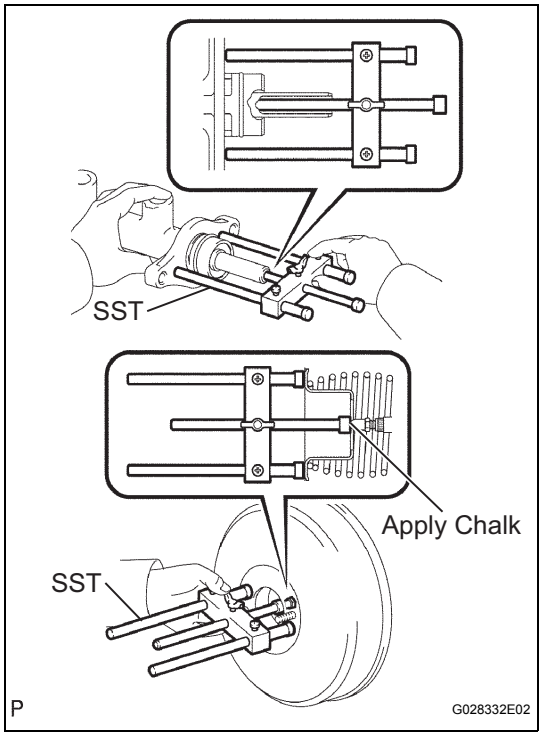

(c) If the clearance is not within the standard, adjust the length by holding the rod using SST and turning the tip of the rod using a 7 mm socket driver.
SST 09737-00020
NOTICE:
Check the push rod clearance again after adjusting.

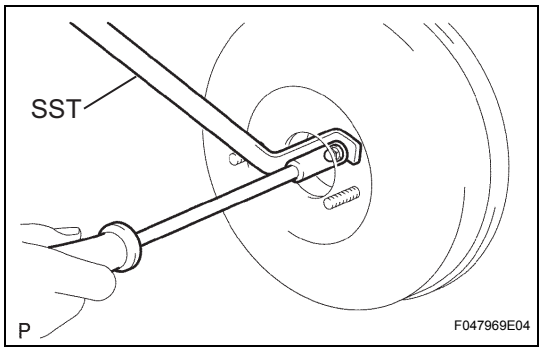

2. INSTALL BRAKE MASTER CYLINDER

(a) Install a new O-ring onto the brake master cylinder.

(b) w/ ABS:
(1) Install the brake master cylinder with the 2 nuts.
Torque: 13 N*m (127 kgf*cm, 9 ft.*lbf)

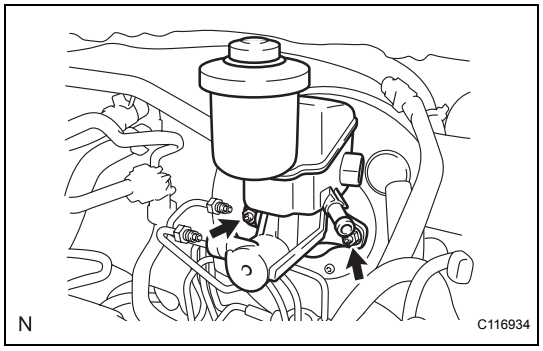

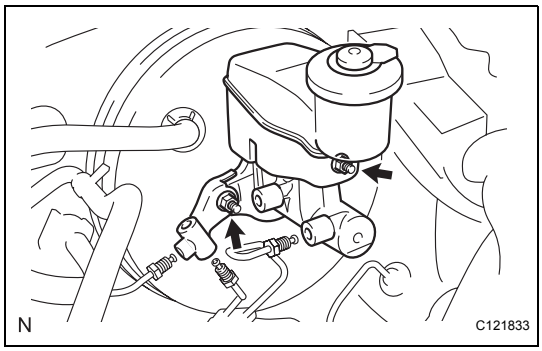

(c) w/o ABS:
(1) Install the brake master cylinder and brake tube way with the 2 nuts.
Torque: 13 N*m (127 kgf*cm, 9 ft.*lbf)

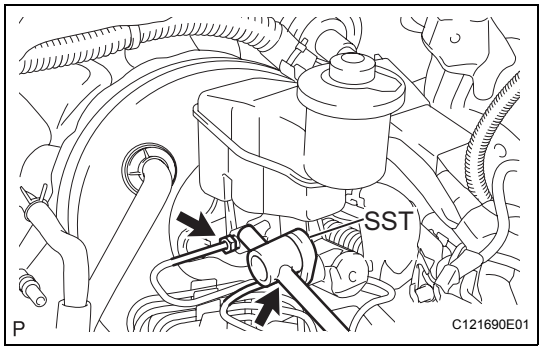

(d) Using SST, install the 2 brake tubes onto the brake master cylinder.
SST 09023-00100
Torque: for use without SST
15 N*m (155 kgf*cm, 11 ft.*lbf)
for use with SST
14 N*m (143 kgf*cm, 10 ft.*lbf)
HINT:
- Use a torque wrench with a fulcrum length of 300 mm (11.81 in.).
- This torque value is effective when SST is parallel to a torque wrench.

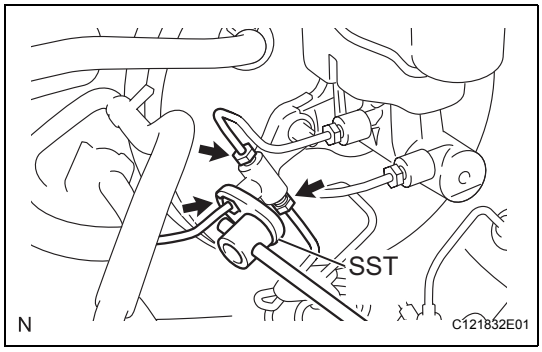

(e) w/o ABS:
(1) Using SST, install the 3 brake tubes to the brake tube way.
SST 09023-00100
Torque: for use without SST
15 N*m (155 kgf*cm, 11 ft.*lbf)
for use with SST
14 N*m (143 kgf*cm, 10 ft.*lbf)
HINT:
- Use a torque wrench with a fulcrum length of 300 mm (11.81 in.).
- This torque value is effective when SST is parallel to a torque wrench.

(f) Connect the brake fluid level warning switch connector.

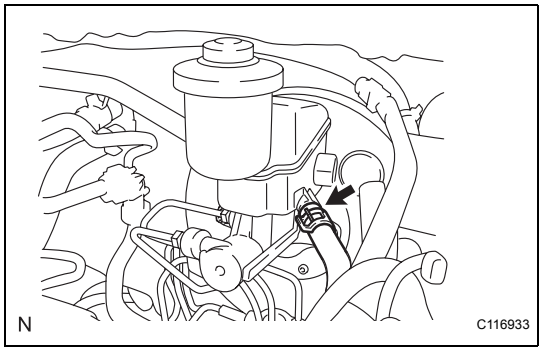

3. **CONNECT CLUTCH RESERVOIR TUBE (for Manual Transaxle)**
(a) Connect the reservoir tube with the clip.
4. **INSTALL BATTERY CARRIER (See page EM-145)**
5. **INSTALL BATTERY TRAY**
6. **INSTALL BATTERY (See page EM-148)**
7. **FILL RESERVOIR WITH BRAKE FLUID (See page BR-10)**
8. **BLEED MASTER CYLINDER (See page BR-10)**
9. **BLEED BRAKE LINE (See page BR-12)**
10. **CHECK FLUID LEVEL IN RESERVOIR (See page BR-12)**

11. CHECK FOR BRAKE FLUID LEAKAGE

BRAKE BOOSTER

COMPONENTS

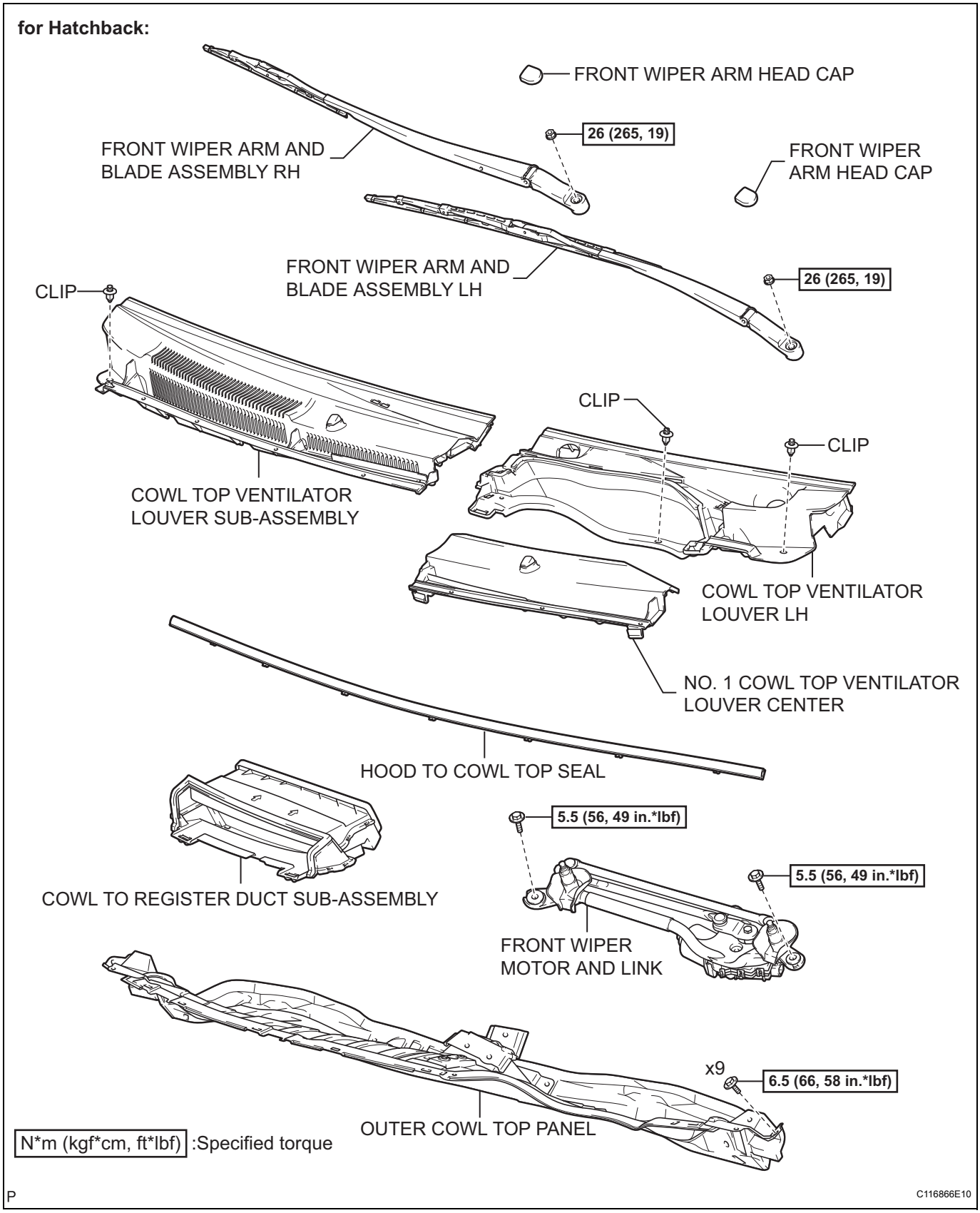

for Sedan:

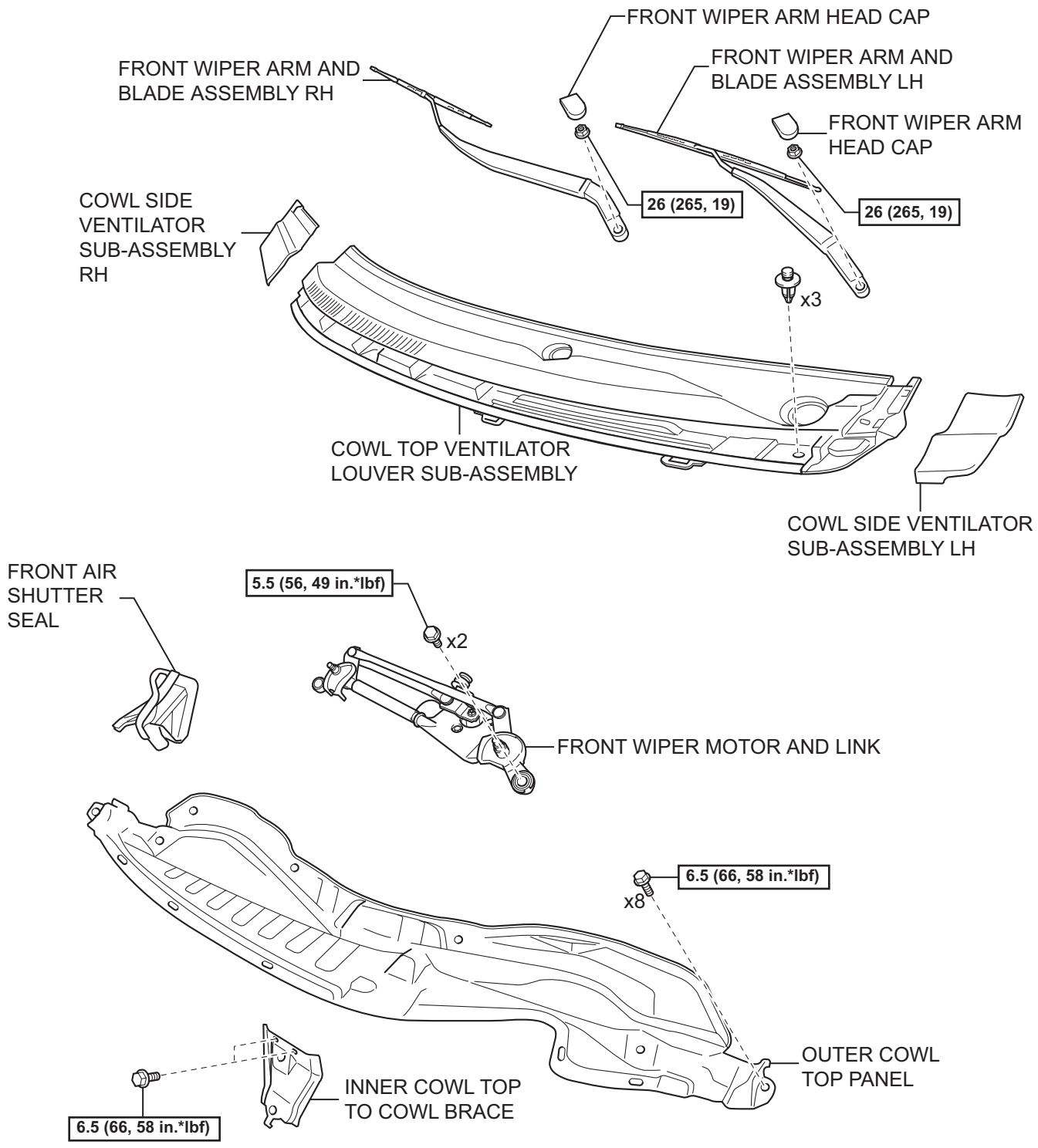

N*m (kgf*cm, ft*lbf) : Specified torque

Y

A133320E07

BR

for Hatchback:

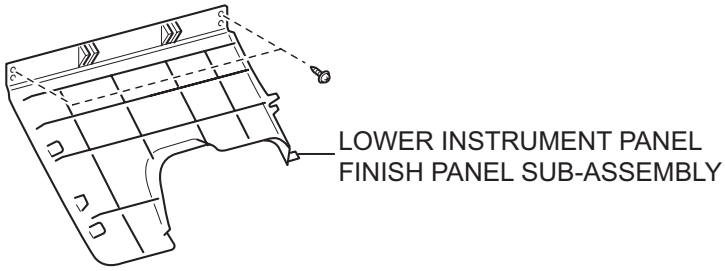

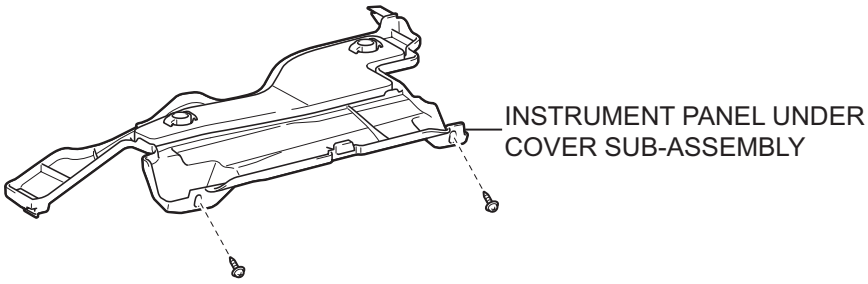

for Sedan:

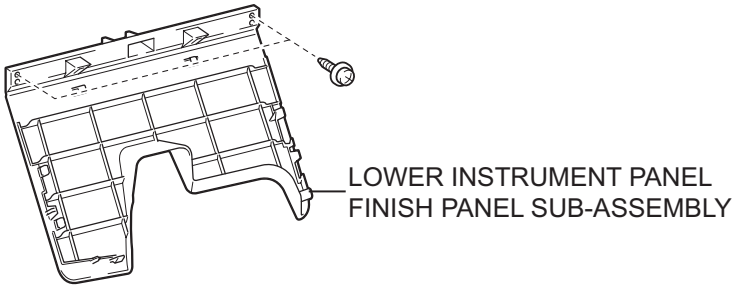

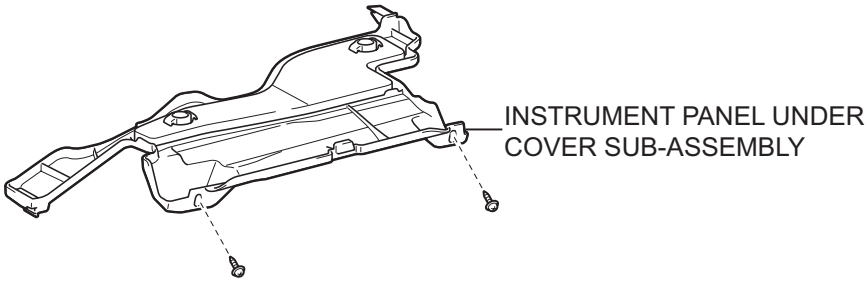

P

C133141E01

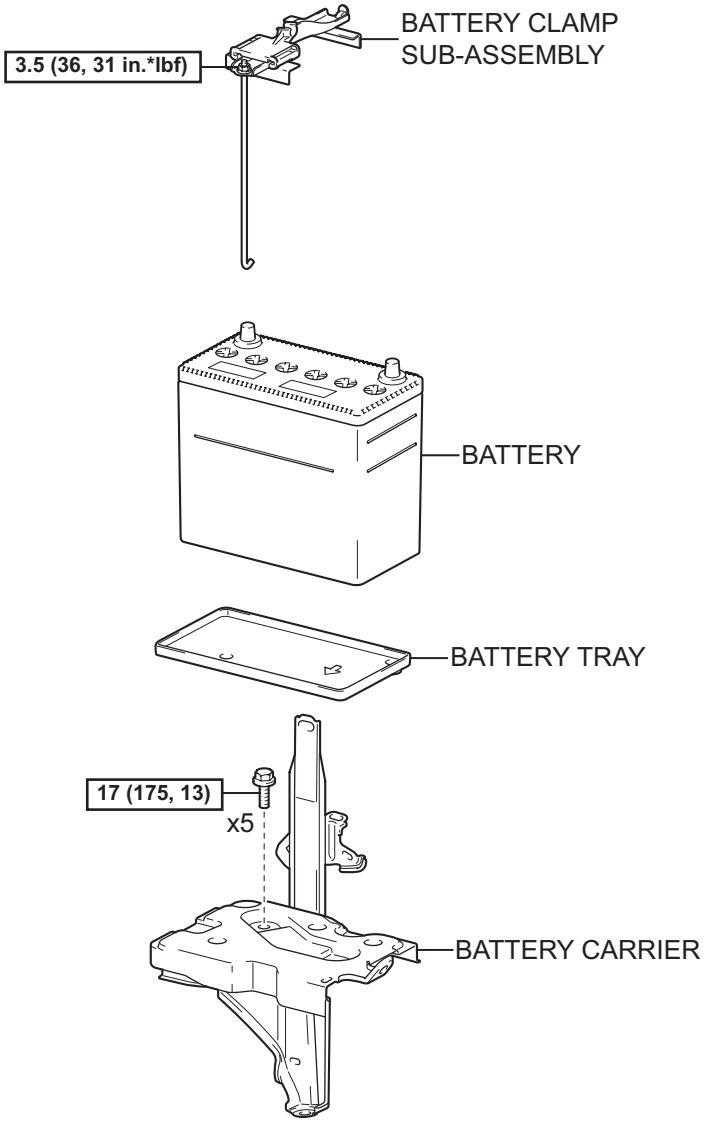

N*m (kgf*cm, ft*lbf) : Specified torque

P

C107526E05

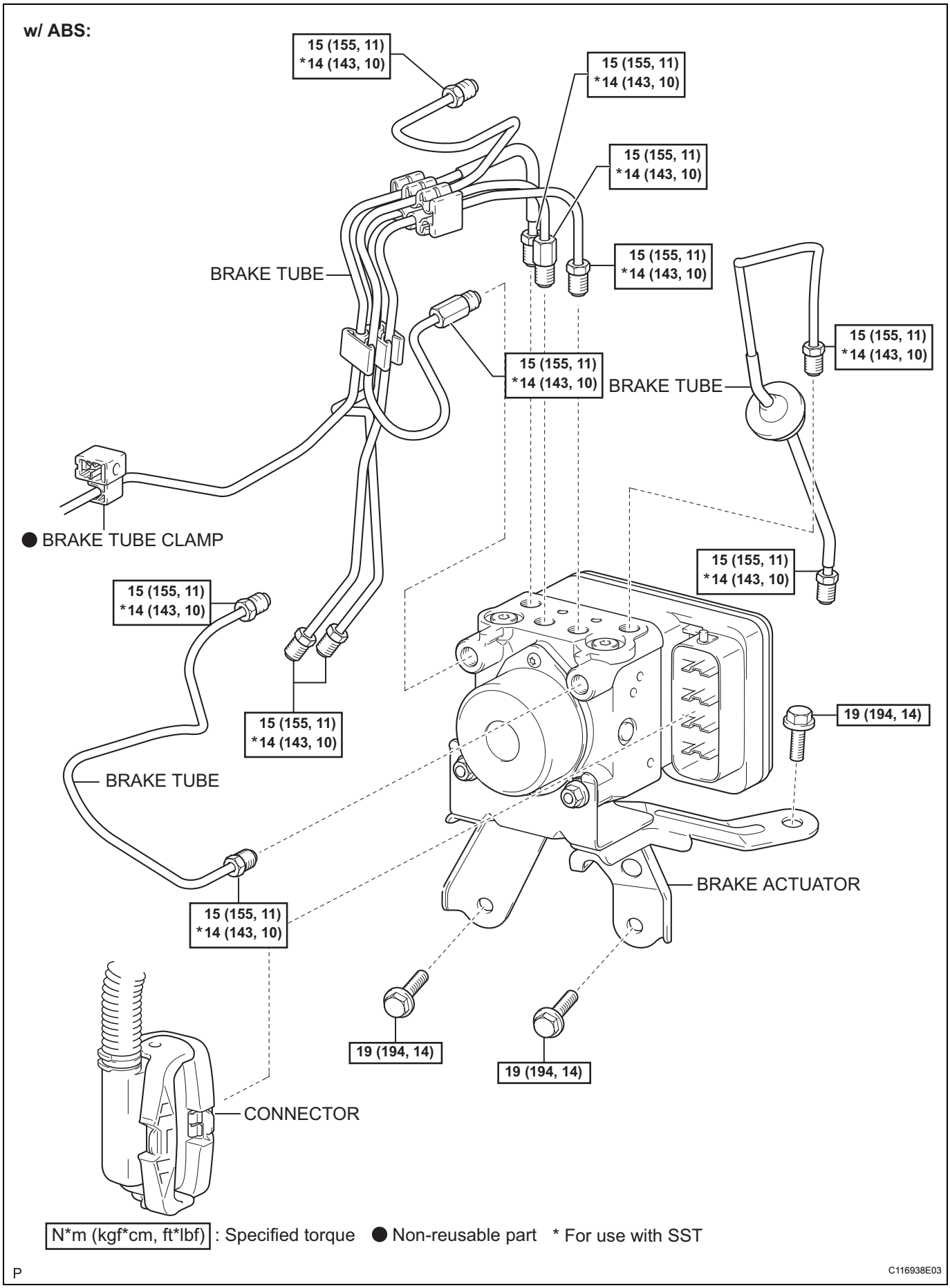
w/ ABS:
15 (155, 11)
*14 (143, 10)
BRAKE TUBE
BRAKE TUBE
BRAKE TUBE
● BRAKE TUBE CLAMP
19 (194, 14)
BRAKE ACTUATOR
CONNECTOR
N*m (kgf*cm, ft*lbf) : Specified torque ● Non-reusable part * For use with SST
P
C116938E03

w/ ABS:

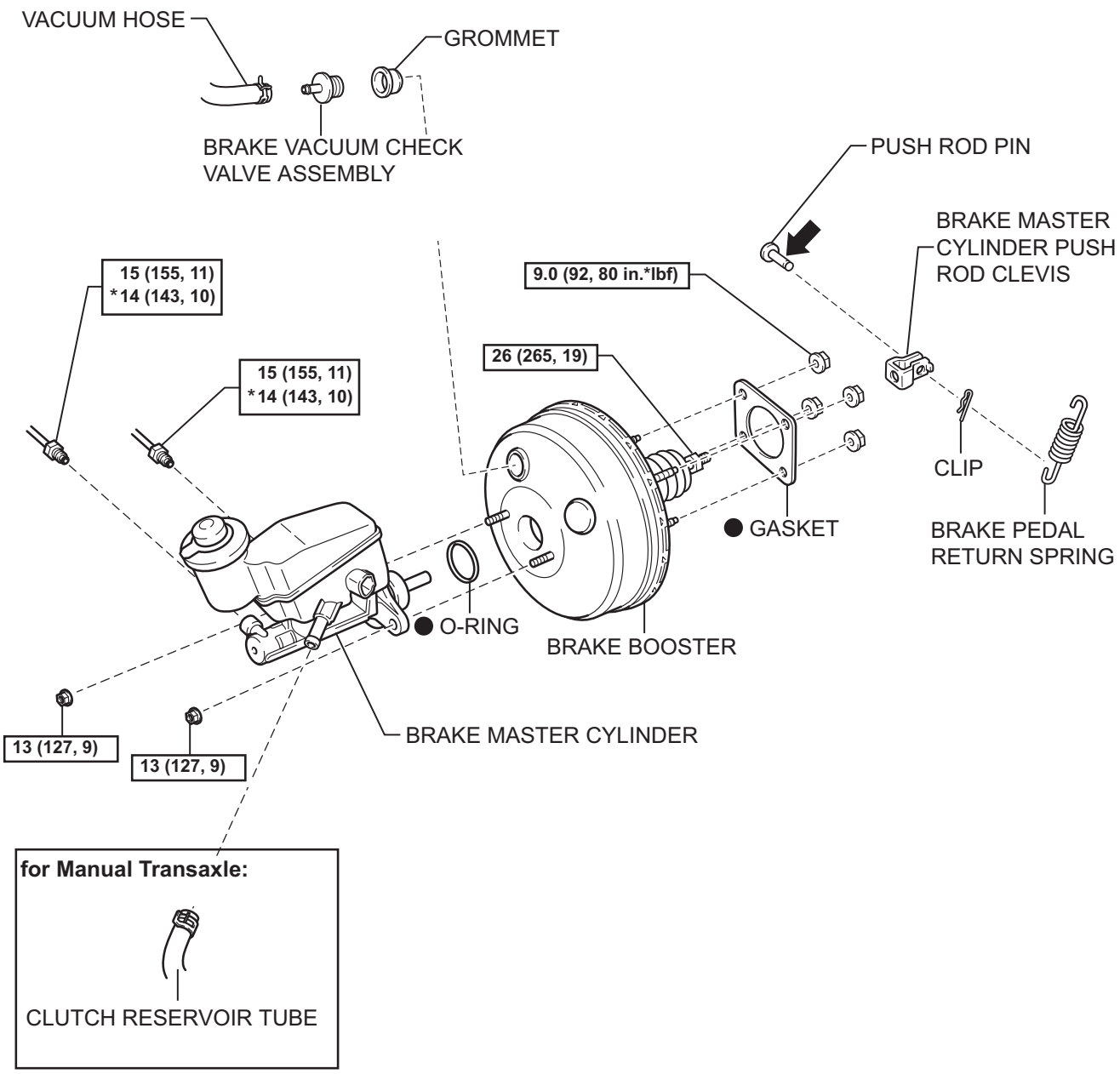

N*m (kgf*cm, ft*lbf) : Specified torque

● Non-reusable part

⬅ Lithium soap base glycol grease * For use with SST

N

C116940E03

BR

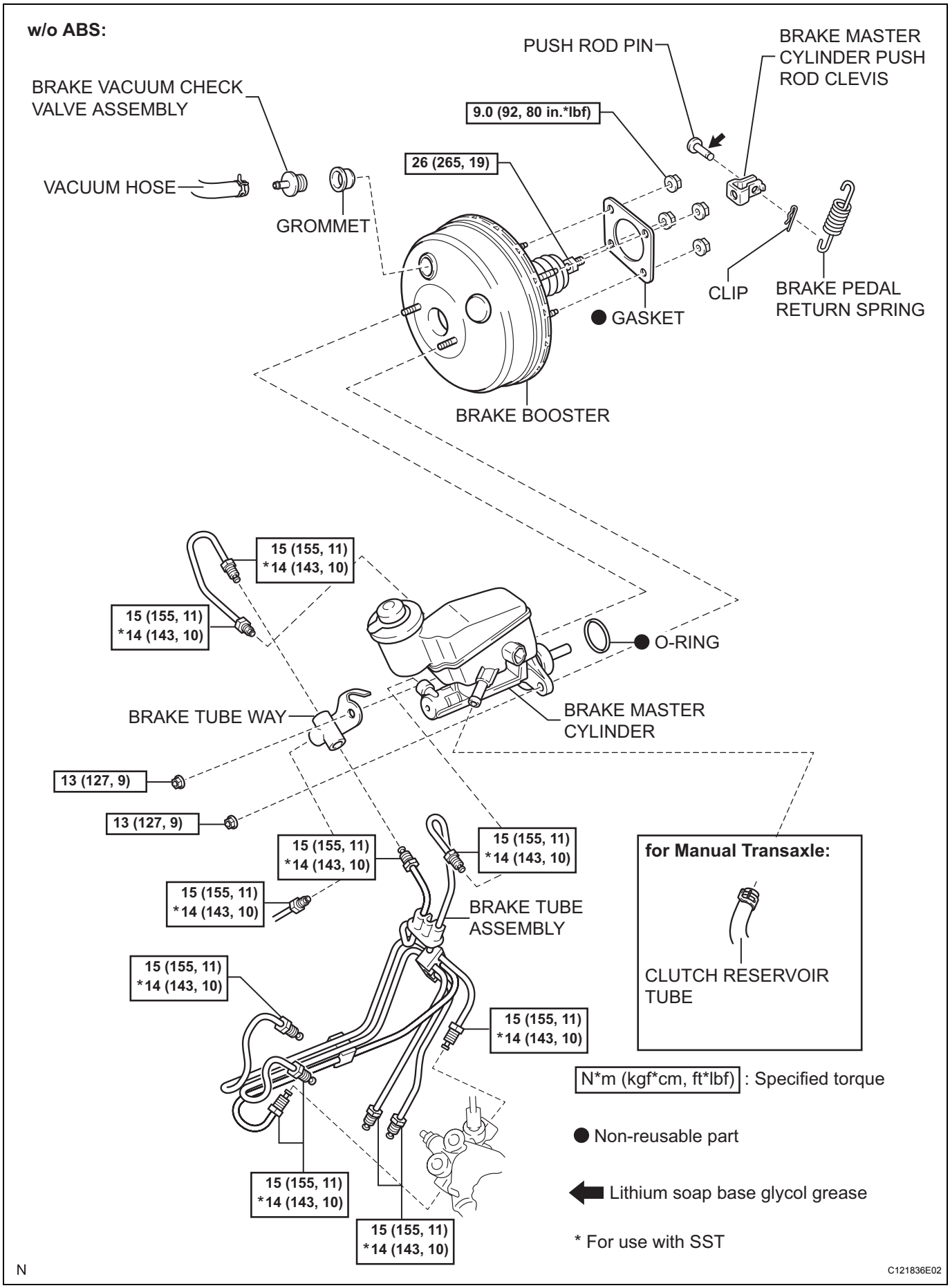
w/o ABS:
PUSH ROD PIN
BRAKE MASTER CYLINDER PUSH ROD CLEVIS
BRAKE VACUUM CHECK VALVE ASSEMBLY
9.0 (92, 80 in.*lbf)
26 (265, 19)
VACUUM HOSE
GROMMET
CLIP
BRAKE PEDAL RETURN SPRING
● GASKET
BRAKE BOOSTER
15 (155, 11)
*14 (143, 10)
15 (155, 11)
*14 (143, 10)
● O-RING
BRAKE TUBE WAY
BRAKE MASTER CYLINDER
13 (127, 9)
13 (127, 9)
15 (155, 11)
*14 (143, 10)
15 (155, 11)
*14 (143, 10)
15 (155, 11)
*14 (143, 10)
BRAKE TUBE ASSEMBLY
for Manual Transaxle:
CLUTCH RESERVOIR TUBE
15 (155, 11)
*14 (143, 10)
15 (155, 11)
*14 (143, 10)
N*m (kgf*cm, ft*lbf) : Specified torque
● Non-reusable part
Lithium soap base glycol grease
* For use with SST
15 (155, 11)
*14 (143, 10)
15 (155, 11)
*14 (143, 10)
N
C121836E02

REMOVAL

1. **DISCONNECT CABLE FROM NEGATIVE BATTERY TERMINAL**
2. **DRAIN BRAKE FLUID**
   NOTICE:
   Immediately wash off any brake fluid that comes into contact with any painted surfaces.
3. **REMOVE FRONT WIPER ARM HEAD CAP**
   Hatchback: (See page WW-17)
   Sedan: (See page WW-9)
4. **REMOVE FRONT WIPER ARM AND BLADE ASSEMBLY LH**
   Hatchback: (See page WW-17)
   Sedan: (See page WW-9)
5. **REMOVE FRONT WIPER ARM AND BLADE ASSEMBLY RH**
   Hatchback: (See page WW-17)
   Sedan: (See page WW-9)
6. **REMOVE HOOD TO COWL TOP SEAL (for Hatchback) (See page WW-18)**
7. **REMOVE COWL SIDE VENTILATOR SUB-ASSEMBLY LH (for Sedan) (See page WW-10)**
8. **REMOVE COWL SIDE VENTILATOR SUB-ASSEMBLY RH (for Sedan) (See page WW-10)**
9. **REMOVE COWL TOP VENTILATOR LOUVER SUB-ASSEMBLY**
   Hatchback: (See page WW-18)
   Sedan: (See page WW-10)
10. **REMOVE COWL TOP VENTILATOR LOUVER LH (for Hatchback) (See page WW-18)**
11. **REMOVE FRONT WIPER MOTOR AND LINK**
    Hatchback: (See page WW-19)
    Sedan: (See page WW-10)
12. **REMOVE COWL TO REGISTER DUCT SUB-ASSEMBLY (for Hatchback) (See page EM-122)**
13. **REMOVE FRONT AIR SHUTTER SEAL (for Sedan) (See page EM-123)**
14. **REMOVE OUTER COWL TOP PANEL**
    Hatchback: (See page EM-123)
    Sedan: (See page EM-123)
15. **REMOVE INSTRUMENT PANEL UNDER COVER SUB-ASSEMBLY**
    Hatchback: (See page IP-67)
    Sedan: (See page IP-44)
16. **REMOVE LOWER INSTRUMENT PANEL FINISH PANEL SUB-ASSEMBLY**
    Hatchback: (See page IP-69)

Sedan: (See page IP-45)

17. REMOVE BATTERY (See page EM-122)

18. REMOVE BATTERY TRAY

19. REMOVE BATTERY CARRIER (See page EM-125)

20. REMOVE BRAKE ACTUATOR (w/ ABS) (See page BC-89)

21. DISCONNECT CLUTCH RESERVOIR TUBE (for Manual Transaxle) (See page BR-28)

22. REMOVE BRAKE MASTER CYLINDER (See page BR-28)

23. SEPARATE BRAKE MASTER CYLINDER PUSH ROD CLEVIS (See page BR-20)

24. REMOVE BRAKE BOOSTER

(a) w/o ABS:

(1) Using SST, separate the 2 brake tubes from the brake tube No. 1 way.
SST 09023-00100

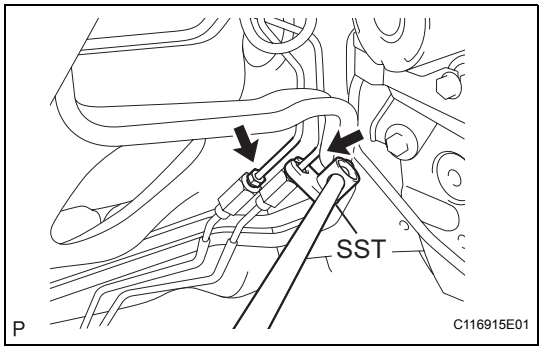

(2) Using SST, remove the brake tube assembly from the proportioning valve.
SST 09023-00100

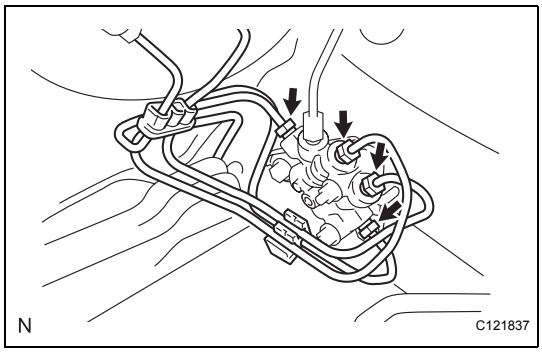

(b) Slide the clip and disconnect the vacuum hose from the check valve.

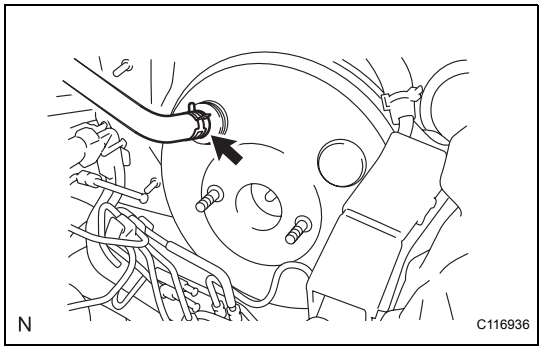

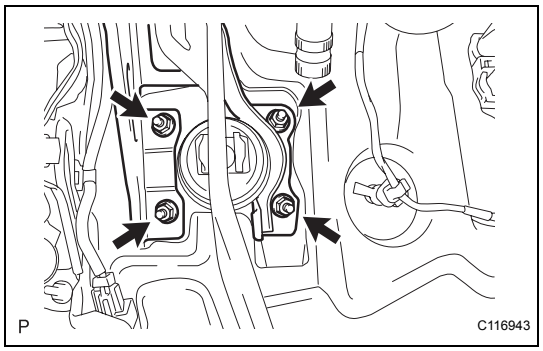

(c) Remove the 4 nuts and remove the brake booster.
(d) Remove the gasket from the brake booster.
(e) Loosen the push rod lock nut and remove the push rod clevis.

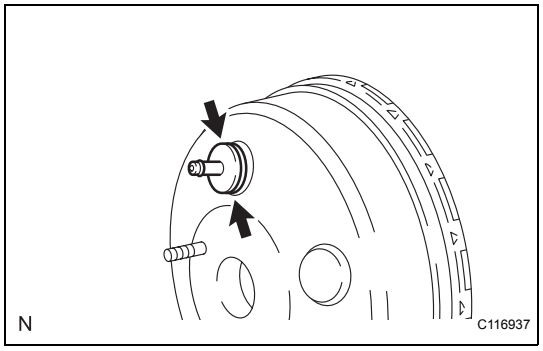

25. REMOVE BRAKE VACUUM CHECK VALVE ASSEMBLY
(a) Remove the vacuum check valve from the brake booster.
(b) Remove the grommet from the brake booster.

INSTALLATION

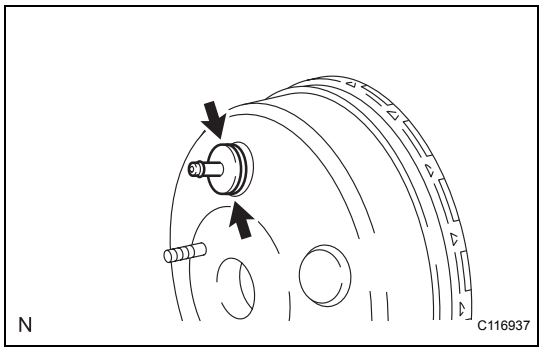

1. INSTALL BRAKE VACUUM CHECK VALVE ASSEMBLY
(a) Install the grommet onto the brake booster.
(b) Install the vacuum check valve onto the brake booster.

2. INSTALL BRAKE BOOSTER
(a) Provisionally install the push rod clevis onto the brake booster.
HINT:
Tighten the push rod lock nut when adjusting the brake pedal height.
(b) Install a new gasket onto the brake booster.
(c) Install the brake booster with the 4 nuts.
Torque: 9.0 N*m (92 kgf*cm, 80 in.*lbf)

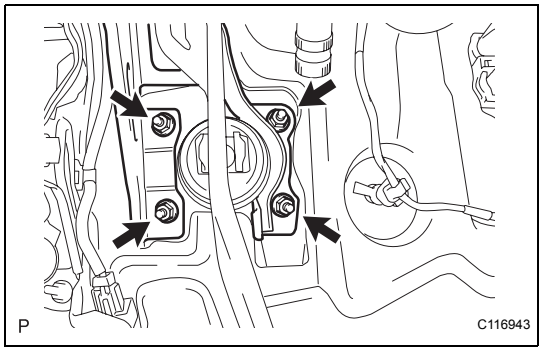

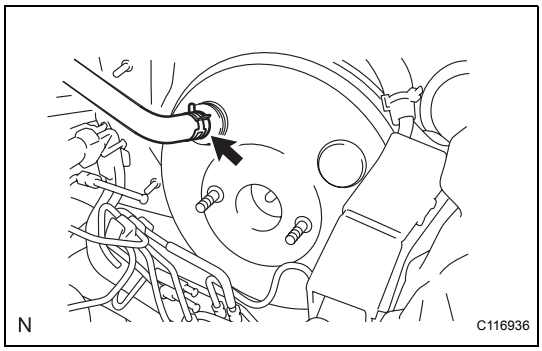

(d) Connect the vacuum hose to the vacuum check valve with the clip.

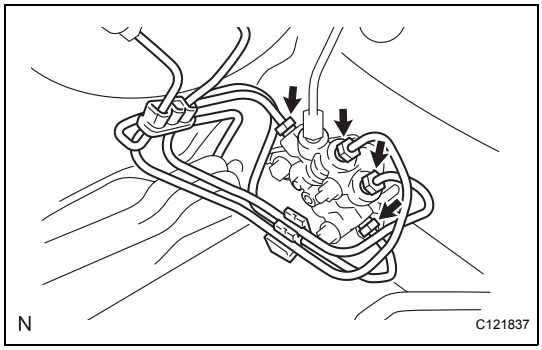

(e) w/o ABS:

(1) Using SST, install the brake tube assembly onto the proportioning valve.
SST 09023-00100
Torque: for use without SST
15 N*m (155 kgf*cm, 11 ft.*lbf)
for use with SST
14 N*m (143 kgf*cm, 10 ft.*lbf)
HINT:
- Use a torque wrench with a fulcrum length of 300 mm (11.81 in.).
- This torque value is effective when SST is parallel to a torque wrench.

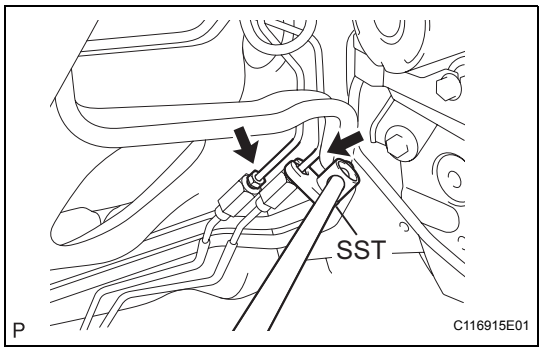

(2) Using SST, install the 2 brake tubes onto the brake tube No. 1 way.
SST 09023-00100
Torque: for use without SST
15 N*m (155 kgf*cm, 11 ft.*lbf)
for use with SST
14 N*m (143 kgf*cm, 10 ft.*lbf)
HINT:
- Use a torque wrench with a fulcrum length of 300 mm (11.81 in.).
- This torque value is effective when SST is parallel to a torque wrench.

3. **INSTALL BRAKE MASTER CYLINDER PUSH ROD CLEVIS (See page BR-21)**
4. **INSPECT AND ADJUST BRAKE BOOSTER PUSH ROD (See page BR-31)**
5. **INSTALL BRAKE MASTER CYLINDER (See page BR-32)**
6. **CONNECT CLUTCH RESERVOIR TUBE (for Manual Transaxle) (See page BR-33)**
7. **INSTALL BRAKE ACTUATOR (w/ ABS) (See page BC-91)**
8. **INSTALL BATTERY CARRIER (See page EM-145)**
9. **INSTALL BATTERY TRAY**
10. **INSTALL BATTERY (See page EM-148)**

11. **INSTALL LOWER INSTRUMENT PANEL FINISH PANEL SUB-ASSEMBLY**
    Hatchback: (See page IP-78)
    Sedan: (See page IP-54)
12. **INSTALL INSTRUMENT PANEL UNDER COVER SUB-ASSEMBLY**
    Hatchback: (See page IP-80)
    Sedan: (See page IP-55)
13. **INSTALL OUTER COWL TOP PANEL**
    Hatchback: (See page EM-146)
    Sedan: (See page EM-147)
14. **INSTALL COWL TO REGISTER DUCT SUB-ASSEMBLY (for Hatchback) (See page EM-147)**
15. **INSTALL FRONT AIR SHUTTER SEAL (for Sedan) (See page EM-148)**
16. **INSTALL FRONT WIPER MOTOR AND LINK**
    Hatchback: (See page WW-21)
    Sedan: (See page WW-12)
17. **INSTALL COWL TOP VENTILATOR LOUVER LH (for Hatchback) (See page WW-21)**
18. **INSTALL COWL TOP VENTILATOR LOUVER SUB-ASSEMBLY**
    Hatchback: (See page WW-21)
    Sedan: (See page WW-12)
19. **INSTALL HOOD TO COWL TOP SEAL (for Hatchback) (See page WW-22)**
20. **INSTALL COWL SIDE VENTILATOR SUB-ASSEMBLY LH (for Sedan) (See page WW-13)**
21. **INSTALL COWL SIDE VENTILATOR SUB-ASSEMBLY RH (for Sedan) (See page WW-13)**
22. **INSTALL FRONT WIPER ARM AND BLADE ASSEMBLY LH**
    Hatchback: (See page WW-22)
    Sedan: (See page WW-13)
23. **INSTALL FRONT WIPER ARM AND BLADE ASSEMBLY RH**
    Hatchback: (See page WW-23)
    Sedan: (See page WW-14)
24. **INSTALL FRONT WIPER ARM HEAD CAP**
    Hatchback: (See page WW-23)
    Sedan: (See page WW-15)
25. **CONNECT CABLE TO NEGATIVE BATTERY TERMINAL**
    Torque: 5.4 N*m (55 kgf*cm, 48 in.*lbf)
26. **FILL RESERVOIR WITH BRAKE FLUID (See page BR-10)**
27. **BLEED MASTER CYLINDER (See page BR-10)**

28. **BLEED BRAKE LINE (See page BR-12)**
29. **CHECK FLUID LEVEL IN RESERVOIR (See page BR-12)**
30. **CHECK FOR BRAKE FLUID LEAKAGE**
31. **INSPECT AND ADJUST BRAKE PEDAL (See page BR-8)**

FRONT BRAKE

COMPONENTS

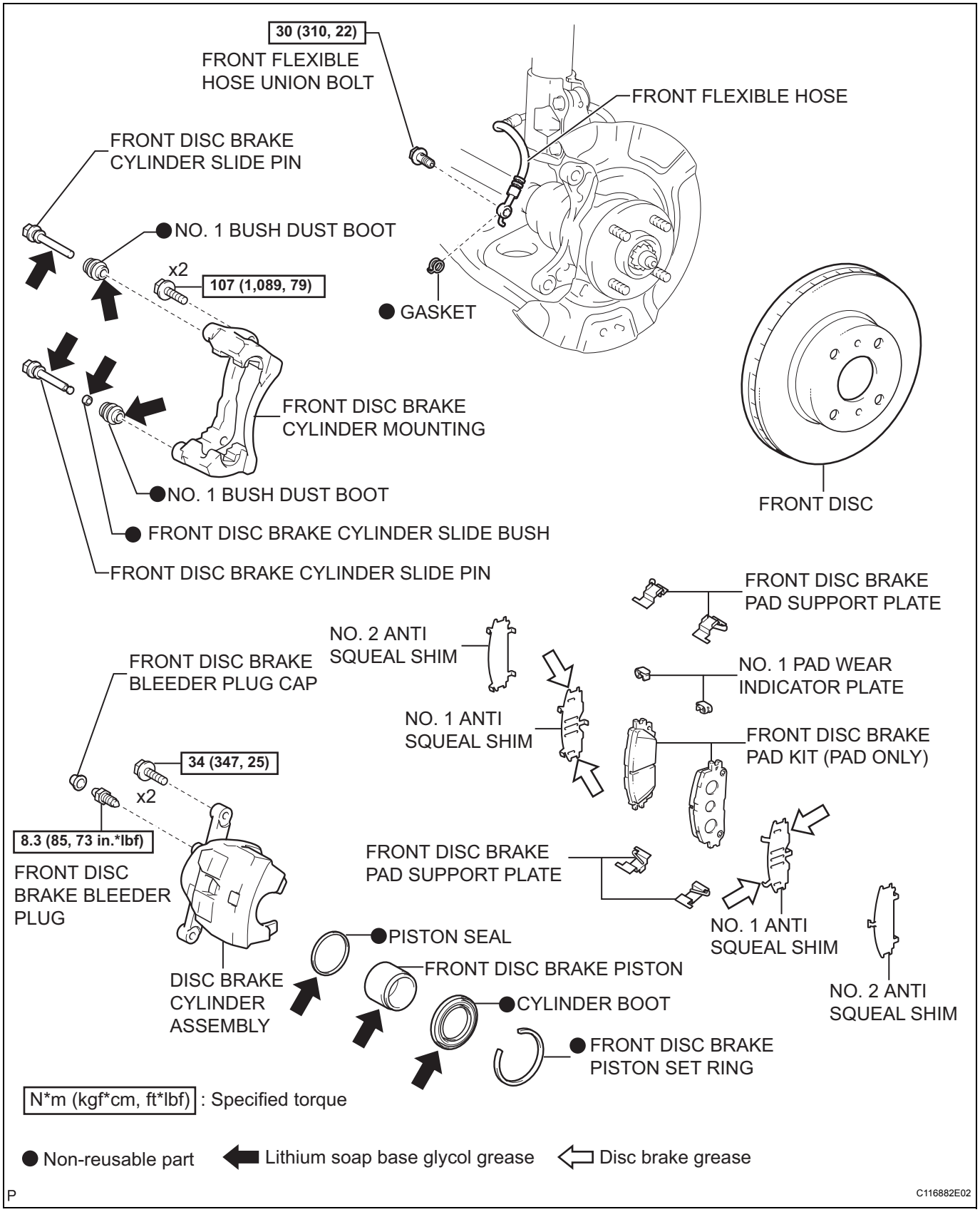

BR

REMOVAL

1. **REMOVE FRONT WHEEL**

2. **DRAIN BRAKE FLUID**
   NOTICE:
   Immediately wash off any brake fluid that comes into contact with any painted surfaces.

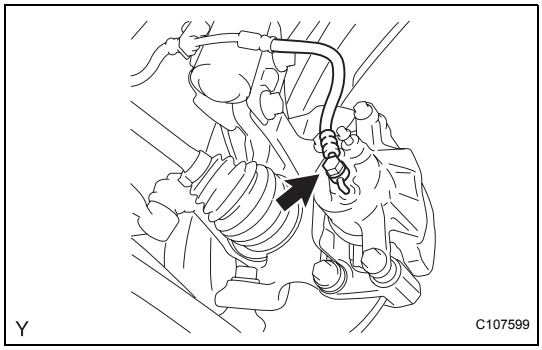

3. **DISCONNECT FRONT FLEXIBLE HOSE**
   (a) Remove the union bolt and gasket and separate the flexible hose from the disc brake cylinder.

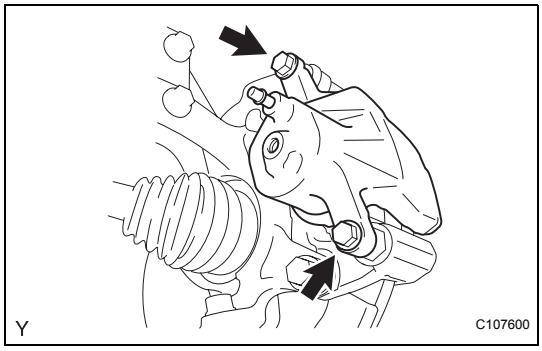

4. **REMOVE DISC BRAKE CYLINDER ASSEMBLY**
   (a) Fix the slide pin with a spanner, remove the 2 bolts and remove the disc brake cylinder.

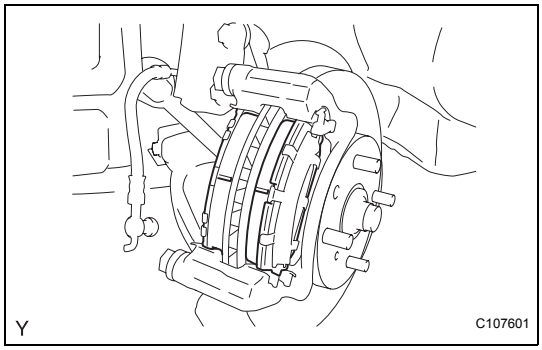

5. **REMOVE FRONT DISC BRAKE PAD KIT (PAD ONLY)**
   (a) Remove the 2 disc brake pads from the disc brake cylinder mounting.

6. **REMOVE FRONT ANTI SQUEAL SHIM KIT**
   (a) Remove the No. 1 anti squeal shim and No. 2 anti squeal shim from each brake pad.

7. **REMOVE NO. 1 PAD WEAR INDICATOR PLATE**
   (a) Remove the indicator plate from each brake pad.

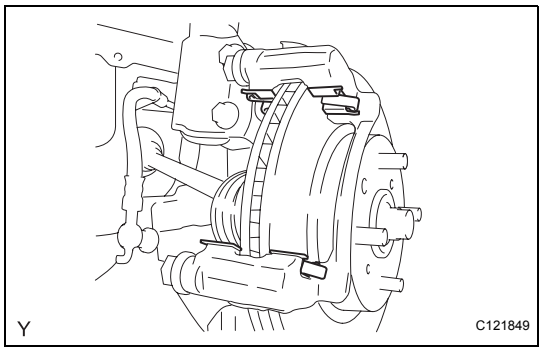

8. **REMOVE FRONT DISC BRAKE PAD SUPPORT PLATE**
   (a) Remove the 4 disc brake pad support plates from the disc brake cylinder mounting.

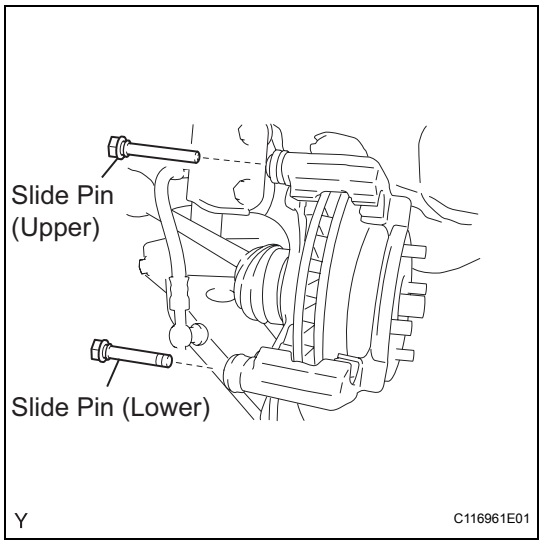

9. REMOVE FRONT DISC BRAKE CYLINDER SLIDE PIN

(a) Remove the slide pin (upper) and slide pin (lower) from the disc brake cylinder mounting.

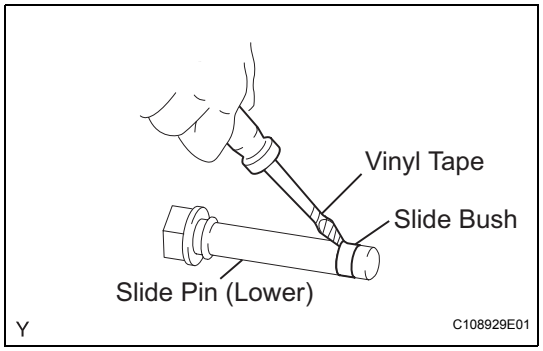

10. REMOVE FRONT DISC BRAKE CYLINDER SLIDE BUSH

(a) Using a screwdriver with its tip wrapped in protective tape, remove the slide bush from the slide pin (lower).

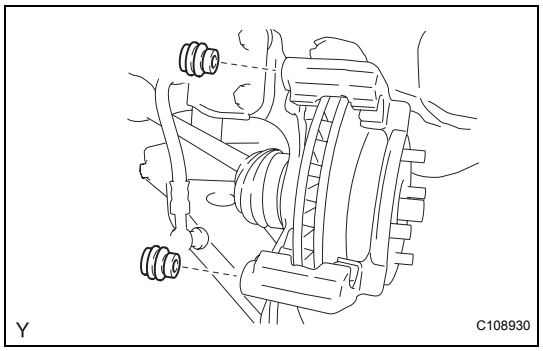

11. REMOVE NO. 1 BUSH DUST BOOT

(a) Remove the 2 dust boots from the disc brake cylinder mounting.

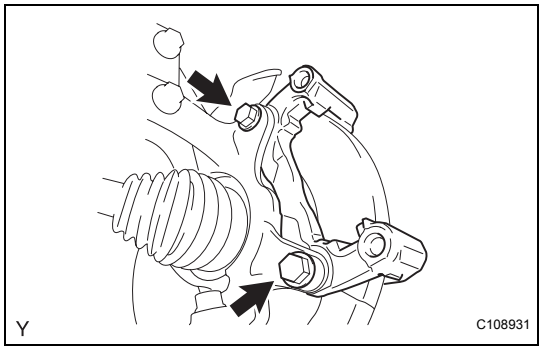

12. REMOVE FRONT DISC BRAKE CYLINDER MOUNTING

(a) Remove the 2 bolts and remove the disc brake cylinder mounting from the steering knuckle.

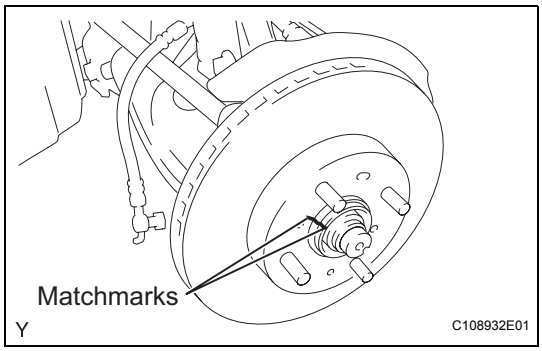

13. REMOVE FRONT DISC

(a) Place matchmarks on the disc and axle hub and remove the disc.

DISASSEMBLY

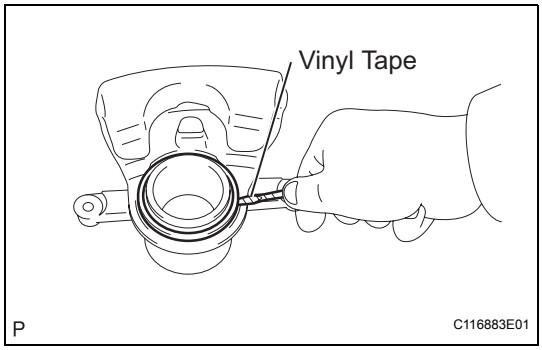

1. REMOVE CYLINDER BOOT

(a) Using a screwdriver with its tip wrapped in protective tape, remove the set ring and cylinder boot from the disc brake cylinder.

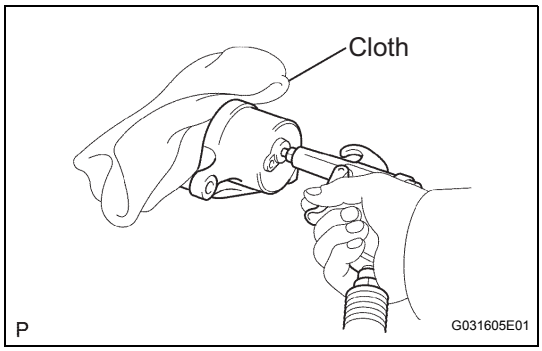

2. REMOVE FRONT DISC BRAKE PISTON

(a) Place a shop rag or piece of cloth between the piston and disc brake cylinder.

(b) Apply compressed air to remove the piston from the disc brake cylinder.

CAUTION:
Do not place your fingers in front of the piston when applying compressed air.
NOTICE:
Do not spatter the brake fluid.

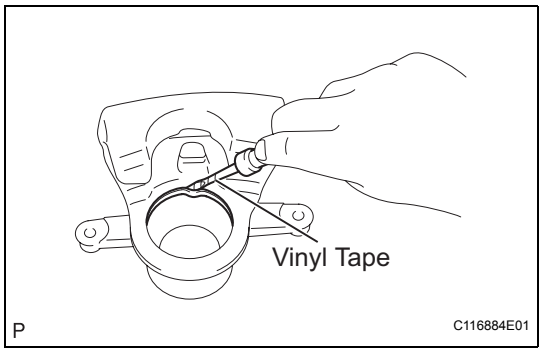

3. REMOVE PISTON SEAL

(a) Using a screwdriver with its tip wrapped in protective tape, remove the piston seal from the disc brake cylinder.

NOTICE:
Do not damage the inner surface or piston seal groove of the cylinder.

4. REMOVE FRONT DISC BRAKE BLEEDER PLUG CAP

5. REMOVE FRONT DISC BRAKE BLEEDER PLUG

INSPECTION

1. INSPECT BRAKE CYLINDER AND PISTON

(a) Check the cylinder bore and piston for rust and scoring.
If necessary, replace the disc brake cylinder and piston.

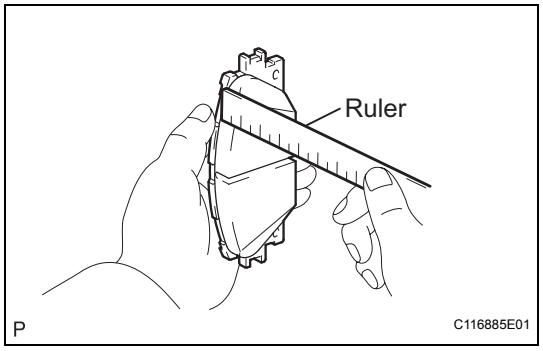

2. INSPECT PAD LINING THICKNESS

(a) Using a ruler, measure the pad lining thickness.
Standard thickness:
12.0 mm (0.472 in.)
Minimum thickness:
1.0 mm (0.039 in.)
If the pad lining thickness is equal to or less than the minimum thickness, replace the disc brake pad kit.

3. INSPECT FRONT DISC BRAKE PAD SUPPORT PLATE

(a) Make sure that the disc brake pad supports have sufficient rebound, that there is no deformation, cracks or wear, and that all rust and dirt are removed.
If necessary, replace the disc brake pad support plate.

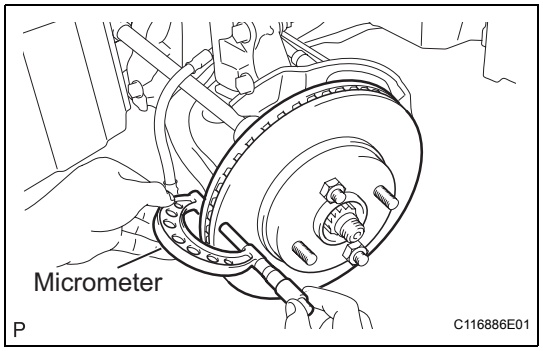

4. INSPECT DISC THICKNESS

(a) Using a micrometer, measure the disc thickness.
Standard thickness:
22.0 mm (0.866 in.)
Minimum thickness:
19.0 mm (0.748 in.)
If the disc thickness is less than the minimum, replace the front disc.

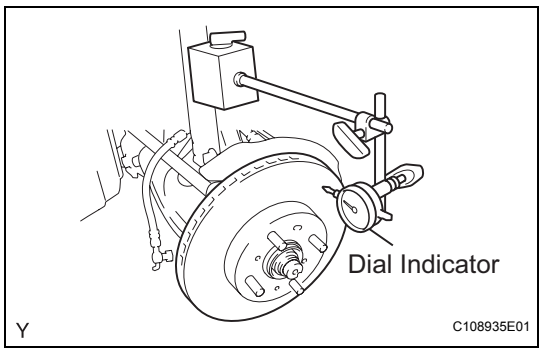

5. INSPECT DISC RUNOUT

(a) Check the bearing play in the axial direction and check for the axle hub runout (See page AH-1).

(b) Provisionally fasten the front disc together with the hub nuts.
Torque: 103 N*m (1,050 kgf*cm, 76 ft.*lbf)

(c) Using a dial indicator, measure the disc runout 10 mm (0.39 in.) away from the outer edge of the front disc.
Maximum disc runout:
0.05 mm (0.0020 in.)
If the runout exceeds the maximum value, change the installation positions of the disc and axle to make the minimum runout. If the runout exceeds the maximum even when the installation positions are changed, grind the disc. If the disc thickness is less than the minimum, replace the front disc.

REASSEMBLY

1. **TEMPORARILY TIGHTEN FRONT DISC BRAKE BLEEDER PLUG**

2. **INSTALL FRONT DISC BRAKE BLEEDER PLUG CAP**

3. **INSTALL PISTON SEAL**
   (a) Apply lithium soap base glycol grease to a new piston seal.
   (b) Install the piston seal onto the disc brake cylinder.
   NOTICE:
   Securely install the piston seal into the groove of the disc brake cylinder.

4. **INSTALL FRONT DISC BRAKE PISTON**
   (a) Apply lithium soap base glycol grease to the piston and a new cylinder boot.
   (b) Install the cylinder boot onto the piston.
   (c) Install the piston into the disc brake cylinder.
   NOTICE:
   Do not forcibly install the piston into the disc brake cylinder.

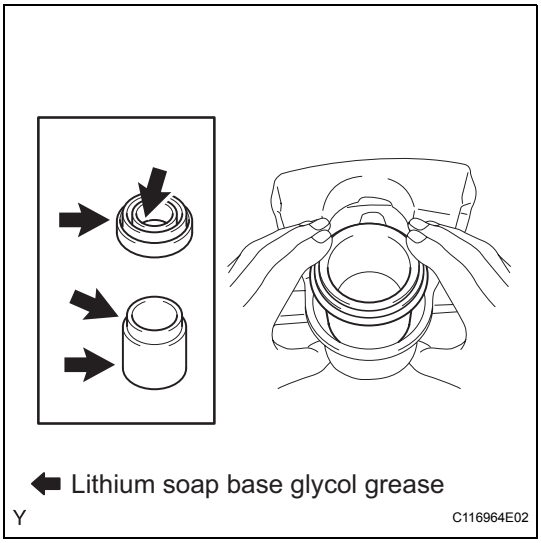

5. **INSTALL CYLINDER BOOT**
   (a) Install the cylinder boot into the disc brake cylinder.
   NOTICE:
   Securely install the cylinder boot into the groove of the disc brake cylinder.
   (b) Using a screwdriver, install a new set ring.
   NOTICE:
   Do not damage the cylinder boot.

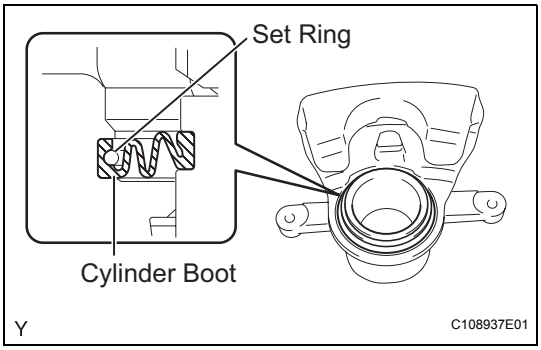

INSTALLATION

1. **INSTALL FRONT DISC**
   (a) Align the matchmarks of the disc and axle hub and install the disc.
   NOTICE:
   When replacing the disc, select the position that gives the minimum disc runout.

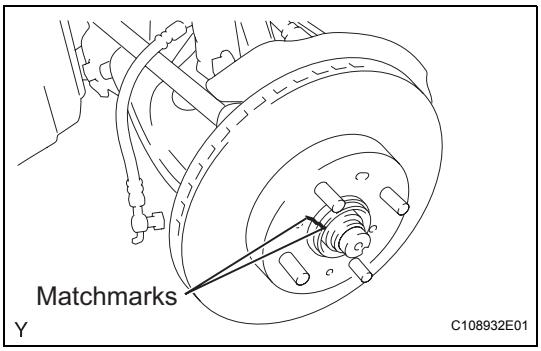

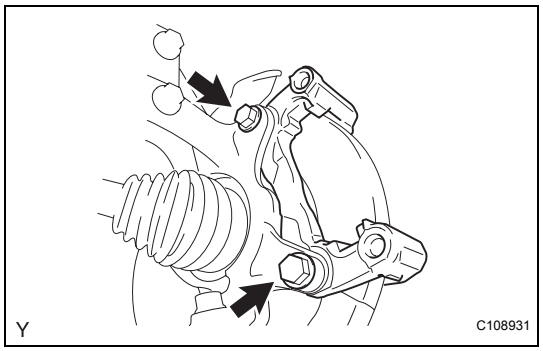

2. INSTALL FRONT DISC BRAKE CYLINDER MOUNTING

(a) Install the disc brake cylinder mounting onto the steering knuckle with the 2 bolts.
Torque: 107 N*m (1,089 kgf*cm, 79 ft.*lbf)

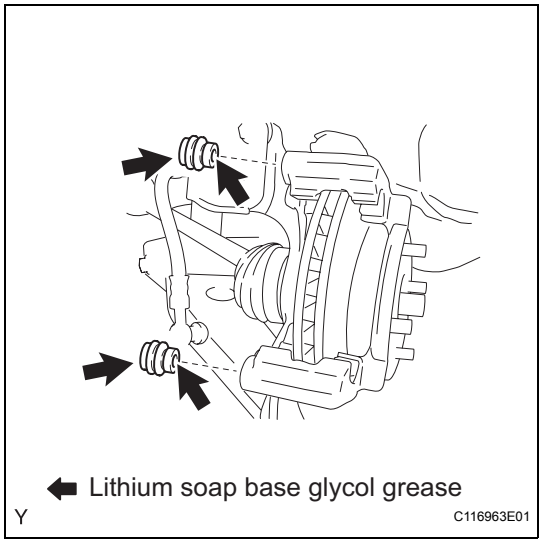

3. INSTALL NO. 1 BUSH DUST BOOT

(a) Apply lithium soap base glycol grease to 2 new dust boots.
(b) Install the 2 dust boots onto the disc brake cylinder mounting.

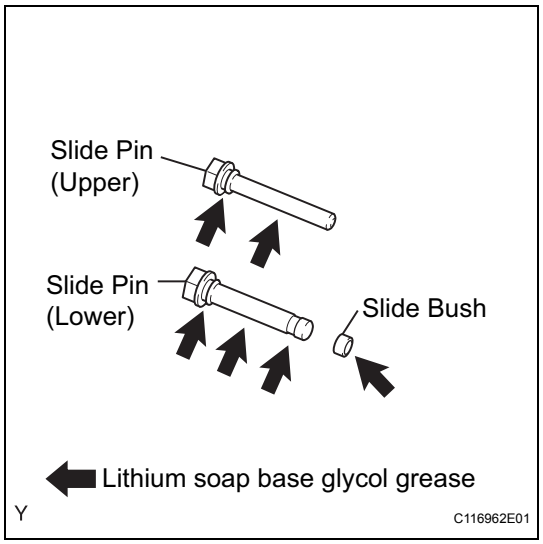

4. INSTALL FRONT DISC BRAKE CYLINDER SLIDE BUSH

(a) Apply lithium soap base glycol grease to the slide pins and a new slide bush, as shown in the illustration.
(b) Install the slide bush onto the slide pin (lower).

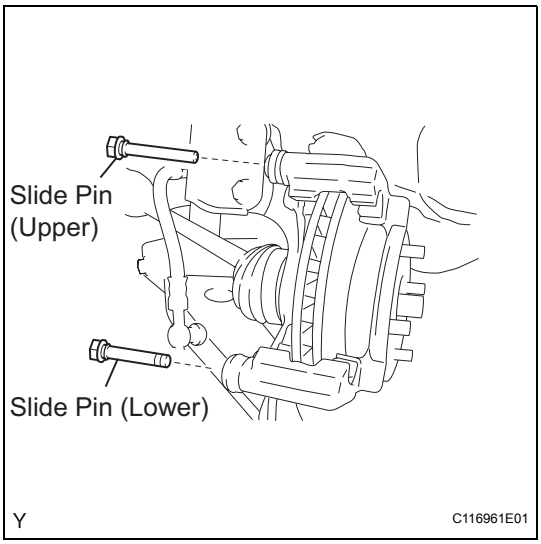

5. INSTALL FRONT DISC BRAKE CYLINDER SLIDE PIN

(a) Install the slide pin (upper) and slide pin (lower) onto the cylinder mounting.

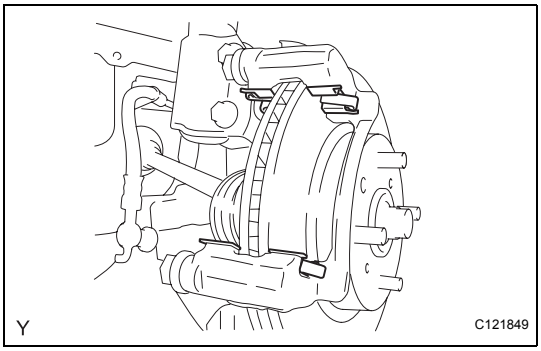

6. INSTALL FRONT DISC BRAKE PAD SUPPORT PLATE

(a) Install the 4 disc brake pad support plates onto the disc brake cylinder mounting.

7. INSTALL NO. 1 PAD WEAR INDICATOR PLATE

(a) Install the indicator plates onto the upper side of the brake pad.

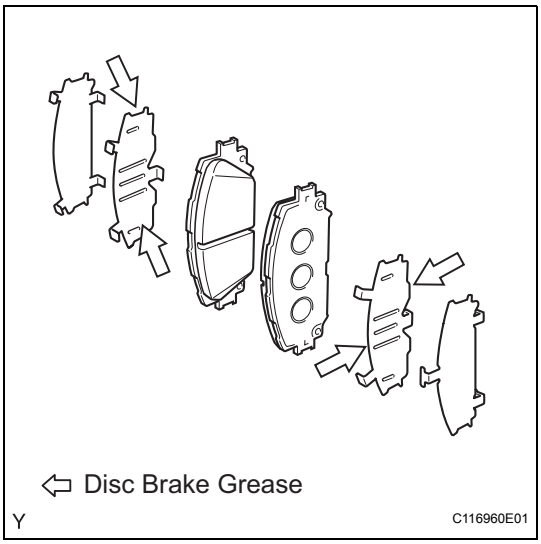

8. INSTALL FRONT ANTI SQUEAL SHIM KIT

(a) Apply disc brake grease to both sides of each No. 1 anti-squeal shim.

(b) Install the anti squeal shims onto each brake pad.

BR

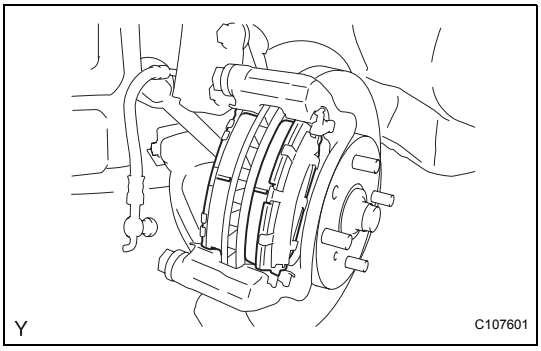

9. INSTALL FRONT DISC BRAKE PAD KIT (PAD ONLY)

(a) Install the 2 disc brake pads onto the disc brake cylinder mounting.

NOTICE:

There should be no oil or grease on the friction surfaces of the disc brake pads or the front disc.

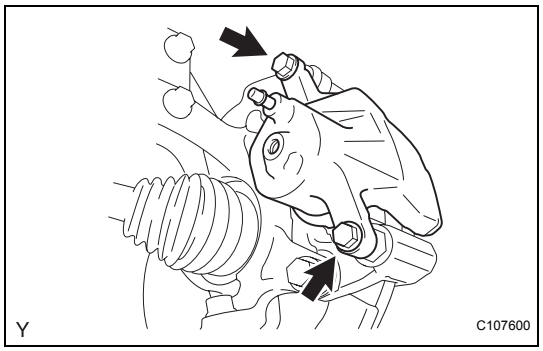

10. INSTALL DISC BRAKE CYLINDER ASSEMBLY

(a) Install the disc brake cylinder onto the disc brake cylinder mounting with the 2 bolts.
Torque: 34 N*m (347 kgf*cm, 25 ft.*lbf)

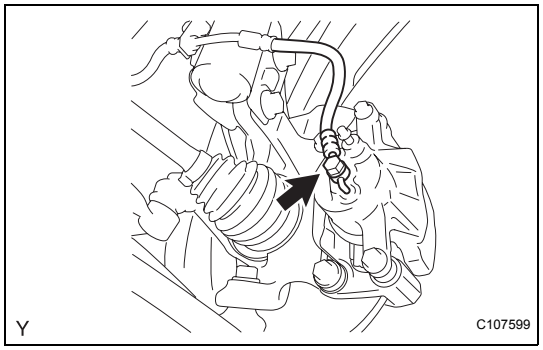

11. CONNECT FRONT FLEXIBLE HOSE

(a) Connect the flexible hose with the union bolt and a new gasket.
Torque: 30 N*m (310 kgf*cm, 22 ft.*lbf)
HINT:
Install the flexible hose lock securely into the lock hole in the disc brake cylinder.

12. FILL RESERVOIR WITH BRAKE FLUID (See page BR-10)

13. BLEED MASTER CYLINDER (See page BR-10)

14. BLEED BRAKE LINE (See page BR-12)

15. CHECK FLUID LEVEL IN RESERVOIR (See page BR-12)

16. CHECK FOR BRAKE FLUID LEAKAGE

17. INSTALL FRONT WHEEL
Torque: 103 N*m (1,050 kgf*cm, 76 ft.*lbf)

FRONT BRAKE FLEXIBLE HOSE

COMPONENTS

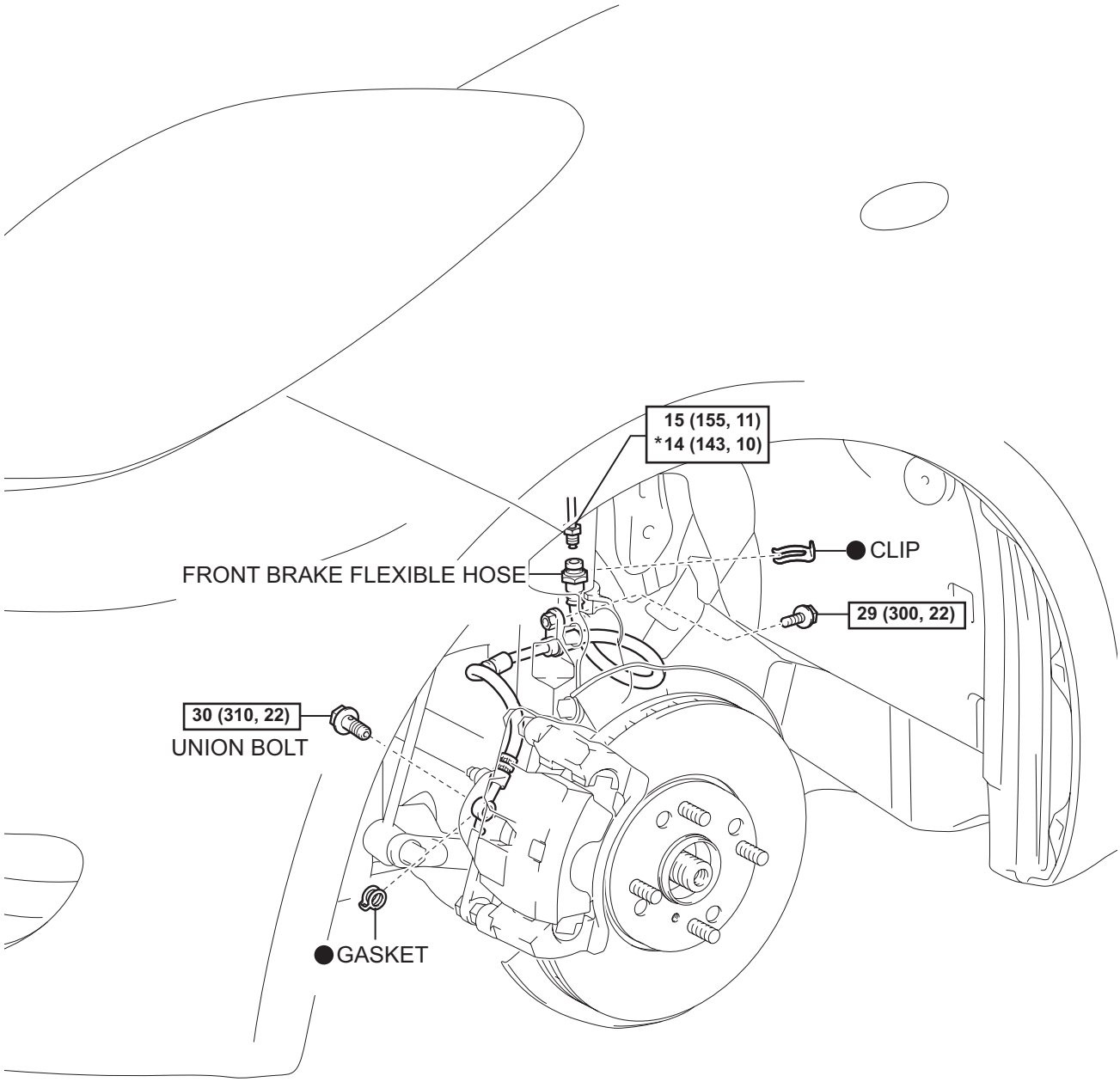

BR

N*m (kgf*cm, ft*lbf) : Specified torque

● Non-reusable part

* For use with SST

P

C116890E02

REMOVAL

1. **REMOVE FRONT WHEEL**
2. **DRAIN BRAKE FLUID**
   NOTICE:
   Immediately wash off any brake fluid that comes into contact with any painted surfaces.
3. **REMOVE FRONT BRAKE FLEXIBLE HOSE**
   (a) Using SST, separate the brake tube.
   SST 09023-00100
   (b) Remove the clip.
   (c) w/ ABS:
   (1) Remove the bolt and separate the flexible hose and speed sensor.
   (d) w/o ABS:
   (1) Remove the bolt and separate the flexible hose.
   (e) Remove the union bolt and gasket and remove the flexible hose from the disc brake cylinder.

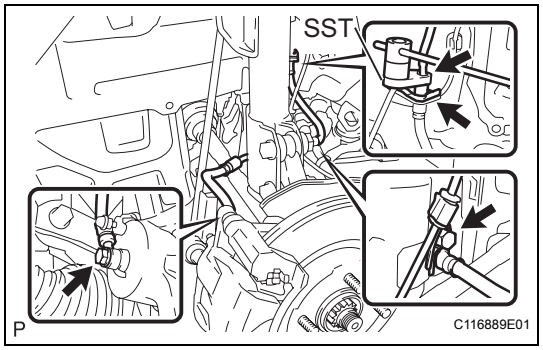

INSTALLATION

1. **INSTALL FRONT BRAKE FLEXIBLE HOSE**
   (a) Install the flexible hose with the union bolt and a new gasket.
   Torque: 30 N*m (310 kgf*cm, 22 ft.*lbf)
   HINT:
   Install the flexible hose lock securely into the lock hole in the disc brake cylinder.
   (b) w/ ABS:
   (1) Install the flexible hose and speed sensor with the bolt.
   Torque: 29 N*m (300 kgf*cm, 22 ft.*lbf)
   NOTICE:
   Install the flexible hose and speed sensor without twisting them.
   (c) w/o ABS:
   (1) Install the flexible hose with the bolt.
   Torque: 29 N*m (300 kgf*cm, 22 ft.*lbf)
   NOTICE:
   Install the flexible hose without twisting it.
   (d) Install a new clip.
   (e) Using SST, install the brake tube.
   SST 09023-00100
   Torque: for use without SST
   15 N*m (155 kgf*cm, 11 ft.*lbf)
   for use with SST
   14 N*m (143 kgf*cm, 10 ft.*lbf)
   HINT:
   - Use a torque wrench with a fulcrum length of 300 mm (11.81 in.).
   - This torque value is effective when SST is parallel to a torque wrench.
2. **FILL RESERVOIR WITH BRAKE FLUID (See page BR-10)**

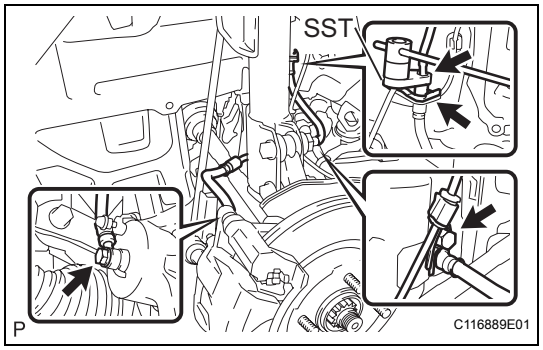

3. **BLEED MASTER CYLINDER (See page BR-10)**
4. **BLEED BRAKE LINE (See page BR-12)**
5. **CHECK FLUID LEVEL IN RESERVOIR (See page BR-12)**
6. **CHECK FOR BRAKE FLUID LEAKAGE**
7. **INSTALL FRONT WHEEL**
   Torque: 103 N*m (1,050 kgf*cm, 76 ft.*lbf)

REAR DRUM BRAKE

COMPONENTS

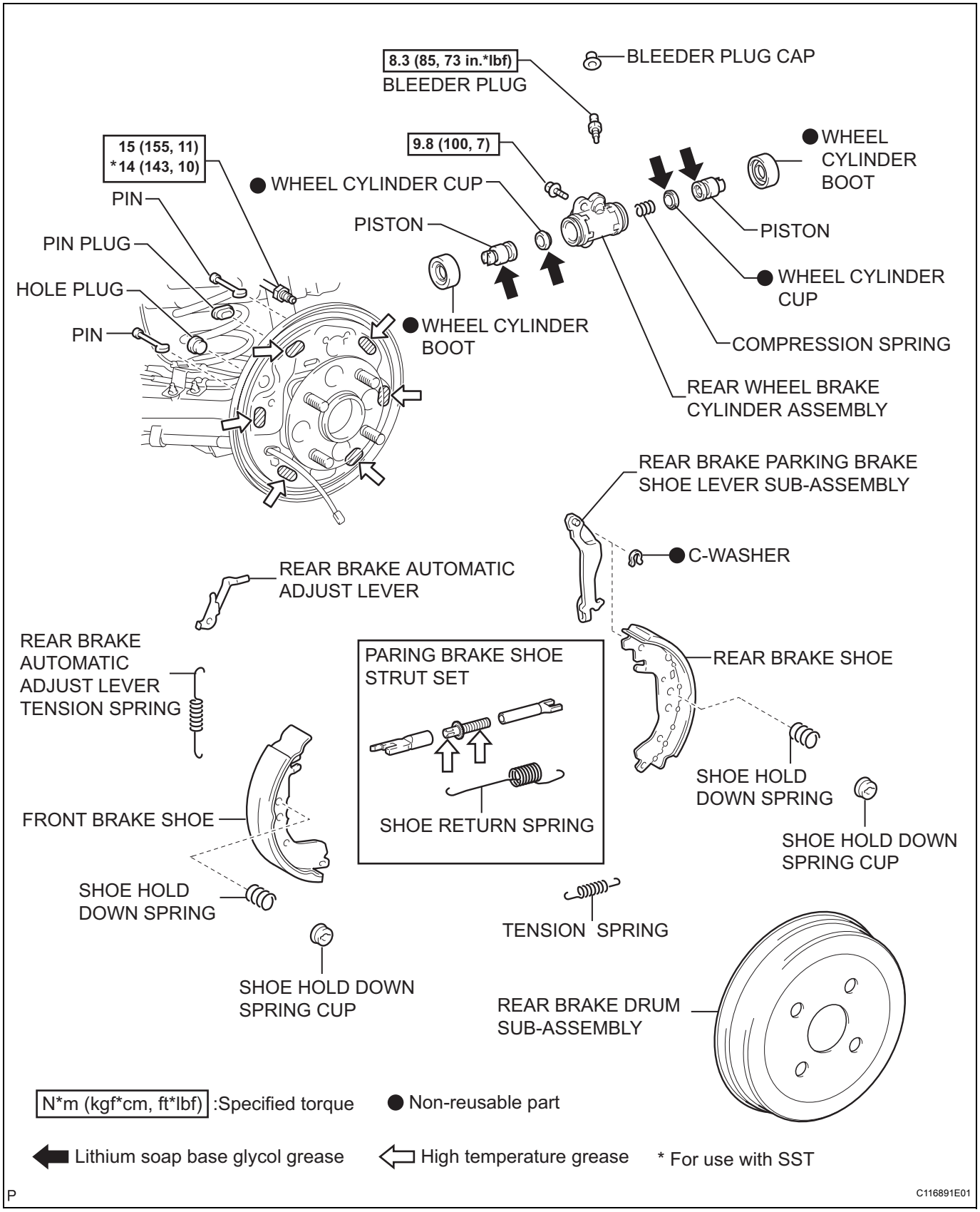

BR

REMOVAL

1. **REMOVE REAR WHEEL**
2. **DRAIN BRAKE FLUID**
   NOTICE:
   Immediately wash off any brake fluid that comes into contact with any painted surfaces.
3. **REMOVE REAR BRAKE DRUM SUB-ASSEMBLY**
   (a) Release the parking brake and remove the rear brake drum.
   If the rear brake drum cannot be removed easily, perform the following procedure.
   (b) Remove the hole plug and insert a screwdriver through the hole into the backing plate, and hold the automatic adjust lever away from the adjuster.
   (c) Using another screwdriver, contract the brake shoe by turning the adjusting bolt.

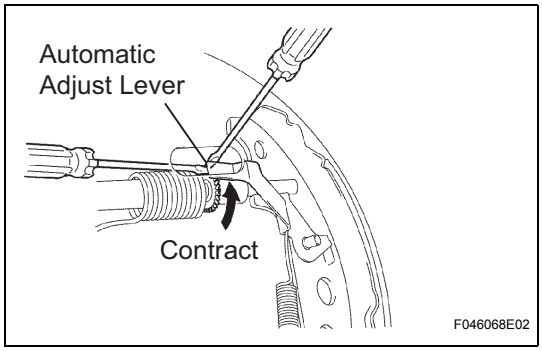

DISASSEMBLY

1. **REMOVE REAR BRAKE SHOE KIT**
   (a) Using SST, separate the shoe return spring from the front brake shoe.
   SST 09703-30010
   NOTICE:
   Do not damage the wheel cylinder boot.

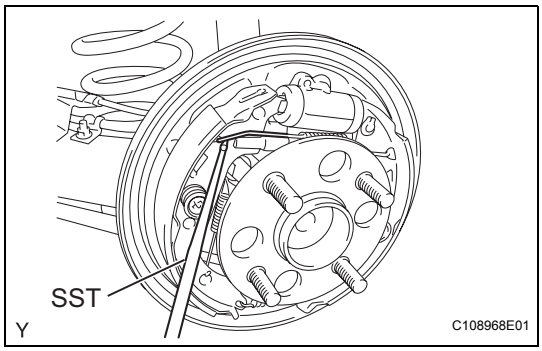

   (b) Using SST, remove the shoe hold down spring cup, shoe hold down spring, pin and front brake shoe.
   SST 09718-00010
   (c) Remove the tension spring.

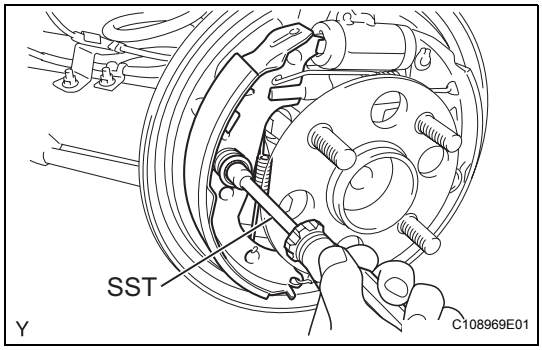

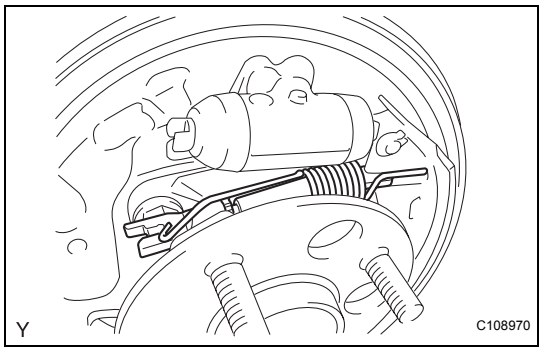

(d) Remove the shoe return spring from the rear brake shoe and remove the parking brake shoe strut set.

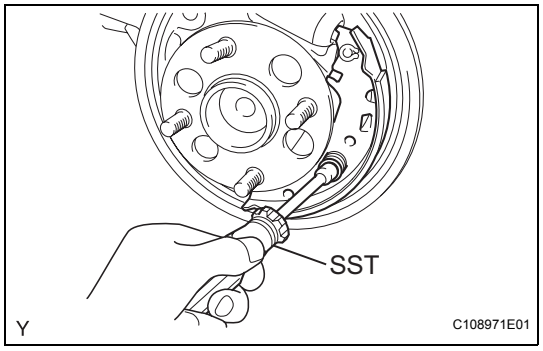

(e) Using SST, remove the shoe hold down spring cup, shoe hold down spring, pin and rear brake shoe.
SST 09718-00010

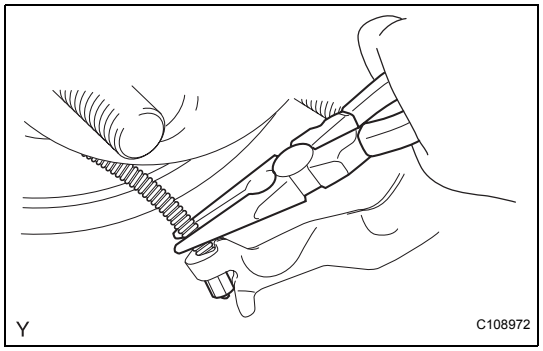

(f) Using needle-nose pliers, separate the parking brake cable.

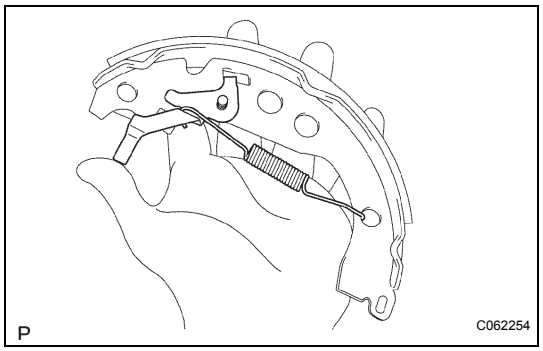

2. REMOVE REAR BRAKE AUTOMATIC ADJUST LEVER

(a) Remove the automatic adjust lever tension spring and remove the automatic adjust lever.

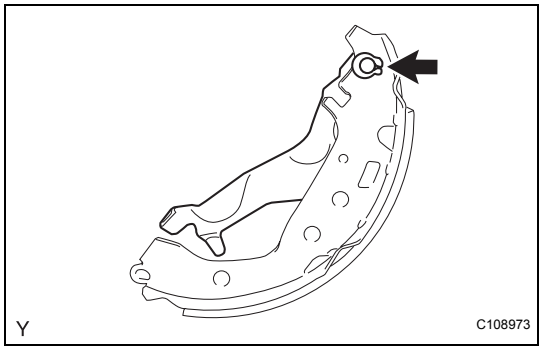

3. REMOVE REAR BRAKE PARKING BRAKE SHOE LEVER SUB-ASSEMBLY

(a) Using a screwdriver, remove the C-washer and remove the parking brake shoe lever.

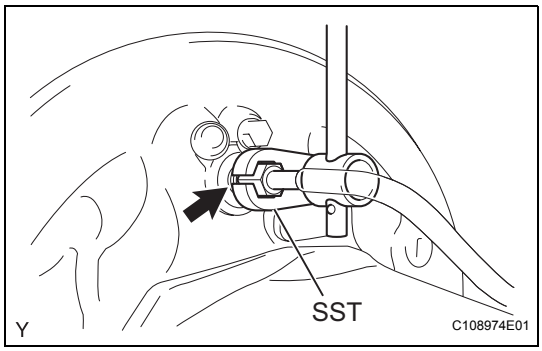

4. REMOVE REAR WHEEL BRAKE CYLINDER ASSEMBLY

(a) Using SST, separate the brake tube from the rear wheel brake cylinder.
SST 09023-00100
HINT:
Use a container to catch the brake fluid.

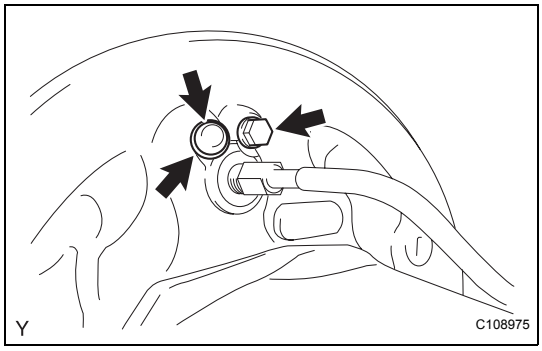

(b) Remove the bleeder plug cap.
(c) Remove the bleeder plug.
(d) Remove the bolt and remove the rear wheel brake cylinder.

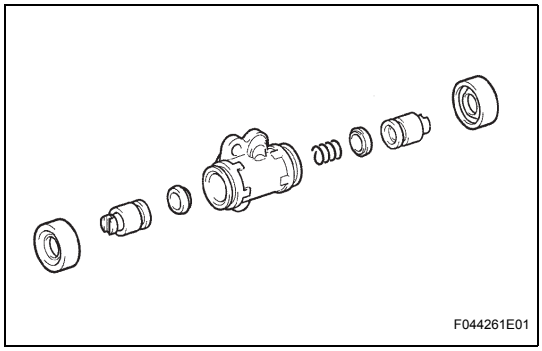

5. REMOVE REAR WHEEL CYLINDER KIT

(a) Remove the 2 wheel cylinder boots from the wheel brake cylinder.
(b) Remove the 2 pistons.
(c) Remove the compression spring.
(d) Remove the wheel cylinder cup from each piston.

INSPECTION

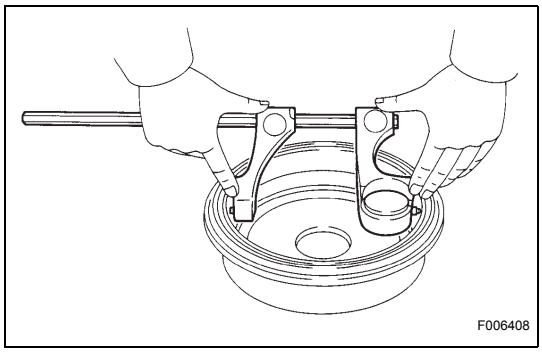

1. INSPECT REAR BRAKE DRUM INSIDE DIAMETER

(a) Using a brake drum gauge or the equivalent, measure the inside diameter of the brake drum.
Standard inside diameter:
200 mm (7.874 in.)
Maximum inside diameter:
201 mm (7.913 in.)
If the inside diameter is greater than the maximum, replace the brake drum.

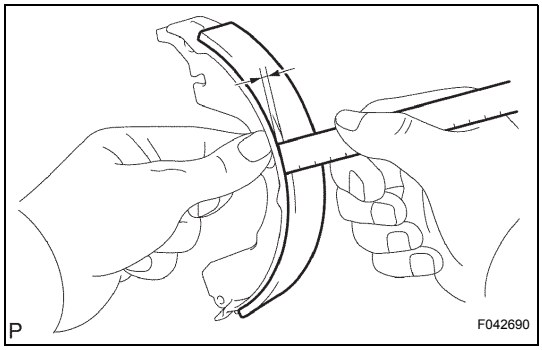

2. INSPECT REAR BRAKE SHOE LINING THICKNESS

(a) Using a ruler, measure the thickness of the shoe lining.
Standard thickness:
4.0 mm (0.157 in.)
Minimum thickness:
1.0 mm (0.039 in.)
If the lining thickness is equal to or less than the minimum value, or if there is any severe or uneven wear, replace the brake shoe.

NOTICE:
If the brake shoes need replacing, they must be replaced as a set.

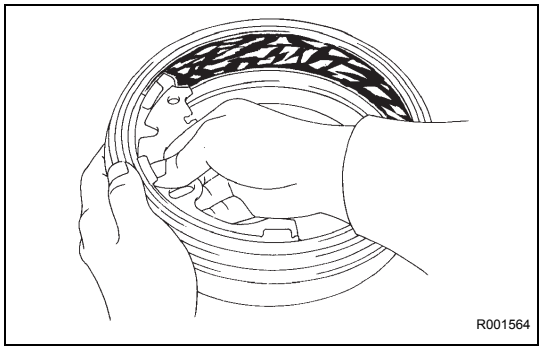

3. INSPECT REAR BRAKE DRUM AND REAR BRAKE SHOE LINING FOR PROPER CONTACT

(a) Apply chalk to the inside surface of the drum, then grind the brake shoe lining so that they fit together properly.
If the contact between the drum and the shoe lining is improper, repair it using a brake shoe grinder or replace the brake shoe assembly.

4. INSPECT WHEEL BRAKE CYLINDER

Check the cylinder bore and piston for rust and scoring.

REASSEMBLY

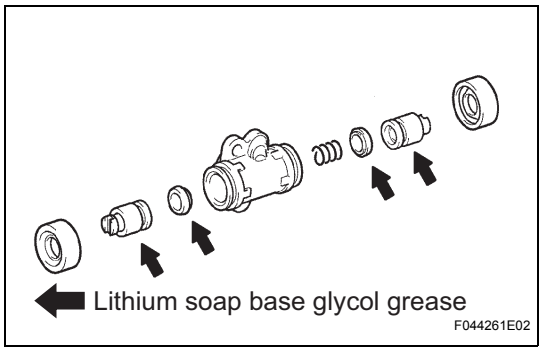

1. INSTALL REAR WHEEL CYLINDER KIT

(a) Apply lithium soap base glycol grease to 2 new wheel cylinder cups and the 2 pistons.
(b) Install the wheel cylinder cup onto each piston.
(c) Install the compression spring and 2 pistons onto the wheel brake cylinder.
(d) Install 2 new wheel cylinder boots onto the wheel brake cylinder.

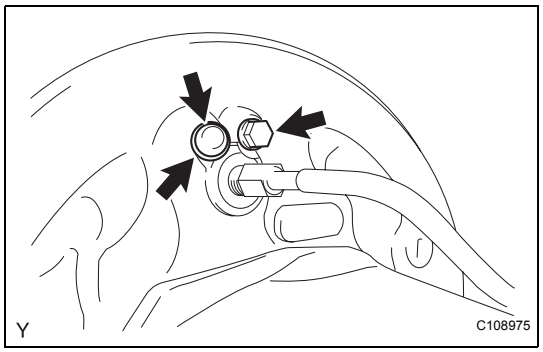

2. INSTALL REAR WHEEL BRAKE CYLINDER ASSEMBLY

(a) Install the wheel brake cylinder with the bolt.
Torque: 9.8 N*m (100 kgf*cm, 7 ft.*lbf)
(b) Provisionally install the bleeder plug.
(c) Install the bleeder plug cap.

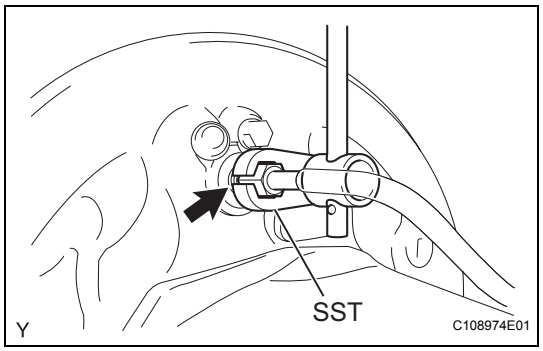

(d) Using SST, install the brake tube.
SST 09023-00100
Torque: for use without SST
15 N*m (155 kgf*cm, 11 ft.*lbf)
for use with SST
14 N*m (143 kgf*cm, 10 ft.*lbf)
HINT:
- Use a torque wrench with a fulcrum length of 300 mm (11.81 in.).
- This torque value is effective when SST is parallel to a torque wrench.

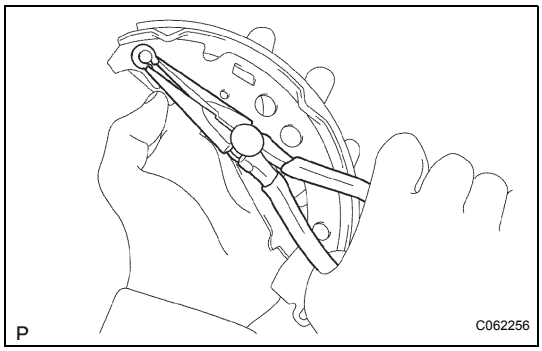

3. INSTALL REAR BRAKE PARKING BRAKE SHOE LEVER SUB-ASSEMBLY

(a) Using needle-nose pliers, install the parking brake shoe lever with a new C-washer.

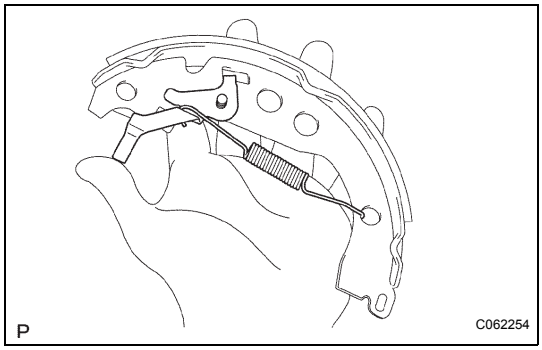

4. INSTALL REAR BRAKE AUTOMATIC ADJUST LEVER

(a) Install the automatic adjust lever and automatic adjust lever tension spring onto the front brake shoe.

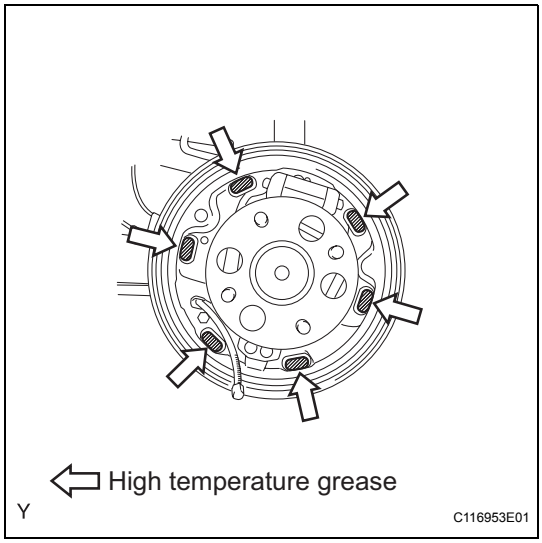

5. INSTALL REAR BRAKE SHOE KIT

(a) Apply high temperature grease to the surface of the backing plate which is in contact with the shoe.

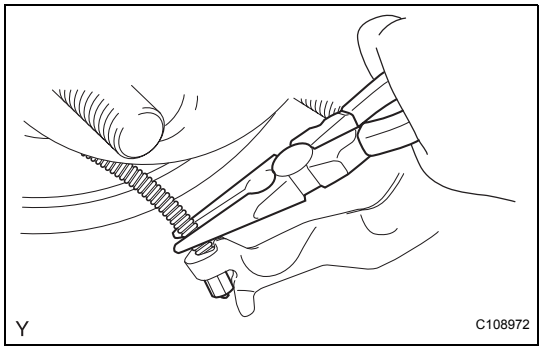

(b) Using needle-nose pliers, install the parking brake cable onto the parking brake shoe lever.

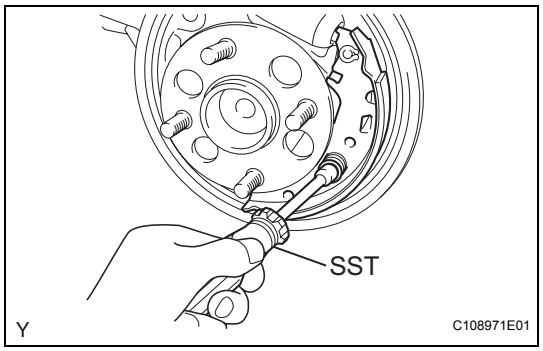

(c) Using SST, install the rear brake shoe, pin, shoe hold down spring and shoe hold down spring cup.
SST 09718-00010

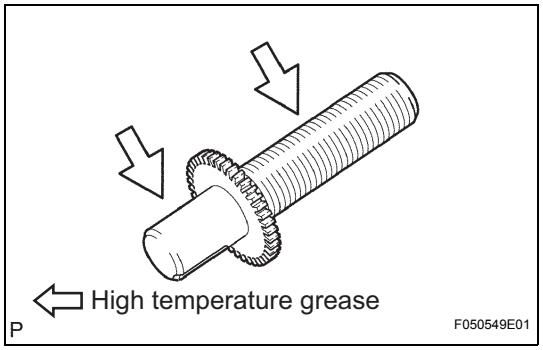

(d) Apply high temperature grease to the adjusting bolt.

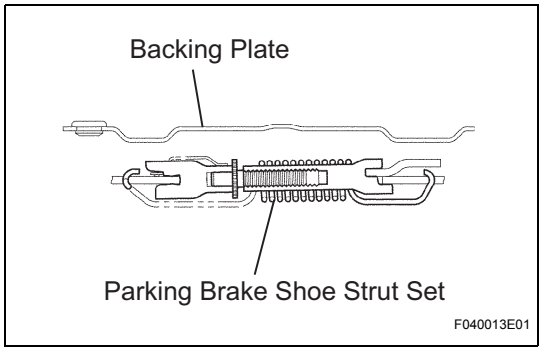

(e) Install the parking brake shoe strut set as shown in the illustration.

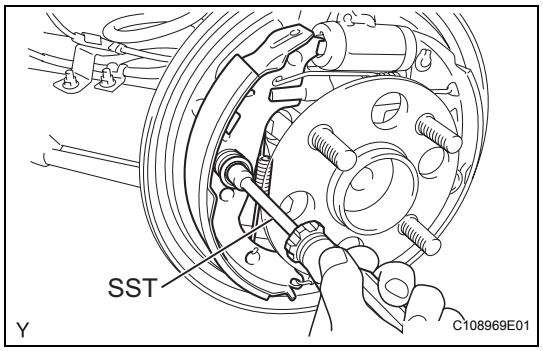

(f) Using SST, install the front brake shoe, pin, shoe hold down spring and shoe hold down spring cup.
SST 09718-00010

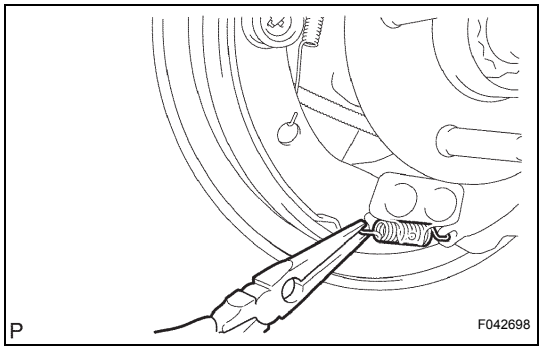

(g) Using needle-nose pliers, install the tension spring onto the front brake shoe and rear brake shoe.

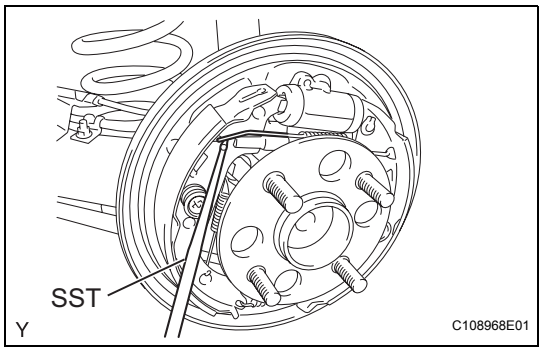

(h) Using SST, install the shoe return spring onto the front brake shoe.
SST 09703-30010
NOTICE:
Do not damage the wheel cylinder boot.

6. CHECK REAR DRUM BRAKE INSTALLATION

(a) Check that each part is installed properly.

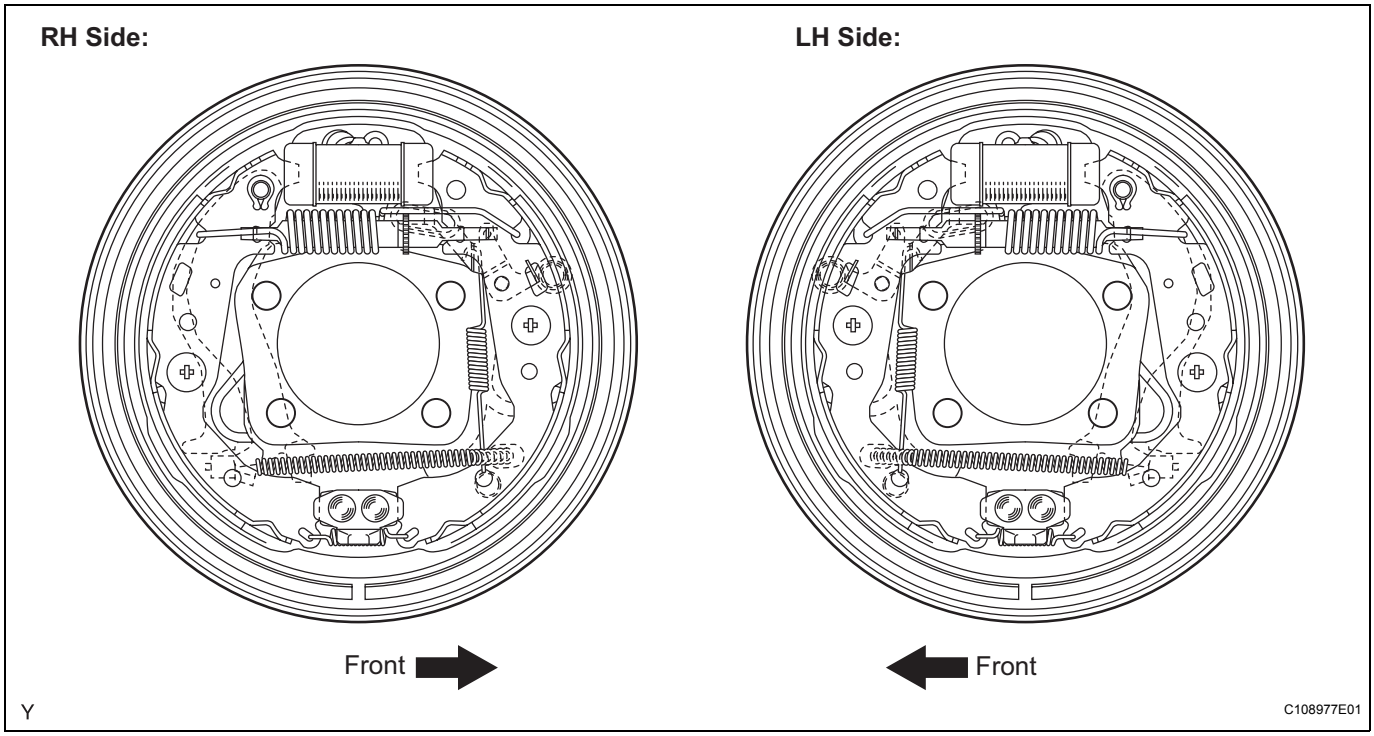

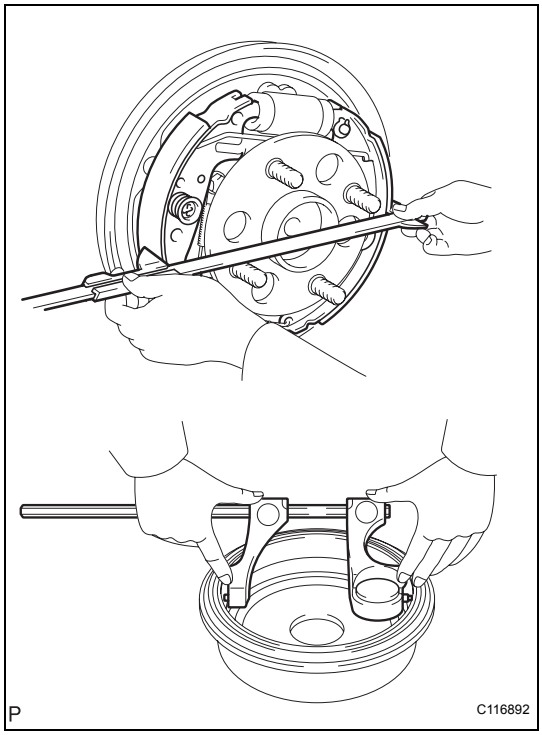

(b) Measure the brake drum inner diameter and the diameter of the brake shoes. Check that the difference between the diameters is equal to the specified shoe clearance.
Shoe clearance:
0.6 mm (0.024 in.)
NOTICE:
There should be no oil or grease adhering to the friction surfaces of the shoe lining or the drum.

INSTALLATION

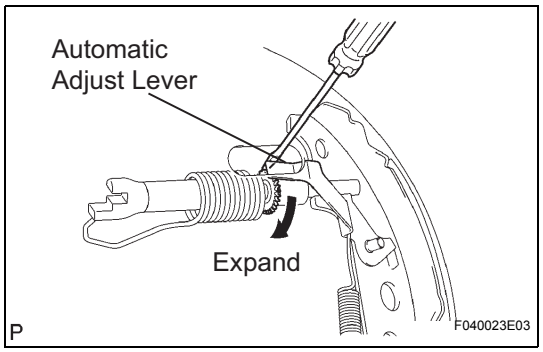

1. **INSTALL REAR BRAKE DRUM SUB-ASSEMBLY**
2. **ADJUST REAR DRUM BRAKE SHOE CLEARANCE**
   (a) Provisionally install the 2 hub nuts.
   (b) Remove the hole plug, and turn the adjuster to expand the shoe until the drum locks.
   (c) Using a screwdriver, release the adjuster 12 notches.
   (d) Install the hole plug.
3. **FILL RESERVOIR WITH BRAKE FLUID (See page BR-10)**
4. **BLEED MASTER CYLINDER (See page BR-10)**
5. **BLEED BRAKE LINE (See page BR-12)**
6. **CHECK FLUID LEVEL IN RESERVOIR (See page BR-12)**
7. **CHECK FOR BRAKE FLUID LEAKAGE**
8. **INSTALL REAR WHEEL**
   Torque: 103 N*m (1,050 kgf*cm, 76 ft.*lbf)
9. **INSPECT PARKING BRAKE LEVER TRAVEL (See page PB-1)**
10. **ADJUST PARKING BRAKE LEVER TRAVEL (See page PB-2)**

REAR BRAKE FLEXIBLE HOSE

COMPONENTS

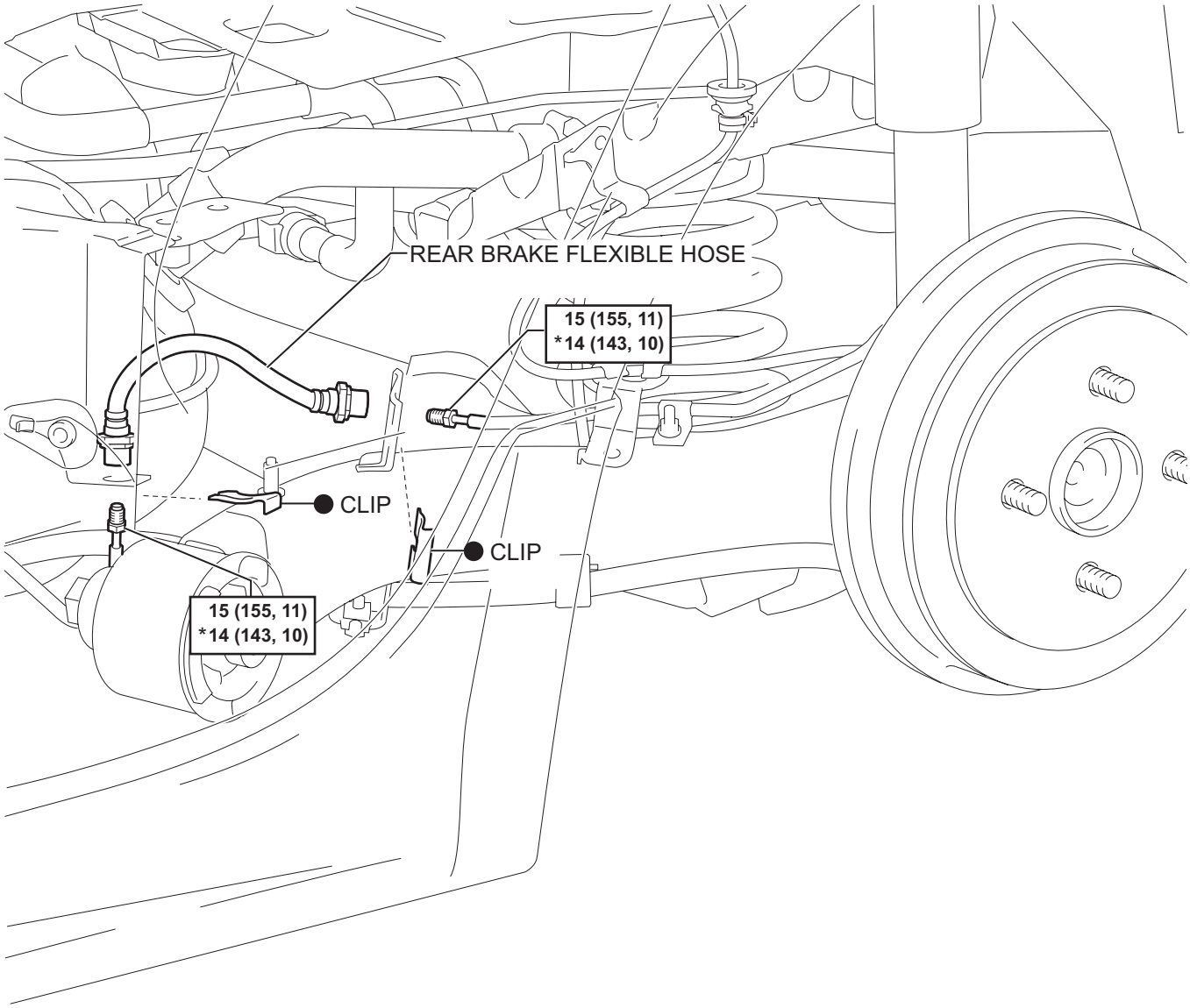

N*m (kgf*cm, ft*lbf) : Specified torque

● Non-reusable part

* For use with SST

P

C116901E02

REMOVAL

1. **REMOVE REAR WHEEL**
2. **DRAIN BRAKE FLUID**
   NOTICE:
   Immediately wash off any brake fluid that comes into contact with any painted surfaces.
3. **REMOVE REAR BRAKE FLEXIBLE HOSE**
   (a) Using SST, separate the brake tubes.
   SST 09023-00100
   (b) Remove the 2 clips and flexible hose from the axle beam.

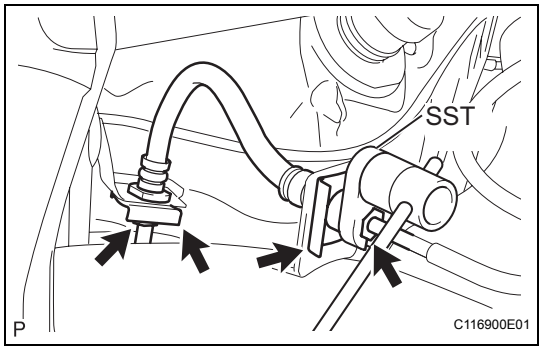

INSTALLATION

1. **INSTALL REAR BRAKE FLEXIBLE HOSE**
   (a) Install the flexible hose with the 2 new clips onto the axle beam.
   (b) Using SST, install the 2 brake tubes onto the flexible hose.
   SST 09023-00100
   Torque: for use without SST
   15 N*m (155 kgf*cm, 11 ft.*lbf)
   for use with SST
   14 N*m (143 kgf*cm, 10 ft.*lbf)
   HINT:
   - Use a torque wrench with a fulcrum length of 300 mm (11.81 in.).
   - This torque value is effective when SST is parallel to a torque wrench.

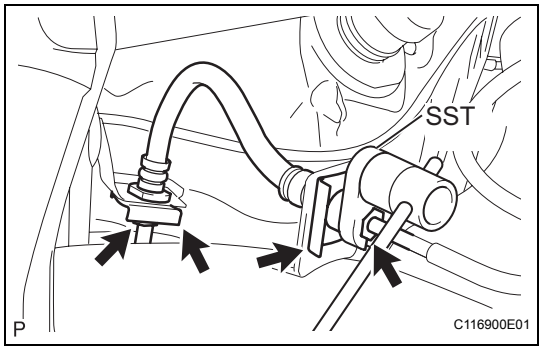

2. **FILL RESERVOIR WITH BRAKE FLUID (See page BR-10)**
3. **BLEED MASTER CYLINDER (See page BR-10)**
4. **BLEED BRAKE LINE (See page BR-12)**
5. **CHECK FLUID LEVEL IN RESERVOIR (See page BR-12)**
6. **CHECK FOR BRAKE FLUID LEAKAGE**
7. **INSTALL REAR WHEEL**
   Torque: 103 N*m (1,050 kgf*cm, 76 ft.*lbf)

PROPORTIONING VALVE

COMPONENTS

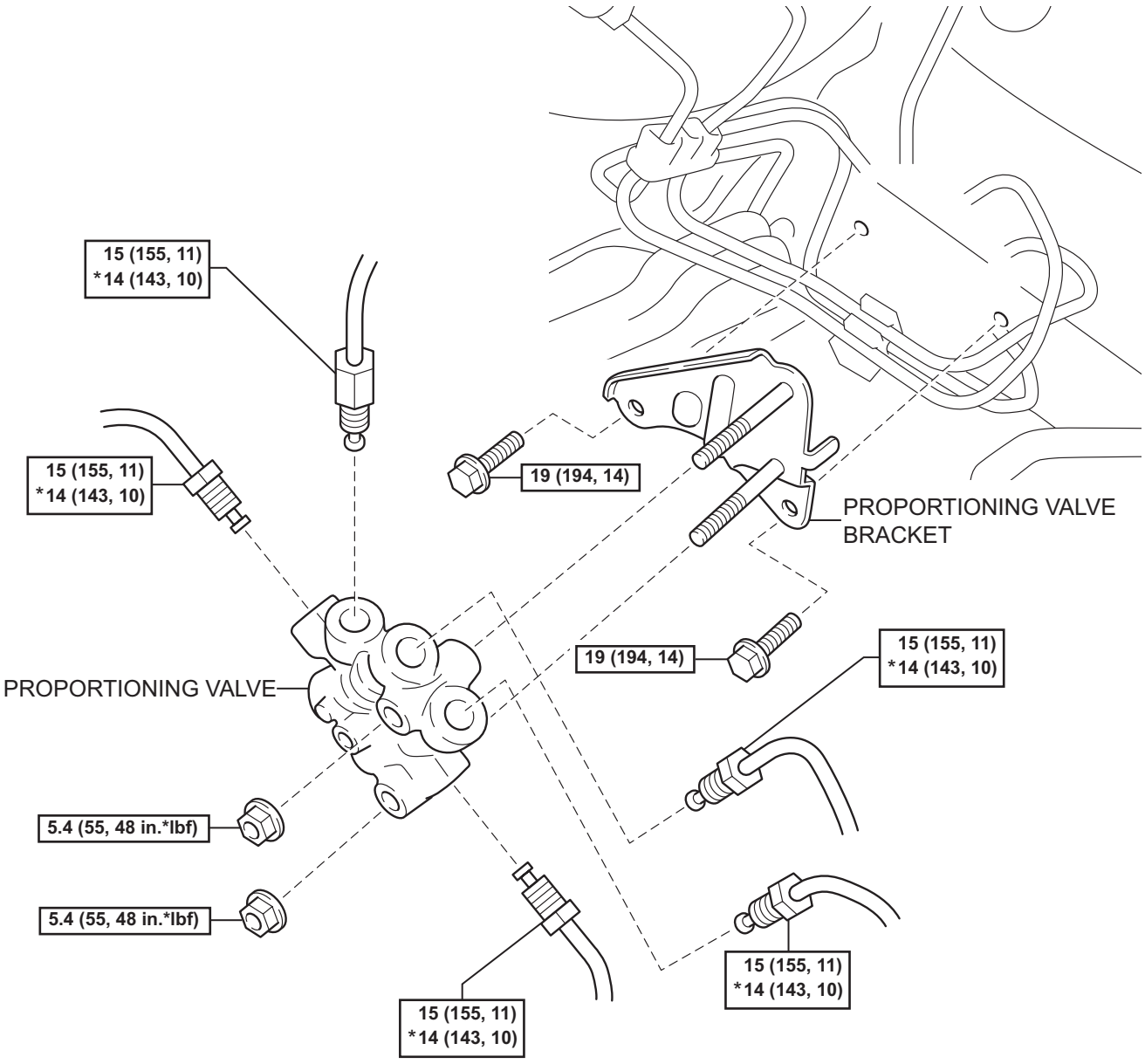

N*m (kgf*cm, ft*lbf) : Specified torque

* For use with SST

N

C121839E02

BR

REMOVAL

1. **DRAIN BRAKE FLUID**
   NOTICE:
   Immediately wash off any brake fluid that comes into contact with any painted surfaces.

2. **REMOVE PROPORTIONING VALVE**
   (a) Using SST, separate the 5 brake tubes from the proportioning valve.
   SST 09023-00100

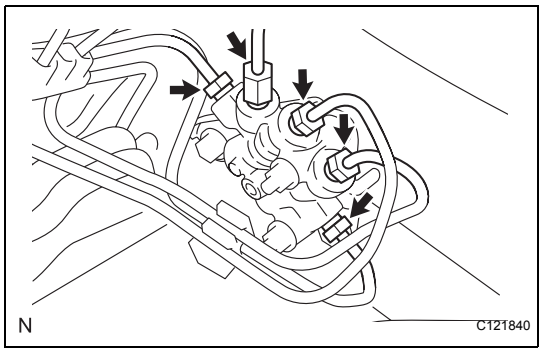

   (b) Remove the 2 bolts and remove the proportioning vale bracket.

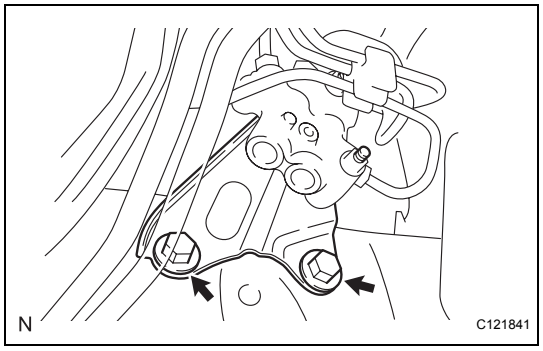

   (c) Remove the 2 nuts and remove the proportioning valve from the proportioning valve bracket.

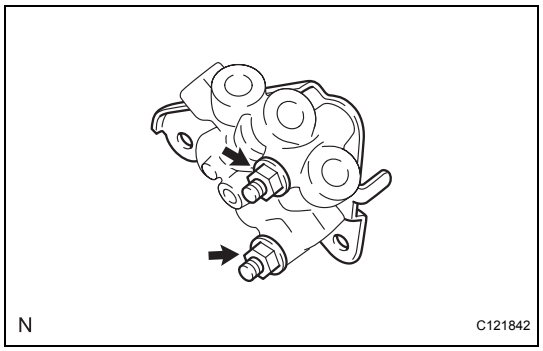

INSTALLATION

1. **INSTALL PROPORTIONING VALVE**
   (a) Install the proportioning valve onto the proportioning valve bracket with the 2 nuts.
   Torque: 5.4 N*m (55 kgf*cm, 48 in.*lbf)

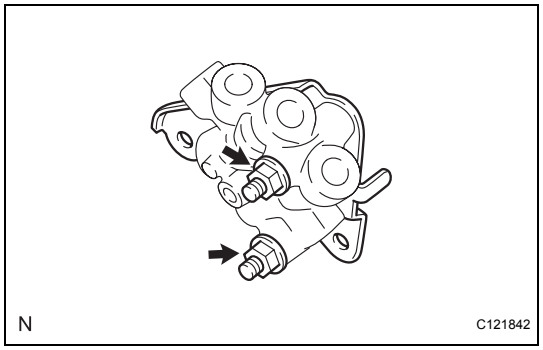

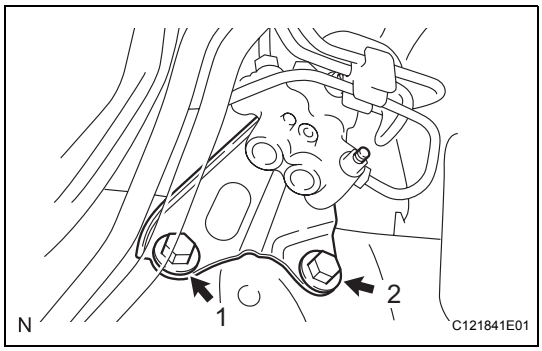

(b) Install the 2 bolts onto the proportioning valve bracket in the sequence order shown in the illustration.
Torque: 19 N*m (194 kgf*cm, 14 ft.*lbf)

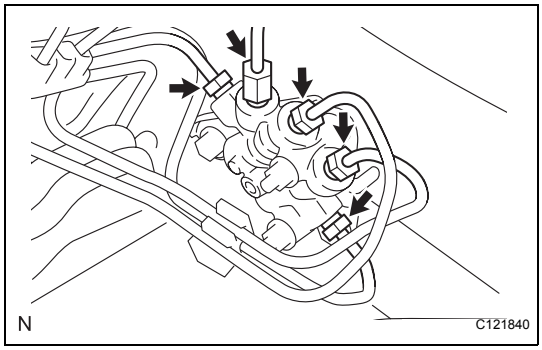

(c) Using SST, install the 5 brake tubes onto the proportioning valve.
SST 09023-00100
Torque: for use without SST
15 N*m (155 kgf*cm, 11 ft.*lbf)
for use with SST
14 N*m (143 kgf*cm, 10 ft.*lbf)
HINT:
- Use a torque wrench with a fulcrum length of 300 mm (11.81 in.).
- This torque value is effective when SST is parallel to a torque wrench.

2. **FILL RESERVOIR WITH BRAKE FLUID (See page BR-10)**
3. **BLEED MASTER CYLINDER (See page BR-10)**
4. **BLEED BRAKE LINE (See page BR-12)**
5. **CHECK FLUID LEVEL IN RESERVOIR (See page BR-12)**
6. **CHECK FOR BRAKE FLUID LEAKAGE**