SECTION ATC
AUTOMATIC AIR CONDITIONER

CONTENTS

PRECAUTIONS 4
Precautions for Supplemental Restraint System (SRS) “AIR BAG” and “SEAT BELT PRE-TENSIONER” 4
Precautions for Working with HFC-134a (R-134a).... 4
General Refrigerant Precautions 4
Lubricant Precautions 5
Precautions for Refrigerant Connection 5
FEATURES OF NEW TYPE REFRIGERANT CONNECTION 5
O-RING AND REFRIGERANT CONNECTION..... 6
Precautions for Servicing Compressor 7
Precautions for Service Equipment 8
RECOVERY/RECYCLING EQUIPMENT 8
ELECTRONIC LEAK DETECTOR 8
VACUUM PUMP 8
MANIFOLD GAUGE SET 8
SERVICE HOSES 8
SERVICE COUPLERS 9
REFRIGERANT WEIGHT SCALE 9
CALIBRATING ACR4 WEIGHT SCALE 9
CHARGING CYLINDER 9
Precautions for Leak Detection Dye 9
IDENTIFICATION 10
IDENTIFICATION LABEL FOR VEHICLE 10
Wiring Diagrams and Trouble Diagnosis 10
PREPARATION 11
Special Service Tools 11
HFC-134a (R-134a) Service Tools and Equipment...11
REFRIGERATION SYSTEM 15
Refrigerant Cycle 15
REFRIGERANT FLOW 15
FREEZE PROTECTION 15
Refrigerant System Protection 15
REFRIGERANT PRESSURE SENSOR (WITH QG ENGINE) 15
DUAL-PRESSURE SWITCH (WITH YD ENGINE) 15
PRESSURE RELIEF VALVE 15
CSV613 Variable Displacement Compressor 16
GENERAL INFORMATION 16
DESCRIPTION 16
Component Layout 19
LUBRICANT 20
Maintenance of Lubricant Quantity in Compressor.. 20
LUBRICANT 20
LUBRICANT RETURN OPERATION 20
LUBRICANT ADJUSTING PROCEDURE FOR COMPONENTS REPLACEMENT EXCEPT COMPRESSOR 21
LUBRICANT ADJUSTING PROCEDURE FOR COMPRESSOR REPLACEMENT 21
AIR CONDITIONER CONTROL 22
Overview Air Conditioner LAN Control System 22
System Construction 22
OPERATION 22
TRANSMISSION DATA AND TRANSMISSION ORDER 23
AIR MIX DOOR CONTROL (AUTOMATIC TEMPERATURE CONTROL) 23
FAN SPEED CONTROL 24
INTAKE DOOR CONTROL 24
OUTLET DOOR CONTROL 24
MAGNET CLUTCH CONTROL 24
SELF-DIAGNOSTIC SYSTEM 24
Overview of Control system 24
Control Operation 25
DISPLAY SCREEN 25
AUTO SWITCH 25
TEMPERATURE DIAL (POTENTIO TEMPERATURE CONTROL) 25
A/C SWITCH 25
DEFROSTER (DEF) SWITCH 25
MODE SWITCH 25
FAN SWITCH 25
OFF SWITCH 25
FRESH (FRE) SWITCH 25
RECIRCULATION (REC) SWITCH 26
REAR WINDOW DEFOGGER SWITCH 26
Fail-safe Function 26

Discharge Air Flow 27
System Description 28
SWITCHES AND THEIR CONTROL FUNCTION.. 28
TROUBLE DIAGNOSIS 29
How to Perform Trouble Diagnoses for Quick and Accurate Repair 29
WORK FLOW 29
SYMPTOM TABLE 29
Component Parts and Harness Connector Location.. 30
ENGINE COMPARTMENT 30
PASSENGER COMPARTMENT 31
Circuit Diagram 32
Wiring Diagram 33
Auto Amp. Terminals and Reference Value 39
PIN CONNECTOR TERMINAL LAYOUT 39
AUTO AMP. INSPECTION TABLE 39
Self-diagnosis Function 41
DESCRIPTION 41
FUNCTION CONFIRMATION PROCEDURE 42
AUXILIARY MECHANISM: TEMPERATURE SETTING TRIMMER 49
Operational Check 50
CHECKING MEMORY FUNCTION 50
CHECKING BLOWER 50
CHECKING DISCHARGE AIR 51
CHECKING RECIRCULATION 52
CHECKING FRESH SWITCH 52
CHECKING TEMPERATURE DECREASE 52
CHECKING TEMPERATURE INCREASE 52
CHECKING AUTO MODE 53
Power Supply and Ground Circuit for Auto Amp. ... 54
INSPECTION FLOW 54
COMPONENT DESCRIPTION 54
DIAGNOSTIC PROCEDURE FOR A/C SYSTEM.. 55
LAN System Circuit 56
DIAGNOSTIC PROCEDURE FOR LAN SYSTEM CIRCUIT 56
Mode Door Motor Circuit 59
INSPECTION FLOW 59
SYSTEM DESCRIPTION 60
COMPONENT DESCRIPTION 61
DIAGNOSTIC PROCEDURE FOR MODE DOOR 61
Air Mix Door Motor Circuit 62
INSPECTION FLOW 62
SYSTEM DESCRIPTION 63
COMPONENT DESCRIPTION 64
DIAGNOSTIC PROCEDURE FOR AIR MIX DOOR MOTOR 64
Intake Door Motor Circuit 65
INSPECTION FLOW 65
SYSTEM DESCRIPTION 66
COMPONENT DESCRIPTION 66
DIAGNOSTIC PROCEDURE FOR INTAKE DOOR MOTOR 67
Blower Motor Circuit 68
INSPECTION FLOW 68
SYSTEM DESCRIPTION 69
COMPONENT DESCRIPTION 70
DIAGNOSTIC PROCEDURE FOR BLOWER MOTOR 70
COMPONENT INSPECTION 73
Magnet Clutch Circuit 74
INSPECTION FLOW 74
SYSTEM DESCRIPTION 75
DIAGNOSTIC PROCEDURE FOR MAGNET CLUTCH 75
COMPONENT INSPECTION 80
Insufficient Cooling 82
INSPECTION FLOW 82
PERFORMANCE TEST DIAGNOSES 84
PERFORMANCE CHART 86
TROUBLE DIAGNOSES FOR UNUSUAL PRESSURE 87
Insufficient Heating 90
INSPECTION FLOW 90
Noise 92
INSPECTION FLOW 92
Self-diagnosis 93
INSPECTION FLOW 93
Memory Function 94
INSPECTION FLOW 94
Ambient Sensor Circuit 95
COMPONENT DESCRIPTION 95
AMBIENT TEMPERATURE INPUT PROCESS... 95
DIAGNOSTIC PROCEDURE FOR AMBIENT SENSOR 95
COMPONENT INSPECTION 97
In-vehicle Sensor Circuit 97
COMPONENT DESCRIPTION 97
DIAGNOSTIC PROCEDURE FOR IN-VEHICLE SENSOR 98
COMPONENT INSPECTION 99
Sunload Sensor Circuit 100
COMPONENT DESCRIPTION 100
SUNLOAD INPUT PROCESS 100
DIAGNOSTIC PROCEDURE FOR SUNLOAD SENSOR 100
COMPONENT INSPECTION 102
Intake Sensor Circuit 103
COMPONENT DESCRIPTION 103
DIAGNOSTIC PROCEDURE FOR INTAKE SENSOR 103
Multiplex Communication Circuit 104
DIAGNOSTIC PROCEDURE FOR MULTIPLEX COMMUNICATION CIRCUIT 104
CONTROLLER 108
Removal and Installation 108
AUTO AMP 109
REMOVAL AND INSTALLATION 109
AMBIENT SENSOR 110
Removal and Installation 110
IN-VEHICLE SENSOR 111
Removal and Installation 111
SUNLOAD SENSOR 112
Removal and Installation 112

INTAKE SENSOR CIRCUIT 113
Removal and Installation 113
REMOVAL 113
INSTALLATION 113
BLOWER UNIT 115
Removal and Installation 115
REMOVAL 115
INSTALLATION 115
Disassembly and Assembly 115
BLOWER MOTOR 116
Removal and Installation 116
INTAKE DOOR MOTOR 117
Removal and Installation 117
HEATER & COOLING UNIT ASSEMBLY 118
Removal and Installation 118
REMOVAL 118
INSTALLATION 119
Disassembly and Assembly 120
MODE DOOR MOTOR 121
Removal and Installation 121
AIR MIX DOOR MOTOR 122
Removal and Installation 122
FAN CONTROL AMPLIFIER 123
Removal and Installation 123
VENTILATION AIR FILTER 124
Removal and Installation 124
FUNCTION 124
REPLACEMENT TIMING 124
REPLACEMENT AND PROCEDURES 124
HEATER CORE 125
Removal and Installation 125
DUCTS AND GRILLES 126
Removal and Installation 126
VENTILATOR DUCT, DEFROSTER NOZZLE AND DEFROSTER DUCTS 126
CENTER VENTILATOR GRILLE 126
SIDE VENTILATOR GRILLE 127
FOOT DUCT 127
FLOOR DUCT 127
REFRIGERANT LINES 128
HFC-134a (R-134a) Service Procedure 128
SETTING OF SERVICE TOOLS AND EQUIPMENT 128
Components 130
QG ENGINE MODELS 130
YD22DDT ENGINE MODELS 131
YD22DDTI ENGINE MODELS 132
Compressor 133
REMOVAL 133
INSTALLATION 134
Compressor Clutch 135
REMOVAL 135
INSTALLATION 136
Low-pressure Flexible Hose 138
REMOVAL 138
INSTALLATION 138
High-pressure Flexible Hose 138
REMOVAL 138
INSTALLATION 139
High-pressure Pipe 139
REMOVAL 139
INSTALLATION 139
Refrigerant Pressure Sensor 140
REMOVAL AND INSTALLATION 140
Dual-pressure Switch 140
REMOVAL AND INSTALLATION 140
Condenser Assembly 141
REMOVAL 141
INSTALLATION 141
Evaporator 141
REMOVAL 141
INSTALLATION 142
Expansion Valve 142
REMOVAL 142
INSTALLATION 142
Checking for Refrigerant Leaks 143
Checking System for Leaks Using the Fluorescent Leak Detector 143
Dye Injection 143
Electronic Refrigerant Leak Detector 144
PRECAUTIONS FOR HANDLING LEAK DETECTOR 144
CHECKING PROCEDURE 145
SERVICE DATA AND SPECIFICATIONS (SDS) 147
Compressor 147
Lubricant 147
Refrigerant 147
Engine Idling Speed 147
Belt Tension 147

PRECAUTIONS

PFP:00001

Precautions for Supplemental Restraint System (SRS) “AIR BAG” and “SEAT BELT PRE-TENSIONER”

EJS002ZH

The Supplemental Restraint System such as “AIR BAG” and “SEAT BELT PRE-TENSIONER”, used along with a front seat belt, helps to reduce the risk or severity of injury to the driver and front passenger for certain types of collision. Information necessary to service the system safely is included in the SRS and SB section of this Service Manual.

WARNING:

- **To avoid rendering the SRS inoperative, which could increase the risk of personal injury or death in the event of a collision which would result in air bag inflation, all maintenance must be performed by an authorized NISSAN/INFINITI dealer.**
- **Improper maintenance, including incorrect removal and installation of the SRS, can lead to personal injury caused by unintentional activation of the system. For removal of Spiral Cable and Air Bag Module, see the SRS section.**
- **Do not use electrical test equipment on any circuit related to the SRS unless instructed to in this Service Manual. SRS wiring harnesses can be identified by yellow and/or orange harnesses or harness connectors.**

Precautions for Working with HFC-134a (R-134a)

EJS002ZI

WARNING:

- **Use only specified lubricant for the HFC-134a (R-134a) A/C system and HFC-134a (R-134a) components. If lubricant other than that specified is used, compressor malfunction is likely to occur.**
- **The specified HFC-134a (R-134a) lubricant rapidly absorbs moisture from the atmosphere. The following handling precautions must be observed:**
  - **When removing refrigerant components from a vehicle, immediately cap (seal) the component to minimize the entry of moisture from the atmosphere.**
  - **When installing refrigerant components to a vehicle, do not remove the caps (unseal) until just before connecting the components. Connect all refrigerant loop components as quickly as possible to minimize the entry of moisture into system.**
  - **Only use the specified lubricant from a sealed container. Immediately reseal containers of lubricant. Without proper sealing, lubricant will become moisture saturated and should not be used.**
  - **Avoid breathing A/C refrigerant and lubricant vapor or mist. Exposure may irritate eyes, nose and throat. Use only approved recovery/recycling equipment to discharge HFC-134a (R-134a) refrigerant. If accidental system discharge occurs, ventilate work area before resuming service. Additional health and safety information may be obtained from refrigerant and lubricant manufacturers.**
  - **Do not allow lubricant (Nissan A/C System Oil Type S) to come in contact with styrofoam parts. Damage may result.**

General Refrigerant Precautions

EJS002ZJ

WARNING:

- **Do not release refrigerant into the air. Use approved recovery/recycling equipment to capture the refrigerant every time an air conditioning system is discharged.**
- **Always wear eye and hand protection (goggles and gloves) when working with any refrigerant or air conditioning system.**
- **Do not store or heat refrigerant containers above 52°C (125°F).**
- **Do not heat a refrigerant container with an open flame; if container warming is required, place the bottom of the container in a warm pail of water.**
- **Do not intentionally drop, puncture, or incinerate refrigerant containers.**
- **Keep refrigerant away from open flames: poisonous gas will be produced if refrigerant burns.**
- **Refrigerant will displace oxygen, therefore be certain to work in well ventilated areas to prevent suffocation.**
- **Do not pressure test or leak test HFC-134a (R-134a) service equipment and/or vehicle air conditioning systems with compressed air during repair. Some mixtures of air and HFC-134a (R-134a) have been shown to be combustible at elevated pressures. These mixtures, if ignited, may cause**

injury or property damage. Additional health and safety information may be obtained from refrigerant manufacturers.

Lubricant Precautions

EJS002ZK

- Use only specified lubricant for the HFC-134a (R-134a) A/C system and HFC-134a (R-134a) components. If lubricant other than that specified is used, compressor malfunction is likely to occur.
- The specified HFC-134a (R-134a) lubricant rapidly absorbs moisture from the atmosphere. The following handling precautions must be observed:
  - When removing refrigerant components from a vehicle, immediately cap (seal) the component to minimize the entry of moisture from the atmosphere.
  - When installing refrigerant components to a vehicle, do not remove the caps (unseal) until just before connecting the components. Connect all refrigerant loop components as quickly as possible to minimize the entry of moisture into system.
  - Only use the specified lubricant from a sealed container. Immediately reseal containers of lubricant. Without proper sealing, lubricant will become moisture saturated and should not be used.
- Avoid breathing A/C refrigerant and lubricant vapor or mist. Exposure may irritate eyes, nose and throat. Use only approved recovery/recycling equipment to discharge HFC-134a (R-134a) refrigerant. If accidental system discharge occurs, ventilate work area before resuming service. Additional health and safety information may be obtained from refrigerant and lubricant manufacturers.
- Do not allow lubricant (Nissan A/C System Oil Type S) to come in contact with styrofoam parts. Damage may result.

Precautions for Refrigerant Connection

EJS002ZL

A new type refrigerant connection has been introduced to all refrigerant lines except the following location.

- Expansion valve to evaporator
- Dual-pressure switch (or refrigerant pressure sensor) to liquid tank

FEATURES OF NEW TYPE REFRIGERANT CONNECTION

- The O-ring has been relocated. It has also been provided with a groove for proper installation. This eliminates the chance of the O-ring being caught in, or damaged by, the mating part. The sealing direction of the O-ring is now set vertically in relation to the contacting surface of the mating part to improve sealing characteristics.
- The reaction force of the O-ring will not occur in the direction that causes the joint to pull out, thereby facilitating piping connections.

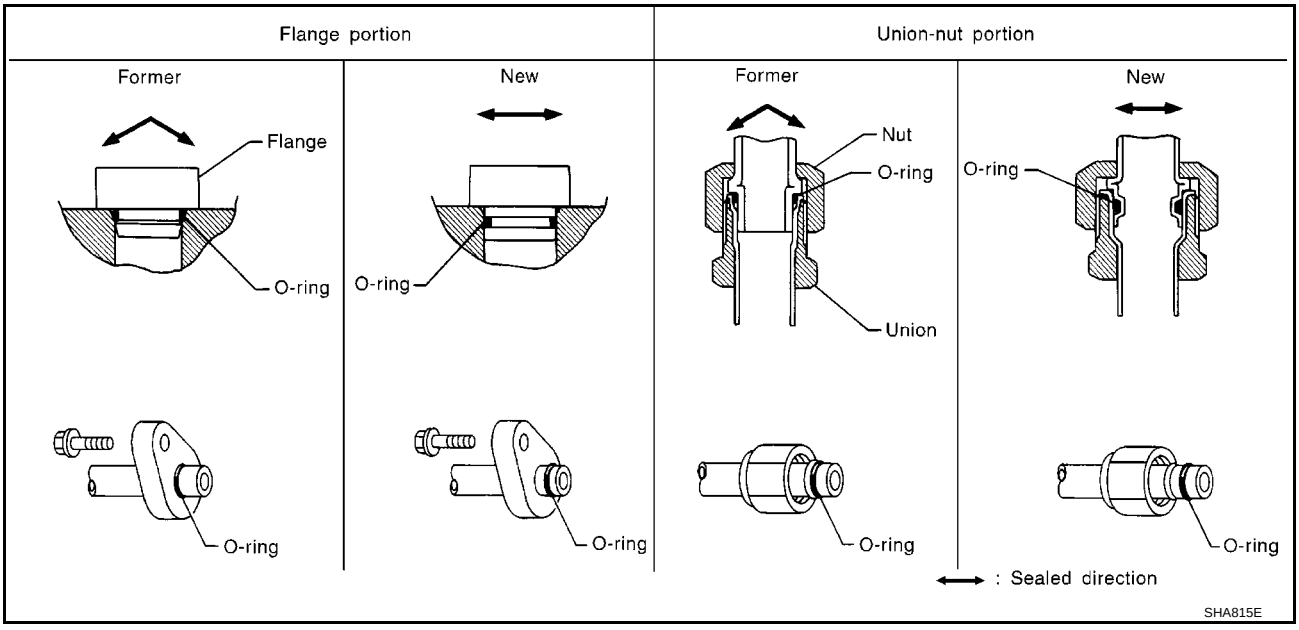

O-RING AND REFRIGERANT CONNECTION

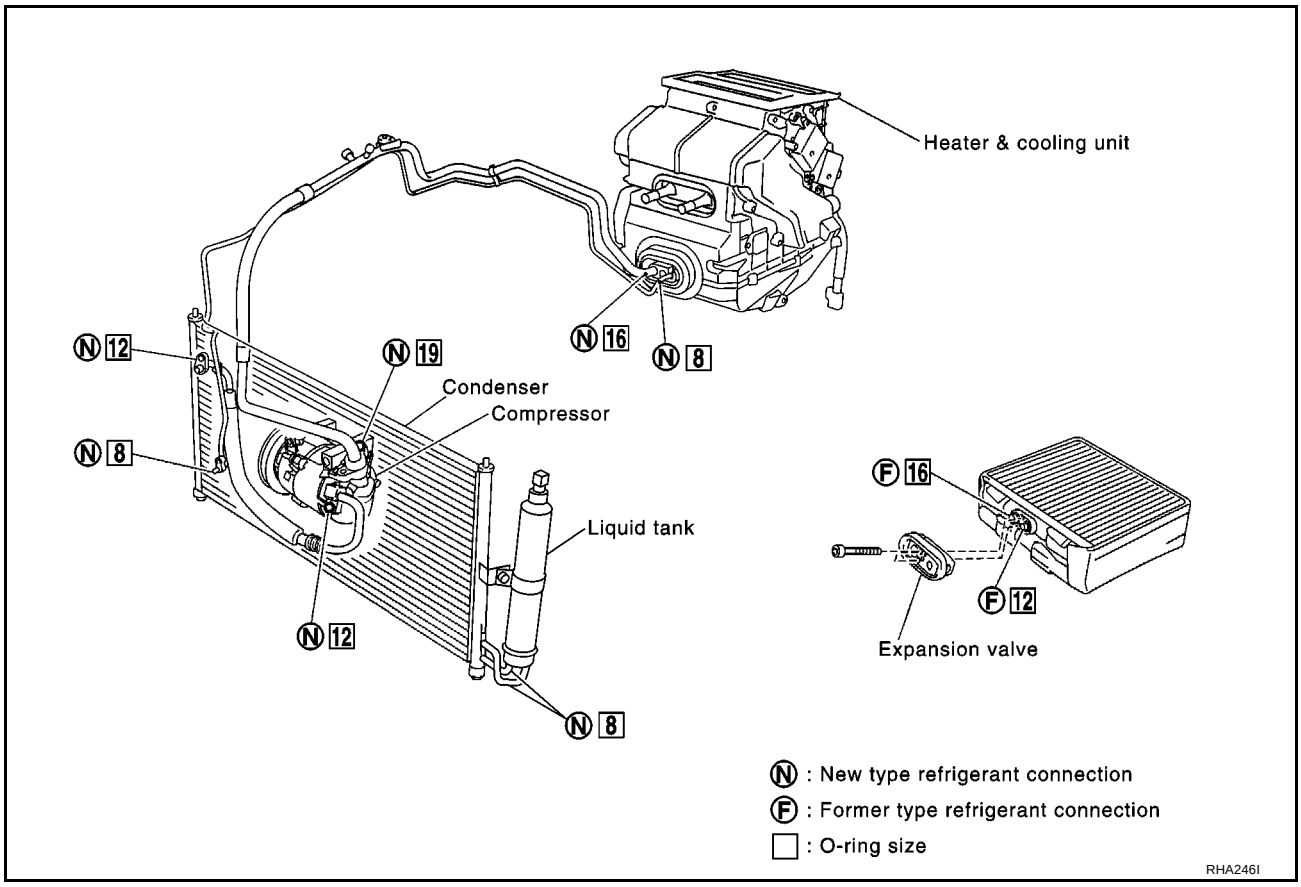

CAUTION:

The new and former refrigerant connections use different O-ring configurations. Do not confuse O-rings since they are not interchangeable. If a wrong O-ring is installed, refrigerant will leak at, or around, the connection.

O-Ring Part Numbers and Specifications

Connection type	Piping connection point		Part number	Qty.	Remarks
New	Low-pressure flexible hose to heater & cooling unit		92473 N8210	1	O-ring size: 16mm
	High-pressure pipe to heater & cooling unit		92471 N8210	1	O-ring size: 8mm
	Condenser to high-pressure flexible hose		92472 N8210	1	O-ring size: 12mm
	Condenser to high-pressure pipe		92471 N8210	1	O-ring size: 8mm
	Compressor to low-pressure flexible hose		92474 N8210	1	O-ring size: 19mm
	Compressor to high-pressure pipe		92472 N8210	1	O-ring size: 12mm
	Liquid tank to condenser pipe	Inlet	92471 N8210	1	O-ring size: 8mm
		Outlet		1	
Former	Dual-pressure switch (or refrigerant pressure sensor)		J2476 89956	1	O-ring size: 10mm
	Expansion valve to evaporator	Inlet	92475 71L00	1	O-ring size: 12mm
		Outlet	92475 72L00	1	O-ring size: 16mm

WARNING:

Make sure all refrigerant is discharged into the recycling equipment and the pressure in the system is less than atmospheric pressure. Then gradually loosen the discharge side hose fitting and remove it.

CAUTION:

When replacing or cleaning refrigerant cycle components, observe the following.

- When the compressor is removed, store it in the same position as it is when mounted on the car. Malfunction to do so will cause lubricant to enter the low pressure chamber.
- When connecting tubes, always use a torque wrench and a back-up wrench.
- After disconnecting tubes, immediately plug all openings to prevent entry of dirt and moisture.
- When installing an air conditioner in the vehicle, connect the pipes as the final stage of the operation. Do not remove the seal caps of pipes and other components until just before required for connection.
- Allow components stored in cool areas to warm to working area temperature before removing seal caps. This prevents condensation from forming inside A/C components.
- Thoroughly remove moisture from the refrigeration system before charging the refrigerant.
- Always replace used O-rings.
- When connecting tube, apply lubricant to circle of the O-rings shown in illustration. Be careful not to apply lubricant to threaded portion.

Lubricant name:	**Nissan A/C System Oil Type S**
Part number:	**KLH00-PAGS0**

- O-ring must be closely attached to dented portion of tube.
- When replacing the O-ring, be careful not to damage O-ring and tube.
- Connect tube until you hear it click, then tighten the nut or bolt by hand until snug. Make sure that the O-ring is installed to tube correctly.
- After connecting line, conduct leak test and make sure that there is no leakage from connections. When the gas leaking point is found, disconnect that line and replace the O-ring. Then tighten connections of seal seat to the specified torque.

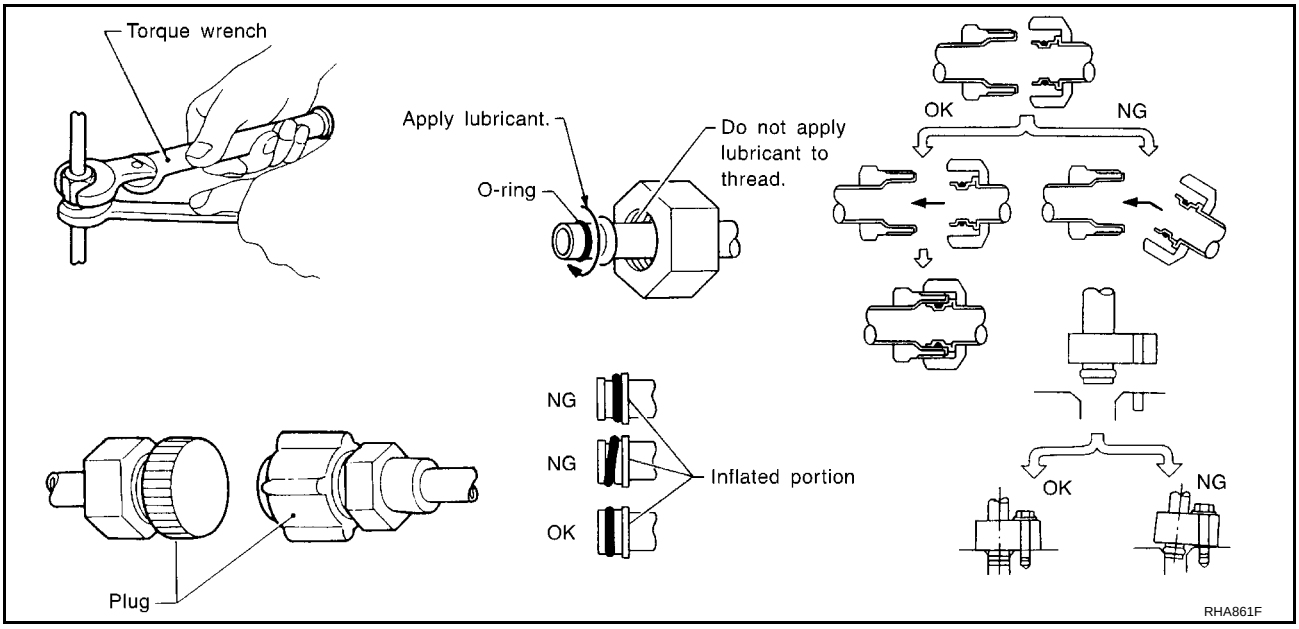

Precautions for Servicing Compressor

EJS002ZM

- Plug all openings to prevent moisture and foreign matter from entering.
- When the compressor is removed, store it in the same position as it is when mounted on the car.
- When replacing or repairing compressor, follow “Maintenance of Lubricant Quantity in Compressor” exactly. Refer to ATC-20, "Maintenance of Lubricant Quantity in Compressor" .
- Keep friction surfaces between clutch and pulley clean. If the surface is contaminated, with lubricant, wipe it off by using a clean waste cloth moistened with thinner.
- After compressor service operation, turn the compressor shaft by hand more than five turns in both directions. This will equally distribute lubricant inside the compressor. After the compressor is installed, let the engine idle and operate the compressor for one hour.
- After replacing the compressor magnet clutch, apply voltage to the new one and check for usual operation.

Precautions for Service Equipment

EJS002ZN

RECOVERY/RECYCLING EQUIPMENT

Be certain to follow the manufacturers instructions for machine operation and machine maintenance. Never introduce any refrigerant other than that specified into the machine.

ELECTRONIC LEAK DETECTOR

Be certain to follow the manufacturer's instructions for tester operation and tester maintenance.

VACUUM PUMP

The lubricant contained inside the vacuum pump is not compatible with the specified lubricant for HFC-134a (R-134a) A/C systems. The vent side of the vacuum pump is exposed to atmospheric pressure. So the vacuum pump lubricant may migrate out of the pump into the service hose. This is possible when the pump is switched off after evacuation (vacuuming) and hose is connected to it.
To prevent this migration, use a manual valve placed near the hose-to-pump connection, as follows.

- Usually vacuum pumps have a manual isolator valve as part of the pump. Close this valve to isolate the service hose from the pump.
- For pumps without an isolator, use a hose equipped with a manual shut-off valve near the pump end. Close the valve to isolate the hose from the pump.
- If the hose has an automatic shut off valve, disconnect the hose from the pump. As long as the hose is connected, the valve is open and lubricating oil may migrate.

Some one-way valves open when vacuum is applied and close under a no vacuum condition. Such valves may restrict the pump's ability to pull a deep vacuum and are not recommended.

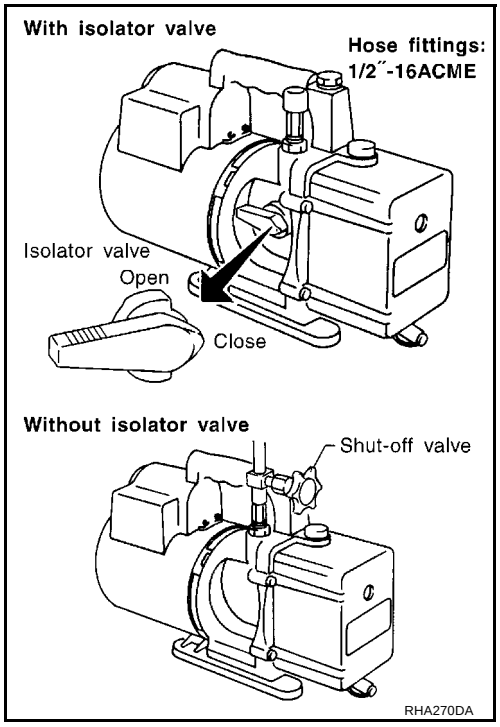

MANIFOLD GAUGE SET

Be certain that the gauge face indicates HFC-134a (R-134a) or 134a. Be sure the gauge set has 1/2″-16 ACME threaded connections for service hoses. Confirm the set has been used only with refrigerant HFC-134a (R-134a) and specified lubricants.

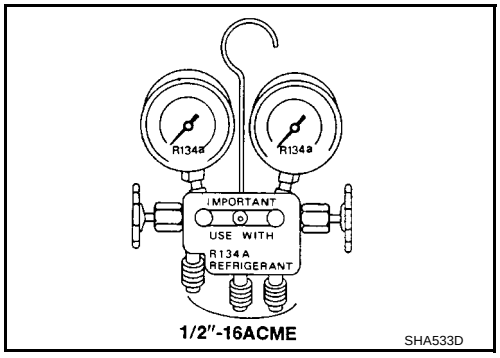

SERVICE HOSES

Be certain that the service hoses display the markings described (colored hose with black stripe). All hoses must include positive shut off devices (either manual or automatic) near the end of the hoses opposite the manifold gauge.

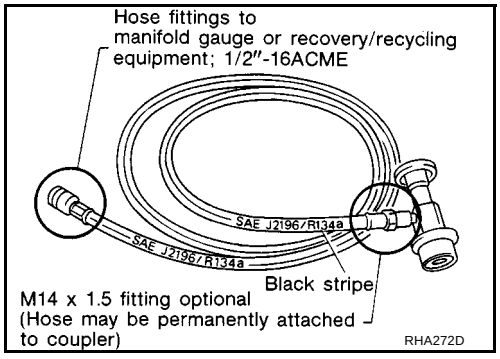

SERVICE COUPLERS

Never attempt to connect HFC-134a (R-134a) service couplers to an CFC-12 (R-12) A/C system. The HFC-134a (R-134a) couplers will not properly connect to the CFC-12 (R-12) system. However, if an improper connection is attempted, discharging and contamination may occur.

Shut-off valve rotation	A/C service valve
Clockwise	Open
Counterclockwise	Close

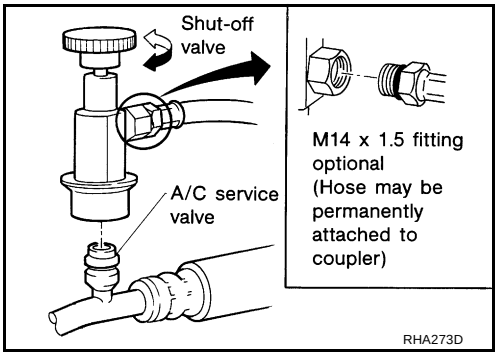

REFRIGERANT WEIGHT SCALE

Verify that no refrigerant other than HFC-134a (R-134a) and specified lubricants have been used with the scale. If the scale controls refrigerant flow electronically, the hose fitting must be 1/2″-16 ACME.

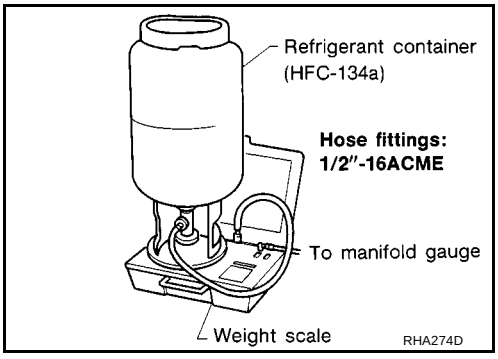

CALIBRATING ACR4 WEIGHT SCALE

Calibrate the scale every three months.
To calibrate the weight scale on the ACR4:

1. Press **Shift/Reset** and **Enter** at the same time.
2. Press **8787** . “**A1** ” will be displayed.
3. Remove all weight from the scale.
4. Press **0** , then press **Enter** . “**0.00** ” will be displayed and change to “**A2** ”.
5. Place a known weight (dumbbell or similar weight), between 4.5 and 8.6 kg (10 and 19 lb) on the center of the weight scale.
6. Enter the known weight using four digits. (Example 10 lb = 10.00, 10.5 lb = 10.50)
7. Press **Enter** — the display returns to the vacuum mode.
8. Press **Shift/Reset** and **Enter** at the same time.
9. Press **6** — the known weight on the scale is displayed.
10. Remove the known weight from the scale. “**0.00** ” will be displayed.
11. Press **Shift/Reset** to return the ACR4 to the program mode.

CHARGING CYLINDER

Using a charging cylinder is not recommended. Refrigerant may be vented into air from cylinder′s top valve when filling the cylinder with refrigerant. Also, the accuracy of the cylinder is generally less than that of an electronic scale or of quality recycle/recharge equipment.

Precautions for Leak Detection Dye

EJS002ZO

- The A/C system contains a fluorescent leak detection dye used for locating refrigerant leaks. An ultraviolet (UV) lamp is required to illuminate the dye when inspecting for leaks.
- Always wear fluorescence enhancing UV safety goggles to protect your eyes and enhance the visibility of the fluorescent dye.
- The fluorescent dye leak detector is not a replacement for an electronic refrigerant leak detector. The fluorescent dye leak detector should be used in conjunction with an electronic refrigerant leak detector to (J-41995) pin-point refrigerant leaks.
- For your safety and your Customer′s satisfaction, read and follow all manufacture′s operating instructions and precautions prior to performing the work.

- A compressor shaft seal should not be repaired because of dye seepage. The compressor shaft seal should only be repaired after confirming the leak with an electronic refrigerant leak detector (J-41995).
- Always remove any remaining dye from the leak area after repairs are complete to avoid a misdiagnosis during a future service.
- Do not allow dye to come into contact with painted body panels or interior components. If dye is spilled, clean immediately with the approved dye cleaner. Fluorescent dye left on a surface for an extended period of time cannot be removed.
- Do not spray the fluorescent dye cleaning agent on hot surfaces (engine exhaust manifold, etc.).
- Do not use more than one refrigerant dye bottle (1/4 ounce / 7.4 cc) per A/C system.
- Leak detection dyes for HFC-134a (R-134a) and CFC-12 (R-12) A/C systems are different. Do not use HFC-134a (R-134a) leak detection dye in CFC-12 (R-12) A/C system or CFC-12 (R-12) leak detector dye in HFC-134a (R-134a) A/C systems or A/C system damage may result.
- The fluorescent properties of the dye will remain for over three (3) years unless a compressor malfunction occurs.

IDENTIFICATION

NOTE:
Vehicles with factory installed fluorescent dye have a green label.
Vehicles without factory installed fluorescent dye have a blue label.

IDENTIFICATION LABEL FOR VEHICLE

Vehicles with factory installed fluorescent dye have this identification label on the front side of hood.

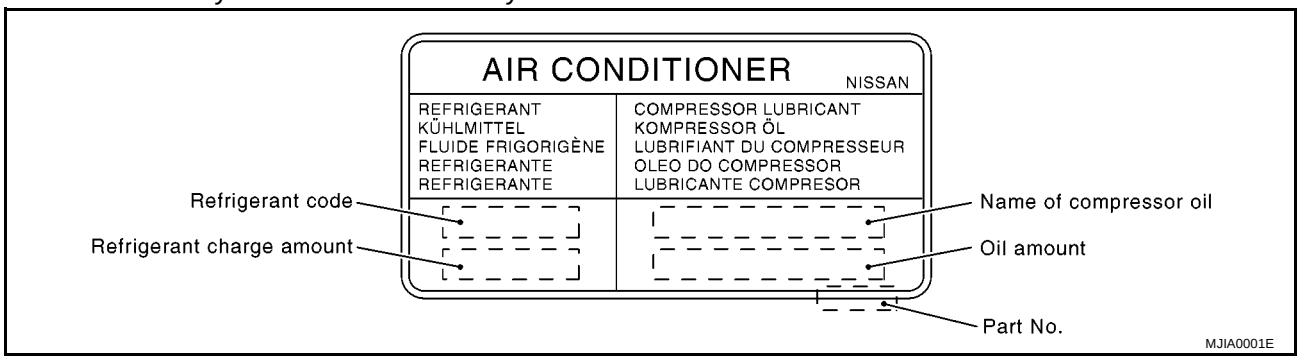

Wiring Diagrams and Trouble Diagnosis

EJS002ZP

When you read wiring diagrams, refer to the followings:

- GI-11, “How to Read Wiring Diagram” in GI section.
- EL-11, “Power Supply Routing” in EL section.

When you perform trouble diagnosis, refer to the followings:

- GI-21, “How to Perform Efficient Diagnosis for an Electrical Incident” in GI section.
- GI-31, “How to Follow Trouble Diagnosis” in GI section.

PREPARATION

PFP:00002

Special Service Tools

EJS002ZQ

Tool number Tool name	Description	
KV99106100 Clutch disc wrench	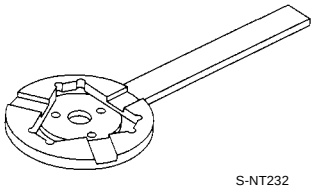 S-NT232 When replacing the magnetic clutch in the above compressor, use a clutch disc wrench with the pin side on the clutch disc to remove it. 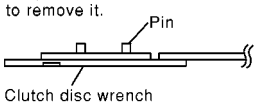 RJIA0194E	Removing shaft nut and clutch disc
KV99232340 or KV992T0001 Clutch disc puller	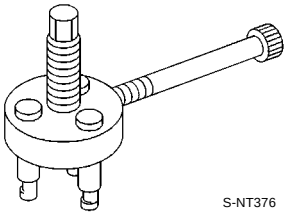 S-NT376	Removing clutch disc
KV99106200 Pulley installer	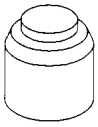 S-NT235	Installing pulley

HFC-134a (R-134a) Service Tools and Equipment

EJS002ZR

Never mix HFC-134a (R-134a) refrigerant and/or its specified lubricant with CFC-12 (R-12) refrigerant and/or its lubricant.
Separate and non-interchangeable service equipment must be used for handling each type of refrigerant/lubricant.
Refrigerant container fittings, service hose fittings and service equipment fittings (equipment which handles refrigerant and/or lubricant) are different between CFC-12 (R-12) and HFC-134a (R-134a). This is to avoid mixed use of the refrigerants/lubricant.
Adapters that convert one size fitting to another must never be used: refrigerant/lubricant contamination will occur and compressor malfunction will result.

Tool number Tool name	Description	
HFC-134a (R-134a) refrigerant	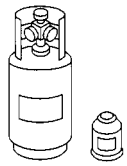 S-NT196	Container color: Light blue Container marking: HFC-134a (R-134a) Fitting size: Thread size ● Large container 1/2″ -16 ACME
KLH00-PAGS0 Nissan A/C System Oil Type S	 S-NT197	Type: Poly alkylene glycol oil (PAG), type S Application: HFC-134a (R-134a) swash plate compressors (Nissan only) Lubricity: 40 m ℓ (1.4 Imp fl oz.)
Recovery/Recycling/ Recharging equipment (ACR4)	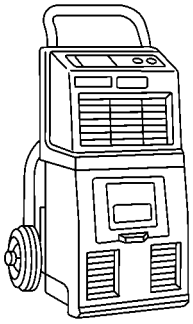 RJIA0195E	Function: Refrigerant Recovery and Recycling and Recharging
Electrical leak detector	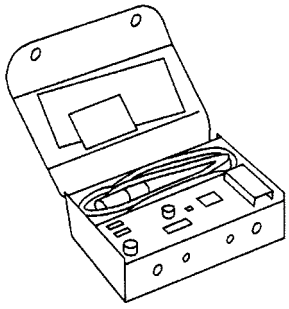 A/C leak detector SHA705EB	Power supply: DC 12V (Cigarette lighter)
(J-43926) Refrigerant dye leak detection kit Kit includes: (J-42220) Fluorescent dye leak detector (J-41459) HFC-134a (R-134a) dye injector Use with J-41447, 1/4 ounce bottle (J-41447) HFC-134a (R-134a) fluorescent leak detection dye (Box, of 24, 1/4 ounce bottles) (J-43872) Dye cleaner	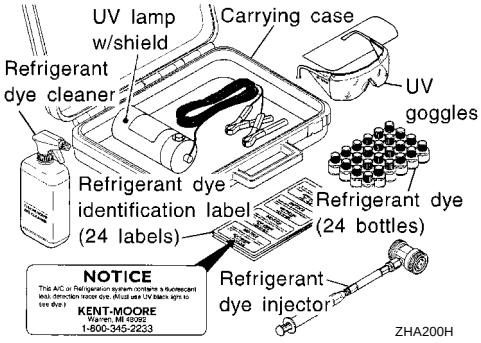 ZHA200H	Power supply: DC 12V (Battery terminal)

Tool number Tool name	Description	
(J-42220) Fluorescent dye leak detector	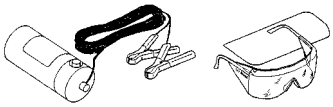 SHA438F	Power supply: DC 12V (Battery terminal) For checking refrigerant leak when fluorescent dye is installed in A/C system. Includes: UV lamp and UV safety goggles
(J-41447) HFC-134a (R-134a) Fluorescent leak detection dye (Box of 24, 1/4 ounce bottles)	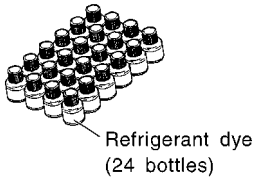 SHA439F	Application: For HFC-134a (R-134a) PAG oil Container: 1/4 ounce (7.4 cc) bottle (Includes self-adhesive dye identification labels for affixing to vehicle after charging system with dye.)
(J-41459) HFC-134a (R-134a) Dye injector Use with J-41447, 1/4 ounce bottle	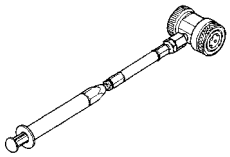 SHA440F	For injecting 1/4 ounce of fluorescent leak detection dye into A/C system.
(J-43872) Dye cleaner	 SHA441F	For cleaning dye spills.
Manifold gauge set (with hoses and couplers)	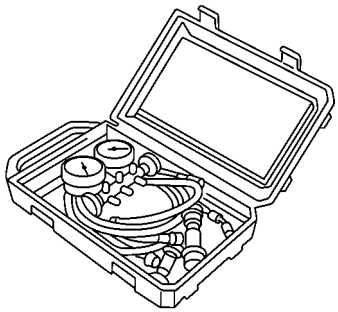 RJIA0196E	Identification: ● The gauge face indicates HFC-134a (R-134a). Fitting size: Thread size ● 1/2″ -16 ACME
Service hoses ● High side hose ● Low side hose ● Utility hose	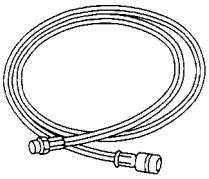 S-NT201	Hose color: ● Low hose: Blue with black stripe ● High hose: Red with black stripe ● Utility hose: Yellow with black stripe or green with black stripe Hose fitting to gauge: ● 1/2″ -16 ACME
Service couplers ● High side coupler ● Low side coupler	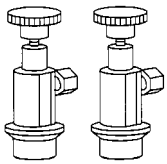 S-NT202	Hose fitting to service hose: ● M14 x 1.5 fitting is optional or permanently attached.

Tool number Tool name	Description	
Refrigerant weight scale	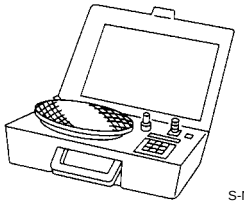 S-NT200	For measuring of refrigerant Fitting size: Thread size ● 1/2″ -16 ACME
Vacuum pump (Including the isolator valve)	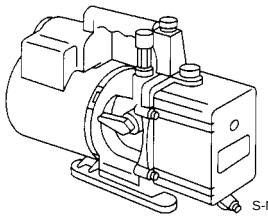 S-NT203	Capacity: ● Air displacement: 4 CFM ● Micron rating: 20 microns ● Oil capacity: 482 g (17 oz.) Fitting size: Thread size ● 1/2″ -16 ACME

REFRIGERATION SYSTEM

PFP:KA990

Refrigerant Cycle

EJS002ZS

REFRIGERANT FLOW

The refrigerant flows in the standard pattern, that is, through the compressor, the condenser with liquid tank, through the evaporator, and back to the compressor. The refrigerant evaporation through the evaporator coil is controlled by an externally equalized expansion valve, located inside the evaporator case.

FREEZE PROTECTION

Under usual operating conditions, when the A/C is switched on, the compressor runs continuously, and the evaporator pressure, and therefore, temperature is controlled by the CSV613 displacement compressor to prevent freeze up.

Refrigerant System Protection

EJS002ZT

REFRIGERANT PRESSURE SENSOR (WITH QG ENGINE)

The refrigerant system is protected against excessively high or low pressures by the refrigerant pressure sensor, located on the liquid tank. If the system pressure rises above, or falls below the specifications, the refrigerant pressure sensor detects the pressure inside the refrigerant line and sends the voltage signal to the ECM. ECM makes the A/C relay go OFF and stops the compressor when pressure on the high pressure side detected by refrigerant pressure sensor is over about 2,746 kPa (27.5 bar, 28 kg/cm^2 , 398 psi), or below about 134 kPa (1.37 bar, 1.4 kg/cm^2 , 20 psi).

DUAL-PRESSURE SWITCH (WITH YD ENGINE)

The refrigerant system is protected against excessively high or low pressures by the dual-pressure switch, located on the liquid tank (condenser). If the system pressure rises above or falls below the specifications, the dual-pressure switch opens to interrupt the compressor operation.

PRESSURE RELIEF VALVE

The refrigerant system is also protected by a pressure relief valve, located in the rear head of the compressor. When the pressure of refrigerant in the system increases to an unusual level [more than 3,727 kPa (37.3 bar, 38 kg/cm^2 , 540 psi)], the release port on the pressure relief valve automatically opens and releases refrigerant into the atmosphere.

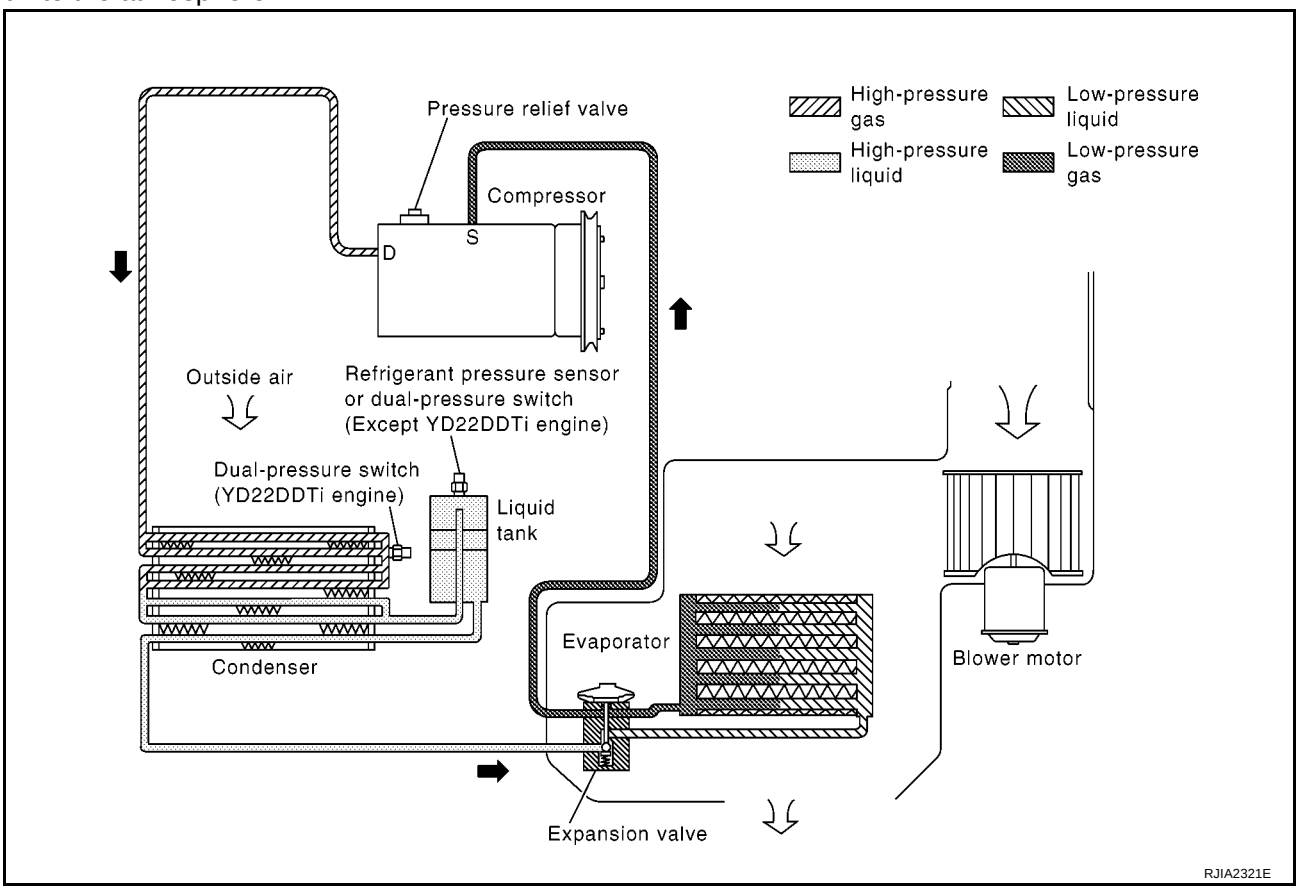

CSV613 Variable Displacement Compressor

EJS002ZU

GENERAL INFORMATION

1. The CSV613 compressor differs from previous units. The vent temperatures of the CSV613 compressor do not drop too far below 5°C (41°F) when:
   Evaporator intake air temperature is less than 20°C (68°F).
   Engine is running at speeds less than 1,500 rpm.
   This is because the CSV613 compressor provides a means of “capacity” control.
2. The CSV613 compressor provides refrigerant control under varying conditions. During cold winters, it may not produce high refrigerant pressure discharge (compared to previous units) when used with air conditioning systems.
3. A “clanking” sound may occasionally be heard during refrigerant charge. The sound indicates that the tilt angle of the swash plate has changed and is not a problem.
4. For air conditioning systems with the CSV613 compressor, the clutch remains engaged unless: the system main switch, fan switch or ignition switch is turned OFF. When ambient (outside) temperatures are low or when the amount of refrigerant is insufficient, the clutch is disengaged to protect the compressor.
5. A constant range of suction pressure is maintained when engine speed is greater than a certain value. It normally ranges from 147 to 177 kPa (1.47 to 1.77 bar, 1.5 to 1.8 kg/cm^2 , 21 to 26 psi) under varying conditions.
   In previous compressors, however, suction pressure was reduced with increases in engine speed.

DESCRIPTION

General

The variable compressor is basically a swash plate type that changes piston stroke in response to the required cooling capacity.

The tilt of the swash plate allows the piston's stroke to change so that refrigerant discharge can be continuously changed from 6.0 to 125 cm^3 (0.366 to 7.628 cu. in).

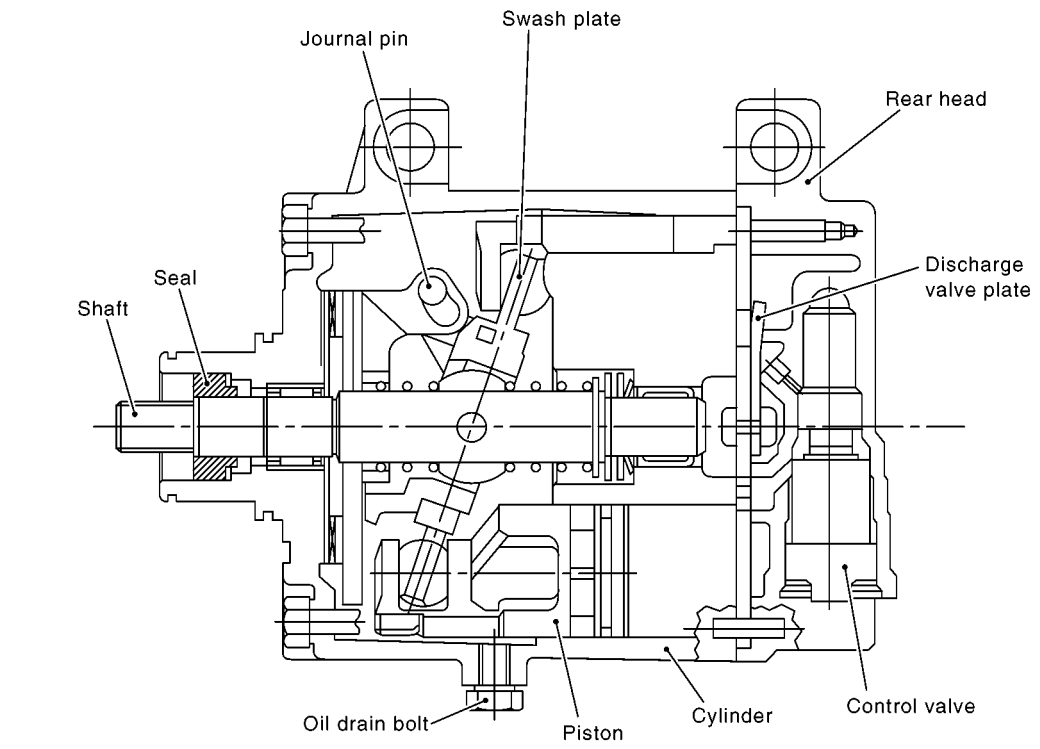

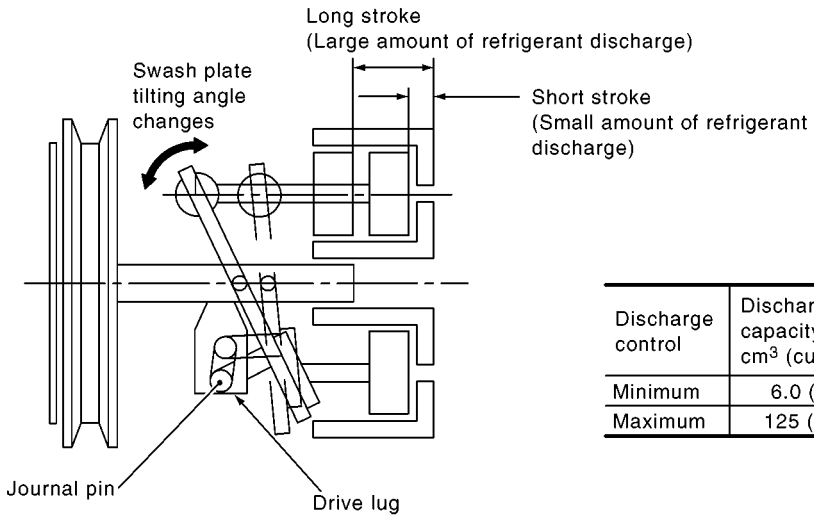

Discharge control	Discharge capacity cm^3 (cu in)/rev.	Piston stroke length mm (in)
Minimum	6.0 (0.366)	1.2 (0.047)
Maximum	125 (7.628)	25.9 (1.020)

RHA854HA

Operation

1. Operation Control Valve
   Operation control valve is located in the suction port (low-pressure) side, and opens or closes in response to changes in refrigerant suction pressure.
   Operation of the valve controls the internal pressure of the crankcase.
   The angle of the swash plate is controlled between the crankcase's internal pressure and the piston cylinder pressure.
2. Maximum Cooling
   Refrigerant pressure on the low–pressure side increases with an increase in heat loads.
   When this occurs, the control valve's bellows compress to open the low-pressure side valve and close the high-pressure side valve.
   This causes the following pressure changes:
   ● The crankcase's internal pressure to equal the pressure on the low-pressure side;

● The cylinder′s internal pressure to be greater than the crankcase′s internal pressure.
Under this condition, the swash plate is set to the maximum stroke position.

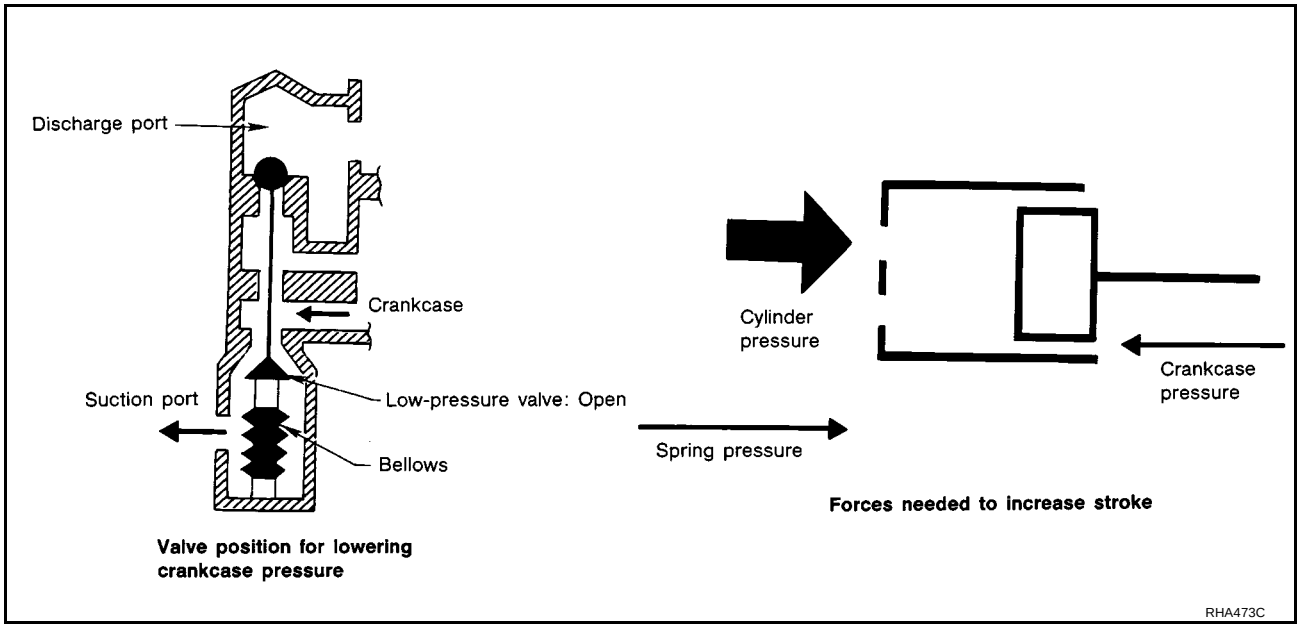

3. Capacity Control
● Refrigerant pressure on suction side is low during high speed driving or when ambient or interior temperature is low.
● The bellows expands when refrigerant pressure on the suction pressure side drops below approximately 177 kPa (1.77 bar, 1.8 kg/cm^2 , 26 psi).
Since suction pressure is low, it makes the suction port close and the discharge port open. Thus, crankcase pressure becomes high as high pressure enters the crankcase.
● The force acts around the journal pin near the swash plate, and is generated by the pressure difference before and behind the piston.
The drive lug and journal pin are located where the piston generates the highest pressure. Piston pressure is between suction pressure Ps and discharge pressure Pd, which is near suction pressure Ps. If crankcase pressure Pc rises due to capacity control, the force around the journal pin makes the swash plate angle decrease and also the piston stroke decrease. In other words, crankcase pressure increase triggers pressure difference between the piston and the crankcase. The pressure difference changes the angle of the swash plate.

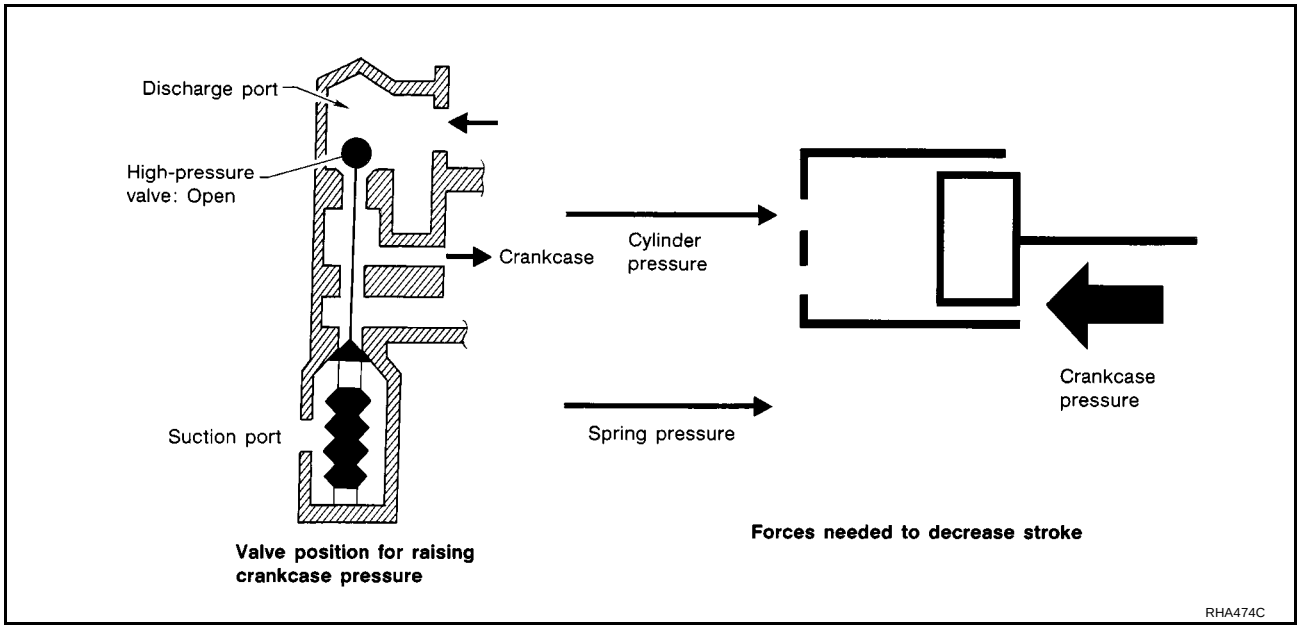

Component Layout

EJS002ZV

SEC. 270•271•272•273

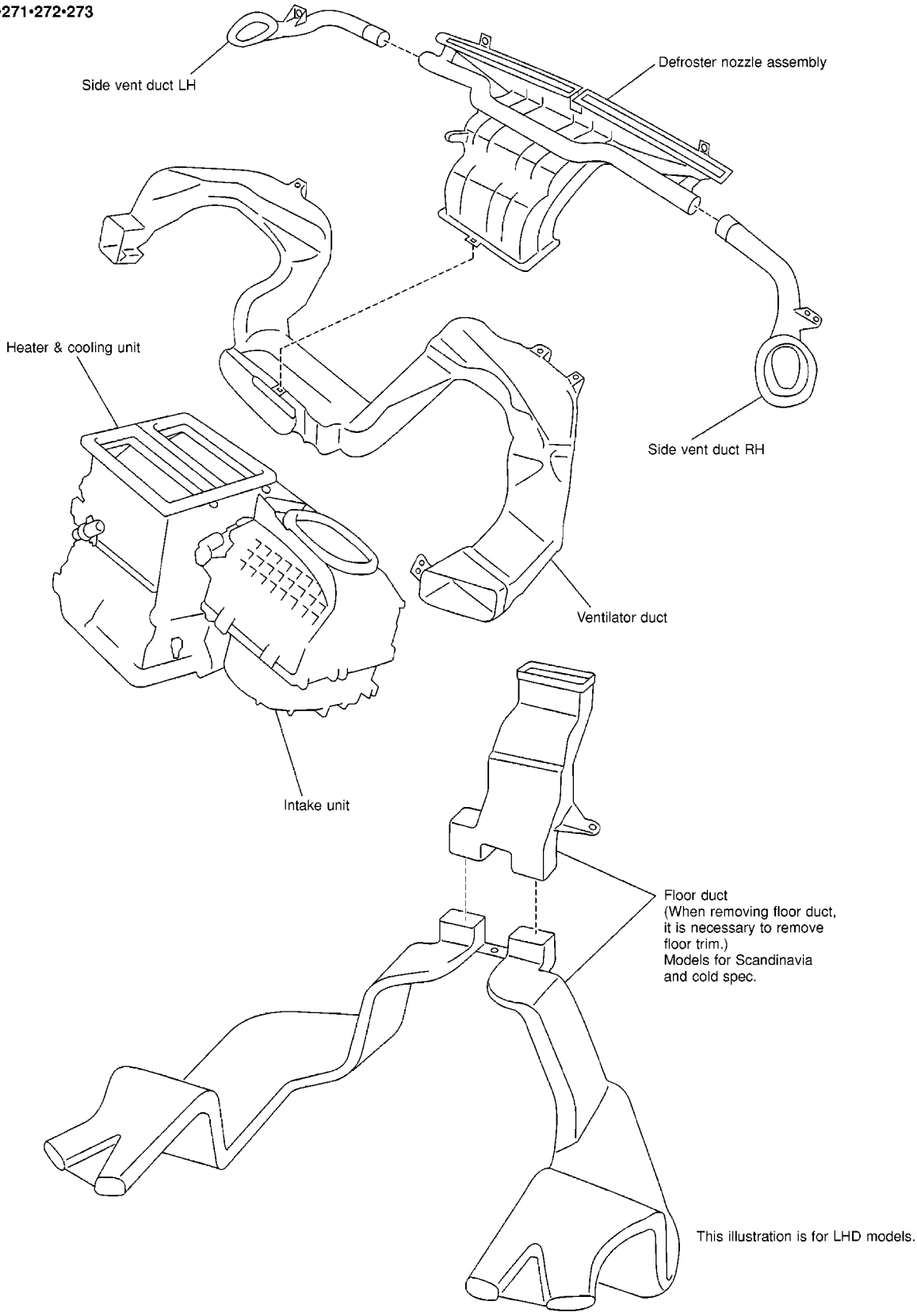

NHA367

LUBRICANT

PFP:KLG00

Maintenance of Lubricant Quantity in Compressor

EJS002ZW

The lubricant in the compressor circulates through the system with the refrigerant. Add lubricant to compressor when replacing any component or after a large gas leakage occurred. It is important to maintain the specified amount.
If lubricant quantity is not maintained properly, the following malfunctions may result:

- Lack of lubricant: May lead to a seized compressor
- Excessive lubricant: Inadequate cooling (thermal exchange interference)

LUBRICANT

Name:	**Nissan A/C System Oil Type S**
Part number:	**KLH00-PAGS0**

LUBRICANT RETURN OPERATION

Adjust the lubricant quantity according to the test group shown below.

1. CHECK LUBRICANT RETURN OPERATION

Can lubricant return operation be performed?

- A/C system works properly.
- There is no evidence of a large amount of lubricant leakage.

Yes or No

Yes >> GO TO 2.
No >> GO TO 3.

2. PERFORM LUBRICANT RETURN OPERATION, PROCEEDING AS FOLLOWS:

1. Start engine, and set the following conditions:
   - Test condition
     Engine speed: Idling to 1,200 rpm
     A/C or AUTO switch: ON
     Blower speed: Max. position
     Temp. control: Optional [Set so that intake air temperature is 25 to 30°C (77 to 86°F).]
     Intake position: Recirculation (REC)
2. Perform lubricant return operation for about 10 minutes.
3. Stop engine.

CAUTION:
If excessive lubricant leakage is noted, do not perform the lubricant return operation.

>> GO TO 3.

3. CHECK COMPRESSOR

Should the compressor be replaced?

Yes or No

Yes >> Go to ATC-21, "LUBRICANT ADJUSTING PROCEDURE FOR COMPRESSOR REPLACEMENT" .
No >> GO TO 4.

4. CHECK ANY PART

Is there any part to be replaced? (Evaporator, condenser, liquid tank or in case there is evidence of a large amount of lubricant leakage.)

Yes or No

Yes >> Go to ATC-21, "LUBRICANT ADJUSTING PROCEDURE FOR COMPONENTS REPLACEMENT EXCEPT COMPRESSOR" .

No >> Carry out the A/C performance test.

LUBRICANT ADJUSTING PROCEDURE FOR COMPONENTS REPLACEMENT EXCEPT COMPRESSOR

After replacing any of the following major components, add the correct amount of lubricant to the system.
Amount of lubricant to be added

Part replaced	Lubricant to be added to system	Remarks
	Amount of lubricant m ℓ (Imp fl oz.)	
Evaporator	75 (2.6)	-
Condenser	35 (1.2)	-
Liquid tank	10 (0.4)	-
In case of refrigerant leak	30 (1.1)	Large leak
	-	Small leak *1

*1:If refrigerant leak is small, no addition of lubricant is needed.

LUBRICANT ADJUSTING PROCEDURE FOR COMPRESSOR REPLACEMENT

1. Before connecting ACR4 to vehicle, check ACR4 gauges. No refrigerant pressure should be displayed. If NG, recover refrigerant from equipment lines.
2. Discharge refrigerant into the refrigerant recovery/recycling equipment. Measure lubricant discharged into the recovery/recycling equipment.
3. Drain the lubricant from the old (removed) compressor into a graduated container and recover the amount of lubricant drained.
4. Drain the lubricant from the new compressor into a separate, clean container.
5. Measure an amount of new lubricant installed equal to amount drained from old compressor. Add this lubricant to new compressor through the suction port opening.
6. Measure an amount of new lubricant equal to the amount recovered during discharging. Add this lubricant to new compressor through the suction port opening.
7. If the liquid tank also needs to be replaced, add an additional 5 m ℓ (0.2 Imp fl oz.) of lubricant at this time. Do not add this 5 m ℓ (0.2 Imp fl oz.) of lubricant if only replacing the compressor.

AIR CONDITIONER CONTROL

PFP:27500

Overview Air Conditioner LAN Control System

EJS002ZX

The LAN system consists of auto amp., mode door motor, air mix door motor and intake door motor.
A configuration of these components is shown in the diagram below.

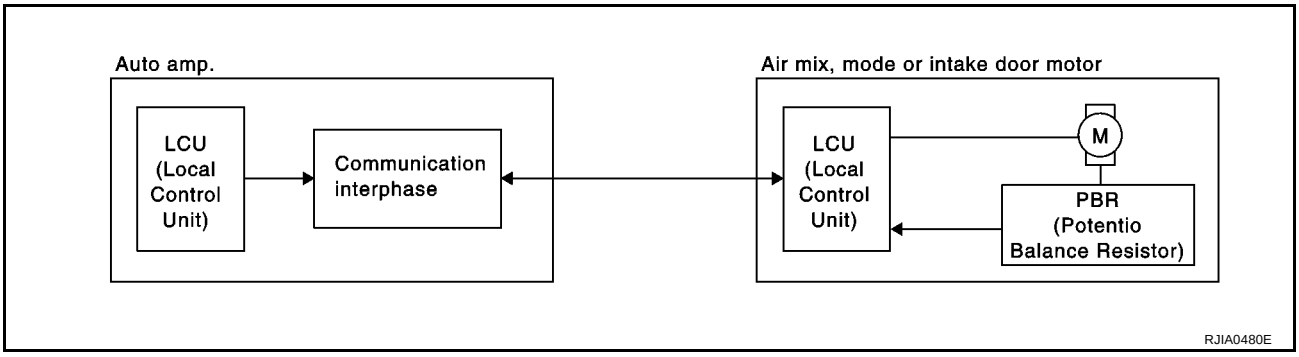

System Construction

EJS002ZY

A small network is constructed between the auto amplifier, air mix door motor, mode door motor and intake door motor. The auto amplifier and motors are connected by data transmission lines and motor power supply lines. The LAN network is built through the ground circuits of the three motors.
Addresses, motor opening angle signals, motor stop signals and error checking messages are all transmitted through the data transmission lines connecting the auto amplifier and three motors.
The following functions are contained in LCUs built into the air mix door motor, mode door motor and intake door motor.

- Address
- Motor opening angle signals
- Data transmission
- Motor stop and drive decision
- Opening angle sensor (PBR function)
- Comparison
- Decision (Auto amplifier indicated value and motor opening angle comparison)

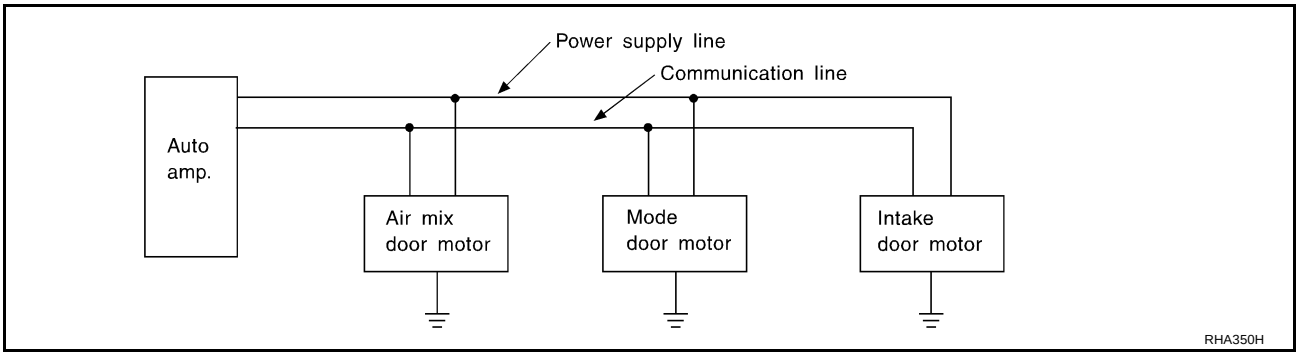

OPERATION

The auto amplifier receives data from each of the sensors. The amplifier sends mode door, air mix door and intake door opening angle data to the mode door motor LCU, air mix door motor LCU and intake door motor LCU.
The mode door motor, air mix door motor and intake door motor read their respective signals according to the address signal. Opening angle indication signals received from the auto amplifier and each of the motor position sensors are compared by the LCUs in each motor with the existing decision and opening angles. Subsequently, HOT/COLD, DEFROST/VENT or FRESH/RECIRCULATION operation is selected. The new selection data is returned to the auto amplifier.

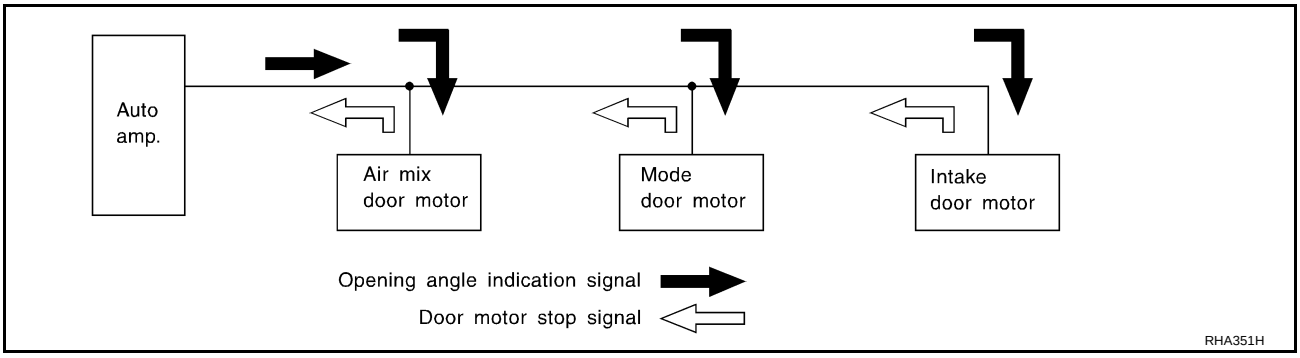

TRANSMISSION DATA AND TRANSMISSION ORDER

Amplifier data is transmitted consecutively to each of the door motors following the form shown in figure below.
Start: Initial compulsory signal sent to each of the door motors.
Address: Data sent from the auto amplifier is selected according to data-based decisions made by the air mix door motor, mode door motor and intake door motor.
If the addresses are identical, the opening angle data and error check signals are received by the door motor LCUs. The LCUs then make the appropriate error decision. If the opening angle data is usual, door control begins.
If an error exists, the received data is rejected and corrected data received. Finally, door control is based upon the corrected opening angle data.
Opening angle:
Data that shows the indicated door opening angle of each door motor.
Error check:
Procedure by which sent and received data is checked for errors. Error data is then compiled. The error check prevents corrupted data from being used by the air mix door motor, mode door motor and intake door motor. Error data can be related to the following problems.

- Unusual electrical frequency
- Poor electrical connections
- Signal leakage from transmission lines
- Signal level fluctuation

Stop signal:
At the end of each transmission, a stop operation, in-operation, or internal problem message is delivered to the auto amplifier. This completes one data transmission and control cycle.

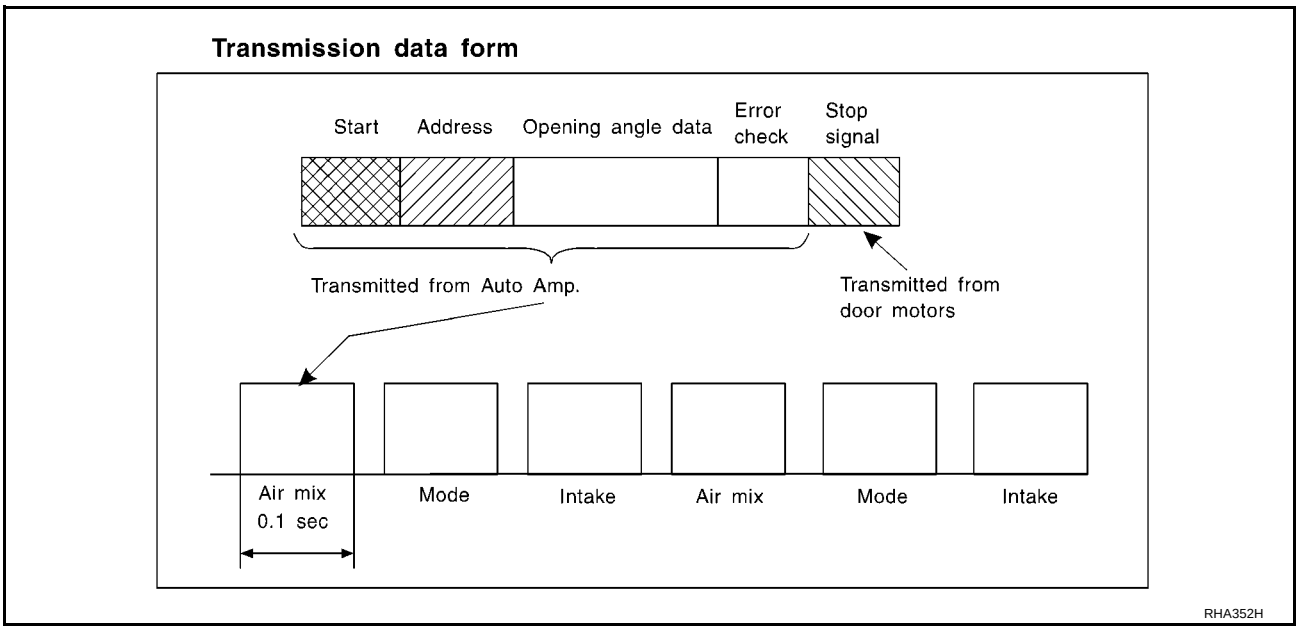

AIR MIX DOOR CONTROL (AUTOMATIC TEMPERATURE CONTROL)

The air mix door is automatically controlled so that in-vehicle temperature is maintained at a predetermined value by: The temperature setting, ambient temperature, in-vehicle temperature and amount of sunload.

FAN SPEED CONTROL

Blower speed is automatically controlled based on temperature setting, ambient temperature, in-vehicle temperature, intake temperature, amount of sunload and air mix door position.
With FAN switch set to AUTO, the blower motor starts to gradually increase air flow volume.
When engine coolant temperature is low, the blower motor operation is delayed to prevent cool air from flowing.

INTAKE DOOR CONTROL

The intake doors are automatically controlled by: The temperature setting, ambient temperature, in-vehicle temperature, intake temperature, amount of sunload and ON-OFF operation of the compressor.

OUTLET DOOR CONTROL

The outlet door is automatically controlled by: The temperature setting, ambient temperature, in-vehicle temperature, intake temperature and amount of sunload.

MAGNET CLUTCH CONTROL

The ECM controls compressor operation using input signals from the refrigerant pressure sensor (with QG engine), throttle position sensor and auto amplifier.

SELF-DIAGNOSTIC SYSTEM

The self-diagnostic system is built into the auto amplifier (LCU) to quickly locate the cause of malfunctions.

Overview of Control system

EJS002ZZ

The control system consists of input sensors, switches, the automatic amplifier (microcomputer) and outputs. The relationship of these components is shown in the diagram below:

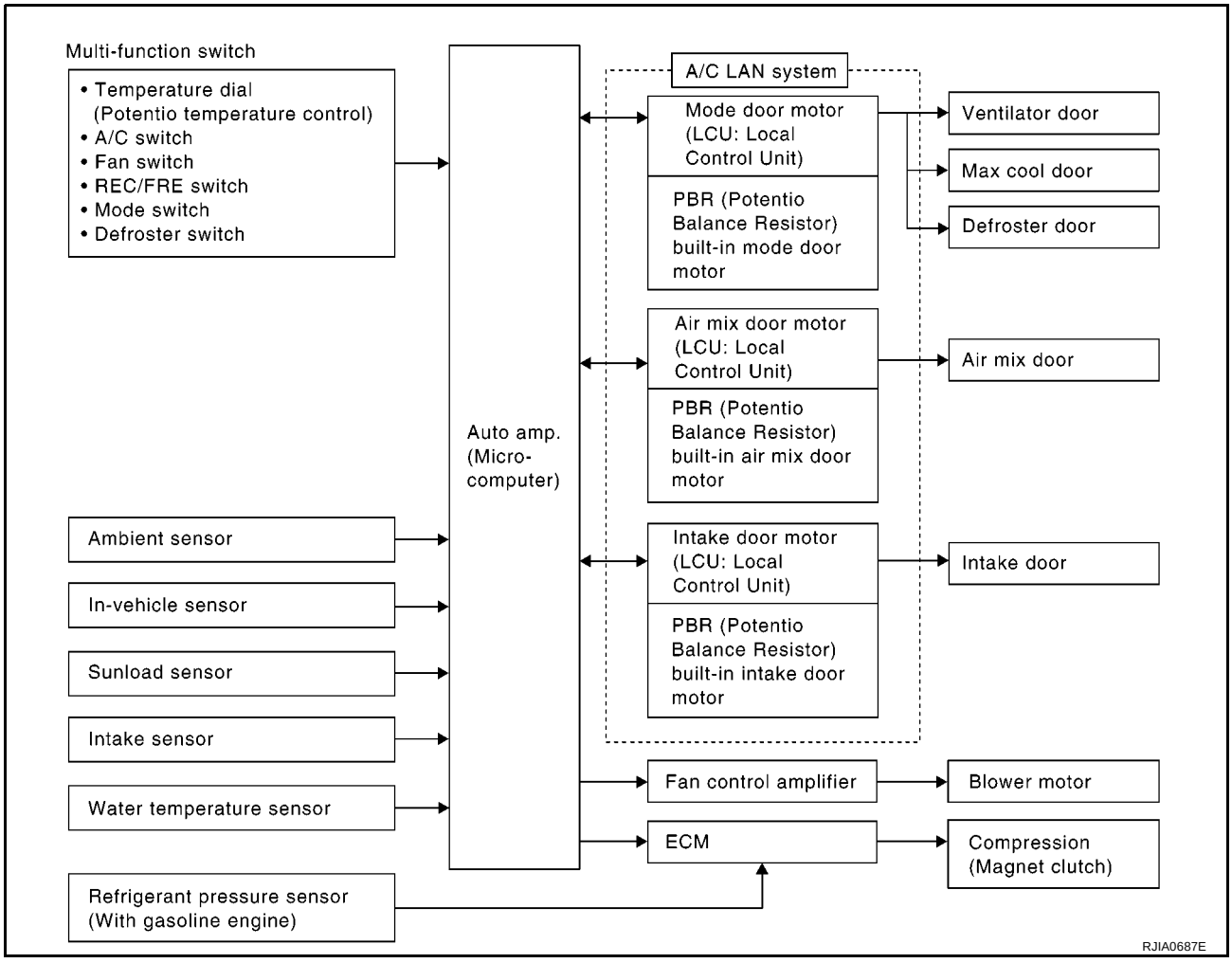

Control Operation

EJS00300

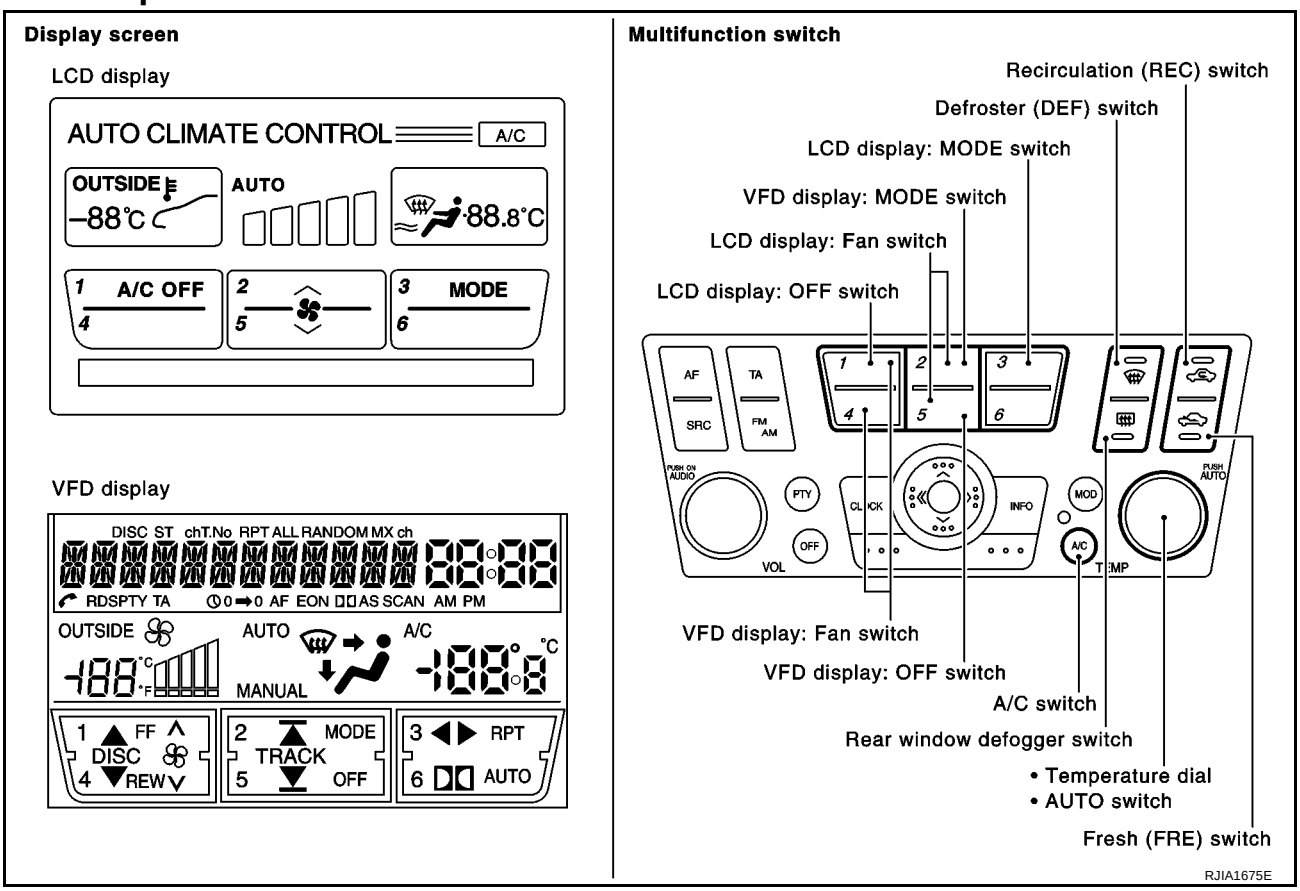

DISPLAY SCREEN

Displays the operational status of the system.

AUTO SWITCH

The compressor, intake doors, air mix doors, outlet doors and blower speed are automatically controlled so that the in-vehicle temperature will reach, and be maintained at the set temperature selected by the operator.

TEMPERATURE DIAL (POTENTIO TEMPERATURE CONTROL)

Increase or decrease the set temperature.

A/C SWITCH

The compressor is ON or OFF.
(Pressing the A/C switch when the AUTO switch is ON will turn off the A/C switch and compressor.)

DEFROSTER (DEF) SWITCH

Positions the air outlet doors to the defrost position. Also positions the intake doors to the outside air position.

MODE SWITCH

Control the air discharge outlets.

FAN SWITCH

Manually controls the blower speed. Five speeds are available for manual control (as shown on the display screen).

OFF SWITCH

The compressor and blower are OFF, the intake doors are set to the outside air position, and the air outlet doors are set to the foot position.

FRESH (FRE) SWITCH

OFF position: Interior air is recirculated inside the vehicle.
ON position: Outside air is drawn into the passenger compartment.
(When RECIRCULATION switch is ON, the FRESH switch turns OFF automatically.)

RECIRCULATION (REC) SWITCH

OFF position: Outside air is drawn into the passenger compartment.
ON position: Interior air is drawn into the passenger compartment.
(When the FRESH switch is ON or the compressor is turned from ON to OFF, the RECIRCULATION switch turns OFF automatically.)

REAR WINDOW DEFOGGER SWITCH

When illumination is ON, rear window is defogged.

Fail-safe Function

EJS00301

If fail-safe request signal is sent from AV control unit, or if communication error exists between auto amplifier and AV control unit for at least 30 seconds, air conditioner is controlled under following conditions.

Compressor	: ON
Air inlet	: Fresh
Air outlet	: AUTO
Blower fan speed	: AUTO
Set temperature	: Setting before communication error occurs

Discharge Air Flow

EJS00302

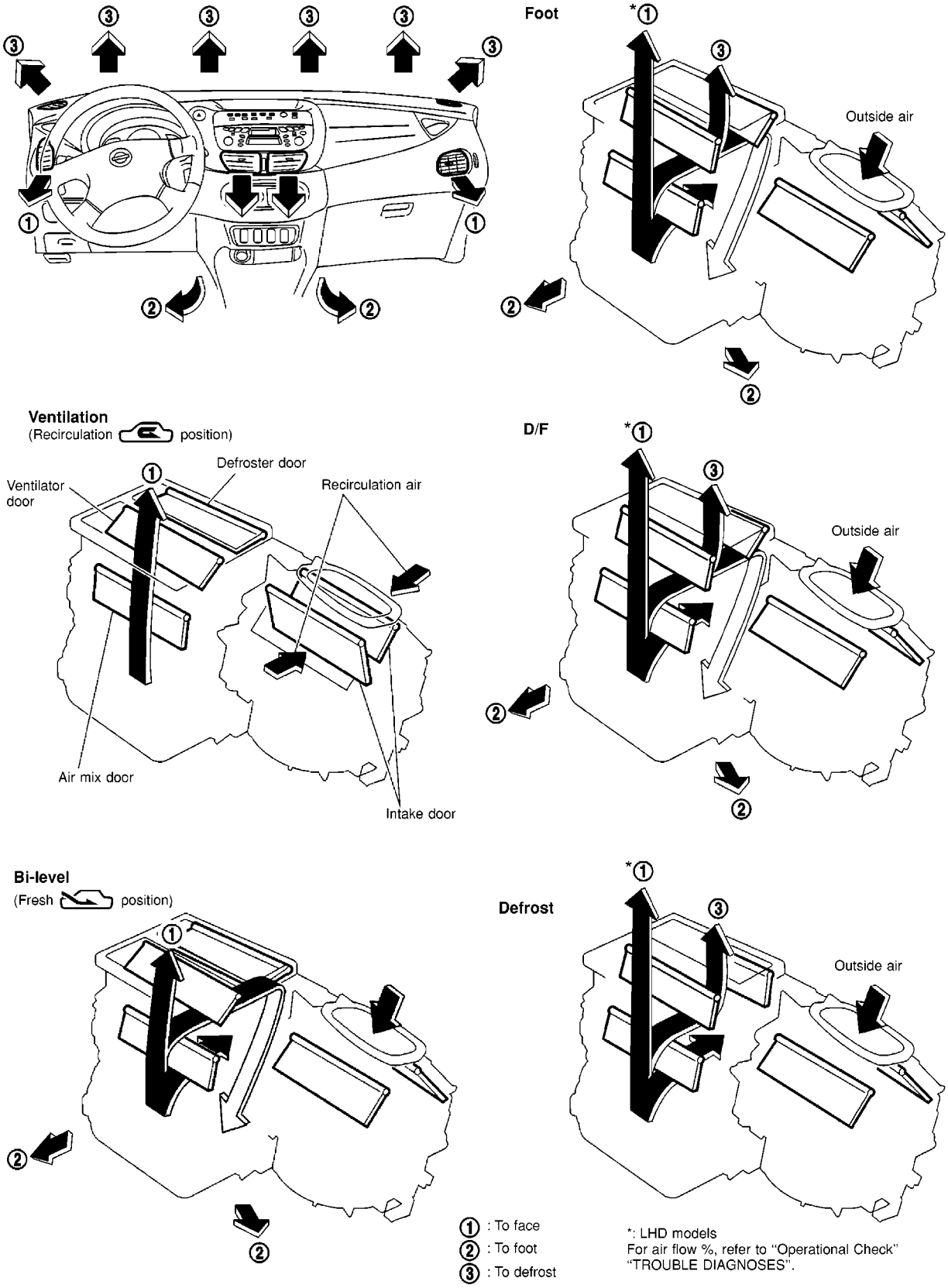

System Description

EJS00303

SWITCHES AND THEIR CONTROL FUNCTION

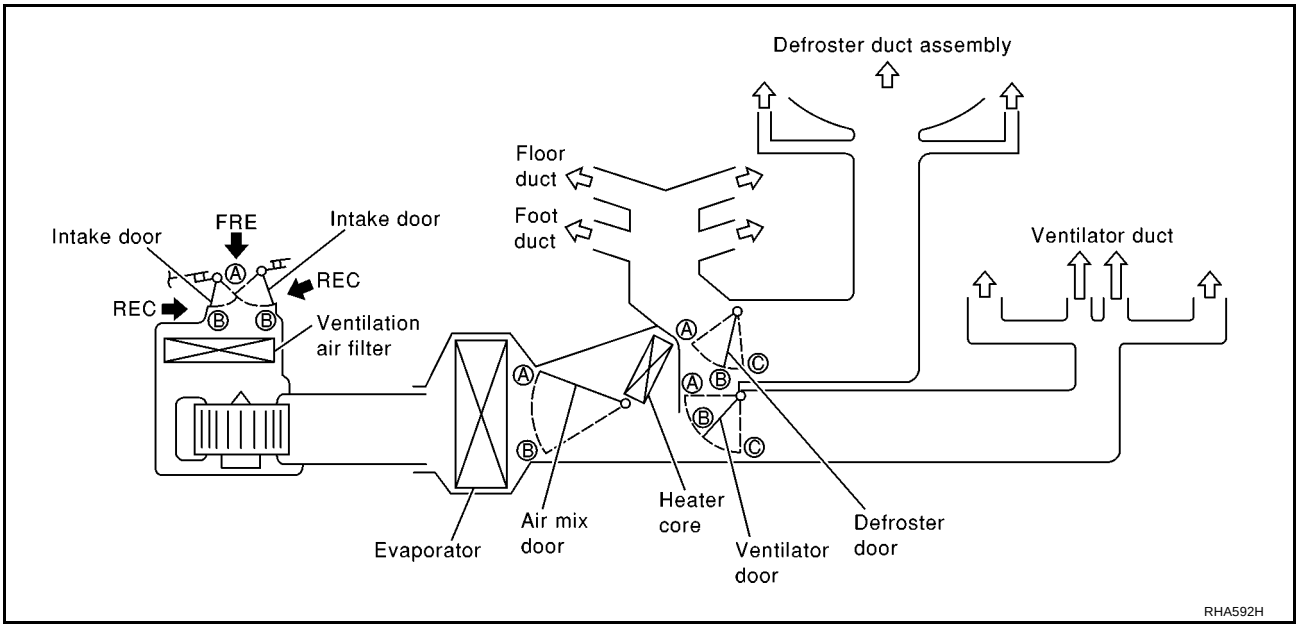

Position or switch	MODE SW					DEF SW		REC/FRE SW			Temperature dial		
	AUTO	VENT	B/L	FOOT	D/F	ON	OFF	REC		FRE			
Door	AUTO					FRONT					18˚C	—	32˚C
Ventilator door	AUTO	A	B	C	C	C	—	—			—		
Defroster door		C	C	B	B	A		—			—		
Intake door	—					A		A	AUTO	B	—		
Air mix door	—					—		—			A	AUTO	B

RJIA1677E

TROUBLE DIAGNOSIS

PFP:00004

How to Perform Trouble Diagnoses for Quick and Accurate Repair

EJS00304

WORK FLOW

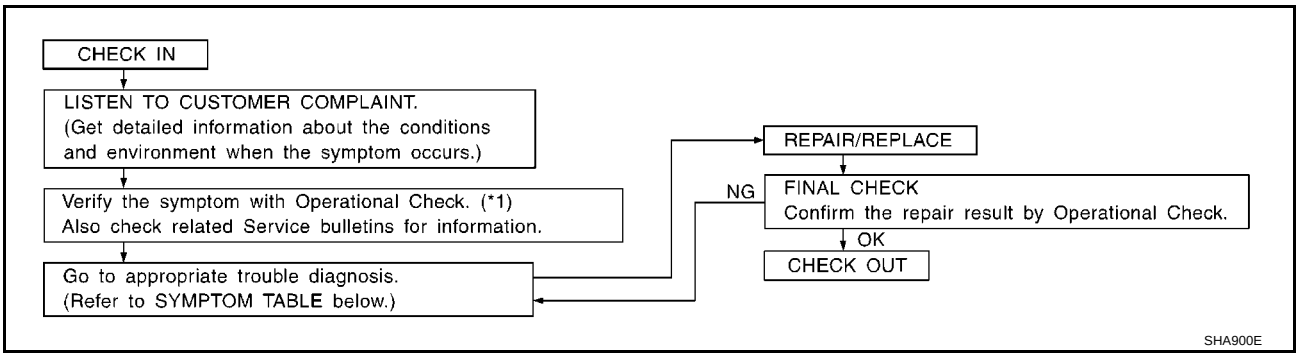

*1 ATC-50, "Operational Check"

SYMPTOM TABLE

Symptom	Reference Page	
A/C system does not come on.	Go to Trouble Diagnosis Procedure for A/C System.	ATC-54, "Power Supply and Ground Circuit for Auto Amp."
Air outlet does not change.	Go to Trouble Diagnosis Procedure for Mode Door Motor. (LAN)	ATC-59, "Mode Door Motor Circuit"
Mode door motor does not operate normally.		
Discharge air temperature does not change.	Go to Trouble Diagnosis Procedure for Air Mix Door Motor. (LAN)	ATC-62, "Air Mix Door Motor Circuit"
Air mix door motor does not operate normally.		
Intake door does not change.	Go to Trouble Diagnosis Procedure for Intake Door Motor.(LAN)	ATC-65, "Intake Door Motor Circuit"
Intake door motor does not operate normally.		
Blower motor operation is malfunctioning.	Go to Trouble Diagnosis Procedure for Blower Motor.	ATC-68, "Blower Motor Circuit"
Blower motor operation is malfunctioning under out of starting fan speed control.		
Magnet clutch does not engage.	Go to Trouble Diagnosis Procedure for Magnet Clutch.	ATC-74, "Magnet Clutch Circuit"
Insufficient cooling	Go to Trouble Diagnosis Procedure for Insufficient Cooling.	ATC-82, "Insufficient Cooling"
Insufficient heating	Go to Trouble Diagnosis Procedure for Insufficient Heating.	ATC-90, "Insufficient Heating"
Noise	Go to Trouble Diagnosis Procedure for Noise.	ATC-92, "Noise"
Self-diagnosis cannot be performed.	Go to Trouble Diagnosis Procedure for Self-diagnosis.	ATC-93, "Self-diagnosis"
Memory function does not operate.	Go to Trouble Diagnosis Procedure for Memory Function.	ATC-94, "Memory Function"
A/C system cannot be controlled.	Go to Trouble Diagnosis Procedure for Multiplex Communication Circuit.	ATC-104, "Multiplex Communication Circuit"

Component Parts and Harness Connector Location

EJS00305

ENGINE COMPARTMENT

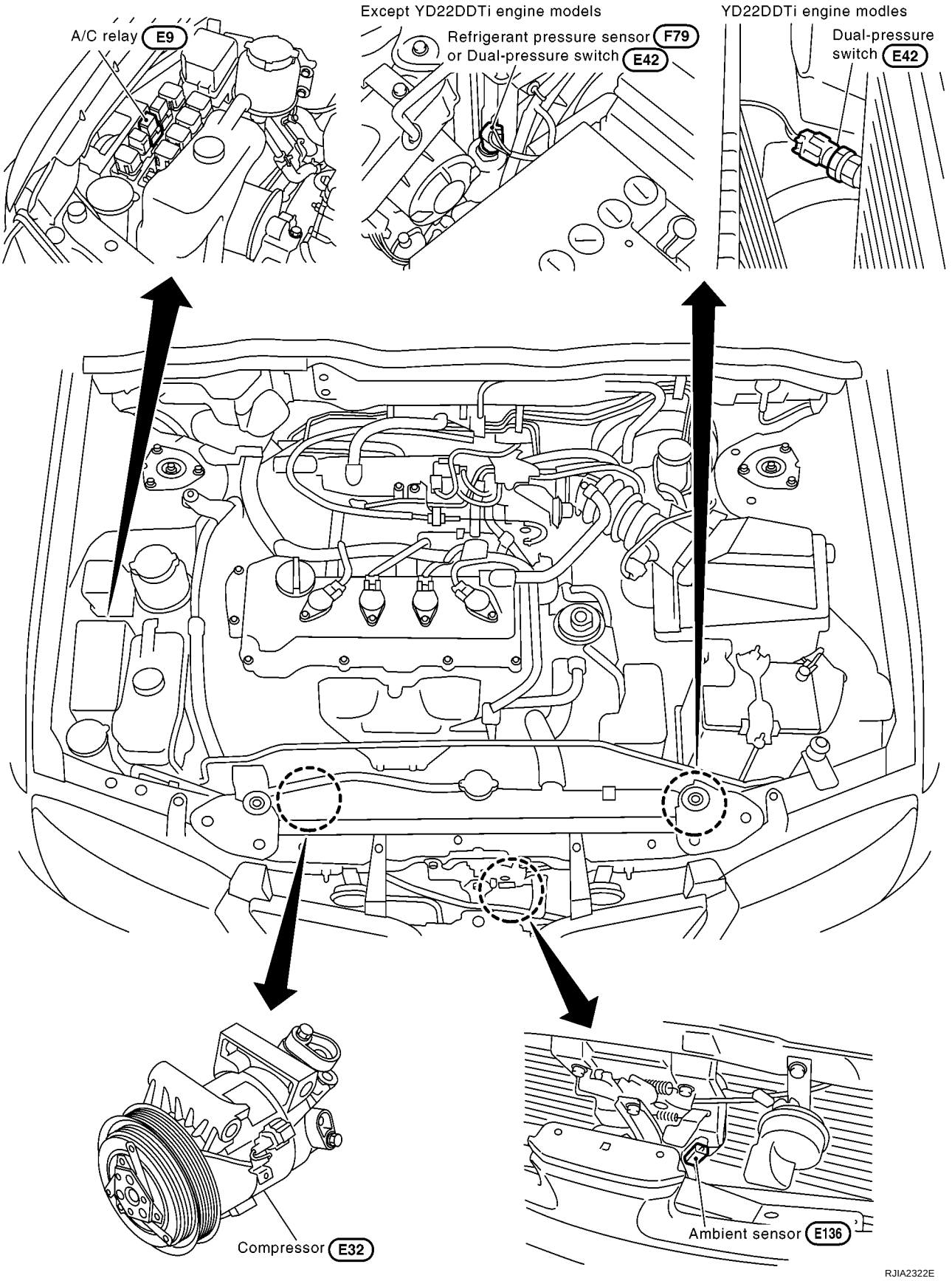

PASSENGER COMPARTMENT

This illustration is for RHD models.
The layout for LHD models is symmetrically opposite.

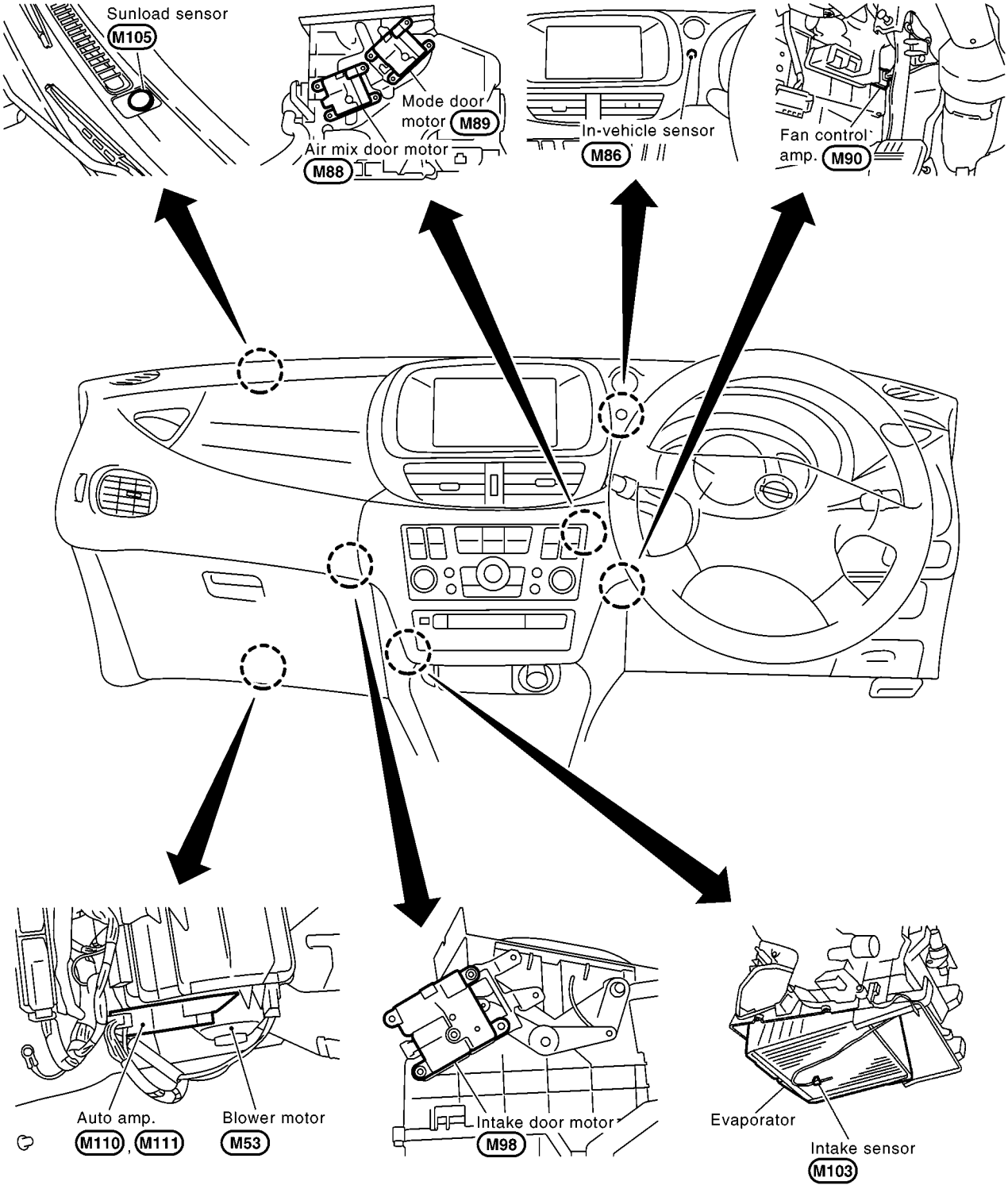

RJIA2323E

Circuit Diagram

EJS00306

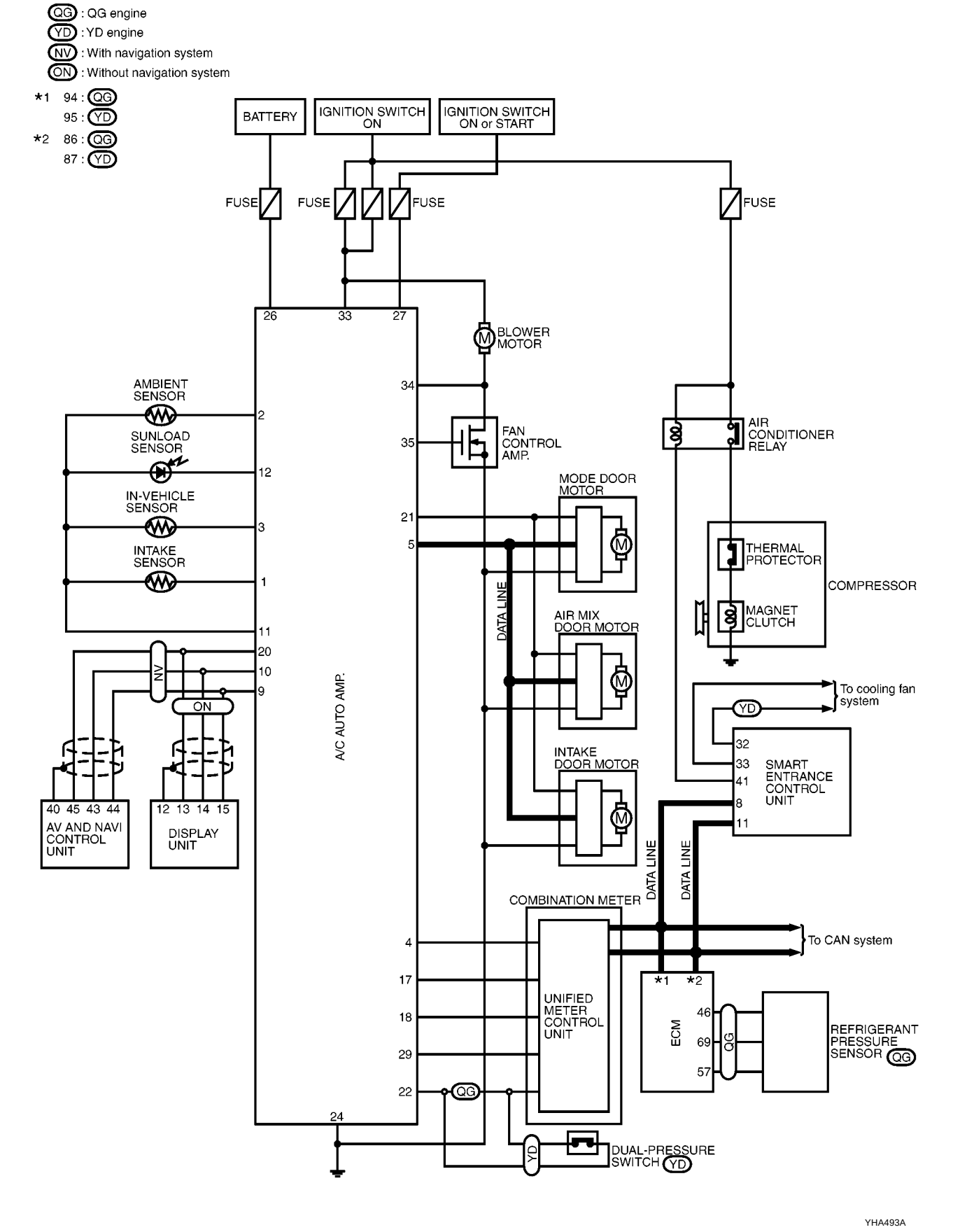

Wiring Diagram

EJS00307

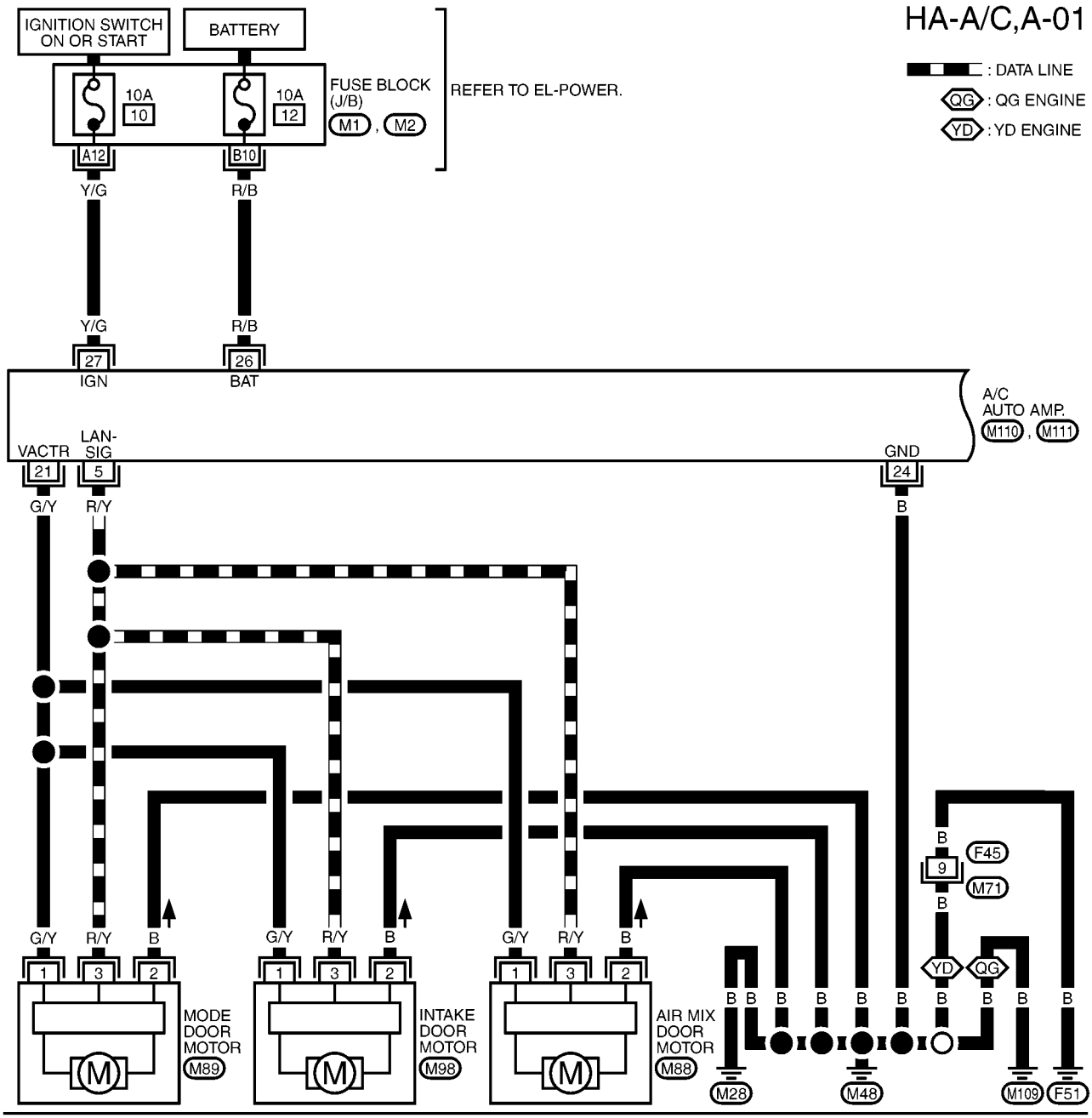

YHA494A

HA-A/C,A-02

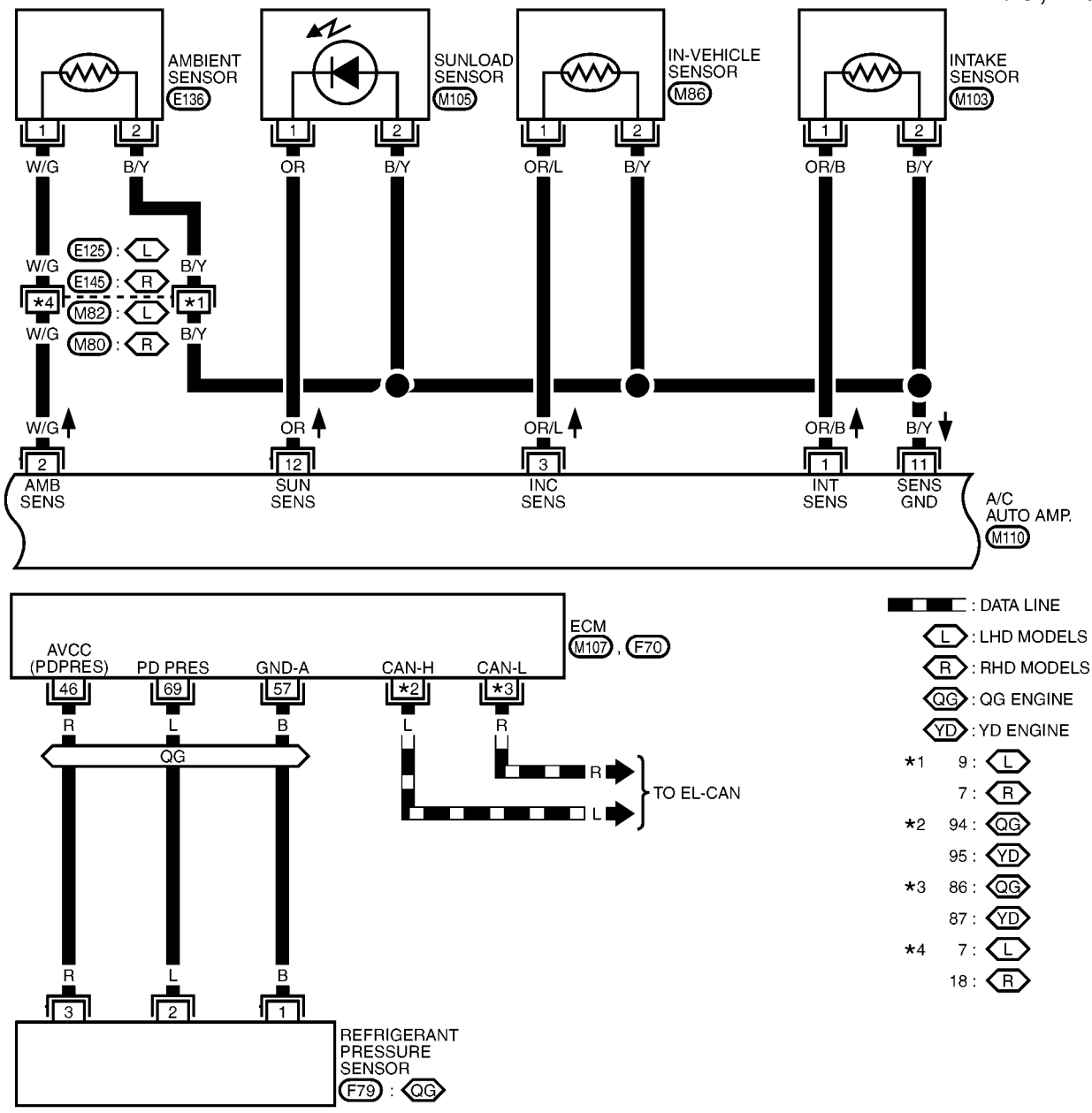

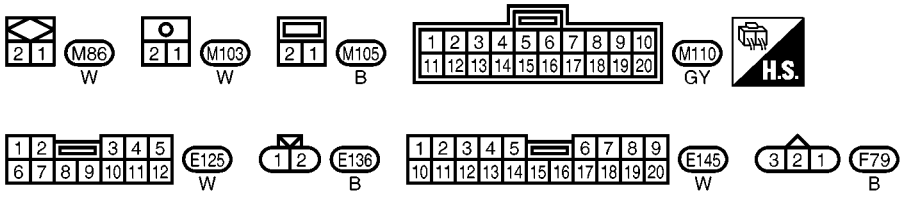

REFER TO THE FOLLOWING.
M107 , F70 -ELECTRICAL UNITS

YHA495A

HA-A/C,A-03

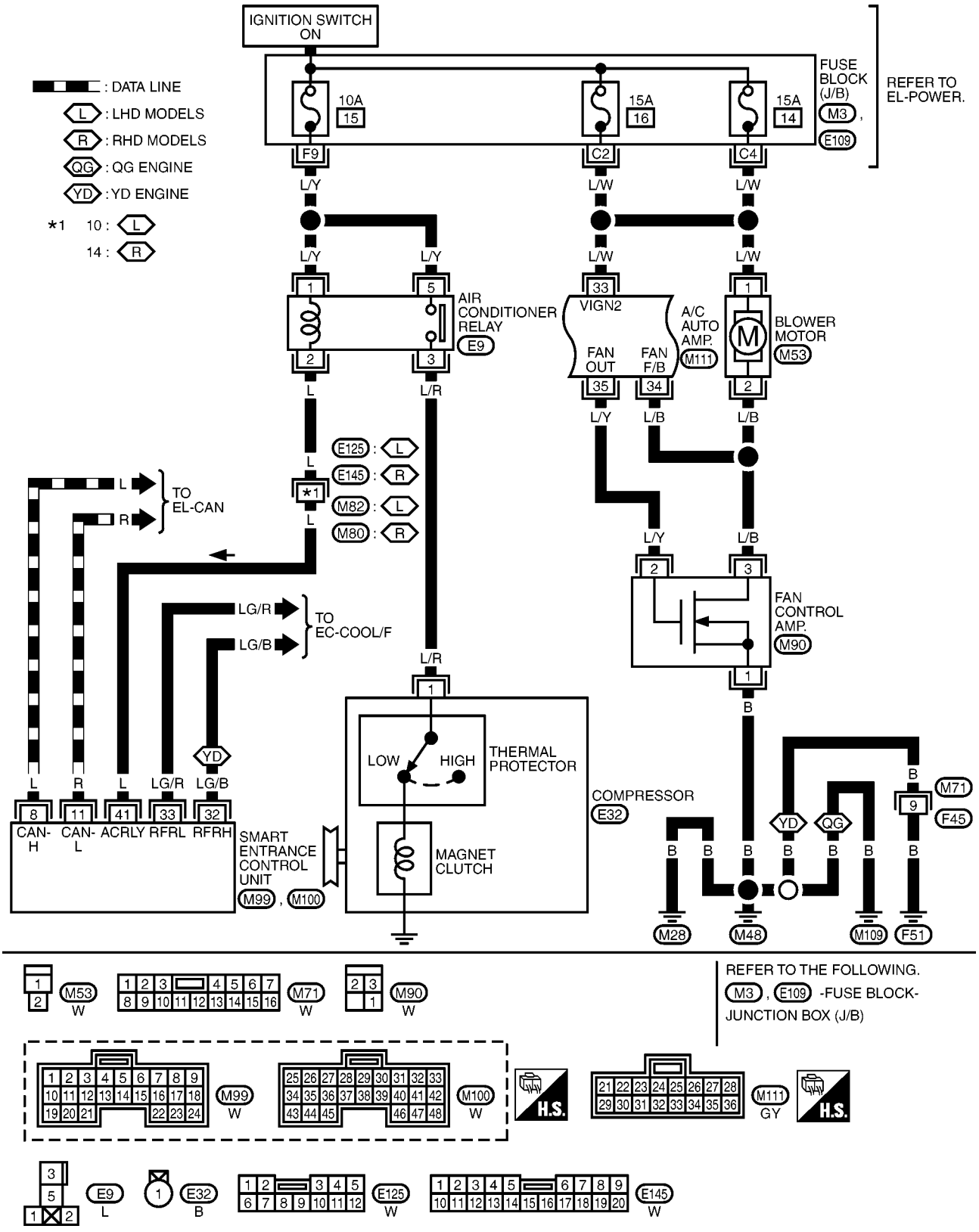
IGNITION SWITCH ON
: DATA LINE
: LHD MODELS
: RHD MODELS
: QG ENGINE
: YD ENGINE
*1 10 : L
14 : R
FUSE BLOCK (J/B)
M3 , E109
REFER TO EL-POWER.
10A 15
15A 16
15A 14
F9
C2
C4
L/Y
L/W
AIR CONDITIONER RELAY
E9
VIGN2
A/C AUTO AMP.
M111
FAN OUT
FAN F/B
BLOWER MOTOR
M53
L/B
E125 : L
E145 : R
M82 : L
M80 : R
TO EL-CAN
TO EC-COOL/F
LG/R
LG/B
L/R
FAN CONTROL AMP.
M90
B
YD
QG
LOW
HIGH
THERMAL PROTECTOR
MAGNET CLUTCH
COMPRESSOR
E32
CAN-H
CAN-L
ACRLY
RFRL
RFRH
SMART ENTRANCE CONTROL UNIT
M99 , M100
M71
F45
M28
M48
M109
F51
REFER TO THE FOLLOWING.
M3 , E109 -FUSE BLOCK-JUNCTION BOX (J/B)
M53
M71
M90
M99
M100
M111
H.S.
E9
E32
E125
E145
YHA496A

HA-A/C,A-04

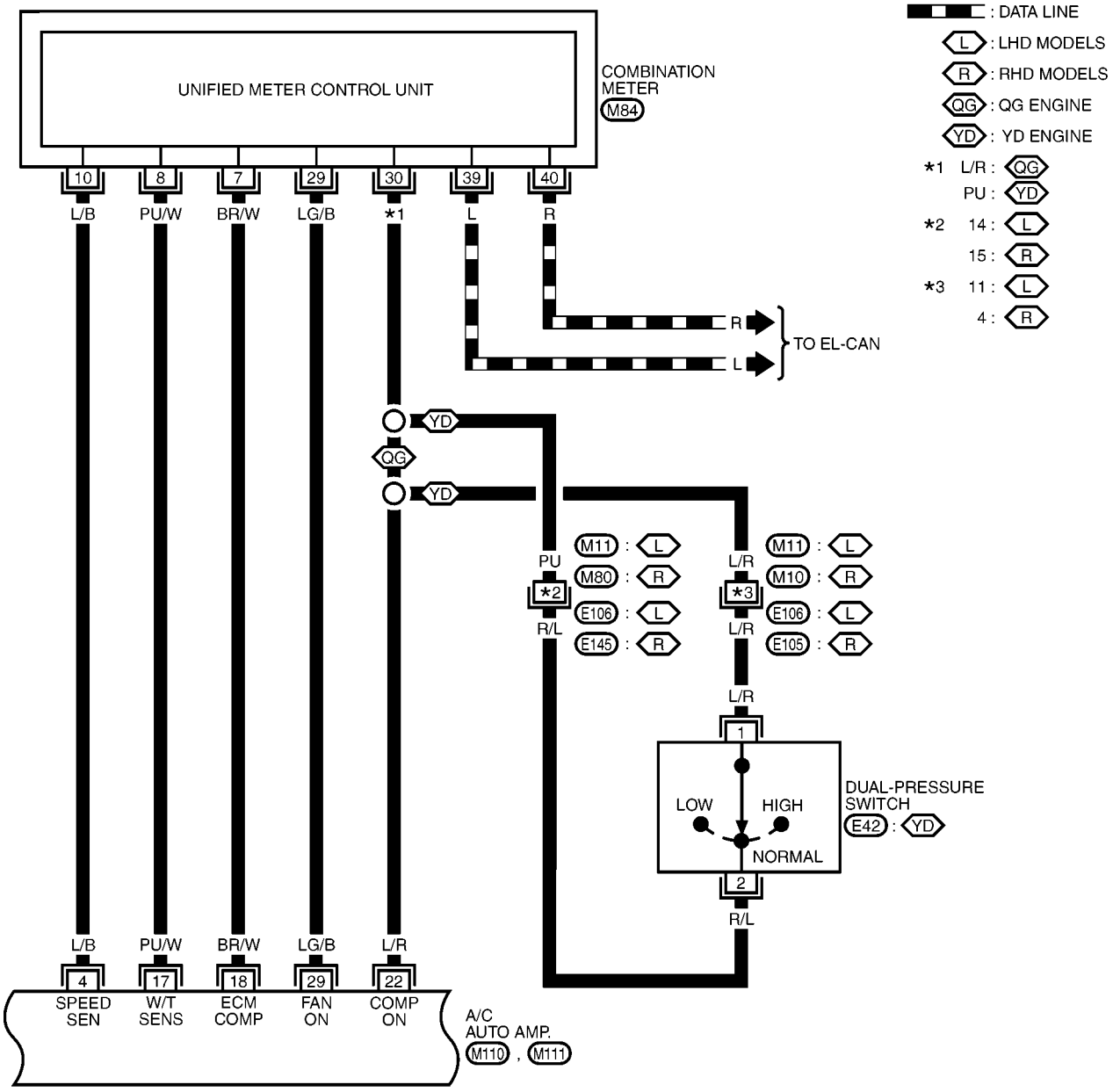

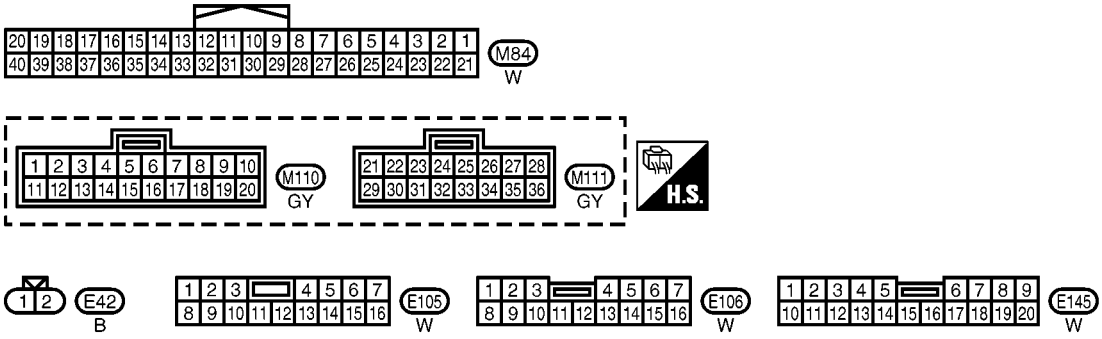

YHA497A

HA-A/C,A-05

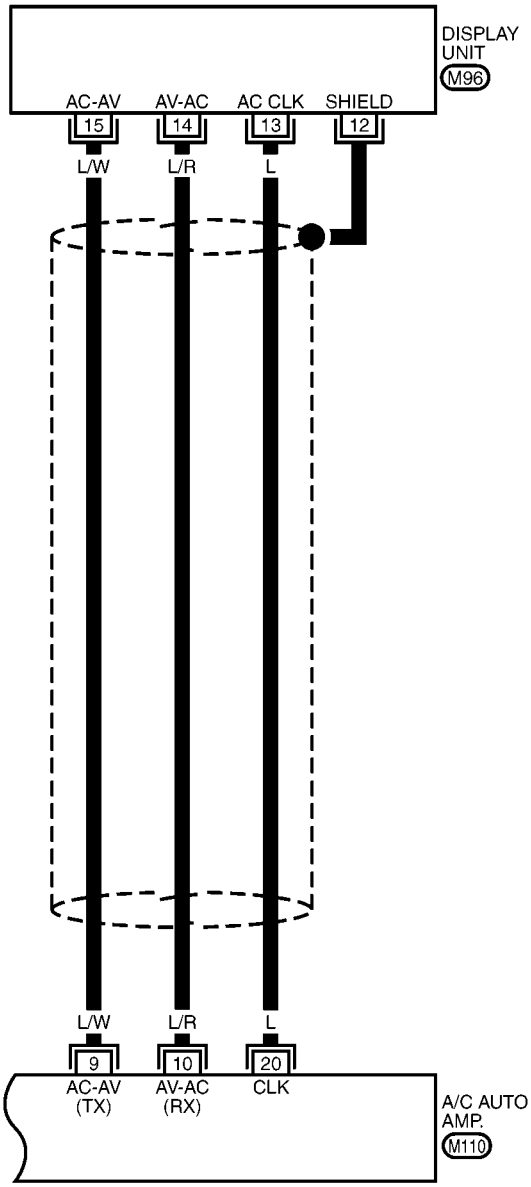

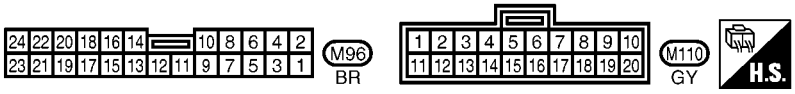

YHA498A

HA-A/C,A-06

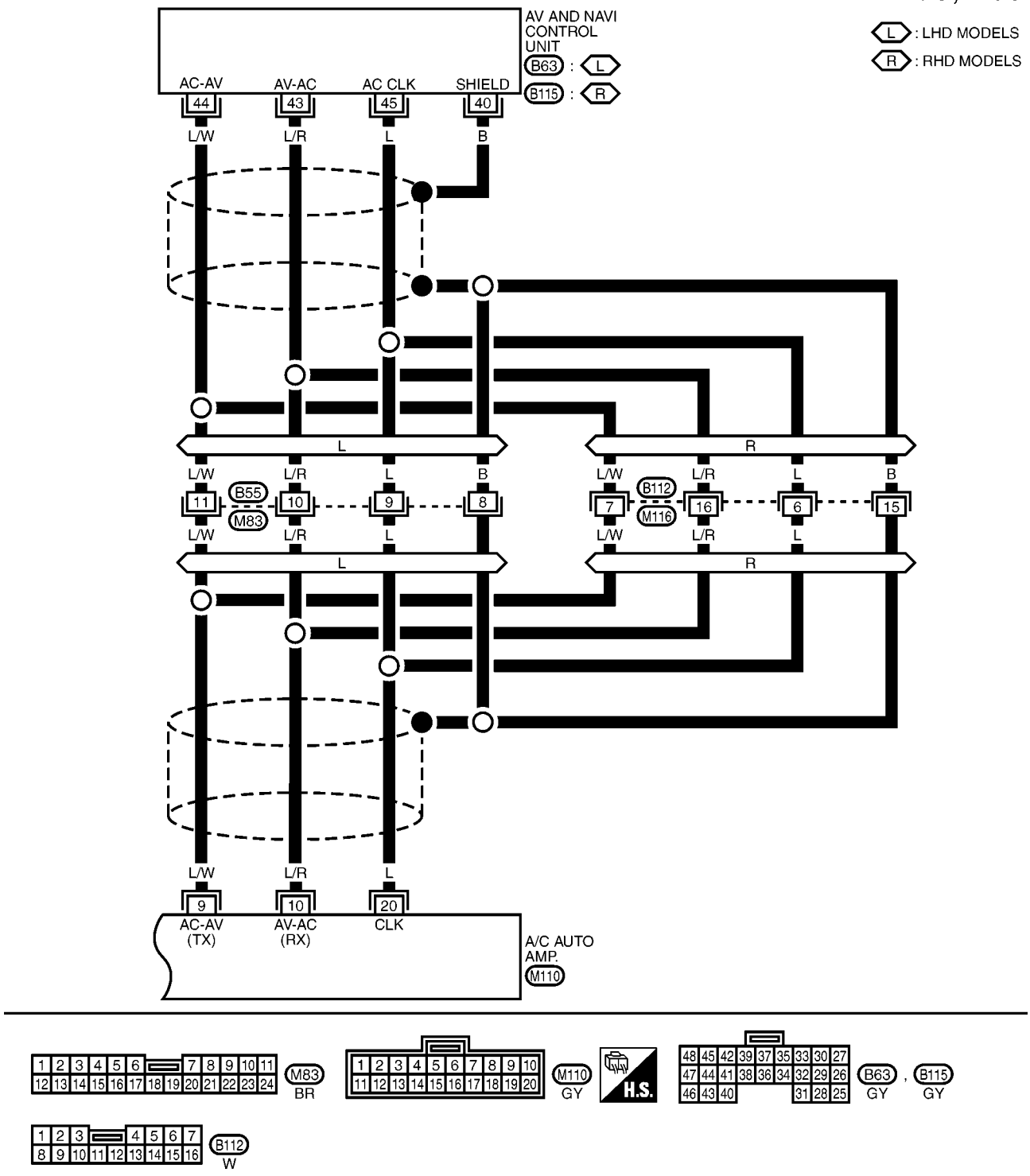

YHA499A

Auto Amp. Terminals and Reference Value

EJS00308

Measure voltage between each terminal and body ground by following AUTO AMP. INSPECTION TABLE.

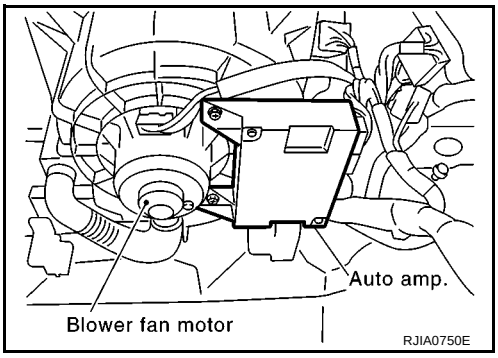

PIN CONNECTOR TERMINAL LAYOUT

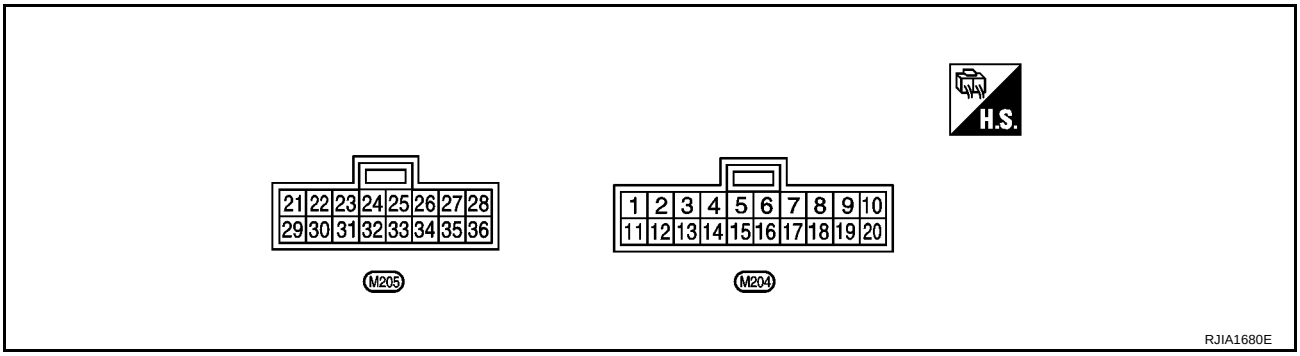

AUTO AMP. INSPECTION TABLE

TERMINAL NO.	WIRE COLOR	ITEM	CONDITION		Voltage (V)
1	OR/B	Intake sensor	-	-	-
2	W/G	Ambient sensor	-	-	-
3	OR/L	In-vehicle sensor	-	-	-
4	L/B	Speed sensor signal	IGN ON	Speedometer: Approx. 40 km/h (25 MPH)	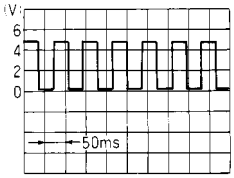 ELF1080D
5	R/Y	LAN signal	IGN ON	-	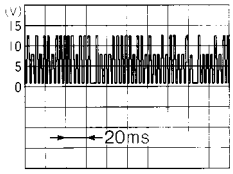 HAK0652D
9	L/W	Multiplex communication (Tx) signal A/C amp. → AV	IGN ON	-	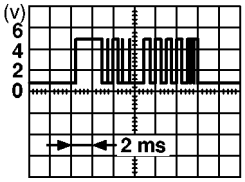 RJIA0212E

TERMI-NAL NO.	WIRE COLOR	ITEM	CONDITION		Voltage (V)
10	L/R	Multiplex communication (Rx) signal AV → A/C amp.	IGN ON	-	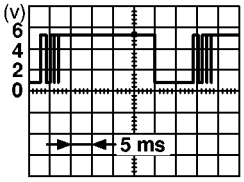 RJIA0213E
11	B/Y	Sensor ground	IGN ON	-	Approx. 0
12	OR	Sunload sensor	IGN ON	-	-
17	PU/W	Water temperature sensor signal	IGN ON	Engine coolant temperature: Approx. 60°C	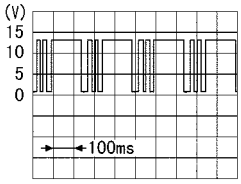 SKIA0056J
18	BR/W	Compressor feed back signal	IGN ON	A/C ON	-
					Approx. 0
				When refrigerant pressure sensor connector is disconnected.	Approx. 5
20	L	Multiplex communication (CLK) signal	IGN ON	-	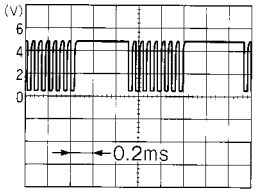 HAK0363D
21	G/Y	Power supply for mode door, air mix door and intake door motor	IGN ON	-	Approx. 12
22	L/R	Compressor ON signal	IGN ON	Compressor: ON	Approx. 0
				Compressor: OFF	Approx. 5
24	B	Ground	IGN ON	-	Approx. 0
26	R/B	Power supply for BATT	IGN OFF	-	Approx. 12
27	Y/G	Power supply for IGN	IGN ON	-	Approx. 12
29	LG/B	Fan ON signal	IGN ON	Blower fan: ON	Approx. 0
				Blower fan: OFF	Approx. 5
33	L/W	Power supply for ACC	IGN ON	-	Approx. 12
34	L/B	Blower fan motor feed back signal	IGN ON	Fan speed: Manual 1st	Approx. 8
35	L/Y	Fan control amp. control signal	IGN ON	Fan speed: Manual 1st - 4th speed	Approx. 2.5 - 3.5
				Manual 5th speed	Approx. 9.0

Self-diagnosis Function

EJS00309

DESCRIPTION

The self-diagnostic system diagnoses sensors, door motors, blower motor, etc. by system line. Refer to applicable sections (items) for details. Shifting from usual control to the self-diagnostic system is accomplished by starting the engine (turning the ignition switch from OFF to ON) and pressing OFF switch for at least 5 seconds. The “OFF” switch must be pressed within 10 seconds after starting the engine (ignition switch is turned ON). This system will be canceled by either pressing A/C switch or turning the ignition switch OFF. Shifting from one step to another is accomplished by means of turning temperature dial, as required.

Additionally shifting from STEP 6 to AUXILIARY MECHANISM is accomplished by means of pushing ⌘ (fan) UP switch.

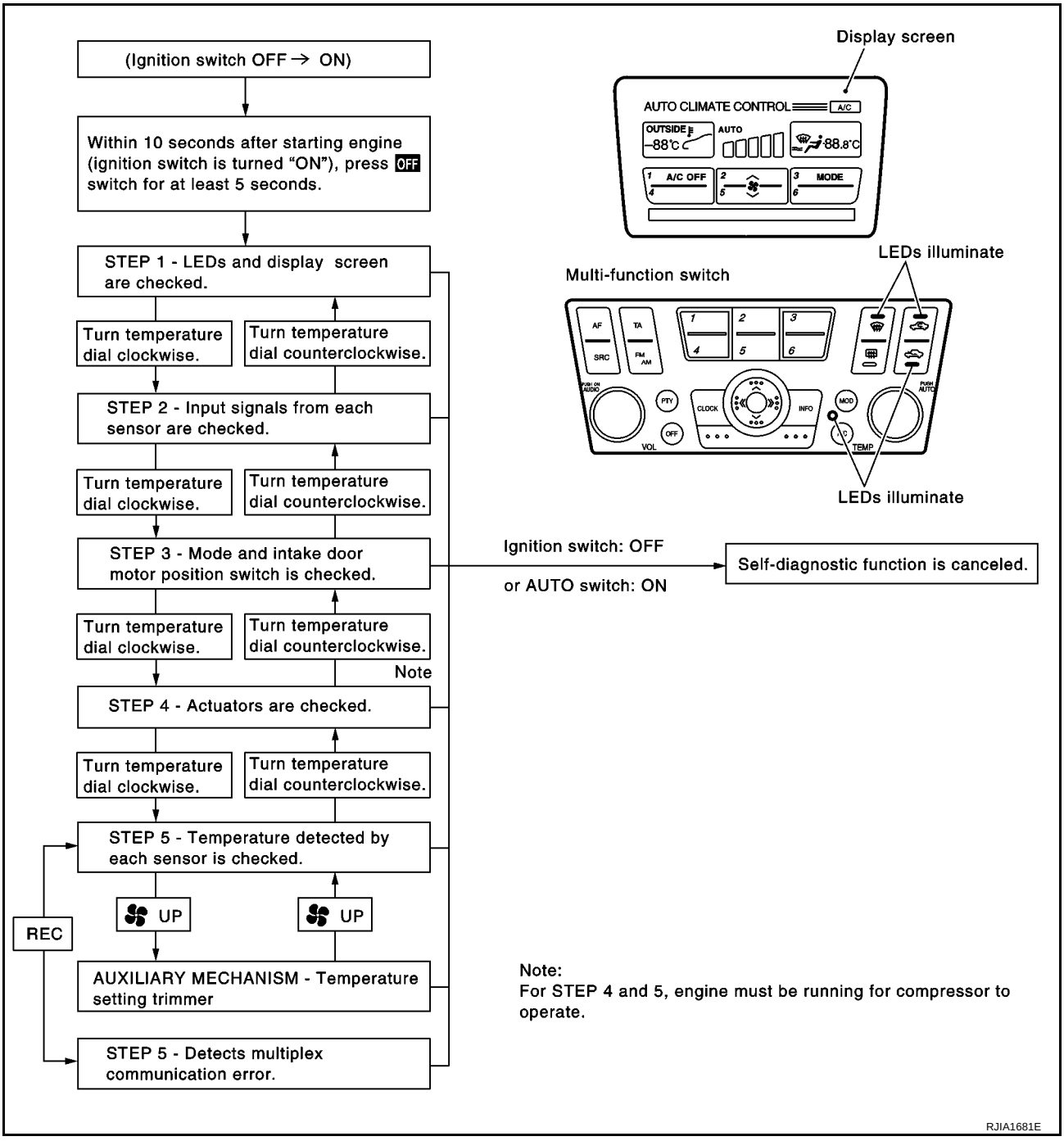

FUNCTION CONFIRMATION PROCEDURE

1. SET IN SELF-DIAGNOSTIC MODE

Method 1 (Without navigation system, or with navigation system)

1. Turn ignition switch to ON.
2. Within 10 seconds after starting engine (ignition switch is turned ON.), press and hold OFF switch for at least 5 seconds.
3. The self-diagnosis (step 1) should start.

Method 2 (Only with navigation system)

1. Turn OFF the audio system.
2. While pressing “Vehicle Information” switch, turn audio switch (volume adjustment dial) by at least 30 notches.
3. Trouble diagnosis initial screen appears. Using joystick, select “Confirmation and Adjustment”. And press “Confirm”.
4. Confirmation and adjustment initial screen appears. Using joystick, select “Air-conditioner trouble diagnosis”, and press “Confirm” to start self-diagnosis (step 1).

CAUTION:

If battery voltage drops below 12V during step diagnosis 3, actuator speed becomes slower and as a result, the system may generate an error even when operation is normal. To avoid this, start engine before performing this diagnosis.

>> GO TO 2.

2. STEP 1 - LEDS AND DISPLAY ARE CHECKED

Check LEDs illuminate and display screen.

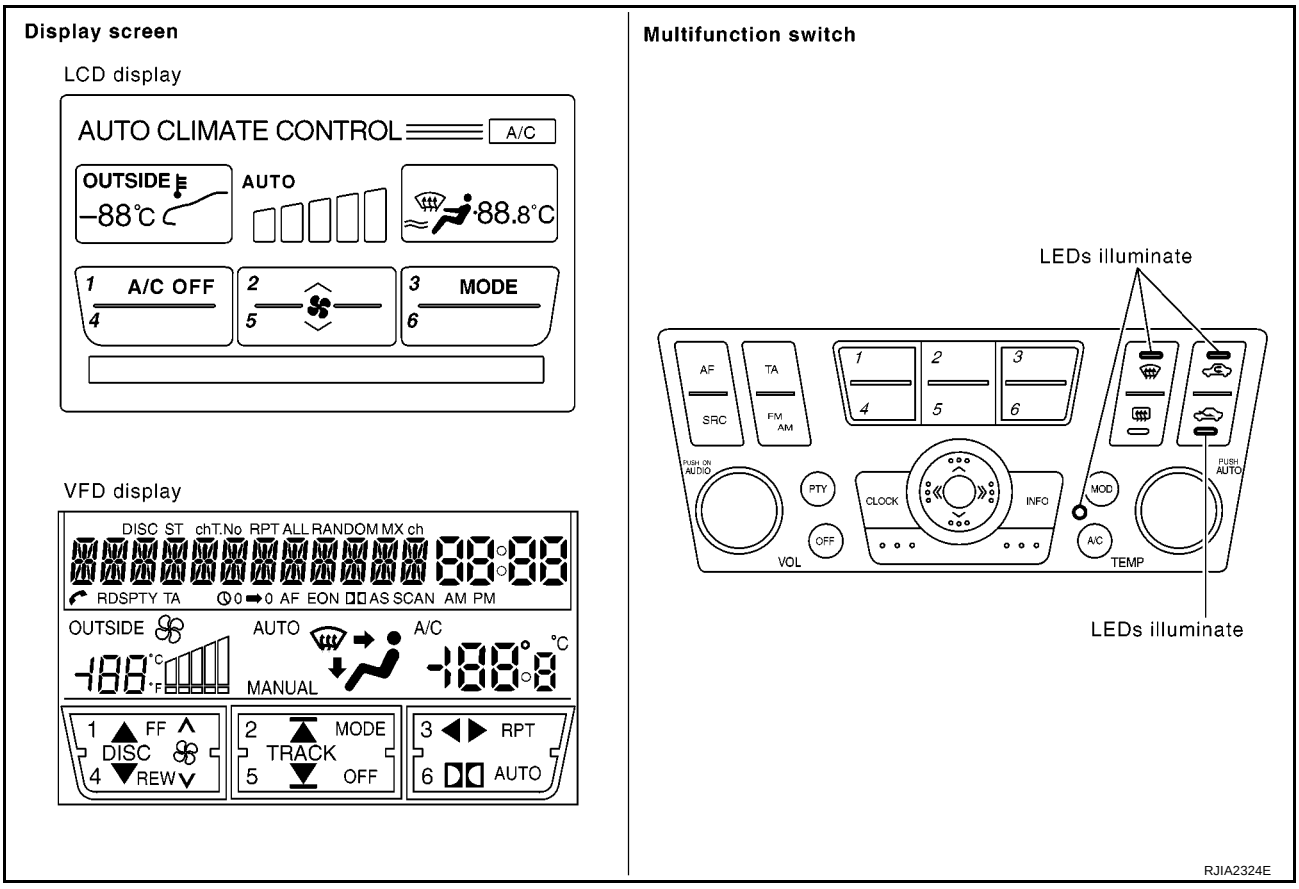

OK or NG

OK >> GO TO 3.
NG >> Malfunctioning OFF switch or LEDs.
>> Check multi-function switch.

3. CHECK TO ADVANCE SELF-DIAGNOSIS STEP 2

1. Turn the temperature dial clockwise.
2. Advance to self-diagnosis STEP 2?

Yes or No

Yes >> GO TO 4.
No >> Malfunctioning temperature dial.
>> Check multi-function switch.

4. CHECK TO RETURN SELF-DIAGNOSIS STEP 1

1. Turn the temperature dial counterclockwise.
2. Return to self-diagnosis STEP 1?

Yes or No

Yes >> GO TO 5.
No >> Malfunctioning temperature dial.
>> Check multi-function switch.

5. STEP 2 - SENSOR CIRCUITS ARE CHECKED FOR OPEN OR SHORT CIRCUIT

1. Turn the temperature dial clockwise.
2. Does code No.20 appear on the display?

Yes or No

Yes >> GO TO 6.
No >> GO TO 14.

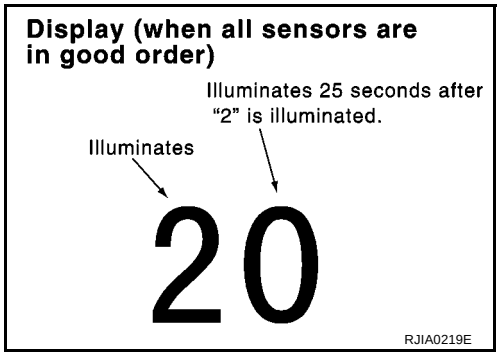

6. STEP 3 - MODE DOOR AND INTAKE DOOR POSITIONS ARE CHECKED

1. Turn the temperature dial clockwise.
2. Does code No.30 appear on the display?

Yes or No

Yes >> GO TO 7.
No >> GO TO 15.

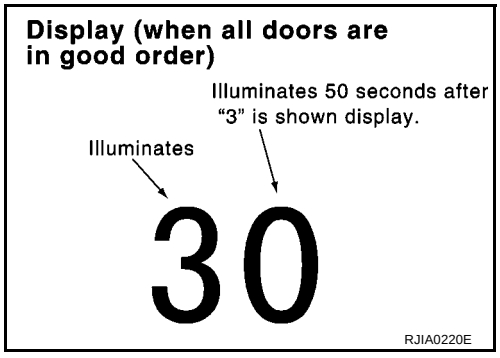

7. STEP 4 - OPERATION OF EACH ACTUATOR IS CHECKED

1. Turn the temperature dial clockwise.
2. Press DEF switch, code No. of each actuator test is indicated on the display.

>> GO TO 8.

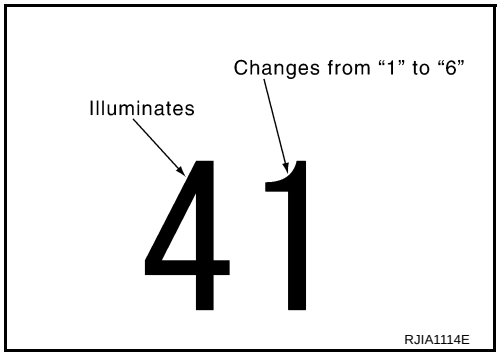

8. CHECK ACTUATORS

Refer to the following chart and confirm discharge air flow, air temperature, blower motor voltage and compressor operation.

Discharge air flow

Mode door position	Air outlet/distribution		
	Face	Foot	Defroster
	100%	–	–
	60%	40%	–
	–	65%	35%
	–	55%	45%
	–	–	100%

RHA280I

	41	42	43	44	45	46
Mode door position	VENT	B/L	B/L	FOOT	D/F	DEF
Intake door position	REC	REC	20% FRE	FRE	FRE	FRE
Air mix door position	FULL COLD	FULL COLD	FULL HOT	FULL HOT	FULL HOT	FULL HOT
Blower fan	Approx. 4.5V	Approx. 10.5V	Approx. 8.5V	Approx. 8.5V	Approx. 8.5V	Approx. 12V
Compressor	ON	ON	OFF	OFF	ON	ON

Checks must be made visually, by listening to any noise, or by touching air outlets with your hand, etc. for improper operation.

OK or NG

OK >> GO TO 9.

NG >>
- Air outlet does not change.
  Go to ATC-59, "Mode Door Motor Circuit" .
- Intake door does not change.
  Go to ATC-65, "Intake Door Motor Circuit" .
- Blower motor operation is malfunctioning.
  Go to ATC-68, "Blower Motor Circuit" .
- Magnet clutch does not engage.
  Go to ATC-74, "Magnet Clutch Circuit" .
- Discharge air temperature does not change.
  Go to ATC-62, "Air Mix Door Motor Circuit"

9. STEP 5 - TEMPERATURE OF EACH SENSOR IS CHECKED

1. Turn the temperature dial clockwise.
2. Code No.51 appears on the display.

>> GO TO 10.

10. CHECK AMBIENT SENSOR

Press DEF switch one time, temperature detected by ambient sensor is indicated on the display.

NOTE:
If temperature shown on display greatly differs from actual temperature, check sensor circuit first, then inspect sensor.

OK or NG

OK >> GO TO 11.
NG >> Go to ATC-95, "Ambient Sensor Circuit" .

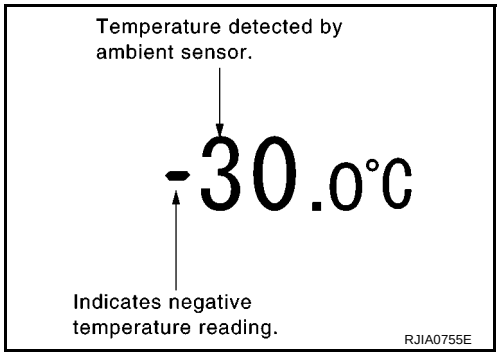

11. CHECK IN-VEHICLE SENSOR

Press DEF switch the second time, temperature detected by in-vehicle sensor is indicated on the display.

NOTE:
If temperature shown on display greatly differs from actual temperature, check sensor circuit first, then inspect sensor.

OK or NG

OK >> GO TO 12.
NG >> Go to ATC-97, "In-vehicle Sensor Circuit" .

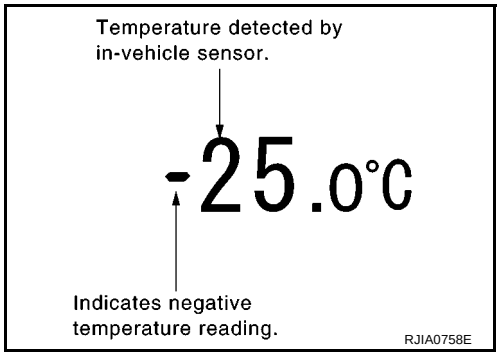

12. CHECK INTAKE SENSOR

Press DEF switch the third time, temperature detected by intake sensor is indicated on the display.

NOTE:
If temperature shown on display greatly differs from actual temperature, check sensor circuit first, then inspect sensor.

OK or NG

OK >> GO TO 13.
NG >> Go to ATC-103, "Intake Sensor Circuit" .

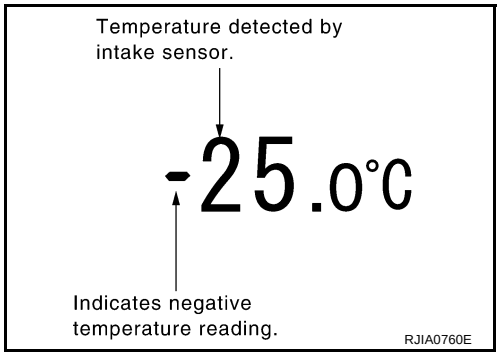

13. CHECK MULTIPLEX COMMUNICATION ERROR

1. Press REC (Recirculation) switch.
2. Multiplex communication error between AV AND NAVI CONTROL UNIT (or DISPLAY UNIT) and auto amp. is detected.

(If plural errors occur, the display of each error will blink two times for 0.5 second intervals.)

OK or NG

OK >> 1. Turn ignition switch OFF or (AUTO) switch ON.
2. END
NG >> Go to ATC-104, "Multiplex Communication Circuit" .

Display	Multiplex communication error
52	In good order
52	AV AND NAVI CONTROL UNIT or DISPLAY ⇨ Auto amp.
52	Auto amp. ⇨ AV AND NAVI CONTROL UNIT or DISPLAY

RJIA0754E

14. CHECK MALFUNCTIONING SENSOR

Refer to the following chart for malfunctioning code No.
(If two or more sensors malfunction, corresponding code Nos. blink respectively two times.)
*1: Perform self-diagnosis STEP 2 under sunshine.
When performing indoors, aim a light (more than 60W) at sunload sensor, otherwise Code No.25 will indicate despite that sunload sensor is functioning properly.

Code No.	Malfunctioning sensor (Including circuits)	Reference page
21 / –21	Ambient sensor	*2
22 / –22	In-vehicle sensor	*3
24 / –24	Intake sensor	*4
25 / –25	Sunload sensor	*5
26 / –26	Air mix door motor (LCU) PBR	*6

*2: ATC-95, "Ambient Sensor Circuit" .
*3: ATC-97, "In-vehicle Sensor Circuit" .
*4: ATC-103, "Intake Sensor Circuit" .
*5: ATC-100, "Sunload Sensor Circuit" .
*6: ATC-62, "Air Mix Door Motor Circuit" .

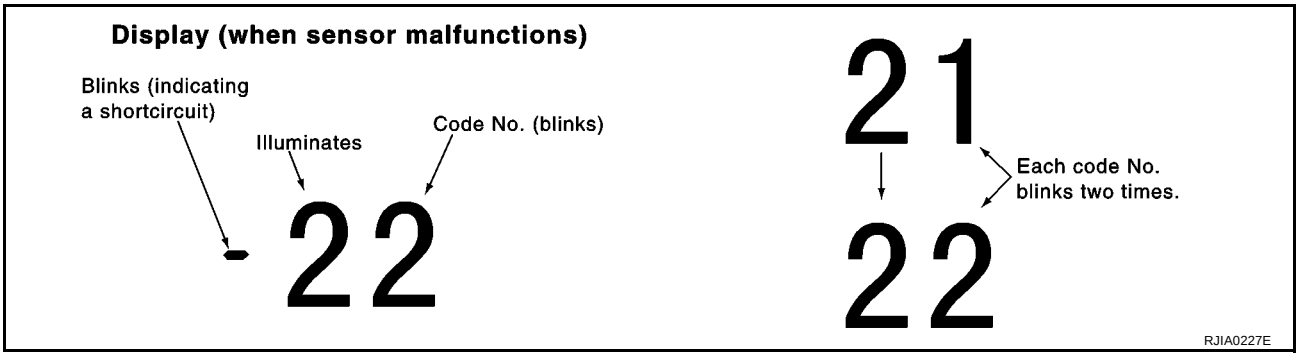

>> INSPECTION END

15. CHECK MALFUNCTIONING DOOR MOTOR POSITION SWITCH

Mode or (and) intake door motor position switch (es) is (are) malfunctioning.

Code No. *1 *2	Mode or intake door position		Reference page
31	VENT	Mode door motor	*3
32	B/L		
34	FOOT		
35	D/F		
36	DEF		
37	FRE	Intake door motor	*4
38	20% FRE		
39	REC		

(If two or more mode or intake doors are out of order, corresponding code numbers blink respectively two times.)
*1: If mode door motor harness connector is disconnected, the following display pattern will appear.
31→32→33→34→35→36→Return to 31
*2: If intake door motor harness connector is disconnected, the following display pattern will appear.
37→38→39→Return to 37
*3: ATC-59, "Mode Door Motor Circuit" .
*4: ATC-65, "Intake Door Motor Circuit" .

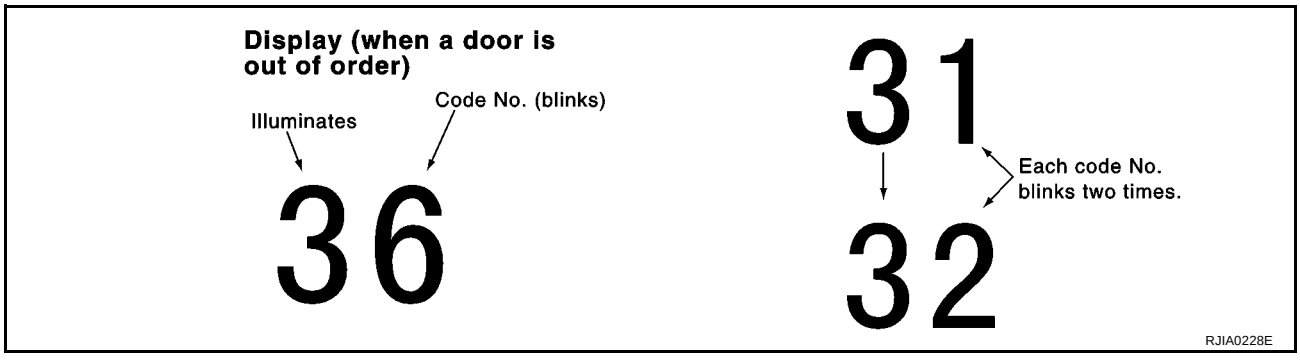

>> INSPECTION END

AUXILIARY MECHANISM: TEMPERATURE SETTING TRIMMER

The trimmer compensates for differences in range of ±3°C (±6°F) between temperature setting (displayed digitally) and temperature felt by driver.

Operating procedures for this trimmer are as follows:

- Begin Self-diagnosis STEP 5 mode.
- Press ⌘ (fan) UP switch to set system in auxiliary mode.
- Display shows 61 in auxiliary mechanism.It takes approximately 3 seconds.
- Turn the temperature dial as desired. Temperature will change at a rate of 1°C (2°F) each time a dial is turned.

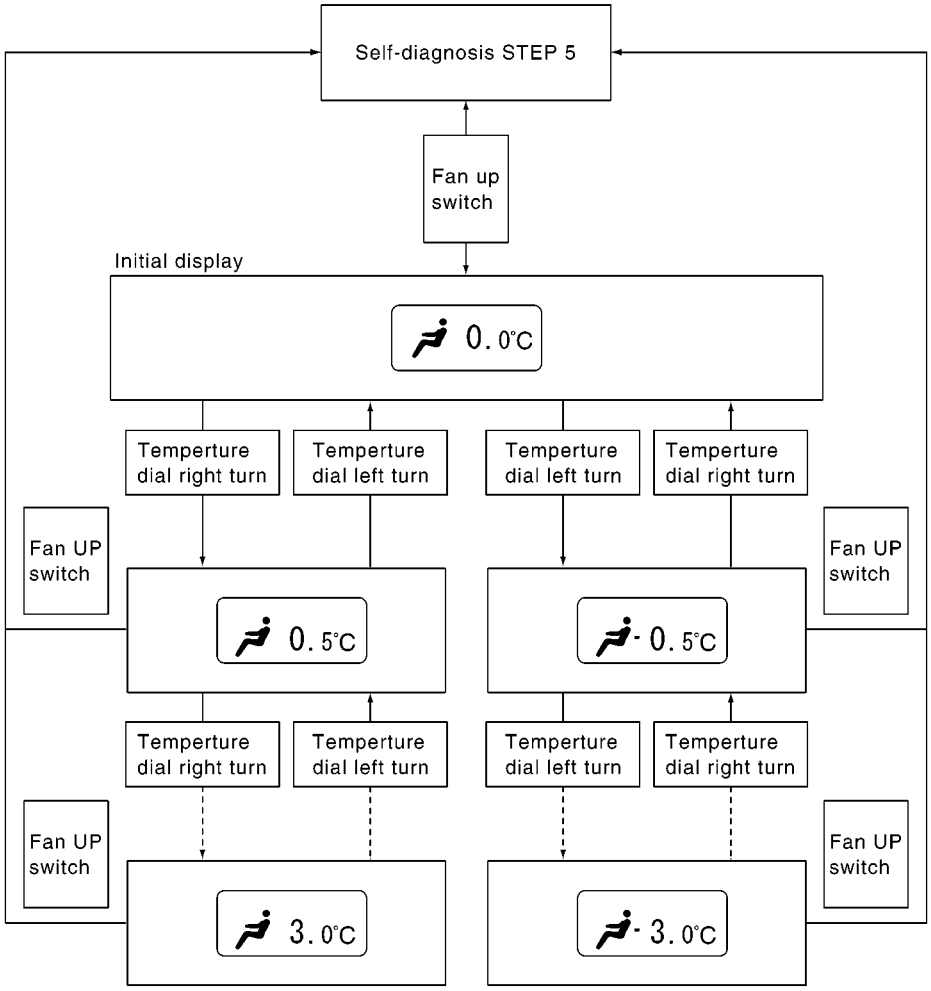

RJIA0778E

When battery cable is disconnected, trimmer operation is canceled. Temperature set becomes that of initial condition, i.e. 0°C (0°F).

Operational Check

EJS0030A

The purpose of the operational check is to confirm that the system operates properly.

Conditions :Engine running and at usual operating temperature

CHECKING MEMORY FUNCTION

1. Set the temperature 90°F or 32°C.
2. Press OFF switch.
3. Turn the ignition switch OFF.
4. Turn the ignition switch ON.
5. Press the AUTO switch.
6. Confirm that the set temperature remains at previous temperature.
7. Press OFF switch.

If NG, go to ATC-94, "Memory Function" .
If OK, continue with next check.

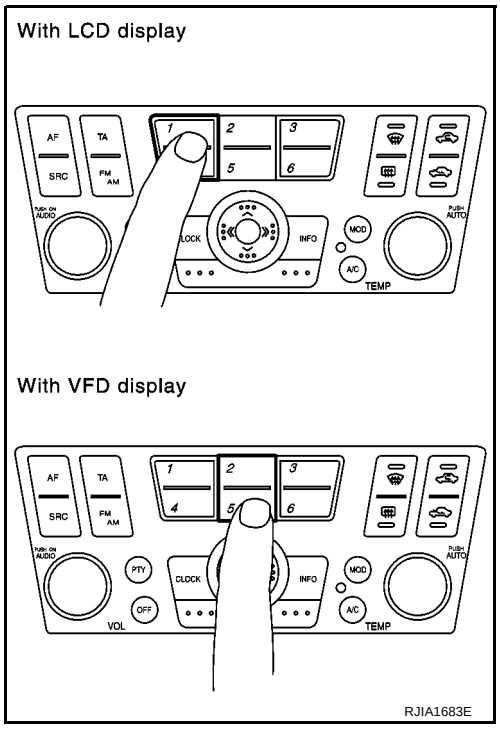

CHECKING BLOWER

1. Press fan switch (up side) one time. Blower should operate on low speed.The fan symbol should have one blade lit.
2. Press fan switch (up side) one more time, and continue checking blower speed and fan symbol until all speeds are checked.
3. Leave blower on MAX. speed.

If NG, go to ATC-68, "Blower Motor Circuit" .
If OK, continue with next check.

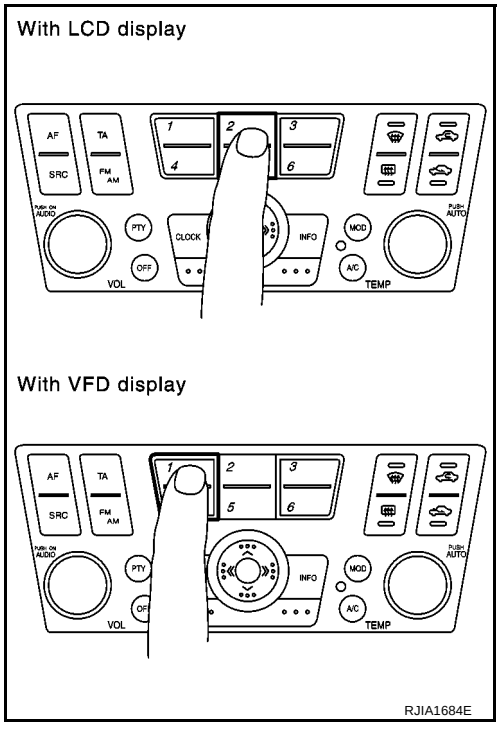

CHECKING DISCHARGE AIR

1. Press mode switch four times and DEF button.
2. Each position indicator should change shape.

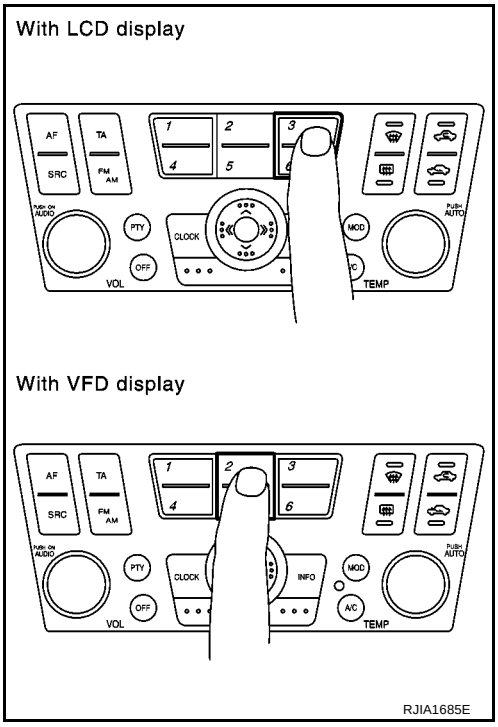

3. Confirm that discharge air comes out according to the air distribution table. Refer to ATC-27, "Discharge Air Flow" .

Intake door position is checked in the next step.
If NG, go to ATC-59, "Mode Door Motor Circuit" .
If OK, continue with next check.

NOTE:
Confirm that the compressor clutch is engaged (visual inspection) and intake door position is at FRESH when the DEF is selected.

Discharge air flow

Mode door position	Air outlet/distribution		
	Face	Foot	Defroster
	100%	–	–
	60%	40%	–
	–	65%	35%
	–	55%	45%
	–	–	100%

RHA280I

CHECKING RECIRCULATION

1. Press recirculation (REC) switch one time. Recirculation indicator should illuminate.
2. Listen for intake door position change (you should hear blower sound change slightly).

If NG, go to ATC-65, "Intake Door Motor Circuit" .
If OK, continue with next check.

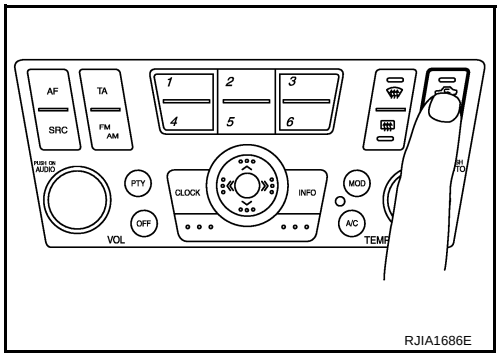

CHECKING FRESH SWITCH

1. Press fresh (FRE) switch one time. Fresh switch indicator should illuminate.
2. Listen for intake door position change (you should hear blower sound change slightly).

If NG, go to ATC-65, "Intake Door Motor Circuit" .
If OK, continue with next check.

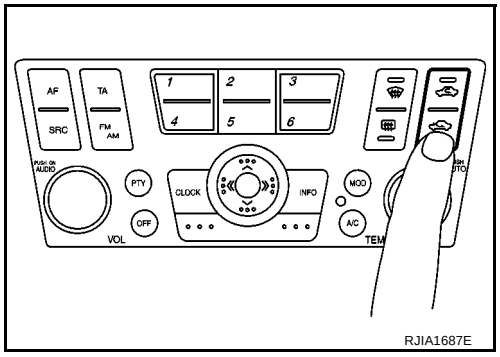

CHECKING TEMPERATURE DECREASE

1. Turn the temperature dial until 18°C (60°F) is displayed.
2. Check for cold air at discharge air outlets.

If NG, go to ATC-82, "Insufficient Cooling" .
If OK, continue with next check.

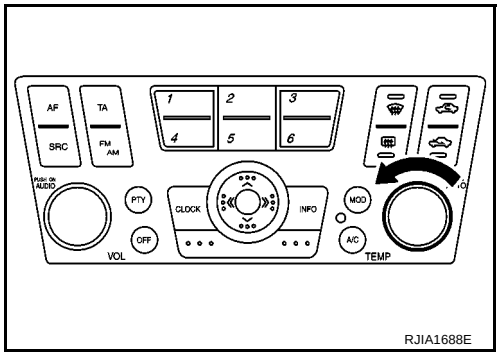

CHECKING TEMPERATURE INCREASE

1. Turn the temperature dial until 32°C (90°F) is displayed.
2. Check for hot air at discharge air outlets.

If NG, go to ATC-90, "Insufficient Heating" .
If OK, continue with next check.

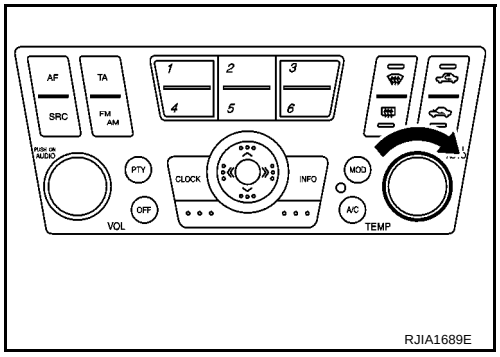

CHECKING AUTO MODE

1. Press temperature dial.
2. Display should indicate AUTO (not ECON).
   - Confirm that the compressor clutch engages (audio or visual inspection). (Discharge air and blower speed will depend on ambient, in-vehicle, and set temperatures.)

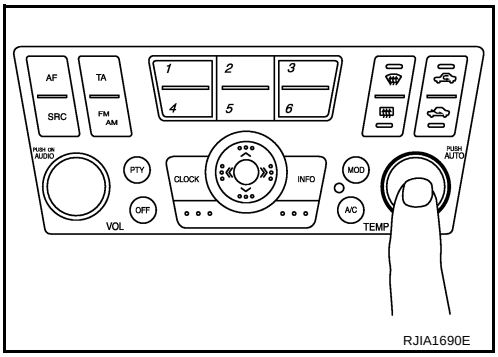

If NG, go to ATC-54, "Power Supply and Ground Circuit for Auto Amp." , then if necessary, go to ATC-74, "Magnet Clutch Circuit" .
If all operational check are OK (symptom can not be duplicated), go to Incident Simulation Tests in GI-21, “How to Perform Efficient Diagnosis for an Electrical Incident” and perform tests as outlined to simulate driving conditions environment. If symptom appears, refer to ATC-29, "SYMPTOM TABLE" and perform applicable trouble diagnosis procedures.

Power Supply and Ground Circuit for Auto Amp.

EJS0030B

SYMPTOM: A/C system does not come on.

INSPECTION FLOW

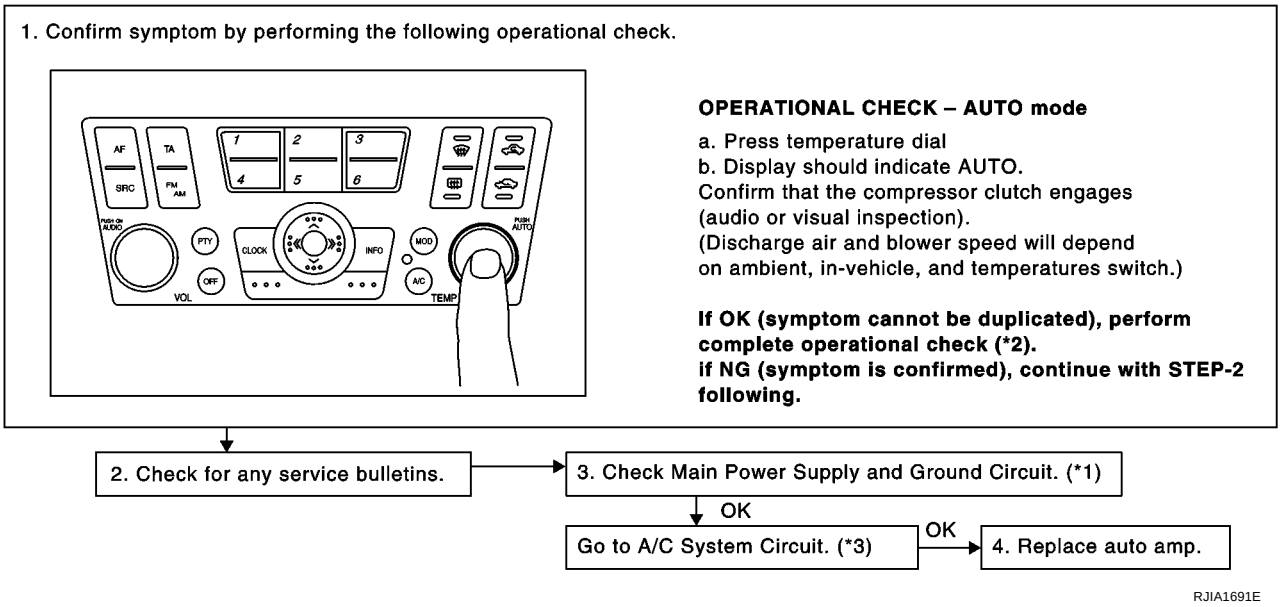

*1 EL-11, “POWER SUPPLY ROUTING”

*2 ATC-50, "Operational Check"

*3 ATC-55, "DIAGNOSTIC PROCEDURE FOR A/C SYSTEM"

COMPONENT DESCRIPTION

Automatic Amplifier (Auto Amp.)

The auto amplifier has a built-in microcomputer which processes information sent from various sensors needed for air conditioner operation. The air mix door motor, mode door motor, intake door motor, blower motor and compressor are then controlled.
The auto amplifier is unitized with control mechanisms. When the various switches and temperature adjustment dial are operated, data is input to the auto amp. from the AV AND NAVI CONTROL UNIT (or DISPLAY UNIT) using multiplex communication.
Self-diagnostic functions are also built into auto amplifier to provide quick check of malfunctions in the auto air conditioner system.

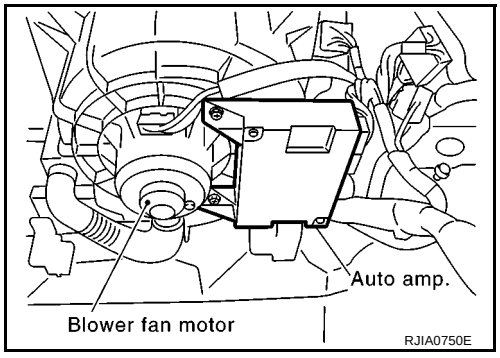

Potentio Temperature Control (PTC)

The PTC is built into the multi-function switch. It can be set at an interval of 0.5°C (1.0°F) in the 18°C (60°F) to 32°C (90°F) temperature range by turning the temperature dial. The set temperature is displayed.

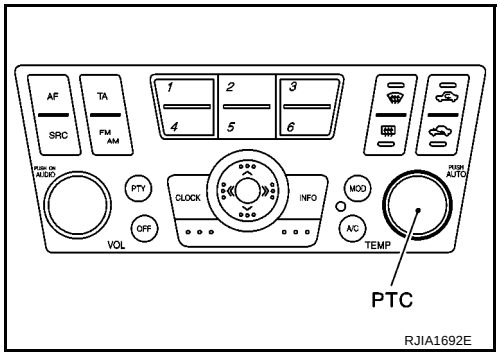

DIAGNOSTIC PROCEDURE FOR A/C SYSTEM

SYMPTOM: A/C system does not come on.

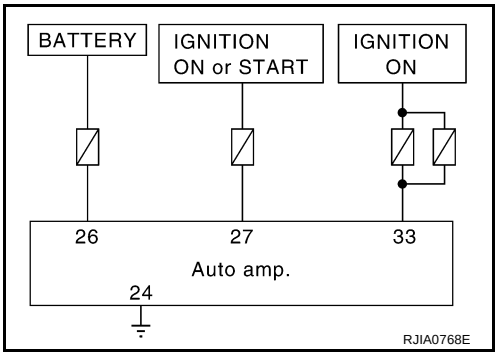

1. CHECK POWER SUPPLY CIRCUIT FOR AUTO AMP.

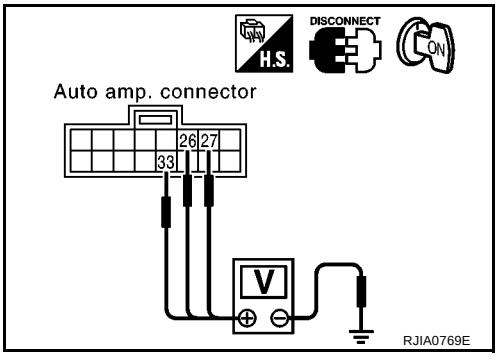

Terminal			Ignition switch position		
(+)		(-)	OFF	ACC	ON
Auto amp. connector	Terminal No. (Wire color)				
M111	26 (R/B)	Ground	Approx. 12V	Approx. 12V	Approx. 12V
	27 (Y/G)		Approx. 0V	Approx. 0V	Approx. 12V
	33 (L/W)		Approx. 0V	Approx. 12V	Approx. 12V

OK or NG

OK >> GO TO 2.

NG >> Check 10A fuses (Nos. 10 and 12) and 15A fuses (Nos. 14 and 16) located in the fuse block (J/B).

- If fuses are OK, check for open circuit in wiring harness. Repair or replace as necessary.
- If fuses are NG, replace fuse and check wiring harness for short circuit. Repair or replace as necessary.

2. CHECK GROUND CIRCUIT FOR AUTO AMP.

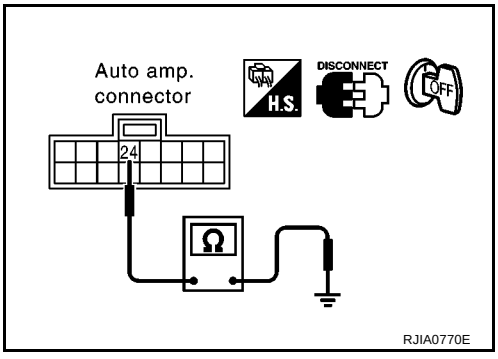

Terminal			Continuity
(+)		(-)	
Auto amp. connector	Terminal No. (Wire color)		
M111	24 (B)	Ground	Yes

OK or NG

OK >> Replace auto amp. INSPECTION END

NG >> Repair or replace harness.

LAN System Circuit

EJS0030C

SYMPTOM: Mode door motor, intake door motor and/or air mix door motor does not operate normally.

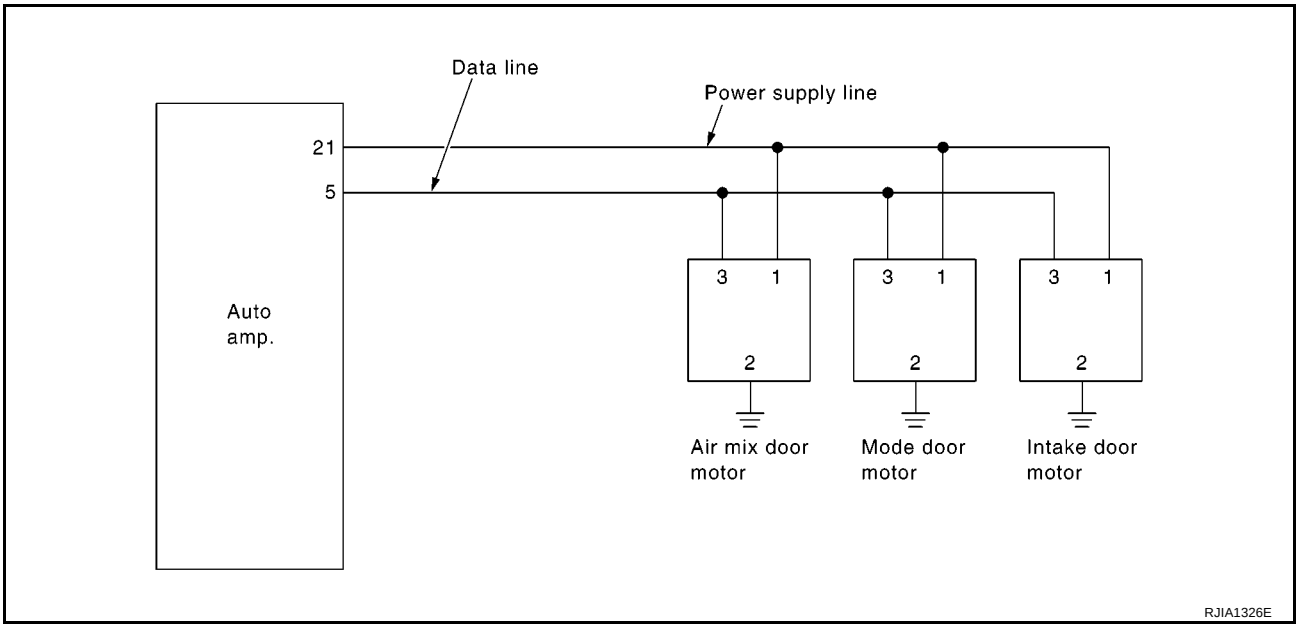

DIAGNOSTIC PROCEDURE FOR LAN SYSTEM CIRCUIT

1. CHECK POWER SUPPLY FOR AUTO AMP.

Terminal			Voltage
(+)		(-)	
Auto amp. connector	Terminal No. (Wire color)		
M111	21 (G/Y)	Ground	Approx. 12V

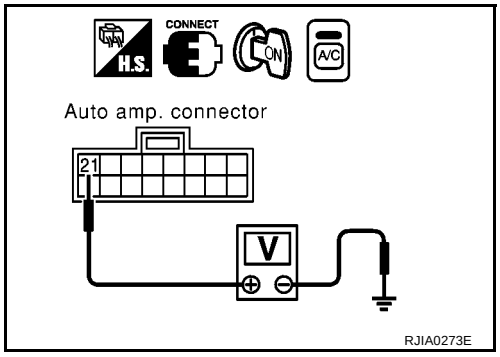

OK or NG

OK >> GO TO 2.
NG >> Replace auto amp.

2. CHECK SIGNAL FOR AUTO AMP.

Confirm A/C LAN signal using an oscilloscope.

Terminal			Voltage
(+)		(-)	
Auto amp. connector	Terminal No. (Wire color)		
M110	5 (R/Y)	Ground	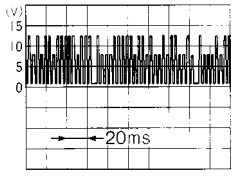 HAK0652D

OK or NG

OK >> GO TO 3.
NG >> Replace auto amp.

3. CHECK POWER SUPPLY FOR MOTOR

Door motor	Terminal			Voltage
	(+)		(-)	
	Connector	Terminal No. (Wire color)		
Mode	M89	1 (G/Y)	Ground	Approx. 12V
Air mix	M88	1 (G/Y)		
Intake	M98	1 (G/Y)		

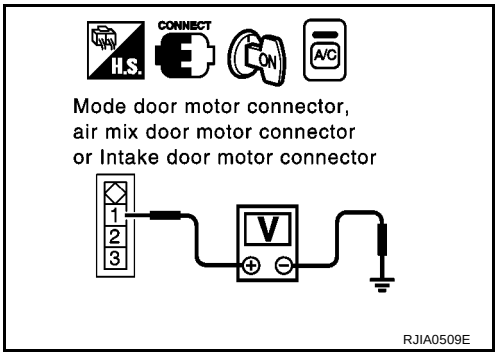

OK or NG

OK >> GO TO 4.
NG >> Replace harness or connector.

4. CHECK SIGNAL FOR MOTOR

Confirm A/C LAN signal using an oscilloscope.

Door motor	Terminal			Voltage
	(+)		(-)	
	Connector	Terminal No. (Wire color)		
Mode	M89	3 (R/Y)	Ground	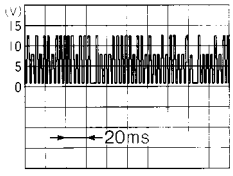
Air mix	M88	3 (R/Y)		
Intake	M98	3 (R/Y)		

HAK0652D

OK or NG

OK >> GO TO 5.
NG >> Replace harness or connector.

5. CHECK MOTOR GROUND CIRCUIT

Door motor	Terminal			Continuity
	(+)		(-)	
	Connector	Terminal No. (Wire color)		
Mode	M89	2 (B)	Ground	Yes
Air mix	M88	2 (B)		
Intake	M98	2 (B)		

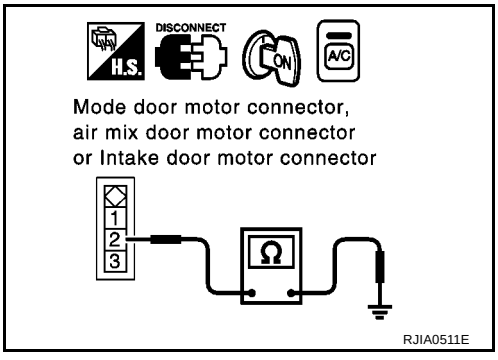

OK or NG

OK >> GO TO 6.
NG >> Replace harness or connector.

6. CHECK MOTOR OPERATION

Disconnect and reconnect the motor connector and confirm the motor operation.

OK or NG

OK >> (Return to operate normally.)
- Poor contacting the motor connector

NG >> (Does not operate normally.)
- GO TO 7

7. CHECK MODE DOOR MOTOR OPERATION

1. Disconnect mode door motor and air mix door motor connector.
2. Reconnect mode door motor connector and confirm the mode door motor operation.

OK or NG

OK >> (Mode door motor operates normally.)
- GO TO 8

NG >> (Mode door motor does not operate normally.)
- Replace the mode door motor.

8. CHECK AIR MIX DOOR MOTOR OPERATION

1. Disconnect mode door motor connector.
2. Reconnect air mix door motor connector and confirm the air mix door motor operation.

OK or NG

OK >> (Air mix door motor operates normally.)
- GO TO 9

NG >> (Air mix door motor does not operate normally.)
- Replace the air mix door motor.

9. CHECK INTAKE DOOR MOTOR OPERATION

1. Disconnect air mix door motor connector.
2. Reconnect intake door motor connector and confirm the intake door motor operation.

OK or NG

OK >> (Intake door motor operates normally.)
- Replace auto amp.

NG >> (Intake door motor does not operate normally.)
- Replace intake door motor.

Mode Door Motor Circuit

EJS0030D

SYMPTOM:

- Air outlet does not change.
- Mode door motor does not operate normally.

INSPECTION FLOW

1. Confirm symptom by performing the following operational check.

With LCD display

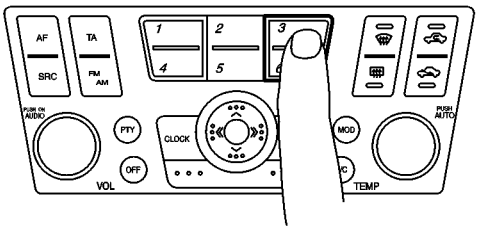

With VFD display

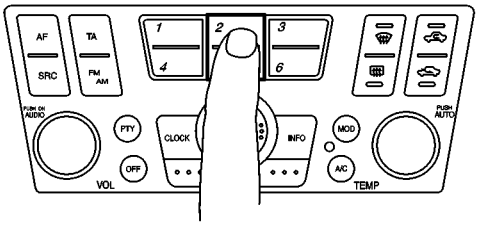

OPERATIONAL CHECK – Discharge air

a. Press mode switch four times and DEF button.
b. Each position indicator should change shape.

c. Confirm that discharge air comes out according to the air distribution table (*15).
Refer to "Discharge Air Flow" (*1).

NOTE:

- **If OK (symptom cannot be duplicated), perform complete operational check (*2).**
  If NG (symptom is confirmed), continue with STEP-2 following.
- **Confirm that the compressor clutch is engaged (visual inspection) and intake door position is at FRESH when DEF is selected.**
  Intake door position is checked in the next step.

2. Check for any service bulletins. → 3. Perform self-diagnosis STEP-1. (*3)

4. Perform self-diagnosis STEP-2. (*4)
- OK → 3. Perform self-diagnosis STEP-1. (*3)
- NG → Go to appropriate malfunctioning sensor circuit. (*9)

OK ↓

5. Perform self-diagnosis STEP-3. (*4)
- NG → Go to DIAGNOSTIC PROCEDURE FOR MODE DOOR MOTOR, AIR MIX DOOR MOTOR AND INTAKE DOOR MOTOR CIRCUIT. (*10)
- OK ↓

6. Perform self-diagnosis STEP-4. (*4)
- NG → Check mode door control linkage. (*11)
  - NG → Repair or adjust control linkage.
- OK **[Cause cannot be confirmed by self-diagnosis.]** ↓

7. Check ambient sensor circuit. (*5) ↓ OK

8. Check in-vehicle sensor circuit. (*6) ↓ OK

9. Check sunload sensor circuit. (*7) ↓ OK

10. Check intake sensor circuit. (*14) ↓ OK

11. Check air mix door motor PBR circuit. (*8)
- OK → If the symptom still exists, perform a complete operational check (*12) and check for other symptoms.
  [Refer to symptom table, (*13).]
  Does another symptom exist?
  - Yes → Go to Trouble Diagnosis for related symptoms. **[Another symptom exists.]**
  - No → Replace auto amp. → INSPECTION END

RJIA1693E

*1	ATC-27, "Discharge Air Flow"	*2	ATC-50, "Operational Check"	*3	ATC-42, "FUNCTION CONFIRMATION PROCEDURE", see No.1
*4	ATC-42, "FUNCTION CONFIRMATION PROCEDURE", see No. 5	*5	ATC-95, "Ambient Sensor Circuit"	*6	ATC-97, "In-vehicle Sensor Circuit"
*7	ATC-100, "Sunload Sensor Circuit"	*8	ATC-62, "Air Mix Door Motor Circuit"	*9	ATC-42, "FUNCTION CONFIRMATION PROCEDURE", see No.14

*10 ATC-56, "LAN System Circuit"	*11 ATC-61, "COMPONENT DESCRIPTION"	*12 ATC-50, "Operational Check"
*13 ATC-29, "SYMPTOM TABLE"	*14 ATC-103, "Intake Sensor Circuit"	*15 ATC-51, "CHECKING DISCHARGE AIR"

SYSTEM DESCRIPTION

Component Parts

Mode door control system components are:

- Auto amp.
- Mode door motor (LCU)
- A/C LAN system (PBR built-in air mix door motor, mode door motor and intake door motor)
- In-vehicle sensor
- Ambient sensor
- Sunload sensor
- Intake sensor

System Operation

The auto amplifier receives data from each of the sensors. The amplifier sends air mix door, mode door and intake door opening angle data to the air mix door motor LCU, mode door motor LCU and intake door motor LCU.

The air mix door motor, mode door motor and intake door motor read their respective signals according to the address signal. Opening angle indication signals received from the auto amplifier and each of the motor position sensors are compared by the LCUs in each motor with the existing decision and opening angles. Subsequently, HOT/COLD or DEFROST/VENT or FRESH/RECIRCULATION operation is selected. The new selection data is returned to the auto amplifier.

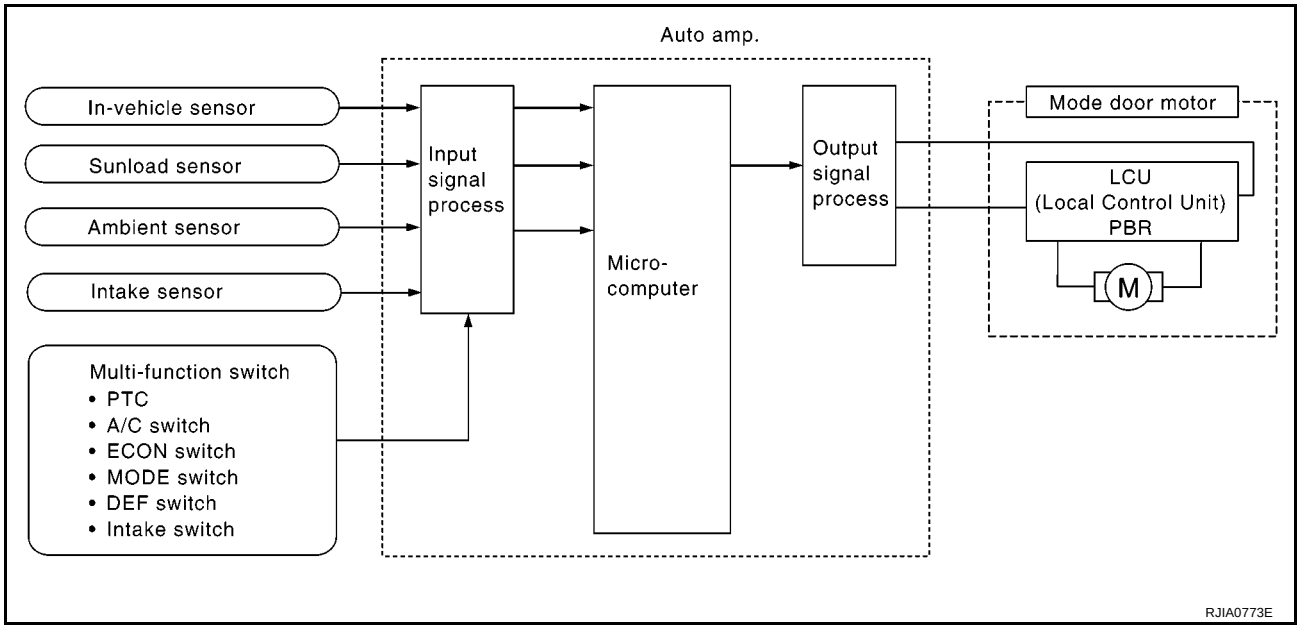

Mode Door Control Specification

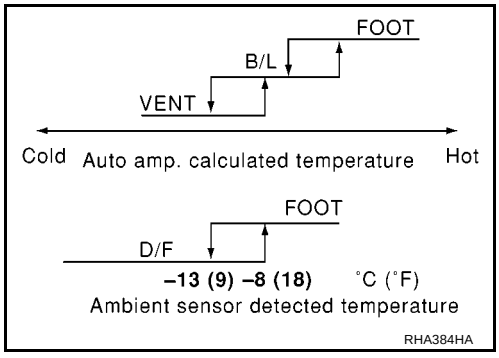

COMPONENT DESCRIPTION

Mode Door Motor

The mode door motor is attached to the heater & cooling unit. It rotates so that air is discharged from the outlet set by the auto amplifier. Motor rotation is conveyed to a link which activates the mode door.

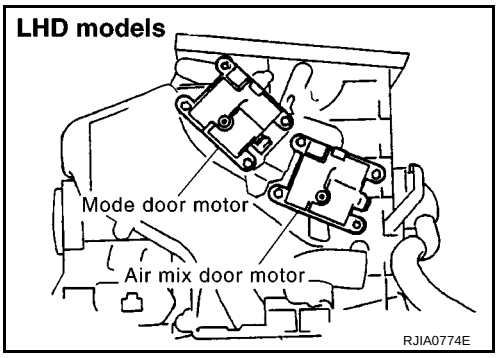

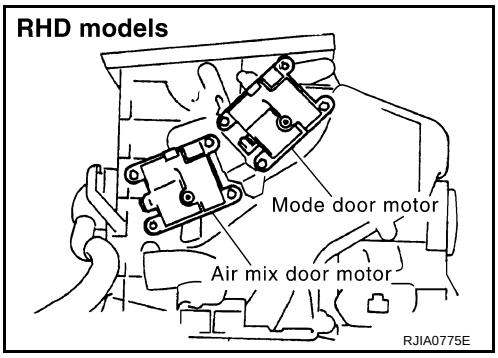

DIAGNOSTIC PROCEDURE FOR MODE DOOR

SYMPTOM: Mode door motor does not operate normally.
Perform diagnostic procedure for LAN system circuit. Refer to ATC-56, "LAN System Circuit" .

Air Mix Door Motor Circuit

EJS0030E

SYMPTOM:

- Discharge air temperature does not change.
- Air mix door motor does not operate.

INSPECTION FLOW

1. Confirm symptom by performing the following operational check.

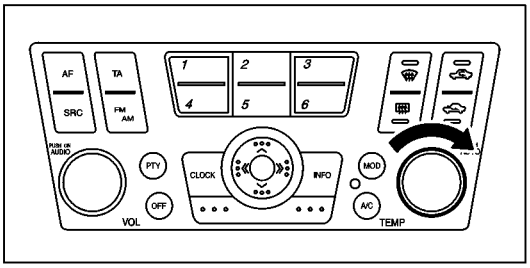

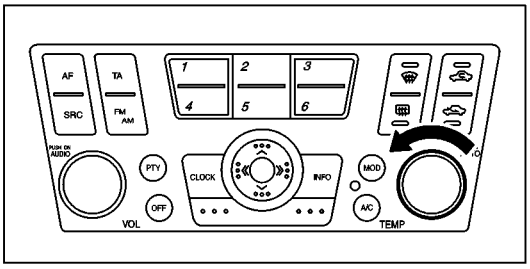

OPERATIONAL CHECK

Temperature Increase

a. Turn the temperature dial clockwise until 32˚C (90˚F) is displayed.
b. Check for hot air at discharge air outlets.

Temperature decrease

a. Turn the temperature dial counterclockwise until 18˚C (60˚F) is displayed.
b. Check for cold air at discharge air outlets.

If OK (symptom cannot be duplicated), perform complete operational check (*8).
If NG (symptom is confirmed), continue with STEP-2 following.

2. Check for any service bulletins. → 3. Perform self-diagnosis STEP-1. (*1)

OK

4. Perform self-diagnosis STEP-2. (*12) — NG → Go to appropriate malfunctioning sensor circuit. (*6)

OK

5. Perform self-diagnosis STEP-4. (*12) — NG → Go to LAN system circuit. (*7)

OK **[Cause cannot be confirmed by self-diagnosis.]**

6. Check ambient sensor circuit. (*2)

OK

7. Check in-vehicle sensor circuit. (*3)

OK

8. Check sunload sensor circuit. (*4)

OK

9. Check intake sensor circuit. (*11)

OK

10. Check air mix door motor PBR circuit. (*5)

OK

If the symptom still exists, perform a complete operational check (*9) and check for other symptoms. [Refer to symptom table, (*10).] Does another symptom exist? — Yes → Go to Trouble Diagnosis for related symptom.

Another symptom exists.

No

Replace auto amp. → INSPECTION END

RJIA1694E

*1 ATC-42, "FUNCTION CONFIRMATION PROCEDURE", see No.1	*2 ATC-95, "Ambient Sensor Circuit"	*3 ATC-97, "In-vehicle Sensor Circuit"
*4 ATC-100, "Sunload Sensor Circuit"	*5 ATC-62, "Air Mix Door Motor Circuit"	*6 ATC-42, "FUNCTION CONFIRMATION PROCEDURE", see No. 14.
*7 ATC-56, "LAN System Circuit"	*8 ATC-50, "Operational Check"	*9 ATC-50, "Operational Check"
*10 ATC-29, "SYMPTOM TABLE"	*11 ATC-103, "Intake Sensor Circuit"	*12 ATC-42, "FUNCTION CONFIRMATION PROCEDURE", see No. 7

SYSTEM DESCRIPTION

Component Parts

Air mix door control system components are:

- Auto amp.
- Air mix door motor (LCU)
- A/C LAN system (PBR built-in air mix door motor, mode door motor and intake door motor)
- In-vehicle sensor
- Ambient sensor
- Sunload sensor
- Intake sensor

System Operation

The auto amplifier receives data from each of the sensors. The amplifier sends air mix door, mode door and intake door motor opening angle data to the air mix door motor LCU, mode door motor LCU and intake door motor LCU.

The air mix door motor, mode door motor and intake door motor read their respective signals according to the address signal. Opening angle indication signals received from the auto amplifier and each of the motor position sensors are compared by the LCUs in each motor with the existing decision and opening angles. Subsequently, HOT/COLD or DEFROST/VENT or FRESH/RECIRCULATION operation is selected. The new selection data is returned to the auto amplifier.

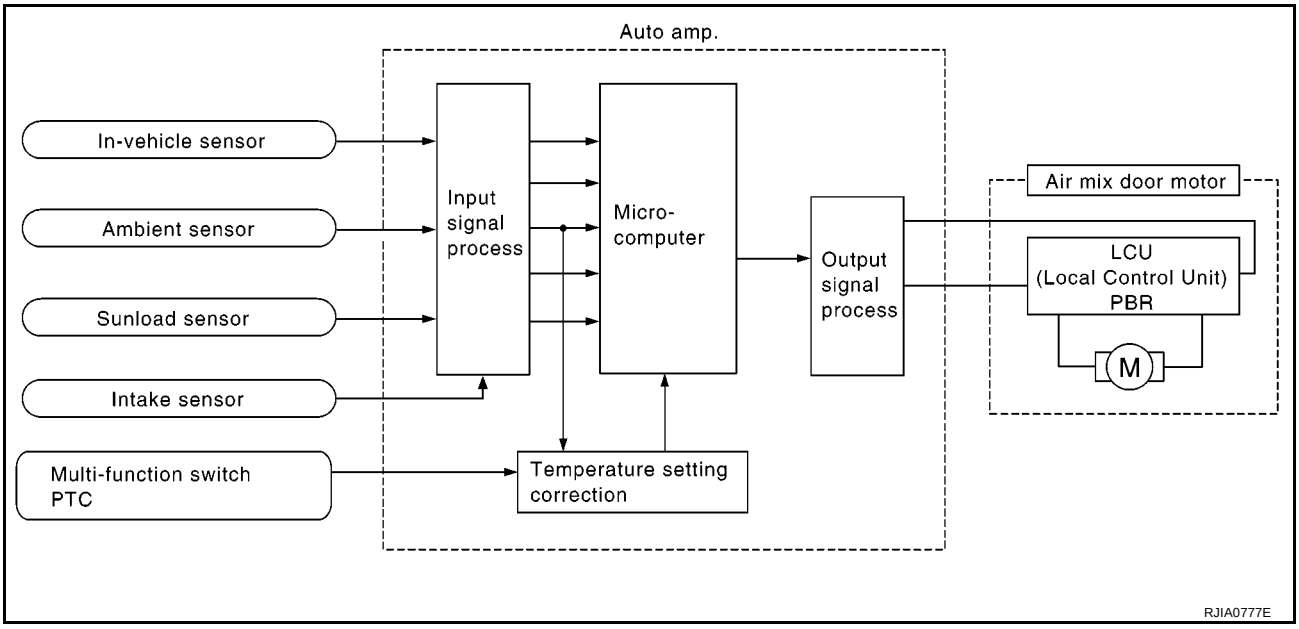

Air Mix Door Control Specification

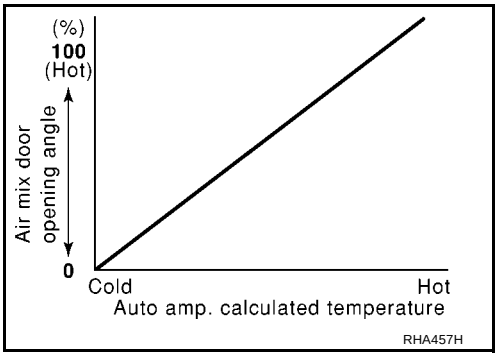

COMPONENT DESCRIPTION

Air Mix Door Motor

The air mix door motor is attached to the heater & cooling unit. It rotates so that the air mix door is opened or closed to a position set by the auto amplifier. The air mix door position is then fed back to the auto amplifier by PBR built-in air mix door motor.

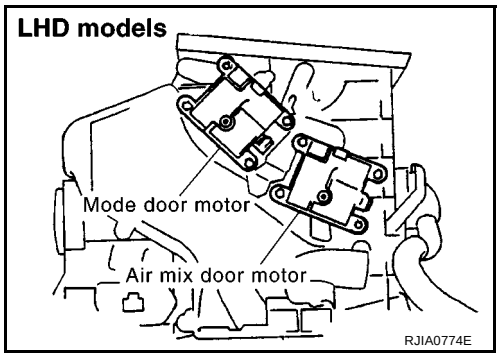

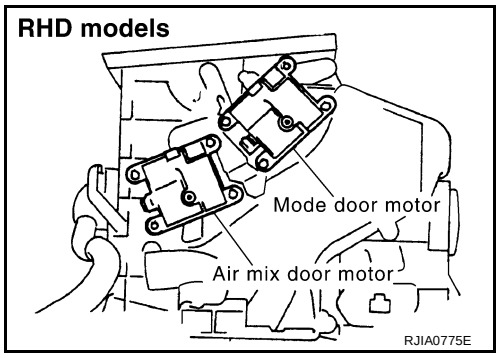

DIAGNOSTIC PROCEDURE FOR AIR MIX DOOR MOTOR

SYMPTOM: Discharge air temperature does not change.
Perform diagnostic procedure for LAN system circuit. Refer to ATC-56, "LAN System Circuit" .

Intake Door Motor Circuit

EJS0030F

SYMPTOM:

- Intake door does not change.
- Intake door motor does not operate normally.

INSPECTION FLOW

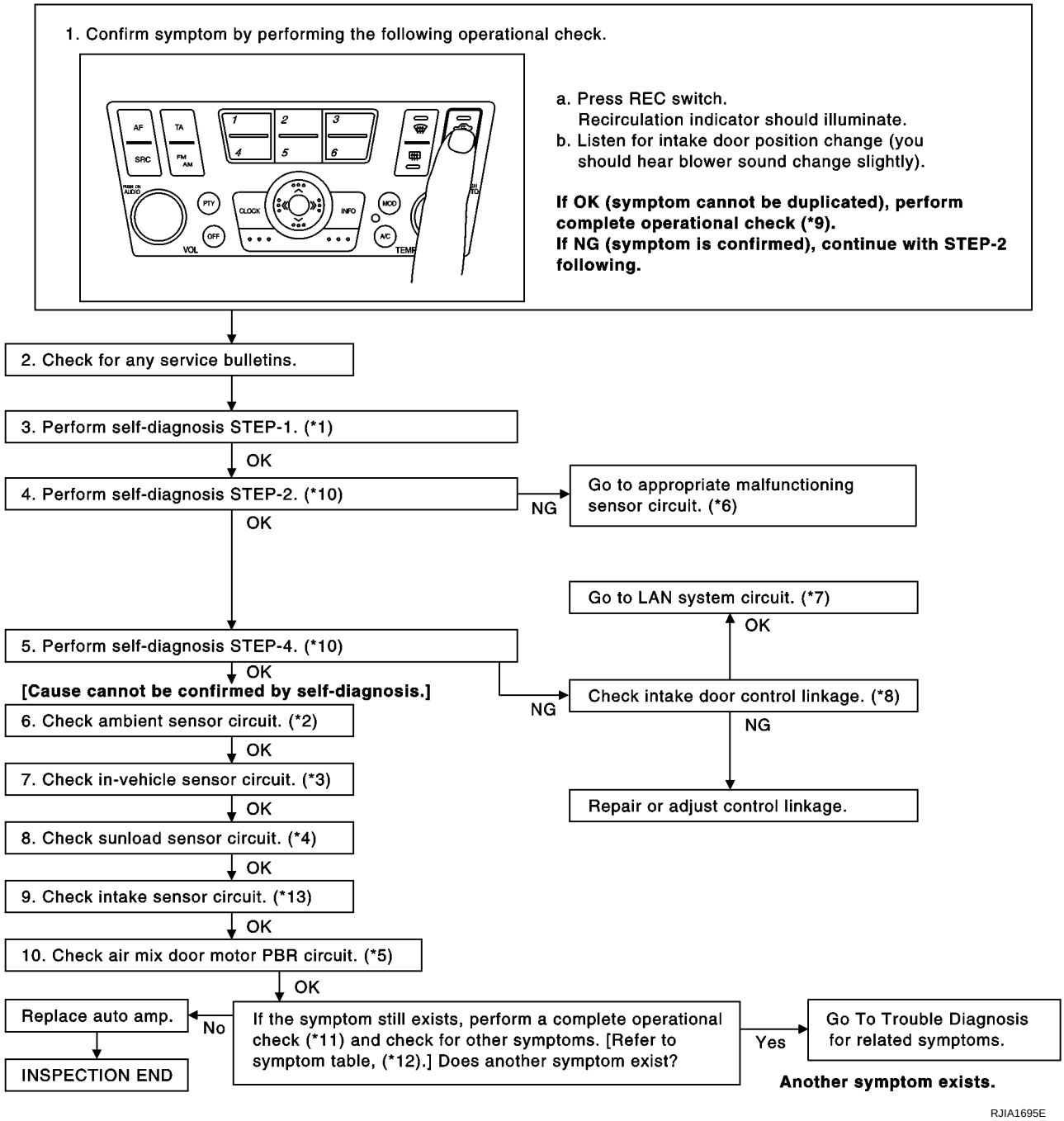

*1	ATC-42, "FUNCTION CONFIRMATION PROCEDURE", see No.1	*2	ATC-95, "Ambient Sensor Circuit"	*3	ATC-97, "In-vehicle Sensor Circuit"
*4	ATC-100, "Sunload Sensor Circuit"	*5	ATC-62, "Air Mix Door Motor Circuit"	*6	ATC-42, "FUNCTION CONFIRMATION PROCEDURE", see No. 14.
*7	ATC-56, "LAN System Circuit"	*8	ATC-66, "COMPONENT DESCRIPTION"	*9	ATC-50, "Operational Check"

*10 ATC-42, "FUNCTION CONFIRMATION PROCEDURE", see No.5 or 7
*11 ATC-50, "Operational Check"
*12 ATC-29, "SYMPTOM TABLE"
*13 ATC-103, "Intake Sensor Circuit"

SYSTEM DESCRIPTION

Component Parts

Intake door control system components are:

- Auto amp.
- Intake door motor (LCU)
- A/C LAN system (PBR built-in air mix door motor, mode door motor and intake door motor)
- In-vehicle sensor
- Ambient sensor
- Sunload sensor
- Intake sensor

System Operation

The auto amplifier receives data from each of the sensors. The amplifier sends air mix door, mode door and intake door motor opening angle data to the air mix door motor LCU, mode door motor LCU and intake door motor LCU.
The air mix door motor, mode door motor and intake door motor read their respective signals according to the address signal. Opening angle indication signals received from the auto amplifier and each of the motor position sensors are compared by the LCUs in each motor with the existing decision and opening angles. Subsequently, HOT/COLD or DEFROST/VENT or FRESH/RECIRCULATION operation is selected. The new selection data is returned to the auto amplifier.

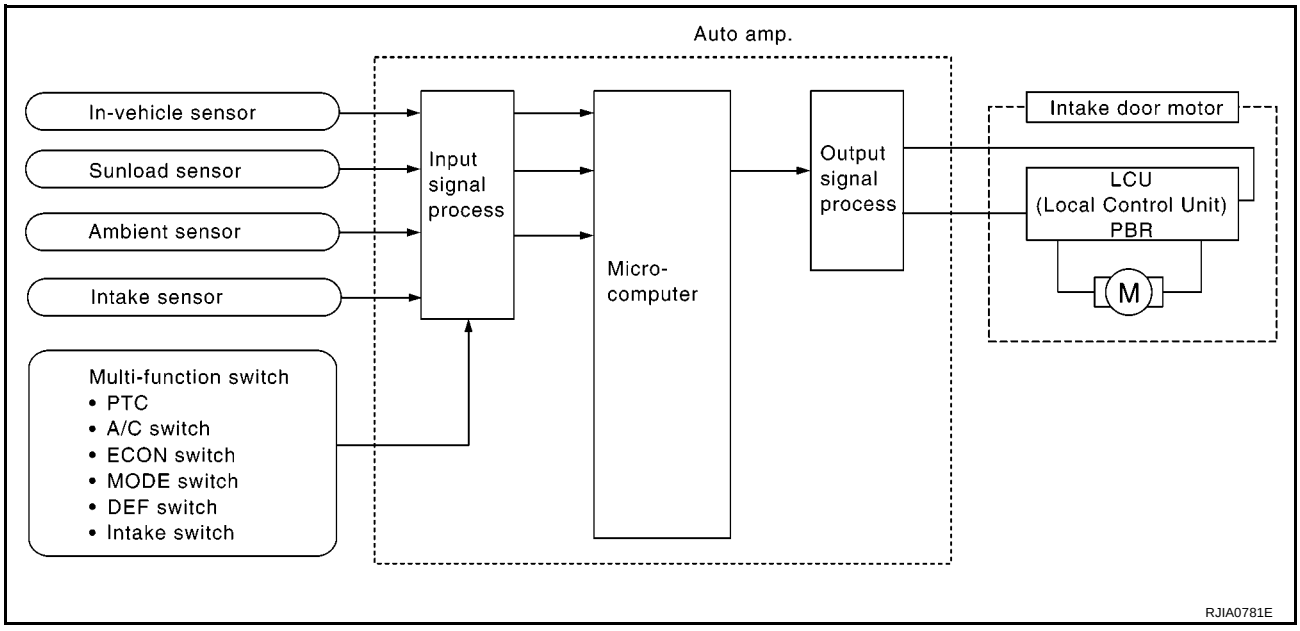

COMPONENT DESCRIPTION

Intake Door Motor

The intake door motor is attached to the intake unit. It rotates so that air is drawn from inlets set by the auto amplifier. Motor rotation is conveyed to a lever which activates the intake door.

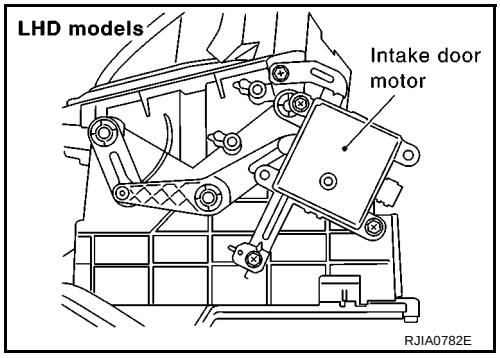

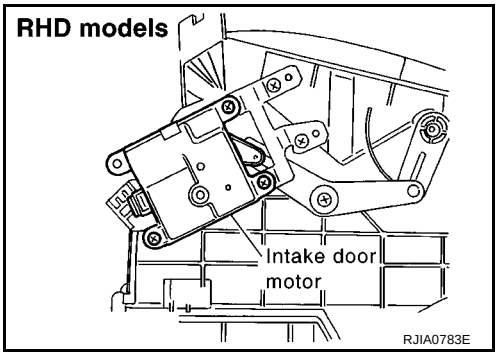

DIAGNOSTIC PROCEDURE FOR INTAKE DOOR MOTOR

SYMPTOM: Intake door motor does not operate normally.
Perform diagnostic procedure for LAN system circuit. Refer to ATC-56, "LAN System Circuit" .

Blower Motor Circuit

EJS0030G

SYMPTOM:

- Blower motor operation is malfunctioning.
- Blower motor operation is malfunctioning under out of starting fan speed control.

INSPECTION FLOW

1. Confirm symptom by performing the following operational check.

With LCD display

With VFD display

OPERATIONAL CHECK – Blower

a. Press the fan switch once.
   Blower should operate at low speeds.
b. Press the fan switch once more, and check blower speed.
c. Continue checking blower speed until all speeds are checked.

If OK (symptom cannot be duplicated), perform complete operational check (*4).
If NG (symptom is confirmed), continue with STEP-2 following.

2. Check for any service bulletins. → 3. Perform self-diagnosis STEP-1. (*1)

OK

4. Perform self-diagnosis STEP-2. (*1)
Code No. 20 should be displyed after approx. 4 second.

NG → Go to appropriate malfunctioning sensor circuit. (*2)

OK

5. Perform self-diagnosis STEP-4. (*1)
Does blower motor speed change as follows?

Code No.	41	42	43	44	45	46
Blower motor speed	4.5V	10.5V	8.5V	8.5V	8.5V	12V

No → Go to Blower Motor Circuit. (*3)

Yes

6. Is engine coolant temperature below 56˚C (133˚F)?

No → Blower motor operation is normal.

Yes

7. Is blower motor operating under staring blower speed control?

No → Go to Blower Motor Circuit. (*3)

OK → Check water temperature sensor circuit. Refer to (*6). “Electrical Component Inspection”.

Yes

If the symptom still exists, perform a complete operational check (*4) and check for other symptoms. [Refer to symptom table, (*5).] Does another symptom exist?

Yes → Go to Trouble Diagnosis for related symptom.

Another symptom exists.

No

Replace auto amp. → INSPECTION END

RJIA1696E

*1 ATC-41, "Self-diagnosis Function"	*2 ATC-42, "FUNCTION CONFIRMATION PROCEDURE", see No.14.	*3 ATC-70, "DIAGNOSTIC PROCEDURE FOR BLOWER MOTOR"
*4 ATC-50, "Operational Check"	*5 ATC-29, "SYMPTOM TABLE"	*6 QG engine (With EURO–OBD): EC-188, "DTC P0117, P0118 ECT SENSOR" QG engine (Without EURO–OBD): EC-660, "DTC P0117, P0118 ECT SENSOR" YD engine:EC-1046, "DTC P0117, P0118 ECT SENSOR"

SYSTEM DESCRIPTION

Component Parts

Fan speed control system components are:

- Auto amp.
- A/C LAN system (PBR built-in air mix door motor, mode door motor and intake door motor)
- Fan control amp.
- In-vehicle sensor
- Ambient sensor
- Sunload sensor
- Intake sensor

System Operation

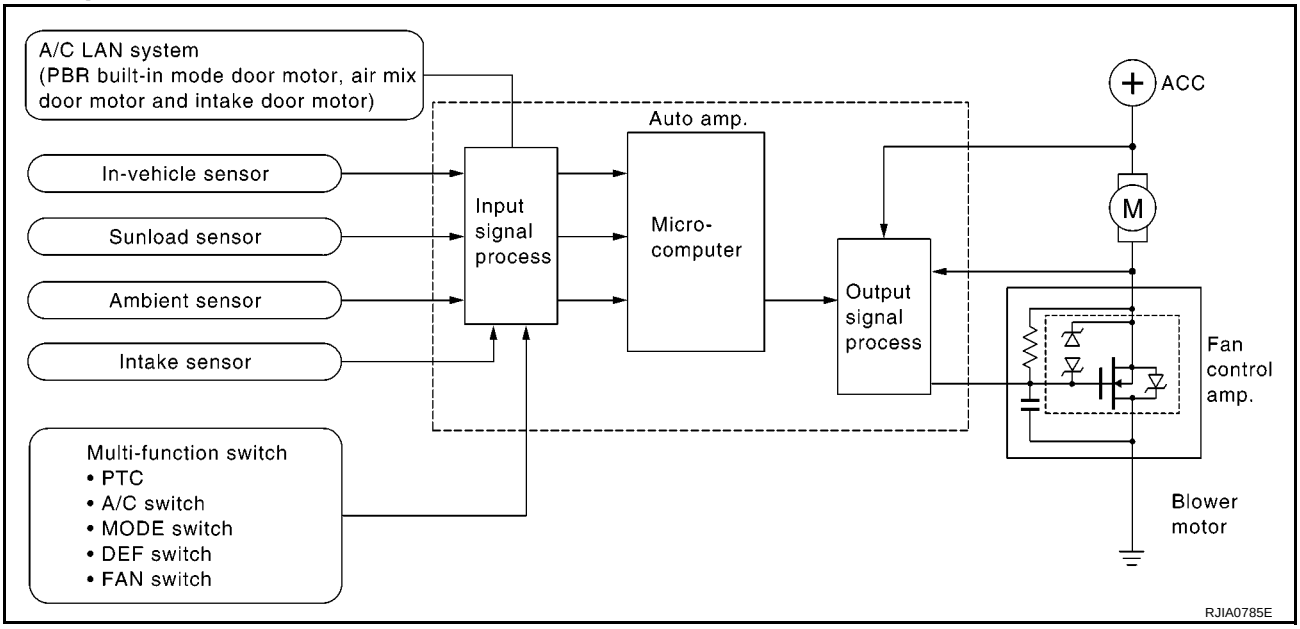

Automatic Mode

In the automatic mode, the blower motor speed is calculated by the automatic amplifier based on input from the PBR, in-vehicle sensor, sunload sensor, intake sensor and ambient sensor.
The blower motor applied voltage ranges from approximately 4 volts (lowest speed) to 12 volts (highest speed).
The control blower speed (in the range of 4 to 12V), the automatic amplifier supplies a gate voltage to the fan control amplifier. Based on this voltage, the fan control amplifier controls the voltage supplied to the blower motor.

Starting Fan Speed Control

Start Up From COLD SOAK Condition (Automatic mode)
In a cold start up condition where the engine coolant temperature is below 56°C (133°F), the blower will not operate for a short period of time (up to 150 seconds). The exact start delay time varies depending on the ambient and engine coolant temperature.

In the most extreme case (very low ambient) the blower starting delay will be 150 seconds as described above. After this delay, the blower will operate at low speed until the engine coolant temperature rises above 56°C (133°F), at which time the blower speed will increase to the objective speed.

Start Up From Usual or HOT SOAK Condition (Automatic mode)
The blower will begin operation momentarily after the A/C button is pushed. The blower speed will gradually rise to the objective speed over a time period of 3 seconds or less (actual time depends on the objective blower speed).

Blower Speed Compensation

Sunload
When the in-vehicle temperature and the set temperature are very close, the blower will be operating at low speed. The low speed will vary depending on the sunload. During conditions of low or no sunload, the blower low speed is usual low speed (approx. 4V). During high sunload conditions, the auto amp causes the blower fan speed to increase.(Approx. 7V)

Fan Speed Control Specification

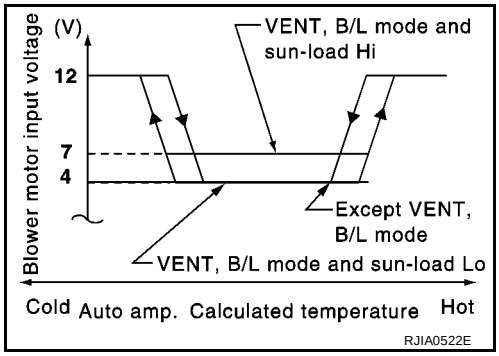

COMPONENT DESCRIPTION

Fan Control Amplifier

The fan control amplifier is located on the heater & cooling unit. The fan control amp. receives a gate voltage from the auto amp. to steplessly maintain the blower fan motor voltage in the 4 to 12 volt range.

NOTE:
This illustration is for LHD models. The layout for RHD models is symmetrically opposite.

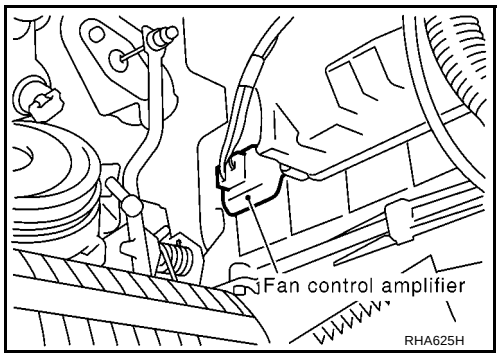

DIAGNOSTIC PROCEDURE FOR BLOWER MOTOR

SYMPTOM: Blower motor operation is malfunctioning under starting fan speed control.

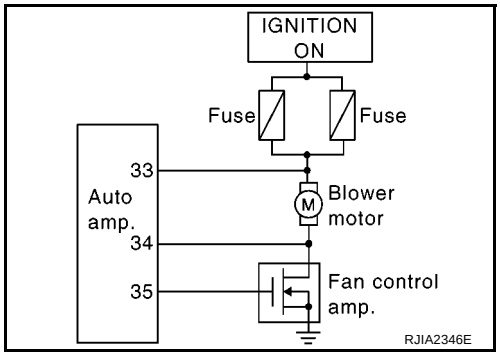

1. CHECK POWER SUPPLY FOR BLOWER MOTOR

Disconnect blower motor harness connector.

Terminal			Voltage
(+)		(-)	
Blower motor connector	Terminal No. (Wire color)		
M53	1 (L/W)	Ground	Approx. 12V

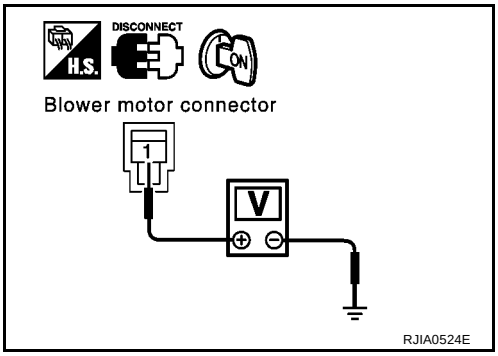

OK or NG

OK >> GO TO 2.

NG >> Check power supply circuit and 15A fuses [Nos. 14 and 16, located in the fuse block (J/B)]. Refer to EL-11, "POWER SUPPLY ROUTING".

- If OK, check for open circuit in wiring harness. Repair or replace as necessary.
- If NG, replace fuse and check wiring harness for short circuit. Repair or replace as necessary.

2. CHECK FAN FEED BACK CIRCUIT

Terminal			Condition	Voltage
(+)		(-)		
Auto amp. connector	Terminal No. (Wire color)			
M111	34 (L/B)	Ground	Fan speed: 1st	Approx. 8V

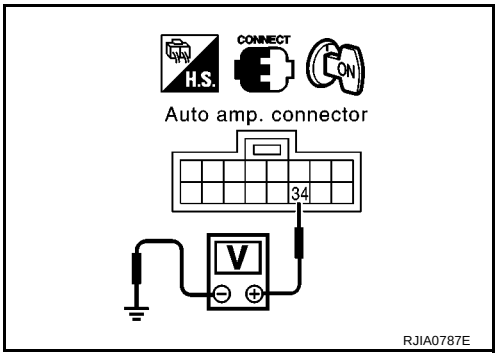

OK or NG

OK >> GO TO 3.

NG >> Repair harness or connector.

3. CHECK BLOWER MOTOR

Refer to ATC-73, "COMPONENT INSPECTION" .

OK or NG

OK >> GO TO 4.

NG >> Replace blower motor.

4. CHECK POWER SUPPLY FOR FAN CONTROL AMP.

1. Reconnect blower motor connector.
2. Disconnect fan control amp. harness connector.

Terminal			Voltage
(+)		(-)	
Fan control amp. connector	Terminal No. (Wire color)		
M90	3 (L/B)	Ground	Approx. 12V

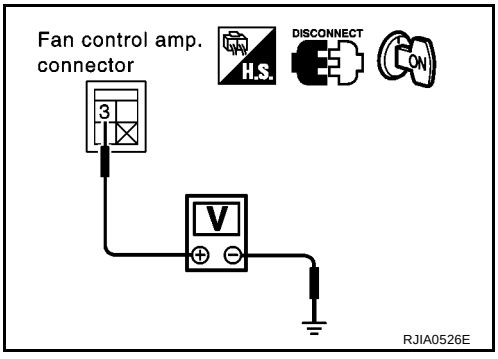

OK or NG

OK >> GO TO 5.

NG >> Repair harness or connector.

5. CHECK GROUND CIRCUIT FOR FAN CONTROL AMP.

Terminal			Continuity
(+)		(-)	
Fan control amp. connector	Terminal No. (Wire color)		
M90	1 (B)	Ground	Yes

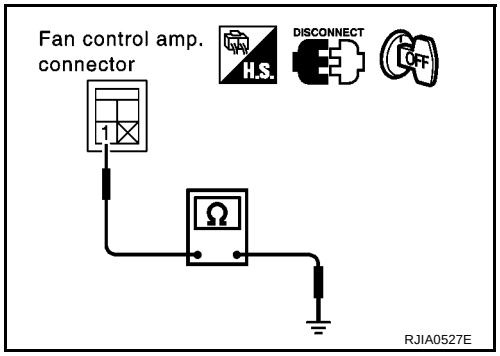

OK or NG

OK >> GO TO 6.
NG >> Repair harness or connector.

6. CHECK FOR AUTO AMP. OUTPUT

Reconnect the fan control amp. harness connector.

Terminal			Condition	Voltage
(+)		(-)		
Fan control amp. connector	Terminal No. (Wire color)			
M90	2 (L/Y)	Ground	Fan speed: 1 - 4	Approx. 2.5 - 3.5
			Fan speed: 5	Approx. 9.0

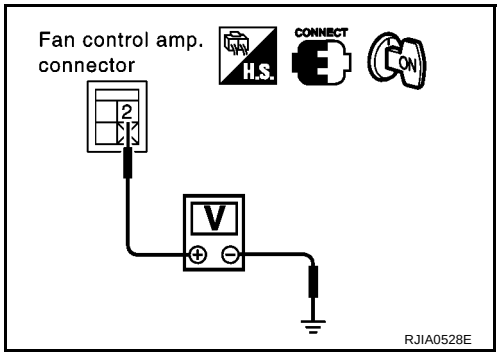

OK or NG

OK >> GO TO 9.
NG >> ● If the voltage is less than 2.5V: GO TO 8.
● If the voltage is more than 9.0V: GO TO 7.

7. CHECK CIRCUIT CONTINUITY BETWEEN AUTO AMP. AND FAN CONTROL AMP.

Disconnect the auto amp. harness connector and fan control amp. harness connector.

Terminal				Continuity
Auto amp.		Fan control amp.		
Connector	Terminal No. (Wire color)	Connector	Terminal No. (Wire color)	
M111	35 (L/Y)	M90	2 (L/Y)	Yes

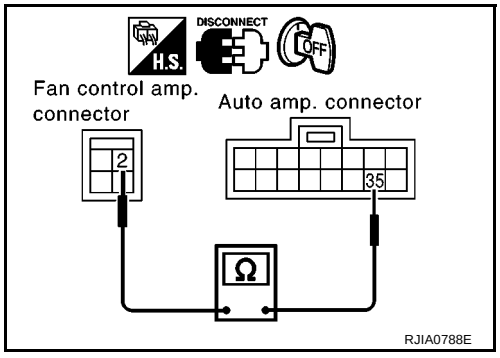

OK or NG

OK >> Replace fan control amp.
NG >> Repair harness or connector.

8. CHECK FAN CONTROL AMP.

Disconnect the fan control amp. harness connector.

Terminal				Continuity
(+)		(-)		
Fan control amp. connector	Terminal No. (Wire color)	Fan control amp. connector	Terminal No. (Wire color)	
M90	2	M90	1	Yes

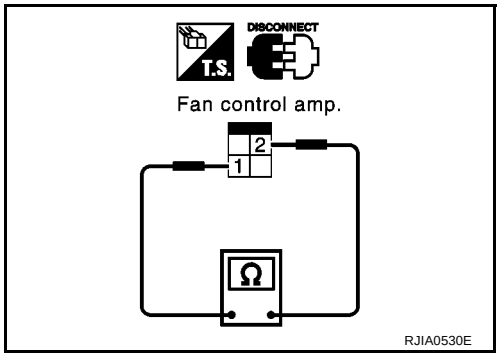

OK or NG

OK >> GO TO 9.
NG >> Replace fan control amp.

9. CHECK CIRCUIT CONTINUITY BETWEEN AUTO AMP. AND FAN CONTROL AMP.

Terminal				Continuity
(+)		(-)		
Auto amp. connector	Terminal No. (Wire color)	Fan control amp. Connector	Terminal No. (Wire color)	
M111	34 (L/B)	M90	3 (L/B)	Yes

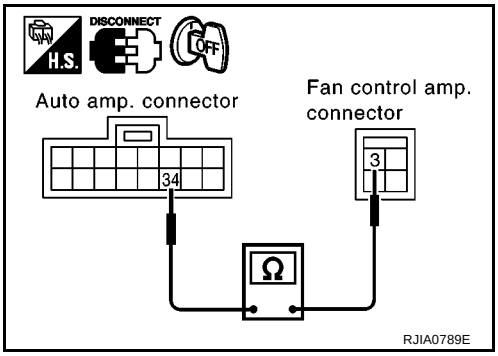

OK or NG

OK >> Replace auto amp.
NG >> Repair harness or connector.

COMPONENT INSPECTION

Blower Motor

Confirm smooth rotation of the blower motor.

- Ensure that there are no foreign particles inside the intake unit.

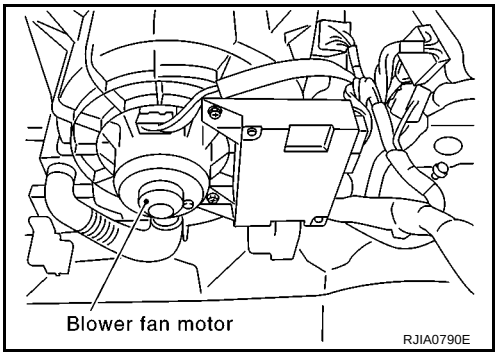

Magnet Clutch Circuit

EJS0030H

SYMPTOM: Magnet clutch does not engage.

INSPECTION FLOW

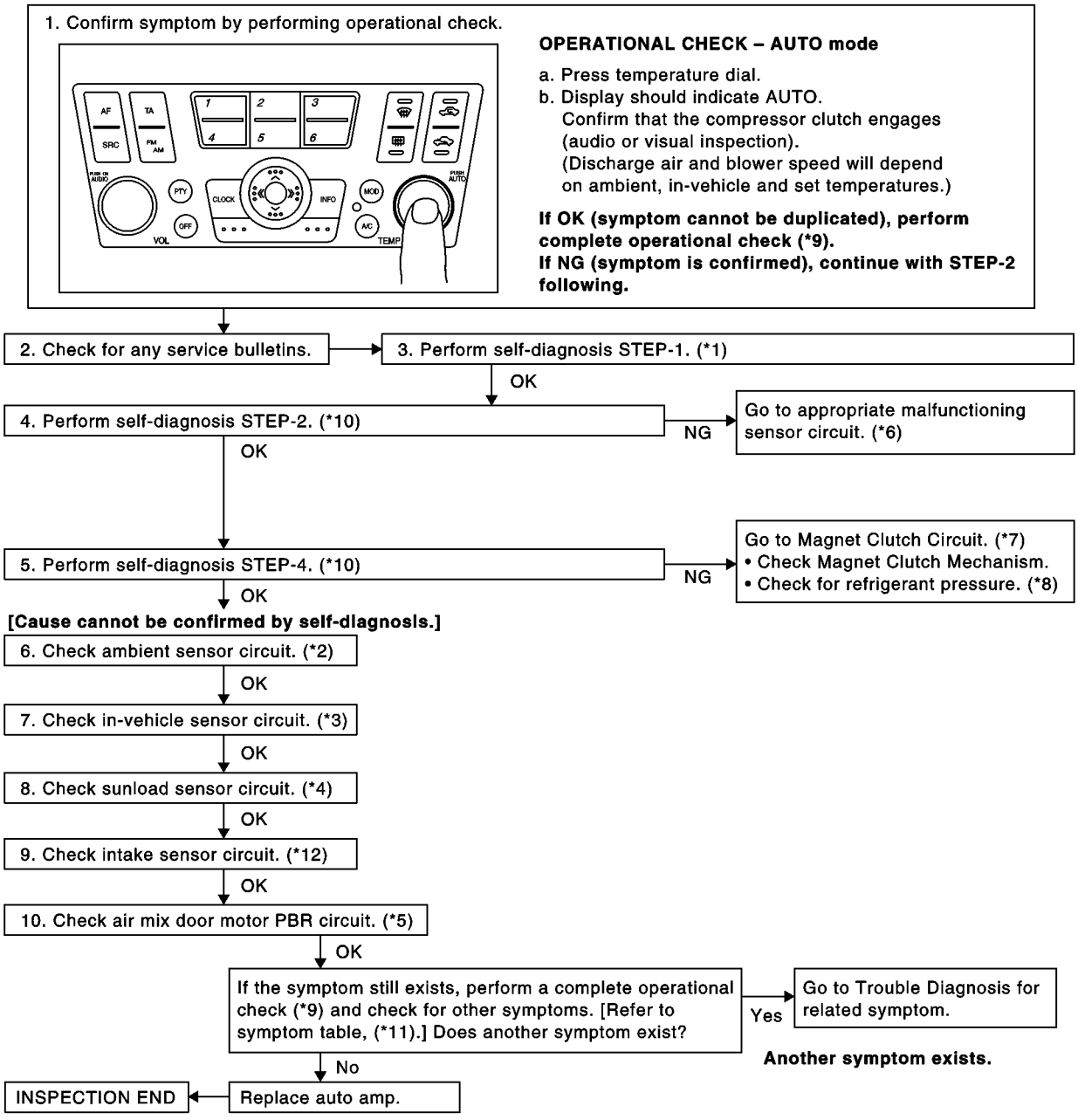

*1	ATC-42, "FUNCTION CONFIRMATION PROCEDURE", see No.1.	*2	ATC-95, "Ambient Sensor Circuit"	*3	ATC-97, "In-vehicle Sensor Circuit"
*4	ATC-100, "Sunload Sensor Circuit"	*5	ATC-62, "Air Mix Door Motor Circuit"	*6	ATC-42, "FUNCTION CONFIRMATION PROCEDURE", see No. 14.
*7	ATC-75, "DIAGNOSTIC PROCEDURE FOR MAGNET CLUTCH".	*8	ATC-87, "TROUBLE DIAGNOSES FOR UNUSUAL PRESSURE"	*9	ATC-50, "Operational Check"
*10	ATC-42, "FUNCTION CONFIRMATION PROCEDURE" see No.5 or 7.	*11	ATC-29, "SYMPTOM TABLE"	*12	ATC-103, "Intake Sensor Circuit"

SYSTEM DESCRIPTION

Auto amplifier controls compressor operation by ambient temperature and signal from ECM.

Low Temperature Protection Control

Auto amplifier will turn the compressor ON or OFF as determined by a signal detected by ambient sensor.
When ambient temperatures are greater than –2°C (28°F), the compressor turns ON. The compressor turns OFF when ambient temperatures are less than –5°C (23°F).

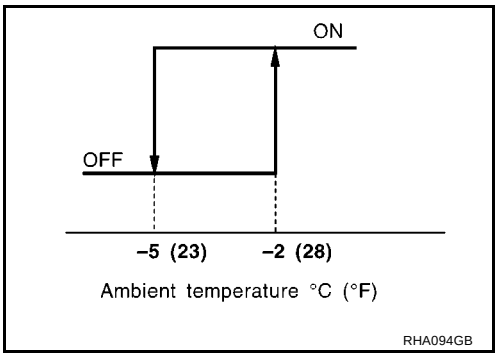

DIAGNOSTIC PROCEDURE FOR MAGNET CLUTCH

SYMPTOM: Magnet clutch does not engage when A/C switch is ON.

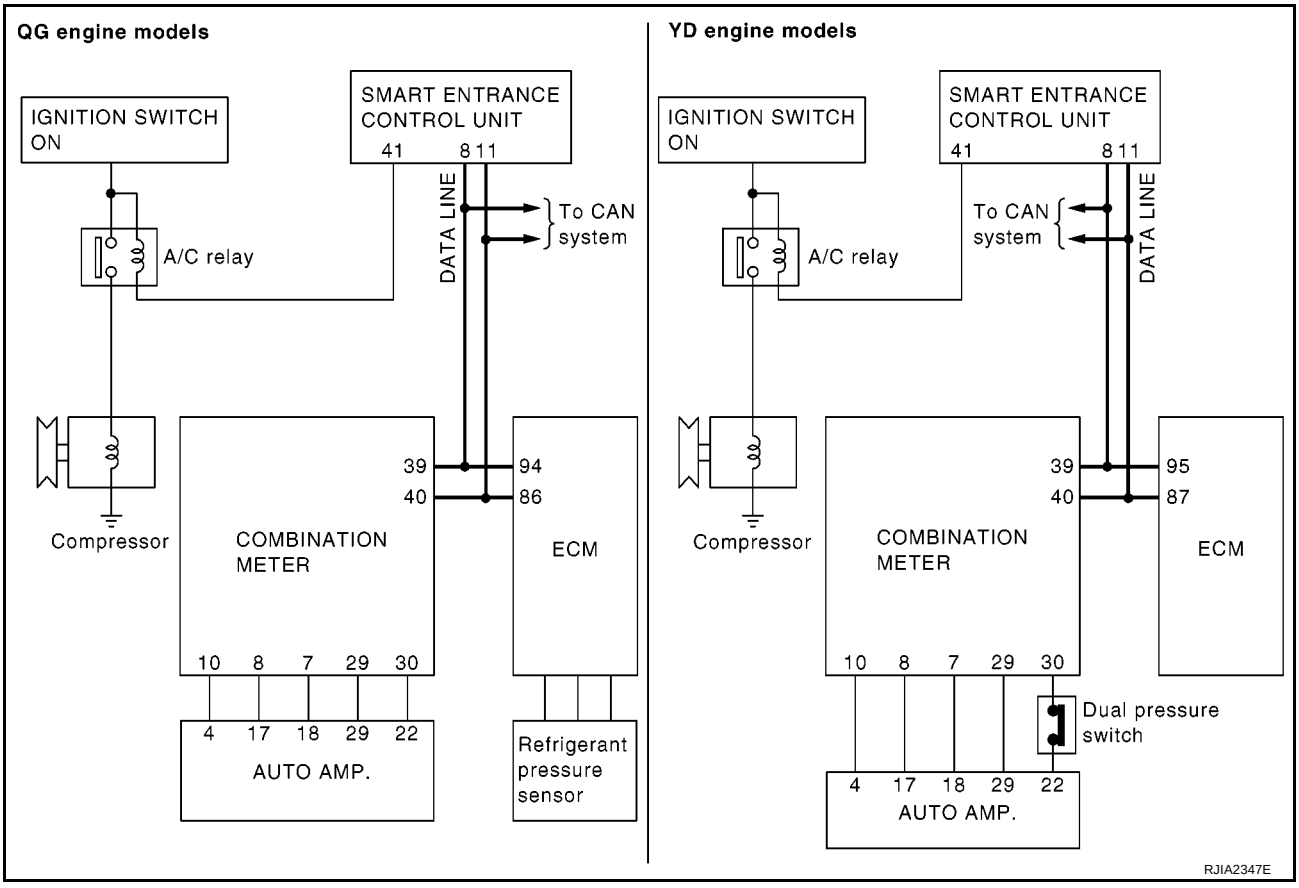

1. CHECK POWER SUPPLY FOR COMPRESSOR

Disconnect compressor harness connector.

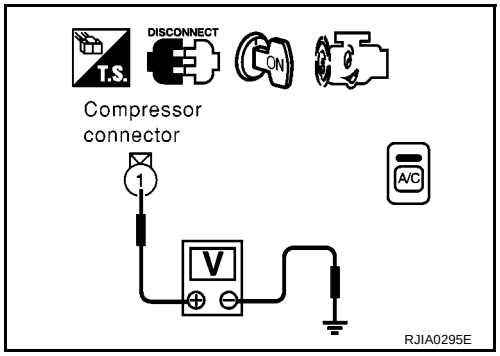

Terminal			Voltage
(+)		(-)	
Compressor connector	Terminal No. (Wire color)		
E32	1 (L/R)	Ground	Battery voltage

OK or NG

OK >> Check magnet clutch coil.

1. If NG, replace magnet clutch. Refer to ATC-135, "Compressor Clutch" .
2. Go to ATC-42, "FUNCTION CONFIRMATION PROCEDURE" and perform self-diagnosis STEP-4. Confirm that magnet clutch operation is usual.

NG >> Disconnect A/C relay. And GO TO 2.

2. CHECK CIRCUIT CONTINUITY BETWEEN A/C RELAY AND COMPRESSOR

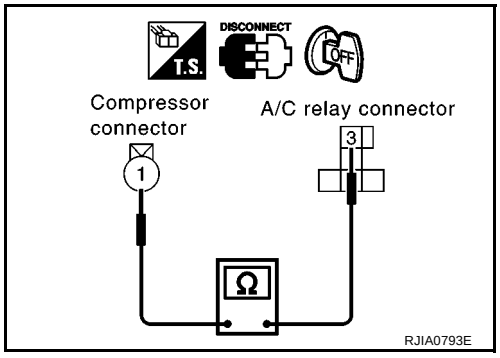

Terminal				Continuity
(+)		(-)		
A/C relay connector	Terminal No. (Wire color)	Compressor connector	Terminal No. (Wire color)	
E9	3 (L/R)	E32	1 (L/R)	Yes

OK or NG

OK >> Check harness for short. And GO TO 3.

NG >> Repair harness or connector.

3. CHECK POWER SUPPLY FOR A/C RELAY

Disconnect A/C relay.

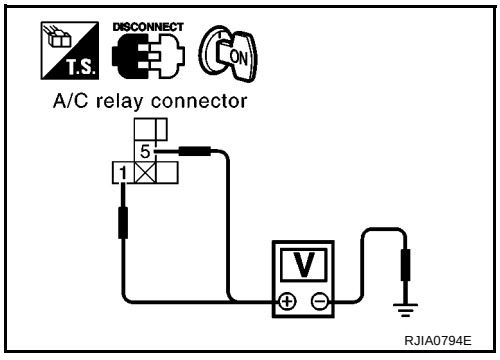

Terminal			Voltage
(+)		(-)	
A/C relay connector	Terminal No. (Wire color)		
E9	1 (L/Y)	Ground	Battery voltage
E9	5 (L/Y)		

OK or NG

OK >> GO TO 4.

NG >> Check power supply circuit and 10A (No.15) fuse at fuse block. Refer to EL-11, "POWER SUPPLY ROUTING".

- If OK, check for open circuit in wiring harness. Repair or replace as necessary.
- If NG, replace fuse and check wiring harness for short circuit. Repair or replace as necessary.

4. CHECK A/C RELAY AFTER DISCONNECTING IT

Refer to ATC-80, "A/C Relay" .

OK or NG

OK >> Reconnect A/C relay. And GO TO 5.

NG >> 1. Replace A/C relay.

2. Go to ATC-42, "FUNCTION CONFIRMATION PROCEDURE" and perform self-diagnosis STEP-4. Confirm that magnet clutch operation is usual.

5. CHECK COIL SIDE CIRCUIT OF A/C RELAY

Terminal				Continuity
(+)		(-)		
A/C relay connector	Terminal No. (Wire color)	Smart entrance control unit connector	Terminal No. (Wire color)	
E9	2 (L)	M100	41 (L)	Yes

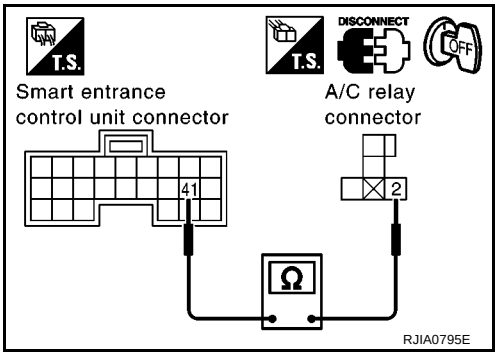

OK or NG

OK >> GO TO 6.
NG >> Repair harness or connector.

6. CHECK AMBIENT SENSOR

Refer to ATC-95, "Ambient Sensor Circuit" .

OK or NG

OK >> ● With gasoline engine: GO TO 7.
● With diesel engine: GO TO 8.
NG >> Repair or replace the malfunctioning part (s).

7. CHECK REFRIGERANT PRESSURE SENSOR (WITH QG ENGINE)

Refer to ATC-80, "Refrigerant Pressure Sensor (With QG Engine)" .

OK or NG

OK >> GO TO 8.
NG >> Repair or replace the malfunctioning part (s).

8. CHECK COMPRESSOR FEED BACK SIGNAL

Terminal			Condition	Voltage
(+)		(-)		
Auto amp. connector	Terminal No. (Wire color)			
M110	18 (BR/W)	Ground	A/C SW: ON	Approx. 0V
			A/C SW: ON (When refrigerant pressure sensor connector is disconnected)	Approx. 5V

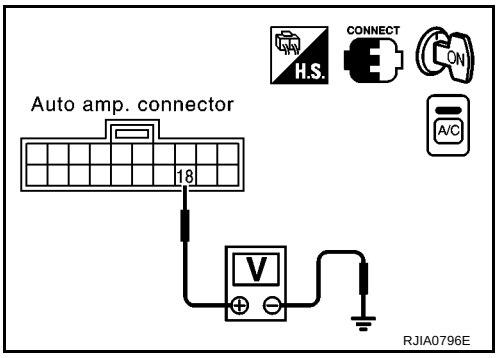

OK or NG

OK >> GO TO 9.
NG >> GO TO 16.

9. CHECK FAN ON SIGNAL

Terminal			Condition	Voltage
(+)		(-)		
Auto amp. connector	Terminal No. (Wire color)			
M111	29 (LG/B)	Ground	Blower fan: ON	Approx. 0V
			Blower fan: OFF	Approx. 5V

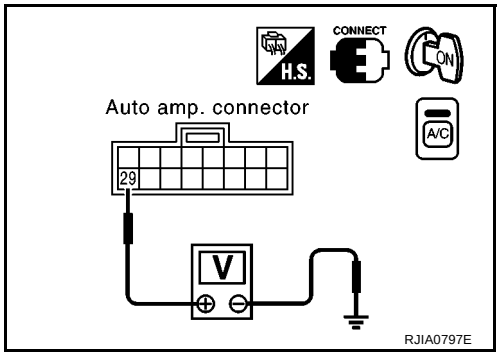

OK or NG

OK >> GO TO 10.

NG >>
- If the voltage is approx. 5V when the blower fan is ON: Replace the auto amp.
- If the voltage is approx. 0V when the blower fan is OFF: GO TO 17.

10. CHECK COMPRESSOR ON SIGNAL

Terminal			Condition	Voltage
(+)		(-)		
Auto amp. connector	Terminal No. (Wire color)			
M111	22 (L/R)	Ground	A/C SW: ON	Approx. 0V
			A/C SW: OFF	Approx. 5V

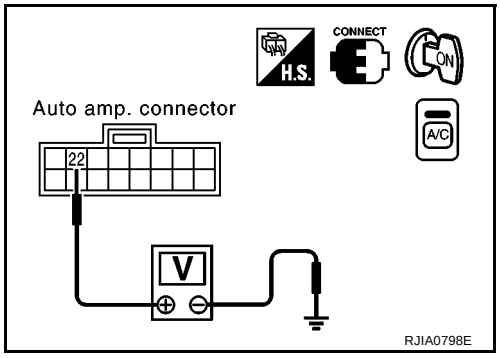

OK or NG

OK >> GO TO 11.

NG >>
- If the voltage is approx. 5V when the A/C switch is ON: Replace the auto amp.
- If the voltage is approx. 0V when the A/C switch is OFF.
  - With gasoline engine: GO TO 18.
  - With diesel engine: GO TO 13.

11. CHECK MULTIPLEX COMMUNICATION CIRCUIT

Refer to ATC-104, "Multiplex Communication Circuit" .

OK or NG

OK >> GO TO 12.

NG >> Repair harness or connector.

12. CHECK CAN CIRCUIT

Refer to CAN communication. EL-459, "CAN COMMUNICATION".

OK or NG

OK >> INSPECTION END.

NG >> Repair or replace malfunctioning part (s).

13. CHECK CIRCUIT CONTINUITY BETWEEN DUAL-PRESSURE SWITCH AND AUTO AMP. (WITH YD ENGINE)

Disconnect dual-pressure switch connector and auto amp. connector.

Terminal				Continuity
(+)		(-)		
Dual-pressure switch connector	Terminal No. (Wire color)	Auto amp. connector	Terminal No. (Wire color)	
E42	1 (L/R)	M111	22 (L/R)	Yes

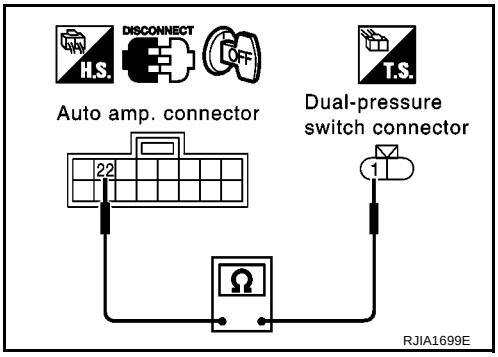

OK or NG

OK >> GO TO 14.
NG >> Repair harness or connector.

14. CHECK DUAL-PRESSURE SWITCH CIRCUIT (WITH YD ENGINE)

Refer to ATC-81, "Dual-Pressure Switch (With YD Engine)" .

OK or NG

OK >> GO TO 15.
NG >> Repair or replace malfunctioning part (s).

15. CHECK CIRCUIT CONTINUITY BETWEEN DUAL-PRESSURE SWITCH AND COMBINATION METER (WITH YD ENGINE)

Disconnect combination meter connector.

Terminal				Continuity
(+)		(-)		
Dual-pressure switch connector	Terminal No. (Wire color)	Combination meter connector	Terminal No. (Wire color)	
E42	2 (R/L)	M84	30 (PU)	Yes

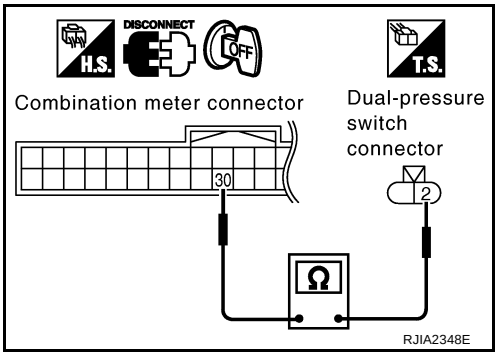

OK or NG

OK >> Replace dual-pressure switch.
NG >> Repair harness or connector.

16. CHECK CIRCUIT CONTINUITY BETWEEN COMBINATION METER AND AUTO AMP.

Disconnect combination meter connector and auto amp. connector.

Terminal				Continuity
(+)		(-)		
Combination meter connector	Terminal No. (Wire color)	Auto amp. connector	Terminal No. (Wire color)	
M84	7 (BR/W)	M110	18 (BR/W)	Yes

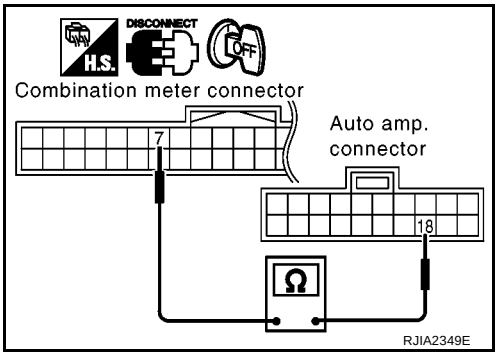

OK or NG

OK >> GO TO 11.
NG >> Repair harness or connector.

17. CHECK CIRCUIT CONTINUITY BETWEEN COMBINATION METER AND AUTO AMP.

Disconnect combination meter connector and auto amp. connector.

Terminal				Continuity
(+)		(-)		
Combination meter connector	Terminal No. (Wire color)	Auto amp. connector	Terminal No. (Wire color)	
M84	29 (LG/B)	M111	29 (LG/B)	Yes

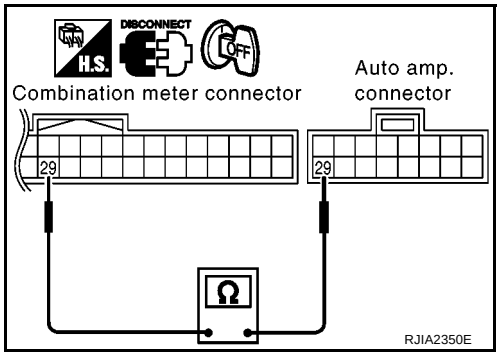

OK or NG

OK >> GO TO 11.
NG >> Repair harness or connector.

18. CHECK CIRCUIT CONTINUITY BETWEEN COMBINATION METER AND AUTO AMP. (WITH QG ENGINE)

Disconnect combination meter connector and auto amp. connector.

Terminal				Continuity
(+)		(-)		
Combination meter connector	Terminal No. (Wire color)	Auto amp. connector	Terminal No. (Wire color)	
M84	30 (L/R)	M111	22 (L/R)	Yes

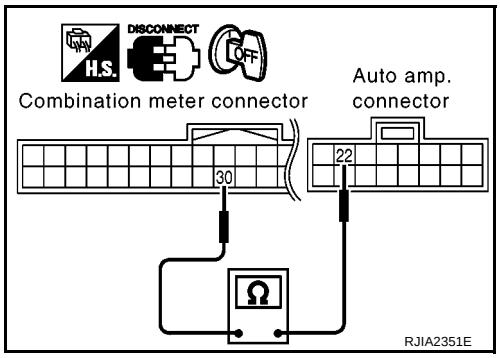

OK or NG

OK >> GO TO 11.
NG >> Repair harness or connector.

COMPONENT INSPECTION

A/C Relay

Check continuity between terminal Nos. 3 and 5.

Conditions	Continuity
12V direct current supply between terminal Nos. 1 and 2	Yes
No current supply	No

If NG, replace relay.

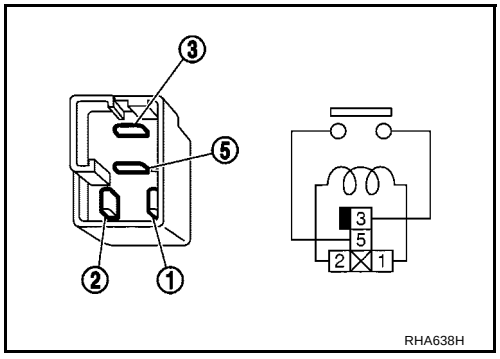

Refrigerant Pressure Sensor (With QG Engine)

The refrigerant pressure sensor is attached to the condenser.

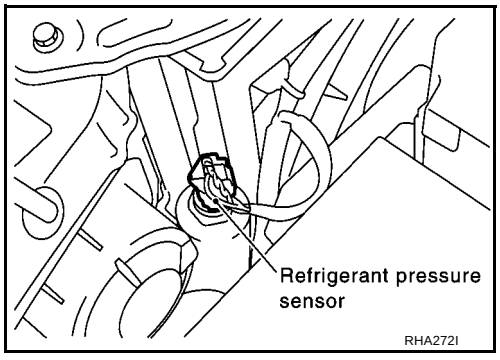

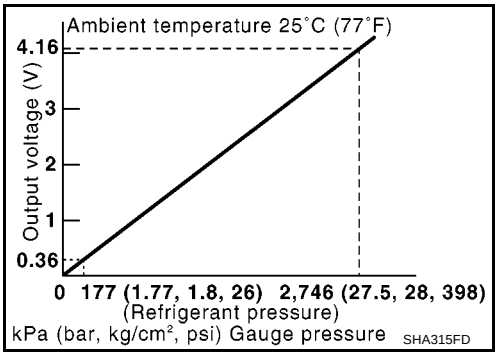

Dual-Pressure Switch (With YD Engine)

	Compressor: ON KPa (bar, kg/cm^2 , psi)	Compressor: OFF KPa (bar, kg/cm^2 , psi)
Low-pressure side	186 (1.86, 1.9, 27)	177 (1.77, 1.8, 26)
High-pressure side	1,569 (15.7, 16, 228)	2,746 (27.5, 28, 398)

YD22DDT Engine Models

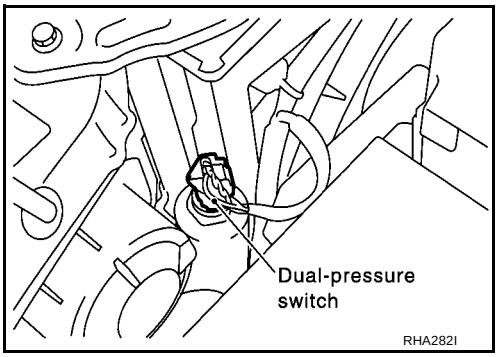

YD22DDTi Engine Models

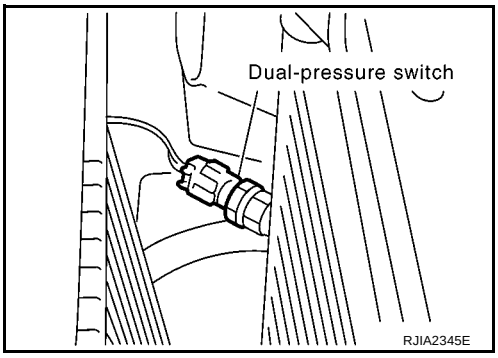

Insufficient Cooling

EJS0030I

SYMPTOM: Insufficient cooling

INSPECTION FLOW

1. Confirm symptom by performing the following operational check.

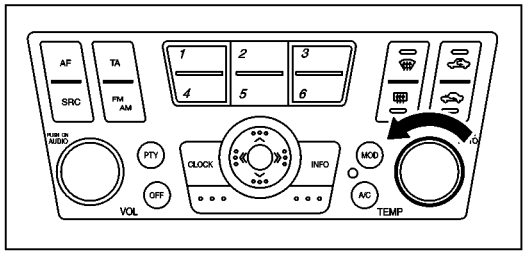

OPERATIONAL CHECK – Temperature decrease

a. Turn the temperature dial counterclockwise until 18˚C is displayed.
b. Check for cold air at discharge air outlets.

If OK (symptom cannot be duplicated), perform complete operational check (*9)
If NG (symptom is confirmed), continue with STEP-2 following.

2. Check for any service bulletins. → 3. Perform self-diagnosis STEP-1. (*1)

3. Perform self-diagnosis STEP-1. (*1) — OK ↓

4. Perform self-diagnosis STEP-2. (*10) — NG → Go to appropriate malfunctioning sensor circuit. (*4)

OK ↓

5. Perform self-diagnosis STEP-4. (*10) — NG → **Go to appropriate malfunctioning items.**
- Check LAN system circuit. (*5)
- Check blower motor circuit. (*6)
- Check magnet clutch circuit. (*7)

OK ↓

6. Check compressor belt tension. Refer to (*11), “Checking Drive Belts”. — NG → Adjust or replace compressor belt.

OK ↓

7. Check air mix door operation. (*2) — NG → Adjust or replace air mix door control linkage.

OK ↓

8. Check cooling fan motor operation. — NG → Refer to (*12), “System Description”.

OK ↓

9. Before connecting ACR4 to vehicle, check ACR4 gauges. No refrigerant pressure should be displayed. If NG, recover refrigerant from equipment lines.

↓

10. Check for evaporator coil freeze up. — NG (Freeze up.) → Perform performance test diagnoses. Refer to (*8).

(Does not freeze up.) OK ↓

11. Check refrigeration cycle pressure with manifold gauge connected. Refer to (*3). — NG → Perform performance test diagnoses. Refer to (*8).

OK ↓

12. Check ducts for air leaks. — NG → Repair air leaks.

OK ↓

INSPECTION END

RJIA1708E

*1 ATC-42, "FUNCTION CONFIRMATION PROCEDURE", see No.1.	*2 ATC-64, "COMPONENT DESCRIPTION"	*3 ATC-86, "Test Reading"
*4 ATC-42, "FUNCTION CONFIRMATION PROCEDURE", see No.14.	*5 ATC-56, "LAN System Circuit"	*6 ATC-68, "Blower Motor Circuit"

*7	ATC-74, "Magnet Clutch Circuit"	*8	ATC-84, "PERFORMANCE TEST DIAGNOSES"	*9	ATC-50, "Operational Check"
*10	ATC-42, "FUNCTION CONFIRMATION PROCEDURE", see No.5 or 7.	*11	QG engine: EM-13, "Checking Drive Belts" YD engine: EM-117, "Checking Drive Belts"	*12	QG engine (With EURO-OBD): EC-188, "DTC P0117, P0118 ECT SENSOR" QG engine (Without EURO-OBD): EC-660, "DTC P0117, P0118 ECT SENSOR" YD engine: EC-1046, "DTC P0117, P0118 ECT SENSOR"

PERFORMANCE TEST DIAGNOSES

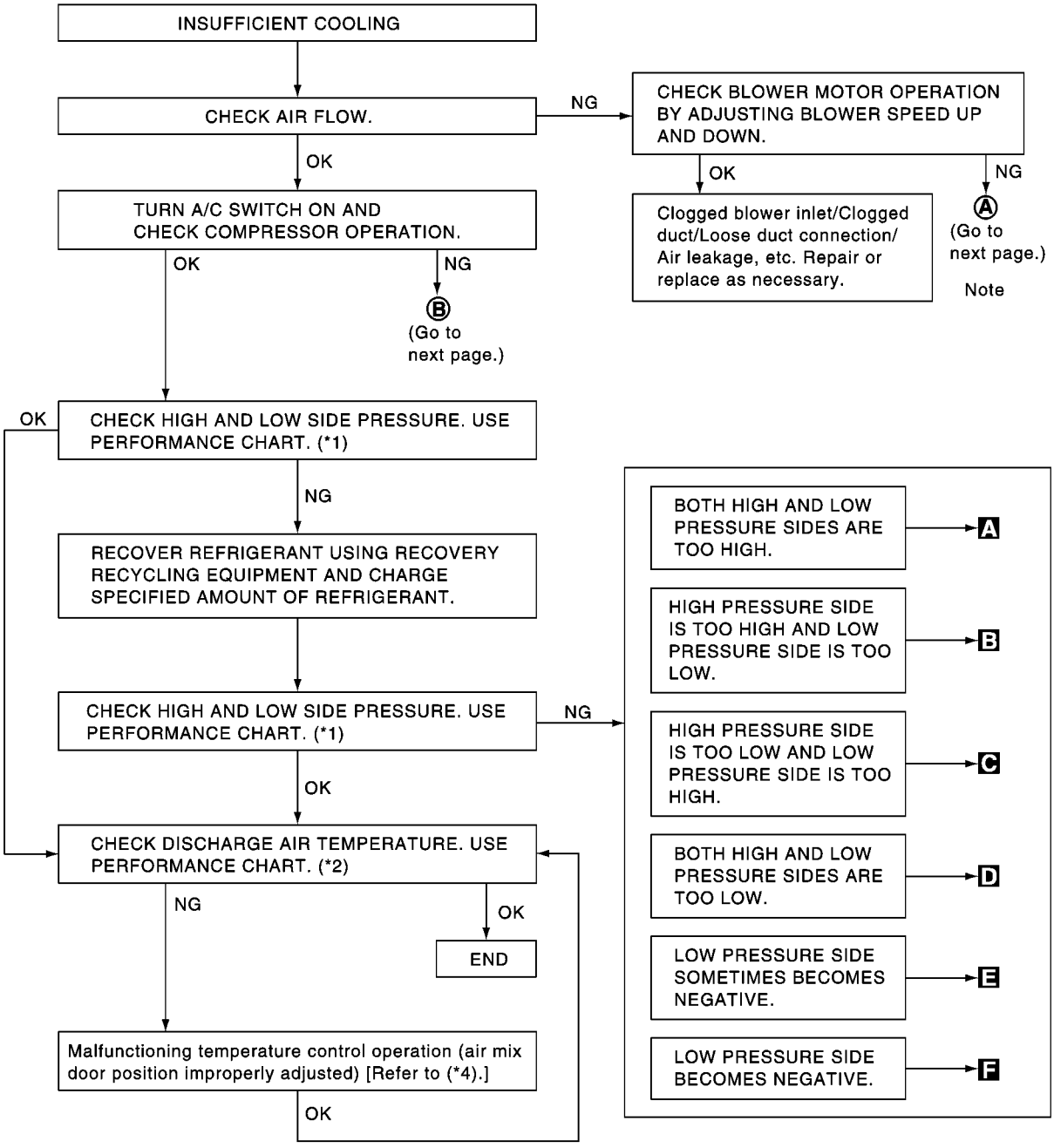

Note: A - F correspond to those in TROUBLE DIAGNOSES FOR UNUSUAL PRESSURE. (*3)

RHA281I

*1 ATC-86, "PERFORMANCE CHART" *2 ATC-86, "PERFORMANCE CHART" *3 ATC-87, "TROUBLE DIAGNOSES FOR UNUSUAL PRESSURE"

*4 ATC-64, "COMPONENT DESCRIPTION"

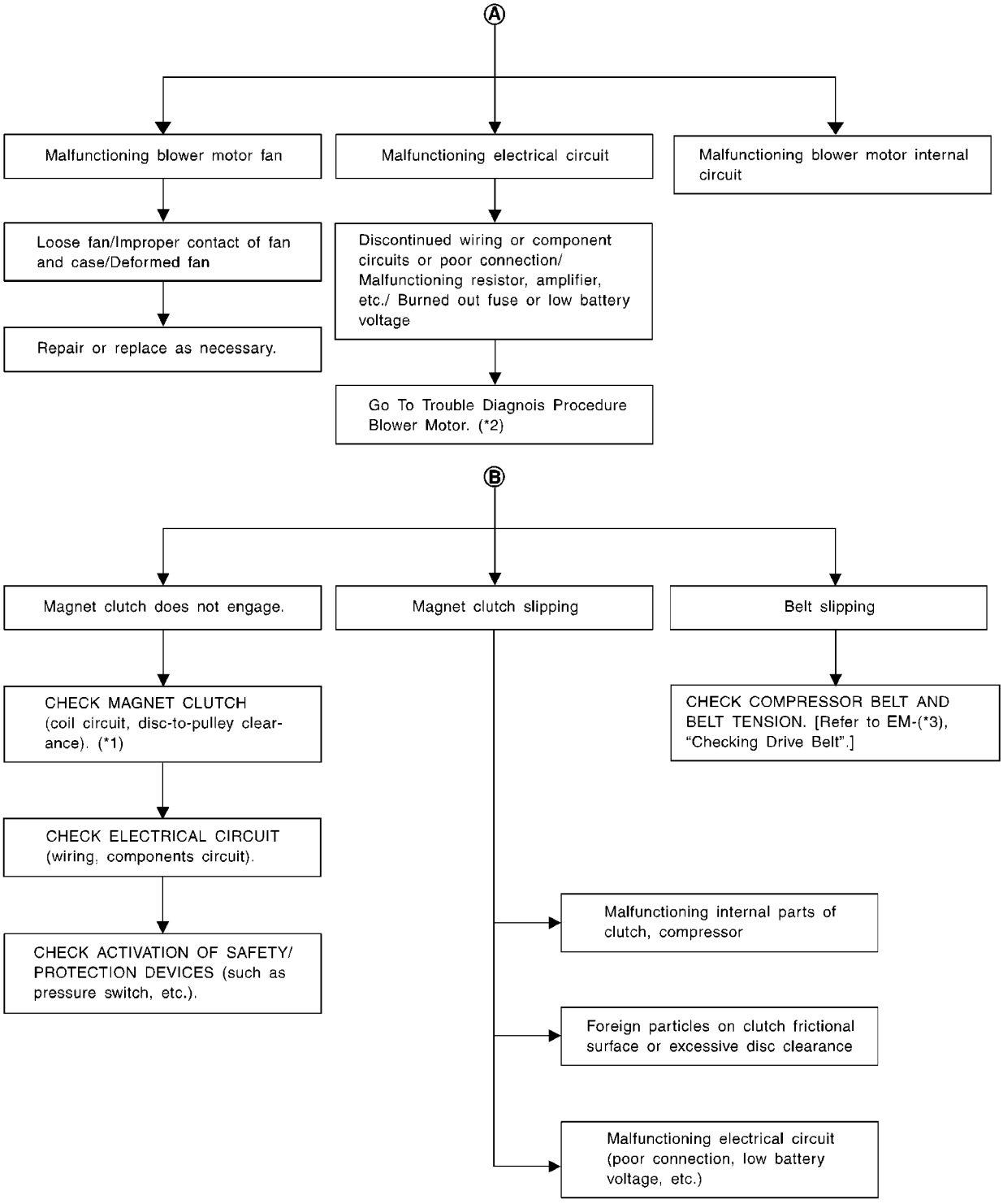

RJIA1595E

*1 ATC-135, "Compressor Clutch"

*2 ATC-68, "Blower Motor Circuit"

*3 QG engine: EM-13, "Checking Drive Belts"
YD engine: EM-117, "Checking Drive Belts"

PERFORMANCE CHART

Test Condition

Testing must be performed as follows:

Vehicle location	Indoors or in the shade (in a well-ventilated place)
Doors	Closed
Door windows	Open
Hood	Open
TEMP.	Max. COLD
Mode switch	(Ventilation) set
Intake switch	(Recirculation) set
(blower) speed	Max. speed set
Engine speed	Idle speed
Operate the air conditioning system for 10 minutes before taking measurements.	

Test Reading

Recirculating-to-discharge Air Temperature Table

Inside air (Recirculating air) at blower assembly inlet		Discharge air temperature at center ventilator °C (°F)
Relative humidity %	Air temperature °C (°F)	
50 - 60	20 (68)	6.0 - 8.8 (43 - 48)
	25 (77)	9.5 - 12.8 (49 - 55)
	30 (86)	14.1 - 17.7 (57 - 64)
60 - 70	20 (68)	8.8 - 11.6 (48 - 53)
	25 (77)	12.8 - 16.2 (55 - 61)
	30 (86)	17.7 - 21.1 (64 - 70)

Ambient Air Temperature-to-operating Pressure Table

Ambient air		High-pressure (Discharge side) kPa (bar, kg/cm^2 , psi)	Low-pressure (Suction side) kPa (bar, kg/cm^2 , psi)
Relative humidity %	Air temperature °C (°F)		
50 - 70	20 (68)	659 - 805 (6.59 - 8.05, 6.72 - 8.21, 95.6 - 116.7)	171 - 214 (1.71 - 2.14, 1.78 - 2.18, 24.7 - 31.0)
	25 (77)	799 - 980 (7.99 - 9.80, 8.15 - 9.99, 115.9 - 142.1)	185 - 220 (1.85 - 2.20, 1.89 - 2.24, 26.9 - 31.9)
	30 (86)	953 - 1,170 (9.53 - 11.70, 9.72 - 11.93, 138.2 - 169.6)	199 - 240 (1.99 - 2.40, 2.03 - 2.45, 28.9 - 34.8)
	35 (95)	1,121 - 1,363 (11.21 - 13.63, 11.43 - 13.90, 162.5 - 197.7)	228 - 282 (2.28 - 2.84, 2.32 - 2.88, 33.0 - 41.0)
	40 (104)	1,298 - 1,584 (12.98 - 15.84, 13.24 - 16.15, 188.3 - 229.7)	273 - 333 (2.73 - 3.33, 2.78 - 3.40, 39.5 - 48.3)

TROUBLE DIAGNOSES FOR UNUSUAL PRESSURE

Whenever system's high and/or low side pressure is unusual, diagnose using a manifold gauge. The marker above the gauge scale in the following tables indicates the standard (usual) pressure range. Since the standard (usual) pressure, however, differs from vehicle to vehicle, refer to above table (Ambient air temperature-to-operating pressure table).

Both High- and Low-pressure Sides are Too High.

Gauge indication	Refrigerant cycle	Probable cause	Corrective action
Both high- and low-pressure sides are too high. 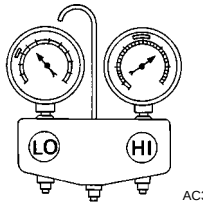 AC359A	Pressure is reduced soon after water is splashed on condenser.	Excessive refrigerant charge in refrigeration cycle	Reduce refrigerant until specified pressure is obtained.
	Air suction by cooling fan is insufficient.	Insufficient condenser cooling performance ↓ 1. Condenser fins are clogged. 2. Improper fan rotation of cooling fan	● Clean condenser. ● Check and repair cooling fan as necessary.
	● Low-pressure pipe is not cold. ● When compressor is stopped high-pressure value quickly drops by approximately 196 kPa (1.96 bar, 2 kg/cm^2 , 28 psi). It then decreases gradually thereafter.	Poor heat exchange in condenser (After compressor operation stops, high pressure decreases too slowly.) ↓ Air in refrigeration cycle	Evacuate repeatedly and recharge system.
	Engine tends to overheat.	Engine cooling systems malfunction.	Check and repair each engine cooling system.
	● An area of the low-pressure pipe is colder than areas near the evaporator outlet. ● Plates are sometimes covered with frost.	● Excessive liquid refrigerant on low-pressure side ● Excessive refrigerant discharge flow ● Expansion valve is open a little compared with the specification. ↓ 1. Improper expansion valve installation 2. Improper expansion valve adjustment	Replace expansion valve.

High-pressure Side is Too High and Low-pressure Side is Too Low.

Gauge indication	Refrigerant cycle	Probable cause	Corrective action
High-pressure side is too high and low-pressure side is too low. 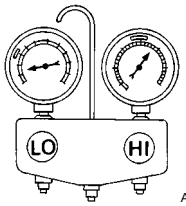 AC360A	Upper side of condenser and high-pressure side are hot, however, liquid tank is not so hot.	High-pressure tube or parts located between compressor and condenser are clogged or crushed.	● Check and repair or replace malfunctioning parts. ● Check lubricant for contamination.

High-pressure Side is Too Low and Low-pressure Side is Too High.

Gauge indication	Refrigerant cycle	Probable cause	Corrective action
High-pressure side is too low and low-pressure side is too high. 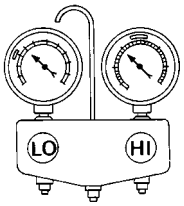 AC356A	High- and low-pressure sides become equal soon after compressor operation stops.	Compressor pressure operation is improper. ↓ Damaged inside compressor packings	Replace compressor.
	No temperature difference between high and low-pressure sides	Compressor pressure operation is improper. ↓ Damaged inside compressor packings.	Replace compressor.

Both High- and Low-pressure Sides are Too Low.

Gauge indication	Refrigerant cycle	Probable cause	Corrective action
Both high- and low-pressure sides are too low. 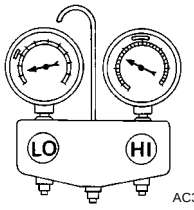 AC353A	● There is a big temperature difference between receiver drier outlet and inlet. Outlet temperature is extremely low. ● Liquid tank inlet and expansion valve are frosted.	Liquid tank inside is slightly clogged.	● Replace liquid tank. ● Check lubricant for contamination.
	● Temperature of expansion valve inlet is extremely low as compared with areas near liquid tank. ● Expansion valve inlet may be frosted. ● Temperature difference occurs somewhere in high-pressure side	High-pressure pipe located between receiver drier and expansion valve is clogged.	● Check and repair malfunctioning parts. ● Check lubricant for contamination.
	Expansion valve and liquid tank are warm or only cool when touched.	Low refrigerant charge ↓ Leaking fittings or components	Refer to ATC-143, "Checking for Refrigerant Leaks" .
	There is a big temperature difference between expansion valve inlet and outlet while the valve itself is frosted.	Expansion valve closes a little compared with the specification. ↓ 1. Improper expansion valve adjustment 2. Malfunctioning expansion valve 3. Outlet and inlet may be clogged.	● Remove foreign particles by using compressed air. ● Check lubricant for contamination.
	An area of the low-pressure pipe is colder than areas near the evaporator outlet.	Low-pressure pipe is clogged or crushed.	● Check and repair malfunctioning parts. ● Check lubricant for contamination.
	Air flow volume is not enough or is too low.	Evaporator is frozen.	● Check intake sensor circuit. Refer to ATC-103, "Intake Sensor Circuit" ● Replace compressor.

Low-pressure Side Sometimes Becomes Negative.

Gauge indication	Refrigerant cycle	Probable cause	Corrective action
Low-pressure side sometimes becomes negative. 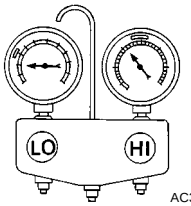	● Air conditioning system does not function and does not cyclically cool the compartment air. ● The system constantly functions for a certain period of time after compressor is stopped and restarted.	Refrigerant does not discharge cyclically. ↓ Moisture is frozen at expansion valve outlet and inlet. ↓ Water is mixed with refrigerant.	● Drain water from refrigerant or replace refrigerant. ● Replace liquid tank.

Low-pressure Side Becomes Negative.

Gauge indication	Refrigerant cycle	Probable cause	Corrective action
Low-pressure side becomes negative. 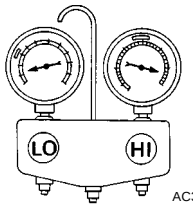	Liquid tank or front/rear side of expansion valve's pipe is frosted or dewed.	High-pressure side is closed and refrigerant does not flow. ↓ Expansion valve or liquid tank is frosted.	Leave the system at rest until no frost is present. Start it again to check whether or not the problem is caused by water or foreign particles. ● If water is the cause, initially cooling is okay. Then the water freezes causing a blockage. Drain water from refrigerant or replace refrigerant. ● If due to foreign particles, remove expansion valve and remove the particles with dry and compressed air (not shop air). ● If either of the above methods cannot correct the problem, replace expansion valve. ● Replace liquid tank. ● Check lubricant for contamination.

Insufficient Heating

EJS0030J

SYMPTOM: Insufficient heating

INSPECTION FLOW

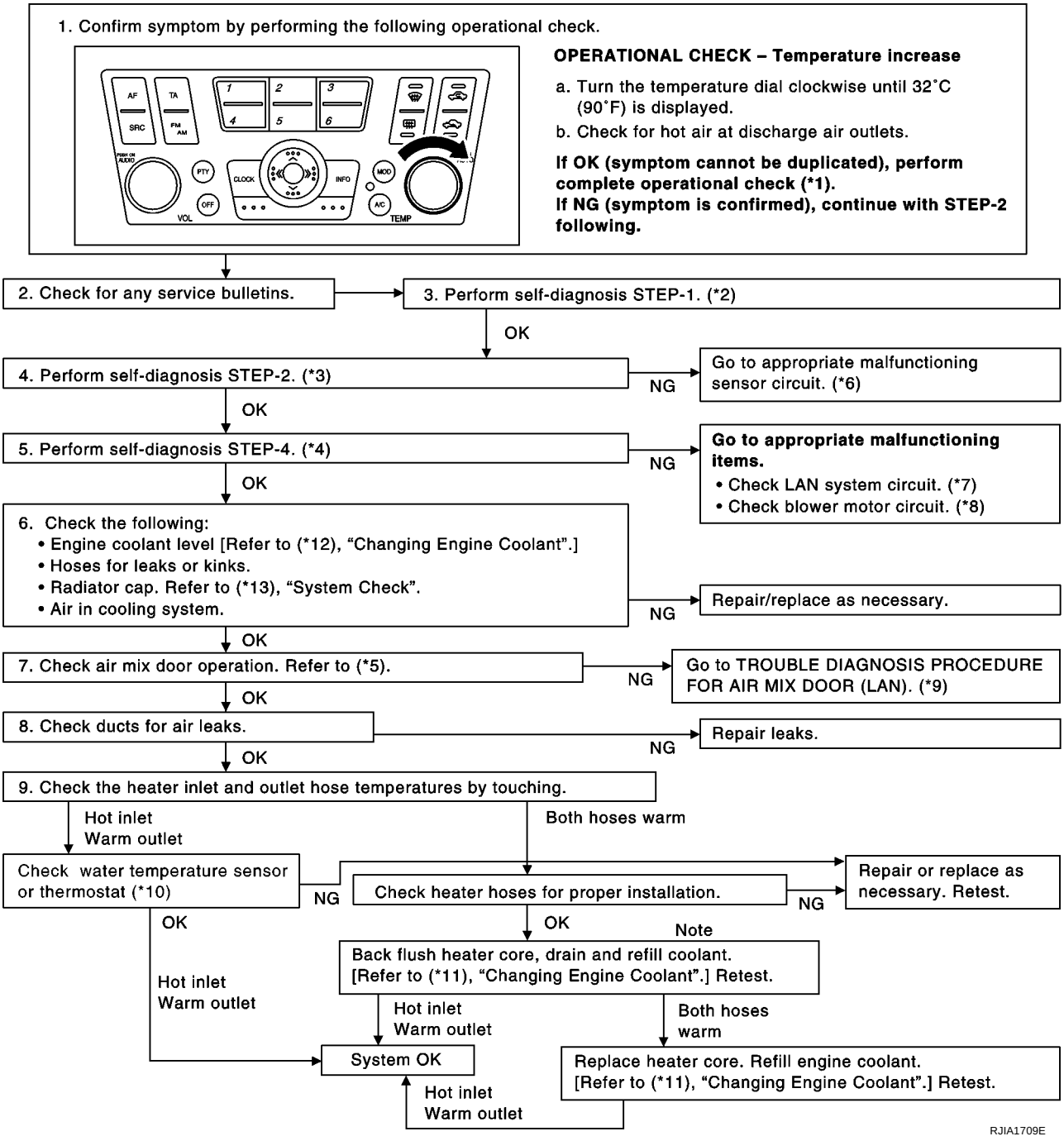

*1 ATC-50, "Operational Check"

*2 ATC-42, "FUNCTION CONFIRMATION PROCEDURE", see No.1.

*3 ATC-42, "FUNCTION CONFIRMATION PROCEDURE", see No.5.

*4 ATC-42, "FUNCTION CONFIRMATION PROCEDURE", see No.7.

*5 ATC-64, "COMPONENT DESCRIPTION"

*6 ATC-42, "FUNCTION CONFIRMATION PROCEDURE", see No.14.

*7	ATC-56, "LAN System Circuit"	*8	ATC-68, "Blower Motor Circuit"	*9	ATC-62, "Air Mix Door Motor Circuit"
*10	QG engine (With EURO–OBD): EC-188, "DTC P0117, P0118 ECT SENSOR" QG engine (Without EURO–OBD): EC-660, "DTC P0117, P0118 ECT SENSOR" YD engine: EC-1046, "DTC P0117, P0118 ECT SENSOR"	*11 & *12	QG engine: LC-18, "Changing Engine Coolant" YD engine: LC-40, "Changing Engine Coolant"	*13	QG engine (with EURO–OBD): EC-473, "DTC P1217 ENGINE OVER TEMPERATURE" QG engine (without EURO–OBD): EC-780, "DTC P1217 ENGINE OVER TEMPERATURE" YD engine: EC-1072, "DTC P0217 ENGINE OVER TEMPERATURE"

Noise

EJS0030K

SYMPTOM: Noise

INSPECTION FLOW

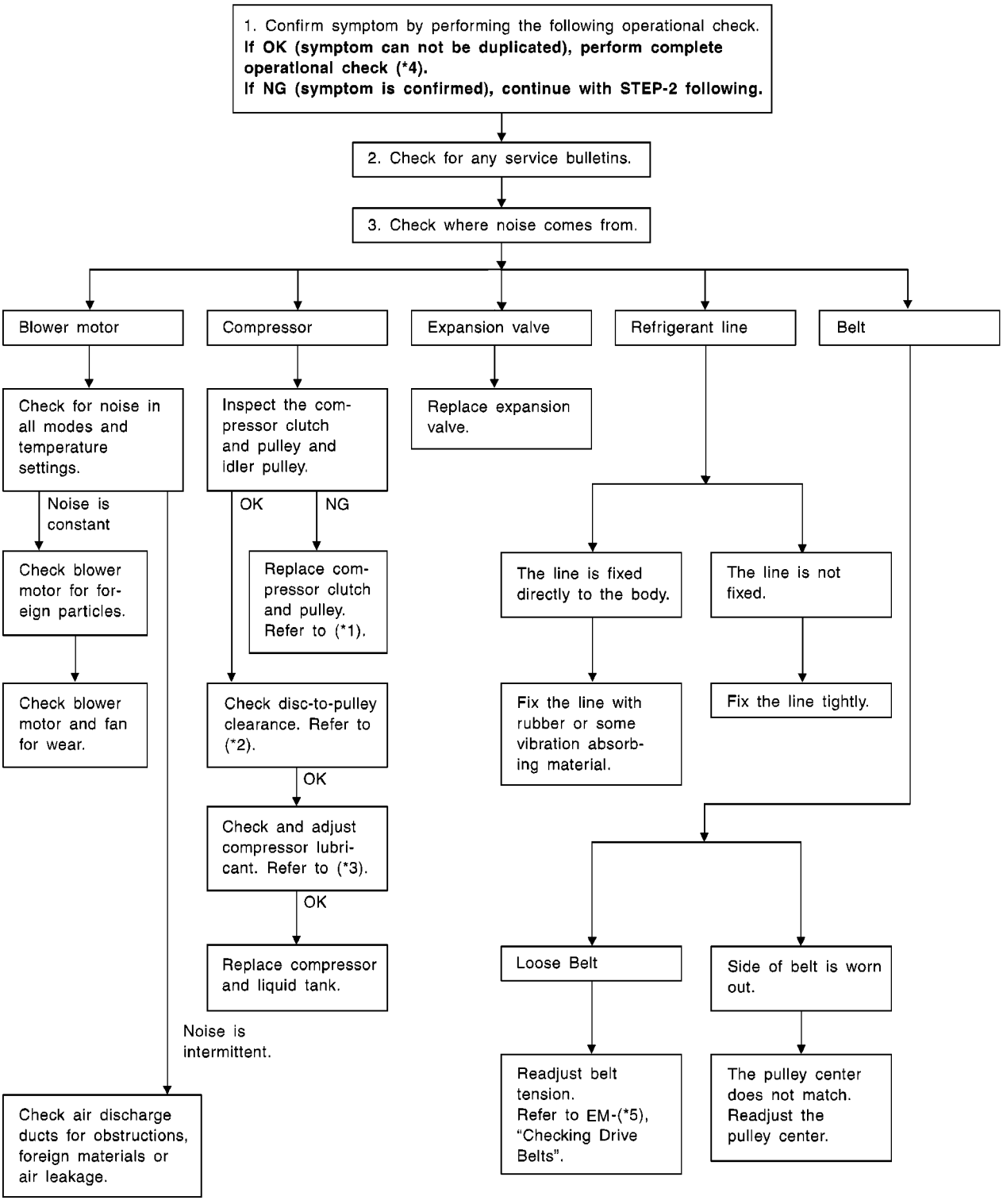

RJIA1596E

*1 ATC-135, "Compressor Clutch"
*2 ATC-136, "INSTALLATION"
*3 ATC-20, "Maintenance of Lubricant Quantity in Compressor"
*4 ATC-50, "Operational Check"
*5 QG engine: EM-13, "Checking Drive Belts"
YD engine: EM-117, "Checking Drive Belts"

Self-diagnosis

EJS0030L

Symptom: Self-diagnosis cannot be performed.

INSPECTION FLOW

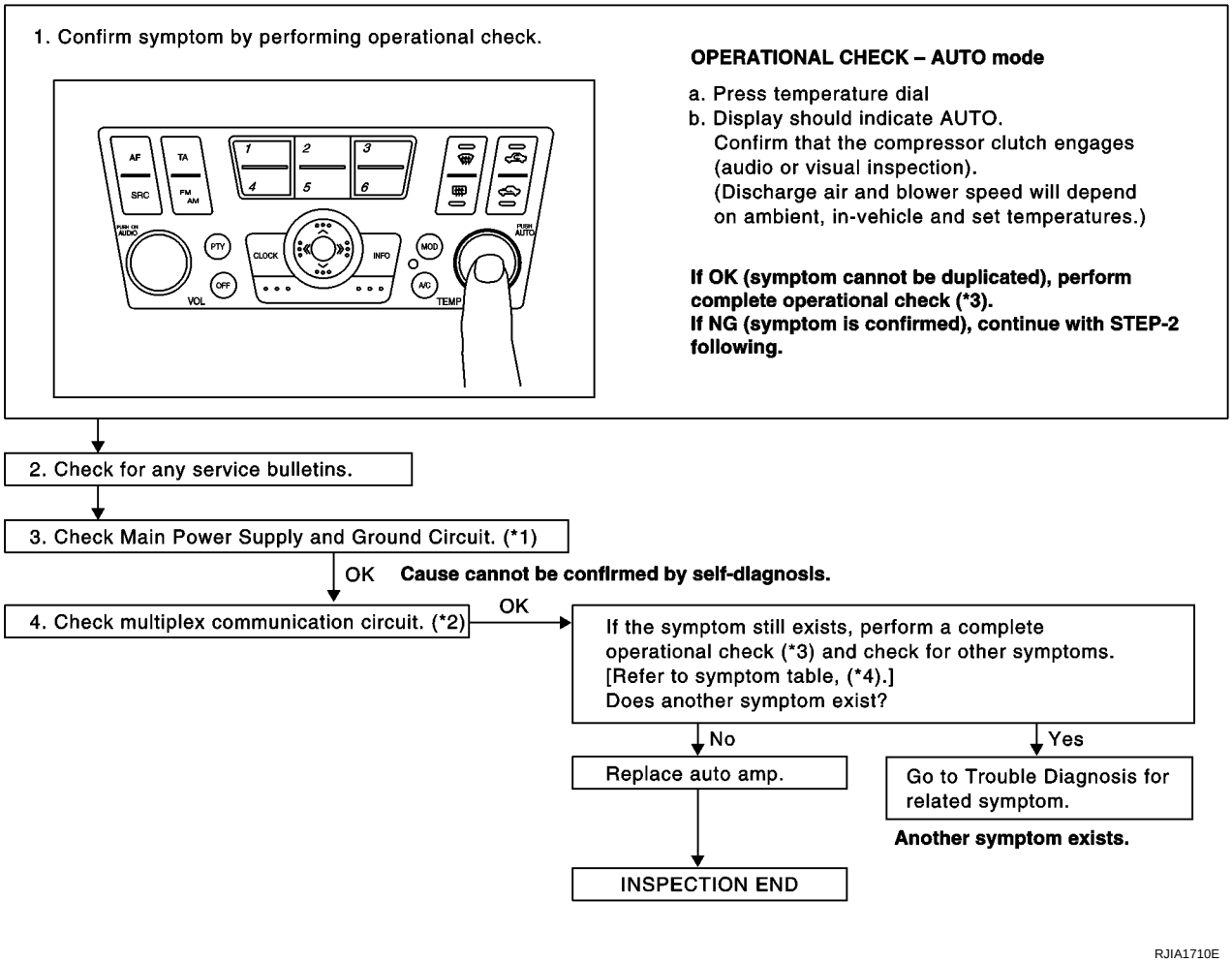

*1 EL-11, "POWER SUPPLY ROUTING"
*2 ATC-104, "Multiplex Communication Circuit"
*3 ATC-50, "Operational Check"
*4 ATC-29, "SYMPTOM TABLE"

Memory Function

EJS0030M

Symptom: Memory function does not operate.

INSPECTION FLOW

1. Confirm symptom by performing the following operational check.

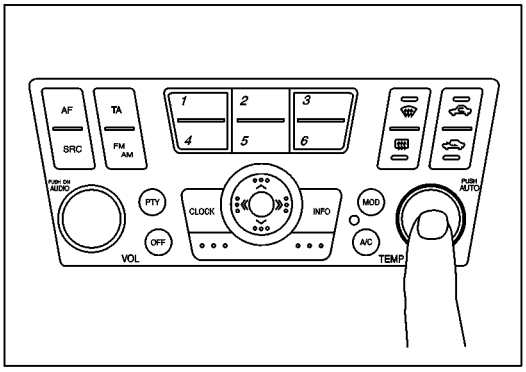

OPERATIONAL CHECK – Memory function

a. Set the temperature 90˚F or 32˚C.
b. Press OFF switch.
c. Turn the ignition off.
d. Turn the ignition on.
e. Press the temperature dial.
f. Confirm that the set temperature remains at previous temperature.
g. Press OFF switch.

If OK (symptom cannot be duplicated), perform complete operational check (*2).
If NG (symptom is confirmed), continue with STEP-2 following.

↓

2. Check for any service bulletins.

↓

3. Check Main Power Supply and Ground Circuit. (*1)

↓ OK

Go to A/C system circuit. (*4)

↓ OK

4. Replace auto amp.

↓

5. FINAL CHECK
Go to self-diagnosis function confirmation procedure (*3) and perform self-diagnosis STEP-2.
Confirm that code No. 20 is displayed.

RJIA1711E

*1 EL-11, "POWER SUPPLY ROUTING"
*2 ATC-50, "Operational Check"
*3 ATC-42, "FUNCTION CONFIRMATION PROCEDURE"
*4 ATC-54, "Power Supply and Ground Circuit for Auto Amp."

Ambient Sensor Circuit

EJS0037G

COMPONENT DESCRIPTION

Ambient Sensor

The ambient sensor is attached on the radiator core upper support. It detects ambient temperature and converts it into a resistance value which is then input into the auto amplifier.

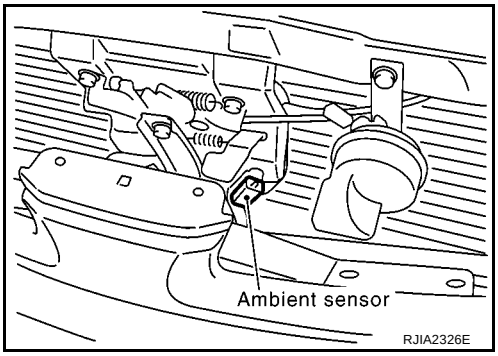

AMBIENT TEMPERATURE INPUT PROCESS

The automatic amplifier includes a processing circuit for the ambient sensor input. However, when the temperature detected by the ambient sensor increases quickly, the processing circuit retards the auto amp. function. It only allows the auto amp. to recognize an ambient temperature increase of 0.33°C (0.6°F) per 100 seconds. As an example, consider stopping for a cup of coffee after high speed driving. Although the actual ambient temperature has not changed, the temperature detected by the ambient sensor will increase. This is because the heat from the engine compartment can radiate to the front grille area, location of the ambient sensor.

DIAGNOSTIC PROCEDURE FOR AMBIENT SENSOR

SYMPTOM: Ambient sensor circuit is open or shorted. (21 or –21 is indicated on auto amp. As a result of conducting Self-diagnosis STEP 2.)

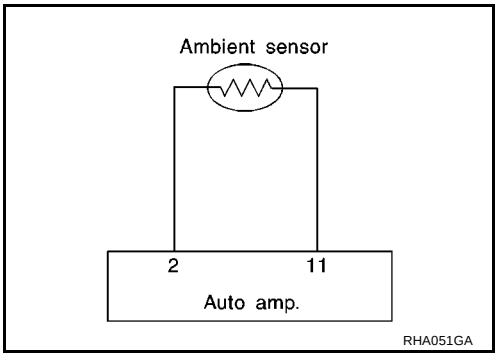

1. CHECK VOLTAGE BETWEEN AMBIENT SENSOR HARNESS CONNECTOR AND GROUND

Disconnect ambient sensor harness connector.

Terminal			Voltage
(+)		(-)	
Ambient sensor connector	Terminal No. (Wire color)		
E136	1 (W/G)	Ground	Approx. 5V

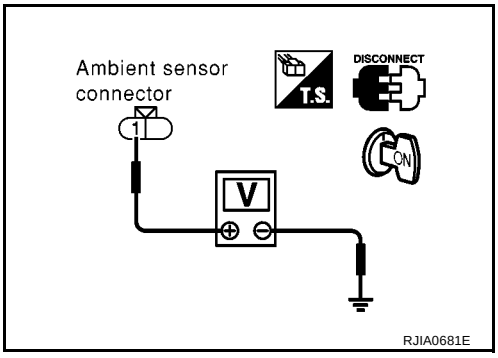

OK or NG

OK >> GO TO 2.
NG >> GO TO 4.

2. CHECK AMBIENT SENSOR CIRCUIT BETWEEN AMBIENT SENSOR AND AUTO AMP.

Disconnect auto amp. harness connector.

Terminal				Continuity
(+)		(-)		
Ambient sensor connector	Terminal No. (Wire color)	Auto amp. connector	Terminal No. (Wire color)	
E136	2 (B/Y)	M110	11 (B/Y)	Yes

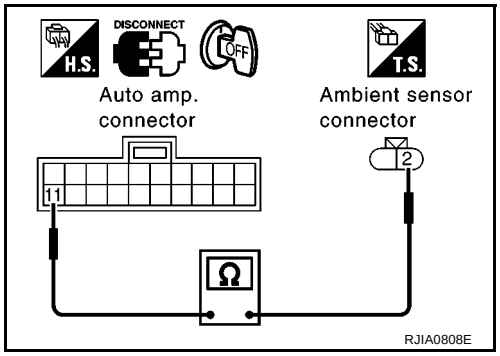

OK or NG

OK >> GO TO 3.
NG >> Repair harness or connector.

3. CHECK AMBIENT SENSOR

Refer to ATC-95, "Ambient Sensor Circuit" .

OK or NG

OK >> 1. Replace auto amp.
2. Go to ATC-42, "FUNCTION CONFIRMATION PROCEDURE" perform self-diagnosis STEP-2. Confirm that code No. 20 is displayed.

NG >> Replace ambient sensor.

4. CHECK AMBIENT SENSOR CIRCUIT BETWEEN AMBIENT SENSOR AND AUTO AMP.

Disconnect auto amp. harness connector.

Terminal				Continuity
(+)		(-)		
Ambient sensor connector	Terminal No. (Wire color)	Auto amp. connector	Terminal No. (Wire color)	
E136	1 (W/G)	M110	2 (W/G)	Yes

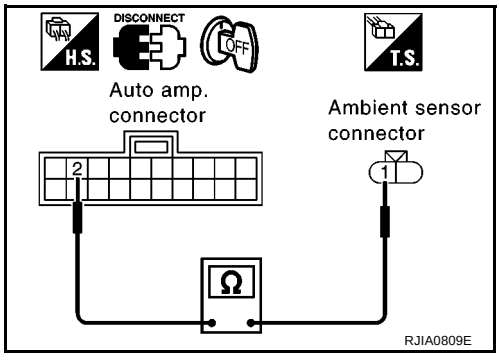

OK or NG

OK >> 1. Replace auto amp.
2. Go to ATC-42, "FUNCTION CONFIRMATION PROCEDURE" and perform self-diagnosis STEP-2. Confirm that code No. 20 is displayed.

NG >> Repair harness or connector.

COMPONENT INSPECTION

Ambient Sensor

After disconnecting ambient sensor harness connector, measure resistance between terminals 2 and 1 at sensor harness side, using the table below.

Temperature °C (°F)	Resistance kΩ
–15 (5)	12.73
–10 (14)	9.92
–5 (23)	7.80
0 (32)	6.19
5 (41)	4.95
10 (50)	3.99
15 (59)	3.24
20 (68)	2.65
25 (77)	2.19
30 (86)	1.81
35 (95)	1.51
40 (104)	1.27
45 (113)	1.07

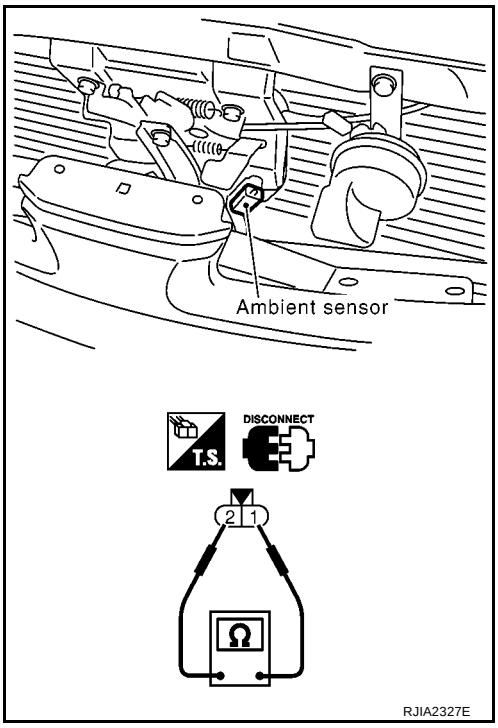

If NG, replace ambient sensor.

In-vehicle Sensor Circuit

EJS0037H

COMPONENT DESCRIPTION

In-vehicle sensor

The in-vehicle sensor is located on instrument lower panel. It converts variations in temperature of compartment air drawn from the aspirator into a resistance value. It is then input into the auto amplifier.

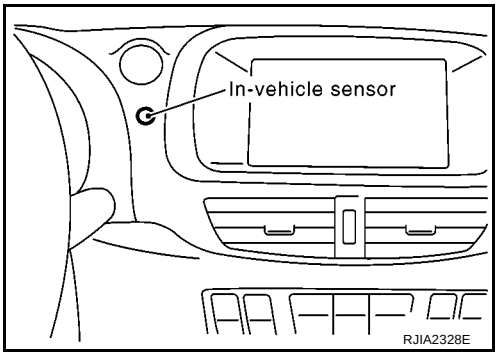

Aspirator

The aspirator is located on heater & cooling unit. It produces vacuum pressure due to air discharged from the heater & cooling unit, continuously taking compartment air in the aspirator.

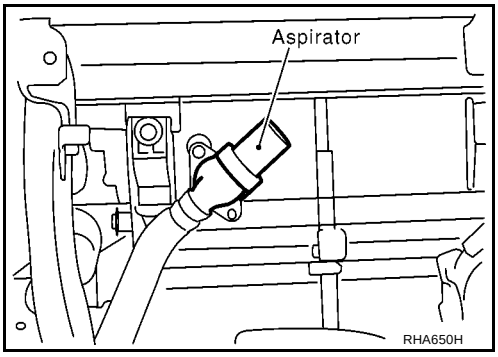

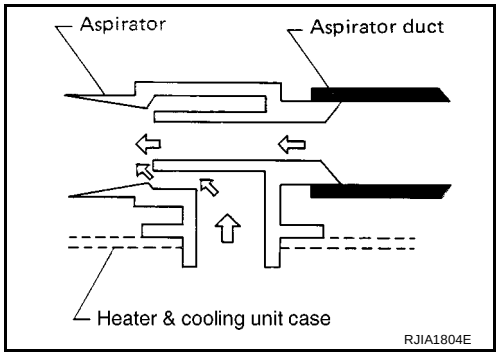

DIAGNOSTIC PROCEDURE FOR IN-VEHICLE SENSOR

SYMPTOM: In-vehicle sensor circuit is open or shorted. (22 or –22 is indicated on auto amp. as a result of conducting Self-diagnosis STEP 2.)

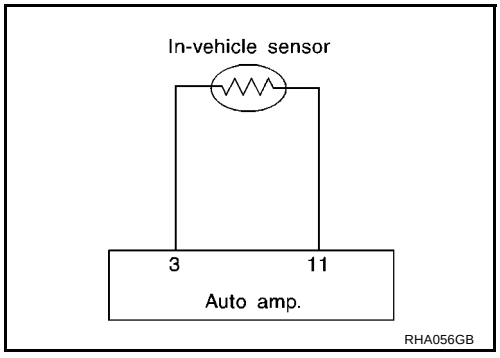

1. CHECK IN-VEHICLE SENSOR CIRCUIT BETWEEN IN-VEHICLE SENSOR AND GROUND

Disconnect in-vehicle sensor harness connector.

Terminal			Voltage
(+)		(-)	
In-vehicle sensor connector	Terminal No. (Wire color)		
M86	1 (OR/L)	Ground	Approx. 5V

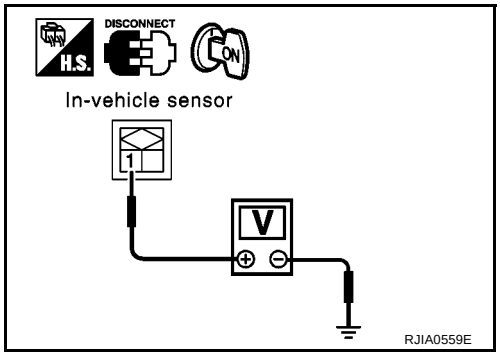

OK or NG

OK >> GO TO 2.
NG >> GO TO 4.

2. CHECK IN-VEHICLE SENSOR CIRCUIT BETWEEN IN-VEHICLE SENSOR AND AUTO AMP.

Disconnect auto amp. harness connector.

Terminal				Continuity
(+)		(-)		
In-vehicle sensor connector	Terminal No. (Wire color)	Auto amp. connector	Terminal No. (Wire color)	
M86	2 (B/Y)	M110	11 (B/Y)	Yes

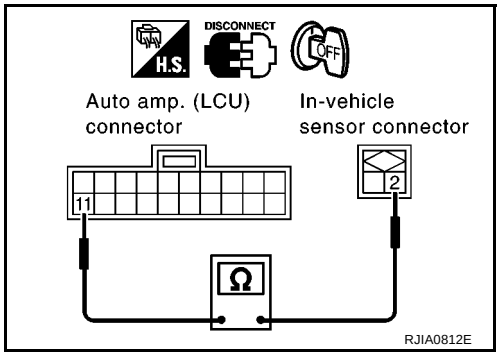

OK or NG

OK >> GO TO 3.
NG >> Repair harness or connector.

3. CHECK IN-VEHICLE SENSOR

Refer to ATC-97, "In-vehicle Sensor Circuit" .

OK or NG

OK >> 1. Replace auto amp.
2. Go to ATC-42, "FUNCTION CONFIRMATION PROCEDURE" and perform self-diagnosis STEP-2. Confirm that code No. 20 is displayed.

NG >> 1. Replace in-vehicle sensor.
2. Go to ATC-42, "FUNCTION CONFIRMATION PROCEDURE" and perform self-diagnosis STEP-2. Confirm that code No. 20 is displayed.

4. CHECK IN-VEHICLE SENSOR CIRCUIT BETWEEN IN-VEHICLE SENSOR AND AUTO AMP.

Disconnect auto amp. harness connector.

Terminal				Continuity
(+)		(-)		
In-vehicle sensor connector	Terminal No. (Wire color)	Auto amp. connector	Terminal No. (Wire color)	
M86	1 (OR/L)	M110	3 (OR/L)	Yes

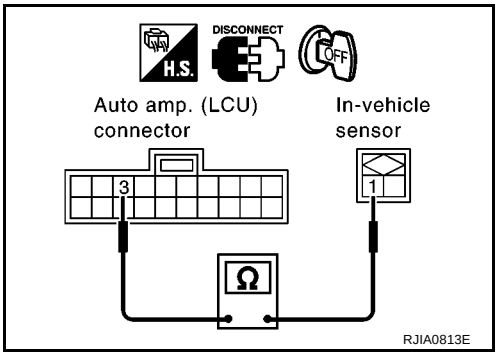

OK or NG

OK >> 1. Replace auto amp.
2. Go to ATC-42, "FUNCTION CONFIRMATION PROCEDURE" and perform self-diagnosis STEP-2. Confirm that code No. 20 is displayed.

NG >> Repair harness or connector.

COMPONENT INSPECTION

In-vehicle Sensor

After disconnecting in-vehicle sensor harness connector, measure resistance between terminals 1 and 2 at sensor harness side, using the table below.

Temperature °C (°F)	Resistance kΩ
–15 (5)	12.73
–10 (14)	9.92
–5 (23)	7.80
0 (32)	6.19
5 (41)	4.95
10 (50)	3.99
15 (59)	3.24
20 (68)	2.65
25 (77)	2.19
30 (86)	1.81
35 (95)	1.51
40 (104)	1.27
45 (113)	1.07

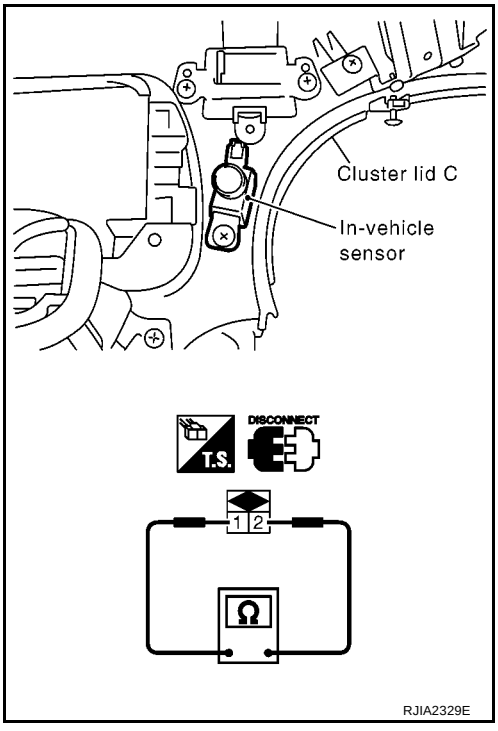

If NG, replace in-vehicle sensor.

Sunload Sensor Circuit

EJS0037I

COMPONENT DESCRIPTION

The sunload sensor is located on the instrument mask. It detects sunload entering through windshield by means of a photo diode. The sensor converts the sunload into a current value which is then input into the auto amplifier.

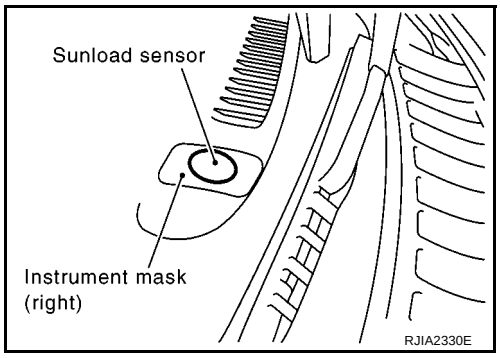

SUNLOAD INPUT PROCESS

The auto amp. also includes a processing circuit which averages the variations in detected sunload over a period of time. This prevents drastic swings in the A/C system operation due to small or quick variations in detected sunload.

For example, consider driving along a road bordered by an occasional group of large trees. The sunload detected by the sunload sensor will vary whenever the trees obstruct the sunlight. The processing circuit averages the detected sunload over a period of time, so that the (insignificant) effect of the trees momentarily obstructing the sunlight does not cause any change in the A/C system operation. On the other hand, shortly after entering a long tunnel, the system will recognize the change in sunload, and the system will react accordingly.

DIAGNOSTIC PROCEDURE FOR SUNLOAD SENSOR

SYMPTOM: Sunload sensor circuit is open or shorted. (25 or –25) is indicated on auto amp. as a result of conducting Self-diagnosis STEP 2.)

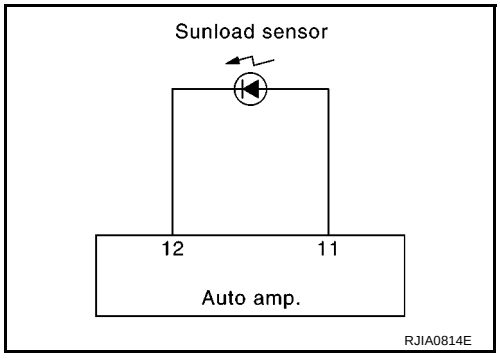

1. CHECK SUNLOAD SENSOR CIRCUIT BETWEEN SUNLOAD SENSOR AND GROUND

Disconnect sunload sensor harness connector.

Terminal			Voltage
(+)		(-)	
Sunload sensor connector	Terminal No. (Wire color)		
M105	1 (OR)	Ground	Approx. 5V

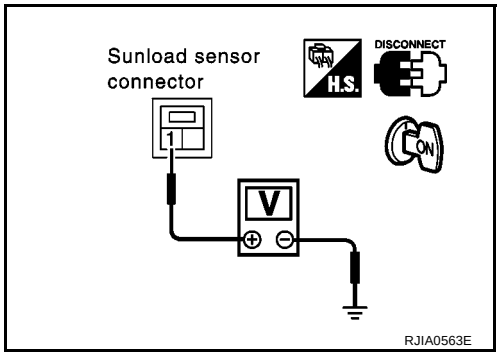

OK or NG

OK >> GO TO 2.
NG >> GO TO 4.

2. CHECK SUNLOAD SENSOR CIRCUIT BETWEEN SUNLOAD SENSOR AND AUTO AMP.

Disconnect auto amp. harness connector.

Terminal				Continuity
(+)		(-)		
Sunload sensor connector	Terminal No. (Wire color)	Auto amp. connector	Terminal No. (Wire color)	
M105	2 (B/Y)	M110	11 (B/Y)	Yes

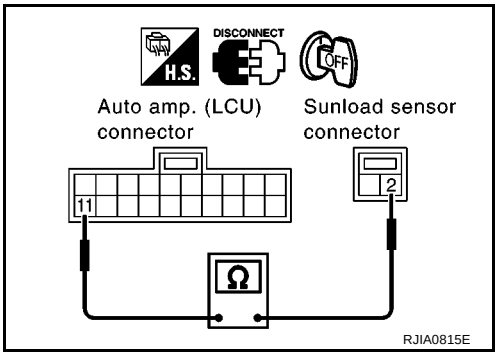

OK or NG

OK >> GO TO 3.
NG >> Repair harness or connector.

3. CHECK SUNLOAD SENSOR.

Refer to ATC-100, "Sunload Sensor Circuit" .

OK or NG

OK >> 1. Replace auto amp.
2. Go to ATC-42, "FUNCTION CONFIRMATION PROCEDURE" and perform self-diagnosis STEP-2. Confirm that code No. 20 is displayed.

NG >> 1. Replace sunload sensor.
2. Go to ATC-42, "FUNCTION CONFIRMATION PROCEDURE" and perform self-diagnosis STEP-2. Confirm that code No. 20 is displayed.

4. CHECK SUNLOAD SENSOR CIRCUIT BETWEEN SUNLOAD SENSOR AND AUTO AMP.

Disconnect auto amp. harness connector.

Terminal				Continuity
(+)		(-)		
Sunload sensor connector	Terminal No. (Wire color)	Auto amp. connector	Terminal No. (Wire color)	
M105	1 (OR)	M110	12 (OR)	Yes

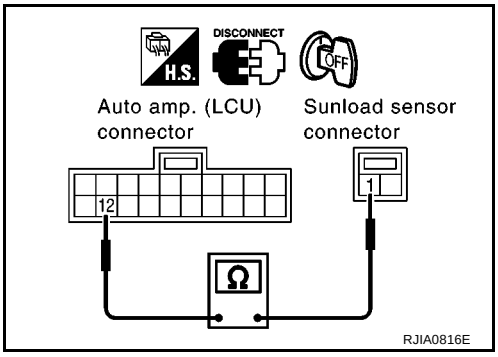

OK or NG

OK >> 1. Replace auto amp.
2. Go to ATC-42, "FUNCTION CONFIRMATION PROCEDURE" and perform self-diagnosis STEP-2. Confirm that code No. 20 is displayed.

NG >> Repair harness or connector.

COMPONENT INSPECTION

Sunload Sensor

Measure voltage between auto amp. terminal 12 (OR) and ground.
If NG, replace auto amp.

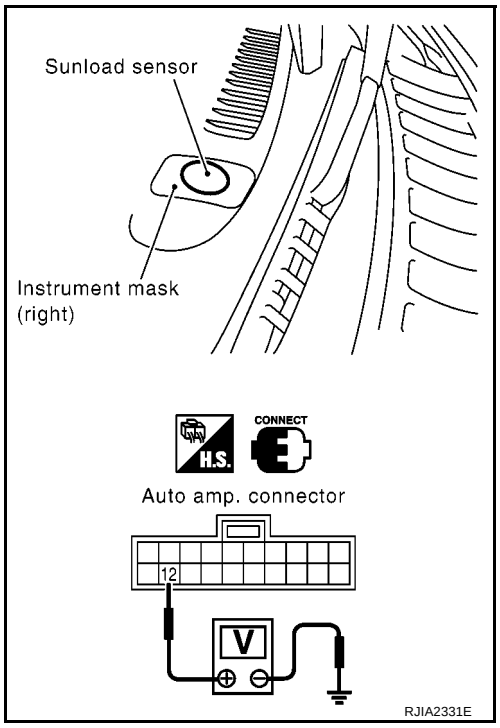

- When checking sunload sensor, select a place where sun shines directly on it.

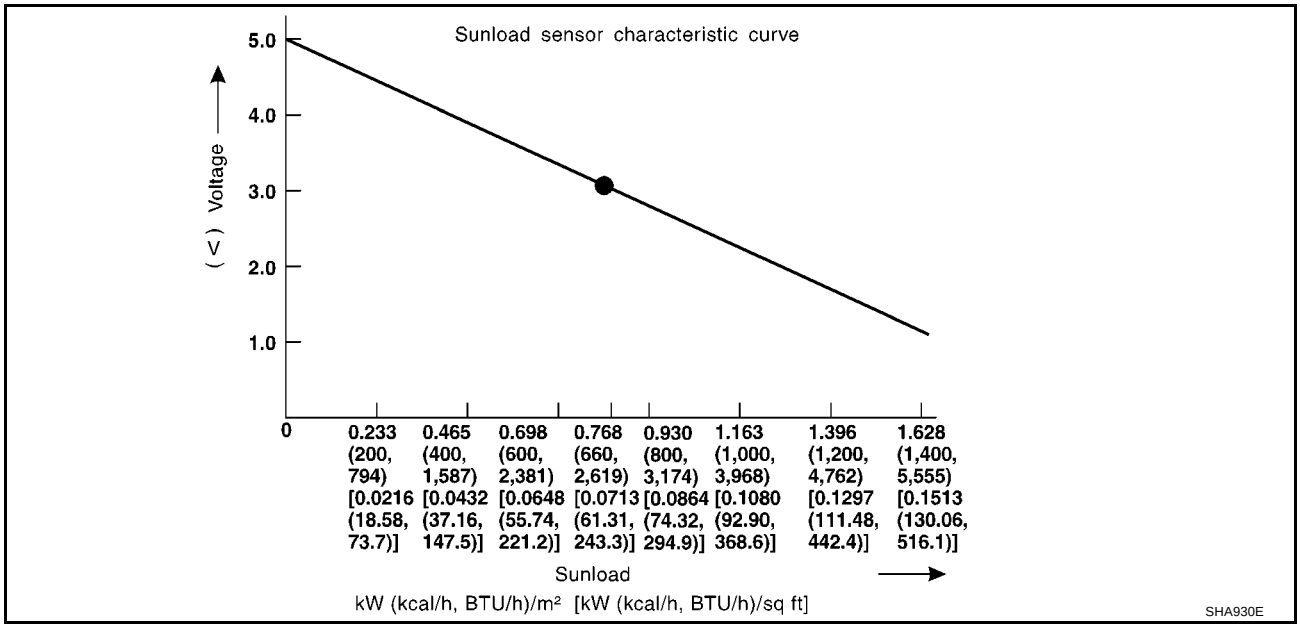

Intake Sensor Circuit

EJS0037J

COMPONENT DESCRIPTION

Intake Sensor

The intake sensor is located on the heater & cooling unit. It converts temperature of air after it passes through the evaporator into a resistance value which is then input to the auto amp.
After disconnecting intake sensor harness connector, measure resistance between terminals 1 and 2 at sensor harness side, using the table below.

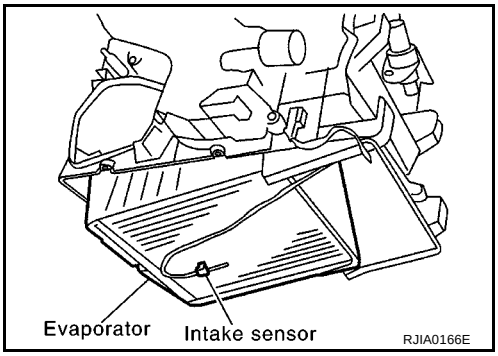

Temperature °C (°F)	Resistance kΩ
–15 (5)	12.34
–10 (14)	9.62
–5 (23)	7.56
0 (32)	6.00
5 (41)	4.80
10 (50)	3.87
15 (59)	3.15
20 (68)	2.57
25 (77)	2.12
30 (86)	1.76
35 (95)	1.47
40 (104)	1.23
45 (113)	1.04

If NG, replace intake sensor.

DIAGNOSTIC PROCEDURE FOR INTAKE SENSOR

SYMPTOM: Intake sensor circuit is open or shorted. (24 or –24) is indicated on auto amp. as a result of conducting Self-diagnosis STEP 2.

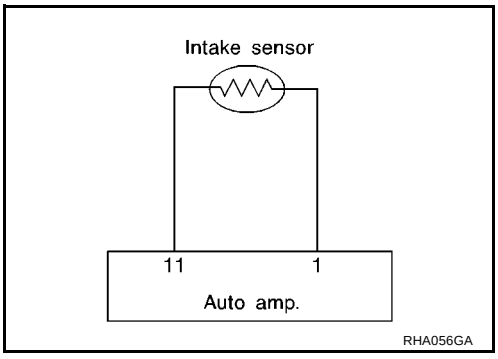

1. CHECK INTAKE SENSOR CIRCUIT BETWEEN INTAKE SENSOR AND GROUND

Disconnect intake sensor harness connector.

Terminal			Voltage
(+)		(-)	
Intake sensor connector	Terminal No. (Wire color)		
M103	1 (OR/B)	Ground	Approx. 5V

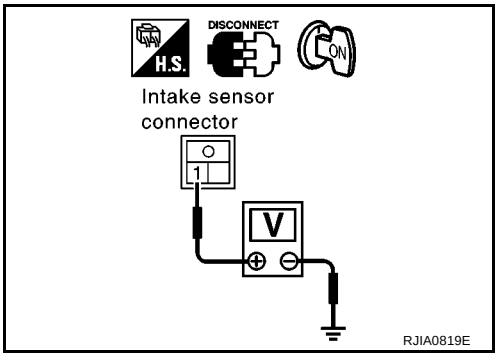

OK or NG

OK >> GO TO 2.
NG >> GO TO 4.

2. CHECK INTAKE SENSOR CIRCUIT BETWEEN INTAKE SENSOR AND AUTO AMP.

Disconnect auto amp. harness connector.

Terminal				Continuity
(+)		(-)		
Intake sensor connector	Terminal No. (Wire color)	Auto amp. connector	Terminal No. (Wire color)	
M103	2 (B/Y)	M110	11 (B/Y)	Yes

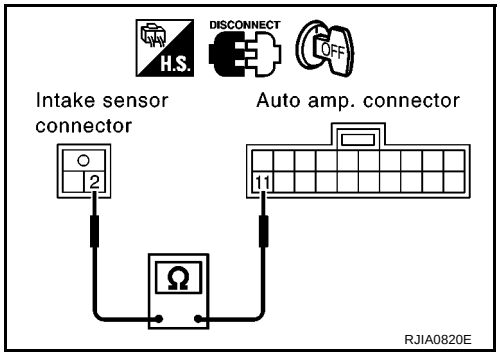

OK or NG

OK >> GO TO 3.
NG >> Repair harness or connector.

3. CHECK INTAKE SENSOR

Refer to ATC-103, "Intake Sensor" .

OK or NG

OK >> 1. Replace auto amp.
2. Go to ATC-42, "FUNCTION CONFIRMATION PROCEDURE" and perform self-diagnosis STEP-2. Confirm that code No. 20 is displayed.

NG >> 1. Replace intake sensor.
2. Go to ATC-42, "FUNCTION CONFIRMATION PROCEDURE" and perform self-diagnosis STEP-2. Confirm that code No. 20 is displayed.

4. CHECK INTAKE SENSOR CIRCUIT BETWEEN INTAKE SENSOR AND AUTO AMP.

Disconnect auto amp. harness connector.

Terminal				Continuity
(+)		(-)		
Intake sensor connector	Terminal No. (Wire color)	Auto amp. connector	Terminal No. (Wire color)	
M103	1 (OR/B)	M110	1 (OR/B)	Yes

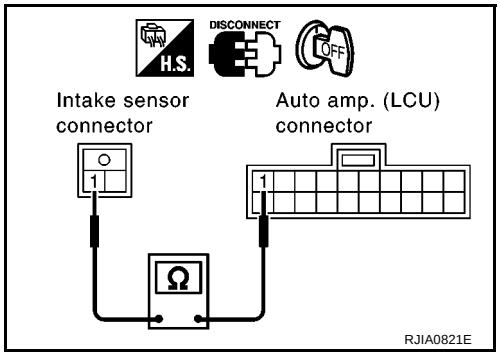

OK or NG

OK >> 1. Replace auto amp.
2. Go to ATC-42, "FUNCTION CONFIRMATION PROCEDURE" and perform self-diagnosis STEP-2. Confirm that code No. 20 is displayed.

NG >> Repair harness or connector.

Multiplex Communication Circuit

EJS0037K

DIAGNOSTIC PROCEDURE FOR MULTIPLEX COMMUNICATION CIRCUIT

SYMPTOM:

- A/C system cannot be controlled.

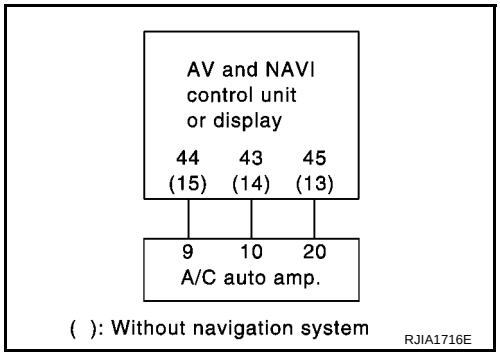

1. CHECK FOR AUTO AMP. OUTPUT

Confirm multiplex communication signal using an oscilloscope.

Terminal		Voltage
Auto amp. connector	Terminal No. (Wire color)	
M75	9 (L/W)	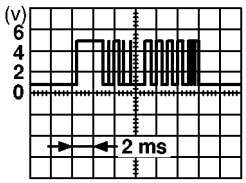 RJIA0212E
	20 (L)	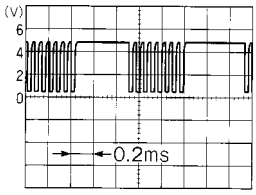 HAK0363D

OK or NG

OK >> GO TO 2.
NG >> Replace auto amp.

2. CHECK CIRCUIT CONTINUITY BETWEEN AUTO AMP. AND DISPLAY UNIT (AV AND NAVI CONTROL UNIT)

Disconnect AV and NAVI control unit (display unit) and auto amp. connector.

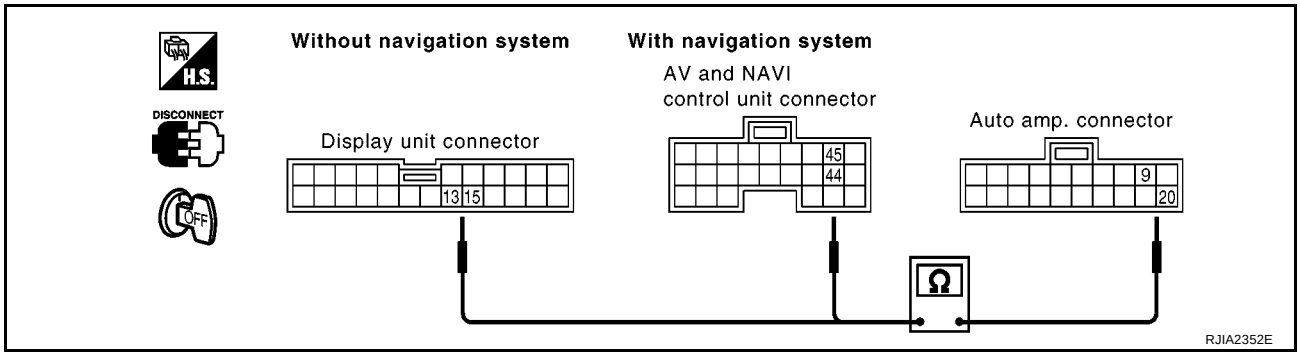

Without navigation system

Terminal				Continuity
(+)		(-)		
Display unit connector	Terminal No. (Wire color)	Auto amp. connector	Terminal No. (Wire color)	
M96	15 (L/W)	M110	9 (L/W)	Yes
	13 (L)		20 (L)	

With navigation system

Terminal				Continuity
(+)		(-)		
AV and NAVI control unit connector	Terminal No. (Wire color)	Auto amp. connector	Terminal No. (Wire color)	
B63: LHD models B115: RHD models	44 (L/W)	M110	9 (L/W)	Yes
	45 (L)		20 (L)	

OK or NG

OK >> Reconnect display unit (or AV and NAVI control unit) and auto amp. connector. And GO TO 3.
NG >> Repair harness or connector.

3. CHECK FOR AUTO AMP. INPUT

Confirm multiplex communication signal using an oscilloscope.

Terminal		Voltage
Auto amp. connector	Terminal No. (Wire color)	
M110	10 (L/R)	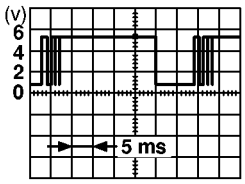

RJIA0213E

OK or NG

OK >> INSPECTION END
NG >> GO TO 4.

4. CHECK CIRCUIT CONTINUITY BETWEEN DISPLAY UNIT (OR AV AND NAVI CONTROL UNIT) AND AUTO AMP.

Disconnect display unit (or AV and NAVI control unit) and auto amp. connector.

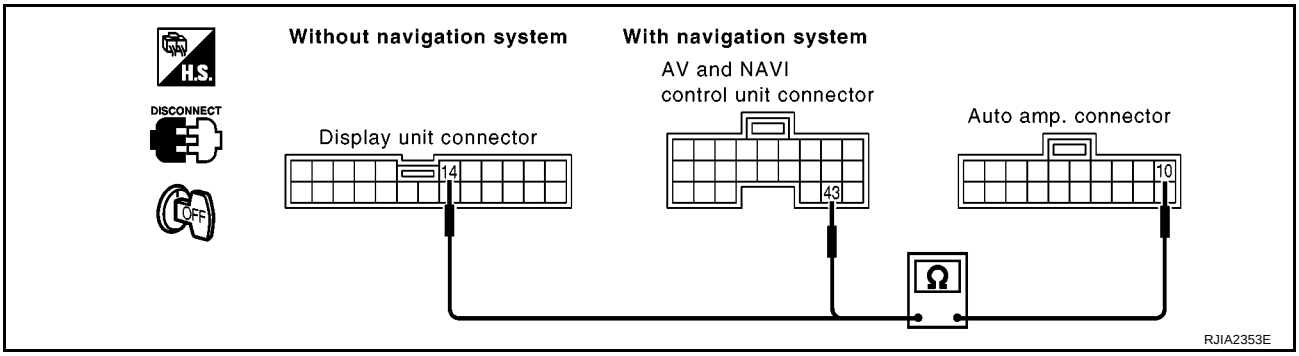

Without navigation system

Terminal				Continuity
(+)		(-)		
Display unit connector	Terminal No. (Wire color)	Auto amp. connector	Terminal No. (Wire color)	
M96	14 (L/R)	M110	10 (L/R)	Yes

With navigation system

Terminal				Continuity
(+)		(-)		
AV and NAVI control unit connector	Terminal No. (Wire color)	Auto amp. connector	Terminal No. (Wire color)	
B63: LHD models B115: RHD models	43 (L/R)	M110	10 (L/R)	Yes

OK or NG

OK >> Replace auto amp.
NG >> Repair harness or connector.

CONTROLLER

PFP:27500

Removal and Installation

EJS0030S

1. Remove cluster lid C. Refer to BT-22, "INSTRUMENT PANEL ASSEMBLY".
2. Remove harness connectors.
3. Remove multifunction switch.

AUTO AMP

PFP:27760

REMOVAL AND INSTALLATION

EJS0030T

1. Remove the instrument lower assist panel.
2. Remove the auto amp. fixing screw.
3. Disconnect the auto amp. connector, then remove the auto amp.

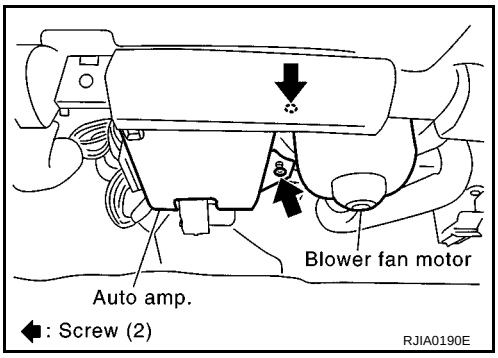

AMBIENT SENSOR

PFP:27722

Removal and Installation

EJS0030U

1. Remove front grille (left). Refer to BT-7, “BODY FRONT END”.
2. Disconnect ambient sensor connector.
3. Remove the ambient sensor.

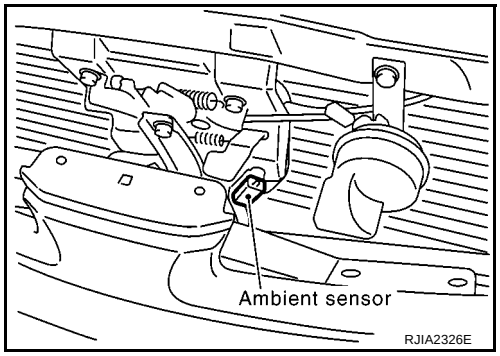

IN-VEHICLE SENSOR

PFP:27720

Removal and Installation

EJS0030V

1. Remove cluster lid C. Refer to BT-22, “INSTRUMENT PANEL ASSEMBLY”.
2. Remove the in-vehicle sensor.

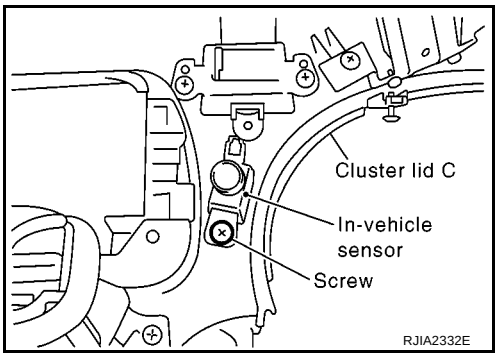

SUNLOAD SENSOR

PFP:27721

Removal and Installation

EJS0030W

1. Remove instrument mask (passenger side).
2. Remove the sunload sensor.

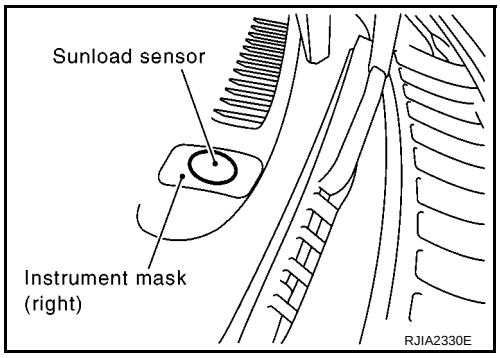

INTAKE SENSOR CIRCUIT

PFP:27723

Removal and Installation

EJS0037L

REMOVAL

1. Use the refrigerant collecting equipment (for HFC-134a), to discharge the refrigerant from A/C system.
2. Disconnect low-pressure flexible hose and high-pressure pipe from the evaporator.

   CAUTION:
   Cap or wrap the joint of the low-pressure flexible hose and the high-pressure pipe with a suitable tool such as a vinyl tape to avoid the entry of air.
3. Hold expansion valve and move it slightly upward. Push evaporator toward rear of vehicle.

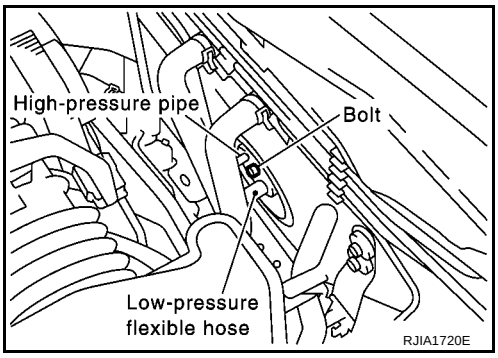

4. Remove the drain hose and lower case mounting screw.
5. Swivel rear of lower case toward passenger seat to remove lower case.

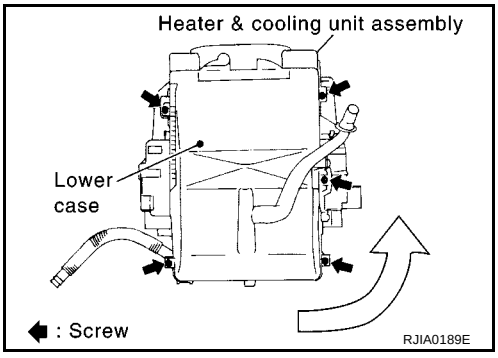

6. Remove the intake sensor from evaporator.

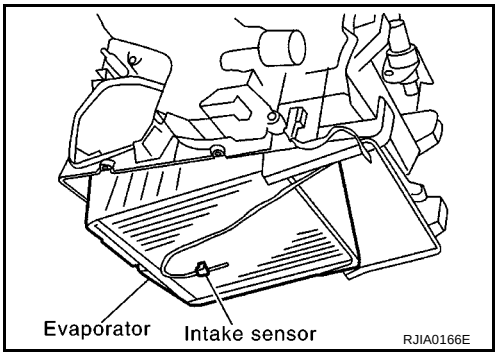

INSTALLATION

1. Set expansion valve to cooler grommet.

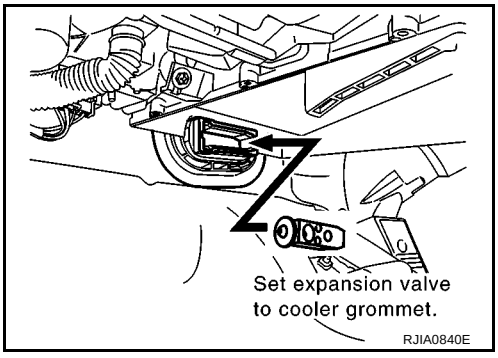

2. Install evaporator to heater & cooling unit.

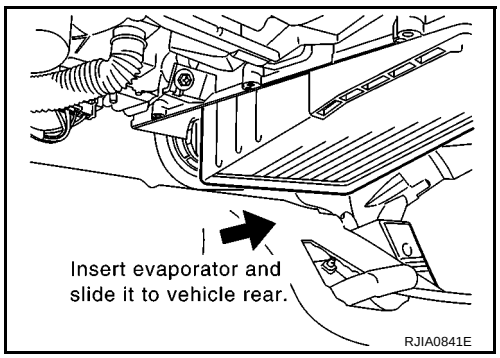

3. Install intake sensor to evaporator.

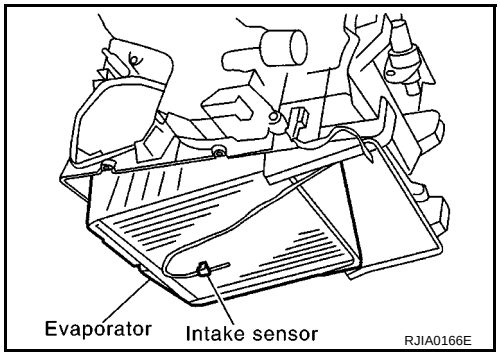

4. Install lower cover, then slide evaporator to forward.
5. Install expansion valve from engine compartment.

Expansion valve mounting bolts

Tightening torque : 2.9 - 5.0 N·m (0.30 - 0.50 kg-m, 26 - 44 in-lb)

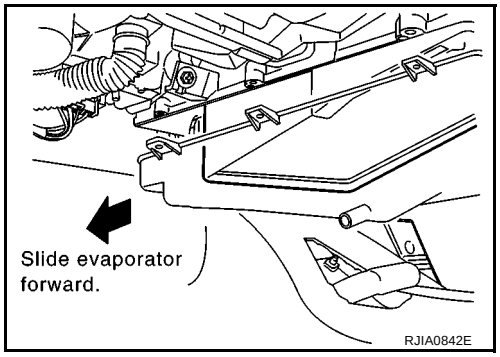

BLOWER UNIT

PFP:27200

Removal and Installation

EJS0030Y

REMOVAL

1. Remove the glove box assembly.
2. Remove the glove box cover and instrument lower assist panel.
3. Remove the ECM with ECM bracket.
4. Remove the blower unit fixing bolt and screw.
5. Disconnect the blower motor connector, intake door motor connector and auto amp. connector.
6. Remove the harness fixing clip.
7. Move the blower unit downwards.

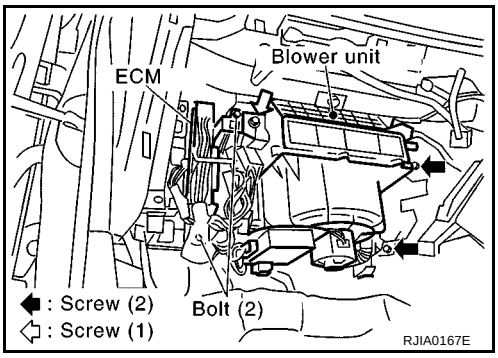

CAUTION:

Slide the blower unit toward the passenger side, remove location pins (2 pieces), then move it downwards.

8. Remove the blower unit.

INSTALLATION

CAUTION:

- **Make sure the location pins (2 pieces) are securely installed.**

Disassembly and Assembly

EJS0030Z

NOTE:

This illustration is for RHD models. The layout for LHD models is symmetrically opposite.

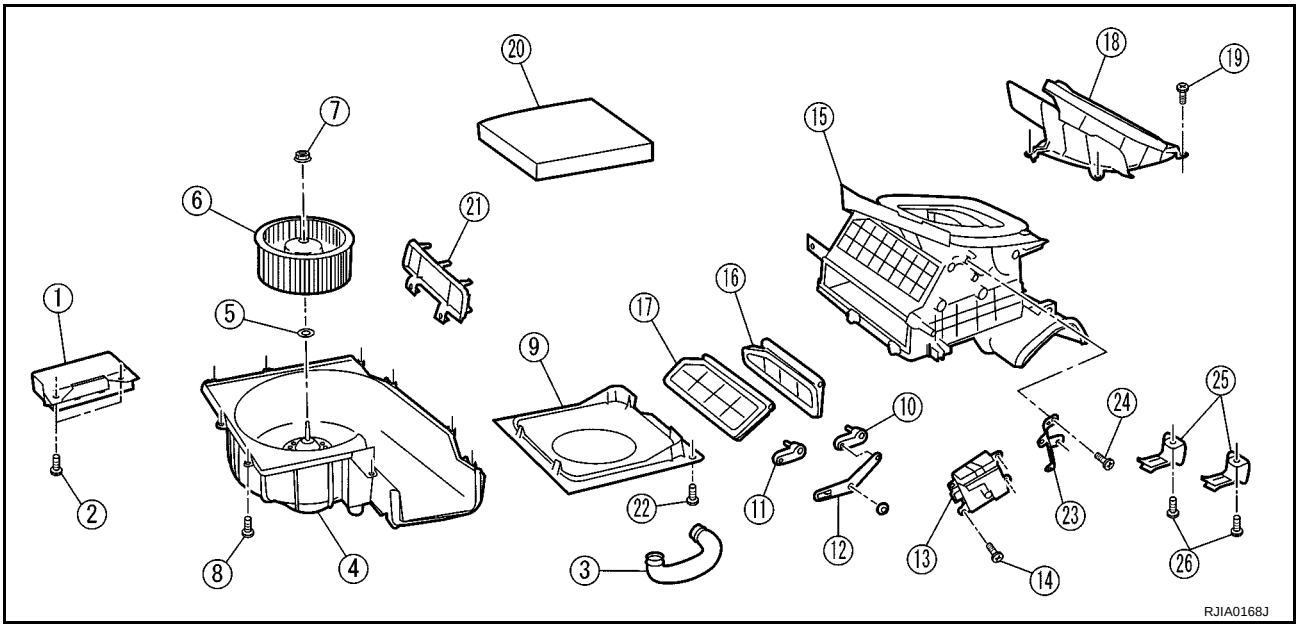

1. Auto amplifier	2. Screw	3. Cooling hose
4. Blower fan motor assembly	5. Washer	6. Blower fan
7. Nut	8. Screw	9. Intake bellmouth
10. Intake door lever 2	11. Intake door lever 1	12. Intake door link
13. Intake door motor	14. Screw	15. Upper case
16. Intake door 2	17. Intake door 1	18. Adapter assembly
19. Screw	20. Ventilation air filter	21. Filter cover
22. Screw	23. Bracket	24. Screw
25. Under cover clip	26. Screw	

BLOWER MOTOR

PFP:27226

Removal and Installation

EJS00310

1. Remove the blower unit. Refer to ATC-115, "Removal and Installation" .
2. Remove the auto amp.
3. Remove the blower unit fixing screw, then separate the blower unit.

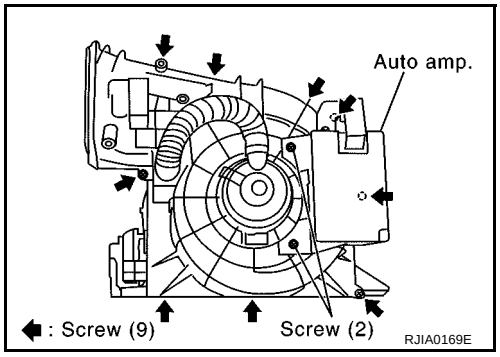

4. Remove the cooling hose and blower fan.

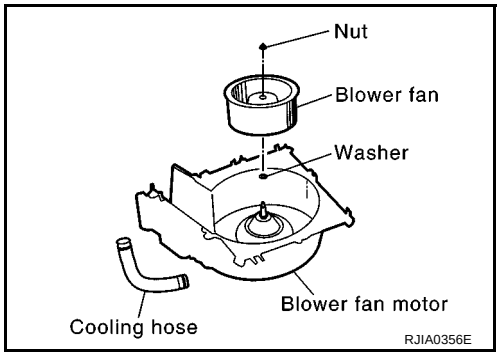

INTAKE DOOR MOTOR

PFP:27730

Removal and Installation

EJS00311

1. Remove the blower unit. Refer to ATC-115, "Removal and Installation"
2. Remove the intake door motor from the blower unit.

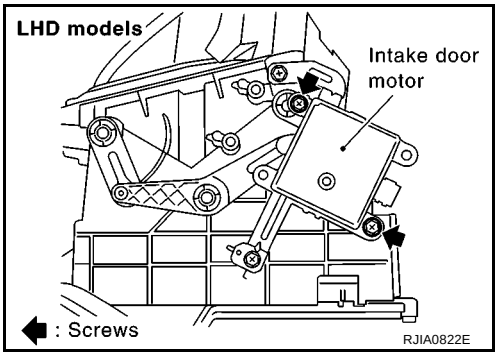

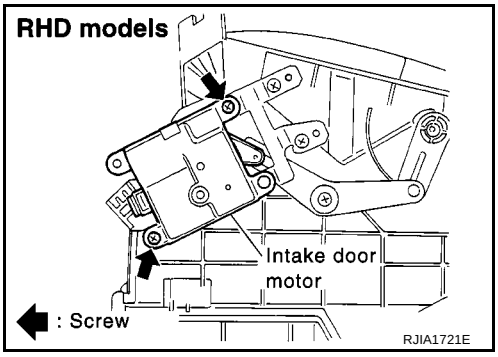

HEATER & COOLING UNIT ASSEMBLY

PFP:27110

Removal and Installation

EJS00312

REMOVAL

1. Use the refrigerant collecting equipment (For HFC-134a) to discharge the refrigerant from A/C system.
2. Drain coolant from cooling system. Refer to LC-18, "Changing Engine Coolant" for QG engine, LC-40, "Changing Engine Coolant" for YD engine.
3. Disconnect two heater hoses from heater core pipe.
4. Disconnect the low-pressure flexible hose and high-pressure pipe from the evaporator.

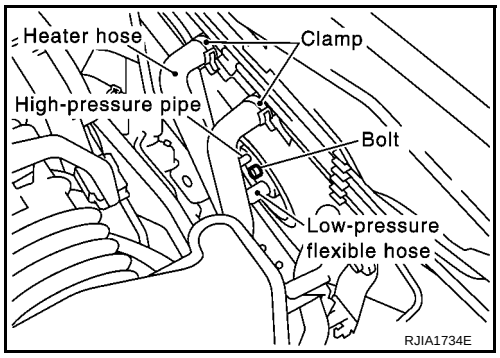

CAUTION:

Cap or wrap the joint of the low-pressure flexible hose and the high-pressure pipe with a suitable tool such as a vinyl tape to avoid the entry of air.

5. Remove the instrument panel assembly.
6. Remove the blower unit.
7. Remove clips of vehicle harness from steering member.
8. Remove the instrument stay.

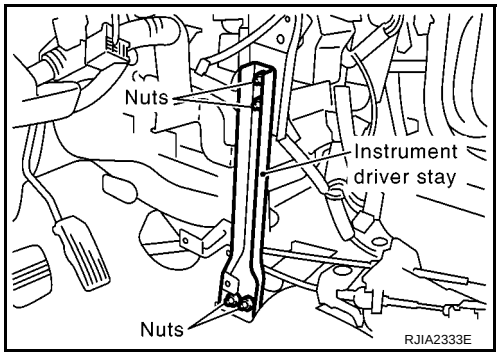

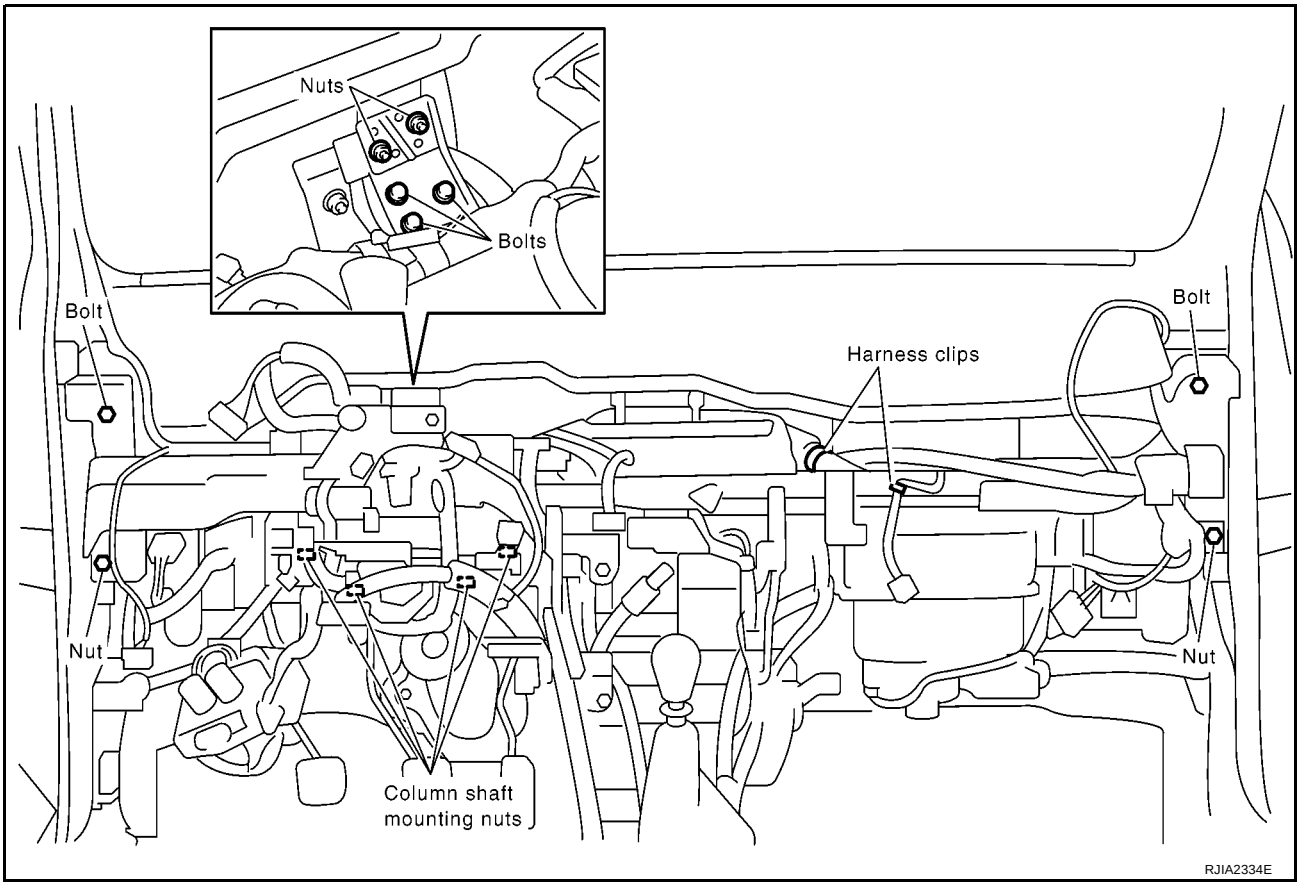

9. Remove the fixing bolts from heater & cooling unit.
10. Remove the steering member.
11. Remove the heater & cooling unit.

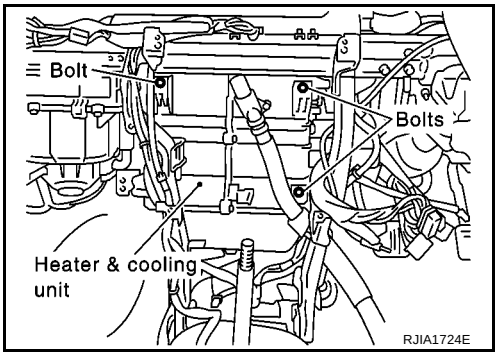

INSTALLATION

1. Installation is basically the reverse order of removal.

NOTE:
When filling radiator with coolant, refer to LC-18, "Changing Engine Coolant" for QG engine, LC-40, "Changing Engine Coolant" for YD engine.

Disassembly and Assembly

EJS00313

NOTE:
This illustration is for RHD models. The layout for LHD models is symmetrically opposite.

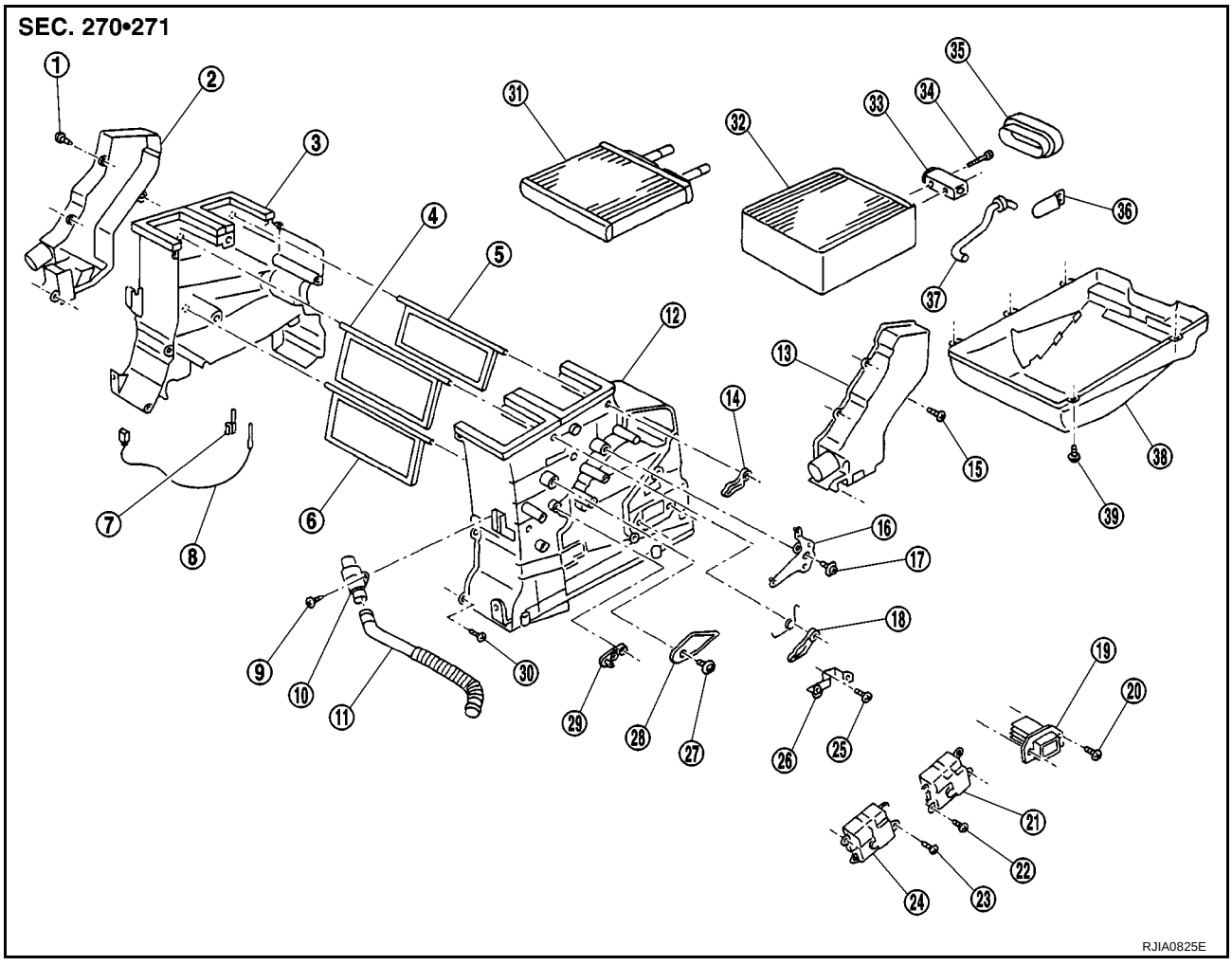

1. Screw	2. Foot duct (left)	3. Heater & cooling unit case (left)
4. Ventilator door	5. Defroster door	6. Air mix door
7. Sensor bracket	8. Intake sensor	9. Screw
10. Aspirator	11. Aspirator duct	12. Heater & cooling unit case (right)
13. Foot duct (right)	14. Mode door lever 2	15. Screw
16. Mode door link 2	17. Screw	18. Mode door lever 1
19. Fan control amp.	20. Screw	21. Mode door motor
22. Screw	23. Screw	24. Air mix door motor
25. Screw	26. Actuator bracket	27. Screw
28. Mode door link	29. Air mix door lever	30. Screw
31. Heater core	32. Evaporator	33. Expansion valve
34. Bolt	35. Cooler grommet	36. Instrument bracket
37. Drain hose	38. Lower case	39. Screw

MODE DOOR MOTOR

PFP:27731

Removal and Installation

EJS00314

1. Disconnect the mode door motor connector.
2. Remove the mode door motor.

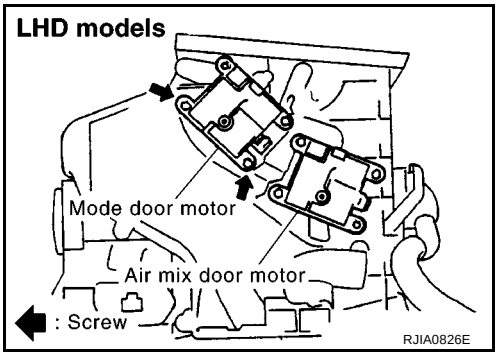

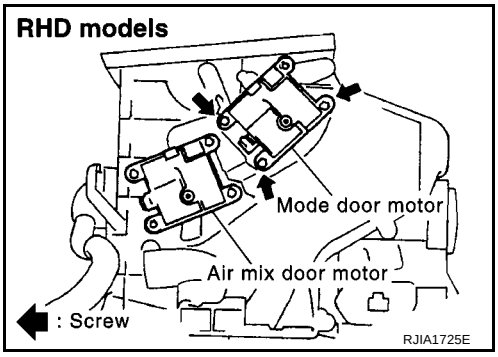

AIR MIX DOOR MOTOR

PFP:27732

Removal and Installation

EJS00315

1. Disconnect the air mix door motor connector.
2. Remove the air mix door motor.

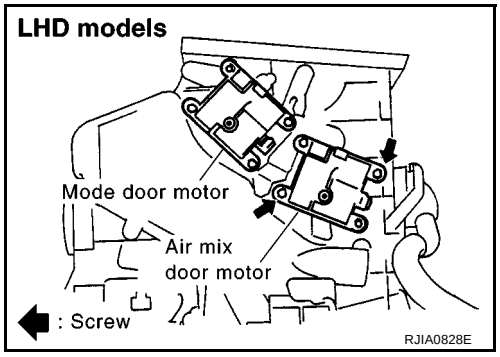

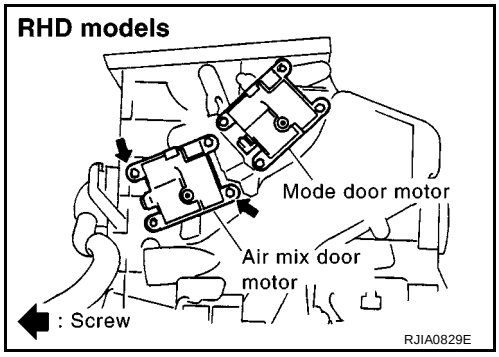

FAN CONTROL AMPLIFIER

PFP:27761

Removal and Installation

EJS00316

1. Disconnect fan control amp. connector.
2. Remove fixing screws, then remove fan control amp.

NOTE:
This illustration is for LHD models. The layout for RHD models is symmetrically opposite.

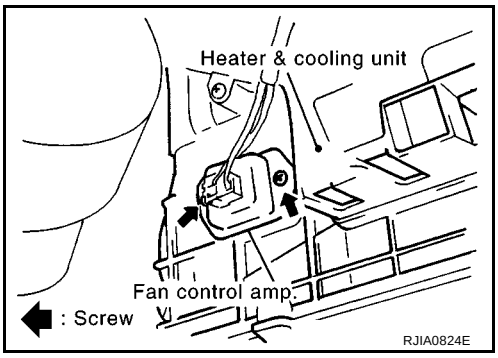

VENTILATION AIR FILTER

PFP:27277

Removal and Installation

EJS00317

FUNCTION

Air inside passenger compartment is kept clean at either recirculation or fresh mode by installing ventilation air filter into blower unit.

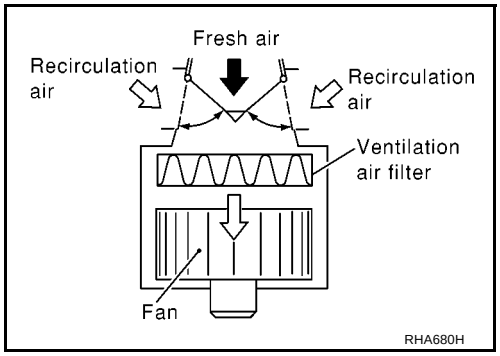

REPLACEMENT TIMING

Refer to MA-5 (Except for Europe), MA-8 or MA-11 (For Europe), “CHASSIS AND BODY MAINTENANCE”.
Caution label is fixed inside the glove box.

REPLACEMENT AND PROCEDURES

1. Remove the glove box.
2. Remove the ventilation air filter cover.
3. Take out the ventilation air filter from blower unit.
4. Replace with new one and reinstall on blower unit.
5. Reinstall the glove box.

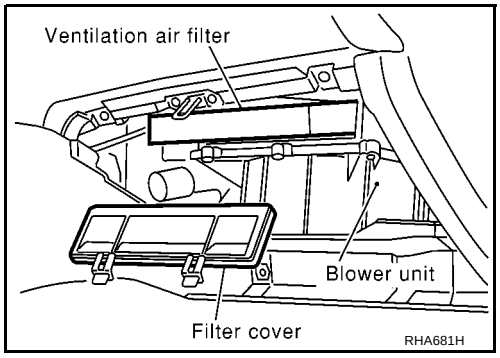

HEATER CORE

PFP:27140

Removal and Installation

EJS00318

1. Remove the heater & cooling unit. Refer to ATC-118, "Removal and Installation" .
2. Separate the heater & cooling unit, then remove the heater core. Refer to ATC-120, "Disassembly and Assembly" .

DUCTS AND GRILLES

PFP:27860

Removal and Installation

EJS00319

VENTILATOR DUCT, DEFROSTER NOZZLE AND DEFROSTER DUCTS

NOTE:

This illustration is for RHD models. The layout for LHD models is symmetrically opposite.

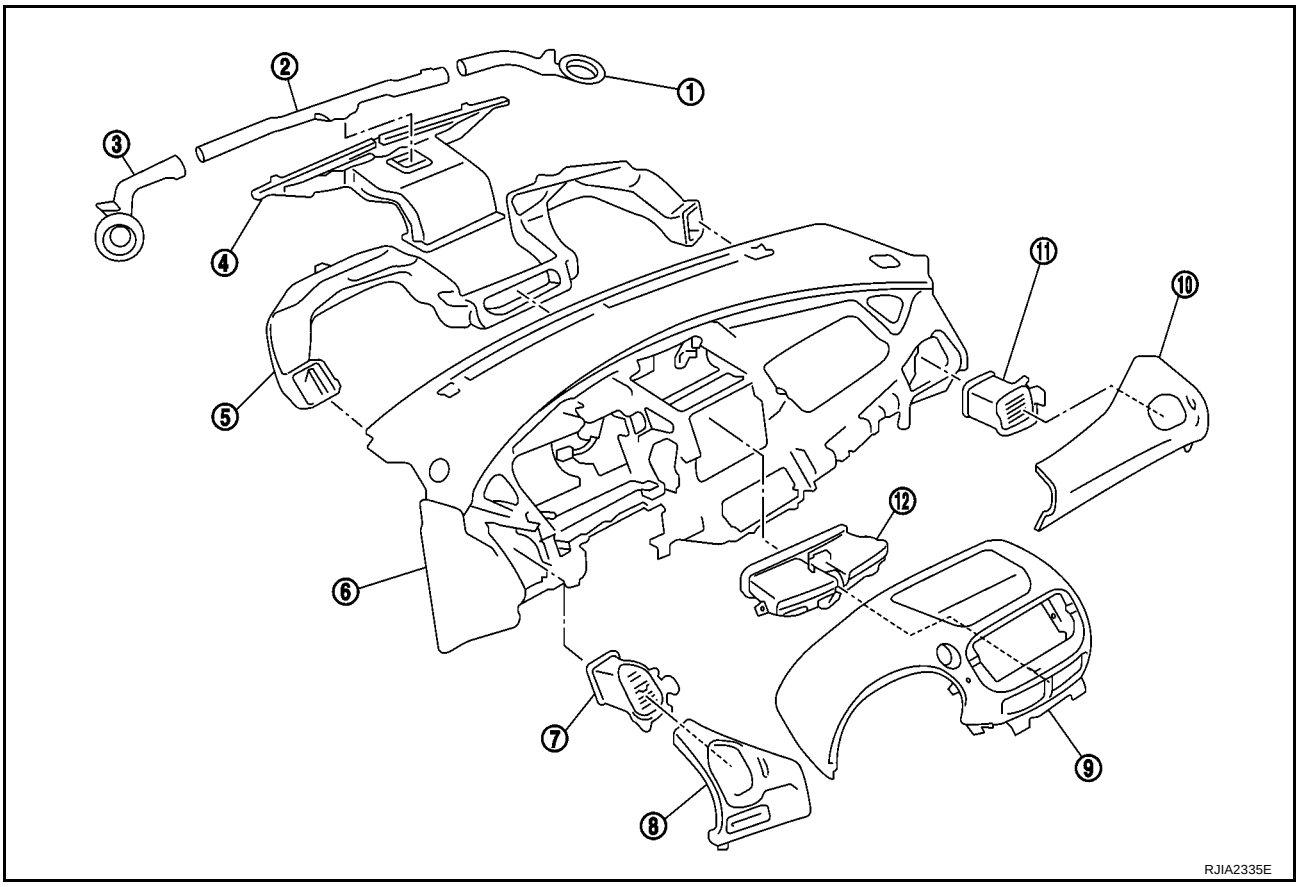

1. Side defroster duct (right)	2. Side defroster duct (center)	3. Side defroster duct (left)
4. Defroster nozzle	5. Ventilator duct	6. Instrument panel
7. Side ventilator grille (left)	8. Instrument finisher A	9. Cluster lid C
10 Instrument finisher B	11 Side ventilator grille (right)	12 Center ventilator grille assembly
.	.	.

CENTER VENTILATOR GRILLE

1. Remove the cluster lid C. Refer to BT-22, "INSTRUMENT PANEL ASSEMBLY".
2. Remove the center ventilator grille assembly.

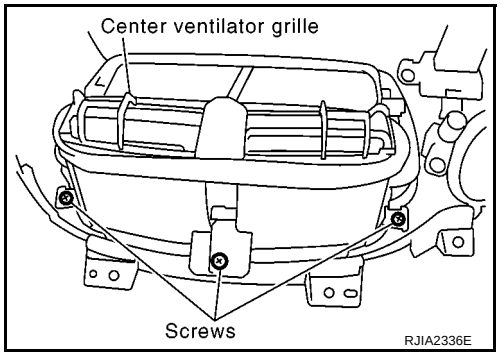

SIDE VENTILATOR GRILLE

1. Remove instrument finisher B.
2. Remove the side ventilator grille (right).

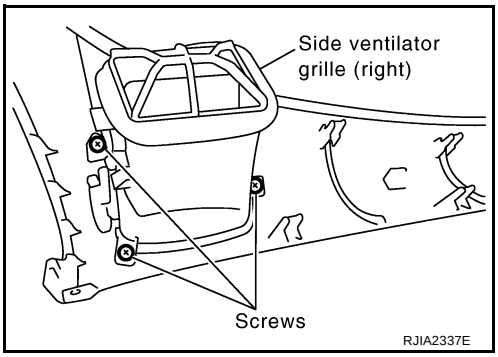

3. Remove instrument finisher A.
4. Remove side ventilator grille (left).

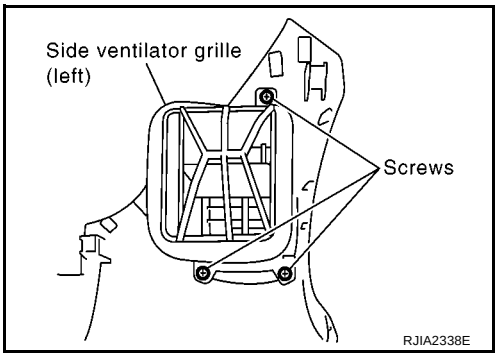

FOOT DUCT

1. Remove the heater & cooling unit. Refer to ATC-118, "Removal and Installation" .
2. Remove the foot duct.

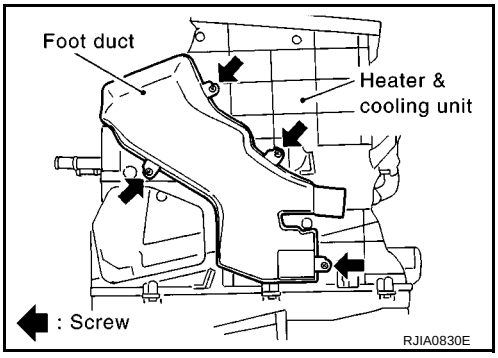

FLOOR DUCT

1. Remove instrument lower center panel. Refer to BT-22, “INSTRUMENT PANEL ASSEMBLY”.
2. Remove center floor duct.
3. Remove the front seats.
4. Peel back the floor trim to a point where the floor duct is visible.
5. Remove floor ducts.

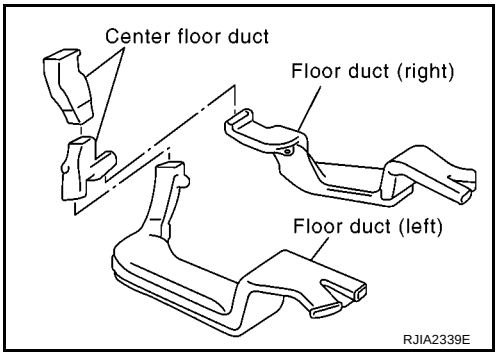

REFRIGERANT LINES

PFP:92600

HFC-134a (R-134a) Service Procedure

EJS0031A

SETTING OF SERVICE TOOLS AND EQUIPMENT

Discharging Refrigerant

WARNING:

Avoid breathing A/C refrigerant and lubricant vapor or mist. Exposure may irritate eyes, nose and throat. Use only approved recovery/recycling equipment to discharge HFC-134a (R-134a) refrigerant. If accidental system discharge occurs, ventilate work area before resuming service. Additional health and safety information may be obtained from refrigerant and lubricant manufacturers.

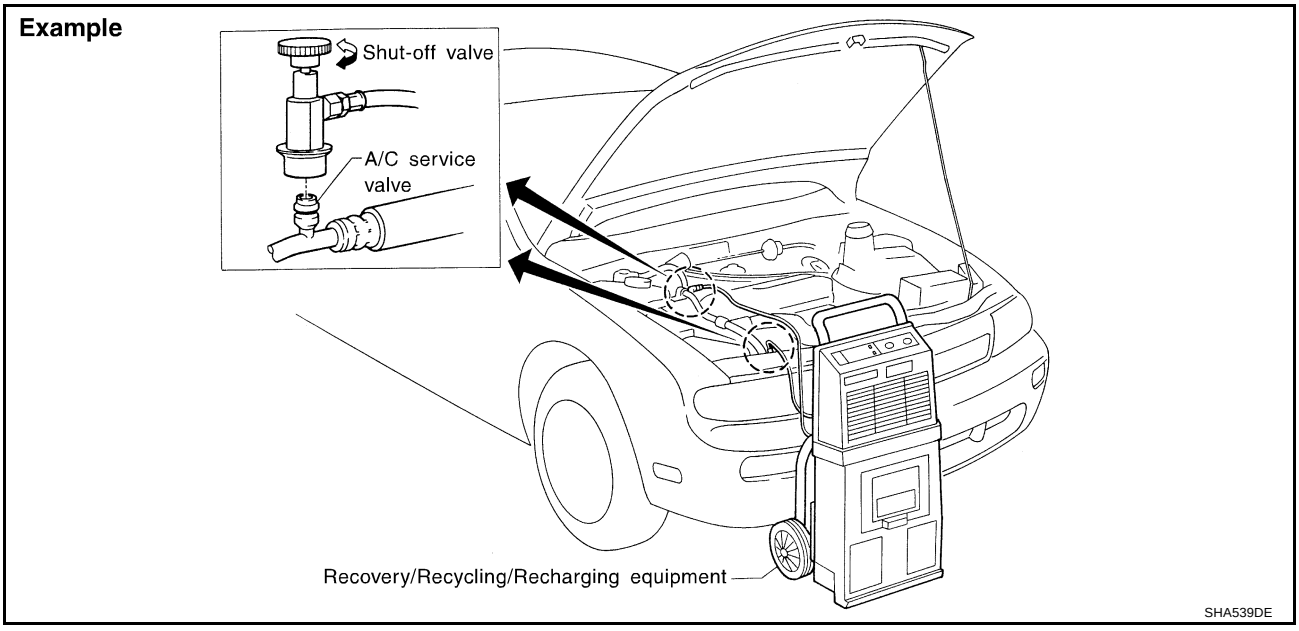

Evacuating System and Charging Refrigerant

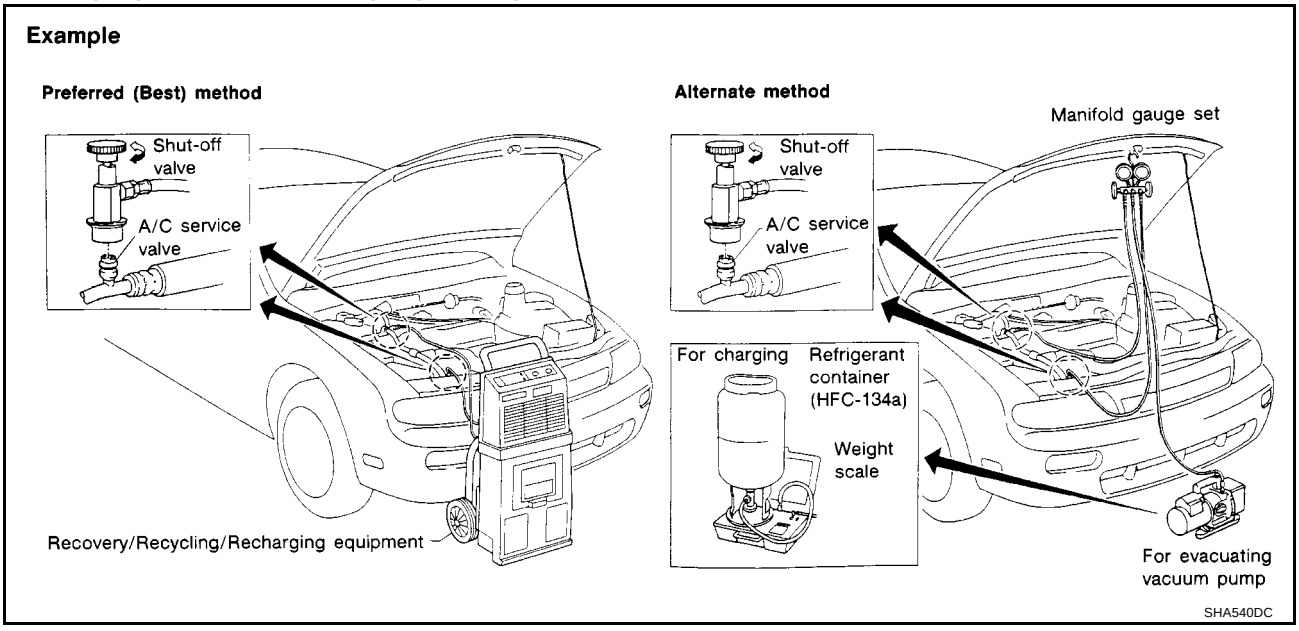

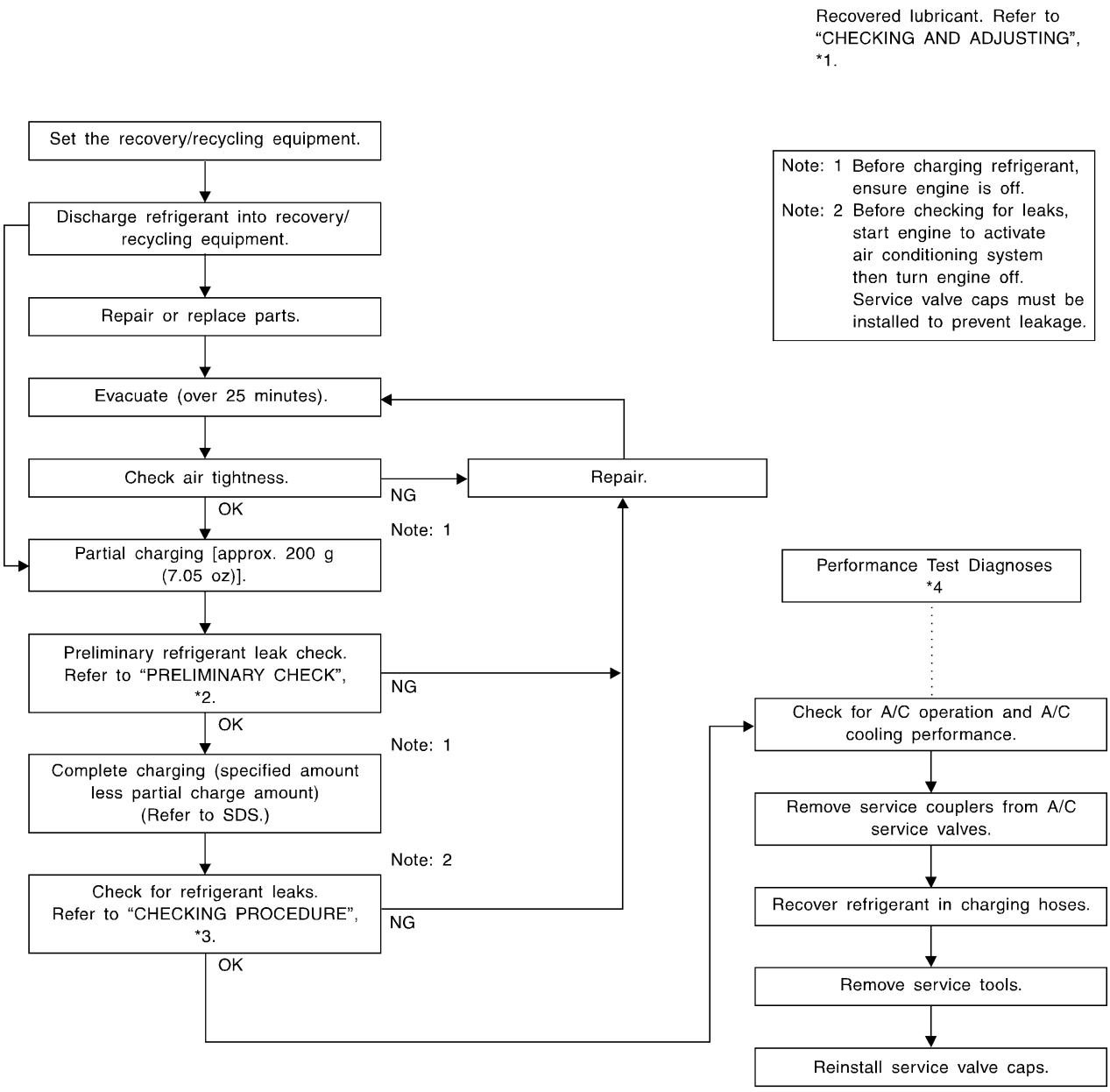

*1 ATC-20, "LUBRICANT RETURN OPERATION"

*2 ATC-143, "Checking for Refrigerant Leaks"

*3 ATC-143, "Checking for Refrigerant Leaks"

*4 ATC-84, "PERFORMANCE TEST DIAGNOSES"

Components

EJS0031B

QG ENGINE MODELS

Refer to ATC-5, "Precautions for Refrigerant Connection" .

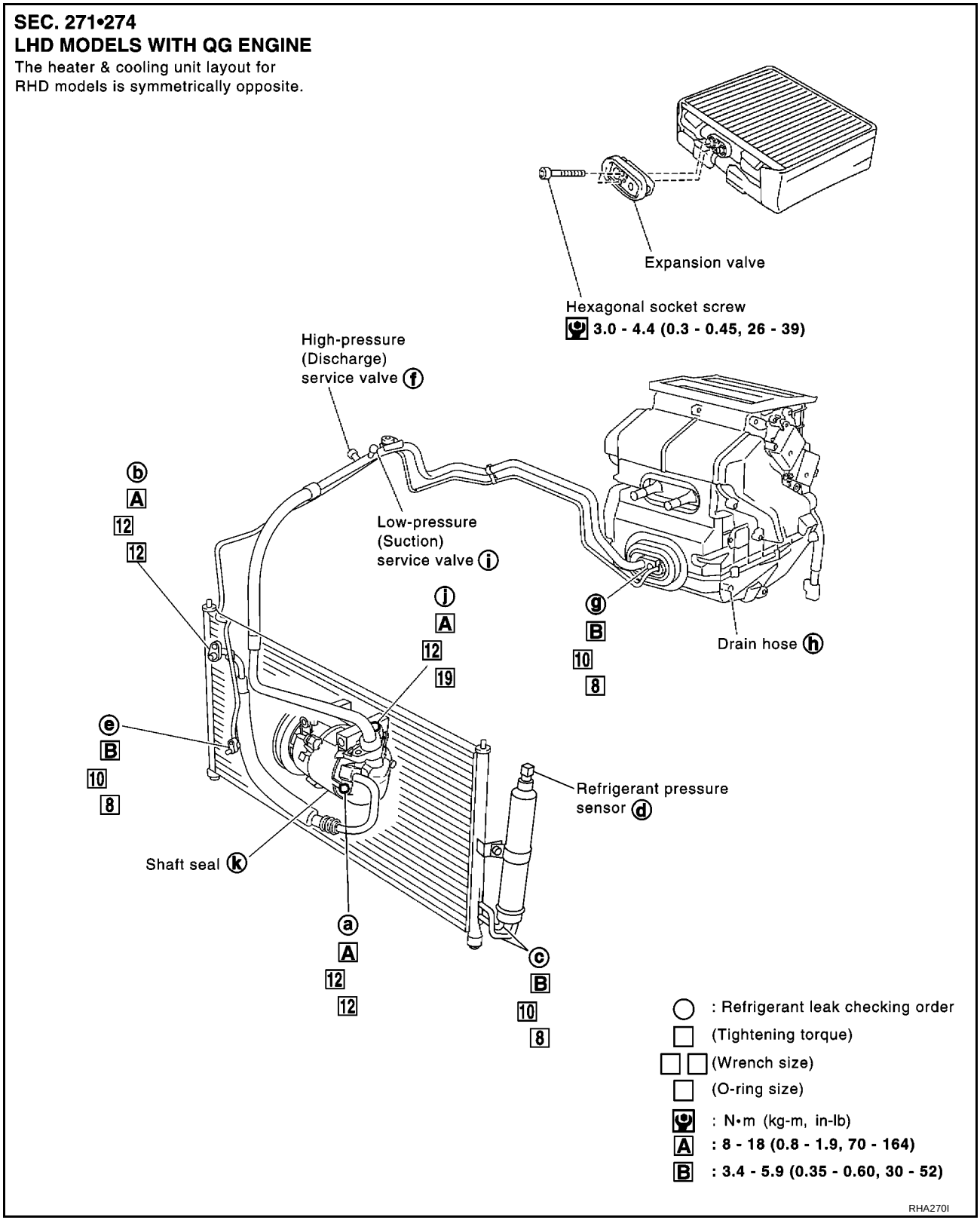

YD22DDT ENGINE MODELS

SEC. 271•274
For LHD models
The heater & cooling unit layout for RHD models is symmetrically opposite.

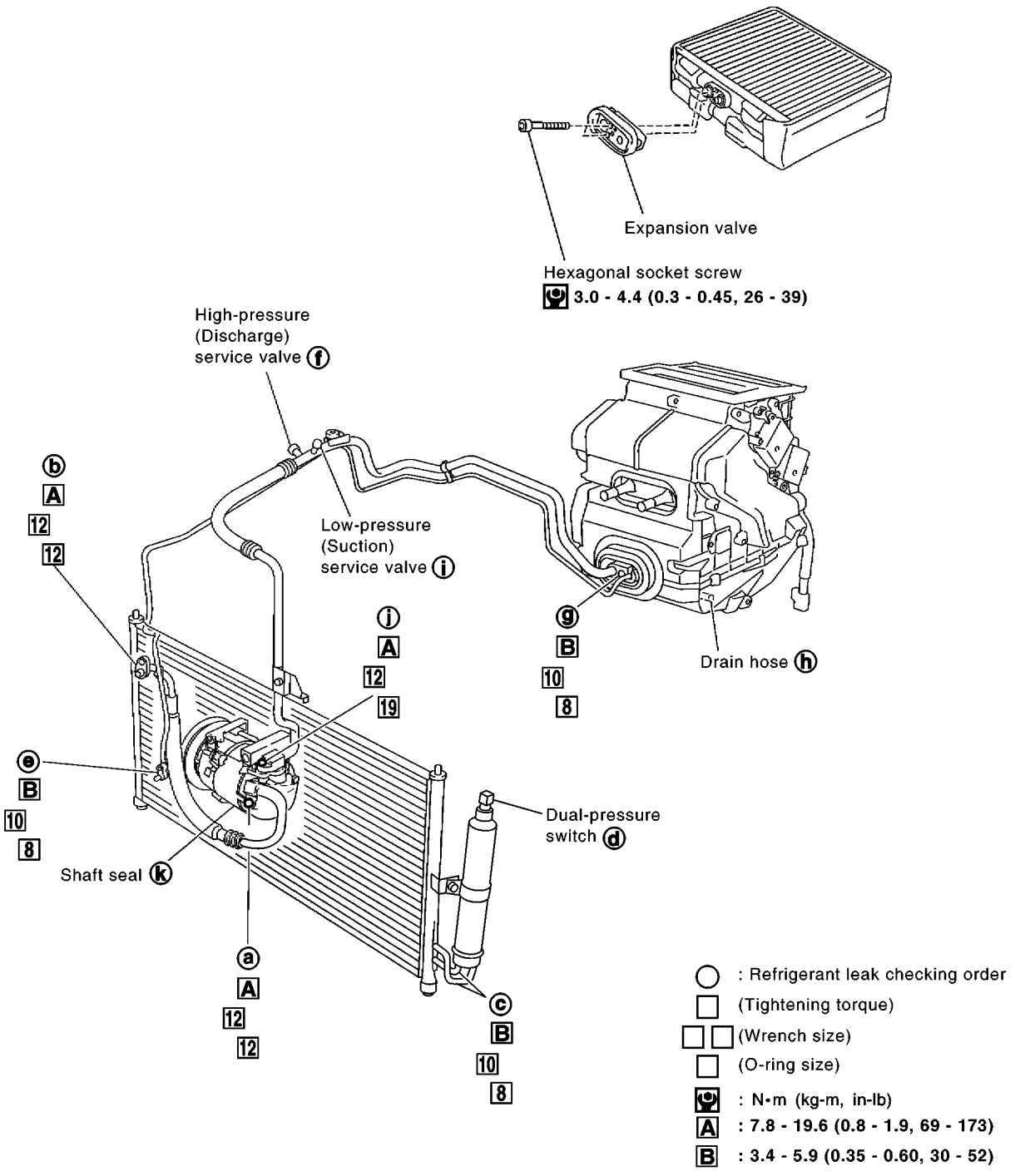

YD22DDTI ENGINE MODELS

SEC. 271•274
FOR LHD MODELS

The heater & cooling unit layout for RHD models is symmetrically opposite.

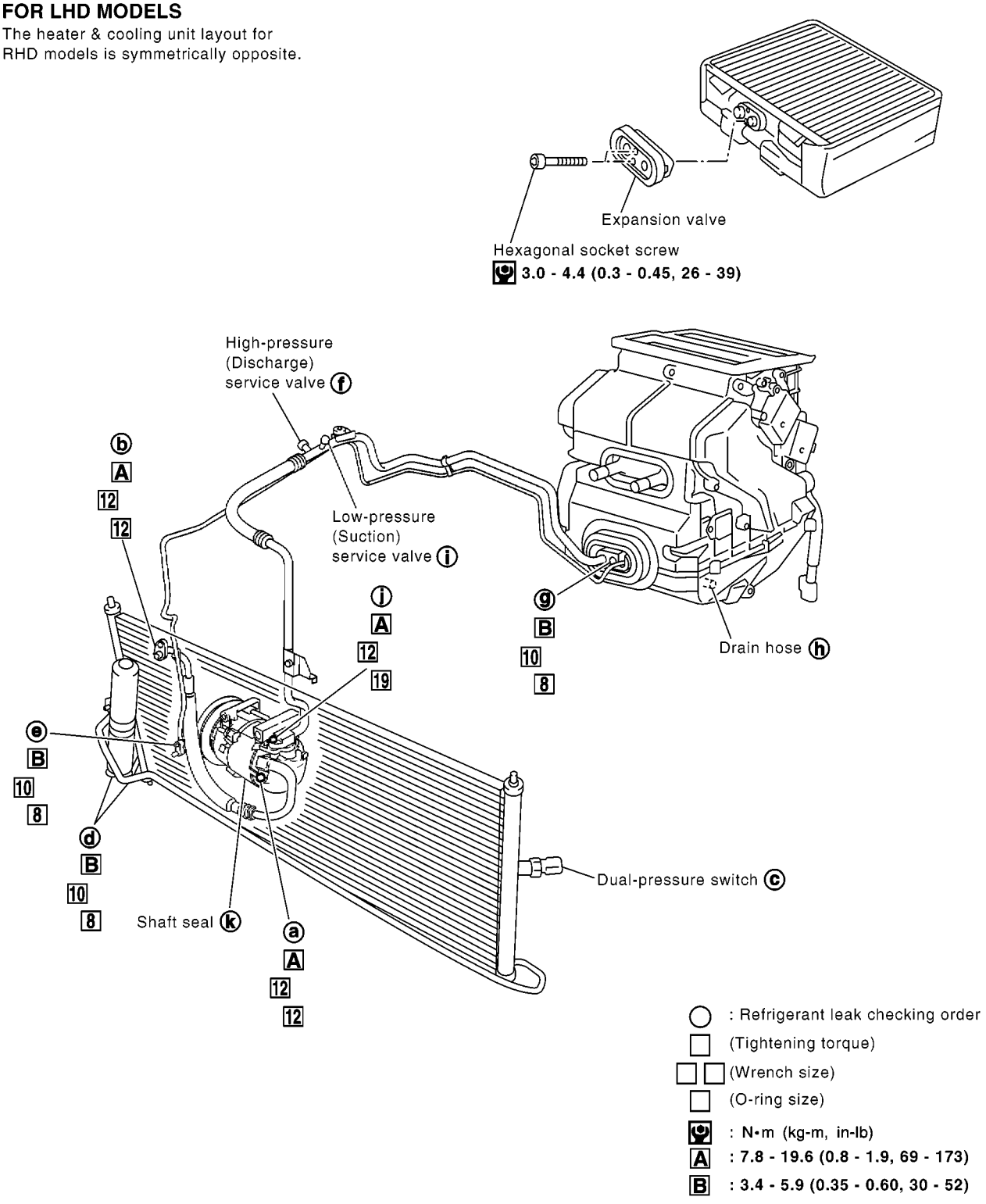

Compressor

EJS0031C

REMOVAL

With QG Engine

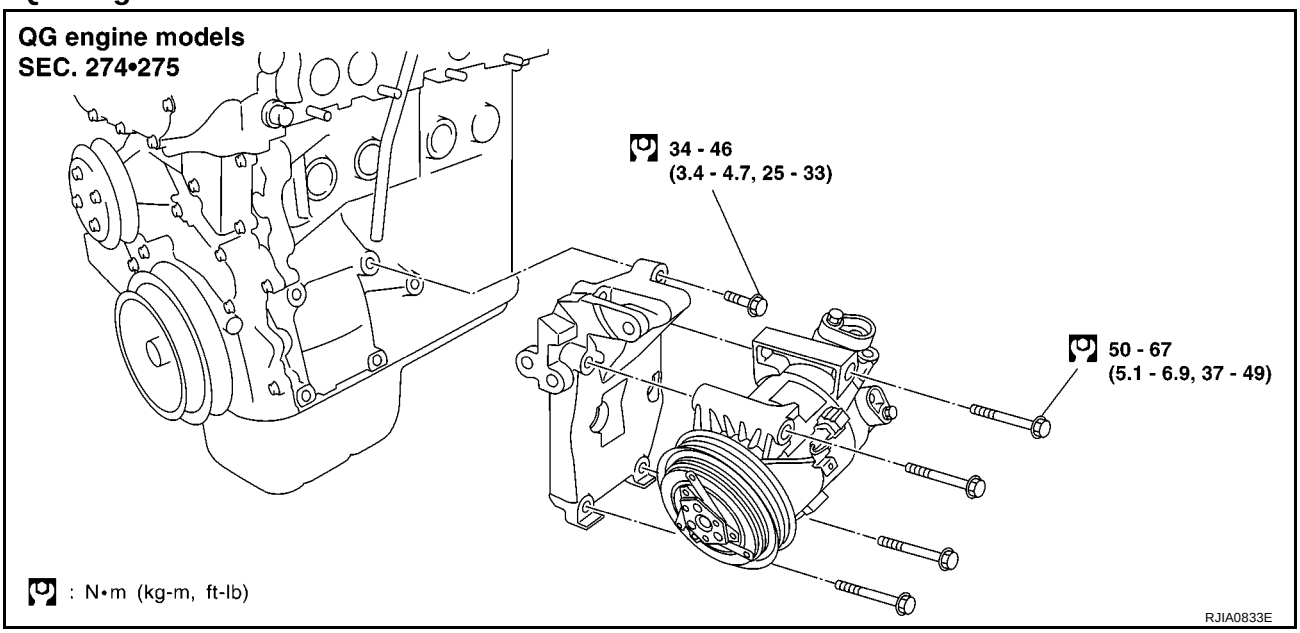

With YD Engine

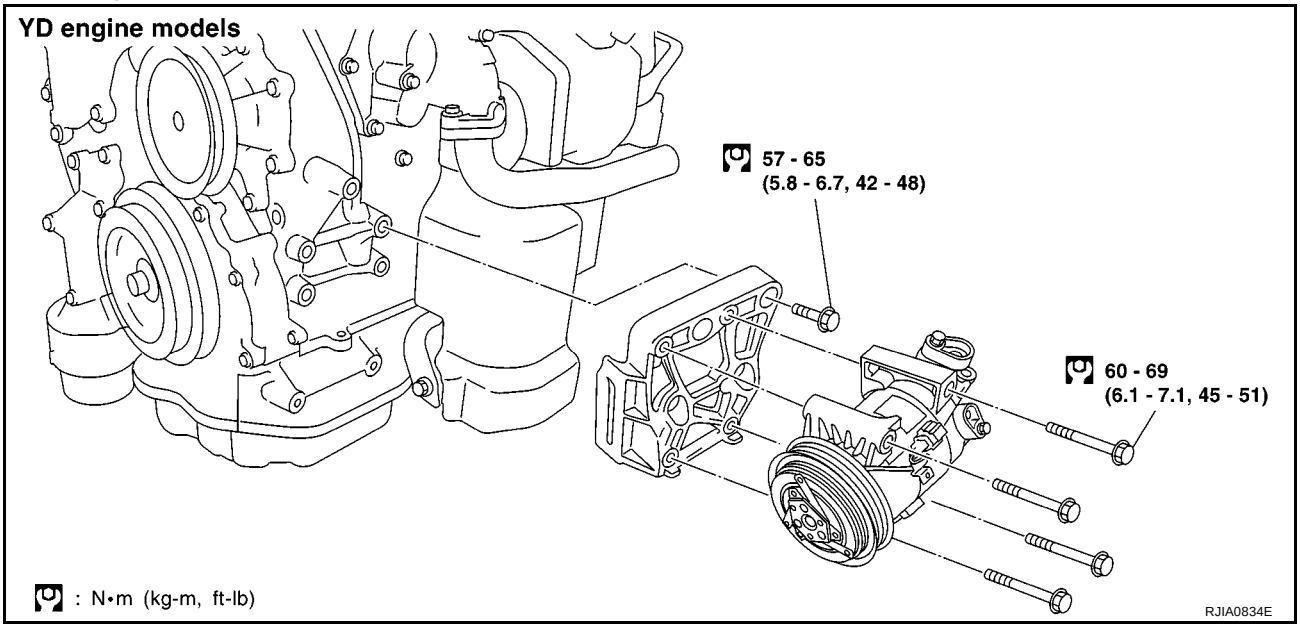

1. Use refrigerant collecting equipment (for HFC-134a) to discharge refrigerant.
2. Disconnect the compressor connector.
3. Remove the engine under cover (right side).
4. Remove the compressor-alternator belt.
   Refer to EM-15, "Removal and Installation" (QG engine), EM-118, "Removal and Installation" (YD engine).

5. Remove the mounting nuts (bolts) from the high-pressure flexible hose and low-pressure flexible hose.

   CAUTION:
   Cap or wrap the joint of the pipe with suitable material such as vinyl tape to avoid the entry of air.

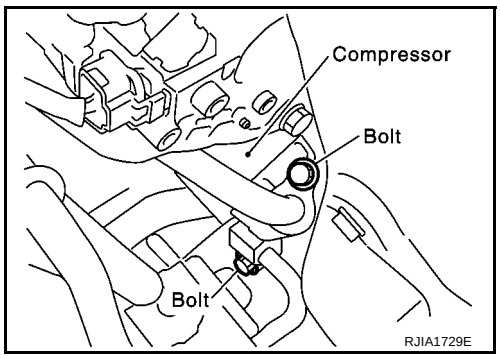

6. Remove the mounting bolts from compressor.
7. Remove the compressor from the lower side of the vehicle.

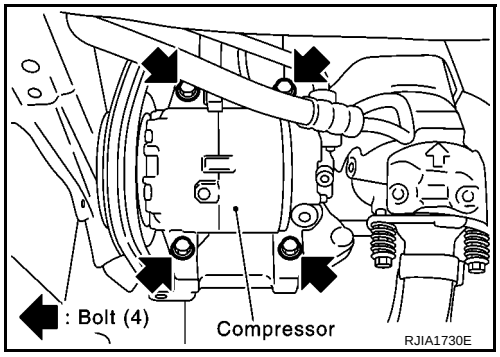

INSTALLATION

CAUTION:

- **Replace the O-ring of the low-pressure flexible hose and high-pressure flexible hose with a new one, then apply compressor oil to it when installing it.**
- **When pouring refrigerant, check for leaks.**

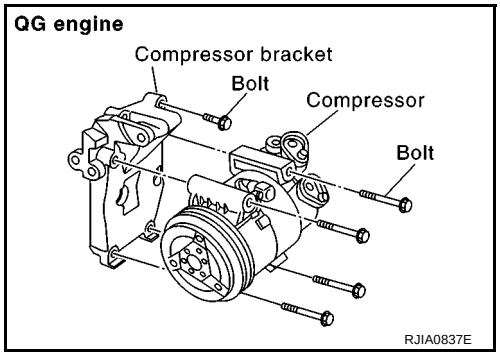

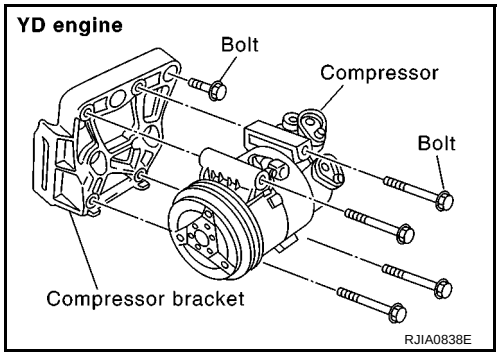

Compressor mounting bolt (QG engine)

Tightening torque : 50 - 60 N·m (5.1 - 6.9 kg-m, 37 - 49 ft-lb)

Compressor mounting bolt (YD engine)

Tightening torque : 60 - 69 N·m (6.1 - 7.1 kg-m, 45 - 51 ft-lb)

Compressor bracket mounting bolt (QG engine)

Tightening torque : 34 - 46 N·m (3.4 - 4.7 kg-m, 25 - 33 ft-lb)

Compressor bracket mounting bolt (YD engine)

Tightening torque : 57 - 65 N·m (5.8 - 6.7 kg-m, 42 - 48 ft-lb)

Nut (bolt) mounting the high-pressure flexible hose

Tightening torque : 7.8 - 19.6 N·m (0.8 - 2.0 kg-m, 69 - 173 in-lb)

Nut (bolt) mounting the low-pressure flexible hose

Tightening torque : 7.8 - 19.6 N·m (0.8 - 2.0 kg-m, 69 - 173 in-lb)

Compressor Clutch

EJS0031D

REMOVAL

Overhaul

1. When removing center bolt, hold clutch disc with wrench.

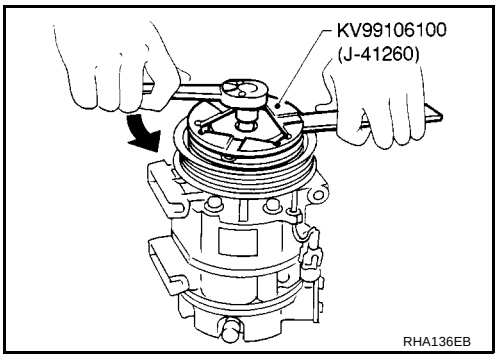

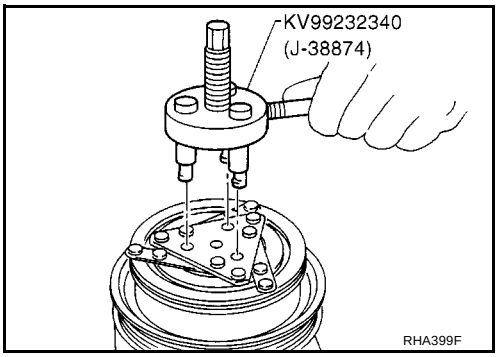

2. Remove the clutch disc using the clutch disc puller.

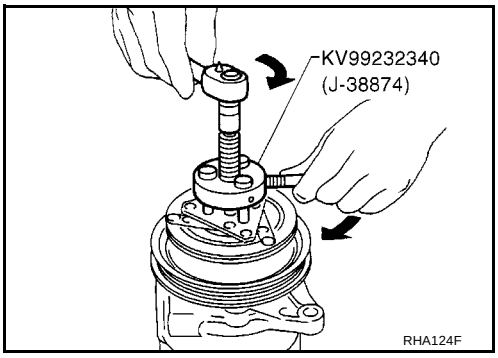

3. Remove the snap ring using external snap ring pliers.

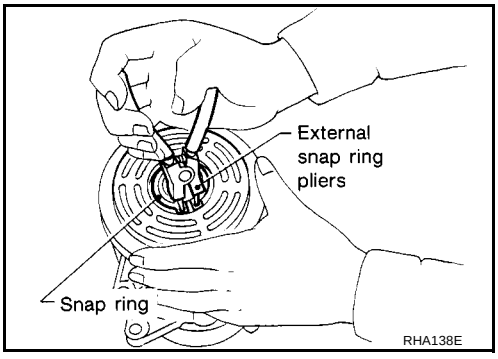

4. Position the center pulley puller on the end of the drive shaft, and remove the pulley assembly using any commercially available pulley puller.
   To prevent the pulley groove from being deformed, the puller claws should be positioned into the edge of the pulley assembly.

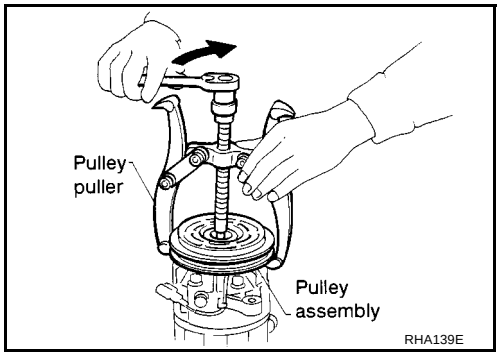

5. Remove the field coil harness clip using a pair of pliers.

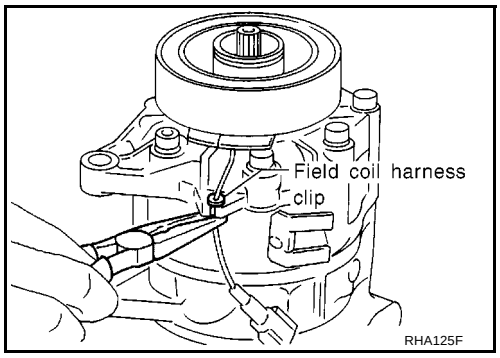

6. Remove the snap ring using external snap ring pliers.

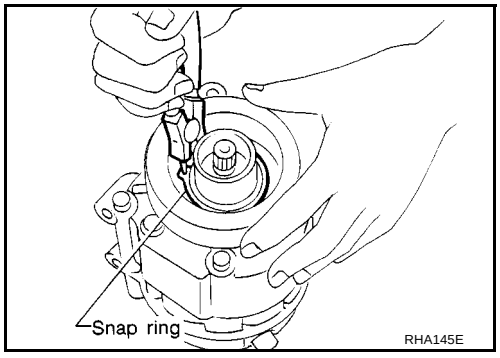

Inspection

Clutch disc
If the contact surface shows signs of damage due to excessive heat, replace clutch disc and pulley.
Pulley
Check the appearance of the pulley assembly. If the contact surface of pulley sows signs of excessive grooving, replace clutch disc and pulley. The contact surfaces of the pulley assembly should be cleaned with a suitable solvent before reinstallation.

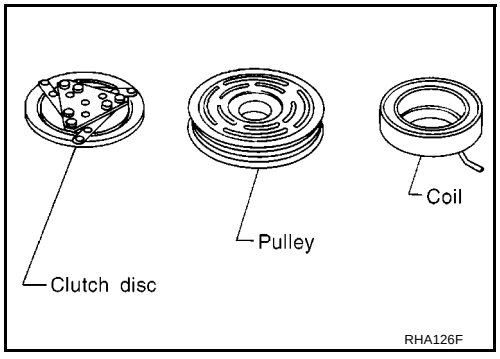

Coil

Check coil for loose connection or cracked insulation.

INSTALLATION

1. Install the field coil.

Be sure to align the coil's pin with the hole in the compressor's front head.

2. Install the field coil harness clip using a screwdriver.

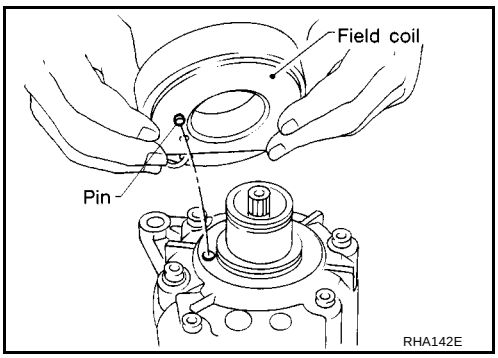

3. Install the pulley assembly using the installer and a hand press, and then install the snap ring using snap ring pliers.

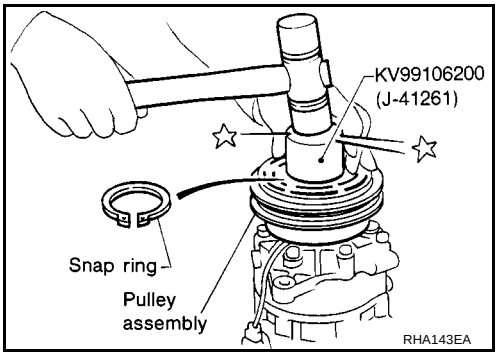

4. Install the clutch disc on the drive shaft, together with the original shim(s). Press the clutch disc down by hand.

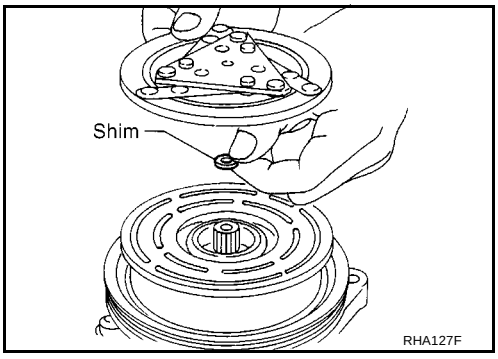

5. Using the holder to prevent clutch disc rotation.

   Tightening torque : 14 N·m (1.4 kg-m, 10 ft-lb)

   After tightening the bolt, check that the pulley rotates smoothly.

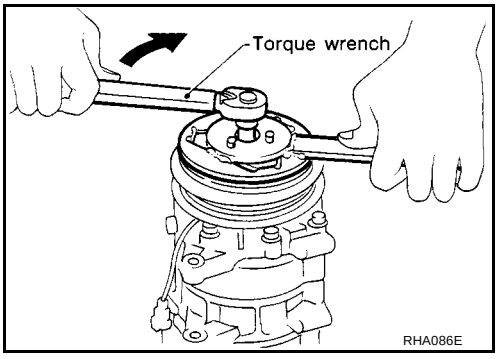

6. Check clearance around the entire periphery of clutch disc.

   Disc to pulley clearance : 0.3 - 0.6 mm (0.012 - 0.024 in)

   If the specified clearance is not obtained, replace adjusting spacer and readjust.

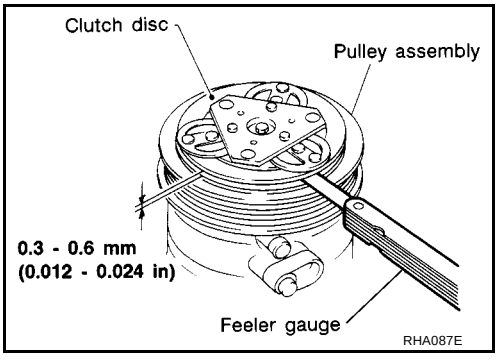

Break-In Operation

When replacing compressor clutch assembly, always carry out the break-in operation. This is done by engaging and disengaging the clutch about thirty times. Break-in operation raises the level of transmitted torque.

Low-pressure Flexible Hose

EJS0031E

REMOVAL

1. Use refrigerant collecting equipment (for HFC-134a) to discharge refrigerant.
2. Remove the clip from the low-pressure flexible hose.

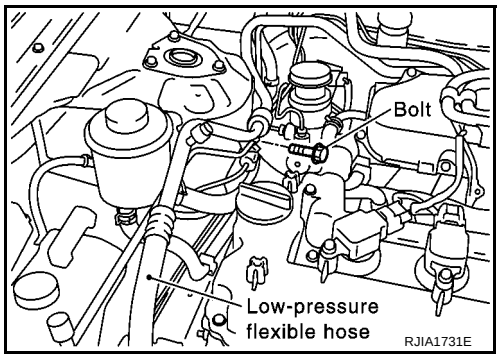

3. Remove the mounting bolts from the low-pressure flexible hose.
4. Remove the low-pressure flexible hose.

   CAUTION:
   Cap or wrap the joint of the pipe with suitable material such as vinyl tape to avoid the entry of air.

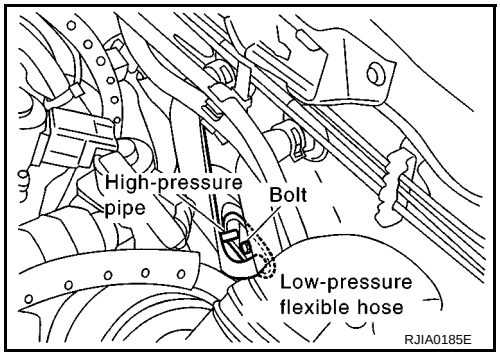

INSTALLATION

CAUTION:

- **Replace the O-ring of the low-pressure flexible hose with a new one, then apply compressor oil to it when installing it.**
- **When pouring refrigerant, check for leaks.**

Low-pressure flexible hose and bolts mounting the high-pressure pipe (evaporator side)

Tightening torque :2.9 - 5.9 N·m (0.29 - 0.6 kg-m, 26 - 52 in-lb)

Nut (Bolt) mounting the low-pressure flexible hose (compressor side)

Tightening torque :7.8 - 19.6 N·m (0.8 - 2.0 kg-m, 70 - 173 in-lb)

High-pressure Flexible Hose

EJS0031F

REMOVAL

1. Use refrigerant collecting equipment (for HFC-134a) to discharge refrigerant.
2. Remove the clip from high-pressure flexible hose.
3. Remove the mounting bolt and nut from the high-pressure flexible hose, then remove it.

   CAUTION:
   Cap or wrap the joint of the pipe with suitable material such as vinyl tape to avoid the entry of air.

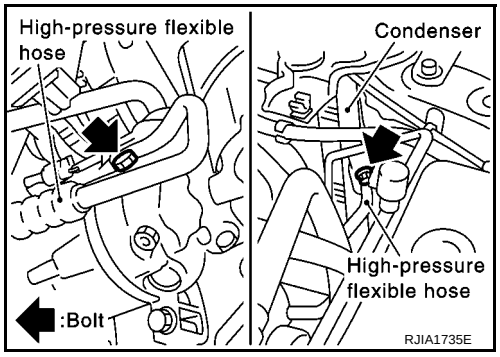

INSTALLATION

CAUTION:

- **Replace the O-ring of the high-pressure flexible hose with a new one, then apply compressor oil to it when installing it.**
- **When pouring refrigerant, check for leaks.**

Bolt and nut mounting the high-pressure flexible hose

Tightening torque :7.8 - 19.6 N·m (0.8 - 2.0 kg-m, 70 - 173 in-lb)

High-pressure Pipe

EJS0031G

REMOVAL

1. Use refrigerant collecting equipment (for HFC-134a) to discharge refrigerant.
2. Remove the low-pressure flexible hose. Refer to ATC-138, "Low-pressure Flexible Hose" .
3. Remove the high-pressure pipe from the clip.

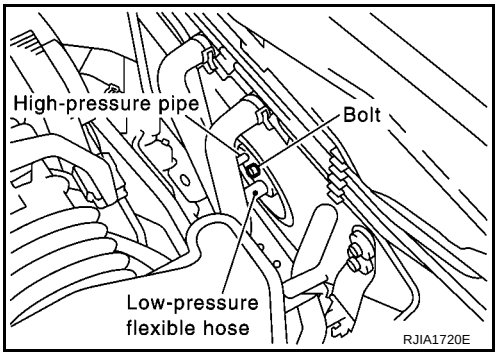

4. Remove the mounting bolt from the high-pressure pipe.
5. Remove the high-pressure pipe.

   CAUTION:
   Cap or wrap the joint of the pipe with suitable material such as vinyl tape to avoid the entry of air.

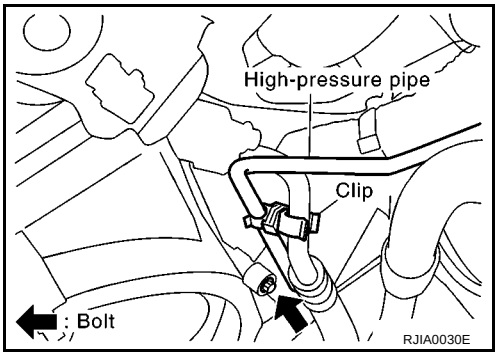

INSTALLATION

CAUTION:

- **Replace the O-ring of the high-pressure pipe and low-pressure flexible hose with a new one, then apply compressor oil to it when installing it.**
- **When pouring refrigerant, check for leaks.**

Bolts mounting the high-pressure pipe (condenser side, evaporator side)

Tightening torque :2.9 - 5.9 N·m (0.29 - 0.6 kg-m, 26 - 52 in-lb)

Refrigerant Pressure Sensor

EJS0031H

REMOVAL AND INSTALLATION

1. Use refrigerant collecting equipment (for HFC-134a) to discharge refrigerant.
2. Remove liquid tank.
3. Using a vice, secure liquid tank, and remove refrigerant pressure sensor.

   CAUTION:
   - **When working, be careful not to damage the condenser fins.**
   - **Apply compressor oil to the O-ring of the refrigerant pressure sensor when installing it.**

   Tightening torque :9.8 - 11.7 N·m (1.0 - 1.2kg-m, 87 - 104 in-lb)

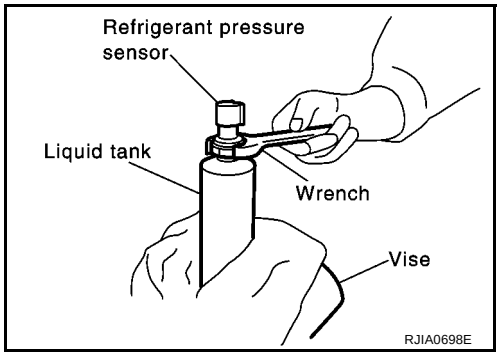

Dual-pressure Switch

EJS0031I

REMOVAL AND INSTALLATION

YD22DDT Engine Models

1. Use refrigerant collecting equipment (for HFC-134a) to discharge refrigerant.
2. Remove liquid tank.
3. Using a vice, secure liquid tank, and remove refrigerant pressure sensor.

   CAUTION:
   - **When working, be careful not to damage the condenser fins.**
   - **Apply compressor oil to the O-ring of the refrigerant pressure sensor when installing it.**

   Tightening torque :9.8 - 11.7 N·m (1.0 - 1.2kg-m, 87 - 104 in-lb)

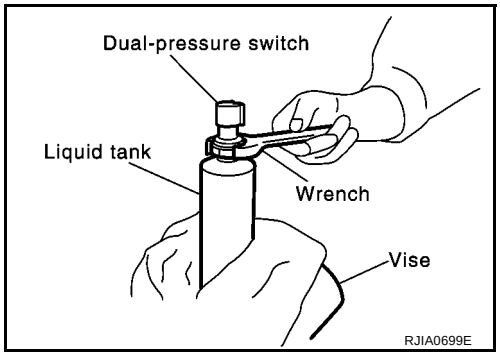

YD22DDTi Engine Models

1. Use refrigerant collecting equipment (for HFC-134a) to discharge refrigerant.
2. Remove condenser. Refer to ATC-141, "Condenser Assembly" .
3. Remove dual-pressure switch from condenser.

   CAUTION:
   - **When working, be careful not to damage the condenser fins.**
   - **Apply compressor oil to the O-ring of the refrigerant pressure sensor when installing it.**

   Tightening torque :9.8 - 11.7 N·m (1.0 - 1.2kg-m, 87 - 104 in-lb)

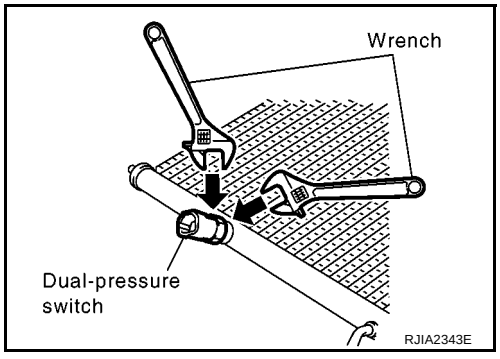

Condenser Assembly

EJS0031J

REMOVAL

1. Use refrigerant collecting equipment (for HFC-134a) to discharge refrigerant.
2. Disconnect the high-pressure flexible hose and the high-pressure pipe from the condenser.

   CAUTION:
   Cap or wrap the joint of the pipe with suitable material such as vinyl tape to avoid the entry of air.
3. Remove the battery and battery tray.
4. Remove the front grille and radiator mounting bracket.

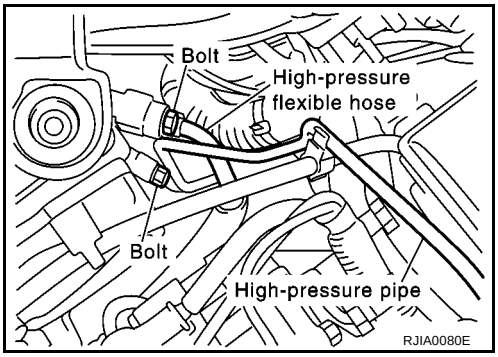

5. Remove the mounting nuts from the condenser upper bracket.

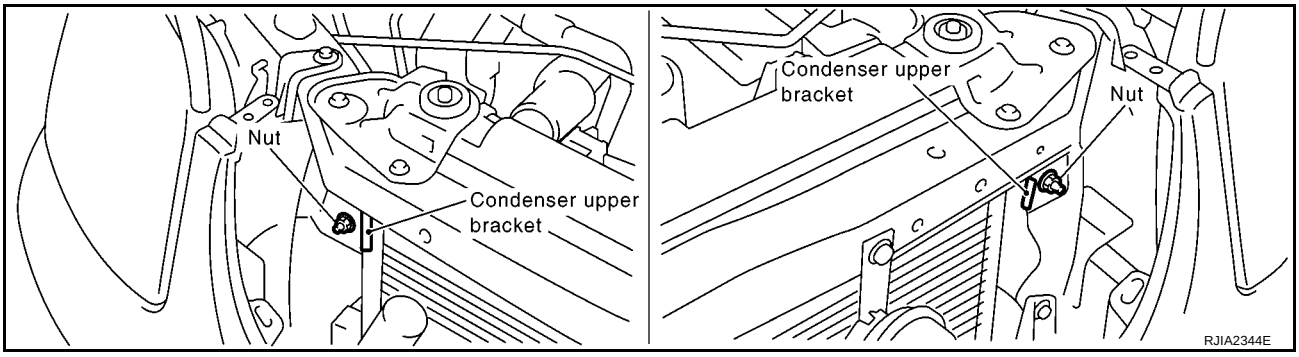

6. Remove the radiator from the lower mount, move it to the engine side, then remove the condenser between the radiator and the radiator core support.

   CAUTION:
   Be careful not to damage the core surface of the condenser and the radiator.

INSTALLATION

CAUTION:

- **Replace the O-rings of the high-pressure pipe and the high-pressure flexible hose with new ones, then apply compressor oil to them after installing them.**
- **When pouring refrigerant, check for leaks.**

High-pressure flexible hose mounting bolts

Tightening torque :7.8 - 19.6 N·m (0.8 - 2.0 kg-m, 70 - 173 in-lb)

High-pressure pipe mounting bolts

Tightening torque :2.9 - 5.9 N·m (0.29 - 0.6 kg-m, 26- 52 in-lb)

Condenser mounting bolts

Tightening torque :3.82 - 4.51 N·m (0.39 - 0.46 kg-m, 34 - 39 in-lb)

Evaporator

EJS0031K

REMOVAL

1. Use refrigerant collecting equipment (for HFC-134a) to discharge refrigerant.
2. Disconnect the low-pressure flexible hose and the high-pressure pipe from the evaporator.

   CAUTION:
   Cap or wrap the joint of the low-pressure flexible hose and the high-pressure pipe with a suitable tool such as a vinyl tape to avoid the entry of air.
3. Hold expansion valve and move it slightly upward. Push evaporator toward rear of vehicle.

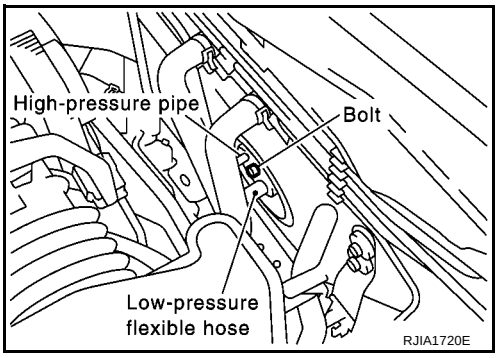

4. Remove the drain hose and lower cover mounting screw.
5. Swivel rear of lower case toward passenger seat to remove lower case.
6. Remove the intake sensor from evaporator.
7. Slide the evaporator to backward, then remove it from the heater & cooling unit.

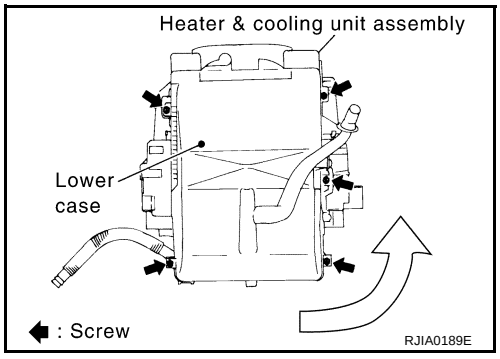

INSTALLATION

CAUTION:

- **Replace the O-rings of the low-pressure flexible hose and the high-pressure pipe with new ones, then apply compressor oil to them when installing them.**
- **Mark the mounting position of the intake sensor bracket.**

Expansion Valve

EJS0031L

REMOVAL

1. Use refrigerant collecting equipment (for HFC-134a) to discharge refrigerant.
2. Disconnect the low-pressure flexible hose and high-pressure pipe from the evaporator.

   CAUTION:
   Cap or wrap the joint of the low-pressure flexible hose and the high-pressure pipe with a suitable tool such as a vinyl tape to avoid the entry of air.
3. Remove the evaporator. Refer to ATC-141, "REMOVAL" .
4. Remove the expansion valve from evaporator.

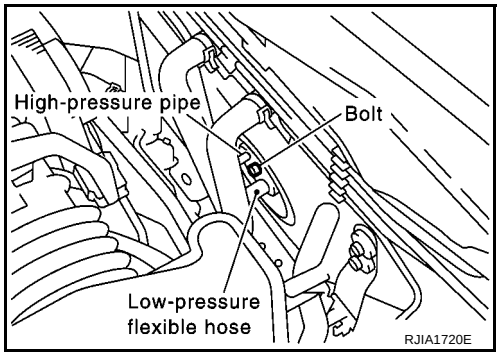

INSTALLATION

1. Set the expansion valve to cooler grommet.

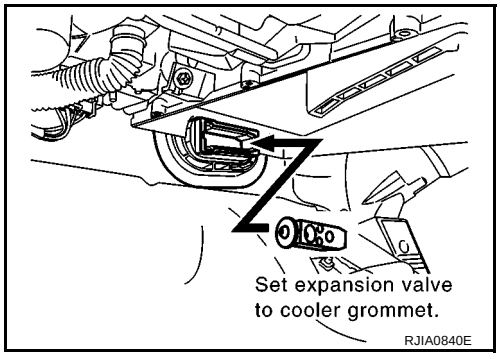

2. Install the evaporator to heater & cooling unit.

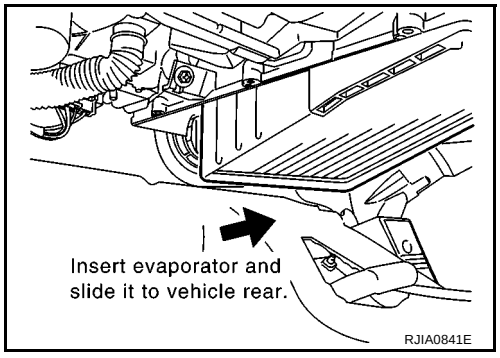

3. Install the lower cover, then slide evaporator to forward.
4. Install the expansion valve from engine compartment

Expansion valve mounting bolts

Tightening torque :2.9 - 5.0 N·m (0.30 - 0.50 kg-m, 26 - 44 in-lb)

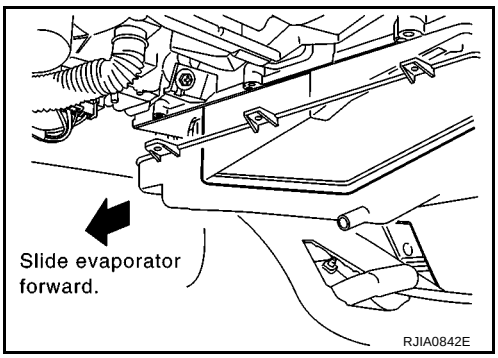

Checking for Refrigerant Leaks

EJS0031M

Perform a visual inspection of all refrigeration parts, fittings, hoses and components for signs of A/C lubricant leakage, damage and corrosion. A/C lubricant leakage may indicate an area of refrigerant leakage. Allow extra inspection time in these areas when using either an electronic refrigerant leak detector or fluorescent dye leak detector.
If dye is observed, confirm the leak with an electronic refrigerant leak detector. It is possible a prior leak was repaired and not properly cleaned.
When searching for leaks, do not stop when one leak is found but continue to check for additional leaks at all system components and connections.
When searching for refrigerant leaks using an electronic leak detector, move the probe along the suspected leak area at 1 to 2 inches per second and no further than 1/4 inch from the component.

CAUTION:
Moving the electronic leak detector probe slower and closer to the suspected leak area will improve the chances of finding a leak.

Checking System for Leaks Using the Fluorescent Leak Detector

EJS0031N

1. Check A/C system for leaks using the UV lamp and safety goggles (J-42220) in a low sunlight area (area without windows preferable). Illuminate all components, fittings and lines. The dye will appear as a bright green/yellow area at the point of leakage. Fluorescent dye observed at the evaporator drain opening indicates an evaporator core assembly (tubes, core or expansion valve) leak.
2. If the suspected area is difficult to see, use an adjustable mirror or wipe the area with a clean shop rag or cloth, with the UV lamp for dye residue.
3. After the leak is repaired, remove any residual dye using dye cleaner (J-43872) to prevent future misdiagnosis.
4. Perform a system performance check and verify the leak repair with an approved electronic refrigerant leak detector.

NOTE:
Other gases in the work area or substances on the A/C components, for example, anti-freeze, windshield washer fluid, solvents and lubricants, may falsely trigger the leak detector. Make sure the surfaces to be checked are clean.
Clean with a dry cloth or blow off with shop air.
Do not allow the sensor tip of the detector to contact with any substance. This can also cause false readings and may damage the detector.

Dye Injection

EJS0031O

(This procedure is only necessary when recharging the system or when the compressor has seized and was replaced.)

1. Check A/C system static (at rest) pressure. Pressure must be at least 345 kPa (3.45 bar, 3.52kg/cm^2 , 50 psi).
2. Pour one bottle (1/4 ounce / 7.4 cc) of the A/C refrigerant dye into the injector tool (J-41459).
3. Connect the injector tool to the A/C LOW PRESSURE side service fitting.
4. Start engine and switch A/C ON.
5. When the A/C operating (compressor running), inject one bottle (1/4 ounce / 7.4 cc) of fluorescent dye through the low-pressure service valve using dye injector tool J-41459 (refer to the manufacture's operating instructions).

6. With the engine still running, disconnect the injector tool from the service fitting.

CAUTION:

Be careful the A/C system or replacing a component, pour the dye directly into the open system connection and proceed with the service procedures.

7. Operate the A/C system for a minimum of 20 minutes to mix the dye with the system oil. Depending on the leak size, operating conditions and location of the leak, it may take from minutes to days for the dye to penetrate a leak and become visible.

Electronic Refrigerant Leak Detector

EJS0031P

PRECAUTIONS FOR HANDLING LEAK DETECTOR

When performing a refrigerant leak check, use an A/C leak detector or equivalent. Ensure that the instrument is calibrated and set properly per the operating instructions.
The leak detector is a delicate device. In order to use the leak detector properly, read the operating instructions and perform any specified maintenance.

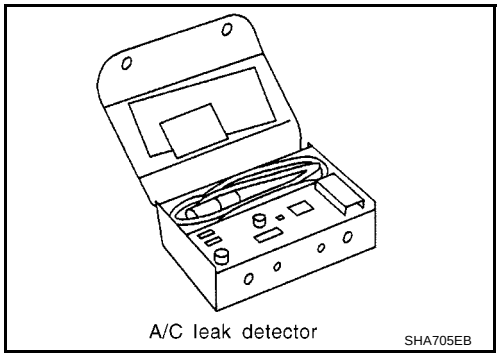

1. Position probe approximately 5 mm (3/16 in) away from point to be checked.

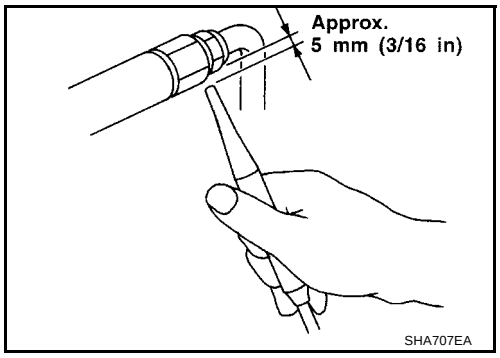

2. When testing, circle each fitting completely with probe.

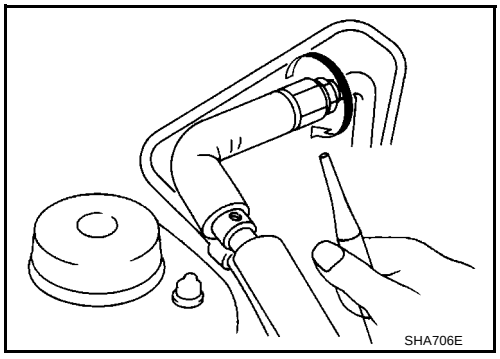

3. Move probe along component approximately 25 to 50 mm (1 to 2 in)/sec.

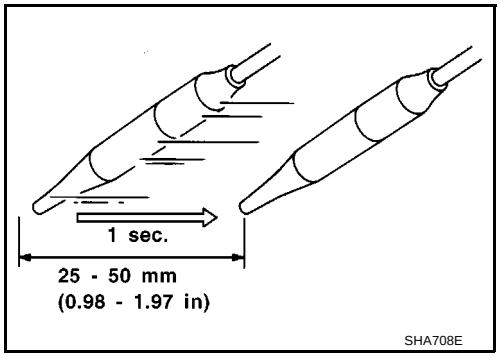

CHECKING PROCEDURE

To prevent inaccurate or false readings, make sure there is no refrigerant vapor, shop chemicals, or cigarette smoke in the vicinity of the vehicle. Perform the leak test in calm area (low air/wind movement) so that the leaking refrigerant is not dispersed.

1. Turn engine OFF.
2. Connect a suitable A/C manifold gauge set to the A/C service ports.
3. Check if the A/C refrigerant pressure is at least 345 kPa (3.45 bar, 3.52 kg/cm^2 , 50 psi) above 16°C (61°F). If less than specification, recover/evacuate and recharge the system with the specified amount of refrigerant.

NOTE:
At temperatures below 16°C (61°F), leaks may not be detected since the system may not reach 345 kPa (3.54 kg/cm^2 , 50 psi).

4. Conduct the leak test from the high side (compressor discharge a to evaporator inlet g) to the low side (drain hose h to shaft seal k). Refer to ATC-130, "Components" . Perform a leak check for the following areas carefully. Clean the component to be checked and move the leak detected probe completely around the connection/component. ATC-130, "Components" .
   Compressor
   Check the fitting of high and low pressure hoses, relief valve and shaft seal.
   Liquid tank
   Check the refrigerant pressure sensor.
   Service valves
   Check all around the service valves. Ensure service valve caps are secured on the service valves (to prevent leaks).

   NOTE:
   After removing A/C manifold gauge set from service valves, wipe any residue from valves to prevent any false readings by leak detector.

   Cooling unit (Evaporator)
   With engine OFF, turn blower fan on “High” for at least 15 seconds to dissipate any refrigerant trace in the cooling unit. Wait a minimum of 10 minutes accumulation time (refer to the manufacturer′s recommended procedure for actual wait time) before inserting the leak detector probe into the drain hose.
   Keep the probe inserted for at least 10 seconds. Use caution not to contaminate the probe tip with water or dirt that may be in the drain hose.
5. If a leak detector detects a leak, verify at least once by blowing compressed air into area of suspected leak, then repeat check as outlined above.
6. Do not stop when one leak is found. Continue to check for additional leaks at all system components.
   If no leaks are found, perform steps 7 - 10.
7. Start engine.
8. Set the heater A/C control as follows;

a. A/C switch: ON
b. Face mode
c. Intake position: Recirculation
d. Max cold temperature
e. Fan speed: High

9. Run engine at 1,500 rpm for at least 2 minutes.
10. Turn engine OFF and perform leak check again following steps 4 through 6 above.

Refrigerant leaks should be checked immediately after stopping the engine. Begin with the leak detector at the compressor. The pressure on the high-pressure side will gradually drop after refrigerant circulation stops and pressure on the low-pressure side will gradually rise, as shown in the graph. Some leaks are more easily detected when pressure is high.

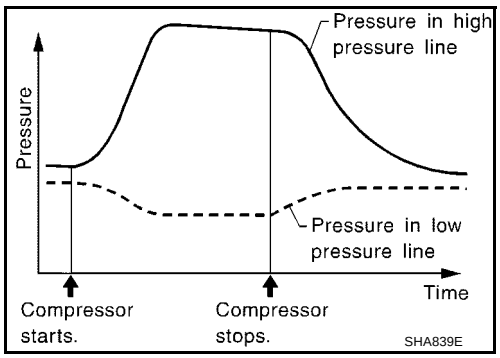

11. Before connecting ACR4 to vehicle, check ACR4 gauges. No refrigerant pressure should be displayed. If pressure is displayed, recover refrigerant from equipment lines and then check refrigerant purity.
12. Discharge A/C system using approved refrigerant recovery equipment. Repair the leaking fitting or component as necessary.
13. Evacuate and recharge A/C system and perform the leak test to confirm no refrigerant leaks.
14. Conduct A/C performance test to ensure system works properly.

SERVICE DATA AND SPECIFICATIONS (SDS)

PFP:00030

Compressor

EJS0031Q

Model		Calsonic Kansei make CSV613
Type		V-6 variable displacement
Displacement cm^3 (cu. in)/rev	Max.	125 (7.628)
	Min.	6.0 (0.366)
Cylinder bore × stroke mm (in)		30 (1.26) × [1.2 - 25.9 (0.047 - 1.020)]
Direction of rotation		Clockwise (viewed from drive end)
Drive belt		With QG engine: Poly V With YD engine: Type A

Lubricant

EJS0031R

Name		Nissan A/C System Oil Type S
Part number		KLH00-PAGS0
Capacity m ℓ (Imp fl oz)	Total in system	180 (6.3)
	Compressor (Service part) charging amount	180 (6.3)

Refrigerant

EJS0031S

Type	HFC-134a (R-134a)
Capacity kg (lb)	0.45 - 0.55 (0.99 - 1.21)

Engine Idling Speed

EJS0031T

Refer to EC-552, "Idle Speed and Ignition Timing" for QG engine (WITH EURO-OBD), EC-936, "Idle Speed and Ignition Timing" for QG engine (WITHOUT EURO-OBD) or EC-1251, "General Specifications" for YD engine (WITH EURO-OBD), EC-1529, "General Specifications" for YD engine (WITHOUT EURO-OBD).

Belt Tension

EJS0031U

Refer to EM-13, "DRIVE BELTS" (QG engine) or EM-117, "DRIVE BELTS" (YD engine).