F I A T S E D I C I

O W N E R H A N D B O O K

Downloaded from www.Manualslib.com manuals search engine

Dear Customer,

Thank you for selecting Fiat and congratulations on your choice of a Fiat SEDICI.

We have written this handbook to help you get to know all your new vehicle features and use it in the best possible way.

You should read it right through before taking the road for the first time.

You will find information, tips and important warnings regarding the driving of your vehicle to help you derive the maximum from your Fiat SEDICI technological features.

What's more every single component of the Fiat SEDICI is fully recyclable. At the end of your vehicle's useful lifespan any Fiat Dealership will be pleased to make arrangements for your vehicle to be recycled and nature benefits in two ways: there's no pollution from waste disposal and the demand for raw materials is reduced.

The enclosed Warranty Booklet lists the services that Fiat offers to its Customers:

❒ the Warranty Certificate with terms and conditions for maintaining its validity

❒ the range of additional services available to Fiat Customers.

Best regards and good motoring!

This Owner Handbook describes all Fiat SEDICI versions. As a consequence, you should consider only the information which is related to the engine and bodywork version of the vehicle you purchased.

Downloaded from www.Manualslib.com manuals search engine

FIAT ORIGINAL SPARE PARTS AND FIAT RE-CONDITIONED SPARE PARTS

FIAT ORIGINAL SPARE PARTS

These spare parts ensure the reliability and technological quality needed to travel safely. Designed on the basis of the same project of the components fitted on the vehicle, the original spare parts undergo very harsh tests before being produced or re-conditioned, with the aim of being used to keep the vehicle performance unchanged in time.

Therefore, for an accurate and careful maintenance, choose Fiat original spare parts (re-conditioned and non re-conditioned), which can be identified by the features of their package and which are available only at the Fiat Dealership.

By choosing Fiat original spare parts (re-conditioned and non re-conditioned) you can rely on a rapid and efficient service provided by skilled operators, on good equipment and a wide range of parts.

The Fiat Dealership uses Fiat original spare parts and re-conditioned spare parts.

FIAT RE-CONDITIONED SPARE PARTS

They are Fiat original spare parts/mechanical assemblies, already used but given back to Fiat, which renews them completely to meet the same qualitative and reliability requirements of the newly original spare parts.

Fiat re-conditioned spare parts:

- ❒ give the Customers the opportunity to buy spare mechanical assemblies (engines, transmissions, etc.) at particularly favourable prices;
- ❒ contribute to safeguard the environment by reducing scrapping operations and the disposal of removed materials.

Downloaded from www.Manualslib.com manuals search engine

SERVICE STATION GUIDE

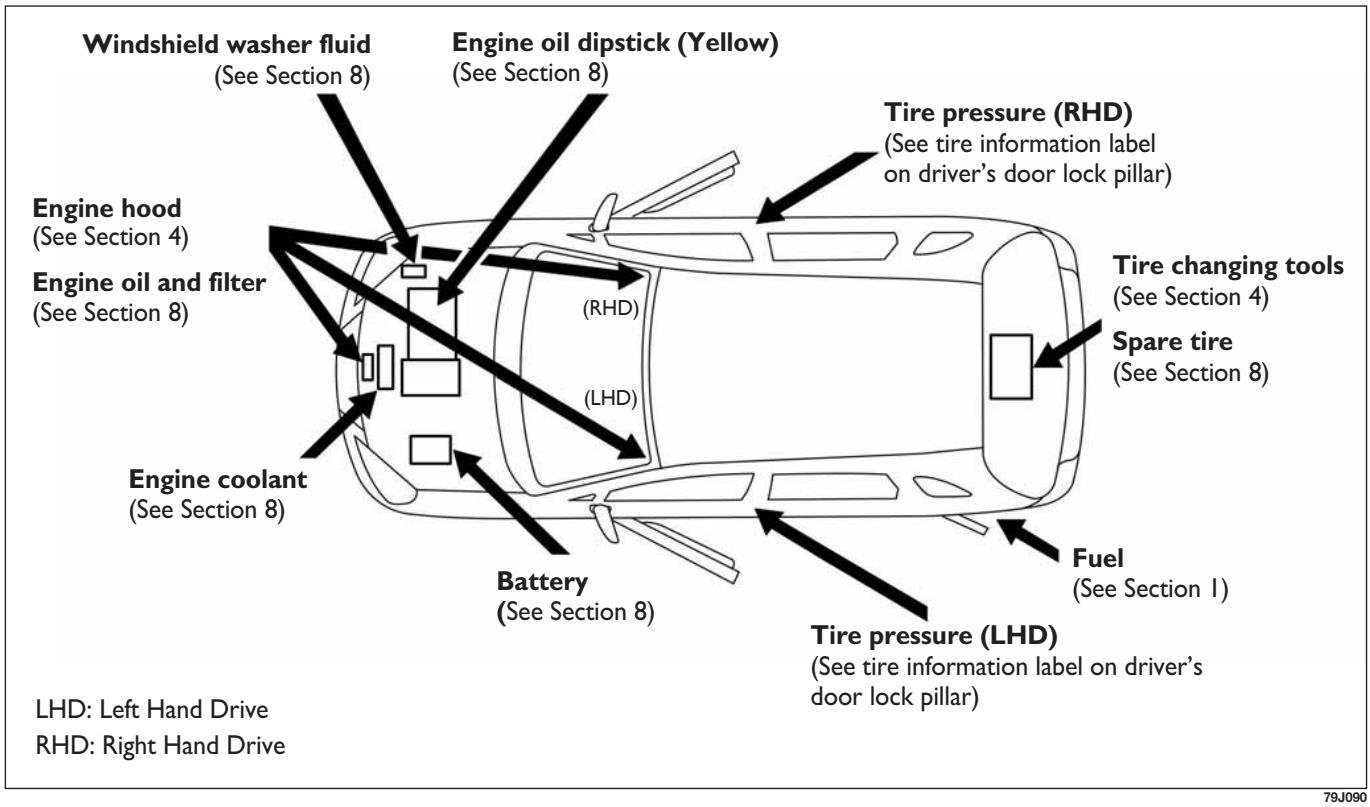

Downloaded from www.Manualslib.com manuals search engine

BATTERY LABEL SYMBOL MEANINGS

No smoking, no naked flames, no sparks

Keep away from children

Note operating instructions

Shield eyes

Battery acid

Explosive gas

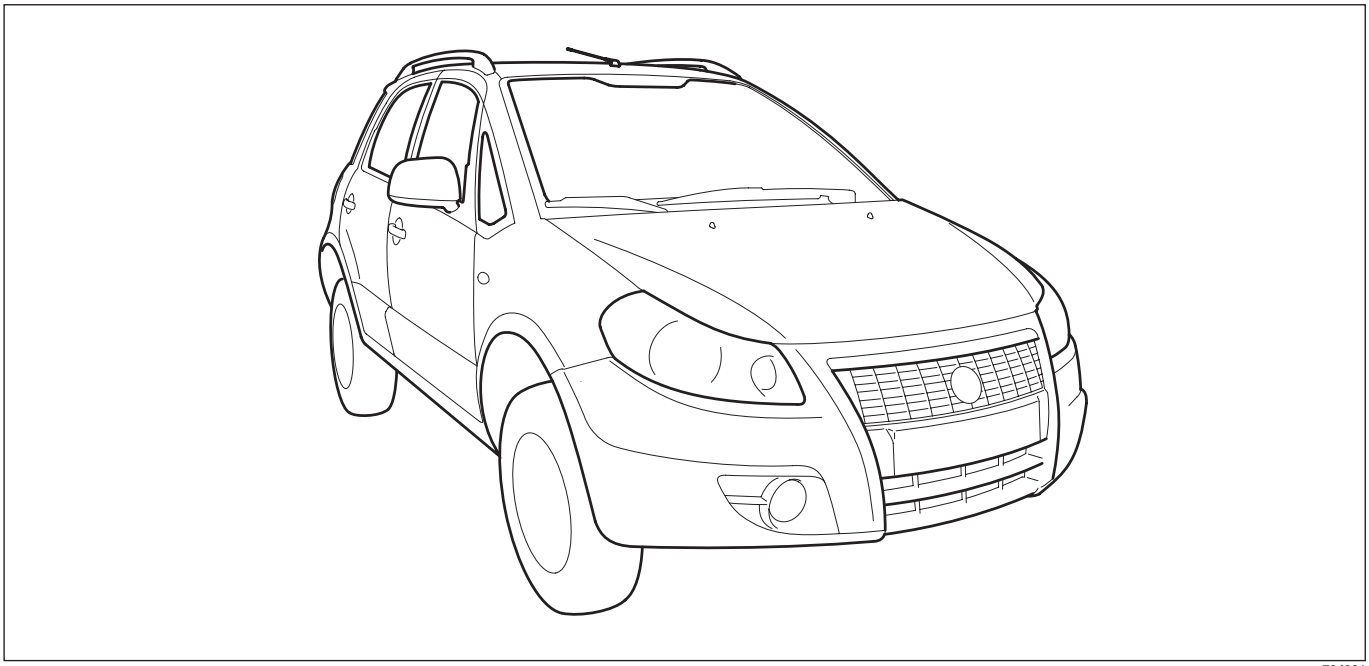

79J001

Downloaded from www.Manualslib.com manuals search engine

FOREWORD

This manual should be considered a permanent part of the vehicle and should remain with the vehicle when resold or otherwise transferred to a new owner or operator. Please read this manual carefully before operating your new Fiat and review the manual from time to time. It contains important information on safety, operation and maintenance.

All information in this manual is based on the latest product information available at the time of publication. Due to improvements or other changes, there may be discrepancies between information in this manual and your vehicle. Fiat reserves the right to make production changes at any time, without notice and without incurring any obligation to make the same or similar changes to vehicles previously built or sold.

This vehicle may not comply with standards or regulations of other countries. Before attempting to register this vehicle in any other country, check all applicable regulations and make any necessary modifications.

IMPORTANT

Please read this manual and follow its instructions carefully. To emphasize special information, the symbol ⚠ and the words WARNING, IMPORTANT and NOTE have special meanings. These special meanings apply except when laws or regulations require that the signal words be used with a different meaning.

Pay special attention to the messages highlighted by these signal words:

⚠ ***WARNING***

Indicates a potential hazard that could result in death or injury.

IMPORTANT Indicates a potential hazard that could result in vehicle damage.

NOTE Indicates special information to make maintenance easier or instructions clearer.

Downloaded from www.Manualslib.com manuals search engine

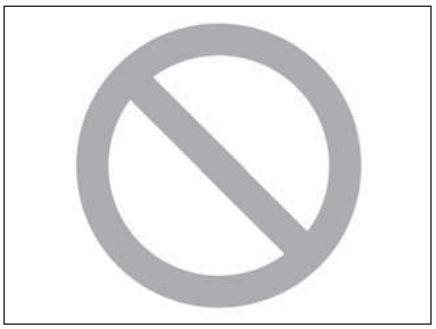

75F080

The circle with a slash in this manual means “Don’t do this” or “Don’t let this happen”.

MODIFICATION WARNING

WARNING

Do not modify this vehicle. Modification could adversely affect safety, handling, performance, or durability and may violate governmental regulations. In addition, damage or performance problems resulting from modification may not be covered under warranty.

IMPORTANT Improper installation of mobile communication equipment such as cellular telephones or CB (Citizen’s Band) radios may cause electronic interference with your vehicle’s ignition system, resulting in vehicle performance problems. Consult your Fiat Dealership or qualified service technician for advice on installing such mobile communication equipment.

Downloaded from www.Manualslib.com manuals search engine

TABLE OF CONTENTS

BEFORE DRIVING 1

STEERING COLUMN CONTROLS 2

INSTRUMENT PANEL 3

OTHER CONTROLS AND EQUIPMENT 4

OPERATING YOUR VEHICLE 5

DRIVING TIPS 6

VEHICLE LOADING AND TOWING 7

INSPECTION AND MAINTENANCE 8

EMERGENCY SERVICE 9

BODY WORK CARE 10

GENERAL INFORMATION 11

TECHNICAL SPECIFICATIONS 12

SUPPLEMENT 13

INDEX 14

Downloaded from www.Manualslib.com manuals search engine

Page left blank voluntarily.

Downloaded from www.Manualslib.com manuals search engine

BEFORE DRIVING 1

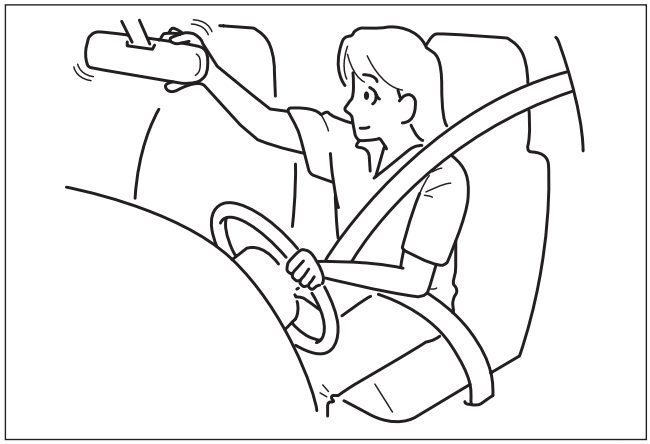

60G404

FUEL RECOMMENDATION 10
KEYS 11
DOOR LOCKS 12
WINDOWS 24
MIRRORS 27
SEAT ADJUSTMENT 28
ADJUSTABLE HEAD RESTRAINTS (if equipped) 30
SEAT BELTS AND CHILD RESTRAINT SYSTEMS 31
SUPPLEMENTAL RESTRAINT SYSTEM (air bags) (if equipped) 47

Downloaded from www.Manualslib.com manuals search engine

FUEL RECOMMENDATION

GASOLINE ENGINE

If your vehicle is not fitted with a restrictor in the fuel filler pipe then you may use leaded or unleaded gasoline with an octane number (RON) of 85 or higher.

Note, it is preferable to use unleaded gasoline.

If your vehicle is fitted with a restrictor in the fuel filler pipe then you must use unleaded gasoline with an octane number (RON) of 91 or higher (or RON of 95 or higher if it is stated on the fuel filler lid). These vehicles are also identified by a label attached near the fuel filler pipe that states: “UNLEADED FUEL ONLY”.

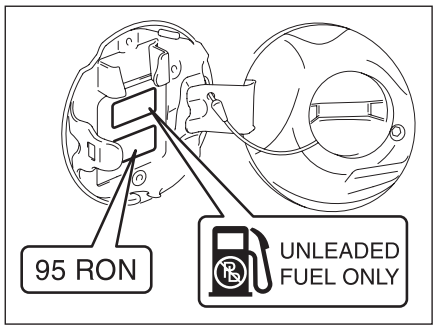

79J054

Gasoline/ Ethanol blends

Blends of unleaded gasoline and ethanol (grain alcohol), also known as gasohol, are commercially available in some areas. Blends of this type may be used in your vehicle if they are no more than 10% ethanol. Make sure this gasoline- ethanol blend has octane ratings no lower than those recommended for gasoline.

Gasoline/ Methanol blends

Blends of unleaded gasoline and methanol (wood alcohol) are also commercially available in some areas. DO NOT USE fuels containing more than 5% methanol under any circumstances. Fuel system damage or vehicle performance problems resulting from the use of such fuels are not the responsibility of Fiat and may not be covered under the New Vehicle Warranty.

Fuels containing 5% or less methanol may be suitable for use in your vehicle if they contain cosolvents and corrosion inhibitors.

NOTE If you are not satisfied with the driveability or fuel economy of your vehicle when you are using a gasoline/ alcohol blend, you should switch back to unleaded gasoline containing no alcohol.

IMPORTANT Be careful not to spill fuel containing alcohol while refueling. Fuels containing alcohol can cause paint damage, which is not covered under the New Vehicle Limited Warranty.

DIESEL ENGINE

The diesel fuel should be with Cetane Index higher than 50 and sulfur content less than 50 ppm (parts per million). You should use the diesel fuel conformable to EN590 that corresponded to Euro IV emission control. Do not use marine diesel fuel, heating oils and so forth. If you use improper diesel fuel, it may cause serious engine damage.

Downloaded from www.Manualslib.com manuals search engine

IMPORTANT The vehicle must only be filled with diesel fuel for motor vehicles, in compliance with European Standard EN590. The use of other products or mixtures may irreparably damage the engine with invalidation of the warranty due to the damage caused. In the event of accidentally filling with another type of fuel, do not start the engine and empty the tank. If the engine has been run even for only a very short time, in addition to the tank, it is also necessary to drain out the whole fuel circuit.

IMPORTANT The fuel tank has an air space to allow for fuel expansion in hot weather. If you continue to add fuel after the filler nozzle has automatically shut off or an initial blowback occurs, the air chamber will become full. Exposure to heat when fully fuelled in this manner will result in leakage due to fuel expansion. To prevent such fuel leakage, stop filling after the filler nozzle has automatically shut off, or when using an alternative non automatic system, initial vent blowback occurs.

WARNING

Do not put naked flames or lighted cigarettes near the fuel filler hole as there is a danger of fire. Do not bend too close to the hole either so as not to breathe in harmful vapours.

KEYS

Your vehicle comes with a pair of identical keys. One key can open all of the locks on the vehicle. Keep the spare key in a safe place.

The key identification number is stamped on a metal tag provided with the keys or on the keys. Keep the tag (if equipped) in a safe place. If you lose your keys, you will need this number to have new keys made.

IMPORTANT All the keys and the metal tag must be handed over to the new owner when selling the vehicle.

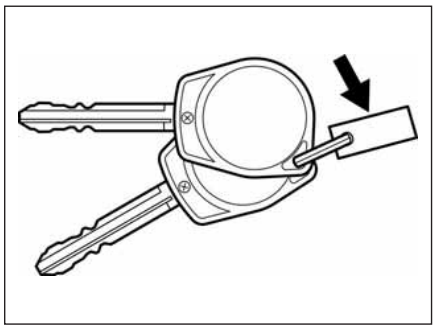

79J020

Fiat CODE - Immobilizer System (if equipped)

This system is designed to help prevent vehicle theft by electronically disabling the engine starting system.

The engine can be started only with your vehicle's original immobilizer ignition key which has an electronic identification code programmed into it. The key communicates the identification code to the vehicle when the key is turned to the "ON" position. If you need to make spare keys, see your Fiat Dealership. The vehicle must be programmed with the correct identification code for the spare keys. A key made by an ordinary locksmith will not work.

Downloaded from www.Manualslib.com manuals search engine

62J127

If the immobilizer system light (**1**) for gasoline engine or service vehicle soon (SVS) light (**2**) for diesel engine blinks when the ignition switch is in the "ON" position, the engine will not start.

NOTE

If this light blinks, turn the ignition switch to the "LOCK" position, then turn it back to the "ON" position. If the light still blinks with the ignition switch turned to the "ON" position, there may be something wrong with your key or with the immobilizer system. Ask your Fiat dealer to inspect the system.

NOTE

❒ If you lose your Immobilizer ignition key, see your Fiat Dealership as soon as possible to have the lost one deactivated, then have the new key made by them.

❒ If you own other vehicles with immobilizer keys, keep those keys away from the ignition switch when using your Fiat, or the engine may not be started because they may interfere with your Fiat's immobilizer system.

❒ In case of attaching any metal objects to the immobilizer key, it may not start the engine.

IMPORTANT The immobilizer key is a sensitive electronic instrument. To avoid damaging the immobilizer key:

❒ Do not expose it to impacts, moisture or high temperature such as on the dashboard under direct sunlight.

❒ Keep the immobilizer key away from magnetic objects.

IMPORTANT The electronic components inside the key may be damaged if the key is submitted to sharp knocks.

This immobilizer system, model 5WK49181 and 5WK49182 for gasoline engine or model 5WK49183 and 5WK49184 for diesel engine are in compliance with the essential requirements and other provisions of the Directive 1999/5/EC.

Ignition Key Reminder (if equipped)

A buzzer sounds intermittently to remind you to remove the ignition key if it is in the ignition switch when the driver's door is opened.

DOOR LOCKS

SIDE DOOR LOCKS

To lock a front door from outside the vehicle:

❒ Insert the key and turn the top of the key toward the rear of the vehicle, or

❒ Turn the lock knob forward and hold the door handle up as you close the door.

To unlock a front door from outside the vehicle, insert the key and turn the top of the key toward the front of the vehicle.

To lock a rear door from outside the vehicle, turn the lock knob forward and close the door.

To lock a door from inside the vehicle, turn the lock knob forward. Turn the lock knob rearward to unlock the door.

NOTE Be sure to hold the door handle up when you close a locked front door, or the door will not remain locked.

Downloaded from www.Manualslib.com manuals search engine

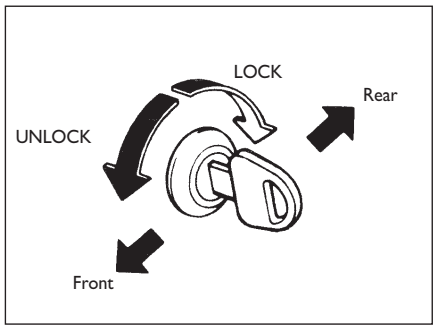

60B008

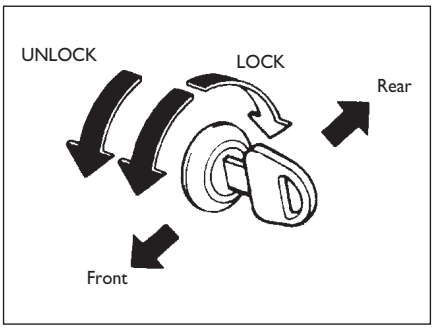

54G294

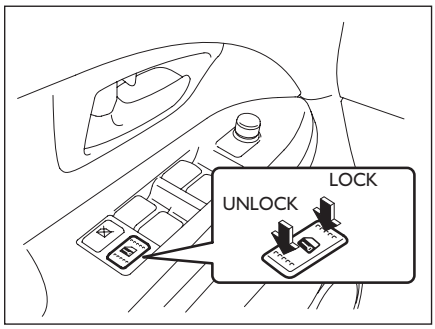

79J022

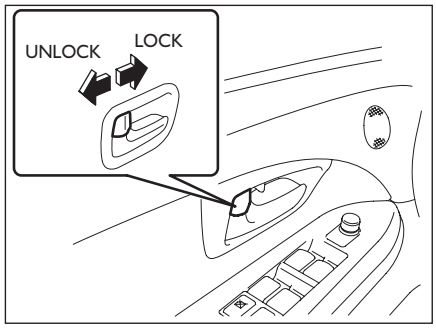

79J021

CENTRAL DOOR LOCKING SYSTEM (if equipped)

You can lock and unlock all doors (including the rear door) simultaneously by using the key in the driver's door lock.

To lock all doors simultaneously, insert the key in the driver's door lock and turn the top of the key toward the rear of the vehicle once.

To unlock all doors simultaneously, insert the key in the driver's door lock and turn the top of the key toward the front of the vehicle twice.

To unlock the driver's door only, insert the key in that door lock and turn the top of the key toward the front of the vehicle once.

You can also lock or unlock all doors by depressing the front or rear of the switch, respectively.

NOTE

❒ If your vehicle is equipped with the keyless entry system, you can also lock or unlock all doors by operating the transmitter. Refer to "Keyless Entry System" in this section.

❒ If your vehicle is equipped with the keyless start system, you can also lock or unlock all doors by pushing the request switch on the door handle. Refer to "Keyless Start System" in this section.

Downloaded from www.Manualslib.com manuals search engine

DEAD LOCK SYSTEM (if equipped)

This system is designed to help prevent tamper-unlocking of the door locks.

You can activate this system by turning the key in the driver's door lock.

NOTE

❒ If your vehicle is equipped with the keyless entry system, you can activate the dead lock system by operating the transmitter. Refer to "Keyless Entry System" in this section.

❒ If your vehicle is equipped with the keyless start system, you can activate the dead lock system by pushing the request switch on the door handle. Refer to "Keyless Start System" in this section.

WARNING

Do not activate the dead lock system if there are occupants in the vehicle. They will be locked in the vehicle and cannot unlock the doors from inside.

NOTE

❒ The dead lock system will not operate if one or more door (s) is (are) not closed and latched completely. Make sure all doors are completely closed and latched when activating the dead lock system.

❒ The dead lock system is released automatically allowing all the side doors to be unlocked when the ignition switch is turned to the "ON" position.

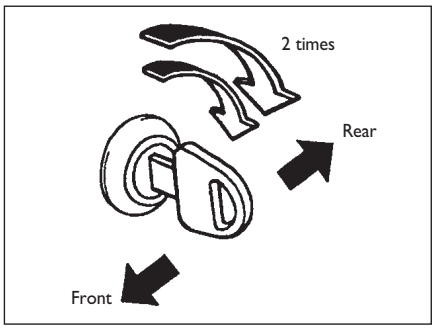

83E107

To activate this system:

Insert the key in the driver's door lock and turn the top of the key toward the rear of the vehicle twice within 3 seconds.

You can not use the lock knobs to unlock the side doors when this system is activated.

Downloaded from www.Manualslib.com manuals search engine

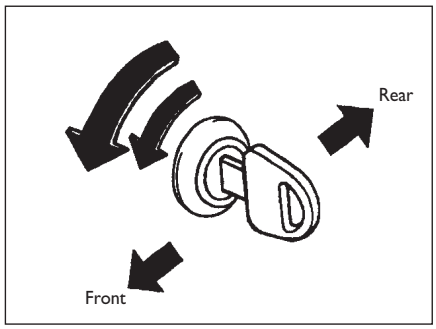

83E105

To release this system:

To unlock all the side doors, insert the key in the driver's door lock and turn the top of the key toward the front of the vehicle twice.

To unlock only the driver's door, insert the key in that door lock and turn the top of the key toward the front of the vehicle once.

KEYLESS START SYSTEM (if equipped)

The keyless start system enables the following operations:

❒ You can lock or unlock the doors by pushing the request switch on the door handle. For details, refer to the explanation in this section.

❒ You can start the engine without using an ignition key. For details, refer to "Ignition Switch" in the "STEERING COLUMN CONTROLS" section and "Starting the Engine" in the "OPERATING YOUR VEHICLE" section.

❒ You can lock or unlock the doors by operating the LOCK/ UNLOCK buttons on the remote controller. Refer to "Keyless Entry System" in the "BEFORE DRIVING" section.

NOTE The keyless start system may not function correctly depending on the environment or operating conditions as follows:

❒ When there are strong signals coming from a television, power station or a cellular phone with you.

❒ When the remote controller is in contact with or covered by a metal object.

❒ When the radio wave type remote keyless entry is used nearby.

❒ When the remote controller is placed near an electric appliance such as personal computer.

The Keyless Start System, controller model S62J1 and key model TS001 are in compliance with the essential requirements and other provisions of Directive 1999/5/EC.

NOTE

❒ Make sure the ignition key is stowed in the remote controller. If the remote controller becomes unreliable, you can not lock or unlock the doors and start the engine.

❒ Be sure that the driver always carries the remote controller.

❒ If you lose your remote controller, see your Fiat Dealership as soon as possible to have the lost one deactivated.

❒ You can use up to four remote controllers and ignition keys for your vehicle. Ask your Fiat Dealership for details.

❒ The battery life of the remote controller is about two years, but it can very depending on usage conditions.

Downloaded from www.Manualslib.com manuals search engine

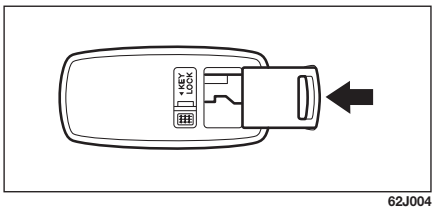

62J004

To stow the ignition key in the remote controller, push the key in the remote controller until the click is heard.

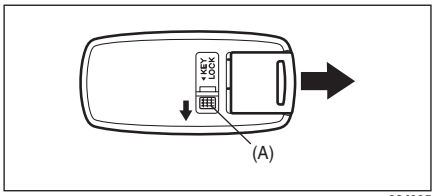

62J005

To remove the key from the remote controller, push the button (**A**) in the direction of the arrow and pull the key out from the remote controller.

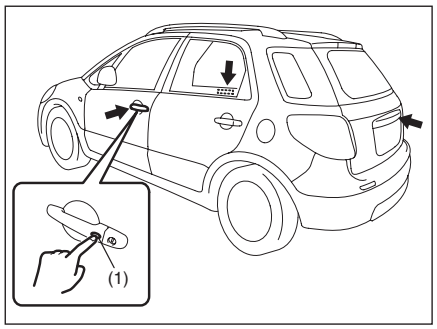

79J023

Keyless unlocking / locking operation

When the remote controller is within the access range, you can lock or unlock the doors by pushing the request switch (**1**) on the door handle of the driver's door, front passenger's door or rear door. If you want to prevent tamper- unlocking of the door locks, you can activate the dead lock system.

To lock or dead lock all doors when all doors are unlocked:

❒ To lock all doors, push the request switch on one of the door handles once.

❒ To lock all doors with the dead lock system, push the request switch on one of the door handles twice within about 3 seconds.

The turn signal lights will flash once when the doors are locked and then the turn signal lights will flash once again when the doors are locked with the dead lock system.

WARNING

Do not activate the dead lock system if there are occupants in the vehicle. They will be locked in the vehicle and cannot unlock the doors from inside.

To unlock a door or all doors:

❒ To unlock the door only, push the request switch on the door handle once.

❒ To unlock other doors, push the request switch on the door handle once again.

Downloaded from www.Manualslib.com manuals search engine

When the door (s) is (are) unlocked:

❒ the turn signal lights will flash twice, and

❒ the interior light will turn on for about 15 seconds and then fade out with the interior light switch in the middle position. If you push the ignition switch during that time, the light will start to fade out immediately.

Be sure the doors are locked after you operate the request switch to lock.

NOTE

❒ The door locks can not be operated by the request switch under the following conditions:

– if any door is open or incompletely closed;

– if the ignition switch is in a position other than LOCK;

– if the ignition key is inserted in the ignition switch.

❒ If no doors are opened within about 30 seconds after unlocking by pushing the request switch, the doors will be locked automatically again.

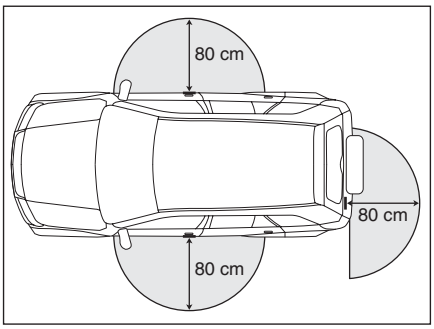

64J007

When the remote controller is within approximately 80 cm from the front door handle or rear door, you can lock or unlock the doors by pushing the request switch.

NOTE

❒ The request switch operating range is within approximately 80 cm of the door handle or rear door handle. If the remote controller is outside this range, it will not operate the request switch.

❒ If the battery of the remote controller runs down or there are strong radio waves or noise, the operating range may be narrower or the remote controller may be inoperative.

❒ If you are too close to the door glass, the remote controller may not operate.

❒ If a spare remote controller is in the vehicle, the request switches may not operate normally.

❒ The remote controller will only operate a request switch if it is within the switch's operating range. For example, if the remote controller is within the operating range of the driver's door request switch, the driver's door switch can be operated but the front passenger's door switch or rear door switch can not be operated.

IMPORTANT The remote controller is a sensitive electronic instrument. To avoid damaging the remote controller:

❒ Do not expose it to impacts, moisture or high temperature such as on the dashboard under direct sunlight.

❒ Keep the remote controller away from magnetic objects such as a television.

Downloaded from www.Manualslib.com manuals search engine

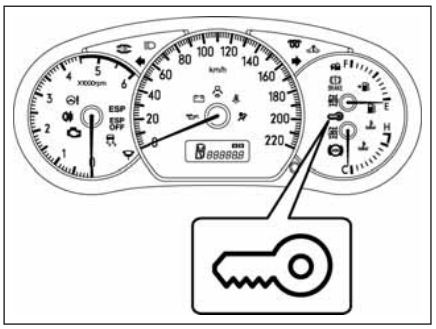

79J186

Reminder function

If the remote controller is not in the vehicle under the following condition, a buzzer sounds intermittently for about 2 seconds and the keyless start system indicator light on the instrument cluster blinks in red:

❒ When the vehicle speed is over 10 km/h.

❒ When the door (s) has (have) opened and later all doors are closed with the ignition switch in a position other than LOCK.

The red indicator light will turn off within several seconds after the remote controller is returned in the vehicle except in the rear luggage area.

If the remote controller is left in the vehicle and you lock the door in the following manner, the driver's door or the front passenger's door will be automatically unlocked.

❒ You open the driver's door and lock the door by turning the lock knob forward or pushing the power door locking switch, the driver's door will be automatically unlocked.

❒ You open the door (s) except the driver's door and lock the front passenger's door by turning the lock knob forward or pushing the power door locking switch, the front passenger's door will be automatically unlocked.

NOTE

❒ The reminder will not operate when the remote controller is on the instrument panel, in the glove box, in the door pocket, in the sun visor or on the floor etc.

❒ Be sure that the driver always carries the remote controller.

❒ Do not leave the remote controller in the vehicle when departing from the vehicle.

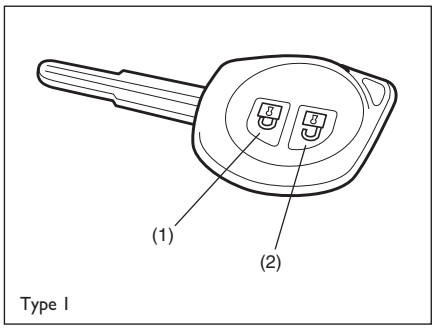

81A184

KEYLESS ENTRY SYSTEM (if equipped)

(**1**) "LOCK" button

(**2**) "UNLOCK" button

There are two ways to lock or unlock all doors simultaneously by operating the transmitter/ remote controller near the vehicle.

Downloaded from www.Manualslib.com manuals search engine

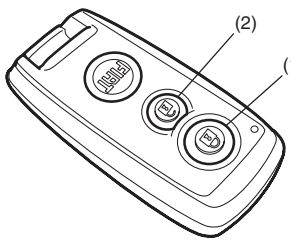

Type 2

79J111

Central door locking system

❒ To lock all doors, push the "LOCK" button (**1**) once.

❒ To unlock only the driver's door, push the "UNLOCK" button (**2**) once.

❒ To unlock other doors, push the "UNLOCK" button (**2**) once again.

Central door locking system with the dead lock system (if equipped)

If you want to prevent tamper- unlocking of the door locks, use this method. When the dead lock system is activated, operating the lock knobs will not unlock the side doors.

To activate this system:

To lock all doors, push the "LOCK" button (**1**) twice within 3 seconds.

To release this system:

❒ To unlock only the driver's door, push the "UNLOCK" button (**2**) once.

❒ To unlock other doors, push the "UNLOCK" button (**2**) once again.

WARNING

Do not activate the dead lock system if there are occupants in the vehicle. They will be locked in the vehicle and cannot unlock the doors from inside.

The turn signal lights will flash once when the doors are locked and then the turn signal lights will flash once again when the doors are locked with the dead lock system.

When the door (s) is (are) unlocked:

❒ The turn signal lights will flash twice, and

❒ the interior light will turn on for about 15 seconds and then fade out with the interior light switch in the middle position. If you insert the key into the ignition switch during that time, the light will start to fade out immediately.

Be sure the doors are locked after you operate the "LOCK" button (**1**).

If no door is opened within about 30 seconds after the "UNLOCK" button (**2**) is operated, the doors will automatically lock again.

Downloaded from www.Manualslib.com manuals search engine

NOTE

❒ The maximum operating distance is about 5 meter (16 ft.), but this can vary depending on the surroundings, especially near other transmitting devices such as radio towers or CB (Citizen's Band) radios.

❒ The door locks can not be operated with the transmitter/ remote controller:

– if the ignition switch is in a position other than "LOCK" or the ignition key is inserted in the ignition switch, or

– if any door is open or incompletely closed.

❒ If you lose your transmitter/ remote controller, ask your Fiat Dealership as soon as possible for a replacement and to have the lost one deactivated.

Type 1

The Keyless Entry System, Transmitter model TS002 and Receiver model R62J1 are in compliance with the essential requirements and other provisions of Directive 1999/5/EC.

Type 2

The Keyless Start System, controller model S62J1 and key model TS001 are in compliance with the essential requirements and other provisions of Directive 1999/5/EC.

IMPORTANT The transmitter/remote controller is a sensitive electronic instrument. To avoid damaging the transmitter/remote controller:

❒ Do not expose it to impacts, moisture or high temperature such as on the dashboard under direct sunlight.

❒ Keep the transmitter/remote controller away from magnetic objects such as a television.

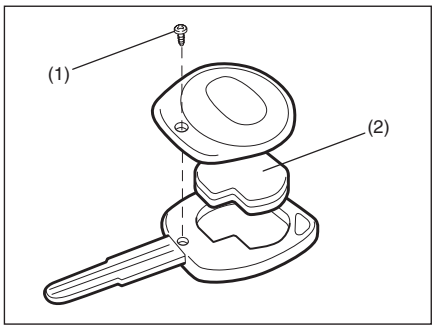

81A185

Replacement of the battery

If the transmitter/ remote controller becomes unreliable, replace the battery.

To replace the battery for the transmitter of the keyless entry

❒ Remove the screw (**1**), and open the transmitter cover.

❒ Remove the transmitter (**2**).

Downloaded from www.Manualslib.com manuals search engine

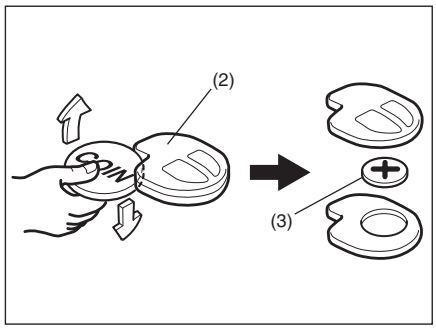

81A186

- ❒ Put the edge of a coin or a flat blade screw driver in the slot of the transmitter (**2**) and pry it open.
- ❒ Replace the battery (**3**) (Lithium disc-type CR1620 or equivalent) so its + terminal faces the "+" mark of the transmitter.
- ❒ Close the transmitter and install it into the transmitter holder.
- ❒ Close the transmitter cover, install and tighten the screw (**1**).
- ❒ Make sure the door locks can be operated with the transmitter.
- ❒ Dispose of the used battery properly according to applicable rules or regulations. Do not dispose of lithium batteries with ordinary household trash.

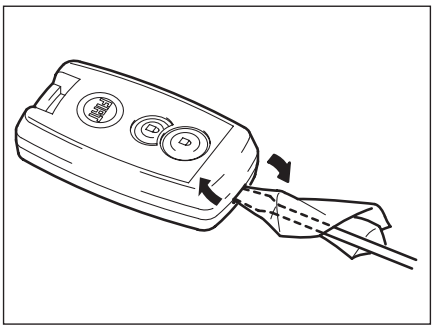

79J112

To replace the battery for the remote controller of the keyless start system

- ❒ Insert a flat blade screw driver covered with a soft cloth in the slit of the remote controller and pry it open.
- ❒ Replace the battery (**1**) (Lithium disc type CR2032 or equivalent) so its + terminal faces the bottom of the case as shown in the illustration.
- ❒ Close the remote controller firmly.
- ❒ Make sure the door locks can be operated with the remote controller.
- ❒ Dispose of the used battery properly according to applicable rules or regulations. Do not dispose of lithium batteries with ordinary household trash.

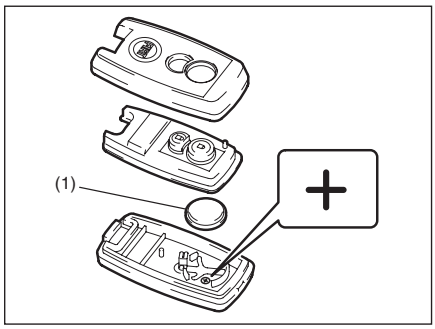

79J113

WARNING

Swallowing a lithium battery may cause serious internal injury. Do not allow anyone to swallow a lithium battery. Keep lithium batteries away from children and pets. If swallowed, contact physician immediately.

IMPORTANT The transmitter/ remote controller is a sensitive electronic instrument. To avoid damaging it, do not expose it to dust or moisture or tamper with internal parts.

Downloaded from www.Manualslib.com manuals search engine

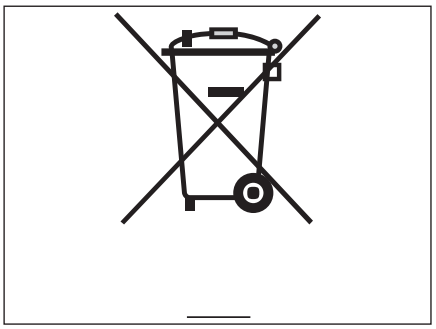

51KM037

IMPORTANT Used batteries are harmful to the environment. They should be disposed of as specified by law in the special containers provided, or take them to a Fiat Dealership, which will deal with their disposal.

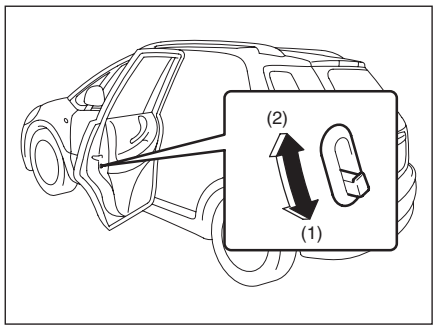

79J025

Child-Proof Locks (rear side door)

As illustrated, a child-proof lock is provided for both rear doors. When the lock lever is in position (**1**), the child-proof lock is locked, and when in position (**2**), the childproof lock is unlocked. When the childproof lock is in the locked position, the rear door cannot be opened from the inside even if the inside door lock is unlocked but can be opened from the outside.

WARNING

Be sure to place the child-proof lock in the locked position whenever children are seated in the rear.

WARNING

After engaging the child lock on both rear doors, check for proper engagement by trying to open a rear door with the internal handle.

Downloaded from www.Manualslib.com manuals search engine

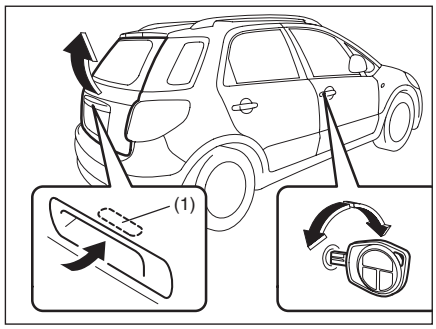

79J026

WARNING

Always make sure that the rear door is closed and latched securely. Completely closing the rear door helps prevent occupants from being thrown from the vehicle in the event of an accident. Completely closing it also helps keep exhaust gases from entering the vehicle.

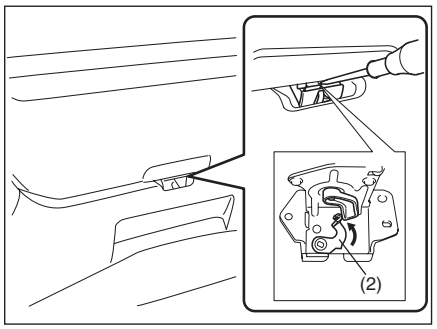

79J099

Rear door

1) Rear door unlatch switch

You can lock and unlock the rear door by using the key in the driver's door lock.

To open the rear door, push and hold the rear door unlatch switch (**1**) and lift the rear door.

NOTE When the rear door is closed incompletely, follow the procedure below:

❒ Push the rear door unlatch switch (**1**) and open the rear door a little.

❒ After a few seconds, close the rear door.

❒ Make sure that the rear door is closed completely.

If you can not unlatch the rear door by pushing the unlatch switch (**1**) due to a discharged battery or malfunction, follow the procedures below to unlatch the rear door from inside the vehicle.

❒ Fold the rear seat forward for easier access. Refer to "Folding Rear Seats" section for details on how to fold the rear seat forward.

❒ Push open the rear door from inside by pushing up on the emergency lever (**2**) using a flat blade screw driver or the jack handle. The rear door will be latched again by closing the rear door simply.

If the rear door can not be unlatched, have the vehicle inspected by your Fiat Dealership.

WARNING

To avoid injury, do not use your finger to push the emergency lever.

Make sure there is not anyone near the rear door when pushing open the rear door from inside the vehicle.

Downloaded from www.Manualslib.com manuals search engine

WINDOWS

MANUAL WINDOW CONTROL (if equipped)

Raise or lower the door windows by turning the handle located on the door panel.

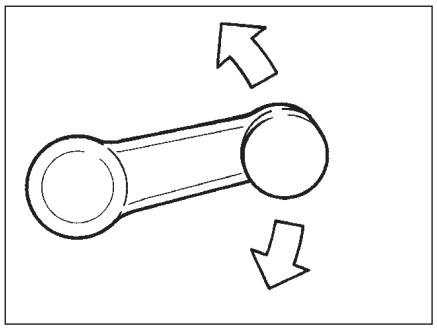

60G010

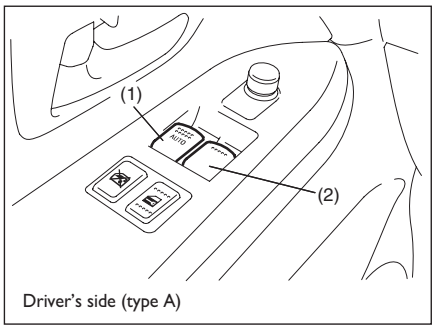

Driver's side (type A)

79J027

ELECTRIC WINDOW CONTROLS (if equipped)

The electric windows can only be operated when the ignition switch is in the "ON" position.

Downloaded from www.Manualslib.com manuals search engine

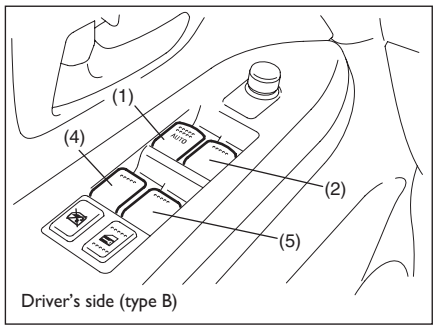

79J028

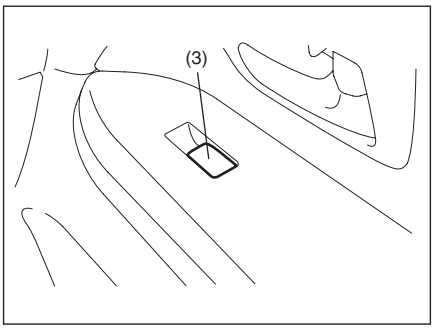

79J029

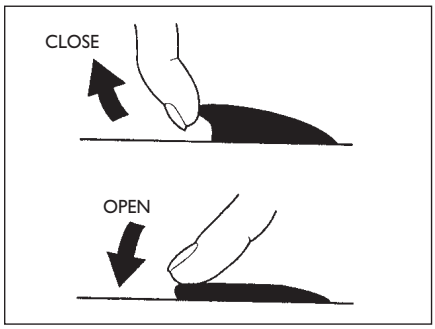

81A009

Driver's side

The driver's door has a switch (**1**) to operate the driver's window, and a switch (**2**) to operate the front passenger's window or there are switches (**4**), (**5**), to operate the rear left and right passenger windows, respectively.

Passenger's door

The passenger's door has a switch (**3**) to operate the passenger's window.

To open a window, push the top part of the switch and to close the window lift up the top part of the switch.

The driver's window has an "auto-down" feature for added convenience (at toll booths or drive-through restaurants, for example). This means you can open the window without holding the window switch in the "Down" position. Press the driver's window switch completely down and release it. To stop the window before it reaches the bottom, pull the switch up briefly.

Downloaded from www.Manualslib.com manuals search engine

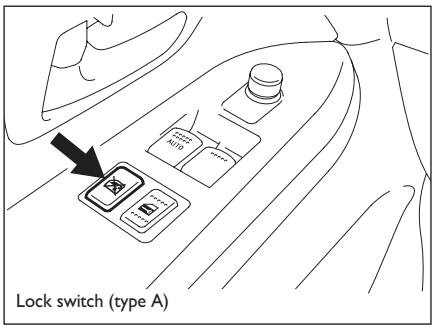

Lock switch (type A)

79J030

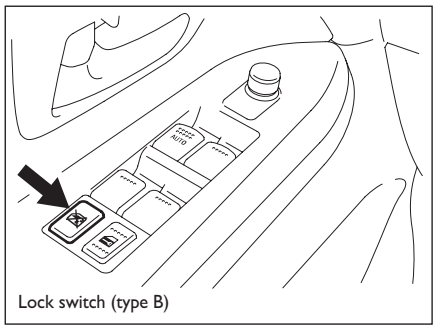

Lock switch (type B)

79J031

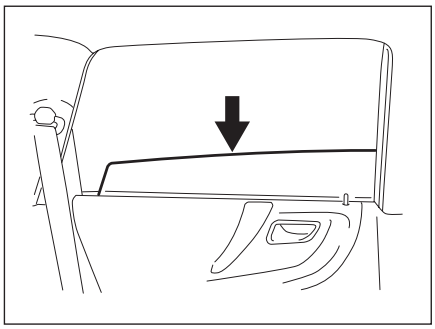

54G011

The driver's door also has a lock switch for the passenger's window (s). When you push in the lock switch, the passenger's window (s) can not be raised or lowered by operating any of the switches (**2**), (**3**), (**4**) or (**5**). To restore normal operation, release the lock switch by pushing again.

WARNING

You should always lock the passenger's window operation when there are children in the vehicle. Children can be seriously injured if they get part of their body caught by the window during operation.

To avoid injuring an occupant by window entrapment, be sure no part of the occupant's body such as hands or head is in the path of the electric windows when closing them.

Always remove the ignition key when leaving the vehicle even if a short time. Also do not leave children alone in a parked vehicle. Unattended children could use the electric window switches and get trapped by the window.

NOTE The rear side door windows are not designed to open fully. They can be opened about 2/3 of the way down.

Downloaded from www.Manualslib.com manuals search engine

MIRRORS

INSIDE REARVIEW MIRROR

You can adjust the inside rearview mirror by hand so as to see the rear of your vehicle in the mirror. To adjust the mirror, set the selector tab (**1**) to the day position, then move the mirror up, down or sideways by hand to obtain the best view.

When driving at night, you can move the selector tab to the night position to reduce glare from the headlights of vehicles behind you.

WARNING

Always adjust the mirror with the selector set to the day position.

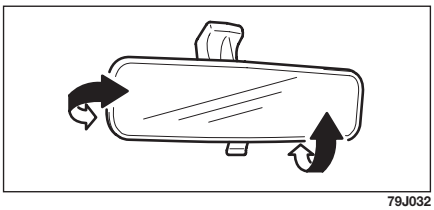

79J032

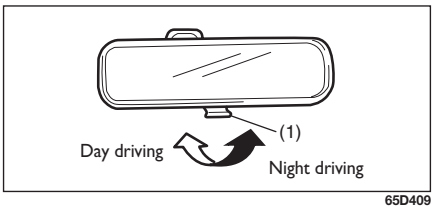

65D409

WARNING

Only use the night position if it is necessary to reduce glare from the headlights of vehicles behind you. Be aware that in this position you may not be able to see some objects that could be seen in the day position.

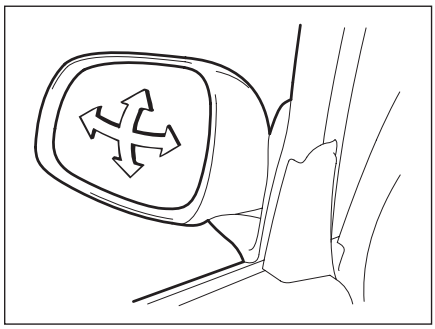

79J033

OUTSIDE REARVIEW MIRRORS

Adjust the outside rearview mirrors so you can just see the side of your vehicle in the mirrors.

WARNING

Be careful when judging the size or distance of a vehicle or other object seen in the side convex mirror. Be aware that objects look smaller and appear farther away than when seen in a flat mirror.

Downloaded from www.Manualslib.com manuals search engine

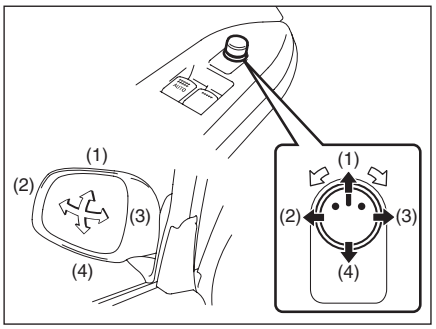

79J034

ELECTRIC MIRRORS (if equipped)

The switch to control the electric mirrors is located on the driver's door panel. You can adjust the mirrors when the ignition switch is in the "ACC" or "ON" position.

To adjust the mirrors:

❒ Move the selector switch to the left or right to select the mirror you wish to adjust.

❒ Press the outer part of the switch that corresponds to the direction in which you wish to move the mirror.

❒ Return the selector switch to the center position to help prevent unintended adjustment.

SEAT ADJUSTMENT

WARNING

Only make adjustments when the vehicle is stationary.

WARNING

Check that the seat is firmly locked in the runners by trying to move it back and forth. Failure to lock the seat in place could result in the seat moving suddenly and the driver losing control of the vehicle.

WARNING

To avoid excessive seat belt slack, which reduces the effectiveness of the seat belts as a safety device, make sure that the seats are adjusted before the seat belts are fastened.

Downloaded from www.Manualslib.com manuals search engine

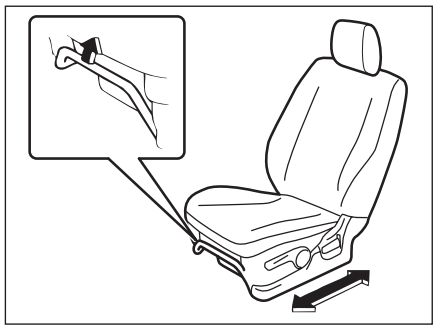

79J114

ADJUSTING SEAT POSITION

The adjustment lever for each front seat is located under the front of the seat. To adjust the seat position, pull up on the adjustment lever and slide the seat forward or rearward.

After adjustment, try to move the seat forward and rearward to ensure that it is securely latched.

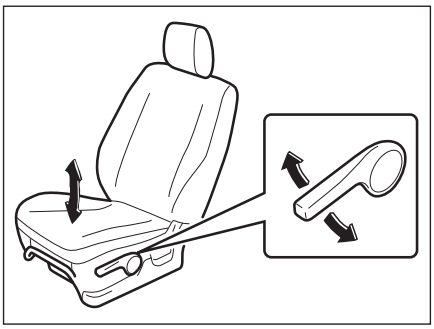

79J055

If the driver's seat is equipped with a seat height adjuster lever on the outboard side of the seat, raise or lower the seat by pulling up or down the adjuster lever.

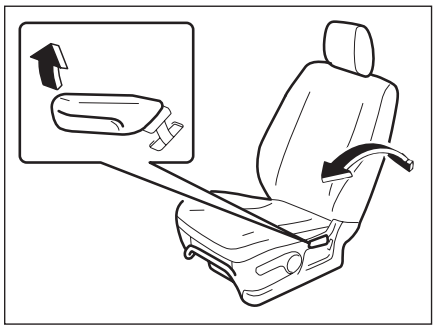

79J056

ADJUSTING SEATBACKS

WARNING

All seatbacks should always be in an upright position when driving, or seat belt effectiveness may be reduced. Seat belts are designed to offer maximum protection when seatbacks are in the upright position.

To adjust the seatback angle of front seats, pull up the lever on the outboard side of the seat, move the seatback to the desired position, and release the lever to lock the seatback in place.

Downloaded from www.Manualslib.com manuals search engine

ADJUSTABLE HEAD RESTRAINTS (if equipped)

Head restraints are designed to help reduce the risk of neck injuries in the case of an accident. Adjust the head restraint to the position which places the center of the head restraint closest to the top of your ears. If this is not possible for very tall passengers, adjust the head restraint as high as possible.

WARNING

Remember that the head restraints should be adjusted to support the back of your head and not your neck. Only in this position do they exert their protective action.

Do not attempt to adjust the head restraint while driving.

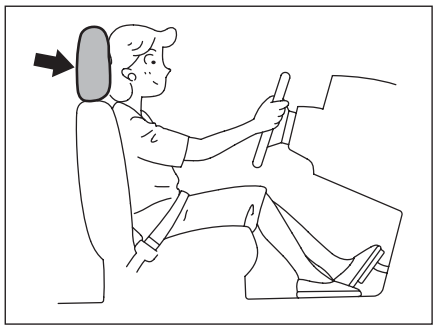

75F123

NOTE It may be necessary to recline the seatback to provide enough overhead clearance to remove the head restraint.

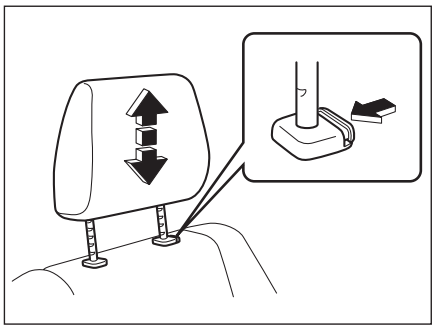

63J015

Front

To raise the front head restraint, pull upward on the restraint until it clicks. To lower the restraint, push down on the restraint while holding in the lock lever. If a head restraint must be removed (for cleaning, replacement, etc.), push in the lock lever and pull the head restraint all the way out.

Downloaded from www.Manualslib.com manuals search engine

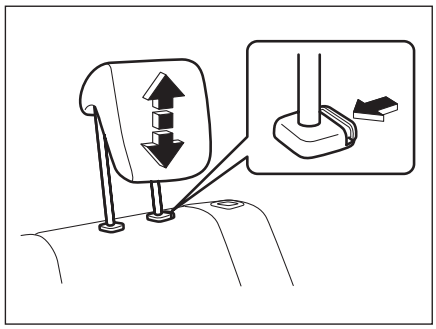

63J135

Rear

To raise the rear head restraint, pull upward on the restraint until it clicks. To lower the restraint, push down on the restraint while holding in the lock lever. If a head restraint must be removed (for cleaning, replacement, etc.), push in the lock lever and pull the head restraint all the way out.

When installing a child restraint system, raise the head restraint to the most upper position.

SEAT BELTS AND CHILD RESTRAINT SYSTEMS

WARNING

Wear Your Seat Belts at All Times.

WARNING

An air bag supplements, or adds to, the frontal crash protection offered by seat belts. The driver and all passengers must be properly restrained by wearing seat belts at all times, whether or not an air bag is mounted at their seating position, to minimize the risk of severe injury or death in the event of a crash.

WARNING

Never allow persons to ride in the cargo area of a vehicle. In the event of an accident, there is a much greater risk of injury for persons who are not riding in a seat with their seat belt securely fastened.

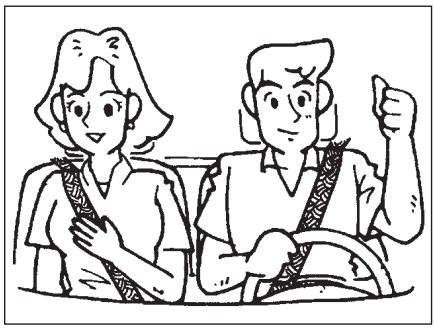

65D231

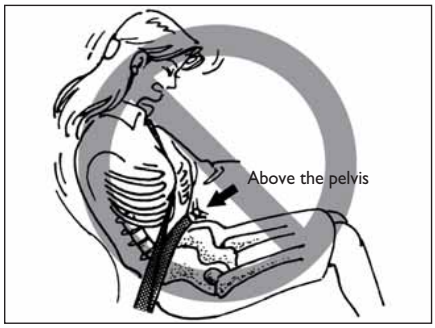

65D360

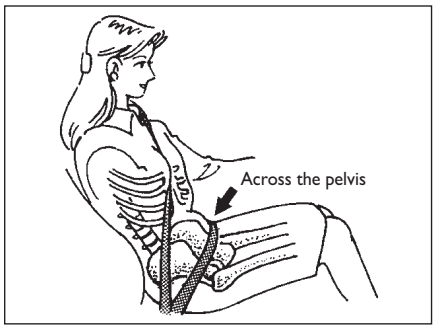

65D201

Downloaded from www.Manualslib.com manuals search engine

WARNING

Seat belts should always be adjusted as follows:

– The lap portion of the belt should be worn low across the pelvis, not across the waist.

– The shoulder straps should be worn on the outside shoulder only, and never under the arm.

– The shoulder straps should be away from your face and neck, but not falling off your shoulder.

– Seat belts should never be worn with the straps twisted and should be adjusted as tightly as is comfortable to provide the protection for which they have been designed. A slack belt will provide less protection than one which is snug.

– Make sure that each seat belt buckle is inserted into the proper buckle catch. It is possible to cross the buckles in the rear seat.

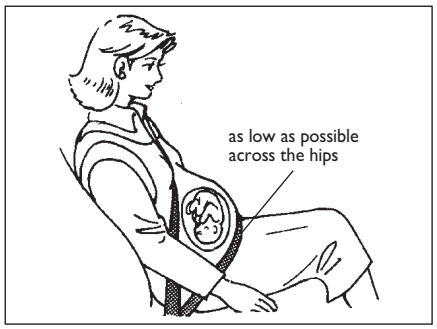

65D199

WARNING

Pregnant women should use seat belts, although specific recommendations about driving should be made by the woman's medical advisor. Remember that the lap portion of the belt should be worn as low as possible across the hips, as shown in the diagram.

Do not wear your seat belt over hard or breakable objects in your pockets or on your clothing. If an accident occurs, objects such as glasses, pens, etc. under the seat belt can cause injury.

WARNING

Never use the same seat belt on more than one occupant and never attach a seat belt over an infant or child being held on an occupant's lap. Such seat belt use could cause serious injury in the event of an accident.

Periodically inspect seat belt assemblies for excessive wear and damage. Seat belts should be replaced if webbing becomes frayed, contaminated, or damaged in any way. It is essential to replace the entire seat belt assembly after it has been worn in a severe impact, even if damage to the assembly is not obvious.

Children age 12 and under should ride properly restrained in the rear seat.

Infants and small children should never be transported unless they are properly restrained. Restraint systems for infants and small children can be purchased locally and should be used. Make sure that the system you purchase meets applicable safety standards. Read and follow all the directions provided by the manufacturer.

Downloaded from www.Manualslib.com manuals search engine

WARNING

Avoid contamination of seat belt webbing by polishes, oils, chemicals, and particularly battery acid. Cleaning may safely be carried out using mild soap and water.

For children, if the shoulder belt irritates the neck or face, move the child closer to the center of the vehicle.

All seatbacks should always be in an upright position when driving, or seat belt effectiveness may be reduced. Seat belts are designed to offer maximum protection when seatbacks are in the upright position.

WARNING

Under no circumstances should the components of the seat belts and pretensioners be tampered with or removed. Any operation should be carried out by qualified and authorised personnel. Always contact a Fiat Dealership.

LAP-SHOULDER BELT

Emergency Locking Retractor (ELR)

The seat belt has an emergency locking retractor (ELR), which is designed to lock the seat belt only during a sudden stop or impact. It also may lock if you pull the belt across your body very quickly. If this happens, let the belt go back to unlock it, then pull the belt across your body more slowly.

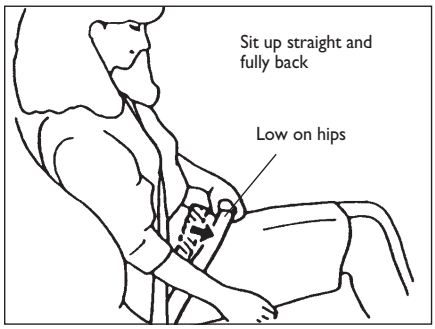

60A038

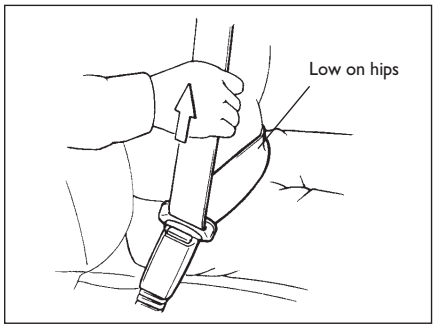

60A040

Downloaded from www.Manualslib.com manuals search engine

Safety reminder

To reduce the risk of sliding under the belt during a collision, position the lap portion of the belt across your lap as low on your hips as possible and adjust it to a snug fit by pulling the shoulder portion of the belt upward through the latch plate. The length of the diagonal shoulder strap adjusts itself to allow freedom of movement.

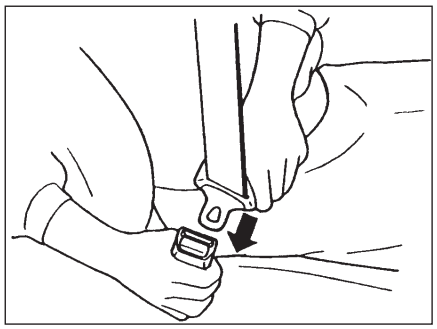

60A036

To fasten the seat belt, sit up straight and well back in the seat, pull the latch plate attached to the seat belt across your body and press it into the buckle until you hear a "click".

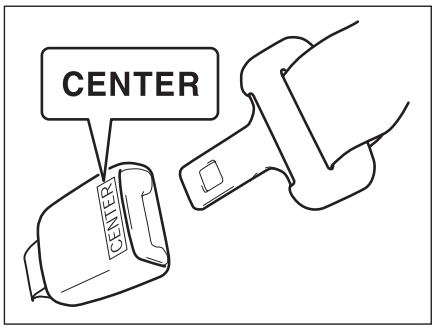

79J057

NOTE The word "CENTER" is molded into the buckle for the rear center belt. The buckles are designed so a latch plate can not be inserted into the wrong buckle.

Downloaded from www.Manualslib.com manuals search engine

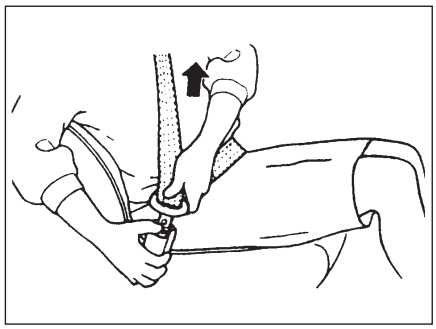

60A039

To unfasten the belt, push the red "PRESS" button on the buckle and allow the belt to retract.

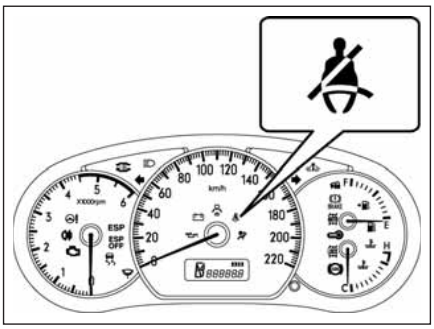

79J187

DRIVER'S SEAT BELT REMINDER

When the driver doesn't buckle his or her seat belt, the driver's seat belt reminder light in the instrument cluster will come on and a buzzer will sound as a reminder to the driver to buckle his or her seat belt. For more details, refer to the explanation below.

If the driver's seat belt remains unbuckled when the ignition switch is turned to the "ON" position, the reminder works as follows:

1) The driver's seat belt reminder light will come on.

2) After the vehicle's speed has reached about 15 km/ h, the driver's seat belt reminder light will blink and a buzzer will sound for about 95 seconds.

3) After step 2) has finished, the reminder light will remain on until the driver's seat belt is buckled.

If the driver has buckled his or her seat belt and later unbuckles the seat belt, the reminder system will be activated from step 1) or step 2) according to the vehicle's speed. When the vehicle's speed is below about 15 km/h, the reminder will start from step 1). When the vehicle's speed is above about 15 km/h, the reminder will start from step 2).

The reminder will be automatically canceled when the driver's seat belt is buckled or the ignition switch is turned off.

WARNING

It is absolutely essential that the driver and passengers wear their seat belts at all times. Persons who are not wearing seat belts have a much greater risk of injury if an accident occurs. Make a regular habit of buckling your seat belt before putting the key in the ignition.

Downloaded from www.Manualslib.com manuals search engine

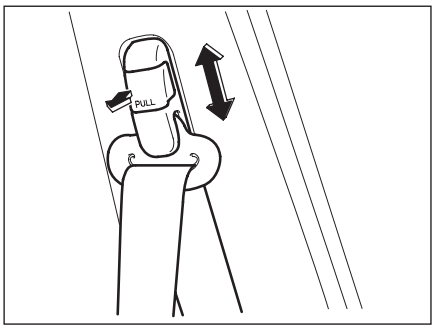

64J198

SHOULDER ANCHOR HEIGHT ADJUSTER (if equipped)

Adjust the shoulder anchor height so that the shoulder belt rides on the center of the outboard shoulder. To adjust the shoulder anchor height, slide the anchor up or down while pulling the lock knob out. After adjustment, make sure that the anchor is securely locked.

WARNING

Be sure that the shoulder belt is positioned on the center of the outside shoulder. The belt should be away from your face and neck, but not falling off your shoulder. Misadjustment of the belt could reduce the effectiveness of the safety belt in a crash.

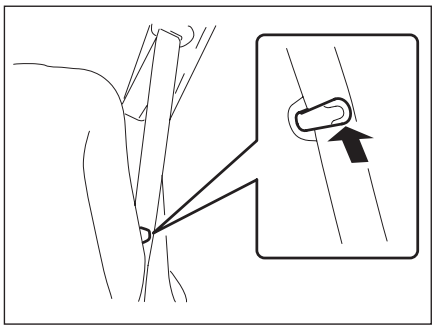

79J035

SEAT BELT HANGER (if equipped)

When you move a seatback, make sure the belt webbing is hooked in the seat belt hangers so the seat belts are not caught by the seatback, seat hinge, or seat latch. This helps prevent damage to the belt system.

Downloaded from www.Manualslib.com manuals search engine

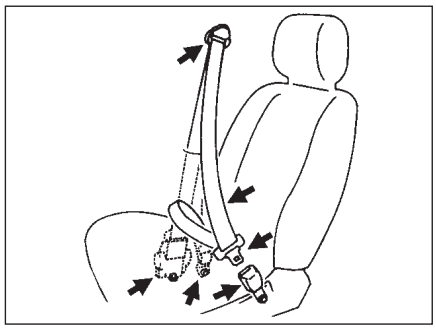

65D209S

SEAT BELT INSPECTION

Periodically inspect the seat belts to make sure they work properly and are not damaged. Check the webbing, buckles, latch plates, retractors, anchorages, and guide loops. Replace any seat belts which do not work properly or are damaged.

WARNING

Be sure to inspect all seat belt assemblies after any collision. Any seat belt assembly which was in use during a collision (other than a very minor one) should be replaced, even if damage to the assembly is not obvious. Any seat belt assembly which was not in use during a collision should be replaced if it does not function properly, it is damaged in any way or the seat belt pretensioners were activated (that is, if the front air bags were activated).

WARNING

Under no circumstances should the components of the seat belts and pretensioners be tampered with or removed. Any operation should be carried out by qualified and authorised personnel. Always contact a Fiat Dealership.

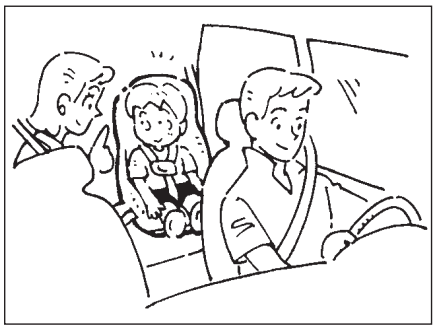

60G332S

CHILD RESTRAINT SYSTEMS

Fiat highly recommends that you use a child restraint system to restrain infants and small children. Many different types of child restraint systems are available; make sure that the restraint system you select meets applicable safety standards.

All child restraint systems are designed to be secured in vehicle seats by either seat belts (lap belts or the lap portion of lap-shoulder belts) or by special rigid lower anchor bars built into the seat. Whenever possible, Fiat recommends that child restraint systems be installed on the rear seat. According to accident statistics, children are safer when properly restrained in rear seating positions than in front seating positions.

Downloaded from www.Manualslib.com manuals search engine

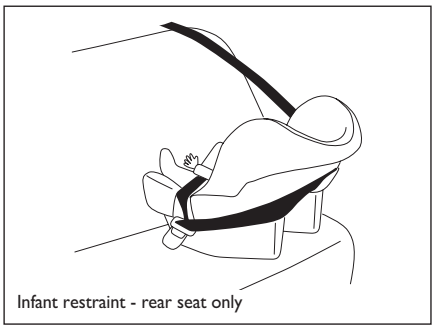
Infant restraint - rear seat only

79J221

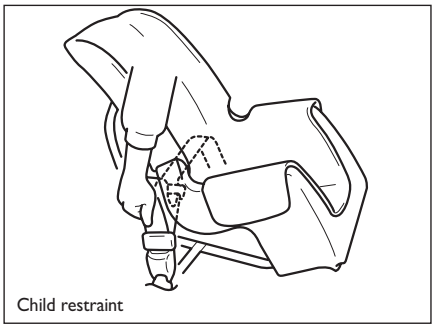
Child restraint

79J222

If you must use a front-facing child restraint in the front passenger's seat, adjust the passenger's seat as far back as possible.

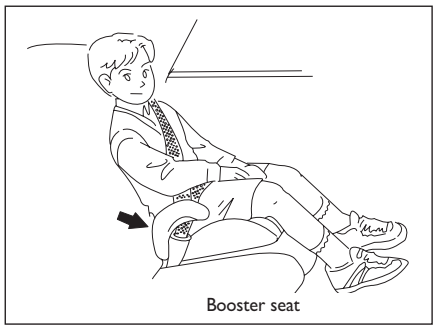
Booster seat

79J223

(For EU countries)

When purchasing a child restraint and install it to your FIAT, refer to the information about suitability for child restraints shown in "Child Restraint System for EU Countries" in this section.

The child restraint installation to this model is limited to the left position of the rear seat except ISOFIX type child restraint of the group 1; child weight 9 to 18kg.

NOTE Observe any statutory regulation about child restraints.

WARNING

The figure is only an example for mounting. Attain to the instructions for fastening which must be enclosed with the specific child restraining system you are using.

65D361

WARNING

If your vehicle is equipped with a front passenger air bag, do not install a rear-facing child restraint in the front passenger's seat. If the passenger's air bag inflates, a child in a rear-facing child restraint could be killed or seriously injured. The back of a rear-facing child restraint would be too close to the inflating air bag.

Downloaded from www.Manualslib.com manuals search engine

65D362

WARNING

If you install a child restraint system in the rear seat, slide the front seat for enough forward so that the child's feet do not contact the front seatback. This will help avoid injury to the child in the event of an accident.

65D363

WARNING

Children could be endangered in a crash if their child restraints are not properly secured in the vehicle. When installing a child restraint system, be sure to follow the instructions below. Be sure to secure the child in the restraint system according to the manufacturer's instructions.

WARNING

If your vehicle is equipped with side air bags, do not install a child restraint in the front passenger's seat. If the passenger's side air bag inflates, a child in a child restraint could be severely injured.

WARNING

In an accident or sudden stop, the rear seat armrest (if equipped) could fall forward. If there is a child in a rear-facing child restraint in the rear center seating position, the falling armrest could injure the child. Do not install a rear- facing child restraint in the rear center seating position.

Downloaded from www.Manualslib.com manuals search engine

CHILD RESTRAINT SYSTEM FOR EU COUNTRIES

CHILD RESTRAINT

The suitability of each passenger's seat position for carriage of children and fitting of child restraint system is shown in the table below. Whenever you carry children under 12 years of age or smaller than 150 cm, properly use the child restraints which conform to ECE-R Norm 44, the standard for child restraints, referring to the table.

Table of vehicle handbook information on conventional (fastening with seat belt) child restraint systems installation suitability for various seating positions

Mass group		Seating position (or other site)				
		Front Passenger	Rear Outboard	Rear Center	Intermediate Outboard	Intermediate Center
group 0	up to 10 kg	**X**	**U** (only left)	**X**	**NA**	**NA**
group 0+	up to 13 kg	**X**	**U** (only left)	**X**	**NA**	**NA**
group 1	9 to 18 kg	**X**	**U** (only left) *	**X**	**NA**	**NA**
group 2	15 to 25 kg	**X**	**UF** (only left)	**X**	**NA**	**NA**
group 3	22 to 36 kg	**X**	**UF** (only left)	**X**	**NA**	**NA**

Key of letters to be inserted in the above table:

U = suitable for "universal" category restraints approved for use in this mass group.

UF = suitable for forward-facing "universal" category restraints approved for use in this mass group.

L = suitable for particular child restraints given on attached list These restraints may be of the "specific vehicle", "restricted" or "semi-universal" categories.

B = built-in restraint approved for this mass group.

X = seat position not suitable for children in this mass group.

NA = not applicable.

* ISOFIX child restraint systems are available to both left and right position.

NOTE "universal" is the category in the ECE regulation-Norm 44.

Downloaded from www.Manualslib.com manuals search engine

Table of vehicle handbook information on ISOFIX child restraint systems installation suitability for various ISOFIX positions

Mass group		Size class	Fixture	Vehicle ISOFIX positions					
				Front Passanger	Rear Outboard	Rear Center	Intermediate Ourboard	Intermediate Center	Other Sites
		F	ISO/L1	**NA**	**X**	**NA**	**NA**	**NA**	**NA**
carrycot		G	ISO/L2	**NA**	**X**	**NA**	**NA**	**NA**	**NA**
			(1)	**NA**	**NA**	**NA**	**NA**	**NA**	**NA**
group 0	up to 10 kg	E	ISO/R1	**NA**	**X**	**NA**	**NA**	**NA**	**NA**
			(1)	**NA**	**NA**	**NA**	**NA**	**NA**	**NA**
group 0+	up to 13 kg	E	ISO/R1	**NA**	**X**	**NA**	**NA**	**NA**	**NA**
		D	ISO/R2	**NA**	**X**	**NA**	**NA**	**NA**	**NA**
		C	ISO/R3	**NA**	**X**	**NA**	**NA**	**NA**	**NA**
			(1)	**NA**	**ND**	**NA**	**NA**	**NA**	**NA**
group 1	9 to 18 kg	D	ISO/R2	**NA**	**X**	**NA**	**NA**	**NA**	**NA**
		C	ISO/R3	**NA**	**X**	**NA**	**NA**	**NA**	**NA**
		B	ISO/F2	**NA**	**IUF**	**NA**	**NA**	**NA**	**NA**
		B1	ISO/F2X	**NA**	**IUF**	**NA**	**NA**	**NA**	**NA**
		A	ISO/F3	**NA**	**IL**	**NA**	**NA**	**NA**	**NA**
			(1)	**NA**	**NA**	**NA**	**NA**	**NA**	**NA**
group 2	15 to 25 kg		(1)	**NA**	**NA**	**NA**	**NA**	**NA**	**NA**
group 3	22 to 36 kg		(1)	**NA**	**NA**	**NA**	**NA**	**NA**	**NA**

(1) For the child restraint system which do not carry the ISO/XX size class identification (A to G), for the applicable mass group, the car manufacturer shall indicate the vehicle specific ISOFIX child restraint system(s) recommended for each position.

Key of letters to be inserted in the above table:

IUF = suitable for ISOFIX forward child restraint systems of universal category approved for use in this mass group Fiat recommends RÖMER DUO plus, available at Lineaccessori Fiat..
IL = suitable for particular ISOFIX child restraint system are those of the "specific vehicle", "restricted" or "semi-universal" categories.
X = ISOFIX position not suitable for ISOFIX child restraint systems in this mass group and/or this size class.
ND = not applicable.

NOTE "universal" is the category in the ECE regulation-Norm 44.

Downloaded from www.Manualslib.com manuals search engine

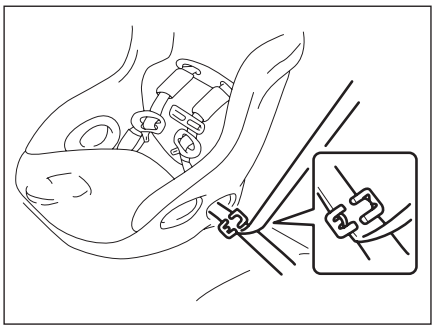

79J224

INSTALLATION WITH LAP-SHOULDER SEAT BELTS (available to the left position of the rear seat)

IMPORTANT Before installing a child restraint system in the rear seat, raise the head restraint to the most upper position.

ELR type belt

WARNING

Install your child restraint system according to the instructions provided by the child restraint system manufacturer.

Make sure that the seat belt is securely latched. Try to move the child restraint system in all directions, to make sure it is securely installed.

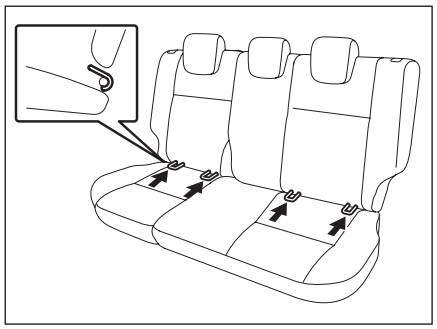

79J058

INSTALLATION WITH ISOFIX TYPE ANCHORAGES (available to both left and right position of the rear seat with the ISOFIX type of the group 1; child weight 9 to 18kg)

Your vehicle is equipped with the lower anchorages in the rear seat outboard seating positions for securing a ISOFIX type of child restraints with the connecting bars. The lower anchorages are located where the rear of the seat cushion meets the bottom of the seatback.

WARNING

Be sure to install the ISOFIX type of child restraint(s) in the only outboard seating positions, not in the central position for rear seat.

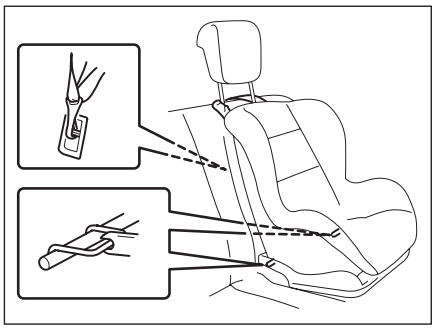

63J020

WARNING

Install the ISOFIX type child restraint system according to the instructions provided by the child restraint system manufacturer. After installing, try moving the child restraint system in all directions especially forward, to make sure the connecting bars are securely latched to the anchorages.

If your vehicle is equipped with the top strap anchorages, be sure to use the top strap of the child restraint according to the instructions provided by the child restraint system manufacture.

Downloaded from www.Manualslib.com manuals search engine

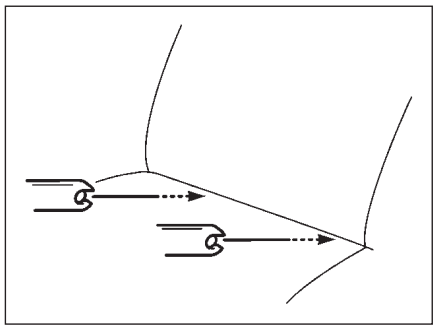

78F114

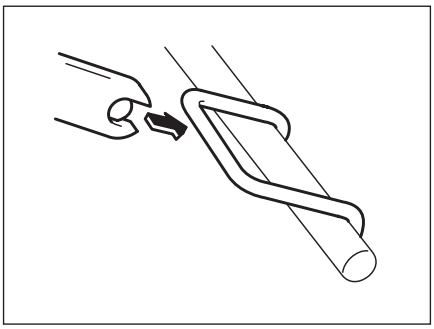

54G183

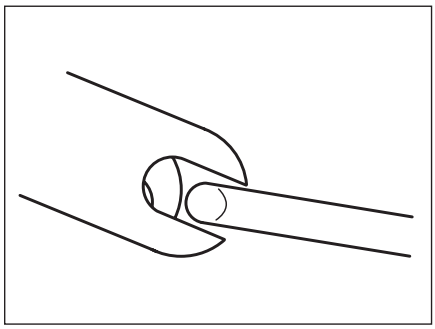

54G184

Here is a general instruction:

❒ Pull upward on the rear head restraint to the most upper position.

IMPORTANT Before installing a child restraint system in the rear seat, raise the head restraint to the most upper position.

❒ If possible, fold the seatback rearward for easier installation.

❒ Place the child restraint in the rear seat, inserting the connecting bars to the anchorages between the seat cushion and the seatback.

❒ Use your hands to carefully align the connecting bar tips with the anchorages. Take care not to pinch your fingers.

❒ Push the child restraint toward the anchorages so that the connecting bar tips are partially hooked to the anchorages. Use your hands to confirm the position.

Downloaded from www.Manualslib.com manuals search engine

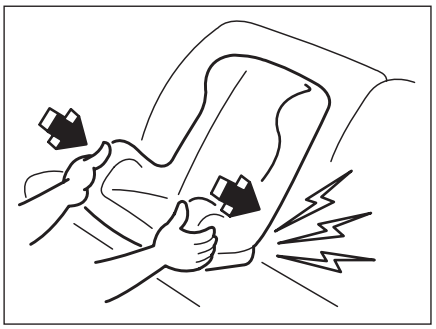

54G185

- ❒ Grasp the front of the child restraint and push the child restraint forcefully to latch the connecting bars. Make sure they are securely latched by trying to move the child restraint system in all directions, especially forward.
- ❒ Return the seatback if folded.
- ❒ Attach the top strap referring to "Installation of Child Restraint with Top Strap" section below (if equipped).

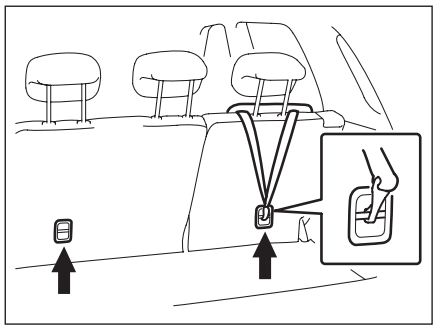

62J026

INSTALLATION OF CHILD RESTRAINT WITH TOP STRAP

Some child restraint systems require the use of a top strap. Top strap anchor brackets are located on the back of the rear seatbacks. The number of the anchor bracket provided in your vehicle depends on the vehicle specification.

Install the child restraint system as follows:

- ❒ Remove the luggage compartment cover.
- ❒ Secure the child restraint on rear seat using the procedure described above for securing a restraint system that does not require a top strap.
- ❒ Hook the top strap to the anchor bracket and tighten the top strap according to the instructions provided by the child restraint system manufacturer. Be sure to attach the top strap to the corresponding anchor located directly behind the child restraint. Do not attach the top strap to the luggage restraint loops (if equipped).

WARNING

Do not attach the child restraint top strap to the luggage restraint loops (if equipped). Incorrectly attached top strap will reduce the intended effectiveness of the child restraint system.

Downloaded from www.Manualslib.com manuals search engine

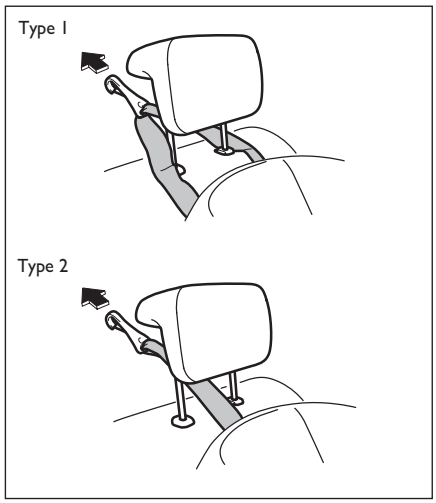

86G032

❒ When routing the top strap, be sure to pass the top strap as shown in the illustration. (Refer to "Adjustable Head Restraints" section for details on how to raise or lower the head restraint.).

❒ Make sure that cargo does not interfere with routing of the top strap.

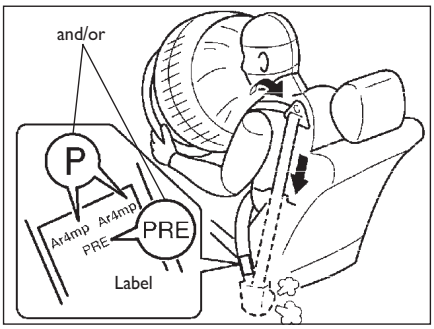

65D205

SEAT BELT PRETENSIONER SYSTEM (if equipped)

WARNING

This section of the owner's manual describes your Fiat's SEAT BELT PRETENSIONER SYSTEM. Please read and follow ALL these instructions carefully to minimize your risk of severe injury or death.

To determine if your vehicle is equipped with a seat belt pretensioner system at the front seating positions, check the label on the front seat belt at the bottom part. If the letters "p" and/or "PRE" appear as illustrated, your vehicle is equipped with the seat belt pretensioner system. You can use the pretensioner seat belts in the same manner as ordinary seat belts.

Read this section and the "Supplemental Restraint System (air bags)" section to learn more about the pretensioner system.

The seat belt pretensioner system works with the SUPPLEMENTAL RESTRAINT SYSTEM (Air Bags). The crash sensors and the electronic controller of the air bag system also control the seat belt pretensioners. When the air bags are triggered, the pretensioners are also triggered. For precautions and general information including servicing the pretensioner system, refer to the "Supplemental Restraint System (air bags)" section in addition to this "Seat Belt Pretensioner System" section, and follow all those precautions.

Downloaded from www.Manualslib.com manuals search engine

The pretensioner is located in each front seat belt retractor. The pretensioner tightens the seat belt so the belt fits the occupant's body more snugly in the event of a frontal crash. The retractors will remain locked after the pretensioners are activated. Upon activation, some noise will occur and some smoke may be released. These conditions are not harmful and do not indicate a fire in the vehicle.

The driver and all passengers must be properly restrained by wearing seat belts at all times, whether or not a pretensioner is equipped at their seating position, to minimize the risk of severe injury or death in the event of a crash.

Sit fully back in the seat; sit up straight; do not lean forward or sideways. Adjust the belt so the lap portion of the belt is worn low across the pelvis, not across the waist. Please refer to the "Seat Adjustment" section and the instructions and precautions about the seat belts in this "Seat Belts and Child Restraint Systems" section for details on proper seat and seat belt adjustments.

Please note that the pretensioners along with the air bags will activate only in severe frontal collisions. They are not designed to activate in rear impacts, side impacts, rollovers, or minor frontal collisions. The pretensioners can be activated only once. If the pretensioners are activated (that is, if the air bags are activated), have the pretensioner system serviced by an authorized Fiat Dealership as soon as possible.

If the "AIR BAG" light on the instrument cluster does not blink or come on briefly when the ignition switch is turned to the "ON" position, stays on for more than 10 seconds, or comes on while driving, the pretensioner system or the air bag system may not work properly. Have both systems inspected by an authorized Fiat Dealership as soon as possible.

WARNING

Service on or around the pretensioner system components or wiring must be performed only by an authorized Fiat Dealership who is specially trained. Improper service could result in unintended activation of pretensioners or could render the pretensioner inoperative. Either of these two conditions may result in personal injury.

To prevent damage or unintended activation of the pretensioners, be sure the battery is disconnected and the ignition switch has been in the "LOCK" position for at least 90 seconds before performing any electrical service work on your Fiat.

Do not touch pretensioner system components or wiring. The wires are wrapped with yellow tape or yellow tubing, and the couplers are yellow. When scrapping your Fiat, ask your Fiat Dealership, body repair shop, or scrap yard for assistance.

Downloaded from www.Manualslib.com manuals search engine

SUPPLEMENTAL RESTRAINT SYSTEM (air bags) (if equipped)

WARNING

This section of the owner's manual describes the protection provided by your Fiat's SUPPLEMENTAL RESTRAINT SYSTEM (air bags). Please read and follow ALL these instructions carefully to minimize your risk of severe injury or death in the event of a collision.

Your vehicle is equipped with a Supplemental Restraint System consisting of the following components in addition to a lap-shoulder belt at each front seating position.

1 Driver's front air bag module

2 Front passenger's front air bag module

3 Side air bag module (if equipped)

4 Side curtain air bag module (if equipped)

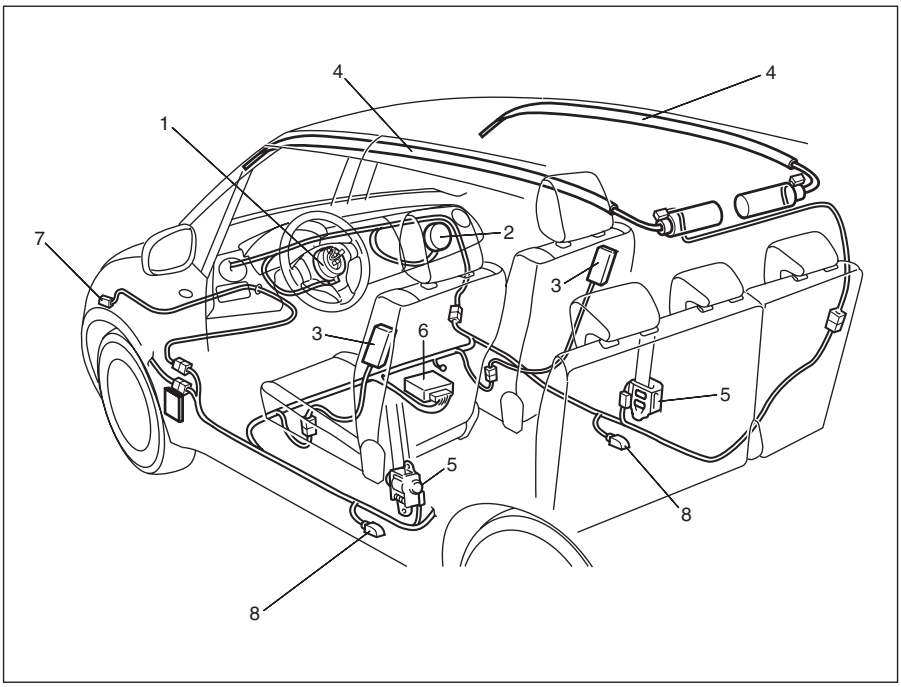

79J115

5 Seat belt pretensioners

6 Air bag controller

7 Forward crash sensor

8 Side crash sensor (if equipped)

Downloaded from www.Manualslib.com manuals search engine

63J030

If the "AIR BAG" light on the instrument cluster does not blink when the ignition switch is first turned to the "ON" position, or the "AIR BAG" light stays on, or comes on while driving, the air bag system (or the seat belt pretensioner system (if equipped)) may not work properly. Have the air bag system inspected by an authorized Fiat Dealership as soon as possible.

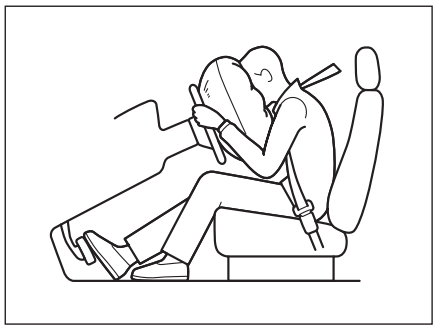

63J113

FRONT AIR BAGS

The driver's front air bag is located behind the center pad of the steering wheel and the front passenger's front air bag is located behind the passenger's side of the dashboard. The words "SRS AIRBAG" are molded into the air bag covers to identify the location of the air bags.

WARNING

Do not apply stickers or other objects to the steering wheel or to the air bag cover on the passenger's side or on the side roof lining. Never put objects (e.g. mobile phones) on the dashboard on passenger side since they could interfere with proper air bag inflation and also cause serious injury.

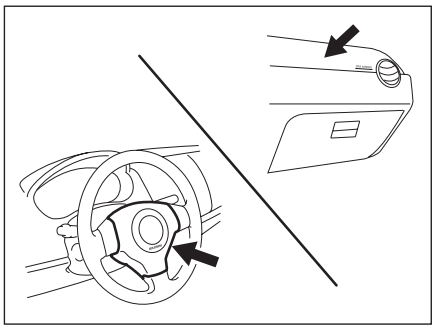

79J059

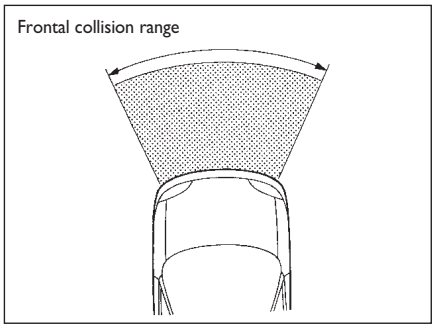

60G032

Downloaded from www.Manualslib.com manuals search engine

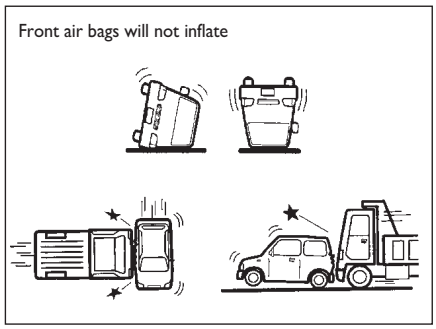

65D236A

Front air bags are designed to inflate only in severe frontal collisions. They are not designed to inflate in rear impacts, side impacts, rollovers or minor frontal collisions, since they would offer no protection in those types of accidents. Remember, since an air bag deploys only one time during an accident, seat belts are needed to restrain occupants from further movements during the accident.

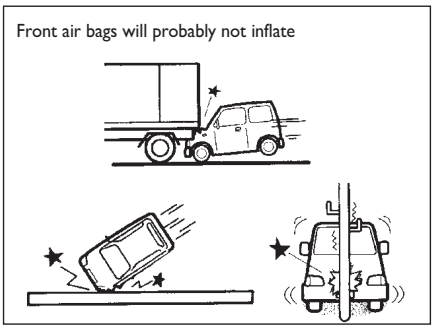

65D237A

Therefore, an air bag is NOT a substitute for seat belts. To maximize your protection, ALWAYS WEAR YOUR SEAT BELTS. Be aware that no system can prevent all possible injuries that may occur in an accident.

WARNING

An air bag supplements, or adds to, the crash protection offered by seat belts. The driver and all passengers must be properly restrained by wearing seat belts at all times, whether or not an air bag is mounted at their seating position, to minimize the risk of severe injury or death in the event of a crash.

65D361

WARNING

Do not install a rear- facing child restraint in the front passenger's seat. If the passenger's front air bag inflates, a child in a rear-facing child restraint could be killed or severely injured. The back of a rear- facing child restraint would be too close to the inflating air bag.

If you must use a front- facing child restraint in the front passenger's seat, be sure to move the front passenger's seat as far back as possible. Please refer to the "Seat Belts and Child Restraint Systems" section in the "BEFORE DRIVING" section for details on securing your child.

Downloaded from www.Manualslib.com manuals search engine

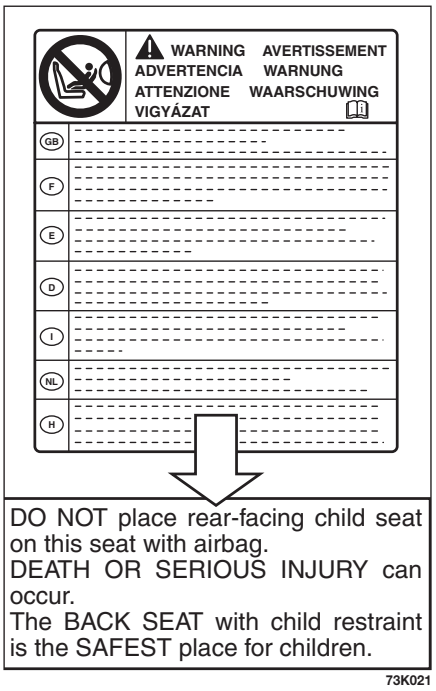

73K021

Air bag plate

The plate is located on the sun visor

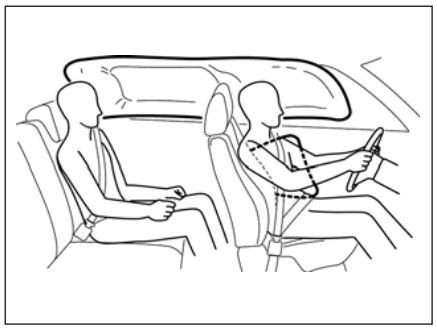

63J115

SIDE AIR BAGS AND SIDE CURTAIN AIR BAGS (if equipped)

Side air bags (if equipped) are located in the part of the front seatbacks closest to the doors. The words "SRS AIRBAG" are molded into the side air bag cover to identify the location of the side air bags.

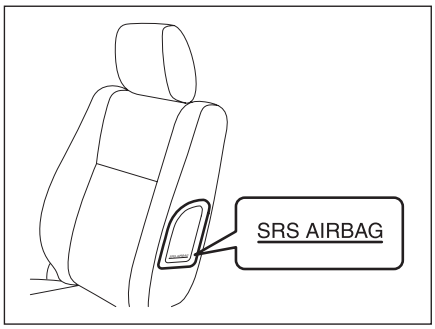

77J052

Downloaded from www.Manualslib.com manuals search engine

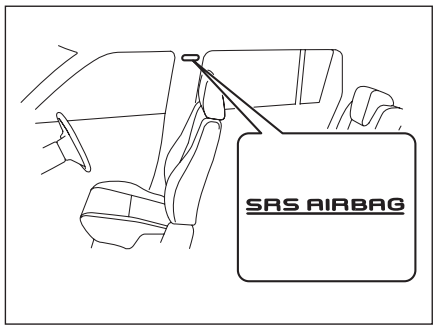

79J116

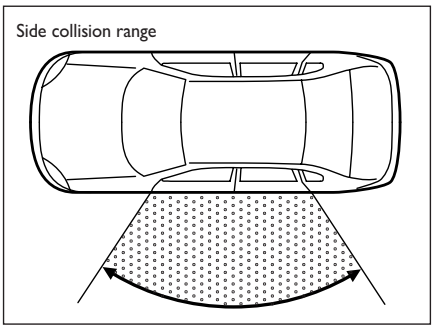

54G026

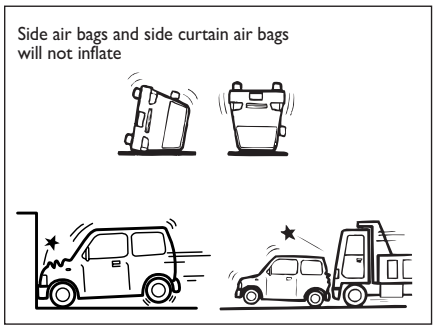

54G027

WARNING

If your vehicle is equipped with a side air bag, do not install a child restraint in the front passenger's seat. If the passenger's side air bag inflates, a child in a child restraint could be injured.

WARNING

Never rest head, arms and elbows on the door, on the windows and in the window bag area to prevent possible injuries during inflation phase.

WARNING

Never lean head, arms and elbows out of window.

Side curtain air bags (if equipped) are located in the roof lining. The words "SRS AIRBAG" are molded into the pillar to identify the location of the side curtain air bags.

Downloaded from www.Manualslib.com manuals search engine

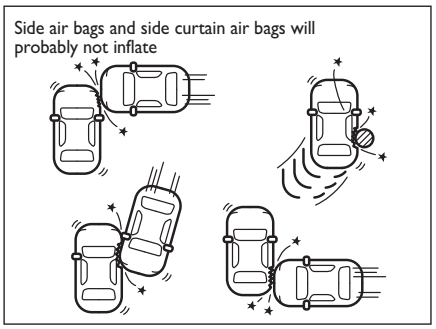

54G028

Side air bags and side curtain air bags are designed to inflate only in severe side impact collisions. They are not designed to inflate in frontal or rear collisions, rollovers or minor side collisions, since they would offer no protection in those types of accidents. Remember, since an air bag deploys only one time during an accident, seat belts are needed to restrain occupants from further movements during the accident.

Therefore, an air bag is NOT a substitute for seat belts. To maximize your protection, ALWAYS WEAR YOUR SEAT BELTS. Be aware that no system can prevent all possible injuries that may occur in an accident.

WARNING

An air bag supplements, or adds to, the crash protection offered by seat belts. The driver and all passengers must be properly restrained by wearing seat belts at all times, whether or not an air bag is mounted at their seating position, to minimize the risk of severe injury or death in the event of a crash.

65D366

HOW THE SYSTEM WORKS

In a frontal collision, the crash sensors will detect rapid deceleration, and if the controller judges that the deceleration represents a severe frontal crash, the controller will trigger the inflators. If your vehicle is equipped with side air bags and side curtain air bags, crash sensors will detect a side collision, and if the controller judges that the side collision is severe enough, it will trigger a side inflator. The inflators inflate the appropriate air bags with nitrogen or argon gas. The inflated air bags provide a cushion for your head (front air bags and side curtain air bags only) and upper body. The air bag inflates and deflates so quickly that you may not even realize that it has activated. The air bag will neither hinder your view nor make it harder to exit the vehicle.

Downloaded from www.Manualslib.com manuals search engine

Air bags must inflate quickly and forcefully in order to reduce the chance of serious or fatal injuries. However, an unavoidable consequence of the quick inflation is that the air bag may irritate bare skin, such as the facial area against a front air bag. Also, upon inflation, a loud noise will occur and some powder and smoke will be released. These conditions are not harmful and do not indicate a fire in the car. Be aware, however, that some air bag components may be hot for a while after inflation.

54G535

A seat belt helps keep you in the proper position for maximum protection when an air bag inflates. Adjust your seat as far back as possible while still maintaining control of the vehicle. Sit fully back in your seat; sit up straight; do not lean over the steering wheel or dashboard. Front occupants should not lean on or sleep against the door. Please refer to the "Seat Adjustment" section and the "Seat Belts and Child Restraint Systems" section in the "BEFORE DRIVING" section for details on proper seat and seat belt adjustments.

WARNING

The driver should not lean over the steering wheel. The front passenger should not rest his or her body against the dashboard, or otherwise get too close to the dashboard. For vehicles with side air bags and side curtain air bag, occupants should not lean on or sleep against the door. In these situations, the out-of- position occupant would be too close to an inflating air bag, and may suffer severe injury.

Do not attach any objects to, or place any objects over, the steering wheel or dashboard. Do not place any objects between the air bag and the driver or front passenger. These objects may interfere with air bag operation or may be propelled by the air bag in the event of a crash. Either of these conditions may cause severe injury.

For vehicles with side air bags, do not place seat covers on the front seats, because seat covers could restrict the air bag's inflation. Also, do not place any cup holders on the door, as the cup holder could be propelled by the air bag in the event of a crash. Either of these conditions may cause severe injury.

Downloaded from www.Manualslib.com manuals search engine

Note that even though your vehicle may be moderately damaged in a collision, the collision may not have been severe enough to trigger the front or side air bags to inflate. If your vehicle sustains ANY front-end or side damage, have the air bag system inspected by an authorized Fiat Dealership to ensure it is in proper working order.

Your vehicle is equipped with a diagnostic module which records information about the air bag system if the air bags deploy in a crash. The module records information about overall system status, which sensors activated the deployment.

Servicing the air bag system

If the air bags inflate, have the air bags and related components replaced by an authorized Fiat Dealership as soon as possible.

If your vehicle ever gets in deep water and the driver's floor is submerged, the air bag controller could be damaged. If it does, have the air bag system inspected by the Fiat Dealership as soon as possible.

Special procedures are required for servicing or replacing an air bag. For that reason, only an authorized Fiat Dealership should be allowed to service or replace your air bags. Please remind anyone who services your Fiat that it has air bags.

Service on or around air bag components or wiring must be performed only by an authorized Fiat Dealership. Improper service could result in unintended air bag deployment or could render the air bag inoperative. Either of these two conditions may result in severe injury.

To prevent damage or unintended inflation of the air bag system, be sure the battery is disconnected and the ignition switch has been in the "LOCK" position for at least 90 seconds before performing any electrical service work on your Fiat. Do not touch air bag system components or wires. The wires are wrapped with yellow tape or yellow tubing, and the couplers are yellow for easy identification.

Scrapping a vehicle that has an uninflated air bag can be hazardous. Ask your Fiat Dealership, body repair shop or scrap yard for help with disposal.

Downloaded from www.Manualslib.com manuals search engine

GENERAL WARNINGS

WARNING

Never travel with objects on your lap, in front of your chest or with a pipe, pencil, etc. between your lips; injury may result in the event of the air bag being triggered.

WARNING

Remember that with the key engaged and at ON, even if the engine is not running, the air bags may be triggered on a stationary vehicle if it is bumped by another moving car. Therefore, never seat children on the front seat even when the vehicle is stationary. On the other hand remember that if the key is at LOCK, no safety system (air bags or pretensioners) is triggered in the event of an impact; in this case, failure to come into action cannot be considered as a sign that the system is not working properly.

WARNING

If the vehicle has been stolen or an attempt to steal it has been made, if it has been subjected to vandals or floods, have the air bag system checked by Fiat Dealership.

WARNING

Do not wash the seat back rest with pressurised water or steam (by hand or at automatic seat washing stations).

WARNING

The front air bag is triggered for shocks greater in magnitude that the pretensioners. For impacts between these two thresholds, it is therefore normal that only the pretensioners are triggered.

Downloaded from www.Manualslib.com manuals search engine

WARNING

Do not hook rigid objects to the coat hooks and to the support handles.

Downloaded from www.Manualslib.com manuals search engine

STEERING COLUMN CONTROLS

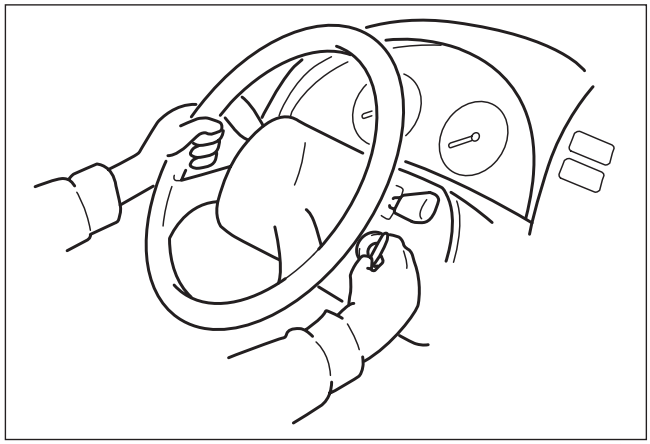

60G405

IGNITION SWITCH 58

LIGHTING/ TURN SIGNAL CONTROL LEVER 63

WINDSHIELD WIPER AND WASHER LEVER 65

REAR WINDOW WIPER/ WASHER SWITCH (if equipped) 66

TILT STEERING LOCK LEVER (if equipped) 67

REMOTE AUDIO CONTROLS (if equipped) 68

HORN 68

Downloaded from www.Manualslib.com manuals search engine

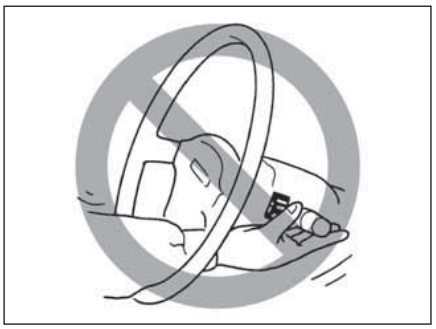

65D367

WARNING

To avoid possible injury, do not operate controls by reaching through the steering wheel.

IGNITION SWITCH

VEHICLE WITHOUT KEYLESS START SYSTEM

The ignition switch has the following four positions:

LOCK

This is the normal parking position. It is the only position in which the key can be removed.

It locks the ignition, and prevents normal use of the steering wheel after the key is removed.

You must push in the key to turn it to the "LOCK" position.

If your vehicle is equipped with the automatic transaxle key inter lock system, the key can be turned to the "LOCK" position only when the gearshift lever is in the "P" (Park) position.

To release the steering lock, insert the key and turn it clockwise to one of the other positions. If you have trouble turning the key to unlock the steering, try turning the steering wheel slightly to the right or left while turning the key.

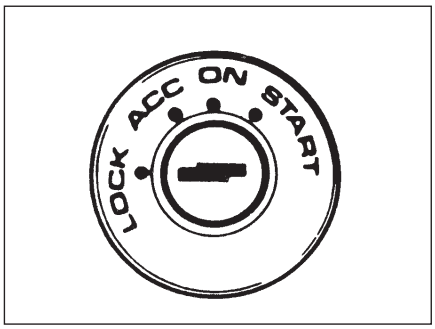

60B041A

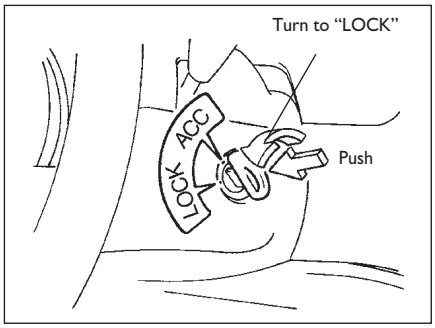

60G033A

ACC

Accessories such as the radio can operate, but the engine is off.

ON

This is the normal operating position. All electrical systems are on.

Downloaded from www.Manualslib.com manuals search engine

START

This is the position for starting the engine using the starter motor. The key should be released from this position as soon as the engine starts.

Ignition key reminder (if equipped)

A buzzer sounds intermittently to remind you to remove the ignition key if it is in the ignition switch when the driver's door is opened.

WARNING

When getting out of the vehicle, always remove the key to prevent any occupants from accidentally activating the controls. Remember to engage the handbrake and if the vehicle is parked on uphill slope to engage the first gear. If the vehicle is facing downhill, engage the reverse gear. Never leave unsupervised children in the vehicle.

WARNING

It is absolutely forbidden to carry out whatever aftermarket operation involving steering system or steering column modifications (e.g.: installation of anti-theft device) that could badly affect performance and safety, cause the lapse of warranty and also result in non-compliance of the vehicle with homologation requirements.

WARNING

If the ignition device is tampered with (e.g.: attempted theft), have it checked over by a Fiat Dealership as soon as possible.

WARNING

Never remove the ignition key while the vehicle is moving. The steering wheel would automatically lock as soon as you try to turn it. This also applies when the vehicle is being towed.

Downloaded from www.Manualslib.com manuals search engine

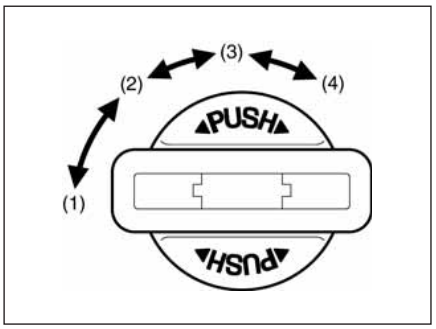

80J083

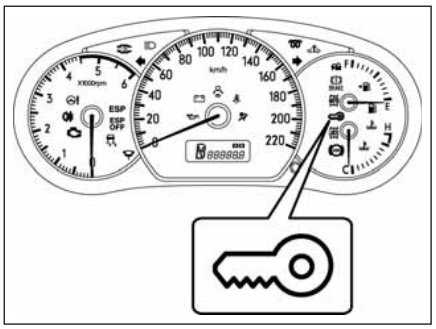

79J186

VEHICLE WITH KEYLESS START SYSTEM

The ignition switch can be operated when the remote controller is in the vehicle except the rear luggage area. To turn the ignition switch, push the switch first.

NOTE You must push in the ignition switch to turn it from the "LOCK" position to the "ACC" position. To return to the "LOCK" position from the "ACC" position, turn the ignition switch counterclockwise while pushing in the switch.

If the keyless start system blue indicator light illuminates on the instrument cluster, you can turn the ignition switch. If the red indicator light illuminates, you can not turn the ignition switch.

NOTE

❒ The ignition switch can be turned to the "ACC" position when the keyless start system blue indicator light illuminates. The blue indicator light will illuminate for several seconds and then turn off to protect the system. In this case, you must release the ignition switch once and push the switch again.

❒ If the keyless start system red indicator light illuminates, the remote controller may not be in the vehicle or the battery of the remote controller may be unreliable. The red indicator light will turn off within several seconds after the remote controller is returned in the vehicle except in the rear luggage area.

When the remote controller is in the vehicle except the rear luggage area, you can turn the ignition switch without using an ignition key.

NOTE

❒ If the battery of the remote controller runs down or there are strong radio waves or noise, the operating range may be narrower or the remote controller may be inoperative.

❒ If the remote controller is too close to the door glass, it may not operate.

❒ The ignition switch may not turn when the remote controller is on the instrument panel, in the glove box, in the door pocket, in the sun visor or on the floor.

Downloaded from www.Manualslib.com manuals search engine

IMPORTANT The remote controller is a sensitive electronic instrument. To avoid damaging the remote controller:

❒ Do not expose it to impacts, moisture or high temperature such as on the dashboard under direct sunlight.

❒ Keep the remote controller away from magnetic objects such as a television.

You can also turn the ignition switch by inserting the ignition key into the slot.

If you leave any of the doors open with the ignition switch in the "ACC" position for a while (and no key inserted), the engine may not start when you turn the ignition switch to "START". If the engine does not start, close all doors completely or turn the ignition switch back to the "LOCK" position, then start the engine.

The ignition switch has the following four positions:

LOCK (1)

This is the normal parking position. It is the only position in which the key can be removed. It locks the ignition, and prevents normal use of the steering wheel.

To release the steering lock, turn the ignition switch clockwise to one of the other positions. If you have trouble turning the ignition switch to unlock the steering, try turning the steering wheel slightly to the right or left while turning the switch.

NOTE You must push the ignition switch to turn it to the "ACC" position. Also you must push the ignition switch to return it to the "LOCK" position.

ACC (2)

Accessories such as the radio can operate, but the engine is off.

ON (3)

This is the normal operating position. All electrical systems are on.

START (4)

This is the position for starting the engine using the starter motor. The switch should be released from this position as soon as the engine starts.

Downloaded from www.Manualslib.com manuals search engine

Ignition switch reminder

(When using the keyless start system)

A buzzer sounds intermittently to remind you to return the ignition switch to the "LOCK" position if it is in the "ACC" position when the driver's door is opened.

Ignition key reminder

(When using the ignition key)

A buzzer sounds intermittently to remind you to remove the ignition key if it is in the ignition switch when the driver's door is opened.

81A279S

WARNING

Never return the ignition switch to the "LOCK" position and remove the ignition key while the vehicle is moving. The steering wheel will lock and you will not be able to steer the vehicle.

Always return the ignition switch to the "LOCK" position and remove the ignition key when leaving the vehicle even if a short time. Also do not leave children alone in a parked vehicle. Unattended children could cause accidental movement of the vehicle or could tamper with power windows or power sunroof. They also could suffer from heat stroke in warm or hot weather. These could result in severe injury or even death.

IMPORTANT

❒ Do not use the starter motor for more than 15 seconds at a time. For diesel engine model, do not use the starter motor for more than 30 seconds at a time. If the engine does not start, wait 15 seconds before trying again. If the engine does not start after several attempts, check the fuel and ignition systems or consult your Fiat Dealership.

❒ Do not leave the ignition switch in the "ON" position if the engine is not running as the battery will discharge.

Downloaded from www.Manualslib.com manuals search engine

LIGHTING/TURN SIGNAL CONTROL LEVER

LIGHTING OPERATION

To turn the lights on or off, twist the knob on the end of the lever. There are three positions:

OFF (1) all lights are off.

(2) Front parking lights, tail-lights, license plate light and instrument lights are on, but headlights are off.

(3) Front parking lights, tail-lights, license plate light, instrument lights and head lights are on.

With the headlights on, push the lever forward to switch to the high beams (main beams) or pull the lever toward you to switch to the low beams. When the high beams (main beams) are on, a light on the instrument panel will come on. To momentarily activate the high beams (main beams) as a passing signal, pull the lever slightly toward you and release it when you have completed the signal.

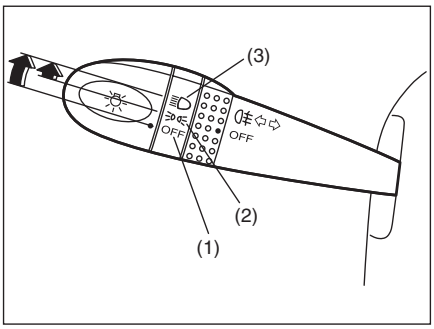

78K068

Lights "On" reminder (if equipped)

A buzzer/ chime sounds to remind you to turn off the lights if they are left on when the ignition key is removed and the driver's door is opened.

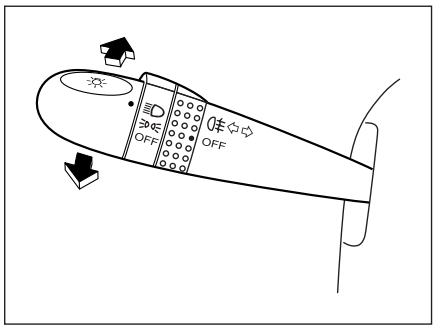

78K069

Day time running light control (if equipped)

When the engine is started, this system turns on all lights. But this control is canceled when the light control lever is turned to any position other than "OFF".

Downloaded from www.Manualslib.com manuals search engine

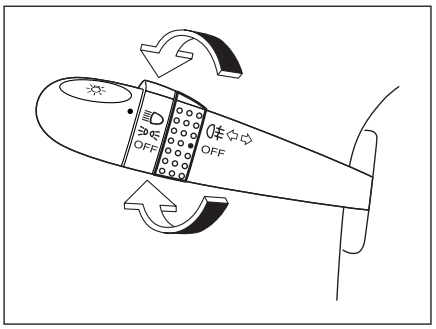

78K070

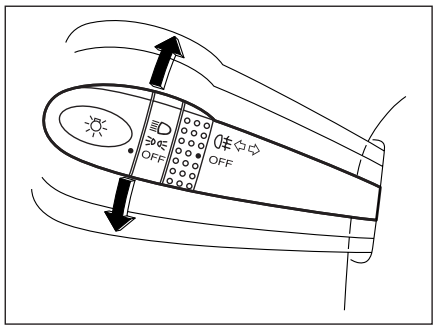

78K071

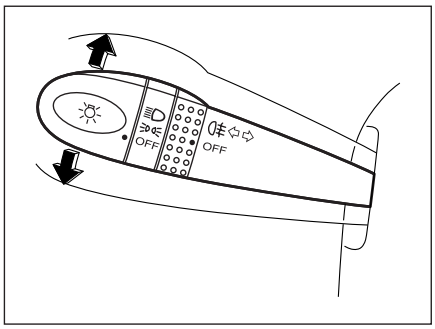

78K072

REAR FOG LIGHT SWITCH

To turn the rear fog light on, twist the knob as shown in the illustration with the head light switch in the third position. When the rear fog light is on, an indicator light on the instrument cluster will come on. Do not turn the rear fog light switch unless the head light switch is in the third position.

NOTE When the head light switch is returned to the "OFF" position, the rear fog light switch will be canceled automatically.

TURN SIGNAL OPERATION

With the ignition switch in the "ON" position, move the lever up or down to activate the right or left turn signals.

Normal turn signal

Move the lever all the way upward or downward to signal. When the turn is completed, the signal will cancel and the lever will return to its normal position.

Lane change signal

Some times, such as when changing lanes, the steering wheel is not turned far enough to cancel the turn signal. For convenience, you can flash the turn signal by moving the lever part way and holding it there. The lever will return to its normal position when you release it.

Downloaded from www.Manualslib.com manuals search engine

WINDSHIELD WIPER AND WASHER LEVER

WINDSHIELD WIPERS

To turn the windshield wipers on, move the lever down to one of the three operating positions. In the "INT" position (if equipped), the wipers operate intermittently. The "INT" position is very convenient for driving in mist or light rain. In the "LO" position, the wipers operate at a steady low speed. In the "HI" position, the wipers operate at a steady high speed. To turn off the wipers, move the lever back to the "OFF" position.

Move the lever up and hold it to the "MIST" position, the windshield wipers will turn on continuously at low speed.

IMPORTANT Never use the window wiper to remove ice or snow from the windscreen. In these conditions, the wiper is submitted to excessive effort that results in motor protection cutting in and wiper operation inhibition for few seconds as a consequence. If operation is not restored (also after restarting the vehicle by the ignition key) contact Fiat Dealership.

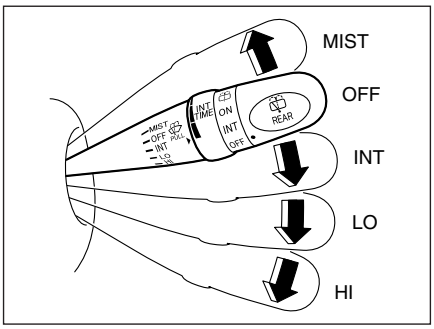

63J301

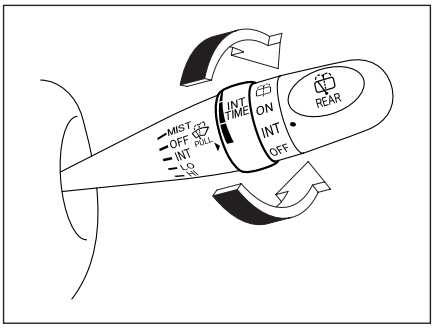

63J302

If the lever is equipped with the "INT TIME" control, turn the control forward or rearward to adjust the intermittent wiper operation to the desired interval.

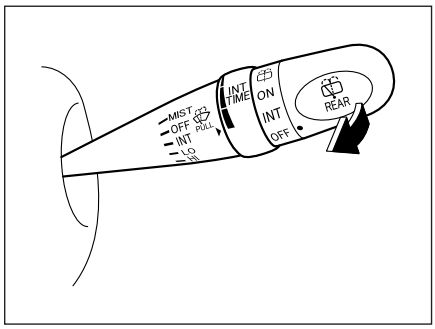

63J303

WINDSHIELD WASHER

To spray windshield washer fluid, pull the lever toward you. The windshield wipers will automatically turn on at low speed if they are not already on and the "INT" position is equipped.

WARNING

To prevent windshield icing in cold weather, turn on the defroster to heat the windshield before and during windshield washer use.

Do not use radiator antifreeze in the windshield washer reservoir. It can severely impair visibility when sprayed on the windshield, and can also damage your vehicle's paint.

Downloaded from www.Manualslib.com manuals search engine

IMPORTANT To help prevent damage to the windshield wiper and washer system components, you should take the following precautions:

❒ Do not continue to hold in the lever when there is no windshield washer fluid being sprayed or the washer motor can be damaged.

❒ Do not attempt to remove dirt from a dry windshield with the wipers or you can damage the windshield and the wiper blades. Always wet the windshield with washer fluid before operating the wipers.

❒ Clear ice or packed snow from the wiper blades before using the wipers.

❒ Check the washer fluid level regularly. Check it often when the weather is bad.

❒ Only fill the washer fluid reservoir 3/4 full during cold weather to allow room for expansion if the temperature falls low enough to freeze the solution.

REAR WINDOW WIPER/WASHER SWITCH (if equipped)

To turn the rear wiper on, twist the rear wiper switch on the end of the lever forward to the "ON" position. If your vehicle is equipped the "INT" position, the rear wiper operates intermittently when you twist the switch forward to the "INT" position. To turn the rear wiper off, twist the switch rearward to the "OFF" position.

With the rear wiper in the "OFF" position, twist the switch rearward and hold it there to spray window washer fluid.

With the rear wiper in the "ON" position, turn the switch forward and hold it there to spray window washer fluid.

IMPORTANT Never use the rear window wiper to remove ice or snow from the rear window. In these conditions, the wiper is submitted to excessive effort that results in motor protection cutting in and wiper operation inhibition for few seconds as a consequence. If operation is not restored contact Fiat Dealership.

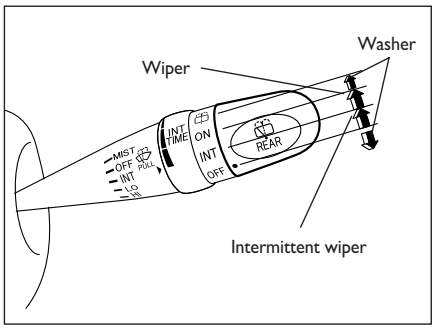

63J304

IMPORTANT Clear ice or snow from the rear window and rear wiper blade before using the rear wiper. Accumulated ice or snow could prevent the wiper blade from moving, causing damage to the wiper motor.

Downloaded from www.Manualslib.com manuals search engine

TILT STEERING LOCK LEVER (if equipped)

The lock lever is located under the steering column. To adjust the steering wheel height:

❒ Pull up the lock lever to unlock the steering column.

❒ Adjust the steering wheel to the desired height and lock the steering column by push down the lock lever.

❒ Try moving the steering wheel up and down to make sure it is securely locked in position.

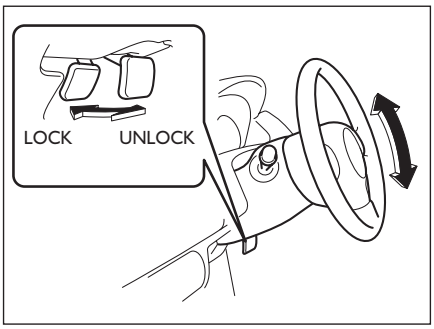

63J026

WARNING

Any adjustment of the steering wheel position must be carried out only with the vehicle stationary and the engine turned off.

WARNING

It is absolutely forbidden to carry out whatever aftermarket operation involving steering system or steering column modifications (e.g.: installation of anti-theft device) that could badly affect performance and safety, cause the lapse of warranty and also result in non-compliance of the vehicle with homologation requirements.

WARNING

Never attempt to adjust the steering wheel height while the vehicle is moving or you could lose control of the vehicle.

Downloaded from www.Manualslib.com manuals search engine

REMOTE AUDIO CONTROLS (if equipped)

You can control basic functions of the audio system with the switches on the steering wheel.

For details, refer to “Audio Systems” in the “INSTRUMENT PANEL” section.

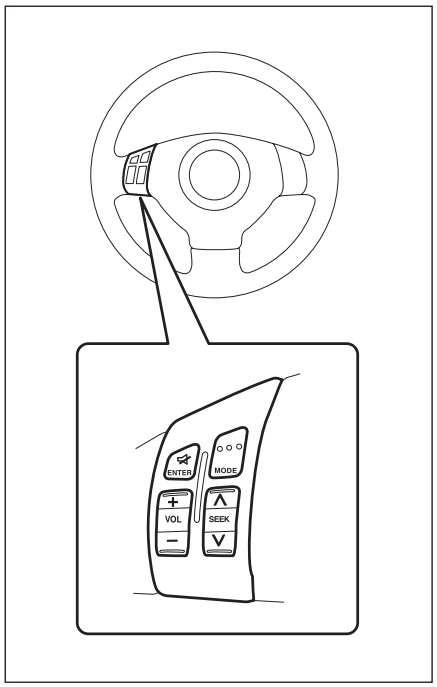

79J073

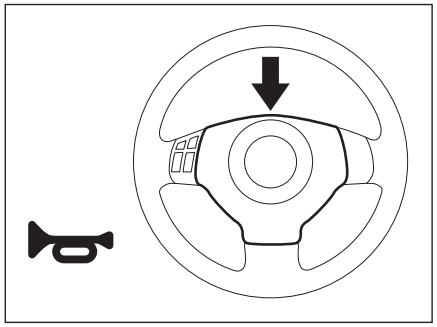

79J060

HORN

Press the horn button of the steering wheel to sound the horn. The horn will sound with the ignition switch in any position.

Downloaded from www.Manualslib.com manuals search engine

INSTRUMENT PANEL

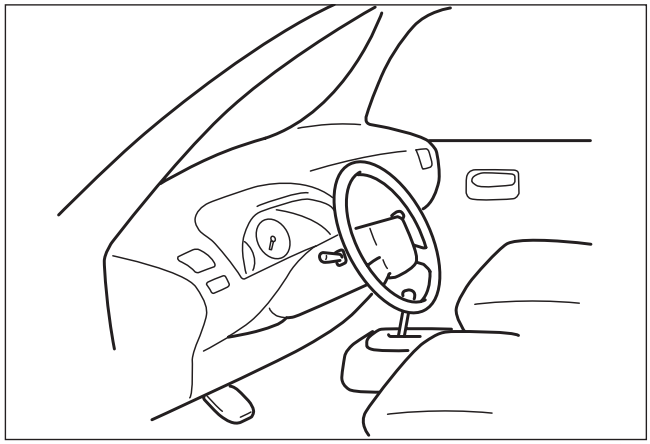

60G406

INSTRUMENT PANEL 70

INSTRUMENT CLUSTER 71

WARNING AND INDICATOR LIGHTS 72

TRANSAXLE SELECTOR POSITION INDICATOR (if equipped) 80

SPEEDOMETER/ ODOMETER/ TRIP METER/ METER ILLUMINATION CONTROL 81

TACHOMETER 83

FUEL GAUGE 84

TEMPERATURE GAUGE/OVERHEAT INDICATOR LIGHT (for diesel engine model) 84

HAZARD WARNING SWITCH 85

"ESP OFF" SWITCH (if equipped) 85

2WD/ 4WD SWITCH (if equipped) 86

HEADLIGHT LEVELING SWITCH (if equipped) 87

HEATED REAR WINDOW AND HEATED OUTSIDE REARVIEW MIRRORS (if equipped) SWITCH 88

ILLUMINATION CANCEL SWITCH (if equipped) 89

FRONT FOG LIGHT SWITCH (if equipped) 89

CIGARETTE LIGHTER AND ASHTRAY (if equipped) .. 90

GLOVE BOX 91

INFORMATION DISPLAY (Type I) (if equipped) 91

INFORMATION DISPLAY (Type II) (if equipped) 94

CLOCK (if equipped) 98

HEATING AND AIR CONDITIONING SYSTEM 99

MANUAL HEATING AND AIR CONDITIONING SYSTEM 100

AUTOMATIC HEATING AND AIR CONDITIONING SYSTEM 104

AUDIO SYSTEMS 109

MP3/WMA PLAYER (if equipped) 120

Downloaded from www.Manualslib.com manuals search engine

INSTRUMENT PANEL

1. Instrument cluster
2. Ignition switch
3. Lighting switch/ Turn signal and dimmer switch
4. Windshield wiper and washer switch/ Rear window wiper and washer switch (if equipped)
5. Hazard warning switch
6. Other switches (if equipped)
7. Heater control panel
8. Audio (if equipped)
9. Cigarette lighter/ ashtray or storage area
10. Hood release
11. Center ventilator
12. Side ventilator
13. Side defroster
14. Glove box
15. Fuse box
16. Air bag (if equipped)
17. Information display

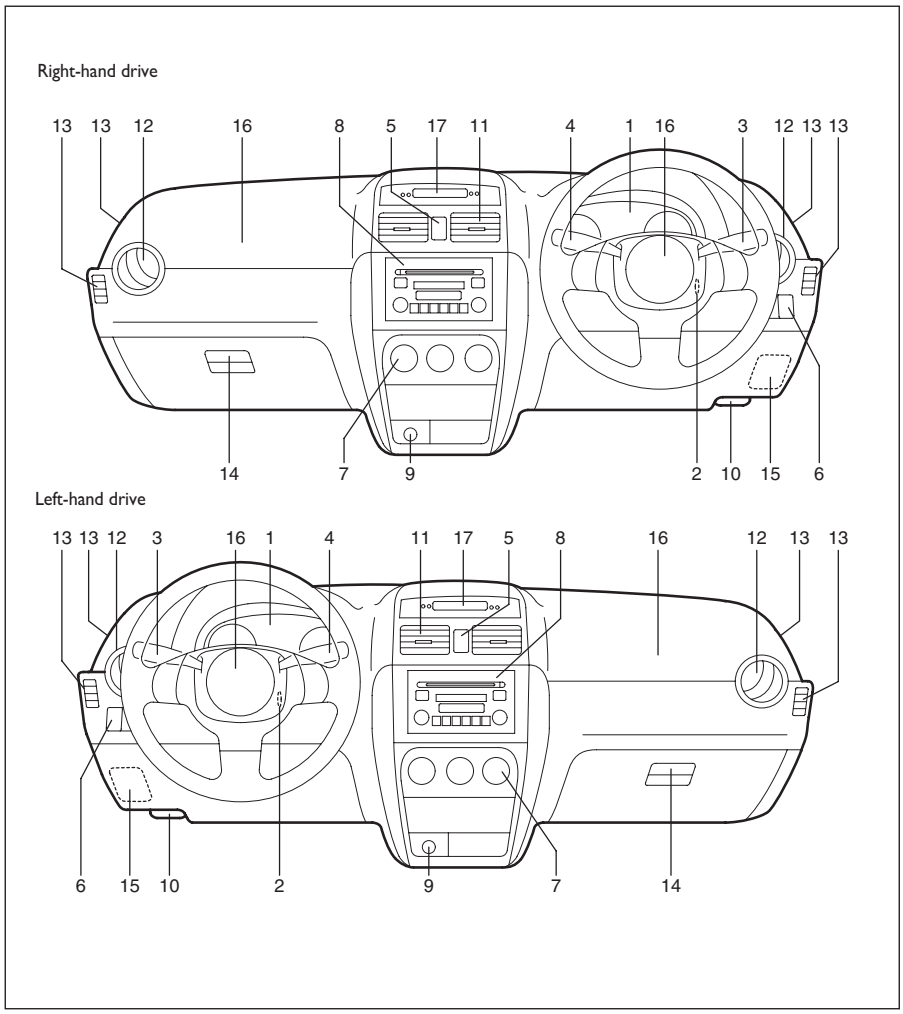

79J037

Downloaded from www.Manualslib.com manuals search engine

INSTRUMENT CLUSTER

1. Speedometer
2. Odometer/Trip meter
3. Odometer/Trip meter selector knob
4. Tachometer
5. Fuel gauge
6. Temperature gauge
7. Warning and indicator lights

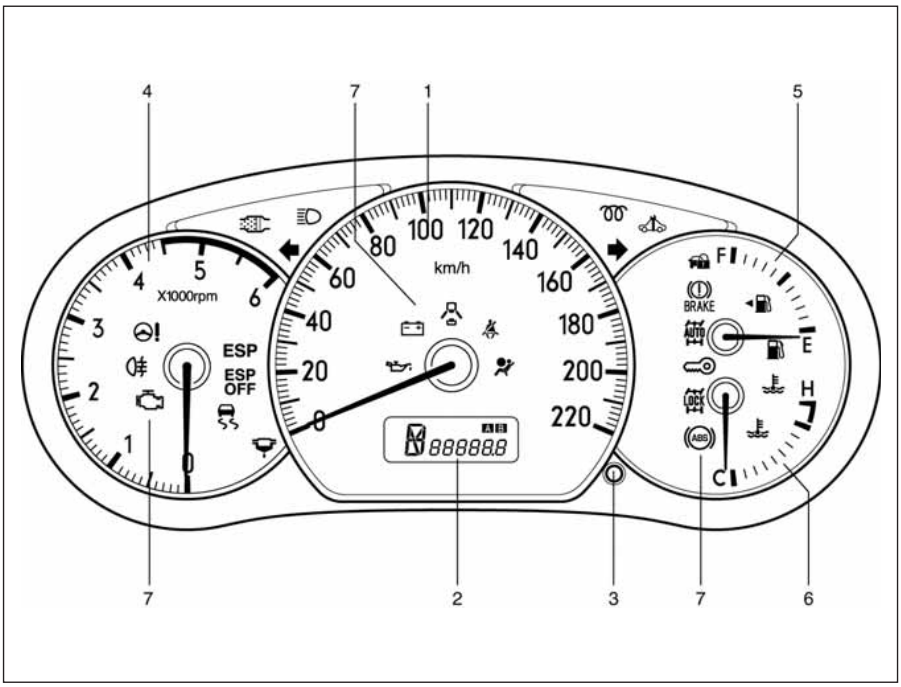

79J179

Downloaded from www.Manualslib.com manuals search engine

WARNING AND INDICATOR LIGHTS

BRAKE SYSTEM WARNING LIGHT

65D477

For working check of this light, there are following three different type operations depending on the vehicle's specification.

❒ The light comes on briefly when the ignition switch is turned to the "ON" and/or "START" position.

❒ The light comes on when the parking brake is engaged with the ignition switch in the "ON" position.

❒ The light comes on when under either or both of above two conditions.

The light also comes on when the fluid in the brake fluid reservoir falls below the specified level.

The light should go out after starting the engine and fully releasing the parking brake, if the fluid level in the brake fluid reservoir is adequate.

The light also comes on together with the ABS warning light when the rear brake force control function (Proportioning valve function) of the ABS system fails.

If the brake system warning light comes on while you are driving the vehicle, it may mean that there is something wrong with the vehicle's brake system. If this happens, you should:

❒ Pull off the road and stop carefully.

WARNING

Remember that stopping distance may be longer, you may have to push harder on the pedal, and the pedal may go down farther than normal.

❒ Test the brakes by carefully starting and stopping at the side of the road.

– If you determine that it is safe, drive carefully at low speed to the nearest dealer for repairs, or

– Have the vehicle towed to the nearest dealer for repairs.

WARNING

If any of the following conditions occur, you should immediately ask your Fiat Dealership to inspect the brake system.

If the brake system warning light does not go out after the engine has been started and the parking brake has been fully released.

If the brake system warning light does not come on when the ignition switch is turned to the "ON" or "START" position.

If the brake system warning light comes on at any time during vehicle operation.

NOTE Because the disc brake system is selfadjusting, the fluid level will drop as the brake pads become worn. Replenishing the brake fluid reservoir is considered normal periodic maintenance.

Downloaded from www.Manualslib.com manuals search engine

ANTI-LOCK BRAKE SYSTEM (ABS) WARNING LIGHT

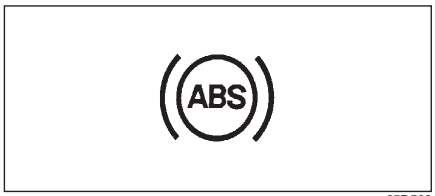

65D529

When the ignition switch is turned to the "ON" position, the light comes on briefly so you can check that the light is working.

If the light stays on, or comes on when driving, there may be something wrong with the ABS.

If this happens:

❒ Pull off the road and stop carefully.

❒ Turn the ignition switch to "LOCK" and then start the engine again.

If the warning light comes on briefly then turns off, the system is normal. If the warning light still stays on, the system will be something wrong.

If the light and the brake system warning light stay on, or come on simultaneously when driving, your ABS system is equipped with the rear brake force control function (Proportioning valve function) and there may be something wrong with both the rear brake force control function and anti-lock function of the ABS system.

If one of these happens, have the system inspected by your Fiat Dealership.

If the ABS becomes inoperative, the brake system will function as an ordinary brake system that does not have this ABS system.

SLIP INDICATOR LIGHT (if equipped)

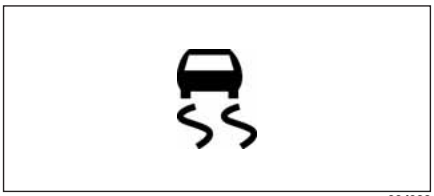

66J033

ESP® is a registered trademark of DaimlerChrysler AG.

This light blinks 5 times per second when one of the ESP® systems other than ABS is activated. If this light blinks, drive carefully.

When the ignition switch is turned to the "ON" position, the light comes on briefly so you can check that the light is working. If the light stays on, or comes on when driving and remains on, there may be something wrong with the ESP® systems (other than ABS). You should have the system inspected by an authorized FIAT dealer.

NOTE When you disconnect and re- connect the battery, ESP® system functions other than ABS will be deactivated and the slip indicator light will blink 1 time per second. For details on how to reactive the ESP® systems, refer to "SLIP Indicator Light" in the "OPERATING YOUR VEHICLE" section.

For details of the ESP® systems, refer to "Electronic Stability Program (ESP®)" in the "OPERATING YOUR VEHICLE" section.

WARNING

The ESP® systems cannot prevent accidents. Always drive carefully.

Downloaded from www.Manualslib.com manuals search engine

"ESP" WARNING LIGHT (if equipped) (Electronic Stability Program)

66J031

When the ignition switch is turned to the "ON" position, the light comes on briefly so you can check that the light is working. If the light stays on, or comes on when driving, there may be something wrong with the ESP® systems (other than ABS). You should have the system inspected by an authorized FIAT dealer.

For details of the ESP® systems, refer to "Electronic Stability Program (ESP®)" in the "OPERATING YOUR VEHICLE" section.

"ESP OFF" INDICATOR LIGHT (if equipped)

66J032

When the ignition switch is turned to the "ON" position, this light comes on briefly so you can check that the light is working.

When the "ESP OFF" switch is pushed to turn off the ESP® systems (other than ABS), the "ESP OFF" light comes on and stays on.

For details of the ESP®systems, refer to "Electronic Stability Program (ESP®)" in the "OPERATING YOUR VEHICLE" section.

OIL PRESSURE LIGHT

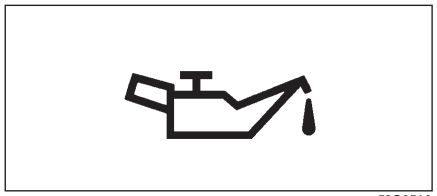

50G051A

This light comes on when the ignition switch is turned to the "ON" position, and goes out when the engine is started. The light will come on and remain on if there is insufficient oil pressure.

WARNING

If the warning light turns on when the vehicle is travelling stop the engine immediately and contact a Fiat Dealership.

Check the oil level and add oil if necessary. If there is enough oil, the lubrication system should be inspected by your Fiat Dealership before you drive the vehicle again.

IMPORTANT

- ❒ If you operate the engine with this light on, severe engine damage can result.
- ❒ Do not rely on the Oil Pressure Light to indicate the need to add oil. Be sure to periodically check the engine oil level.

Oil Life Monitoring (for Diesel Engine Model)

Your vehicle also has the oil life monitoring system that let you know when to change the engine oil and filter.

If the oil pressure light blinks, you should change the engine oil and oil filter immediately since the monitoring system has calculated that oil life has been diminished by detecting a deterioration, increase or decrease of engine oil. The blinking light goes out after 1 minute and comes back on every hour. If the life of engine oil remains 0%, the oil pressure light blinks for 1 minute when the engine is started. You should change the engine oil and filter at the first blink. For details on how to change the engine oil, refer to "Changing Engine Oil and Filter" in "INSPECTION AND MAINTENANCE" section.

Whenever the engine oil is changed, the light must be reset to monitor the next oil change timing properly. To reset the light, consult your Fiat Dealership.

Downloaded from www.Manualslib.com manuals search engine

WARNING

Change the engine oil and filter at the first blink of the light. If you keep operating the engine after the light blinks, severe engine damage can result.

CHARGING LIGHT

50G052A

This light comes on when the ignition switch is turned to the "ON" position, and goes out when the engine is started. The light will come on and remain on if there is something wrong with the battery charging system. If the light comes on when the engine is running, the charging system should be inspected immediately by your Fiat Dealership.

SEAT BELT REMINDER LIGHT (if equipped)

60G049

When the driver doesn't buckle his or her seat belt, this light will come on.

For details about the seat belt reminder, refer to "Seat Belts and Child Restraint Systems" in the "BEFORE DRIVING" section.

"AIR BAG" LIGHT (if equipped)

63J030

This light blinks or comes on for several seconds when the ignition switch is turned to the "ON" position so you can check if the light is working.

The light will come on and stay on if there is a problem in the air bag system or the seat belt pretensioner system (if equipped).

WARNING

If the "AIR BAG" light does not blink or come on briefly when the ignition switch is turned to the "ON" position, stays on for more than 10 seconds, or comes on while driving, the air bag system or the seat belt pretensioner system (if equipped) may not work properly. Have both systems inspected by an authorized Fiat Dealership.

MALFUNCTION INDICATOR LIGHT

65D530

Your vehicle has a computer-controlled emission control system. A malfunction indicator light is provided on the instrument cluster to indicate when it is necessary to have the emission control system serviced. The malfunction indicator light comes on when the ignition switch is turned to "ON" or "START" and goes out when the engine is started.

Downloaded from www.Manualslib.com manuals search engine

If the malfunction indicator light comes on when the engine is running, there is a problem with the emission control system. Bring the vehicle to your Fiat Dealership to have the problem corrected.

IMPORTANT Continuing to drive the vehicle when the malfunction indicator light is on can cause permanent damage to the vehicle's emission control system, and can affect fuel economy and driveability.

Service Vehicle Soon (SVS) Light (for Diesel Engine Model)

84E034

When the ignition switch is turned to the "ON" position, this light comes on briefly to let you know the light is working.

If this light blinks with the ignition switch turned "ON", the engine will not start.

NOTE

If this light blinks, turn the ignition switch to the "LOCK" position, then turn it back to the "ON" position. If the light still blinks with the ignition switch turned to the "ON" position, there may be something wrong with the immobilizer system. Ask to you Fiat Dealership to inspect the system.

FIAT CODE SYSTEM LIGHT (IMMOBILIZER) (if equipped)

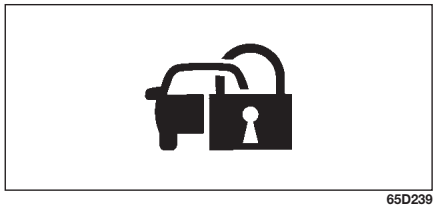

65D239

When the ignition switch is turned to the "ON" position, this light comes on to let you know the light is working. If this light blinks with the ignition switch turned to "ON", there may be something wrong with the immobilizer system.

If this light blinks with the ignition switch turned to "ON", the engine will not start.

NOTE

If this light blinks, turn the ignition switch to the "LOCK" position, then turn it back to the "ON" position. If the light still blinks with the ignition switch turned to the "ON" position, there may be something wrong with the immobilizer system. Ask to you Fiat Dealership to inspect the system.

OVERHEAT INDICATOR LIGHT (for Diesel Engine Model)

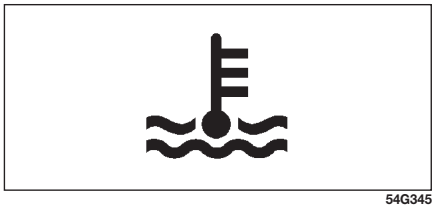

54G345

If this light comes on while driving, it may mean engine overheat. Refer to "Temperature Gauge/Overheat Indicator Light" section.

GLOW PLUG INDICATOR LIGHT (for Diesel Engine Model)

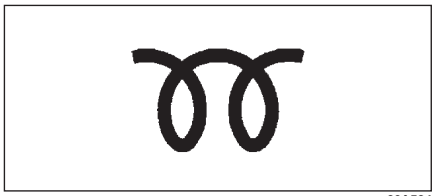

60A534

If the coolant temperature is cool enough, this light comes on when the ignition switch is turned on and goes out when the glow plug is heated enough for engine starting.

Downloaded from www.Manualslib.com manuals search engine

FUEL FILTER WARNING LIGHT (for Diesel Engine Model)

60A541

If the light comes on when driving, there is a possibility to have water in the fuel filter. Drain water as soon as possible. For details of draining water, refer to "Fuel Filter" in the "INSPECTION AND MAINTENANCE" section.

IMPORTANT The presence of water in the fuel circuit may cause serious damage to the entire injection system and cause irregular engine operation. If the warning light turns on contact Fiat Dealership as soon as possible to have the system relieved. If the above indications come on immediately after refuelling, water has probably been poured into the tank: turn the engine off immediately and contact Fiat Dealership.

DIESEL PARTICULATE FILTER WARNING LIGHT (for Diesel Engine Model)

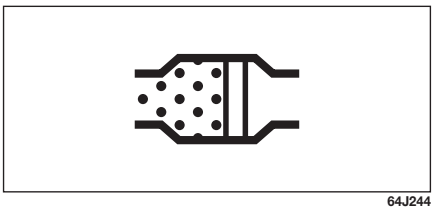

64J244

If the light comes on when driving, the diesel particulate filter is nearly clogged. To regenerate the diesel particulate filter, we recommend that you drive the vehicle until the light goes out, at an average speed of 50 km/h (31 mph) for about 5 minutes.

When the regeneration of the diesel particulate filter is completed by your driving, this warning light will go out.

For details, refer to "Diesel Particulate Filter" in the "OPERATING YOUR VEHICLE" section.

OPEN DOOR WARNING LIGHT

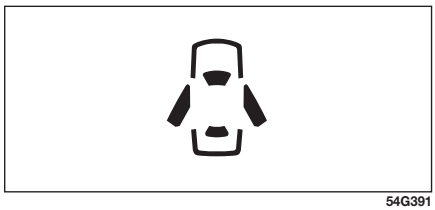

54G391

This light remains on until all doors (including the rear door) are completely closed.

LOW FUEL WARNING LIGHT

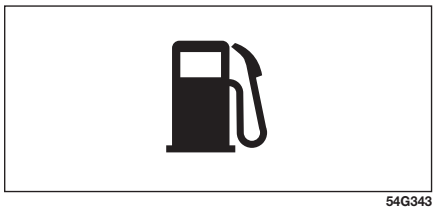

54G343

If this light comes on, fill the fuel tank immediately.

NOTE The activation point of this light varies depending on road conditions (for example, slope or curve) and driving conditions because of fuel moving in the tank.

Downloaded from www.Manualslib.com manuals search engine

ELECTRIC POWER STEERING LIGHT (if equipped)

79J039

This light comes on when the ignition switch is turned to the "ON" position, and goes out when the engine is started.

If this light comes on while driving, the power steering system may not work properly. Have the system inspected by your Fiat Dealership.

NOTE If the power steering system does not work properly, you will feel heavier to steer but you still will be able to steer.

KEYLESS START SYSTEM INDICATOR LIGHT (if equipped)

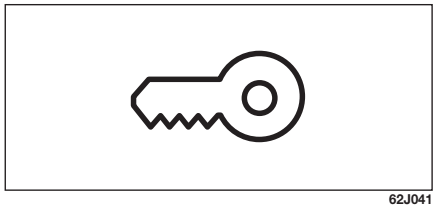

62J041

When you push the ignition switch for vehicle with the keyless start system, this light will come on in blue or red. If this light comes on in blue, you can turn the ignition switch without using an ignition key. If this light comes on in red, you can not turn the ignition switch without using an ignition key. For details, refer to "Ignition Switch" in the "STEERING COLUMN CONTROLS" section.

If this light blinks in red, it reminds you that the remote controller is not in the vehicle. For details, refer to "Keyless Start System" in the "BEFORE DRIVING" section.

REAR FOG LIGHT INDICATOR LIGHT (if equipped)

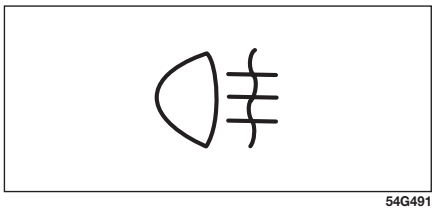

54G491

The rear fog light indicator light comes on when the rear fog light operates.

Downloaded from www.Manualslib.com manuals search engine

TURN SIGNAL INDICATORS

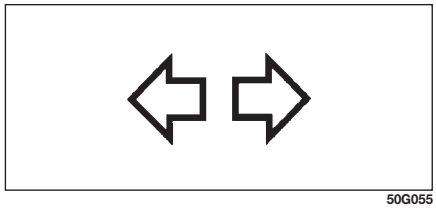

50G055

When you turn on the left or right turn signals, the corresponding green arrow on the instrument cluster will flash along with the respective turn signal lights. When you turn on the hazard warning switch, both arrows will flash along with all of the turn signal lights.

MAIN BEAM (HIGH BEAM) INDICATOR LIGHT

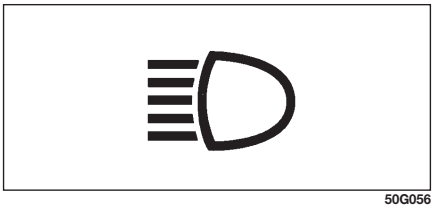

50G056

This indicator comes on when headlight main beams (high beams) are turned on.

4WD AUTO INDICATOR LIGHT (if equipped)

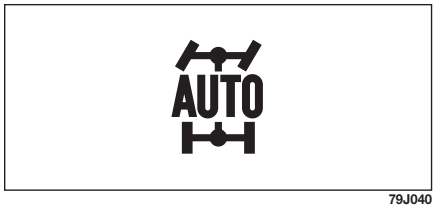

79J040

When the ignition switch is turned to the "ON" position, the light comes on briefly so you can check that the light is working. When the 2WD/4WD switch is in the "4WD AUTO" mode with the ignition switch in the "ON" position, the light comes on and stays on.

If the light and the "4WD LOCK" indicator light stay on or come on simultaneously when driving, there may be something wrong with the 4WD system. Have the system inspected by an authorized Fiat Dealership.

Downloaded from www.Manualslib.com manuals search engine

If the oil temperature of the parts for 4WD system is high, this light will blink. The “4WD AUTO” or “4WD LOCK” mode will be changed to the “2WD” mode automatically to prevent a damage of the parts for 4WD system.

For details, refer to “Using the 2WD/4WD Switch” in the “OPERATING YOUR VEHICLE” section.

NOTE If you restart the engine, the light will stop blinking temporarily.

NOTE When the vehicle speed is increased, the “4WD LOCK” mode will be changed to the “4WD AUTO” mode automatically. The “4WD AUTO” indicator light will come on and stay on.

4WD LOCK INDICATOR LIGHT (if equipped)

79J100

When the ignition switch is turned to the “ON” position, this light comes on briefly so you can check that the light is working.

The light comes on when the 2WD/4WD switch is changed to the “4WD LOCK” mode from the “4WD AUTO” mode.

If the light and the “4WD AUTO” indicator light stay on or come on simultaneously when driving, there may be something wrong with the 4WD system. Have the system inspected by an authorized Fiat Dealership.

NOTE

- ❒ When the vehicle speed is increased, the “4WD LOCK” mode will be changed to the “4WD AUTO” mode automatically. The “4WD AUTO” indicator light will come on and stay on.
- ❒ When the ignition switch is turned to the “OFF” position, the “4WD LOCK” mode is canceled.

For details of the “4WD LOCK” mode, refer to “Using the 2WD/4WD Switch” in the “OPERATING YOUR VEHICLE” section.

IMPORTANT Do not operate your vehicle in “4WD LOCK” mode on dry hard surfaces.

TRANSAXLE SELECTOR POSITION INDICATOR (if equipped)

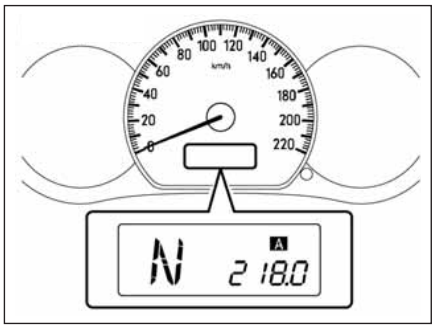

79J151

When the ignition switch is in the “ON” position, the indicator shows the gear position.

For details on how to use the transaxle, refer to “Using the Transaxle” in the “OPERATING YOUR VEHICLE” section.

Downloaded from www.Manualslib.com manuals search engine

SPEEDOMETER/ODOMETER/TRIP METER/ METER ILLUMINATION CONTROL

1. Speedometer
2. Odometer/Trip meter (Indication of illumination intensity)
3. Indication selector and meter illumination control knob

Speedometer

The speedometer indicates vehicle speed in km/ h.

Odometer/Trip meter (Indication of illumination intensity)

When the ignition switch is turned to "ON", the display shows the odometer or trip meter. The odometer records the total distance the vehicle has been driven. The trip meter can be used to measure the distance traveled on short trips or between fuel stops.

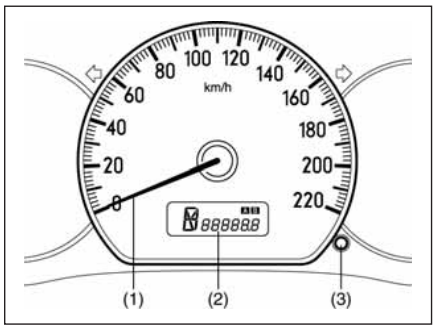

79J185

IMPORTANT Keep track of your odometer reading and check the maintenance schedule regularly for required services. Increased wear or damage to certain parts can result from failure to perform required services at the proper mileage intervals.

Downloaded from www.Manualslib.com manuals search engine

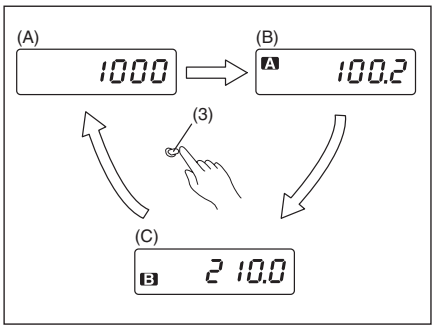

65D603

When the ignition switch is turned to "ON" with the lighting switch is in the "OFF" position, the display shows three types of indication; odometer (**A**), trip meter **A** (**B**) and trip meter **B** (**C**). Push the selector knob (**3**) quickly to switch the indication among the three.

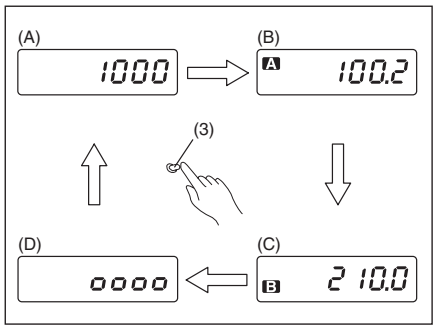

65D532

When the ignition switch is turned to "ON" and the lighting switch is turned to the second or third position with the illumination cancel switch in the OFF position, the display shows four types of indication; odometer (**A**), tripmeter **A** (**B**), tripmeter **B** (**C**) and indication of illumination intensity (**D**). Push the selector knob (**3**) quickly to switch the indication among the four. When the indication shows (**D**), you can control the meter illumination intensity. Refer to "Meter illumination control" section below for details on how to dim or brighten the meter illumination.

For details on how to use the illumination cancel switch, refer to "Illumination Cancel Switch" in this section.

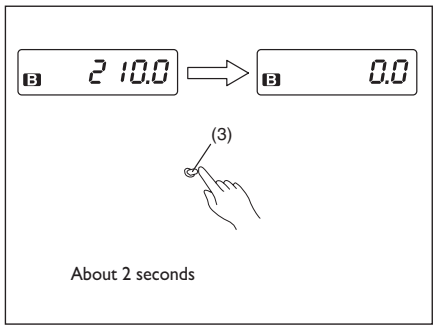

65D481

To reset the trip meter to zero, hold in the selector knob (**3**) for about 2 seconds.

Downloaded from www.Manualslib.com manuals search engine

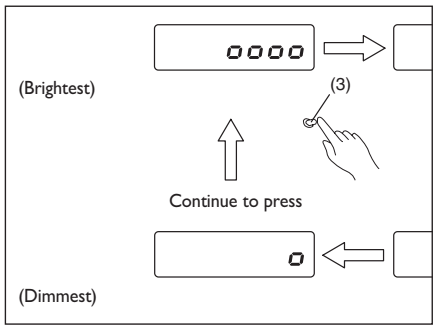

81A263

Meter illumination control

When the display shows the indication of illumination intensity (**D**), you can dim or brighten the meter illumination.

To change the meter illumination brightness, continue to hold in the selector knob (**3**). The indication will change as shown in the illustration. The illumination gets dimmer then returns to the brightest condition after it reaches the dimmest.

TACHOMETER

The tachometer indicates engine speed in revolutions per minute.

WARNING

Never drive with the engine speed indicator in the red zone or severe engine damage can result.

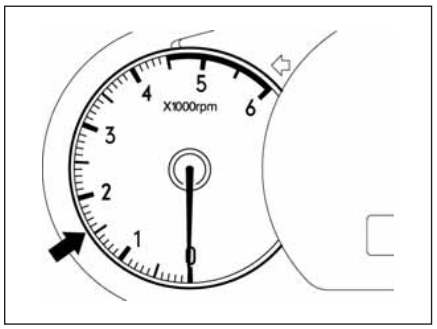

79J137

Downloaded from www.Manualslib.com manuals search engine

FUEL GAUGE

When the ignition switch is in the "ON" position, this gauge gives an approximate indication of the amount of fuel in the fuel tank. "**F**" stands for full and "**E**" stands for empty.

If the indicator gets off the graduation of "**E**" (not character "**E**"), refill the tank as soon as possible.

If the low fuel warning light (**1**) comes on, fill the fuel tank immediately.

The mark (**2**) indicates that the fuel filler door is located on the left side of the vehicle.

NOTE The activation point of the low fuel warning light (**1**) varies depending on road conditions (for example, slope or curve) and driving conditions because of fuel moving in the tank.

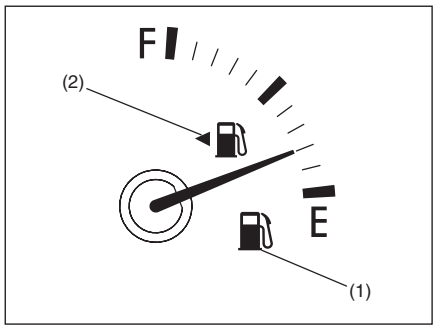

79J102

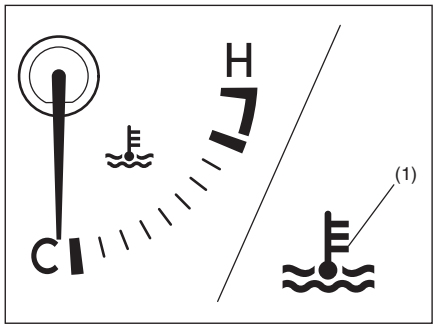

79J135

TEMPERATURE GAUGE/ OVERHEAT INDICATOR LIGHT (for Diesel Engine Model)

When the ignition switch is in the "ON" position, this gauge indicates the engine coolant temperature. Under normal driving conditions, the indicator should stay within the normal, acceptable temperature range between "**H**" and "**C**". If the indicator approaches "**H**" (or the overheat indicator light (**1**) (if equipped) comes on), overheating is indicated. Follow the instructions for engine overheating in the "EMERGENCY SERVICE" section.

IMPORTANT Continuing to drive the vehicle when engine overheating is indicated can result in severe engine damage.

Downloaded from www.Manualslib.com manuals search engine

HAZARD WARNING SWITCH

Push in the hazard warning switch to activate the hazard warning lights. All four turn signal lights and both turn signal indicators will flash simultaneously. To turn off the lights, push the switch again.

Use the hazard warning lights to warn other traffic during emergency parking or when your vehicle could otherwise become a traffic hazard.

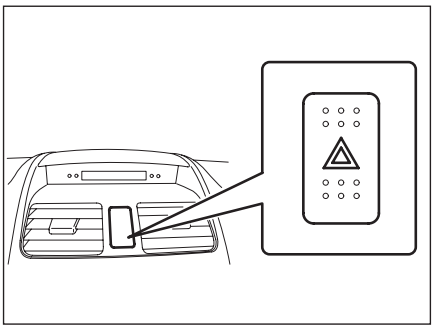

79J041

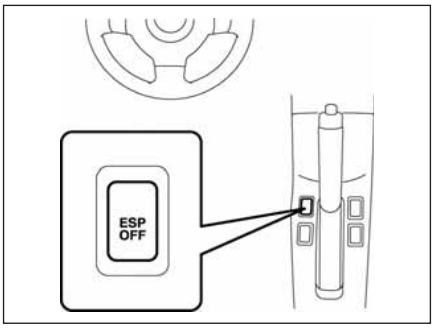

79J180

"ESP OFF" SWITCH (if equipped)

ESP® is a registered trademark of DaimlerChrysler AG.

The "ESP OFF" switch is located on the center console. You can turn the ESP® systems (other than ABS) on or off using this switch.

To turn off the ESP® systems (other than ABS), push and hold the "ESP OFF" switch until the "ESP OFF" indicator light comes on.

Downloaded from www.Manualslib.com manuals search engine

To turn on all of the ESP® systems, push the "ESP OFF" switch again. The "ESP OFF" indicator light will go out.

For details of the ESP® systems, refer to "Electronic Stability Program (ESP®)" in the "OPERATING YOUR VEHICLE" section.

2WD/4WD SWITCH (if equipped)

The 2WD/4WD switch is located on the center console.

For details on how to use the 2WD/4WD switch, refer to "Using the 2WD/4WD Switch" in the "OPERATING YOUR VEHICLE" section.

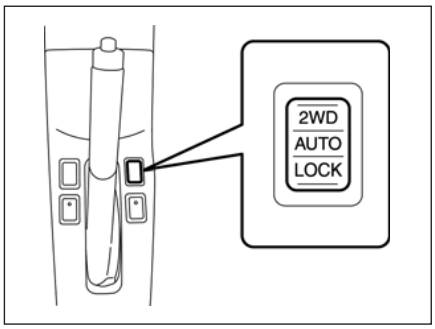

79J042

Downloaded from www.Manualslib.com manuals search engine

HEADLIGHT LEVELING SWITCH (if equipped)

Level the headlight beam according to the load condition of your vehicle by turning this switch. The chart below shows the appropriate switch position for different vehicle-load conditions.

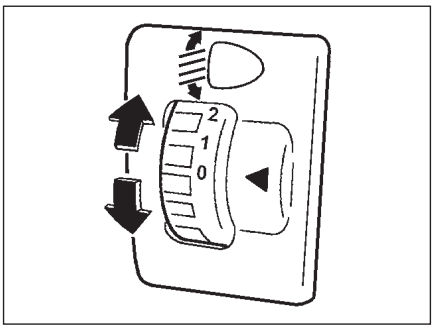

80G025

Vehicle Load Condition	Switch Position
Driver only	0
Driver + 1 passenger (in front seat)	0
Driver + 4 passengers, No cargo	1
Driver + 4 passengers, cargo added	2
Driver + full cargo	3

Downloaded from www.Manualslib.com manuals search engine

HEATED REAR WINDOW AND HEATED OUTSIDE REARVIEW MIRRORS (if equipped) SWITCH

When the rear window is frosted it is sufficient, with the engine started, to press the button (**1**) to defrost it.

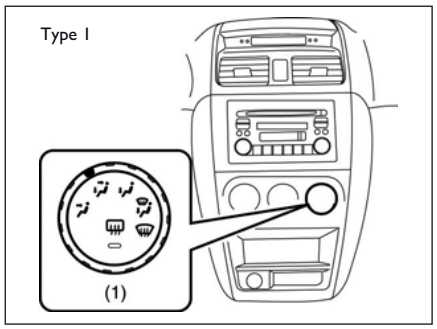

79J043

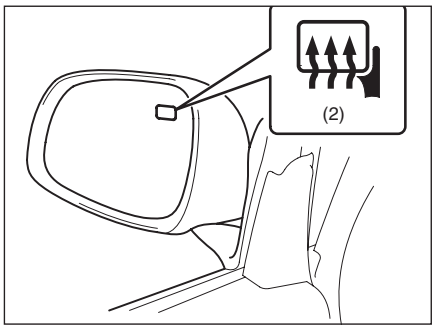

79J044

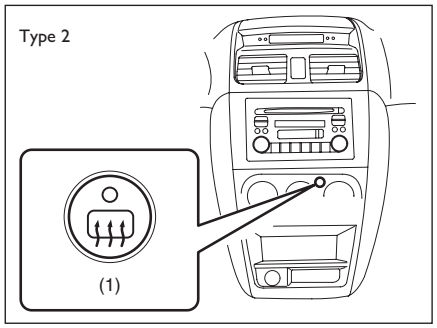

79J119

If the driver's outside rearview mirror has the mark (**2**), it is also equipped with the heated outside rearview mirrors. When you push the switch (**1**), both the heated outside rearview mirrors and the heated rear window will operate simultaneously.

An indicator light will be lit when the defogger is on. The defogger will work only when the engine is running. To turn off the defogger, push the switch again.

NOTE This device is regulated by a timer, after 15 minutes it deactivates automatically to preserve the battery charge.

IMPORTANT The heated rear window and the heated outside rearview mirrors (if equipped) use a large amount of electricity. Be sure to turn off after the window and mirrors have become clear.

Downloaded from www.Manualslib.com manuals search engine

ILLUMINATION CANCEL SWITCH (if equipped)

Operating the illumination cancel switch changes (**1**) the brightness of the audio display, the information display, and the odo/trip meter as below.

1) When the lighting switch is in the first position, the audio display, the information display, and the odo/trip meter obtain full brightness regardless of the illumination cancel switch operation.

2) When the lighting switch is either in the 2nd or 3rd position:

   1. If the status of the illumination cancel switch is off, the audio display and the information display become dimmer, and the odo/trip meter brightness changes to one preferred brightness setting. For details on how to set the meter illumination, refer to "Meter illumination control" in this section.

   2. If the status of the illumination cancel switch is on, the audio display, the information display, and the odo/trip meter obtain full brightness.

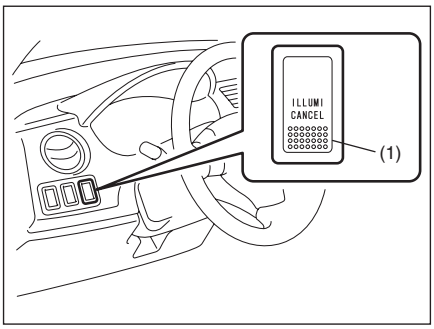

79J046

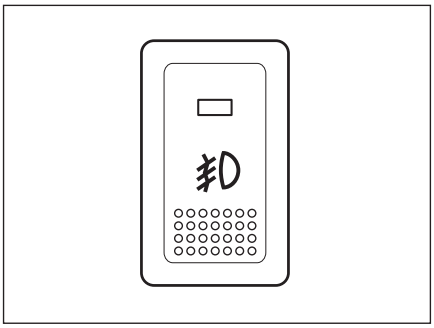

64J058

If your vehicle is equipped with DRL, each press of the illumination cancel switch will toggle between full brightness and reduced brightness regardless of the lighting switch position.

FRONT FOG LIGHT SWITCH (if equipped)

The front fog light comes on when the fog light switch is pushed in with the head light switch turned to the second and/ or third position. An indicator light above the switch will be lit when the front fog light is on.

NOTE In some countries the lighting operation may be different from the above description according to local regulations.

Downloaded from www.Manualslib.com manuals search engine

CIGARETTE LIGHTER AND ASHTRAY (if equipped)

CIGARETTE LIGHTER

To use the cigarette lighter, push it all the way into the receptacle and release it. It will automatically heat up and will pop out to its normal position when it is ready for use.

To use the cigarette lighter, push it all the way into the receptacle and release it. It will automatically heat up and will pop out to its normal position when it is ready for use.

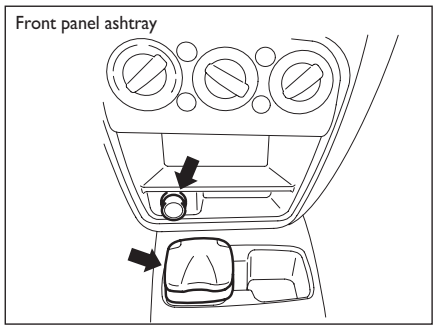

79J045

IMPORTANT To avoid damage to the cigarette lighter socket, do not use it as other accessories' power source. Some accessories' power plug can damage the inner mechanism of the cigarette lighter socket.

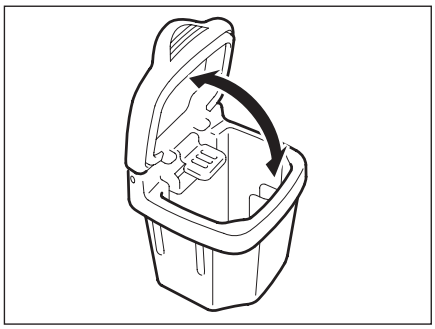

79J047

ASHTRAY (if equipped)

You can fit the ashtray into any of the cup holders on the center console.

WARNING

Make sure tobacco is fully extinguished before closing the ashtrays. Never throw waste in the ashtrays: it could create a fire hazard.

Downloaded from www.Manualslib.com manuals search engine

GLOVE BOX

To open the glove box, pull the latch lever. To close it, push the lid until it latches securely.

WARNING

Never drive with the glove box lid open. It could cause injury if an accident occurs.

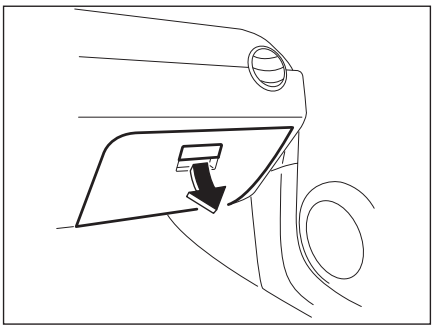

79J120

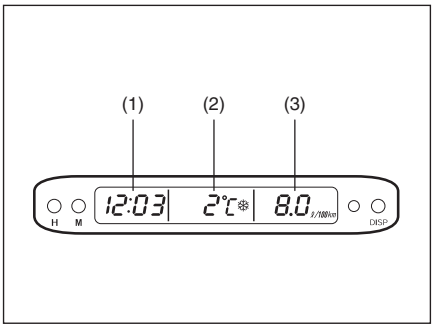

79J061

INFORMATION DISPLAY (Type I) (if equipped)

1. Clock
2. Thermometer
3. Instantaneous fuel consumption

Downloaded from www.Manualslib.com manuals search engine

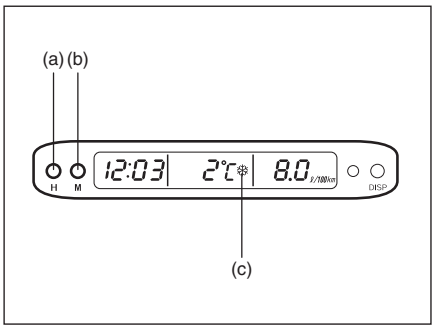

79J062

CLOCK AND THERMOMETER

Clock

The clock is shown when the ignition switch is in the "ACC" position.

To set the clock, follow the instructions below.

❒ To set the hour display, push the "H" knob (**a**) repeatedly to advance the hour display. To advance the hour display quickly, hold in the "H" knob (**a**) for about 1 second and continue holding.

❒ To set the minute display, push the "M" knob (**b**) repeatedly to advance the minute display. To advance the minute display quickly, hold in the "M" knob (**b**) for about 1 second and continue holding.

Thermometer

The thermometer shows the outside temperature when the ignition switch is in the "ON" position.

If the outside temperature nears freezing, the mark (**c**) will come on.

NOTE The thermometer will not indicate the actual outside temperature when driving at low speed, or when stopped.

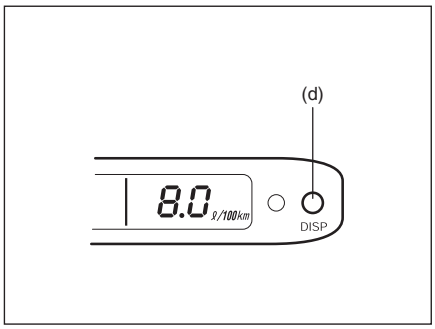

79J063

Instantaneous fuel consumption

The display shows the instantaneous fuel consumption when the vehicle is moving. However, the display of instantaneous fuel consumption can be disappeared if you desire.

NOTE Unless the vehicle is moving, the display will indicate "--.-".

Downloaded from www.Manualslib.com manuals search engine

You can switch the unit indication of instantaneous fuel consumption and also you can display nothing. To switch the indication, follow the instruction below.

❒ Push the "DISP" knob (**d**) for more than 2 seconds. The unit display of instantaneous fuel consumption will blink. When the display of instantaneous fuel consumption is disappeared, the display "-- -" will be appeared.

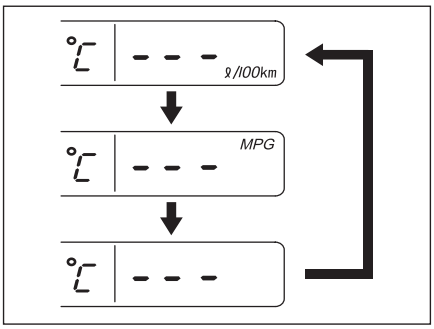

64J207

❒ Push the "DISP" knob (**d**) quickly to switch the indication as shown in the above illustration.

❒ Push the "DISP" knob (**d**) for more than 2 seconds, and the unit indication will stop blinking or the display "-- -" will be disappeared when selecting the nondisplay. If you don't operate the knob more than about 8 seconds, the unit display will automatically stop blinking or the display "-- -" will be disappeared when selecting the nondisplay.

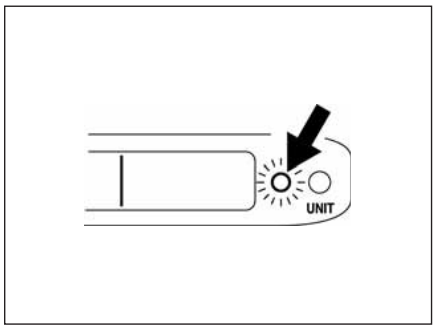

63J111

THEFT DETERRENT LIGHT

This light will blink with the ignition switch in the "OFF" or "ACC" position. The blinking light is intended to deter theft by leading others to believe that the vehicle is equipped with a security system.

Downloaded from www.Manualslib.com manuals search engine

INFORMATION DISPLAY (Type II) (if equipped)

1. Clock
2. Thermometer
3. Fuel consumption
4. Theft deterrent light

a. "H" knob

b. "M" knob

c. "DISP" knob

d. Freezing mark

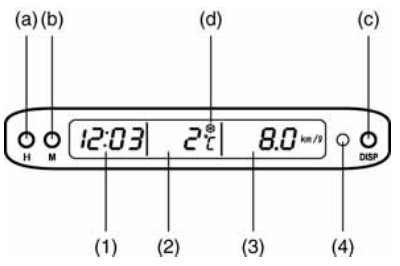

Type A (For Gasoline Engine Model)

62J136

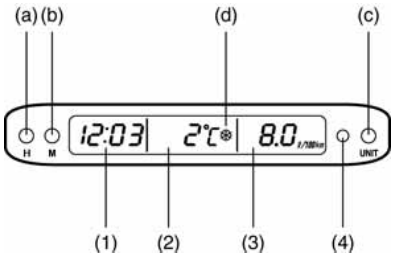

Type B (For Diesel Engine Model)

62J137

CLOCK (1)

The clock is shown when the ignition switch is in the "ACC" or "ON" position.

To set the clock, follow the instructions below.

❒ To set the hour display, push the "**H**" knob (**a**) repeatedly to advance the hour display. To advance the hour display quickly, hold in the "**H**" knob (**a**) for about 1 second and continue holding.

❒ To set the minute display, push the "**M**" knob (**b**) repeatedly to advance the minute display. To advance the minute display quickly, hold in the "**M**" knob (**b**) for about 1 second and continue holding.

Downloaded from www.Manualslib.com manuals search engine

THERMOMETER (2)

The thermometer shows the outside temperature when the ignition switch is in the "ON" position.

If the outside temperature nears freezing, the mark (**d**) will come on.

NOTE The thermometer will not indicate the actual outside temperature when driving at low speed, or when stopped.

FUEL CONSUMPTION (3)

This display can be changed to show instantaneous fuel consumption or average fuel consumption by changing the display. Also, the display of fuel consumption can be turned off if you desire.

When the ignition switch is turned to the "ACC" or "ON" position:

❒ If you selected instantaneous fuel consumption the last time you drove the vehicle, the display indicates "--.-". Unless the vehicle is moving, the display will indicate "--.-".

❒ If you selected average fuel consumption the last time you drove the vehicle, the display shows the last value of average fuel consumption. Unless you reset the value of average fuel consumption, the display will show the value of average fuel consumption which includes average fuel consumption during previous driving.
For details of how to reset the display, refer to the explanation in this section.

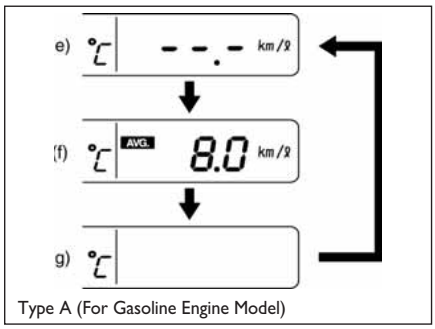

Type A (For Gasoline Engine Model)

63J202

Every time you push the "DISP" knob (**c**), the display will be changed among the following three displays.

e. Instantaneous fuel consumption

f. Average fuel consumption

g. No display

To reset the value of average fuel consumption, hold in the "DISP" knob (**c**) for more than 2 seconds. The display will indicate "--.-" and then will show the average fuel consumption again after driving for a short time.

You can also change the unit display of fuel consumption. You should operate the display before the vehicle moves. To change the display, follow the instructions below.

Downloaded from www.Manualslib.com manuals search engine

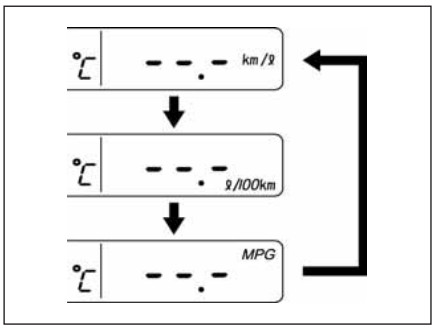

63J148

❒ Turn the ignition switch to the "ACC" or "ON" position while holding in the "DISP" knob (**c**). The unit display of fuel consumption will blink the current unit.

❒ Push the "DISP" knob (**c**) quickly to change the display as shown in the above illustrations.

❒ Push the "DISP" knob (**c**) for more than 2 seconds, and the unit display will stop blinking and the display will stay on. If you don't operate the "DISP" knob (**c**) within about 8 seconds, the unit display will automatically stop blinking and the display will stay on.

NOTE

❒ The value of fuel consumption shown in the display is affected by such as following conditions;

– road condition

– surrounding traffic condition

– driving condition

❒ The information display will be changed to the state of initialization when you reconnect the negative (–) terminal to a battery.

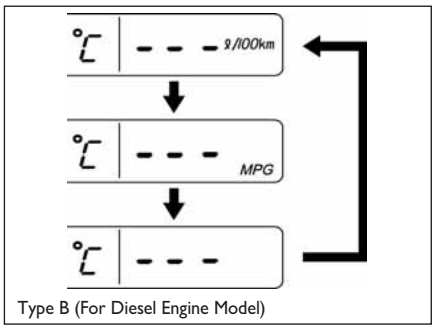

Type B (For Diesel Engine Model)

62J143

This display shows instantaneous fuel consumption when the vehicle is moving.

However, the display of instantaneous fuel consumption can be turned off if you desire.

NOTE Unless the vehicle is moving, the display will indicate "--.-".

You can change the unit indication between "l/ 100km" or "MPG" and you can also turn the display off. To change the indication, follow the instructions below.

Downloaded from www.Manualslib.com manuals search engine

❒ Hold in the "DISP" knob (**c**) for more than 2 seconds. The unit display of the instantaneous fuel consumption will blink. When the display of instantaneous fuel consumption is turned off, the display "-- -" will appear.

❒ Push the "DISP" knob (**c**) quickly to change the indication as shown in the above illustration.

❒ Push the "DISP" knob (**c**) for more than 2 seconds, and the unit indication will stop blinking or the display "-- -" will go out and the display will be turned off. If you don't operate the "DISP" knob (**c**) within about 8 seconds after the unit indication starts blinking, the unit display will automatically stop blinking or the display "-- -" will go out and the display will be turned off.

NOTE

❒ The value of fuel consumption shown in the display is affected by such as following conditions;

– road condition

– surrounding traffic condition

– driving condition

❒ The information display will be changed to the state of initialization when you reconnect the negative (–) terminal to a battery.

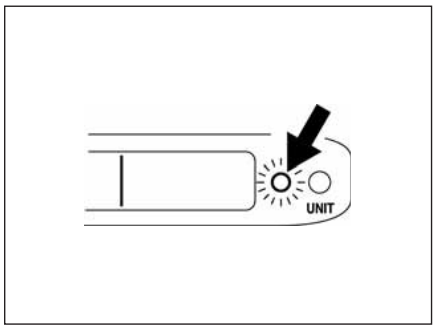

63J111

THEFT DETERRENT LIGHT (4)

This light will blink with the ignition switch in the "OFF" or "ACC" position. The blinking light is intended to deter theft by leading others to believe that the vehicle is equipped with a security system.

Downloaded from www.Manualslib.com manuals search engine

CLOCK (if equipped)

The clock is shown when the ignition switch is in the "ACC" or "ON" position. To set the clock, follow the instructions below.

❒ To set the hour display, push the "H" knob (**a**) repeatedly to advance the hour display. To advance the hour display quickly, hold in the "H" knob (**a**) for about 1 second and continue holding.

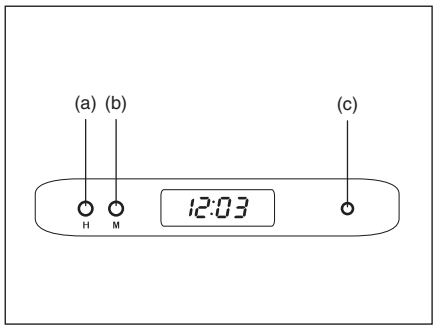

62J054

❒ To set the minute display, push the "M" knob (**b**) repeatedly to advance the minute display. To advance the minute display quickly, hold in the "M" knob (**b**) for about 1 second and continue holding.

THEFT DETERRENT LIGHT (c)

This light will blink with the ignition switch in the "OFF" or "ACC" position. The blinking light is intended to deter theft by leading others to believe that the vehicle is equipped with a security system.

Downloaded from www.Manualslib.com manuals search engine

HEATING AND AIR CONDITIONING SYSTEM

There are two types of heating and air conditioning systems as follows:

❒ manual Heating and Air Conditioning System

❒ automatic Heating and Air Conditioning System (Climate Control)

AIR OUTLET

1. Windshield defroster outlet
2. Side defroster outlet
3. Side outlet
4. Center outlet
5. Floor outlet

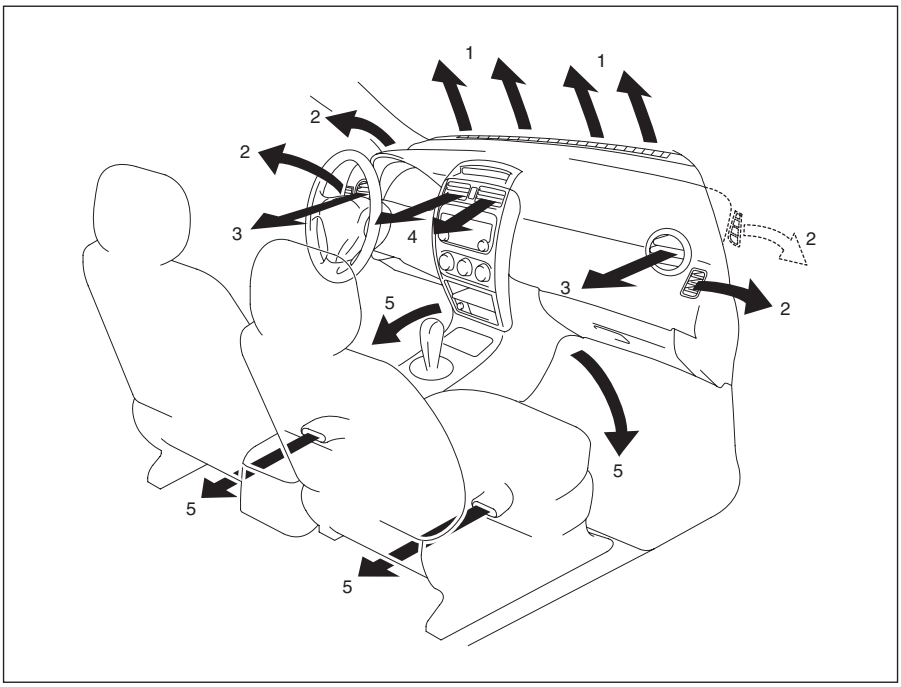

79J064

Downloaded from www.Manualslib.com manuals search engine

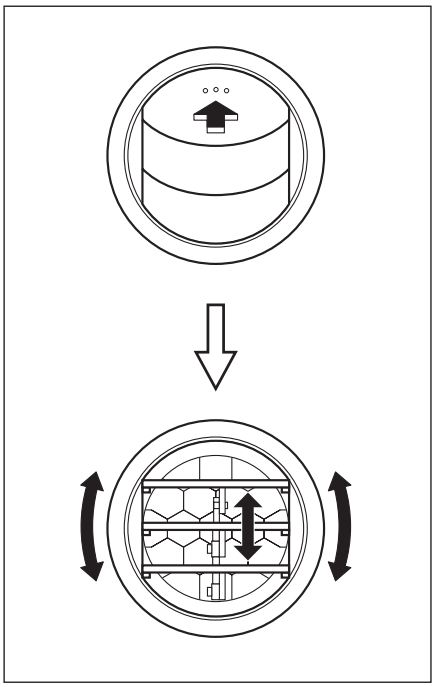

63J045

SIDE OUTLET

When "Open", air comes out regardless of the air flow selector position.

MANUAL HEATING AND AIR CONDITIONING SYSTEM

DESCRIPTION OF CONTROLS

Temperature selector (1)

This is used to select the temperature by turning the selector.

Blower speed selector (2)

This is used to turn on the blower and to select blower speed by turning the selector.

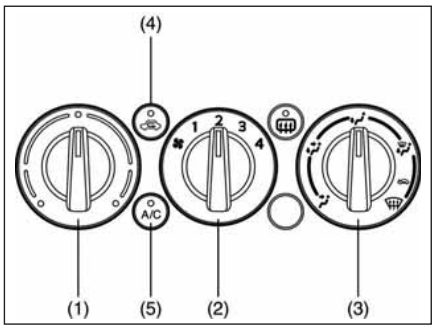

79J103

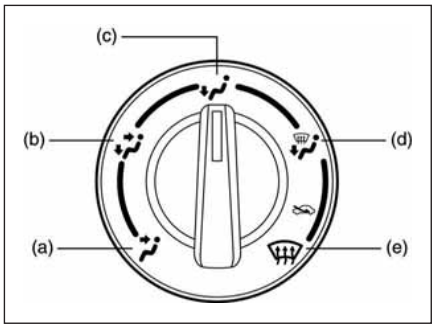

63J048

Air flow selector (3)

This is used to select one of the functions described below.

Downloaded from www.Manualslib.com manuals search engine

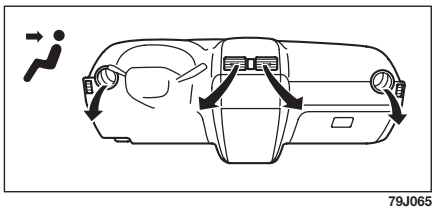

79J065

Ventilation (a)

Temperature-controlled air comes out of the center and side air outlets.

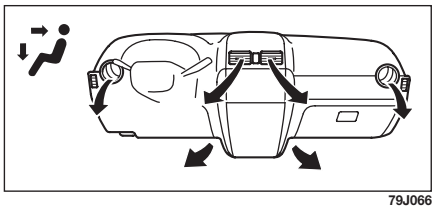

79J066

Bi- level (b)

Temperature-controlled air comes out of the floor outlets and cooler air comes out of the center and side outlets. When the temperature selector (**I**) is in the fully COLD position or fully HOT position, however, the air from the floor outlets and the air from the center and side outlets will be the same temperature.

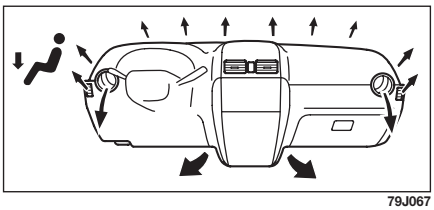

79J067

Heat (c)

Temperature-controlled air comes out of the floor outlets and the side outlets, also comes out of the windshield defroster outlets and the side defroster outlets slightly.

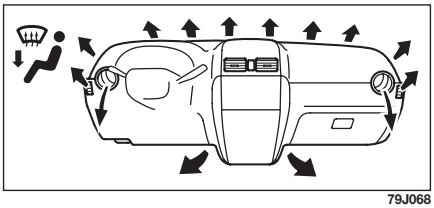

79J068

Heat & defrost (d)

Temperature-controlled air comes out of the floor outlets, the windshield defroster outlets, the side defroster outlets and the side outlets.

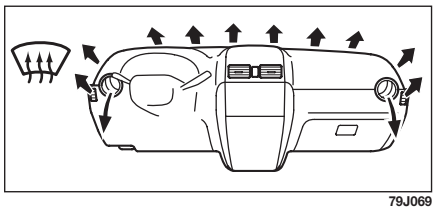

79J069

Defrost (e)

Temperature-controlled air comes out of the windshield defroster outlets, the side defroster outlets and the side outlets.

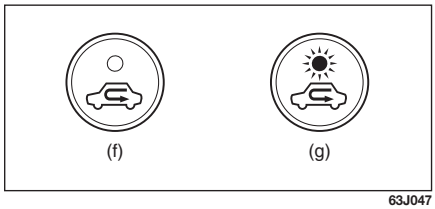

63J047

Air intake selector (4)

This selector is used to select the following modes.

Fresh Air (f)

When this mode is selected, the indicator light will go off and outside air is used.

Downloaded from www.Manualslib.com manuals search engine

Recirculated Air (g)

When this mode is selected, the indicator light will come on, outside air is shut out and inside air is recirculated. This mode is suitable when driving through dusty or polluted air such as in a tunnel, or when attempting to quickly cool down the interior.

"FRESH AIR" and "RECIRCULATED AIR" are switched alternately each time the air intake selector is pushed.

NOTE If you select "RECIRCULATED AIR" for an extended period of time, the air in the vehicle can become contaminated. Therefore, you should occasionally select "FRESH AIR".

Air conditioning switch (5)

To turn on the air conditioning system, push in the "A/C" switch and set the blower speed selector to a position other than "OFF". With this "A/ C" switch operation, a indicator light will come on when the air conditioning system is on. To turn off the air conditioning system, push the "A/C" switch again.

During operation of the air conditioner, you may notice slight changes in engine speed. These changes are normal, the system is designed so that the compressor turns on or off to maintain the desired temperature.

Less operation of the compressor results in better fuel economy.

SYSTEM OPERATING INSTRUCTIONS

Natural ventilation

Select "VENTILATION" and "FRESH AIR", the temperature selector to the desired temperature position, and the blower speed selector to "OFF". Fresh air will flow through the vehicle during driving.

Forced ventilation

The control settings are the same as for natural ventilation except you set the blower speed selector to a position other than "OFF".

Normal heating (using outside air)

Select "HEAT" and "FRESH AIR", the temperature selector to the desired temperature position and the blower speed selector to the desired blower speed position. Setting the blower speed selector to a higher blower speed position increases heating efficiency.

Quick heating (using recirculated air)

The control settings are the same as for normal heating except you select "RECIRCULATED AIR". If you use this heating method for an extended period of time, the air in the vehicle can become contaminated and the windows can become misty. Therefore, use this method only for quick heating and change to the normal heating method as soon as possible.

Downloaded from www.Manualslib.com manuals search engine

Head cooled/ Feet warmed heating

Select "BI-LEVEL" and "FRESH AIR", the temperature selector to the desired temperature position, and the blower speed selector to the desired blower speed position. Unless the temperature selector is in the fully COLD position or fully HOT position, the air that comes out of the center and side outlets will be cooler than the air that comes out of the floor outlets.

Normal cooling

Turn on the "A/C" switch, set the air flow selector to "VENTILATION", the temperature selector to the desired temperature position and the blower speed selector to the desired blower speed position. Setting the blower speed selector to a higher blower speed position increases cooling efficiency.

You can switch the air intake selector to either "FRESH AIR" or "RECIRCULATED AIR" as you desire. Choosing "RECIRCULATED AIR" increases cooling efficiency.

Quick cooling (using recirculated air)

The control settings are the same as for normal cooling except you select "RECIRCULATED AIR" and the highest blower speed.

NOTE

❒ If you select "RECIRCULATED AIR" for an extended period of time, the air in the vehicle can become contaminated. Therefore, you should occasionally select "FRESH AIR".

❒ If your vehicle has been left in the sun with the windows closed, it will cool faster if you open the windows briefly while you operate the air conditioner with the air intake selector at "FRESH AIR" and the blower at high speed.

Dehumidifying

Turn on the "A/C" switch, set the air flow selector to a desired air flow selector position, and select "FRESH AIR", the temperature selector to the desired temperature position, and the blower speed selector to the desired blower speed position.

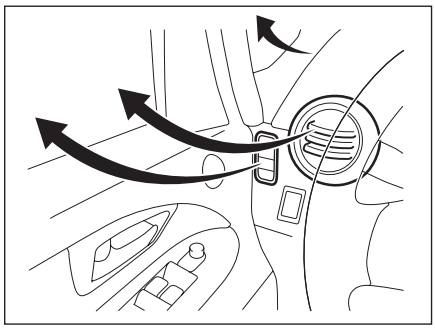

79J070

NOTE Because the air conditioner dehumidifies the air, turning it on will help keep the windows clear, even when blowing heated air using the "DEFROST" or "HEAT & DEFROST" functions.

NOTE If you need maximum defrosting:

❒ select "DEFROST" and "FRESH AIR",

❒ turn on the "A/C" switch,

❒ set the blower speed selector to HIGH,

❒ adjust the temperature selector to the HOT end, and

❒ adjust the side outlets so the air blows on the side windows.

Downloaded from www.Manualslib.com manuals search engine

MAINTENANCE

If you do not use the air conditioner for a long period, such as during winter, it may not give the best performance when you start using it again. To help maintain optimum performance and durability of your air conditioner, it needs to be run periodically. Operate the air conditioner at least once a month for one minute with the engine idling. This circulates the refrigerant and oil and helps protect the internal components.

Your air conditioner is equipped with air filters. Clean or replace them as specified in the "Maintenance Schedule" in the "INSPECTION AND MAINTENANCE" section. Have this job done by your Fiat Dealership as the lower glove box must be lowered for this job.

NOTE Your vehicle uses the air conditioning refrigerant HFC-134a, commonly called "R-134a". R-134a replaced R-12 around 1993 for automotive applications. Other refrigerants are available, including recycled R-12, but only R-134a should be used in your vehicle.

IMPORTANT Using the wrong refrigerant may damage your air conditioning system. Use R-134a only. Do not mix or replace the R-134a with other refrigerants.

AUTOMATIC HEATING AND AIR CONDITIONING SYSTEM (Climate Control)

DESCRIPTION OF CONTROLS

Temperature selector/ Air conditioning switch (1)

This is used to select the temperature by turning the selector.

Also, this is used to turn on and off the air conditioning system by pushing the switch. To turn on the air conditioning system, push in the switch and the indicator light will come on. To turn off the air conditioning system, push in the switch again and the indicator light will go off.

Downloaded from www.Manualslib.com manuals search engine

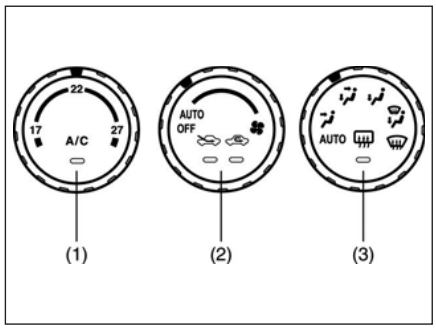

79J094

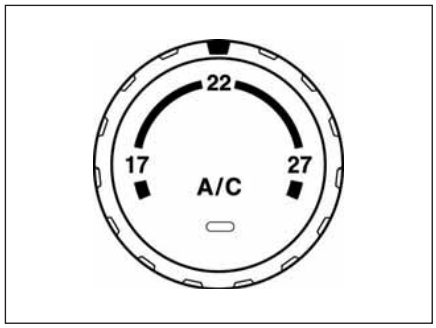

79J095

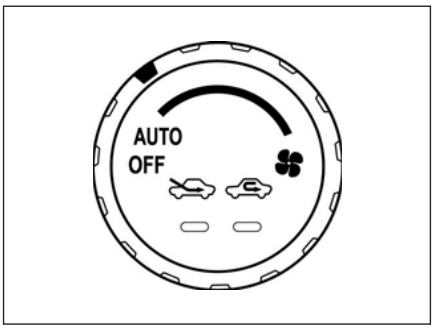

79J096

Blower speed selector/ Air intake selector (2)

This is used to turn on the blower and to select blower speed.

If the selector is in "AUTO" position, the blower speed will vary as the climate control system maintains the selected temperature.

Also, this is used to select the following modes by pushing the selector.

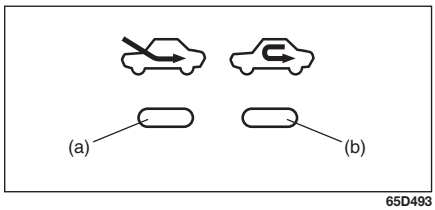

65D493

FRESH AIR

When this mode is selected, the indicator light (**a**) will come on and outside air is used.

RECIRCULATED AIR

When this mode is selected, the indicator light (**b**) will come on, outside air is shut out and inside air is recirculated. This mode is suitable when driving through the polluted air such as a tunnel, or attempting to quickly cool down.

"FRESH AIR" and "RECIRCULATED AIR" are switched alternately each time the air intake selector is pushed.

NOTE When both the indicator light (**a**) and (**b**) go off, this selector is controlled automatically.

Downloaded from www.Manualslib.com manuals search engine

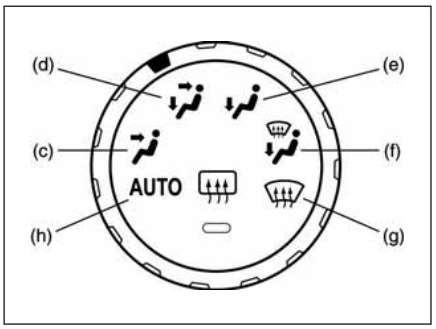

79J097

Air flow selector (3)

AUTO (h)

Temperature-controlled air comes out of various outlets automatically.

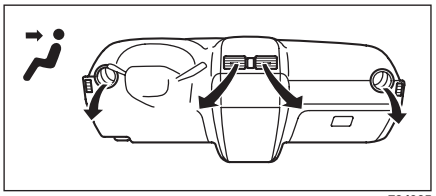

79J065

Ventilation (c)

Temperature-controlled air comes out of the center and side air outlets.

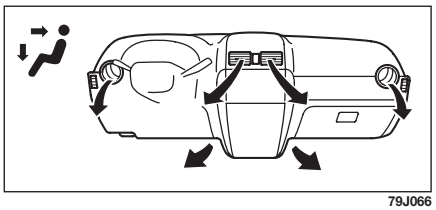

79J066

Bi-level (d)

Temperature-controlled air comes out of the floor outlets and cooler air comes out of the center and side outlets. When the temperature selector (**I**) is in the fully COLD position or fully HOT position, however, the air from the floor outlets and the air from the center and side outlets will be the same temperature.

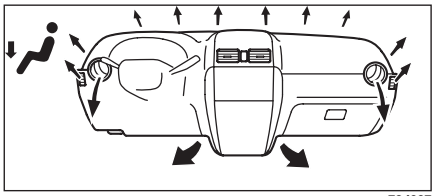

79J067

Heat (e)

Temperature-controlled air comes out of the floor outlets and the side outlets, also comes out of the windshield defroster outlets and the side defroster outlets slightly.

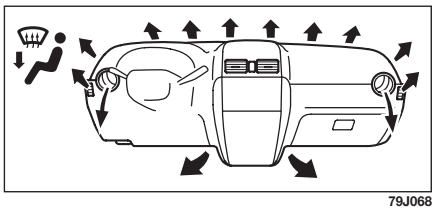

79J068

Heat & defrost (f)

Temperature-controlled air comes out of the floor outlets, the windshield defroster outlets, the side defroster outlets and the side outlets.

Downloaded from www.Manualslib.com manuals search engine

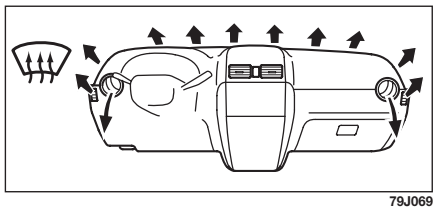

79J069

Defrost (g)

Temperature- controlled air comes out of the windshield defroster outlets, the side defroster outlets and the side outlets.

NOTE When the air flow selector (**3**) is turned either to "Heat & defrost (**f**)" or "Defrost (**g**)", the air conditioning system will come on and the "FRESH AIR" mode will be selected automatically. But in very cold weather, the air conditioning system will not turn on.

SYSTEM OPERATING INSTRUCTIONS

Automatic operation

You can let the climate control system work automatically. To set the system in fullyautomatic operation, follow the procedure below.

❒ Set the desired temperature by turning the temperature selector (**1**).

❒ Turn the blower speed selector (**2**) to the "AUTO" position.

❒ Turn the air flow selector (**3**) to the "AUTO" position.

Then the blower speed selector/ air intake selector (**2**) and air flow selector (**3**) are controlled automatically to maintain the set temperature.

The air conditioning switch (**1**) is to be selected manually according to your taste.

When you turn the air conditioning switch off, the climate control system cannot lower the inside temperature below outside temperature.

To turn the climate control system off, turn the blower speed selector (**2**) to the "OFF" position.

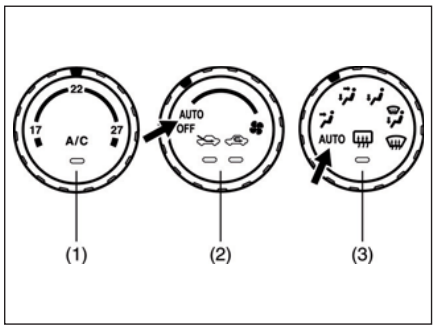

79J098

NOTE

❒ To find your comfortable zone, start with the 22°C (72°F) setting.

❒ If you turn the temperature selector (**1**) to the highest or lowest limit, the climate control system will operate at the maximum cooling or heating and the blower will run at nearly full speed.

❒ To avoid blowing cold air in cold weather or hot air in hot weather, the system will delay turning on the blower until warmed or chilled air is available.

Downloaded from www.Manualslib.com manuals search engine

❒ If your vehicle has been left in the sun with the windows closed, it will cool faster if you open the windows briefly.

❒ Even under the automatic operation, you can set some of the blower speed selector/ air intake selector (**2**) and air flow selector (**3**) into manual mode. Then the manually selected function is maintained preferentially, and the other functions remain under automatic operation.

❒ To return the air intake selector (**2**) to automatic operation when both the blower speed selector (**2**) and the air flow selector (**3**) are in the "AUTO" position, turn either the selector (**2**) or (**3**) to a position other than "AUTO", then turn to the "AUTO" position again.

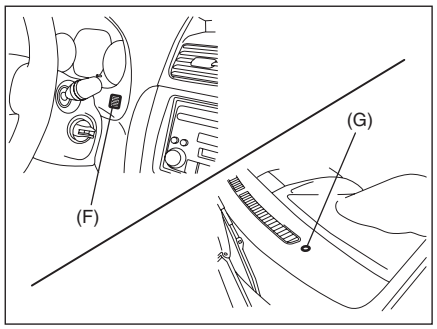

79J071

Be careful not to cover the interior temperature sensor (**F**) between the steering wheel and the climate control panel, or the solar sensor (**G**) located at the top of the driver's side dashboard. These sensors are used by the automatic system to regulate temperature.

Manual operation

You can manually control the climate control system. Set the selectors to your desired position.

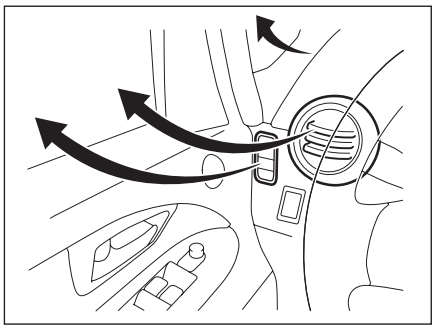
79J070

NOTE If you need maximum defrosting:

❒ set the air flow selector to "DEFROST" (the air conditioning system will come on and the "FRESH AIR" mode will be selected automatically),

❒ set the blower speed selector to HIGH,

❒ adjust the temperature selector to the HOT end, and

❒ adjust the side outlets so the air blows on the side windows.

Downloaded from www.Manualslib.com manuals search engine

MAINTENANCE

If you do not use the air conditioner for a long period, such as during winter, it may not give the best performance when you start using it again. To help maintain optimum performance and durability of your air conditioner, it needs to be run periodically. Operate the air conditioner at least once a month for one minute with the engine idling. This circulates the refrigerant and oil and helps protect the internal components.

NOTE Your vehicle uses the air conditioning refrigerant HFC-134a, commonly called "R-134a". R-134a replaced R-12 around 1993 for automotive applications. Other refrigerants are available, including recycled R-12, but only R-134a should be used in your vehicle.

IMPORTANT Using the wrong refrigerant may damage your air conditioning system. Use R-134a only. Do not mix or replace the R-134a with other refrigerants.

AUDIO SYSTEMS

WARNING

Too high a volume when driving can put the driver's life at risk and that of other people. Therefore the volume should always be adjusted in such a way that it is always possible to hear the noises of the surrounding environment (e.g.: horns, ambulance, police sirens, etc.).

FM/MW/LW CD PLAYER WITH CD CHANGER CONTROL

PRECAUTIONS

❒ When the inside of the vehicle is very cold and the player is used soon after switching on the heater, moisture may form on the disc or the optical parts of the player and proper playback may not be possible. If moisture forms on the disc, wipe it off with a soft cloth. If moisture forms on the optical parts of the player, do not use the player for about one hour, this will allow the condensation to disappear normally.

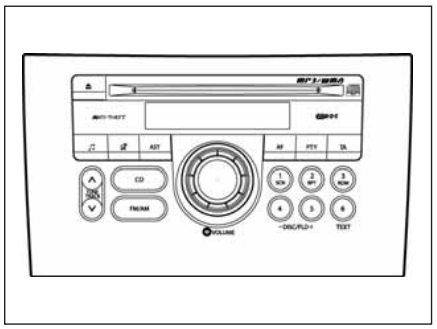

79J188

❒ Driving on extremely bumpy roads which cause severe vibrations may cause sound to skip.

❒ This unit uses a precision mechanism. Even in the event that trouble arises, never open the case, disassemble the unit, or lubricate the rotating parts. Please bring the unit to an authorized Fiat Dealership.

Downloaded from www.Manualslib.com manuals search engine

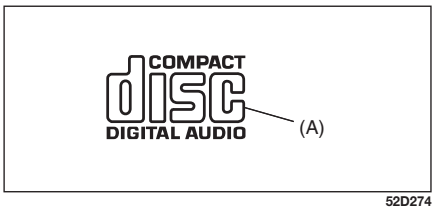

52D274

CAUTIONS ON HANDLING

This unit has been designed specifically for playback of compact discs bearing the mark (**A**).

No other discs can be played.

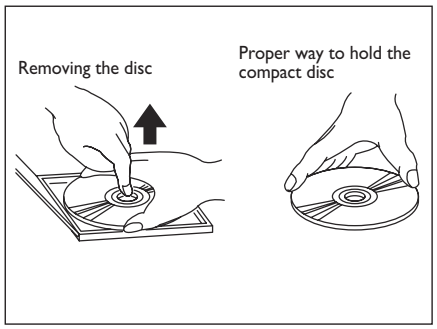

52D275

To remove the compact disc from its storage case, press down on the center of the case and lift the disc out, holding it carefully by the edges.

Always handle the compact disc by the edges.

Never touch the surface.

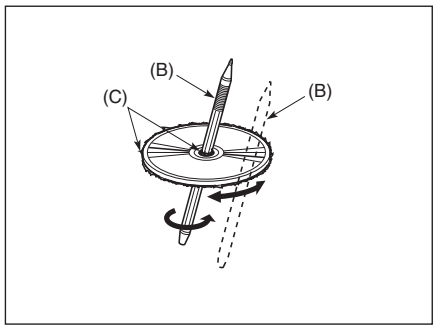

52D277

New discs may have some roughness around the edges. The unit may not work or the sound may skip if such discs are used. Use a ball-point pen (**B**), etc. to remove the roughness (**C**) from edges of the disc before insertion inside the unit.

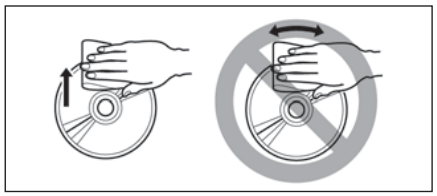

52D276

To remove fingermarks and dust, use a soft cloth, and wipe in a straight line from the center of the compact disc to the circumference.

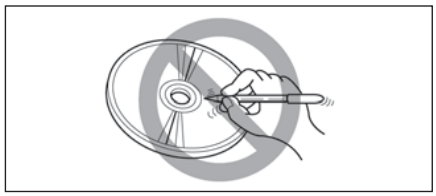

52D278

Never stick labels on the surface of the compact disc or mark the surface with a pencil or pen.

Downloaded from www.Manualslib.com manuals search engine

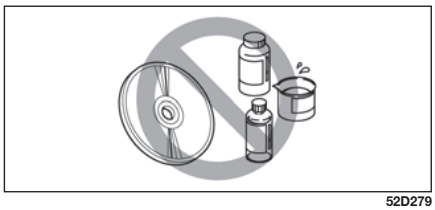

52D279

Do not use any solvents such as commercially available cleaners, anti-static spray, or thinner to clean compact discs.

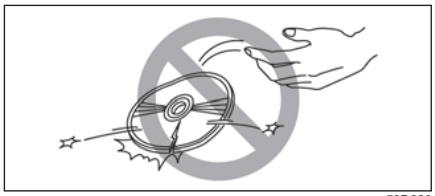

52D280

Do not use compact discs that have large scratches, are misshaped, or cracked, etc. Use of such discs will cause damage or prevent the system from operating properly.

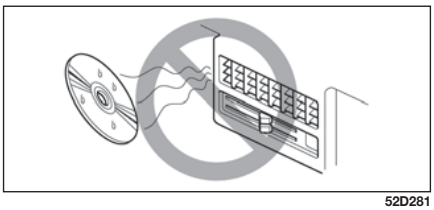

52D281

Do not expose compact discs to direct sunlight or any heat source.

NOTE

❒ Do not use commercially available CD protection sheets or discs equipped with stabilizers, etc. These may get caught in the internal mechanism and damage the disc.

❒ CD-R discs may not be able to playback in this unit due to the recording conditions.

❒ CD-RW discs can not playback in this unit.

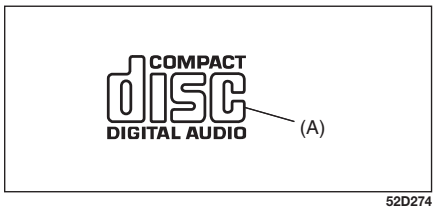

52D274

LISTENING TO A CD

❒ CDs or CD-ROMs carrying no mark (**A**) cannot be used.

❒ Some discs previously recorded in CD-R\CD-RW format may not be used.

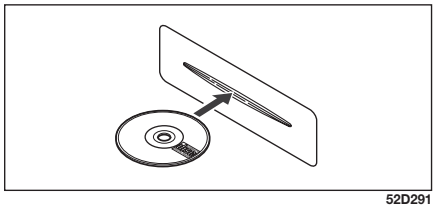

52D291

❒ A CD is inserted with its label facing upward.

❒ When there is a CD already loaded in the unit, another CD cannot be loaded at the same time. Do not use force when inserting the CD into the CD insertion slot.

❒ If a blank disc (non recorded CD-R) is loaded in the unit, the disc will be ejected.

Downloaded from www.Manualslib.com manuals search engine

IMPORTANT

❒ Never insert your finger or hand into the CD insertion slot. Never insert foreign objects.

❒ Never insert a CD with glue coming out from adhesive tape or a rental CD label or with a trace indicating that adhesive tape or a rental CD label has been removed. This may cause the CD not to eject or result in a malfunction.

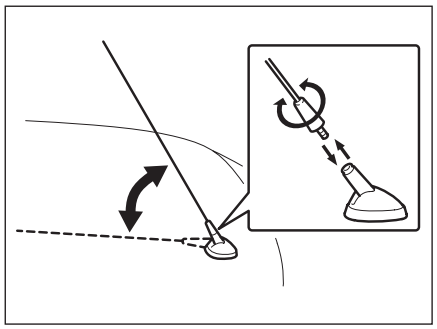

80G143

RADIO ANTENNA (if equipped)

The radio antenna at the front of the roof can be folded down and is removable. To fold the antenna rearward, be sure to grip the bottom of antenna. To remove the antenna, turn it counterclockwise. To reinstall the antenna, turn it clockwise firmly by hand.

IMPORTANT To avoid damage to the radio antenna:

❒ Remove the antenna when using an automatic vehicle wash.

❒ Remove or fold down the antenna when the antenna hits anything such as a low ceiling in a parking garage or putting a vehicle cover over your vehicle .

GENERAL

1. Power on/ off knob – volume control knob
2. Mute button
3. Audio control button
4. Up button
5. Down button

Power On/Off

Press the power on/ off knob (**1**) to switch power on.

Press the power on/ off knob (**1**) again to switch power off.

Volume Up/Down

Turn the volume control knob (**1**) clockwise to increase the volume.

Turn the volume control knob (**1**) counter clockwise to decrease the volume.

Mute On/Off

Press the mute button (**2**) to temporarily muffle the sound.

Downloaded from www.Manualslib.com manuals search engine

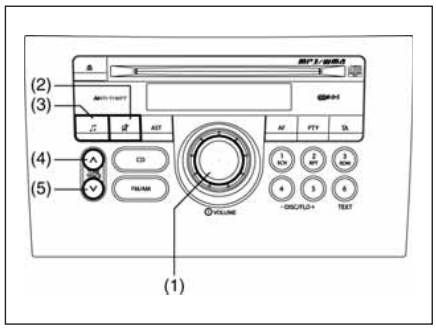

79J189

Press the mute button (**2**) again to restore the sound to the preceding level.

NOTE

❒ In CD mode, play is temporarily stopped (pause) instead of muting.

❒ If power is switched off, or if some button is pressed, mute is automatically released.

Audio Control

Bass / Treble / Balance / Fader can be adjusted.

Press the audio control button (**3**) to select the desired item.

Each time the audio control button (**3**) is pressed the selectable items change as follows:

BAS (Bass) / TRE (Treble) / BAL (Balance) / FAD (Fader) / AVC (Auto Volume Control) (only MP3 version)

Pressing the audio control button (**3**) again releases Audio Control.

Press the up button (**4**) or the down button (**5**) to adjust the selected item.

❒ BAS (Bass)
(4): To increase bass
(5): To decrease bass

❒ TRE (Treble)
(4): To increase treble
(5): To decrease treble

❒ BAL (Balance)
(4): To decrease the left speaker's volume
(5): To decrease the right speaker's volume

❒ FAD (Fader)
(4): To decrease the rear speaker's volume
(5): To decrease the front speaker's volume

❒ AVC (Auto Volume Control) (only MP3 version)
(4): AVC OFF / AVC1 / AVC2 / AVC3
(5): AVC3 / AVC2 / AVC1 / AVC OFF

NOTE The Auto Volume Control (AVC) function automatically adjusts (increases/decreases) the sound volume in accordance with vehicle speed.

RADIO

4. Up button

5. Down button

6. FM/AM button

7. Preset button [1] to [6]

8. Auto search button

Radio Mode

If FM/AM button (**6**) is pressed when power is off or in other than radio mode, the last station you were listening to is received.

Band

Each time FM/AM button (**6**) is pressed in radio mode, the bands change as follows:

FM1 / FM2 / LW / MW1 / MW2 / (FM1)

Manual Tuning

The frequencies can be adjusted by pressing the up button (**4**) or the down button (**5**).

(4): Higher frequency

(5): Lower frequency

Downloaded from www.Manualslib.com manuals search engine

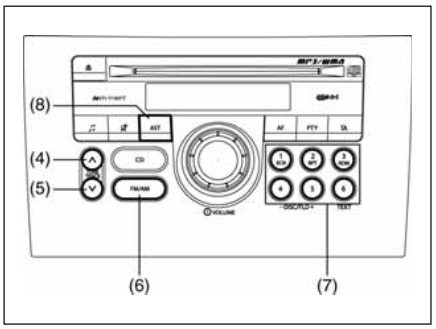

79J190

Auto Tuning

If the up button (**4**) or the down button (**5**) is released after pressing it for about 1 second or more, the unit searches for a station till it receives one.

(4): Higher frequency

(5): Lower frequency

NOTE If AF is ON, the unit searches for RDS stations only.

Manual Preset

If any of the preset buttons (**7**) with numbers [1] to [6] is pressed for about 2 seconds or more, the station received corresponding to the pressed button is preset.

NOTE

❒ Stations can be preset for FM1, FM2, LW, MW1, and MW2 respectively.

❒ When stations are preset, the new data is written over the old data.

Auto Preset

By pressing auto search button (**8**) for about 2 seconds or longer, six stations in good receiving condition on the band now selected can be automatically preset.

NOTE

❒ Auto Preset can be released by pressing the auto search button (**8**) while auto preset is in process.

❒ Stations can be preset for FM1, FM2, LW, MW1, and MW2 respectively.

❒ Up to six stations can be preset. If stations in good receiving condition are not found, the number of stations preset may be less than six.

❒ After you have preset stations, the station preset under the button with number [1] is received. If none of stations is found, the unit is reset to the preceding frequency.

❒ When stations are preset, the new data is written over the old data.

❒ If AF is ON, only RDS stations are preset.

Preset Station Calling

By pressing any of the preset buttons (**7**) with numbers [1] to [6], the corresponding station preset can be received.

NOTE If the button for a station not preset is pressed, the unit displays “- - -”.

Downloaded from www.Manualslib.com manuals search engine

RDS (Radio Data System)

1. Power on/off knob – volume control knob
4. Up button
5. Down button
9. Auto frequency button
10. Traffic announcement button
11. Program type button

What is RDS?

Some FM stations are broadcasting added data compatible with RDS. This radio set offers convenient functions using such data.

RDS service availability varies with areas. Please understand the following functions are not available in some areas.

AF (Alternative Frequency)

The unit searches for a station in better receiving condition that emits the same programme as now received, and automatically selects that station.

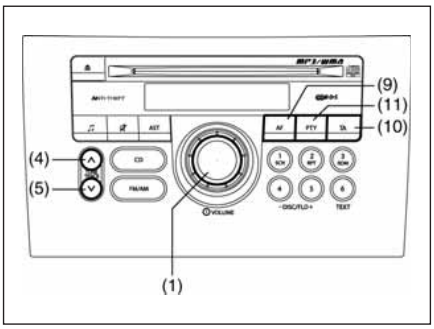

79J191

REG (Region)

An area in which the AF function may be used to select stations can be set. When REG is ON, the AF function is effective in the present area only.

PS (Program Service Name)

Instead of the frequency, the name of the broadcast station appears.

PTY (Program Type)

Programs can be searched for by PTY.

TA (Traffic Announcement)

The unit can search for stations emitting TP (traffic programmes), and tune in to such stations in preference to others. Stations emitting TP are called TP stations.

EON (Enhanced Other Network)

RDS information is updated constantly in response to the current position.

The "EON" indicator remains lit while RDS information is received.

Emergency Announcement Reception

Emergency announcements are automatically received and displayed.

AF/REG On/Off

Each time the auto frequency button (**9**) is pressed, AF/ REG changes as follows:

AF ON / REG OFF / AF ON/ REG ON / AF OFF / REG OFF / (AF ON/ REG OFF)

The "AF" indicator lights up when AF is ON. In addition to that, the "REG" indicator lights up when REG is ON.

Downloaded from www.Manualslib.com manuals search engine

TA On/off

Press the traffic announcement button (**10**) to turn TA on. Press the traffic announcement button (**10**) again to turn TA off.

When TA is turned on, the "TA" indicator lights.

The "TP" indicator remains lit while TP data is being received.

NOTE

❒ If the up button (**4**) or the down button (**5**) is pressed while TA is turned on, the unit searches for a TP station (TP SEEK).

❒ If TP data is not received in about 20 seconds after TA is turned on, TP SEEK automatically takes place only once.

❒ If no TP station is received, the unit displays "NOTHING".

TA Standby

If TP is received when TA is ON in CD or CD changer mode, radio mode is automatically selected. The unit returns to the preceding mode after TP.

PTY Search

Programs can be searched for by PTY.

❒ Press the program type button (**11**) to select PTY mode.

❒ Turn the volume control knob (**1**) to select a desired PTY.

Turning the volume knob (**1**) clockwise changes the items in the following order. (Turning it counter clockwise changes them in the reverse order.)

NO PTY / NEWS / AFFAIRS / INFO / SPORTS / EDUCATE / DRAMA / CULTURE / SCIENCE / VARIED / POP / ROCK / EASY M / LIGHT M / CLASSICS / OTHER M / WEATHER / FINANCE / CHILDREN / SOCIAL / RELIGION / PHONE IN / TRAVEL / LEISURE / JAZZ / COUNTRY / NATION M / OLDIES / FOLK M / DOCUMENT / (NEWS)

❒ Press the up button (**4**) or the down button (**5**) while PTY is displayed. Search begins.

NOTE If the specified PTY is not received, the unit displays "NOTHING", and then PTY again. If the up button (**4**) or the down button (**5**) is pressed, the same PTY is searched for again.

CD PLAYER

4. Up button

5. Down button

12. CD button

13. Eject button

14. Scan button

15. Repeat button

16. Random play button

CD Mode

CD mode is selected by pressing the CD button (**12**) when power is off or in other modes

NOTE

❒ CD mode is not selected if no CD is in the unit.

❒ If the mode has changed to CD changer mode, press the CD button (**12**) again.

Downloaded from www.Manualslib.com manuals search engine

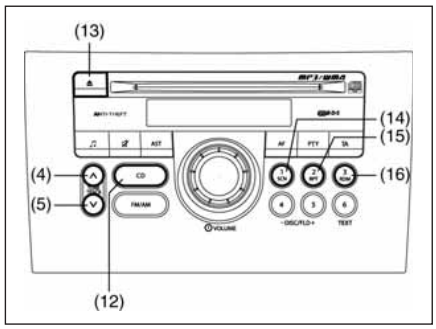

79J192

CD Insert/Eject

To insert a CD, make sure that its label side is up.

To eject it, press the eject button (**13**).

NOTE The "CD IN" indicator remains lit while a CD is in the unit. Be careful not to insert a CD when the "CD IN" indicator is lit.

Track Selection

The desired track can be selected by pressing the up button (**4**) or the down button (**5**).

(4): Next track

(5): Preceding track (Press it twice)

Fast Forward/ Fast Reverse

Play speed increases while the up button (**4**) or down button (**5**) is kept depressed.

(4): Fast forward

(5): Fast reverse

NOTE

❒ When the present track in REPEAT play mode comes to its end, it returns to normal play.

❒ If Fast Forward is kept to the end of the disc, it returns to the first track.

SCAN Play

For scan play (playing about 10 seconds of the top of each track), press the scan button (**14**).

To release scan play, press the scan button (**14**) again.

The "SCN" indicator remains lit during scan play.

REPEAT Play

For repeat play (playing the present track repeatedly), press the repeat button (**15**).

To release repeat play, press the repeat button (**15**) again.

The "RPT" indicator remains lit during repeat play.

RANDOM Play

For random play (playing the disc tracks at random), press the random play button (**16**).

To release random play, press the random play button (**16**) again.

The "RDM" indicator remains lit during random play.

Downloaded from www.Manualslib.com manuals search engine

CD CHANGER

A CD changer is optional. Consult your Fiat Dealership for details.

4. Up button

5. Down button

12. CD button

14. Scan button

15. Repeat button

16. Random play button

17. Disc up button

18. Disc down button

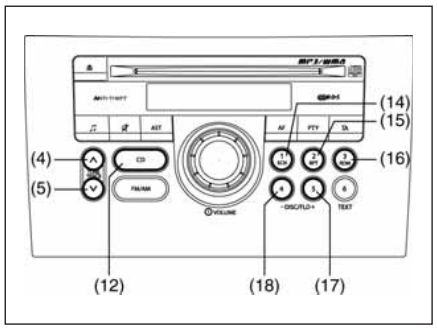

79J193

CD Changer Mode

If the CD button (**12**) is pressed when power is off or in other modes, CD changer mode is selected.

NOTE

❒ CD changer mode is not selected if the CD changer is not connected, or if no CD is inserted in the unit.

❒ If the mode has changed to CD mode, press the CD button (**12**) again.

Disc Up/Down

The desired disc can be selected by pressing The disc up button (**17**) or the disc down button (**18**).

(17) Next disc

(18) Preceding disc

Track Up/ Down

The desired track can be selected by pressing the up button (**4**) or the down button (**5**).

(4): Next track

(5): Preceding track (Press it twice)

Downloaded from www.Manualslib.com manuals search engine

Fast Forward/ Fast Reverse

Play speed increases while the up button (**4**) or down button (**5**) is kept depressed.

(4): Fast forward

(5): Fast reverse

NOTE

❒ When the present track in REPEAT play mode comes to its end, it returns to normal play.

❒ If Fast Forward is kept to the end of the disc, it returns to the first track.

SCAN Play

❒ SCAN Play

For scan play (playing about 10 seconds of the top of each track on the present disc), press the scan button (**14**).

To release scan play, press the scan button (**14**) again.

The "SCN" indicator remains lit during scan play.

❒ DISC SCAN Play

For disc scan play (playing about 10 seconds of the top of the first track on each disc), press the scan button (**14**) for about 1 second or more.

To release disc scan play, press the scan button (**14**) again.

The "D. SCN" indicator remains lit during disc scan play.

REPEAT Play

❒ REPEAT Play

For repeat play (playing the present track repeatedly), press the repeat button (**15**).

To release repeat play, press the repeat button (**15**) again.

The "RPT" indicator remains lit during repeat play.

❒ DISC REPEAT Play

For disc repeat play (playing the present disc repeatedly), press the repeat button (**15**) for about 1 second or more.

To release disc repeat play, press the repeat button (**15**) again.

The "D. RPT" indicator remains lit during disc repeat play.

RANDOM Play

❒ RANDOM Play

For random play (playing the disc tracks at random), press the random play button (**16**).

To release random play, press the random play button (**16**) again.

The "RDM" indicator remains lit during random play.

❒ DISC RANDOM Play

For disc random play (playing the tracks of all discs at random), press the random play button (**16**) for about 1 second or more.

To release disc random play, press the random play button (**16**) again.

The "D. RDM" indicator remains lit during disc random play.

Downloaded from www.Manualslib.com manuals search engine

MP3/WMA Player (if equipped)

4. File up button

5. File down button

12. CD button

13. Eject button

15. Repeat button

16. Random play button

17. Folder up button

18. Folder down button

20. Text display button

What is MP3/WMA?

MP3 (MPEG1/2 Audio Layer-II/III) and WMA (Windows MediaTM Audio) are the compression formats of digital audio. The former is developed by MPEG (Motion Picture Experts Group), and the latter is developed by Microsoft Corporation. Using these compression formats, you can record the contents of about 10 music CDs on a single CD media (This figures refer to data recorded on a 650 MB CD-R or CD-RW at a fixed bit rate of 128 kbps and a sampling frequency of 44.1 kHz).

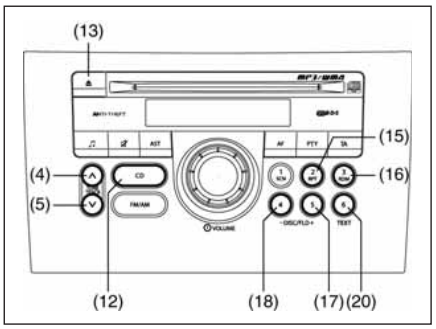

79J194

Points to remember when making MP3/WMA files

Common

❒ High bit rate and high sampling frequency are recommended for high quality sounds.

❒ Selecting VBR (Variable Bit Rate) is not recommended because playing time is not displayed properly and sound may be skipped.

❒ The playback sound quality differs depending on the encoding circumstances.

For details, refer to the user manual of your own encoding software and writing software.

MP3

❒ It is recommended to set the bit rate to "128 kbps or more" and "fixed".

WMA

❒ It is recommended to set the bit rate to "64 kbps or more" and "fixed".

❒ Do not set the copy protect attribute on the WMA file to enable this unit to play back.

NOTE:

Never assign the ".mp3", or ".wma" file name extension to a file that is not in the MP3/WMA format. This may not only produce noise from the speaker damage, but also damage your hearing.

Recording MP3/WMA files on a CD-media

❒ You are recommended to minimize the chances of making a disc that contains both CD-DA files and MP3/WMA files.

❒ If CD-DA files are on the same disc as MP3 or WMA files, the songs may not play in the intended order, or some songs may not play at all.

❒ When storing MP3 data and WMA data on the same disc, use different folders for each data.

❒ Do not record files other than MP3/WMA files and unnecessary folder on a disc.

❒ The name of an MP3/WMA file should be added by rules as shown in the following descriptions and also comply with the rules of each file system.

Downloaded from www.Manualslib.com manuals search engine

❒ The file extension ".mp3" or ".wma" should be assigned to each file depending on the file format.

❒ You may encounter trouble in playing MP3/WMA files or displaying the information of MP3/WMA files recorded with certain writing software or CD recorders.

❒ This unit does not have a play list function.

❒ Although Multi-session recording is supported, the use of Disc-at-Once is recommended.

Compression formats MP3

❒ Bit rate

MPEG1 Audio Layer II : 64k – 320 kbps

MPEG1 Audio Layer III : 32k – 320 kbps

MPEG2 Audio Layer II : 64k – 320 kbps

MPEG2 Audio Layer III : 8k – 160 kbps

❒ Sampling frequency

MPEG1 Audio Layer II/III : 44.1 k/48 k/32 kHz

MPEG2 Audio Layer II/III : 22.05 k/24 k/16 kHz

WMA (Ver.7, Ver.8, Ver. 9*)

❒ Bit rate 32 k – 192 kbps

❒ Sampling frequency 44.1 k/48 k/32 kHz

** WMA 9 Professional/LossLess/Voice are not supported.*

Supported file systems

ISO 9660 Level 1/Level 2, Apple Extension to ISO 9660, Joliet, Romeo

Maximum number of files/folders

❒ Maximum number of files: 511 (files + folders)

❒ Maximum number of files in one folder: 255

❒ Maximum depth of trees: 8

❒ Maximum number of folders: 255 (Root folder is included.)

MP3/ WMA Mode

MP3/ WMA mode is selected by pressing the CD button (**12**) when power is off or in other modes.

NOTE

❒ MP3/ WMA mode is not selected if no MP3/ WMA disc is in the unit.

❒ If the mode has changed to CD changer mode, press the CD button (**12**) again.

Disc Insert/ Eject

To insert a disc, make sure that its labelside is up. To eject it, press the eject button (**13**).

NOTE The "CD IN" indicator remains lit while a disc is in the unit. Be careful not to insert a disc when the "CD IN" indicator is lit.

File Up/ Down

The desired file can be selected by pressing the file up button (**4**) or the file down button (**5**).

(**4**): Next file

(**5**): Preceding file (Press it twice.)

Folder Up/ Down

The desired folder can be selected by pressing the folder up button (**17**) or the folder down button (**18**).

(**17**): Next folder

(**18**): Preceding folder

Fast Forward/ Fast Reverse

Play speed increases while the button (**4**) or (**5**) is kept depressed.

(**4**): Fast forward

(**5**): Fast reverse

NOTE

❒ When the present file in REPEAT play mode comes to its end, it returns to normal play.

❒ If Fast Forward is kept to the end of the disc, it returns to the first file.

Downloaded from www.Manualslib.com manuals search engine

Text Display

Each time the text display button (20) is pressed in MP3/ WMA mode, the display change as follows:

Elapsed Time / Folder Name / File Name / (Elapsed Time)

NOTE For scrolling text, hold down the text display button (20) for 2 seconds or more.

REPEAT Play

For repeat play (playing the present file repeatedly), press the repeat button (**15**).

To release repeat play, press the repeat button (**15**) again.

The "RPT" indicator remains lit during repeat play.

RANDOM Play

For random play (playing the disc files at random), press the random play button (**16**).

To release random play, press the random play button (**16**) again.

The "RDM" indicator remains lit during random play.

ANTI-THEFT SYSTEM (SEC)

1. Power on/ off knob – volume control knob

4. Up button

11. Program type button

19. Numbered buttons [1] to [4]

You can set up a 4-digit ID to prevent theft. Once you set up the ID, the unit is inoperable without the ID when this unit or the battery is removed.

NOTE

❒ If the wrong user ID is entered 10 times, the unit displays "HELP" and cannot be operated.

❒ If you should forget your user ID, consult your Fiat Dealership.

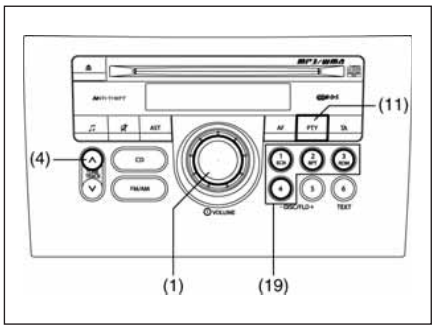

79J195

User ID Setting

❒ Press the power on/ off knob (**1**) to turn off the power.

❒ With numbered buttons (**19**) with number [3] and [4] kept depressed at the same time; press the power on/ off knob (**1**) for about 1 second or more. The unit displays "SEC".

❒ With the up button (**4**) kept depressed, press the numbered button (**19**) with number [1].
The unit displays "- - - -".

Downloaded from www.Manualslib.com manuals search engine

❒ Press the numbered buttons (**19**) with number [1] to [4], and enter the user ID. Each button corresponds to each digit, and the number increases each time the button is pressed. For example, to raise the digit second from the left to 3, press the numbered button (**19**) with number [2] four times.

❒ Press the program type button (**11**) for about 2 second or more to enter.
Power is switched off after the unit displays "SEC".
Once the ID is set up, the ID is required at power-on when this unit or the battery has been removed.

User ID Entry

Once the ID is set up, this unit displays "SEC" to prompt you to enter your user ID when the power is turned on again in the case of removal of this unit or the battery.

The unit cannot be used unless the ID is entered in the following order.

NOTE The unit does not display "SEC" when the power is turned on within 20 seconds from the last use.

❒ With the up button (**4**) kept depressed, press the numbered button (**19**) with number [1].
The unit displays "- - - -".

❒ Press the numbered buttons (**19**) with number [1] to [4], and enter the user ID. Each button corresponds to each digit. Enter the stored user ID.

❒ Press program type button (**11**) for about 2 second or more to enter.
Power is switched off.
When you switch the unit back on, it is in radio mode for normal use.

Erasing User ID

Your stored user ID can be erased. After erasing it, you may set a new user ID. Therefore, you can change your user ID as often as you like.

❒ Press the power on/off knob (**1**) to turn off the power.

❒ With the numbered buttons (**19**) with numbers [3] and [4] kept depressed at the same time, press the power on/ off know (**1**) for about 1 second or more.
The unit displays "SEC".

❒ With the up button (**4**) kept depressed, press the numbered button (**19**) with number [1].
The unit displays "- - - -".

❒ Press the numbered buttons (**19**) with number [1] to [4], and enter the user ID. Each button corresponds to each digit. Enter the stored user ID.

❒ Press the program type button (**11**) for about 2 seconds or more to enter.
The power is turned off approx, 10 seconds after "- - - -" is displayed.

Downloaded from www.Manualslib.com manuals search engine

TROUBLESHOOTING

If you suspect something is wrong, then please check and take steps as described below.

If the described suggestions do not solve the problem, it is recommended to take the unit to your nearest dealer.

Problem	Possible cause	Possible solution
A lot of noise	A mobile phone is used nearby	If you are going to use a mobile phone, use it away from the unit
Unable to operate	The security function is on	If the unit displays "SEC", enter your user ID. If the unit displays "HELP", consult your dealer.

Radio

Problem	Possible cause	Possible solution
A lot of noise	The unit is not exactly tuned in to the station	Tune it exactly to the station
Unable to receive by auto tuning	There is no station emitting signals powerful enough. If AF is ON, the unit searches for RDS stations only.	Pick up a station by manual tuning. Turn AF off.
Unable to preset stations of signals powerful enough by auto preset	If AF is ON, only RDS stations will be preset.	Turn AF off.

CD

Problem	Possible cause	Possible solution
Sound skipping or noise	The disc is dirty. The disc has a major flaw or is warped.	Wipe the disc with a soft cloth. Replace the disc with another without flaws.
CD cannot be inserted	A disc is already loaded.	Insert a CD after having removed the already inserted disc by pressing the eject button (**13**).

Downloaded from www.Manualslib.com manuals search engine

ERROR DISPLAY MESSAGES

CD

Display	Possible cause	Possible solution
ERROR 1	The disc cannot be read.	Insert the disc with its label side up. Check the disc that it is not warped and is free of flaws. If ERROR 1 does not go out when a normal disc is inserted, consult your Fiat Dealership.
ERROR 3	The player developed an error of an unidentified cause	If CD is inserted in the unit, press the eject button (**13**) to remove the disc. If the disc cannot be ejected, consult your Fiat Dealership.

Downloaded from www.Manualslib.com manuals search engine

REMOTE AUDIO CONTROLS (if equipped)

You can control basic functions of the audio system with the switches on the steering wheel. How to use the switches is different if the navigation system is equipped or not.

For vehicle without navigation system

To control the volume:

To increase the volume, push the switch (**1**).

To decrease the volume, push the switch (**2**).

To mute, push the switch (**3**).

To select the mode, push the switch (**4**).

You can also turn on the audio system by pushing the switch (**4**).

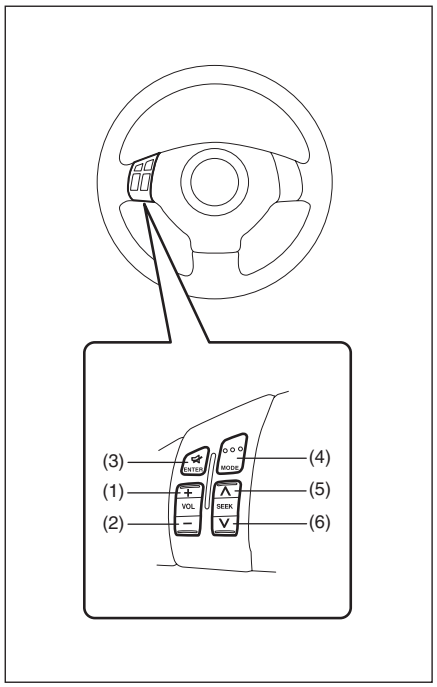

79J117

To change the radio station:

To advance to the next preset station, push the switch (**5**) briefly (only MP3 version)

To select the previous preset station, push the switch (**6**) briefly (only MP3 version)

To scan the higher frequency radio station, push and hold the switch (**5**)

To scan the lower frequency radio station, push and hold the switch (**6**)

To scan the selection on a CD:

To advance to the next track on a CD, push the switch (**5**)

To select the previous track on a CD, push the switch (**6**).

For vehicle with navigation system

Refer to the chart below how to use the switches on the steering wheel.

Downloaded from www.Manualslib.com manuals search engine

Switch	Switch operation	Mode		
		Navigation	**Tuner**	**CD player**
(1)	Push briefly	increase the volume	increase the volume	increase the volume
	Push long	increase the volume rapidly	increase the volume rapidly	increase the volume rapidly
(2)	Push briefly	decrease the volume	decrease the volume	decrease the volume
	Push long	decrease the volume rapidly	decrease the volume rapidly	decrease the volume rapidly
(3)	Push briefly	OK (perform)	radio preset up	switch to track 1
	Push long	repeat last message	scan tuner	scan track
(4)	Push briefly	switch to tuner mode or CD mode		
	Push long	switch to navigation mode		
(5)	Push briefly	select the upper navigation menu	scan to a higher frequency preset radio station	advance to next track
	Push long	select the upper navigation menu rapidly	scan to a higher frequency radio station	fast forward a track
(6)	Push briefly	select the lower navigation menu	scan to a lower frequency preset radio	return to previous track
	Push long	select the lower navigation menu rapidly	station scan to a lower frequency radio station	fast rewind a track

Downloaded from www.Manualslib.com manuals search engine

NOTES

Downloaded from www.Manualslib.com manuals search engine

OTHER CONTROLS AND EQUIPMENT

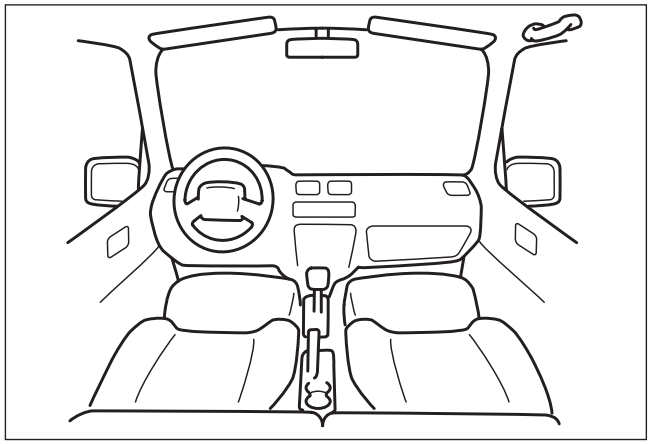

60G407

PARKING BRAKE LEVER 130
PEDAL 131
GEARSHIFT LEVER 132
FUEL FILLER CAP 132
FOLDING REAR SEATS 134
SUN VISOR 137
INTERIOR LIGHT SWITCH 138
SPOT LIGHT (if equipped) 138
FRONT SEAT HEATER (if equipped) 139
ASSIST GRIPS (if equipped) 140
ENGINE HOOD 140
CUP HOLDER AND STORAGE AREA (if equipped) 142
FRAME HOOKS 143
TIRE CHANGING TOOL 144
FRONT SEAT BACK POCKET (if equipped) 145
LUGGAGE RESTRAINT LOOPS (if equipped) 145
LUGGAGE COMPARTMENT COVER (if equipped) 146
LUGGAGE COMPARTMENT LIGHT 146
RADIO ANTENNA (if equipped) 147
ROOF RAILS OR ROOF RACK ANCHORS (if equipped) 147

Downloaded from www.Manualslib.com manuals search engine

PARKING BRAKE LEVER

1. To set
2. To release
3. To release

The parking brake lever is located between the seats. To set the parking brake, hold the brake pedal down and pull the parking brake lever all the way up. To release the parking brake, hold the brake pedal down, pull up slightly on the parking brake lever, push the button on the end of the lever with your thumb, and lower the lever to its original position.

WARNING

Never drive your vehicle with the parking brake on: rear brake effectiveness can be reduced from overheating, brake life may be shortened, or permanent brake damage may result.

If the parking brake does not hold the vehicle securely or does not fully release, have your vehicle inspected immediately by an authorized Fiat Dealership.

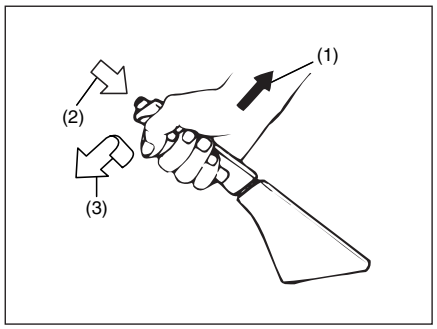

54G039

For automatic transaxle vehicles, always set the parking brake before moving the gearshift lever to the "P" (PARK) position. If you park on an incline and shift into "P" before setting the parking brake, the weight of the vehicle may make it difficult to shift out of "P" when you are ready to drive the vehicle.

When preparing to drive the vehicle, move the gearshift lever out of the "P" position before releasing the parking brake.

WARNING

Always set the parking brake fully before leaving your vehicle or it may move, causing injury or damage. When parking, make sure the gearshift lever for manual transaxle vehicles is in 1st gear or "R" (Reverse) and the gearshift lever for automatic transaxle vehicles is in "P" (Park). Remember, even though the transaxle is in gear or in Park, you must set the parking brake fully.

WARNING

When parking the vehicle in extremely cold weather, the following procedure should be used:

1) Set the parking brake.

2) Shift the manual transaxle into reverse or first gear, or the automatic transaxle into "P" (Park).

3) With the engine off, get out of the vehicle and put chocks under the wheels.

4) Release the parking brake.
When you return to your vehicle, you must remember to first set the parking brake, then remove the wheel chocks.

Downloaded from www.Manualslib.com manuals search engine

PEDAL

Clutch Pedal (1)
(For manual transaxle)

The clutch pedal is used to disengage the drive to the wheels when starting the engine, stopping, or shifting the gearshift lever. Depressing the pedal disengages the clutch.

IMPORTANT Do not drive with your foot resting on the clutch pedal. It could result in excessive clutch wear, clutch damage, or unexpected loss of engine braking.

Brake Pedal (2)

Your Fiat vehicle is equipped with either front and rear disc brakes or front disc brakes and rear drum brakes. Depressing the brake pedal applies both sets of brakes.

You may hear occasional brake squeal when you apply the brakes. This is a normal condition caused by environmental factors such as cold, wet, snow, etc.

WARNING

If brake squeal is excessive and occurs each time the brakes are applied, you should have the brakes checked by your Fiat Dealership.

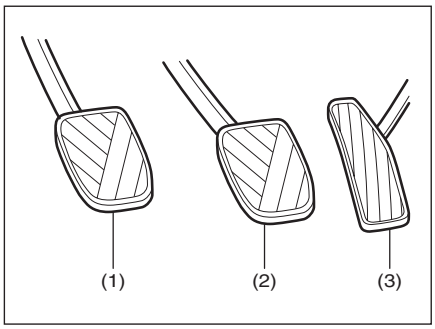

Manual transaxle 79J072

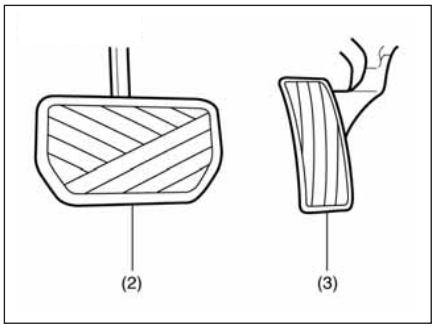

Automatic transaxle 79J154

WARNING

Do not "ride" the brakes by applying them continuously or resting your foot on the pedal. This will result in overheating of the brakes which could cause unpredictable braking action, longer stopping distances, or permanent brake damage.

Accelerator Pedal (3)

This pedal controls the speed of the engine. Depressing the accelerator pedal increases power output and speed.

Downloaded from www.Manualslib.com manuals search engine

GEARSHIFT LEVER

Your vehicle is equipped with a manual transaxle. The gearshift lever is shown. For details on how to use the transaxle, refer to "Using the Transaxle" in the "OPERATING YOUR VEHICLE" section.

WARNING

To change gears properly you must push the clutch pedal fully down. It is therefore essential that there is nothing under the pedals: make sure the mats are lying flat and do not get in the way of the pedals.

IMPORTANT Do not drive with your hand resting on the gear lever as the force exerted, even if slight, could lead over time to premature wear on the gearbox internal components.

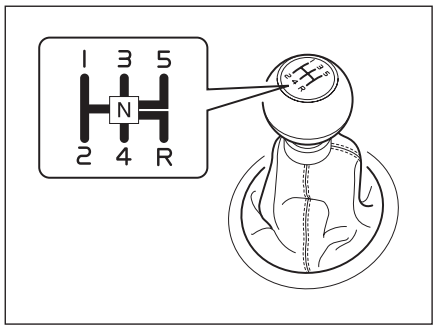

Manual transaxle 63J051

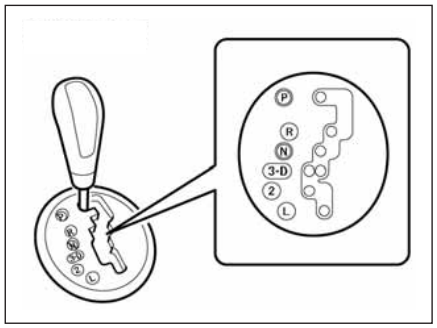

Automatic transaxle 77J021

Your vehicle is equipped with either a manual transaxle or automatic transaxle.

The gearshift lever for each transaxle type is shown in the illustrations. For details on how to use the transaxle, refer to "Using the Transaxle" in the "OPERATING YOUR VEHICLE" section.

FUEL FILLER CAP

The fuel filler cap is located on the left rear side of the vehicle. The fuel filler lid can be unlocked by pulling up the opener lever located on the outboard side of the driver's seat and locked by simply closing the lid.

WARNING

Remove the fuel filler cap slowly. The fuel may be under pressure and may spray out, causing injury.

WARNING

Gasoline is extremely flammable. Do not smoke when refueling, and make sure there are no open flames or sparks in the area.

Downloaded from www.Manualslib.com manuals search engine

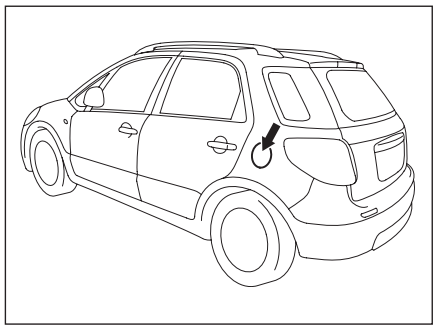

79J048

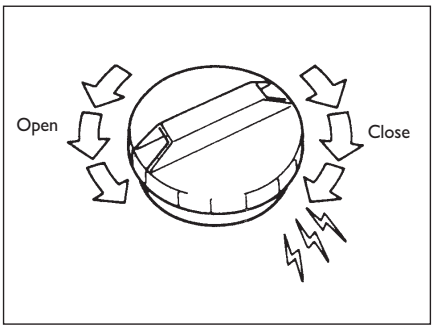

60G069

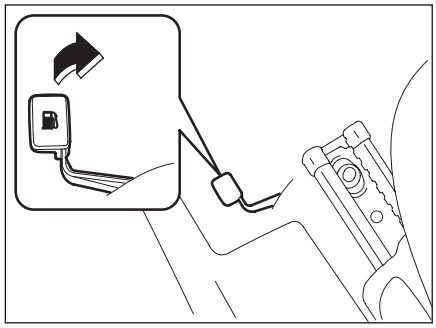

79J049

The fuel tank filler cap has a "screw-on ratcheting type" feature.

❒ To remove, turn the cap counter-clockwise. Turn the cap slowly to allow any residual pressure to escape.

❒ To install, turn the cap clockwise and tighten it securely until a "ratcheting" (clicking) sound is heard. The "ratcheting" sound indicates that the cap is on properly.

WARNING

If you need to replace the fuel cap, use a genuine Fiat cap or its equivalent. Use of an improper cap can result in a malfunction of the fuel system or emission control system. It may also result in fuel leakage in the event of an accident.

Downloaded from www.Manualslib.com manuals search engine

FOLDING REAR SEATS

The rear seats of your vehicle can be folded forward to provide additional cargo space.

To fold the rear seats forward:

❒ Hook the webbing of the outboard lap-shoulder belts in the belt hangers.

IMPORTANT When you move a seatback, make sure the belt webbing is hooked in the seat belt hangers so the seat belts are not caught by the seatback, seat hinge, or seat latch. This helps prevent damage to the belt system. Make sure the belt webbing is not twisted.

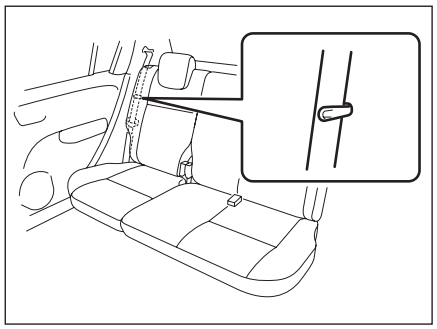

79J121

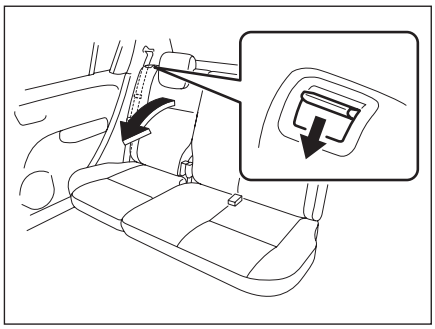

79J123

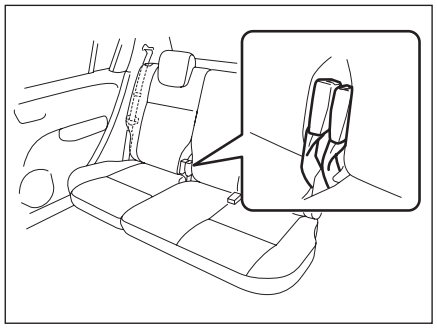

79J122

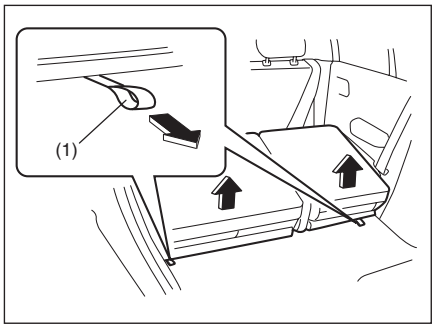

63J057

❒ Stow the seat belt buckles of the center and right seating position as shown in the illustration.

IMPORTANT When you fold the rear seatback forward, stow the seat belt buckles of the center and right seating position into the seat first. This helps prevent being caught by the seat and being damaged.

❒ Lower the adjustable head restraint fully.

❒ Pull the release lever on the top of each split seat, and fold the seatbacks forward.

❒ Pull the lock release strap (**1**) rearward to unlatch the seat cushion.

Downloaded from www.Manualslib.com manuals search engine

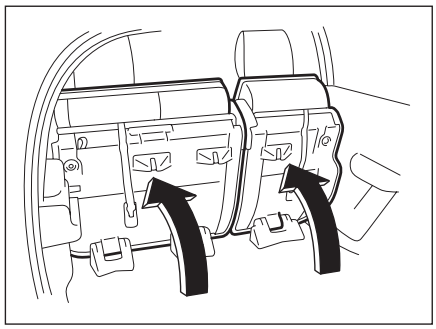

79J124

WARNING

When you unlatch the rear seat cushion, be careful that your face or hands are not injured from the seat popping up.

❒ Fold the entire seat forward.

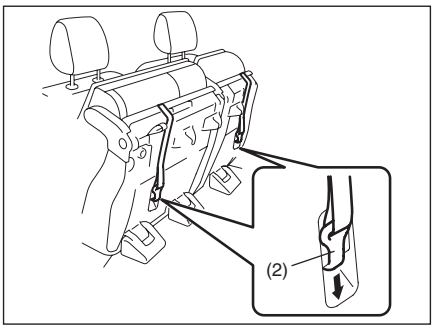

79J125

❒ Unhook the strap (**2**) by pushing down the hook as shown in the illustration.

❒ Hook the strap (**2**) to the front seat head restraint as shown in the illustration.

IMPORTANT When securing the folded rear seat with a strap, adjust the strap length so that the rear seat will not move.

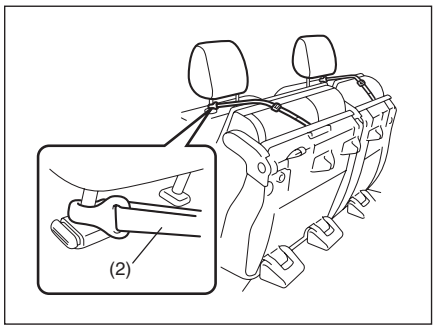

63J059

WARNING

Luggage or other cargo should be stowed in the luggage compartment with the rear seat in an upright position, whenever possible. If you need to carry cargo in the passenger compartment with the rear seat back folded forward, be sure to secure the cargo or it may be thrown about, causing injury. Never pile cargo higher than the seatbacks.

Downloaded from www.Manualslib.com manuals search engine

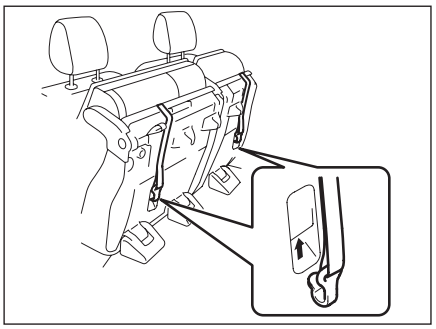

79J126

To return the seat to the normal position, follow the procedure below.

❒ Unhook the strap from the head restraint and stow the strap to the back of the seat cushion.

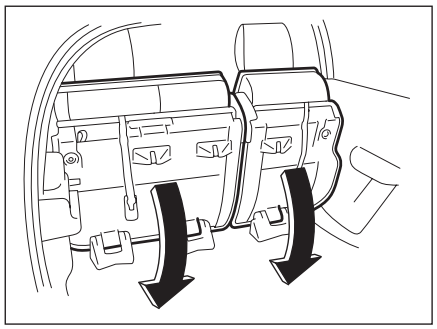

79J129

❒ Pull down the seat cushion until it locks into place.

WARNING

When returning the rear seat cushion to the normal position, be careful that your finger is not caught between the lock and the floor.

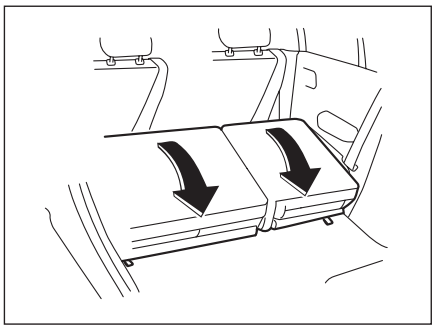

63J130

IMPORTANT When returning the rear seat cushion to the normal position, make sure that there is nothing around the striker. This prevents the seat cushion from being locked securely. When returning the rear seat cushion to the normal position, make sure that there is nothing under the seat cushion. This prevents damage to the seat cushion.

❒ Raise the seatback until it locks into place.

After returning the seat, try moving the seat and seatback to make sure they are securely latched.

Downloaded from www.Manualslib.com manuals search engine

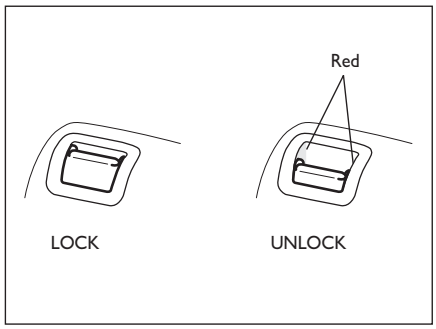

79J127

IMPORTANT After securing the rear seatback, make sure that it is locked securely. If it is not, you will see red in the release lever.

SUN VISOR

The sun visors can be pulled down to block glare coming through the windshield, or they can be unhooked and turned to the side to block glare coming through the side window.

IMPORTANT When unhooking and hooking a sun visor, be sure to handle it by the hard plastic parts or the sun visor can be damaged.

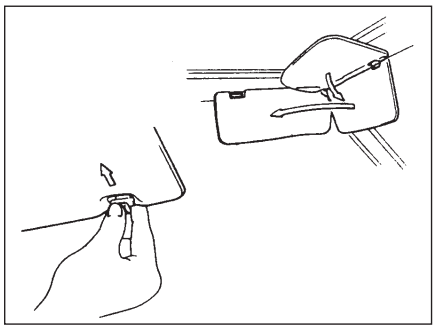

60A158

Downloaded from www.Manualslib.com manuals search engine

INTERIOR LIGHT SWITCH

This light switch has three positions which function as described below:

1. The light comes on and stays on regardless of whether the door is open or closed.
2. The light comes on when the door is opened.
   After closing all doors, the light will remain on for about 15 seconds and then fade out. If you insert the key into the ignition switch during that time, the light will start to fade out immediately.
   After removing the key from the ignition switch, the light will turn on for about 15 seconds and then fade out.
3. The light remains off even when the door is opened.

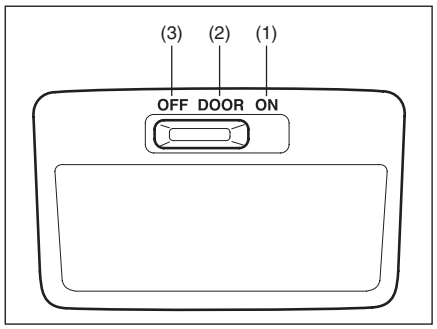

64J104

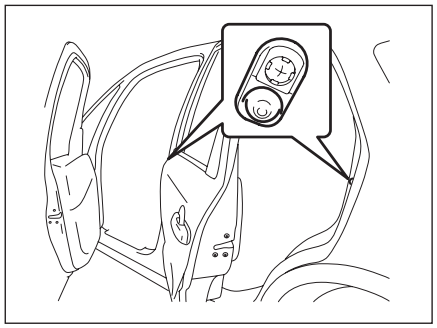

79J075

NOTE The number of doors involved in the lighting operation of the interior light depends on the vehicle specification. If there is a switch (rubber projection) at the door opening as shown, the door is involved in the lighting operation.

SPOT LIGHT (if equipped)

Push the switch to turn on the light and push it again to turn off the light.

Downloaded from www.Manualslib.com manuals search engine

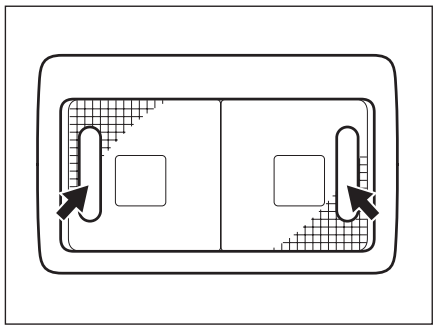

79J074

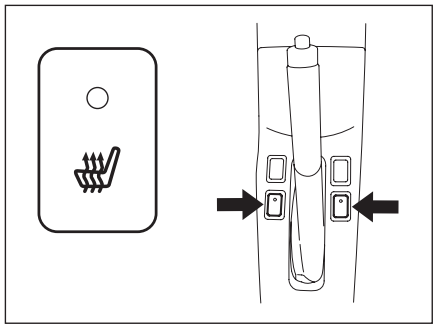

79J076

FRONT SEAT HEATER (if equipped)

With the ignition switch in the "ON" position, push in one or both of the seat heater switches to warm the corresponding seat(s). The indicator light below the switch will also come on. To turn off the seat heater, push in the switch again. The indicator light below the switch will go off.

WARNING

Improperly using the seat heater can be hazardous. An occupant can suffer burns even if the heating temperature is fairly low, if the occupant is wearing thin pants, a thin skirt or shorts and leaves the heater on for long periods.

Avoid using the seat heater for these occupants:

– People who have reduced feeling in their legs, including the elderly or those with certain disabilities.

– Small children, or anyone with sensitive skin.

– People who are asleep or under the influence of alcohol or other drugs which make them tired.

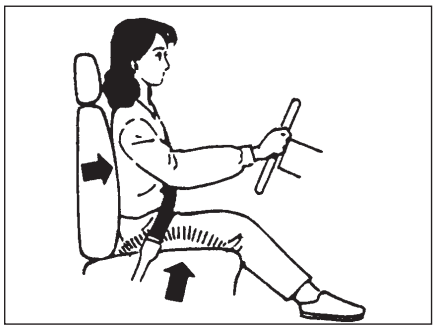

86G064

IMPORTANT To avoid damaging the heater element:

❒ Do not subject the front seats to heavy impacts, such as children jumping on them.

❒ Do not cover the seat with any insulating materials such as blankets or cushions.

Downloaded from www.Manualslib.com manuals search engine

ASSIST GRIPS (if equipped)

Assist grips are provided for passenger convenience.

IMPORTANT To avoid damaging the assist grip and the molded headlining, do not hang down the assist grip.

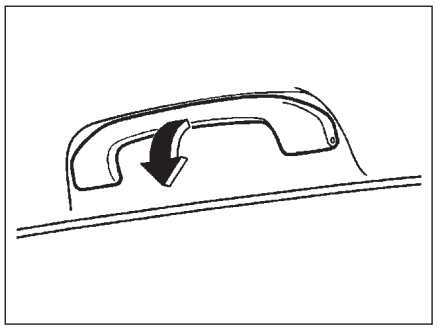

54G249

ENGINE HOOD

To open the engine hood:

❒ Pull the hood release handle located on the outboard side of the driver's side of the instrument panel. This will disengage the engine hood lock halfway.

Downloaded from www.Manualslib.com manuals search engine

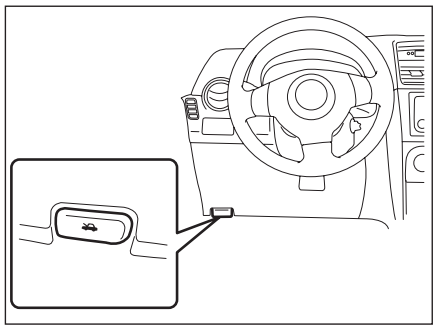

79J077

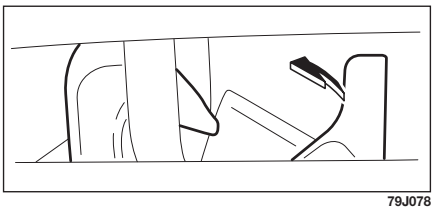

79J078

❒ Push the under- hood release lever sideways with your finger, as shown in the illustration. While pushing the lever, lift up the engine hood.

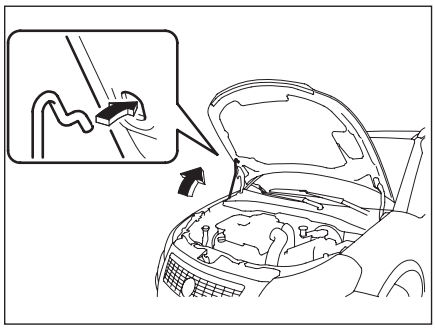

79J050

❒ Continue to lift up the hood until it is high enough to support with the prop rod.

Downloaded from www.Manualslib.com manuals search engine

WARNING

For safety reasons the bonnet must be closed properly to avoid its opening while the vehicle is travelling. Therefore, always check it is properly closed and the catch engaged. Should you notice that the catch is not perfectly engaged when travelling, stop the vehicle immediately and close the bonnet.

WARNING

If the supporting rod is not positioned correctly the bonnet may fall violently.

CUP HOLDER AND STORAGE AREA (if equipped)

The cup holders are provided in the center console.

WARNING

Do not use the cup holder to hold cups containing hot liquids, or sharpedged, hard or breakable objects. Objects in the cup holder may be thrown about during a sudden stop or impact, and could cause personal injury.

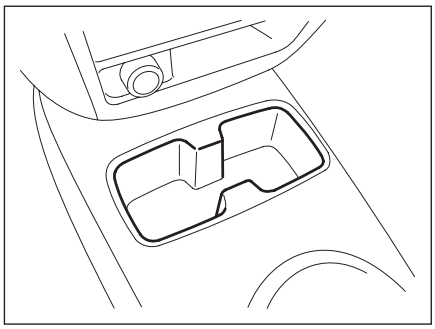

79J051

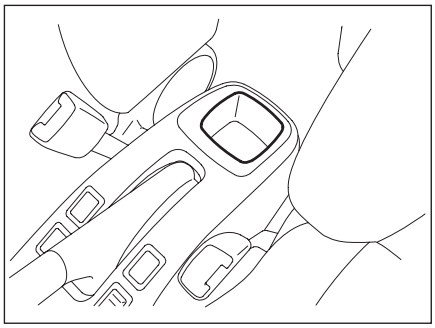

79J052

Downloaded from www.Manualslib.com manuals search engine

FRAME HOOKS

Frame hooks are provided on the front (**1**), rear (**2**) and side (**3**) (if equipped) of the vehicle for use in emergency situations.

To tow your vehicle on the road or highway, follow the instruction of "Towing" in "EMERGENCY SERVICE" or "VEHICLE LOADING AND TOWING" section.

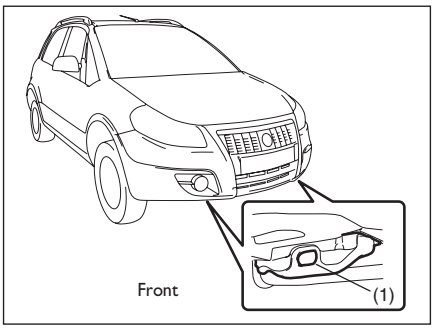

79J079

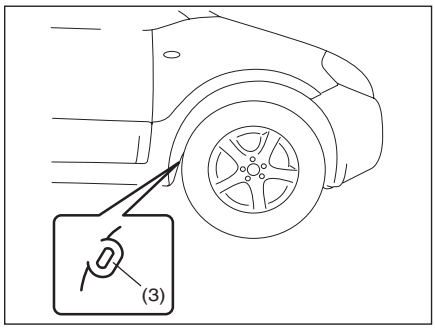

79J081

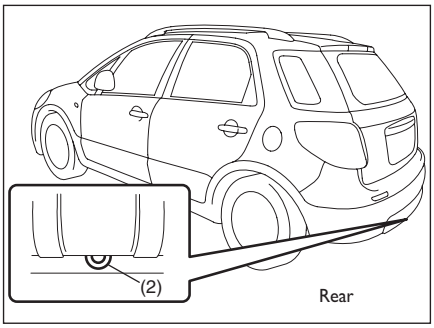

79J080

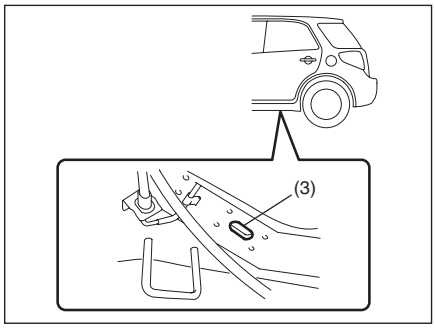

79J132

WARNING

Do not use the frame hooks to tow another vehicle or to have your vehicle towed on the road or highway. The hooks are designed for use in emergency situations only, such as if your vehicle or another vehicle gets stuck in deep mud or snow.

Shipping hook

The hooks (**2**) and frame holes (**3**) are provided for shipping purposes only. It can break if used for any other purpose.

Downloaded from www.Manualslib.com manuals search engine

TIRE CHANGING TOOL

The jack, wheel brace, jack handle are stowed in the luggage compartment.

To remove the spare tire, turn its bolt counterclockwise and remove it.

To remove the jack, turn its shaft counterclockwise and pull the jack out of the storage bracket.

To stow the jack, place it in the storage bracket and turn the shaft clockwise until the jack is securely held in place.

WARNING

The jack shall only be used for changing wheels on the vehicle with which it is provided or on cars of the same model. It must not be used for other purposes such as for instance raising vehicles of other models. In no case should it be used for repairs under the vehicle. Incorrect positioning of the jack may cause the jacked vehicle to fall. Do not use the jack for higher capacities than stated on its label.

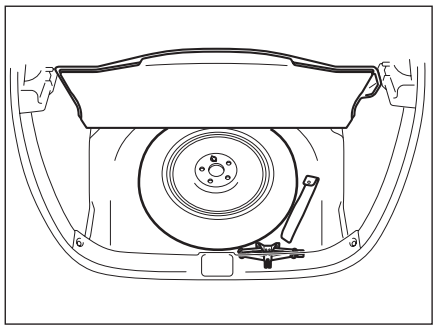

79J082

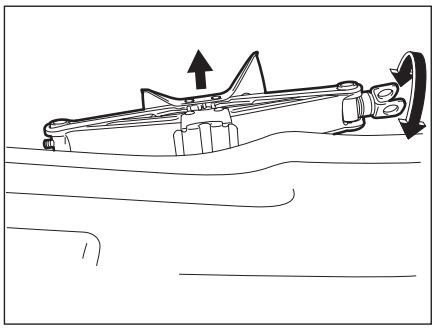

79J085

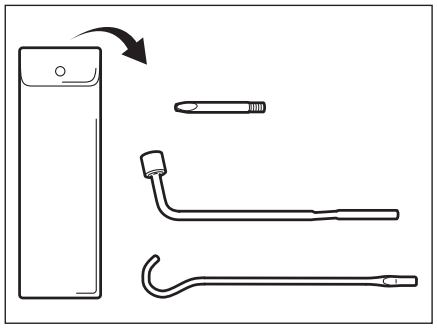

79J083

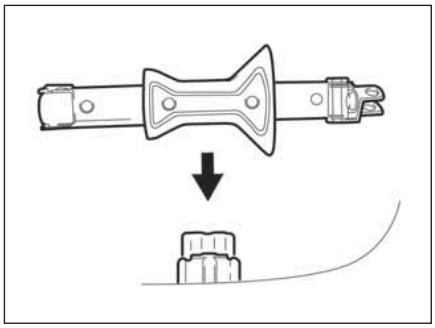

79J086

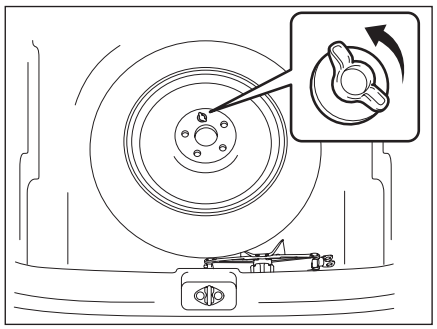

79J084

WARNING

After using the tire changing tools, be sure to stow them securely or they can cause injury if an accident occurs.

Downloaded from www.Manualslib.com manuals search engine

FRONT SEAT BACK POCKET (if equipped)

This pocket is provided for holding light and soft things such as gloves, newspapers or magazines.

WARNING

Do not put hard or breakable objects in the pocket. If an accident occurs, objects such as bottles, cans, etc. can injure the occupants in the rear seat.

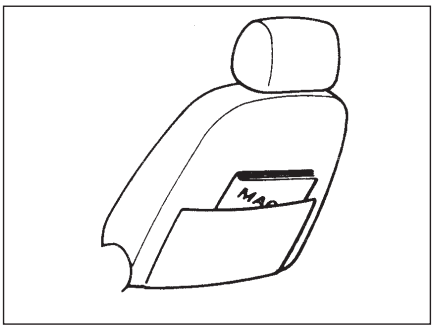

60B119

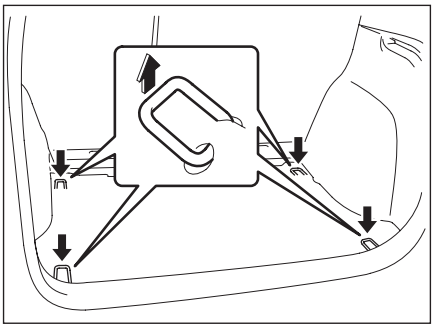

79J087

LUGGAGE RESTRAINT LOOPS (if equipped)

Four luggage restraint loops are provided on the luggage compartment floor. An optional rubber net can be hooked to these loops to help keep cargo from moving around in the luggage compartment during normal driving.

Downloaded from www.Manualslib.com manuals search engine

LUGGAGE COMPARTMENT COVER (if equipped)

Luggage or other cargo placed in the luggage compartment are hidden from view by a luggage compartment cover.

WARNING

Do not carry items on top of the luggage compartment cover, even if they are small and light. Objects on top of the cover could be thrown about in an accident, causing injury, or could obstruct the driver's rear view.

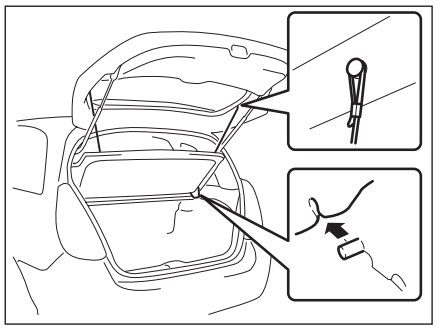

79J128

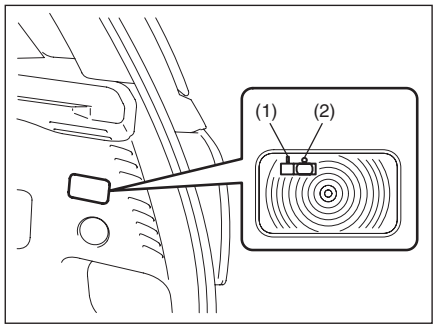

79J053

LUGGAGE COMPARTMENT LIGHT

When you open the rear door with the luggage compartment light switch in the "ON" position (**1**), the light comes on and remains on as long as you keep the rear door open.

When the luggage compartment light switch is in the "OFF" position (**2**), the light remains off regardless of whether the rear door is opened or closed.

IMPORTANT Do not leave the rear door open with the luggage compartment light switch in the "ON" position for a long time, or the battery will discharge.

Downloaded from www.Manualslib.com manuals search engine

RADIO ANTENNA (if equipped)

The radio antenna at the front of the roof can be folded down and is removable. To fold the antenna rearward, be sure to grip the bottom of antenna. To remove the antenna, turn it counterclockwise. To reinstall the antenna, turn it clockwise firmly by hand.

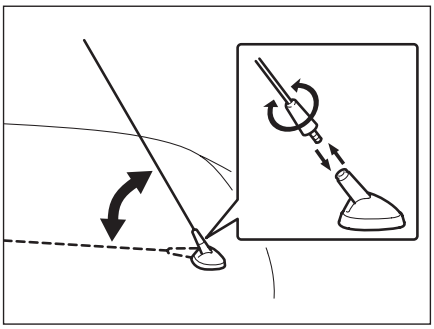

80G143

IMPORTANT To avoid damage to the radio antenna:

❒ Remove the antenna when using an automatic vehicle wash.

❒ Remove or fold down the antenna when the antenna hits anything such as a low ceiling in a parking garage or putting a vehicle cover over your vehicle.

ROOF RAILS OR ROOF RACK ANCHORS (if equipped)

You can use the roof rails to attach the optional roof rack which is available at your Fiat Dealership. If you use a roof rack, observe the instructions and precautions in this section and provided with the roof rack.

❒ Make sure the roof rack is securely installed.

❒ To mount various types of cargo (such as skis, bicycles, etc.) properly, use suitable attachments which are available from your Fiat Dealership. Be sure to install the attachments properly and securely according to the instructions provided. Do not mount cargo directly on the roof panel. The cargo can damage the roof panel.

❒ The gross weight of the roof rack plus cargo must not exceed the loading capacity (50 kg -110 lbs). Also, do not let the gross vehicle weight (fully loaded vehicle including driver, passengers, cargo, roof load and trailer tongue weight) exceed the Gross Vehicle Weight Rating (GVWR) listed in the "SPECIFICATIONS" section of this manual.

Downloaded from www.Manualslib.com manuals search engine

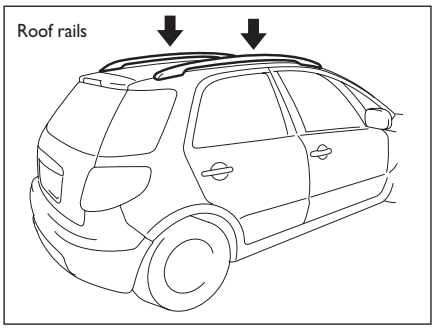

79J088

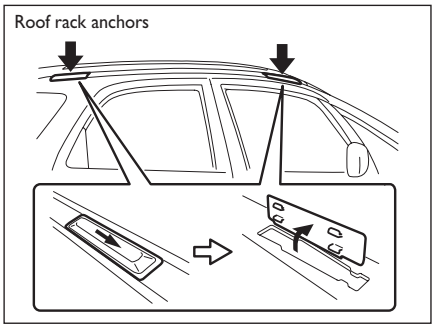

79J089

- ❒ Mount and secure the cargo onto the roof rack properly according to the instructions provided. Be sure to stow the heaviest items at the bottom and distribute the cargo as evenly as possible.
- ❒ Do not carry items so large that they hang over the bumpers or the sides of the vehicle, or block your view.
- ❒ Secure the front and rear ends of long items – such as wood panels, surfboards and so forth – to both the front and rear of the vehicle. You should protect the painted surfaces of the vehicle from scuffing caused by tie-down ropes.
- ❒ Check periodically to make sure the roof rack is securely installed and free from damage.
- ❒ For vehicles with roof rack anchors, make sure the anchors are covered with the caps when not in use.

WARNING

Abrupt maneuvers or failure to properly secure cargo can allow the cargo to fly off the vehicle and hit others, causing personal injury or property damage.

Mount cargo securely and avoid abrupt maneuvers such as "jackrabbit" starts, sharp turns, fast cornering and sudden braking. Check periodically to make sure that cargo is securely fastened.

Large, bulky, long, or flat items can affect vehicle aerodynamics or be caught by the wind, and can reduce vehicle control resulting in an accident and personal injury. Drive cautiously at reduced speed when carrying this type of cargo.

Downloaded from www.Manualslib.com manuals search engine

OPERATING YOUR VEHICLE

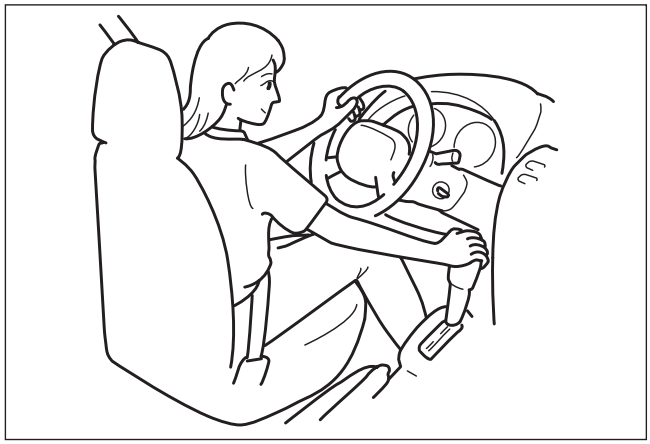

60G408

EXHAUST GAS WARNING 150
DAILY INSPECTION CHECKLIST 150
ENGINE OIL CONSUMPTION 151
STARTING THE ENGINE 152
USING THE TRANSAXLE 155
USING THE 2WD/ 4WD SWITCH (if equipped) 157
BRAKING 160
ELECTRONIC STABILITY PROGRAM (ESP®) (if equipped) 162
RUNNING-IN 165
CATALYTIC CONVERTER (if equipped) 165
IMPROVING FUEL ECONOMY 166

Downloaded from www.Manualslib.com manuals search engine

EXHAUST GAS WARNING

WARNING

Avoid breathing exhaust gases. Exhaust gases contain carbon monoxide, a potentially lethal gas that is colorless and odorless. Since carbon monoxide is difficult to detect by itself, be sure to take the following precautions to help prevent carbon monoxide from entering your vehicle.

Do not leave the engine running in garages or other confined areas.

Do not park with the engine running for a long period of time, even in an open area. If it is necessary to sit for a short time in a parked vehicle with the engine running, make sure the air intake selector is set to "FRESH AIR" and the fan is at high speed.

Avoid operating the vehicle with the tail gate or trunk open. If it is necessary to operate the vehicle with the tail gate or trunk open, make sure the sunroof (if equipped) and all windows are closed, and the blower is at high speed with the air intake selector set to "FRESH AIR".

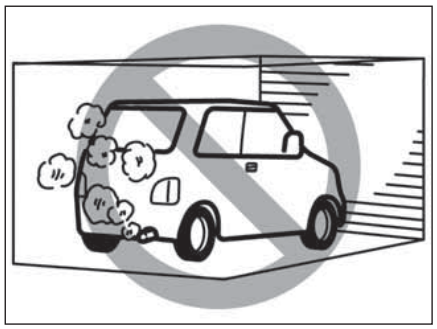

52D147

WARNING

To allow proper operation of your vehicle's ventilation system, keep the air inlet grille in front of the windshield clear of snow, leaves, or other obstructions at all times.

Keep the exhaust tailpipe area clear of snow and other material to help reduce the buildup of exhaust gases under the vehicle. This is particularly important when parked in blizzard conditions.

Have the exhaust system inspected periodically for damage and leaks. Any damage or leaks should be repaired immediately.

DAILY INSPECTION CHECKLIST

BEFORE DRIVING

❒ Make sure that windows, mirrors, lights, and reflectors are clean and unobstructed.

❒ Visually check the tires for the following points:

– the depth of the tread groove

– abnormal wear, cracks and damage

– loose wheel bolts

– existence of foreign material such as nails, stones, etc.

Refer to "Tires" in "INSPECTION AND MAINTENANCE" section for details.

❒ Look for fluid and oil leaks.

NOTE It is normal for water to drip from the air conditioning system after use.

❒ Make sure the hood is fully closed and latched.

❒ Check the headlights, turn signal lights, brake lights and horn for proper operation.

Downloaded from www.Manualslib.com manuals search engine

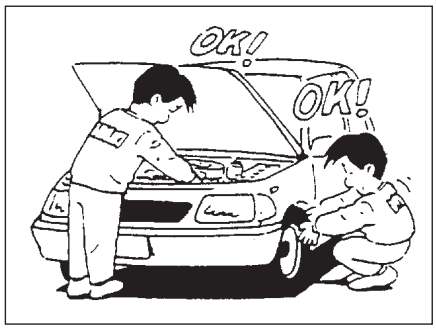

60A187S

❒ Adjust the seat and adjustable head restraint (if equipped).

❒ Check the brake pedal and the parking brake lever.

❒ Adjust the mirrors.

❒ Make sure that you and all passengers have properly fastened your seat belts.

❒ Make sure that all warning lights come on as the key is turned to the "ON" or "START" position.

❒ Check all gauges.

❒ Make sure that the BRAKE SYSTEM WARNING light turns off when the parking brake is released.

Once a week, or each time you fill your fuel tank, perform the following underhood checks:

❒ Engine oil level

❒ Coolant level

❒ Brake fluid level

❒ Power steering (if equipped) fluid level

❒ Windshield washer fluid level

❒ Battery solution level

❒ Hood latch operation
Pull the hood release handle inside the vehicle. Make sure that you cannot open the hood all the way without releasing the secondary latch. Be sure to close the hood securely after checking for proper latch operation. See "All latches, hinges & locks" of "CHASSIS AND BODY" in the "Periodic Maintenance Schedule" in the "INSPECTION AND MAINTENANCE" section for lubrication schedule.

WARNING

Make sure the hood is fully closed and latched before driving. If it is not, it can fly up unexpectedly during driving, obstructing your view and resulting in an accident.

Once a month, or each time you fill your fuel tank, check the tire pressure using a tire pressure gauge. Also check the tire pressure of the spare tire.

ENGINE OIL CONSUMPTION

It is normal for the engine to consume some engine oil during normal vehicle operation.

The amount of engine oil consumed depends on the viscosity of the oil, the quality of the oil and the conditions the vehicle is driven under.

More oil is consumed during high- speed driving and when there is frequent acceleration and deceleration. Under high loads, your engine also will consume more oil.

A new engine also consumes more oil, since its pistons, piston rings and cylinder walls have not yet become conditioned. New engines reach the normal level of oil consumption only after approximately 5000 km (3000 miles) driving.

Downloaded from www.Manualslib.com manuals search engine

Oil consumption: Max. 1.0 L per 1000 km (1 Qt. per 600 miles)

When judging the amount of oil consumption, note that the oil may become diluted and make it difficult to accurately judge the true oil level.

As an example, if a vehicle is used for repeated short trips, and consumes a normal amount of oil, the dipstick may not show any drop in the oil level at all, even after 1000 km (600 miles) or more of driving. This is because the oil is gradually becoming diluted with fuel or moisture, making it appear that the oil level has not changed.

You should also be aware that the diluting ingredients evaporate out when the vehicle is subsequently driven at high speeds, such as on an expressway, making it appear that oil is excessively consumed after high- speed driving.

STARTING THE ENGINE

BEFORE STARTING THE ENGINE

❒ Make sure the parking brake is set fully.

❒ Manual transaxle – Shift into "N" (Neutral) and depress the clutch pedal all the way to the floor. Hold it while starting the engine.

❒ Automatic transaxle – If the gearshift lever is not in "P" (Park) position, shift into "P" (Park). (If you need to re- start the engine while the vehicle is moving, shift into "N".)

NOTE:

Automatic transaxle vehicles have a starter interlock device which is designed to keep the starter from operating if the transaxle is in any of the drive positions.

WARNING

Make sure that the parking brake is set fully and the transaxle is in Neutral (or Park for vehicles with an automatic transaxle) before attempting to start the engine.

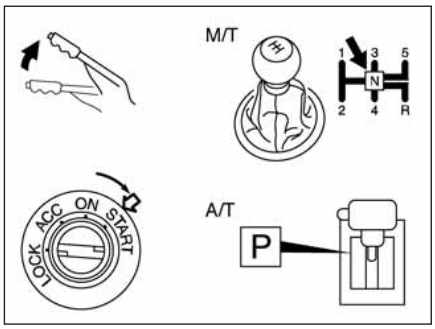

79J156

IMPORTANT We recommend that during the initial period you do not drive to full vehicle performance (e.g.: excessive acceleration, long journeys at top speed, sharp braking, etc.).

IMPORTANT When the engine is switched off never leave the key into the ignition switch to prevent pointless current absorption from draining the battery.

Downloaded from www.Manualslib.com manuals search engine

STARTING A COLD ENGINE (For Petrol Engine Model)

With your foot off the accelerator pedal, crank the engine by turning the ignition key to "START". Release the key when the engine starts.

IMPORTANT

❒ Stop turning the starter immediately after the engine has started or the starter system can be damaged.

❒ Do not crank the engine for more than 15 seconds at a time. If the engine doesn't start on the first try, wait about 15 seconds before trying again.

If the engine does not start after 15 seconds of cranking, wait about 15 seconds, then press down the accelerator pedal to 1/3 of its travel and try cranking the engine again. Release the key and accelerator pedal when the engine starts.

If the engine still does not start, try holding the accelerator pedal all the way to the floor while cranking. This should clear the engine if it is flooded.

STARTING A COLD ENGINE (for Diesel Engine Model)

Turn the ignition switch to the "ON" position and wait until the glow plug indicator goes out if it comes on. Crank the engine by turning the ignition key to "START". Release the key when the engine starts

IMPORTANT

❒ The starter is allowed to crank the engine up to 30 seconds. If the engine failed to start, wait 15 seconds, then restart cranking. Even if the third trial failed, consult authorized Fiat Dealership.

❒ If the engine is started after long time parking at extremely cold atmosphere such as the ambient temperature is below –20°C, release ignition key from start position and stop cranking after confirming the engine speed increase around 800 to 1000 rpm.

STARTING WARM ENGINE

Crank the engine by turning the ignition key to "START". Release the key when the engine starts.

CAUTION WHEN STOPPING THE ENGINE WITH TURBOCHARGER

When stopping the engine after climbing or high speed driving, let the engine idle for about one minute or more (if it is not prohibited) to cool down the turbocharger and engine oil. This is to prevent the engine oil from over-deteriorating. Deteriorated engine oil will damage the bearings of the turbocharger.

RESTARTING D19AA DIESEL ENGINE AFTER FUEL-EMPTY STOP

The engine stops if the engine feels fuel emptiness. To restart the engine, stop the vehicle, hold the ignition key in "ON" position for 5 – 10 seconds to feed fuel, then perform above engine starting procedure.

DIESEL PARTICULATE FILTER

Diesel Particulate Filter warning light

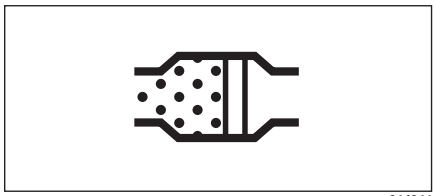

64J244

If the Diesel Particulate Filter warning light comes on when driving, there is a risk of the particle filter becoming clogged. You should regenerate the diesel particulate filter when the Diesel Particulate Filter warning light comes on. To regenerate the diesel particulate filter, we recommend that you drive the vehicle until the light goes out, at an average speed of 50 km/h (31 mph) for about 5 minutes.

Downloaded from www.Manualslib.com manuals search engine

However, you should drive carefully with keeping the legal speed limit, and take care the surrounding traffic condition.

If you drive your vehicle at an average speed of 50 km/h (31 mph) for about 5 minutes, the regeneration of the diesel particulate filter will be completed and the Diesel Particulate Filter warning light will go out.

IMPORTANT Be sure to regenerate the diesel particulate filter when the Diesel Particulate Filter warning light comes on. Non-regenerate the diesel particulate filter will cause the vehicle malfunction due to the clogged filter.

NOTE When you drive your vehicle, the white smoke may be emitted depending on the grade of fuel used. This is due to the particle filter being regenerated automatically, and does not affect the way the vehicle runs.

Vehicle With Keyless Start System

The ignition switch can be operated when the remote controller is in the vehicle except the rear luggage area. To turn the ignition switch, push the switch first.

NOTE

You must push in the ignition switch to turn it from the "LOCK" position to the "ACC" position. To return to the "LOCK" position from the "ACC" position, turn the ignition switch counterclockwise while pushing in the switch.

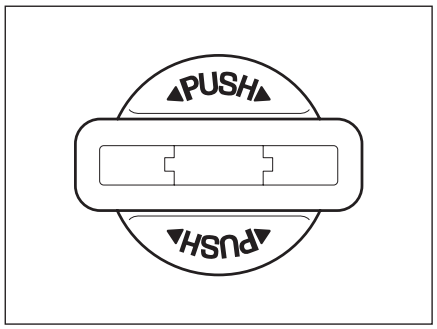

80J084

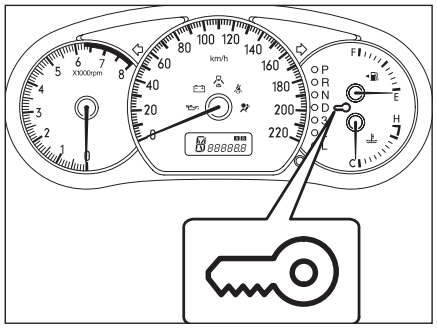

79J232

If the keyless start system blue indicator light illuminates on the instrument cluster, you can turn the ignition switch. If the red indicator light illuminates, you can not turn the ignition switch.

NOTE

- ❒ The ignition switch can be turned to the "ACC" position when the keyless start system blue indicator light illuminates. The blue indicator light will illuminate for several seconds and then turn off to protect the system. In this case, you must release the ignition switch once and push the switch again.
- ❒ If the keyless start system red indicator light illuminates, the remote controller may not be in the vehicle or the battery of the remote controller may be unreliable. The red indicator light will turn off within several seconds after the remote controller is returned in the vehicle except in the rear luggage area.

When the remote controller is in the vehicle except the rear luggage area, you can turn the ignition switch without using an ignition key.

NOTE

- ❒ If the battery of the remote controller runs down or there are strong radio waves or noise, the operating range may be narrower or the remote controller may be inoperative.
- ❒ If the remote controller is too close to the door glass, it may not operate.
- ❒ The ignition switch may not turn when the remote controller is on the instrument panel, in the glove box, in the door pocket, in the sun visor or on the floor.

Downloaded from www.Manualslib.com manuals search engine

WARNING

The remote controller is a sensitive electronic instrument. To avoid damaging it, do not expose it to impacts, moisture or high temperature (such as on the dashboard under direct sunlight).

You can also turn the ignition switch by inserting the ignition key into the slot.

If you leave any of the doors open with the ignition switch in the "ACC" position for a while (and no key inserted), the engine may not start when you turn the ignition switch to "START". If the engine does not start, close all doors completely or turn the ignition switch back to the "LOCK" position, then start the engine.

USING THE TRANSAXLE

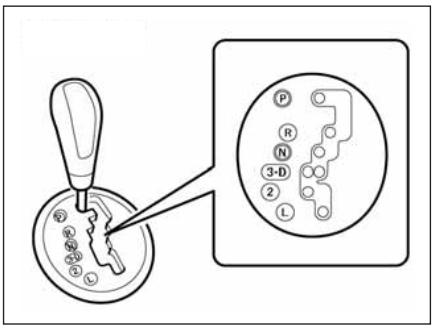

77J021

4- Speed Automatic Transaxle

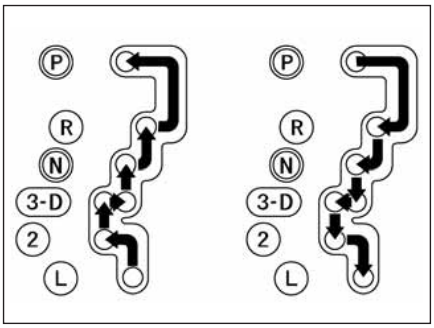

77J028

Gearshift lever

WARNING

Always depress the brake pedal before shifting from "P" (Park) (or "N" (Neutral) if the vehicle is stationary) to a forward or reverse gear, to help prevent the vehicle from moving unexpectedly when you shift.

Use the gearshift lever positions as described below:

P (Park)

Use this position to lock the transaxle when the vehicle is parked or when starting the engine. Shift into Park only when the vehicle is completely stationary.

R (Reverse)

Use this position to reverse the vehicle from stop. Make sure that vehicle is completely stationary before shifting into Reverse.

N (Neutral)

Use this position for starting the engine if the engine stalls and you need to restart it while the vehicle is moving. You may also shift into Neutral and depress the brake pedal to hold the vehicle stationary during idling.

Downloaded from www.Manualslib.com manuals search engine

D (Drive)

Use this position for all normal driving. With the gearshift lever in "D" range you can get an automatic downshift by pressing the accelerator pedal. The higher the vehicle speed is, the more you need to press the accelerator pedal to get a downshift.

3 (Low 3)

Use this position for driving on moderate uphill and downhill gradients. The engine braking effect on moderate downhills can be used in this position. The transaxle shifts up only to 3rd gear.

2 (Low 2)

Use this position to provide extra power when climbing hills, or to provide engine braking when going down hills.

L (Low 1)

Use this position to provide maximum power when climbing steep hills or driving through deep snow or mud, or to provide maximum engine braking when going down steep hills.

NOTE:

If you move the gearshift lever to a lower gear while driving faster than the maximum allowable speed for the lower gear, the transaxle will not actually downshift until your speed drops below the maximum speed for the lower gear.

IMPORTANT Be sure to take the following precautions to help avoid damage to the automatic transaxle:

- ❒ Make sure that the vehicle is completely stationary before shifting into "P" or "R".
- ❒ Do not shift from "P" or "N" to "R","D", "3", "2", or "L" when the engine is running above idle speed.
- ❒ Do not rev the engine with the transaxle in a drive position (" R", "D","3", "2", or "L") and the front wheels not moving.
- ❒ Do not use the accelerator to hold the vehicle on a hill. Use the vehicle's brakes.

MANUAL TRANSAXLE

Starting off

To start off, push in the clutch pedal and shift into 1st gear. After releasing the parking brake, gradually release the clutch. When you hear a change in the engine's sound, slowly press the accelerator while continuing to gradually release the clutch.

Shifting

All forward gears are synchronized, which provides for quiet, easy shifting. Always push in the clutch pedal fully before shifting gears.

For vehicle with tachometer

Keep the engine speed so it does not get into the red zone of tachometer.

Reverse engagement

Petrol versions: from neutral (N) press the gear lever down and at the same time move it rightwards and backwards.

Diesel versions: raise the ring and at the same time move the gear lever rightwards and backwards.

Downloaded from www.Manualslib.com manuals search engine

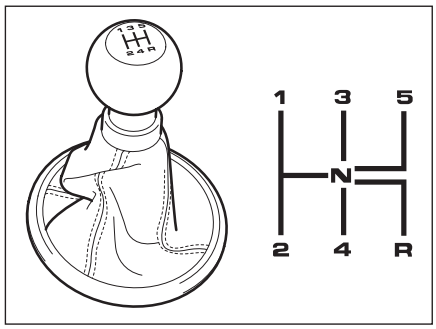

79J002

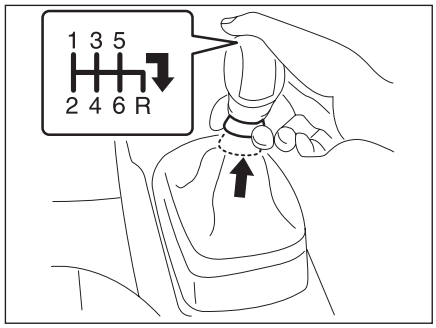

Diesel model 79J140

WARNING

To change gears properly you must push the clutch pedal fully down. It is therefore essential that there is nothing under the pedals: make sure the mats are lying flat and do not get in the way of the pedals.

WARNING

Reduce your speed and downshift to a lower gear before going down a long or steep hill. A lower gear will allow the engine to provide braking. Avoid riding the brakes or they may overheat, resulting in brake failure.

When driving on slippery roads, be sure to slow down before downshifting. Excessive and or sudden changes in engine speed may cause loss of traction, which could cause you to lose control.

Make sure that the vehicle is completely stationary before you shift into reverse.

IMPORTANT Do not drive with your hand resting on the gear lever as the force exerted, even if slight, could lead over time to premature wear on the gearbox internal components.

IMPORTANT

- ❒ To help avoid clutch damage, do not use the clutch pedal as a footrest while driving or use the clutch to keep the vehicle stationary on a hill. Depress the clutch fully when shifting.
- ❒ When shifting or starting off, do not race the engine. Racing the engine can shorten engine life and prevent smooth shifting.

USING THE 2WD/ 4WD SWITCH (if equipped)

This 4WD system enables you to select the driving mode according to the driving conditions by operating the 2WD/4WD switch. With this feature, you can select 3 mode positions, "2WD", "4WD AUTO" and "4WD LOCK" by operating the 2WD/ 4WD switch even when the vehicle is moving, provided the front wheels are in the straight ahead position.

DESCRIPTION OF TRANSFER CASE POSITIONS

2WD

In this position, engine power is supplied to the front axle only. Use this position for normal driving (on dry, hard surfaces).

4WD AUTO

In this position, engine power is supplied to the front and rear axles at normal speed, providing greater traction than 2-wheel drive. Use this position for driving on paved roads or on slippery roads (icy, snow- covered, muddy, etc.).

Downloaded from www.Manualslib.com manuals search engine

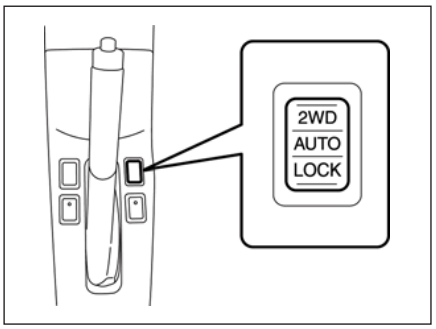

79J042

In the AUTO mode, the 4WD controller judges the driving conditions using signals from sensors.

When slipping of the front wheels is detected, the electronically controlled coupling supplies optimum driving force to the rear wheels. This function improves driving stability and running through performance on rough roads and stabilizes driving performance even on a snow covered up- hill road or the like.

Also, during normal driving on paved roads, torque distribution to the rear wheels is reduced to achieve the nearly front wheel drive condition, thereby fuel consumption is improved.

4WD LOCK

In this position, engine power is supplied to the front and rear axles at reduced speed. Use this position when it is hard to start off in the "4WD AUTO" mode such as in mud, sand or on snow.

NOTE

- ❒ Avoid operating your vehicle in the "4WD LOCK" on wet pavement as much as possible. Operating your vehicle in the "4WD LOCK" on wet pavement may cause severe damage to the drive train.
- ❒ As the vehicle speed increases, the "4WD LOCK" mode is automatically canceled and the "4WD AUTO" mode is selected.
- ❒ When the ignition switch is turned to the "OFF" position, the "4WD LOCK" mode is canceled.

2WD/4WD SWITCH OPERATION

Operate the 2WD/4WD switch according to the appropriate procedure described below:

How to turn on 2WD/4WD switch

2WD/4WD switch will activate when the ignition switch is turned on.

From 2WD to 4WD AUTO

Turn the 2WD/4WD switch to the neutral position, and the "4WD AUTO" indicator will come on.

79J040

Downloaded from www.Manualslib.com manuals search engine

From 4WD AUTO to 4WD LOCK

Push the "4WD LOCK" switch for a few seconds until the "4WD LOCK" indicator will come on.

79J100

From 4WD LOCK to 4WD AUTO

Push the "4WD LOCK" switch, and the "4WD AUTO" indicator will come on.

From 4WD AUTO or LOCK to 2WD

Push the "2WD" switch, and the "4WD AUTO" or "4WD LOCK" indicator will turn off.

NOTE

❒ The 2WD/4WD switch can be operated when the vehicle is either stopped or moving.

❒ Make sure that the front wheels are in the straight ahead position when operating the 2WD/4WD switch.

❒ While making turns or accelerating and decelerating, operating the 2WD/4WD switch or turning off the key switch in the "4WD AUTO" or "4WD LOCK" mode may cause a shock, but this is not a system malfunction.

❒ While driving in the "4WD LOCK" mode, as the vehicle speed increases, the driving mode changes to the "4WD AUTO" mode automatically. Even when the vehicle speed reduces, on the other hand, the driving mode does not return to the "4WD LOCK" mode automatically. You should press the "4WD LOCK" switch according to the driving conditions.

❒ Any forcible operation while driving off-road in the sand or water or when a wheel has run off the road, the difference of the revolution between front wheels and rear wheels increases (wheels run idle). If this state continues, the oil temperature of the driving system parts rises.
In such case, the "4WD AUTO" indicator light blinks and the driving mode changes to the 2WD mode to protect the driving system parts.
When you operate your vehicle in the 4WD mode continuously, park the vehicle at a safe place and run the engine idle. After some time, the "4WD AUTO" indicator light turns on again and the driving mode returns to the "4WD AUTO" mode.

IMPORTANT

❒ Never use the "4WD LOCK" mode when driving on dry paved roads.
Avoid using the "4WD LOCK" mode when driving on wet paved roads as much as possible. Use of the "4WD LOCK" mode in above conditions will apply excessive force to the driving system and may cause a critical failure. Also, the tires may wear faster and fuel consumption may be affected adversely.

❒ Note that 4WD vehicles are not allaround vehicles. Be sure to observe following instructions when driving your vehicle.
– Do not drive through water like crossing a river.
– Do not drive continuously where front wheels tend to race such as in the sand and mud.
– When any wheel is in the air for such reason as running off the road, do not race it needlessly.

❒ If the "4WD AUTO" and the "4WD LOCK" indicator lights stay on and come on simultaneously when driving, there may be something wrong the 4WD system. Have the system inspected by an authorized Fiat Dealership.

IMPORTANT Unevenly worn tires can cause problems in the operation of the 2WD/4WD switch. Be sure to rotate the tires according to the maintenance schedule. Refer to "Tires" and "Maintenance Schedule" in the "INSPECTION AND MAINTENANCE" section for proper tire rotation procedures.

Downloaded from www.Manualslib.com manuals search engine

BRAKING

The distance needed to bring any vehicle to a halt increases with the speed of the vehicle. The braking distance needed, for example, at 60 km/h (37 mph) will be approximately 4 times greater than the braking distance needed at 30 km/h (19 mph). Start to brake the vehicle when there is plenty of distance between your vehicle and the stopping point, and slow down gradually.

WARNING

If water gets into the brake drums, brake performance may become poor and unpredictable. After driving through water or washing the underside of the vehicle, test the brakes while driving at a slow speed to see if they have maintained their normal effectiveness. If the brakes are less effective than normal, dry them by repeatedly applying the brakes while driving slowly until the brakes have regained their normal effectiveness.

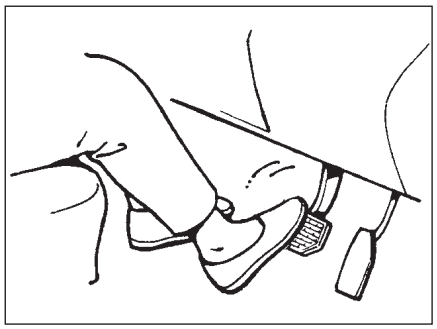

60G165A

POWER ASSISTED BRAKES

Your vehicle has power assisted brakes. If power assistance is lost due to a stalled engine or other failures, the system is still fully operational on reserve power and you can bring the vehicle to a complete stop by pressing the brake pedal once and holding it down. The reserve power is partly used up when you depress the brake pedal and reduces each time the pedal is pressed. Apply smooth and even pressure to the pedal. Do not pump the pedal.

WARNING

Even without reserve power in the brake system, you can still stop the vehicle by pressing the brake pedal harder than normally required. However, the stopping distance may be longer.

ANTI-LOCK BRAKE SYSTEM (ABS) (if equipped)

ABS will help you avoid skidding by electronically controlling braking pressure. It will also help you maintain steering control when braking on slippery surfaces or when braking hard.

The ABS works automatically, so you do not need any special braking technique.

Just push the brake pedal down without pumping. The ABS will operate whenever it senses that the wheels are locking up. You may feel the brake pedal moves a little while the ABS is operating.

NOTE The ABS will not work if vehicle speed is under about 6 km/h (4 mph).

Downloaded from www.Manualslib.com manuals search engine

WARNING

On some types of loose surfaces (such as gravel, snow-covered roads, etc.) the stopping distance required for an ABS-equipped vehicle may be slightly greater than for a comparable vehicle with a conventional brake system. With a conventional brake system, skidding tires are able to "plow" the gravel or snow layer, shortening the stopping distance, ABS minimizes this resistance effect. Allow for extra stopping distance when driving on loose surfaces.

On regular paved roads, some drivers may be able to obtain slightly shorter stopping distances with conventional brake systems than with ABS.

In both of the above conditions, ABS will still offer the advantage of helping you maintain directional control. However, remember that ABS will not compensate for bad road or weather conditions or poor driver judgment. Use good judgment and do not drive faster than conditions will safely allow.

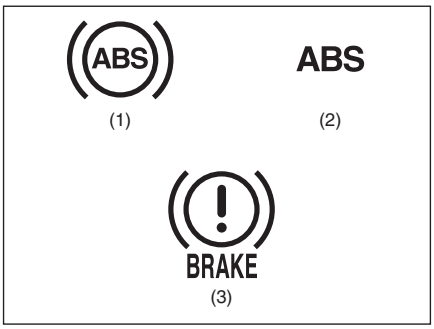

65D451

1. ABS warning light Type 1
2. ABS warning light Type 2
3. Brake system warning light

WARNING

If the ABS warning light ((1) or (2)) on the instrument panel comes on and stays on while driving, there may be a problem with the ABS system. Ask your Fiat Dealership to inspect the ABS system immediately. If the ABS system becomes inoperative, the brake system will function as an ordinary brake system that has no ABS.

WARNING

If the ABS warning light ((1) or (2)) and the Brake system warning light (3) on the instrument panel simultaneously stays on or comes on when driving, both anti-lock function and rear brake force control function (Proportioning valve function) of the ABS system may have failed. If so, the rear wheels may easily skid or the vehicle can even spin in the worst case when braking on a slippery road or when hard braking even on a dry paved road.

Ask your Fiat Dealership to inspect the ABS system immediately. Drive carefully, avoiding hard braking as much as possible.

Downloaded from www.Manualslib.com manuals search engine

HOW THE ABS WORKS

A computer continuously monitors wheel speed. The computer compares the changes in wheel speed when braking. If the wheels slow suddenly, indicating a skidding situation, the computer will change braking pressure several times each second to prevent the wheels from locking. When you start your vehicle after a stop you may hear a momentary motor noise as the system checks itself.

WARNING

The ABS may not work properly if tires or wheels other than those specified in the owner's manual are used. This is because the ABS works by comparing changes in wheel speed. When replacing tires or wheels, use only the size and type specified in this owner's manual.

ELECTRONIC STABILITY PROGRAM (ESP®) (if equipped)

ESP® is a registered trademark of DaimlerChrysler AG.

The Electronic Stability Program (ESP®) helps to control the vehicle during cornering if the vehicle is understeering or oversteering. It also assists you in maintaining traction while accelerating on loose or slippery road surfaces. It does this by regulating the engine's output, and by selectively applying the brakes. In addition, ESP® helps to avoid skidding by controlling braking pressure.

WARNING

The ESP® cannot enhance the vehicle's driving stability in all situations and does not control your vehicle's entire braking system. The ESP® cannot prevent accidents, including those resulting from excessive speed in turns, or hydroplaning. Only a safe and attentive driver can prevent accidents. The capabilities of an ESP® - equipped vehicle must never be used as a substitute for careful driving.

The ESP® has the following three systems:

STABILITY CONTROL SYSTEM

The vehicle stability control system helps provide integrated control of systems such as anti- lock brakes, traction control, engine control, etc. This system automatically controls the brakes and engine to help prevent the vehicle from skidding when cornering on a slippery road surface or when turning the steering wheel abruptly.

TRACTION CONTROL SYSTEM

The traction control system automatically helps prevent the spinning of wheels when the vehicle is started or accelerated on slippery road surfaces. The system operates only if it senses that some of the wheels are spinning or beginning to lose traction. When this happens, the system operates the front or rear brakes and reduces engine power to limit wheel spin.

NOTE You may hear a clicking sound in the engine compartment for a few seconds when you start the engine or just after the vehicle begins to move. This means that the above systems are in the self-check mode. This sound does not indicate a malfunction.

Downloaded from www.Manualslib.com manuals search engine

ANTI-LOCK BRAKING SYSTEM (ABS)

ABS will help you avoid skidding by electronically controlling braking pressure. It will also help you maintain steering control when braking on slippery surfaces or when braking hard. The ABS works automatically, so you do not have to use any special braking technique. Just push the brake pedal down without pumping. The ABS will operate whenever it senses that wheels are locking up. You may feel the brake pedal pulsate while the ABS is operating.
(For more information on ABS, see "Braking" in the "OPERATING YOUR VEHICLE" section.)

NOTE If the ABS system is activated, you may hear a clunking noise and/ or feel pulsating in the brake pedal. This is normal and indicates that the brake fluid pressure is being controlled properly.

WARNING

The ESP may not work properly if tires or wheels other than those specified in the Owner's Manual are used. When replacing tires or wheels, use only the size and type specified in this Owner's Manual.

The ESP® may not work properly if tires are not inflated to the recommended tire inflation pressure.

The ESP® may not work properly if tires are fitted with tire chains.

The ESP® may not work properly if the tires are excessively worn. Be sure to replace tires when the tread wear indicators in the grooves appear on the tread surface.

The ESP® is not a substitute for winter tires or tire chains on a snow covered road.

WARNING

The ESP® may not work properly if engine related parts such as the muffler are not equivalent to standard equipment or are extremely deteriorated.

Do not modify the vehicle's suspension since the ESP® may not operate correctly.

The ESP® indicator lights are described below:

SLIP INDICATOR LIGHT

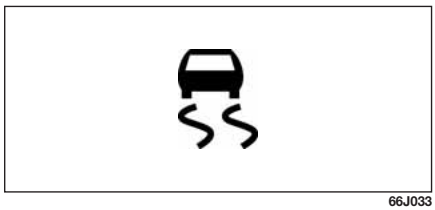

66J033

When one of the ESP® systems other than ABS is activated, the SLIP indicator light in the instrument cluster blinks 5 times per second.

IMPORTANT If the SLIP indicator light comes on and stays on while driving, there may be a malfunction of the ESP® systems (other than ABS). You should have the systems inspected by an authorized Fiat Dealership.

NOTE When the SLIP indicator light comes on and stays on while driving, indicating a malfunction of the ESP® systems (other than ABS), the brake system will function as an ordinary ABS with no additional ESP® functions.

Downloaded from www.Manualslib.com manuals search engine

NOTE

When you disconnect and re- connect the battery, ESP® system functions other than ABS will be deactivated and the slip indicator light will blink 1 time per second. In this case, use the following procedure to reactivate the ESP® systems:

❒ Drive your vehicle straight ahead without tire slippage at a speed greater than approximately 15 km/ h (9 mph) for a few seconds

❒ The slip indicator light will go out and the ESP® systems (other than ABS) will be re- activated

It may take more than few seconds before the slip indicator light goes out depending on the road surface condition.

"ESP" Warning Light

66J031

When the ESP® systems (other than ABS) have a system malfunction, the "ESP" warning light in the instrument cluster comes on.

IMPORTANT If the "ESP" warning light comes on, or stays on while driving, there may be a malfunction of the ESP® systems (other than ABS). You should have the systems inspected by an authorized Fiat Dealership.

NOTE When the "ESP" warning light comes on, or stays on while driving, indicating a malfunction of the ESP® systems (other than ABS), the brake system will function as an ordinary ABS that has no additional ESP® functions.

"ESP OFF" Indicator Light

66J032

You should turn the ESP® on during your ordinary driving, so that you have the benefits of all of the ESP® systems.

It may be required to turn the ESP® systems (other than ABS) off if your vehicle is stuck in sand, mud, or snow, where wheel spin is necessary.

"ESP OFF" switch

62J142

When the "ESP OFF" switch located at the center of the instrument panel is pushed and held to turn off the ESP® systems (other than ABS), the "ESP OFF" indicator light in the instrument cluster comes on.

When you have turned the ESP® systems (other than ABS) off, make sure to turn them back on before resuming ordinary driving.

When you push and hold the "ESP OFF" switch again, the "ESP OFF" indicator light will go out and all of the ESP® systems will be activated.

ABS Warning Light / Brake System Warning Light

See "Braking" in the "OPERATING YOUR VEHICLE" section.

Downloaded from www.Manualslib.com manuals search engine

RUNNING-IN

IMPORTANT The future performance and reliability of the engine depends on the care and restraint exercised during its early life. It is especially important to observe the following precautions during the initial 960 km (600 miles) of vehicle operation.

❒ After starting, do not race the engine. Warm it up gradually.

❒ Avoid prolonged vehicle operation at a constant speed. Moving parts will break in better if you vary your speed.

❒ Start off from a stop slowly. Avoid full throttle starts.

❒ Avoid hard braking, especially during the first 300 km (200 miles) of driving.

❒ Do not drive slowly with the transaxle in a high gear.

❒ Drive the vehicle at moderate engine speeds.

❒ Do not tow a trailer during the first 960 km (600 miles) of vehicle operation.

CATALYTIC CONVERTER (if equipped - Petrol Engine Model)

The purpose of the catalytic converter is to minimize the amount of harmful pollutants in your vehicle's exhaust. Use of leaded fuel in vehicles equipped with catalytic converters is prohibited, because lead deactivates the pollutant- reducing components of the catalyst system.

The converter is designed to last the life of the vehicle under normal usage and when unleaded fuel is used. No special maintenance is required on the converter. However, it is very important to keep the engine properly tuned. Engine misfiring, which can result from an improperly tuned engine, may cause overheating of the catalyst. This may result in permanent heat damage to the catalyst and other vehicle components.

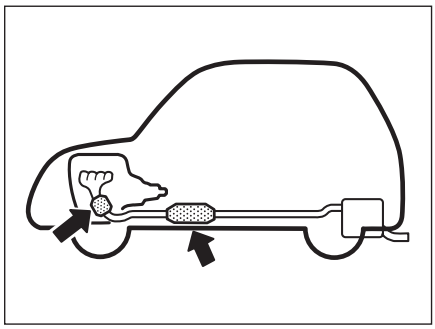

54G236

IMPORTANT To minimize the possibility of catalyst or other vehicle damage:

❒ Maintain the engine in the proper operating condition.

❒ In the event of an engine malfunction, particularly one involving engine misfire or other apparent loss of performance, have the vehicle serviced promptly.

❒ Do not turn off the engine or interrupt the ignition when the transaxle is in gear and the vehicle is in motion.

❒ Do not try to start the engine by pushing or towing the vehicle, or coasting down a hill.

Downloaded from www.Manualslib.com manuals search engine

54G071S

❒ Do not idle the engine with any spark plug wires disconnected or removed, such as during diagnostic testing.

❒ Do not idle the vehicle for prolonged periods if idling seems rough or there are other malfunctions.

❒ Do not allow the fuel tank to get near the empty level.

WARNING

Be careful where you park and drive; the catalytic converter and other exhaust components can get very hot. As with any vehicle, do not park or operate this vehicle in areas where combustible materials such as dry grass or leaves can come in contact with a hot exhaust system.

IMPROVING FUEL ECONOMY

The following instructions will help you improve fuel economy.

Avoid excessive idling

If you are to wait for more than a minute while you are parked, stop the engine and start it again later. When warming up a cold engine, allow the engine to idle until the temperature gauge pointer comes up to the "C" position (if the idling is not prohibited). In this position, the engine is sufficiently warm for starting off.

Avoid "fast" starts

Fast starts away from lights or stop signs will consume fuel unnecessarily and shorten engine life. Start off slowly.

Avoid unnecessary stops

Avoid unnecessary deceleration and stopping. Try to maintain a slow, steady speed whenever possible. Slowing down and then accelerating again uses more fuel.

Keep a steady cruising speed

Keep as constant a speed as road and traffic conditions will permit.

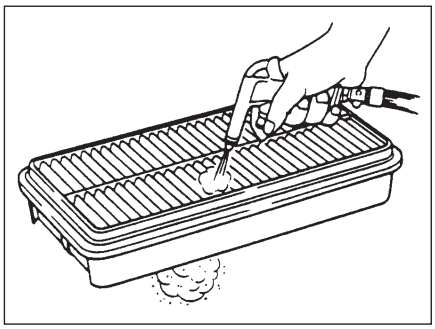

60A183

Keep the air cleaner clean

A dirty air cleaner will cause the carburetion system to supply too much fuel to the engine for the amount of air being supplied. The result is waste of fuel due to incomplete combustion.

Keep weight to a minimum

The heavier the load, the more fuel the vehicle consumes. Take out any luggage or cargo when it is not necessary.

Keep tire pressures correct

Underinflation of the tires can waste fuel due to increased running resistance of the tires. Keep your tires inflated to the correct pressure shown on the label on the driver's side door or the driver's door lock pillar.

Downloaded from www.Manualslib.com manuals search engine

DRIVING TIPS

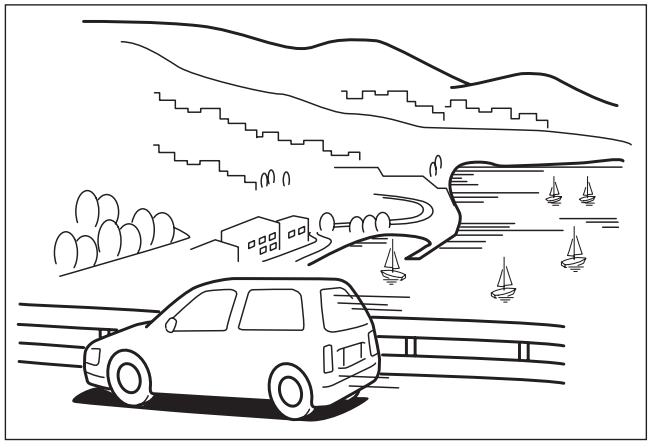

60G409

HIGHWAY DRIVING 168
DRIVING ON HILLS 168
DRIVING ON SLIPPERY ROADS 169

Downloaded from www.Manualslib.com manuals search engine

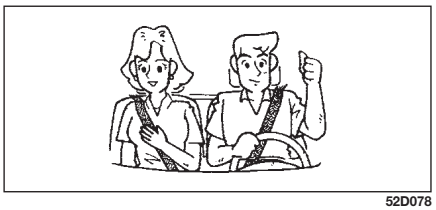

52D078

WARNING

Wear Your Seat Belts at All Times. Even though air bags are equipped at the front seating positions, the driver and all passengers should be properly restrained at all times, using the seat belts provided. Refer to the "Seat Belts and Child Restraint Systems" section for instructions on proper use of the seat belts.

Never drive while under the influence of alcohol or other drugs. Alcohol and drugs can seriously impair your ability to drive safely, greatly increasing the risk of injury to yourself and others. You should also avoid driving when you are tired, sick, irritated, or under stress.

HIGHWAY DRIVING

When driving at high-speed, pay attention to the following:

❒ Stopping distance progressively increases with vehicle speed. Apply the brakes far enough ahead of the stopping point to allow for the extra stopping distance.

❒ On rainy days, "Aquaplaning" can occur. "Aquaplaning" is the loss of direct contact between the road surface and the vehicle's tires due to a water film forming between them. Steering or braking the vehicle while "Aquaplaning" can be very difficult, and loss of control can occur. Keep speed down when the road surface is wet.

❒ At high speeds, the vehicle may be affected by side winds. Therefore, reduce speed and be prepared for unexpected buffeting, which can occur at the exits of tunnels, when passing by a cut of a hill, or when being overtaken by large vehicles, etc.

DRIVING ON HILLS

❒ When climbing steep hills, the vehicle may begin to slow down and show a lack of power. If this happens, you should shift to a lower gear so that the engine will again be operating in its normal power range. Shift rapidly to prevent the vehicle from losing momentum.

❒ When driving down a hill, the engine should be used for braking by shifting into a lower gear. (Do this with EITHER an automatic or manual transaxle.)

WARNING

Try not to hold the brake pedal down too long or too often while going down a steep or long hill. This could cause the brakes to overheat, resulting in reduced braking efficiency. Failure to take this precaution could result in loss of vehicle control.

Downloaded from www.Manualslib.com manuals search engine

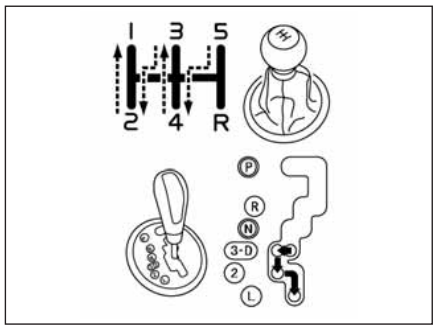

79J029

IMPORTANT When descending a down hill, NEVER turn the ignition key to the "OFF" position. Emission control system damage may result.

DRIVING ON SLIPPERY ROADS

Under wet road conditions you should drive at a lower speed than on dry roads due to possible slippage of tires during braking. When driving on icy, snow-covered, or muddy roads, reduce your speed and avoid sudden acceleration, abrupt braking, or sharp steering movements.

FOR 4-WHEEL DRIVE (4WD) MODELS

Your 4WD is designed to get better traction on slippery roads than 2-wheel drive models. However, your 4WD will not have as much traction in deep snow, mud or sand as multipurpose 4WD vehicles. You should not attempt to drive your 4WD in deep snow, mud or sand.

SNOW CHAINS

Snow chains should only be used if they are needed to increase traction or are required by law. Make sure that the chains you use are the correct size for your vehicle's tires. Also make sure that there is enough clearance between the fenders and the chains as installed on the tires.

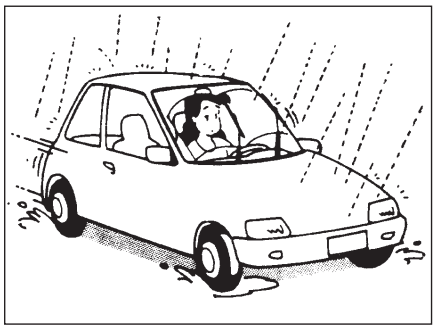

60G089A

Install the chains on the front tires tightly, according to the chain manufacturer's instructions. Retighten the chains after driving about 1. 0 km (1/ 2 mile) if necessary. With the chains installed, drive slowly.

IMPORTANT

❒ If you hear the chains hitting against the vehicle body while driving, stop and tighten them.

❒ If you vehicle is equipped with full wheel caps, remove the wheel caps before installing the chains or the wheel caps can be damaged by the chain bands.

Downloaded from www.Manualslib.com manuals search engine

IF YOUR VEHICLE GETS STUCK

If your vehicle gets stuck in snow, mud, or sand, follow the directions below:

❒ Shift the transaxle back and forth between first gear and reverse. This will create a rocking motion which may give you enough momentum to free the vehicle. Press gently on the accelerator to keep wheel spin to a minimum.
Remove your foot from the accelerator while shifting.
Do not race the engine. Excessive wheel spin will cause the tires to dig deeper, making it more difficult to free the vehicle.

❒ If your vehicle remains stuck after a few minutes of rocking, get another vehicle to pull you out.

WARNING

Do not allow anyone to stand near the vehicle when you are rocking it, and do not spin the wheels faster than an indicated 40 km/h (25 mph) on the speedometer. Personal injury and/ or vehicle damage may result from spinning the wheels too fast.

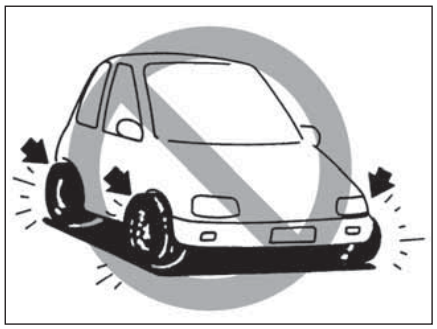

54G074S

IMPORTANT Do not continue rocking the vehicle for more than a few minutes. Prolonged rocking can cause engine overheating or transaxle damage.

WARNING

In addition to following the driving tips in this section, it is important to observe the following precautions.

Make sure your tires are in good condition and always maintain the specified tire pressure. Refer to "Tires" in the "INSPECTION AND MAINTENANCE" section for details.

WARNING

Do not use tires other than those specified by Fiat. Never use different sizes or types of tires on the front and rear wheels. For information regarding the specified tires, refer to the Tire Information Label located on the driver's door lock pillar.

Never use oversized tires or special shock absorbers and springs to raise (jack up) your vehicle. This will change the handling characteristics. Oversized tires may also rub against the fender over bumps, causing vehicle damage or tire failure.

After driving through water, test the brakes while driving at a slow speed to see if they have maintained their normal effectiveness. If the brakes are less effective than normal, dry them by repeatedly applying the brakes while driving slowly until the brakes have regained their normal effectiveness.

Downloaded from www.Manualslib.com manuals search engine

VEHICLE LOADING AND TOWING

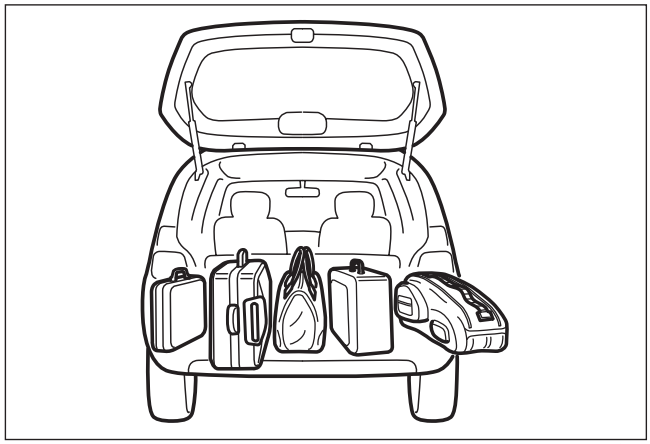

54G215

VEHICLE LOADING 172
TRAILER TOWING 172
TOWING YOUR VEHICLE 177

Downloaded from www.Manualslib.com manuals search engine

VEHICLE LOADING

Your vehicle was designed for specific weight capacities. The weight capacities of your vehicle are indicated by the Gross Vehicle Weight Rating (GVWR) and the Gross Axle Weight Rating (GAWR, front and rear). The GVWR and GAWR (front and rear) are listed in the "SPECIFICATIONS" section.

GVWR – Maximum permissible overall weight of the fully loaded vehicle (including all the occupants, accessories and cargo plus the trailer nose weight if towing a trailer).

GAWR – (Front and Rear) Maximum permissible weight on an individual axle.

Actual weight of the loaded vehicle and actual loads at the front and rear axles can only be determined by weighing the vehicle. Compare these weights to the GVWR and GAWR (front and rear). If the gross vehicle weight or the load on either axle exceeds these ratings, you must remove enough weight to bring the load down to the rated capacity.

WARNING

Never overload your vehicle. The gross vehicle weight (sum of the weights of the vehicle, all the occupants, accessories, cargo plus trailer nose weight if towing a trailer) must never exceed the Gross Vehicle Weight Rating (GVWR). In addition, never distribute a load so that the weight on either the front or rear axle exceeds the Gross Axle Weight Rating (GAWR).

WARNING

Always distribute cargo evenly. To avoid personal injury or damage to your vehicle, always secure cargo to prevent it from shifting if the vehicle moves suddenly. Place heavier objects on the floor and as far forward in the cargo area as possible. Never pile cargo higher than the top of the seat backs.

TRAILER TOWING

Your Fiat was originally designed to carry people and a normal amount of cargo, not to tow a trailer. Fiat does not recommend you use your vehicle to tow a trailer if there is not any local regulation about towing capacity permitted (for example, registered or statutory towing capacity). Towing a trailer can adversely affect handling, durability, and fuel economy.

Some countries have regulations which specifically allow trailer towing up to a specified maximum trailer weight (registered or statutory towing capacity, whichever is smaller); vehicles sold in these countries can be used to tow a light trailer, provided the trailer does not exceed the maximum trailer weight specified in the country's regulations.

If you use your Fiat to tow a trailer, you should always observe the requirements and recommendations in this section. If you intend to tow a trailer, it is essential to select a trailer and trailer towing equipment which are compatible. A reputable towing specialist can help you.

Downloaded from www.Manualslib.com manuals search engine

IMPORTANT Trailer towing puts additional stress on the engine, drive train, and brakes of your vehicle. Never tow a trailer during the first 960 km (600 miles) of vehicle operation.

IMPORTANT For Automatic Transaxle vehicles, do not use "D" range when towing on a steep hill. Towing in "D" range when driving on a steep hill can cause automatic transaxle fluid overheating without warning, which can result in transaxle damage.

TOW BARS

Only use a tow bar that is designed to attach to the chassis of your vehicle, and a hitch that is designed to bolt to this bracket.

WARNING

Never use a tow bar which attaches to the axle or the bumper of your vehicle.

SAFETY CHAINS

Always attach safety chains between your vehicle and trailer. Cross safety chains under the nose of the trailer so that the nose will not drop to the road if the trailer becomes separated from the tow bar. Follow the manufacturer's recommendation for attaching safety chains. Always leave just enough slack to permit full turning. Never allow safety chains to drag on the road.

WARNING

Never attach safety chains to the bumper of your vehicle. Secure connections so that they can't come loose.

TRAILER LIGHTS

Make sure your trailer is equipped with lights which meet local requirements. Always check for the proper operation of all trailer lights before you start to tow.

WARNING

Never connect trailer lights directly into your vehicle's electrical system, or electrical system damage may occur.

BRAKES

WARNING

If trailer brakes are used, you should follow all instructions provided by the manufacturer. Never connect to the brake system of your vehicle and never take an electrical supply directly from the wiring harness.

Downloaded from www.Manualslib.com manuals search engine

TIRES

WARNING

When towing a trailer, it is very important for your vehicle and trailer to have properly inflated tires. Your vehicle's tires should be inflated to the pressures listed on your vehicles Tire Information label. If laden pressures are listed on the label, the tires should be inflated to the laden pressures. Inflate trailer tires according to the specifications provided by the trailer manufacturer.

MIRRORS

Check to see if your vehicle's mirrors meet local requirements for mirrors used on towing vehicles. If they do not, you must install the required mirrors before you tow.

VEHICLE/TRAILER LOADING

To load your vehicle and trailer properly, you must know how to measure gross trailer weight and trailer nose weight.

Gross Trailer Weight is the weight of the trailer plus all the cargo in it. You can measure gross trailer weight by putting the fully loaded trailer on a vehicle scale.

Nose Weight is the downward force exerted on the tow bar by the trailer coupler, with the trailer fully loaded and the coupler at its normal towing height. This weight can be measured using a bathroom scales.

The weight of your loaded trailer (Gross Trailer Weight) should never exceed the "Towing capacity".

Distribute cargo in your trailer so that nose weight is about 10% of gross trailer weight, but does not exceed "Maximum vertical load on trailer hitch point". You should measure gross trailer weight and nose weight before towing to make sure that your load is properly distributed.

WARNING

Improper weight distribution of your trailer may result in poor vehicle handling and swaying of the trailer. Always make sure that trailer nose weight is about 10% of gross trailer weight, but does not exceed "Maximum vertical load on trailer hitch point". Also make sure that the cargo is properly secured. Failure to observe this requirement may result in an accident.

Downloaded from www.Manualslib.com manuals search engine

WARNING

Never overload your trailer or your vehicle. Gross trailer weight must never exceed the "Towing capacity". Gross vehicle weight (sum of the weights of the vehicle, all the occupants, accessories including tow bars and a trailer hitch, cargo and trailer nose weight) must never exceed the Gross Vehicle Weight Rating (GVWR) listed in the "SPECIFICATIONS" section.

ADDITIONAL TRAILER TOWING WARNINGS

WARNING

Connect trailer lights and hook up safety chains every time you tow.

IMPORTANT Because towing a trailer puts additional stress on your vehicle, more frequent maintenance will be required than under normal driving conditions. Follow the schedule for "Maintenance Recommended under Severe Driving Conditions".

WARNING

Your vehicle will handle differently when towing a trailer. For your safety and the safety of others, you should observe the following precautions:

– Practice turning, stopping, and reversing before you begin towing in traffic. Do not tow in traffic until you are confident that you can handle the vehicle and trailer safely.

– Never exceed towing speed limits or 80 km/h (50 mph), whichever is lower.

– Never drive at a speed that causes shaking or swaying of the trailer. If you notice even the slightest sign of shaking or swaying, slow down.

– When roads are wet, slippery or rough, drive at a slower speed than you would on dry, smooth roads.

Failure to slow down when road conditions are bad can result in loss of control.

– Always have someone guide you when reversing.

– Allow adequate stopping distance. Stopping distance is increased when you tow a trailer. For each 16 km/h (10 mph) of speed, allow at least one vehicle and trailer length between you and the vehicle ahead. Follow at a greater distance if roads are wet or slippery.

WARNING

– If the trailer has over-run brakes, apply the brakes gradually to avoid snatching caused by the trailer wheels locking.

– Slow down before corners and maintain a steady speed while cornering. Deceleration or acceleration while cornering can result in loss of control. Remember that a larger than normal turning radius is needed because the trailer wheels will be closer than vehicle wheels to the inside of the turn.

– Avoid sudden acceleration and stopping of the vehicle. Do not make quick maneuvers unless they are necessary.

– Slow down in cross winds and be prepared for gusts of wind from large passing vehicles.

– Be careful when overtaking other vehicles. Be sure to allow enough room for your trailer before you change lanes, and signal well in advance.

– Slow down and shift into a lower gear before you reach long or steep downhill grades. It is hazardous to attempt downshifting while you are descending a hill.

Downloaded from www.Manualslib.com manuals search engine

WARNING

– Avoid "riding" the brakes. This could cause the brakes to overheat resulting in reduced braking efficiency. Use engine braking as much as possible.

– Because of the added trailer weight, your engine may overheat on hot days when going up long or steep hills. Pay attention to your engine temperature gauge. If it indicates overheating, pull off the road and stop in a safe place. Refer to "If the Engine Overheats" in "EMERGENCY SERVICE" section.

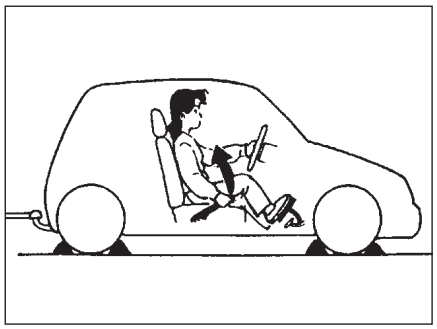

60A186

WARNING

When parking your vehicle and connected trailer, always use the following procedure:

– Apply the vehicle's brakes firmly.

– Have another person place wheel chocks under the wheels of the vehicle and the trailer while you are holding the brakes.

– Slowly release the brakes until the wheel chocks absorb the load.

– Fully engage the parking brake.

– Manual Transaxle – Shift into Reverse or first gear and turn off the engine.

– Automatic Transaxle – Shift into Park and turn off the engine.

WARNING

When starting out after parking:

– Depress the clutch and start the engine.

– Shift into gear, release the parking brake, and slowly pull away from the chocks.

– Stop, apply the brakes firmly and hold them.

– Have another person remove the chocks.

Downloaded from www.Manualslib.com manuals search engine

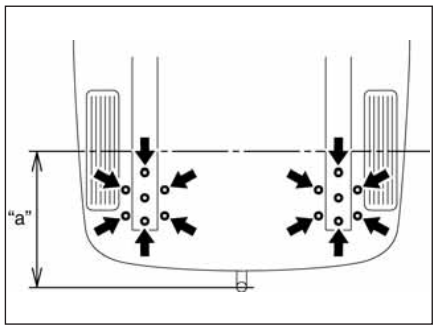

79J158

Maximum vertical load on trailer hitch point

50 kg (110 lbs)

Maximum permissible overhang "a"

810 mm (31.9 in.)

TOWING YOUR VEHICLE

Your vehicle may be towed behind another vehicle (such as a motorhome), provided your vehicle is 2 wheel drive (2WD) and you use the proper towing method specified for your vehicle. The towing method you must use depends on the specifications of your vehicle: whether it is a manual transaxle vehicle or an automatic transaxle vehicle.

Use the towing instruction table to select the proper towing method for your vehicle, and carefully follow the corresponding instructions. Be sure to use proper towing equipment designed for recreational towing and make sure that towing speed does not exceed 90 km/ h (55 mph).

WARNING

When you tow your vehicle, follow the instructions below to avoid accidents and damage to your vehicle. In addition, be sure to observe government and local requirements regarding vehicle lighting and trailer hitches or tow bars.

TOWING INSTRUCTION TABLE

DRIVE TRAIN	TRANSAXLE	TOWING METHOD
2WD	A/T	A
	M/T	A B
4WD	M/T	B

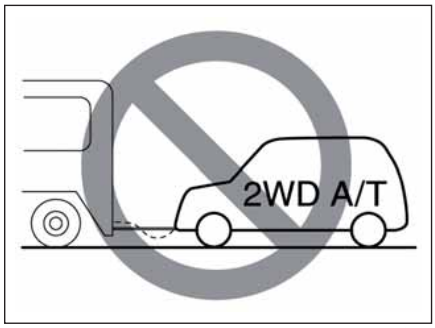

54G641

IMPORTANT Towing an automatic transaxle vehicle with four wheels on the ground can result in damage to the automatic transaxle.

WARNING

A safety chain should always be used when you tow your vehicle.

Downloaded from www.Manualslib.com manuals search engine

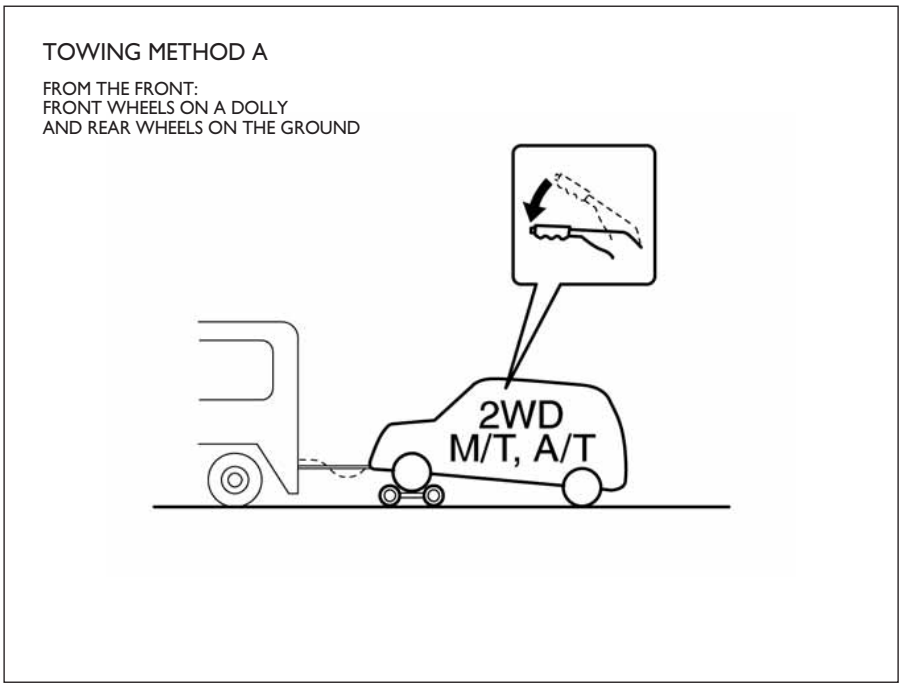

54G212

A: 2WD VEHICLES WITH MANUAL TRANSAXLE OR AUTOMATIC TRANSAXLE

❒ Secure the front wheels on a towing dolly according to the instructions provided by the dolly manufacturer.

❒ Release the parking brake.

Downloaded from www.Manualslib.com manuals search engine

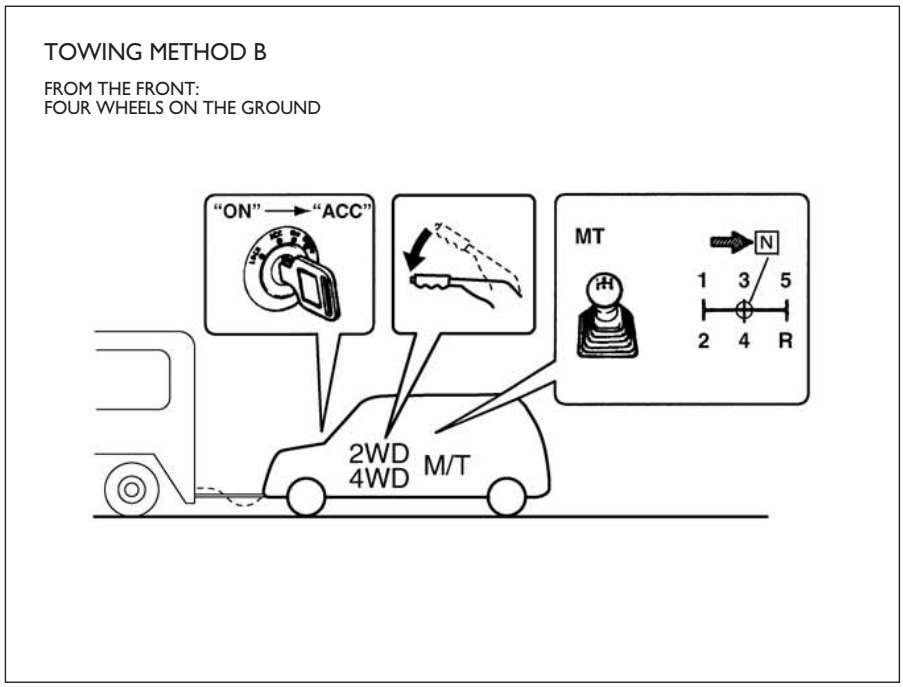

79J130a

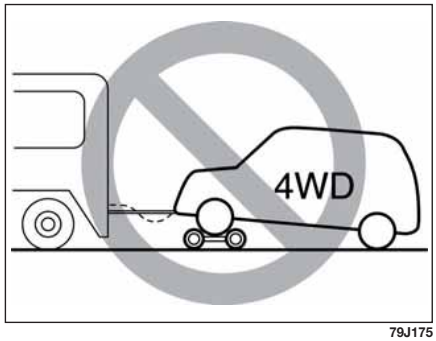

79J175

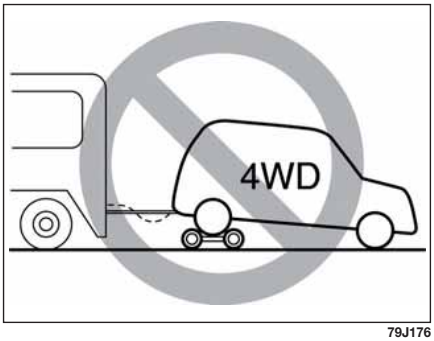

79J176

B: 2WD VEHICLES WITH MANUAL TRANSAXLE

❒ Shift the manual transaxle lever into neutral.

❒ Turn the ignition key to the "ACC" position to unlock the steering wheel.

❒ Release the parking brake.

IMPORTANT The steering column is not strong enough to withstand shocks transmitted from the front wheels during towing. Always unlock the steering wheel before towing.

B: 4WD VEHICLES WITH MANUAL TRANSAXLE

❒ Shift the 2WD/4WD switch to the "2WD" mode.

❒ Shift the manual transaxle lever into neutral.

❒ Turn the ignition key to the "ACC" position to unlock the steering wheel.

❒ Release the parking brake.

IMPORTANT The steering column is not strong enough to withstand shocks transmitted from the front wheels during towing. Always unlock the steering wheel before towing.

IMPORTANT Never use a towing truck to tow 4WD vehicles.

Downloaded from www.Manualslib.com manuals search engine

NOTES

Downloaded from www.Manualslib.com manuals search engine

INSPECTION AND MAINTENANCE

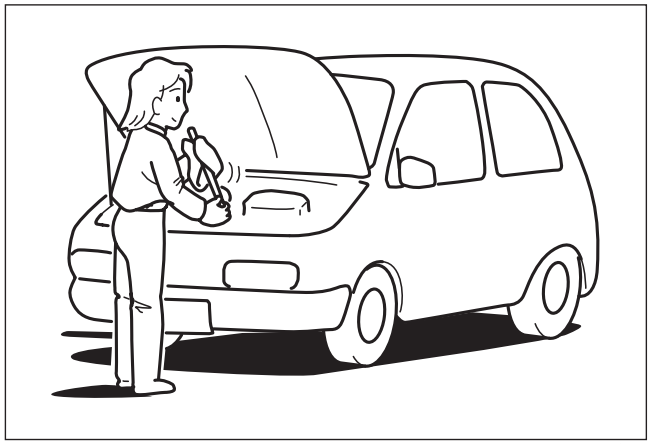

60G410

MAINTENANCE SCHEDULE 183
MAINTENANCE RECOMMENDED UNDER SEVERE DRIVING CONDITIONS 188
DRIVE BELT 189
ENGINE OIL AND FILTER 189
GEAR OIL 193
AUTOMATIC TRANSAXLE (AT) FLUID 194
ENGINE COOLANT 196
WINDSHIELD WASHER FLUID 199
AIR CLEANER 199
SPARK PLUGS (Petrol engine) 200
FUEL FILTER (Diesel engine) 202
BRAKES 203
STEERING 205
CLUTCH PEDAL 206
TIRES 206
BATTERY 211
FUSES 212
BULB REPLACEMENT 218
WINDSCREEN - REAR WINDOW WASHER / WIPERS 223
AIR CONDITIONING SYSTEM 224

Downloaded from www.Manualslib.com manuals search engine

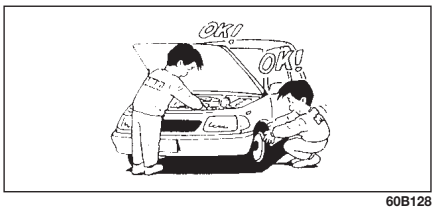

60B128

WARNING

You should take extreme care when working on your vehicle to prevent accidental injury. Here are a few precautions that you should be especially careful to observe:

– To prevent damage or unintended activation of the air bag system or seat belt pretensioner system, be sure the battery is disconnected and the ignition switch has been in the "LOCK" position for at least 90 seconds before performing any electrical service work on your Fiat. Do not touch air bag system components, seat belt pretensioner system components or wires.
The wires are wrapped with yellow tape or yellow tubing, and the couplers are yellow for easy identification.

– Do not leave the engine running in garages or other confined areas.

WARNING

– When the engine is running, keep hands, clothing, tools, and other objects away from the fan and drive belt. Even though the fan may not be moving, it can automatically turn on without warning.

– When it is necessary to do service work with the engine running, make sure that the parking brake is set fully and the transaxle is in Neutral (for manual transaxle vehicles) or Park (for automatic transaxle vehicles).

– Do not touch ignition wires or other ignition system parts when starting the engine or when the engine is running, or you could receive an electric shock.

– Be careful not to touch a hot engine, exhaust manifold and pipes, muffler, radiator and water hoses.

– Do not allow smoking, sparks, or flames around gasoline or the battery. Flammable fumes are present.

– Do not get under your vehicle if it is supported only with the portable jack provided in your vehicle.

WARNING

– Be careful not to cause accidental short circuits between the positive and negative battery terminals.

– Keep used oil, coolant, and other fluids away from children and pets.

Dispose of used fluids properly; never pour them on the ground, into sewers, etc.

Downloaded from www.Manualslib.com manuals search engine

MAINTENANCE SCHEDULE

The following table shows the times when you should perform regular maintenance on your vehicle. This table shows in miles, kilometers and months when you should perform inspections, adjustments, lubrication and other services. These intervals should be shortened if driving is usually done under severe conditions (refer to "Maintenance Recommended under Severe Driving Conditions").

IMPORTANT The Programmed Maintenance coupons are specified by the Manufacturer. The failure to have them carried out may invalidate the warranty.

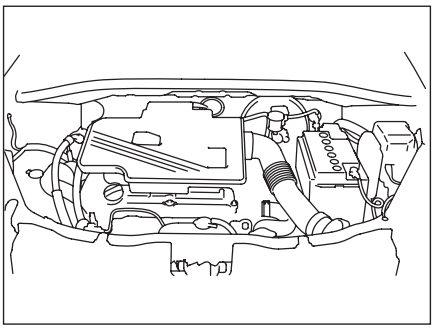

79J004

WARNING

Vehicle maintenance should be entrusted to Fiat Dealership. For routine and minor maintenance operations you wish to carry out yourself, always make sure you have the proper equipment, genuine Fiat spare parts and the necessary fluids; do not however carry out these operations if you have no experience.

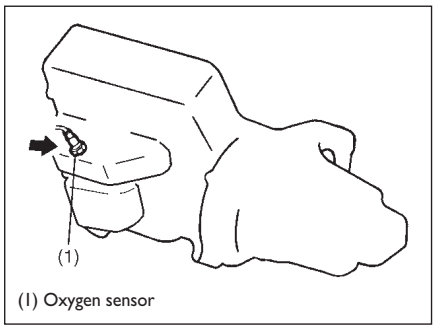

(1) Oxygen sensor

54G088

IMPORTANT Whenever it becomes necessary to replace parts on your vehicle, it is recommended that you use genuine Fiat replacement parts.

WARNING

The shock absorbers are filled with high pressure gas. Never attempt to disassemble it or throw it into a fire. Avoid storing it near a heater or heating device. When scrapping the absorber, the gas must be released from the absorber safely. Ask your Fiat Dealership for assistance.

Downloaded from www.Manualslib.com manuals search engine

SERVICE SCHEDULE PETROL VERSIONS

Service coupons shall be carried out every 15,000 km

Thousands of km	15	30	45	60	75	90	105	120	135	150	165	180
Check tyre conditions/wear and adjust pressure if required	●	●	●	●	●	●	●	●	●	●	●	●
Check electric system operation headlights, direction indicators, hazard lights, passenger compartment/ boot light, instrument panel warning lights, etc.)	●	●	●	●	●	●	●	●	●	●	●	●
Check windscreen wiper operation, adjust nozzles if required	●	●	●	●	●	●	●	●	●	●	●	●
Check windscreen blade position/wear	●	●	●	●	●	●	●	●	●	●	●	●
Check front disk brake pad wear conditions and brake pad wear indicator operation	●	●	●	●	●	●	●	●	●	●	●	●
Check rear disk brake pad or shoes conditions and wear		●		●		●		●		●		●
Sight inspect conditions and integrity of: bodywork and underbody protection, pipes (exhaust, fuel, brakes), rubber parts (boots, sleeves, bushes, etc.), brake and fuel system hoses, axles and axle shafts	●	●	●	●	●	●	●	●	●	●	●	●
Top up fluids (engine coolant, brakes, clutch, battery, windscreen washer, etc.)	●	●	●	●	●	●	●	●	●	●	●	●
Sight inspect accessory drive belt conditions			●						●			
Check antievaporation system						●						●
Check and adjust handbrake lever stroke, if required	●	●	●	●	●	●	●	●	●	●	●	●
Check and adjust tappet clearance, if required		●		●		●		●		●		●

Downloaded from www.Manualslib.com manuals search engine

Thousands of km	15	30	45	60	75	90	105	120	135	150	165	180
Check exhaust emissions/smoke		●		●		●		●		●		●
Check cleanness of bonnet and boot locks and lever cleanness and lubrication		●	●	●	●	●	●	●	●	●	●	●
Change spark plugs (change iridium spark plugs every 105,000 km)			●			●			●			●
Change engine oil and oil filter	●	●	●	●	●	●	●	●	●	●	●	●
Check air cleaner conditions	●	●		●	●		●	●		●	●	
Replace air cleaner cartridge			●			●			●			●
Change engine coolant			●			●			●			●
Change accessory drive belt conditions						●						●
Sight inspect fuel tank conditions			●			●			●			●
Check manual transaxle gear oil level	●						●					
Change manual transaxle gear oil			●			●			●			●
Change automatic transaxle gear oil (■)											●	
Check transmission unit oil level (4x4 version)	●		●		●		●		●		●	
Check rear differential oil level (4x4 version)			●		●				●		●	
Change rear differential oil (4x4 version) (just the first time at 15,000 km)	●											
Check suspension operation		●		●		●		●		●		●
Check steering system (electric drive)		●		●		●		●		●		●
Check engine control system operation (through diagnostic socket)		●		●		●		●		●		●
Change brake and clutch fluid (or every 2 years)		●		●		●		●		●		●
Change pollen filter (or every 2 years)	●	●	●	●	●	●	●	●	●	●	●	●

(■) 99000 miles

Downloaded from www.Manualslib.com manuals search engine

SERVICE SCHEDULE DIESEL VERSIONS

Service coupons shall be carried out every 15,000 km

Thousands of km	15	30	45	60	75	90	105	120	135	150	165	180
Check tyre conditions/wear and adjust pressure if required	●	●	●	●	●	●	●	●	●	●	●	●
Check electric system operation headlights, direction indicators, hazard lights, passenger compartment/ boot light, instrument panel warning lights, etc.)	●	●	●	●	●	●	●	●	●	●	●	●
Check windscreen wiper operation, adjust nozzles if required	●	●	●	●	●	●	●	●	●	●	●	●
Check windscreen blade position/wear	●	●	●	●	●	●	●	●	●	●	●	●
Check front disk brake pad wear conditions and brake pad wear indicator operation	●	●	●	●	●	●	●	●	●	●	●	●
Check rear disk brake pad or shoes conditions and wear		●		●		●		●		●		●
Sight inspect conditions and integrity of: bodywork and underbody protection, pipes (exhaust, fuel, brakes), rubber parts (boots, sleeves, bushes, etc.), brake and fuel system hoses, axles and axle shafts	●	●	●	●	●	●	●	●	●	●	●	●
Top up fluids (engine coolant, brakes, clutch, battery, windscreen washer, etc.)	●	●	●	●	●	●	●	●	●	●	●	●
Sight inspect accessory drive belt conditions				●								●
Check and adjust handbrake lever stroke, if required	●		●		●		●		●		●	
Check and adjust tappet clearance, if required				●				●				●
Check exhaust emissions/smoke		●		●		●		●		●		●
Check cleanness of bonnet and boot locks and lever cleanness and lubrication	●	●	●	●	●	●	●	●	●	●	●	●

Downloaded from www.Manualslib.com manuals search engine

Thousands of km	15	30	45	60	75	90	105	120	135	150	165	180
Change engine oil and oil filter (Diesel versions - DPF)**		(●)		(●)		(●)		(●)		(●)		(●)
Check air cleaner conditions	●	●		●	●		●	●		●	●	
Replace air cleaner cartridge			●			●			●			●
Change engine coolant			●			●			●			●
Change accessory drive belt conditions								●				
Change timing belt *										●		
Change fuel filter				●				●				●
Sight inspect fuel tank conditions			●			●			●			●
Check manual transaxle gear oil level	●											
Change manual transaxle gear oil			●			●			●			●
Check transmission unit oil level (4x4 version)	●		●		●		●		●		●	
Check rear differential oil level (4x4 version)			●		●		●		●		●	
Change rear differential oil (4x4 version) (just the first time at 15,000 km)	●											
Check suspension operation		●		●		●		●		●		●
Check steering system (electric drive)		●		●		●		●		●		●
Check engine control system operation (through diagnostic socket)		●		●		●		●		●		●
Change brake and clutch fluid (or every 2 years)		●		●		●		●		●		●
Change pollen filter (or every 2 years)	●	●	●	●	●	●	●	●	●	●	●	●

* Or every 4 years in the event of particularly demanding use (cold climates, driving in the city, idling for a long time, driving on dusty roads or covered with sand and/or salt), or in any case every 5 years regardless of the km covered.

** Actual interval to change engine oil and oil filter depends on the conditions of use of the vehicle and it is indicated by the relevant instrument panel warning light (see section "Warning and indicator lights"), or in any case every 2 years.

Downloaded from www.Manualslib.com manuals search engine

MAINTENANCE RECOMMENDED UNDER SEVERE DRIVING CONDITIONS

If the vehicle is usually used under the conditions corresponding to any severe condition code given below, it is recommended that applicable maintenance operation be performed at the particular interval as given in the chart below.

Severe condition code

A Repeated short trips
B Driving on rough and/or muddy roads
C Driving on dusty roads
D Driving in extremely cold weather and/ or salted roads
E Repeated short trips in extremely cold weather
F Leaded fuel use
H Trailer towing (if admitted)
R Replace or Change
I Inspect and correct or replace if necessary
L Lubricate

Severe Condition Code	Maintenance		Maintenance Operation	Maintenance Interval
B C D	Accessory drive belt (V-belt)		**I**	Every 15,000 km (9,000 miles) or 12 months
			R	Every 45,000 km (27,000 miles) or 36 months
AD	Timing belt (Diesel versions)		**R**	Every 48 months
A C D E F H	Engine oil and oil filter (Petrol versions)		**R**	Every 7,500 km (4,500 miles) or 6 months
A C D E H	Engine oil and oil filter (Diesel versions)		**R**	Every 7,500 km (4,500 miles) or 6 months
A B C E F H	Spark plugs	Iridium plugs (recommended)	**R**	Every 30,000 km (18,000 miles) or 24 months
		Nickel plugs (traditional)	**R**	Every 10,000 km (6,000 miles) or 8 months
C	Air cleaner cartridge (Check and replace more frequently, if required)		**R**	Every 30,000 km (18,000 miles) or 24 months
B E H	Automatic transaxle fluid change		**R**	Every 30,000 km (18,000 miles) or 24 months
B C D H	Wheel bearings		**I**	Every 15,000 km (9,000 miles) or 12 months
B D E H	Driving axle /Propeller shaft casing (4WD)		**I**	Every 15,000 km (9,000 miles) or 12 months
B E H	Manual transaxle gear oil Transmission unit oil (4WD) Differential oil (4WD)		**R**	First time only: 15,000 km (9,000 miles) or 12 months Second time and after: Every 30,000 km (18,000 miles) or 24 months reckoning from 0 km (0 mile) or 0 month

Downloaded from www.Manualslib.com manuals search engine

DRIVE BELT

WARNING

When the engine is running, keep hands, hair, clothing, tools, etc. away from the moving fan and drive belts.

For Petrol Engine Model

Make sure the drive belt tension is correct. If the belt is too loose, insufficient battery charging, engine overheating, poor power steering, poor air conditioning, or excessive belt wear can result. When you press the belt with your thumb midway between the pulleys, there should be a deflection according to the following chart.

The belts should also be examined to ensure that they are not damaged.

If you need to replace or adjust the belt have it done by your Fiat Dealership.

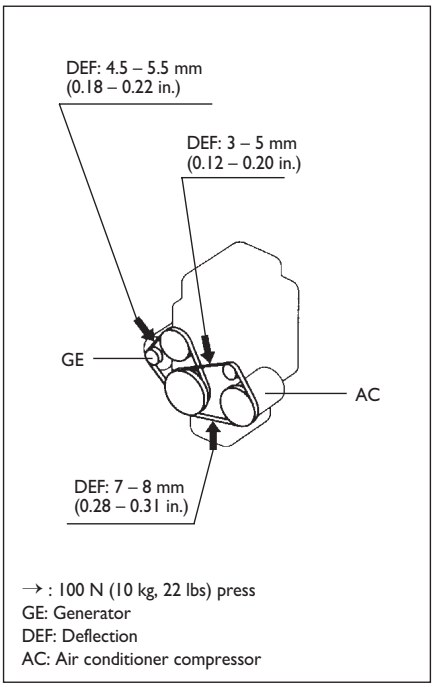

63J132

For Diesel Engine Model

The drive belts tension is adjusted automatically.

ENGINE OIL AND FILTER

OIL SPECIFICATIONS - PETROL ENGINES

Check whether the adopted engine oil is falling within the following quality classes: API SL, SM or ACEA A3, recommended product: SELENIA K SAE 5W-40, Fiat 9.55535-M2 qualification.

OIL SPECIFICATIONS - DIESEL ENGINES

Check whether the adopted engine oil is falling within the following quality classes: API CF or ACEA B4, recommended product: SELENIA WR SAE 5W-40, Fiat 9.55535-N2 qualification.

Downloaded from www.Manualslib.com manuals search engine

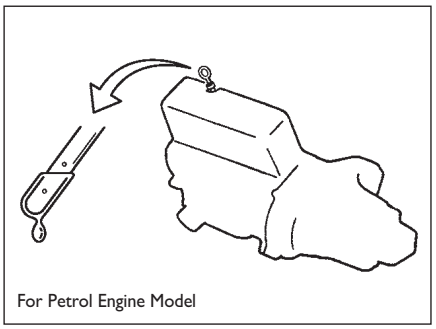

For Petrol Engine Model

80G064

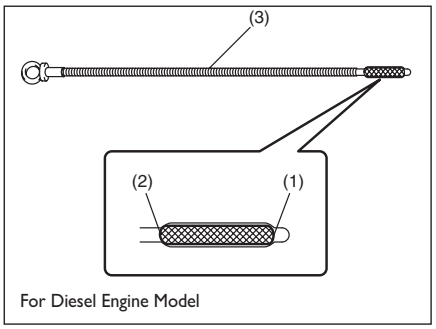

For Diesel Engine Model

79J170

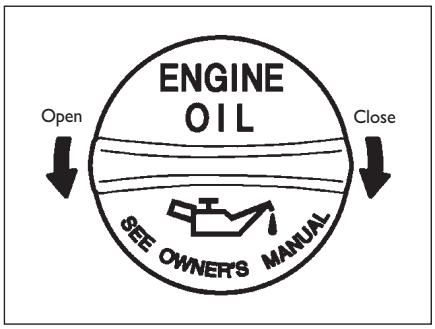

81A147

OIL LEVEL CHECK

It is important to keep the engine oil at the correct level for proper lubrication of your vehicle's engine. Check the oil level with the vehicle on a level surface. The oil level indication may be inaccurate if the vehicle is on a slope. The oil level should be checked either before starting the engine or at least 5 minutes after stopping the engine.

The handle of the engine oil dipstick is colored yellow for easy identification. Pull out the oil dipstick, wipe oil off with a clean cloth, insert the dipstick all the way into the engine, then remove it again. The oil on the stick should be between the upper and lower limits shown on the stick. If the oil level indication is near the lower limit, add enough oil to raise the level to the upper limit.

1. MIN

2. MAX

3. Oil dipstick

IMPORTANT Failure to check the oil level regularly could lead to serious engine trouble due to insufficient oil.

REFILLING

Remove the oil filler cap and pour oil slowly through the filler hole to bring the oil level to the upper limit on the dipstick. Be careful not to overfill. Too much oil is almost as bad as too little oil. After refilling, start the engine and allow it to idle for about a minute. Stop the engine, wait about 5 minutes and check the oil level again.

Downloaded from www.Manualslib.com manuals search engine

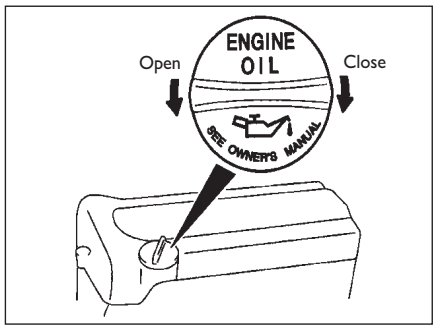

54G091

CHANGING ENGINE OIL AND FILTER

Drain the engine oil while the engine is still warm.

❒ Remove the oil filler cap.

❒ Place a drain pan under the drain plug.

❒ Using a wrench, remove the drain plug and drain out the engine oil.

WARNING

The engine oil temperature may be high enough to burn your fingers when the drain plug is loosened. Wait until the drain plug is cool enough to touch with your bare hands.

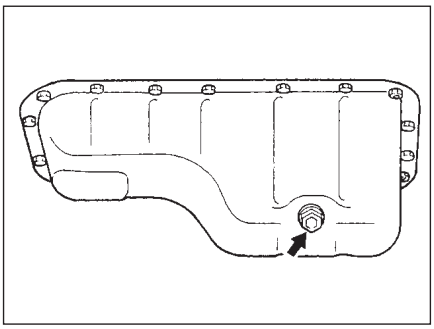

60G306A

Tightening torque for drain plug
For Petrol Engine Model:
50 Nm (5,0 kgm, 36.2 lb-ft)
For Diesel Engine Model:
20 Nm (2,0 kgm, 14.4 lb-ft)

WARNING

New and used oil can be hazardous.

Children and pets may be harmed by swallowing new or used oil. Keep new and used oil and used oil filters away from children and pets.

Repeated, prolonged contact with used engine oil may cause skin cancer.

Brief contact with used oil may irritate skin.

WARNING

To minimize your exposure to used oil, wear a long-sleeve shirt and moisture- proof gloves (such as dishwashing gloves) when changing oil. If oil contacts your skin, wash thoroughly with soap and water.

Launder any clothing or rags if wet with oil.

Recycle or properly dispose of used oil and filters.

❒ Reinstall the drain plug and gasket. Tighten the plug with a wrench to the specified torque.

NOTE
(For Diesel Engine Model)
Whenever the engine oil is changed, the monitoring system to find the next oil change stage must be reset whether the oil pressure light blinks or not. For details on how to reset the system, ask your Fiat Dealership.

Downloaded from www.Manualslib.com manuals search engine

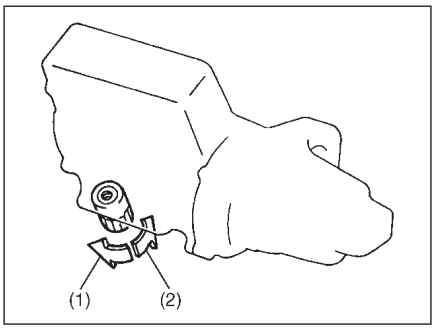

54G092

For Petrol Engine Model:

1. Loosen

2. Tighten

REPLACE THE OIL FILTER

❒ Using an oil filter wrench, turn the oil filter counterclockwise and remove it.

❒ Using a clean rag, wipe off the mounting surface on the engine where the new filter will be seated.

❒ Smear a little engine oil around the rubber gasket of the new oil filter.

❒ Screw on the new filter by hand until the filter gasket contacts the mounting surface.

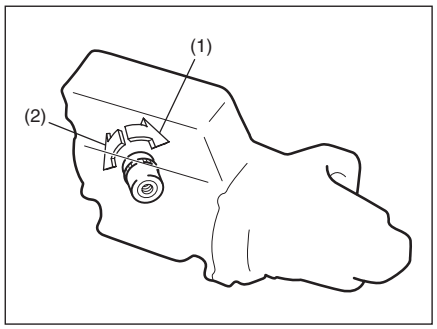

79J142

For Diesel Engine Model

1. Loosen

2. Tighten

IMPORTANT To tighten the oil filter properly, it is Important to accurately identify the position at which the filter gasket first contacts the mounting surface.

❒ Tighten the filter specified turn from the point of contact with the mounting surface (or to the specified torque) using an oil filter wrench.

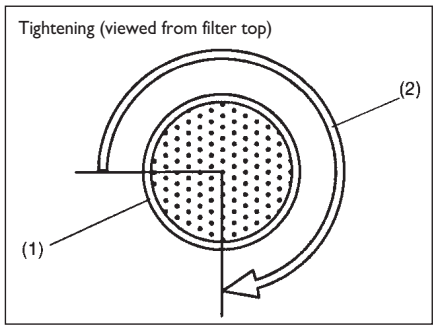

54G093

1. Oil filter

2. 3/4 turn

Tightening torque for oil filter
For Petrol Engine Model:
3/4 turn or 14 Nm
(1,4 kgm, 10,1 lb-ft)
For Diesel Engine Model
28 Nm (2,8 kgm, 20.2 lb-ft)

IMPORTANT To prevent oil leakage, make sure that the oil filter is tight, but do not over- tighten it.

Downloaded from www.Manualslib.com manuals search engine

Refill with Oil and Check for Leaks

❒ Pour oil through the filler hole and install the filler cap.
For the approximate capacity of the oil, refer to the "Capacities" item in the "SPECIFICATIONS" section.

❒ Start the engine and look carefully for leaks at the oil filter and drain plug. Run the engine at various speeds for at least 5 minutes.

❒ Stop the engine and wait about 5 minutes. Check the oil level again and add oil if necessary. Check for leaks again.

IMPORTANT

❒ When replacing the oil filter, it is recommended that you use a genuine Fiat replacement filter. If you use an aftermarket filter, make sure it is of equivalent quality and follow the manufacturer's instructions.

❒ Oil leaks from around the oil filter or drain plug indicate incorrect installation or gasket damage. If you find any leaks or are not sure that the filter has been properly tightened, have the vehicle inspected by your Fiat Dealership.

GEAR OIL

MANUAL TRANSAXLE OIL/ TRANSFER OIL (4WD)/ REAR DIFFERENTIAL OIL (4WD)

When adding gear oil, use gear oil with the appropriate viscosity and grade as shown in the chart below.

TUTELA XVI SAE 75W-90, API GL3, FIAT 9.55550-MZ4 Contractual Technical Reference N° F808.G08, for manual transaxle gear oil.

Hypoid gear oil TUTELA W90/M - DA SAE 80W-90 API GL 5 for transfer oil and rear differential oil (4WD).

Manual transaxle oil (API GL-4)

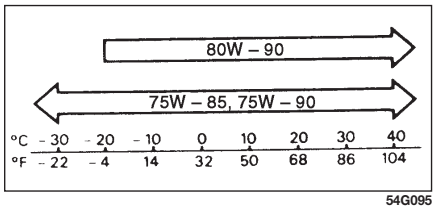

54G095

Transfer oil (4WD)
Rear differential oil (4WD)
(API GL-5 Hypoid)

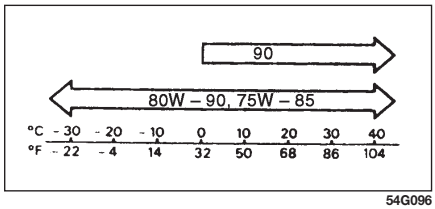

54G096

Downloaded from www.Manualslib.com manuals search engine

Gear Oil Level Check

To check the gear oil level, use the following procedure:

❒ Park the vehicle on a level surface with the parking brake applied. Then, stop the engine.

❒ Remove the oil filler plug (**1**) or (**2**).

❒ Feel the inside of the hole with your finger. If the oil level comes up to the bottom of the plug hole, the oil level is correct. If so, reinstall the plug.

❒ If the oil level is low, add gear oil through the oil filler plug hole (**1**) or (**2**) until the oil level reaches the bottom of the filler hole, then reinstall the plug.

Tightening torque for oil filler and level plug (1) and (2)
21 Nm (2,1 kgm, 15,2 lb-ft)

WARNING

After driving the vehicle, the gear oil temperature may be high enough to burn you. Wait until the oil filler plug is cool enough to touch with your bare hands before inspecting transaxle oil.

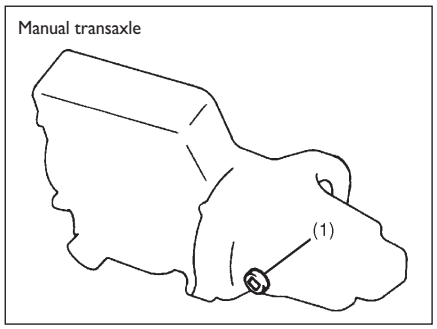

54G097

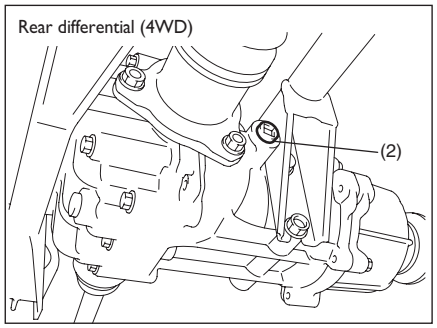

79J005

IMPORTANT When tightening the plug, apply sealing compound Loctite 510 or equivalent to the plug threads to prevent oil leakage.

Gear Oil Change

Since special procedures, materials and tools are required, it is recommended that you trust this job to your authorized Fiat Dealership.

AUTOMATIC TRANSAXLE (AT) FLUID

Specific Fluid

Contact Fiat Dealership to receive indications about the proper fluid to use.

Fluid Level Check

IMPORTANT Driving with too much or too little fluid can damage the transaxle.

You must check the fluid level with the automatic transaxle fluid at normal operating temperature.

To check the fluid level:

❒ To warm up the transaxle fluid, drive the vehicle or idle the engine until the temperature gauge indicates normal operating temperature.

❒ Then drive for ten more minutes.

IMPORTANT To prevent damages to the automatic transaxle of your vehicle, never use a fluid different than that recommended by Fiat Dealership.

Downloaded from www.Manualslib.com manuals search engine

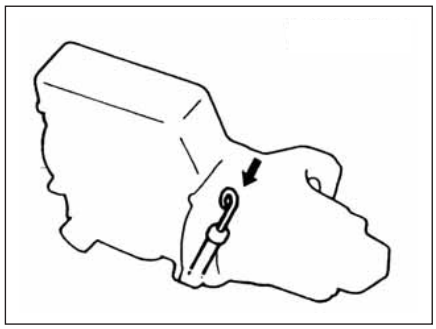

63J125

NOTE:

Do not check the fluid level if you have just driven the vehicle for a long time at high speed, if you have driven in city traffic in hot weather, or if the vehicle has been pulling a trailer. Wait until the fluid cools down (about 30 minutes), or the fluid level indication will not be correct.

❒ Park your vehicle on level ground.

❒ Apply the parking brake and then start the engine in "P" (Park). Let it idle for two minutes and keep it running during the fluid level check.

❒ With your foot on the brake pedal, move the gearshift lever through each range, pausing for about three seconds in each range. Then move it back to the "P" (Park) position.

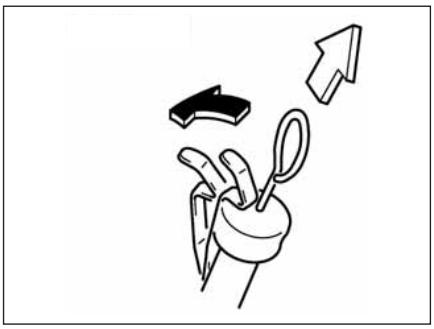

81A090

WARNING

Be sure to depress the brake pedal when moving the gearshift lever, or the vehicle can move suddenly.

❒ The handle of the A/ T fluid dipstick is colored red for easy identification. Remove the dipstick, clean it and pushit back in until the cap seats. Then pull out the dipstick.

❒ Check both sides of the dipstick, and read the lowest level. The fluid level should be between the two marks in the "HOT" range on the dipstick.

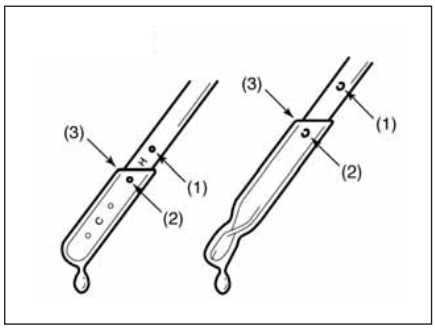

54G317

(1) FULL HOT
(2) LOW HOT
(3) The lowest point = Fluid level

❒ Add just enough specified fluid through the dipstick hole to fill the transaxle to the proper level.

IMPORTANT After checking or adding oil, be sure to insert the dipstick securely.

Changing Oil

Since special procedures, materials, and tools are required to change the automatic transaxle oil, it is recommended that you trust this job to your authorized FIAT dealer.

Downloaded from www.Manualslib.com manuals search engine

ENGINE COOLANT

SELECTION OF COOLANT

To maintain optimum performance and durability of your engine, use **PARAFLU UP**.

This type of coolant is best for your cooling system as it:

❒ Helps maintain proper engine temperature.

❒ Gives proper protection against freezing and boiling.

❒ Gives proper protection against corrosion and rust.

Failure to use the proper coolant can damage your cooling system. Your authorized Fiat Dealership can help you select the proper coolant.

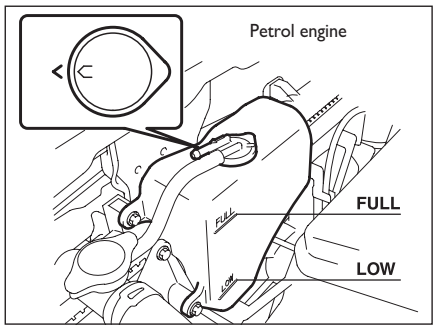

79J006

IMPORTANT To avoid damaging your cooling system:

❒ Always use a high quality ethylene glycol base non- silicate type coolant diluted with distilled water at the correct mixture concentration.

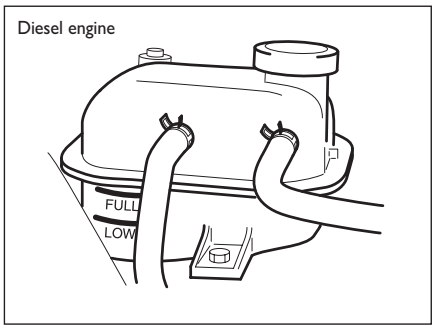

79J145

❒ Make sure that the proper mix is 50/50 coolant to distilled water and in no case higher than 70/30. Concentrations greater than 70/30 coolant to distilled water will cause overheating conditions.

❒ Do not use straight coolant nor plain water.

❒ Do not add extra inhibitors or additives. They may not be compatible with your cooling system.

❒ Do not mix different types of base coolants. Doing so may result in accelerated seal wear and/ or the possibility of severe overheating and extensive engine/ automatic transaxle damage.

COOLANT LEVEL CHECK

Check the coolant level at the reservoir tank, not at the radiator. With the engine cool, the coolant level should be between the “FULL” and “LOW” marks.

Downloaded from www.Manualslib.com manuals search engine

ADDING COOLANT

WARNING

It is hazardous to remove the degassing tank cap for Diesel engine when the water temperature is high, because scalding fluid and steam may be blown out under pressure. Wait until the coolant temperature has lowered before removing the cap.

If the coolant level is below the "LOW" mark, more coolant should be added.

When the engine is cool, remove the degassing tank cap by turning it anticlockwise slowly to release any pressure. And add coolant until the degassing tank level reaches the "FULL" mark. Never fill the degassing tank above the "FULL" mark.

IMPORTANT

- ❒ The mixture you use should contain 50% concentration of antifreeze.
- ❒ If the lowest ambient temperature in your area is expected to be –35°C (–31°F) or below, use higher concentrations up to 60% following the instructions on the antifreeze container.
- ❒ When putting the cap on the reservoir tank, line up the arrow on the cap and the arrow on the tank. Failure to follow this can result in coolant leakage.

WARNING

Engine coolant is harmful or fatal if swallowed or inhaled. Do not drink antifreeze or coolant solution. If swallowed, do not induce vomiting. Immediately contact a poison control center or a physician. Avoid inhaling mist or hot vapors; if inhaled, remove to fresh air. If coolant gets in eyes, flush eyes with water and seek medical attention. Wash thoroughly after handling. Solution can be poisonous to animals. Keep out of the reach of children and animals.

Downloaded from www.Manualslib.com manuals search engine

79J007

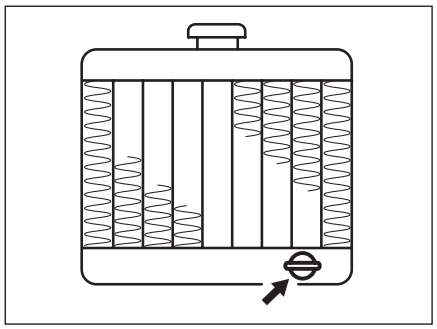

60A212

COOLANT REPLACEMENT

WARNING

It is hazardous to remove the radiator cap when the water temperature is high, because scalding fluid and steam may be blown out under pressure. Wait until the coolant temperature has lowered before removing the cap.

For Petrol Engine Model

❒ When the engine is cool, remove the radiator cap by turning it slowly to the left until a "stop" is felt. Do not press down while turning the cap. Wait until any pressure is released, then press down on the cap and continue turning it anticlockwise.

❒ Remove the reservoir by lifting it up, and drain the reservoir completely.

❒ Loosen the drain plug attached to the lower part of the radiator and drain the coolant into a suitable container.

❒ Reinstall the reservoir and fill it with coolant to the "FULL" line.

❒ Tighten the drain plug on the radiator.

❒ Fill the radiator with coolant and install the radiator cap.

❒ After filling, let the engine idle for about 2–3 minutes to get rid of air in the cooling system.

❒ Stop the engine.

❒ Check the coolant level in the radiator again. If the level has gone down, add more coolant.

IMPORTANT The coolant must be replaced with the vehicle on level ground.

For Diesel Engine Model

Since special procedures are required, we recommend you take your vehicle to your Fiat Dealership for coolant replacement.

Downloaded from www.Manualslib.com manuals search engine

WINDSHIELD WASHER FLUID

Check windscreen washer fluid level in the tank and if required top up with TUTELA PROFESSIONAL SC35 diluted with water, if necessary.

WARNING

Do not use "antifreeze" solution in the windshield washer reservoir. This can severely impair visibility when sprayed on the windshield, and can also damage your vehicle's paint.

WARNING

Do not travel with the windscreen washer reservoir empty: the windscreen washer is fundamental for improving visibility.

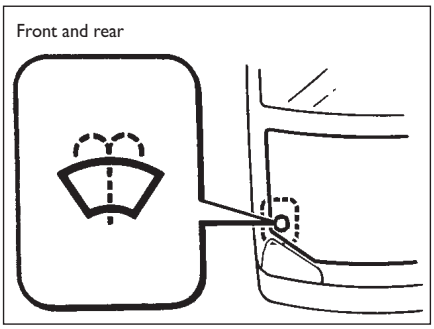

WARNING

Certain commercial additives for windscreen washers are inflammable. The engine compartment contains hot components which may set it on fire.

IMPORTANT Damage may result if the washer motor is operated with no fluid in the washer tank.

AIR CLEANER

If the air cleaner is clogged with dust, there will be greater intake resistance, resulting in decreased power output and increased fuel consumption.

Downloaded from www.Manualslib.com manuals search engine

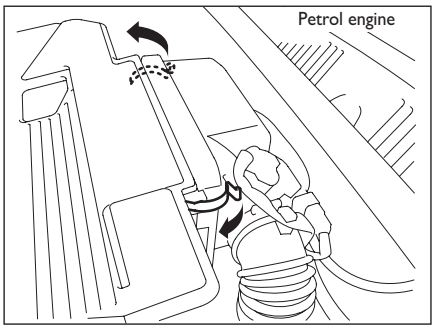

79J008

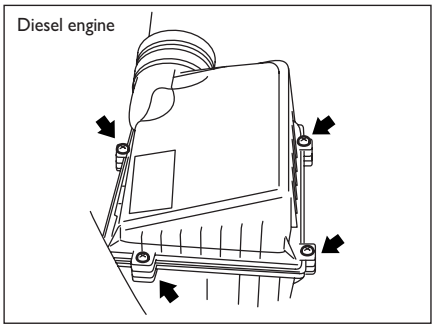

79J146

To remove the air cleaner element:

Unclamp the side clamps or loosen the screws, and remove the element from the air cleaner case. If it appears to be dirty, replace it with a new one.

SPARK PLUGS (Petrol engine)

For Nickel spark plugs (traditional type):

You should inspect spark plugs periodically for carbon deposits. When carbon accumulates on a spark plug, a strong spark may not be produced. Remove carbon deposits with a wire or pin and adjust the spark plug gap.

To access the spark plugs:

❒ Loosen the 3 bolts (**1**) and remove the air cleaner Assy.

❒ If necessary, disconnect the coupler (**2**) while pushing the release lever.

❒ Remove the ignitor bolts.

❒ Pull the spark plug boots out.

NOTE When installation, make sure the wires, couplers, sealing rubber of air cleaner assy and washers, are correctly returned in place.

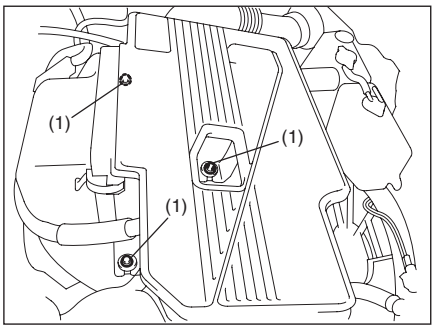

79J009

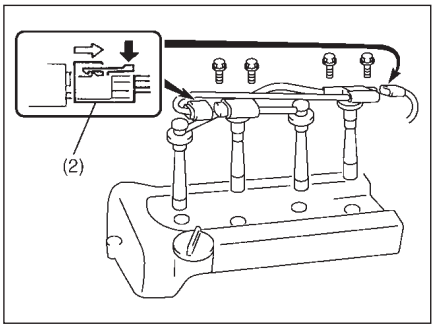

54G105

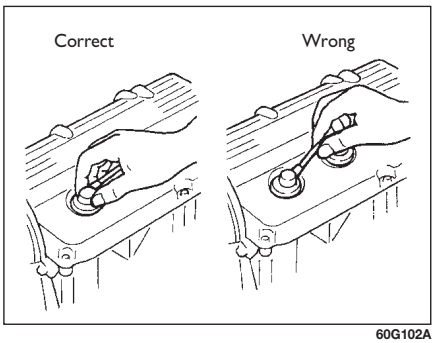

60G102A

Downloaded from www.Manualslib.com manuals search engine

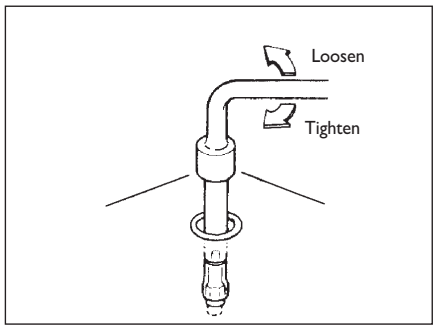

60G160A

IMPORTANT

❒ When disconnecting the spark plug cables, pull on the boot, not on the cable itself. Pulling on the cable can damage it.

❒ When servicing the Iridium/ Platinum spark plugs (slender center electrode type plugs), do not touch the center electrode, as it is easy to damage.

IMPORTANT

❒ When installing the spark plugs, screw them in with your fingers to avoid stripping the threads. Tighten with a torque wrench to 25 Nm (2.5 kgm, 18.0 lb-ft). Do not allow contaminants to enter the engine through the spark plug holes when the plugs are removed.

❒ Never use spark plugs with the wrong thread size.

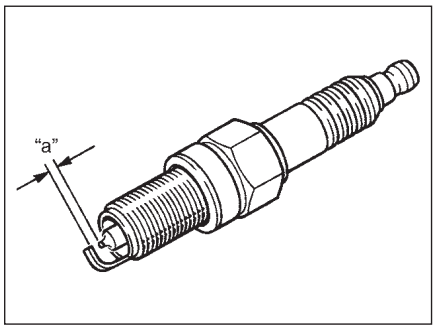

54G106

Spark plug gap "a"
K20PR-U11
BKR6E-11
IFR6J11
1.0 – 1.1 mm (0.039 – 0.043 in.)

IMPORTANT When replacing spark plugs, you should use the brand and type specified for your vehicle. For the specified plugs, refer to the "SPECIFICATIONS" section at the end of this book. If you wish to use a brand of spark plug other than the specified plugs, consult your Fiat Dealership.

Downloaded from www.Manualslib.com manuals search engine

NOTE If your engine is equipped with the hightension cord type ignition wiring and you experience some firing problem of spark plugs, such as, hard engine- starting, misfire etc., the cause may be located not only on spark plugs but also on deteriorated ignition wirings (generally, used for more than 80000 km or five years). If spark plug replacement does not solve the problem, have the ignition wiring and other ignition system inspected by your Fiat Dealership.

FUEL FILTER (Diesel engine)

The fuel filter works as a water sedimentor as well.

Drain water when the fuel filter warning light comes on. To drain water:

❒ Place a pan or ample rag under the fuel filter drain nozzle.

❒ Loosen the drain knob (**1**). The water will be drained.

❒ Tighten the drain knob when the water changes to the diesel fuel.

❒ Tighten the drain knob.

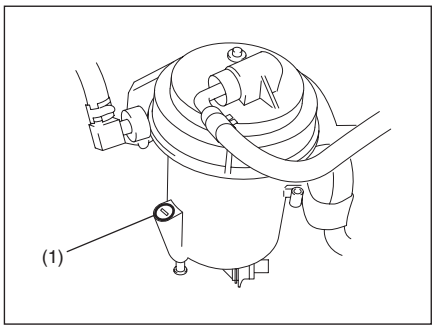

79J147

Downloaded from www.Manualslib.com manuals search engine

BRAKES

BRAKE FLUID

Check the brake fluid level by looking at the reservoir in the engine compartment. Check that the fluid level is between the "MAX" and "MIN" lines. If the brake fluid level is near the "MIN" line, fill it up to the "MAX" line with TUTELA TOP 4 SAE J1704 o DOT4 brake fluid.

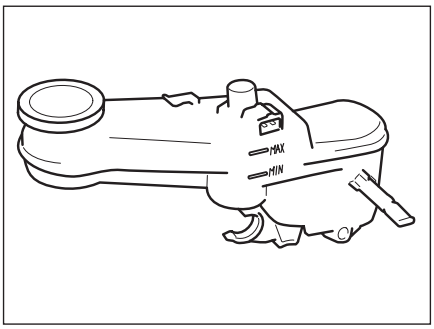

79J010

WARNING

Failure to follow the guidelines below can result in personal injury or serious damage to the brake system.

– If the brake fluid in the reservoir drops below a certain level, the brake warning light on the instrument panel will come on (the engine must be running with the parking brake fully disengaged). Should the light come on, immediately ask your Fiat Dealership to inspect the brake system.

– A rapid fluid loss indicates a leak in the brake system which should be inspected by your Fiat Dealership immediately.

WARNING

– Brake fluid can harm your eyes and damage painted surfaces. Use caution when refilling the reservoir.

– Do not use any fluid other than SAE J1704 or DOT4 brake fluid. Do not use reclaimed fluid or fluid that has been stored in old or open containers. It is essential that foreign particles and other liquids are kept out of the brake fluid reservoir.

WARNING

Brake fluid is harmful or fatal if swallowed, and harmful if it comes in contact with skin or eyes. If swallowed, do not induce vomiting. Immediately contact a poison control center or a physician. If brake fluid gets in eyes, flush eyes with water and seek medical attention. Wash thoroughly after handling. Solution can be poisonous to animals. Keep out of the reach of children and animals.

NOTE With disc brakes, the fluid level can be expected to gradually fall as the brake pads wear.

Downloaded from www.Manualslib.com manuals search engine

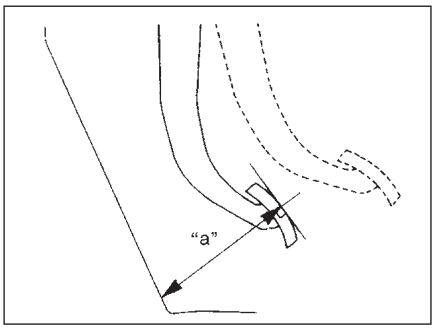

54G108

BRAKE PEDAL

Check if the brake pedal stops at the regular height without "spongy" feeling when you depress it. If not, have the brake system inspected by your Fiat Dealership. If you doubt the brake pedal for the regular height, check it as follows:

Pedal to wall minimum distance "a": 40 mm (1.6 in.)

With the engine running, measure the distance between the brake pedal and floor carpet when the pedal is depressed with approximately 30 kg (66 lbs) of force. The minimum distance required is as specified. Since your vehicle's brake system is self-adjusting, there is no need for pedal adjustment.

If the pedal to floor wall distance as measured above is less than the minimum distance required, have your vehicle inspected by your Fiat Dealership.

NOTE When measuring the distance between the brake pedal and floor wall, be sure not to include the floor mat or rubber on the floor wall in your measurement.

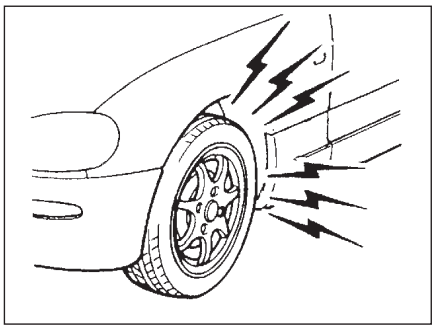

60G104A

WARNING

If you experience any of the following problems with your vehicle's brake system, have the vehicle inspected immediately by your Fiat Dealership.

– Poor braking performance

– Uneven braking (Brakes not working uniformly on all wheels.)

– Excessive pedal travel

– Brake dragging

– Excessive noise

– Pedal pulsation (Pedal pulsates when depressed.)

Downloaded from www.Manualslib.com manuals search engine

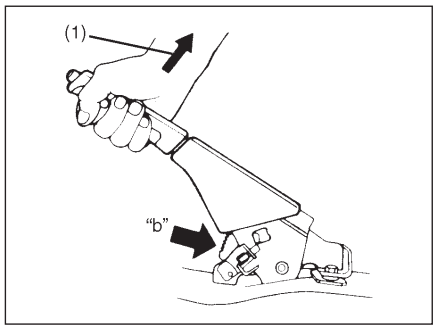

54G109

PARKING BRAKE

Ratchet tooth specification "b":
6th – 8th
Lever pull force (1):
200 N (20 kg, 44 lbs)

Check the parking brake for proper adjustment by counting the number of clicks made by the ratchet teeth as you slowly pull up on the parking brake lever to the point of full engagement. The parking brake lever should stop between the specified ratchet teeth and the rear wheels should be securely locked. If the parking brake is not properly adjusted or the brakes drag after the lever has been fully released, have the parking brake inspected and/ or adjusted by your Fiat Dealership.

STEERING

Steering wheel play "c":
0 – 30 mm (0.0 – 1.2 in.)

Check the play of the steering wheel by gently turning it from left to right and measuring the distance that it moves before you feel slight resistance. The play should be between the specified values.

Check that the steering wheel turns easily and smoothly without rattling by turning it all the way to the right and to the left while driving very slowly in an open area. If the amount of free play is outside the specification or you find anything else to be wrong, an inspection must be performed by your Fiat Dealership.

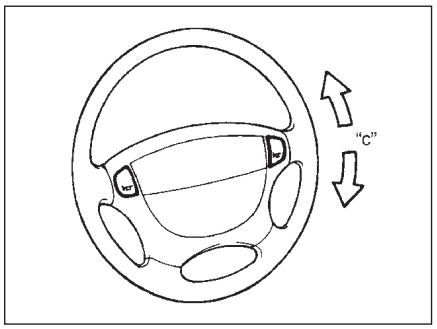

54G110

Downloaded from www.Manualslib.com manuals search engine

CLUTCH PEDAL

FLUID CONTROL CLUTCH

Check the clutch pedal for smooth operation and clutch fluid level from time to time. If clutch dragging is felt with the pedal fully depressed, have the clutch inspected by your Fiat Dealership. If the clutch fluid level is near the "MIN" line, fill it up to the "MAX" line with TUTELA TOP 4 SAE J1704 or DOT4 brake fluid.

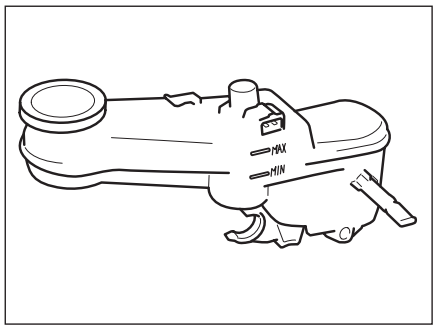

79J010

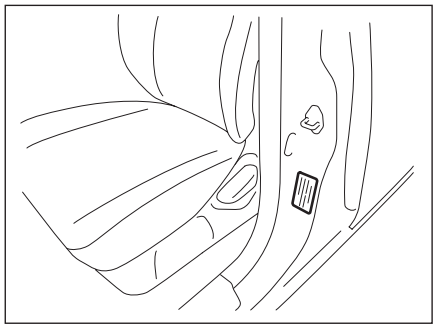

54G307

TIRES

The front and rear tire pressure specifications for your vehicle are listed on the Tire Information Label. Both the front and rear tires should have the specified tire pressure.

Note that the value does not apply to the compact spare tire.

TIRE INSPECTION

Inspect your vehicle's tires at least once a month by performing the following checks

❒ Measure the air pressure with a tire gauge. Adjust the pressure if necessary. Remember to check the spare tire, too.

Downloaded from www.Manualslib.com manuals search engine

WARNING

– Air pressures should be checked when the tires are cold or you may get inaccurate readings.

– Check the inflation pressure from time to time while inflating the tire gradually, until the specified pressure is obtained.

– Never underinflate or overinflate the tires.
Underinflation can cause unusual handling characteristics or can cause the rim to slip on the tire bead, resulting in an accident or damage to the tire or rim.
Overinflation can cause the tire to burst, resulting in personal injury.
Overinflation can also cause unusual handling characteristics which may result in an accident.

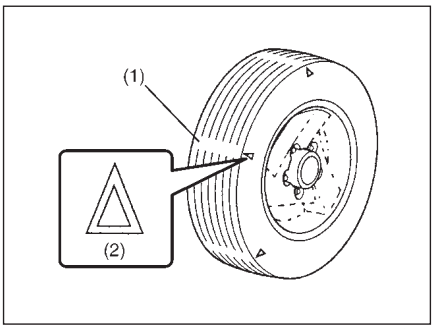

54G136

1. Tread wear indicator

2. Indicator location mark

❒ Check that the depth of the tread groove is more than 1.6 mm (0.06 in.). To help you check this, the tires have molded- in tread wear indicators in the grooves. When the indicators appear on the tread surface, the remaining depth of the tread is 1.6 mm (0.06 in.) or less and the tire should be replaced.

❒ Check for abnormal wear, cracks and damage. Any tires with cracks or other damage should be replaced. If any tires show abnormal wear, have them inspected by your Fiat Dealership.

WARNING

Hitting curbs and running over rocks can damage tires and affect wheel alignment. Be sure to have tires and wheel alignment checked periodically by your Fiat Dealership.

❒ Check for loose wheel bolts.

❒ Check that there are no nails, stones or other objects sticking into the tires.

Downloaded from www.Manualslib.com manuals search engine

WARNING

– Your Fiat is equipped with tires which are all the same type and size. This is important to ensure proper steering and handling of the vehicle. Never mix tires of different size or type on the four wheels of your vehicle. The size and type of tires used should be only those approved by Fiat as standard or optional equipment for your vehicle.

– Replacing the wheels and tires equipped on your vehicle with certain combinations of aftermarket wheels and tires can significantly change the steering and handling characteristics of your vehicle.

– Therefore, use only those wheel and tire combinations approved by Fiat as standard or optional equipment for your vehicle.

IMPORTANT Replacing the original tires with tires of a different size may result in false speedometer or odometer readings. Check with your Fiat Dealership before purchasing replacement tires that differ in size from the original tires.

IMPORTANT For 4-wheel drive (4WD) models, replacing a tire with one of a different size, or using different brands among the four tires can result in damage to the drive train.

4-tire rotation

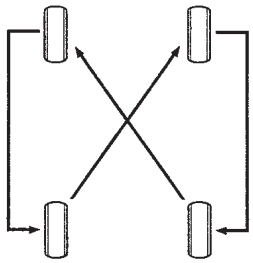

54G114

TIRE ROTATION

To avoid uneven wear of your tires and to prolong their life, rotate the tires as illustrated. Tires should be rotated every 10,000 km (6,000 miles). After rotation, adjust front and rear tire pressures to the specification listed on your vehicle's Tire Information Label.

Downloaded from www.Manualslib.com manuals search engine

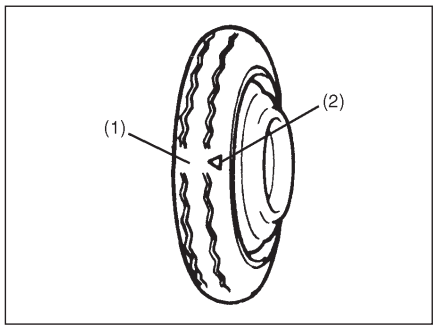

54G115

COMPACT SPARE TIRE (if equipped)

1. Wear indicator

2. Indicator location mark

Your vehicle comes equipped with the compact spare tire. The compact spare is designed to save space in your storage area, and its lighter weight makes it easier to install if a flat tire occurs. It is only intended for temporary emergency use, until the conventional tire can be repaired or replaced. The inflation pressure of the compact spare tire should be checked at least monthly. Use a quality pocket- type inflation pressure gauge and set at 4.2 bar (60 psi). At the same time, check that the tire is stored securely. If it is not, tighten it.

Note that two or more compact spare tires should not be used on one vehicle simultaneously.

WARNING

The compact spare tire and wheel are intended for temporary emergency use only. Continuous use of this spare can result in tire failure and loss of control. Always observe these precautions when using this spare:

– Your vehicle will handle differently with this temporary spare.

– Do not exceed 80 km/h (50 mph) speed.

– Replace this spare with a standard tire and wheel as soon as possible.

– Use of this spare will reduce ground clearance.

o Recommended air pressure for this spare is 4.2 bar (60 psi).

– Do not use tire chains on the compact spare. If you must use tire chains, rearrange the wheels so standard tires and wheels are fitted to the front axle.

WARNING

– The compact spare tire has a much shorter tread life than the conventional tires on your vehicle. Replace the tire as soon as the tread wear indicator appears.

– When replacing the compact spare tire, use a replacement tire with the exact same size and construction.

Downloaded from www.Manualslib.com manuals search engine

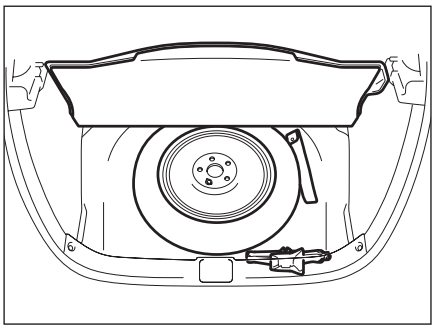

79J196

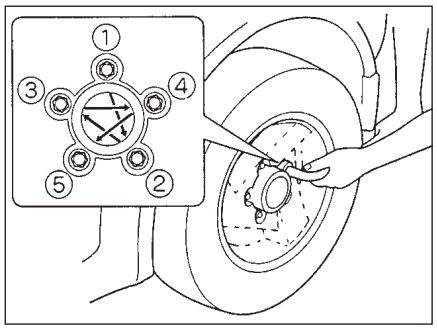

81A057

CHANGING WHEELS

To change a wheel, use the following procedure:

❒ Remove the jack, tools and spare wheel from the vehicle.

❒ Loosen, but do not remove the wheel bolts.

❒ Jack up the vehicle (follow the jacking instructions in the "EMERGENCY SERVICE" section).

WARNING

– Be sure to shift into "R" (Reverse) in manual transaxle when you jack up the vehicle.

– Never jack up the vehicle with the transaxle in "N" (Neutral). Otherwise, unstable jack may cause an accident.

❒ Remove the wheel bolts and wheel.

❒ Before installing the new wheel, clean any mud or dirt off from the surface of the wheel and hub with a clean cloth. Clean the hub carefully; it may be hot from driving.

❒ Install the new wheel and replace the wheel bolts with their cone shaped end facing the wheel. Tighten each bolt snugly by hand until the wheel is securely seated on the hub.

Tightening torque for wheel bolt 85 Nm (8.5 kgm, 61.5 lb-ft)

❒ Lower the jack and fully tighten the bolts to the specified torque in a criss-cross fashion with a wrench as shown in the illustration.

WARNING

Use genuine wheel bolts and tighten them to the specified torque as soon as possible after changing wheels. Incorrect wheel bolts or improperly tightened wheel bolts may come loose or fall off, which can result in an accident. If you do not have a torque wrench, have the wheel bolt torque checked by an authorized Fiat Dealership.

Downloaded from www.Manualslib.com manuals search engine

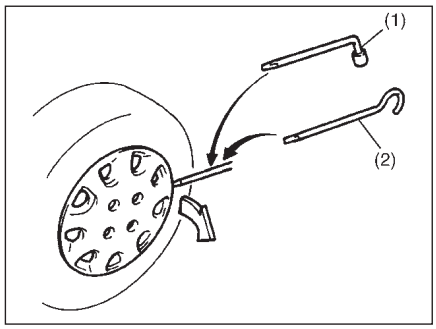

60G309A

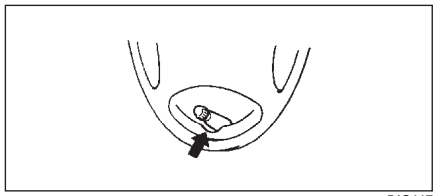

54G117

FULL WHEEL COVER (if equipped)

1. or **2.** Flat end tool

Your vehicle includes two tools, a wheel brace and a jack crank, one of which has a flat end.

Use the tool with the flat end to remove the full wheel cap, as shown above.

When installing the cover, make sure that it is positioned so that it does not cover or foul the air valve.

BATTERY

WARNING

– Batteries produce flammable hydrogen gas. Keep flames and sparks away from the battery or an explosion may occur. Never smoke when working in the vicinity of the battery.

– When checking or servicing the battery, disconnect the negative cable. Be careful not to cause a short circuit by allowing metal objects to contact the battery posts and the vehicle at the same time.

– To avoid harm to yourself or damage to your vehicle or battery, follow the jump starting instructions in the "EMERGENCY SERVICE" section of this manual if it is necessary to jump start your vehicle.

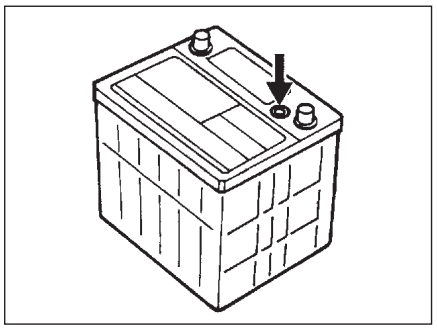

60A269

Your vehicle is equipped with a battery that requires infrequent maintenance. You will never have to add water. You should, however, periodically check the battery, battery terminals and battery hold- down bracket for corrosion. Remove corrosion using a stiff brush and ammonia mixed with water, or baking soda mixed with water. After removing corrosion, rinse with clean water.

The test indicator on the top of the battery provides information on the condition of the battery.

If your vehicle is not going to be driven for a month or longer, disconnect the cable from the negative terminal of the battery to help prevent discharge.

Downloaded from www.Manualslib.com manuals search engine

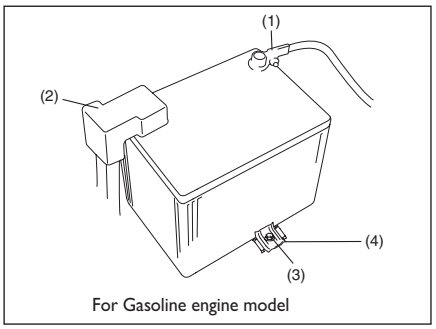

For Gasoline engine model

51KM039

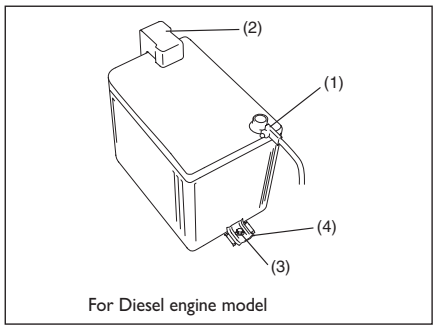

For Diesel engine model

51KM041

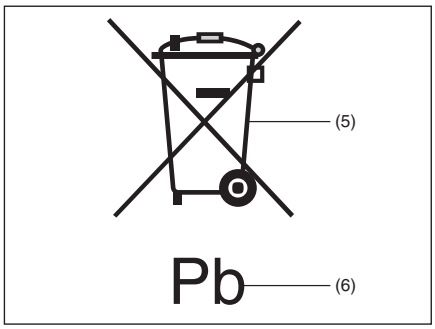

51KM042

REPLACEMENT OF THE BATTERY

To remove the battery

1. Disconnect the negative cable (1).
2. Disconnect the positive cable (2).
3. Remove the retainer bolt (3) and remove the retainer (4).
4. Remove the battery.

To install the battery

1. Install the battery in the reverse order of removal.
2. Tighten the retainer bolt and battery cables securely.

NOTE When the battery is disconnected, some of the vehicle's function will be initialized and/or deactivated.
These function are required to reset after the battery is reconnected.

WARNING

Batteries contain toxic substances including sulfuric acid and lead. They could have potential negative consequences for the environment and human health. Used battery must be disposed or recycled according to the local law and must not be discarded with ordinary household waste. Make sure not to tip over the battery when you remove it from the vehicle. Otherwise, sulfuric acid could run out and you might get injury.

5. Crossed-out wheeled bin symbol
6. Chemical symbol of "Pb"

The crossed-out wheeled bin symbol (5) located on the battery label indicates that used battery should be collected separately from ordinary household waste. The chemical symbol of "Pb" (6) indicates the battery contains more than 0.004% lead.

By ensuring the used battery is disposed or recycled correctly, you will help prevent potential negative consequences for the environment and human health, which could otherwise be caused by inappropriate waste handling of the battery. The recycling of materials will help to conserve natural resources. For more detailed information about disposing or recycling of the used battery, consult your Fiat Dealership.

Downloaded from www.Manualslib.com manuals search engine

FUSES

Your vehicle has three types of fuses, as described below:

Main fuse

The main fuse takes current directly from the battery.

Primary fuses

These fuses are between the main fuse and individual fuses, and are for electrical load groups.

Individual fuses

These fuses are for individual electrical circuits.

FUSES IN THE ENGINE COMPARTMENT

The main fuse, primary fuses and some of the individual fuses are located in the engine compartment. If the main fuse blows, no electrical component will function. If a primary fuse blows, no electrical component in the corresponding load group will function. When replacing the main fuse, a primary fuse or an individual fuse, use a genuine Fiat replacement.

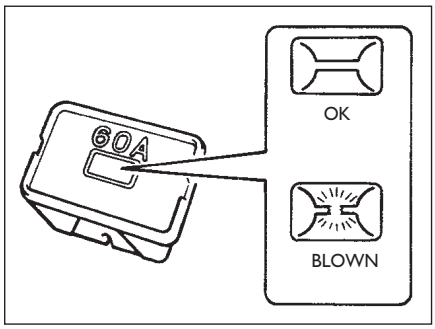

60G111A

WARNING

If the main fuse or a primary fuse blows, be sure to have your vehicle inspected by an authorized Fiat Dealership. Always use a genuine Fiat replacement. Never use a substitute such as a wire even for a temporary repair, or extensive electrical damage and a fire can result.

Downloaded from www.Manualslib.com manuals search engine

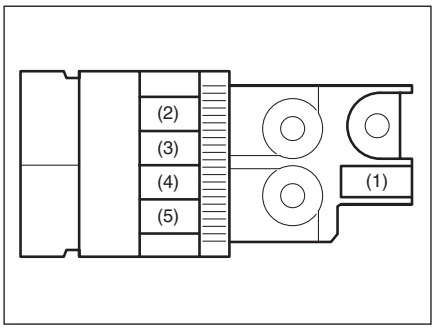

62J085

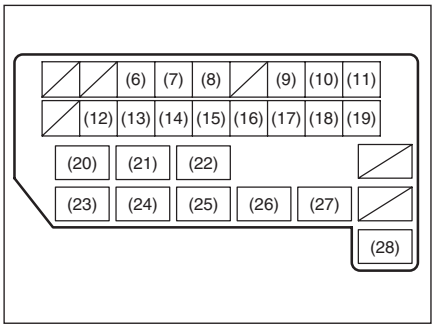

79J092

FUSES IN THE ENGINE COMPARTMENT

Petrol engine

Main fuse / Primary fuse

(1)	80A	All electric load
(2)	50A	Power window, Ignition Wiper, Starter
(3)	50A	Tail light, Rear defogger, Door lock, Hazard/ Horn, Dome
(4)	80A	Heater, Air compressor, Power steering
(5)	80A	Radiator fan, Front fog light, Head light
(6)	15A	Head light (Right) fuse
(7)	15A	Head light (Left) fuse
(8)	15A	Front fog light fuse
(9)	60A	Power steering control module fuse
(10)	40A	ABS control module fuse
(11)	30A	Radiator fan fuse
(12)	30A	ABS control module fuse

Downloaded from www.Manualslib.com manuals search engine

Main fuse / Primary fuse

(13)	30A	Starting motor fuse
(14)	30A	Ignition switch fuse
(15)	30A	Blower fan fuse
(16)	20A	Air compressor fuse
(17)	15A	Throttle motor fuse
(18)	15A	Automatic transaxle fuse (if equipped)
(19)	15A	Fuel injection fuse
(20)	–	Automatic transaxle relay (if equipped)
(21)	–	Air compressor relay
(22)	–	Fuel pump relay
(23)	–	Condenser fan relay
(24)	–	Front fog light relay
(25)	–	Throttle motor relay
(26)	–	FI MAIN
(27)	–	Starting motor relay
(28)	–	Radiator fan relay

Downloaded from www.Manualslib.com manuals search engine

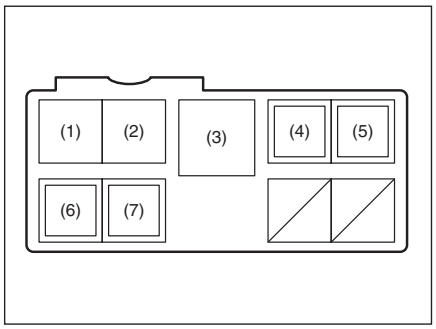

79J172

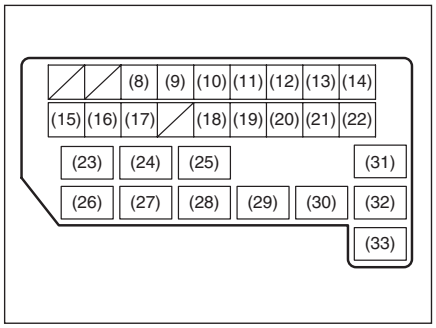

79J149

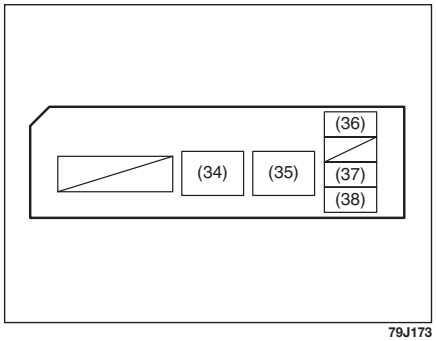

79J173

Diesel engine

Main fuse / Primary fuse

(1)	80A	Glow
(2)	30A	Fuel heater
(3)	140A	All electric load
(4)	50A	Light
(5)	30A	Sub heater
(6)	30A	Sub heater
(7)	30A	Sub heater
(8)	15A	Head light (Right) fuse
(9)	15A	Head light (Left) fuse
(10)	20A	Front fog light fuse
(11)	50A	Ignition
(12)	60A	Power steering control module fuse
(13)	40A	ABS control module fuse
(14)	30A	Radiator fan fuse
(15)	30A	ABS control module fuse
(16)	30A	Starting motor fuse
(17)	50A	Ignition
(18)	30A	Blower fan fuse

Downloaded from www.Manualslib.com manuals search engine

Main fuse / Primary fuse

(19)	10A	Air compressor fuse
(20)	20A	Fuel pump fuse
(21)	30A	Condenser fan fuse
(22)	20A	Fuel injection fuse
(23)	–	Sub heater relay 3
(24)	–	Air compressor relay
(25)	–	Fuel pump relay
(26)	–	Condenser fan relay
(27)	–	Front fog light relay
(28)	–	Sub heater relay 2
(29)	–	Sub heater relay
(30)	–	Starting motor relay
(31)	–	Radiator fan relay
(32)	–	Radiator fan relay
(33)	–	Radiator fan relay
(34)	–	Fuel heater
(35)	–	Fuel injection main
(36)	10A	EPI
(37)	10A	Fuel injection
(38)	15A	INJ DVR

Downloaded from www.Manualslib.com manuals search engine

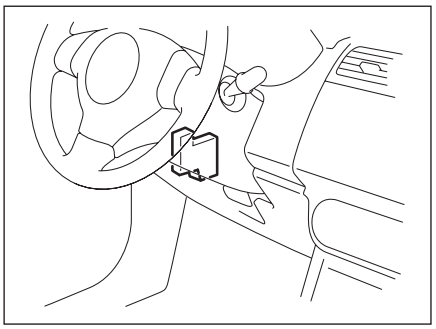

79J093

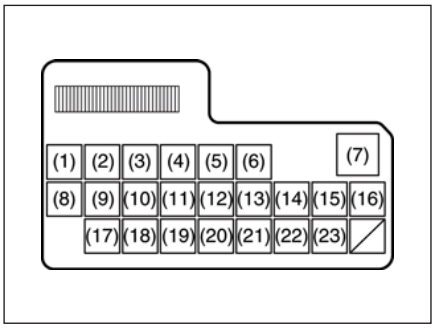

79J011

FUSES UNDER THE DASH BOARD

Main fuse / Primary fuse

(1)	15A	Rear wiper
(2)	15A	Ignition coil
(3)	10A	Back-up light
(4)	10A	Meter
(5)	15A	Accessory
(6)	15A	Accessory 2
(7)	30A	Power window
(8)	30A	Wiper
(9)	10A	IG1 SIG
(10)	15A	Air bag
(11)	10A	Anti-lock brake system
(12)	10A	Tail light
(13)	15A	Stop light
(14)	20A	Door lock
(15)	15A	4WD light
(16)	10A	ST SIG
(17)	15A	Seat heater
(18)	10A	IG 2 SIG
(19)	10A	Rear fog lamp
(20)	15A	Dome
(21)	30A	Rear defogger
(22)	15A	Horn / Hazard
(23)	10A	Fiat CODE (Immobilizer)

Downloaded from www.Manualslib.com manuals search engine

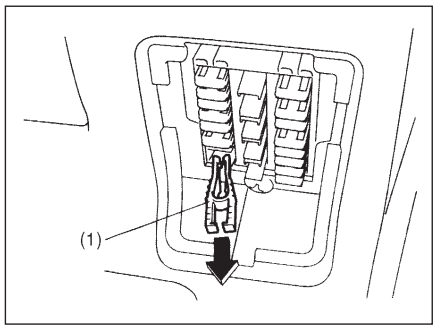

54G256

1. Fuse puller

The fuses are also located under the driver's side of the dashboard. Remove the fuse box lid by pulling it off. To remove a fuse, use the fuse puller provided in the fuse box. The amperage of each fuse is shown on the top of the fuse box cover.

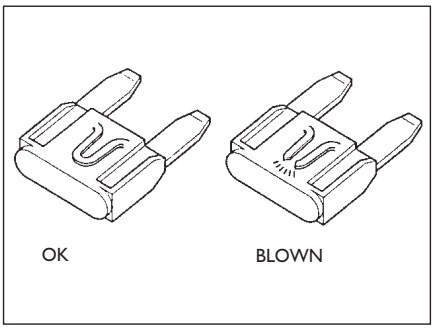

65D046

WARNING

Always be sure to replace a blown fuse with a fuse of the correct amperage. Never use a substitute such as aluminum foil or wire to replace a blown fuse. If you replace a fuse and the new one blows in a short period of time, you may have a major electrical problem. Have your vehicle inspected immediately by your Fiat Dealership.

NOTE Make sure that the fuse box always carries spare fuses.

BULB REPLACEMENT

WARNING

– Light bulbs can be hot enough to burn your finger right after being turned off. This is true especially for halogen headlight bulbs. Replace the bulbs after they become cool enough.

– The headlight bulbs are filled with pressurized halogen gas. They can burst and injure you if they are hit or dropped. Handle them carefully.

IMPORTANT The oils from your skin may cause a halogen bulb to overheat and burst when the lights are on. Grasp a new bulb with a clean cloth.

IMPORTANT Frequent replacement of a bulb indicates the need for an inspection of the electrical system. This should be carried out by your Fiat Dealership.

Downloaded from www.Manualslib.com manuals search engine

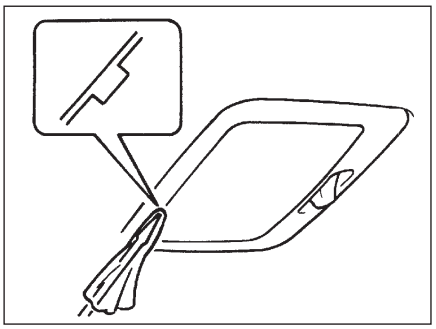

60G115

CENTER INTERIOR LIGHT (if equipped)

Pull down the lens by using a plane screw driver covered with a soft cloth as shown. To install it, simply push it back in.

The bulb can be removed by simply pulling it out. When replacing the bulb, make sure that the contact springs are holding the bulb securely.

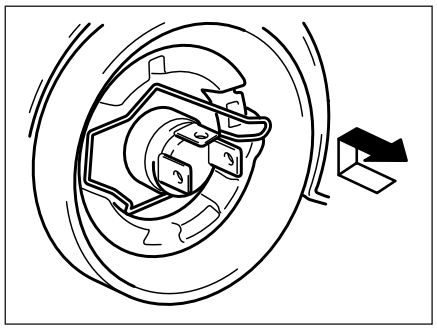

54G121

HEADLIGHT

Open the engine hood. Disconnect the coupler. Remove the sealing rubber.

Push the retaining spring forward and unhook it. Then remove the bulb. Install a new bulb in the reverse order of removal.

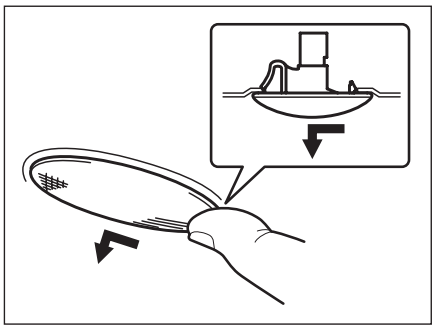

64J195

SIDE TURN SIGNAL LIGHT

As the bulb is built-in type, the light assembly must be replaced. Remove the light assembly by sliding the light housing leftward with your finger.

Downloaded from www.Manualslib.com manuals search engine

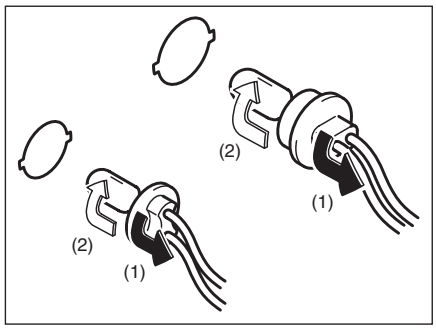

54G123

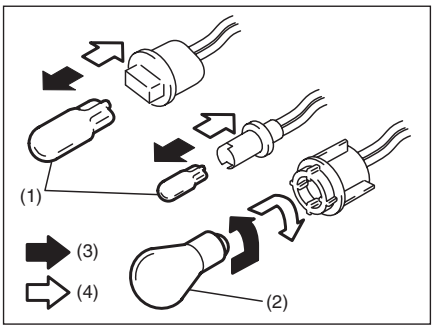

54G124

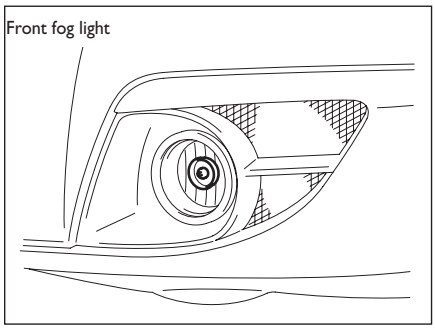

79J013

OTHER GENERAL LIGHTS

Bulb holder

1. Removal

2. Installation

To remove a bulb holder from a light housing, turn the holder counterclockwise and pull it out. To install the holder, push the holder in and turn it clockwise.

Bulb

3. Removal

4. Installation

There are two types of bulb, "Full glass type" (**1**) and "Glass/ metal type" (**2**).

To remove and install a full glass type bulb (**1**), simply pull out or push in the bulb.

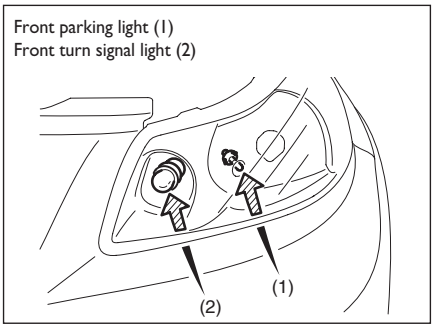

79J012

To remove a glass metal type bulb (**2**) from a bulb holder, push in the bulb and turn it counterclockwise. To install a new bulb, push it in and turn it clockwise.

You can access the individual bulb or bulb holders as follows.

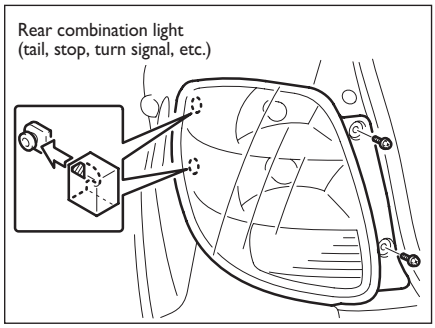

79J014

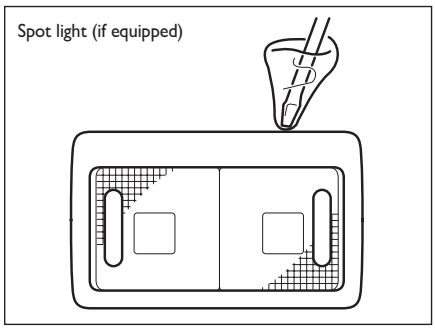

79J131

Downloaded from www.Manualslib.com manuals search engine

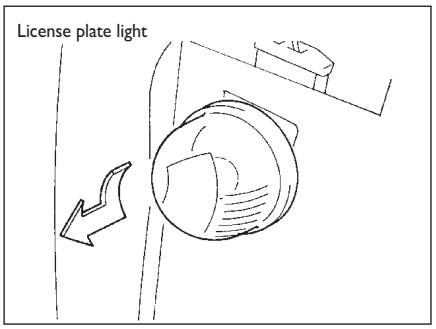

75F087

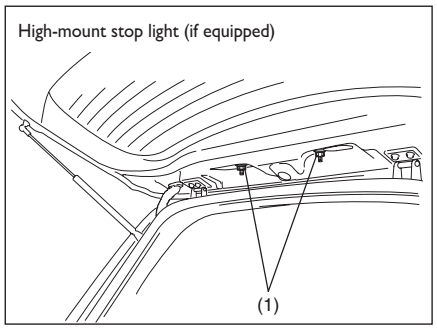

63J106

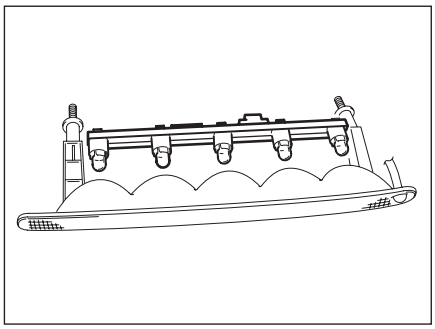

63J108

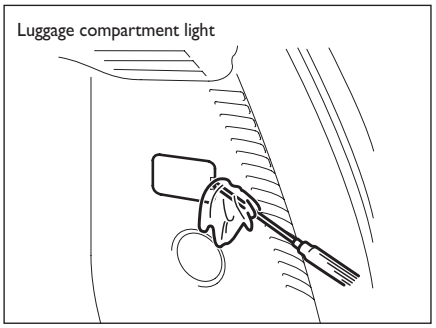

79J015

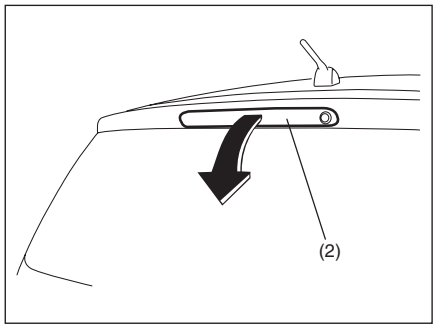

63J127

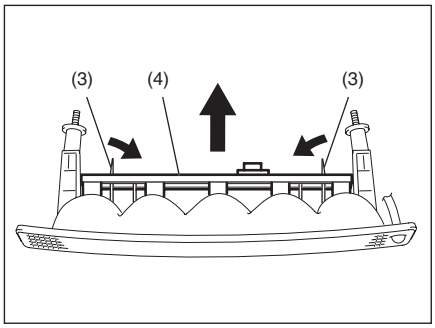

63J107

To remove a high-mounted stop light housing the following procedure:

❒ Open the tailgate, and remove the nuts (**1**) as shown in the illustration.

❒ Close the tailgate. Remove a high-mounted stop light housing (**2**) from the tailgate.

❒ Pushing the unguiform prongs (**3**) toward inside and remove the bulb holder (**4**).

❒ Replace the bulbs.
To install a high-mounted stop light housing in the reverse order of removal.

Downloaded from www.Manualslib.com manuals search engine

WINDSCREEN - REAR WINDOW WASHER / WIPERS

If the wiper blades become brittle or damaged, or make streaks when wiping, replace the wiper blades.

To install new wiper blades, follow the procedures below.

IMPORTANT To avoid scratching or breaking the window, do not let the wiper arm strike the window while replacing the wiper blade.

NOTE Some wiper blades may be different from the ones described here depending on vehicle specifications. If so, consult your Fiat Dealership for proper replacement method.

WARNING

Driving with worn wiper blades is a serious hazard, because visibility is reduced in bad weather.

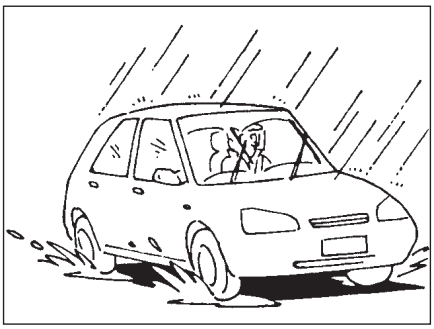

54G129

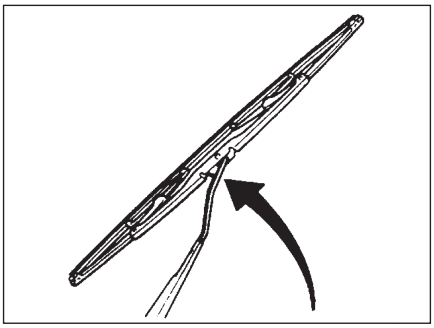

70G119A

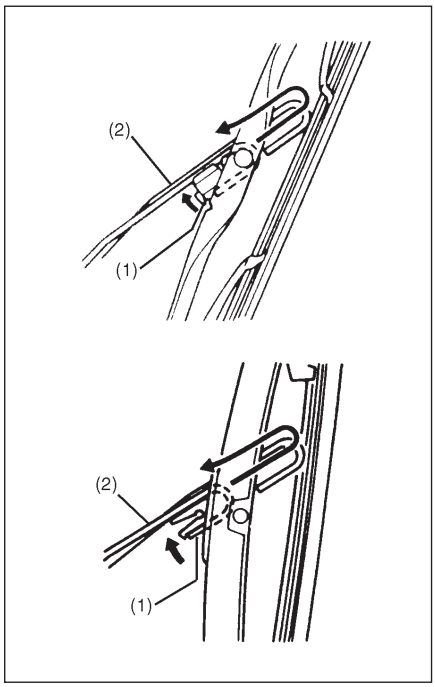

54G130

For windscreen wipers

❒ Hold the wiper arm away from the window.

❒ Squeeze lock (**1**) towards wiper arm (**2**) and remove the wiper frame from the arm as shown.

Downloaded from www.Manualslib.com manuals search engine

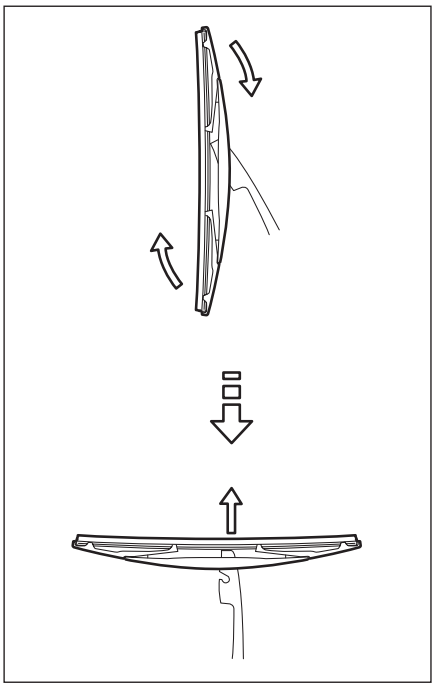

80G146

For rear window / wiper

❒ Hold the wiper arm away from the window.

❒ Remove the wiper frame from the arm as shown.

❒ Slide the blade out as shown.

AIR CONDITIONING SYSTEM

If you do not use the air conditioner for a long period, such as during winter, it may not give the best performance when you start using it again. To help maintain optimum performance and durability of your air conditioner, it needs to be run periodically.

Operate the air conditioner at least once a month for one minute with the engine idling. This circulates the refrigerant and oil and helps protect the internal components.

Downloaded from www.Manualslib.com manuals search engine

EMERGENCY SERVICE

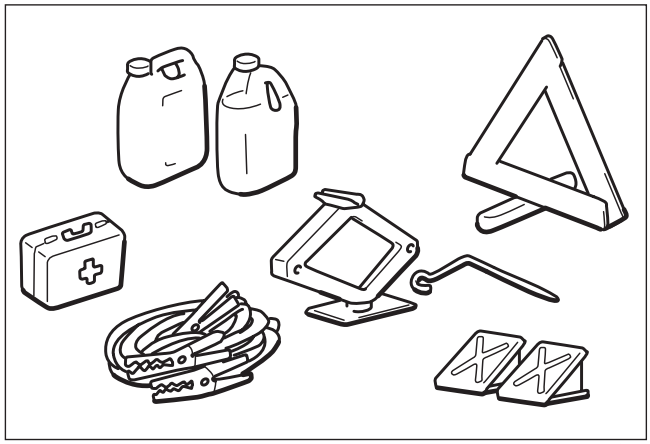

60G411

JACKING INSTRUCTIONS 226

JUMP STARTING INSTRUCTIONS 227

TOWING 229

IF THE STARTER DOES NOT OPERATE 229

IF THE ENGINE IS FLOODED 230

IF THE ENGINE OVERHEATS 230

IF YOU CAN NOT SHIFT AUTOMATIC TRANSAXLE GEARSHIFT LEVER OUT OF “P” (PARK) 232

Downloaded from www.Manualslib.com manuals search engine

JACKING INSTRUCTIONS

❒ Place the vehicle on level, hard ground.

❒ Set the parking brake firmly and shift into "P" (Park) if your vehicle has an automatic transaxle, or shift into "R" (Reverse) if your vehicle has a manual transaxle.

WARNING

– Be sure to shift into "P" (Park) in automatic transaxle, or shift into "R" (Reverse) in manual transaxle when you jack up the vehicle.

– Never jack up the vehicle with the transaxle in "N" (Neutral). Otherwise, unstable jack may cause an accident.

❒ Turn on the hazard warning flasher if your vehicle is near traffic.

❒ Block the front and rear of the wheel diagonally opposite of the wheel being lifted.

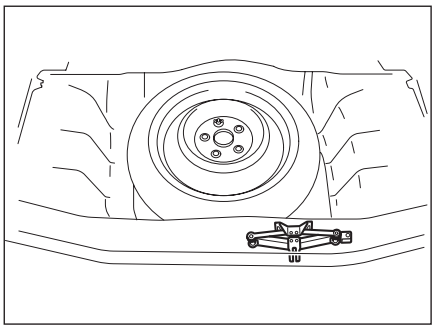

79J016

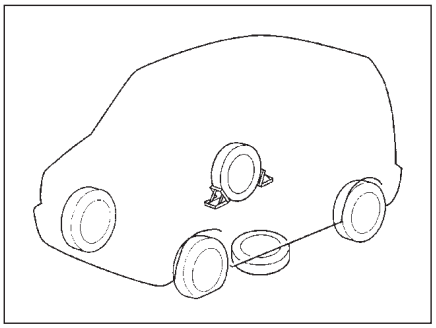

75F062

❒ Place the spare wheel near the wheel being lifted as shown in the illustration in case that the jack is slipped.

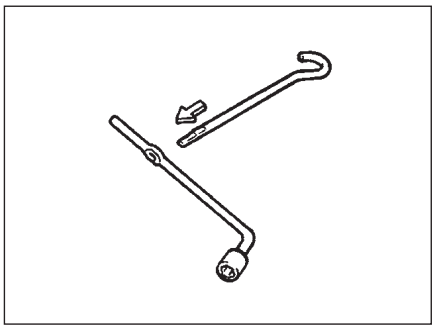

54G253

❒ Position the jack vertically and raise the jack by turning the jack handle clockwise until the jack head recess fits the rod of the body.

❒ Continue to raise the jack slowly and smoothly until the tire clears the ground. Do not raise the vehicle more than necessary.

Downloaded from www.Manualslib.com manuals search engine

WARNING

– Use the jack only to change wheels.

– Never jack up the vehicle on an inclined surface.

– Never raise the vehicle with the jack in a location other than between the frame bosses near the wheel to be changed.

– Make sure that the jack is raised at least 51 mm (2 inches) before it contacts the flange. Use of the jack when it is within 51 mm (2 inches) of being fully collapsed may result in failure of the jack.

– Never get under the vehicle when it is supported by the jack.

– Never run the engine when the vehicle is supported by the jack and never allow passengers to remain in the vehicle.

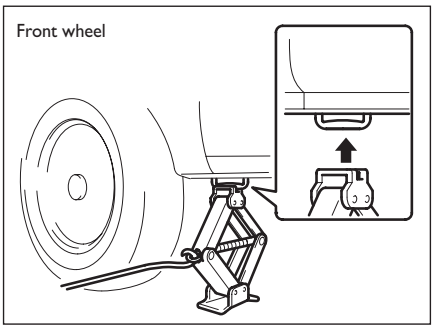

79J017

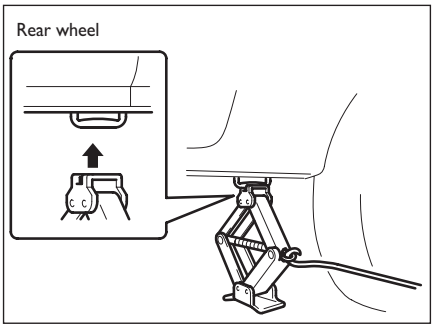

79J018

JUMP STARTING INSTRUCTIONS

WARNING

– Never attempt to jump start your vehicle if the battery appears to be frozen. Batteries in this condition may explode or rupture if jump starting is attempted.

– When making jump lead connections, be certain that your hands and the jump leads remain clear from pulleys, belts, or fans.

– Batteries produce flammable hydrogen gas. Keep flames and sparks away from the battery or an explosion may occur. Never smoke when working in the vicinity of the battery.

– If the booster battery you use for jump starting is installed in another vehicle, make sure the two vehicles are not touching each other.

– If your battery discharges repeatedly, for no apparent reason, have your vehicle inspected by an authorized Fiat Dealership.

Downloaded from www.Manualslib.com manuals search engine

WARNING

– To avoid harm to yourself or damage to your vehicle or battery, follow the jump starting instructions below precisely and in order. If you are in doubt, call for qualified road service.

IMPORTANT Your vehicle should not be started by pushing or towing. This starting method could result in permanent damage to the catalytic converter. Use jump leads to start a vehicle with a weak or flat battery.

WHEN JUMP STARTING YOUR VEHICLE, USE THE FOLLOWING PROCEDURE

❒ Use only a 12 volt battery to jump start your vehicle. Position the good 12 V battery close to your vehicle so that the jump leads will reach both batteries. When using a battery installed on another vehicle, DO NOT LET THE VEHICLES TOUCH. Set the parking brakes fully on both vehicles.

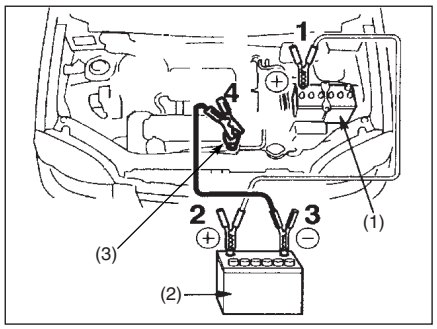

54G079

❒ Turn off all vehicle accessories, except those necessary for safety reasons (for example, headlights or hazard lights).

❒ Make jump lead connections as follows:

– Connect one end of the first jump lead to the positive (**+**) terminal of the flat battery (**1**).

– Connect the other end to the positive (**+**) terminal of the booster battery (**2**).

– Connect one end of the second jump lead to the negative (**–**) terminal of the booster battery (**2**).

– Make the final connection to an unpainted, heavy metal part (i. e. engine hook (**3**)) of the engine of the vehicle with the flat battery (**1**).

WARNING

Never connect the jump lead directly to the negative (–) terminal of the discharged battery, or an explosion may occur.

❒ If the booster battery you are using is fitted to another vehicle, start the engine of the vehicle with the booster battery. Run the engine at moderate speed.

❒ Start the engine of the vehicle with the flat battery.

❒ Remove the jump leads in the exact reverse order in which you connected them.

Downloaded from www.Manualslib.com manuals search engine

TOWING

If you need to have your vehicle towed, contact a professional service. Your dealer can provide you with detailed towing instructions.

IMPORTANT To help avoid damage to your vehicle during towing, proper equipment and towing procedures must be used.

2- WHEEL DRIVE (2WD) AUTOMATIC TRANSAXLE

Automatic transaxle vehicles may be towed using either of the following methods.

❒ From the front, with the front wheels lifted and the rear wheels on the ground. Before towing, make sure that the parking brake is released.

❒ From the rear, with the rear wheels lifted and a dolly under the front wheels.

IMPORTANT Towing your vehicle with the front wheels on the ground can result in damage to the automatic transaxle.

2-WHEEL DRIVE (2WD) MANUAL TRANSAXLE

Manual transaxle vehicles may be towed using either of the following methods.

❒ From the front, with the front wheels lifted and the rear wheels on the ground. Before towing, make sure that the parking brake is released.

❒ From the rear, with the rear wheels lifted and the front wheels on the ground, provided the steering and drivetrain are in operational condition. Before towing, make sure that transaxle is in neutral, the steering wheel is unlocked (the ignition key should be in the "ACC" position), and the steering wheel is secured with a clamping device designed for towing service.

IMPORTANT The steering column is not strong enough to withstand shocks transmitted from the front wheels during towing. Always unlock the steering wheel before towing.

4-WHEEL DRIVE (4WD)

Your vehicle should be towed under one of the following conditions:

❒ With all four wheels on a flat-bed truck.

❒ With the front or rear wheels lifted and a dolly under the other wheels.

IMPORTANT Towing your vehicle with front and/ or rear wheels on the ground can result in damage to the automatic transaxle and/ or the 4WD drive system.

IF THE STARTER DOES NOT OPERATE

❒ Try turning the ignition switch to the "START" position with the headlights turned on to determine the battery condition. If the headlights go excessively dim or go off, it usually means that either the battery is flat or the battery terminal contact is poor. Recharge the battery or correct battery terminal contact as necessary.

❒ If the headlights remain bright, check the fuses. If the reason for failure of the starter is not obvious, there may be a major electrical problem. Have the vehicle inspected by your authorized Fiat Dealership.

Downloaded from www.Manualslib.com manuals search engine

IF THE ENGINE IS FLOODED

If the engine is flooded with gasoline, it may be hard to start. If this happens, press the accelerator pedal all the way to the floor and hold it there while cranking the engine. (Do not operate the starter motor for more than 15 seconds).

IF THE ENGINE OVERHEATS

The engine could overheat temporarily under severe driving conditions. If the engine coolant temperature gauge indicates overheating during driving:

❒ Turn off the air conditioner, if equipped.

❒ Take the vehicle to a safe place and park.

❒ Let the engine run at the normal idle speed for a few minutes until the indicator is within the normal, acceptable temperature range between "H" and "C".

WARNING

If you see or hear escaping steam, stop the vehicle in a safe place and immediately turn off the engine to let it cool. Do not open the hood when steam is present. When the steam can no longer be seen or heard, open the hood to see if the coolant is still boiling. If it is, you must wait until it stops boiling before you proceed.

Downloaded from www.Manualslib.com manuals search engine

If the temperature indication does not come down to within the normal, acceptable range:

❒ Turn off the engine and check that the water pump belt and pulleys are not damaged or slipping. If any abnormality is found, correct it.

❒ Check the coolant level in the reservoir. If it is found to be lower than the "LOW" line, look for leaks at the radiator, water pump, and radiator and heater hoses. If you locate any leaks that may have caused the overheating, do not run the engine until these problems have been corrected.

79J007

❒ If you do not find a leak, carefully add coolant to the reservoir and then the radiator, if necessary. (Refer to "Engine Coolant" in the "INSPECTION AND MAINTENANCE" section.)

WARNING

– It is hazardous to remove the radiator cap when the water temperature is high, because scalding fluid and steam may be blown out under pressure. The cap should only be taken off when the coolant temperature has lowered.

– To help prevent personal injury, keep hands, tools and clothing away from the engine cooling fan and air-conditioner fan (if equipped). These electric fans can automatically turn on without warning.

Downloaded from www.Manualslib.com manuals search engine

IF YOU CAN NOT SHIFT AUTOMATIC TRANSAXLE GEARSHIFT LEVER OUT OF "P" (PARK)

Left Hand Drive Vehicle

Vehicles with an automatic transaxle have an electrically operated park- lock feature. If the vehicle's battery is discharged, or there is some other electrical failure, the automatic transaxle cannot be shifted out of Park in the normal way. Jump starting may correct the condition. If not, follow the procedure described below. This procedure will permit shifting the transaxle out of Park.

❒ Be sure the parking brake is firmly applied.

❒ If the engine is running, stop the engine.

❒ Make sure the key is in the "ON" or "ACC" position.

❒ Remove the cover (1) over the button.

❒ With pushing the release button by the key or the flat end rod, shift the gearshift lever to the desired position.

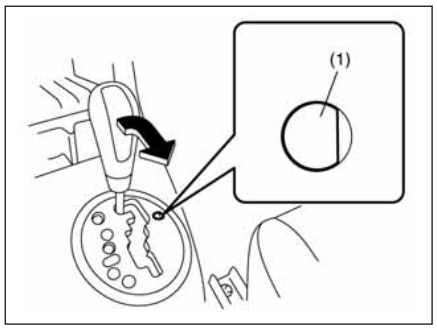

62J083

This procedure is for emergency use only. If repeated use of this procedure is necessary, or the procedure does not work as described, take the vehicle to your dealer for repair.

Right Hand Drive Vehicle

Vehicles with an automatic transaxle have an electrically operated park- lock feature. If the vehicle's battery is discharged, or there is some other electrical failure, the automatic transaxle cannot be shifted out of Park in the normal way. Jump starting may correct the condition. If not, follow the procedure described below. This procedure will permit shifting the transaxle out of Park.

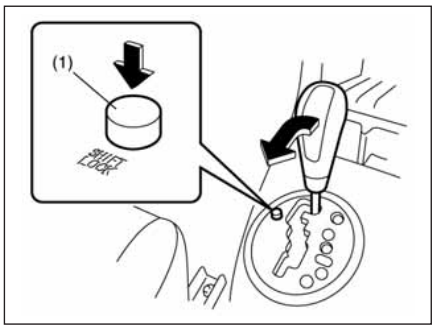

63J142

❒ Be sure the parking brake is firmly applied.

❒ If the engine is running, stop the engine.

❒ Make sure the key is in the "ON" or "ACC" position.

❒ With pushing the release button (1), shift the gearshift lever to the desired position.

This procedure is for emergency use only. If repeated use of this procedure is necessary, or the procedure does not work as described, take the vehicle to your dealer for repair.

Downloaded from www.Manualslib.com manuals search engine

BODY WORK CARE

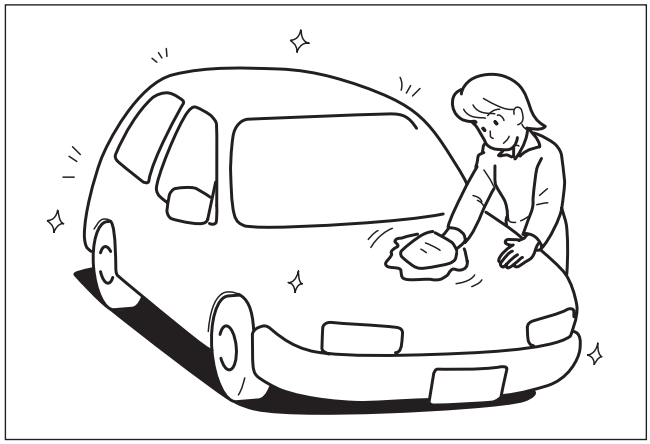
60G412

CORROSION PREVENTION 234
VEHICLE CLEANING 236

Downloaded from www.Manualslib.com manuals search engine

CORROSION PREVENTION

It is important to take good care of your vehicle to protect it from corrosion. Listed below are instructions for how to maintain your vehicle to prevent corrosion. Please read and follow these instructions carefully.

IMPORTANT INFORMATION ABOUT CORROSION

Common causes of corrosion

❒ Accumulation of road salt, dirt, moisture, or chemicals in hard to reach areas of the vehicle underbody or frame.

❒ Chipping, scratches and any damage to treated or painted metal surfaces resulting from minor accidents or abrasion by stones and gravel.

Environmental conditions which accelerate corrosion

❒ Road salt, dust control chemicals, sea air or industrial pollution will all accelerate the corrosion of metal.

❒ High humidity will increase the rate of corrosion particularly when the temperature range is just above the freezing point.

❒ Moisture in certain areas of a vehicle for an extended period of time may promote corrosion even though other body sections may be completely dry.

❒ High temperatures will cause an accelerated rate of corrosion to parts of the vehicle which are not well ventilated to permit quick drying.

This information illustrates the necessity of keeping your vehicle (particularly the underbody) as clean and dry as possible. It is equally important to repair any damage to the paint or protective coatings as soon as possible.

HOW TO HELP PREVENT CORROSION

Wash your vehicle frequently

The best way to preserve the finish on your vehicle and to help avoid corrosion is to keep it clean with frequent washing.

Wash your vehicle at least once during the winter and once immediately after the winter. Keep your vehicle, particularly the underside, as clean and dry as possible.

If you frequently drive on salted roads, your vehicle should be washed at least once a month during the winter. If you live near the ocean, your vehicle should be washed at least once a month throughout the year.

For washing instructions, refer to the “Vehicle Cleaning” section.

Downloaded from www.Manualslib.com manuals search engine

Remove foreign material deposits

Foreign material such as salts, chemicals, road oil or tar, tree sap, bird droppings and industrial fall-out may damage the finish of your vehicle if it is left on painted surfaces. Remove these types of deposits as quickly as possible. If these deposits are difficult to wash off, an additional cleaner may be required. Be sure that any cleaner you use is not harmful to painted surfaces and is specifically intended for your purposes. Follow the manufacturer's directions when using these special cleaners.

Repair finish damage

Carefully examine your vehicle for damage to the painted surfaces. Should you find any chips or scratches in the paint, touch them up immediately to prevent corrosion from starting. If the chips or scratches have gone through to the bare metal, have a qualified body shop make the repair.

Keep passenger and luggage compartments clean

Moisture, dirt or mud can accumulate under the floor mats and may cause corrosion.

Occasionally, check under these mats to ensure that this area is clean and dry. More frequent checks are necessary if the vehicle is used off road or in wet weather.

Certain cargos such as chemicals, fertilizers, cleaners, salts, etc. are extremely corrosive by nature. These products should be transported in sealed containers. If a spill or leak does occur, clean and dry the area immediately.

Store your vehicle in a dry, well-ventilated area

Do not park your vehicle in a damp, poorly ventilated area. If you often wash your vehicle in the garage or if you frequently drive it in when wet, your garage may be damp. The high humidity in the garage may cause or accelerate corrosion. A wet vehicle may corrode even in a heated garage if the ventilation is poor.

WARNING

Do not apply additional undercoating or rust preventive coating on or around exhaust system components such as the catalytic converter, exhaust pipes, etc. A fire could be started if the undercoating substance becomes overheated.

Downloaded from www.Manualslib.com manuals search engine

VEHICLE CLEANING

WARNING

When cleaning the interior or exterior of the vehicle, NEVER USE flammable solvents such as lacquer thinners, gasoline, benzene or cleaning materials such as bleaches or strong household detergents. The materials could cause personal injury or damage to the vehicle.

CLEANING THE INTERIOR

Vinyl upholstery

Prepare a solution of soap or mild detergent mixed with warm water. Apply the solution to the vinyl with a sponge or soft cloth and let it soak for a few minutes to loosen dirt.

Rub the surface with a clean, damp cloth to remove dirt and the soap solution. If some dirt still remains on the surface, repeat this procedure.

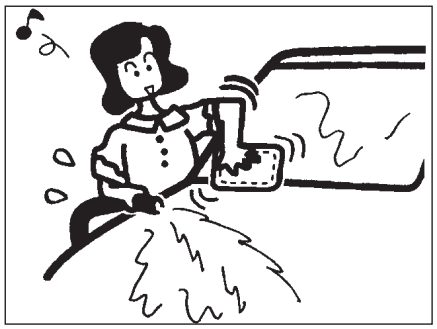

76G044A

Fabric upholstery

Remove loose dirt with a vacuum cleaner. Using a mild soap solution, rub stained areas with a clean damp cloth. To remove soap, rub the areas again with a cloth dampened with water. Repeat this until the stain is removed, or use a commercial fabric cleaner for tougher stains. If you use a fabric cleaner, carefully follow the manufacturer's instructions and precautions.

Seat belts

Clean seat belts with a mild soap and water. Do not use bleach or dye on the belts. They may weaken the fabric in the belts.

Vinyl floor mats

Ordinary dirt can be removed from vinyl with water or mild soap. Use a brush to help loosen dirt. After the dirt is loosened, rinse the mat thoroughly with water and dry it in the shade.

Carpets

Remove dirt and soil as much as possible with a vacuum cleaner. Using a mild soap solution, rub stained areas with a clean damp cloth. To remove soap, rub the areas again with a cloth dampened with water. Repeat this until the stain is removed, or use a commercial carpet cleaner for tougher stains. If you use a carpet cleaner, carefully follow the manufacturer's instructions and precautions.

CLEANING THE EXTERIOR

IMPORTANT It is important that your vehicle be kept clean and free from dirt. Failure to keep your vehicle clean may result in fading of the paint or corrosion to various parts of the vehicle body.

Downloaded from www.Manualslib.com manuals search engine

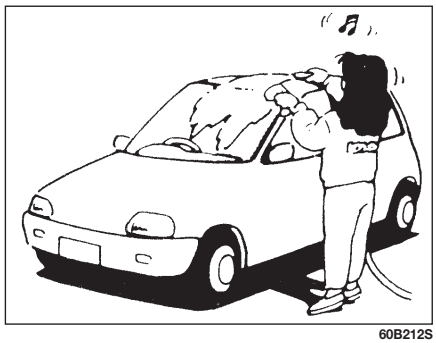

60B212S

WARNING

– Never attempt to wash and wax your vehicle with the engine running.

– When cleaning the underside of the body and fender, where there may be sharp-edged parts, you should wear gloves and a long sleeved shirt to protect your hands and arms from being cut.

– After washing your vehicle, carefully test the brakes before driving to make sure they have maintained their normal effectiveness.

When washing the vehicle, park it where direct sunlight does not fall on it and follow the instructions below:

Flush the underside of body and wheel housings with pressurized water to remove mud and debris. Use plenty of water.

IMPORTANT When washing the vehicle, avoid directing steam or hot water of more than 80°C (176°F) on plastic parts. To avoid damaging engine components, do not use pressurized water in the engine compartment.

Rinse the body to loosen the dirt. Remove dirt and mud from the body exterior with running water. You may use a soft sponge or brush. Do not use hard materials which can scratch the paint or plastic. Remember that the headlight covers or lenses are made of plastic in many cases.

IMPORTANT To avoid damage to the paint or plastic surface, do not wipe the dirt off without ample water. Be sure to follow above procedure.

Wash the entire exterior with a mild detergent or vehicle wash soap using a sponge or soft cloth. The sponge or cloth should be frequently soaked in the soap solution.

IMPORTANT When using a commercial vehicle wash product, observe the cautions specified by the manufacturer. Never use strong household detergents or soaps.

Downloaded from www.Manualslib.com manuals search engine

❒ Once the dirt has been completely removed, rinse off the detergent with running water.

❒ After rinsing, wipe off the vehicle body with a wet chamois or cloth and allow it to dry in the shade.

❒ Check carefully for damage to painted surfaces. If there is any damage, "touch-up" the damage following the procedure below:

– Clean all damaged spots and allow them to dry.

– Stir the paint and "touch- up" the damaged spots lightly using a small brush.

– Allow the paint to dry completely.

IMPORTANT If you use an automatic vehicle wash, make sure that your vehicle's body parts, such as spoilers, can not be damaged. If you are in doubt, consult the vehicle wash operator for advice.

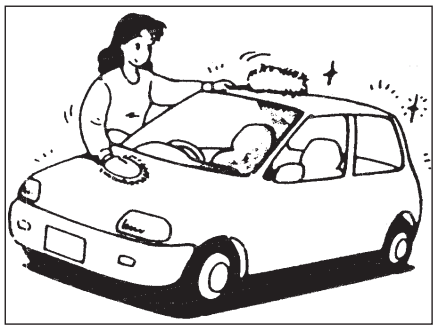

60B211S

WAXING

After washing the vehicle, waxing and polishing are recommended to further protect and beautify the paint.

Only use waxes and polishes of good quality.

When using waxes and polishes, observe the precautions specified by the manufacturers.

Downloaded from www.Manualslib.com manuals search engine

GENERAL INFORMATION

VEHICLE IDENTIFICATION 240
FUEL CONSUMPTION - CO_2 EMISSIONS 241

Downloaded from www.Manualslib.com manuals search engine

VEHICLE IDENTIFICATION

CHASSIS SERIAL NUMBER

The chassis and/ or engine serial numbers are used to register the vehicle. They are also used to assist your dealer when ordering or referring to special service information. Whenever you have occasion to consult your Fiat Dealership, remember to identify your vehicle with this number. Should you find the number difficult to read, you will also find it on the identification plate.

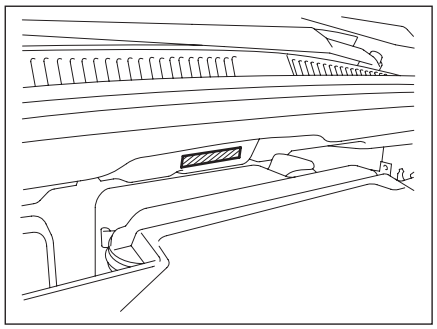

79J019

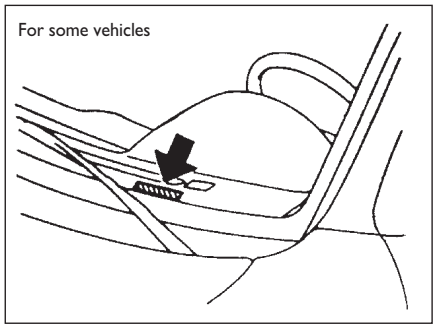

60G152

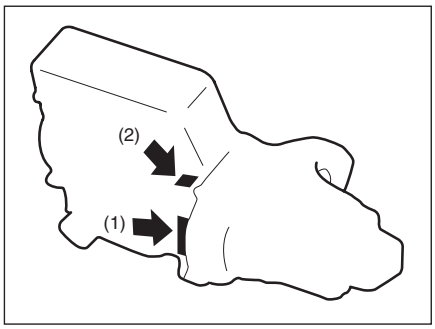

54G082

1. Petrol engine
2. Diesel engine

ENGINE SERIAL NUMBER

The engine serial number is stamped on the cylinder block as shown in the illustration.

Downloaded from www.Manualslib.com manuals search engine

FUEL CONSUMPTION - CO_2 EMISSIONS

Fuel consumption according to 2004/3/EC directive.

CO_2 emission levels given in the following table refer to combined consumption according to 1999/100/EC directive.

			1.6 16V		1.9 Multijet	
			1.6 L 2WD	1.6 L 4WD	1.9 L 2WD	1.9 L 4WD
Urban	(L/100km)	M/T	8.4	8.7	7.8	7.9
	CO_2 (g/km)	M/T	201	204	206	209
	(L/100km)	A/T	9.4	–	–	–
	CO_2 (g/km)	A/T	223	–	–	–
Extra-urban	(L/100km)	M/T	5.7	5.9	5.5	5.6
	CO_2 (g/km)	M/T	135	140	145	147
	(L/100km)	A/T	6.2	–	–	–
	CO_2 (g/km)	A/T	146	–	–	–
Combined	(L/100km)	M/T	6.7	6.9	6.3	6.4
	CO_2 (g/km)	M/T	159	164	166	170
	(L/100km)	A/T	7.4	–	–	–
	CO_2 (g/km)	A/T	175	–	–	–

NOTE As these data are obtained under certain specific conditions, actual fuel consumption of your vehicle will be different from these data.

Downloaded from www.Manualslib.com manuals search engine

NOTES

Downloaded from www.Manualslib.com manuals search engine

TECHNICAL SPECIFICATIONS

ENGINE 244
FUEL FEED – IGNITION 244
ELECTRICAL COMPONENTS 245
BULBS 245
TRANSMISSION 246
BRAKES 246
SUSPENSIONS 246
STEERING 246
WHEELS 247
DIMENSIONS 247
WEIGHTS 248
PERFORMANCE 248
CAPACITIES 248

Downloaded from www.Manualslib.com manuals search engine

TECHNICAL SPECIFICATIONS

NOTE Technical specifications are subject to change without notice

ENGINE		1.6 16V	1.9 Multijet
Code - type		M16A (DOHC) - Euro 4	D19AA - Euro 4 with Diesel Particulate Filter
Number and layout of cylinders		4 in line	4 in line
Piston bore and stroke		78 x 83 mm (3.07 x 3.27 in.)	82 x 90.4 mm (3.23 x 3.56 in.)
Total displacement		1,586 cm^3 (96.7 cu. in)	1,910 cm^3 (116.5 cu. in)
Compression ratio		10.5 : 1	18.4 : 1
Maximum power (EEC)	kW	79	88
	HP	107	120
corresponding ratio	rpm	5,600	4,000
Maximum torque (EEC)	Nm	145	280
	kgm	14.8	28.6
corresponding ratio	rpm	4,000	2,050
Fuel		Unleaded petrol 95 RON (Specification EN228)	Diesel fuel for motor vehicles (Specification EN590)

FUEL FEED - IGNITION	1.6 16V	1.9 Multijet
Fuel feed	Direct electronic	Direct injection with electronically controlled Multijet "Common Rail", turbosupercharger and intercooler
Ignition	Injection	Compression

WARNING

Modifications or repairs to the fuel feed system that are not carried out properly or do not take the system's technical specifications into account can cause malfunctions leading to the risk of fire.

Downloaded from www.Manualslib.com manuals search engine

ELECTRICAL COMPONENTS		1.6 16V	1.9 Multijet
Battery		12V 36Ah/20HR, CCA 180A (DIN) or 12V 44Ah/ 20HR, CCA 210A (DIN)	12V 70Ah/20HR, CCA 450A (DIN)
Spark plugs	Iridium	NGK IFR6J11	–
	Nickel	DENSO K20PR-U11, NGK BKR6E-11	–
Fuses		See "INSPECTION AND MAINTENANCE" section	

BULBS	Power	Type
Main beam/ dipped beam headlights	12V – 60/55W	H4
Front fog lights	12V – 55W	H11
Front direction indicators	12V – 21W	PY21W
Rear direction indicators	12V – 21W	P21W
Parking lights	12V – 5W	W5W
Brake lights / taillights	12V – 21/5W	P21/5W
License plate lights	12V – 5W	W5W
Reversing lights	12V – 21W	P21W
Passenger compartment light	12V – 10W	–
Luggage compartment light	12V – 5W	–
Rear fog lights	12V – 21W	P21W
Spot lights	12V – 8W	W5W (8W)
Third brake light (additional brake light)	12V – 5W	W5W

Downloaded from www.Manualslib.com manuals search engine

TRANSMISSION

Drive 4WD		4-wheel drive, electronic-control self-locking differential
Clutch		Dry single disc, Belleville washer, hydraulic control
Gearbox	**1.6 16V**	5 forward gears + reverse
	1.9 Multijet	6 forward gears + reverse

BRAKES

Service brakes	Front	Disc (Ø 280 mm - 11 in.)
	Rear	Drum (Ø 220 mm - 8.65 in.)
Parking brake		Controlled by hand lever, it works on rear brakes
Vacuum brake		10”

SUSPENSIONS

Front	Mc Pherson independent wheels
Rear	Bent twisting axle

STEERING

Type	Electric, pinion
Minimum steering cycle	11 m (433 in.)

Downloaded from www.Manualslib.com manuals search engine

WHEELS

Tyres			205/60 R16
Rims			16 x 6J
Tyre pressure			Tyre inflation pressure values are specified on the label located on the driver's door post
Recommended snow chains	Radial thickness:		10 mm (254 in.)
	Axial thickness:		10 mm (254 in.)
Wheel geometry	Toe-in, front		1 ± 1 mm (0.0393 ± 0.0393 in.)
	Camber angle, front	2WD	– 0° 23' ± 1°
		4WD	– 0° 10' ± 1°
	Caster angle, front	2WD	3° 40' ± 2°
		4WD	3° 32' ± 2°

DIMENSIONS Unit mm (in.)		1.6 16V		1.9 Multijet	
		2WD	4WD	2WD	4WD
Overall length		4,115 (162)	4,115 (162)	4,115 (162)	4,115 (162)
Overall width		1,755 (69.1)	1,755 (69.1)	1,755 (69.1)	1,755 (69.1)
Overall height		1,605 (63.2)	1,620 (63.8)	1,605 (63.2)	1,620 (63.8)
Wheelbase		2,500 (98.4)	2,500 (98.4)	2,500 (98.4)	2,500 (98.4)
Track	Front	1,500 (59.1)	1,495 (58.9)	1,500 (59.1)	1,495 (58.9)
	Rear	1,495 (58.9)	1,495 (58.9)	1,495 (58.9)	1,495 (58.9)
Ground clearance		175 (6.9)	190 (7.5)	175 (6.9)	190 (7.5)
Overhang	Front	895 (35.2)	895 (35.2)	895 (35.2)	895 (35.2)
	Rear	720 (28.3)	720 (28.3)	720 (28.3)	720 (28.3)
Boot volume	dm^3	270/670	270/670	270/670	270/670

Downloaded from www.Manualslib.com manuals search engine

WEIGHTS kg (lbs)		1.6 16V	1.9 Multijet
Kerb weight (including fuel, spare wheel, tools and accessories)	2WD	1,135 – 1,185 (2,502 – 2,612)	1,270 – 1,320 (2,800 – 2,910)
	4WD	1,195 – 1,245 (2,634 – 2,745)	1,330 – 1,380 (2,932 – 3,042)
Gross vehicle weight (GVWR)	2WD	1,650 (3,638)	1,790 (3,946)
	4WD	1,670 (3,682)	1,790 (3,946)
Gross front axle weight (GAWR)	2WD	865 (1,907)	980 (2,160)
	4WD	870 (1,918)	980 (2,160)
Gross rear axle weight (GAWR)	2WD	850 (1,874)	860 (1,896)
	4WD	870 (1,918)	860 (1,896)

PERFORMANCE	1.6 16V	1.9 Multijet
Top admitted speed after initial vehicle use	170 km/h	180 km/h
Pick-up angle	20.3°	20.3°
Racing angle	31.1°	31.1°
Rise angle	18.1°	18.1°

CAPACITIES (indicative values)		1.6 16V	1.9 Multijet
Engine cooling system (including reservoir tank)		7.7 litres (13.6 Imp pt)	6.5 litres (11.4 Imp pt)
Fuel tank		50 litres (11.0 Imp gal)	50 litres (11.0 Imp gal)
Engine oil		3.9 litres (6.9 Imp pt) (replacement with oil filter)	4.5 litres (7.9 Imp pt) (replacement with oil filter)
Gearbox oil	2WD (M/T)	2.5 litres (4.4 Imp pt)	2.5 litres (4.4 Imp pt)
	2WD (A/T)	5.8 litres (10.2 Imp pt)	–
	4WD (M/T)	2.5 litres (4.4 Imp pt)	2.5 litres (4.4 Imp pt)
Transfer oil	4WD	0.6 litres (1.1 Imp pt)	0.6 litres (1.1 Imp pt)
Rear differential oil	4WD	0.8 litres (1.4 Imp pt)	0.8 litres (1.4 Imp pt)

Downloaded from www.Manualslib.com manuals search engine

SUPPLEMENT

DECLARATION OF CONFORMITY 252

Downloaded from www.Manualslib.com manuals search engine

Declaration of Conformity in accordance with Directive 1999/5/EC (R&TTE Directive)

Manufacturer:	Siemens VDO Automotive AG Body & Chassis Electronics
Address:	Dep. SV C BC P2 RF TG Siemensstrasse 12 D-93055 Regensburg Germany
Product type designation:	5WK4 9182 and 5WK4 9181
Intended use:	Vehicle immobilisation system

The product mentioned above complies with the essential requirements and other relevant provisions of Directive 1999/5/EC, when used for its intended purpose:

Health and safety pursuant to §3.1.a:	*Applied standard(s):* EN 60950: 2000
Electromagnetic compatibility pursuant to § 3.1.b:	*Applied standard(s):* EN 301 489-1,-3: V1.4.1 (2002-08)
Efficient use of spectrum pursuant to § 3.2:	*Applied standard(s):* EN 300 330-1: V1.3.2 (2002-12)

The following marking applies to the above mentioned product:

CE

Siemens VDO Automotive AG

Regensburg, 2004-06-28

i.V. .....

Jean-Francois Tarabbia
Executive Vice President
Body & Chassis Electronics
Operations

i.V. .....

Norbert Müller
Vice President
Wireless Products and Modules

Downloaded from www.Manualslib.com manuals search engine

Declaration of Conformity in accordance with Directive 1999/5/EC (R&TTE Directive)

Manufacturer:	Siemens VDO Automotive AG Body & Chassis Electronics
Address:	Dep. SV C BC P2 RF TG Siemensstrasse 12 D-93055 Regensburg Germany
Product type designation:	5WK4 9184 and 5WK4 9183
Intended use:	Vehicle immobilisation system

The product mentioned above complies with the essential requirements and other relevant provisions of Directive 1999/5/EC, when used for its intended purpose:

Health and safety pursuant to §3.1.a:	*Applied standard(s):* EN 60950: 2000
Electromagnetic compatibility pursuant to § 3.1.b:	*Applied standard(s):* EN 301 489-1,-3: V1.4.1 (2002-08)
Efficient use of spectrum pursuant to § 3.2:	*Applied standard(s):* EN 300 330-1: V1.3.2 (2002-12)

The following marking applies to the above mentioned product:

CE

Siemens VDO Automotive AG

Regensburg, 2004-06-28

i.V. .....

Jean-Francois Tarabbia
Executive Vice President
Body & Chassis Electronics
Operations

i.V. .....

Norbert Müller
Vice President
Wireless Products and Modules

Downloaded from www.Manualslib.com manuals search engine

DECLARATION OF CONFORMITY

We, **Calsonic Kansei Corp**. hereby declare, at our sole responsibility, that the following product conforms to the Essential Requirements of the Radio and Telecommunications Terminal Equipment Directive 1999/5/EC in accordance with the tests conducted to the appropriate requirements of the relevant standards, as listed herewith.

Product: Controller of Intelligent Key System (Keyless Start System)

Model/Type Number: S62J1

Year of affixing CE marking: 2004

DECLARATION OF CONFORMITY

We, **Calsonic Kansei Corp**. hereby declare, at our sole responsibility, that the following product conforms to the Essential Requirements of the Radio and Telecommunications Terminal Equipment Directive 1999/5/EC in accordance with the tests conducted to the appropriate requirements of the relevant standards, as listed herewith.

Product: Controller of Intelligent Key System (Keyless Start System)

Model/Type Number: TS001

Year of affixing CE marking: 2004

Downloaded from www.Manualslib.com manuals search engine

DECLARATION OF CONFORMITY

We, **Calsonic Kansei Corp**. hereby declare, at our sole responsibility, that the following product conforms to the Essential Requirements of the Radio and Telecommunications Terminal Equipment Directive 1999/5/EC in accordance with the tests conducted to the appropriate requirements of the relevant standards, as listed herewith.

Product: Transmitter of Keyless Entry System

Model/Type Number: TS002

Year of affixing CE marking: 2004

DECLARATION OF CONFORMITY

We, **Calsonic Kansei Corp**. hereby declare, at our sole responsibility, that the following product conforms to the Essential Requirements of the Radio and Telecommunications Terminal Equipment Directive 1999/5/EC in accordance with the tests conducted to the appropriate requirements of the relevant standards, as listed herewith.

Product: Transmitter of Keyless Entry System

Model/Type Number: R62J1

Year of affixing CE marking: 2004

Downloaded from www.Manualslib.com manuals search engine

NOTES

Downloaded from www.Manualslib.com manuals search engine

Downloaded from www.Manualslib.com manuals search engine

Downloaded from www.Manualslib.com manuals search engine

INDEX

ABS 160
Air bags 47
– Front 48
– How the system works 52
– Servicing 54
– Side 50
Air cleaner 199
Air conditioning 99-224
Ashtray 90
Assist grips 140
Audio systems
– Antenna 112-147
– Anti-theft system 121
– Cautions on handling 110
– CD Changer 118
– CD player 116
– Error display messages 125
– General 112
– Radio 113
– RDS (Radio Data System) 115
– Steering wheel controls 126
– System 109
– Troubleshooting 123
Automatic heating and air conditioning system 104
– Maintenance 109-224
Automatic Transaxle (AT) Fluid 194

Battery 211-245
Before driving 9
Bodywork care 233
Brake fluid 203
Brake system 160
Brakes
– Brake fluid 203
– Brake pedal 131-204
– Brake system 246
– Parking brake lever 130-205
– Vacuum brake 161
Bulbs
– Replacement 218
– Type 245

Can holder 142
Capacities 10-248
Catalytic converter 165
Child-proof locks 22
Children
– Child-proof locks 22
– Child restraint systems 37
– Installation with Isofix type anchorages 42
– Installation with lap-shoulder seat belts 42
Cigar lighter 90
Clock 98
Clutch 131-206
CO_2 emissions 241
Cup holder 142

Daily inspection checklist 150
Dimensions 247
Dipped beam headlights 63
– Bulb replacement 219
Doors
– Central door locking system 13-19
– Child-proof locks 22
– Dead lock 14
– Keyless Start 15
– Opening/closing 12
Drive belt (servicing) 189
Driving tips 167
– Driving on hills 168
– Driving on slippery roads 169
– Highway driving 168

Emergency service 225
Engine
– Air cleaner 199
– Engine coolant 196
– Engine oil and filter 189
– If the engine is flooded 230

Downloaded from www.Manualslib.com manuals search engine

– If the engine overheats 230
– If the starter does not operate .. 229
– Jump starting 227
– Oil consumption 151
– Serial number 240
– Spark plugs 199
– Starting 152
– Technical specifications 244
– Temperature gauge 84
Engine coolant 196
Engine coolant temperature gauge .. 84
Engine hood 140
Engine oil consumption 152
Engine oil
– Changing 191-248
– Level check 190
– Specifications 189
Engine oil filter (change) 191
ESP (Electronic Stability Program) ... 162
Exhaust gas 150
External lights 63-219
Eyeglasses holder 142

Fiat CODE (Immobilizer system) 11
Frame hooks 143
Front fog lights 89
Fuel
– Capacities/refuelling 10-248
– Consumption 241
– Fuel filter 202
– Fuel filler cap 132
– Fuel gauge 84
– Improving fuel economy 166
– Instantaneous fuel consumption (gauge) 92
Fuel filler cap 132
Fuel gauge 84
Fuses 212

Gear oil
– Changing 193-248
– Level check 194
– Specifications..... 193
General information 239
Glove box 91

Hazard warning lights 85
Hazard warning lights 85
Head restraints 30
Headlight levelling switch 87
Headlights
– Bulb replacement 219
– Headlight levelling switch 87
Heated rear window 88
Heating and air conditioning system 99-224
Heating system 99-104
Horn 68

Identification data 230
Ignition switch 58
Information display 91-94
– Illumination cancel switch 89
Inspection and maintenance 181
– Maintenance schedule 183
– Severe driving conditions 188
Instrument cluster 71
– Meter illumination (control) 82-87
Instrument panel 69
Interior lights 138-219
Isofix type child restraint system (installation)..... 42

Jack..... 144
Jacking instructions..... 226
Jump starting instructions..... 227

Keys..... 11
– Battery replacement..... 20
– Keyless Entry 18

Luggage compartment
– Capacity/volume 247
– Extension (folding rear seats)..... 134
– Luggage compartment cover 146
– Luggage compartment light 146
– Luggage restraint loops 145
– Rear door opening 23

Downloaded from www.Manualslib.com manuals search engine

Luggage compartment light 146
Luggage restraint loops 145

Main beam headlights 63
– Bulb replacement 220
Manual heating and air conditioning system 100
– Maintenance 104-224
Mirrors
– Defroster 88
– Electric mirrors 28
– Inside rearview mirror 27
– Outside rearview mirror 27
MP3/WMA Player 120

Odometer 81
– Illumination cancel switch 89
Operating your vehicle 149
Original spare parts 2
Other controls and equipment 129

Parking brake lever 130
Parking lights 63
Pedals 131
Performance 248
Pretensioners for seat belts 45

Radio antenna 112-147
Rear door 23
Rear fog light 64
Rear window washer
– Switch 66
Rear window wiper
– Blades 224
– Control 66
Recirculated air 102-105
Refuelling/Capacities 10-248
Roof rails or roof rack anchors 147
Running-in 165

Seat back pocket 145
Seat belts
– Height adjuster 36
– Pretensioners 45
– Seat belt hangers 36
– Seat belt inspection 37
– Seat belt reminder (S.B.R.) 35
– Use 33
– Warnings 31
Seats
– Folding rear seats 145
– Front (adjustment) 29
– Front seat heater 139
– Seat back pocket 145
Service station guide 3
Snow chains 169
Spare tire 144-209
Spark plugs 200-245
Speedometer 81
Spot light 138
Starting the engine 152
Steering 205-246
Steering column controls 57
Steering wheel
– Adjustment 67-205
– Audio controls 68-126
Sun visors 137
Supplement 249
Suspensions 246
Symbols 4

Tachometer 83
Tailgate 23
Technical specifications 243
Theft deterrent light 93
Thermometer 92
Tools 144
Towing the vehicle
– Frame hooks 135
– Instructions 177-229
Trailer towing 172
Trailer hitch 172
Transaxle (automatic)
– Specified fluid 194
– Changing oil 195
– Lever out of P 232
Transaxle (manual)
– Gear oil 194

Downloaded from www.Manualslib.com manuals search engine

– Gear oil change 194-248
– Gearshift lever 132
– Using the transaxle 155
Transmission 246
Trip meter 81
Turn signal 79
– Bulb replacement 219
Tires
– Compact spare tire 144-209
– Inspection 206
– Rotation 208
– Technical data 247

Vacuum brake 161
Vehicle identification 240
Vehicle loading..... 172
Vehicle loading and towing 171
Ventilation 101-106

Warning and indicator lights 72
Warning and indicator lights 72
Weights 248
Wheels
– Changing 210
– Technical data..... 247
Windows
– Electric window controls 24
– Manual window controls 24
Windshield defroster 101-107
Windshield washer
– Control 65
– Fluid 198
Windshield wiper
– Blades 223
– Control 65
2WD/4WD switch 85-157

Downloaded from www.Manualslib.com manuals search engine

PROVISIONS FOR THE PROCESSING OF A VEHICLE AT THE END OF ITS LIFE-CYCLE

For years now Fiat has been developing its global commitment towards the safeguarding and protection of the Environment through the continuous improvement of its production processes and the making of increasingly more "eco friendly" products. With a view to guaranteeing the best possible service to clients in full observance of environmental standards and in response to the obligations imposed by European Directive 2000/53/EC on end-of-life vehicles, Fiat offers its clients the possibility to hand in their vehicle* at the end of its life span without additional costs.

The European Directive, in fact, provides for the take-back of the vehicle without the last holder or owner of the same incurring expenses due to the fact that the market value of the vehicle is zero or negative. In particular, in almost all of the countries of the European Union, up until 1st January 2007, take-back of the vehicle free of charge only applies to vehicles registered from 1 July 2002 on, while, from 2007 on, take-back will be carried out free of charge, independently of the year of registration, provided that the vehicle still contains all its essential component parts (especially engine and body) and is free from additional waste materials.

Our contracted network of authorised treatment facilities has been carefully selected in order to provide a quality service to our customers by de-polluting and recycling "End of Life Vehicles" to approved environmental standards. To find out the location of your nearest authorised treatment facility, offering free of charge take-back, simply contact one of our dealers or refer to the Fiat web site or call the toll free number 00800 3428 0000.

* Passenger transportation vehicles to seat a max. of nine persons, having a total admissible weight of 3.5 t

Downloaded from www.Manualslib.com manuals search engine

SELÈNIA®

At the heart of your engine.

Always ask your mechanic for SELÈNIA®

Downloaded from www.Manualslib.com manuals search engine

Oil change? The experts reccomend Selenia.

*The engine of your car is factory filled with **Selenia.** This is an engine oil range which satisfies the most advanced international specifications. Its superior technical characteristics allow **Selenia** to guarantee the **highest performance** and **protection of your engine**.*

The Selenia range includes a number of technologically advanced products:

SELENIA PERFORMER MULTIPOWER
Particularly ideal for the protection of new generation petrol engines, very effective even in the most severe weather conditions. It guarantees a reduction in fuel consumption (Energy conserving) and it is also ideal for alternative engines.

SELENIA K
is the synthetic lubricant with innovative technology, which ensures improved cold starting for petrol engines and the utmost protection also under typically “urban” conditions of use. Owing to its 5W-40 viscosimetric grade and its special formulation it more effectively meets the emission limits required by new European regulations and exceeds the major international specifications.

SELENIA WR
Oil specifically designed for common rail Multijet engines. Particularly effective during cold starts, it guarantees maximum wear protection and hydraulic tappets control, reduction in consumption and stability at high temperatures.

SELENIA DIGITECH
Fully synthetic lubricant for petrol and diesel engines.
Its advanced technology guarantees maximum protection, a reduction in consumption and reliability in extreme climate conditions.

The range also includes Selenia StAR, Selenia Racing, Selenia 20K Alfa Romeo, Selenia TD, Selenia Performer 5W-40
For further information on Selenia products visit the web site www.flselenia.com.

Downloaded from www.Manualslib.com manuals search engine

Fiat Group Automobiles S.p.A. - Customer Services - Technical Services - Service Engineering
Largo Senatore G. Agnelli, 5 - 10040 Volvera - Torino (Italia)
Print N. 603.81.321 - 09/2008 - 3rd edition

Downloaded from www.Manualslib.com manuals search engine

ENGLISH

The data contained in this publication is intended merely as a guide. FIAT reserves the right to modify the models and versions described in this booklet at any time for technical and commercial reasons.
If you have any further questions please consult your FIAT dealer.
Printed in recycled paper without chlorine.

Downloaded from www.Manualslib.com manuals search engine