METER / GAUGE SYSTEM

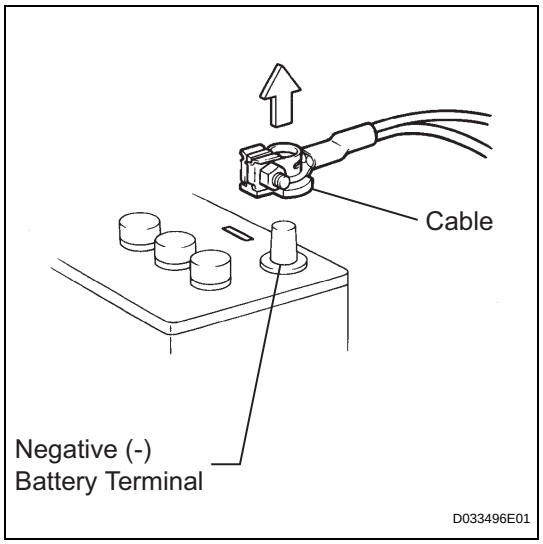

PRECAUTION

1. REMOVAL AND INSTALLATION OF BATTERY TERMINAL CABLE

(a) Before performing electronic work, disconnect the battery negative (-) terminal cable in order to prevent it from shorting and burning out.

(b) When disconnecting and reconnecting the battery cable, turn the power switch OFF and headlight dimmer switch OFF. Then loosen the terminal nut completely. Be careful not to damage the cable or terminal.

(c) When the battery terminal cable is removed, the memories of the clock, radio, DTCs, etc. are erased. So before removing it, check and make a note of them.

NOTICE:

When disconnecting the cable from the negative (-) battery terminal, initialize the following system(s) after the cable is reconnected.

System Name	See procedure
Power Window Control System	IN-32

2. FOR HYBRID SYSTEM ACTIVATION

(a) When the warning light is illuminated or the battery has been disconnected and reconnected, pressing the power switch may not start the system on the first try. If so, press the power switch again.

(b) With the power switch's power mode changed to ON (IG), disconnect the battery. If the key is not in the key slot during reconnection, DTC B2799 may be output.

PARTS LOCATION

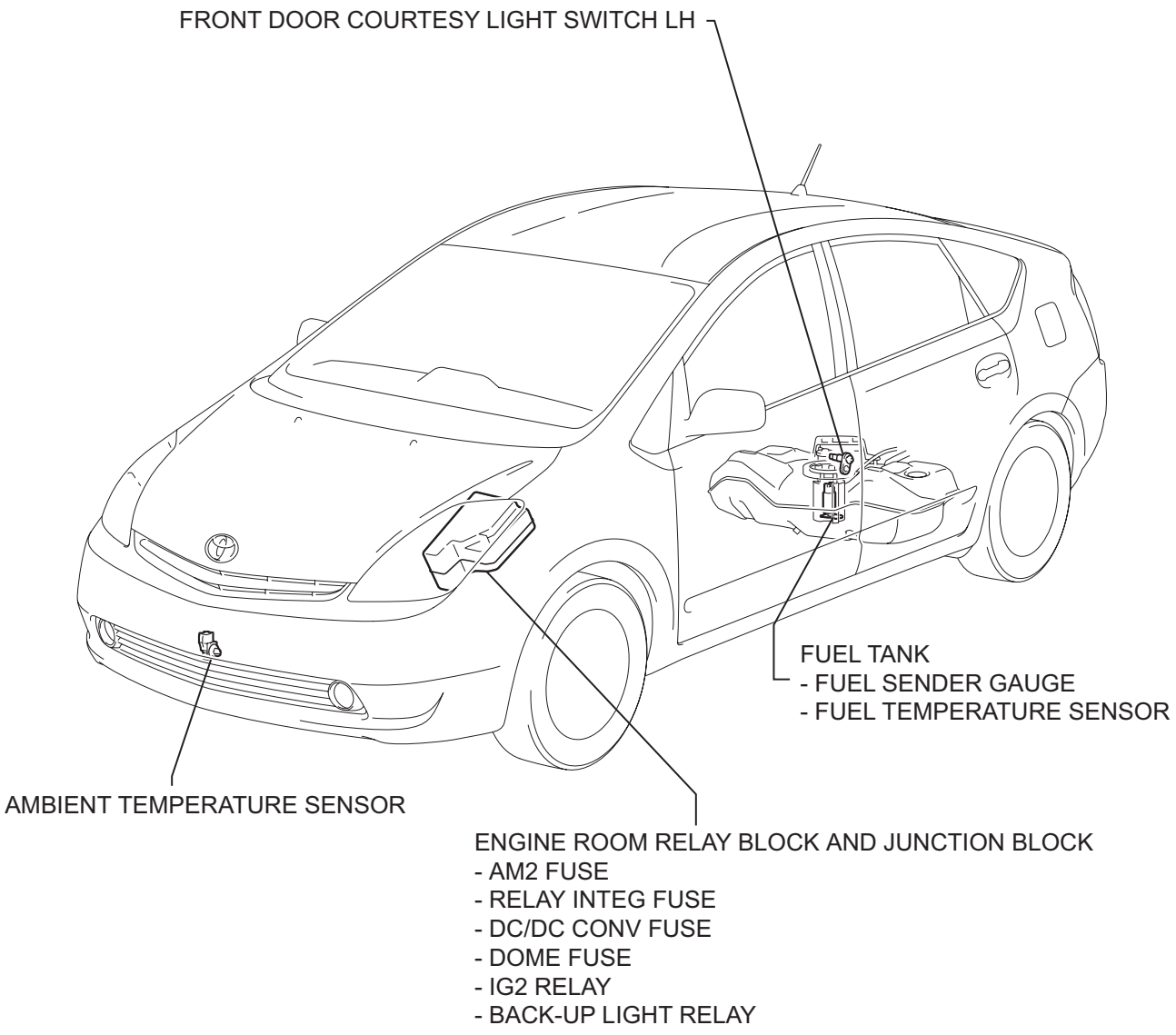

P

B140396E01

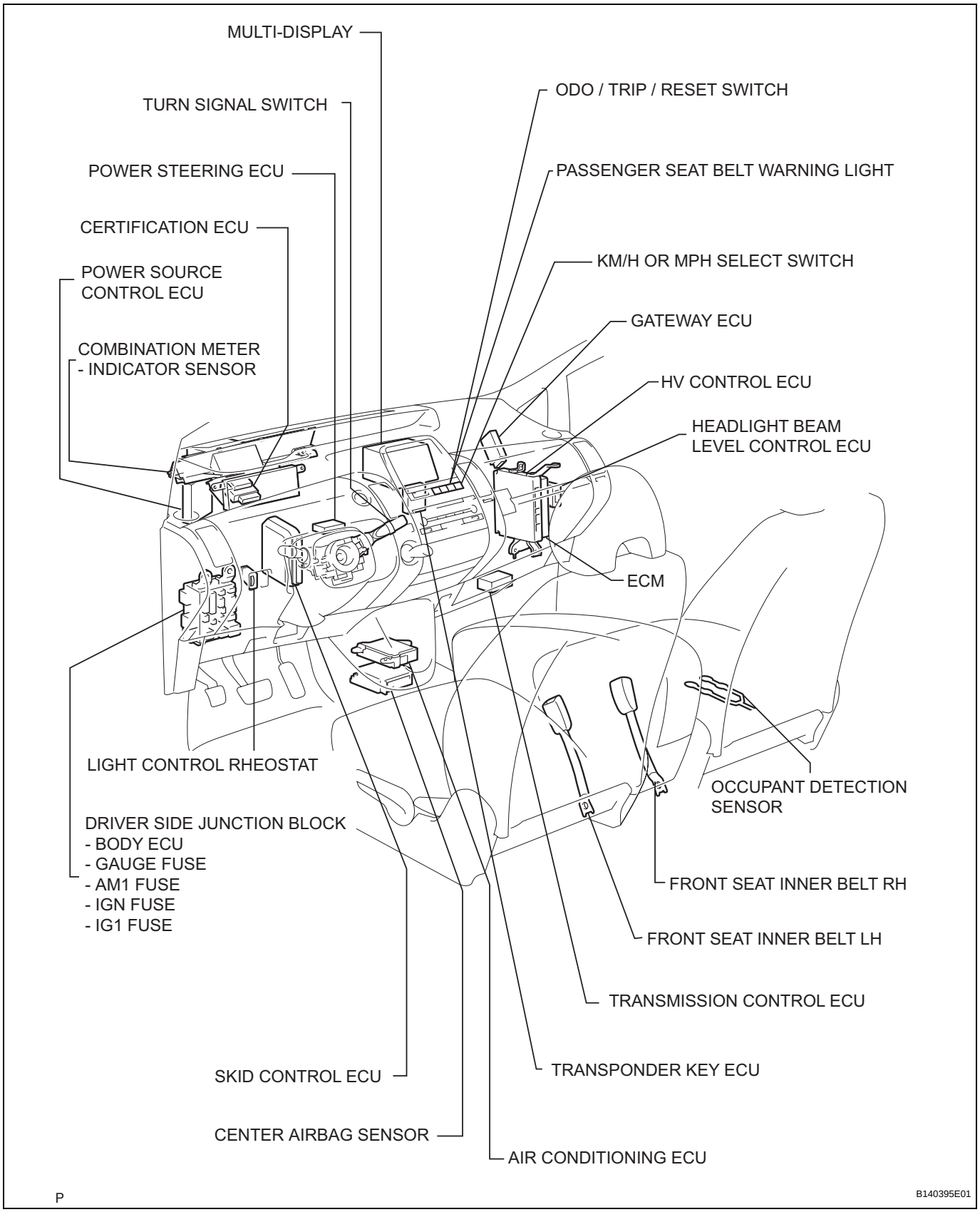
MULTI-DISPLAY
TURN SIGNAL SWITCH
POWER STEERING ECU
CERTIFICATION ECU
POWER SOURCE CONTROL ECU
COMBINATION METER - INDICATOR SENSOR
ODO / TRIP / RESET SWITCH
PASSENGER SEAT BELT WARNING LIGHT
KM/H OR MPH SELECT SWITCH
GATEWAY ECU
HV CONTROL ECU
HEADLIGHT BEAM LEVEL CONTROL ECU
ECM
LIGHT CONTROL RHEOSTAT
DRIVER SIDE JUNCTION BLOCK
- BODY ECU
- GAUGE FUSE
- AM1 FUSE
- IGN FUSE
- IG1 FUSE
OCCUPANT DETECTION SENSOR
FRONT SEAT INNER BELT RH
FRONT SEAT INNER BELT LH
TRANSMISSION CONTROL ECU
TRANSPONDER KEY ECU
SKID CONTROL ECU
CENTER AIRBAG SENSOR
AIR CONDITIONING ECU
P
B140395E01

ME

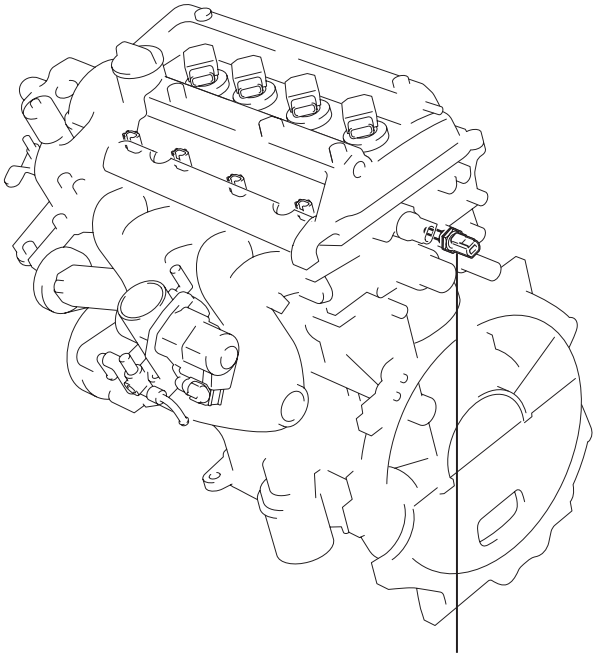

ENGINE COOLANT TEMPERATURE SENSOR

P

B140397E01

SYSTEM DIAGRAM

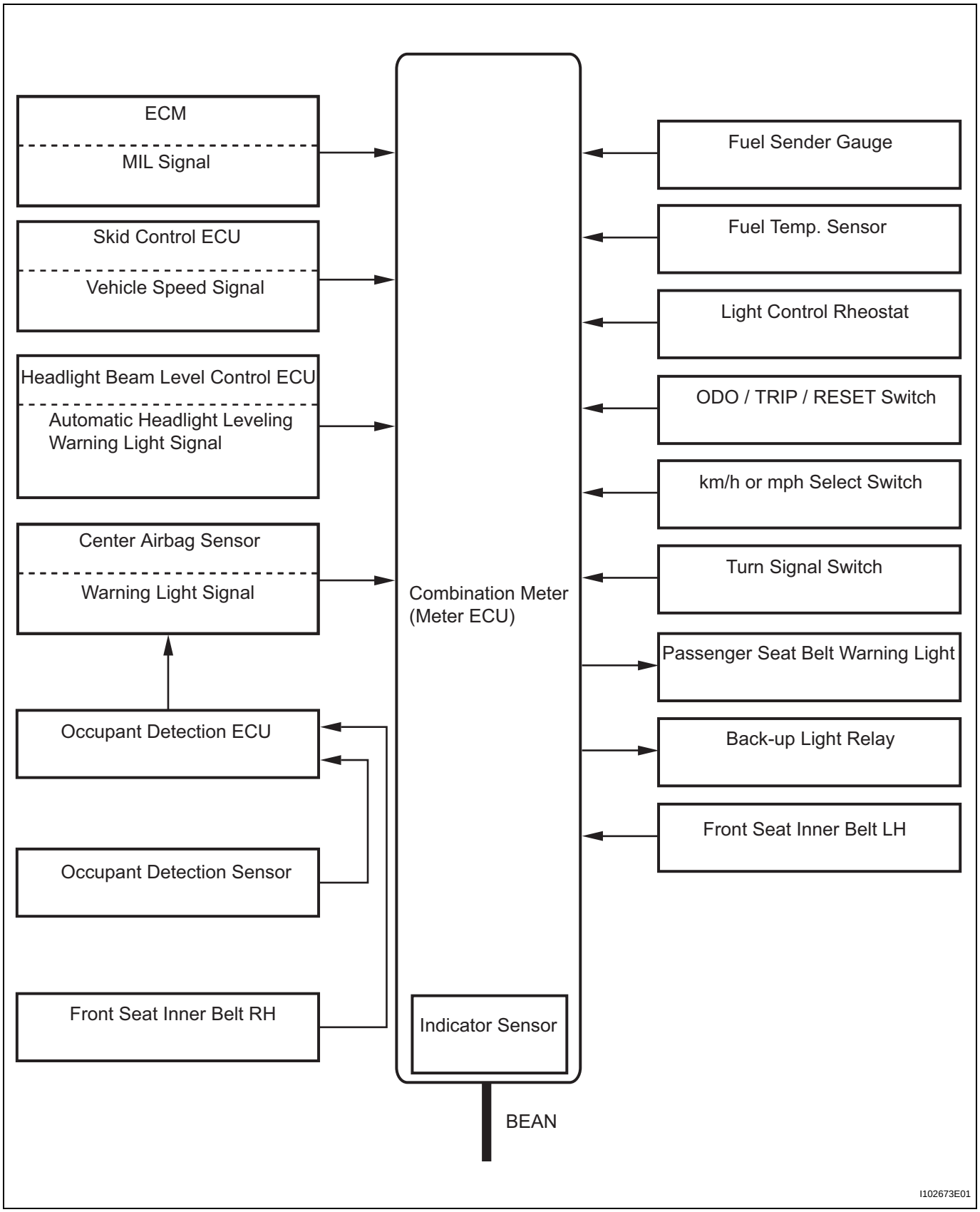

ME

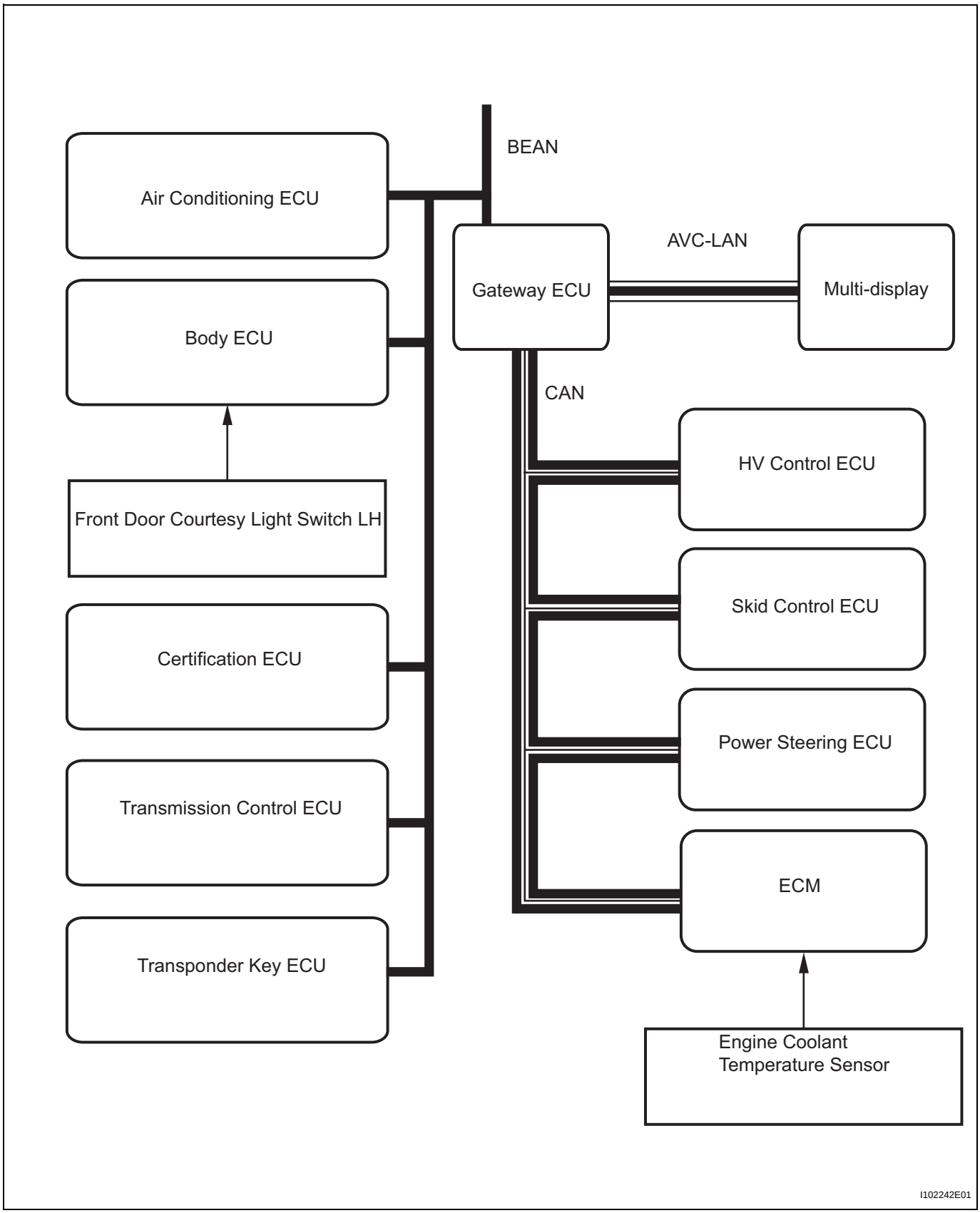

ME

Gateway

ECU	Signals from/to Combination Meter (Meter ECU)
Gateway ECU	• Receives ODO METER information signal

BEAN

ECU	Signals from / to Combination Meter (Meter ECU)
A/C ECU	• Transmits ambient temperature signal (for low ambient temperature warning light) • Transmits indicator light (A/C AUTO, RECIRCULATE, Front DEF, Rear DEF) ON demand signal • Receives vehicle speed signal
Body ECU	• Receives vehicle speed signal • Receives taillight cancel signal • Transmits D seat door courtesy SW signal (for headlight reminder control) • Transmits ACC switch signal • Transmits D seat door courtesy SW signal • Transmits warning ON signal (HEAD and TAIL) • Transmits headlight ON signal (HI-BEAM) • Transmits front fog light ON signal (FOG indicator light) • Transmits meter illumination light dimmer demand signal • Transmits warning ON signal (all door courtesy switch)
Certification ECU	• Receives vehicle speed signal • Transmits inside cabin key detection signal (Smart Key System) • Transmits buzzer sounding demand signal
Transmission Control ECU	• Transmits P state signal • Transmits master warning light (P control malfunction) ON demand signal • Transmits shift position (N, P) signal
Transponder Key ECU	• Transmits master warning light (shift warning) ON demand signal • Transmits buzzer sounding demand signal • Receives vehicle speed signal
Steering Lock ECU	• Transmits buzzer sounding demand signal • Transmits meter display signal

CAN

ECU	Signals from / to Combination Meter (Meter ECU)
HV control ECU	• Transmits shift position signal (P, R, N, D, B) (for shift position indicator light) • Transmits cruise indicator light ON demand signal • Transmits master warning light (HV system, main battery, NDB warning, Motor inverter, CHARGE) ON demand signal • Transmits READY indicator ON/blink & buzzer sounding signal • Transmits starter ON signal • Transmits EV indicator ON/blink and buzzer sounding signal
ECM	• Receives fuel tank level signal • Transmits engine coolant temperature signal (for master warning light [engine coolant temperature warning]) • Transmits engine speed signal (for trip information operation) • Transmits fuel injection volume signal (for trip information operation) • Transmits test mode signal • Transmits master warning light (OIL. P) ON signal
Skid Control ECU	• Transmits warning signal (ABS, VSC, BRAKE, ECB) ON/blink demand signal • Transmits diagnosis signal (ABS, VSC, ECB) ON/blink demand signal • Transmits SLIP indicator light ON/blink demand signal
Power Steering ECU	• Transmits EPS warning light ON/blink demand signal

AVC-LAN

ECU	Signals from / to Combination Meter (Meter ECU)
Multi-display	• Transmits trip information operation signal • Receives warning (fuel level, headlight leveling, EPS) display signal • Receives trip information display signal • Receives km/h (mph) selector switch signal • Receives taillight cancel switch signal

SYSTEM DESCRIPTION

1. METER GAUGE AND WARNING/INDICATOR

Gauge

Item	Signal Description
Speedometer	Based on a signal received from wheel speed sensor, skid control ECU calculates vehicle speed and transmits data to meter
Fuel	Displays a fuel level receiving a signal from fuel sender gauge (Direct line)

Warning / Indicator

Item	Signal Description
TURN	Turn signal switch is ON
BEAM	Displays receiving a signal from body ECU (Direct line)
CHARGE	Receives malfunction signal from alternator
MIL	Receives malfunction signal from ECM
DOOR	Open door indicator turns on receiving a signal from body ECU (Direct line)
SEAT BELT	Driver's seat belt buckle switch is OFF (Unfastened)
BRAKE	Displays when parking brake switch is ON or brake fluid level warning switch is ON
MAINT REQUID (Blinks)	Blinks when running 4,500 miles after ODO/TRIP switch is set
MAINT REQUID (Comes on)	Turns on when running 5,000 miles after ODO/TRIP switch is set
CRUISE	Receives malfunction signal from ECM
AIRBAG	Receives malfunction signal from airbag ECU
FUEL	Receives fuel empty signal from fuel sender gauge
A/T P	Receives P signal from hybrid vehicle control ECU (BEAN)
A/T R	Receives R signal from hybrid vehicle control ECU (BEAN)
A/T N	Receives N signal from hybrid vehicle control ECU (BEAN)
A/T D	Receives D signal from hybrid vehicle control ECU (BEAN)
A/T B	Receives B signal from hybrid vehicle control ECU (BEAN)
SLIP	Receives malfunction signal from skid control ECU
VSC	Receives malfunction signal from skid control ECU
ABS	Receives malfunction signal from skid control ECU
ECB	Receives malfunction signal from skid control ECU
LOW AMBIENT TEMP	Receives LOW AMBIENT TEMP. signal from A/C ECU (BEAN)
A/C AUTO	Receives A/C AUTO signal from A/C ECU (BEAN)
RECIRCULATE	Receives RECIRCULATE signal from A/C ECU (BEAN)
Rr DEF	Receives Rr DEF signal from A/C ECU (BEAN)
Fr DEF	Receives Fr DEF signal from A/C ECU (BEAN)
SECURITY	Receives SECURITY signal from body ECU (BEAN)
SMART	Receives SMART signal from certification ECU (BEAN)

2. GENERAL

- The combination meter is digital display type.
- The meter ECU maintains communication with other ECUs through the BEAN. It also maintains communication with the ECUs (or components) that compose the CAN and AVC-LAN through the gateway ECU.
- The meter ECU and buzzer are installed in the combination meter.
- The "READY" light comes on to inform the driver that the vehicle is ready to be driven.

- The low ambient temperature indicator light comes on to inform the driver that the ambient temperature is low (below 3°C (6.6°F)).
- The master warning light comes on with buzzer sounding if there is a malfunction in each system (see page ME-11).
- The 2 inclination sensors are built in the combination meter to detect the inclination (longitudinal and latitudinal) of the vehicle.

3. OIL REPLACEMENT REMINDER WARNING LIGHT (w/ REMINDER WARNING LIGHT)

- 4,500 miles after ODO/TRIP switch is set, the maintenance indicator begins to blink for 15 seconds after the power switch is turned ON (ACC or IG).
- 5,000 miles after ODO/TRIP switch is set, the maintenance indicator comes on. For resetting, refer to the following procedure (see page ME-23).

4. FUEL GAUGE

- For the purpose of correcting the calculation of the fuel level by the meter ECU, 2 inclination sensors that detect the vehicle's longitudinal and latitudinal inclinations are installed in the meter ECU. The fuel temperature sensor are installed in the fuel tank to detect the temperature in the fuel tank.
- The fuel level is calculated by the meter ECU in accordance with the signals of the sender gauge located in the sub tank and the vehicle speed signal received from the brake ECU. At this time, corrections are made by the signals from the inclination sensor that detect the vehicle's longitudinal and latitudinal inclinations and the fuel temperature sensors that detects the temperature in the fuel tank. For the inclination sensor centered value setting, refer to the following procedure (see page ME-23).

HOW TO PROCEED WITH TROUBLESHOOTING

HINT:
- Use these procedures to troubleshoot the meter / gauge system.
- *: Use the intelligent tester.

1 VEHICLE BROUGHT TO WORKSHOP

NEXT

2 INSPECT BATTERY VOLTAGE

Standard voltage:
11 to 14 V
If the voltage is below 11 V, recharge or replace the battery before proceeding.

NEXT

3 PROBLEM SYMPTOMS TABLE

Result

Result	Proceed to
Fault is not listed in problem symptoms table	A
Fault is listed in problem symptoms table	B

B → **Go to step 5**

A

4 OVERALL ANALYSIS AND TROUBLESHOOTING*

(a) Terminals of ECU (see page ME-14)
(b) DATA LIST / ACTIVE TEST (see page ME-23)
(c) On-vehicle Inspection (see page ME-23)

NEXT

5 REPAIR OR REPLACE

NEXT

6	**CONFIRMATION TEST**

NEXT

END

CUSTOMIZE PARAMETERS

NOTICE:
Basically, these buzzers should be set on for safety driving. However, only if it is necessary to set the buzzer off for some reason, perform the following procedures.

Procedure

Steps	Back-up Warning Buzzer	Driver's Seat Belt Buzzer	Front Passenger's Seat Belt Buzzer
1	Turn power switch ON (IG)	Turn power switch ON (IG)	Turn power switch ON (IG)
2	Press ODO / TRIP switch until odometer displays "ODO"	Press ODO / TRIP switch until odometer displays "ODO"	Press ODO / TRIP switch until odometer displays "ODO"
3	Turn power switch OFF	Turn power switch OFF	Turn power switch OFF
4	Turn power switch ON (IG) while depressing brake pedal. Check that combination meter displays "READY"	Turn power switch ON (IG) while depressing brake pedal. Check that combination meter displays "READY"	Turn power switch ON (IG) while depressing brake pedal. Check that combination meter displays "READY"
5	After turning power switch ON (IG), press ODO / TRIP switch within 6 seconds, and hold it down for 10 seconds or more	After turning power switch ON (IG), press ODO / TRIP switch within 6 seconds, and hold it down for 10 seconds or more.	Sit in front passenger seat. After turning the power switch ON (IG), press ODO / TRIP switch within 6 seconds, and hold it down for 10 seconds or more.
6	Continue holding down ODO / TRIP switch, move shift lever to R and press P switch	Continue holding down ODO / TRIP switch, fasten driver seat belt	Continue holding down ODO / TRIP switch, fasten front passenger seat belt
7	Check that odometer displays either "b-on" or "b-off"*	Check that odometer displays either "b-on" or "b-off"*	Check that odometer displays either "b-on" or "b-off"*
8	Press ODO / TRIP switch to change display to "b-off"	Press ODO / TRIP switch to change display to "b-off"	Press ODO / TRIP switch to change display to "b-off"
9	Turn power switch OFF	Turn power switch OFF	Turn power switch OFF
10	Turn power switch ON (IG) while depressing brake pedal. Check that combination meter displays "READY"	Turn power switch ON (IG) while depressing brake pedal. Check that combination meter displays "READY"	Turn power switch ON (IG) while depressing brake pedal. Check that combination meter displays "READY"
11	Check that no buzzer sounds when shift lever is in "R"	Check that no buzzer sounds	Check that no buzzer sounds when sitting on front passenger seat

HINT:
*: "b-off" indicates that the buzzer is OFF. "b-on" indicates that the buzzer is ON. The buzzer cancel setting will be finished (the odometer will display "ODO") if the ODO / TRIP switch is not operated for 10 seconds or more. In this case, perform step 11 to check that buzzer cancel setting is complete. If it is not complete, start from step 1 again.

NOTICE:
When either the battery cable or the combination meter connector is disconnected, these buzzers are set on.

PROBLEM SYMPTOMS TABLE

HINT:

- Use the table below to help determine the cause of the problem symptom. The potential causes of the symptoms are listed in order of probability in the "Suspected area" column of the table. Check each symptom by checking the suspected areas in the order they are listed. Replace parts as necessary.
- Inspect the fuses and relays related to this system before inspecting the suspected areas below.

Malfunction system

Symptom	Suspected area	See page
Entire combination meter does not operate	1. Refer to troubleshooting	ME-29
ODO / TRIP switch malfunction	1. Refer to troubleshooting	ME-41
Operating light control rheostat does not change light brightness	1. Refer to troubleshooting	ME-43

Meter gauges

Symptom	Suspected area	See page
Speedometer malfunction	1. Refer to troubleshooting	ME-31
Fuel receiver gauge malfunction	1. Refer to troubleshooting	ME-34

Warning lights

Symptom	Suspected area	See page
MIL does not turn on	1. Refer to troubleshooting	ES-428
	2. Wire harness	-
	3. Combination meter	-
Brake control warning light does not turn on	1. Refer to troubleshooting	BC-186
	2. Wire harness	-
	3. Combination meter	-
ABS warning light does not turn on	1. Refer to troubleshooting	BC-170
	2. Wire harness	-
	3. Combination meter	-
SRS warning light does not turn on	1. Refer to troubleshooting	RS-165
	2. Wire harness	-
	3. Combination meter	-
Open door warning light does not turn on	1. Door courtesy light switch circuit	LI-54
	2. Wire harness	-
	3. Combination meter	-
VSC warning light does not turn on	1. Refer to troubleshooting	BC-175
	2. Wire harness	-
	3. Combination meter	-
Driver side seat belt warning light does not operate	1. Refer to troubleshooting	ME-36
Seat belt warning light for passengers seat does not operate	1. Refer to troubleshooting	ME-38

Indicator lights

Symptom	Suspected area	See page
Turn indicator light does not turn on	1. Turn signal and hazard warning system	LI-123
	2. Wire harness	-
	3. Combination meter	-

Symptom	Suspected area	See page
High beam indicator light does not turn on	1. Headlight dimmer switch	LI-106
	2. Wire harness	-
	3. Combination meter	-
A/C AUTO indicator light does not turn on	1. Refer to troubleshooting	AC-23
	2. Wire harness	-
	3. Combination meter	-
Rr DEF indicator light does not turn on	1. Refer to troubleshooting	AC-23
	2. Wire harness	-
	3. Combination meter	-
Fr DEF indicator light does not turn on	1. Refer to troubleshooting	AC-23
	2. Wire harness	-
	3. Combination meter	-
RECIRCULATE indicator light does not turn on	1. Refer to troubleshooting	AC-23
	2. Wire harness	-
	3. Combination meter	-
HEAD indicator light does not turn on	1. Refer to troubleshooting	LI-69
	2. Wire harness	-
	3. Combination meter	-
SMART indicator light does not turn on	1. Refer to troubleshooting	DL-185
	2. Wire harness	-
	3. Combination meter	-
SECURITY indicator light does not turn on	1. Refer to troubleshooting	TD-36
	2. Wire harness	-
	3. Combination meter	-
SLIP indicator light does not turn on	1. Refer to troubleshooting	BC-187
	2. Wire harness	-
	3. Combination meter	-
CRUISE indicator light does not turn on	1. ECM	-
	2. Wire harness	-
	3. Combination meter	-
All buzzers (key reminder, tail cancel, seat belt) do not operate	1. Refer to troubleshooting	ME-10
	2. Combination meter	-

ME

Display warning

Symptom	Suspected area	See page
Malfunction in HV system	1. Hybrid vehicle control ECU	HV-20
	2. Combination meter	-
Main battery low voltage malfunction	1. Hybrid vehicle control ECU	HV-20
	2. Combination meter	-
AT shift indicator light does not turn on	1. Hybrid vehicle control ECU	HV-20
	2. Combination meter	-
Charging malfunction	1. Hybrid vehicle control ECU	HV-20
	2. Combination meter	-
Water temperature display malfunction	1. ECM	-
	2. Combination meter	-
Malfunction in transmission control system	1. Transmission control ECU	-
	2. Combination meter	-
Low engine oil pressure display malfunction	1. Engine oil pressure switch	-
	2. Combination meter	-

Symptom	Suspected area	See page
Malfunction in EPS system	1. Power steering ECU	-
	2. Combination meter	-
Malfunction in headlight leveling control	1. Headlight control ECU	-
	2. Combination meter	-

Buzzer

Symptom	Suspected area	See page
Key reminder warning buzzer does not sound	1. Refer to troubleshooting	DL-209
	2. Wire harness	-
	3. Combination meter	-
Light reminder warning buzzer does not sound	1. Refer to troubleshooting	LI-69
	2. Wire harness	-
	3. Combination meter	-
Seat belt warning buzzer does not sound	1. Refer to troubleshooting	SB-4
	2. Wire harness	-
	3. Combination meter	-
Headlight automatic leveling warning buzzer does not sound	1. Refer to troubleshooting	LI-69
	2. Wire harness	-
	3. Combination meter	-
Warning buzzer does not sound (READY, A/T R, N/D warning, HV system, Main battery, Charge, Shift reject)	1. Refer to troubleshooting	LI-69
	2. Wire harness	-
	3. Combination meter	-
Warning buzzer does not sound (Hi water temperature, Oil pressure)	1. Refer to troubleshooting	LI-69
	2. Wire harness	-
	3. Combination meter	-
Warning buzzer does not sound (Smart key system)	1. Refer to troubleshooting	LI-69
	2. Wire harness	-
	3. Combination meter	-
Steering lock warning buzzer does not sound	1. Refer to troubleshooting	PS-11
	2. Wire harness	-
	3. Combination meter	-

TERMINALS OF ECU

1. CHECK COMBINATION METER (METER ECU)

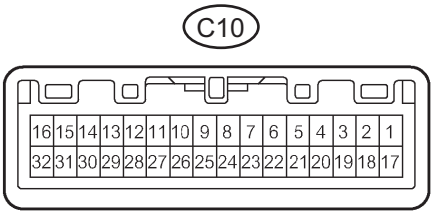

I040067E01

Symbols (Terminals No.)	Wiring Color	Terminal Description	Condition	Specified Condition
km/h or mph (C10-1) - Body ground	L - Body ground	km/h or mph signal	Power switch ON (ACC or IG) and km/h or mph switch ON	Below 1 V
			Power switch ON (ACC or IG) and km/h or mph switch OFF	4 to 5.5 V
TRIP EARTH (C10-2) - Body ground	B - Body ground	GND signal FOR ODO/ TRIP SWITCH	Always	Below 1 Ω
ODO/TRIP/RESET (C10-3) - Body ground	R - Body ground	ODO/TRIP/RESET signal	ODO/TRIP/RESET switch ON	Below 1 V
			ODO/TRIP/RESET switch OFF	4 to 5.5 V
IG2 (C10-4) - Body ground	O - Body ground	Power switch signal	Power switch ON	10 to 14 V
			Power switch OFF	Below 1 V
D-BELT SW (C10-6) - Body ground	LG - Body ground	Driver seat belt condition	D-BELT indicator light ON (IG)	Below 1 V
			D-BELT indicator light OFF	10 to 14 V
P-BELT SW (C10-7) - Body ground	R - Body ground	Passenger seat belt condition	P-BELT indicator light ON	Below 1 V
			P-BELT indicator light OFF	10 to 14 V
SECURITY (C10-8) - Body ground	R - Body ground	SECURITY signal	Key is not inserted	10 to 14 V
			Key is inserted	Below 1 V
SPEED IN (C10-9) - Body ground	V - Body ground	Speed signal (Input)	Power switch ON (ACC or IG) and turn the wheel slowly	Pulse generation (See waveform 1)
AUTO LVL (C10-10) - Body ground	L - Body ground	Headlight automatic leveling signal	Headlight leveling system is normal	Below 1 V
			Headlight leveling system is malfunctioning	10 to 14 V
AIRBAG (C10-11) - Body ground	B - Body ground	AIRBAG signal	AIRBAG indicator light ON	Below 1 V
			AIRBAG indicator light OFF	8 to 14 V
TEMP SSR- (C10-12) - Body ground	L - Body ground	Outside temperature signal	Always	4 to 5.5 V
4P OUT (C10-13) - Body ground	V - Body ground	Speed signal (Output)	Power switch ON (ACC or IG) and turn the wheel slowly	Pulse generation (See waveform 2)
SIGNAL EARTH (C10-14) - Body ground	BR - Body ground	GND signal	Always	Below 1 Ω

Symbols (Terminals No.)	Wiring Color	Terminal Description	Condition	Specified Condition
FUEL IN (C10-15) - Body ground	B - Body ground	Fuel signal	Power switch ON (ACC or IG) and fuel level is FULL	4.0 Ω
			Power switch ON (ACC or IG) and fuel level is EMPTY	110 Ω
TURN R (C10-18) - Body ground	G - Body ground	Turn signal right	Turn signal RH indicator light OFF	Below 1 V
			Turn signal RH indicator light ON	10 to 14 V
TURN L (C10-19) - Body ground	Y - Body ground	Turn signal left	Turn signal LH indicator light OFF	Below 1 V
			Turn signal LH indicator light ON	10 to 14 V
TEMP SSR+ (C10-20) - Body ground	R - Body ground	GND	Always	Below 1 Ω
+B (C10-21) - Body ground	Y - Body ground	Power switch signal	Always	10 to 14 V
IG2 (C10-22) - Body ground	V - Body ground	Power switch signal	Power switch ON (IG)	10 to 14 V
			Power switch OFF	Below 1 V
BACK-UP LP (C10-23) - Body ground	P - Body ground	Back-up light signal	Power switch ON (ACC or IG) and shift is except R position	Below 1 V
			Power switch ON (ACC or IG) and shift is R position	10 to 14 V
CHECK E/G (C10-26) - Body ground	G - Body ground	MIL signal	Power switch ON (ACC or IG) and MIL on	Below 1 V
			Power switch ON (ACC or IG) and MIL off	10 to 14 V
TC (C10-28) - Body ground	SB - Body ground	Tail cancel (light condition) signal	Power switch ON (ACC or IG)	Pulse generation (See waveform 3)
TR (C10-29) - Body ground	R - Body ground	Rheostat (light control) signal	Light control dimmer switch is OFF	Below 1 V
			Light control dimmer switch is TAIL / HEAD	10 to 14 V
P-BELT LP (C10-30) - Body ground	Y - Body ground	Passenger seat belt signal	Power switch ON (ACC or IG) and sit on passenger seat, seat belt unfastened	Below 1 V
			Power switch ON (ACC or IG) and sit on passenger seat, seat belt fastened	10 to 14 V
FUEL EARTH (C10-31) - Body ground	BR - Body ground	GND for fuel sender gauge	Always	Below 1 V

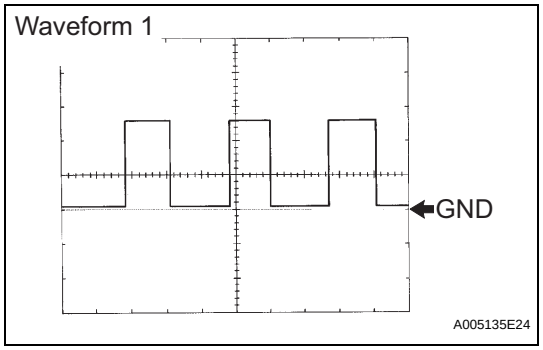

(a) Using an oscilloscope, check the signal waveform 1 of the meter.

Waveform 1 (Reference)

Item	Contents
Symbols (Terminal No.)	SPEED IN (C10-9) - Body ground
Tool setting	5 V/DIV., 20 msec./DIV.
Vehicle condition	Driving at approx. 20 km/h (12 mph)

HINT:
As vehicle speed increases, the wavelength shortens.

ME

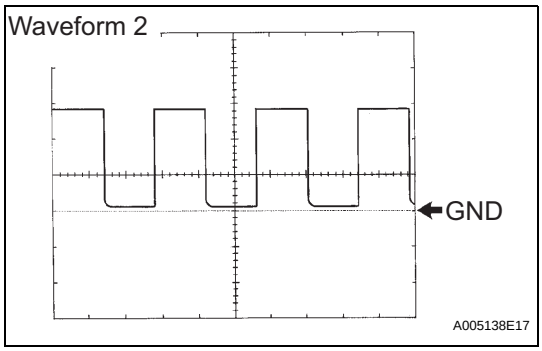

(b) Using an oscilloscope, check the signal waveform 2 of the meter.

Waveform 2 (Reference)

Item	Contents
Symbols (Terminal No.)	4P OUT (C10-13) - Body ground
Tool setting	5 V/DIV., 10 msec./DIV.
Vehicle condition	Engine idle speed

HINT:
As vehicle speed increases, the wavelength shortens.

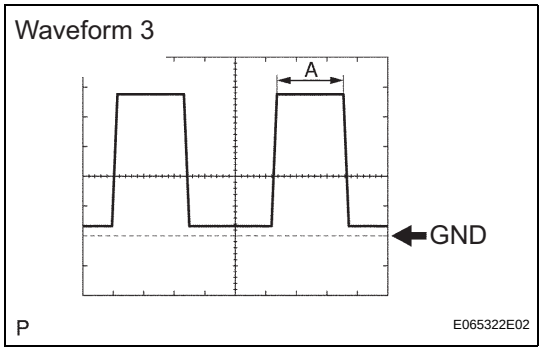

(c) Using an oscilloscope, check the signal waveform 3 of the meter.

Waveform 3 (Reference)

Item	Contents
Symbols (Terminal No.)	TC (C10-28) - Body ground
Tool setting	2 V/DIV., 1 msec./DIV.
Vehicle condition	Power switch ON (IG)

HINT:
Waveform changes as illumination dims ("A" becomes longer).

2. CHECK SUB WIRE HARNESS CONNECTOR

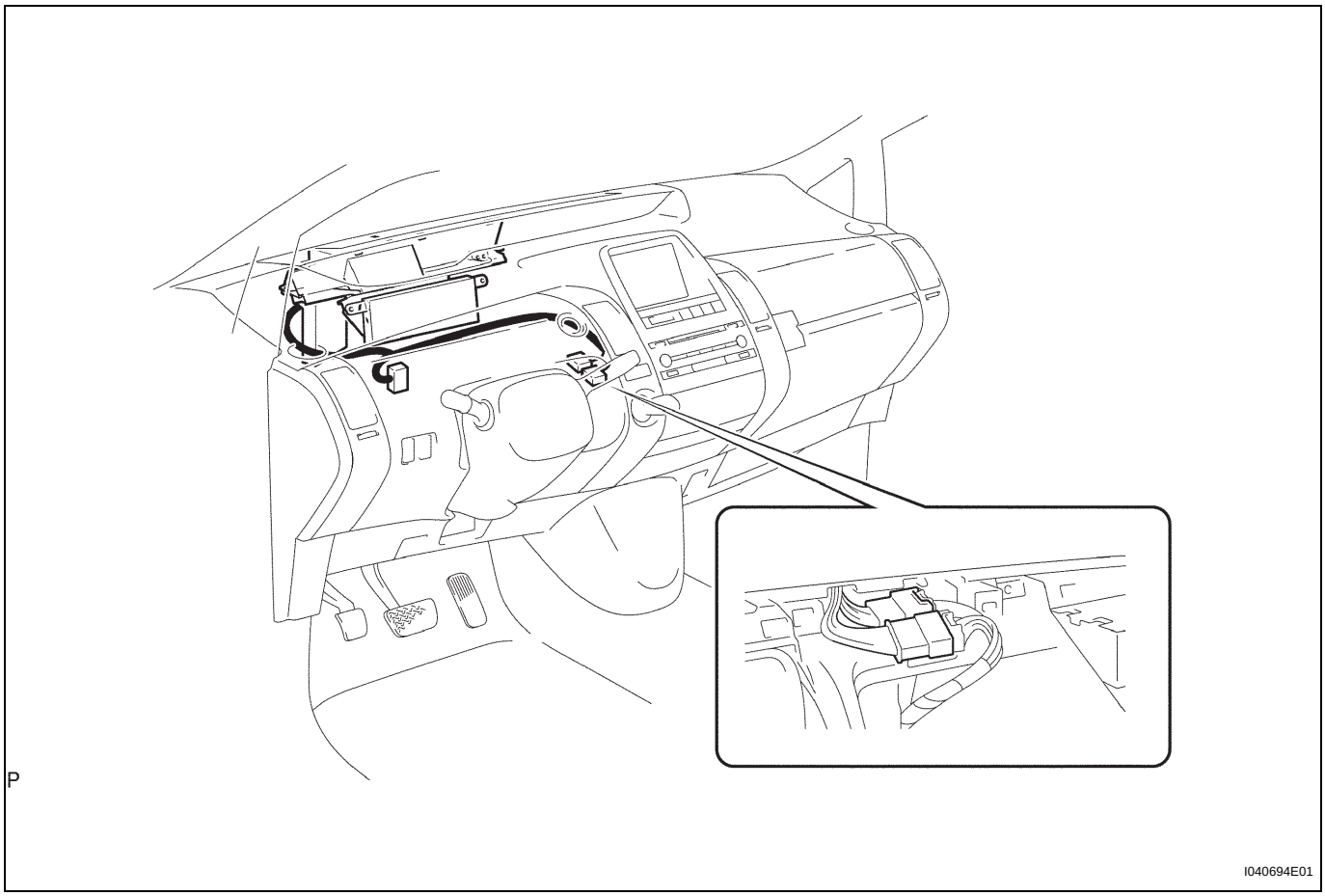

ME

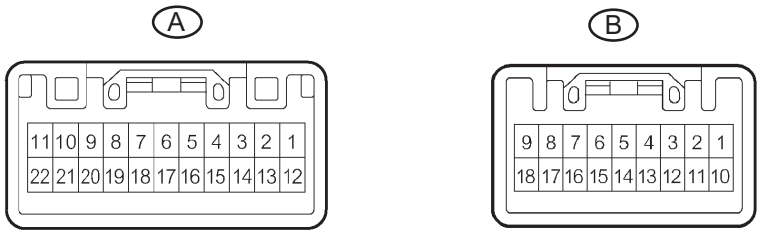

I040695E01

Symbols (Terminals No.)	Wiring Color	Terminal Description	Condition	Specified Condition
SECURITY (A-1) - Body ground	R - Body ground	SECURITY signal	Key is inserted	Below 1 V
			Key is not inserted	10 to 14 V
D-BELT SW (A-3) - Body ground	LG - Body ground	Driver seat belt condition	D-BELT indicator light ON	Below 1 V
			D-BELT indicator light OFF	10 to 14 V
SIGNAL EARTH (A-4) - Body ground	BR - Body ground	GND signal	Always	Below 1 Ω
TRIP EARTH (A-5) - Body ground	B - Body ground	GND signal FOR ODO/ TRIP SWITCH		
km/h or mph (A-6) - Body ground	L - Body ground	km/h or mph signal	Power switch ON (ACC or IG) and km/h or mph switch ON	Below 1 V
			Power switch ON (ACC or IG) and km/h or mph switch OFF	4 to 5.5 V
IG2 (A-7) - Body ground	O - Body ground	Power switch signal	Power switch ON (IG)	10 to 14 V
			Power switch OFF	Below 1 V
ODO/TRIP/RESET (A-8) - Body ground	R - Body ground	ODO/TRIP/RESET signal	ODO/TRIP/RESET switch ON	Below 1 V
			ODO/TRIP/RESET switch OFF	4 to 5.5 V
SPEED IN (A-9) - Body ground	V - Body ground	Speed signal (Input)	Power switch ON (ACC or IG) and turn the wheel slowly	Pulse generation (See waveform 1)
CHECK E/G (A-10) - Body ground	G - Body ground	MIL signal	Power switch ON (ACC or IG) and MIL ON	Below 1 V
			Power switch ON (ACC or IG) and MIL OFF	10 to 14 V
TURN L (A-11) - Body ground	Y - Body ground	Turn signal left	Turn signal LH indicator light OFF	Below 1 V
			Turn signal LH indicator light ON	10 to 14 V
TURN R (A-12) - Body ground	G - Body ground	Turn signal right	Turn signal RH indicator light ON	Below 1 V
			Turn signal RH indicator light OFF	10 to 14 V
BACK-UP LP (A-13) - Body ground	P - Body ground	BACK-UP light signal	Power switch ON (ACC or IG) and shift is except R position	Below 1 V
			Power switch ON (ACC or IG) and shift is R position	10 to 14 V
AIRBAG (A-14) - Body ground	B - Body ground	AIRBAG signal	AIRBAG indicator light ON	Below 1 V
			AIRBAG indicator light OFF	8 to 14 V

Symbols (Terminals No.)	Wiring Color	Terminal Description	Condition	Specified Condition
TR (B-2) - Body ground	R - Body ground	Rheostat (light control) signal	Light control dimmer switch is TAIL / HEAD	Below 1 V
			Light control dimmer switch is OFF	10 to 14 V
P-BELT SW (B-4) - Body ground	R - Body ground	Passenger seat belt condition	P-BELT indicator light ON	Below 1 V
			P-BELT indicator light OFF	10 to 14 V
AUTO LVL (B-5) - Body ground	L - Body ground	Headlight automatic leveling signal	Headlight leveling system is normal	Below 1 V
			Headlight leveling system is malfunctioning	10 to 14 V
TEMP SSR+ (B-8) - Body ground	R - Body ground	GND	Always	Below 1 Ω
+B (B-9) - Body ground	Y - Body ground	Power switch signal	Always	10 to 14 V
TEMP SSR- (B-10) - Body ground	L - Body ground	Outside temperature signal		4 to 5.5 V
IG2 (B-11) - Body ground	V - Body ground	Power switch signal	Power switch ON (IG)	10 to 14 V
			Power switch OFF	Below 1 V
FUEL IN (B-12) - Body ground	B - Body ground	Fuel signal	Power switch ON (ACC or IG) and fuel level is FULL	4.0 Ω
			Power switch ON (ACC or IG) and fuel level is EMPTY	110 Ω
FUEL EARTH (B-13) - Body ground	BR - Body ground	GND for fuel sender gauge	Always	Below 1 Ω
4P OUT (B-14) - Body ground	V - Body ground	Tachometer signal (Output)	Power switch ON (ACC or IG) and turn the wheel slowly	Pulse generation (See waveform 2)
TC (B-15) - Body ground	SB - Body ground	Taillight cancel (light condition) signal	Power switch ON (ACC or IG)	Pulse generation (See waveform 3)

ME

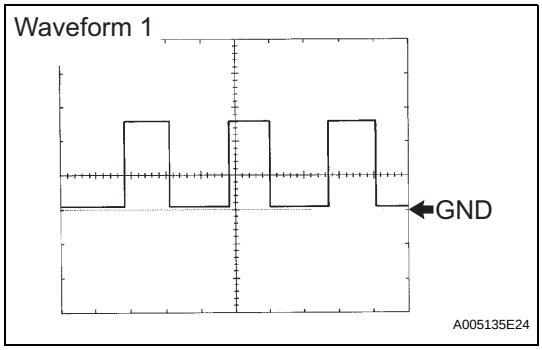

(a) Using an oscilloscope, check the signal waveform 1 of the meter.

Waveform 1 (Reference)

Item	Contents
Symbol (Terminal No.)	SPEED IN (A-9) - Body ground
Tool setting	5 V/DIV., 20 msec./DIV.
Vehicle condition	Driving at approx. 20 km/h (12 mph)

HINT:
As vehicle speed increases, the wavelength shortens.

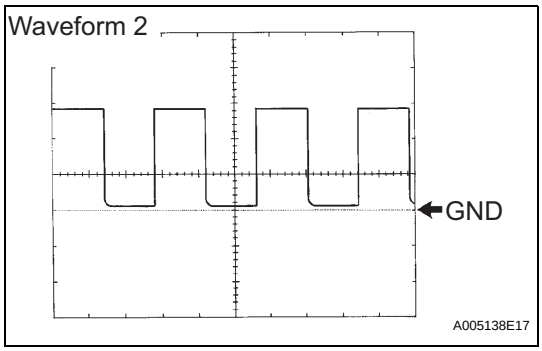

(b) Using an oscilloscope, check the signal waveform 2 of the meter.

Waveform 2 (Reference)

Item	Contents
Symbol (Terminal No.)	4P OUT (B-14) - Body ground
Tool setting	5 V/DIV., 10 msec./DIV.
Vehicle condition	Engine idle speed

HINT:
As vehicle speed increases, the wavelength shortens.

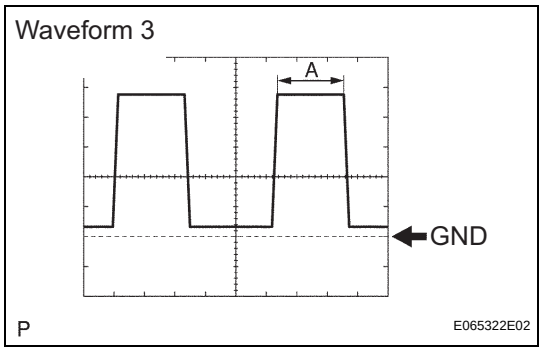

(c) Using an oscilloscope, check the signal waveform 3 of the meter.

Waveform 3 (Reference)

Item	Contents
Symbol (Terminal No.)	TC (B-15) - Body ground
Tool setting	2 V/DIV., 1 msec./DIV.
Vehicle condition	Power switch ON (IG)

HINT:
Waveform changes as illumination dims ("A" becomes longer).

3. COMBINATION METER INNER CIRCUIT

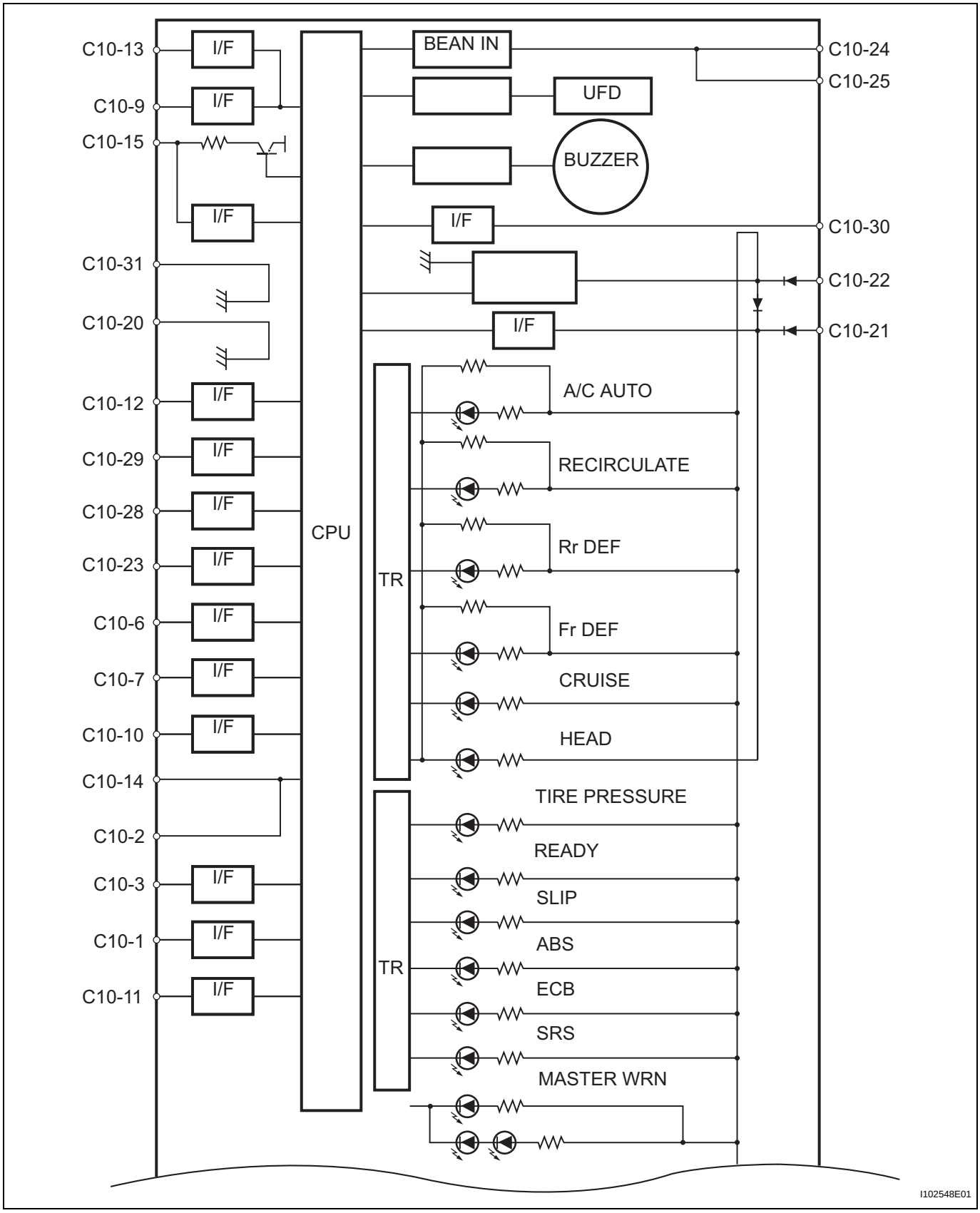

ME

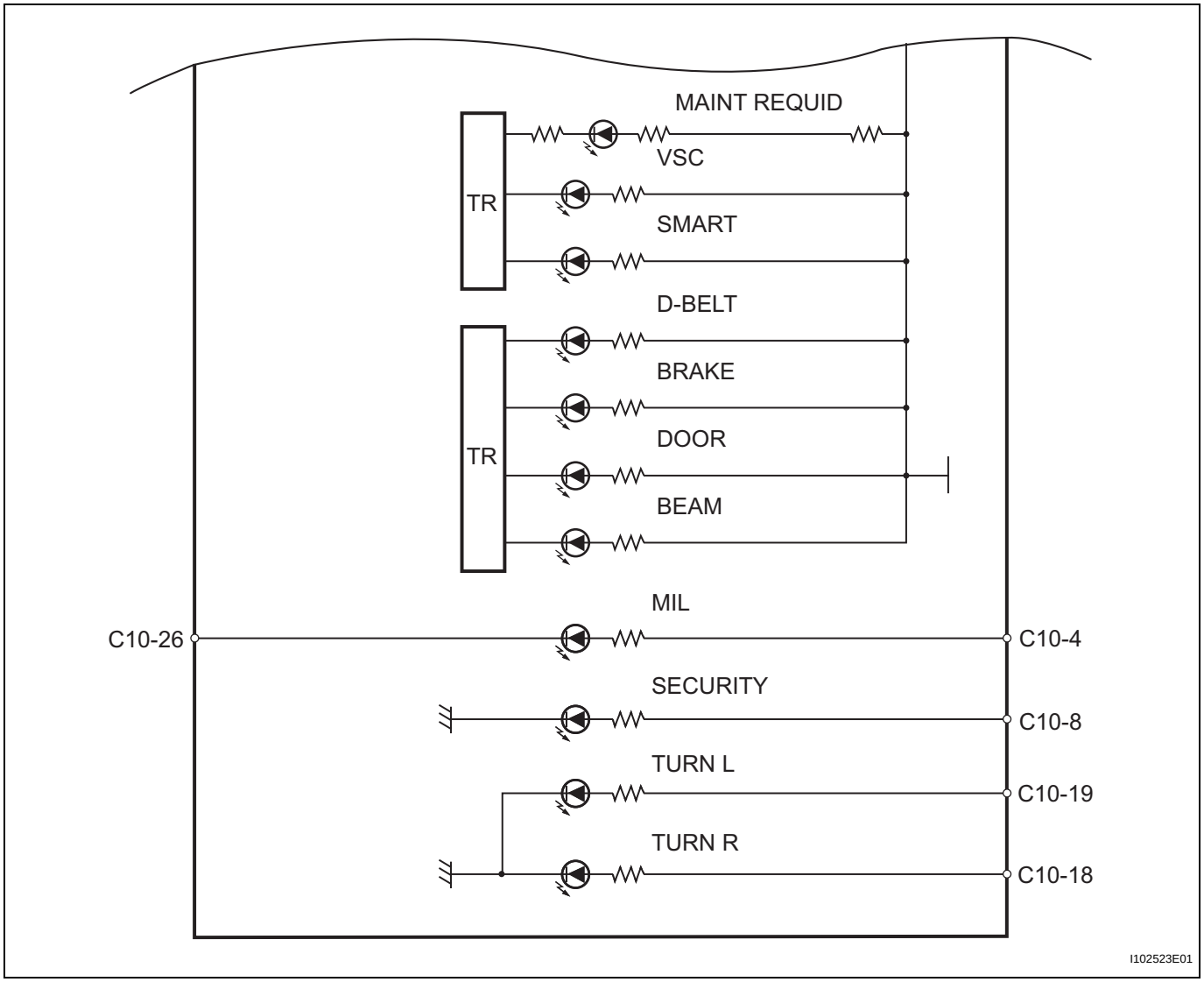
MAINT REQUID
VSC
TR
SMART
D-BELT
BRAKE
DOOR
TR
BEAM
MIL
C10-26
C10-4
SECURITY
C10-8
TURN L
C10-19
TURN R
C10-18
I102523E01

Table of Terminal Connection

Terminal No.		Wire Harness Side
C10	1	ODO / TRIP Switch
	2	
	3	
	4	IGN fuse
	5	-
	6	Front seat inner belt LH
	7	Front seat inner belt RH
	8	Body ECU
	9	Skid control ECU
	10	Headlight beam level control ECU
	11	Center airbag sensor
	12	Fuel sender gauge
	13	4 Pulse output
	14	Body ground
	15	Fuel sender gauge
	16	-
	17	
	18	Flasher relay
	19	
	20	Fuel sender gauge
	21	DOME fuse
	22	GAUGE fuse
	23	Back-up light relay
	24	Certification ECU
	25	Power source control ECU
	26	ECM
	27	-
	28	Light control rheostat
	29	PANEL fuse
	30	Passenger seat belt warning light
	31	Fuel sender gauge
	32	-

ME

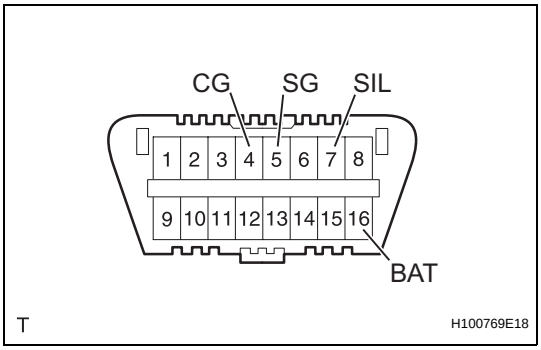

DIAGNOSIS SYSTEM

1. CHECK DLC3

The vehicle's combination meter (ECU) uses ISO 15765-4 for communication. The terminal arrangement of the DLC3 complies with SAE J1962 and matches the ISO 15765-4 format. If there are any open or short circuits in the chart below, perform troubleshooting with the "SFI System" (see page ES-10).

Tester Connection	Terminal Description	Condition	Specified Condition
SIL (7) - SG (5)	Bus "+" line	During communication	Pulse generation
CG (4) - Body ground	Chassis ground	Always	Below 1 Ω
SG (5) - Body ground	Signal ground	Always	Below 1 Ω
BAT (16) - Body ground	Battery positive	Always	9 to 14 V

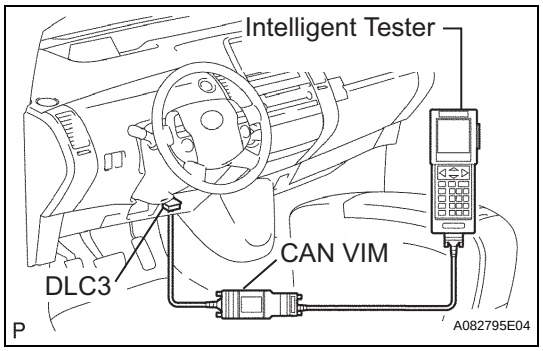

HINT:
If the display inidcates UNABLE TO CONNECT TO VEHICLE when you have connected the cable of the intelligent tester (with CAN VIM) to the DLC3, turned the power switch ON (IG) and operated the tester, there is a problem either on the vehicle side or tester side.

- If communication is normal when the tester is connected to another vehicle, inspect the DLC3 on the original vehicle.
- If communication is still not possible when the tester is connected to another vehicle, the problem is probably in the tester itself, so consult the Service Department listed in the tester's instruction manual.

DATA LIST / ACTIVE TEST

1. READ DATA LIST

HINT:
Using the intelligent tester's DATA LIST allows switch, actuator and other item values to be read without removing any parts. Reading the DATA LIST early in troubleshooting is one way to save time.

(a) Connect the intelligent tester (with CAN VIM) to the DLC3.
(b) Turn the power switch ON (IG).
(c) Read the DATA LIST according to the display on the tester.

ECM

Item	Measurement Item / Range (Display)	Normal Condition	Diagnostic Note
VEHICLE SPEED	Vehicle speed / Min.: 0 km/h (0 mph), Max.: 255 km/h (158 mph)	Almost the same as the actual vehicle speed (When driving)	-
ENGINE SPD	Engine speed / Min.: 0 rpm, Max.: 16,383 rpm	Almost the same as the actual engine speed (When engine is running)	-
COOLANT TEMP	Coolant temperature / Min.: -40°C (-40°F), Max.: 140°C (284°F)	After warming up: 80 to 95°C (176 to 203°F)	If the value is "-40°C (-40°F)" or "140°C (284°F)", sensor circuit is open or shorted

Skid control ECU

Item	Measurement Item/ Range (Display)	Normal Condition	Diagnostic Note
(FR/FL/RR/RL) SPD	Vehicle speed / Min.: 0 km/h (0 mph), Max.: 326 km/h (202 mph)	Almost same as actual speed (When driving)	-

ON-VEHICLE INSPECTION

1. CHECK SPEEDOMETER

(a) Check the operation.

(1) Using a speedometer tester, inspect the speedometer for indication error and check the operation of the odometer.

Reference (km/h)

Standard indication	Acceptable range
20 km/h	18.0 to 22.0 km/h
40 km/h	38.0 to 42.0 km/h
60 km/h	58.0 to 62.0 km/h
80 km/h	78.0 to 82.0 km/h
100 km/h	97.0 to 103.0 km/h
120 km/h	117.0 to 123.0 km/h
140 km/h	137.0 to 143.0 km/h
160 km/h	157.0 to 163.0 km/h

Reference (mph)

Standard indication	Acceptable range
20 mph	18.0 to 22.0 mph
40 mph	38.0 to 42.0 mph
60 mph	59.0 to 63.0 mph
80 mph	79.0 to 83.0 mph
100 mph	99.0 to 104.0 mph
120 mph	119.0 to 125.0 mph

ME

NOTICE:
Tire wear and over or under tire pressure will affect indication error.

(2) Check the deflection width of the speedometer indicator.

Reference:
Below 0.5 km/h (0.3 mph)

2. CHECK OUTPUT SIGNAL OF VEHICLE SPEED

(a) Check the output signal waveform.

(1) Remove the combination meter.

(2) Connect an oscilloscope to terminals C10-13 and the body ground.

(3) Start the engine.

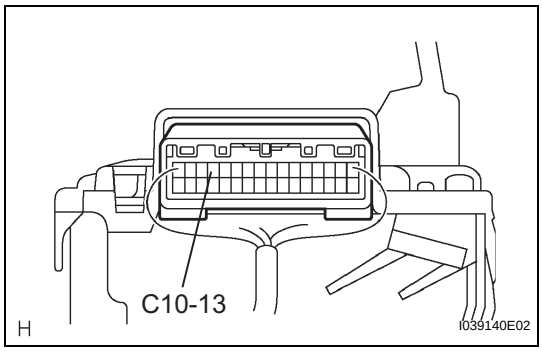

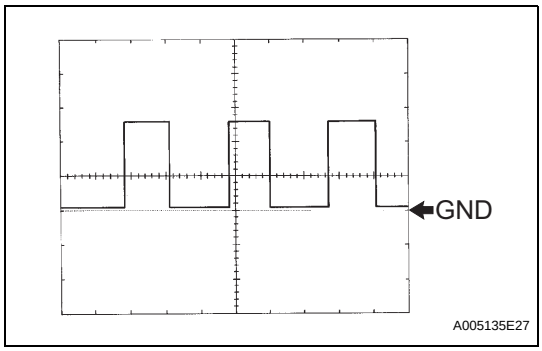

(4) Check the signal waveform according to the condition(s) in the table below.

Item	Condition
Tool setting	5 V/DIV., 20 msec./DIV.
Vehicle condition	Driving at approx. 20 km/h (12 mph)

OK:
As shown in the illustration
HINT:
As vehicle speed increases, the cycle of the signal waveform narrows.

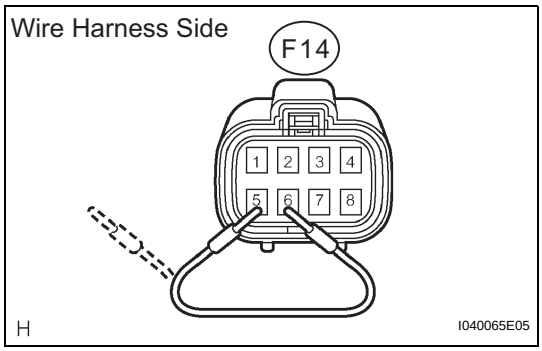

3. CHECK FUEL RECEIVER GAUGE

(a) Disconnect the F14 sender gauge connector.
(b) Turn the power switch ON (IG), then check the position of the receiver gauge needle.
OK:
Needle position is on EMPTY.
(c) Connect terminals 5 and 6 on the wire harness side connector of the fuel sender gauge.
(d) Turn the power switch to the ON (IG), then check the position of the receiver gauge needle.
OK:
Needle position is on FULL.

4. CHECK FUEL LEVEL WARNING

(a) Disconnect the connector from the sender gauge.
(b) Turn the power switch ON (IG), check that the fuel level needle indicates EMPTY and fuel level warning light comes on.
OK:
Fuel level warning light comes on.

5. CHECK LOW OIL PRESSURE WARNING LIGHT

(a) Disconnect the connector from the low oil pressure switch.
(b) Turn the power switch ON (IG).
(c) Ground the terminal of the wire harness side connector, then check the low oil pressure warning light.
OK:
Low oil pressure warning light comes on.

6. CHECK BRAKE WARNING LIGHT

(a) Inspect the parking brake warning light.
(1) Disconnect the connector from the parking brake switch.
(2) Turn the power switch ON (IG).
(3) Ground the terminal of the wire harness side connector, then check the parking brake warning light.
OK:
Brake warning light comes on.
(b) Inspect the brake fluid level warning light.
(1) Disconnect the connector from the brake fluid level warning switch.
(2) Turn the power switch ON (IG).

(3) Connect a terminal to the other terminal of the wire harness side connector, then check the brake fluid level warning switch.
OK:
Brake warning light comes on.

7. CHECK BRAKE FLUID LEVEL WARNING SWITCH

(a) Remove the reservoir tank cap and strainer.
(b) Disconnect the connector.
(c) Measure the resistance between the terminals.
Standard resistance:
Float up (switch off): 10 kΩ or higher
(d) Use a syphon, etc. to take fluid out of the reservoir tank.
(e) Measure the resistance between the terminals.
Standard resistance:
Float up (switch off): 10 kΩ or higher
(f) Pour the fluid back in the reservoir tank.
(g) Reconnect the connector.

8. MAINTENANCE LIQUID RESETTING PROCEDURE (U. S. A. models)

ME

Indicator condition

State	Condition	Specified State
Blinking	Vehicle runs 4,500 miles after previous setting	Indicator blinks for 15 seconds after power switch ON (IG) (including 3 seconds for a valve check)
Continuously Illuminated	Vehicle runs 5,000 miles after previous setting	Indicator is continuously illuminated after power switch ON (IG)

(a) Press the ODO / TRIP switch until odometer displays "ODO".
(b) Turn the power switch OFF.
(c) Press and hold the reset switch, and turn the power switch ON (IG).
(d) After turning the power switch ON (IG), keep holding the reset switch for at least 5 seconds. The reset procedure is completed.
HINT:
- If the power switch is turned OFF during reset procedure, reset mode is canceled.
- If the reset switch is turned off during the reset procedure, reset mode is canceled and the display shows the condition prior to the reset procedure.

9. CENTERED VALUE SETTING (INCLINATION SENSOR)

Perform the following procedures to correct inclination of the meter and inclination sensors when installing / removing / replacing the meter or after replacing the inclination sensors or main base.

(a) Setting procedure

(1) Connect the connector and install the meter securely in the position shown in the illustration so that it is inclined at a 20 degree angle to the vehicle's vertical line A.

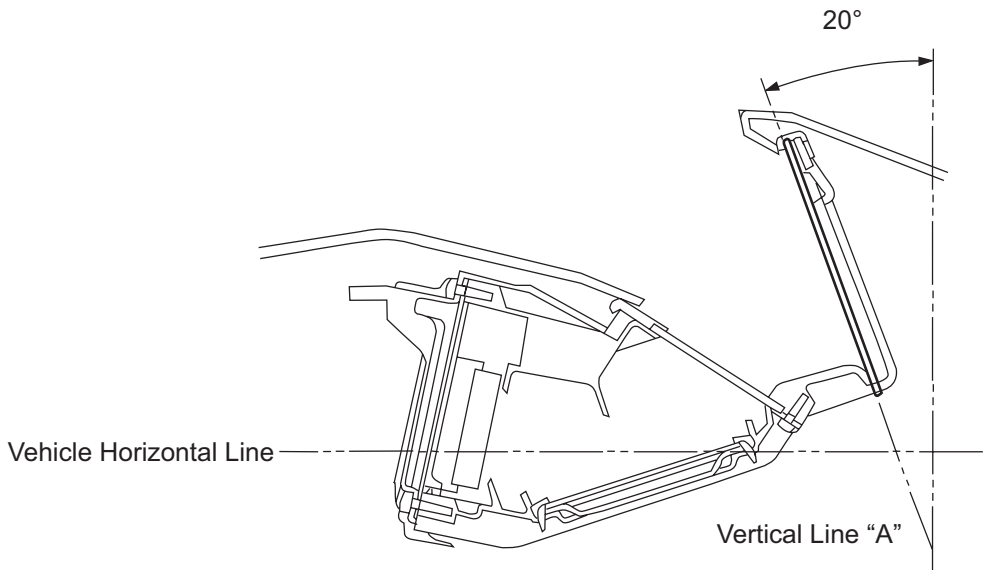

I102520E01

(2) Park the vehicle on a level surface.
(3) Turn the power switch ON (IG).
(4) Set the odometer display into the "TRIP A" mode.
(5) Turn the power switch OFF.
(6) Press and hold the ODO/TRIP switch while pressing the power switch twice ON (IG). (Do not put your foot on the brake.)
(7) Press the ODO/TRIP button (switch?) 3 times within 5 seconds and hold it at least 5 seconds until the Inclination Sensor Information is displayed on the odometer.
(8) Release the ODO/TRIP switch.
(9) Press and hold the ODO/TRIP switch for at least 5 seconds to update the centered value. The third digit will indicate the status. The value of "1" indicates a successful reset.
HINT:
- If "0", "2", or "3" is displayed, perform the procedure "Turn the power switch ON (IG)" again.
- Once the reset is complete, the odometer will returns to normal.

(10) Release the ODO/TRIP button. (Once the reset is complete, the odometer will returns to normal.)

ME

(11) Turn the power switch OFF.

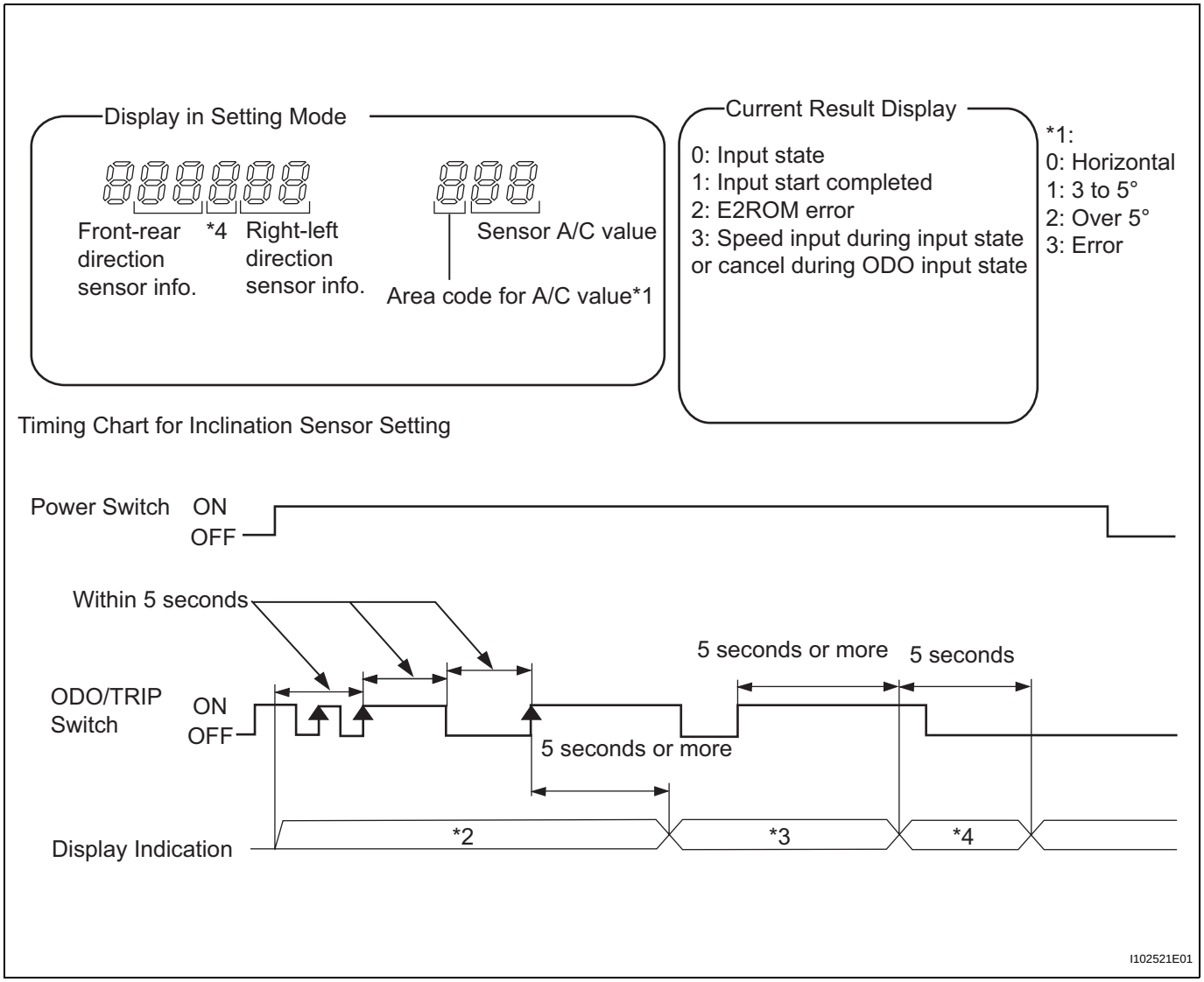

*2: ODO/TRIP display (Normal mode)
*3: Inclination sensor information display (Setting mode)
*4: Current result display

ME

Entire Combination Meter does not Operate

WIRING DIAGRAM

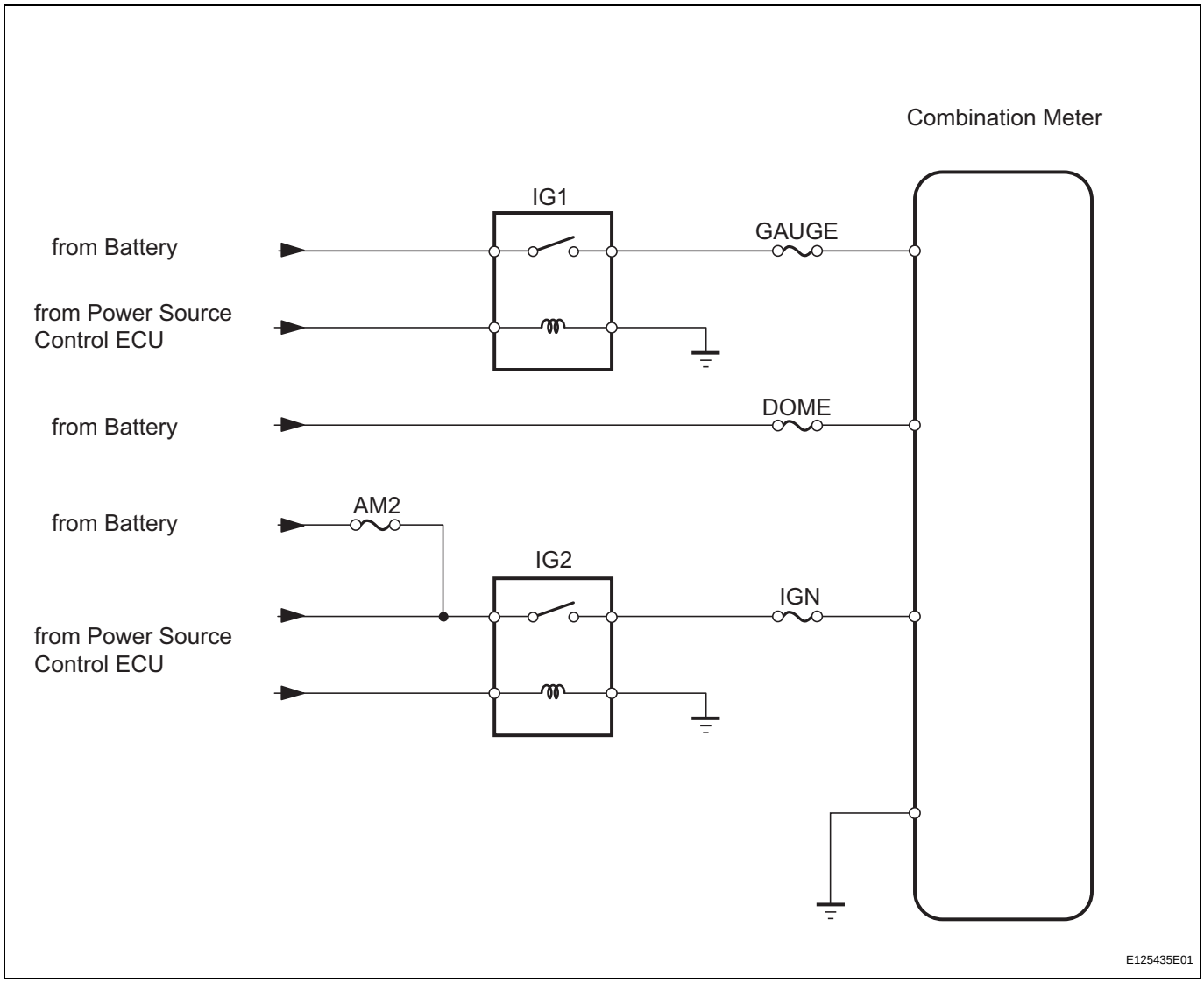

INSPECTION PROCEDURE

1	CHECK WIRE HARNESS (METER - BATTERY AND BODY GROUND)

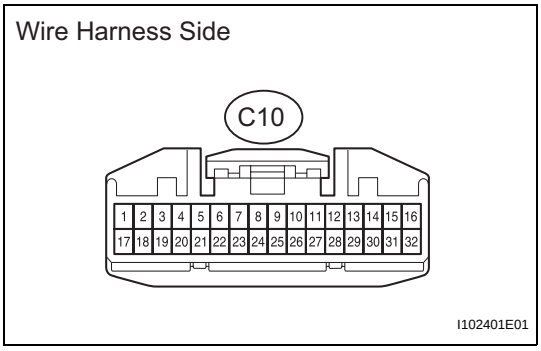

(a) Disconnect the C10 meter connector.

(b) Measure the voltage of the wire harness side connector.

Standard voltage

Tester Connection	Condition	Specified Condition
C10-21 - Body ground	Always	10 to 14 V
C10-4 - Body ground	Power switch ON (IG)	
C10-22 - Body ground		

(c) Measure the resistance of the wire harness side connector.

Standard resistance

Tester Connection	Specified Condition
C10-14 - Body ground	Below 1 Ω

NG → **REPAIR OR REPLACE HARNESS AND CONNECTOR**

OK

REPLACE COMBINATION METER ASSEMBLY

Speedometer Malfunction

WIRING DIAGRAM

INSPECTION PROCEDURE

1	READ VALUE OF INTELLIGENT TESTER (VEHICLE SPEED SIGNAL)

(a) Check the DATA LIST for proper functioning of the vehicle speed signal.

Skid control ECU

Item	Measurement Item / Range (Display)	Normal Condition	Diagnostic Note
(FR/FL/RR/RL) SPD	Vehicle speed / Min.: 0 km/h (0 mph), Max.: 326 km/h (202 mph)	Almost same as actual speed (When driving)	-

OK:
Vehicle speed displayed on the tester is almost the same as the actual vehicle speed.

NG → **GO TO ELECTRONICALLY CONTROLLED BRAKE SYSTEM**

OK

2 CHECK COMBINATION METER ASSEMBLY

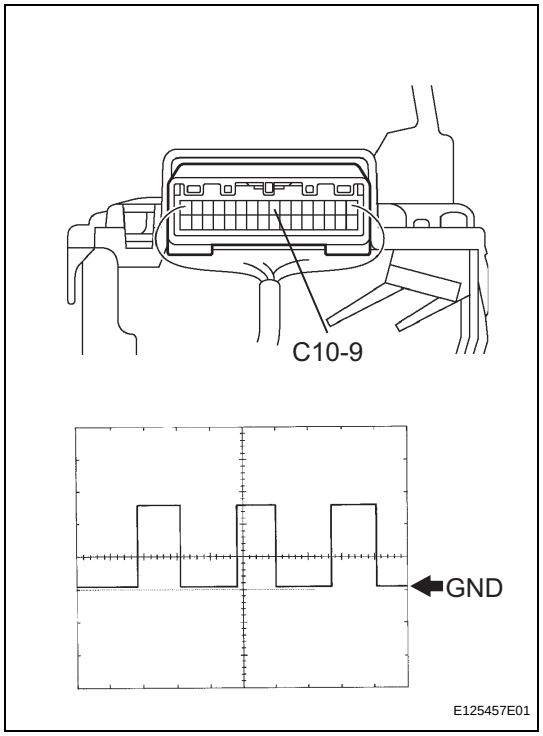

(a) Using an oscilloscope, check the signal waveform of the meter.

Tester Connection	Tool Setting	Vehicle Condition
C10-9 - Body ground	5 V/DIV., 20 msec./DIV.	Driving at approx. 20 km/h (12 mph)

OK:
Refer to the illumination.
HINT:
As the vehicle speed increases, the wavelength shortens.

OK → **REPLACE COMBINATION METER**

NG

3 CHECK WIRE HARNESS (ECU - METER)

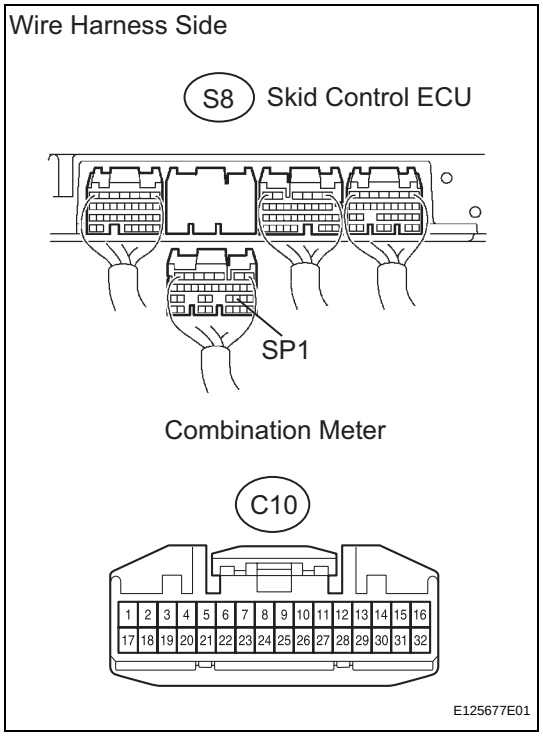

(a) Disconnect the S8 ECU connector.
(b) Disconnect the C10 meter connector.
(c) Measure the resistance of the wire harness side connectors.
Standard resistance

Tester Connection	Specified Condition
C10-9 - S8-22 (SP1)	**Below 1 Ω**
C10-9 - Body ground	**10 kΩ or higher**

NG → **REPAIR OR REPLACE HARNESS AND CONNECTOR**

ME

OK

GO TO ELECTRONICALLY CONTROLLED BRAKE SYSTEM

Fuel Receiver Gauge Malfunction

WIRING DIAGRAM

ME

INSPECTION PROCEDURE

HINT:
The inclination sensor is built into the combination meter (see page ME-23).

1	CHECK COMBINATION METER

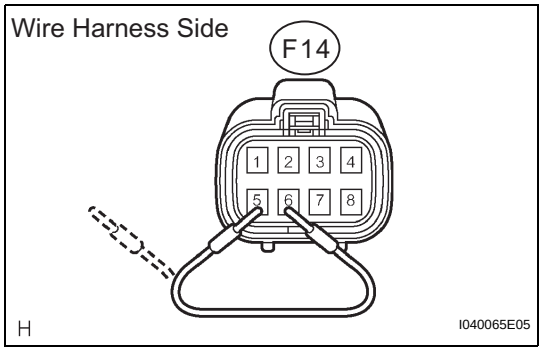

(a) Disconnect the F14 sender gauge connector.
(b) Turn the power switch ON (IG), and check the position of the sender gauge needle.
OK:
Fuel gauge indicates E.
(c) Connect terminals 5 and 6 on the wire harness side connector.
(d) Turn the power switch ON (IG), and check the position of the receiver gauge needle.
OK:
Fuel gauge indicates F.
(e) Measure the voltage of the wire harness side connector.
Standard voltage

Tester Connection	Switch Condition	Specified Condition
F14-5 - Body ground	Power switch ON (IG)	10 to 14 V

NG → **Go to step 3**

OK

2 INSPECT FUEL SENDER GAUGE ASSEMBLY

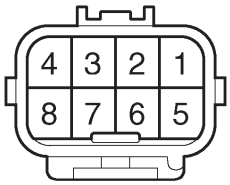

I041218E01

(a) Disconnect the F14 gauge connector.
(b) Measure the resistance of the gauge connector.
Standard resistance

Tester Connection	Fuel level	Specified Condition
5 - 6	Full	Approx. 4 Ω
	Half	Approx. 40 to 60 Ω
	Empty	Approx. 110 Ω

NG → **REPLACE FUEL TANK ASSEMBLY**

OK

REPLACE COMBINATION METER ASSEMBLY

ME

3 CHECK WIRE HARNESS (GAUGE - METER)

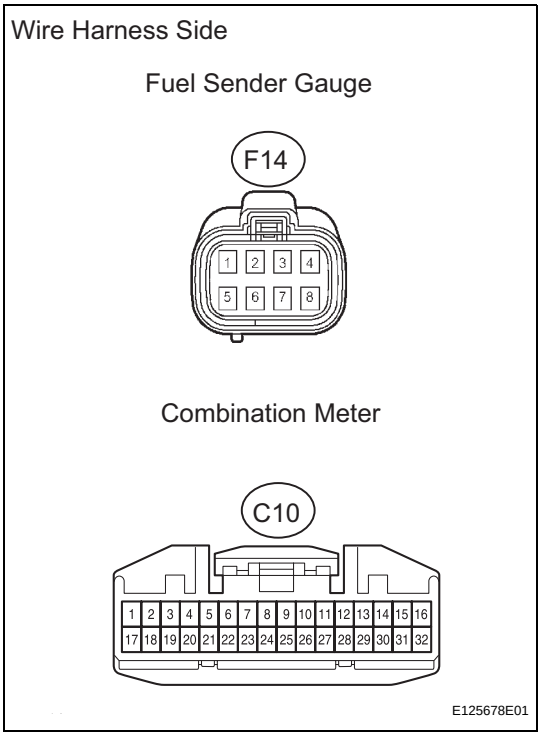

E125678E01

(a) Disconnect the F14 gauge connector.
(b) Disconnect the C12 meter connector.
(c) Measure the resistance of the wire harness side connectors.
Standard resistance

Tester Connection	Specified Condition
F14-6 - C10-31	Below 1 Ω
F14-5 - C10-15	

NG → **REPAIR OR REPLACE HARNESS AND CONNECTOR**

OK

REPLACE COMBINATION METER ASSEMBLY

Driver Side Seat Belt Warning Light does not Operate

WIRING DIAGRAM

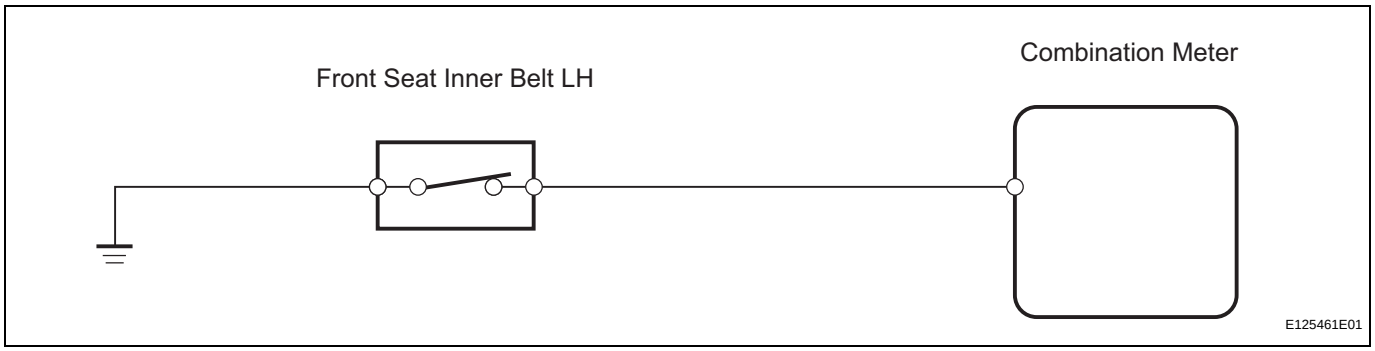

INSPECTION PROCEDURE

1	INSPECT FRONT SEAT INNER BELT ASSEMBLY LH (BUCKLE SWITCH)

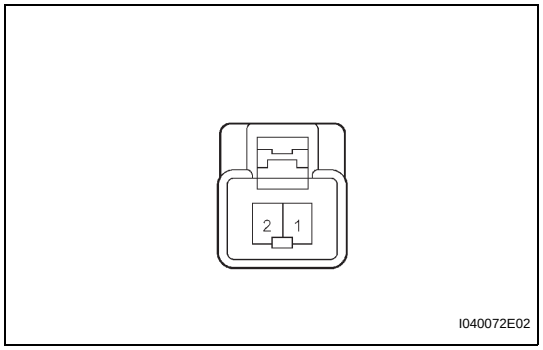

(a) Remove the front seat inner belt LH.
(b) Measure the resistance of the buckle switch.
Standard resistance

Tester Connection	Condition	Specified Condition
1 - 2	Seat belt is unfastened	Below 1 Ω
	Seat belt is fastened	10 kΩ or higher

NG → **REPLACE FRONT SEAT INNER BELT ASSEMBLY LH**

OK

ME

2	CHECK WIRE HARNESS (INNER BELT LH - METER AND BODY GROUND)

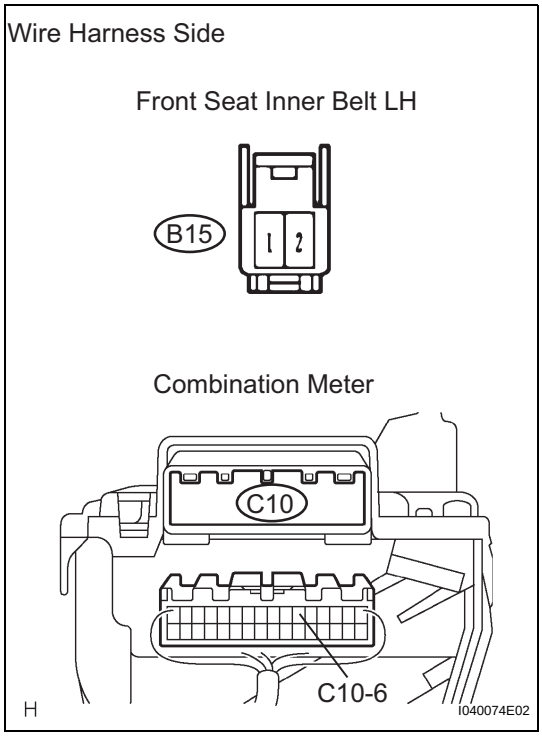

(a) Disconnect the B15 belt connector.
(b) Disconnect the C10 meter connector.
(c) Measure the resistance of the wire harness side connectors.

Standard resistance

Tester Connection	Specified Condition
C10-6 - B15-2	Below 1 Ω
B15-1 - Body ground	

NG → **REPAIR OR REPLACE HARNESS AND CONNECTOR**

OK

REPLACE COMBINATION METER ASSEMBLY

ME

Seat Belt Warning Light for Passenger Seat does not Flash

WIRING DIAGRAM

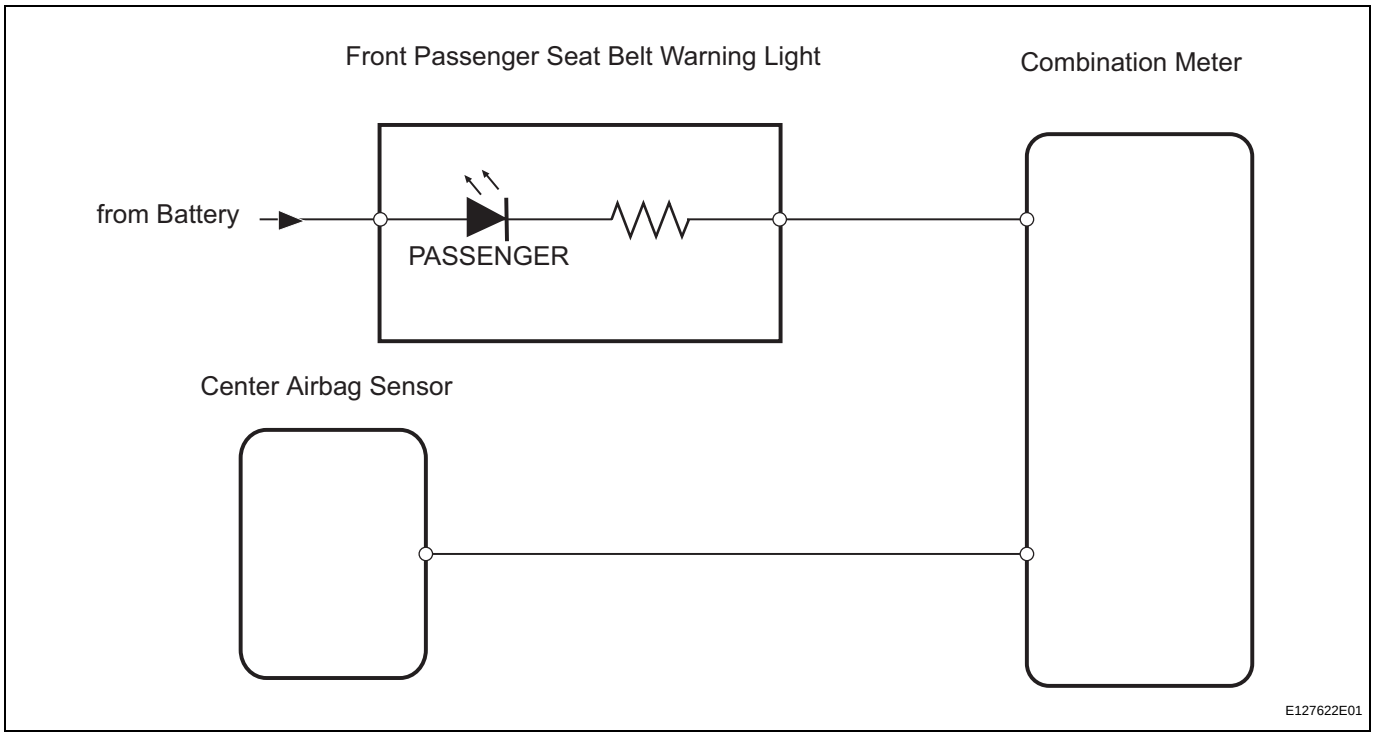

INSPECTION PROCEDURE

1	CHECK DTC

(a) Clear the DTC (see page RS-182).
(b) Check for DTC (see page RS-182).
Result

Result	Proceed to
DTC B1771 is not output	A
DTC B1771 is output	B

B → **GO TO OCCUPANT CLASSIFICATION SYSTEM**

A

ME

2 CHECK FRONT PASSENGER SEAT BELT WARNING LIGHT

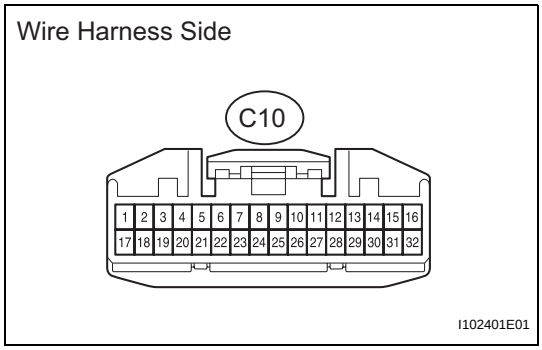

(a) Disconnect the C10 meter connector.
(b) Using a service wire, connect the meter terminal 30 on the wire harness side and body ground.
(c) Check that the passenger seat belt warning light turns on.
OK:
Front passenger seat belt warning light turns on.

NG → **Go to step 4**

OK

3 CHECK WIRE HARNESS (METER - SENSOR)

ME

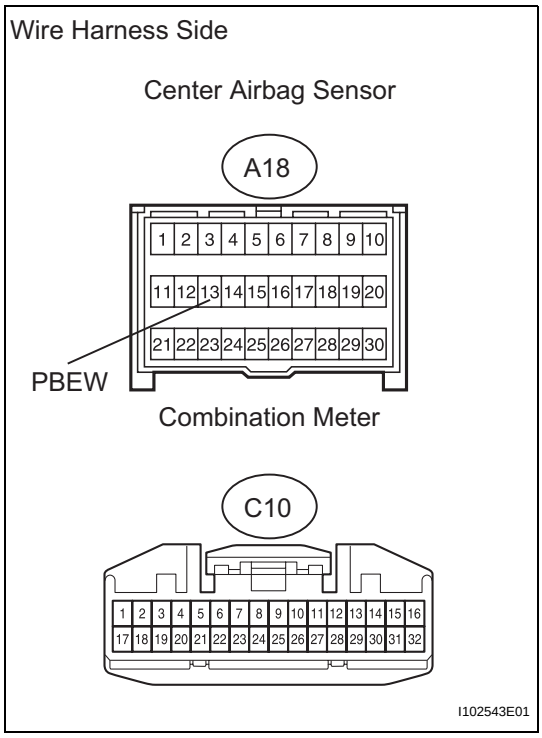

(a) Disconnect the A18 sensor connector.
(b) Disconnect the C10 meter connector.
(c) Measure the resistance of the wire harness side connectors.
Standard resistance

Tester Connection	Specified Condition
A18-13 (PBEW) - C10-7	Below 1 Ω

NG → **REPAIR OR REPLACE HARNESS AND CONNECTOR**

OK

REPLACE COMBINATION METER ASSEMBLY

4	CHECK WIRE HARNESS (WARNING LIGHT - METER AND BATTERY)

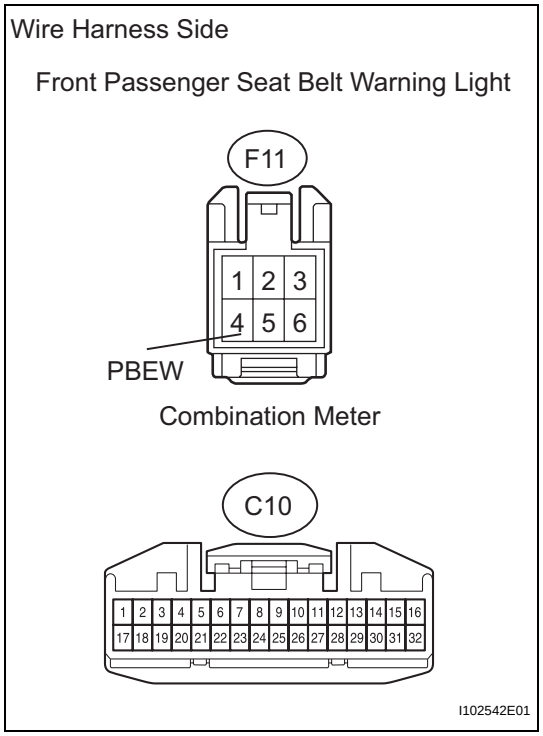

(a) Disconnect the F11 warning light connector.
(b) Disconnect the C10 meter connector.
(c) Measure the resistance of the wire harness side connectors.
Standard resistance

Tester Connection	Specified Condition
F11-4 (PBEW) - C10-30	Below 1 Ω

(d) Measure the voltage of the wire harness side connector.
Standard resistance

Tester Connection	Specified Condition
F11-6 (IG+) - Body ground	10 to 14 V

NG → **REPAIR OR REPLACE HARNESS AND CONNECTOR**

OK

REPLACE FRONT PASSENGER SEAT BELT WARNING LIGHT

ME

Odo / Trip Switch Malfunction

WIRING DIAGRAM

ME

INSPECTION PROCEDURE

1	INSPECT ODO / TRIP SWITCH

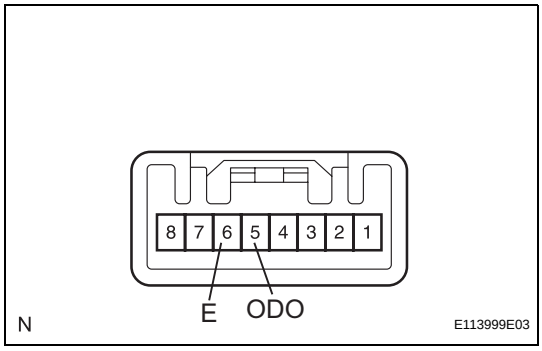

(a) Remove the ODO / TRIP switch.
(b) Measure the resistance of the switch.
Standard resistance

Tester Connection	Switch Condition	Specified Condition
5 (ODO) - 6 (E)	Push ODO / TRIP switch	Below 1 Ω
	Release ODO / TRIP switch	10 kΩ or higher

NG → **REPLACE ODO / TRIP SWITCH**

OK

2	**CHECK WIRE HARNESS (SWITCH - METER)**

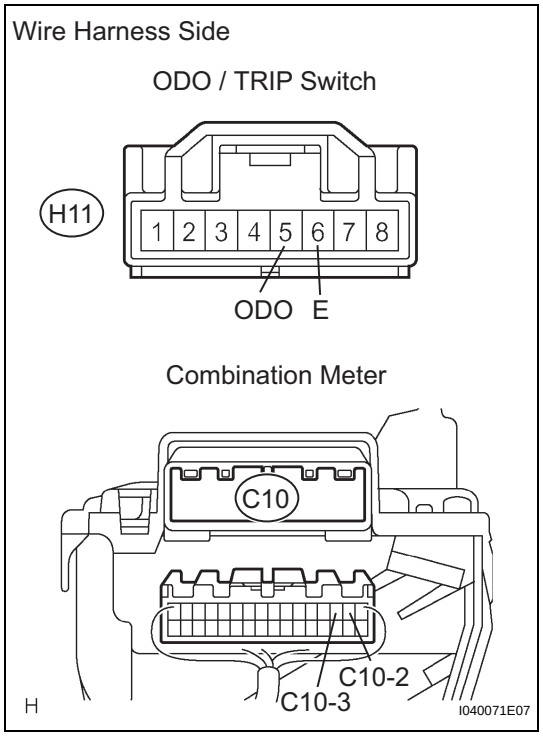

(a) Disconnect the H11 switch connector.
(b) Disconnect the C10 meter connector.
(c) Measure the resistance of the wire harness side connectors.

Standard resistance

Tester Connection	Specified Condition
H11-5 (ODO) - C10-3	Below 1 Ω
H11-6 (E) - C10-2	

NG → **REPAIR OR REPLACE HARNESS AND CONNECTOR**

OK

REPLACE COMBINATION METER

ME

Operating Light Control Rheostat does not Change Light Brightness

WIRING DIAGRAM

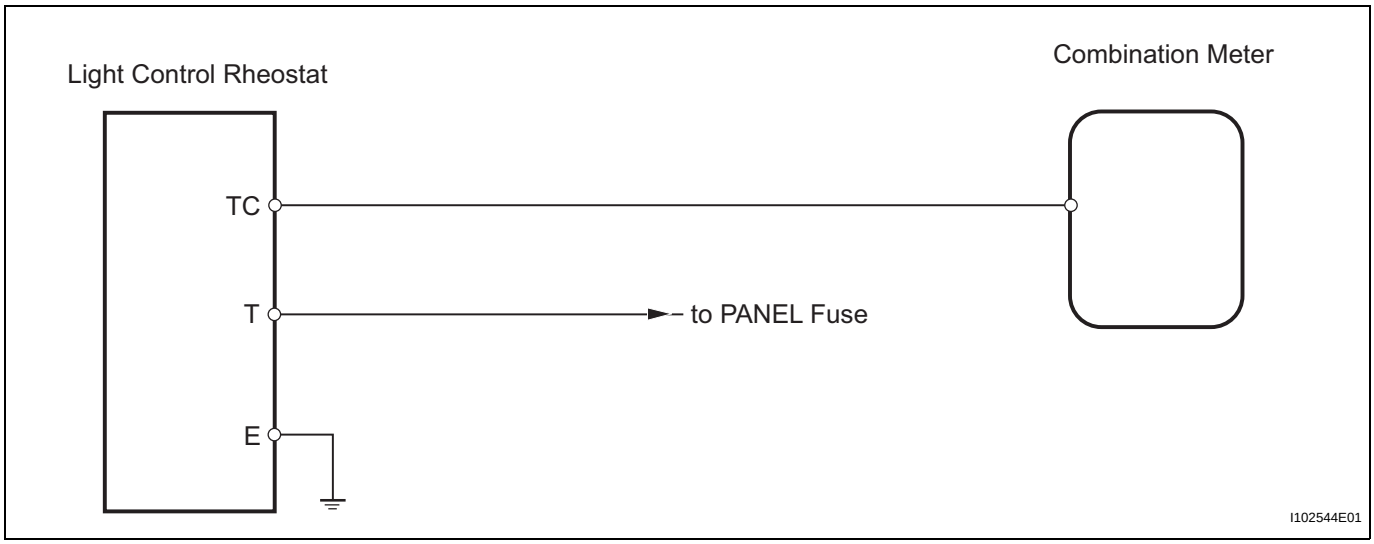

ME

INSPECTION PROCEDURE

1	INSPECT LIGHT CONTROL RHEOSTAT

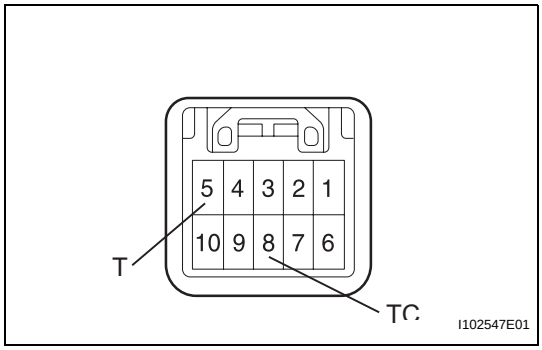

(a) Remove the light control rheostat.
(b) Measure the resistance of the rheostat.
Standard resistance

Tester Connection	Condition	Specified Condition
5 (T) - 8 (TC)	Not in tail cancel position	Below 1 Ω
	Tail cancel position (rheostat knob is fully turned up)	10 kΩ or higher

NG → **REPLACE LIGHT CONTROL RHEOSTAT**

OK

2 CHECK WIRE HARNESS (RHEOSTAT - METER, BATTERY AND BODY GROUND)

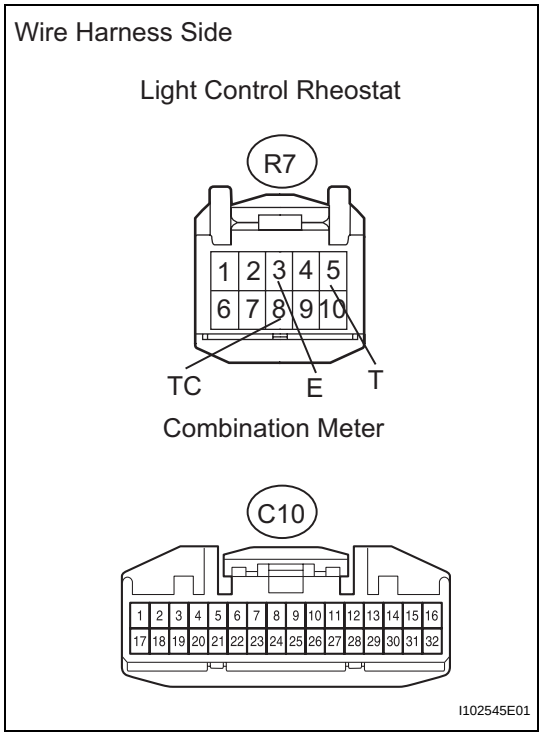

(a) Disconnect the R7 rheostat connector.
(b) Disconnect the C10 meter connector.
(c) Measure the resistance of the wire harness side connectors.
Standard resistance

Tester Connection	Specified Condition
R7-8 (TC) - C10-28	Below 1 Ω
R7-3 (E) - Body ground	

(d) Measure the voltage of the wire harness side connectors.
Standard voltage

Tester Connection	Switch Condition	Specified Condition
R7-5 (T) - Body ground	Light control switch is TAIL	10 to 14 V

NG → **REPAIR OR REPLACE HARNESS AND CONNECTOR**

OK

REPLACE COMBINATION METER

ME

COMBINATION METER

COMPONENTS

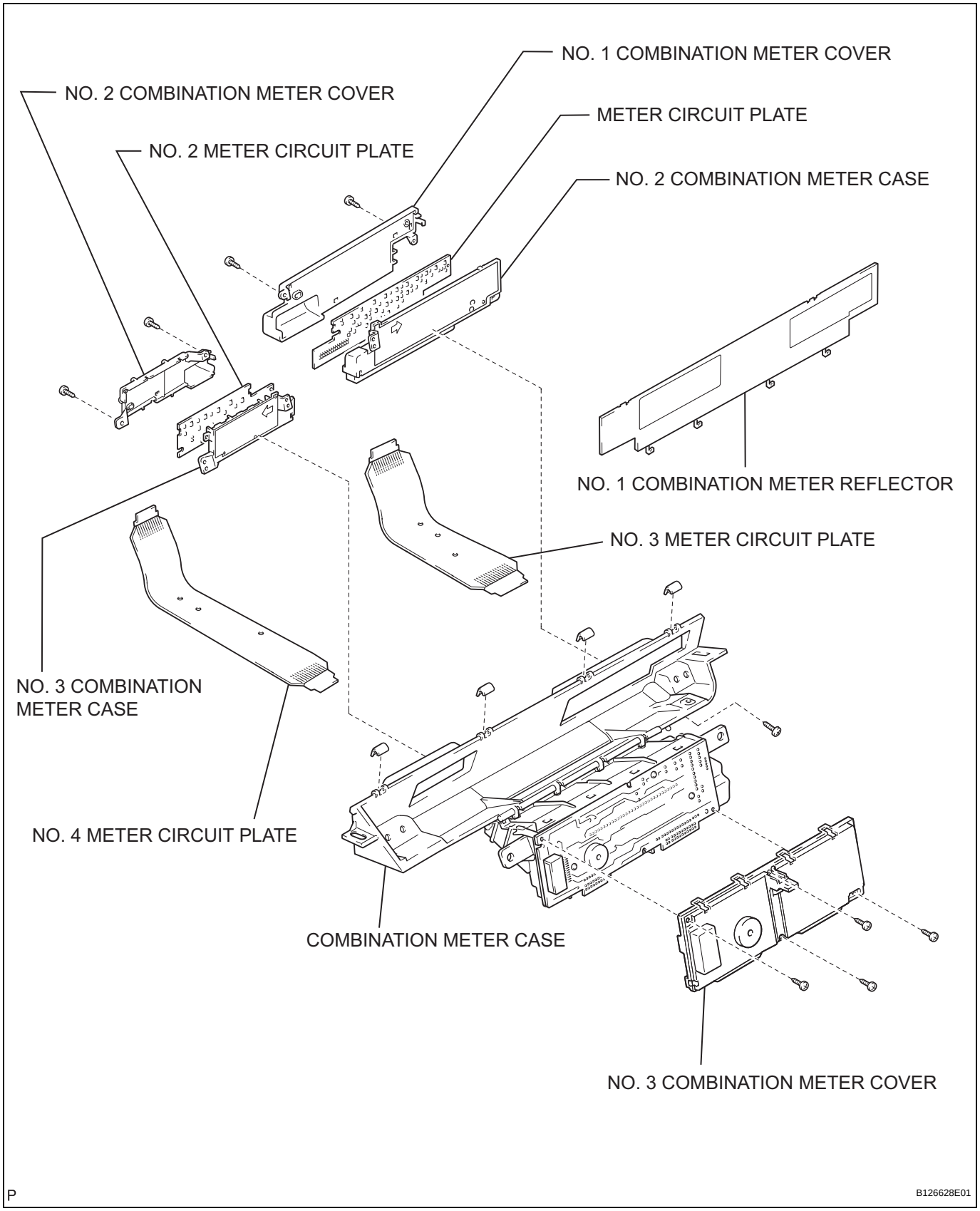

REMOVAL

1. REMOVE INSTRUMENT PANEL SUB-ASSEMBLY

(a) Remove the instrument panel (see page IP-5).

2. REMOVE COMBINATION METER ASSEMBLY (See page IP-9)

DISASSEMBLY

1. REMOVE NO. 1 COMBINATION METER COVER

(a) Remove the 2 screws.

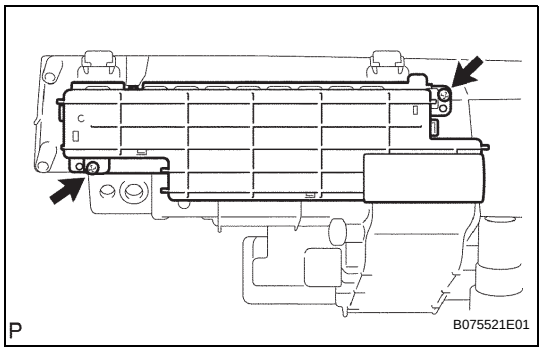

(b) Detach the 2 claws, and then remove the combination meter cover.

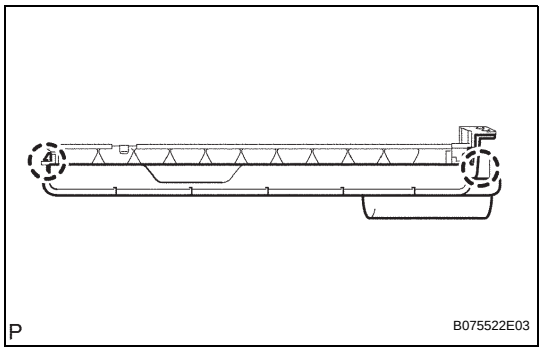

2. REMOVE METER CIRCUIT PLATE

NOTICE:

When disassembling the combination meter assembly, eliminate static electricity by touching the vehicle body to prevent the components from being damaged.

(a) Pull the connector lock in the direction indicated by the arrow in the illustration and separate the No. 3 meter circuit plate from the meter circuit plate.

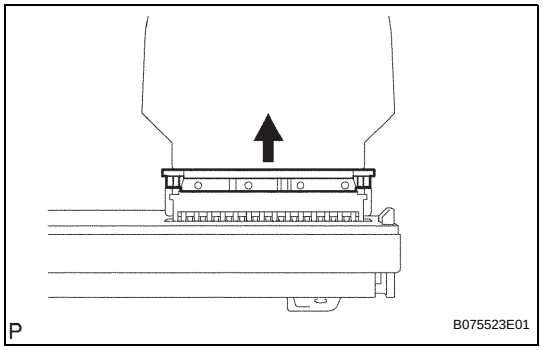

(b) Detach the 5 claws, and then remove the meter circuit plate.

3. REMOVE NO. 2 COMBINATION METER CASE

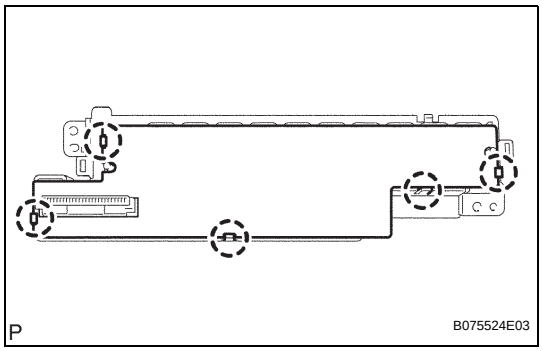

ME

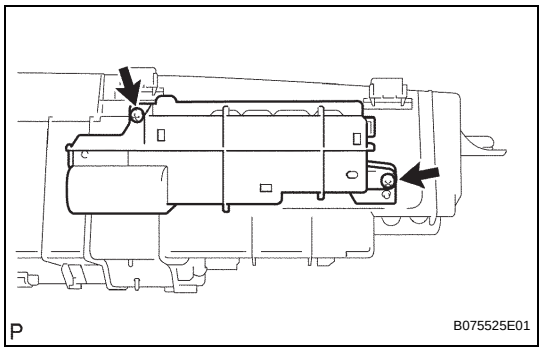

4. REMOVE NO. 2 COMBINATION METER COVER
NOTICE:
When disassembling the combination meter assembly, eliminate static electricity by touching the vehicle body to prevent the components from being damaged.
(a) Remove the 2 screws.

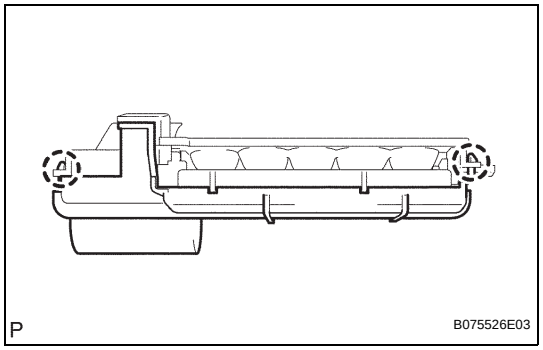

(b) Detach the 2 claws, and then remove the combination meter cover.

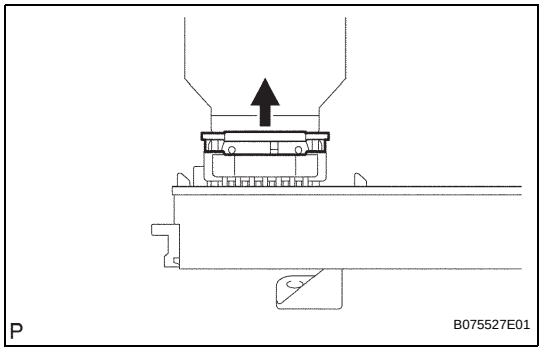

5. REMOVE NO. 2 METER CIRCUIT PLATE
NOTICE:
When disassembling the combination meter assembly, eliminate static electricity by touching the vehicle body to prevent the components from being damaged.
(a) Pull the connector lock in the direction indicated by the arrow in the illustration and separate the No. 4 meter circuit plate from the No. 2 meter circuit plate.

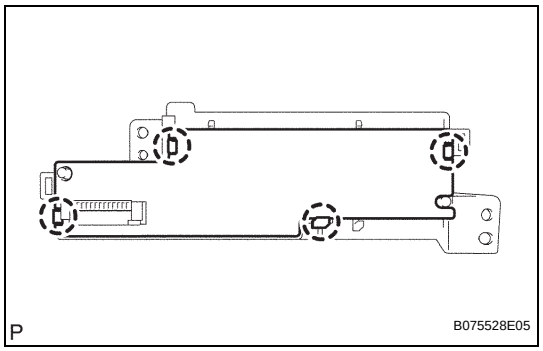

(b) Detach the 4 claws, and then remove the meter circuit plate.

6. REMOVE NO. 3 COMBINATION METER CASE

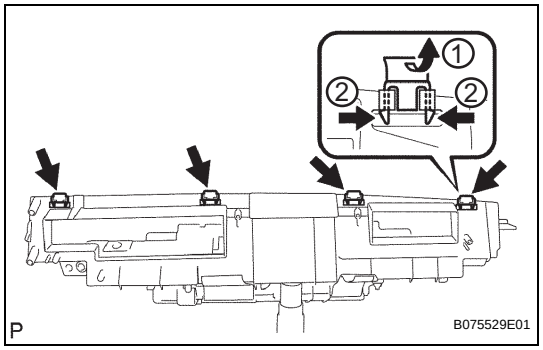

7. REMOVE NO. 1 COMBINATION METER REFLECTOR
(a) Remove the 4 clips.

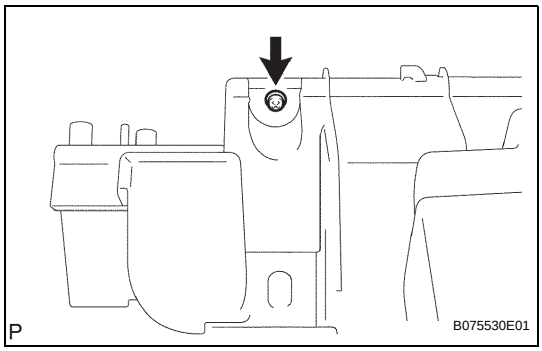

(b) Remove the screw and combination meter reflector.

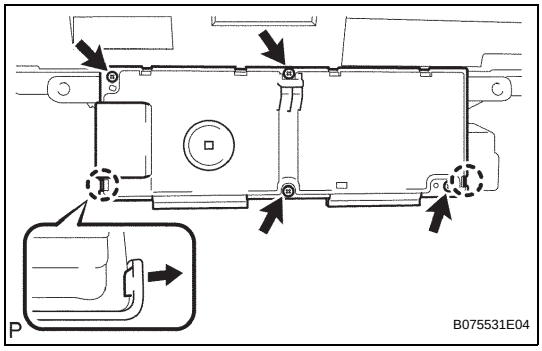

8. REMOVE NO. 3 COMBINATION METER COVER

(a) Remove the 4 screws.

(b) Release the 2 claws of the cover, as shown in the illustration.

(c) Raise the cover from the bottom and remove the combination meter cover.

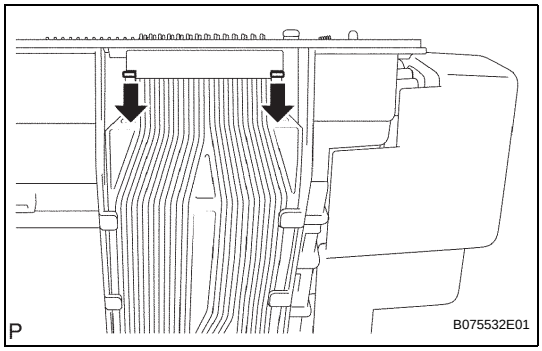

9. REMOVE NO. 3 METER CIRCUIT PLATE

NOTICE:

When disassembling the combination meter assembly, eliminate static electricity by touching the vehicle body to prevent the components from being damaged.

(a) Pull the connector lock in the direction indicated by the arrow in the illustration, and remove the meter circuit plate.

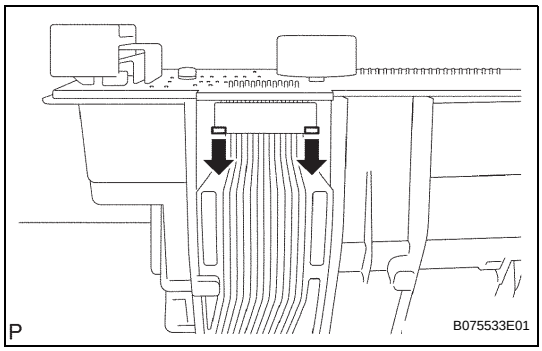

10. REMOVE NO. 4 METER CIRCUIT PLATE

NOTICE:

When disassembling the combination meter assembly, eliminate static electricity by touching the vehicle body to prevent the components from being damaged.

(a) Pull the connector lock in the direction indicated by the arrow in the illustration, and remove the meter circuit plate.

11. REMOVE COMBINATION METER CASE

REASSEMBLY

1. INSTALL COMBINATION METER CASE

2. INSTALL NO. 4 METER CIRCUIT PLATE

NOTICE:
When reassembling the combination meter assembly, eliminate static electricity by touching the vehicle body to prevent the components from being damaged.

(a) Push the connector lock in the direction indicated by the arrow in the illustration, and install the meter circuit plate.

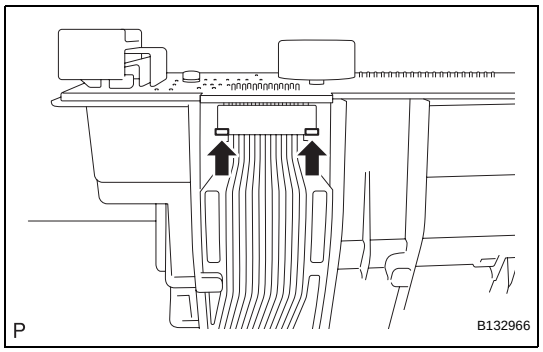

3. INSTALL NO. 3 METER CIRCUIT PLATE

NOTICE:
When reassembling the combination meter assembly, eliminate static electricity by touching the vehicle body to prevent the components from being damaged.

(a) Push the connector lock in the direction indicated by the arrow in the illustration, and install the meter circuit plate.

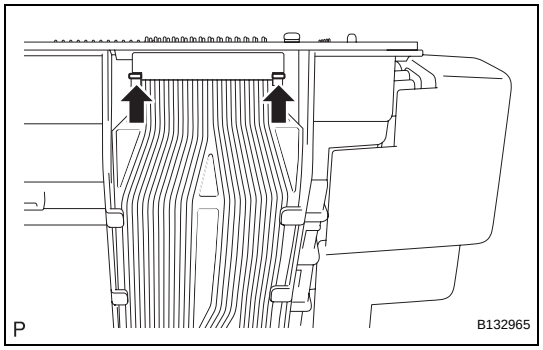

4. INSTALL NO. 3 COMBINATION METER COVER

(a) Attach the 2 claws to install the combination meter cover.

(b) Install the 4 screws.

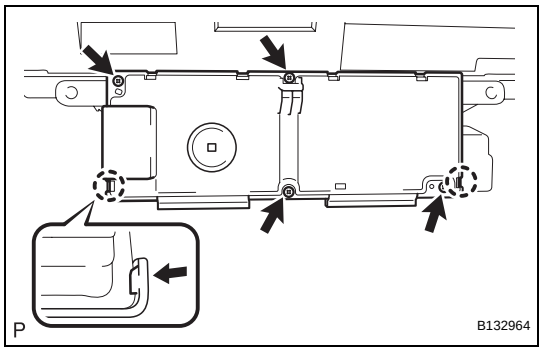

5. INSTALL NO. 1 COMBINATION METER REFLECTOR

(a) Install the combination reflector with the screw.

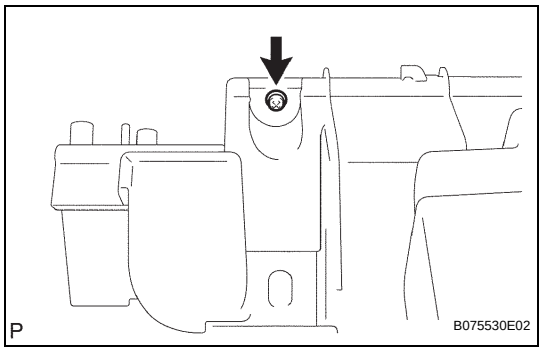

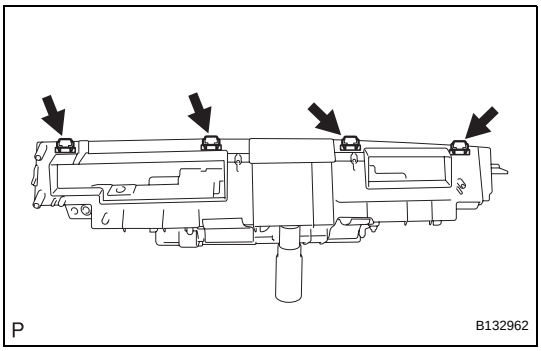

(b) Install the 4 clips.

6. INSTALL NO. 3 COMBINATION METER CASE

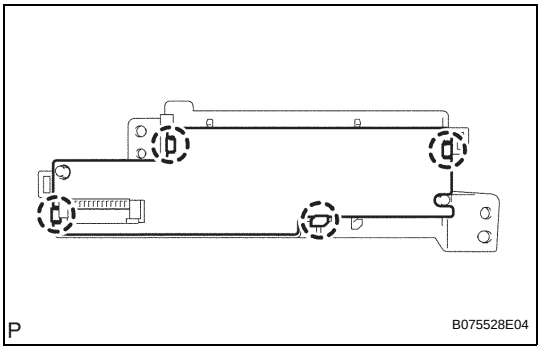

7. INSTALL NO. 2 METER CIRCUIT PLATE

NOTICE:
When reassembling the combination meter assembly, eliminate static electricity by touching the vehicle body to prevent the components from being damaged.

(a) Attach the 4 claws to install the meter circuit plate.

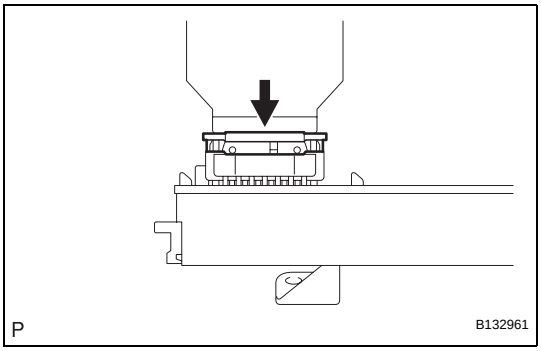

(b) Push the connector lock in the direction indicated by the arrow in the illustration and install the No. 4 meter circuit plate from the No. 2 meter circuit plate.

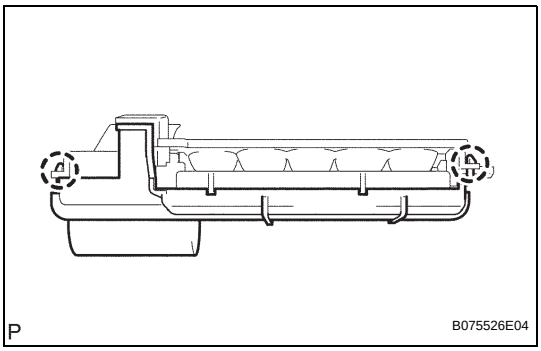

8. INSTALL NO. 2 COMBINATION METER COVER

NOTICE:
When reassembling the combination meter assembly, eliminate static electricity by touching the vehicle body to prevent the components from being damaged.

(a) Attach the 2 claws to install the combination meter cover.

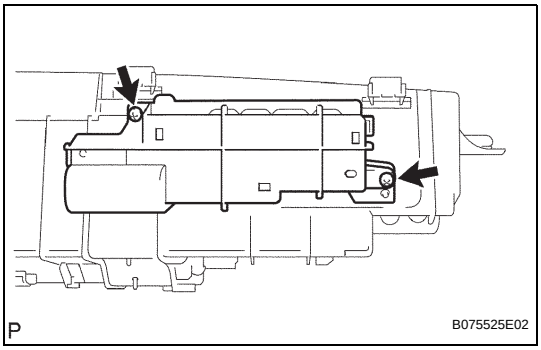

(b) Install the 2 screws.

9. INSTALL NO. 2 COMBINATION METER CASE

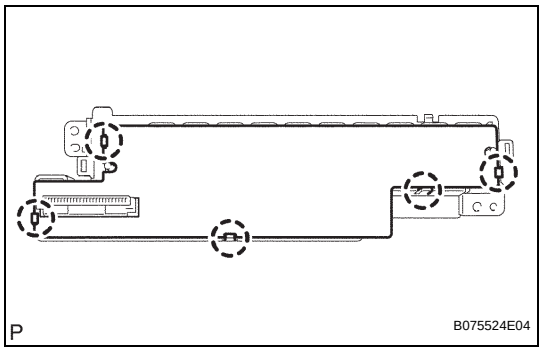

10. INSTALL METER CIRCUIT PLATE

NOTICE:

When reassembling the combination meter assembly, eliminate static electricity by touching the vehicle body to prevent the components from being damaged.

(a) Attach the 5 claws to install the meter circuit plate.

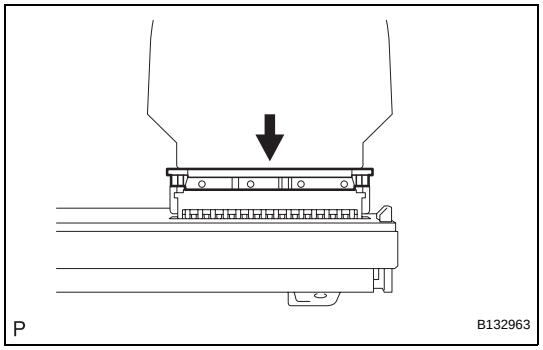

(b) Push the connector lock in the direction indicated by the arrow in the illustration and install the No. 3 meter circuit plate to the meter circuit plate.

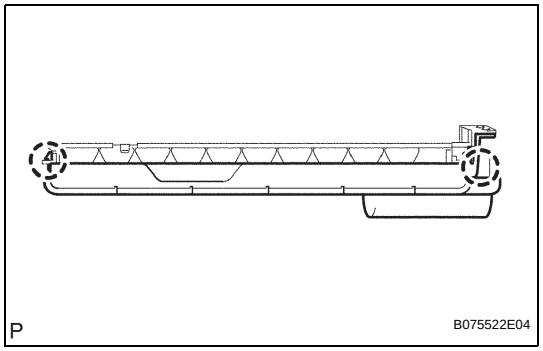

11. INSTALL NO. 1 COMBINATION METER COVER

(a) Attach the 2 claws to install the combination meter cover.

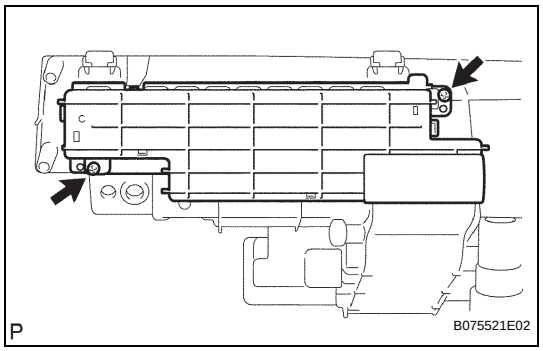

(b) Install the 2 screws.

INSTALLATION

1. **INSTALL COMBINATION METER ASSEMBLY (See page IP-10)**
2. **INSTALL INSTRUMENT PANEL SUB-ASSEMBLY**
   (a) Install the instrument panel (see page IP-11).