2003-05 ENGINE

Ignition System - Repair Procedures - Z4/E85

TROUBLESHOOTING

12 00 CONTENTS OF ENGINE ELECTRICAL SYSTEM GENERAL

General Information

Working on ignition system

1. Always switch off ignition before working on ignition system.

   Never touch components under current with engine running!

   Dangerous high tension!

2. Always remove DME master relay for the compression test to avoid activation of ignition coils by ignition final stages of the DME control unit.

   Dangerous high tension!

3. Always switch off ignition before connecting /disconnecting Service Tester, other testers and adapters or replacing components!
4. The secondary side (high voltage side) of ignition system must be under load of at least 4 kohms.
5. Never start engine after removing distributor cap or disconnecting wire (terminal 4) on ignition coil (terminal 4).
6. Never connect a shielded capacitor or test light on ignition coil terminal 1.
7. Never connect ignition coil terminal 1 wire earth or battery positive.

   For this reason, terminal 1 wire may not be used to interlock starting when service installing a burglar alarm system.

Removing And Installing Electronic Control Units

CAUTION: Disconnecting the vehicle battery will cancel the fault memories of control units.

For this reason, before disconnecting the battery, connect up BMW SERVICE TESTER or DIS. DIS: (select Expert mode) interrogate fault memory and print out fault messages stored in memory. BMW SERVICE TESTER: Interrogate fault memory and print out fault messages stored in memory. Investigate stored faults.

Ignition must always be switched off before disconnecting or connecting control-unit connectors.

Removal and installation of components, relays, fuse, etc. could cause the storage of faults in fault memories of control units capable of self-diagnosis. For this reason, fault memories must always be interrogated after working on the electrical system. Stored faults must be investigated and cancelled.

When Replacing Control Unit Of DME (Digital Motor Electronics), Please Note The Following Points:

Each control unit is programmed with certain basic values, which serve as mean values. The control unit receives different input values, depending on engine condition, which are compared with the stored values. The adaptive system compares the input values with the stored map values. Appropriate correction commands are sent to the concerned drive elements.

If, for example, the DME control unit would be without current for a long time (more than an hour), its adaptive system would lose the stored values. After re-commissioning a cancelled unit or installing a new control unit, the input values of the relevant engine must be read in and stored for the adaptive system.

This procedure could lead to erratic idling and disturbed overrunning of the engine after starting. Depending on the engine it could require some time before all values are adapted to the engine condition.

For this reason, follow the procedure described below before replacing or reinstalling a DME control unit:

1. Run engine to operating temperature if possible before replacing the control unit.
2. Remove control unit, install new control unit and drive vehicle.

Welding Work (Overload Protection Of Control Units)

When performing welding work on installed control units, to avoid any defects in the electronic control units, observe the following steps:

- Observe instructions for disconnecting and connecting battery. See INSTRUCTIONS FOR DISCONNECTING AND CONNECTING BATTERY.
- Detach terminal of battery negative lead from car battery and second battery if fitted. Cover negative terminal posts.
- If welding is to be performed near the battery/batteries, first remove battery/batteries from vehicle (flying sparks - combustion of explosive gas).
- Fit return clamp on welding unit as close as possible to welding point (maximum distance approx. 1 mm).
- Never connect return clamp to ground pin on body which has ground wires attached!

Disconnecting and connecting battery .

Observe safety instructions for handling vehicle battery. Refer to **Safety Instructions For Handling Vehicle Battery**.

Before Disconnecting Battery:

Switch off ignition.

NOTE: If the ignition is not turned off when the battery is disconnected, fault memories may be set in some control units.

Important!

- There is a danger of mixing up battery leads: If the battery positive and negative leads are the same color and you are in doubt, follow the polarity to the battery, then mark and cover the leads.
- On vehicles with radio code: After disconnecting the battery, the radio code must be re-entered. Therefore obtain the radio code card from the customer beforehand. Note stored stations and restore them after connecting the battery.
- Stored settings of the on-board computer and clock will also be lost.
- All available central keys must be receded for cars with first generation infrared transmitter locking systems.

General Notes On Disconnecting Battery:

- Do not disconnect battery leads and leads from alternator and starter motor while engine is running.
- Cars with IBS on battery negative terminal:
- Do not under any circumstances pull/lever off pole shoes by force.
- Do not under any circumstances release socket-head cap screw of IBS.
- When work is carried out on the electrical system, faults may be caused in the fault memories of some control units when the battery is connected.

After Connecting Battery:

Important!

After a power supply interruption some equipment is disabled and must be reactivated.

For further information and instructions on vehicle-specific activation, please refer to PROCEDURE FOR INITIALIZATION .

Disconnecting and connecting test equipment

When connecting and disconnecting:

- Service Tester.
- Testing Devices.
- Test Leads.
- When Replacing Control Units.

It is essential to turn off the ignition.

Follow instructions for removing and installing electronic control units. See REMOVING AND INSTALLING ELECTRONIC CONTROL UNIT.

Follow operating instructions for testing devices.

Make sure that connected test leads cannot make contact with rotating parts (e.g.: fans, ribbed V-belts, etc.).

Component inspection

NOTE: On all inspections and operations on the engine electrics and electronics, comply with prevailing national safety legislation and accident prevention regulations.

Always disconnect connectors of control units or components before checking electric wires.

Testing Aids:

The relevant wiring diagrams are filed in the Electrical Troubleshooting Manual folder for the 3 Series E36.

Always use correctly produced inspection lines, adapters, terminals and test tips.

Test values for checking components are contained in the Electrical Troubleshooting Manual.

For further technical information, refer to **ENGINE ELECTRICAL SYSTEM - TECHNICAL DATA** .

External Jump-Starting Aid

Do not start the engine with help of starting sprays.

Preparation

Conform with the following when starting engine with starting cable.

Ensure that starting cable wires are to appropriate cross-section size.

Only use fuse-protected starting cables.

Check whether the current supplying battery has 12V voltage.

If engine is started from battery of another vehicle, ensure that there is no contact between the bodies of both vehicles.

CAUTION: Never touch ignition system components under current - dangerous high tension!

Operation:

Always conform with the procedures to avoid injury to persons or damage to parts.

Select range P in vehicles with an automatic transmission and apply the parking brake.

Move the shift lever of vehicles with manual transmission into neutral and apply the parking brake.

Ensure that the starting cables cannot get caught in rotating parts, e.g. fan.

First connect both positive poles of the batteries with one starting cable (red).

Use the positive connection point in the engine compartment for vehicles with the battery in the trunk.

Then connect the second starting cable (black) between the negative pole of the current supplying battery and engine or body earth of the vehicle to be started.

CAUTION: Never connect the second starting cable (black) on the negative pole of the battery in the vehicle to be started. Produced gas could be ignited by sparks.

Danger of explosion!

If the battery in the vehicle supplying power is weak, start the engine of this vehicle and let it run at idling speed.

After the engine of the vehicle to be started has started up, first disconnect the starting cable on the negative pole/earth connection. Then remove the starting cable from the positive poles.

Compression Testing See **11 00 039 CHECKING COMPRESSION OF ALL CYLINDERS** .

12 00... INSTRUCTIONS FOR DISCONNECTING AND CONNECTING BATTERY

Observe safety instructions for handling vehicle battery .

Before disconnecting battery:

Switch off ignition.

NOTE: If the ignition is not turned off when the battery is disconnected, fault memories may be set in some control units.

IMPORTANT:

- **There is a danger of mixing up battery leads: If the battery positive and negative leads are the same color and you are in doubt, follow the polarity to the battery, then mark and cover the leads.**
- **On vehicles with radio code: After disconnecting the battery, the radio code must be re-entered. Therefore obtain the radio code card from the**

customer beforehand. Note stored stations and restore them after connecting the battery.

- **Stored settings of the on-board computer and clock will also be lost.**
- **All available central keys must be recoded for cars with first generation infrared transmitter locking systems.**

General notes on disconnecting battery:

- Do not disconnect battery leads and leads from alternator and starter motor while engine is running.
- Cars with IBS on battery negative terminal:

  Do not under any circumstances pull/lever off pole shoes by force.

  Do not under any circumstances release socket-head cap screw of IBS.

- Detach terminal of battery negative lead from car battery and second battery if fitted. Cover battery negative terminal(s) and secure.
- When work is carried out on the electrical system, faults may be caused in the fault memories of some control units when the battery is connected.
- When fitting terminal for battery negative lead. Tightening torque, see 61 21 1AZ in **GENERAL ELECTRICAL SYSTEM - TIGHTENING TORQUE** .

After connecting battery:

IMPORTANT: After a power supply interruption some equipment is disabled and must be reactivated.
Likewise, individual settings are lost and must be activated.
Example:

- **Vehicles with AFS only: Activate steering angle**
- **If necessary, activate power windows**
- **If necessary, activate mirror with compass**

12 13 NOTES ON CHECKING IGNITION SYSTEM

Troubleshooting

-> **12 13 ... FAULT IN FUEL INJECTION SYSTEM**
-> **12 13 ... SPARK-PLUG FAULTS**
-> **12 13 ... IGNITION COIL FAULTS**
-> **12 13 ... FURTHER FAULT PATTERNS WITH EVALUATION**
-> **12 13 ... ADDITIONAL FAULT NOTES FOR TROUBLESHOOTING**

Oscillograms

-> **12 13 ... NORMAL OSCILLOGRAM**
-> **12 13 ... OSCILLOGRAMS OF IGNITION COILS FROM DIFFERENT MANUFACTURERS**

Check

-> **12 13 ... CHECKING SECONDARY SIGNAL FOR STATIONARY IGNITION DISTRIBUTION**

IGNITION WIRES, SPARK PLUGS

12 12 011 REPLACING ALL SPARK PLUGS

Special tools required:

- 12 1 171
- 12 1 200

NOTE: This repair instruction is valid for the following engines:

- **M52 / M52TU / M54 / M56**
- **S52 / S50US**

Necessary preliminary tasks:

- Remove ignition coils .

Unscrew and remove spark plugs with special tool 12 1 171 in conjunction with special tool 12 1 200.

Installation:

If special tool 12 1 200 is not used,

Tightening torque, see 12 12 1AZ in **ENGINE ELECTRICAL SYSTEM - TIGHTENING TORQUES** .

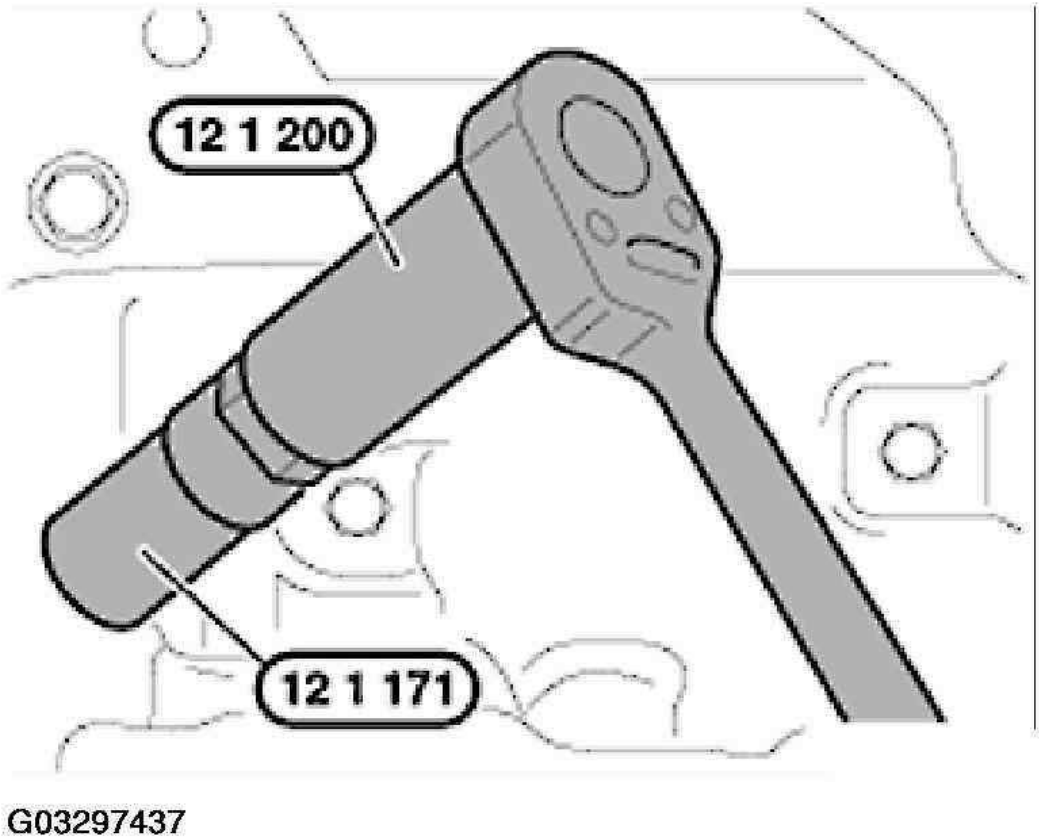

Fig. 1: Identifying Spark Plug Remover (Special Tool)
Courtesy of BMW OF NORTH AMERICA, INC.

IGNITION COIL

12 13 NOTES ON CHECKING IGNITION SYSTEM

Troubleshooting

-> **12 13 ... FAULT IN FUEL INJECTION SYSTEM**
-> **12 13 ... SPARK-PLUG FAULTS**
-> **12 13 ... IGNITION COIL FAULTS**
-> **12 13 ... FURTHER FAULT PATTERNS WITH EVALUATION**
-> **12 13 ... ADDITIONAL FAULT NOTES FOR TROUBLESHOOTING**

Oscillograms

-> **12 13 ... NORMAL OSCILLOGRAM**

-> **12 13 ... OSCILLOGRAMS OF IGNITION COILS FROM DIFFERENT MANUFACTURERS**

Check

-> **12 13 ... CHECKING SECONDARY SIGNAL FOR STATIONARY IGNITION DISTRIBUTION**

12 13... CHECKING SECONDARY SIGNAL FOR STATIONARY IGNITION DISTRIBUTION

Special tools required:

- 12 7 030

Engine Test Step 10

Remove ignition coil. Clip Special Tool 12 7 030 on relevant ignition coil to be tested. Clip high tension clip around ignition lead.

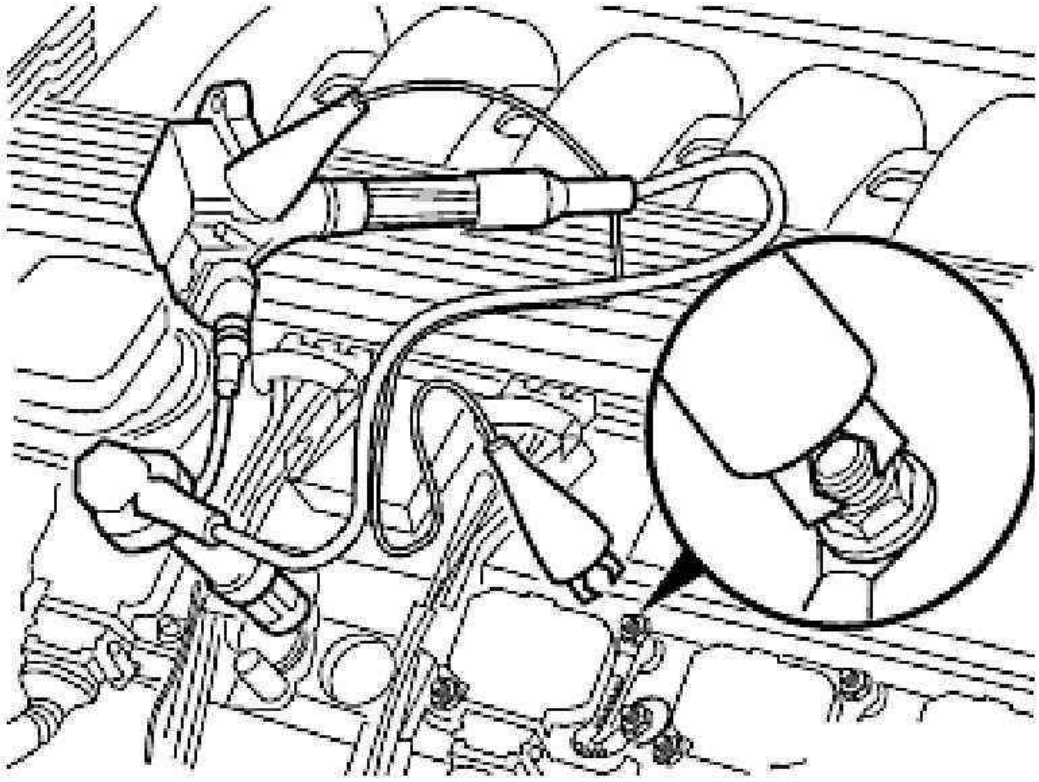

Fig. 2: Removing Ignition Coil
Courtesy of BMW OF NORTH AMERICA, INC.

Connect earth lead of adapter to vehicle earth and ignition coil.

Connect up diagnosis connector.

If trigger signal is not present (terminal 1), connect black clip of universal adapter cable to pin 1 of primary adapter cable.

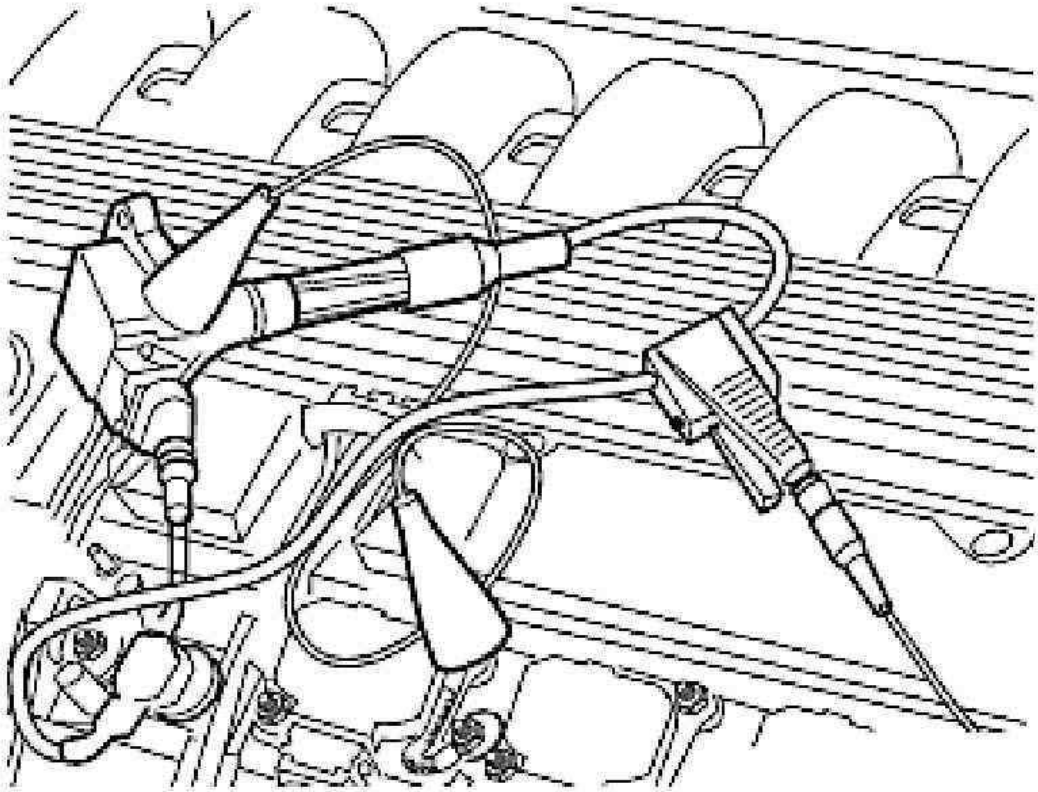

Fig. 3: Connecting Diagnosis Connector
Courtesy of BMW OF NORTH AMERICA, INC.

Produce a stationary signal by pressing key R on the tester.

NOTE: Neighboring ignition leads could produce interference on the screen of the oscilloscope.

Refer to the fault memories of engine control units for additional troubleshooting.

Interrogate fault memory and its fault reports.

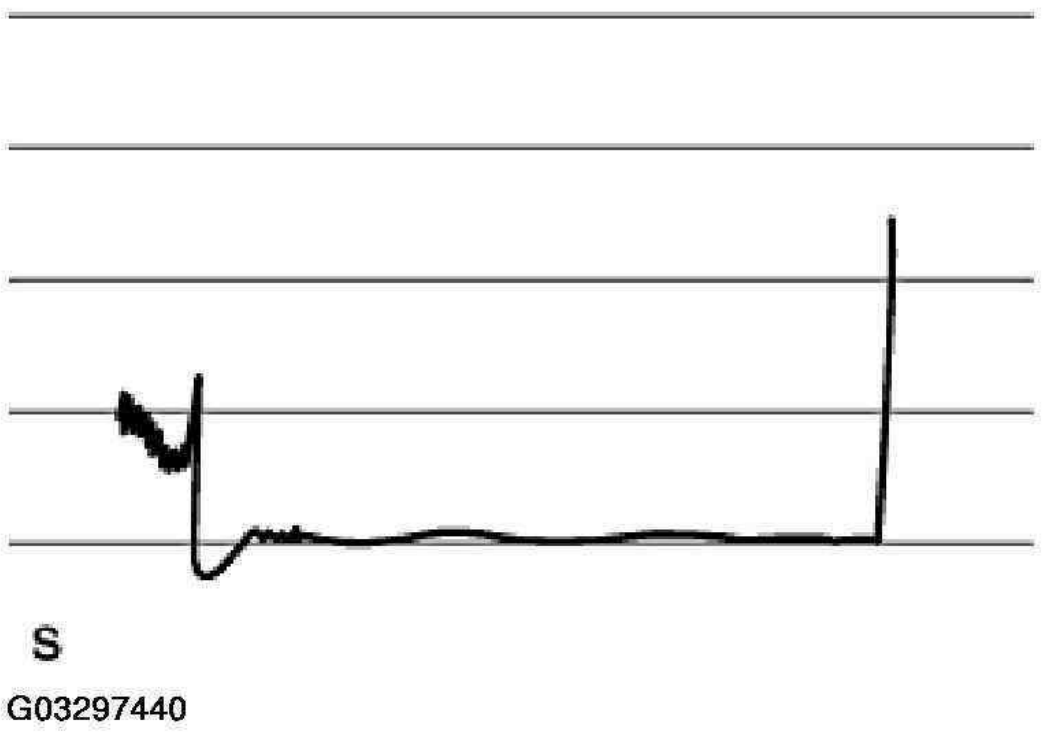

Fig. 4: Identifying Tester Signal
Courtesy of BMW OF NORTH AMERICA, INC.

12 13... NORMAL OSCILLOGRAM (M, S, W ENGINES ONLY)

1. start of ignition voltage peak
2. Level of ignition voltage
3. Level of combustion voltage
4. Period of combustion
5. Combustion curve characteristics
6. Start of decay process
7. Termination oscillations

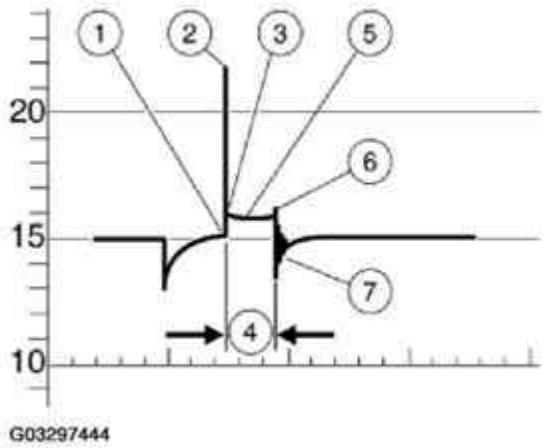

1. start of ignition voltage peak
2. Level of ignition voltage
3. Level of combustion voltage
4. Period of combustion
5. Combustion curve characteristics
6. Start of decay process
7. Termination oscillations

Fig. 5: Combustion Period Graph
Courtesy of BMW OF NORTH AMERICA, INC.

Secondary voltage patterns, beside one another:

Evaluation of ignition voltage peaks at idle speed (this example shows an engine with 4 cylinders).

NOTE: **The display of ignition voltage spikes is approx. 20-25% lower than the real value.**
The uniformity of all cylinders to each other is more important than the height of ignition voltage peaks.
Differences of 3000... 4000 V are permitted.
In event of greater differences, refer to Further Fault Patterns With Evaluation.

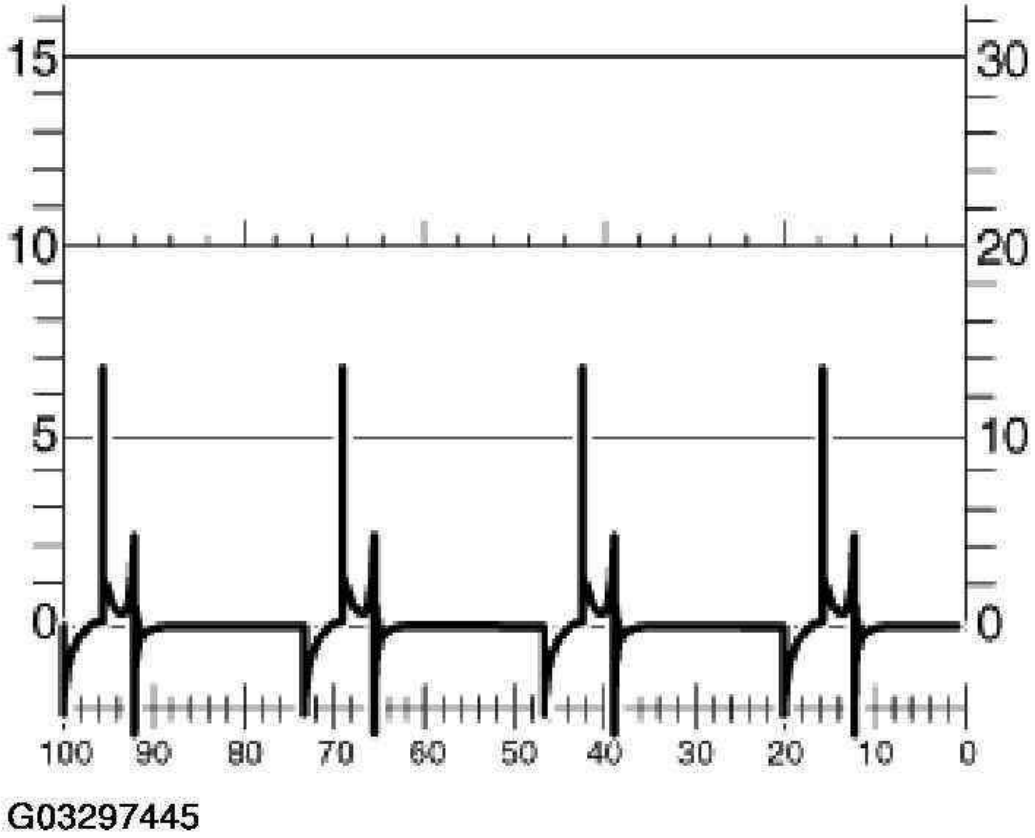

Fig. 6: Secondary Voltage Patterns (Beside One Another)
Courtesy of BMW OF NORTH AMERICA, INC.

Evaluation of ignition voltage peaks at increased speed of approx. 2000 RPM (this example shows an engine with 4 cylinders).

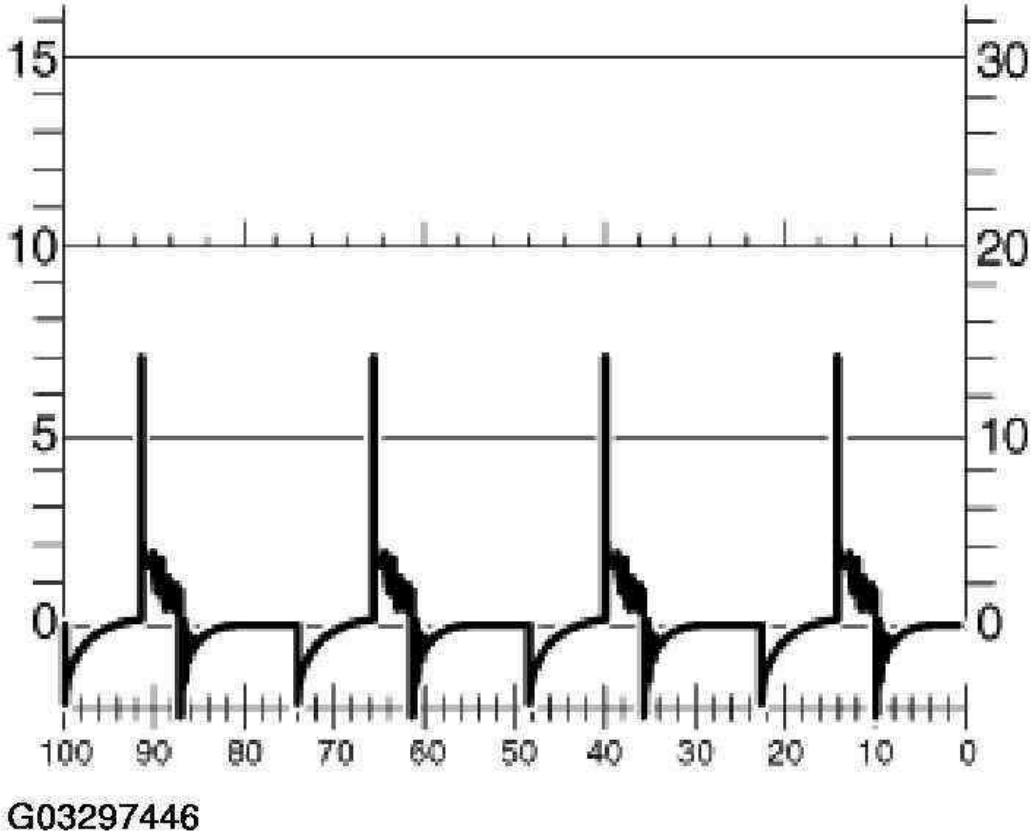

Fig. 7: Ignition Voltage Evaluation Graph
Courtesy of BMW OF NORTH AMERICA, INC.

Secondary voltage diagrams, superimposed:

Evaluation of combustion characteristics curve and decay characteristics at idle speed (this example shows a 4-cylinder engine).

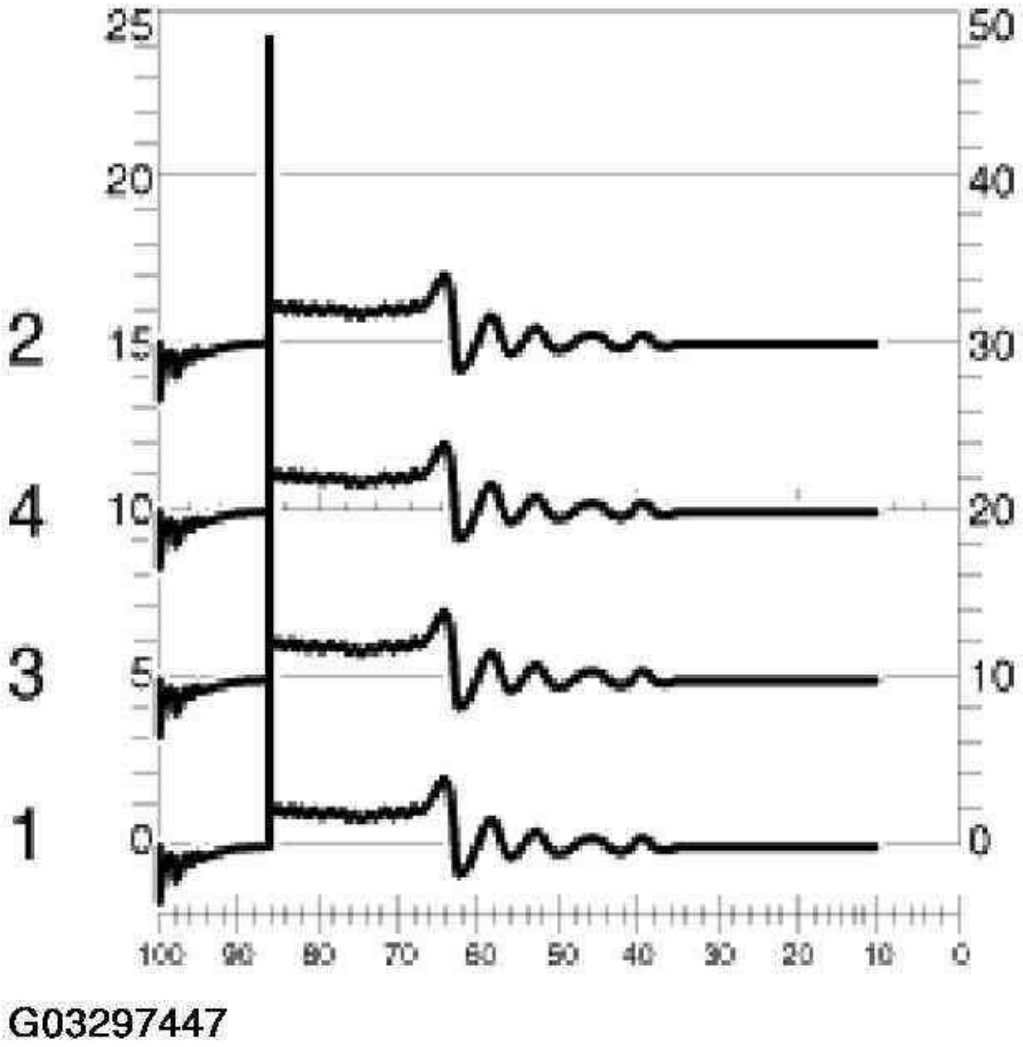

Fig. 8: Secondary Voltage Diagrams (Superimposed)
Courtesy of BMW OF NORTH AMERICA, INC.

Secondary voltage diagrams, consecutive:

NOTE: **Only the major differences in the ignition voltage patterns are revealed by this method of comparison.**
The identified fault must be allocated to the relevant cylinder using the secondary voltage representation forms next to/on top of each other.

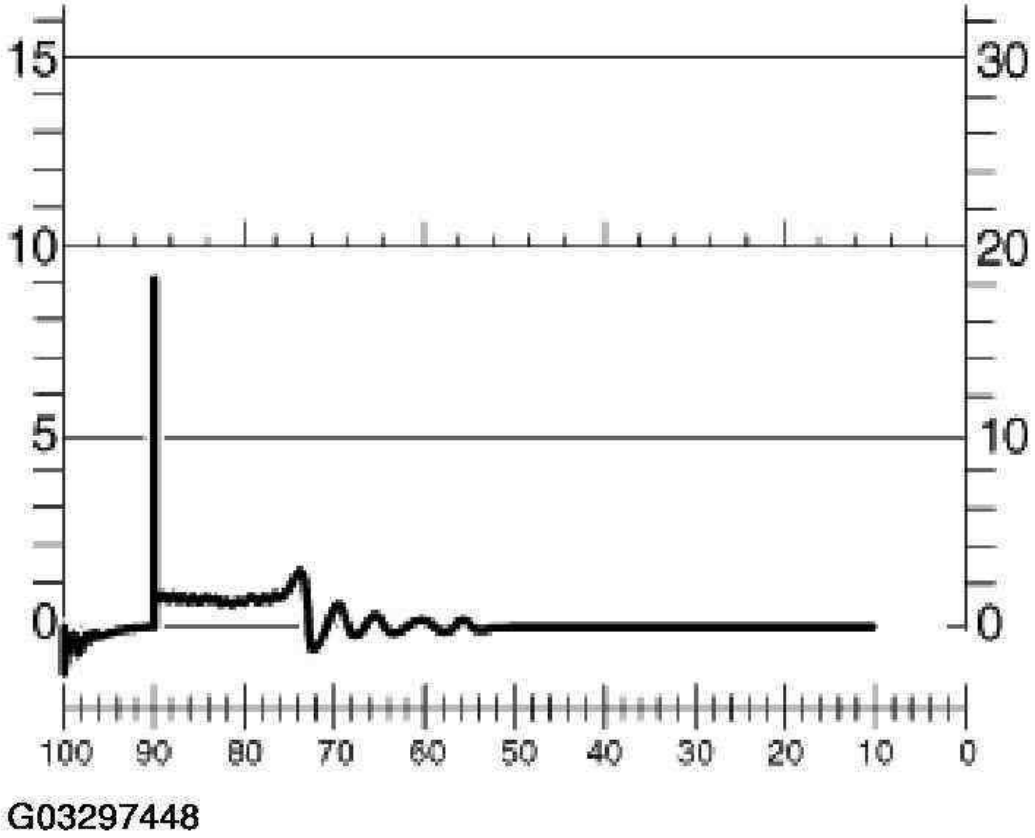

Fig. 9: Secondary Voltage Diagrams (Consecutive)
Courtesy of BMW OF NORTH AMERICA, INC.

12 13 009 CHECKING ROD-TYPE IGNITION COILS (M54)

Special tools required:

- 12 1 301
- 12 7 050

Necessary preliminary tasks:

- Remove ignition coil cover.

Unlock plug fastener (1) of ignition coil.

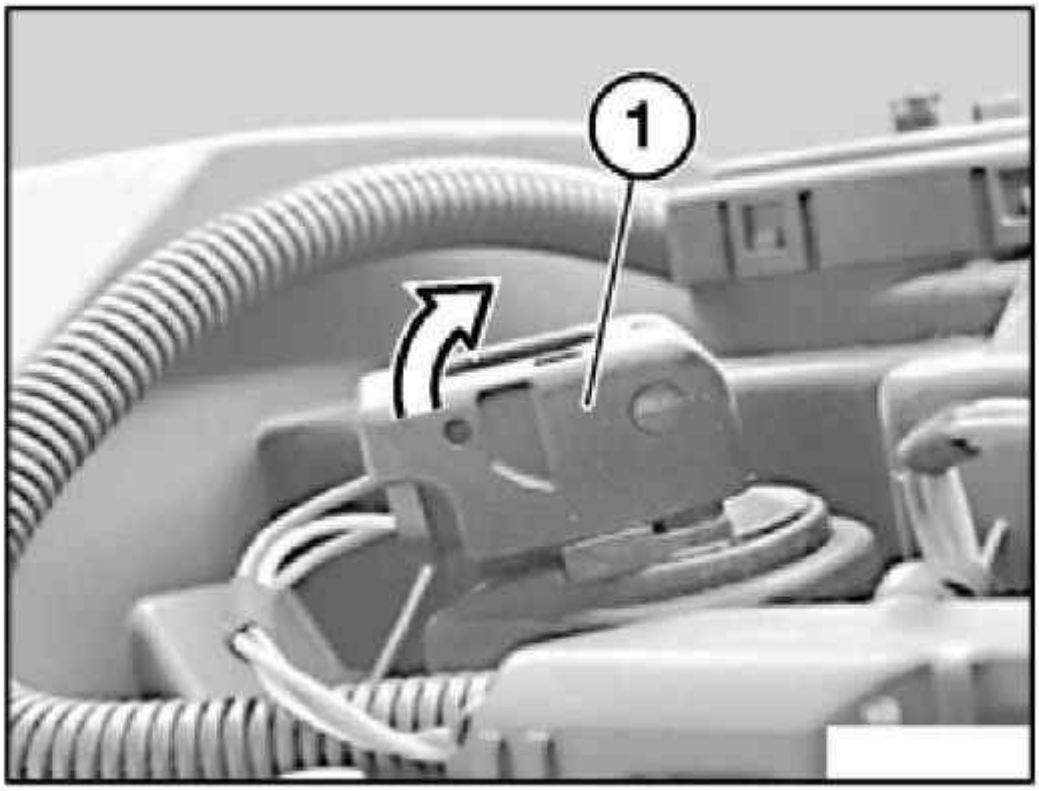

G03297449

Fig. 10: Releasing Plug Fastener Ignition Coil
Courtesy of BMW OF NORTH AMERICA, INC.

Detach plug (1) in direction of arrow.

Pull out ignition coil (2) towards top.

NOTE: Procedure applies to all rod-type ignition coils.

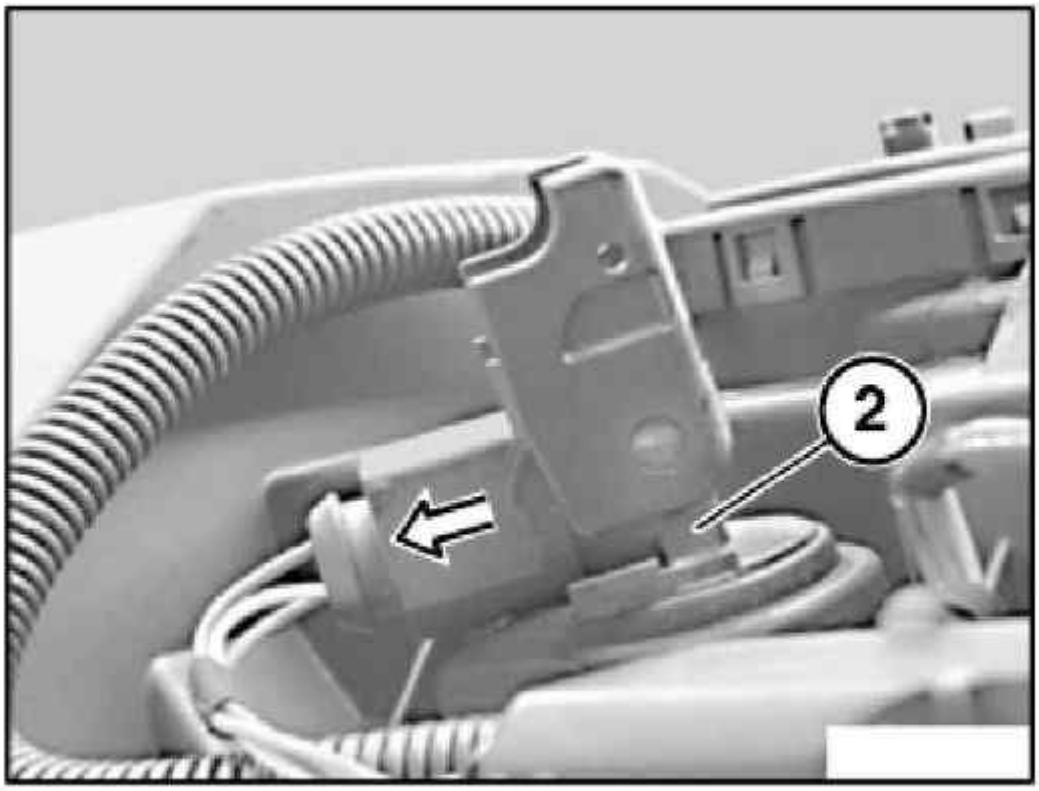

G03297450

Fig. 11: Removing Ignition Coil
Courtesy of BMW OF NORTH AMERICA, INC.

Install special tool 12 7 050.

Installation:

Special tool 12 7 050 is attached between spark plug and rod type ignition coil.

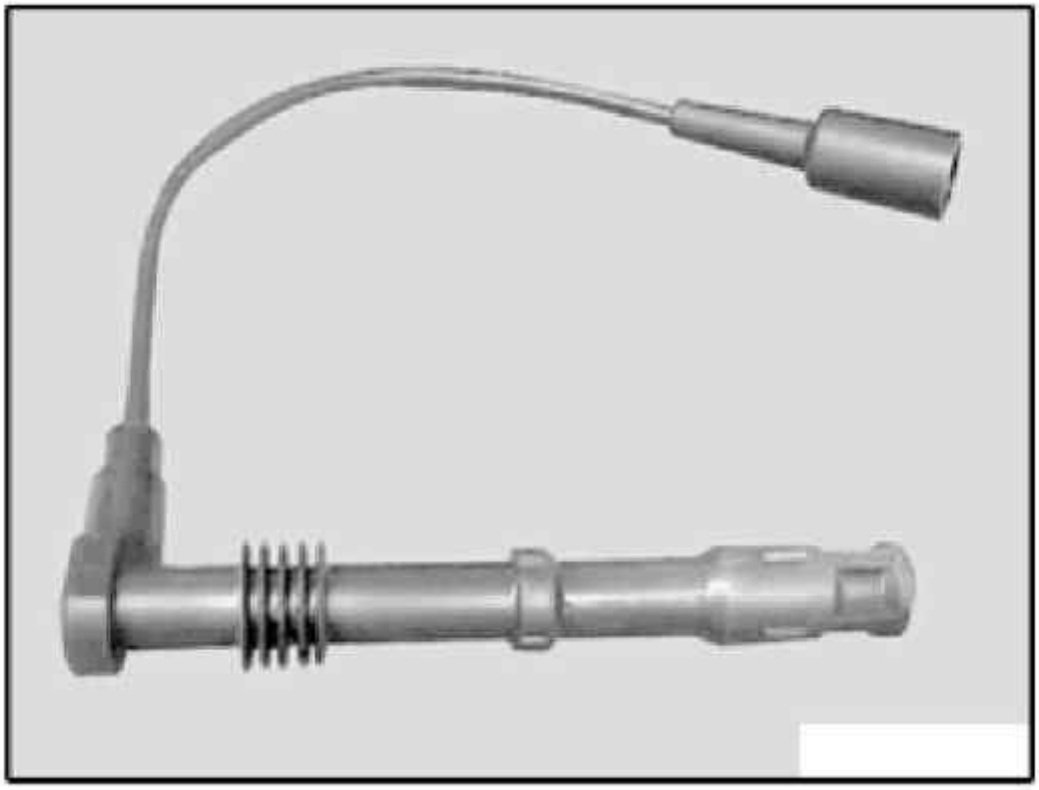

G03297451

Fig. 12: Attaching Special Tool Between Spark Plug And Rod Type Ignition Coil
Courtesy of BMW OF NORTH AMERICA, INC.

Secondary measurement:

Connect KV clip-on probe (1) of DIS Tester to special tool 12 7 050.

Procedure on DIS Tester:

- Select < Measurement >.
- Select < Preset measurement >.
- Select < Secondary ignition signal >.
- Connect < TD cable to diagnostic head >.
- Select < static ignition distribution >.
- Select < Number of cylinders >.

For subsequent procedure, follow DIS instructions.

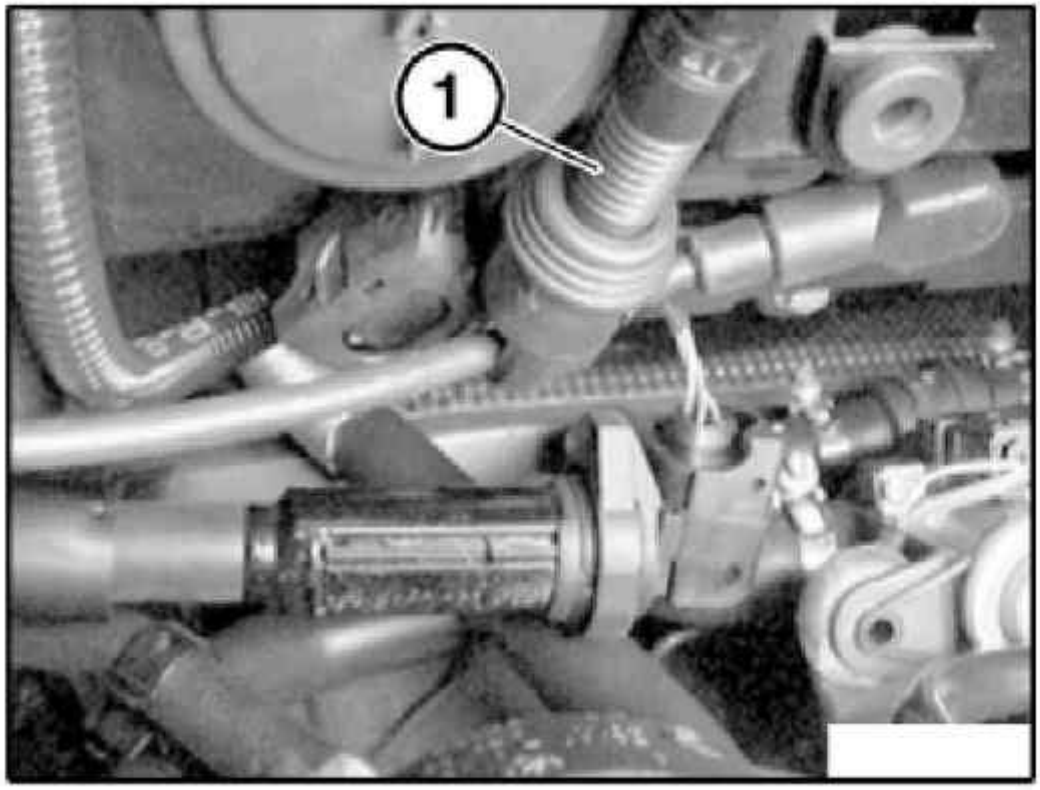

G03297452

Fig. 13: Connecting KV Clip-On Probe Of DIS Tester To Special Tool (illustration Shows: KV Clip-On Probe (1) US Version)
Courtesy of BMW OF NORTH AMERICA, INC.

Primary measurement:

Connect 26-pin pin box with special tool 12 1 301 to connector (1) DME module 5.

Procedure on DIS Tester:

- Select < Measurement >.
- Select < Preset measurement >.
- Select < Ignition signal term.1 >.

For subsequent procedure, follow DIS instructions.

NOTE: Pin assignment acc. to connection scheme.

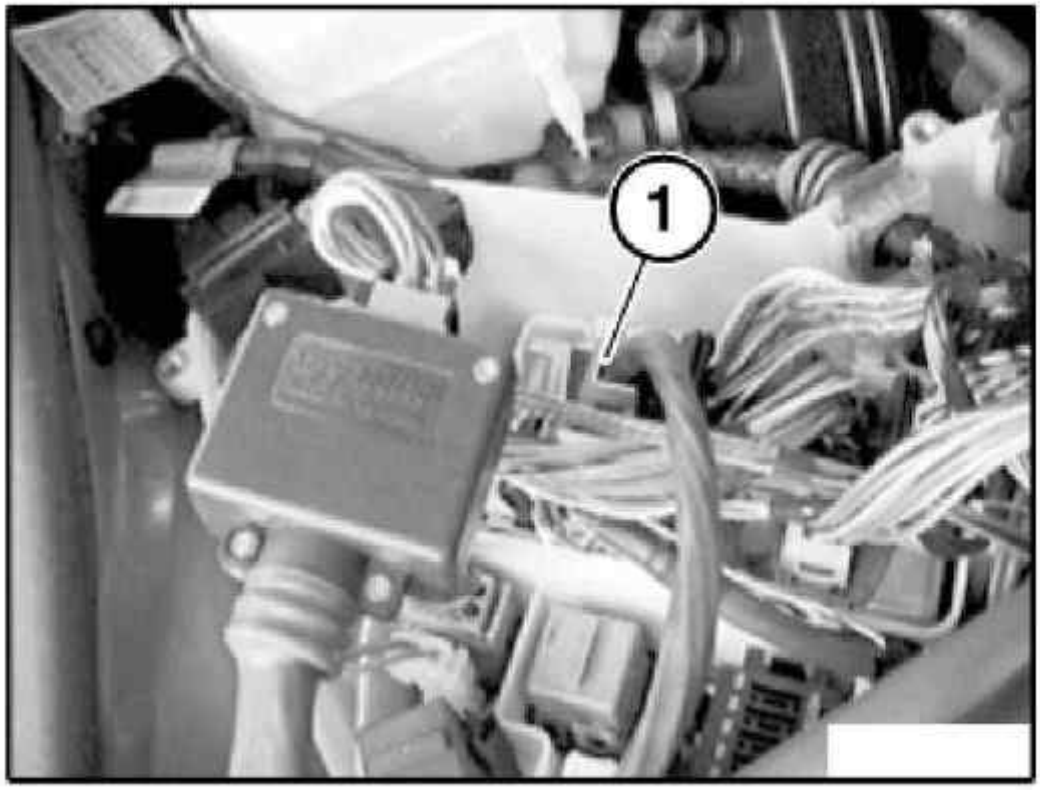

G03297453

Fig. 14: Connecting 26-Pin Pin Box With Special Tool To Connector
Courtesy of BMW OF NORTH AMERICA, INC.

IMPORTANT: Ignition signal is a multiple spark ignition.

Illustration of multiple spark ignition

1. Start of ignition peak.
2. Level of ignition voltage.
3. Level of sparking voltage.
4. Spark duration.
5. Sparking voltage curve.
6. Start of decay process.
7. Decay process.

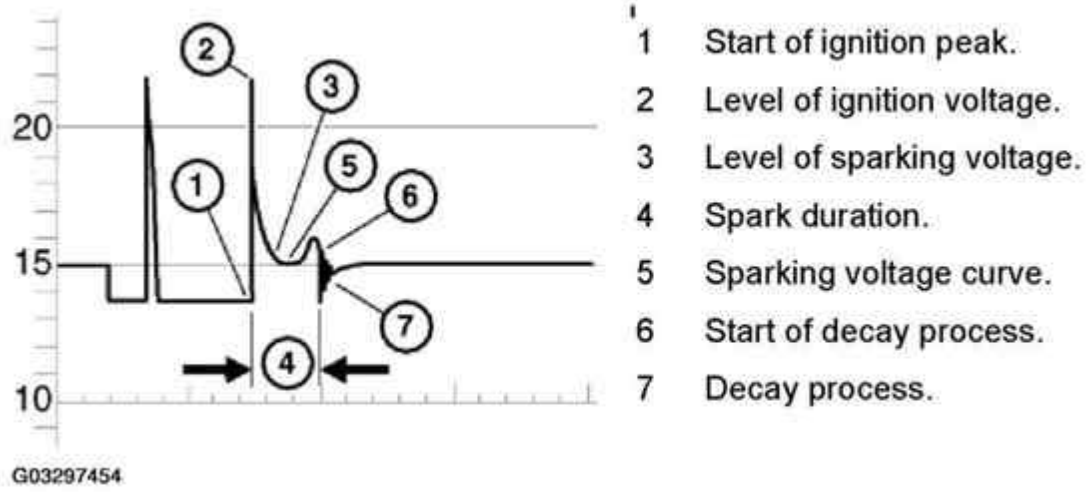

Fig. 15: Multiple Spark Ignition Graph
Courtesy of BMW OF NORTH AMERICA, INC.

M54 / M56 / N40 / N42 / N45 / N46 / N62 / N73:

The following ignition oscillogram applies to engines with multiple spark ignition from a production date of April 2001:

Depending on engine temperature (approx. -20° to 100°) and engine speed (< 2000 RPM.), some ignition voltage peaks (approx. 1-5 ignition peaks) can occur before the typical ignition voltage characteristic.

The additional ignition peaks play no role in diagnosis.

The last ignition peak (1) on the oscillogram is decisive.

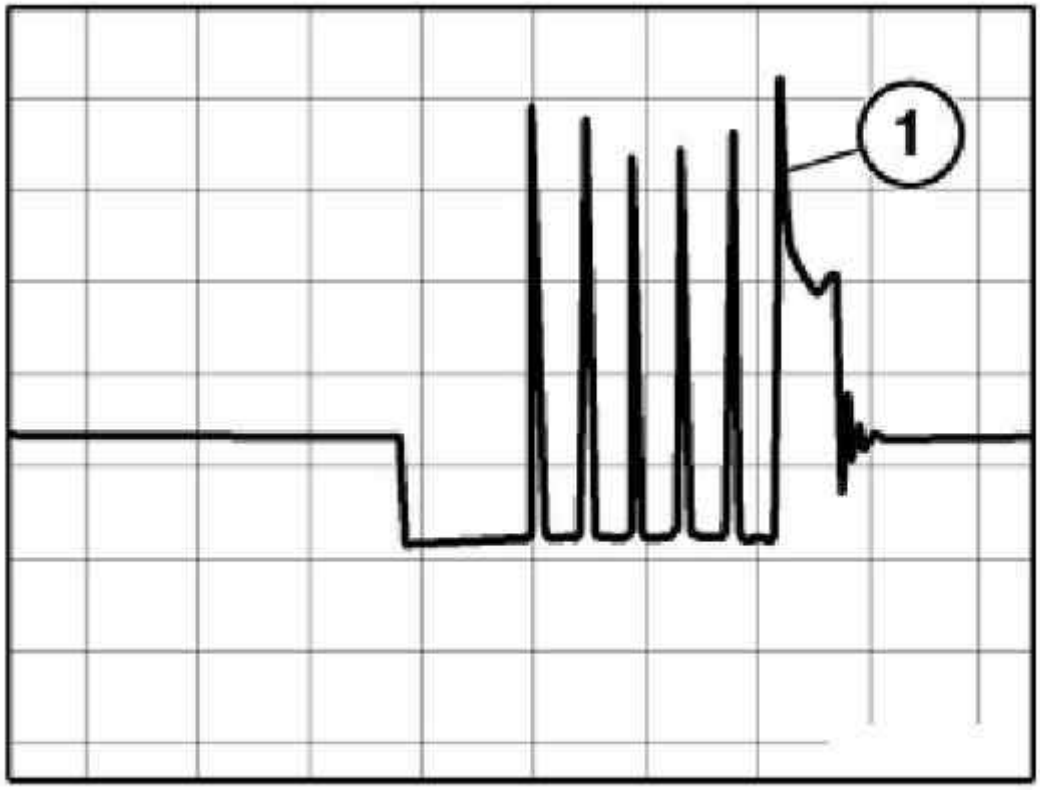

G03297455

Fig. 16: Ignition Oscillogram (Multi Spark Ignition Engine - 4/01 Onwards)
Courtesy of BMW OF NORTH AMERICA, INC.

NOTE: The display of the ignition voltage peak is approx. 20-25 % lower than the real value.

It is not the height of the ignition voltage peaks but rather the uniformity of all the cylinders that is important.

Differences of 3000 to 4000 volts are permitted.

12 13 511 REPLACING IGNITION COILS (M54)

Necessary preliminary tasks:

- Check stored fault messages.
- Switch off ignition.
- Remove E65/66 center assembly wall .

- Remove ignition coil cover .

Unlock plug retainer of ignition coil (1) and disconnect plug.

Pull ignition coil (1) up and out.

This procedure is applicable to all ignition coils.

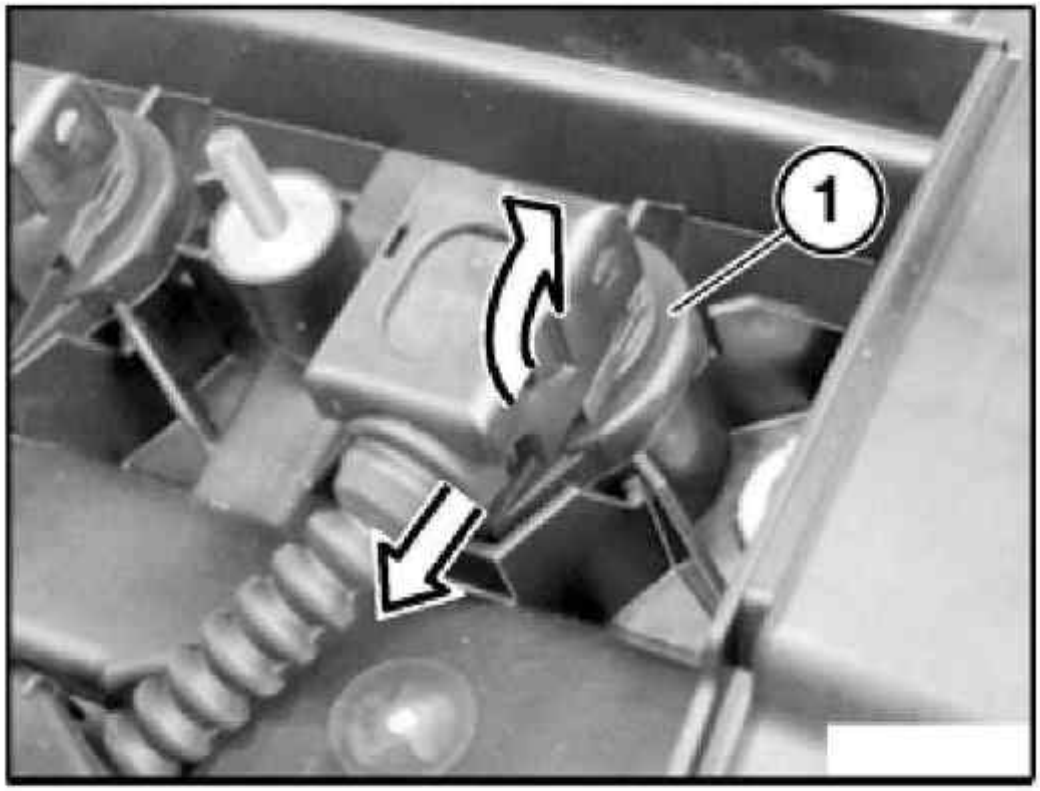

G03297456

Fig. 17: Removing Ignition Coil
Courtesy of BMW OF NORTH AMERICA, INC.

Installation:

Check that rubber seal of ignition coil (1) is correctly seated.

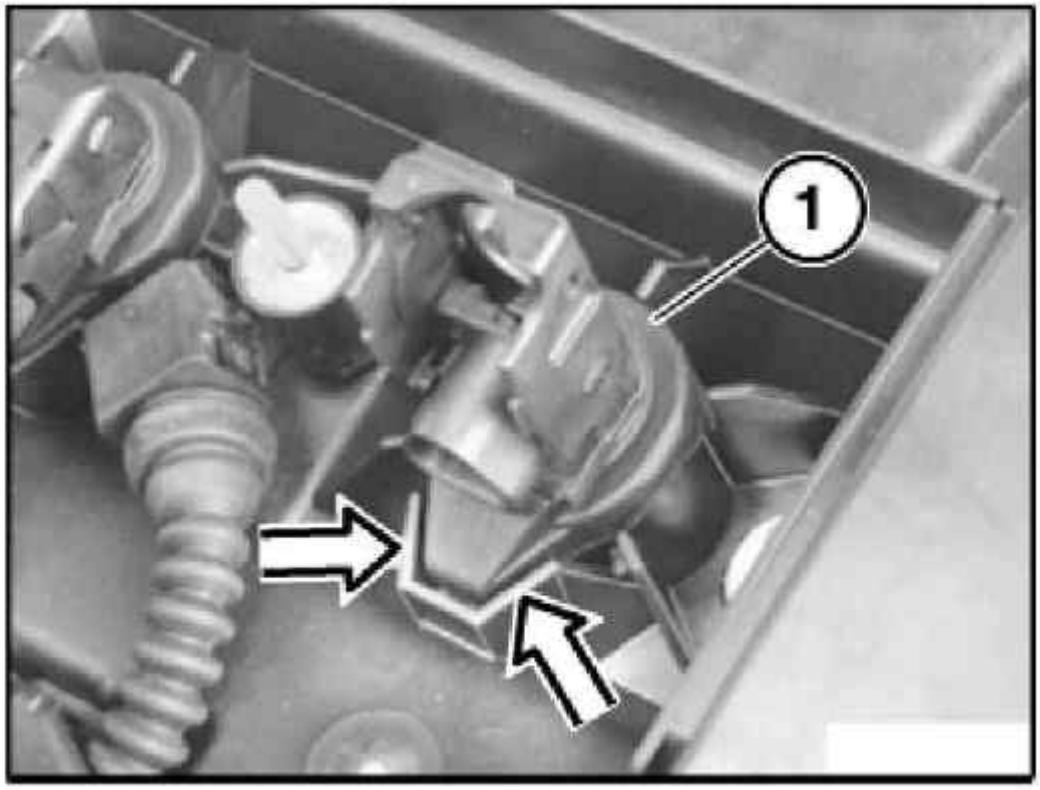

G03297457

Fig. 18: Identifying Ignition Coil Rubber Seal Position
Courtesy of BMW OF NORTH AMERICA, INC.

NOTE: Read out fault memory of DME control unit.

Now clear the fault memory.

ELECTRONIC SWITCHING OR CONTROL UNIT

12 14 521 REPLACING PULSE GENERATOR ON CRANKSHAFT (M54/M56)

Necessary preliminary tasks:

- Read out fault memory of DME control unit
- Switch off ignition
- **E46, E60, E61 only:**

Remove reinforcement plate on front axle support. See **51 71 374 REMOVING AND INSTALLING/REPLACING REINFORCEMENT PLATE** .

IMPORTANT: The section removing and installing reinforcement plate on front axle support contains important installation instructions.

- If fitted:

  Remove vacuum reservoir for exhaust flap.

All models:

NOTE: Installation location of pulse generator for crankshaft is underneath starter motor.

NOTE: For a better overview, this work step is shown on an engine that has been removed.

Unlock plug (1) and remove.

Unscrew bolt (2).

Remove pulse generator (3).

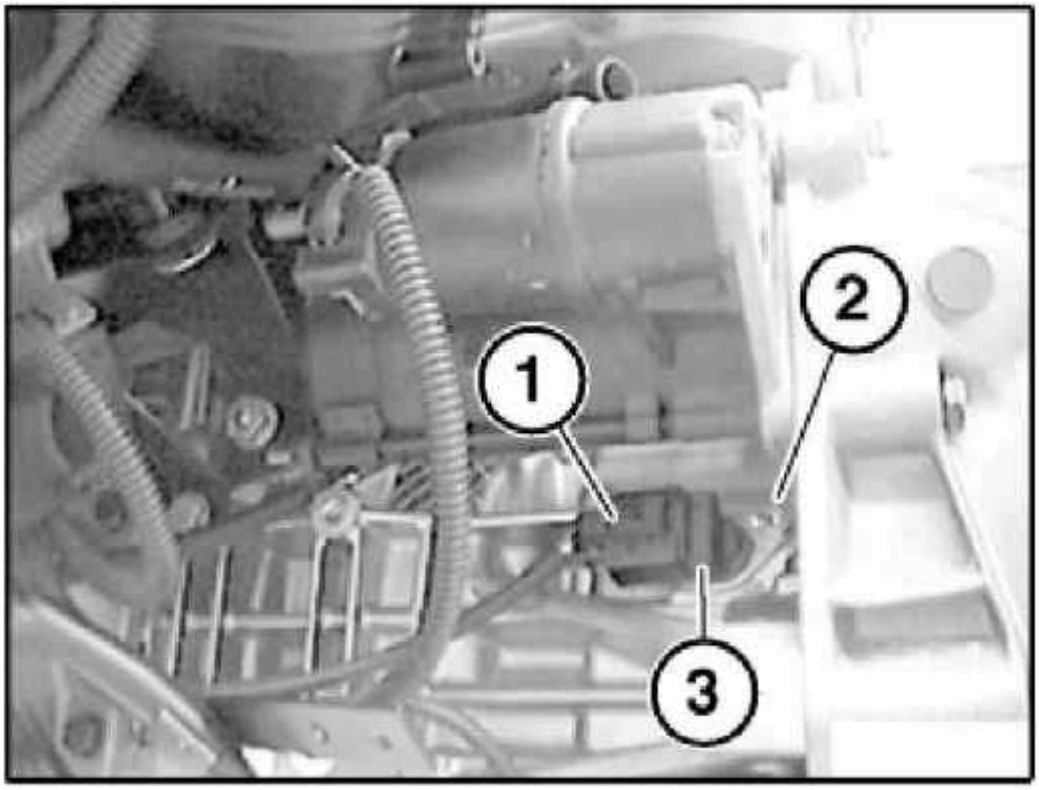

G03297458

Fig. 19: Removing Pulse Generator
Courtesy of BMW OF NORTH AMERICA, INC.

NOTE: Check stored fault messages.

Now clear the fault memory.

12 14 523 REPLACING PULSE GENERATOR ON INLET CAMSHAFT (M52TU / M54 / M56)

Necessary preliminary tasks:

- Check stored fault messages.
- Switch off ignition.
- Remove suction filter housing .

NOTE: Arrow shows installation position of pulse generator.

Remove solenoid valve (1) of VANOS adjustment unit for inlet camshaft.

Installation:

Replace sealing ring.

Tightening torque, see 11 36 1AZ in **ENGINE - TIGHTENING TORQUES** .

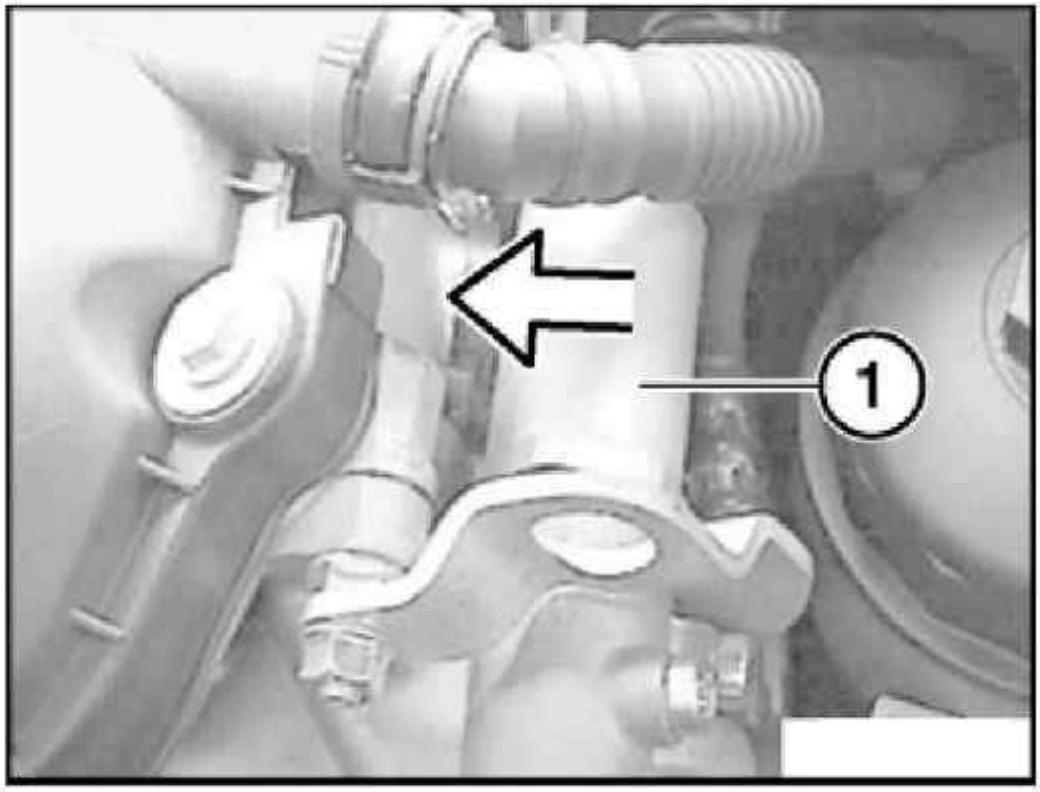

G03297459

Fig. 20: Removing Solenoid Valve
Courtesy of BMW OF NORTH AMERICA, INC.

Disconnect plug connection (1) on cable duct (2).

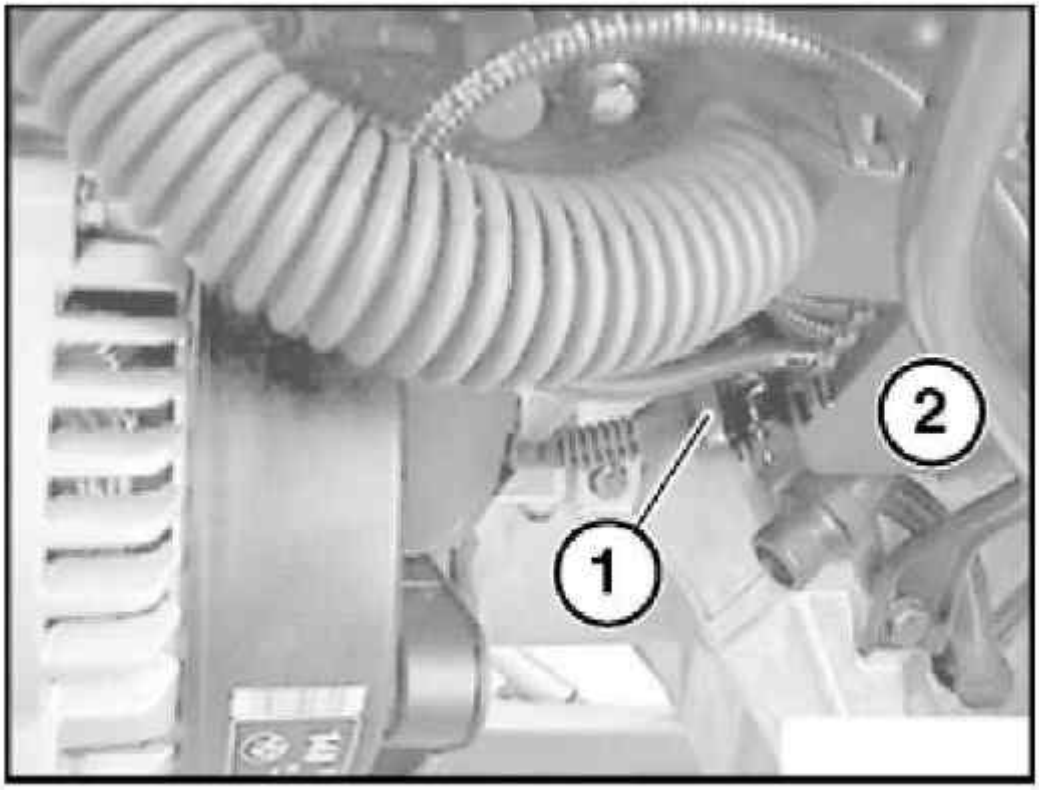

G03297460

Fig. 21: Disconnecting Plug Connection
Courtesy of BMW OF NORTH AMERICA, INC.

Release screw (1) on pulse generator (2).

Remove pulse generator (2) from cylinder head.

NOTE: To facilitate installation of pulse generator lead:
Secure an approx. 50 cm long auxiliary lead to plug connection of pulse generator.

Feed out end of pulse generator lead but only to such an extent that the auxiliary lead remains in the original routing in the intake system.

Remove pulse generator with lead.

Disconnect auxiliary lead from faulty pulse generator. Secure plug connection of new pulse generator to auxiliary lead.

Using auxiliary lead, feed new lead of pulse generator through to cable duct at bottom.

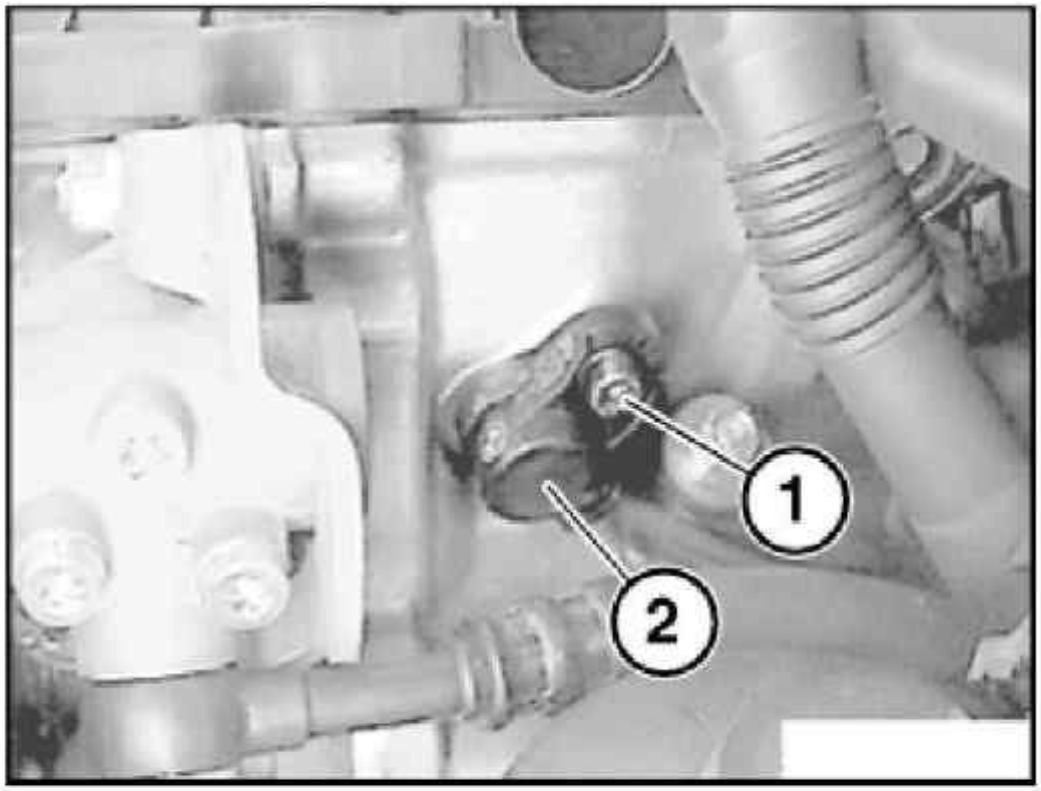

G03297461

Fig. 22: Removing Pulse Generator
Courtesy of BMW OF NORTH AMERICA, INC.

Installation:

Check sealing ring for possible damage, replace if necessary.

NOTE: Read out fault memory of DME control unit.

Now clear the fault memory.

12 14 524 REPLACING PULSE GENERATOR ON EXHAUST CAMSHAFT (M52TU, M54, M56)

Necessary preliminary tasks:

- Check stored fault messages

- Switch off ignition.

Location:

On cylinder head at front on exhaust side.

Unlock plug (1) and detach from pulse generator.

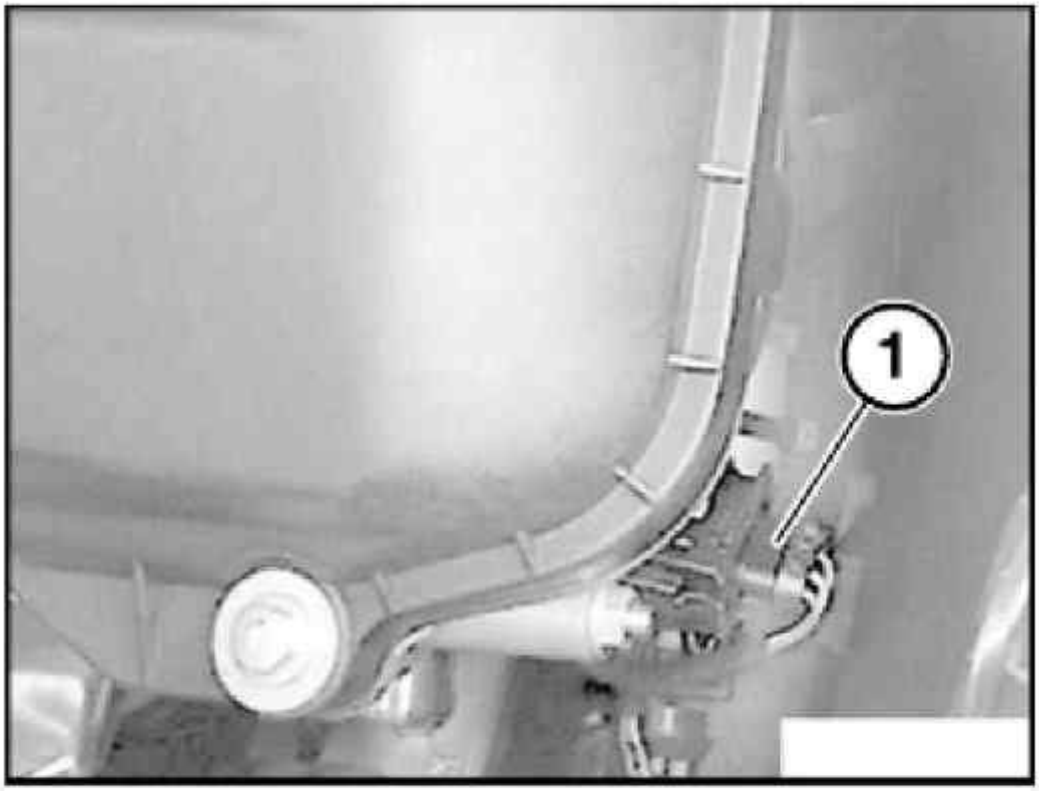

G03297462

Fig. 23: Removing Plug From Pulse Generator
Courtesy of BMW OF NORTH AMERICA, INC.

Release screw (1) on cylinder head.

Remove pulse generator.

Installation:

Check sealing ring for possible damage, replace if necessary.

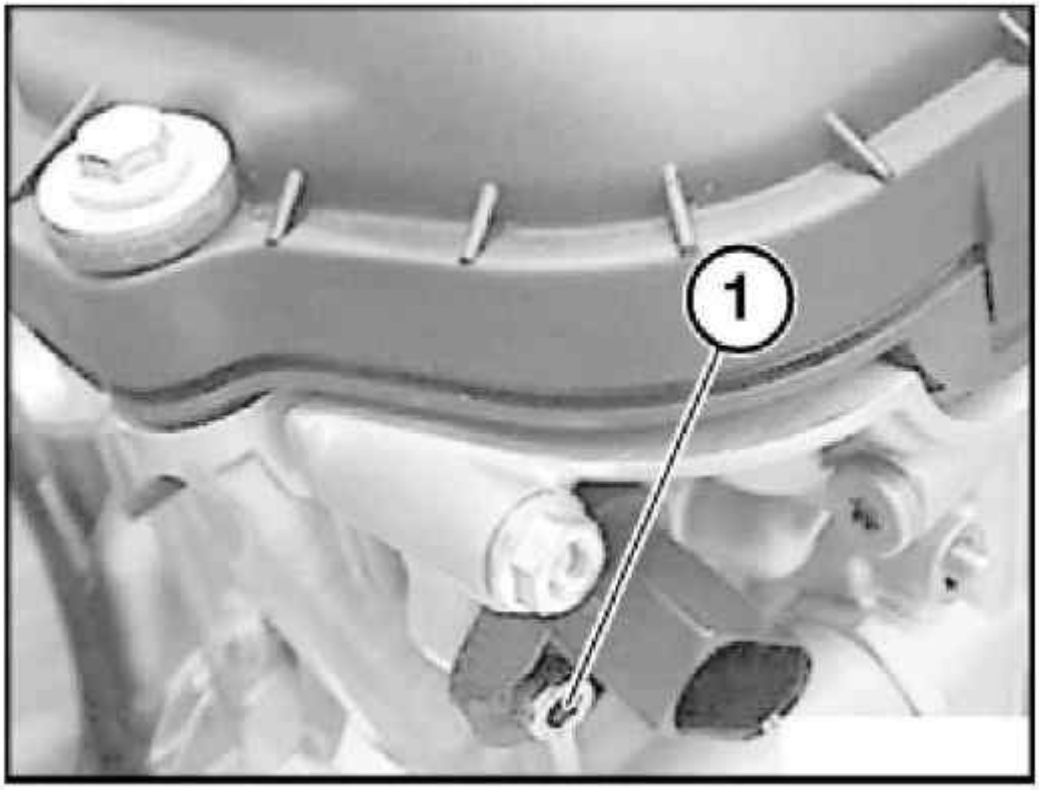

G03297463

Fig. 24: Releasing Screw
Courtesy of BMW OF NORTH AMERICA, INC.

NOTE: Interrogate fault memory of DME control unit.

Rectify faults.

Now clear the fault memory.

12 14 600 REPLACING KNOCK SENSOR (M52TU, M54,M56)

Necessary preliminary tasks:

- Check stored fault messages.
- Switch off ignition.
- Remove intake air manifold. See **11 61 050 REMOVING AND INSTALLING INTAKE AIR MANIFOLD** .

Unclip plug connection (1) from holder of cable duct (2) and disconnect.

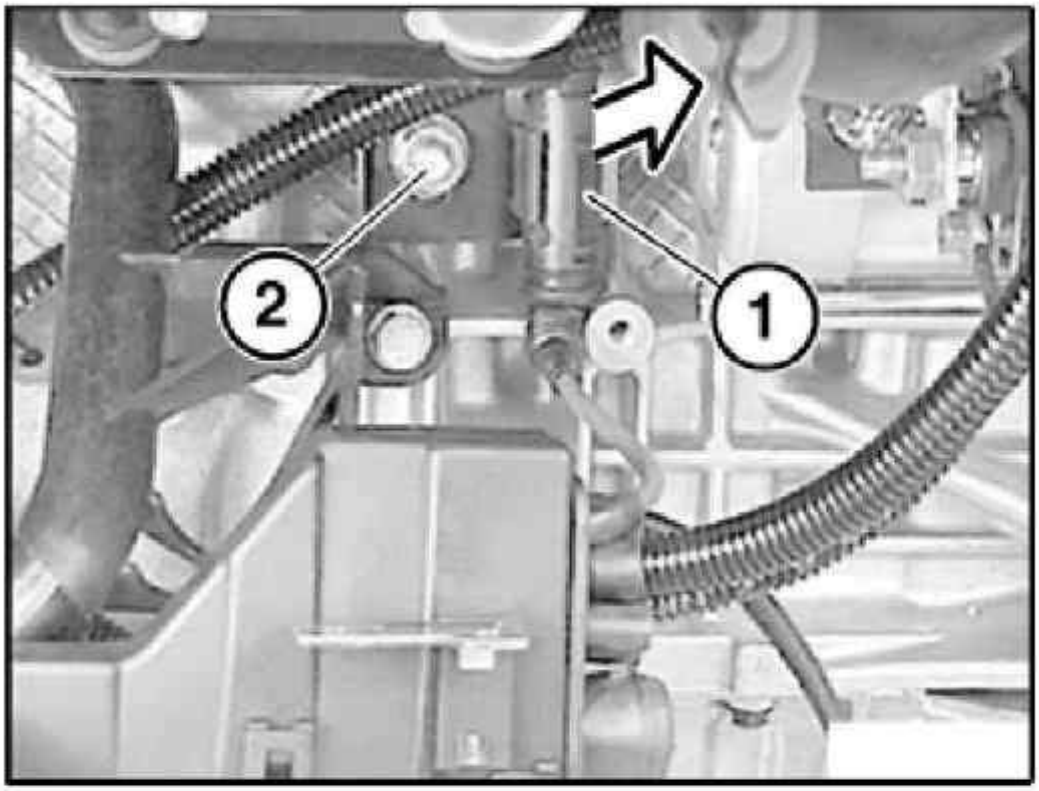

G03297464

Fig. 25: Disconnecting Cable Duct Holder Plug Connection
Courtesy of BMW OF NORTH AMERICA, INC.

Release screw (1) and remove knock sensor for cylinder bank 1-3.

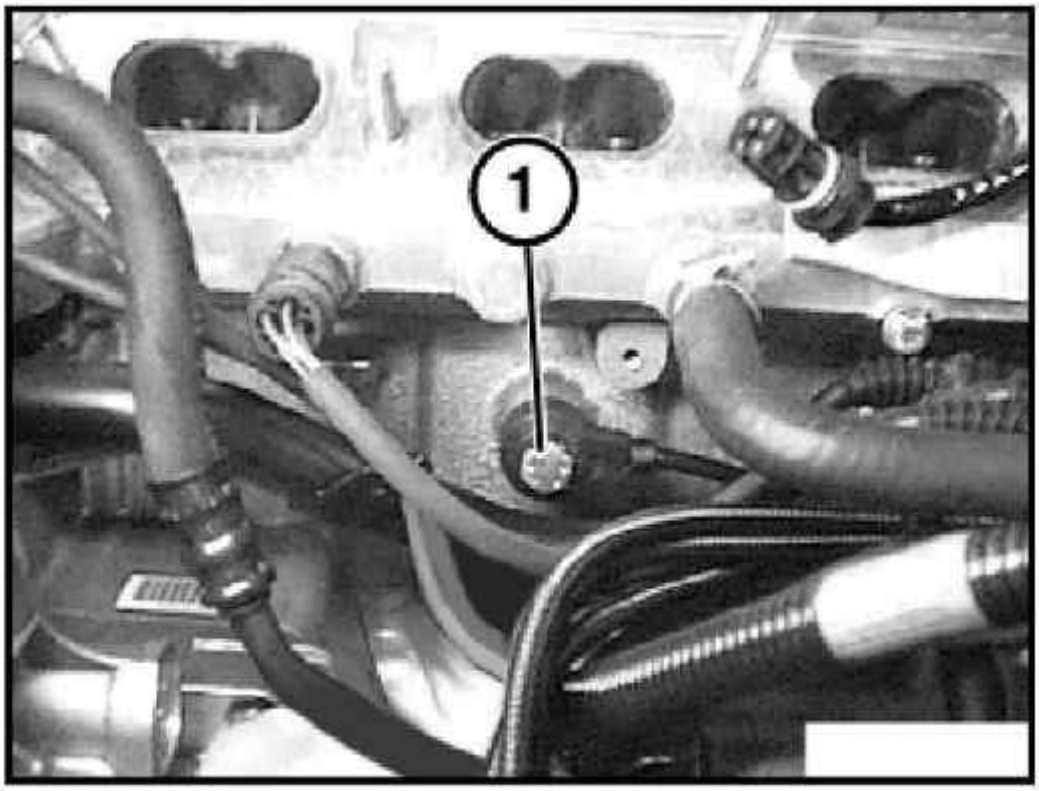

G03297465

Fig. 26: Removing Knock Sensor (Cylinder Bank 1-3)
Courtesy of BMW OF NORTH AMERICA, INC.

Release screw (2) and remove knock sensor for cylinder bank 4-6.

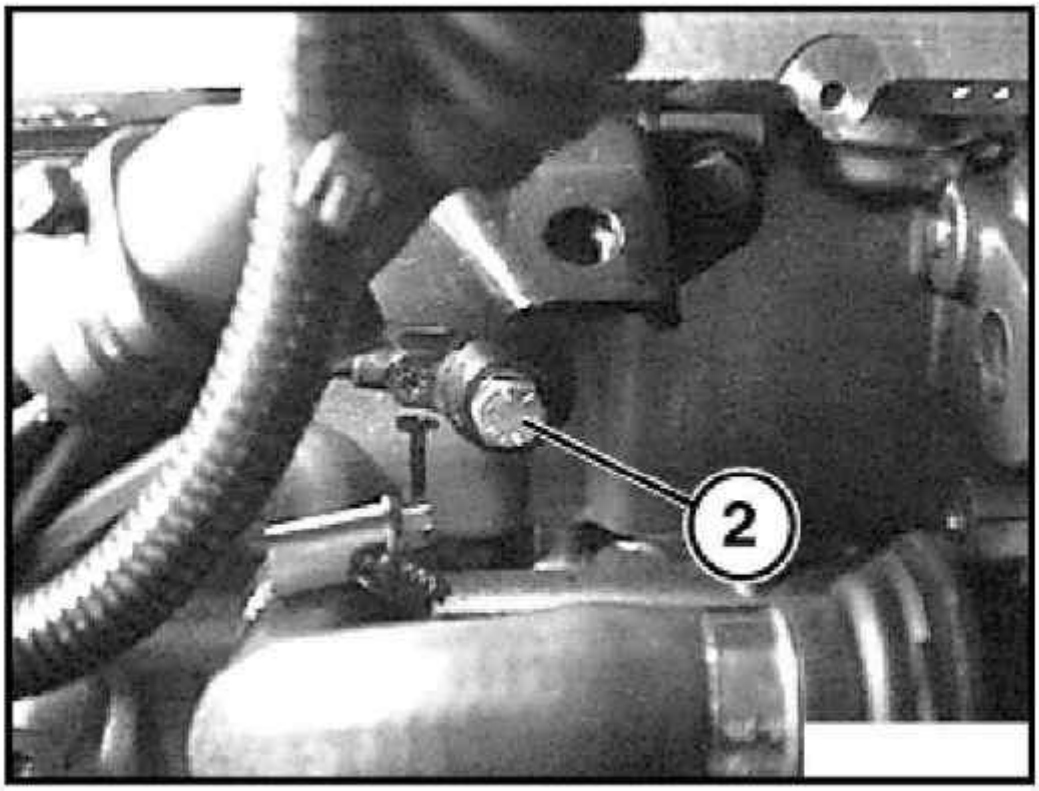

G03297466

Fig. 27: Removing Knock Sensor (Cylinder Bank 4-6)
Courtesy of BMW OF NORTH AMERICA, INC.

Installation:

Clean support face of knock sensors on engine block.

Tightening torque, see 12 14 2AZ in **ENGINE ELECTRICAL SYSTEM - TIGHTENING TORQUES** .

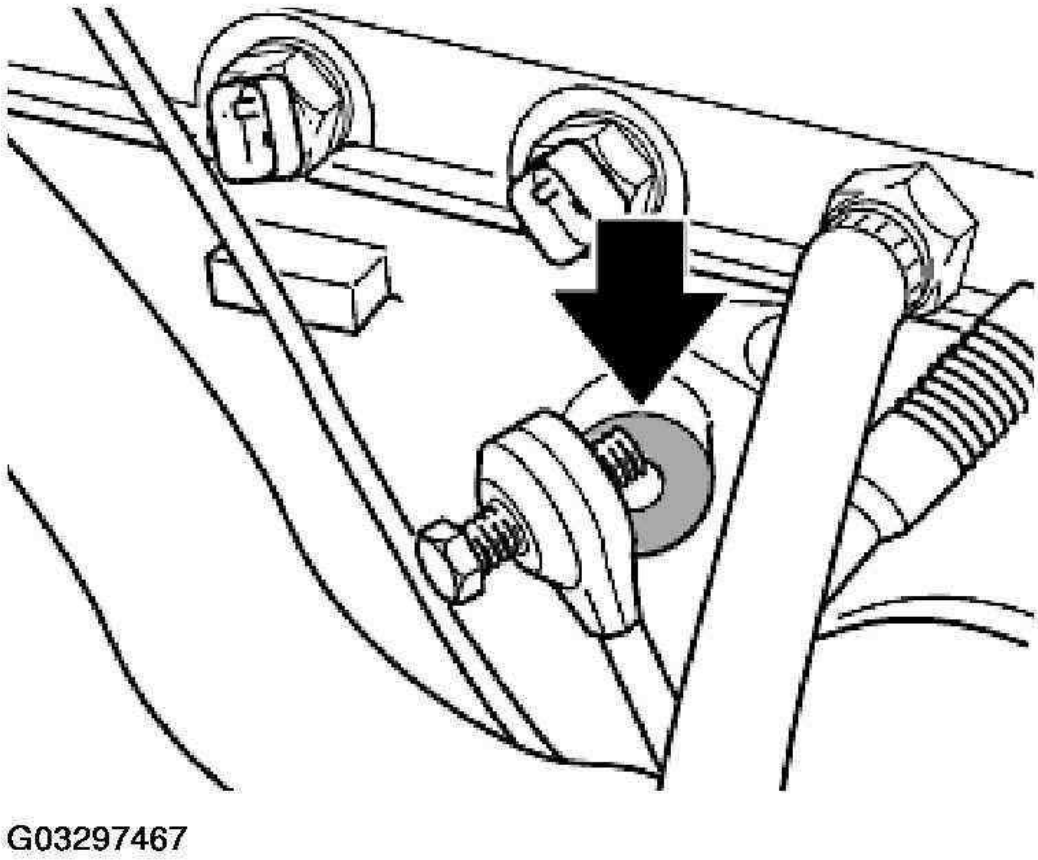

Fig. 28: Cleaning Support Face Of Knock Sensors On Engine Block
Courtesy of BMW OF NORTH AMERICA, INC.

Installation:

Read out fault memory of control unit of Digital Motor Electronics (DME).

Now clear the fault memory.

12 14 700 CODING CONTROL MODULE (DME)

Switch off ignition.

Connect MoDiC or DIS/GT1 Tester.

Switch on ignition.

Select "Coding" program

For subsequent procedure, follow instructions in MoDiC or DIS/GT1 Tester.

Carry out adjustment of following control units:

- EWS (electronic immobilizer)
- DME (Digital Motor Electronics) or

12 14 705 PROGRAMMING CONTROL UNIT (DME)

Switch off ignition.

Connect MoDiC or DIS/GT1 Tester.

Switch on ignition.

Select "Programming".

For subsequent procedure, follow instructions in MoDiC or DIS/GT1 Tester.

Carry out adjustment of following control units:

- EWS (electronic immobilizer)
- DME (Digital Motor Electronics) or

ALTERNATOR WITH DRIVE AND MOUNT

12 31... REPLACING ALTERNATOR BELT PULLEY

Special tools required:

- 12 7 110

Remove and install alternator drive belt.

Depending on alternator type, grip shaft with:

- hexagon socket
- multi-tooth socket or
- Torx socket wrench

Release nut with special tool 12 7 110.

Installation:

Tightening torque, see 12 31 2AZ / 12 31 3AZ in **ENGINE ELECTRICAL SYSTEM - TIGHTENING**

TORQUES .

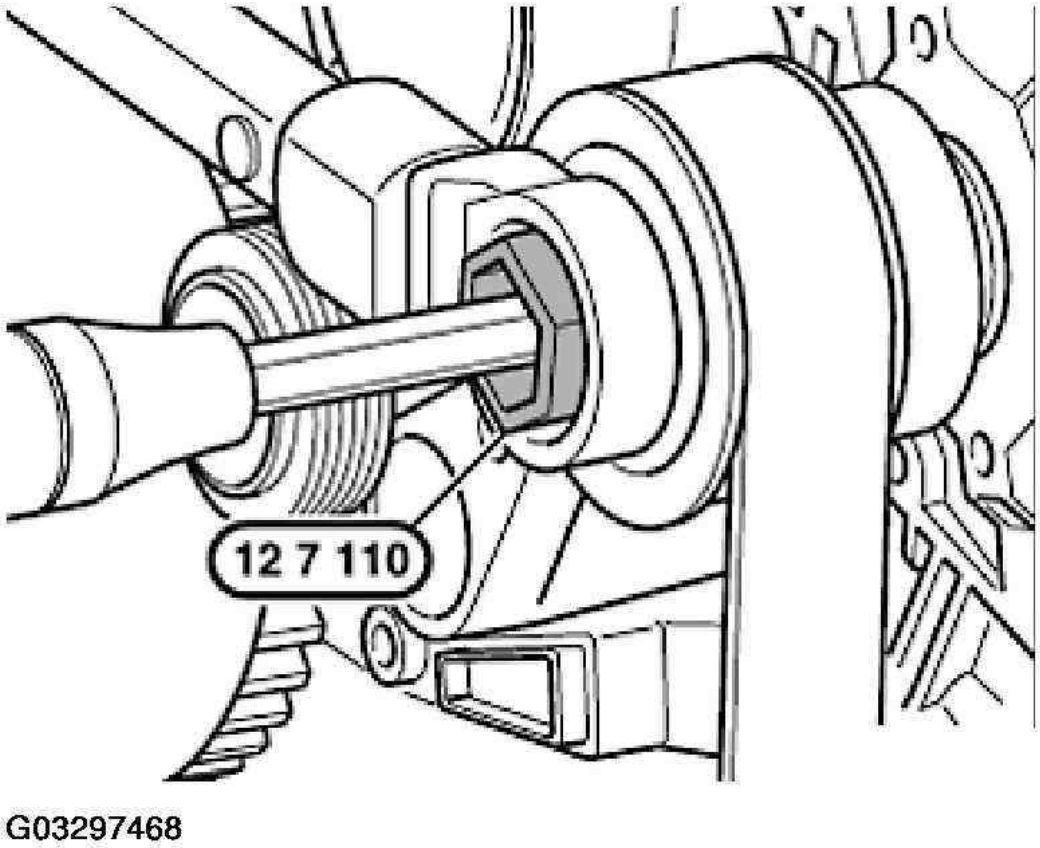

Fig. 29: Assembling Special Tool
Courtesy of BMW OF NORTH AMERICA, INC.

12 31 009 CHECKING ALTERNATOR (BSD)

Necessary preliminary tasks:

- Correct connections on charged battery
- Correct connections on alternator and starter motor
- Good ground connection between engine and body
- Tensioned ribbed V-belt
- Read out DME fault memory.

NOTE: The alternator with BSD interface can communicate with the engine control unit (DME).

The alternator is not connected to the charge telltale light.

The alternator can identify various faults.

BSD alternator can be recognized by the plug connection on the alternator.

Connect diagnosis tester.

- Function selection
- Complete vehicle
- Drive
- Voltage and current regulation
- Voltage and current generation
- Alternator
- Follow instruction in diagnostic program

Oscillogram for a fault-free alternator:

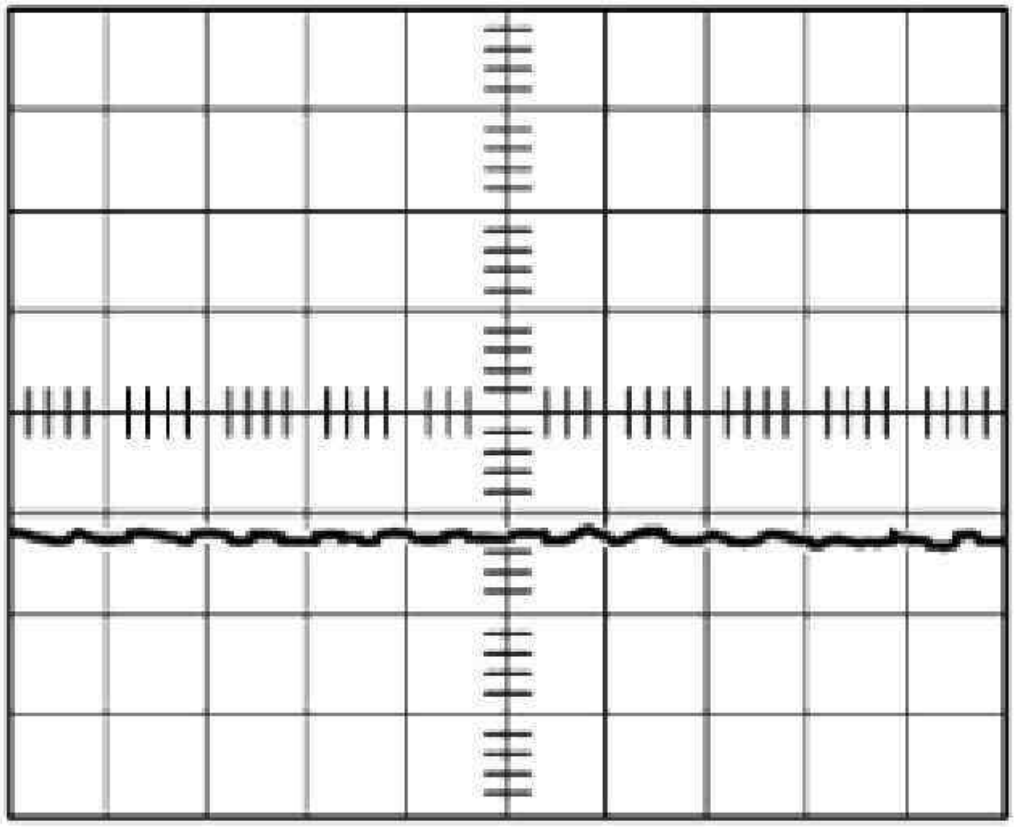

G03297469

Fig. 30: Fault-Free Alternator Oscillogram
Courtesy of BMW OF NORTH AMERICA, INC.

Oscillogram for a faulty alternator:

One phase interrupted.

Repair/exchange alternator.

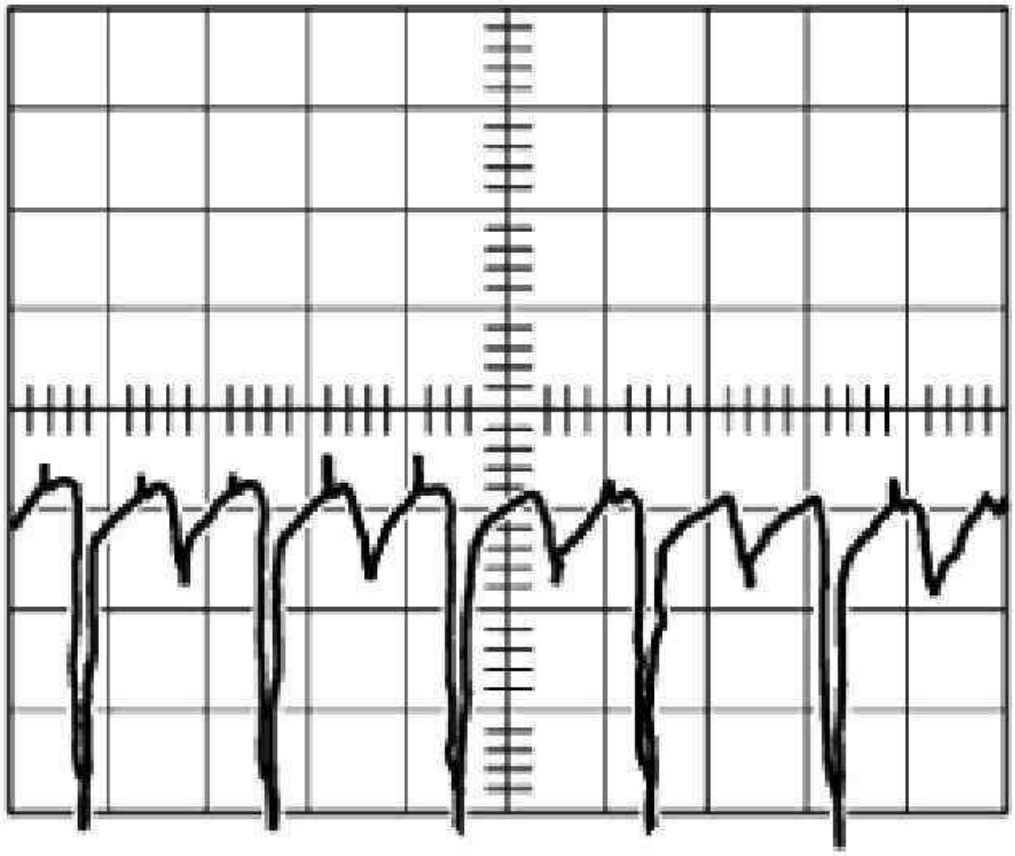

Fig. 31: Faulty Alternator Oscillogram
Courtesy of BMW OF NORTH AMERICA, INC.

Interturn fault.

Repair/exchange alternator.

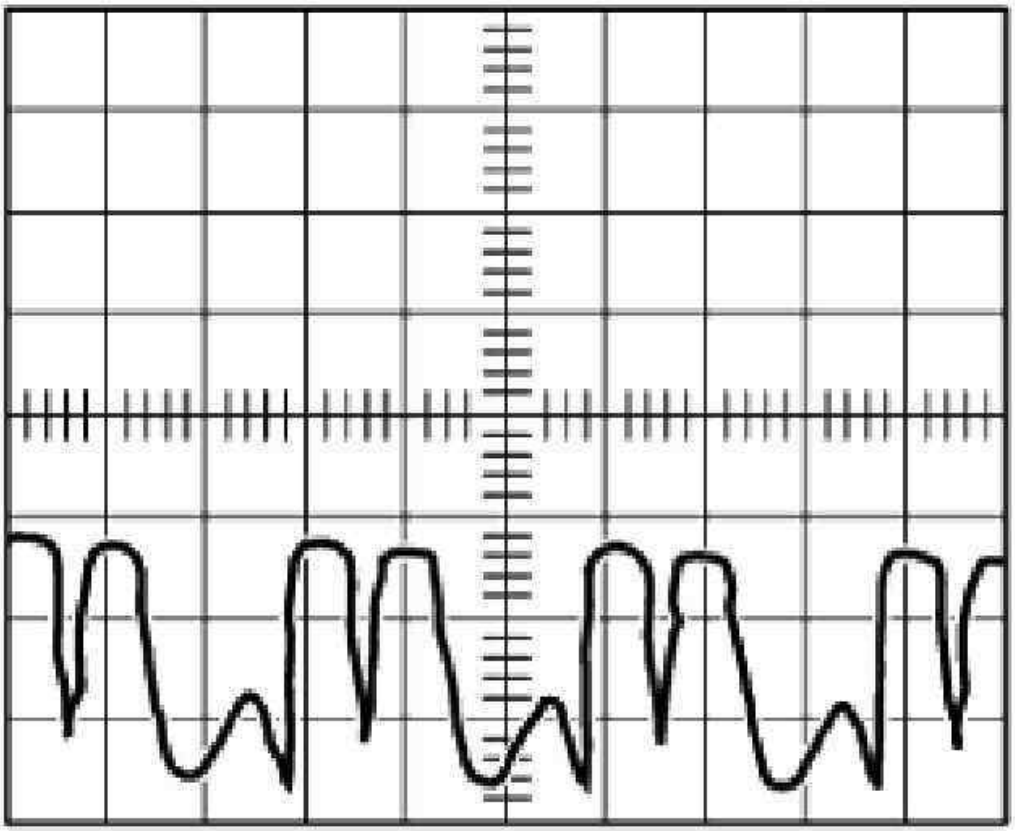

G03297471

Fig. 32: Alternator Oscillogram - Interturn Fault
Courtesy of BMW OF NORTH AMERICA, INC.

Open circuit in negative diode.

Repair/exchange alternator.

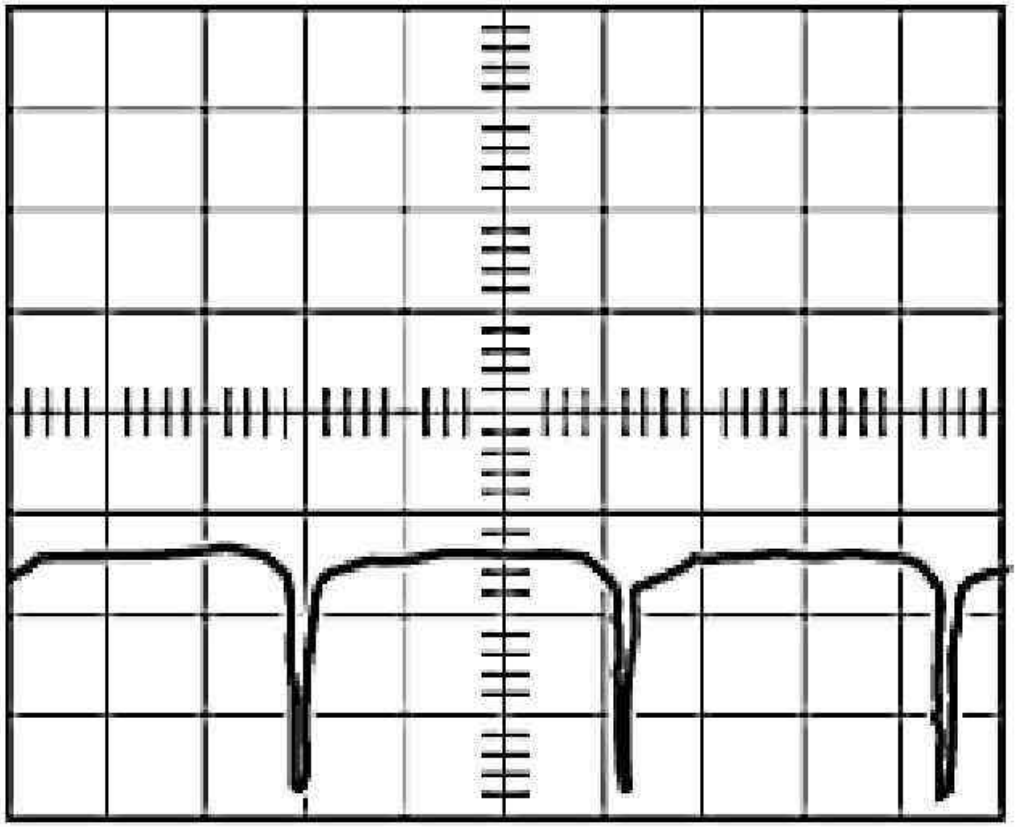

Fig. 33: Alternator Oscillogram - Open Circuit In Negative Diode
Courtesy of BMW OF NORTH AMERICA, INC.

Short circuit in positive diode.

Repair/exchange alternator.

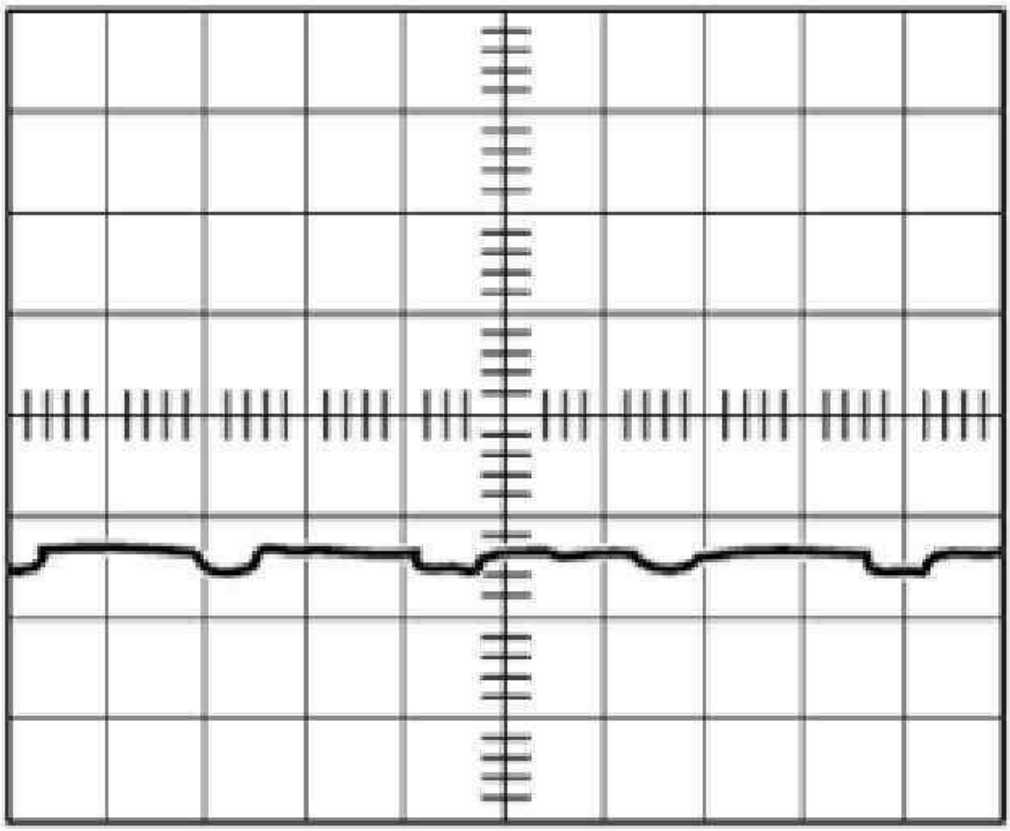

Fig. 34: Alternator Oscillogram - Short Circuit In Positive Diode
Courtesy of BMW OF NORTH AMERICA, INC.

Open circuit in positive diode.

Repair/exchange alternator.

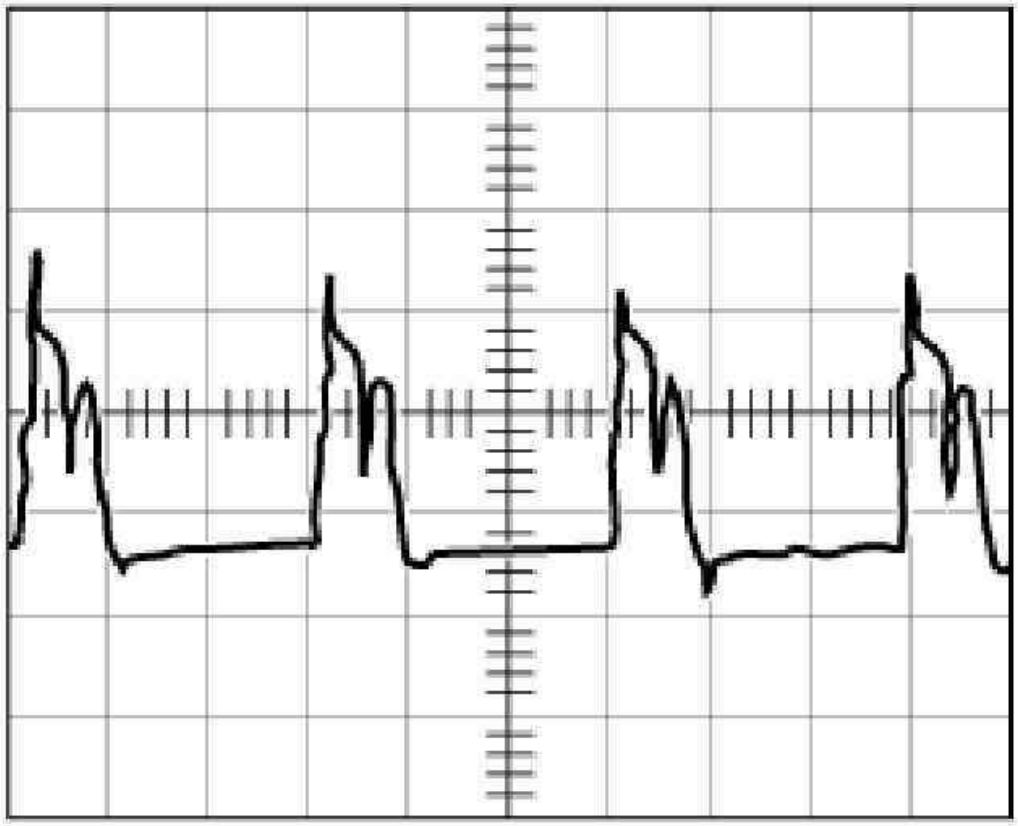

Fig. 35: Alternator Oscillogram - Open Circuit In Positive Diode
Courtesy of BMW OF NORTH AMERICA, INC.

Open circuit in exciter diode.

Repair/exchange alternator.

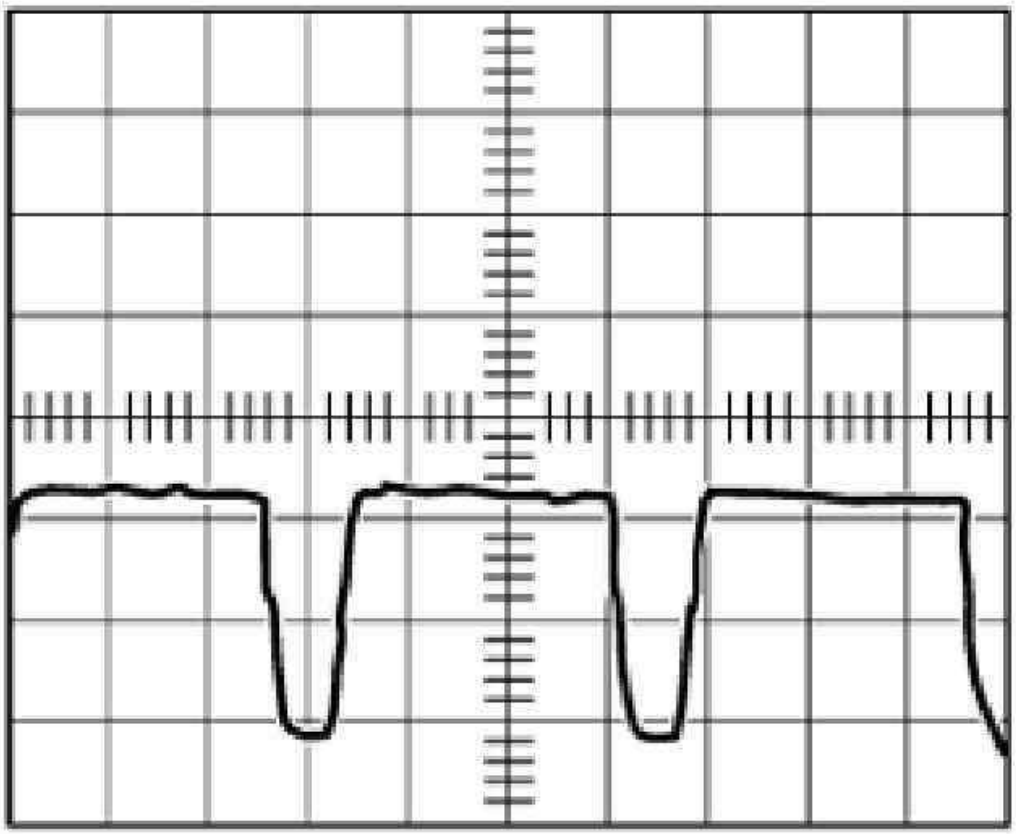

Fig. 36: Alternator Oscillogram - Open Circuit In Exciter Diode
Courtesy of BMW OF NORTH AMERICA, INC.

Assemble engine.

Check function of DME.

12 31 009 CHECKING ALTERNATOR AND REGULATOR SWITCH

Test requirements:

- Correct connections on charged battery
- Correct connections on alternator and starter motor
- Good ground connection between engine and body

- Tightened drive belt

Connect DIS Tester.

- Measurement
- Checking alternator

If charge indicator lamp is permanently lit:

Remove voltage regulator and check carbon brushes, replace if necessary.

Replace alternator regulator switch .

NOTE: Minimum length of carbon brushes "A" = 5 mm.

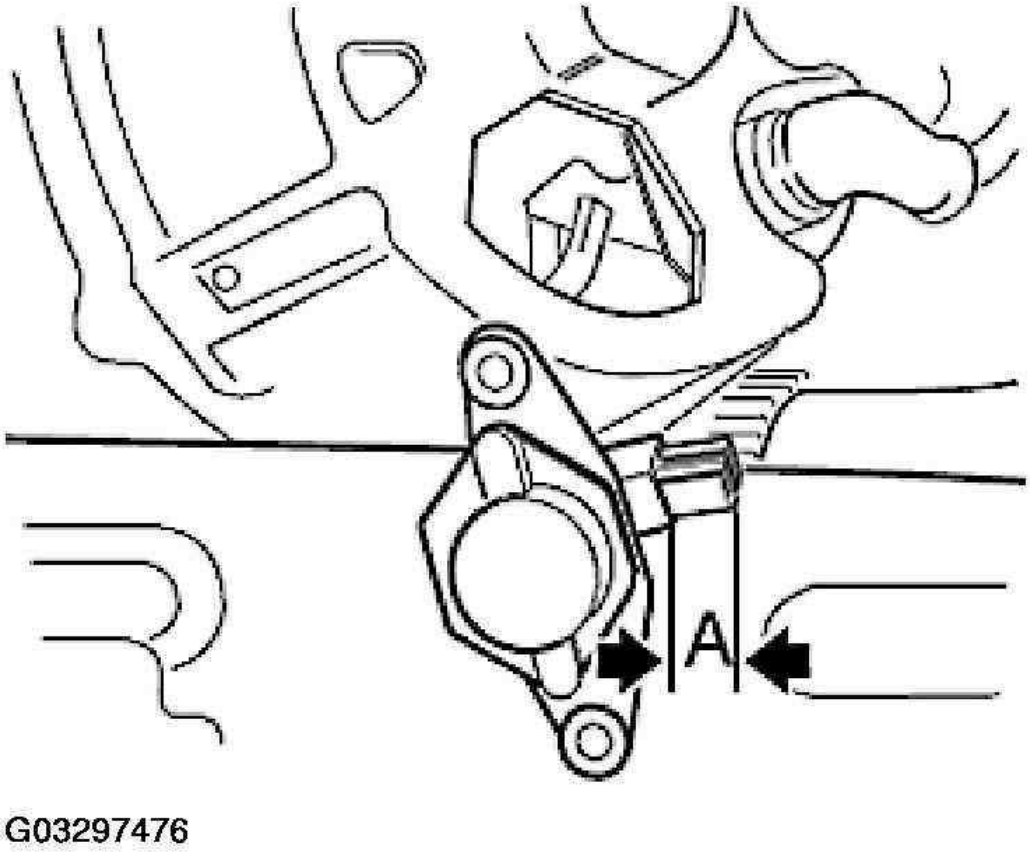

Fig. 37: Identifying Minimum Carbon Brush Length
Courtesy of BMW OF NORTH AMERICA, INC.

If charge indicator lamp goes out while engine is running:

Check control voltage.

Regulator switch must be replaced if control voltage is not achieved.

Replace alternator regulator switch .

From E46/E39 with multifunction regulator.

Recognizable by plug connection on regulator.

Connect DIS Tester.

- Function selection
- Complete vehicle
- Drive
- Voltage and current regulation
- Voltage and current generation
- Work through test modules

Oscillogram for a fault-free alternator:

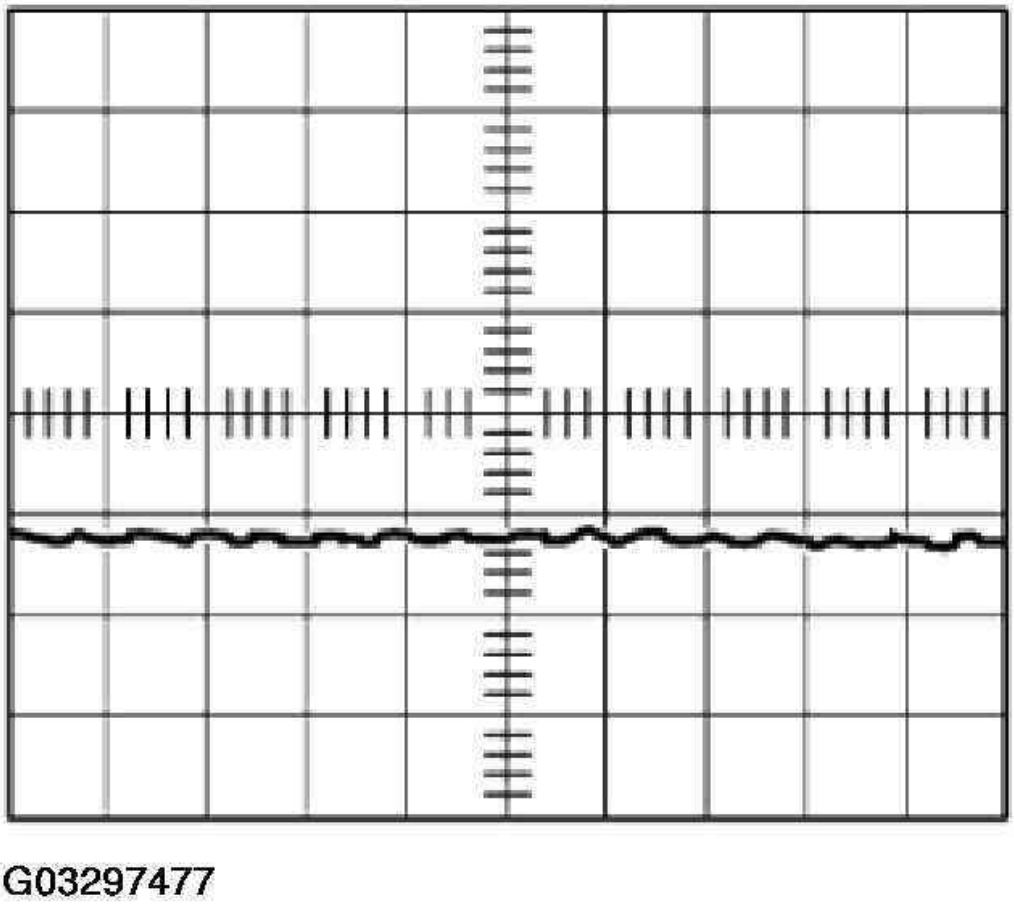

Fig. 38: Fault-Free Alternator Oscillogram
Courtesy of BMW OF NORTH AMERICA, INC.

Oscillogram for a faulty alternator:

One phase interrupted.

Repair/exchange alternator.

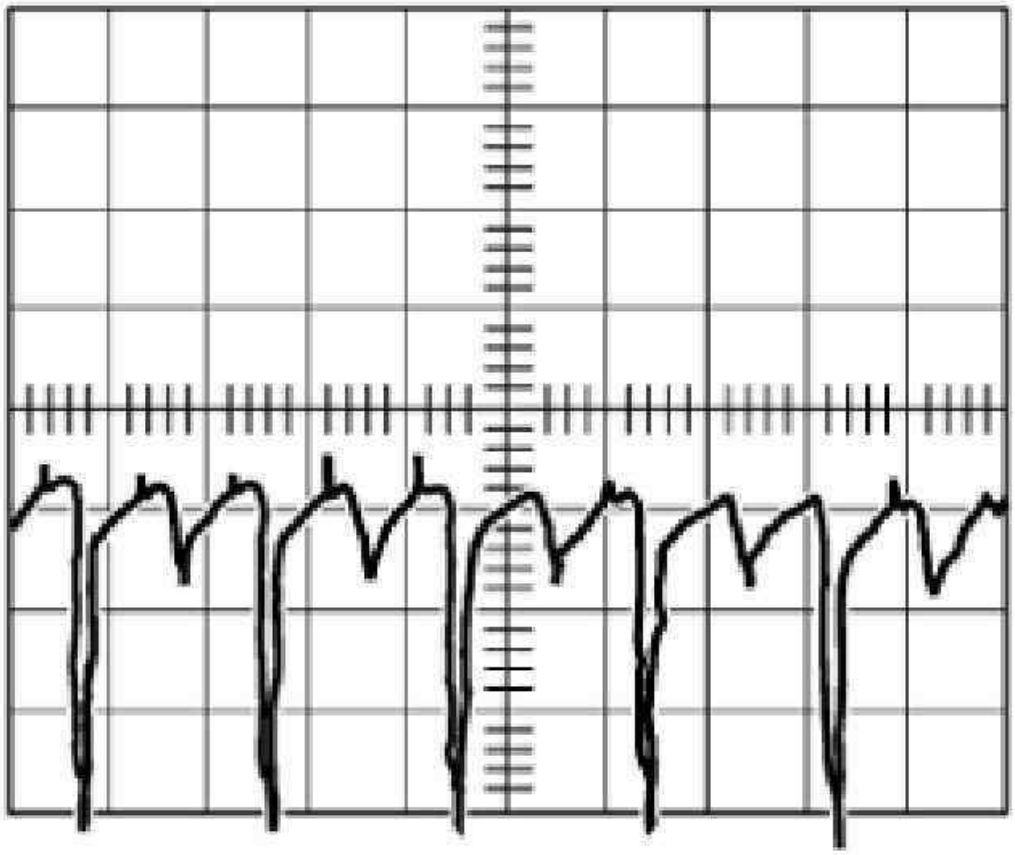

Fig. 39: Faulty Alternator Oscillogram
Courtesy of BMW OF NORTH AMERICA, INC.

Interturn fault.

Repair/exchange alternator.

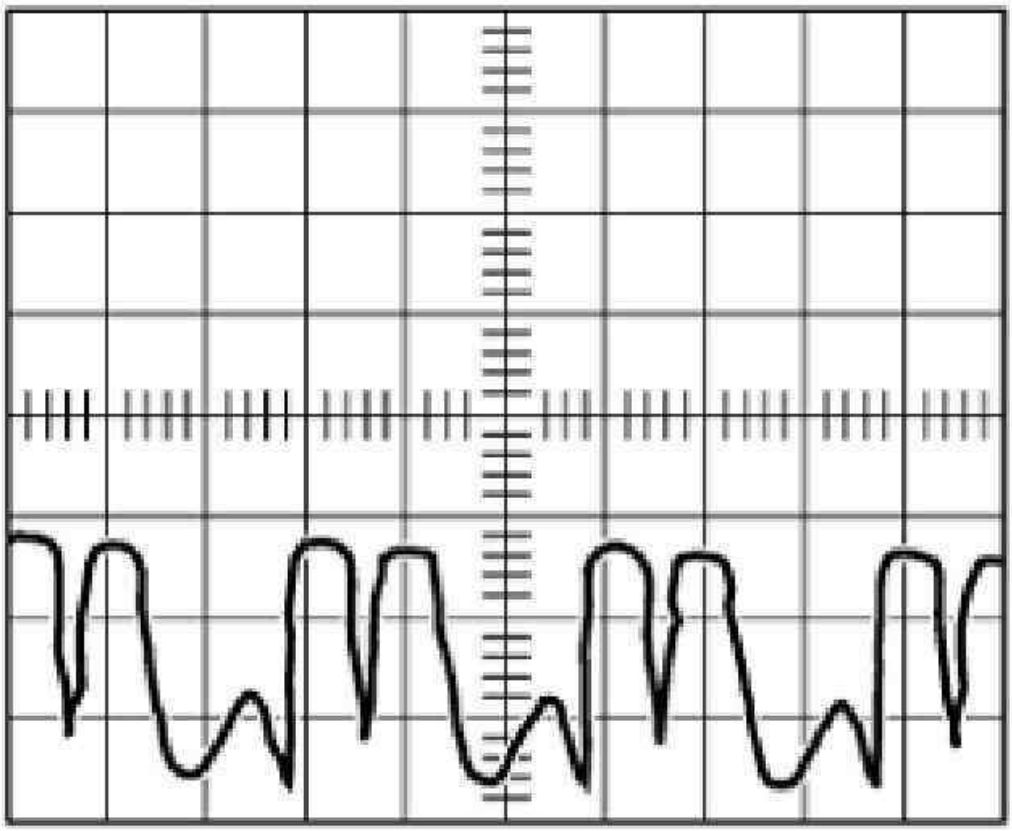

G03297479

Fig. 40: Alternator Oscillogram - Interturn Fault
Courtesy of BMW OF NORTH AMERICA, INC.

Open circuit in negative diode.

Repair/exchange alternator.

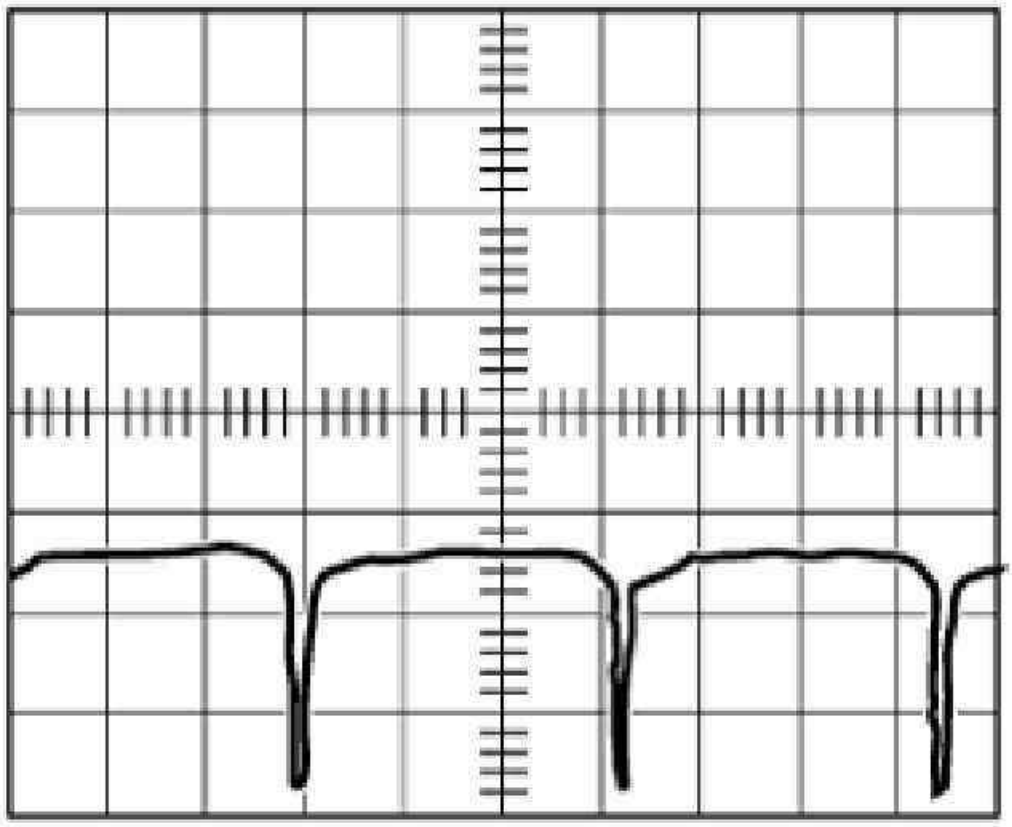

G03297480

Fig. 41: Alternator Oscillogram - Open Circuit In Negative Diode
Courtesy of BMW OF NORTH AMERICA, INC.

Short circuit in positive diode.

Repair/exchange alternator.

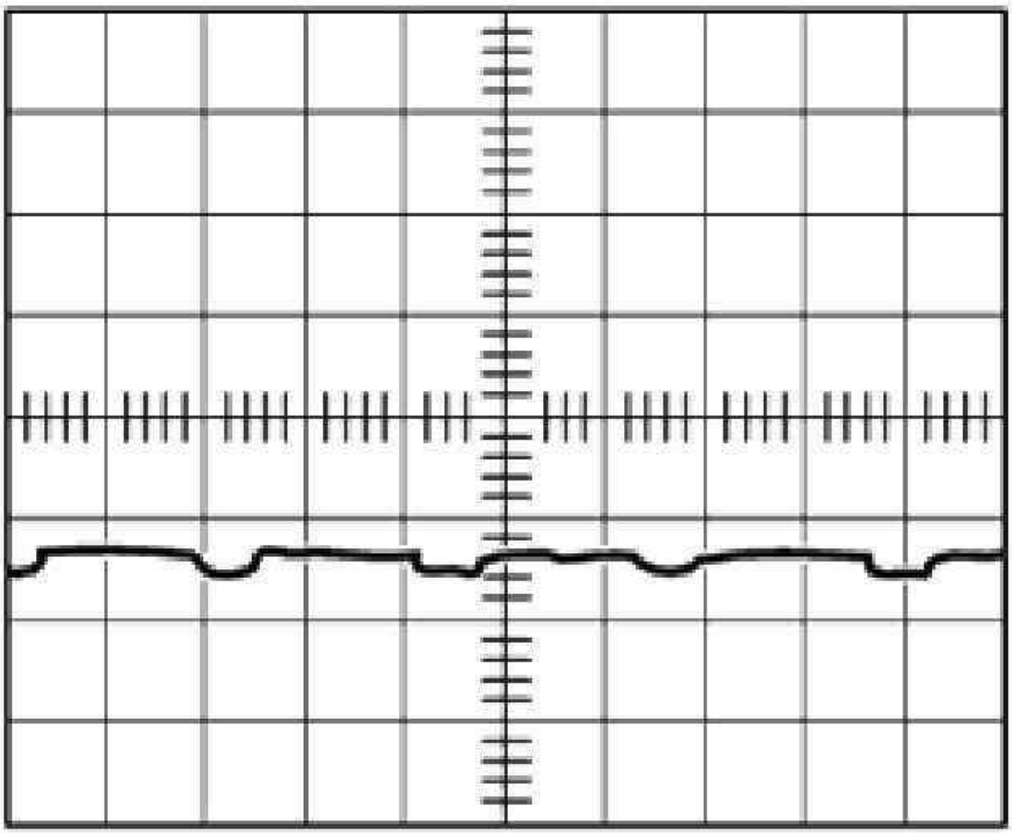

G03297481

Fig. 42: Alternator Oscillogram - Short Circuit In Positive Diode
Courtesy of BMW OF NORTH AMERICA, INC.

Open circuit in positive diode.

Repair/exchange alternator.

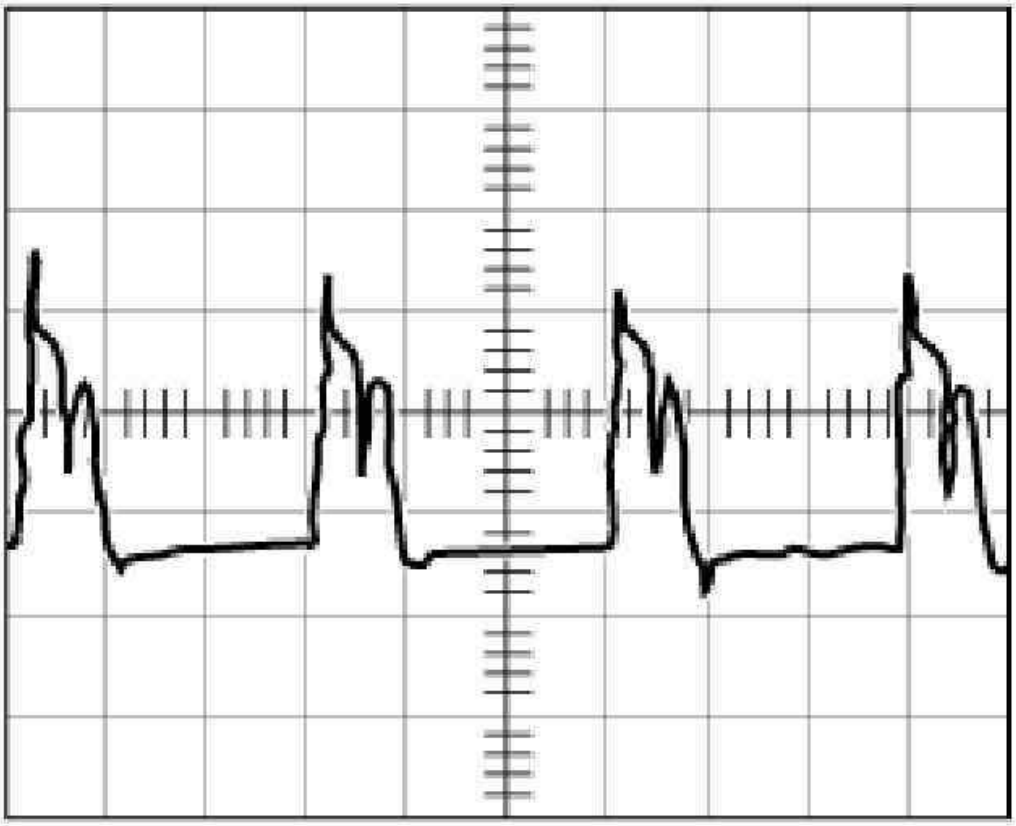

G03297482

Fig. 43: Alternator Oscillogram - Open Circuit In Positive Diode
Courtesy of BMW OF NORTH AMERICA, INC.

Open circuit in exciter diode.

Repair/exchange alternator.

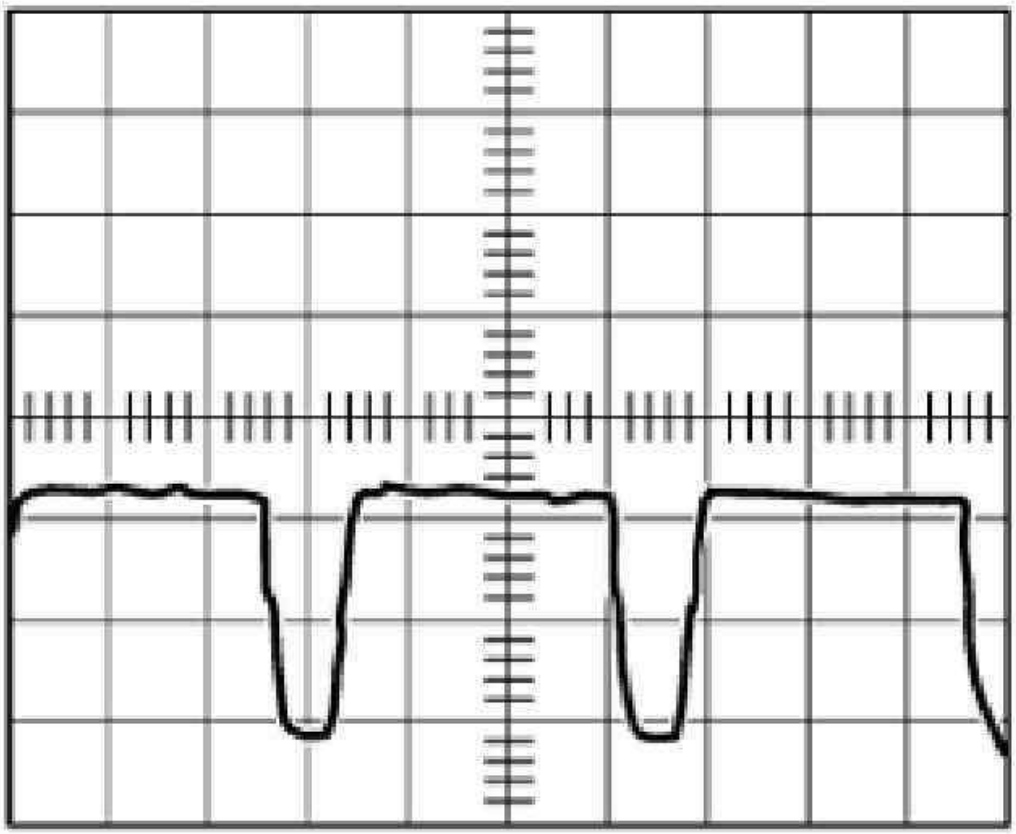

G03297483

Fig. 44: Alternator Oscillogram - Open Circuit In Exciter Diode
Courtesy of BMW OF NORTH AMERICA, INC.

12 31 020 REMOVING AND INSTALLING OR REPLACING ALTERNATOR (M54)

Necessary preliminary tasks:

- Check stored fault messages.
- Switch off ignition.
- Observe **Instructions For Disconnecting And Connecting Battery** .
- Disconnect battery ground wire and mask it.
- Remove suction filter housing .
- Remove Alternator Drive Belt .

Unlock and detach plug connection (1).

Release nut (2) and remove battery positive lead.

Tightening torque, see 12 31 1AZ in **ENGINE ELECTRICAL SYSTEM - TIGHTENING TORQUES** .

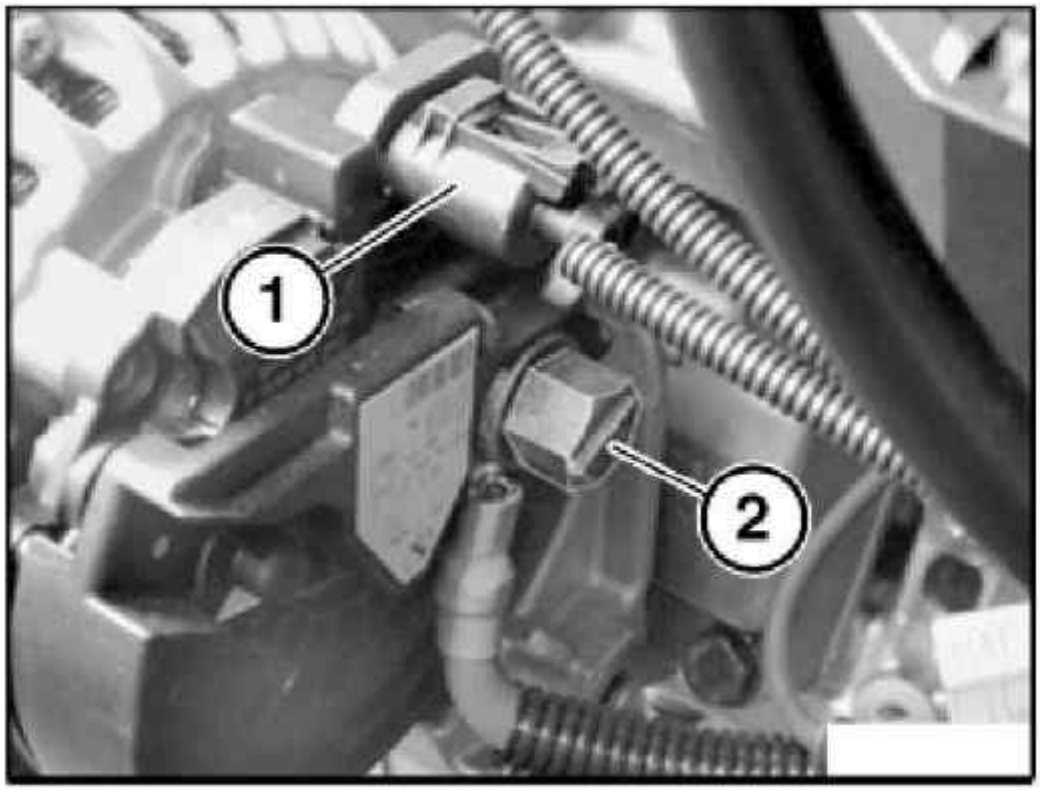

G03297484

Fig. 45: Removing Battery Positive Lead
Courtesy of BMW OF NORTH AMERICA, INC.

Remove cover from idler pulley (1).

Release screw and remove idler pulley (1).

Release screw and remove alternator (2).

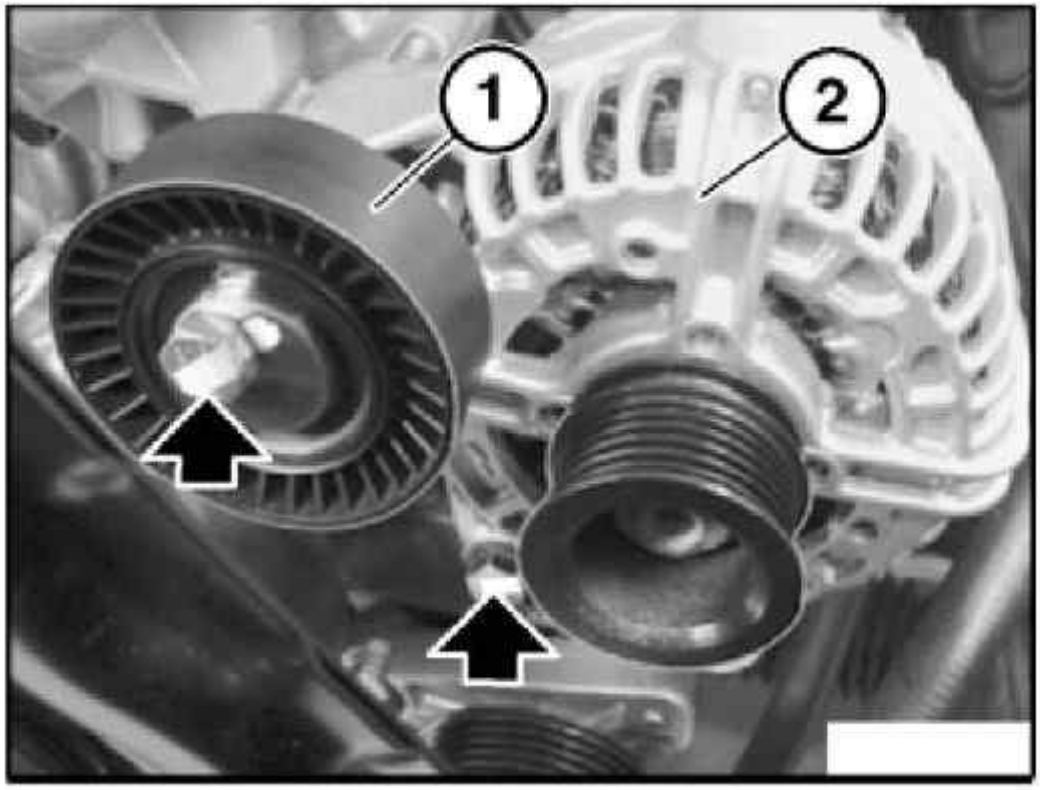

G03297485

Fig. 46: Removing Alternator
Courtesy of BMW OF NORTH AMERICA, INC.

Installation:

Turning lock of tensioning roller must engage in alternator groove.

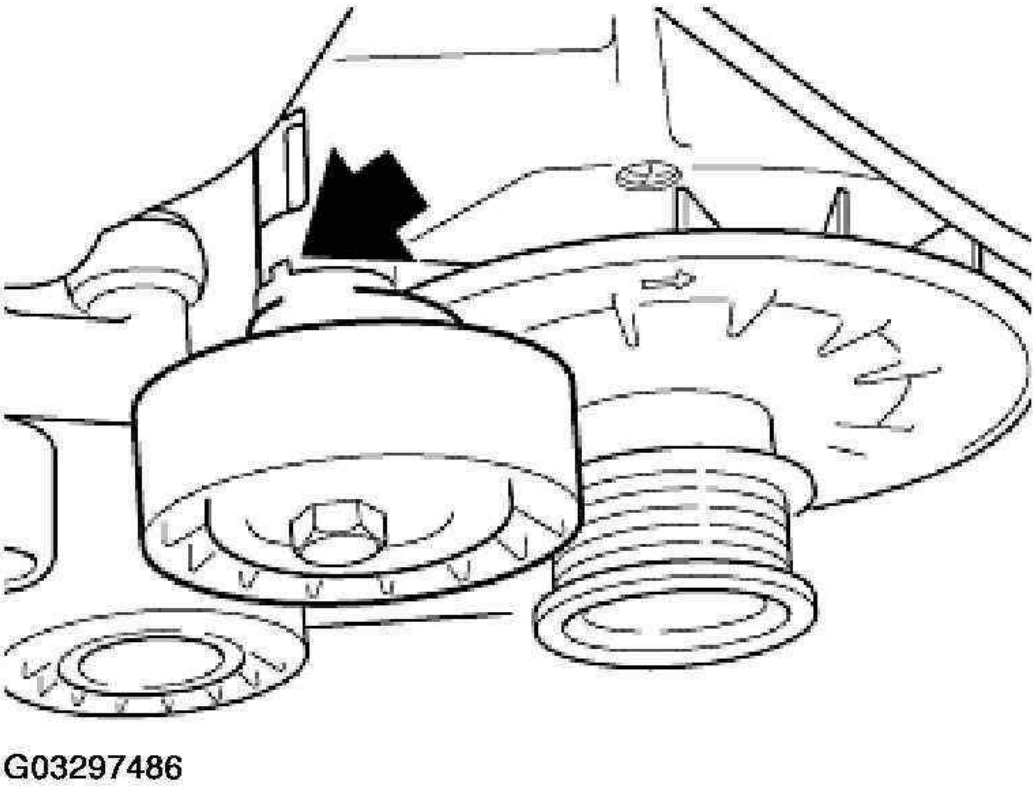

Fig. 47: Identifying Tensioning Roller Lock Position
Courtesy of BMW OF NORTH AMERICA, INC.

NOTE: Read out fault memory of DME control unit.

Now clear the fault memory.

STARTER WITH MOUNTING

12 41 020 REMOVING AND INSTALLING/REPLACING STARTER MOTOR (M54)

Necessary preliminary tasks:

- Follow **Instructions For Disconnecting And Connecting Battery**.
- Disconnect battery negative lead from battery
- Remove intake filter housing

NOTE: All the tasks can be performed from above.

Release nut (1) and remove lead from starter motor.

Installation:

Tightening torque, see 12 41 4AZ in **ENGINE ELECTRICAL SYSTEM - TIGHTENING TORQUES** .

Release nut (2) and remove battery positive leads from starter motor.

Installation:

Tightening torque, see 12 41 4AZ in **ENGINE ELECTRICAL SYSTEM - TIGHTENING TORQUES** .

Release screws (3) and remove starter motor (4).

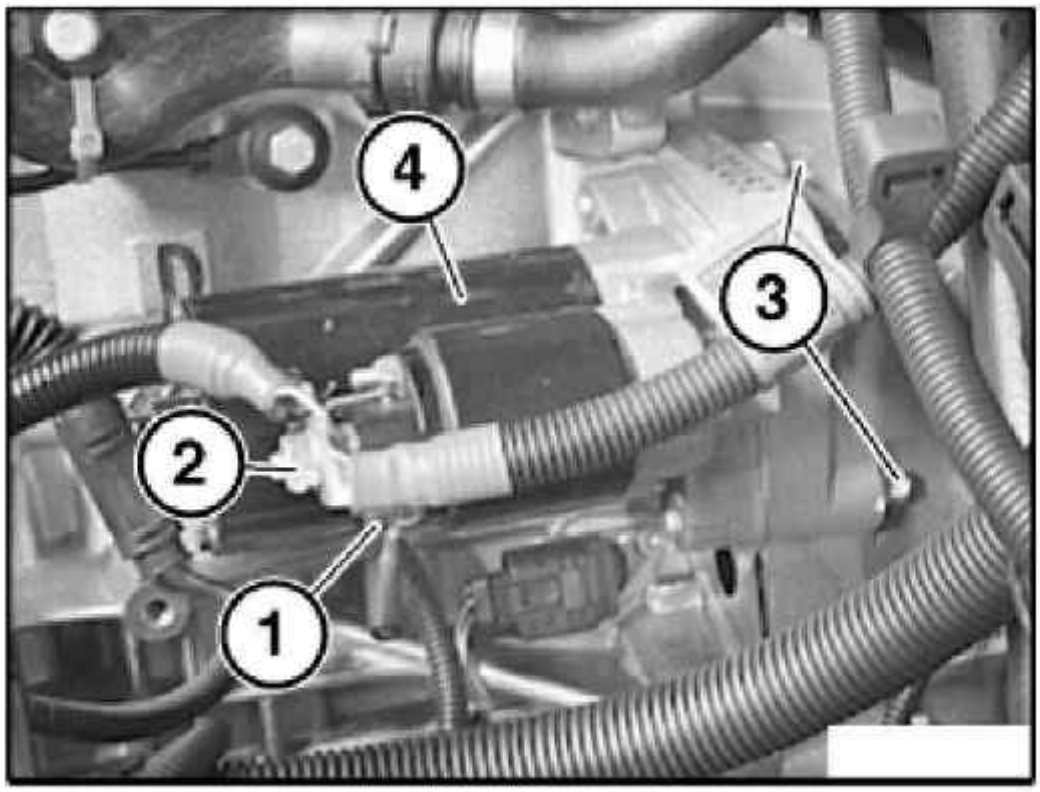

G03297487

Fig. 48: Removing Starter Motor
Courtesy of BMW OF NORTH AMERICA, INC.

Installation:

Tightening torque, see 12 41 1AZ in **ENGINE ELECTRICAL SYSTEM - TIGHTENING TORQUES** .

Installation:

Check starter motor pinion and ring gear for damage.

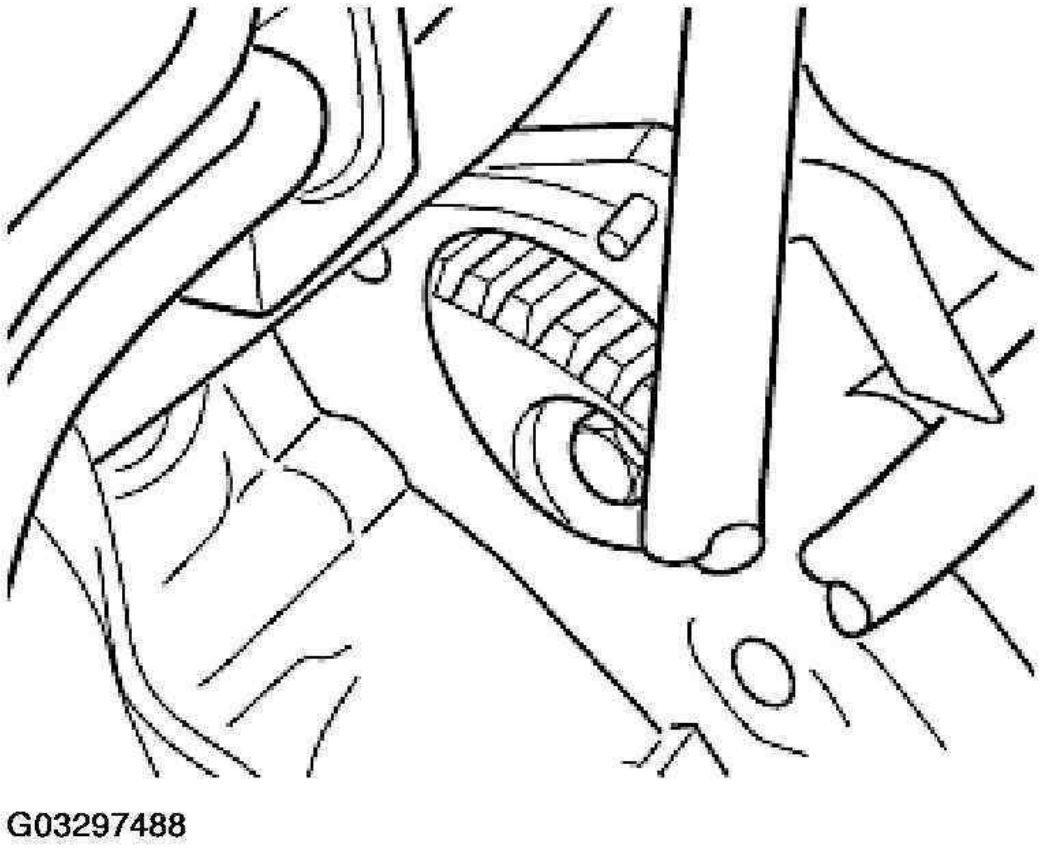

Fig. 49: Checking Starter Motor Pinion And Ring Gear
Courtesy of BMW OF NORTH AMERICA, INC.

12 41 041 REPLACING SOLENOID SWITCH

Turn off ignition.

Remove starter motor. See **12 41 020 Removing And Installing/Replacing Starter Motor (M54)**.

Release nut (1).

Remove cable lug (2).

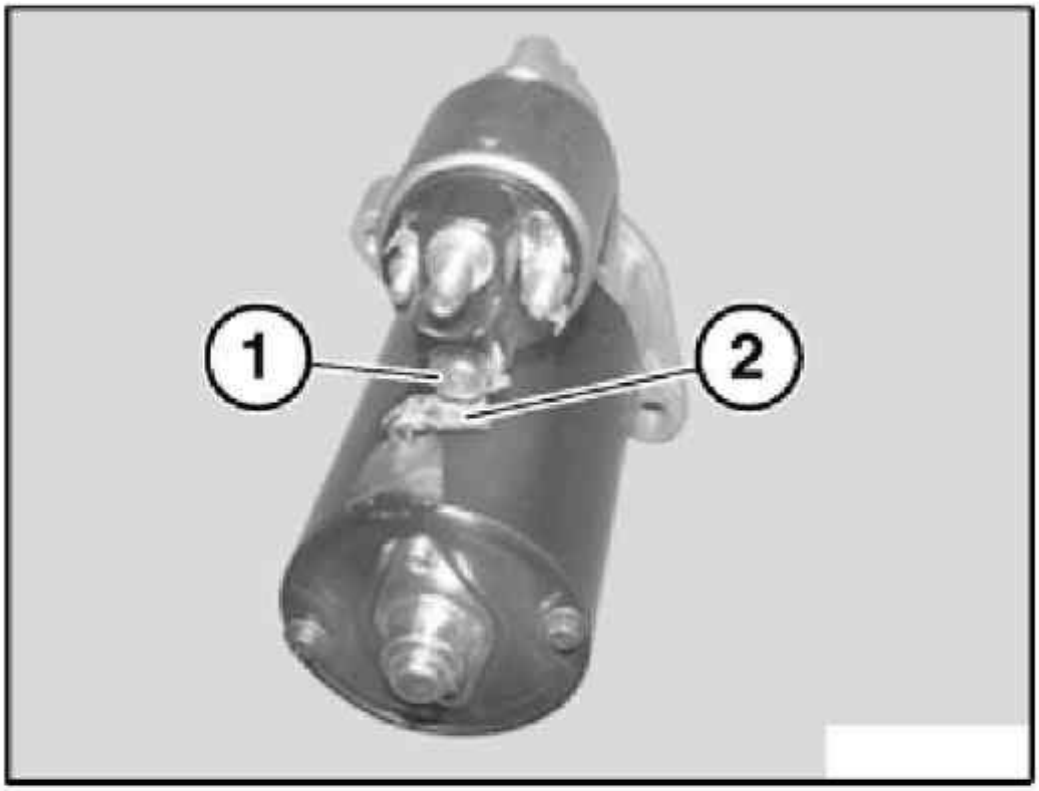

G03297489

Fig. 50: Removing Cable Lug
Courtesy of BMW OF NORTH AMERICA, INC.

CAUTION: Do not turn cable lug (2) while tightening down - risk of short circuit to starter motor housing.
Tightening torque, see 12 41 4AZ in ENGINE ELECTRICAL SYSTEM - TIGHTENING TORQUES .

Release screws (1).

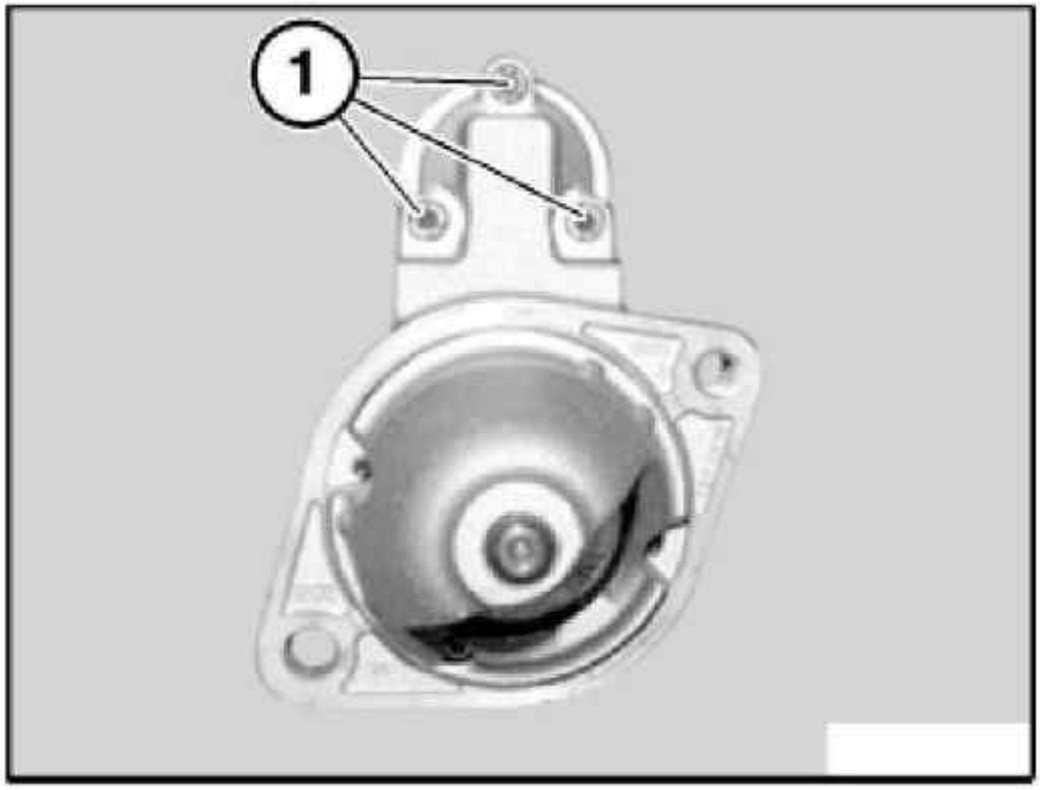

G03297490

Fig. 51: Releasing Screws
Courtesy of BMW OF NORTH AMERICA, INC.

Remove solenoid switch (1) and spring (2).

Unhook pin (3).

Installation:

Check pin (3) for wear and apply grease.

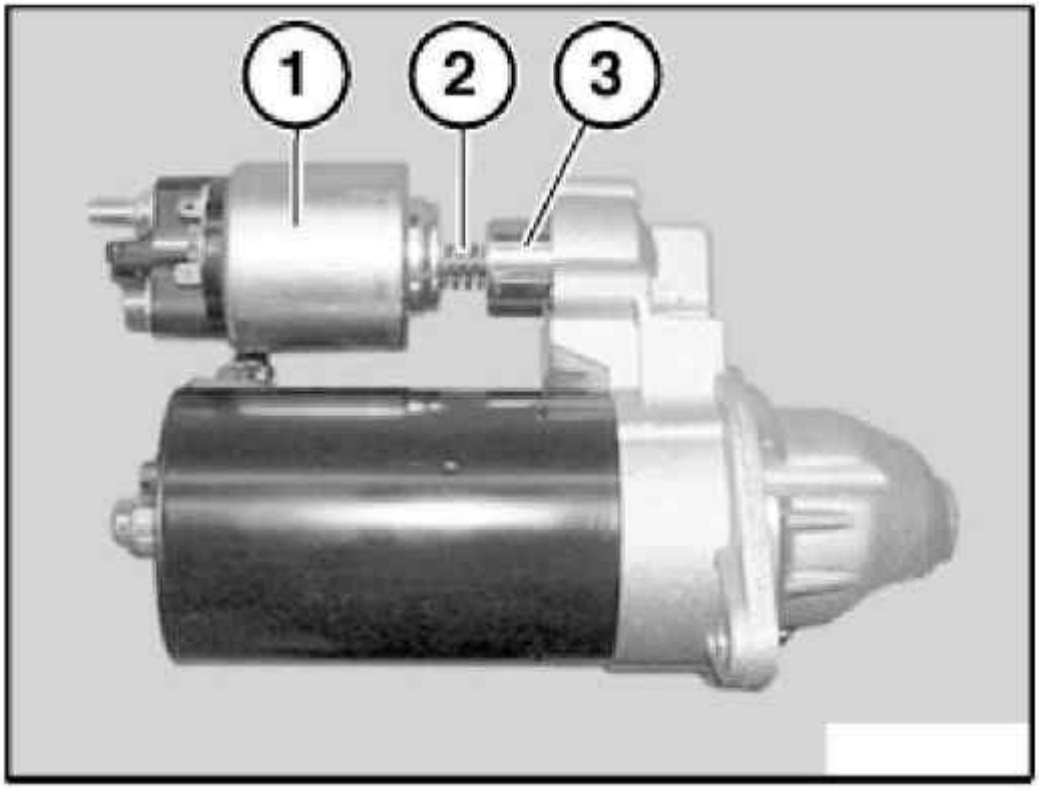

G03297491

Fig. 52: Removing Solenoid Switch And Spring
Courtesy of BMW OF NORTH AMERICA, INC.

STARTER LEAD

12 42 540 REPLACING SAFETY BATTERY TERMINAL (SBK)

IMPORTANT: Comply with safety regulations!
Investigate cause of safety battery terminal being triggered.
To do so, read fault memory of airbag control unit. Note down fault messages stored in memory. Rectify faults.
Now clear the fault memory.

Necessary preliminary tasks:

- Remove luggage compartment floor trim panel. See **51 47 101 REMOVING AND INSTALLING/REPLACING LUGGAGE COMPARTMENT FLOOR TRIMS** .

- Follow instructions for **Instructions For Disconnecting And Connecting Battery**.
- Disconnect battery negative lead and cover.
- Loosen electrical system cable.
- Remove battery.

NOTE: The safety battery terminal is replaced together with a complete cable up to the battery positive terminal in the engine compartment.

Unlock cover on terminal and remove.

Unlock both plug connections (1) and disconnect.

Release nut on electrical system cable (2).

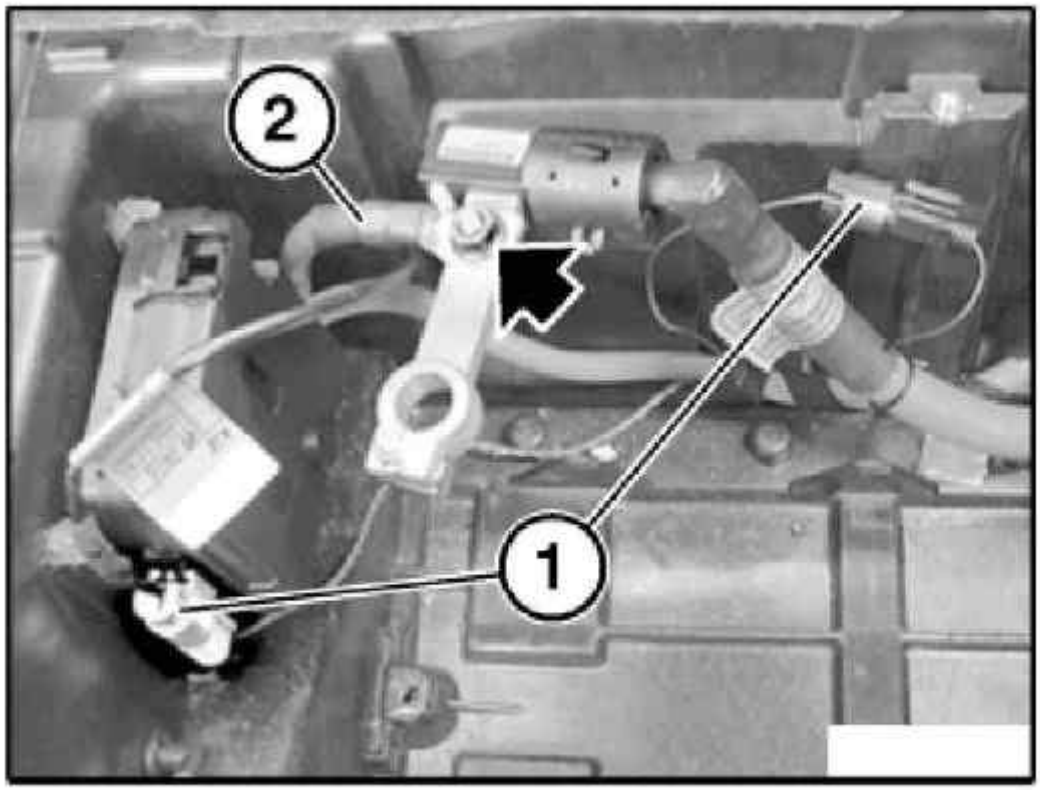

G03297492

Fig. 53: Disconnecting Plug Connection (1 Of 2)
Courtesy of BMW OF NORTH AMERICA, INC.

Unclip plug connection (1), unlock and disconnect.

Release nut on electrical system cable (2).

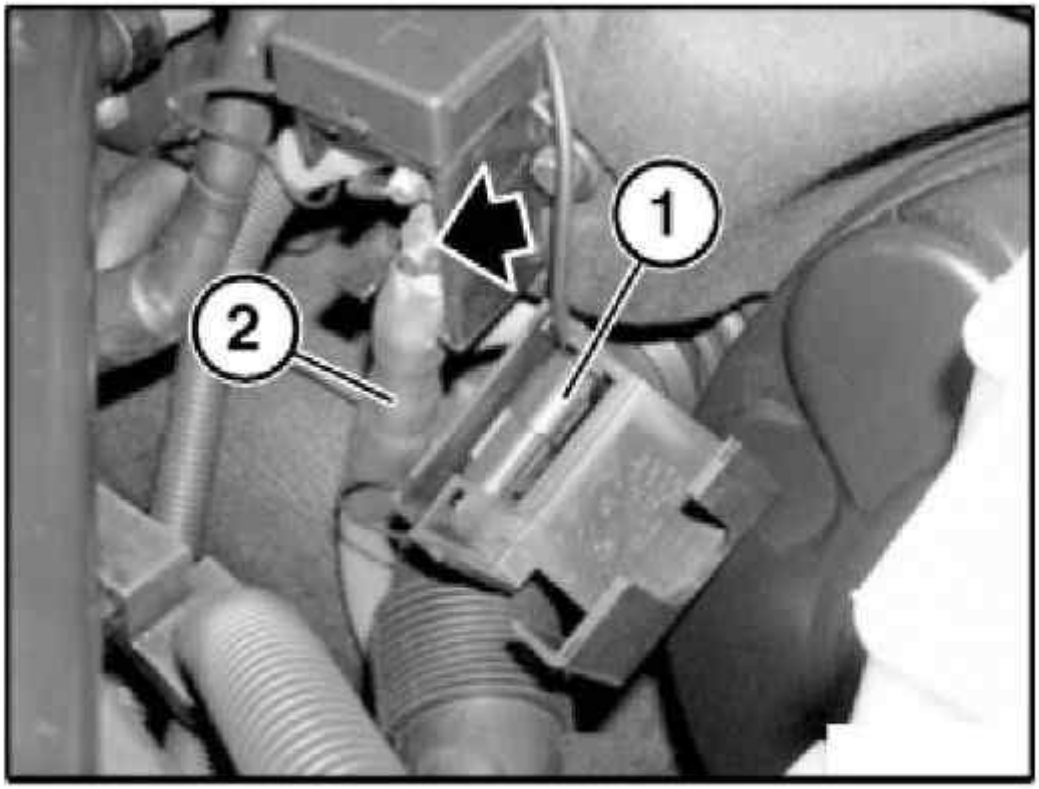

G03297493

Fig. 54: Disconnecting Plug Connection (2 Of 2)
Courtesy of BMW OF NORTH AMERICA, INC.

Remove left rear wheel .

Release screws on cover frame (1).

Unscrew nuts (2).

Feed battery positive lead out of battery well.

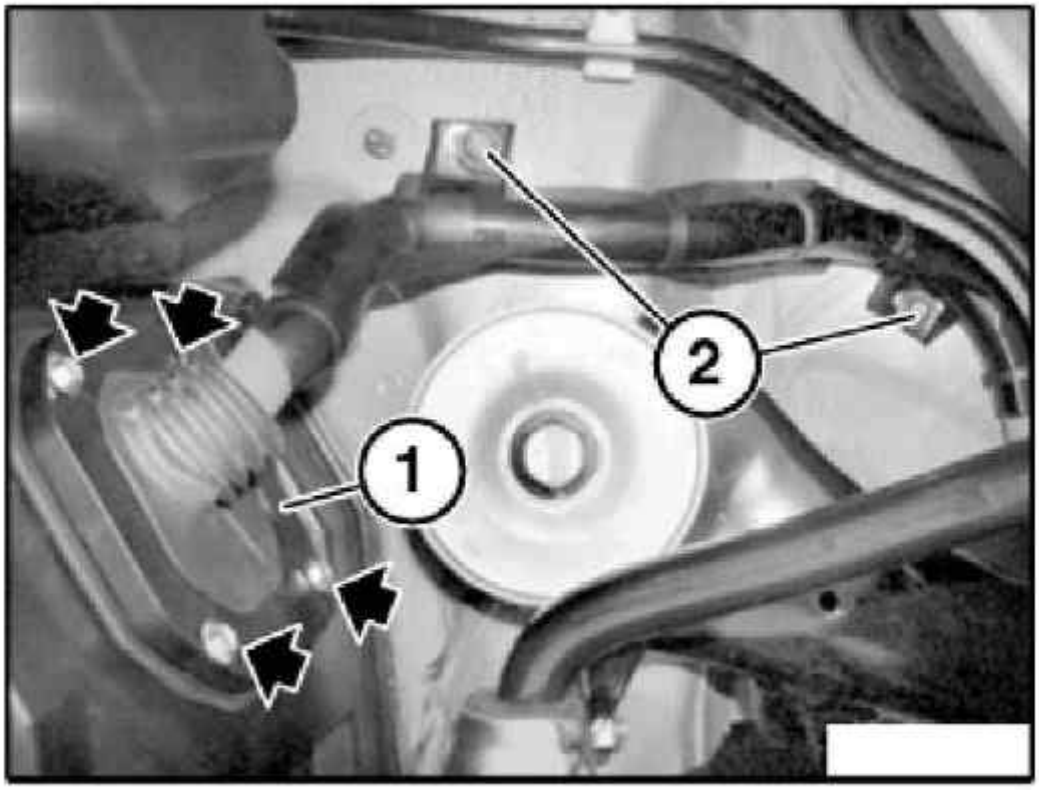

G03297494

Fig. 55: Releasing Cover Frame Screws
Courtesy of BMW OF NORTH AMERICA, INC.

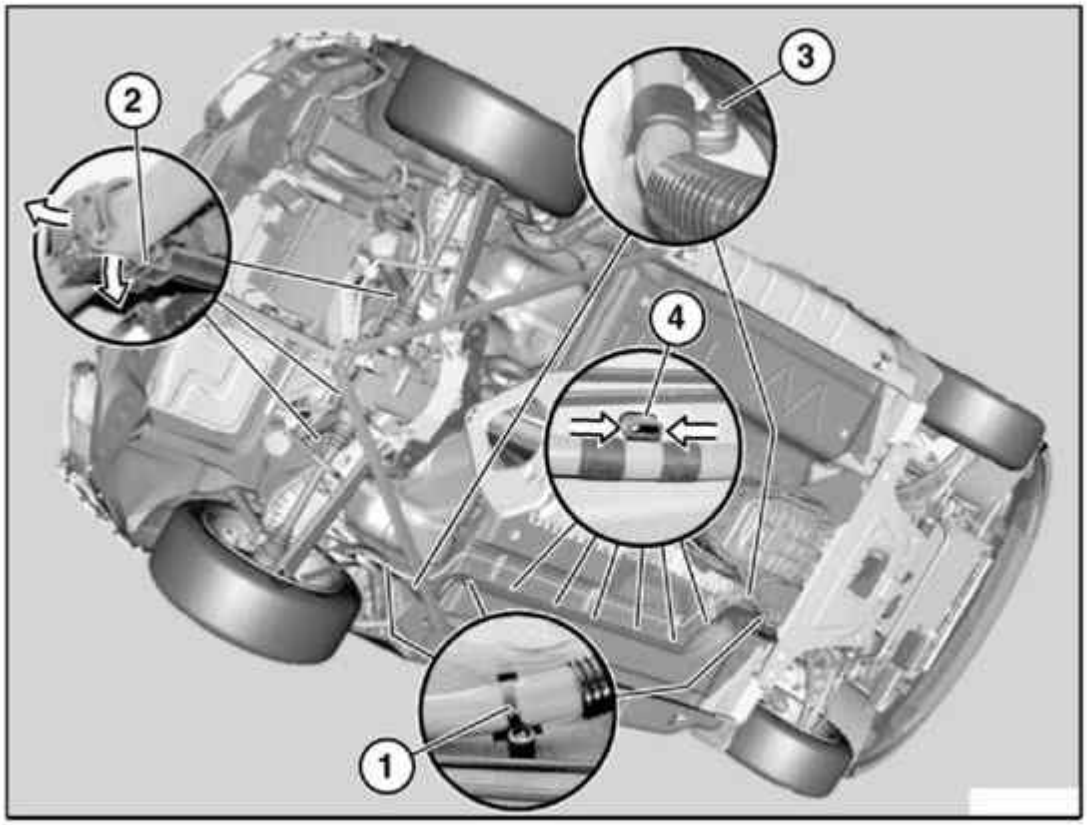

G03297495

Fig. 56: Cutting Cable Ties
Courtesy of BMW OF NORTH AMERICA, INC.

Cut through cable ties (1).

Unlock holder (2) and unclip positive lead.

Release nut (3) and remove holder.

Compress holder (4) and detach.

If necessary, unclip plastic line (1).

If necessary, unclip brake lines (2).

If necessary, release lead (3) from ABS sensor and disconnect.

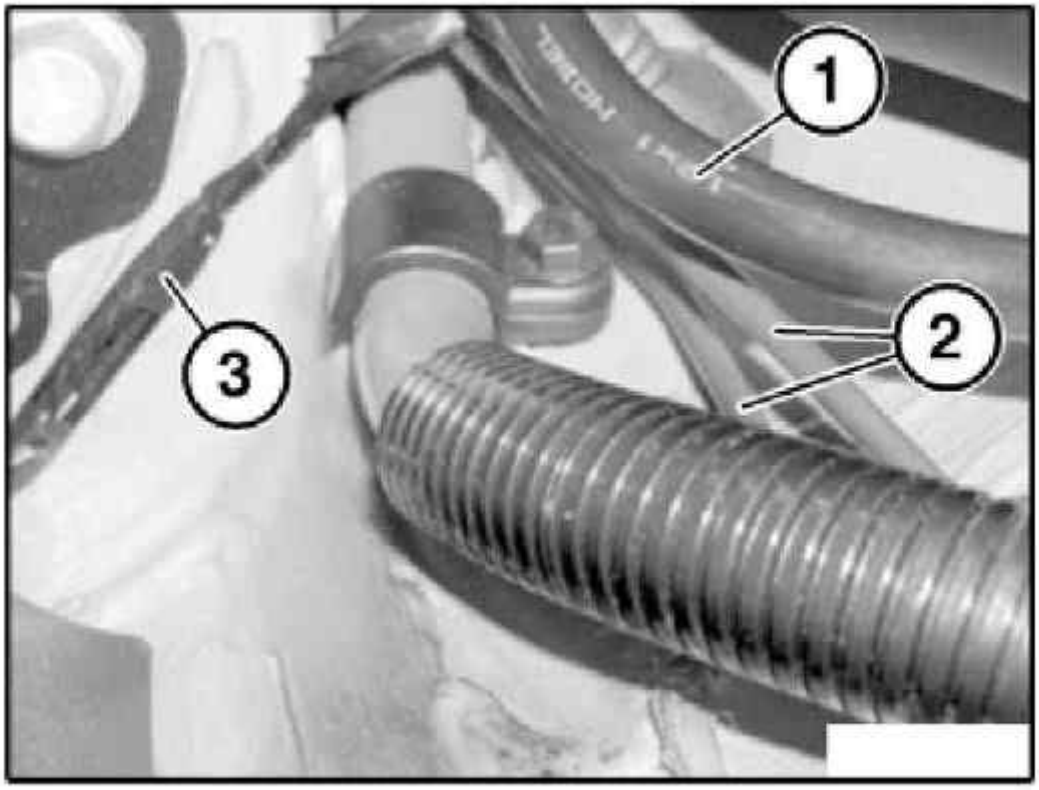

G03297496

Fig. 57: Releasing Leads From ABS sensor
Courtesy of BMW OF NORTH AMERICA, INC.

Feed out battery positive lead in direction of battery well to right and remove.

Installation:

If necessary, replace faulty fuses.

ENGINE WIRING LOOM

12 51 001 REPLACING WIRING HARNESS SECTION FOR ENGINE (M54)

Necessary preliminary tasks:

- Switch off ignition
- Follow **Instructions For Disconnecting And Connecting Battery**.

Disconnect battery negative lead and cover

- Remove intake air manifold . See **11 61 050 REMOVING AND INSTALLING INTAKE AIR MANIFOLD** .
- Remove ignition coil cover .
- Remove reinforcement plate . See **51 71 374 REMOVING AND INSTALLING/REPLACING REINFORCEMENT PLATE** .

WIRING HARNESS SECTION REPLACEMENT WORK STEP

Work step	Note:
Unlock plug on oil level sensor and disconnect. See **12 61 285 Replacing Oil Level Sensor**.	
Unlock plug on crankshaft sensor and disconnect. See **12 14 521 Replacing Pulse Generator On Crankshaft (M54/M56)**	
Unlock plug on coolant temperature sensor and disconnect. See **13 62 531 REPLACING COOLANT TEMPERATURE SENSOR** .	
Unlock plug on throttle valve assembly . See **13 54 030 REMOVING AND INSTALLING/SEALING THROTTLE VALVE ASSEMBLY** .	
Unlock plugs on both solenoid valves for VANOS and disconnect. See **11 36 570 REPLACING SOLENOID VALVE FOR INLET** and **11 36 575 REPLACING SOLENOID VALVE FOR EXHAUST** .	
Unlock plugs on inlet and exhaust camshaft sensors and disconnect. See **12 14 523 Replacing Pulse Generator On Inlet Camshaft (M52TU / M54 / M56)** and **12 14 524 Replacing Pulse Generator On Exhaust Camshaft (M52TU, M54, M56)**.	
Unlock plug on oil pressure switch and disconnect. See **12 61 280 Removing And Installing/Replacing Oil Pressure Sensor (M54)**.	
Unlock plug on knock sensors and disconnect. See **12 14 600 Replacing Knock Sensor (M52TU, M54,M56)**.	
Unlock plug on alternator and detach battery positive lead from alternator. See **12 31 020 Removing And Installing Or Replacing Alternator (M54)**.	
Detach battery positive lead and control lead from starter motor. See **12 41 020 Removing And Installing/Replacing Starter Motor (M54)**.	
Unlock plug connections in electronics box and disconnect: • Control unit . See **SYSTEM & COMPONENT TESTING** article. • DME relay See **SYSTEM & COMPONENT TESTING** article.	• Remove electronics box cover. • Do not remove control unit.

12 51 100 REPLACING WIRING HARNESS SECTION FOR IGNITION COILS (M54)

Necessary preliminary tasks:

- Read out fault memory of DME control unit

- Switch off ignition
- Disconnect battery negative lead from battery.

  Follow **Instructions For Disconnecting And Connecting Battery**.

- Remove cover for ignition coils

Unfasten screws.

Open cover (1) of electronics box and remove.

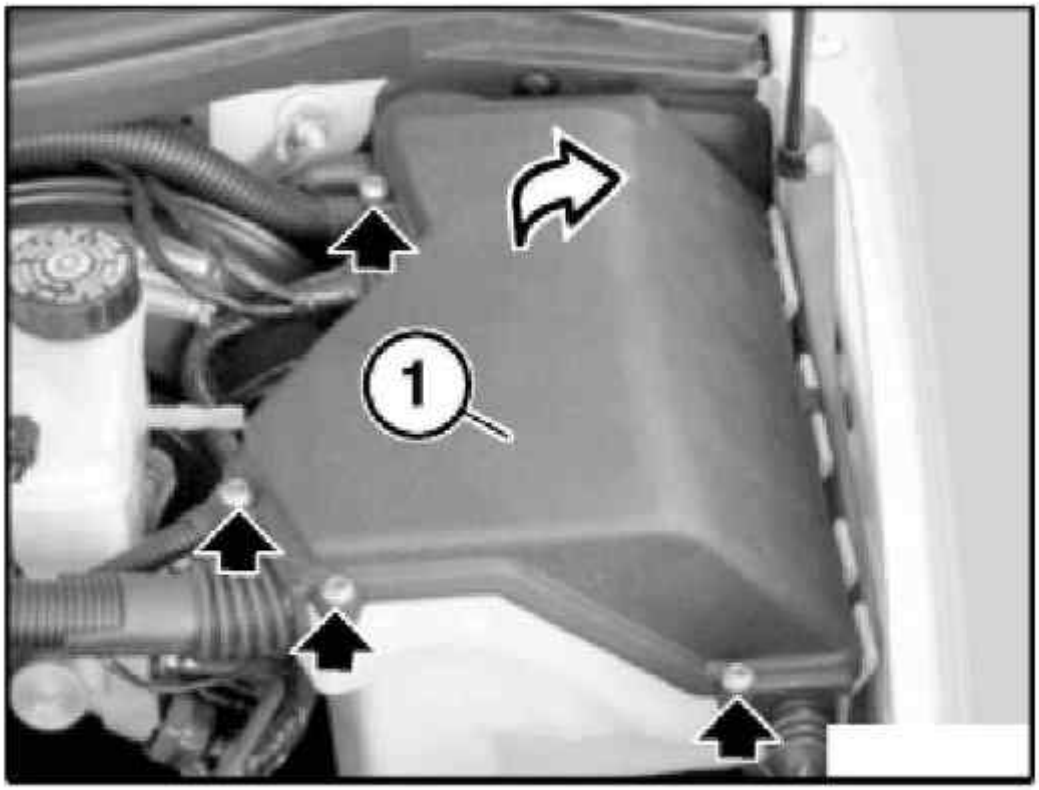

G03297497

Fig. 58: Removing Electronics Box Cover
Courtesy of BMW OF NORTH AMERICA, INC.

Unlock plug (1) and detach from DME control unit.

Unlock plug (2) and remove.

Lift wiring harness with profile seal (3) out of electronics box.

Installation:

To prevent leaks, you must install profile seal (3) correctly.

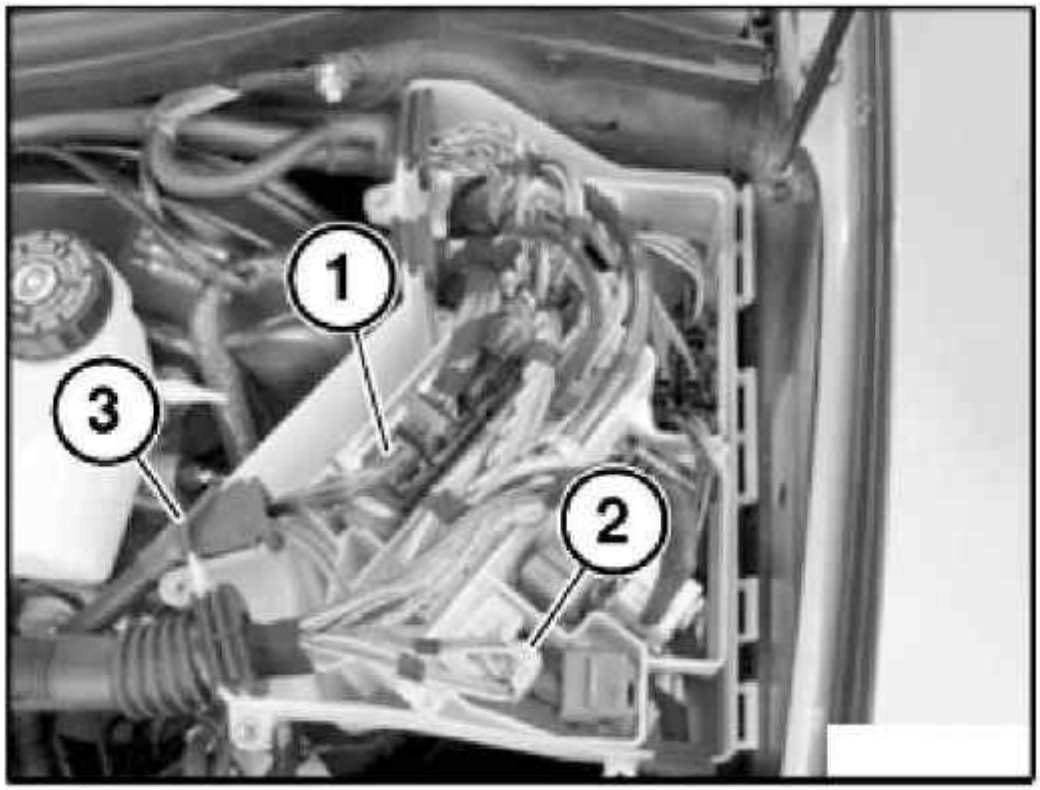

G03297498

Fig. 59: Removing Wiring Harness With Profile Seal From Electronics Box
Courtesy of BMW OF NORTH AMERICA, INC.

Unlock plug retainer (1) of ignition coil and disconnect plug.

NOTE: This procedure is applicable to all ignition coils.

Release nuts and remove grounding cable.

Unclip cable duct (2).

Unclip wiring harness (3) and remove.

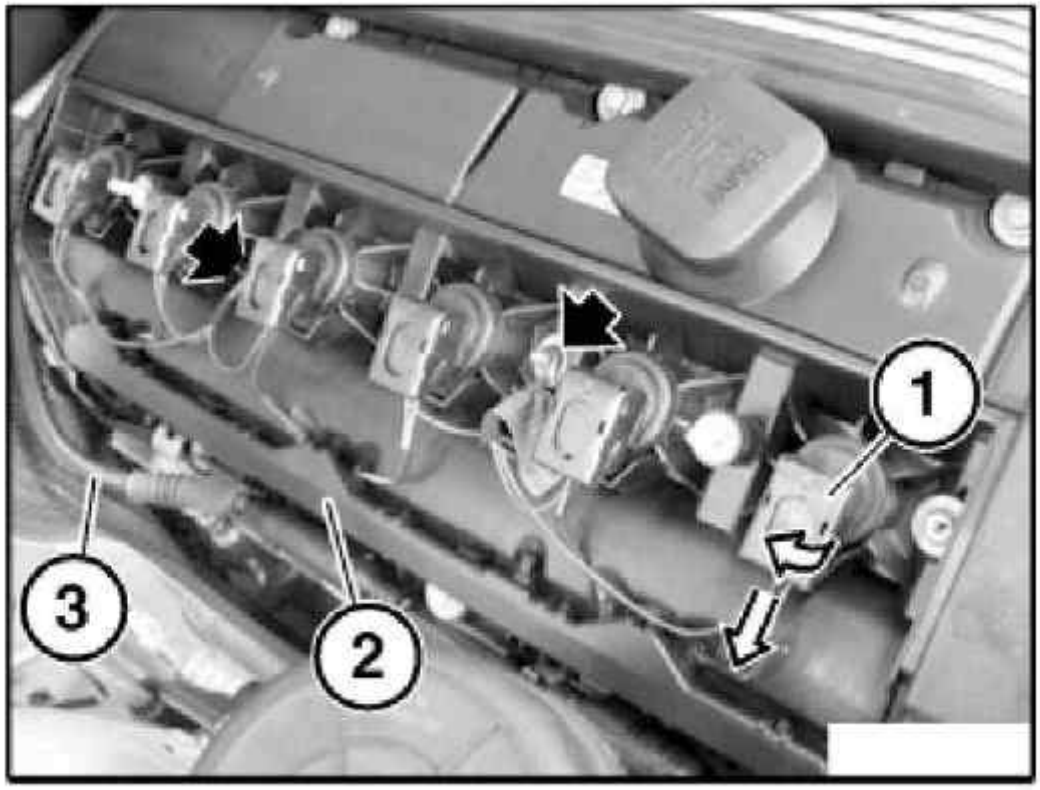

G03297499

Fig. 60: Removing Wiring Harness
Courtesy of BMW OF NORTH AMERICA, INC.

NOTE: Now clear the fault memory.

OIL PRESSURE/OIL TEMPERATURE GAUGE

12 61 250 REMOVING AND INSTALLING/REPLACING OIL TEMPERATURE SENSOR (M54)

Necessary preliminary tasks:

- Switch off ignition
- Unfasten oil filter cap to enable engine oil in filter to flow back into the oil sump.
- Remove intake filter housing . See **11 61 050 REMOVING AND INSTALLING INTAKE AIR FILTER HOUSING** .

Installation location: at base of oil filter.

Disconnect plug connection (1).

Unscrew oil temperature sensor.

IMPORTANT: Engine oil may emerge when the oil temperature sensor is removed - have a cleaning cloth to hand.
Catch and dispose of emerging engine oil.

Installation:

Tightening torque, see 12 61 1AZ in **ENGINE ELECTRICAL SYSTEM - TIGHTENING TORQUES** .

Screw on oil-filter cover tightly.

Check engine oil level, top up engine oil if necessary.

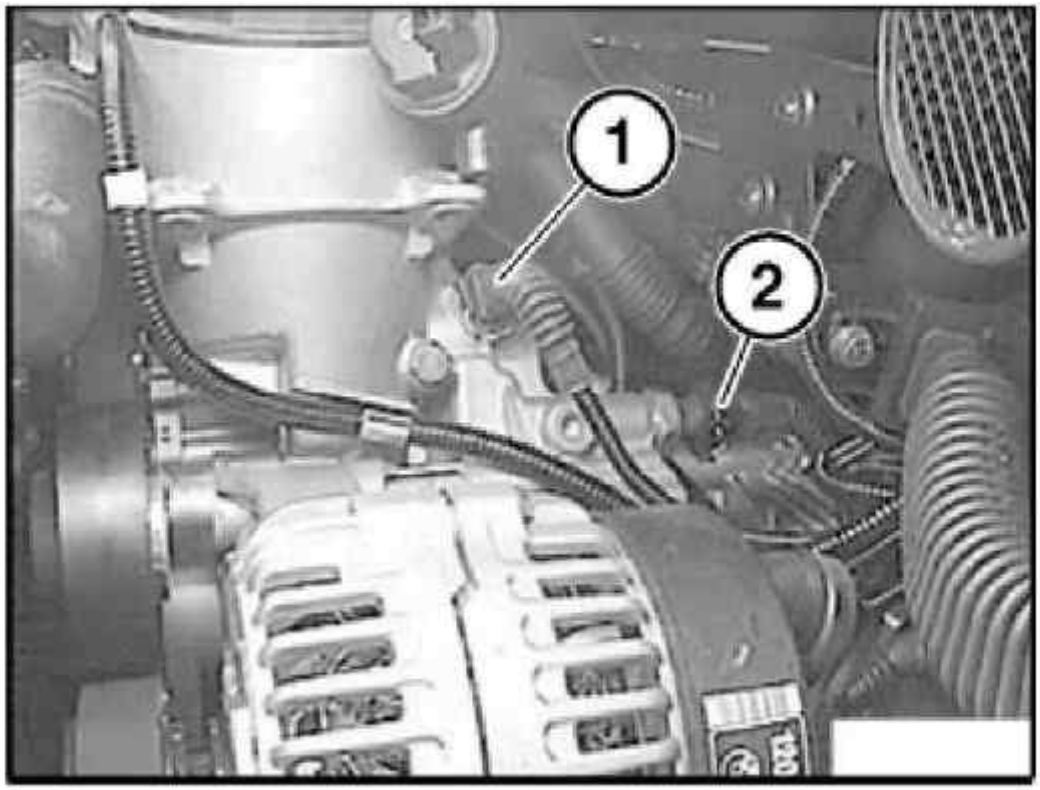

G03297500

Fig. 61: Disconnecting Plug Connection (1 Of 2)
Courtesy of BMW OF NORTH AMERICA, INC.

12 61 280 REMOVING AND INSTALLING/REPLACING OIL PRESSURE SENSOR (M54)

Necessary preliminary tasks:

- Switch off ignition
- Unfasten oil filter cap to enable engine oil in filter to flow back into the oil sump.
- Remove intake filter housing See **11 61 050 REMOVING AND INSTALLING INTAKE AIR FILTER HOUSING** .

Installation location: at base of oil filter.

Disconnect plug connection (2).

Unscrew and remove oil-pressure switch.

IMPORTANT: Engine oil may emerge when the oil pressure sensor is removed - have a cleaning cloth to hand.
Catch and dispose of emerging engine oil.

Tightening torque, see 12 61 1AZ in **ENGINE ELECTRICAL SYSTEM - TIGHTENING TORQUES** .

Installation:

Screw on oil-filter cover tightly.

Check engine oil level, top up engine oil if necessary.

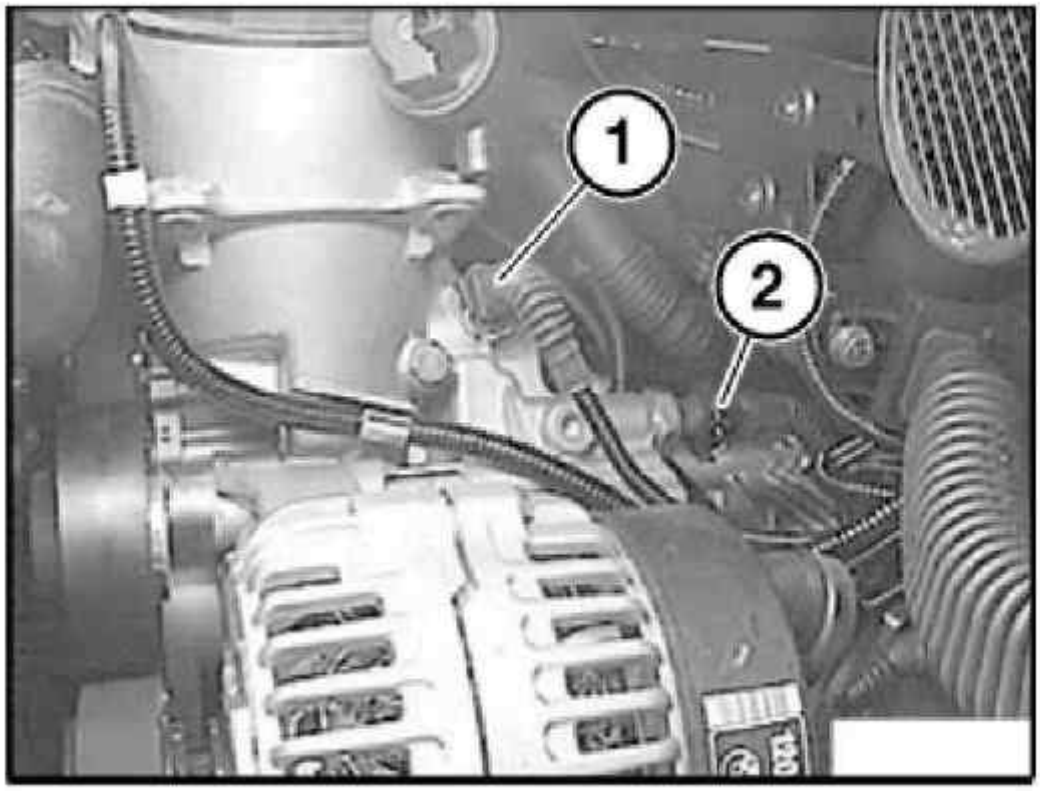

G03297501

Fig. 62: Disconnecting Plug Connection (2 Of 2)
Courtesy of BMW OF NORTH AMERICA, INC.

12 61 285 REPLACING LEVEL SWITCH FOR ENGINE OIL

Necessary preliminary tasks:

- Switch off ignition.
- Unfasten oil filter cover to enable engine oil in filter to flow back into the oil pan.
- Remove underbody panelling.
- If necessary, remove reinforcing plate . See **51 71 374 REMOVING AND INSTALLING/REPLACING REINFORCEMENT PLATE** .
- Drain engine oil.

Disconnect plug connection (1).

Unscrew nuts (2).

Remove level switch (3).

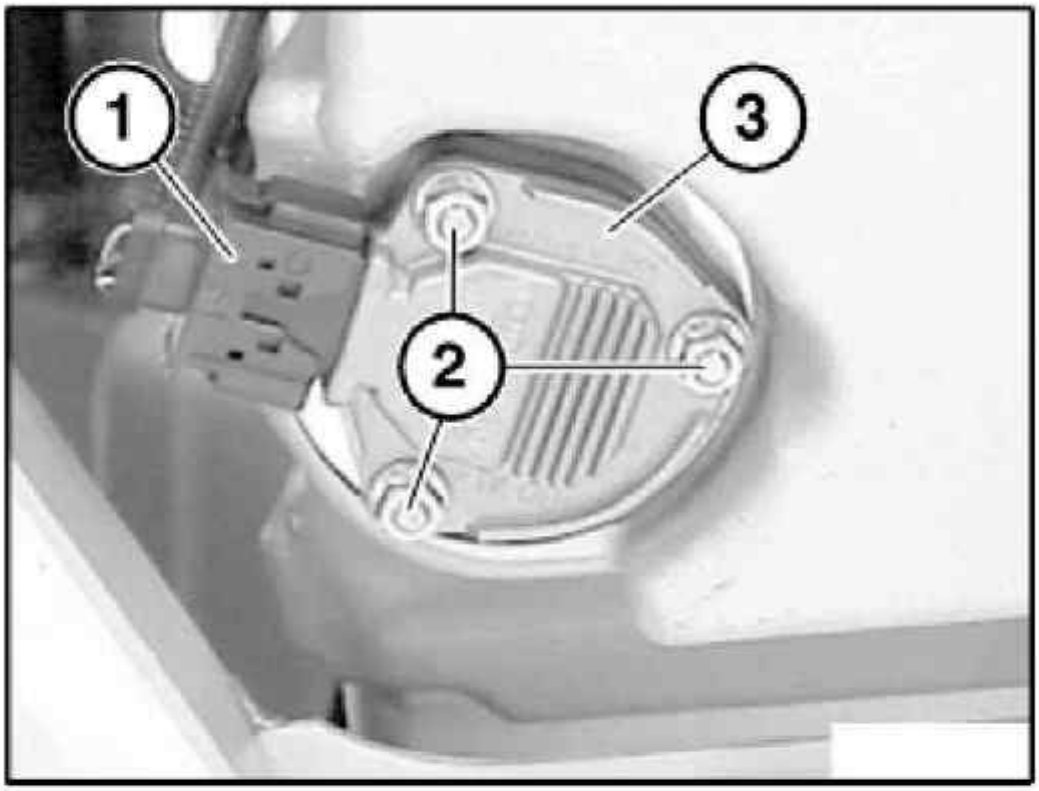

G03297502

Fig. 63: Removing Level Switch
Courtesy of BMW OF NORTH AMERICA, INC.

Installation:

Clean sealing face on oil sump.

Replace seal on level switch.

Installation:

Top up engine oil.

Screw on oil-filter cover tightly.

Tightening torque, see 11 42 2AZ in **ENGINE - TIGHTENING TORQUES** .

12 61 285 REPLACING OIL LEVEL SENSOR

Necessary preliminary tasks:

- Switch off ignition
- Unfasten oil filter cap to enable engine oil in filter to flow back into the oil sump
- Remove reinforcement plate . See **51 71 374 REMOVING AND INSTALLING/REPLACING REINFORCEMENT PLATE** .
- Drain off engine oil

Unlock plug (1) and remove.

Unscrew nuts.

Remove oil level sensor (2).

Installation:

Clean sealing face on oil sump.

Replace seal on oil level sensor.

Tightening torque, see 12 61 2AZ in **ENGINE ELECTRICAL SYSTEM - TIGHTENING TORQUES** .

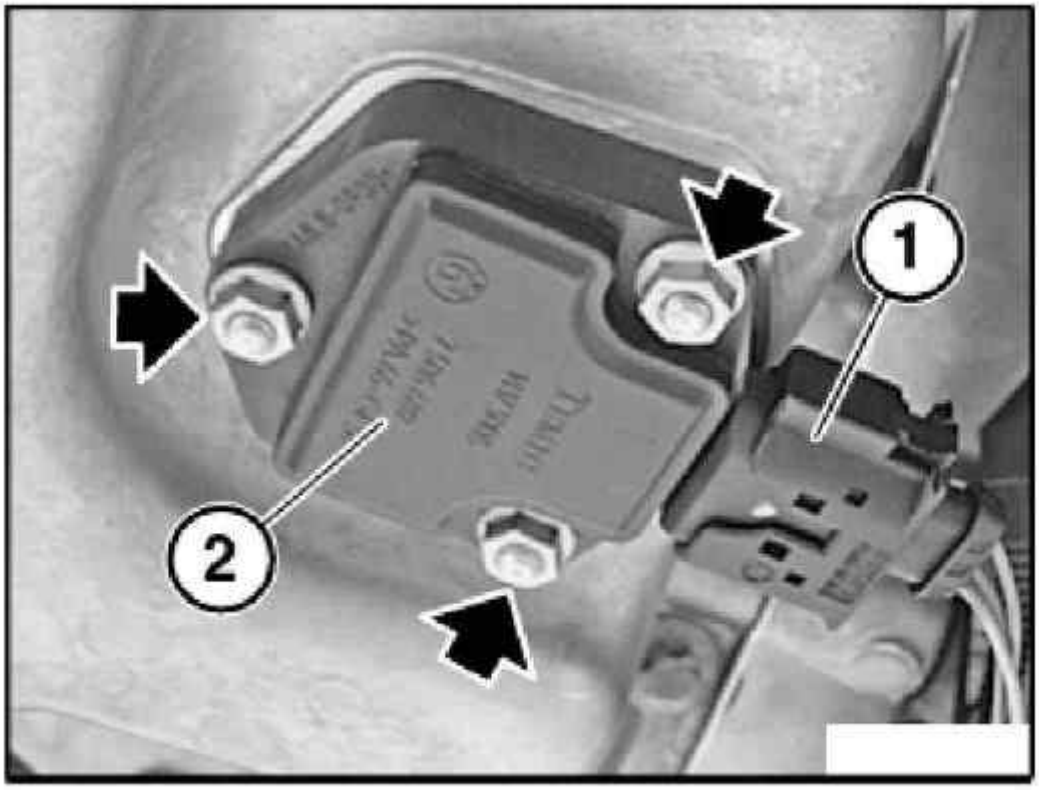

G03297503

Fig. 64: Removing Oil Level Sensor
Courtesy of BMW OF NORTH AMERICA, INC.

Installation:

Top up engine oil.

Tighten down oil filter cap.

Tightening torque, see 11 42 2AZ in **ENGINE - TIGHTENING TORQUES** .