# *Introduction*

N09200100862

Thank you for buying a MITSUBISHI ECLIPSE/ECLIPSE SPYDER.
We are confident you will enjoy your vehicle. It has been engineered for optimum performance, durability and comfort. By thoroughly reading this Owner's Manual, you will gain an understanding of the many features that are included in the ECLIPSE/ECLIPSE SPYDER. The Owner's Manual contains descriptions and illustrations that will assist in the operation and maintenance of your vehicle.

Your Authorized Mitsubishi Motors Dealer will be happy to assist you with any further questions you may have regarding the operation of your vehicle.
Please note that this manual applies to all ECLIPSE/ECLIPSE SPYDER models and explains all features including options. Some features explained in this manual may not be installed on your vehicle.

Please leave this Owner's Manual in the vehicle at the time of resale. The next owner will appreciate having access to the information contained here.

This manual includes instructions for standard and optional equipment available at the time of printing. Mitsubishi Motors Corporation reserves the right to make changes in design and specifications and to make additions or improvements in its product without assuming any obligation to install these on previously manufactured products.

MITSUBISHI MOTORS

Throughout this manual the words **WARNING** and **CAUTION** appear.
These are reminders to be especially careful. Failure to follow the instructions could result in personal injury or damage to your vehicle.

***WARNING***

**Indicates a strong possibility of severe personal injury or death if instructions are not followed.**

***CAUTION***

**Points out hazards or unsafe practices that could cause minor personal injury or damage to your vehicle.**

You will see another important symbol:
**NOTE Gives helpful information.**

***WARNING***

- **Engine exhaust, some of its constituents, and certain vehicle components contain or emit chemicals known to the State of California to cause cancer and birth defects and reproductive harm. In addition, certain fluids contained in vehicles and certain products of component wear contain or emit chemicals known to the State of California to cause cancer and birth defects or other reproductive harm.**

**©2011 Mitsubishi Motors Corporation Printed in U.S.A.**

This vehicle is manufactured by Mitsubishi Motors North America, Inc. in U.S.A. under license from Mitsubishi Motors Corporation.

# Table of contents


| | |
|---|---|
| Overview | |
| Quick index | |
| General information | 1 |
| Seat and restraint systems | 2 |
| Features and controls | 3 |
| Driving safety | 4 |
| Comfort controls | 5 |
| For emergencies | 6 |
| Vehicle care and maintenance | 7 |
| Customer assistance/Reporting Safety Defects | 8 |
| Specifications | 9 |

# *Instruments and controls (Driver's area)*

N00100201114

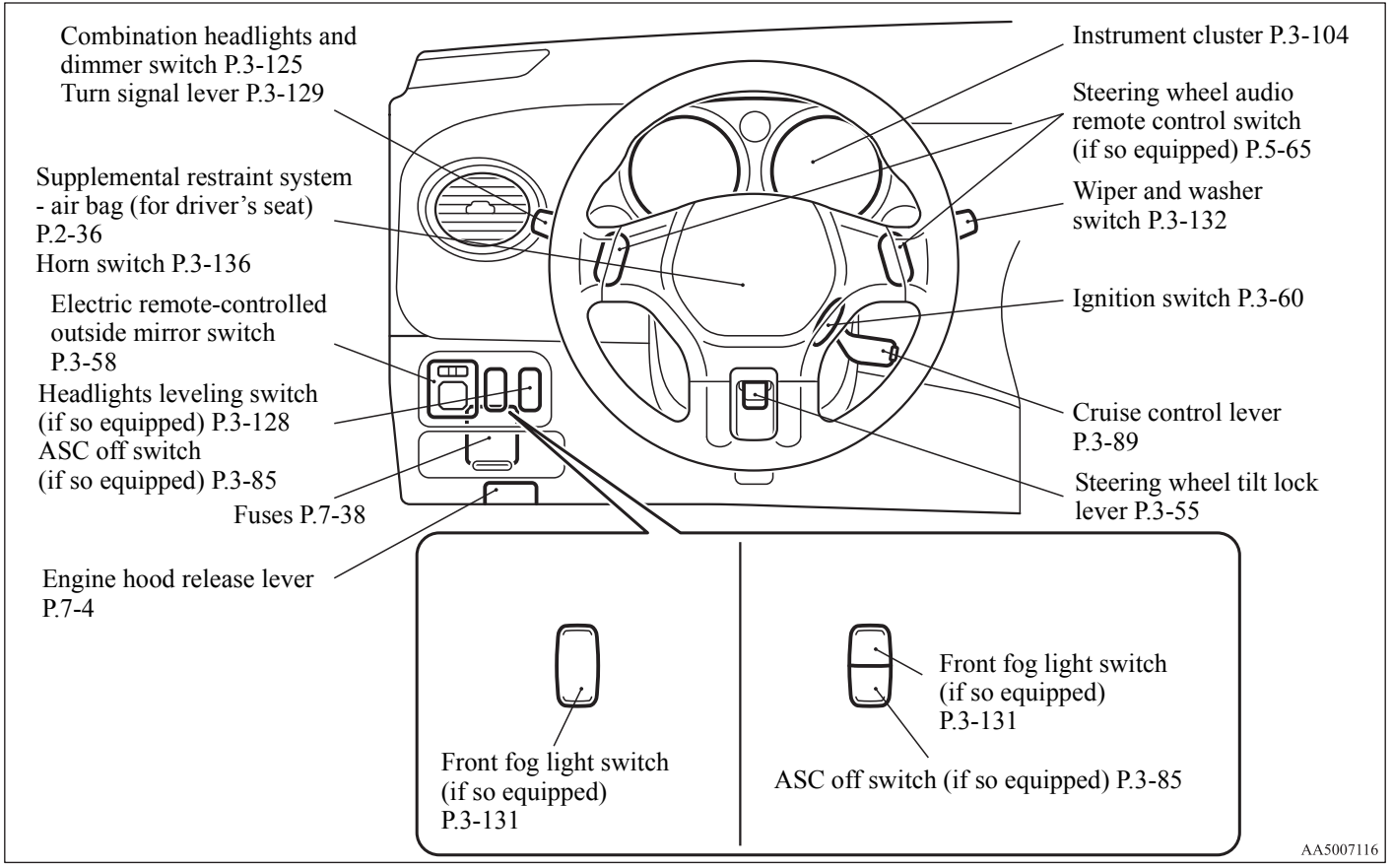

# *Instruments and controls (Instrument panel)*

N00100201127

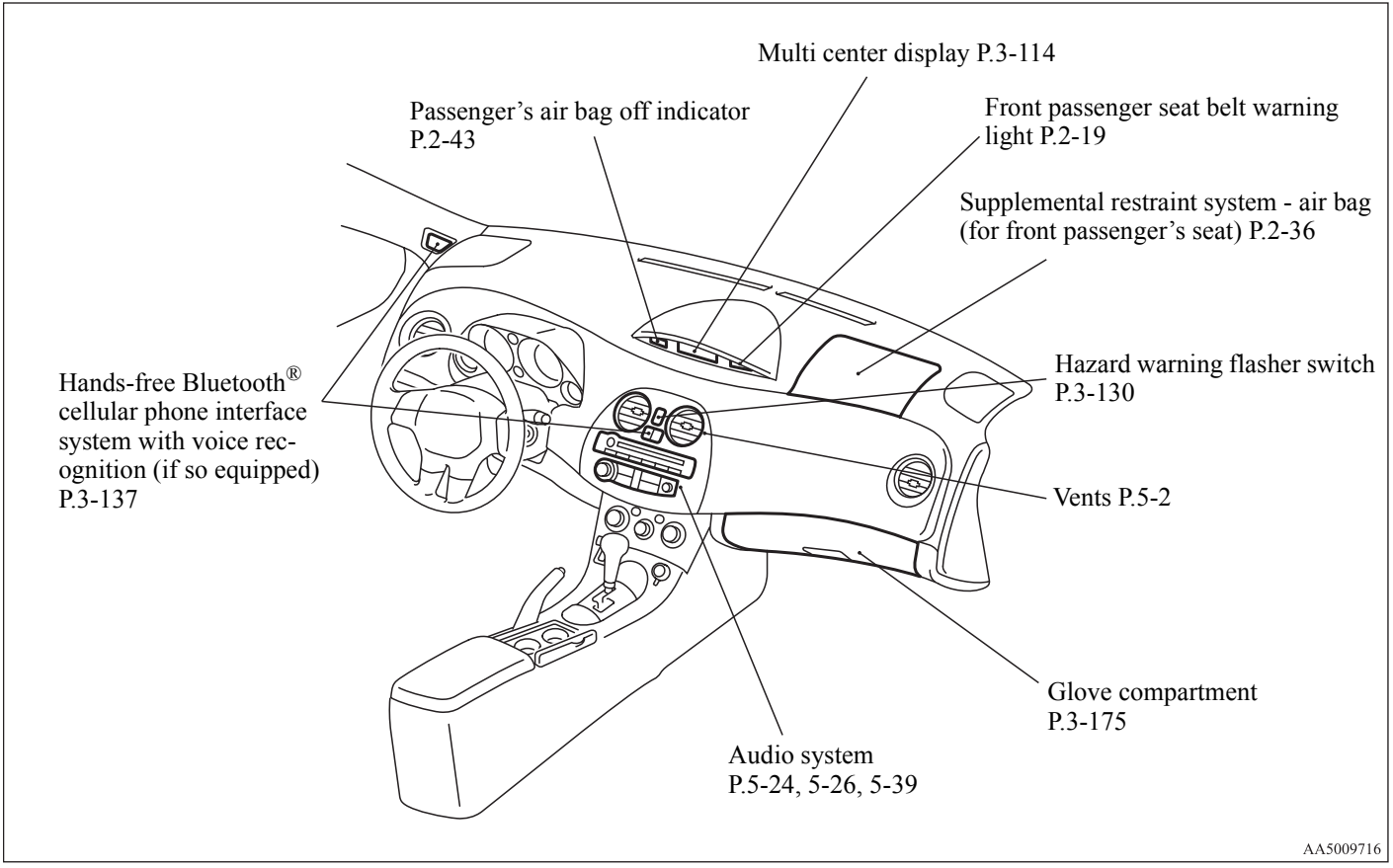

# *Instruments and controls (Floor console)*

N00100201273

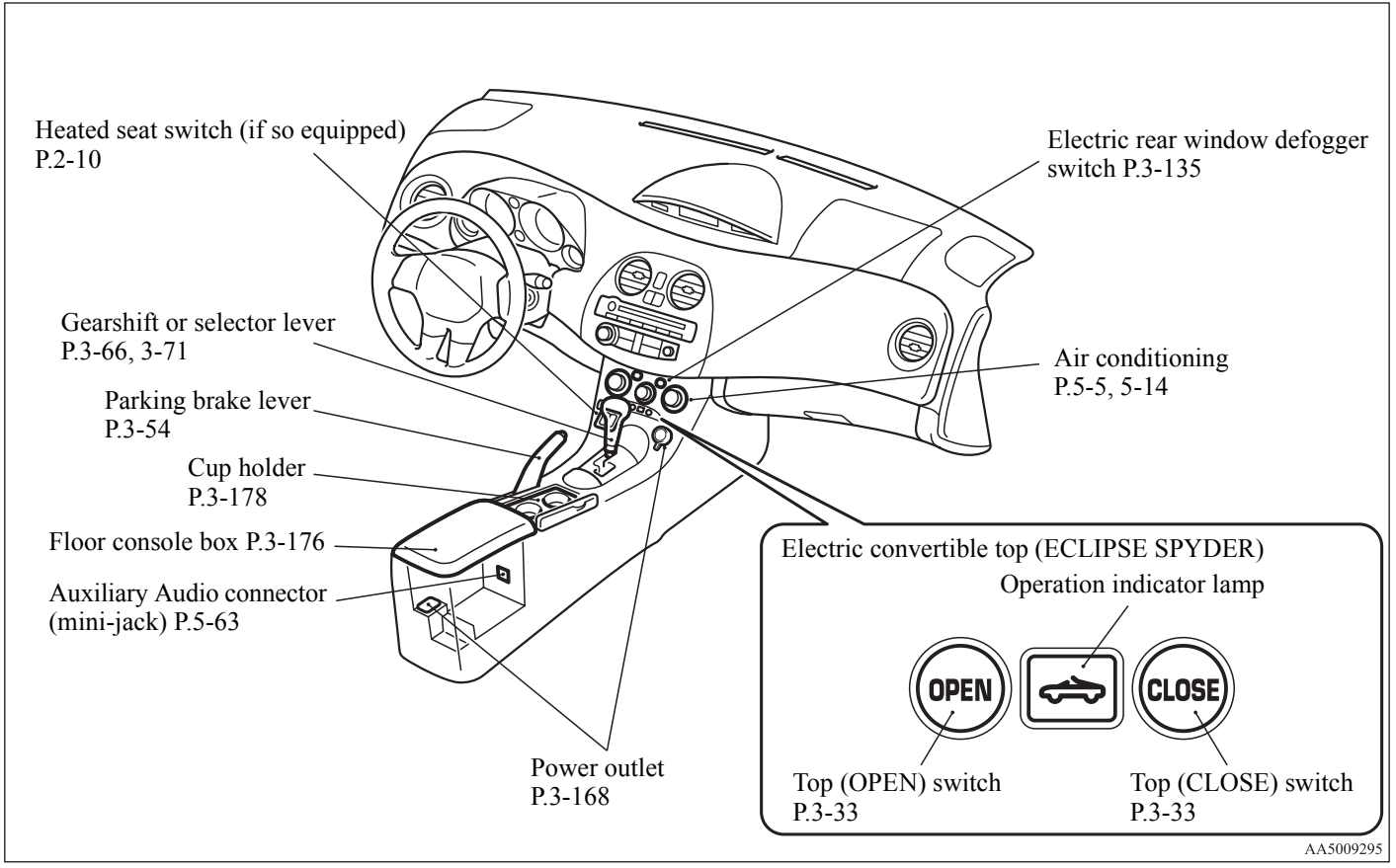


AA5009295

# Interior

N00100301157

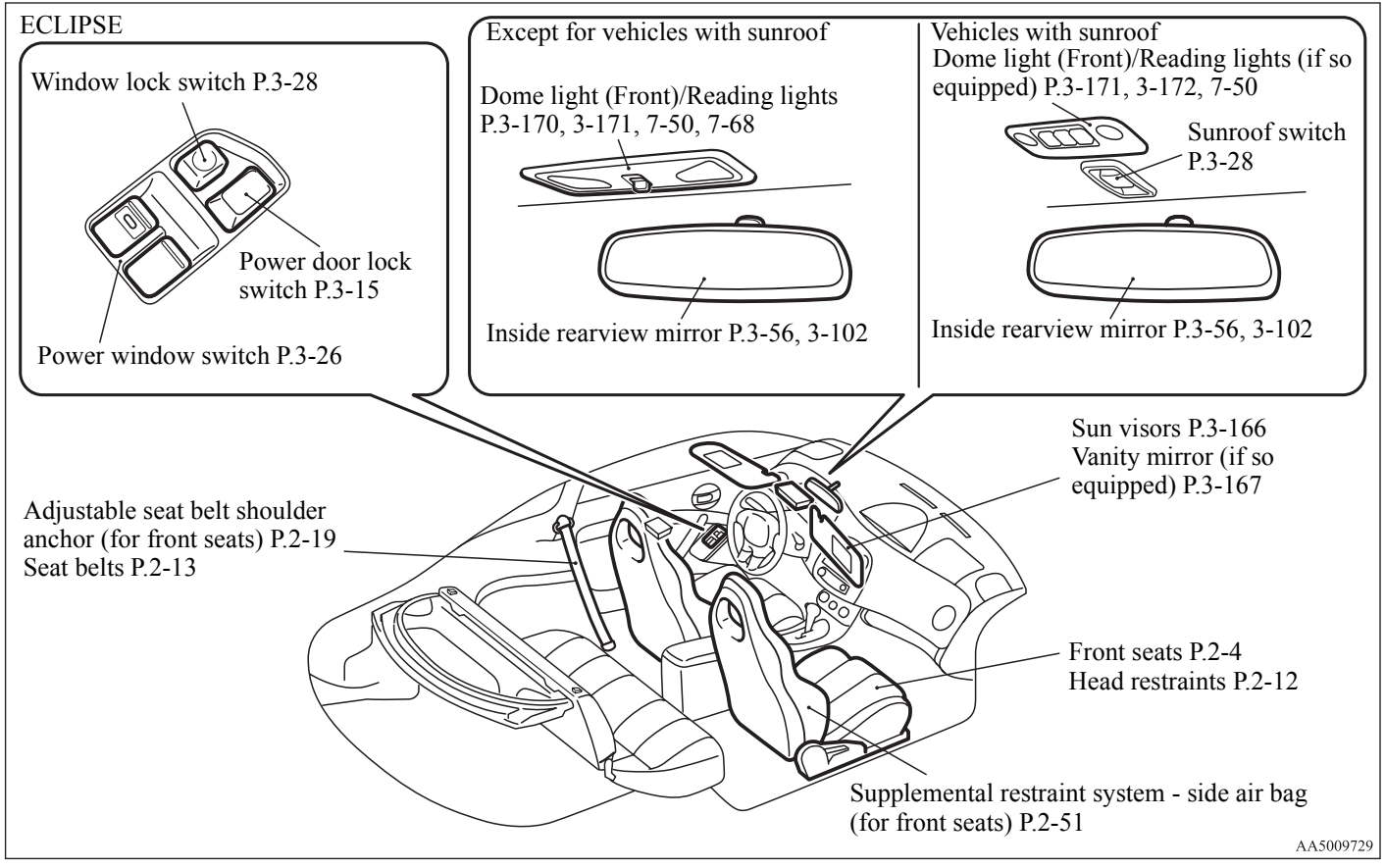

# *Interior*

N00100301069

ECLIPSE

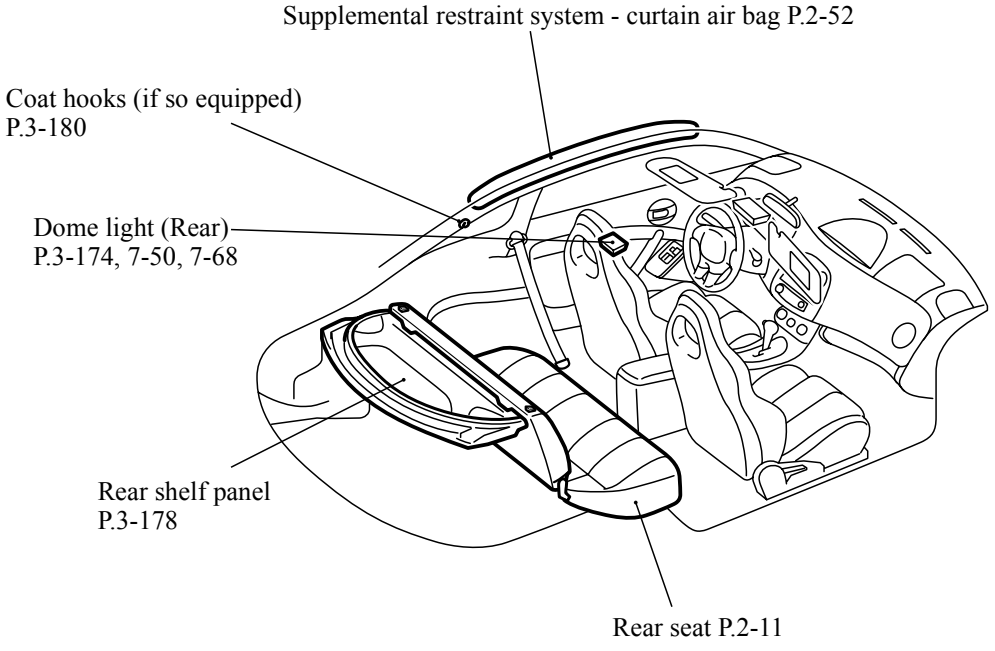


AA5004522

# *Cargo area*

N00100500077

ECLIPSE

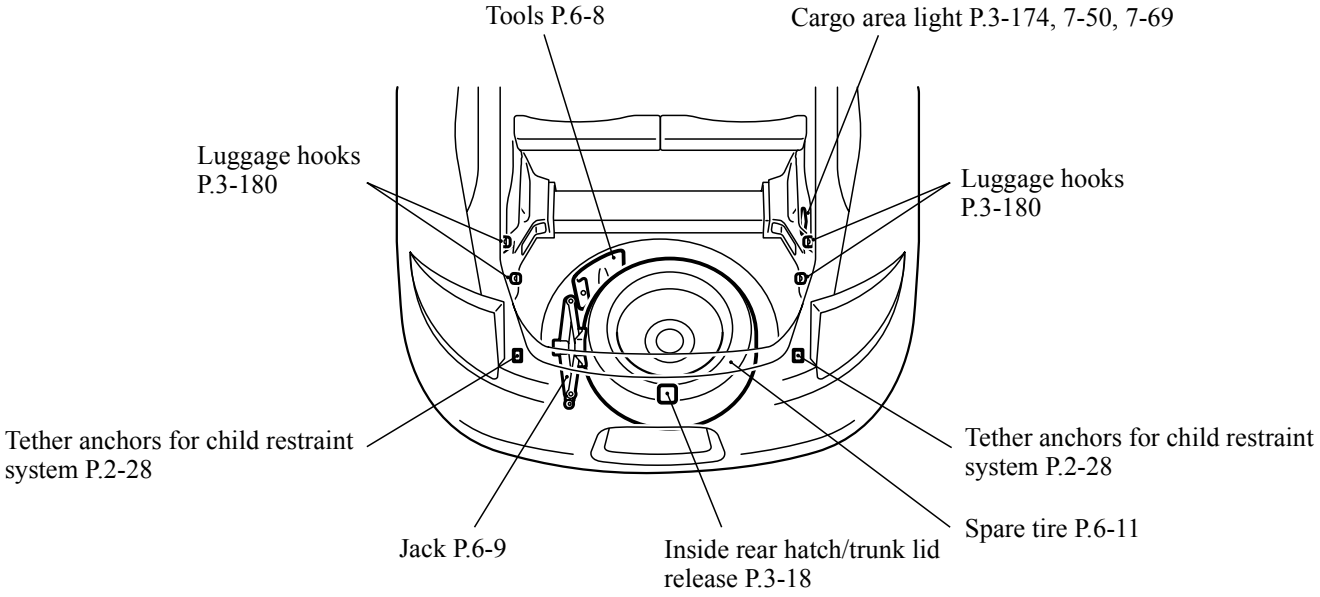


AA5007057

# Outside (Front)

N00100601134

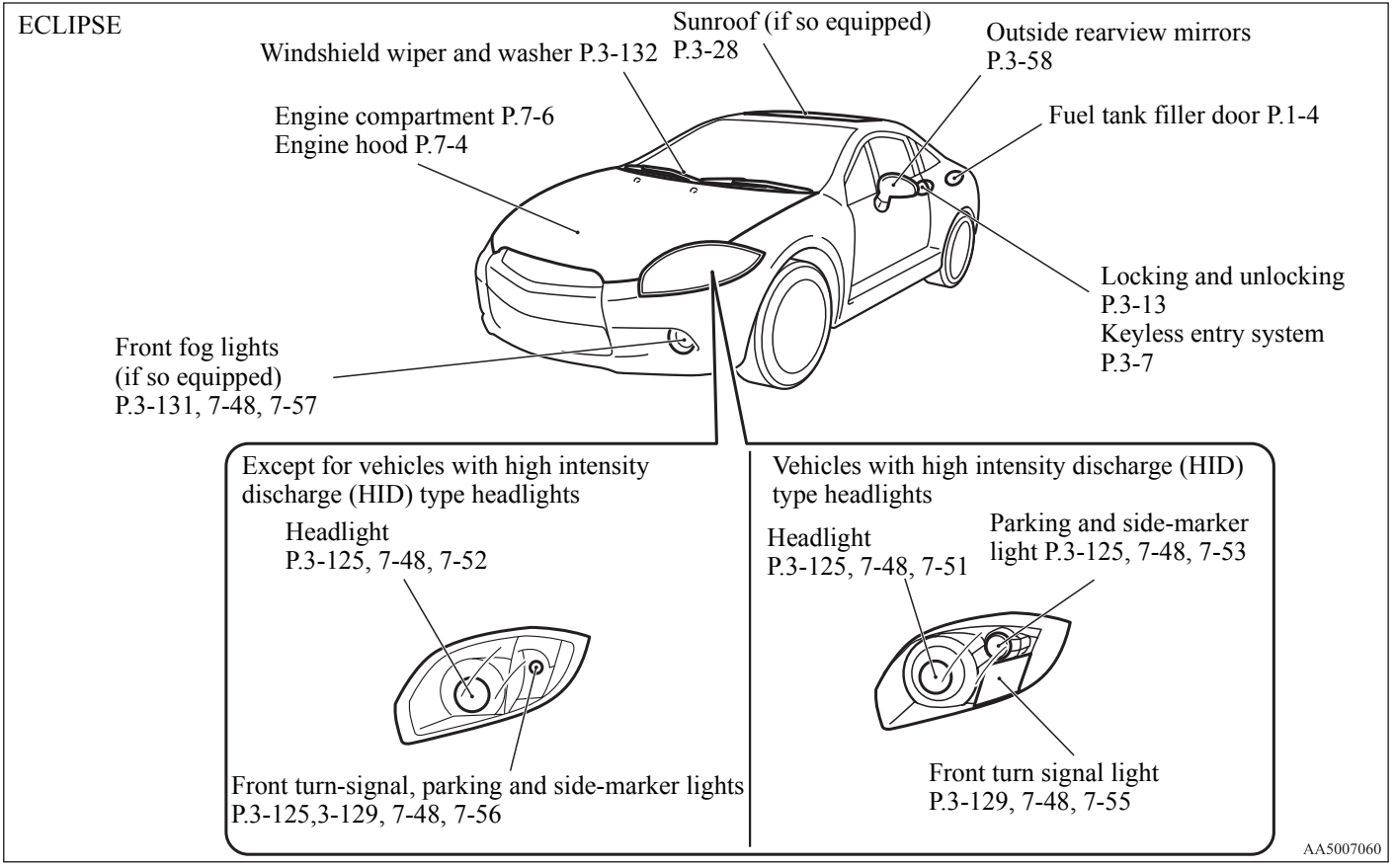

# *Outside (Rear)*

N00100601251

ECLIPSE

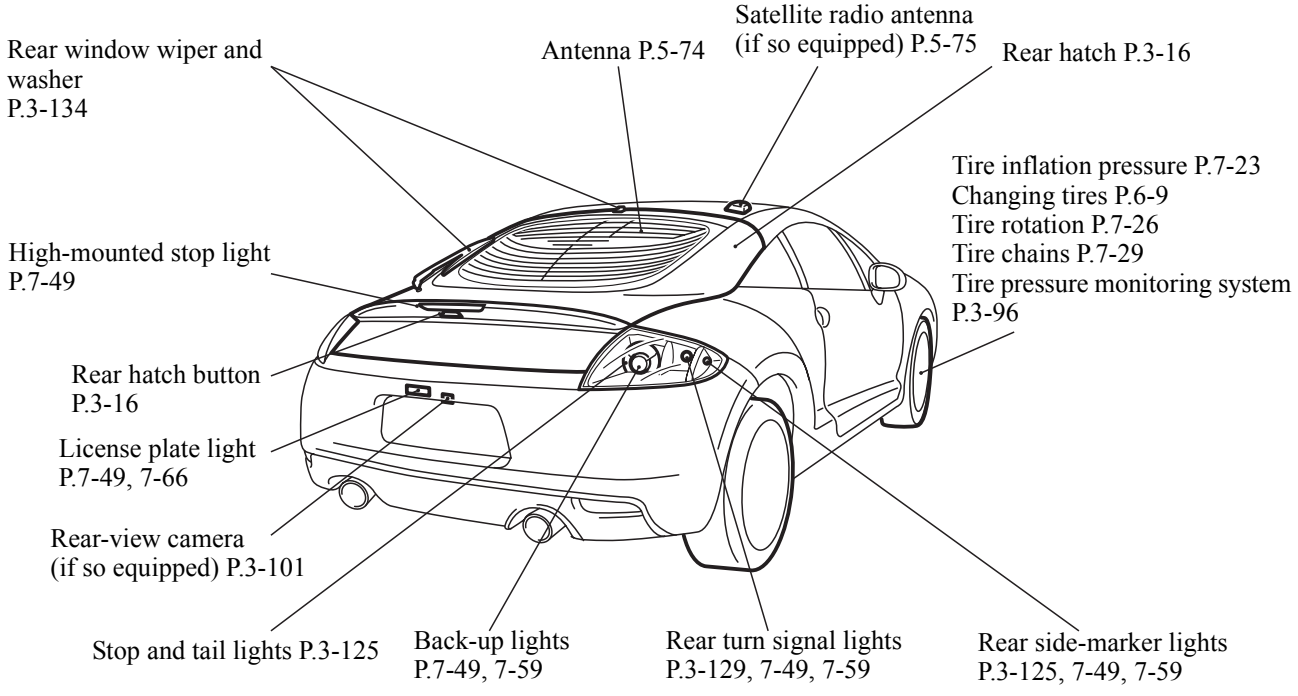


AA5012446

# *Interior*

N00100301144

ECLIPSE SPYDER

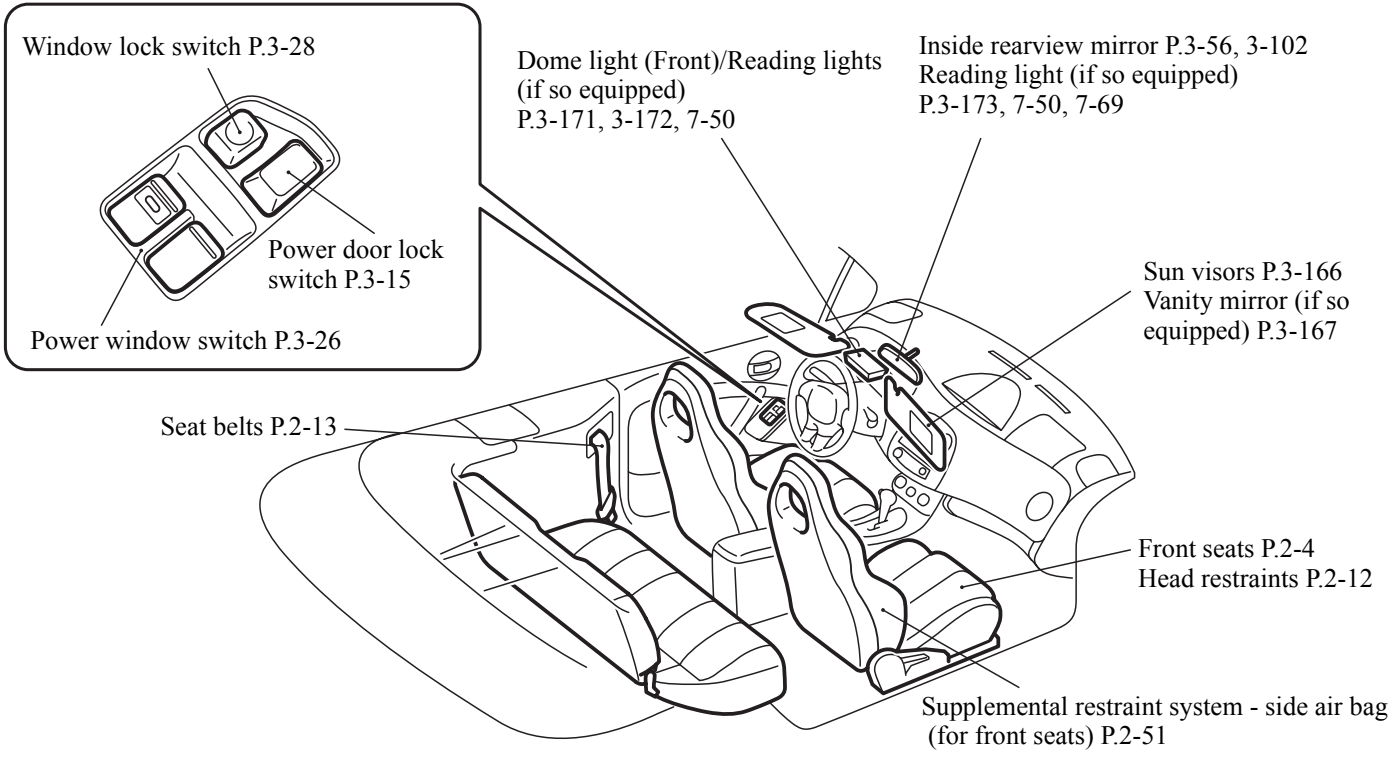


AA5011797

# *Trunk area*

N00100400223

ECLIPSE SPYDER

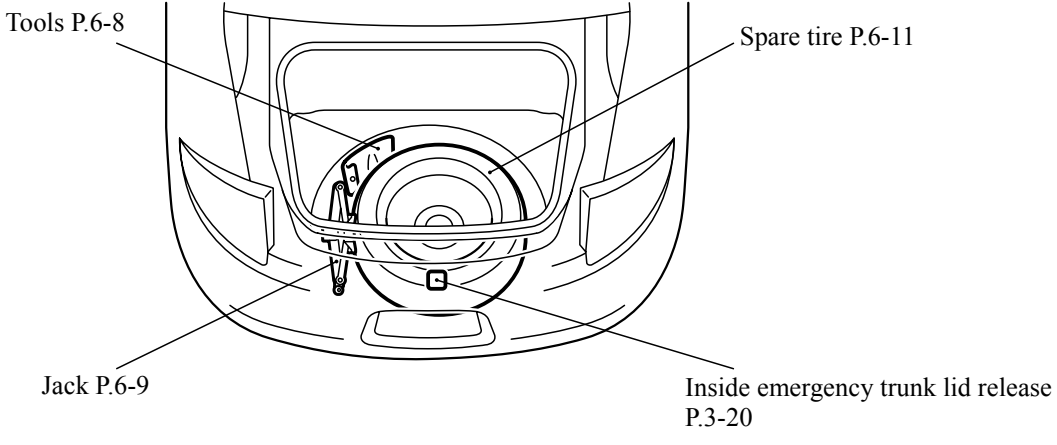


AA5007086

# Outside (Front)

N00100601150

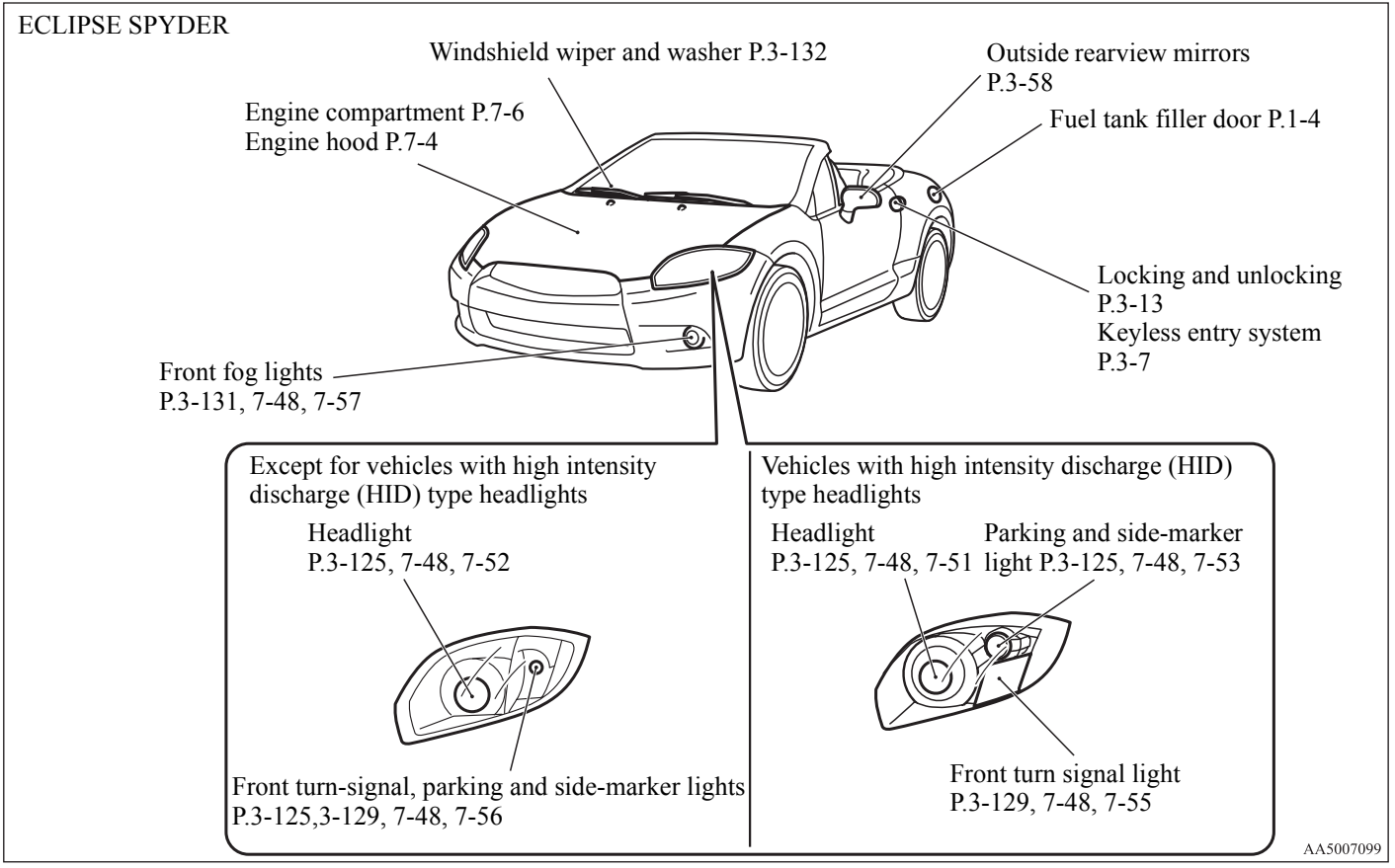

# *Outside (Rear)*

N00100601248

ECLIPSE SPYDER

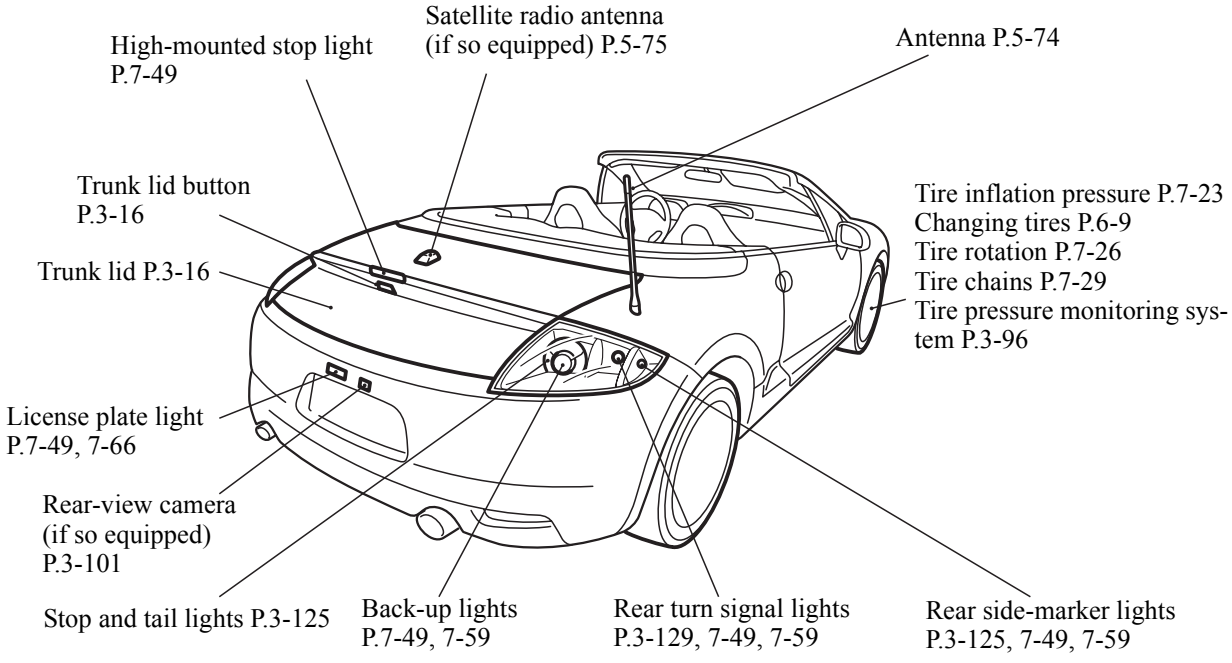


AA5009758

# *If this warning light comes on or flashes while you're driving...*

N00200701093

NOTE
- These warning lights will come on for a few seconds for a bulb check when the ignition key is first turned to "ON".

| Warning light | Do this | Ref. page |
|---|---|---|
| Charging system warning light | ● Park your vehicle in a safe place and stop the engine.<br>Contact an authorized Mitsubishi Motors dealer or a repair facility of your choice for assistance. | P.3-113 |
| Oil pressure warning light | ● Park your vehicle in a safe place and stop the engine, then check the engine oil level.<br>If the light comes on while the engine oil level is normal, have the system checked at an authorized Mitsubishi Motors dealer or a repair facility of your choice as soon as possible. | P.3-113 |
| BRAKE or (!)<br>Brake warning light | ● If this light comes on while driving, check to see that the parking brake is fully released.<br>● If this light stays on after releasing the parking brake, stop and check the brake fluid level.<br>● If the brake fluid level is correct, there may be a system malfunction. Avoid hard braking and high speeds, and contact an authorized Mitsubishi Motors dealer or a repair facility of your choice for assistance. | P.3-111 |

| Warning light | Do this | Ref. page |
|---|---|---|
| 0 or 1 through 4 or 5<br>Selector lever position indicator in the instrument cluster flashes rapidly (twice per second) (if so equipped) | ● Park your vehicle in a safe place.<br>Idle the engine until the selector lever position indicator stops flashing. If the indicator does not go off, have the system checked at an authorized Mitsubishi Motors dealer or a repair facility of your choice as soon as possible. | P.3-74 |
| SERVICE ENGINE SOON or<br>Engine malfunction indicator (“SERVICE ENGINE SOON” or “Check engine light”) | ● Although your vehicle will usually be drivable and not need towing, have the engine system checked at an authorized Mitsubishi Motors dealer or a repair facility of your choice as soon as possible. If the vehicle is not drivable, contact emergency roadside assistance at 1-888-648-7820 (for vehicles sold in U.S.A.) or 1-888-576-4878 (for vehicles sold in Canada), an authorized Mitsubishi Motors dealer, or local towing company for assistance. | P.3-112 |
| ABS<br>Anti-lock braking system warning light | ● When this light comes on, the anti-lock braking system is not functioning and only the ordinary braking system is functioning.<br>● Park your vehicle in a safe place and stop the engine.<br>Test the system as described on page 3-82.<br>● If the light does not go out after the test, or if it comes on again, we recommend that you have the system checked at an authorized Mitsubishi Motors dealer or a repair facility of your choice as soon as possible. | P.3-82 |
| SRS warning light | ● It is not necessary to stop the vehicle immediately, but we recommend that you have the air bag and the pre-tensioner seat belt system checked at an authorized Mitsubishi Motors dealer as soon as possible. | P.2-24, 2-44 |

| Warning light | Do this | Ref. page |
|---|---|---|
| 0 or 1 through 4 or 5<br>Selector lever position indicator in the instrument cluster flashes slowly (once per second) (if so equipped) | ● Have the automatic transaxle checked at an authorized Mitsubishi Motors dealer or a repair facility of your choice as soon as possible. | P.3-74 |
| and ASC OFF<br>or<br>and OFF<br>ASC indicator and ASC OFF indicator | ● Park your vehicle in a safe place and turn off the engine. Restart the engine and check to see if the indicator comes on again.<br>● If the indicator does not go out, or if it comes on again, have your vehicle inspected at an authorized Mitsubishi Motors dealer or a repair facility of your choice as soon as possible.<br>● When this indicator comes on, the active stability control is not functioning and normal operation of the vehicle will not be affected. | P.3-87 |
| Tire pressure monitoring system warning light | ● If the warning light comes on, you should stop and adjust the tires to the proper inflation pressure as soon as possible. (See “Tire inflation pressures” on page 7-23.) Once adjustments have been made, the warning light will go off after a few minutes of driving.<br>● If the warning light blinks for approximately 1 minute and then remains continuously illuminated, the system is not operating properly. If the system returns to normal, the warning light will go off. If the warning light does not go off, have the vehicle inspected at an authorized Mitsubishi Motors dealer. | P.3-97 |

# *If you hear this sound...*

N00200800664

AA1000597

| Sound | Do this | Ref. page |
|---|---|---|
| Constant tone when the driver’s door is opened. | **“Key reminder buzzer”**<br>A tone will sound if the driver’s door is opened while the ignition key is in the “LOCK” or “ACC” position.<br>Remove the key to stop the tone.<br>OR<br>**“Headlight reminder buzzer”**<br>A tone will sound if the driver’s door is opened when the ignition key is in the “LOCK” or “ACC” position or removed from the ignition switch while the lights are on. Turn the lights off.<br>The tone will stop automatically when the lights are automatically turned off.<br>(See page 3-126 for auto-cutout function.) | P.3-14<br><br>P.3-127 |

| Sound | Do this | Ref. page |
|---|---|---|
| Metallic squeal when you press the brake pedal while driving. | **“Brake pad wear alarm”**<br>The brake pads are worn down to the serviceable limit.<br>Have the brake pads replaced at an authorized Mitsubishi Motors dealer or a repair facility of your choice. | P.3-80 |
| Tone when the ignition key is turned to the “ON” position. | **“Seat belt reminder buzzer”**<br>When the ignition key is turned to the “ON” position, the tone will sound for about 6 seconds. If the driver’s seat belt remains unfastened 1 minute later, the tone will sound intermittently (12 times) when the vehicle is driven. If the driver’s seat belt subsequently remains unfastened while the vehicle is being driven, the tone will sound as a warning each time the vehicle stops and starts. When the driver’s seat belt is fastened, the tone will stop. | P.2-18 |
| Tone when the vehicle is moving at more than 5 mph (8 km/h). | **“Door-ajar warning buzzer”**<br>Door or rear hatch (ECLIPSE) is not properly shut.<br>If you shut the door or rear hatch (ECLIPSE), the tone will stop. | P.3-114 |
| When the headlights have flashed for three minutes, the horn will sound intermittently for three minutes. | **“Theft-alarm system”**<br>The theft-alarm system is operating. To stop the alarm, use the keyless-entry transmitter to lock or unlock the doors or rear hatch (ECLIPSE) or the trunk lid (ECLIPSE SPYDER).<br>Alternatively, turn the ignition key to the “ON” position. | P.3-22 |

# *If the indicator flashes and a tone sounds when the electric convertible top is operated (ECLIPSE SPYDER)*

N00200100029

| Indicator Lamp | | Tone | Do this | Ref. page |
|---|---|---|---|---|
| | Flashes slowly (approx. one flash per second). | Sounds intermittently and rapidly (approx. three times per second). | ● The requirements for operation of the electric convertible top are not all satisfied. Ensure satisfaction of all the requirements. | P.3-32 |
| | | | ● The indicator and tone indicate that the electric convertible top is not going to operate.<br>• Check whether the OPEN switch and CLOSE switch are both being pressed at the same time.<br>• Check whether the OPEN (or CLOSE) switch is being pressed when the top is fully open (or closed). | P.3-33, 3-36 |
| | | | ● The indicator and tone indicate that the electric convertible top has temporarily stopped working because continuous operation of one switch then the other has triggered a protection circuit. Wait about seven minutes, then try operating the electric convertible top again. | P.3-33 |
| | Flashes rapidly (approx. two flashes per second). | Sounds for approx. five seconds. | ● The top is partly open. Stop the vehicle and completely open or close the top. The tone will then stop. | P.3-38 |
| | | Sounds intermittently and slowly (approx. once per second). | ● The indicator and tone indicate a system fault. Have the vehicle inspected by an authorized Mitsubishi Motors dealer. | P.3-38 |

# *If this problem occurs...*

N00200900678

| Problem | Do this | Ref. Page |
|---|---|---|
| Cannot turn the key. 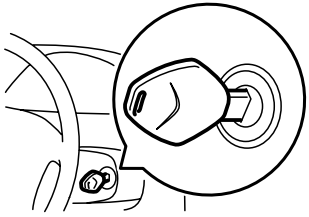 | **From “LOCK” to “ACC”**<br>Turn the key while jogging the steering wheel in either direction.<br>**From “ACC” to “LOCK”**<br>**Vehicles with automatic transaxle:**<br>Check the position of the selector lever.<br>The key cannot be removed unless the selector lever is set to the “P” (PARK) position.<br>**Vehicles with manual transaxle:**<br>Place the key at the “ACC” position. Push the key in and turn it. | P.3-61,<br>3-63 |
| Cannot shift the selector lever from the “P” (PARK) position. (for vehicles with automatic transaxle) | Shift the selector lever while pressing the brake pedal.<br>Check that the ignition key is in the “ON” position. | P.3-71 |
| The windows are fogged up. | 1. Set the mode selection dial to the “ ” or “ ” position.<br>2. Turn on the blower. | P.5-12,<br>5-20 |
| The engine does not start.<br>The lights do not come on.<br>The lights are dim.<br>The horn does not honk.<br>The horn sound is weak. | Have the battery checked. Recharge or replace as needed. | P.6-2,<br>7-16 |

| Problem | Do this | Ref. page |
|---|---|---|
| The engine coolant temperature gauge indicator is at the “H” (hot) position.<br>Steam comes out of the engine compartment.<br> 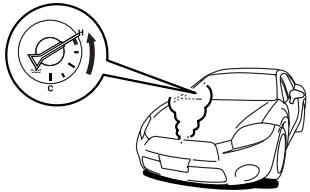 <br>AAZ001924 | The engine is overheated.<br>Carefully stop the vehicle in a safe place. | P.6-6 |
| The vehicle is stuck in sand, mud, or snow. | Move the gearshift lever or selector lever rhythmically between 1st and Reverse gears (for vehicles with manual transaxle) or “Sports mode” and “R” (REVERSE) positions (for vehicles with automatic transaxle), while pressing lightly on the accelerator pedal. | P.6-22 |

**⚠ *WARNING***

- **When attempting to rock your vehicle out of a stuck position, be sure that no one is near the vehicle. The rocking motion may cause the vehicle to suddenly lurch forward or backward, possibly injuring bystanders.**
- **Avoid revving the engine or spinning the wheels. Prolonged efforts to free a stuck vehicle may result in overheating and transaxle failure.**
  **If the vehicle remains stuck after several rocking attempts, have a towing service pull the vehicle out.**

| Problem | Do this | Ref. page |
|---|---|---|
| The brakes are not functioning properly after driving through water. | Dry out the brakes by driving slowly while lightly pressing the brake pedal. | P.4-6 |
| The automatic transaxle does not shift when accelerating and/or the vehicle does not easily begin to move. | There may be a problem in the automatic transaxle.<br>Have the vehicle inspected by an authorized Mitsubishi Motors dealer or a repair facility of your choice.<br>Shift the lever into 2nd gear of the sports mode when starting the vehicle. If the vehicle is on a level road, shift the lever back to “D” (DRIVE) position.<br>(This method may or may not work depending on the type of malfunction.) | P.3-79 |
| A tire is punctured. | 1. Park the vehicle in a safe place where the surface is flat and level.<br>2. Replace the flat tire with the spare tire. | P.6-9 |

# General information

Fuel selection . . . . . 1- 2
Filling the fuel tank . . . . . 1- 4
Modifications to and racing of your vehicle . . . . . 1- 7
Mitsubishi Motors genuine parts . . . . . 1- 9
California Perchlorate Materials Requirements. . . 1- 9

# Fuel selection

N00301000808

Your vehicle is designed to use unleaded gasoline only. It is equipped with a fuel filler tube especially designed to accept only a small diameter unleaded gasoline dispensing nozzle.



**⚠ WARNING**

- **Gasoline is highly flammable and explosive. You could be burned, seriously injured or killed when handling it. Whenever you refuel your vehicle, stop the engine and keep flames, sparks, and smoking materials away from the vehicle. Always handle fuel in well-ventilated outdoor areas.**

**⚠ CAUTION**

- **Using leaded gasoline in your vehicle will damage the engine, catalytic converter, and the oxygen sensors. Also, using leaded gasoline is illegal, and will void your warranty coverage of the engine, catalytic converter, and oxygen sensors.**

## Gasoline detergent additives

In the United States, fuel suppliers are required by law to add detergents to their gasoline to minimize fuel-injector fouling and minimize intake-valve deposits. Detergent gasoline helps keep your engine in tune and your emission-control system working properly.

## Octane requirement

### *2.4 liter engine model*

Your vehicle is designed to operate on unleaded gasoline having a minimum octane number of 87 [(MON+RON)/2], or 91 RON.

### *3.8 liter engine model*

Unleaded gasoline having an octane number of 87 [(MON+RON)/2] or 91 RON may be used, but Mitsubishi Motors Corporation recommends that your vehicle be operated on premium grade unleaded gasoline having a minimum octane number of 91 [(MON+RON)/2], or 95 RON. For maximum performance, premium gasoline is recommended.

MON: Motor Octane Number
RON: Research Octane Number

## Oxygenated gasoline

Gasoline sold at some service stations contains oxygenates such as ethanol and MTBE, although the oxygenates may not be identified by those names. Oxygenates are required in some areas of the country. Such fuel can be used in your vehicle.

## Ethanol (Gasohol)

A mixture of up to 10 % ethanol (grain alcohol) and 90 % unleaded gasoline may be used in your vehicle, provided the octane number is at least as high as that recommended for unleaded gasoline.

## Methanol

Do not operate your vehicle on gasoline containing methanol (wood alcohol). Using this type of alcohol could adversely affect the vehicle's performance and damage critical parts of the vehicle's fuel system.

## Reformulated gasoline

Many areas of the country require the use of cleaner burning fuel referred to as "Reformulated Gasoline".

Reformulated gasoline contains oxygenates and is specially blended to reduce vehicle emissions and improve air quality. Mitsubishi Motors Corporation strongly supports the use of reformulated gasoline. Properly blended reformulated gasoline has no adverse effect on vehicle performance or on the durability of the engine and fuel system.

## MMT (methylcyclopentadienyl manganese tricarbonyl)

MMT is a manganese-containing metallic additive that is blended into some gasolines to increase the octane number.

Mitsubishi Motors Corporation recommends using gasolines without MMT.

Use of gasolines blended with MMT may adversely affect performance, and cause the malfunction indicator on your instrument panel to come on. If this happens, contact an authorized Mitsubishi Motors dealer or a repair facility of your choice for assistance.

## Sulfur in gasoline

Your vehicle may have been designed to satisfy California's low-emission regulations based on clean-burning low-sulfur gasoline. Gasoline sold in parts of the country other than California is allowed to have a higher sulfur content. Using such gasoline could adversely affect the vehicle's catalytic converter and cause the engine malfunction indicator ("SERVICE ENGINE SOON" or "CHECK ENGINE") to come on. Illumination of this indicator while you are using high-sulfur gasoline does not necessarily mean the vehicle's emission-control system is malfunctioning. Your authorized Mitsubishi Motors dealer may suggest you try using a different, lower-sulfur brand of unleaded gasoline to determine whether the problem is fuel-related.

NOTE

- Poor-quality gasoline can cause problems such as poor starting, stalling during idling, abnormal engine noise, and poor acceleration. If you experience any of these problems, try using a different brand of gasoline. If the engine malfunction indicator ("SERVICE ENGINE SOON" or "CHECK ENGINE") flashes, have the vehicle inspected as soon as possible by the nearest authorized Mitsubishi Motors dealer or a repair facility of your choice.

- Repeatedly driving short distances at low speeds can cause deposits to form in the fuel system and engine, resulting in poor starting and poor acceleration. If these problems occur, you are advised to add a detergent additive to the gasoline when you refuel the vehicle. The additive will remove the deposits, thereby returning the engine to a normal condition. Be sure to use a genuine Mitsubishi detergent additive. Using an unsuitable additive could make the engine malfunction. For details, please contact the nearest authorized Mitsubishi Motors dealer.



## *Filling the fuel tank*

N00301100740

**⚠ *WARNING***

- **Gasoline is highly flammable and explosive. You could be burned, seriously injured or killed when handling it. When refueling your vehicle, always turn the engine off and keep away from flames, sparks, and smoking materials. Always handle fuel in well-ventilated outdoor areas.**
- **Before removing the fuel cap, be sure to get rid of your body's static electricity by touching a metal part of the car or fuel pump. Any static electricity on your body could create a spark that ignites fuel vapor.**
- **Perform the whole refueling process (opening the fuel tank filler door, removing the fuel cap, etc.) by yourself. Do not let any other person come near the fuel tank filler. If you allowed a person to help you and that person was carrying static electricity, fuel vapor could be ignited.**
- **Do not move away from the fuel tank filler until refueling is finished. If you moved away and did something else (for example, sitting on a seat) partway through the refueling process, you could pick up a fresh charge of static electricity.**
- **Be careful not to inhale fuel vapor. Fuel contains toxic substances.**
- **Keep the doors and windows closed while refueling the vehicle. If they were open, fuel vapor could get into the cabin.**

## Fuel tank capacity

17.7 gal (67 L)

## Refueling

1. Before filling with fuel, stop the engine.
2. The fuel tank filler is located on the rear driver side of your vehicle.
   To open the fuel tank filler door, hook a finger behind the door, and pull the door toward you.

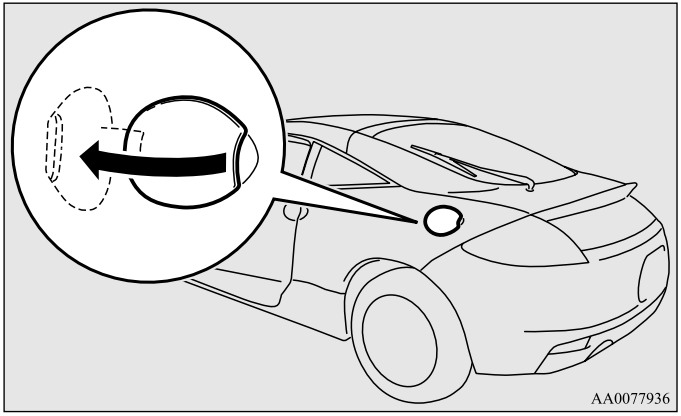


3. Open the fuel tank filler pipe by slowly turning the cap counterclockwise.

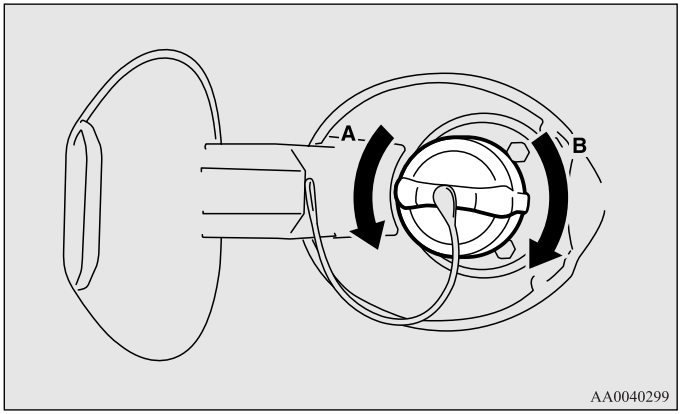


A- Remove
B- Close

**⚠ WARNING**

- **Since the fuel system may be under pressure, remove the fuel tank filler cap slowly. This relieves any pressure or vacuum that might have built up in the fuel tank. If the cap is venting vapor or if you hear a hissing sound, wait until it stops before removing the cap. Otherwise, fuel may spray out, injuring you or others.**

4. To fill with fuel correctly depends mainly on correct handling of the fuel filler nozzle. Do not tilt the nozzle. Insert the nozzle in the tank port as far as it will go.

**⚠ CAUTION**

- **Your vehicle can only be operated using unleaded gasoline. Serious engine and catalytic converter damage will result if leaded gasoline is used.**

5. When the nozzle stops automatically, do not try to add more fuel.

**⚠ CAUTION**

- **To avoid fuel spillage and overfilling, do not "top-off" the fuel tank. Spilled fuel could discolor, stain, or crack the vehicle's paintwork. If fuel spills on the paintwork, wipe it off with a soft cloth.**

6. To close, turn the fuel tank filler cap slowly clockwise until you hear clicking sounds, then gently push the fuel tank filler door closed.

**⚠ WARNING**

- **Make sure the fuel cap is securely closed. If the fuel cap is loose, fuel could leak, resulting in a fire.**

**⚠ CAUTION**

- **If you need to replace the fuel tank filler cap, use only the cap specified for your model vehicle.**

NOTE

- If the fuel tank filler cap is not tight while driving, the engine malfunction indicator ("SERVICE ENGINE SOON" or "Check engine light") may come on when the onboard diagnostic (OBD) system performs a self check.
  Always tighten the fuel tank filler cap until you hear clicking sounds.
  The indicator will go off after driving several times. If the indicator does not go off, contact your authorized Mitsubishi Motors dealer or a repair facility of your choice as soon as possible.

## *Modifications to and racing of your vehicle*

N00301600136

This vehicle should not be modified with non-Mitsubishi Motors genuine parts. Mitsubishi Motors designs and manufactures high quality vehicles with an emphasis on safety and durability. Modifications using non-Mitsubishi Motors genuine parts may affect the performance, safety and/or durability of your vehicle, and may violate applicable state and/or federal regulations.

**DAMAGE OR PERFORMANCE PROBLEMS RESULTING FROM MODIFICATIONS TO OR RACING OF YOUR VEHICLE ARE NOT COVERED UNDER WARRANTY.**

Examples of modifications to your vehicle that can cause damage or performance problems include the following:

- Failure to use Mitsubishi Motors genuine parts
- Failure to use required fuel and fluids
- Failure to use proper size tires and wheels
- Modification of the fuel, intake, exhaust, emission, suspension, engine, drive train or electrical wiring systems
- Modification of any onboard computer/control module, including reprogramming, or replacing/adding chips to any onboard computer/control module

Review the Warranty and Maintenance Manual for further details regarding warranty coverage.

## Installation of accessories

N00301700023

**⚠ *CAUTION***

- **Before any electrical or electronic accessories are installed, consult an authorized Mitsubishi Motors dealer.**

- The installation of accessories, optional parts, etc., should only be carried out within the limits prescribed by law in the driving area and in accordance with the guidelines and warnings contained within the documents accompanying this vehicle.
  Only Mitsubishi Motors approved accessories should be fitted to your vehicle.
- Improper installation of electrical parts could cause fire. Refer to the “Modification/alterations to the electrical or fuel systems” section within this owner’s manual.
- Using a cellular phone or radio set inside the vehicle without an external antenna may cause electrical system interference, which could lead to unsafe vehicle operation.
- Tires and wheels which do not meet specifications must not be used.
  Refer to the “Specifications” section for information regarding wheel and tire sizes.

**⚠ WARNING**

- **If you choose to use a cellular phone while driving, you must not allow that usage to distract you in the safe operation of your vehicle. Anything, including cellular phone usage, that distracts you from the safe operation of your vehicle increases your risk of an accident.**
  **Refer to and follow all state and local laws in your area regarding cellular phone usage while driving.**

***Important point!***

Due to the large number of accessory and replacement parts provided by different manufacturers in the market, it is not always possible for an authorized Mitsubishi Motors dealer to check whether the attachment or installation of non-Mitsubishi Motors genuine parts will affect the driving safety of your Mitsubishi-vehicle.

## Modification/alterations to the electrical or fuel systems

N00301800125

Mitsubishi Motors manufactures high quality vehicles with an emphasis on safety. It is important to consult an authorized Mitsubishi Motors dealer before installation of any accessory which may involve modification of the electrical or fuel systems.

**⚠ CAUTION**

- **Please consult an authorized Mitsubishi Motors dealer concerning any such accessory fitment or modification.**
  **If the wires interfere with the vehicle body or improper installation methods are used (protective fuses not included, etc.), electronic devices may be adversely affected, resulting in a fire, vehicle damage, or other accident.**

## *Mitsubishi Motors genuine parts*

N00301400105

Mitsubishi Motors Genuine Parts are designed and manufactured to meet high standards of performance, and are recommended for all of your maintenance needs. Also available from your Mitsubishi Motors dealer are a wide variety of accessories to personalize your new vehicle. Each Mitsubishi vehicle has a selection of Mitsubishi Motors authorized accessories to choose from to tailor your new vehicle to your own personal preference. Your Mitsubishi Motors dealer's Parts Manager has information on various audio systems, protection items, as well as interior and exterior accessories available for your specific model.

## *California Perchlorate Materials Requirements*

N00300100017

Certain components of this vehicle, such as airbag modules, seat belt pretensioners, and button cell batteries, may contain perchlorate materials.
Special handling may apply. For additional information, see www.dtsc.ca.gov/hazardouswaste/perchlorate.

# *Seat and restraint systems*


Seats . . . . . 2- 2
Seats and restraint systems. . . . . 2- 3
Front seats . . . . . 2- 4
Rear seat. . . . . 2- 11
Head restraints . . . . . 2- 12
Seat belts . . . . . 2- 13
Seat belt use during pregnancy . . . . . 2- 22
Seat belt pre-tensioner and force limiter systems . 2- 22
Child restraints . . . . . 2- 24
Maintenance and inspection of seat belts. . . . . 2- 35
Supplemental Restraint System (SRS) - air bag . . 2- 36

# *Seats*

N00408400323

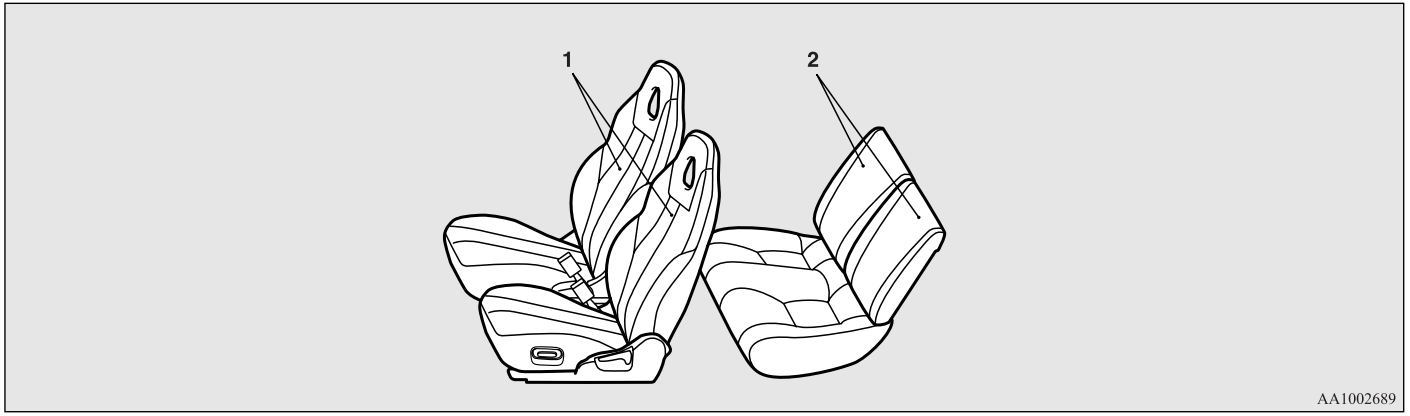


## 1 - Front seats

- To adjust the seat forward or backward → P.2-5
- To adjust the seatback → P.2-6
- To adjust the seat height (Driver's side only) → P.2-7
- To adjust the lumbar support (Driver's side only) → P.2-9
- For access to the rear seat (Passenger's side only) → P.2-10
- Heated seats (if so equipped) → P.2-10

## 2 - Rear seat

- Folding the seatbacks forward (ECLIPSE only) → P.2-11

# *Seats and restraint systems*

N00401600195

Your vehicle has seat belts and other features that help protect you and your passengers in an accident.

Seat belts are the most important safety device. When worn properly, seat belts can reduce the chance of serious injury or death in various types of crashes. For added protection during a severe frontal collision, your vehicle has a Supplemental Restraint System (SRS) with air bags for the driver and front seat passenger. The seats, head restraints, and door locks also are safety equipment, which must be used correctly.

Always check the following before you drive:

- That everyone in your vehicle is properly wearing their seat belt.
- That infants and small children are properly secured in appropriate child restraints in the rear seat.
- That all doors are fully closed and locked.
- That seatbacks are upright.

Safety equipment cannot prevent injury or death in all motor vehicle accidents. You can help reduce the risk of injury or death, however, by following the instructions in this manual.

## *Front seats*

N00401800201

Position the driver' s seat as far back as possible while maintaining a position that still enables you to fully apply the pedals, easily control the steering wheel and safely operate the vehicle.

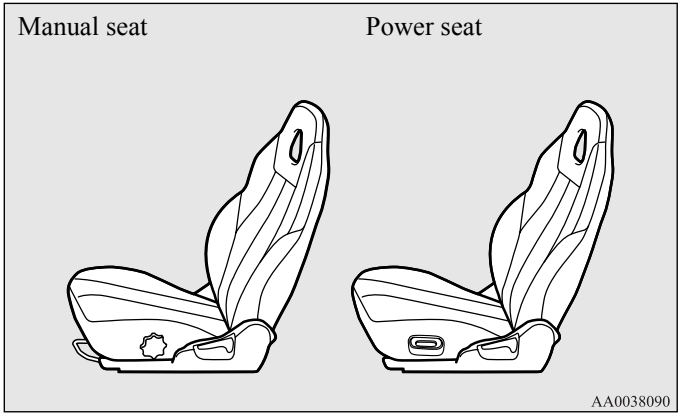


**⚠ *WARNING***

- **Do not attempt to adjust the seat while driving. This can cause loss of vehicle control and result in an accident.**
- **After adjusting the seat, make sure that the seat is securely locked into position.**
- **To reduce the risk to the driver of serious injury or death during deployment of the driver's air bag, always properly wear the seat belt and adjust the driver's seat as far back as possible while maintaining a position that still enables you to fully apply the pedals, easily control the steering wheel, and safely operate the vehicle.**
- **To reduce the risk to the front passenger of serious injury or death during deployment of the passenger's air bag, always properly wear the seat belt and adjust the front passenger's seat as far back as possible.**
- **Always place children 12 years old and under in the rear seat and use appropriate child restraints.**

**⚠ CAUTION**

- **Make sure that the seat is adjusted by an adult. If it is adjusted by a child, an unexpected accident might occur.**
- **Do not place a cushion or the like between your back and the seatback while driving. The effectiveness of the head restraints will be reduced in the event of an accident.**
- **When sliding the seats, be careful not to catch your hand or leg.**
- **When sliding or reclining the seat rearward, pay careful attention to the rear seat passengers.**

## To adjust the seat forward or backward

N00401900260

### *Manual seat*

Pull the seat adjusting lever up and slide the seat forward or backward to the desired position. Release the adjusting lever to lock the seat in place.

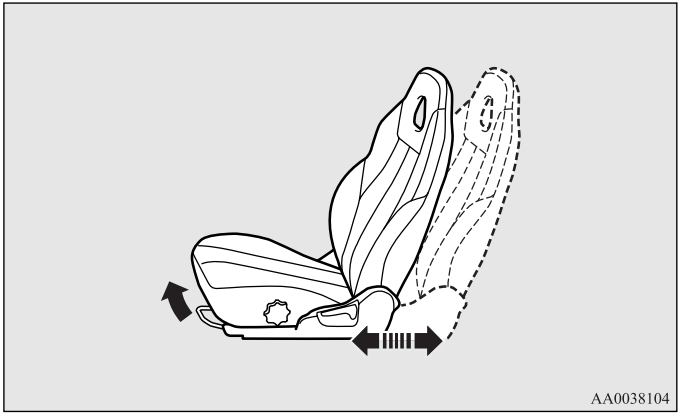


**⚠ WARNING**

- **To make sure that the seat is securely locked, try to move it forward or backward without using the adjusting lever.**

### *Power seat*

Push the switch to adjust the seat forward or backward to the desired position. Release the switch, and the seat will lock at that position.

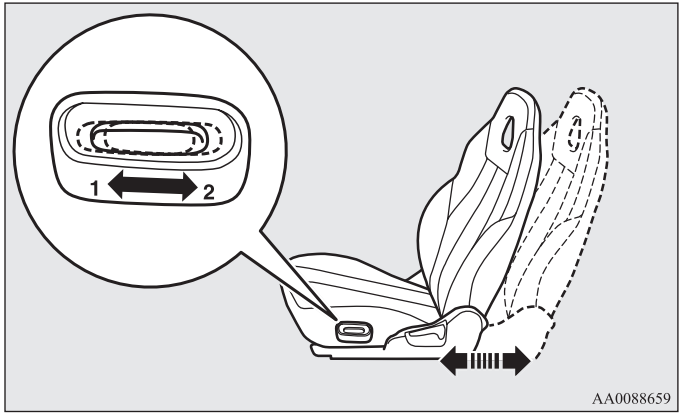


1- Forward (towards the front of the vehicle)
2- Backward (towards the rear of the vehicle)

NOTE

- To prevent the battery from running down, operate the power seat with the engine running.

## To adjust the seatback

N00402000167

To adjust the seatback, lean forward slightly, gently pull the seatback lock lever up, then lean backward to a comfortable position and release the lever. The seatback will lock in place.

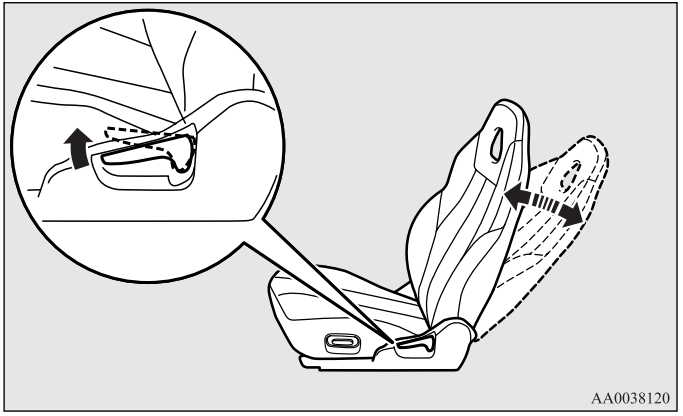


**⚠ *CAUTION***

- **The reclining mechanism used in the seatback is spring loaded, and will cause the seatback to return quickly to the vertical position when the lock lever is operated.**
  **When pulling the lever, sit close to the seatback or hold the seatback with your hand to control its return motion.**

**⚠ WARNING**

- **To reduce the risk of serious injury or death in the event of an accident or sudden stop, all seatbacks should be kept in the upright position while the vehicle is in motion.**

  **Seat belt performance during an accident can be adversely affected if the seatbacks are reclined. The more a seatback is reclined, the more likely seat belt performance will be adversely affected. If the seat belt is not properly positioned against the body during an accident, there is increased risk you will slide under the belt and receive serious injury or death.**

## To adjust the seat height (Driver's side only)

N00402100100

### *Manual seat*

Turn the dial to raise or lower the whole seat cushion.

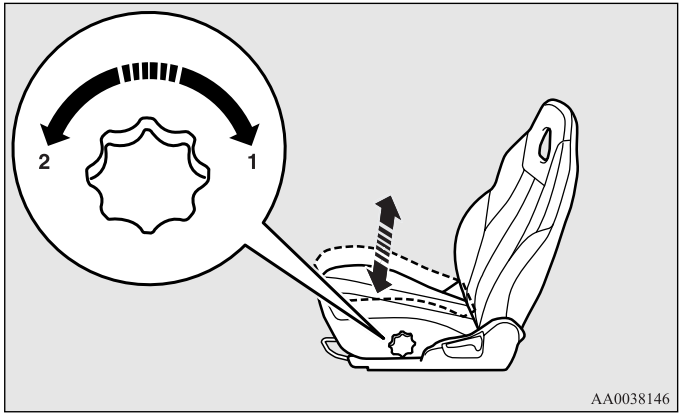


1- Raise
2- Lower

### *Power seat*

Front and/or rear parts of the seat cushion height can be adjusted.

NOTE

- To prevent the battery from running down, operate the power seat with the engine running.

**Front part of the seat cushion**

Operate the switch to raise or lower the front part of the seat cushion.



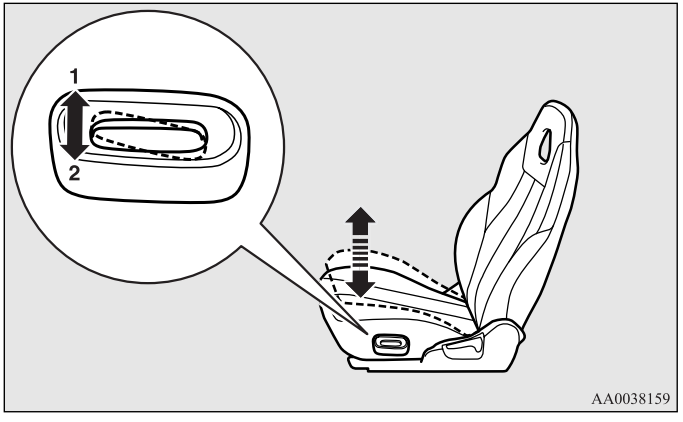


1- Raise
2- Lower

**Rear part of the seat cushion**

Operate the switch to raise or lower the rear part of the seat cushion.

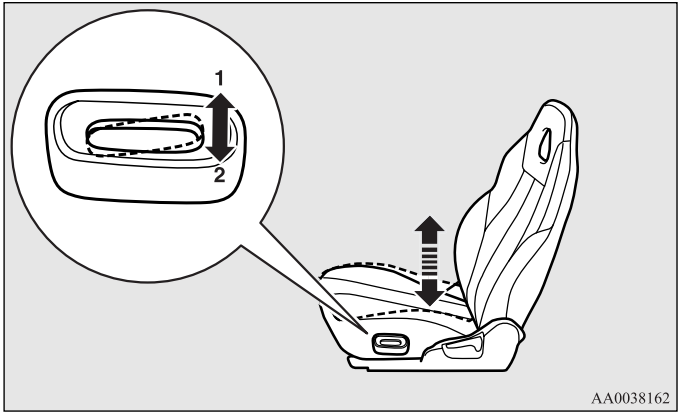


1- Raise
2- Lower

**Whole seat cushion**

Operate the center of the switch to raise or lower the whole seat cushion.

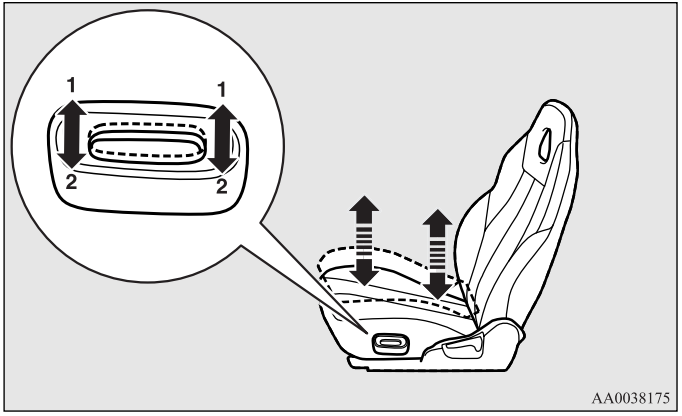


1- Raise
2- Lower

## To adjust the lumbar support (Driver's side only)

N00402200097

A lumbar support is included in the seatback of the driver's seat.

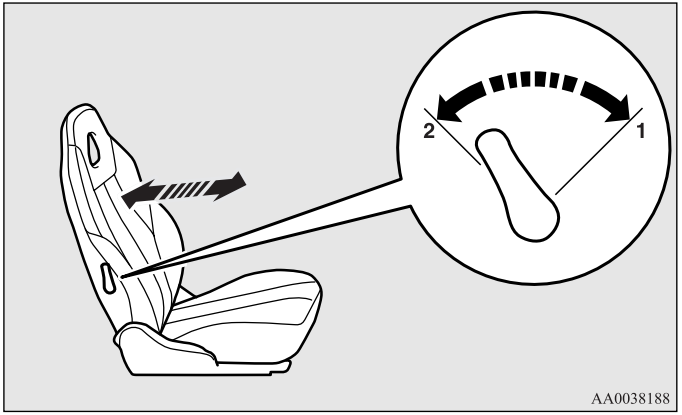


1- Strong
2- Weak

## For access to the rear seat (Passenger's side only)

N00402400028

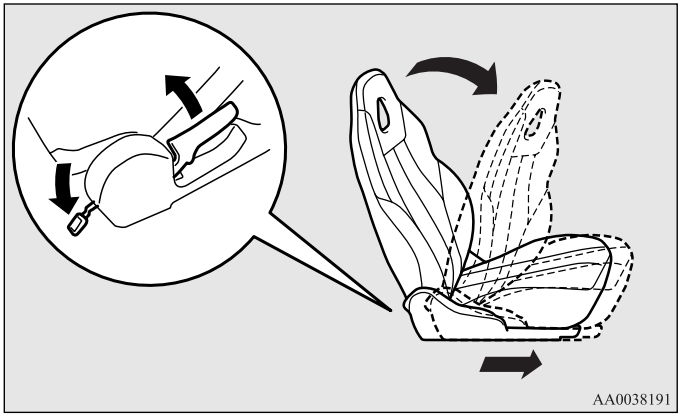


For rear seat passenger entry or exit, the front passenger seat and seatback can be moved forward by either pulling up the seat lock lever or depressing the lock release pedal behind the seat. To return the seat, push the seatback backward until you hear a "click" and the seat locks in position.

**⚠ WARNING**

- **To make sure that the seat is securely locked, try to move it forward or backward without using the adjusting lever. To reduce the risk of serious injury or death in the event of an accident or sudden stop, all seatbacks should be kept in the upright position while the vehicle is in motion.**

## Heated seats (if so equipped)

N00435600293

The heated seats can be operated when the ignition key is in the "ON" position.

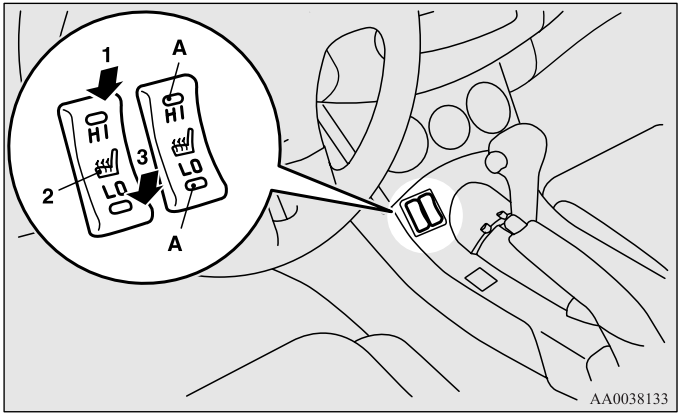


1- Heater high (for quick heating)
2- Heater off
3- Heater low (to keep the seat warm)

The indicator light (A) will illuminate while the heater is on.

**CAUTION**

- **Switch off the seat heaters when not in use. Operate the heaters at high for quick heating. After the seat has become warm, set the heater to low to keep it warm. Slight variations in the seat temperature may be felt while using the heated seats. This is caused by the operation of the heater's internal thermostat and does not indicate a malfunction.**
  **If the following types of persons use the heated seats, they might become too hot or receive minor burns (red skin, heat blisters, etc.):**
  - **Children, elderly persons, ill persons**
  - **Person with sensitive skin**
  - **Excessively fatigued persons**
  - **Persons under the influence of alcohol or sleep-inducing medication (cold medicine, etc.)**
- **Do not place heavy objects on the seat or stick pins, needles, or other pointed objects into it.**
- **Do not use a blanket, cushion, or other material with high heat insulation properties on the seat while using the heater; doing so could cause the heater element to overheat.**
- **When cleaning the seat, do not use benzine, kerosene, gasoline, alcohol, or other organic solvents; doing so could damage not only the surface of the seat, but also the heater.**
- **If water or any other liquid is spilled on the seat, allow it to dry thoroughly before attempting to use the heater. Turn the heater off immediately if it appears to be malfunctioning during use.**

# *Rear seat*

N00402500074

## Folding the seatbacks forward (ECLIPSE only)

N00402900153

The rear seatbacks can be folded forward to provide additional cargo area space.
Pull the left and/or right release knobs, and fold the rear seatbacks forward.

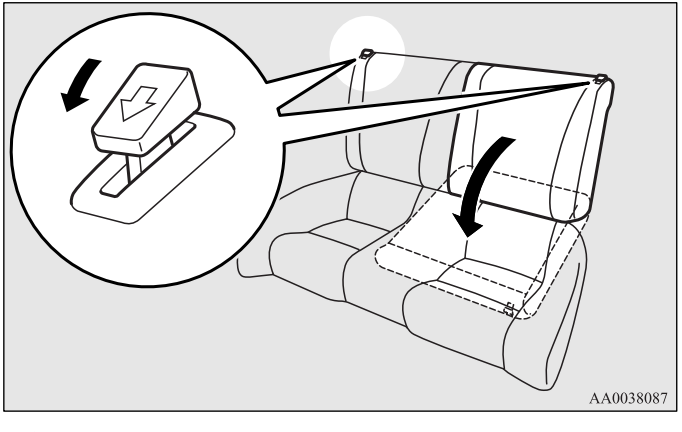


NOTE
- Confirm that the seatback locks securely when it is returned.

**⚠ WARNING**

- **Do not allow anyone to ride in the cargo area while the vehicle is in motion. People who are not properly seated and restrained can be seriously injured or killed in an accident.**
- **To avoid reducing rearward vision, do not load cargo or luggage higher than the top of the seatback.**
- **Firmly secure cargo and luggage. Unsecured cargo and luggage can move during braking or in an accident, causing serious injury or death.**



## *Head restraints*

N00404300454

The front seats are equipped with padded head restraints (A) integrated with the seatbacks. These head restraints can reduce the risk of a whiplash injury if your vehicle is hit from the rear. To maximize the effectiveness of your head restraint, adjust your seatback to the upright position and sit back against the seatback with your head close to the head restraint.

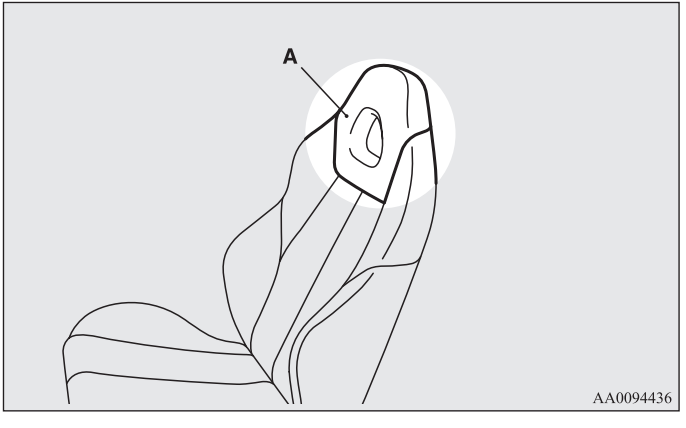

**⚠ WARNING**

- **In order to minimize the risk of a neck injury due to a rear impact, the driver and front passenger seat-backs must be adjusted to the upright position before vehicle operation. The driver should never adjust the seat while the vehicle is in motion.**
- **Never place a cushion or similar device on the seat-back. This can adversely affect head restraint performance by increasing the distance between your head and the restraint.**

## *Seat belts*

N00406000282

Seat belts are installed in your vehicle to help reduce the risk of injury to the driver and passenger in the event of an accident. Always use the provided seat belts.
Carefully review the following information for proper seat belt usage.

**⚠ WARNING**

- **To help reduce the risk of injury or death in an accident, seat belts and child restraints must always be used. Refer to "Child restraints" on page 2-24 for additional information.**
- **Never use one seat belt for more than one person.**
- **Never carry more people in your vehicle than there are seat belts.**
- **Always adjust the seat belt for a snug fit.**
- **Always place the shoulder belt over your shoulder and across your chest. Never put it behind you or under your arm.**
- **Always wear the lap belt as low as possible across your hips, not around your waist.**
- **Never modify or alter the seat belts in your vehicle.**
- **To reduce the risk to the driver of serious injury or death during deployment of the driver's air bag, always properly wear the seat belt and adjust the driver's seat as far back as possible while maintaining a position that still enables you to fully apply the pedals, easily control the steering wheel, and safely operate the vehicle.**

**⚠ WARNING**

- **To reduce the risk to a front seat passenger of serious injury or death from a deploying air bag, make sure the passenger always wears the seat belt properly, remains seated all the way back and upright in their seat, and moves the seat as far back as possible. Refer to "Supplemental Restraint System (SRS) - air bag" on page 2-36 for additional information.**
- **Never hold an infant or child in your arms or on your lap when riding in this vehicle even when you are wearing your seat belt. Never place any part of the seat belt you are wearing around an infant or child. Failure to follow these simple instructions creates a risk of serious injury or death to your child in the event of an accident or sudden stop.**
- **Children 12 years old and under should always ride in the rear seat and be properly restrained. This reduces their risk of serious injury or death in an accident, especially due to a deploying front passenger air bag. Refer to "Child restraints" on page 2-24 for additional information.**
- **Any child who is too small to properly wear a seat belt must be properly restrained in an appropriate child restraint system. Children 12 years old and under should be seated only in the rear seat to reduce their risk of serious injury or death in an accident, especially from the deployment of a front passenger air bag.**
- **Infants MUST be placed in a rear-facing child safety seat and positioned in the rear seat.**
- **In the event of an accident, all seat belt assemblies, including retractors and attachment hardware, should be inspected by an authorized Mitsubishi Motors dealer to determine whether replacement is necessary.**



## Seat belt instructions

N00406200314

All seats are equipped with a seat belt which uses one combined lap-and-shoulder belt with an emergency locking retractor.

This system is designed to provide both comfort and safety. It permits full extension and automatic retraction of the belts during normal vehicle operation. A sensing device inside the belt retractor is designed to lock the retractor in the event of a sudden change in the vehicle's motion.

NOTE

- For instructions on installing a child restraint system using a seat belt, refer to "Installing a child restraint system using the seat belt" on page 2-31.

1. Occupants should always sit back in their seats with their backs against the upright seatback. To reduce the risk of serious injury or death during deployment of the air bag, adjust the driver's seat as far back as possible while maintaining a position that still enables you to fully apply the pedals, easily control the steering wheel, and safely operate the vehicle. The front passenger seat should also be moved as far back as possible. Refer to "Supplemental Restraint System (SRS) - air bag" on page 2-36. Also refer to "To adjust the seat forward or backward" on page 2-5.

**WARNING**

- **To reduce the risk of serious injury or death in the event of an accident or sudden stop, all seatbacks should be kept in the upright position while the vehicle is in motion.**

  **Seat belt performance during an accident can be adversely affected if the seatbacks are reclined. The more a seatback is reclined, the more likely seat belt performance will be adversely affected. If the seat belt is not properly positioned against the body during an accident, there is increased risk you will slide under the belt and receive serious injury or death.**

2. Grasp the latch plate and slide it up the webbing so that it easily pulls across your body.

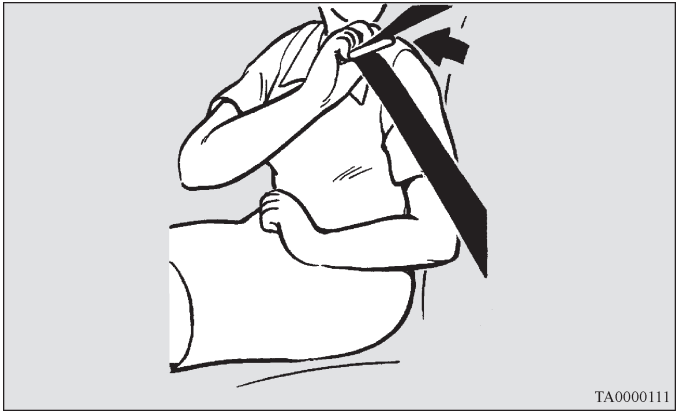


3. Pull the seat belt out slowly while holding the latch plate. Push the latch plate into the buckle until you hear a “click”. Pull up on the belt to be sure the latch plate is locked securely in the buckle.

NOTE

- If the seat belt locks up and cannot be pulled out, pull it once with force and let it retract all the way.
  Then, pull the belt out slowly once again.

4. The lap part of the belt must always be worn low and snug across the hips. Pull up on the shoulder portion of the belt to take up any slack in the lap belt.

NOTE

- With the exception of the seat belt for the driver, the seat belts in all other seating positions are equipped with an Automatic Locking Retractor (ALR) function. If you pull the seat belt fully out of the retractor, the retractor will switch to its ALR child restraint installation function (see page 2-31).
  When the ALR function has been activated, the seat belt will only retract. If this happens, let the belt fully retract, then pull the seat belt back out, repeating steps 1 through 4.

**⚠ WARNING**

- **Be sure the lap belt portion fits snugly and is worn as low as possible across the hips, not around the waist. Failure to follow this instruction will increase the risk of serious injury or death in the event of an accident.**
- **Be sure the seat belt webbing is not twisted when worn. Twisted webbing may adversely affect seat belt performance.**

5. To release the belt, press the button on the buckle and allow the belt to retract.
   If the belt does not retract smoothly, pull it out and check for kinks or twists in the webbing. Then make sure it remains untwisted as it retracts.

## Driver's seat belt reminder/warning light

N00418400137

A tone and warning light are used to remind the driver to fasten the seat belt.

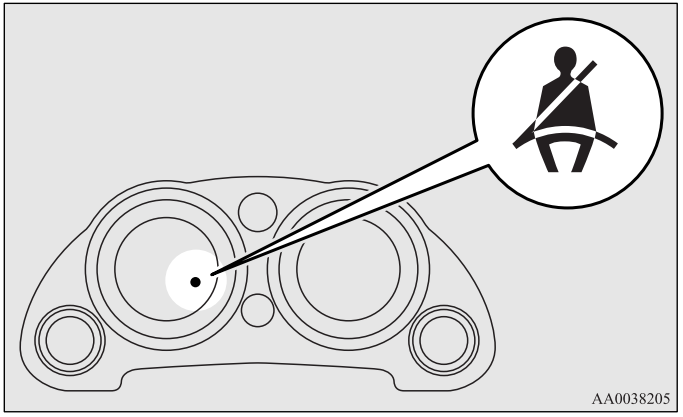


When the ignition key is turned to the "ON" position, the warning light will come on and a tone will sound for about 6 seconds. If the driver's seat belt remains unfastened approximately 1 minute later, the warning light will flash and the tone will sound intermittently (12 times each) when the vehicle is driven. If the driver subsequently unfastens the seat belt while driving, the warning light and tone will issue further warnings. And if the seat belt remains unfastened, the warning light and tone will issue further warnings each time the vehicle starts moving from a stop. When the seat belt is fastened, the warnings will stop.

**WARNING**

- **In order to reduce the risk of serious injury or death in an accident, always wear your own seat belt. Do not allow anyone to ride in your vehicle unless he or she is also seated and wearing a seat belt. Children should additionally be restrained in a secure child restraint system.**

## Front passenger seat belt warning light

N00418300093

The front passenger seat belt warning light is located above the central vents in the instrument panel.

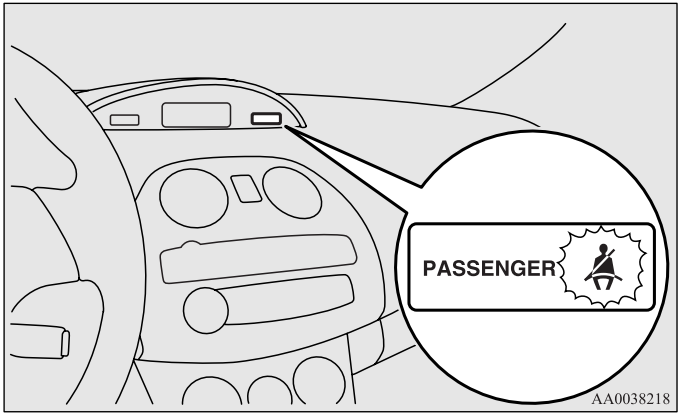


The light normally comes on when the ignition switch is turned to the “ON” position and goes off a few seconds later.
The light comes on when a person sits on the front passenger seat but does not fasten the seat belt. It goes off when the seat belt is subsequently fastened.

**⚠ *WARNING***

- **Do not install any accessory or sticker that makes the light difficult to see.**

## Adjustable seat belt shoulder anchor (ECLIPSE only, front seats)

N00406300230

To move the anchor down, press the lock knob (A) and slide the anchor down to the desired position.
To move the anchor up, slide the anchor up to the desired position.

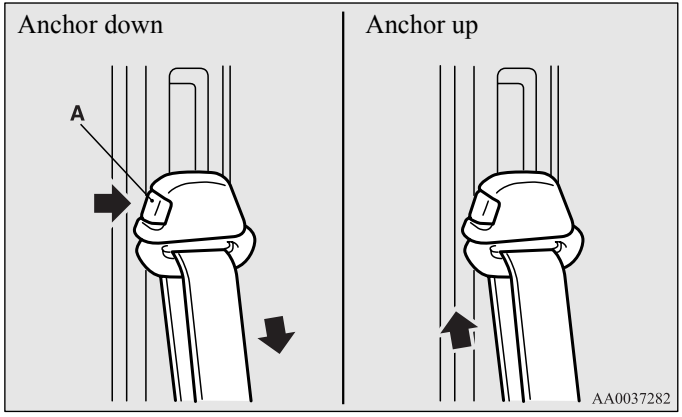

**⚠ WARNING**

- **Always adjust the shoulder belt anchor so that the shoulder belt is positioned across the center of your shoulder without touching your neck. The shoulder belt should not be able to fall off your shoulder. Failure to follow this instruction can adversely affect seat belt performance and increase the risk of serious injury or death in the event of an accident.**
- **Adjust the shoulder belt anchor only when the vehicle is not in motion.**
- **Make sure the anchor is securely locked in position after adjusting it.**



## Seat belt guide (ECLIPSE SPYDER only, front seats)

N00419300045

Each front seat is fitted with a seat belt guide (A).

### *Instruction*

Insert the seat belt into the seat belt guide through the slot (B).

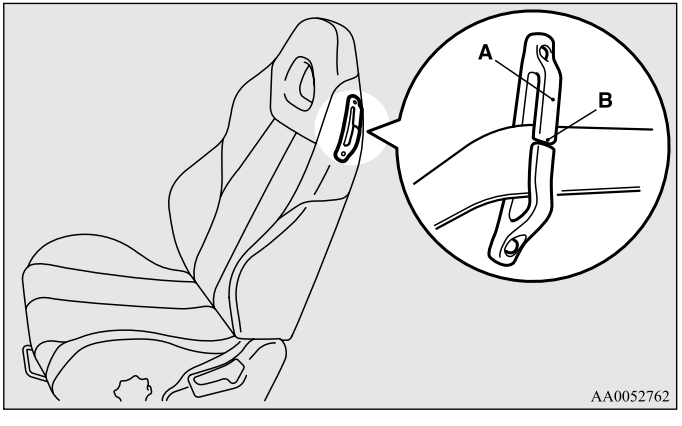


**⚠ WARNING**

- **Always use the seat belt guide so that the shoulder belt is positioned across the center of your shoulder without touching your neck. The shoulder belt should not be able to fall off your shoulder. Failure to follow this instruction can adversely affect seat belt performance and increase the risk of serious injury or death in the event of an accident.**

**⚠ WARNING**

- **Make sure the part of the seat belt webbing you inserted into the seat belt guide is not twisted. Twisted webbing may adversely affect seat belt performance.**

NOTE

- Remove the seat belt from the seat belt guide when a passenger is going to move to or from the rear seat.

## Seat belt extender

N00406700087

When your seat belt, even fully extended, is not long enough, a seat belt extender must be obtained. The extender may be used for either of the front seats.

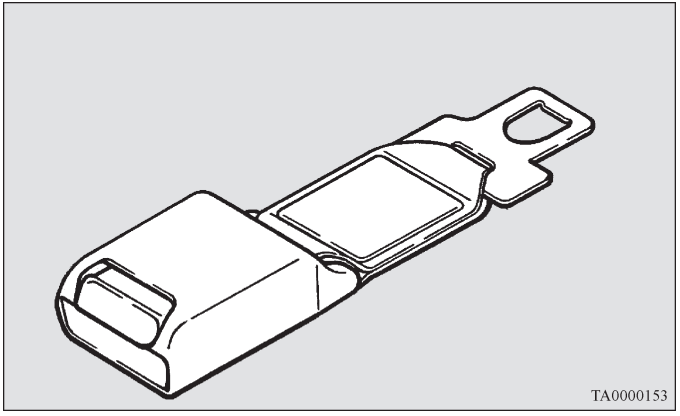


**⚠ WARNING**

- **The extender should only be used if the existing belt is not long enough. Anyone who can use the standard seat belt should not use an extender. Unnecessary use of an extender can adversely affect seat belt performance in an accident.**
- **When not required, the extender must be removed and stowed.**

## *Seat belt use during pregnancy*

N00406800075

Seat belts work for everyone, including pregnant women. Like all occupants, pregnant women are more likely to be seriously injured or killed in an accident if they do not wear seat belts.

**⚠ *WARNING***

- **To reduce the risk of serious injury or death to pregnant women and unborn children in an accident, pregnant women should always wear a seat belt. The lap portion of the seat belt should be worn snug and low across the hips and below the rounding. Consult your doctor if you have any additional questions or concerns.**



## *Seat belt pre-tensioner and force limiter systems*

N00417700319

The driver's and front passenger's seats each have a seat belt equipped with a pre-tensioner system.

### Pre-tensioner system

The driver and front passenger seat belts are equipped with a seat belt pre-tensioner system. In moderate-to-severe frontal collisions, this system operates simultaneously with the deployment of the front air bags.

The seat belt pre-tensioners are located within the seat belt retractors (A). When activated, the pre-tensioners quickly draw back seat belt webbing and increase seat belt performance.

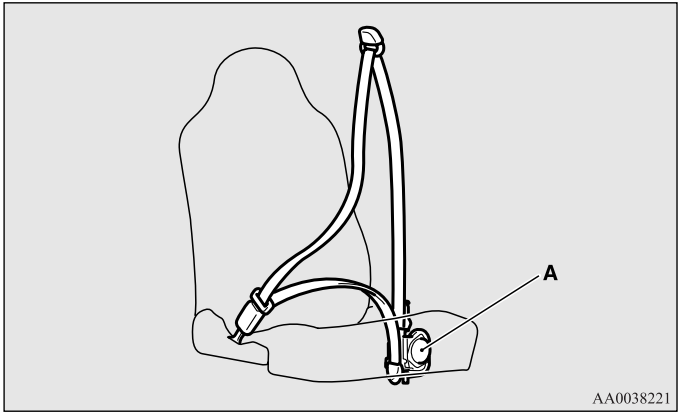

The seat belt pre-tensioner system includes the following components:

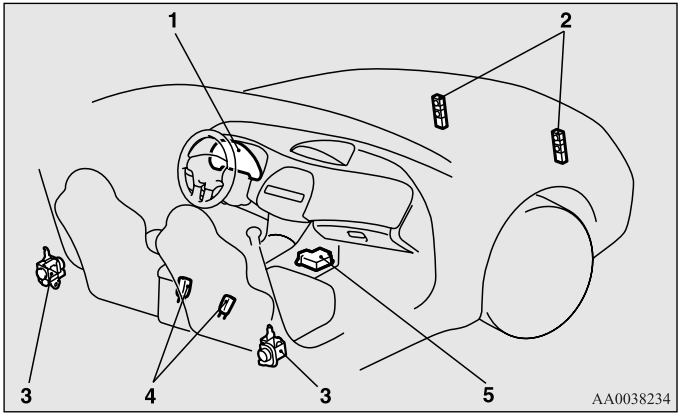


1- SRS warning light
2- Front impact sensors
3- Seat belt pre-tensioners
4- Seat belt buckle switches
5- Air bag control unit

The air bag control unit monitors the readiness of the electronic parts of the system whenever the ignition switch is in the “ON” or “START” position. These include all of the items listed above and all related wiring.

The pre-tensioner seat belts will operate only when the ignition switch is in the “ON” or “START” position.

When the seat belt pre-tensioners activate, some smoke is released and a loud noise will be heard. The smoke is not harmful, but care should be taken not to intentionally inhale it, as it may cause some temporary irritation to people with respiratory problems.

Even in the event of a severe frontal impact, the pre-tensioners will not operate if the seat belts are not fastened. The seat belt pre-tensioners may not activate in certain frontal collisions, even though the vehicle may appear to be severely damaged. Such non-activation does not mean something is wrong with the seat belt pre-tensioner system, but rather that the collision forces were not severe enough or not of the type to activate the system.

**⚠ WARNING**

- **The seat belt pre-tensioner system is designed to work only once. After the seat belt pre-tensioners have been activated, they will not work again. They must promptly be replaced and the entire seat belt pre-tensioner system inspected by an authorized Mitsubishi Motors dealer.**

## SRS warning light

N00408700049

This warning light tells you if there is a problem involving the SRS air bags and the pre-tensioner seat belts. Refer to “SRS warning light” on page 2-44.

## Force limiter system

N00408900070

In the event of an accident, the seat belt force limiter system will help reduce the force applied to the driver and front seat passenger.



# *Child restraints*

N00407100600

When transporting infants or small children in your vehicle, an appropriate child restraint system must always be used. This is required by law in the U.S. and Canada.
Child restraints specifically designed for infants and small children are offered by several manufacturers. Choose only a child restraint system with a label certifying that it complies with Federal Motor Vehicle Safety Standard 213 (FMVSS 213) or Motor Vehicle Restraint Systems and Booster Cushions Safety Regulations (RSSR). Look for the manufacturer’s statement of compliance on the box and child restraint itself.

The child restraint system should be appropriate for your child’s weight and height, and should properly fit your vehicle’s seat.
For detail information, refer to the instruction manual accompanying the child restraint system.

## Guidelines for child restraint system selection

All children should be properly restrained in a restraint device that offers the maximum protection for their size and age.
Be sure to check local, state, or provincial requirements for child size and age that may vary from the recommendations listed below.

- Children less than 1 year old and children less than 20 pounds (9 kg) MUST ride in a rear-facing child safety seat that MUST ONLY be used in the rear seat.
- Children older than 1 year of age and who weigh less than 40 pounds (18 kg) or who are less than 40 inches (100 cm) tall must be in a forward-facing restraint used only in the rear seat.

- Children who weigh more than 40 pounds (18 kg) or who are more than 40 inches (100 cm) tall, regardless of age, should use a suitable child seat or a booster seat (including a booster cushion) in the rear seat until the vehicle's lap/shoulder belt fits them properly.

**⚠ WARNING**

- **All children must be seated in the rear seat, and properly restrained.**
  **Accident statistics show that children of all sizes and ages are safer when properly restrained in the rear seat, rather than in the front seat.**
- **Any child who is too large to use a child restraint should ride in the rear seat and wear the lap and shoulder belt properly. The shoulder belt must be positioned over the shoulder and across the chest, not across their neck, and with the lap belt positioned low on the child's hips, not across their stomach. If necessary, a booster seat (including a booster cushion) should be used to help achieve a proper seat belt fit. Follow the booster seat (including a booster cushion) manufacturer's instructions. Only use a booster seat (including a booster cushion) that is certified as complying with Federal Motor Vehicle Safety Standards or Motor Vehicle Restraint Systems and Booster Cushions Safety Regulations.**
- **Your ECLIPSE SPYDER is not equipped with a tether anchor. Child restraint systems and a booster seat (including a booster cushion) which require a tether strap cannot be used in your ECLIPSE SPYDER.**
- **Never operate the electric convertible top when a child is in your ECLIPSE SPYDER or when a child restraint system is attached to the rear seat.**

**⚠ WARNING**

- **Never hold an infant or child in your arms or on your lap when riding in this vehicle, even when you are wearing your seat belt. Never place any part of the seat belt you are wearing around an infant or child. Failure to follow these simple instructions creates a risk of serious injury or death to your child in the event of an accident or sudden stop.**

**⚠ WARNING**

- **Your vehicle is also equipped with a front passenger air bag.**
  **Never put REAR-FACING CHILD RESTRAINTS or INFANT RESTRAINTS in the front passenger seat. This places the infant too close to the passenger air bag. During deployment of the air bag, the infant can be seriously injured or killed. Rear-facing child restraints or infant restraints must only be used in the rear seat.**

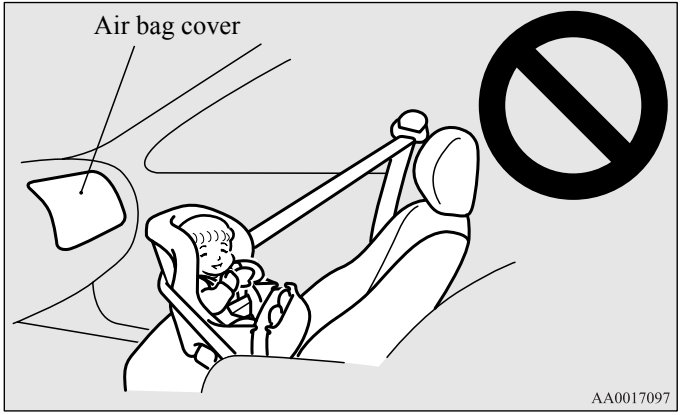


**⚠ WARNING**

- **FRONT-FACING CHILD RESTRAINTS should always be used in the rear seat whenever possible. If one must be used in the front passenger seat, move the seat to the most rearward position and make sure the child stays in the child restraint, properly restrained. Failure to follow these instructions could result in serious injury or death to the child.**

**⚠ WARNING**

- **It is important to use an approved rear-facing infant restraint until the infant is one year old (unless the infant outgrows the seat sooner). This allows the infant's neck and spine to develop enough to support the weight of their head in the event of an accident.**
- **When installing a child restraint system, follow the instructions provided by the manufacturer and follow the directions in this manual. Failure to do so can result in serious injury or death to your child in an accident or sudden stop.**
- **After installation, push and pull the child restraint system back and forth, and side to side, to see that it is firmly secured. If the child restraint system is not installed securely, it may cause injury to the child or other occupants in the event of an accident or sudden stop.**
- **When not in use, keep your child restraint system secured with the seat belt, or remove it from the vehicle, in order to prevent it from being thrown around inside the vehicle during an accident.**

NOTE

- Before purchasing a child restraint system, try installing it in the rear seat to make sure there is a good fit. Because of the location of the seat belt buckles and the shape of the seat cushion, it may be difficult to securely install some manufacturer's child restraint systems.
  If the child restraint system can be pulled forward or to either side easily on the seat cushion after the seat belt has been tightened, choose another manufacturer's child restraint system.
  Depending on the seating position in the vehicle and the child restraint system that you have, the child restraint can be attached using one of the following two methods:
  - To the lower anchorage in the rear seat ONLY if the child restraint is compatible with the LATCH system (See page 2-28).
  - To the seat belt (See page 2-31).

## Installing a child restraint system using the LATCH (Lower Anchors and Tethers for children) system

N00418800043

### *Lower anchor locations*

The seating positions in the rear seat of your vehicle are equipped with lower anchors for attaching child restraint systems compatible with the LATCH system.



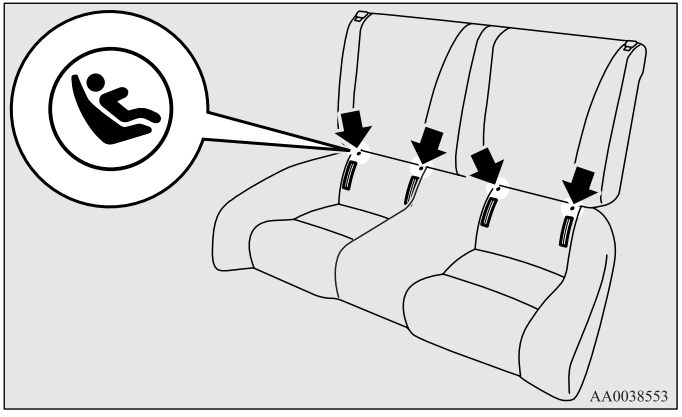


NOTE

- The symbols on the seatback show the location of the lower anchor points.

### *Tether anchor locations (ECLIPSE only)*

N00418900086

Your vehicle has 2 attachment points on the floor of the cargo area. These are for securing a child restraint system tether strap to each of the 2 rear seating positions in your vehicle.

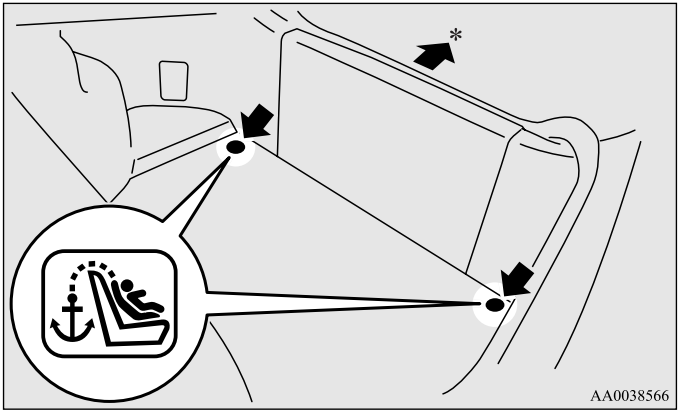


*- Rear of the vehicle

### *Examples of child restraint systems compatible with the LATCH system*

N00419000101

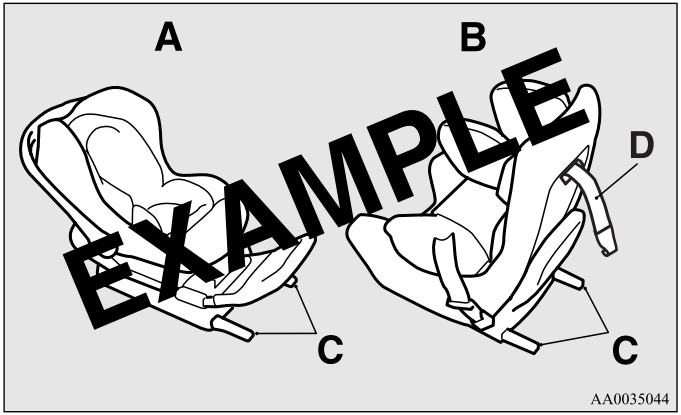


A- Rear-facing child restraint
B- Front-facing child restraint
C- Child restraint system lower anchor connectors
D- Tether strap
(These are only examples.)

### *Using the LATCH system*

N00419100203

1. Push the anchor connectors (A) on the child restraint system into the slits (B) in accordance with the instructions provided by the child restraint system manufacturer. Remember, the lower anchors (E) provided with your vehicle are designed to secure suitable child restraint systems compatible with the LATCH system in the rear seat only.

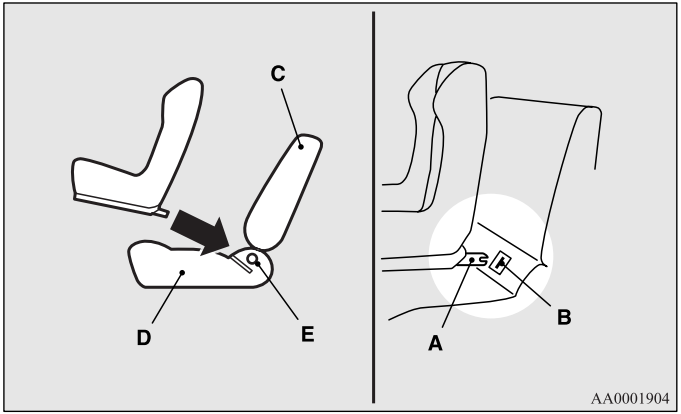


A: Connector
B: Slit
C: Vehicle seatback
D: Vehicle seat cushion
E: Lower anchor

NOTE

- In order to secure a child restraint systems compatible with the LATCH system, use the lower anchor points in the rear seat. It is not necessary to use the vehicle's seat belt.

**⚠ WARNING**

- **If there is any foreign material in or around the lower anchors, remove it before installing the child restraint system. Also, make sure the seat belt is away from, not looped through or otherwise interfering with, the child restraint system. If foreign matter is not removed and/or the seat belt interferes with the child restraint system, the child restraint system will not be secured properly, could detach and move forward in the event of sudden braking or an accident, and could result in injury to the child or other vehicle occupants.**
- **When the vehicle is moving, do not adjust the seat where the child restraint system is installed.**



In an ECLIPSE, install a tether strap in accordance with steps 2 to 4 shown hereafter.

2. Open the rear hatch. Remove the rear shelf panel. Refer to "Rear shelf panel" on page 3-178.
3. Cut out the notch (F) in the cargo floor carpet by hand, then lift the carpet.

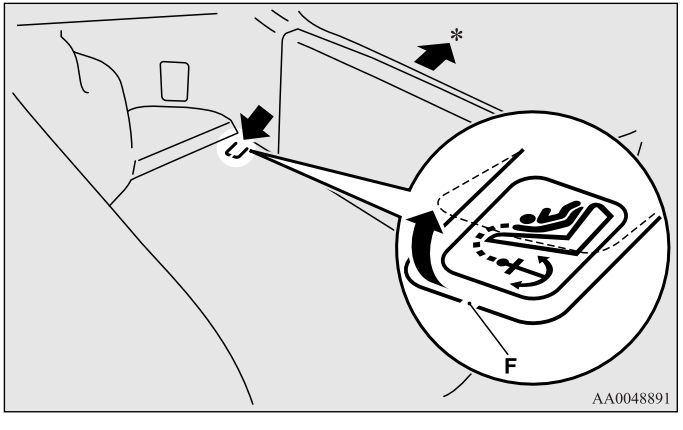


* - Rear of the vehicle

4. Latch the tether strap hook (G) of the child restraint system to the tether anchor (H) and tighten the tether strap so it is securely fastened.

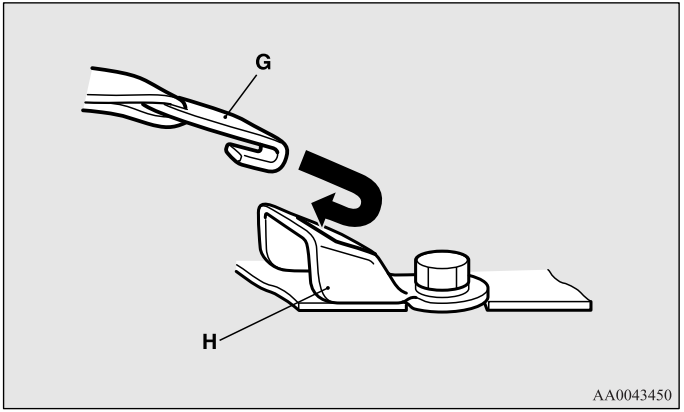


NOTE
- When using a child restraint system that requires a tether strap, the rear shelf panel cannot be installed.

5. Push and pull the child restraint system in all directions to be sure it is firmly secured.

**⚠ WARNING**

- **Child restraint tether anchors are designed only to withstand loads from correctly fitted child restraint systems. Under no circumstances are they to be used for adult seat belts, or harnesses, or for attaching other items or equipment to the vehicle.**

## Installing a child restraint system using the seat belt (With emergency/automatic locking mechanism)

N00407300413

With the exception of the driver, the seat belt in all other seating positions can be converted from normal Emergency Locking Retractor (ELR) mode to Automatic Locking Retractor (ALR) mode. This means that when you pull the seat belt fully out of the retractor, the retractor will switch to its ALR child restraint installation function. Always use the ALR child restraint installation function when you install a child restraint system using the seat belt.

Children 12 years old and under should always be restrained in the rear seat, whenever possible, although the front passenger seat belt can also be converted to ALR mode.

**⚠ WARNING**

- **When you install a child restraint system using the seat belt, always make sure the retractor has been switched to the ALR child restraint installation function. The ALR function will keep the child restraint system tightly secured to the seat.**
  **Failure to convert the retractor to the ALR function may allow the child restraint system to move forward during sudden braking or an accident, resulting in serious injury or death to the child or other occupants.**
- **[ECLIPSE SPYDER only]**
  **Before attaching a child restraint system to the front passenger seat, insert the seat belt into the seat belt guide. Refer to “Seat belt guide” on page 2-20.**

### *Installation:*

1. Place the child restraint system in a rear seating position.
2. Route the seat belt through the child restraint system according to the instructions provided by the child restraint manufacturer. Then insert the seat belt latch plate into the buckle. Make sure you hear a “click” when you insert the latch plate into the buckle.

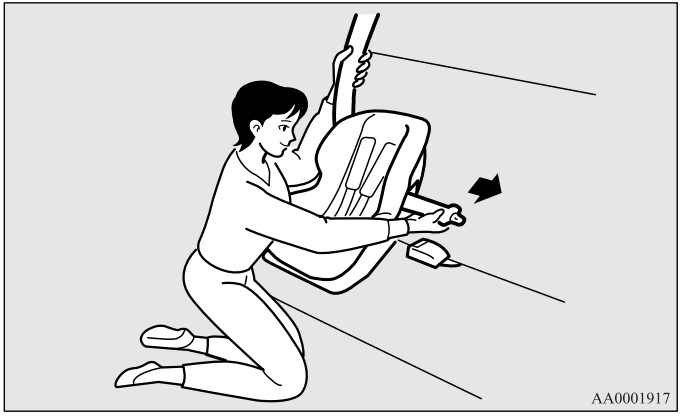


3. To activate the ALR child restraint installation function, slowly pull the shoulder part of the belt all the way out of the retractor until it stops. Then let the belt feed back into the retractor.

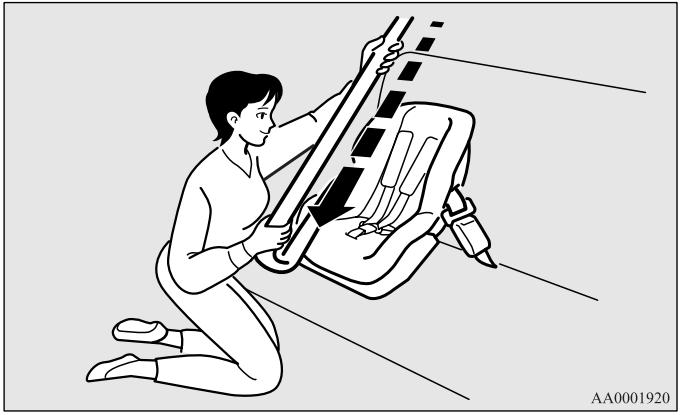


4. After the belt has retracted, tug on it. If the belt is in the ALR function, you will not be able to pull it out. If the webbing can be pulled out from retractor, the ALR function has not been activated and you will need to repeat steps 3 and 4.

5. After confirming that the belt is locked, grab the shoulder part of the belt near the buckle and pull up to remove any slack from the lap part of the belt allowing the slack to feed into the retractor. Remember, if the lap belt portion is not tight, the child restraint system will not be secure. It may help to put your weight on the child restraint system and/or push on its seatback while pulling up on the belt (see illustration).

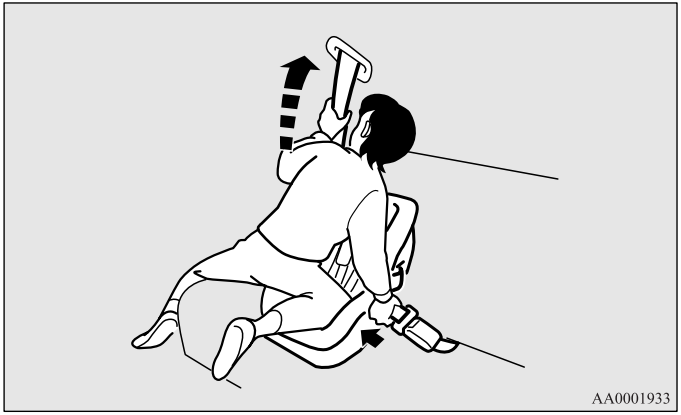


In an ECLIPSE, if your child restraint system requires the use of a tether strap fasten the tether strap in accordance with steps 6 to 8 shown hereafter.

6. Open the rear hatch. Remove the rear shelf panel. Refer to “Rear shelf panel” on page 3-178.
7. Cut out the notch (A) in the cargo floor carpet by hand, then lift the carpet.

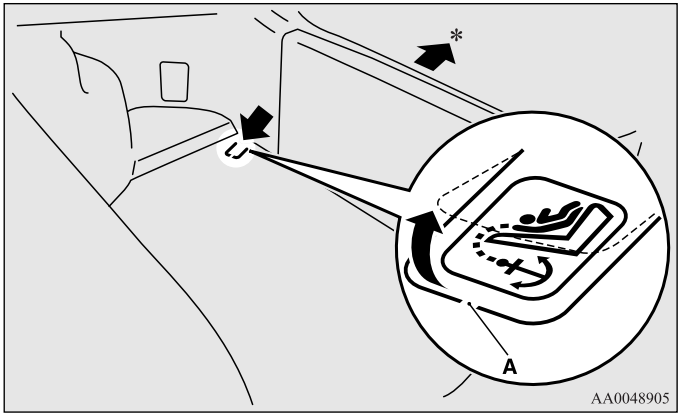


* - Rear of the vehicle

8. Latch the tether strap hook (B) of the child restraint system to the tether anchor (C) and tighten the tether strap so it is securely fastened.

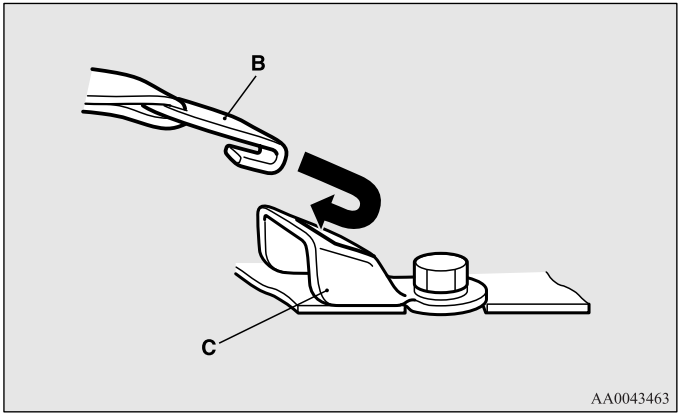


NOTE
- When using a child restraint system that requires a tether strap, the rear shelf panel cannot be installed.

**⚠ WARNING**

- **Child restraint tether anchors are designed only to withstand loads from correctly fitted child restraint systems. Under no circumstances are they to be used for adult seat belts, or harnesses, or for attaching other items or equipment to the vehicle.**

9. Before putting your child in the restraint, push and pull the restraint in all directions to be sure it is firmly secured. Do this before each use. If the child restraint system is not firmly secure, repeat steps 1 through 8.
10. To remove a child restraint system from the vehicle and deactivate the ALR mode, remove the child from the restraint. Unlatch the buckle. Then remove the belt from the restraint and let the belt fully retract.

## Children who have outgrown child restraint systems

N00407600490

Children who have outgrown a child restraint system should be seated in the rear seat and wear the seat belt. If the shoulder belt crosses their face or neck, and/or the lap belt crosses their stomach, a commercially available booster seat (including a booster cushion) must be used, to raise the child so that the shoulder belt crosses their shoulder and the lap belt remains positioned low across their hips. The booster seat (including a booster cushion) should fit the vehicle seat and have a label certifying compliance with Federal Motor Vehicle Safety Standards or Motor Vehicle Restraint Systems and Booster Cushions Safety Regulations.

**⚠ WARNING**

- **Any child who is too small to properly wear a seat belt must be properly restrained in an appropriate child restraint system, to reduce their risk of serious injury or death in an accident.**
- **A child should never be left unattended in, or unsupervised, around your vehicle. When you leave the vehicle always take the child out as well.**
- **Children can die from heat stroke if left or trapped inside the vehicle, especially on hot days.**
- **Keep your vehicle locked and the trunk (ECLIPSE SPYDER) closed when not in use. Keep your vehicle keys away from children.**
- **For ECLIPSE SPYDER, never allow children to play in the trunk of your vehicle.**

## *Maintenance and inspection of seat belts*

N00407000221

The seat belt webbing may be cleaned with mild soap or detergent solution. Do not use an organic solvent. Allow the belts to dry in the shade. Do not allow them to retract until completely dry. Do not attempt to bleach or re-dye the belts. The color may rub off and the webbing strength may be affected.

Regularly check your seat belt buckles and their release mechanisms for positive engagement and release of the latch plate. Check the retractors for automatic locking when in the Automatic Locking Retractor function.

The entire seat belt assembly should be replaced if the webbing shows any obvious cuts, tears, increase in thickness in any section of the webbing from broken fibers, or severe fading from sunlight. All of these conditions indicate a weakening of the belt, which may adversely affect seat belt performance in an accident.

**⚠ WARNING**

- **Do not attempt to repair or replace any part of the seat belt assemblies. This work should be done by an authorized Mitsubishi Motors dealer. Failure to have an authorized Mitsubishi Motors dealer perform the work could reduce the effectiveness of the belts and could result in a serious injury or death in an accident.**

# *Supplemental Restraint System (SRS) - air bag*

N00407700606

This vehicle is equipped with a Supplemental Restraint System (SRS), which includes air bags for the driver and front passenger.

The SRS front air bags are designed to supplement the primary protection of the driver and front passenger seat belt systems by providing those occupants with protection against head and chest injuries in certain moderate to severe frontal collisions.
The SRS front air bags, together with the sensors at the front of the vehicle and sensors attached to the front seats, form an advanced air bag system.

In an ECLIPSE, the SRS side air bags are also designed to supplement the seat belts and provide the driver and front passenger with protection against chest and abdomen injuries in certain moderate to severe side impact collisions.
In an ECLIPSE SPYDER, the SRS side air bags are also designed to supplement the seat belts and provide the driver and front passenger with protection against head and chest injuries in certain moderate to severe side impact collisions.

The SRS curtain air bags (ECLIPSE only) are designed to supplement the seat belts and provide the driver and front passenger with protection against head injuries in certain moderate to severe side impact collisions.

The SRS air bags are NOT a substitute for use of the seat belts. For maximum protection in all types of accidents, seat belts must ALWAYS be worn by everyone who drives or rides in this vehicle (with infants and small children in an appropriate child restraint in the rear seat, and older children buckled in the rear seat). Refer to “Child restraints” on page 2-24.

**⚠ *WARNING***

- **IT IS VERY IMPORTANT TO ALWAYS WEAR YOUR SEAT BELT PROPERLY EVEN WITH AN AIR BAG.**
  - **Seat belts help keep the driver and front passenger properly positioned. This reduces the risk of injury in all collisions, and reduces the risk of serious injuries or death when the air bags inflate.**
    **During sudden braking just before a collision, an unrestrained or improperly restrained driver or front passenger can move forward into direct contact with, or within close proximity to, the air bag when it begins to inflate.**
    **The beginning stage of air bag inflation is the most forceful and can cause serious injuries or death if the occupant comes in contact with the air bag at this time.**
  - **Seat belts reduce the risk of injury in rollovers, rear impact collisions, and in lower-speed frontal collisions, because the air bags are not designed to inflate in those situations.**
  - **Seat belts reduce the risk of being thrown from your vehicle in a collision or rollover.**

## ⚠ WARNING

- **IT IS VERY IMPORTANT TO BE PROPERLY SEATED.**
  - **A driver or front passenger sitting too close to the steering wheel or instrument panel during air bag deployment can be seriously injured or killed.**
  - **Air bags inflate very quickly and with great force. If the driver and front passenger are not properly seated and restrained, the air bag may not provide the proper protection and can cause serious injuries or death when it inflates.**
  - **To reduce the risk to the driver of serious injury or death due to a deploying driver's air bag, always properly wear your seat belt and adjust the driver's seat as far back as possible, maintaining a position that still allows the driver to have good control of the steering wheel, brake, accelerator, and other vehicle controls.**
  - **To reduce the risk to the front passenger of serious injury or death from a deploying passenger's air bag, make sure the passenger always wears the seat belt properly, remains seated upright and all the way back in the seat, and positions the seat as far back as possible.**

## ⚠ WARNING

- **Air bags inflate very quickly and with great force. Do not sit on the edge of the seat or lean your head or chest close to the steering wheel or the instrument panel.**
- **Do not put your feet or legs on or against the instrument panel.**

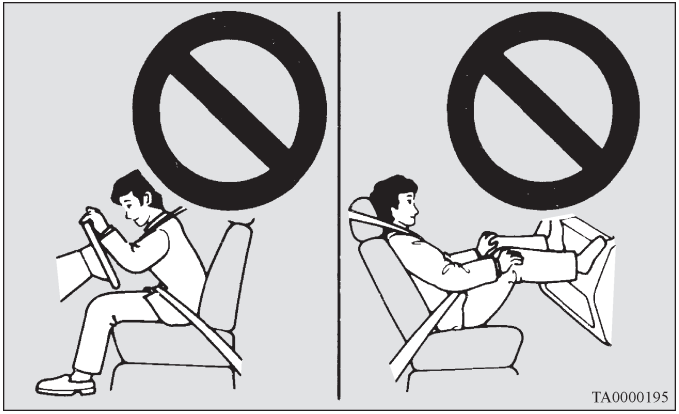

**⚠ WARNING**

- **Infants and small children should never ride unrestrained, or lean against the instrument panel. They should never ride held in your arms or on your lap. They can be seriously injured or killed in an accident, especially when the air bags inflate. Infants and children should be properly seated in the rear seat in an appropriate child restraint system. Refer to “Child restraints” on page 2-24.**

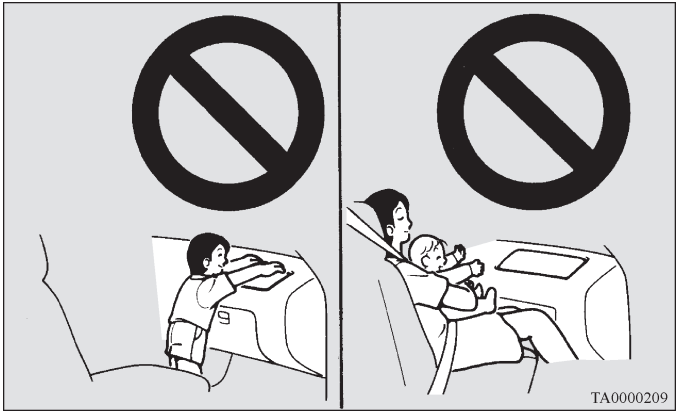


**⚠ WARNING**

- **NEVER put REAR-FACING CHILD RESTRAINTS or INFANT RESTRAINTS in the front passenger seat. This places the infant too close to the passenger air bag. During deployment of that air bag, the infant can be seriously injured or killed. Rear-facing child restraints or infant restraints must only be used in the rear seat.**

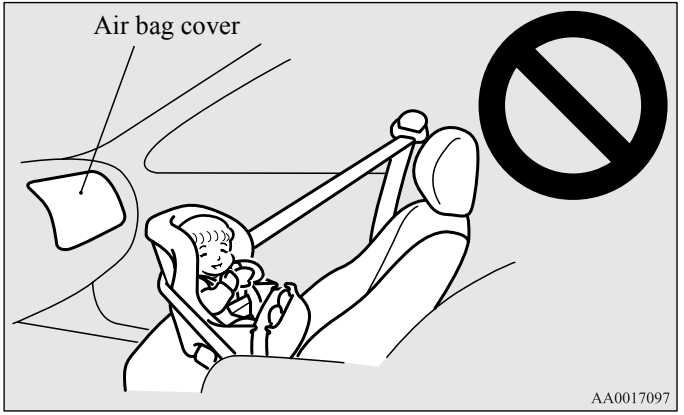

**⚠ WARNING**

- **FRONT-FACING CHILD RESTRAINTS should be used in the rear seat whenever possible. If they must be used in the front passenger seat, move the seat to the most rearward position and make sure the child stays in the child restraint, properly restrained. Failure to follow these instructions could result in serious injury or death to the child.**

**⚠ WARNING**

- **Older children should be seated in the rear seat with their seat belt properly worn, and with an appropriate booster seat (including a booster cushion) if needed.**
  **Refer to "Children who have outgrown child restraint systems" on page 2-35.**

## How the Supplemental Restraint System works

N00407800317

The SRS includes the following components:

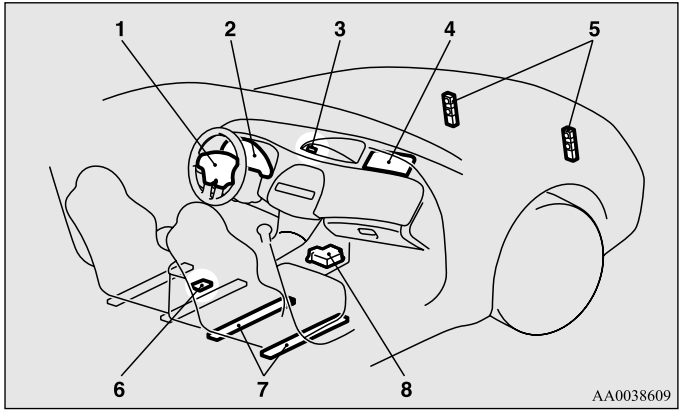


1- Driver's air bag
2- SRS warning light
3- Passenger's air bag off indicator
4- Passenger's front air bag
5- Front impact sensors
6- Driver's seat position sensor
7- Passenger's seat weight sensors
8- Air bag control unit

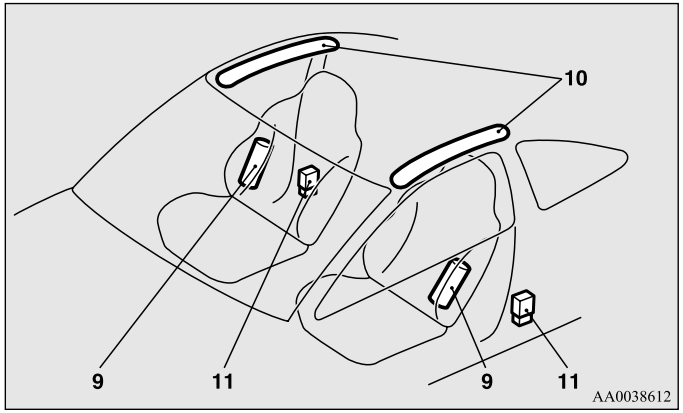


9- Side air bag modules
10- Curtain air bag modules (ECLIPSE only)
11- Side impact sensors

The air bag control unit monitors the readiness of the electronic parts of the system whenever the ignition switch is in the “ON” or “START” position. These include all of the items listed above and all related wiring.

The air bags will operate only when the ignition switch is in the “ON” or “START” position.

When the impact sensors detect a sufficient front or side impact to deploy the air bag(s), the appropriate air bag(s) will be deployed.
When air bags deploy, some smoke is released accompanied by a loud noise. The smoke is not harmful, but do not intentionally inhale the smoke as it may cause temporary irritation to people with respiratory problems.

After deployment, the air bags will quickly deflate, so quickly that some people may not even realize the air bags inflated.
Air bag inflation does not prevent the driver from seeing or being able to steer the vehicle, and does not prevent people from leaving the vehicle.

**⚠ *CAUTION***

- **Air bags inflate very quickly and with great force. In certain situations, contact with an inflating air bag may cause small cuts, abrasions, and bruises.**

## Event Data Recording

N00418600054

Your vehicle is equipped with an “EDR” - Event Data Recorder which is capable of collecting and storing data in the event of an air bag deployment.

The EDR may record the following information:

- Condition of specific vehicle systems;
- Whether the driver and front passenger seat belts were buckled;
- Diagnostic code(s)

## Driver’s seat position sensor

N00417900092

The driver’s seat position sensor is attached to the seat rail and provides the air bag control unit with information on the seat’s fore-aft position. The air bag control unit controls deployment of the driver’s front air bag in accordance with the information it receives from this sensor.
If there is a problem involving the driver’s seat position sensor, the SRS warning light in the instrument panel will come on. Refer to “SRS warning light” on page 2-44.

**⚠ WARNING**

- **If the SRS warning light comes on, have the vehicle inspected by an authorized Mitsubishi Motors dealer as soon as possible.**
- **Please observe the following instructions to ensure that the driver’s seat position sensor can operate correctly.**
  - **Adjust the seat to the correct position, and sit well back against the seatback.**
    **Refer to “Front seat” on page 2-4.**
  - **Do not recline the seatback more than necessary when driving.**
  - **Do not place metallic objects or luggage under the front seat.**
- **If the vehicle is involved in a severe impact, have the sensor inspected by an authorized Mitsubishi Motors dealer as soon as possible.**

## Passenger's seat weight sensors

N00418000319

The passenger's seat weight sensors are attached to the seat rails and provide the air bag control unit with information regarding the weight on the front passenger seat. The air bag control unit controls deployment of the passenger's front air bag in accordance with the information it receives from this sensor.

The passenger's front air bag will not deploy in an impact when the weight on the seat is sensed to be less than approximately 66 pounds (30 kg). In this case, the passenger air bag off indicator will come on.

Refer to "Passenger air bag off indicator" on page 2-43.

If there is a problem involving the passenger seat weight sensors, the SRS warning light in the instrument panel will come on. Refer to "SRS warning light" on page 2-44.

**⚠ WARNING**

- **If any of the following conditions occur, you should immediately have your vehicle inspected by an authorized Mitsubishi Motors dealer as soon as possible:**
  - **The SRS warning light does not initially come on when the ignition key is turned to the "ON" or "START" position.**
  - **The SRS warning light does not go out after several seconds.**
  - **The SRS warning light comes on while you are driving.**

**⚠ WARNING**

- **To ensure that the passenger's seat weight sensors can correctly sense the weight being applied to the seat, observe the following instructions. Failure to follow these instructions can adversely affect the performance of the passenger's air bag system.**
  - **Adjust the seat to the correct position, and sit well back against the seatback.**
    **Refer to "Front seat" on page 2-4.**
  - **Do not recline the seatback more than necessary.**
  - **Never have more than one person (adult or child) sitting on the seat.**
  - **Do not place anything between the seat and the floor console.**
  - **Do not hang anything on the front passenger's seatback.**
  - **When attaching a child restraint system, secure it firmly.**
  - **Do not place luggage or other objects on the seat.**
  - **Do not use a seat cover or a cushion.**
  - **Do not modify or replace the seat and seat belt.**
  - **Do not place luggage or other objects under the seat.**
  - **Do not place the floor mat on the seat rails.**
  - **Do not expose the sensors to liquids or vapors.**
  - **Do not subject the sensors to shock.**
  - **Do not allow rear-seat occupants to push the front passenger seat with their feet or force the front passenger seat upward.**
  - **Do not allow rear-seat occupants to grasp the front passenger's seatback or put their arms around it.**
  - **When attaching a child restraint system in the rear seat, make sure it does not interfere with the front seat.**
  - **When using the wind deflector, adjust the seat to the position where the seat does not come in contact with the wind deflector. (ECLIPSE SPYDER only)**

**⚠ WARNING**

- **If the vehicle is involved in a severe impact, have the sensors inspected by an authorized Mitsubishi Motors dealer as soon as possible.**

## Passenger's air bag off indicator

N00418100219

The passenger air bag off indicator is located in the instrument panel.

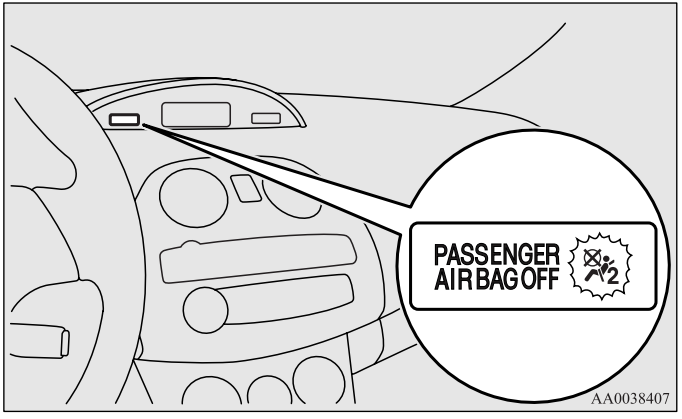


The indicator normally comes on when the ignition switch is turned to the "ON" position and goes out a few seconds later.

[For ECLIPSE]

In the following situations, the indicator will stay on to show that the passenger's front air bag is not operational.

- The passenger's seat weight sensors sense a weight of less than approximately 66 pounds (30 kg) on the front passenger seat.
- The front passenger's seat is not occupied.

When the weight applied to the front passenger seat is sensed to be approximately 66 pounds (30 kg) or greater, the indicator goes out to show that the passenger's front air bag is operational.

[For ECLIPSE SPYDER]
In the following situations, the indicator will stay on to show that the passenger's front air bag and the passenger's side air bag are not operational.

- The passenger's seat weight sensors sense a weight of less than about 66 pounds (30 kg) on the front passenger seat.
- The front passenger's seat is not occupied.

When the weight applied to the front passenger seat is sensed as about 66 pounds (30 kg) or greater, the indicator goes off to show that the passenger's front air bag and the passenger's side air bag are operational.



**WARNING**

- **If any of the following conditions occur, you should immediately have the air bag system in your vehicle inspected by an authorized Mitsubishi Motors dealer as soon as possible:**
  - **The passenger's air bag off indicator comes on when an adult is sitting on the front passenger seat.**
  - **The passenger's air bag off indicator does not come on when the front passenger's seat is not occupied.**
  - **The passenger's air bag off indicator does not come on when the ignition switch is turned to the "ON" position.**
  - **The passenger's air bag off indicator comes on and goes out repeatedly.**
- **Do not attach any accessory to your vehicle that makes the passenger's air bag off indicator difficult or impossible to see.**
  **You must be able to see the passenger's air bag off indicator and verify the status of the passenger's air bag system.**

## SRS warning light

N00408300306

There is a Supplemental Restraint System (SRS) warning light on the instrument panel. The system checks itself each time the ignition is turned on.
When the ignition key is in the "ON" or "START" position, the SRS warning light should come on for several seconds and then go out. This means the system is working properly.
If there is a problem involving one or more of the SRS components, the warning light will come on and stay on.
The SRS warning light is shared by the Supplemental Restraint System (SRS) and the seat belt pre-tensioner system.

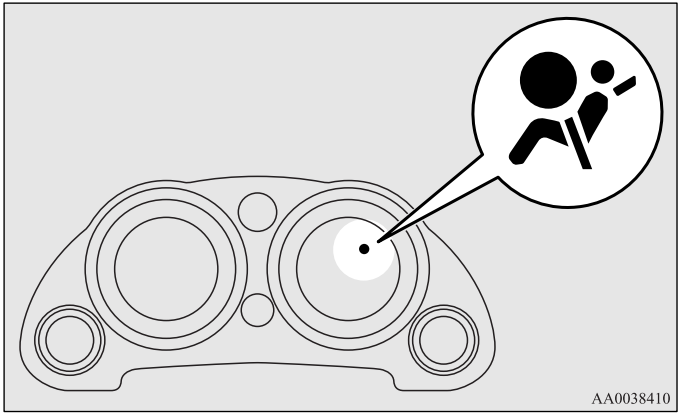

**⚠ WARNING**

- **If any of the following conditions occur, the SRS and/or seat belt pre-tensioners are not working properly and you should immediately have it inspected by an authorized Mitsubishi Motors dealer:**
  - **The SRS warning light does not come on when the ignition key is turned to the "ON" or "START" position.**
  - **The SRS warning light does not go out after several seconds.**
  - **The SRS warning light comes on while driving.**

## Driver's and passenger's front air bag system

N00407900220

The driver's air bag is located under the padded cover in the middle of the steering wheel. The front passenger's air bag is contained in the instrument panel above the glove compartment. The driver's air bag and the front passenger's air bag are designed to deploy at the same time. However, the front passenger's air bag does not deploy when the front passenger seat is not occupied or when the weight sensor in the front passenger seat senses a weight on the seat of less than approximately 66 pounds (30 kg).

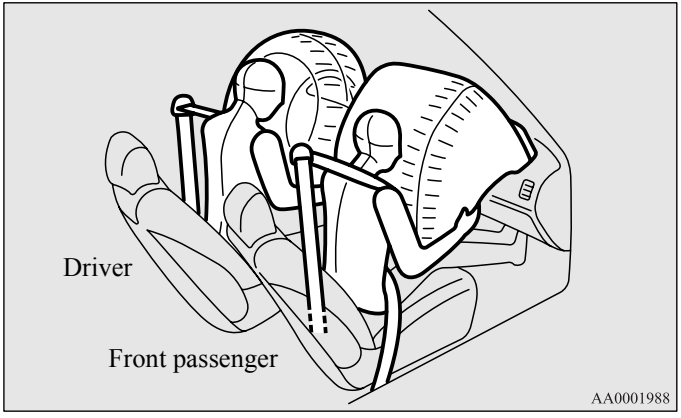

## Deployment of front air bags

N00408000459

### *The front air bags ARE DESIGNED TO DEPLOY when…*

Head-on collision with a solid wall at speeds of approx. 15 mph (25 km/h) or higher

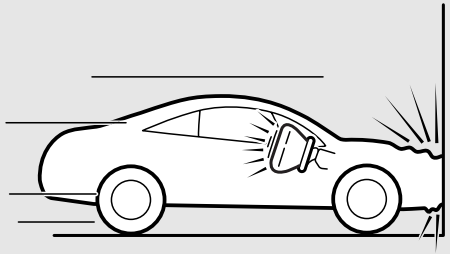

Moderate to severe frontal impact within the shaded area between the arrows

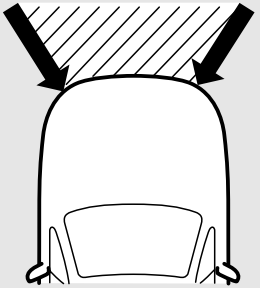

AA1003152



The front air bags are designed to deploy when the vehicle suffers a moderate to severe frontal impact. A typical condition is shown in the illustration to the left.

The front air bags are designed to deploy only in certain moderate to severe frontal collisions within the shaded area between the arrows in the illustration to the right.
The front air bags will deploy if the impact to the vehicle's main structure is above a specific threshold level. The threshold level is approximately 15 mph (25 km/h) for a frontal collision straight into a solid flat wall that does not bend or deform. If the impact to the vehicle's main structure is below this threshold level, the front air bags may not deploy. This threshold level may also be higher if the vehicle hits something that absorbs the impact, either by bending or moving (for example, another stationary vehicle, a pole or a guard rail).
The beginning stage of air bag inflation is the most forceful, and can cause serious injuries or death if you are too close to the deploying air bag. Accordingly, it is important that you always wear the available seat belt.

### *The front air bags MAY NOT DEPLOY when …*

In certain types of front collisions, the front air bags may not deploy, even if the deformation of the body seems to be large, because the vehicle's body structure is designed to absorb the impact and deform in order to help protect the occupants. Some typical situations where the front air bags may not deploy are shown in the illustrations.

Because the front air bags do not protect the occupant in all types of frontal collisions, be sure to always wear your seat belts properly.

Collision with a utility pole, tree or other narrow objects

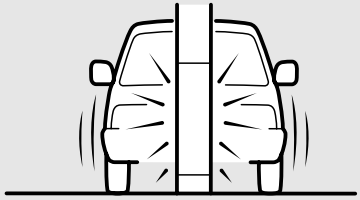

Collision where the vehicle slides under the rear body of a truck

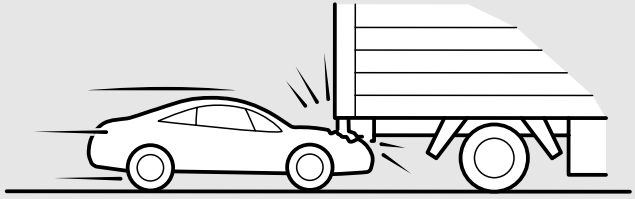

Oblique frontal impact

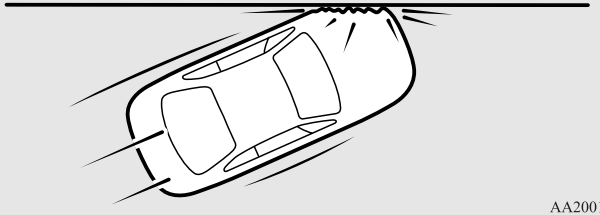

AA2001139

### *The front air bags ARE NOT DESIGNED TO DEPLOY when …*

The front air bags are not designed to deploy in situations where they cannot provide protection to the occupants.
Some typical situations are shown in the illustrations.

Because the front air bags do not protect the occupants in all types of collisions, be sure to always wear your seat belts properly.



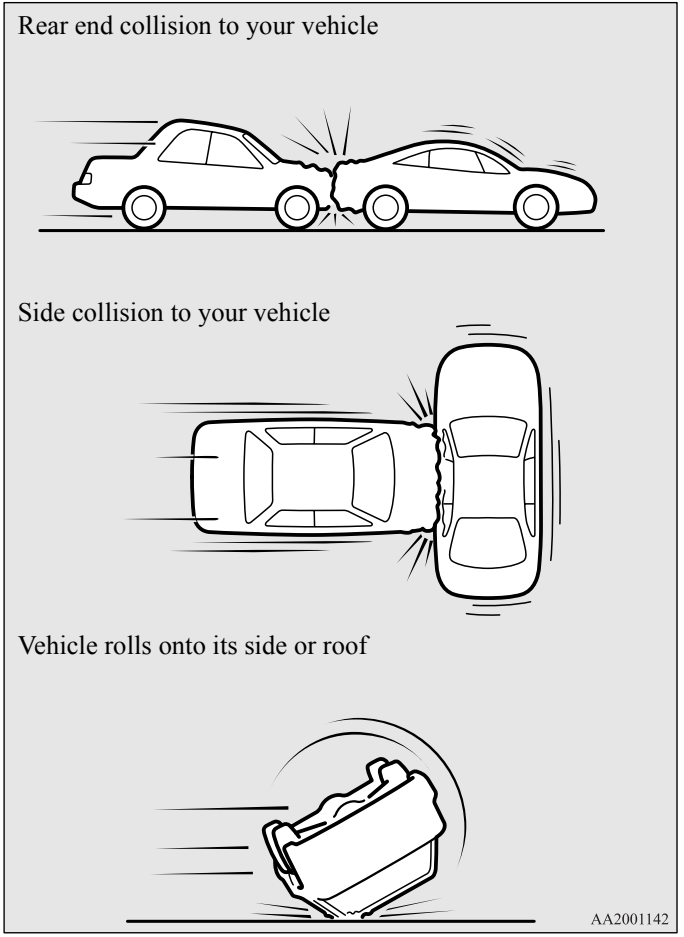

### *The front air bags MAY DEPLOY when …*

The front air bags may deploy if the underside of the vehicle suffers a moderate to severe impact (undercarriage impact). Some typical situations are shown in the illustrations.

Because the front air bags may deploy in certain types of unexpected impacts, as shown in the illustrations, and these unexpected impacts can move you out of position, it is important to always wear your seat belts properly. When worn properly, seat belts can help maintain your distance from the air bags when they begin to inflate. The beginning stage of air bag inflation is the most forceful and can cause serious injury or death if you are close to the deploying air bag.

Collision with an elevated median/island or curb

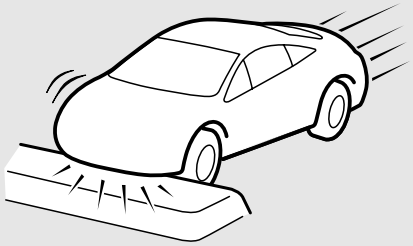

Vehicle travels over a deep hole/pothole

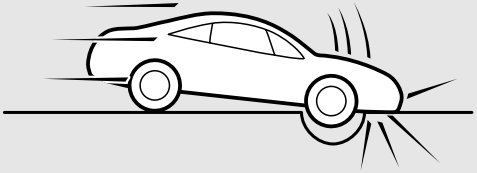

Vehicle drives down a steep slope and hits the ground

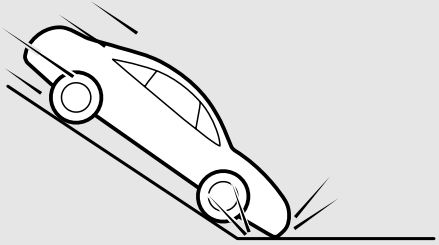

AA2001155

**⚠ WARNING**

- **Do not attach anything to the steering wheel's padded cover, such as trim material, badges, etc. These could strike and injure an occupant if the air bag inflates.**
- **Do not set anything on, or attach anything to, the instrument panel above the glove compartment. Such items could strike and injure an occupant if the air bag inflates.**



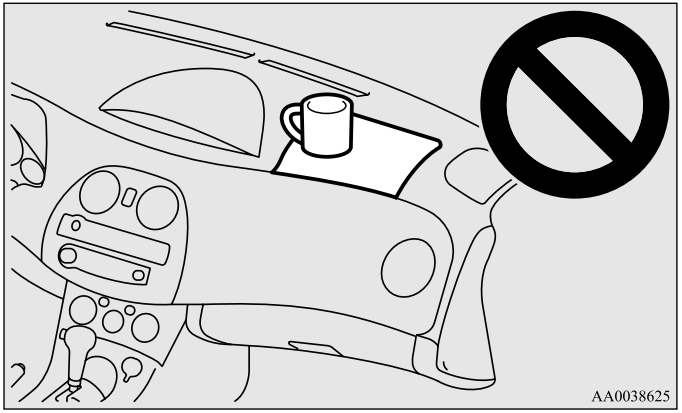


**⚠ WARNING**

- **Do not attach accessories to, or put them in front of, the windshield. They could restrict the air bag inflation, or strike and injure an occupant, when the air bag inflates.**
- **Do not place objects, such as packages or pets, between the air bags and the driver or the front passenger. Such objects can adversely affect air bag performance, or cause serious injury or death when the air bag deploys.**
- **Immediately after air bag inflation, some parts of the air bag system will be hot. Do not touch them. You could be burned.**
- **The air bag system is designed to work only once. After the air bags deploy, they will not work again. They must promptly be replaced and the entire air bag system must be inspected by an authorized Mitsubishi Motors dealer.**

## Side air bag system

N00408100290

The side air bags (A) are contained in the driver and front passenger seatbacks.

[For ECLIPSE]

The side air bag is designed to inflate only on the side of the vehicle that is impacted, even with no passenger in the front seat.

[For ECLIPSE SPYDER]

The side air bag is designed to inflate only on the side of the vehicle that is impacted.

In the following situations, the passenger's side air bag is not operational.

- The passenger's seat weight sensors sense a weight of less than about 66 pounds (30 kg) on the front passenger seat.
- The front passenger's seat is not occupied.

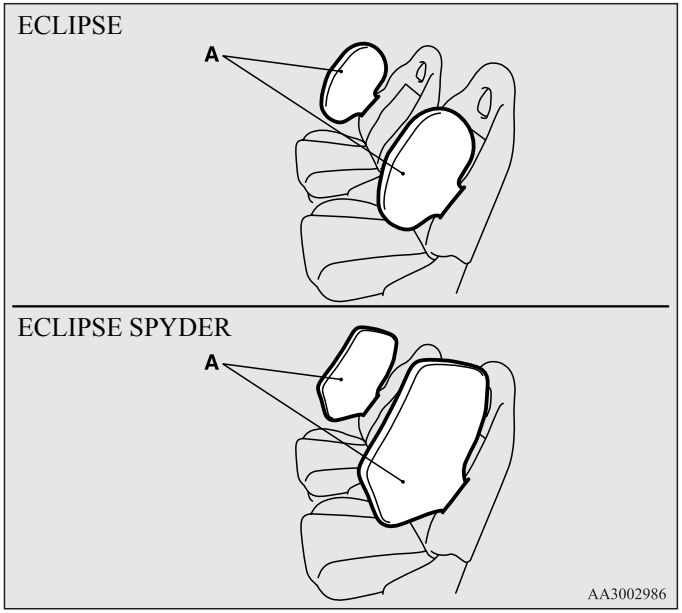

A label is attached to the seatbacks in vehicles with side air bags.

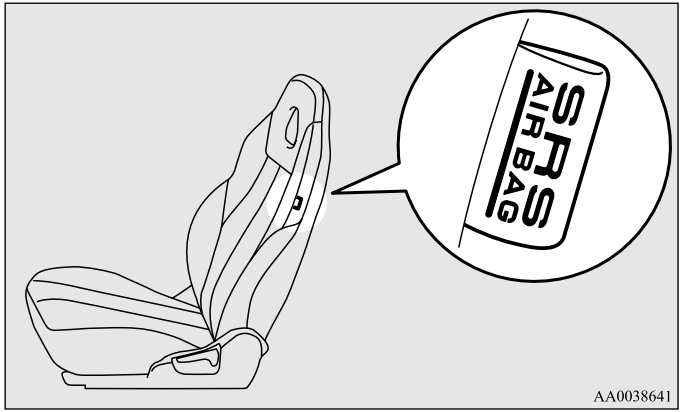




## Curtain air bag system (ECLIPSE only)

N00419200028

The curtain air bags are contained in the front and rear pillars and roof side rail. The curtain air bag is designed to inflate only on the side of the vehicle that is impacted, even with no passenger in the front seat.

**WARNING**

- **The side air bag and curtain air bag can cause serious injury or death to anyone too close to the air bag when it deploys. To reduce the risk of injury from a deploying side air bag and curtain air bags, driver and front passenger must be properly restrained and seated well back, upright, and in the middle of the seat. Do not lean against the door.**

**WARNING**

- **In order to reduce the risk of injury from a deploying side air bag, do not allow any rear seat passengers to hold onto the back of either front seat. Special care should be taken with children.**
- **Do not place any objects near or around the front of either front seatback. Such objects can interfere with proper side air bag deployment and cause injury during deployment of the side air bag.**
- **Do not place stickers, labels or additional trim on the back of either front seat. They can interfere with proper side air bag deployment.**
- **Do not install seat covers or re-cover seats that have side air bags. Covers can interfere with proper side air bag deployment and adversely affect side air bag performance.**

## ⚠ WARNING

- **Do not attach a microphone (A) or any other object around the part where the curtain air bag (B) deploys, such as on the windshield, side door glass or front and rear pillars and roof side rail. When the curtain air bag inflate, the microphone or other object may be hurled with great force or the curtain air bag may not inflate correctly, resulting in death or serious injury.**



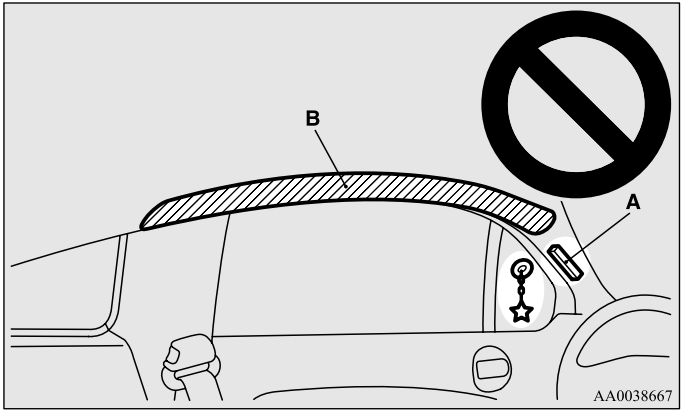


## ⚠ WARNING

- **Do not put a hanger or any heavy or pointed object on the coat hook. If the curtain air bag was activated, any such item could be propelled away with great force and could prevent the curtain air bag from inflating correctly. Hang clothes directly on the coat hook (without using a hanger). Make sure there are no heavy or sharp objects in the pockets of clothes that you hang on the coat hook.**
- **Never install a rear-facing child restraint in the front passenger seat. Rear-facing child restraints MUST ONLY be used in the rear seat.**
- **Front-facing child restraints should also be used ONLY in the rear seat. If a front-facing child restraint must be used in the front passenger seat, move the seat as far back as possible, and make sure that the child stays in the child restraint, properly restrained and away from the door.**
- **Do not allow a child to lean against or sit close to the passenger door, even if the child is seated in a child restraint system. The child's head should also not lean against or be close to the section of the seatback where the side air bag and curtain air bag are located. It is dangerous if the side air bag and curtain air bag deploys. Failure to follow all of these instructions could lead to serious injury or death to the child.**
- **Work done on or in the vicinity of the side air bag and curtain air bag system components should be done only by an authorized Mitsubishi Motors dealer. Improper work methods can cause accidental side air bag and curtain air bag deployment, or render a side air bag and curtain air bag inoperable. Either of these situations can result in serious injury or death.**

## Deployment of side air bag and curtain air bag

N00408200392

### *The side air bag and curtain air bag ARE DESIGNED TO DEPLOY when …*

A side air bag and curtain air bag are designed to deploy when the vehicle suffers a moderate to severe side impact to the middle of the passenger compartment.
The typical situation is shown in the illustration.

Moderate to severe impact to the middle of the vehicle body's side structure

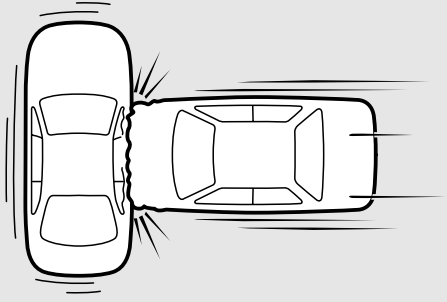

AA0045685

The seat belts in your vehicle are your primary means of protection in an accident. The SRS (Supplemental Restraint System) side air bags and curtain air bags are designed to provide additional protection. Therefore, for your safety and the safety of all occupants, be sure to always wear your seat belts properly.

### *The side air bag and curtain air bag MAY NOT DEPLOY when …*

In certain types of side collisions, the side air bag and curtain air bag may not deploy, even if the deformation of the body seems to be large, because the vehicle's body structure is designed to absorb the impact and to deform in order to help protect the occupants. Some typical situations where the side air bag and curtain air bag may not deploy are shown in the illustrations.

Because the side air bags and curtain air bags do not protect the occupant in all types of side collisions, be sure to always wear your seat belts properly.

Side impact in an area away from the passenger compartment

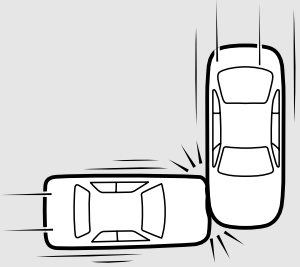

Motorcycle or other similar small vehicle collision with the side of vehicle

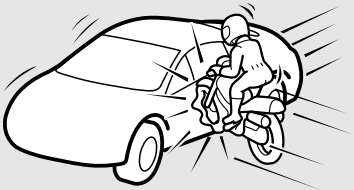

Collision with a utility pole, tree or other narrow object

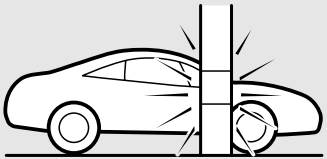

AA2001168

Oblique side impact

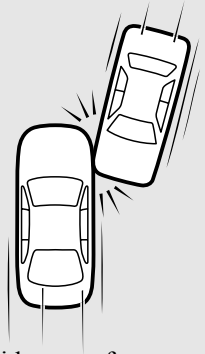

Vehicle rolls onto its side or roof

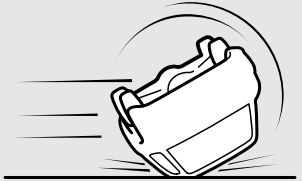

AA3002524

### *The side air bag and curtain air bag ARE NOT DESIGNED TO DEPLOY when …*

The side air bag and curtain air bag are not designed to deploy in situations where they cannot provide protection to the occupants. Some typical situations are shown in the illustrations.

Because the side air bags and curtain air bags do not protect the occupants in all types of collisions, be sure to always wear your seat belts properly.

Head-on collision

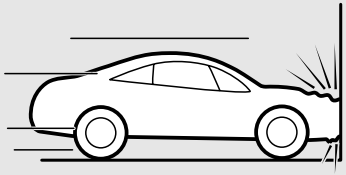

Rear end collision

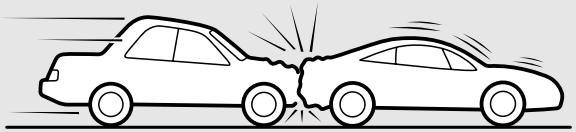

AA3002537

## SRS servicing

N00408500656

**⚠ WARNING**

- **Any maintenance performed on or near the components of the SRS should be performed only by an authorized Mitsubishi Motors dealer. Do not permit anyone else to do any service, inspection, maintenance or repair on any SRS components or wiring. Similarly, no part of the SRS should ever be handled, removed or disposed by anyone except an authorized Mitsubishi Motors dealer.**
  **Improper work methods on the SRS components or wiring could result in an accidental air bag deployment or could make the SRS inoperable. Either of these situations could result in serious injury or death.**
- **Do not modify your steering wheel or any other SRS component or related vehicle part. For example, replacement of the steering wheel, or modifications to the front bumper or body structure can adversely affect SRS performance and may lead to injury.**
- **If your vehicle has received any damage, you should have the SRS inspected by an authorized Mitsubishi Motors dealer to make sure it is in proper working order.**
- **Do not modify your front seats, center pillar or center console. Such modifications can adversely affect SRS performance and may lead to injury.**
  **Also, if you discover any tear or open seam in the seat fabric near the side air bag, have the seat inspected by an authorized Mitsubishi Motors dealer.**

**⚠ WARNING**

- **For ECLIPSE, if you find a crack in or damage to the front pillar, rear pillar, or roof side rail where the curtain air bag is located, have the SRS inspected by an authorized Mitsubishi Motors dealer.**

NOTE

- When you transfer ownership of the vehicle to another person, we urge you to alert the new owner that it is equipped with the SRS and refer that owner to the applicable sections in this owner's manual.
- If you decide to junk or scrap your vehicle, we urge you to first take it to an authorized Mitsubishi Motors dealer so that the SRS can be made safe for disposal.
- If any of the following parts needs to be modified for use by a handicapped person, the advanced air bag system will be greatly affected. Please consult an authorized Mitsubishi Motors dealer.
  - Driver's seat
  - Front passenger seat
  - Front seat belt
  - Steering wheel
  - Instrument panel



**[For vehicles sold in U.S.A.]**
To contact Mitsubishi Motors North America, Inc. call 1-888-648-7820 or write to:

**Mitsubishi Motors North America, Inc.**
**Customer Relations Department**
**P. O. Box 6400**
**Cypress, CA 90630-0064**

**[For vehicles sold in Canada]**
To contact Mitsubishi Motor Sales of Canada, Inc. call 1-888-576-4878 or write to:

**Mitsubishi Motor Sales of Canada, Inc.**
**Customer Relations Department**
**P.O. Box 41009**
**4141 Dixie Road**
**Mississauga, ON L4W 5C9**

**[For vehicles sold in Puerto Rico]**
To contact Mitsubishi Motor Sales of Caribbean, Inc.
call 1-787-251-8715 or write to:

**Mitsubishi Motor Sales of Caribbean, Inc.**
**Customer Service Department**
**P.O. Box 192216**
**SAN JUAN PR 00919-2216**

## Warning labels

N00408600282

Occupant restraint warning labels for the SRS are located in the vehicle as shown in the illustration.

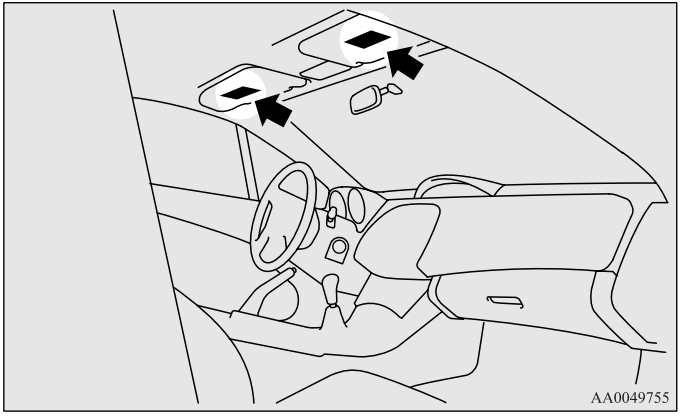


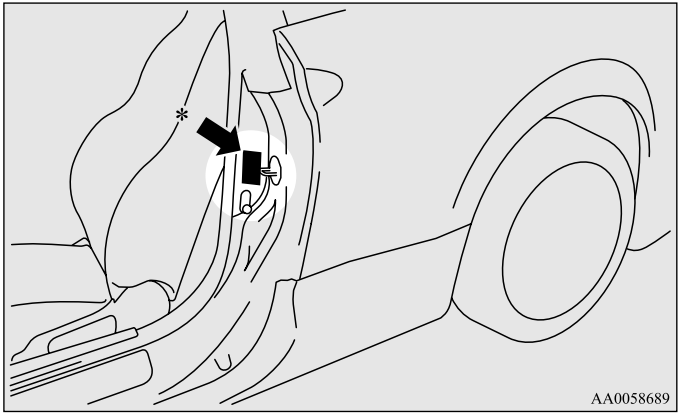


* - Located in the passenger's side as well.

# Features and controls


Break-in recommendations . . . . . 3- 2
Keys . . . . . 3- 2
Electronic immobilizer
(Anti-theft starting system). . . . . 3- 3
Keyless entry system . . . . . 3- 7
Door locks . . . . . 3- 13
Power door locks . . . . . 3- 15
Rear hatch (ECLIPSE)/
Trunk lid (ECLIPSE SPYDER) . . . . . 3- 16
Inside rear hatch/trunk lid release . . . . . 3- 18
Inside emergency trunk lid release
(ECLIPSE SPYDER) . . . . . 3- 20
Theft-alarm system . . . . . 3- 22
Power windows . . . . . 3- 26
Sunroof (ECLIPSE only, if so equipped). . . . . 3- 28
Electric convertible top (ECLIPSE SPYDER) . . . 3- 31
Parking brake . . . . . 3- 54
Steering wheel tilt lock lever . . . . . 3- 55
Inside rearview mirror . . . . . 3- 56
Outside rearview mirrors . . . . . 3- 58
Ignition switch . . . . . 3- 60
Steering wheel lock . . . . . 3- 63
Starting. . . . . 3- 64
Manual transaxle . . . . . 3- 66
Automatic transaxle . . . . . 3- 70
Service brake . . . . . 3- 79
Anti-lock braking system. . . . . 3- 81
Active stability control (ASC) . . . . . 3- 84
Power steering system . . . . . 3- 89
Cruise control . . . . . 3- 89
Tire pressure monitoring system . . . . . 3- 96
Rear-view camera (if so equipped) . . . . . 3-101
Instrument cluster . . . . . 3-104
Indicator and warning light package . . . . . 3-110
Indicator . . . . . 3-111
Warning lights . . . . . 3-111
Multi center display. . . . . 3-114
Combination headlights and dimmer switch. . . . . 3-125
Headlight levelling switch (if so equipped) . . . . . 3-128
Turn signal lever . . . . . 3-129
Hazard warning flasher switch . . . . . 3-130
Front fog light switch (if so equipped) . . . . . 3-131
Wiper and washer switch . . . . . 3-132
Electric rear window defogger switch. . . . . 3-135
Horn switch . . . . . 3-136
Hands-free Bluetooth® cellular phone interface
system with voice recognition (if so equipped) . 3-137
Sun visors . . . . . 3-166
Vanity mirror (if so equipped). . . . . 3-167
Power outlet. . . . . 3-168
Interior lights. . . . . 3-169
Glove compartment. . . . . 3-175
Floor console box . . . . . 3-176
Cup holder. . . . . 3-178
Rear shelf panel (ECLIPSE only) . . . . . 3-178
Coat hooks (ECLIPSE only, if so equipped). . . . . 3-180
Luggage hooks (ECLIPSE only). . . . . 3-180

## Break-in recommendations

N00508700226

Advanced automobile manufacturing techniques permit you to operate your new vehicle without requiring a long break-in period of low-speed driving.
However, you can add to the future performance and economy of your vehicle by observing the following precautions during the first 300 miles (500 km).
Drive your vehicle at moderate speeds during the break-in period.

- Avoid revving the engine.
- Avoid rough driving such as fast starts, sudden acceleration, prolonged high-speed driving and sudden braking. These would have a detrimental effect on the engine and also cause increased fuel and oil consumption, which could result in malfunction of the engine components. Be particularly careful to avoid full acceleration while in low gear.
- Do not overload the vehicle. Observe the seating capacity (See “Cargo load precautions” on page 4-12).
- Do not use this vehicle for trailer towing.

## Keys

N00508800445

Two keys are provided.
The keys fit all locks. Keep one in a safe place as a spare key.

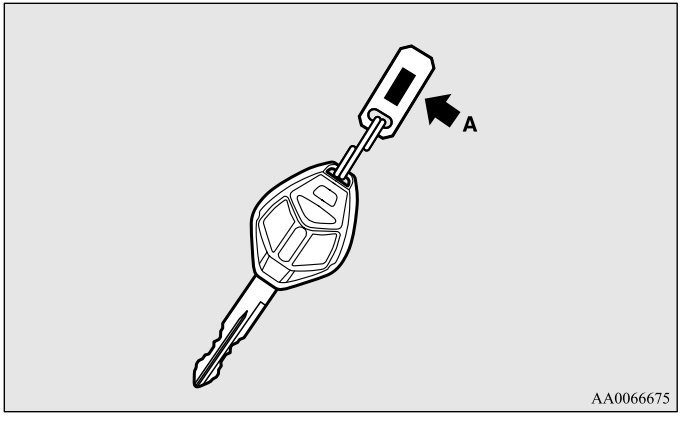

NOTE

- The key number (A) is stamped on the key number plate as shown in the illustration.
  Make a record of the key number and store the key and key number plate in separate places, so that you can order a key from your authorized Mitsubishi Motors dealer if the original keys are lost.
- The key is a precision electronic device with a built-in signal transmitter. Please observe the following in order to prevent damage.
  - Do not leave where it may be exposed to heat caused by direct sunlight, such as on top of the dashboard.
  - Do not take the remote control transmitter apart.
  - Do not excessively bend the key or subject it to strong impacts.
  - Keep the remote control transmitter dry.
  - Keep away from magnetic objects such as key holders.
  - Keep away from devices that produce magnetism, such as audio systems, computers and televisions.
  - Do not clean with ultrasonic cleaners.
  - Do not leave the key where it may be exposed to high temperature or high humidity.
- As your vehicle is equipped with an electronic immobilizer, the engine is designed so that it will not start if the ID code registered in the immobilizer computer and the key's ID code do not match. Refer to the section entitled "Electronic immobilizer" for details and key usage.

## *Electronic immobilizer (Anti-theft starting system)*

N00509100676

The electronic immobilizer is designed to significantly reduce the possibility of vehicle theft. The purpose of the system is to immobilize the vehicle if an invalid start is attempted. A valid start attempt can only be achieved (subject to certain conditions), using a key "registered" to the immobilizer system.
All of the keys provided with your new vehicle have been programmed to the vehicle's electronics.

NOTE

- In the following cases, the vehicle may not be able to recognize the registered ID code from the key. This means the engine will not start even when the registered key is turned to the “START” position.
  - When the key contacts a key ring or other metallic or magnetic object (Type A)
  - When the key grip contacts metal of another key (Type B)
  - When the key contacts or is close to other immobilizing keys (including keys of other vehicles) (Type C)
- In cases like the above, move the offending object(s) away from the key and turn the key back to the “ACC” or “LOCK” position. Then try to start the engine again. If the engine does not start, contact an authorized Mitsubishi Motors dealer.

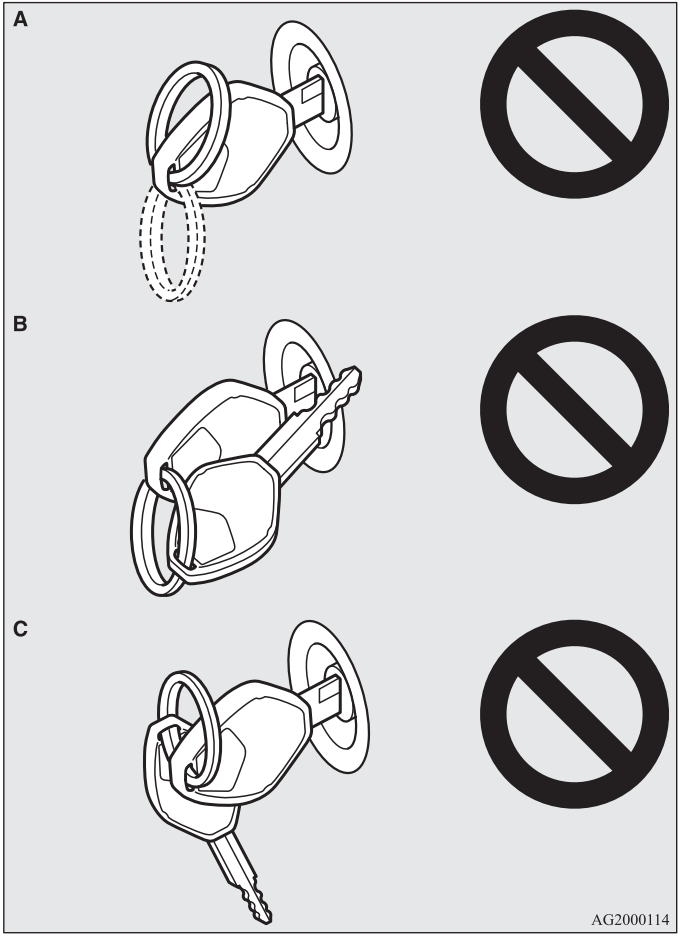

NOTE
- Electronic immobilizer is not compatible with commercially available remote starting systems. Use of commercially available remote starting systems may result in vehicle starting problems and a loss of security protection.
- A system failure is suspected when the ignition key is turned to the "START" position, and the engine does not start. In such a case, contact an authorized Mitsubishi Motors dealer.

**⚠ CAUTION**

- **Do not make any alterations or additions to the immobilizer system. Alterations or additions could cause failure of the immobilizer.**

## Replacement keys

Only keys that have been programmed to the vehicle electronics can be used to start the vehicle.

If you lose a key, you can order a key from your authorized Mitsubishi Motors dealer by referring to the key number.
To prevent vehicle theft, the ID code for the vehicle keys must be changed.
Take your vehicle and all remaining keys to your authorized Mitsubishi Motors dealer to have your ID code changed.

## Additional keys

To add a key, you need to register the ID code to the vehicle.
Registering the ID code can be done by your authorized Mitsubishi Motors dealer. Or it can be done by yourself (except for vehicles sold in Canada).
For you to register the ID code yourself, follow the "Customer key programming" procedure below.
If you choose to have your authorized Mitsubishi Motors dealer register the ID code, take your vehicle and any remaining keys to your authorized Mitsubishi Motors dealer.

NOTE
- You are provided with 2 keys, but you may add up to 6 more keys.

## Customer key programming (Except for vehicles sold in Canada)

You can program new keys to the system if you have two valid (already registered) keys and blank (not registered) immobilizer key (specially cut for your vehicle at your Mitsubishi Motors dealer) by doing the following:

1. Insert the first valid key into the ignition and turn the ignition to the "ON" position for 5 seconds.
2. Turn the ignition to the "LOCK" position and remove the first key.
3. Within 30 seconds of turning the first key to the "LOCK" position, insert the second valid key into the ignition and turn it to the "ON" position. About 10 seconds later, the immobilizer indicator will start blinking.

4. When the immobilizer indicator starts blinking, turn the second valid key to the “LOCK” position and remove it. Within 30 seconds after doing so, insert a blank immobilizer key into the ignition and turn it to the “ON” position. Perform this operation no more than 30 seconds after the immobilizer indicator starts blinking. When registration of the ID code is complete, the immobilizer indicator will come on for 3 seconds then go off. If an error occurs, the immobilizer indicator will go off during the procedure.

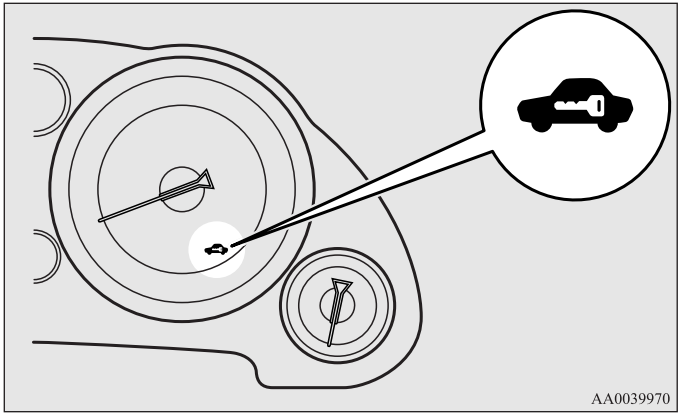


5. If you wish to register another key, perform the process again from step 1.

NOTE

- It is not possible to register a key if:
  - the immobilizer indicator goes off during the procedure
  - the immobilizer indicator does not come on for 3 seconds after turning the ignition to the “ON” position with a blank immobilizer key
- The procedure will be terminated automatically if:
  - a period of 30 seconds or longer elapses from the moment when the first key is turned to the “LOCK” position to the moment when the second key is turned to the “ON” position
  - a period of 30 seconds or longer elapses from the moment when the second key is turned to the “LOCK” position to the moment when the blank immobilizer key (specially cut for your vehicle at your Mitsubishi Motors dealer) is turned to the “ON” position
  - more than 30 seconds elapse after the immobilizer indicator starts blinking

## General information

Your electronic immobilizer operates on a radio frequency subject to Federal Communications Commission (FCC) Rules (For vehicles sold in U.S.A.) and Industry Canada Rules (For vehicles sold in Canada). This device complies with Part 15 of the FCC Rules and RSS-210 of the Industry Canada Rules. Operation is subject to the following two conditions.

- This device may not cause harmful interference.
- This device must accept any interference received, including interference that may cause undesired operation.

This digital apparatus does not exceed the Class A limits for radio noise emissions from digital apparatus set out in the Radio Interference Regulations of the Canadian Department of Communications.

**⚠ *CAUTION***

- **Changes or modifications not expressly approved by the manufacturer for compliance could void the user's authority to operate the equipment.**

# *Keyless entry system*

N00509000851

Press the remote control transmitter buttons to lock or unlock the doors and to open the rear hatch (ECLIPSE) or trunk lid (ECLIPSE SPYDER).

It can also help you signal for attention by setting off the panic alarm.

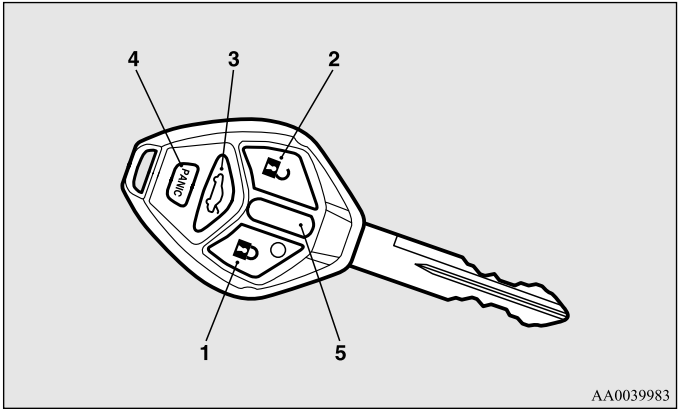


1- LOCK ( ) button
2- UNLOCK ( ) button
3- Rear hatch ( ) button (ECLIPSE)/
Trunk ( ) button (ECLIPSE SPYDER)
4- PANIC button
5- Indicator light

## To lock

Press the LOCK button (1) to lock all the doors and the rear hatch or trunk lid.
If the dome light switch is in the door position, the dome light will blink once. The turn signal lights will also blink once.

NOTE
- If you press the LOCK button (1) after locking the doors and the rear hatch or trunk lid, the horn will sound once to confirm that they are locked.

## To unlock

Press the UNLOCK button (2) to unlock the driver's door only. Press the UNLOCK button one more time to unlock all the doors and the rear hatch or trunk lid.
If the dome light switch is in the door position, the dome light will turn on for 15 seconds. The turn signal lights will also blink twice.



## To open the rear hatch (ECLIPSE) or trunk lid (ECLIPSE SPYDER)

Press the rear hatch or trunk button (3) twice within 5 seconds and the rear hatch or trunk lid will be opened. The rear hatch or trunk lid must be closed manually after it has been opened.

## Answerback function

The keyless entry system answerback functions from the horn and turn signal lights can each be turned on or off as desired. This is done with the key removed from the ignition switch.

NOTE
- The answerback function will not operate when the key is in the ignition switch.

### *Horn deactivation/reactivation*

The answerback function can be set in the following three ways.
Each time the answerback function is set, a tone will sound to tell you the condition of the answerback function.

| | |
|---|---|
| One chime: | The horn will sound if the doors and the rear hatch or trunk lid are locked with the keyless entry system. |
| Two chimes: | The horn will not sound, even if the doors and the rear hatch or trunk lid are locked with the keyless entry system. |
| Three chimes: | The horn will sound if the doors and the rear hatch or trunk lid are already locked and the keyless entry system is used.<br>In this mode, the horn will only sound when the keyless entry LOCK button is pressed again to reconfirm that the doors and the rear hatch or trunk lid are locked. |

1. Press the LOCK button (1) for 4 to 10 seconds and press the UNLOCK button (2) during this time.
2. Release the LOCK and UNLOCK buttons within 10 seconds of pressing the UNLOCK button in step 1.

### *Turn signal light deactivation/reactivation*

The answerback function from the turn signal lights indicating when the doors and the rear hatch or trunk lid are locked or unlocked can be turned on or off separately.
A tone will sound once when the function has been turned on, and twice if it has been turned off.

**To deactivate/reactivate the answerback function for locking of the doors and rear hatch or trunk lid, take the following steps:**

1. Press the UNLOCK button (2) for 4 to 10 seconds and press the LOCK button (1) during this time.
2. Release the LOCK button and then release the UNLOCK button within 10 seconds of pressing the LOCK button in step 1.

**To deactivate/reactivate the answerback function for unlocking of the doors and rear hatch or trunk lid, take the following steps:**

1. Press the UNLOCK button (2) for 4 to 10 seconds and press the LOCK button (1) during this time.
2. Release the UNLOCK button and then release the LOCK button within 10 seconds of pressing the LOCK button in step 1.

## Using the panic alarm

If you are near your vehicle and feel threatened, you can activate the alarm to call attention as follows:

1. Press the PANIC button (4) for more than 1 second.
2. The headlights will blink on and off and the horn will sound intermittently for about 3 minutes.
3. To turn off the alarm, press any button on the remote control transmitter.

NOTE

- The indicator light (5) comes on each time a switch is pressed.
- The keyless entry system does not work if the key is in the ignition.
- The remote control transmitter can be used from about 40 feet (12 m) away. However, this distance may change if your vehicle is near a TV transmitting tower, a power station, or a radio station.
- If the UNLOCK button (2) is pressed and no door or rear hatch or trunk lid is opened within approximately 30 seconds: relocking will automatically occur.
- If the following conditions are observed after pressing the LOCK (1) or UNLOCK (2) button on the remote control transmitter, the battery in the remote control transmitter may need to be replaced.
  - The doors and the rear hatch or trunk lid cannot be locked or unlocked.
  - The panic alarm cannot be operated.
  - The indicator light (5) is dim or does not come on.
- If you lose your remote control transmitter, please contact an authorized Mitsubishi Motors dealer for a replacement.
- If you wish to obtain an additional remote control transmitter, please contact an authorized Mitsubishi Motors dealer. A maximum of 4 remote control transmitters can be programmed for your vehicle.



NOTE

- Your keyless entry system operates on a radio frequency subject to Federal Communications Commission (FCC) Rules (For vehicles sold in U.S.A.) and Industry Canada Rules (For vehicles sold in Canada). This device complies with Part 15 of the FCC Rules and RSS-210 of the Industry Canada Rules. Operation is subject to the following two conditions.
  - This device may not cause harmful interference.
  - This device must accept any interference received, including interference that may cause undesired operation.

**⚠ *CAUTION***

- **Changes or modifications not expressly approved by the manufacturer for compliance could void the user's authority to operate the equipment.**

## Procedure for replacing the remote control transmitter battery

1. With the Mitsubishi mark facing you, insert the cloth-covered tip of a flat blade screwdriver into the notch in the remote control transmitter case and use it to open the case.

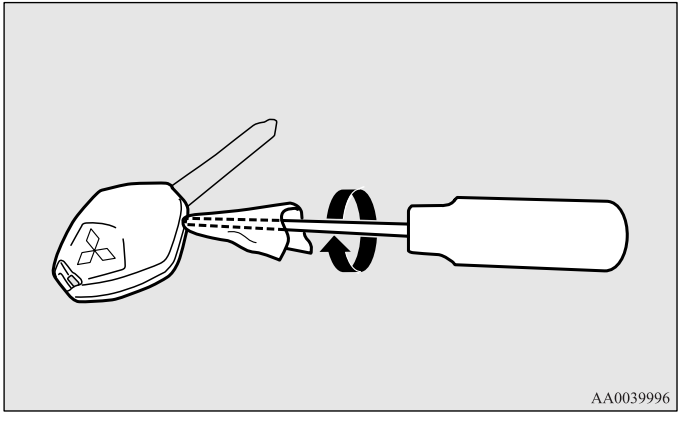


NOTE

- Be sure to perform the procedure with the Mitsubishi mark facing you. If the Mitsubishi mark is not facing you when you open the remote control transmitter case, the buttons may come out.

2. Remove the remote control transmitter from the remote control transmitter case. Then, open the remote control transmitter using the method described in step 1.

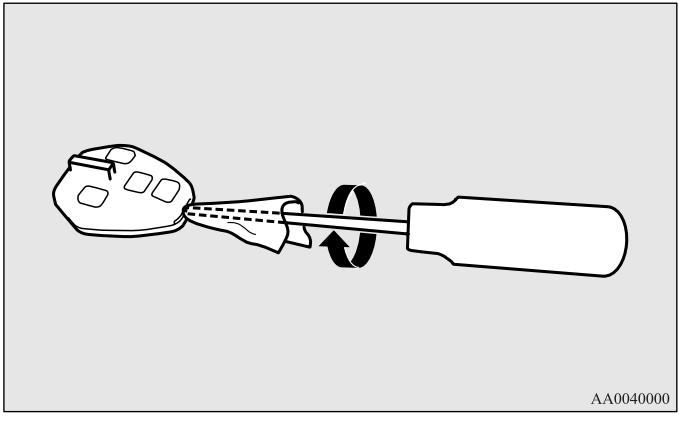


3. Remove the old battery.

4. Install a new battery with the + side (A) down.

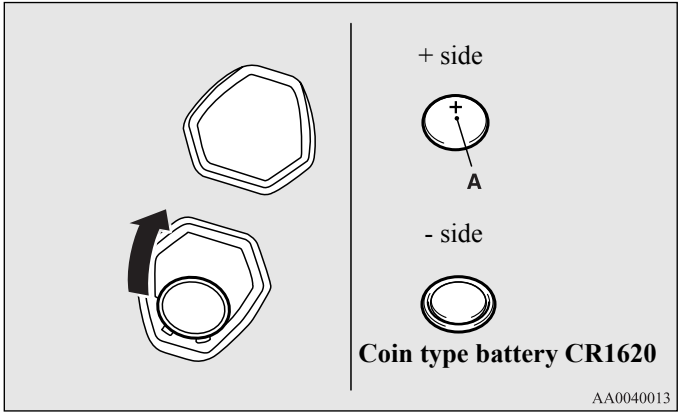


5. Close the remote control transmitter firmly.
6. Place the remote control transmitter in the remote control transmitter case, then securely close the remote control transmitter case.
7. Check the keyless entry system to see that it works.

NOTE
- You may purchase a replacement battery at an electric appliance store.
- Your authorized Mitsubishi Motors dealer can replace the battery for you if you prefer.

**⚠ CAUTION**

- **When the remote control transmitter case is opened, be careful to keep water, dust, etc. out. Also, do not touch the internal components.**

# *Door locks*

N00509200202

**⚠ *WARNING***

- **Make sure all doors are tightly closed and locked while driving.**
  - **Locked doors, in combination with the use of seat belts, can help reduce the risk of ejection in an accident.**
  - **Locked doors can help keep passengers, especially small children, from opening doors and falling out of moving vehicles.**
  - **Locked doors can help prevent outsiders from gaining access to your vehicle when you slow or come to a stop.**
- **Lock your vehicle whenever you leave it. Children who get into unlocked vehicles may not be able to get out. Children trapped inside vehicles can quickly be overcome by heat and suffer serious injury or death due to heat stroke.**
- **Never leave children unattended inside a vehicle. In addition to the risk of heat stroke, children can activate switches and controls, resulting in an injury or fatal accident.**

## To lock or unlock the door with the key (driver's door only)

Turn the key toward the front of the vehicle to lock the door. After checking that the door is locked, turn the key back to the center and remove it.

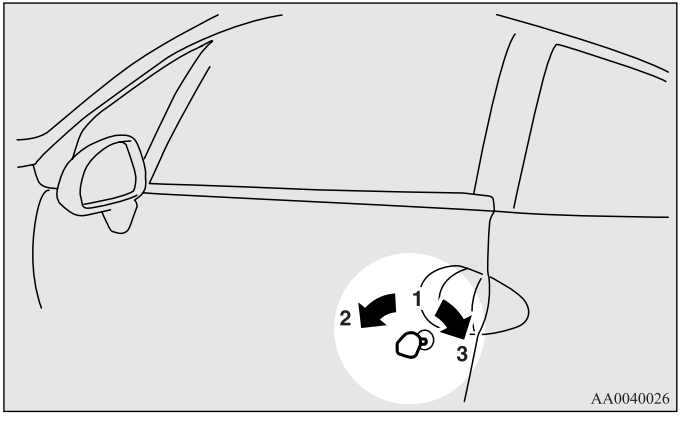


1- Insert or remove the key
2- Lock
3- Unlock

## To lock or unlock the door from the inside

Move the lock knob to the lock position to lock the door. All doors should be kept locked while driving.

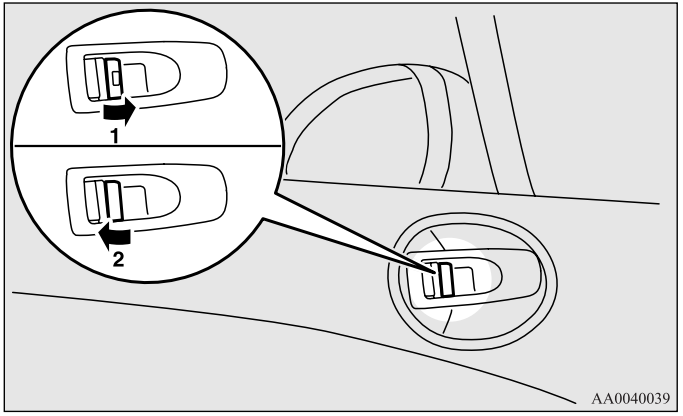


1- Lock
2- Unlock

The driver's door can be unlocked without using the lock knob by pulling on the inside door handle.

## To lock the door without using the key

1. Move the inside lock knob to the locked position.
2. Be sure the keys are not inside the vehicle. Close the door.

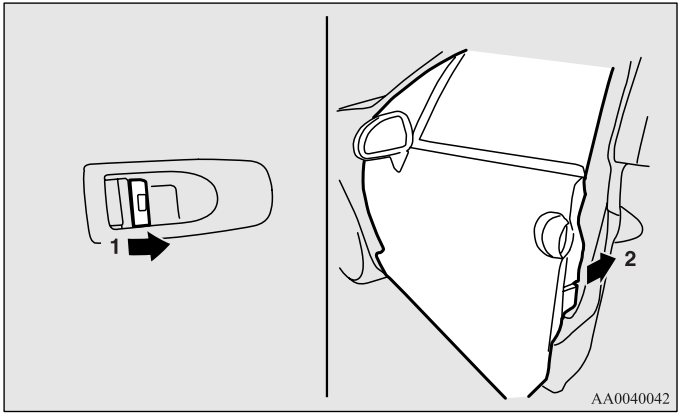


## Key reminder buzzer

N00549600035

If you open the driver's door while the ignition key is in the "LOCK" or "ACC" position, a tone will sound, reminding you to remove the key.

## Lock out protection

N00549700153

If the key is in the ignition switch when you push the lock knob forward with the driver's door or passenger's door open, the lock knob will automatically return to the unlocked position.

## Short stroke mechanism

N00553500022

The short stroke mechanism makes the doors easier to open and close by raising and lowering the door window glass as the doors are opened and closed.

When you pull a door handle to open a door whose window is closed, the window will open slightly. While the door is open, the window will remain in the slightly open position. When you close the door, the window will return to its original position.
In the unlikely event that the window remains in the open position when you close the door, open and close the door again. If the window still does not close, pull up the power window switch to fully close the window with the door closed. After releasing the switch, pull it up again for approximately 1 second. The window glass should then return to its original position. If it does not, have the vehicle inspected by a Mitsubishi Motors dealer or a repair facility of your choice.

# *Power door locks*

N00509300506

NOTE
- Repeated continuous operation between lock and unlock could activate the power door locking systems built-in protection circuit and prevent the system's from operating. If this occurs, wait about 1 minute before operating the power door lock switch.

## To lock and unlock by the power door lock switch

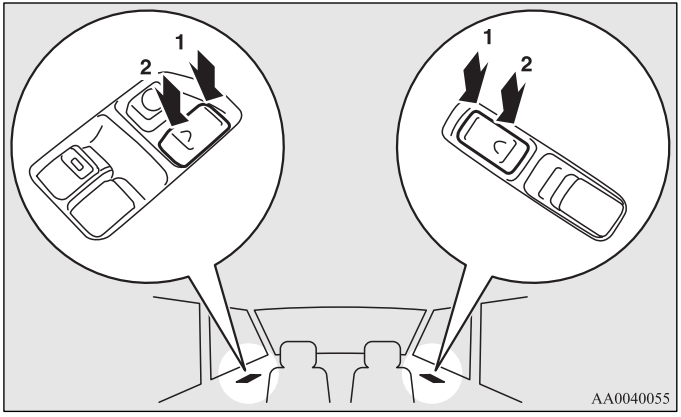


1- Lock
2- Unlock

All of the doors and the rear hatch or trunk lid can be locked or unlocked by pressing the power door lock switch on the driver's or the passenger's door.

# *Rear hatch (ECLIPSE)/Trunk lid (ECLIPSE SPYDER)*

N00510000037

**⚠ *WARNING***

- **It is dangerous to drive with the rear hatch or trunk lid open since carbon monoxide (CO) gas can enter the cabin. CO is an invisible, odorless gas that can cause unconsciousness and even death.**

**⚠ *CAUTION***

- **Do not stand behind the exhaust pipe when loading and unloading luggage. Heat from the exhaust could lead to burns.**

NOTE

- Locking/unlocking of the driver's door by using the keyless entry system also locks/unlocks the rear hatch or trunk lid.

## To open

N00554100041

1. Press the rear hatch or trunk button (A) to open the rear hatch or trunk lid. The rear hatch or trunk lid will pop up slightly. Lift it from this point.

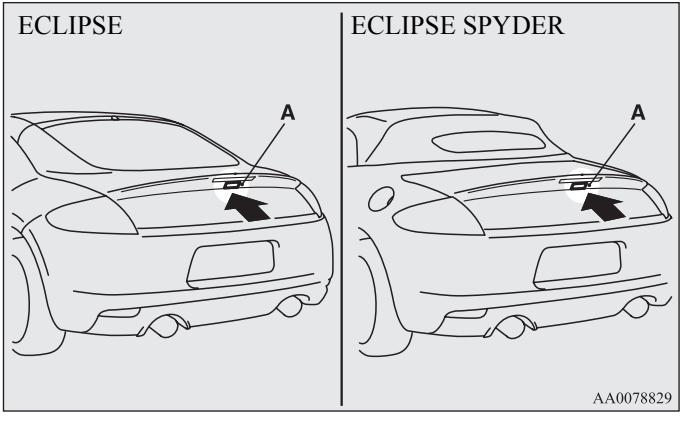

2. Slip your hand into the gap (B) under the rear hatch or trunk, and raise the rear hatch or trunk lid to open it.

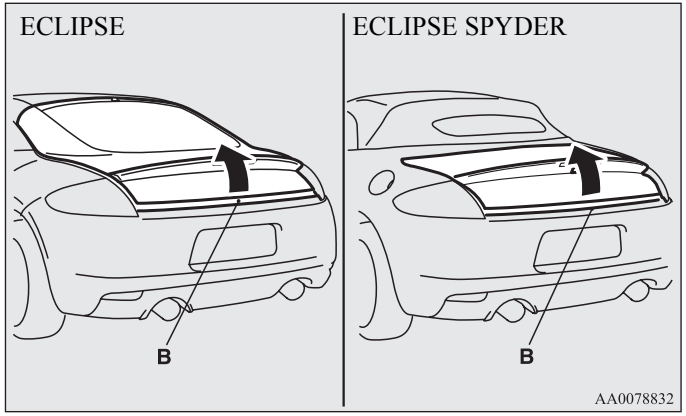


NOTE

- It is also possible to open the rear hatch or trunk lid using the remote control transmitter. (See “Keyless entry system” on page 3-7.)
- The cargo area light (ECLIPSE only) comes on when the rear hatch is opened, and goes out when it is closed.

## To close

N00554200039

Pull the rear hatch grip (A) or trunk lid downward as illustrated and let it go before the rear hatch or trunk lid closes completely. Gently slam the rear hatch or trunk lid from the outside so that it is completely closed.

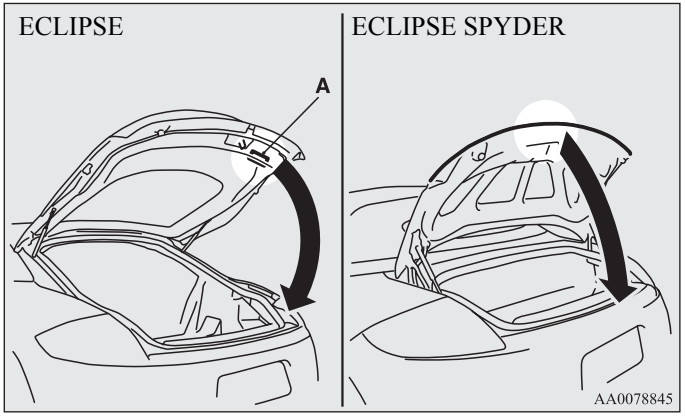


**⚠ CAUTION**

- **To avoid injuring your hand or arm, do not attempt to close the rear hatch or trunk lid without letting go of the rear hatch or trunk lid grip.**
- **Before starting the vehicle, be sure to confirm that the rear hatch or trunk lid is locked. If the rear hatch or trunk lid opens while driving the vehicle, objects stored in the cargo area could fall out onto the road.**

# *Inside rear hatch/trunk lid release*

N00509800149

## ECLIPSE

The inside rear hatch release provides a way to open the rear hatch in the case of a discharged battery.
The rear hatch release lever (see illustration) is mounted in the cargo area.

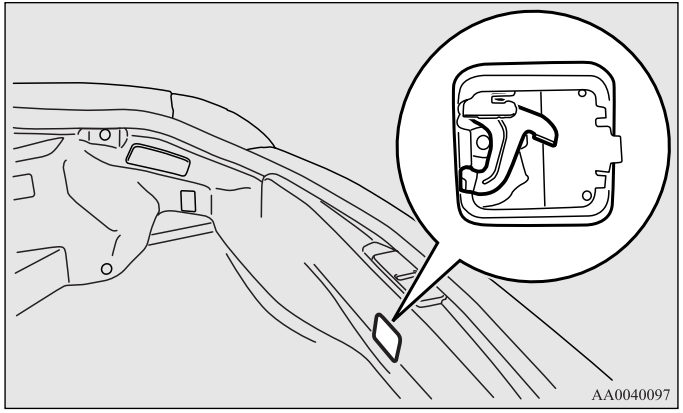


You and your family should familiarize yourselves with the location and operation of the rear hatch release lever.

1. Open the lid (A) inside of the cargo area.

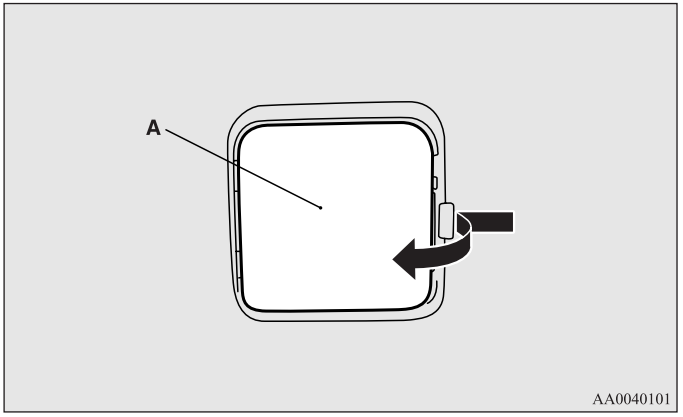


2. Move the lever (B) up to unlock the rear hatch.

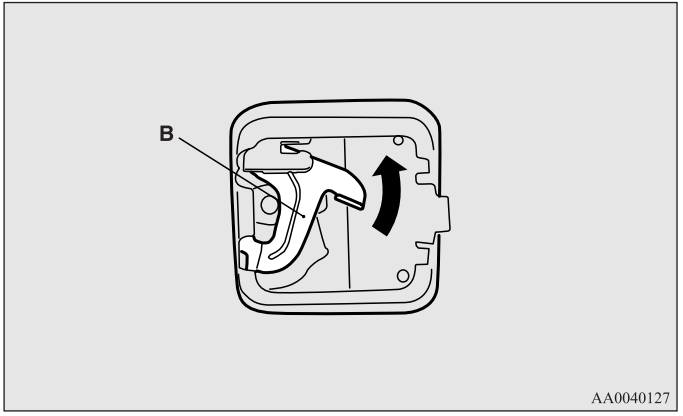

3. Push out on the rear hatch to open it.

**⚠ CAUTION**

- **Always keep the release lever lid on rear hatch closed when driving so that your cargo cannot accidentally bump the lever and open the rear hatch.**

## ECLIPSE SPYDER

The inside trunk lid key cylinder provides a way to open the trunk lid in the case of a discharged battery.

1. Make sure the tonneau panel is securely closed to prevent the tonneau panel from contacting the trunk lid when it opens.
2. Remove the woofer cover (A) in the center of the rear seat by gently pulling at its side edges.

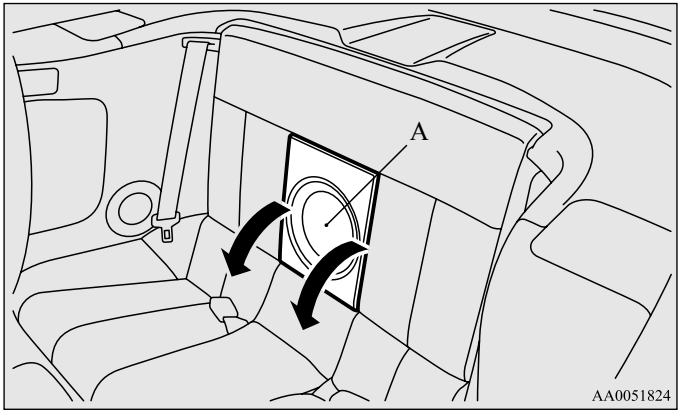


The trunk lid key cylinder (see illustration) is located near the sub woofer.

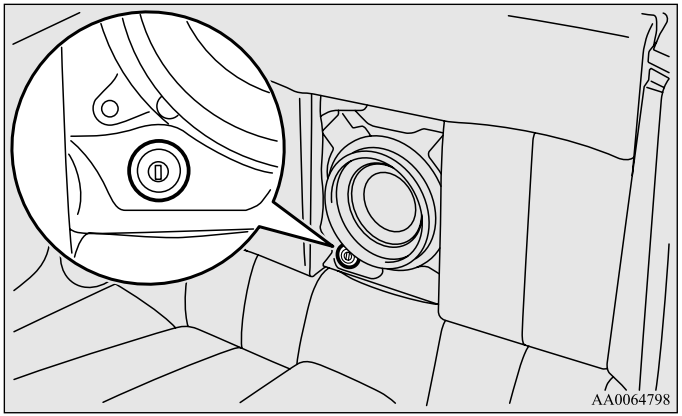


You and your family should familiarize yourselves with the location and operation of the inside trunk lid key cylinder.

3. Insert the key and turn it clockwise.

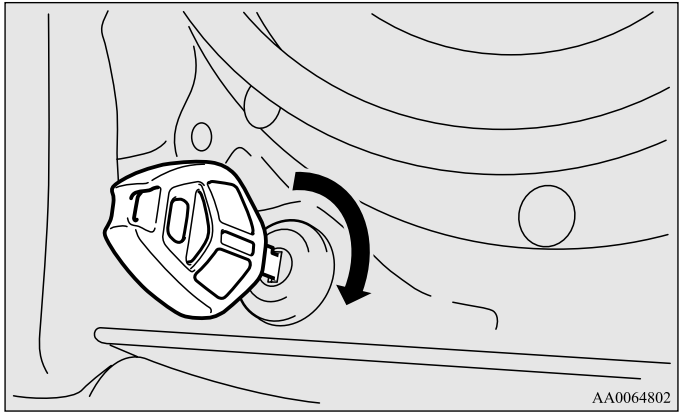


4. The trunk lid will pop up slightly.
5. Put the woofer cover back into the original position.



## *Inside emergency trunk lid release (ECLIPSE SPYDER)*

N00509800110

The emergency trunk lid release provides a way to open the trunk lid from inside the trunk. It was developed to help prevent death and serious injuries, to children who might become locked inside a vehicle trunk.

The luminous “T” shaped yellow emergency trunk lid release handle (see illustration) is mounted near the latch inside the trunk.

The handle glows in the dark after exposure to sunlight.

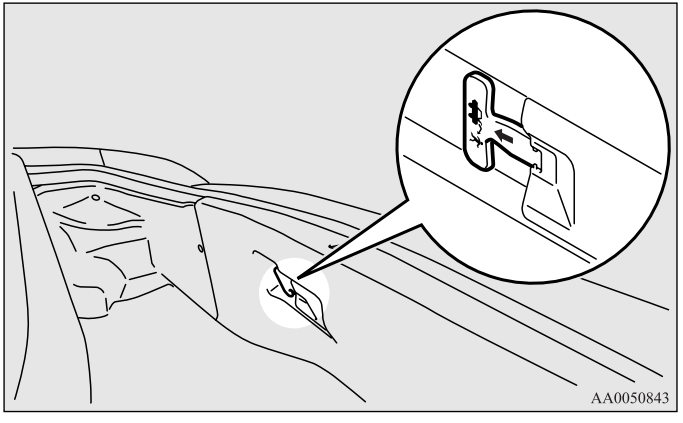

You and your family should familiarize yourselves with the location and operation of the emergency trunk lid release handle. Children should be taught not to play in or around vehicles.

**WARNING**

- **Children should never be left unsupervised in or around vehicles.**
- **Unsupervised children could lock themselves in an open vehicle or trunk.**
- **People trapped inside a vehicle or trunk, even if only for a short period of time, can quickly die from suffocation or heat stroke, especially on hot days. Interior temperatures in vehicles can rise in minutes.**
- **Keep your vehicle doors locked and the trunk lid closed when not in use. Keep your vehicle keys away from children.**

To open the trunk from the inside, pull the handle in the direction of the arrow on the handle. Push up on the trunk lid to open the trunk and climb out.

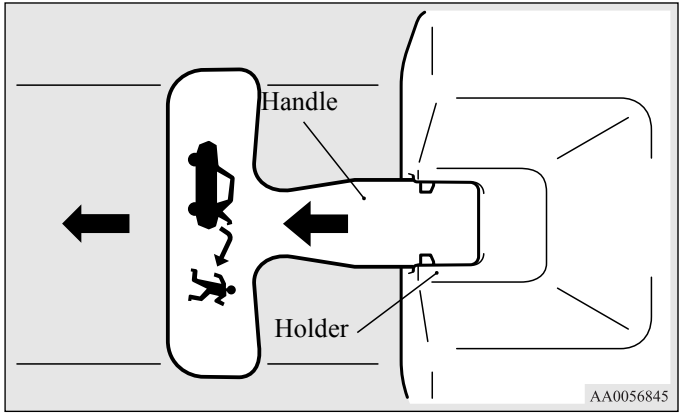


**CAUTION**

- **When loading the trunk, place your things so that they will not touch the emergency trunk lid release handle when you close the trunk. Otherwise you could damage the handle and make it unusable.**
- **Always keep the handle in its holder when driving so that your cargo cannot accidentally bump it and open the trunk.**

# *Theft-alarm system*

N00510200068

The theft-alarm system is designed to provide protection from unauthorized entry into the vehicle. This system is operated in three stages: the first is the “armed” stage, the second is the “alarm” stage, and third is the “disarmed” stage. If triggered, the system provides both audible and visual alarm signals.



## Armed stage

N00510300069

Park the vehicle and stop the engine. Arm the system as described below.

1. Remove the key from the ignition switch.
2. Make sure that the engine hood is locked.
3. Lock all doors and the rear hatch or trunk lid by using power door lock switch or the remote control transmitter.

Arm the system and leave.

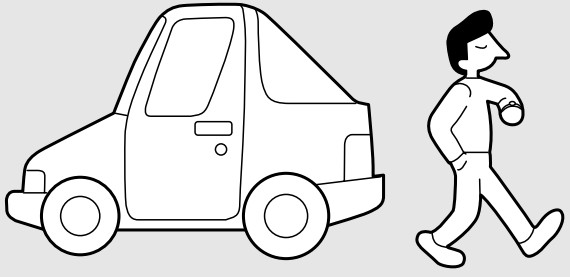

AA0056858

NOTE

- The system is also armed by locking your vehicle using the following procedures when you leave the vehicle.
  - With either the driver’s door or passenger’s door open, set the inside lock knobs on both doors to the locked position and then close the door.
  - With either the driver’s door or passenger’s door open, lock all doors and the rear hatch or trunk lid using the power door lock switch and then close the door.

After completion of the steps above, the theft-alarm indicator (A) will illuminate for approximately 20 seconds and keeps blinking on and off, indicating that the system is armed.

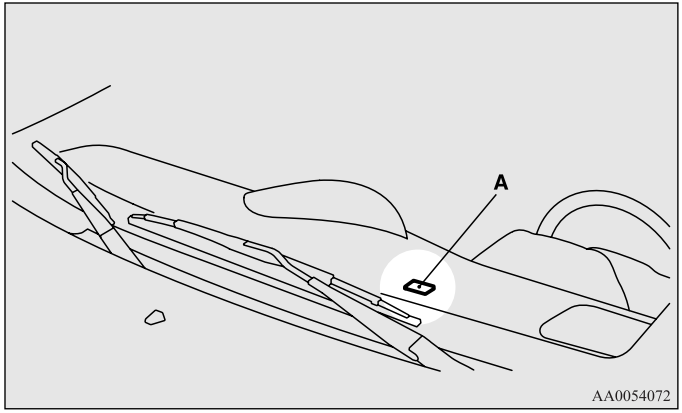


NOTE

- The system will be armed even if the engine hood is open, but when the system is set, be sure that the engine hood is locked.
- The system will be disarmed if, while the theft-alarm indicator (located in the front center of the dashboard) is illuminated, all doors and the rear hatch or trunk lid are unlocked by remote control transmitter.
- The system will be disarmed if, while the theft-alarm indicator is illuminated, the ignition key is turned to the “ON” or “ACC”.
- The system will not be armed if a door is not completely closed. If this happens, rearm the system as described above.
- The trunk lid can only be opened by remote control transmitter without triggering or disarming the system even after the system has been armed. When it is closed, the system will be rearmed.
- The driver should not arm the system until first confirming that all passengers have left the vehicle. If the driver arms the system with passenger(s) in the vehicle, the alarm may be activated when the passenger(s) open the door.

## Alarm stage

N00510400060

The alarm will be activated if any of the following occur while the vehicle is parked and the system is armed.

1. One of the doors and the rear hatch or trunk lid is opened without the remote control transmitter.
2. The engine hood is opened from the outside.

### *Type of alarm*

When the alarm is activated:

1. The headlights blink on and off for 3 minutes.
   After 3 minutes the headlights automatically shut off.
2. The horn will sound intermittently for 3 minutes.

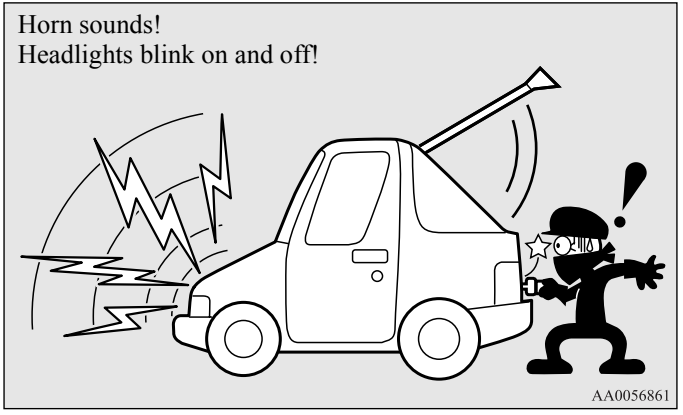


NOTE

- The alarm will continue to operate for 3 minutes. At the end of that period, the alarm will automatically shut off to save battery power. The system will then be rearmed until the proper disarming step is taken.

### *Alarm deactivation*

The alarm can be deactivated in the following ways.

- By using the remote control transmitter to lock or unlock the door, the rear hatch or trunk lid.
- Turn the ignition key to the “ON” position.

## Disarmed stage

N00510500061

The system will be disarmed when either of the following steps are taken:

1. All doors and the rear hatch or trunk lid are unlocked by the remote control transmitter.
2. The ignition key is turned to the “ACC” or “ON” position.
3. If the UNLOCK button is pressed when all doors and the rear hatch or trunk lid are closed and no door is opened within approximately 30 seconds, re-arming will automatically occur.

Disarm…by remote control transmitter

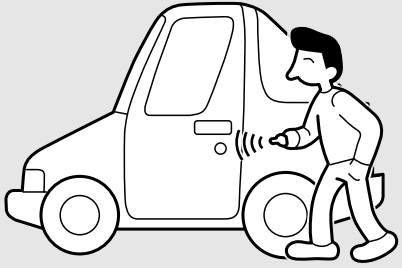

AA0070940

NOTE

- Once the system has been disarmed, it cannot be rearmed except by repeating the arming procedure.

## Testing the theft-alarm system

N00510600059

Use the following procedure to test the system:

1. Lower the driver’s window.
2. Arm the system as explained in “Armed stage”.
3. Make sure that the theft-alarm indicator comes on and flash in approximately 20 seconds.
4. Wait a few seconds and then unlock the driver’s side door by using the inside door lock knob and opening the door.
5. Check to be sure that the horn sounds intermittently and the headlights blink on and off when the door is opened.
6. Disarm the system by unlocking all doors and the rear hatch or trunk lid by the remote control transmitter or using the key.

NOTE

- To make sure the alarm sounds when the engine hood is opened, open the engine hood by using the engine hood release lever when the system is in the “armed” stage.

# Power windows

N00510800338

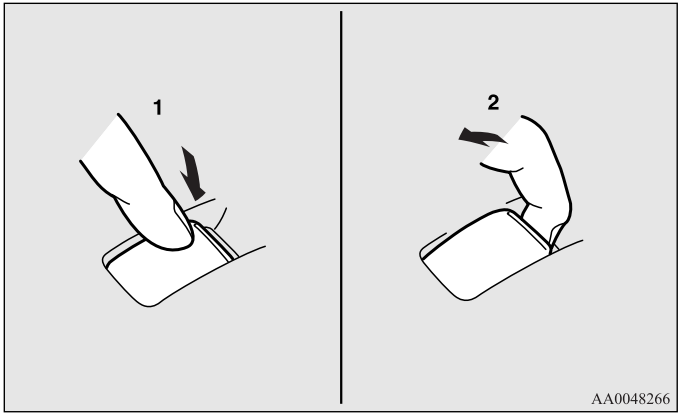


1- Open (down)
2- Close (up)

In an ECLIPSE SPYDER, operating a power window switch causes the door window and quarter window to move together. However, within about 4 inches from the fully closed position, only the door window moves without accompanying the quarter window.

NOTE

- Depending on the position of the door window, the door window may briefly stop then continue moving before reaching the fully closed position.
- Never try to operate the main switch and sub switch in different directions at the same time. This will freeze the window in position.
- Operating the power windows repeatedly with the engine stopped will run down the battery. Use the window switches only while the engine is running.

**⚠ WARNING**

- **Before operating the power windows, make sure that nothing can be trapped (head, hands, fingers, etc.) in the window.**
- **Never leave the vehicle without removing the key.**
- **Never leave a child alone in the vehicle.**

NOTE

- If a power window stops moving during operation due to a drop in the battery voltage, it may not automatically return to normal operability when the battery has been charged. In this event, take the following corrective action:
  With the door closed, pull up the power window switch to fully close the window. After releasing the switch, pull it up again for approximately 1 second. Normal opening and closing of the window will then be possible.

## Main switch

The main switch located on the driver's door can be used to operate all the windows.

The windows will move while the switch is pressed and stop when the switch is released.

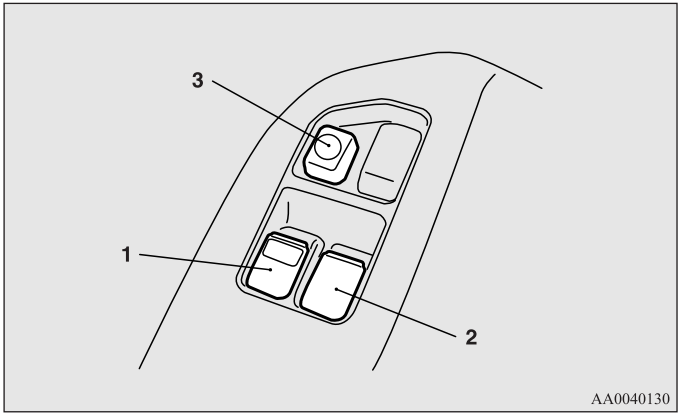


1- Driver's door window switch (ECLIPSE)
Driver's door window and driver's side quarter window switch (ECLIPSE SPYDER)
(To open the window all the way, you do not need to hold the switch down for the entire time.)
2- Passenger door window switch (ECLIPSE)
Passenger door window switch and passenger's side quarter window switch (ECLIPSE SPYDER)
3- Window lock switch

## Sub switch

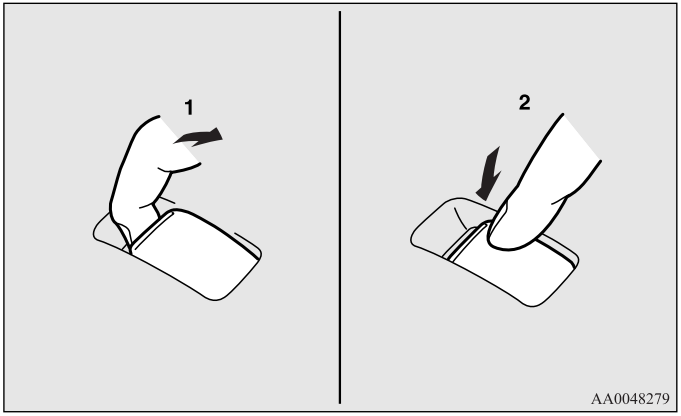


1- Close
2- Open

A sub switch can be used for its own passenger side window, unless the driver's window lock switch is activated.

## Timer function

The power windows can be run up or down when the ignition key is in the "ON" position.
The windows can be opened or closed for a 30 second period after the ignition key is turned to the "ACC" or "LOCK" position. However, once the driver's door or the passenger's door is opened, the power windows cannot be operated.

## Lock switch

N00549000101

When this switch is in the lock mode, the main switch for passenger's side window and the sub switch cannot be used to open or close the window, and the main switch will open or close only the driver's side window. To unlock the switch, press it again.

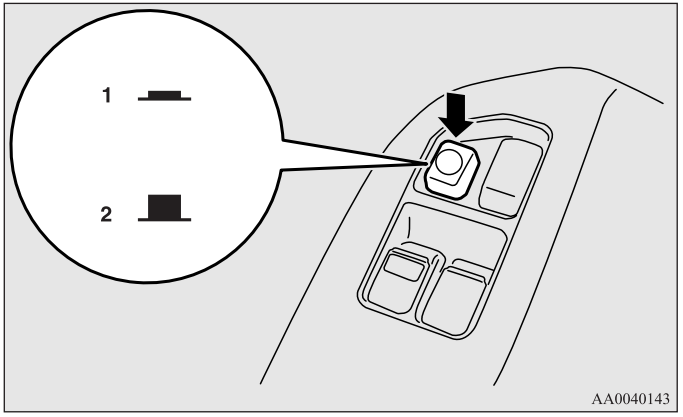


1- Lock
2- Unlock

**⚠ WARNING**

- **Before driving with a child in the vehicle, be sure to lock the window switch to make it inoperative. Children tampering with the switch could easily trap their hands or heads in the window.**

# *Sunroof (ECLIPSE only, if so equipped)*

N00511000571

The sunroof can be opened and closed with the ignition key in the "ON" position.

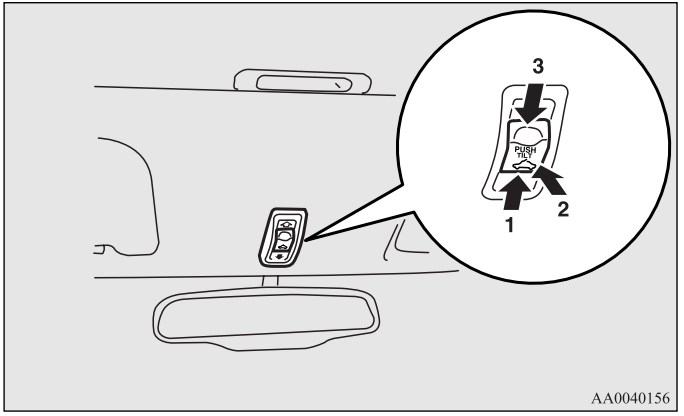


## To open

Press the switch (1), the sunroof automatically opens and the sunroof will stop several centimeters this side of the full open position. Press the switch (1) again, and the sunroof will be fully open.
To stop the moving sunroof, press the switch.

NOTE

- The sunroof stops just before reaching the fully open position. If the vehicle is driven with the sunroof in this position, wind buffeting is lower than with the sunroof fully open.

## To close
The sunroof closes while the switch (3) is pressed.

## To tilt up
When the switch (2) is pressed, the rear edge of sunroof raises for ventilation.

## To tilt down
Press the switch (3).

## Timer function
The sunroof can be operated when the ignition key is in the "ON" position. The sunroof can be opened or closed for a 30 seconds period after the ignition switch is turned off. However, once the driver's door or the passenger's door is opened, the sunroof cannot be operated until the ignition switch is turned on again.

## Sunshade
The sunshade can be opened or closed manually while the sunroof is closed.
When the sunroof is opened, the sunshade will also open automatically.

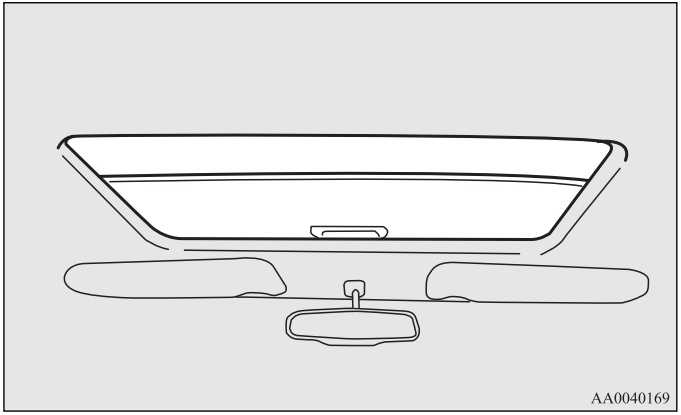


**⚠ CAUTION**

- **Do not attempt to close the sunshade when the sunroof is opened.**
- **Be careful that hands are not trapped when closing the sunshade.**

NOTE
- Be sure to tilt down the sunroof before closing the sunshade.

**⚠ WARNING**

- **Do not stick your head, hands or anything else in the sunroof opening.**
- **Before operating the sunroof, make sure that nothing can be trapped (head, hands, fingers, etc.).**
- **Never leave a child (or other person who is incapable of safely operating the sunroof switch) alone in the vehicle.**

NOTE

- When leaving the vehicle unattended, be sure to close the sunroof and remove the ignition key.
- Do not try to operate the sunroof if it is frozen closed (after snowfall or during extreme cold).
- Do not sit on or place heavy luggage on the sunroof or roof opening edge.
- Do not apply any force that may cause damage to the sunroof.
- Release the switch when the sunroof has reached a completely open or completely closed position.
- If the sunroof does not operate when the sunroof switch is operated, release the switch and check whether something is trapped by the sunroof. If nothing is trapped, have the sunroof checked at an authorized Mitsubishi Motors dealer.
- Be careful when tilting up the sunroof if a ski carrier or a roof carrier is installed. Depending on the model of ski carrier or roof carrier, the sunroof may contact the carrier when the sunroof is tilted up.
- Be sure to close the sunroof completely when washing the vehicle or when leaving the vehicle.
- Do not put any wax on the weatherstrip (black rubber) around the sunroof opening. If it is waxed, the weatherstrip cannot maintain a weatherproof seal with the sunroof.
- After washing the vehicle or after it has rained, wipe off any water that is on the sunroof before operating it.
- Operating the sunroof repeatedly with the engine turned off will run down the battery. Operate the sunroof only while the engine is running.

## *Electric convertible top (ECLIPSE SPYDER)*

N00511100048

The electric convertible top can be opened and closed using the dash mounted control switches.

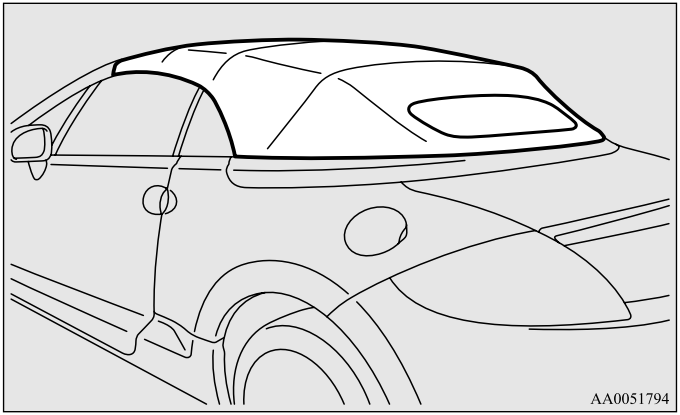


**⚠ WARNING**

- **While the vehicle is being driven, passengers must not stand up in the vehicle, sit on the tonneau panel, or put any part of their bodies out of the vehicle. Passengers failing to observe this caution may suffer serious injuries in the event of hard braking or a collision.**
- **Never attempt to operate the electric convertible top while the vehicle is in motion.**
- **Never leave a child alone in the vehicle.**

**⚠ WARNING**

- **Before operating the electric convertible top, inform other vehicle occupants that you are going to cause the top to move and have them exercise caution. Otherwise, sudden opening or closing of the windows may cause injuries.**
- **While the top is being opened or closed, vehicle occupants must keep their heads, necks, and other body parts away from the power windows and other moving components and away from the windshield top edge on which the top is retained.**
- **If child restraint systems are mounted in the rear seat or children are seated in the rear seat, remove the child from the vehicle before operating the electric convertible top.**

**⚠ CAUTION**

- **When the top is completely lowered, keep the rear window defogger turned off to avoid damage to the top.**
- **Secure all loose objects inside the vehicle when driving with the top down.**
- **Never drive the vehicle with the top in a partly open/partly closed state. If the top is neither fully open nor fully closed when the vehicle is driven, there is a risk of serious injuries and a risk that the top will be caught by the wind, resulting in an accident.**
- **Do not open or close the top in a strong wind. The top may not work normally in a strong wind.**

NOTE
- The opening or closing operation of the top cannot be performed when the vehicle is in motion.
- For information about the cleaning of the top, refer to the section “Convertible top” on page 7-77.
- When leaving the vehicle unattended, be sure to close the top and remove the ignition key.
- To avoid damage, do not sit or place luggage or any heavy objects on the top itself, or the area around it.
- Make sure nothing is in the top storage area (top and behind the rear seats) when raising or lowering the top. Even a small article may interfere with the operation of the top and may damage the top or cause it to malfunction.
- Always be sure the top is completely dry before it is lowered. Lowering the top while wet or damp may cause interior water damage, water stains or mildew of the top. It can also cause the top to deteriorate and shrink.
- Never operate the top when temperatures are 32 °F (0 °C) or below. The fabric of the top may be damaged. If necessary, allow the vehicle to set for a while in a heated garage prior to operating the convertible top mechanism.
- A roof top or luggage carrier of any type or design MUST NOT be used on the ECLIPSE SPYDER’s top. This includes, but is not limited to ski, bicycle or luggage racks. Damage to the top may result.
- Before opening or closing the top, make sure there are no obstructions above the vehicle. For opening and closing of the top, there must be upward clearance of approximately 6.6 feet (2 m) as measured from the ground.
- The trunk lid cannot be opened until opening or closing of the electric convertible top is complete.
- The power windows cannot be operated until opening or closing of the electric convertible top is complete.

## Normal operation

N00504900015

The top can be opened and closed using the top switches.

### *Requirements for operation*

N00505000026

The top can be opened and closed when the following requirements are all satisfied.
- The ambient temperature is 32 °F (0 °C) or higher.
- The vehicle is stationary.
- The ignition switch is in the “ON” position.
- The trunk lid is closed.
- The latch handles are unlocked.

NOTE
- If either of the top switches is operated when the requirements for operation are not all satisfied, the operation indicator lamp will flash slowly (approximately one flash per second) and a tone will sound intermittently and rapidly (approximately three times per second) to indicate that opening/closing operation is not possible.
  If you are not able to perform opening/closing operation when the requirements are all satisfied, have the vehicle inspected by an authorized Mitsubishi Motors dealer.

### *Top switches*

N00505100030

The top can be opened and closed using the switches. The top moves only while a switch is being pushed.

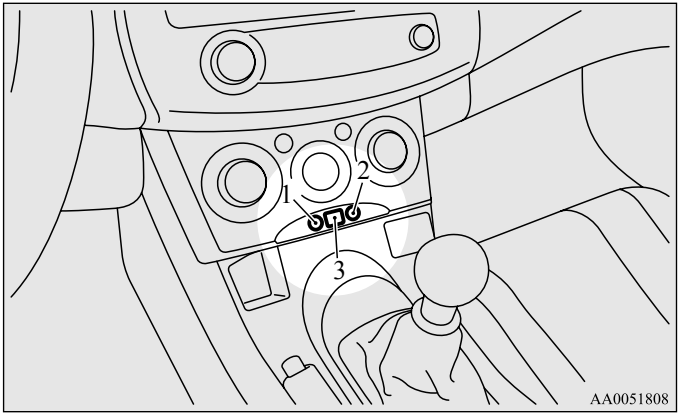


1- OPEN switch
2- CLOSE switch
3- Operation indicator lamp

NOTE

- If the OPEN switch and CLOSE switch are both pushed at the same time, the operation indicator lamp will flash slowly (approximately one flashes per second) and a tone will sound intermittently and rapidly (approximately three per second) to indicate that the top is not going to work. To operate the top, release the switches and push the relevant switch again.
- If the switches are continuously pushed one after the other, a protection circuit may operate, making the electric convertible top temporarily inoperable. In this event, the operation indicator lamp will flash slowly (approximately one flash per second) and a tone will sound intermittently (approximately three times per second). Wait about 7 minutes, then try operating the electric convertible top again.

### *To open the top*

N00505200031

1. Without obstructing traffic, stop the vehicle on a level, firm surface where the top can be safely operated.
2. Securely apply the parking brake. If the vehicle has an automatic transaxle, place the selector lever in the “P” (PARK) position. If the vehicle has a manual transaxle, place the gearshift lever in the “N” (Neutral) position.

NOTE

- The top can be operated with the selector lever of an automatic transaxle in a position other than “P” (PARK) and with the gearshift lever of a manual transaxle in a position other than “N” (Neutral). For safety, however, you should place the selector lever or gearshift lever (as relevant) in the indicated position and apply the parking brake.

3. Start the engine.

NOTE

- Operating the top without the engine running can drain the battery. To avoid a dead battery, operate the top with the engine running.

4. Pull down both sun visors.

5. Push the left and right release buttons (A) to unlock the latch handles (B) and cause them to slightly rise.

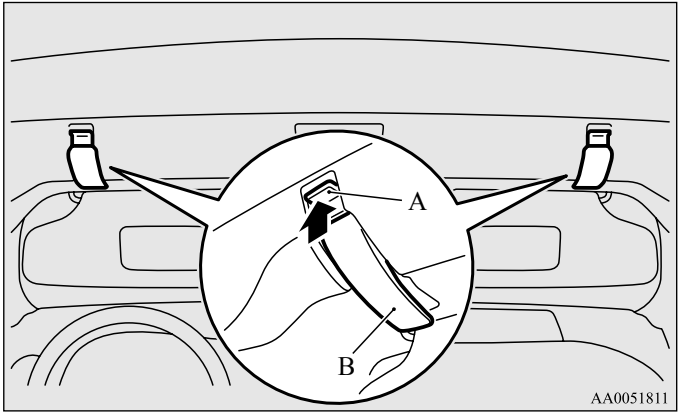


6. Pull the latch handles (B) toward you until they lock in position.

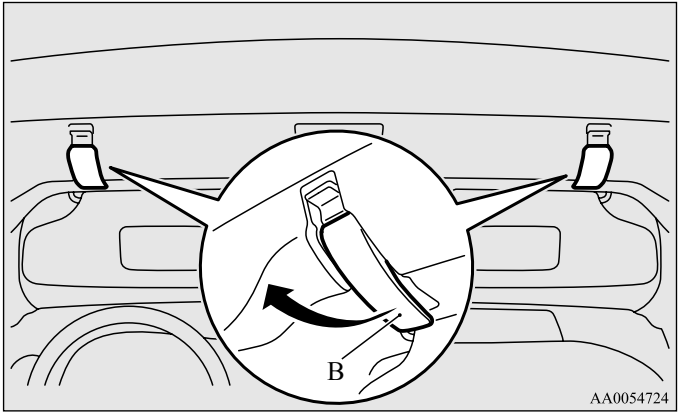


NOTE

- Make sure the latch handles (B) are securely locked in place. Operating the electric convertible top without first locking the latch handles in position could cause the electric convertible top to malfunction.
- If you pull the driver's-side latch handle (B) while listening to the audio system, an audible beep will sound and the audio system's sound equalization will change to settings that are optimized for operation with the electric convertible top open.

7. When you push the OPEN switch, a tone will sound and the top will start to operate. Keep pressing the OPEN switch until the top is fully open. Refer to “Top switches” on page 3-33.

NOTE

- When the top reaches the fully open position, a tone sounds once and the operation indicator lamp goes off to show that the operation is complete.

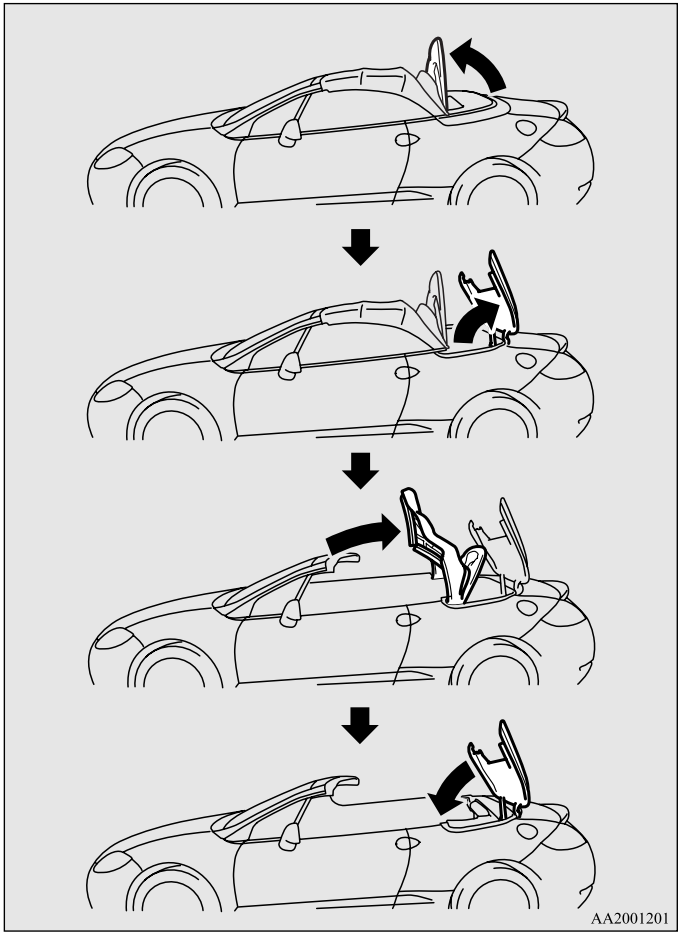

**⚠ WARNING**

- **To avoid injury, keep hands and head away from the top while it is operating.**
- **To prevent uncontrolled movement of the top, always keep the vehicle engine running when operating the top.**

NOTE

- During operation of the top, if the switch is released before the top has fully closed or retracted, the top will stop moving and the operation indicator lamp will flash slowly (approximately one flash per second).
- If operation of the top is stopped for more than 4 minutes before it has fully closed or retracted, the top (depending on its location) will slowly move toward the closed or retracted position. During this time, the operation indicator lamp will flash rapidly (approximately two flashes per second) and the top switch will be inoperable. When the operation indicator lamp stops flashing (approximately 2 minutes later), the top switch will again become operable.
- The operation indicator lamp is illuminated while the top is moving.
- When the OPEN switch is pushed, the door windows and quarter windows automatically open fully before the top starts moving.
- If the CLOSE switch is pushed when the top is fully closed, the operation indicator lamp flashes slowly (approximately one flash per second) and a tone sounds intermittently and rapidly (approximately three times per second) to indicate that the top is not going to move.



### *To close the top*

N00505300045

1. When you push the CLOSE switch, a tone will sound and the top will start to operate. Keep pressing the CLOSE switch until the top is fully closed. Refer to “Top switches” on page 3-33.

NOTE

- When the top reaches the fully closed position, a tone sounds once and the operation indicator lamp goes off to show that the operation is complete.

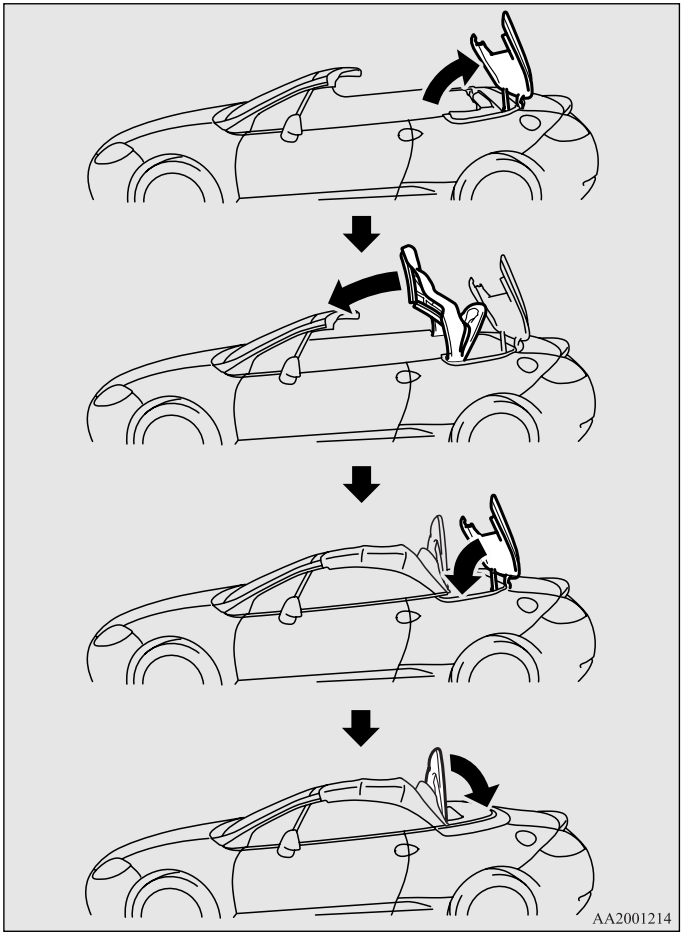


**WARNING**

- **To avoid injury, keep hands and head away from the top while it is operating.**
- **To prevent uncontrolled movement of the top, always keep the vehicle engine running when operating the top.**

NOTE

- During operation of the top, if the switch is released before the top has fully closed or retracted, the top will stop moving and the operation indicator lamp will flash slowly (approximately one flash per second).
- If operation of the top is stopped for more than 4 minutes before it has fully closed or retracted, the top (depending on its location) will slowly move toward the closed or retracted position. During this time, the operation indicator lamp will flash rapidly (approximately two flashes per second) and the top switch will be inoperable. When the operation indicator lamp stops flashing (approximately 2 minutes later), the top switch will again become operable.
- The operation indicator lamp is illuminated while the top is moving.
- When the CLOSE switch is pushed, the door windows and quarter windows automatically open fully before the top starts moving.
- If the OPEN switch is pushed when the top is fully open, the operation indicator lamp flashes slowly (approximately one flash per second) and a tone sounds intermittently and rapidly (approximately three times per second) to indicate that the top is not going to move.

2. Pull down both sun visors.
3. Firmly return the latch handles (B) until they click and lock into position. Return the sun visors to their original positions.

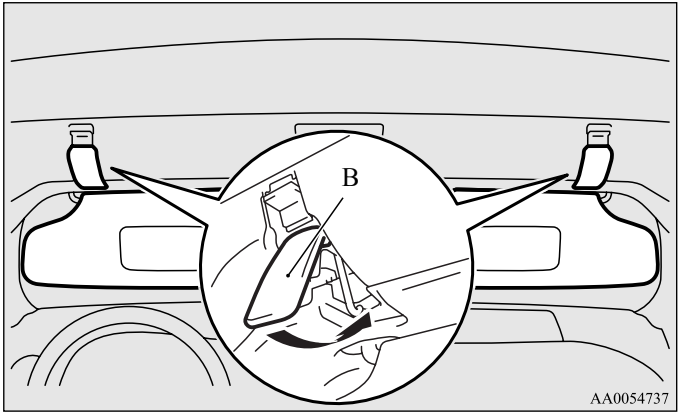


NOTE
- If you lock the driver's-side latch handle (B) while listening to the audio system, an audible beep will sound and the audio system's sound equalization will change to settings that are optimized for operation with the electric convertible top closed.

**⚠ WARNING**
- **Make sure the latch handles (B) are securely locked in place. Driving the vehicle without first locking the latch handles in position could cause the top to open, resulting in a serious accident.**

### *Part-open warning buzzer*

N00505400033

If you start to drive the vehicle with the top partly open, the operation indicator lamp will flash rapidly (approximately two flashes per second) and a tone will sound for approximately 5 seconds to indicate that the top is partly open. Stop the vehicle in a safe place and completely open or close the top.

### *If the electric convertible top malfunctions*

N00505500018

If the electric convertible top malfunctions, the operation indicator lamp will flash rapidly (approximately two flashes per second) and a tone will sound intermittently and slowly (approximately once per second) to indicate the system fault when either top switch is operated. If the operation indicator lamp does not go off when a period of 10 minutes or longer has elapsed, have the vehicle inspected by an authorized Mitsubishi Motors dealer.

## Wind deflector (if so equipped)

N00505800024

The wind deflector reduces turbulent airflow inside the vehicle for greater comfort when driving with the electric convertible top open.

**⚠ WARNING**

- **The two rear seats must not be occupied when the wind deflector is installed.**
- **Never place any object on the wind deflector. An object on the wind deflector could cause damage to the deflector and/or the vehicle. It could be blown off when the vehicle is in motion.**
- **Adjust the front passenger's seat so that the seat does not come in contact with the wind deflector to ensure that the front passenger's seat weight sensor can correctly sense the weight being applied to the seat.**

**⚠ CAUTION**

- **When you adjust the front seats when the wind deflector is installed, be careful not to push the backrests into the wind deflector when reclining the seats or when moving them back.**

NOTE

- The optional wind deflector is stored in a bag in the trunk. To prevent damage it should always be kept in this bag when not installed. Do not place heavy objects (e.g. crates or heavy shopping bags) on top of the wind deflector.

### *Installing the wind deflector*

1. Open half of the bottom frame (A) and half of the top frame (B) of the wind deflector as shown by the arrows.

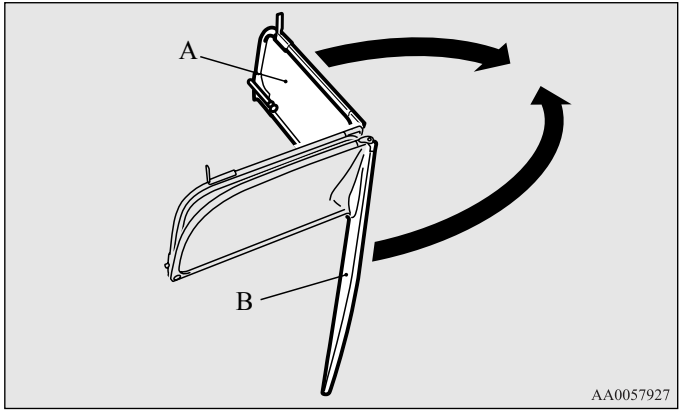

2. While pushing the slide (C) in the direction of the arrow, install the top and bottom frames, then release the slide (C). Make sure both of the frames are securely engaged.

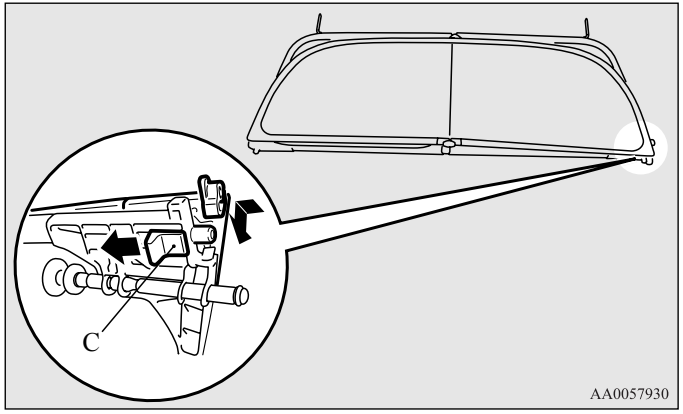


3. Move the locking pin (D) to the position (2).

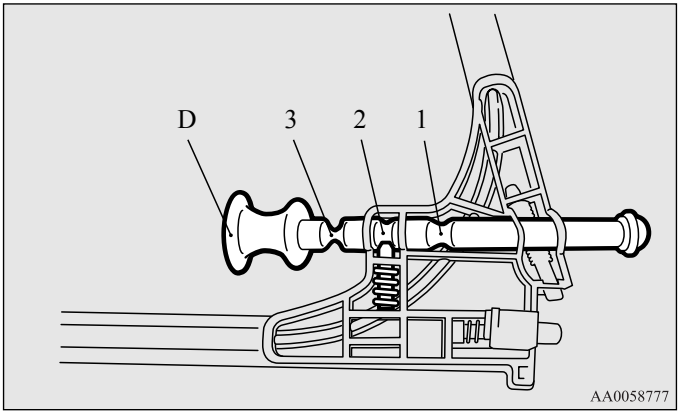


1- Stowed position
2- Installation position
3- Locked position

4. From inside the vehicle, insert the two retainer pegs (E) all the way into mountings provided (F).

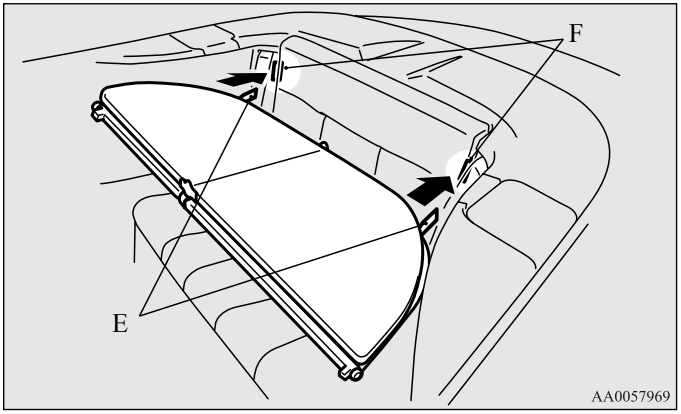


5. Align the locking pins (D) with the holes (G) in the vehicle. Slide the locking pins (D) toward the outside and insert them in the holes to retain the wind deflector. Make sure that the wind deflector is securely installed in the vehicle.

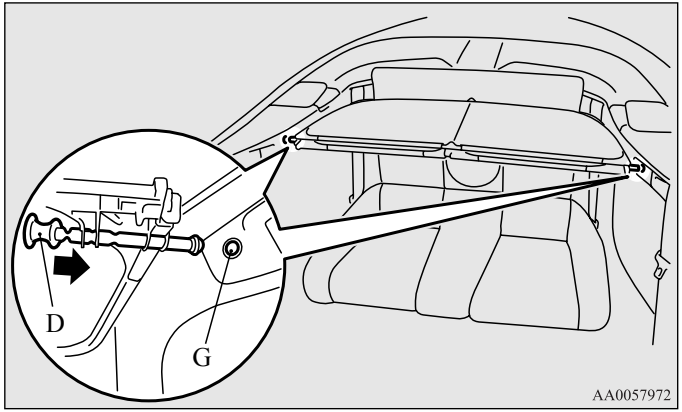

NOTE

- When you insert the locking pins (D) into the holes (G), they may be stiff. If this happens, adjust each locking pin (D) to a length that enables secure retention of the wind deflector. To adjust the length of each locking pin (D), turn the end of the locking pin using a screwdriver.

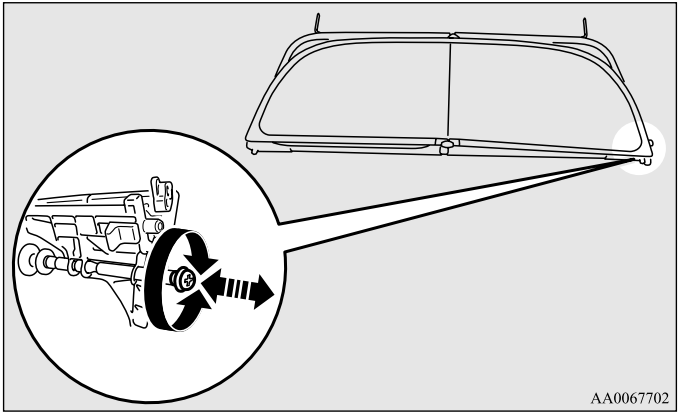


6. Raise the top frame to the full upright position as illustrated.

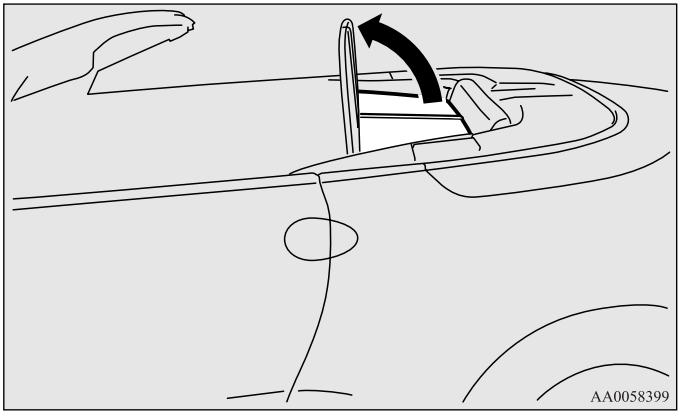

### *Removing the wind deflector*

Trying to remove the wind deflector improperly will cause damage or destruction.

NOTE

- Follow the removal procedure exactly to avoid damage or destruction of the wind deflector.

1. Fold down the top of the wind deflector.

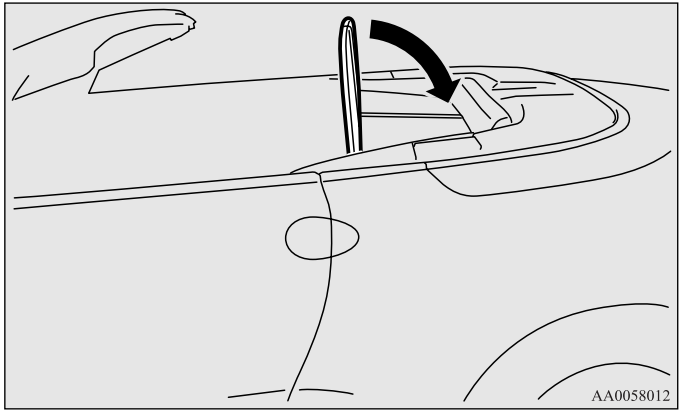


2. Slide the locking pins (D) inward to remove them from the holes (G) in the vehicle.

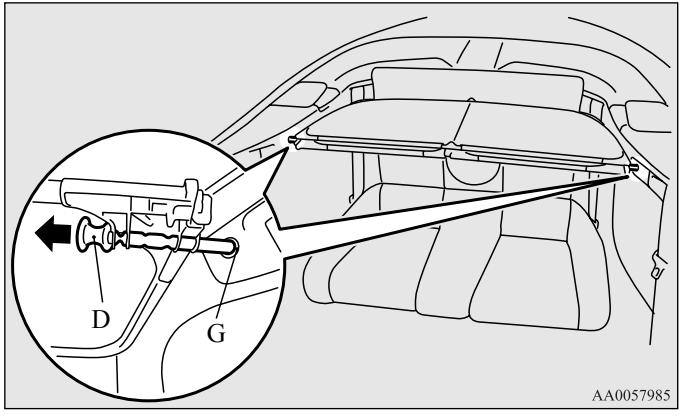


3. Slightly slide the wind deflector forward to clear the upholstery and then lift the deflector out of the vehicle.

4. Slide the slide (C) toward the middle to unlock the bottom frame (A) and the top frame (B).

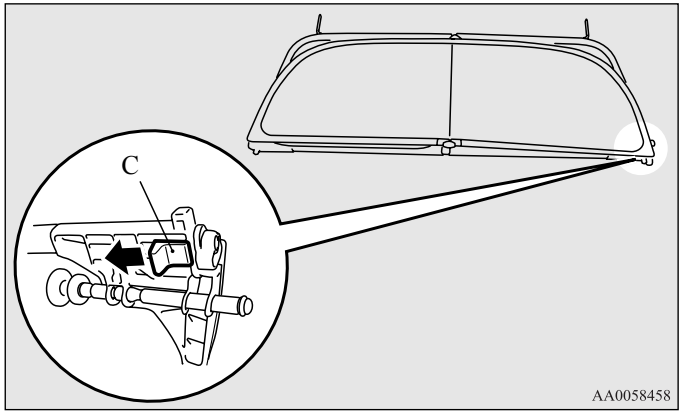


5. Move the locking pin (D) to the position (1).

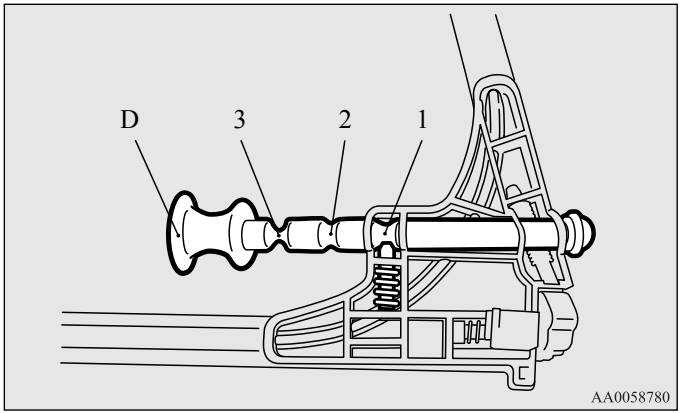


1- Stowed position
2- Installation position
3- Locked position

6. Fold the split halves forward in the direction of bold arrows.

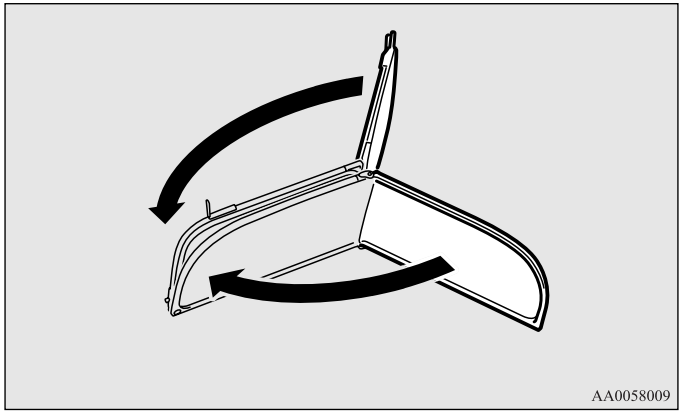


## Operate the electric convertible top manually

N00505600019

If the top fails to close by means of switch operation, check whether the requirements for operation are all satisfied. Refer to “Requirements for operation” on page 3-32. If the requirements are all satisfied but the top is failing to close by means of switch operation, you can close the top by hand.

**⚠ CAUTION**

- **Do not manually close the top when there is a strong wind.**

NOTE

- The top cannot be opened by hand. If the top fails to open by means of switch operation, have the vehicle inspected by an authorized Mitsubishi Motors dealer.
- For manual closing of the electric convertible top, it is advisable for two people to work together. In particular, the task of folding up the top and extending it forward is much easier for two people than for one. If no assistance is available, you may find it easiest to position yourself on the rear seat and lift up the electric convertible top by grasping it at the center.
- When the top has been closed by hand, it can become inoperable (neither openable nor closable) by means of switch operation. After closing the top by hand, be sure to have the vehicle inspected by an authorized Mitsubishi Motors dealer.

### *To close the top by manually*

N00505700036

1. Without obstructing traffic, stop the vehicle on a level, firm surface where you can work safely.
2. Securely apply the parking brake. If the vehicle has an automatic transaxle, place the selector lever in the “P” (PARK) position. If the vehicle has a manual transaxle, place the gearshift lever in the 1st position.
3. Completely open the power windows.
4. Place the ignition switch in the OFF position.
5. Pull down both sun visors.
6. Slide the front seats fully forward. Tip the seatbacks forward. Refer to “To adjust the seat forward or backward” on page 2-5 and “To adjust the seatback” on page 2-6.
7. Remove the woofer cover (A) in the center of the rear seat by gently pulling at its side edges.

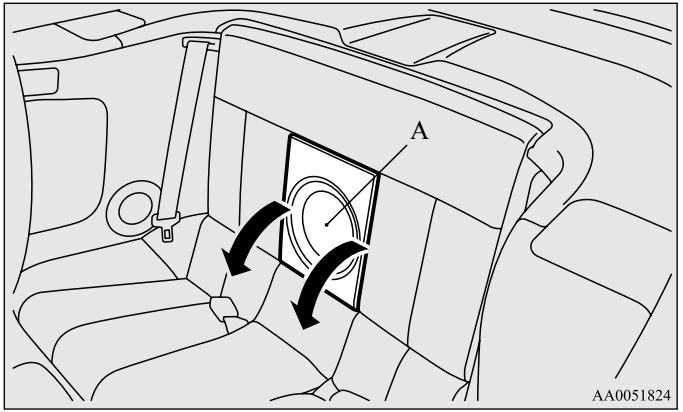


8. Remove the emergency tool (B) that is mounted in the rear seat behind the woofer cover.

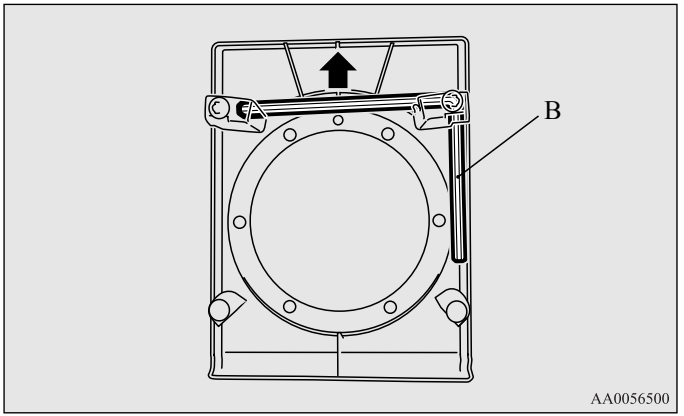

9. Insert the stamped end of the emergency tool stamped with a part number into the specified location (C).

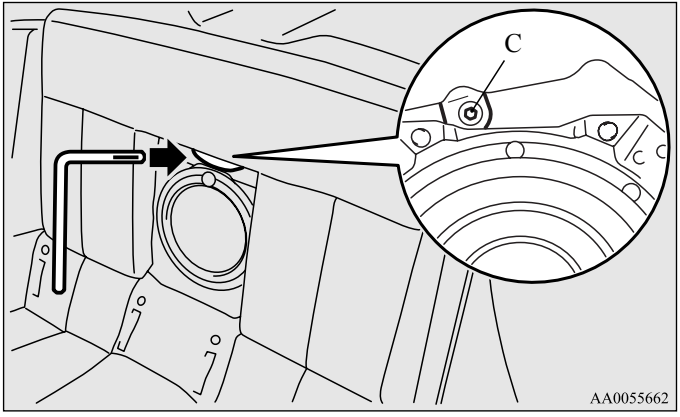


10. Slowly move the emergency tool in the direction of the arrow to unlock the tonneau panel.

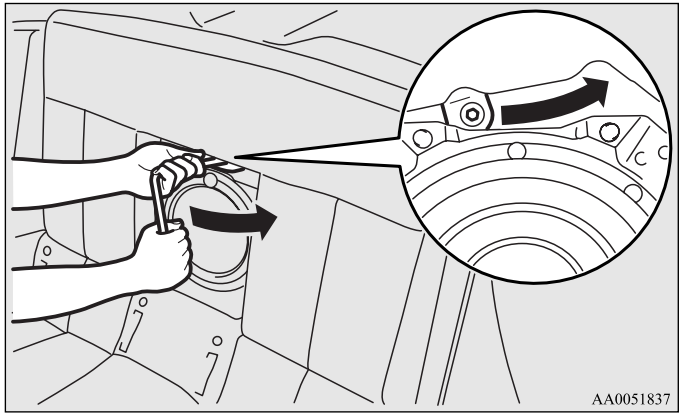

11. Step out of the vehicle. Open the tonneau panel. Insert the non-stamped end of the emergency tool into the specified location in the tonneau hinge (D) to hold the tonneau panel in place.

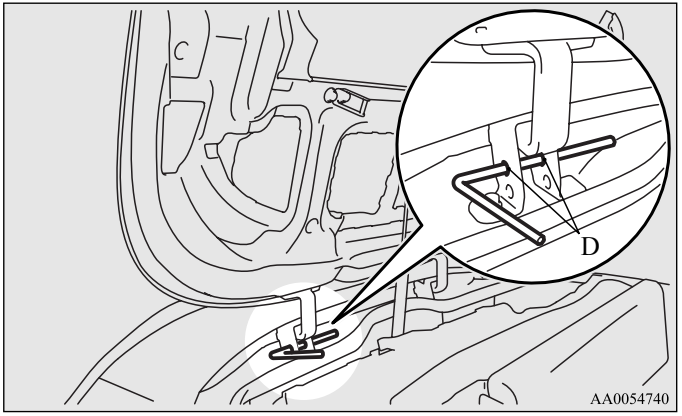


**⚠ CAUTION**

- **Leave the emergency tool inserted in the specified location (D) in the tonneau hinge. Removing the emergency tool while the work is in progress could cause the tonneau panel to fall down, resulting in damage or injury.**

NOTE

- If you were to insert the stamped end of the emergency tool into the tonneau hinge, the emergency tool would interfere with the top when you lifted the top.

12. Step into the vehicle. Firmly grasp the top and slowly raise it.

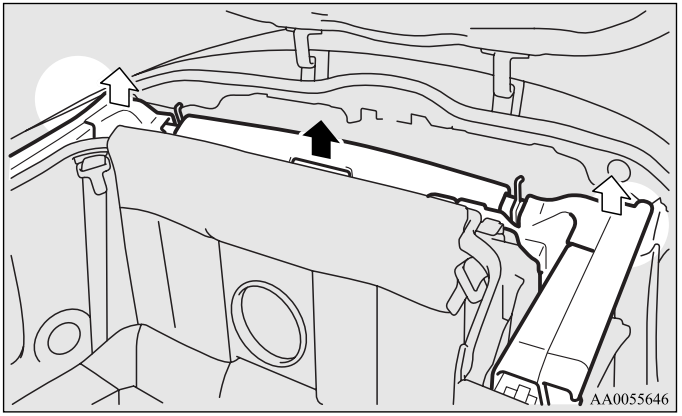


⬆ : One person working alone

⇧ : Two people working together

13. Slowly close the top until it touches the top edge of the windshield.

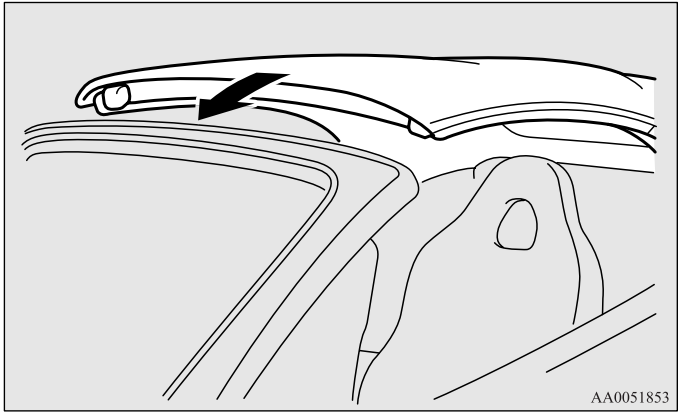


**CAUTION**

- **Be careful not to trap your hands and fingers when closing the top.**

14. With the top closed, return the latch handles (E) until they lock into position. Return the sun visors to their original positions.

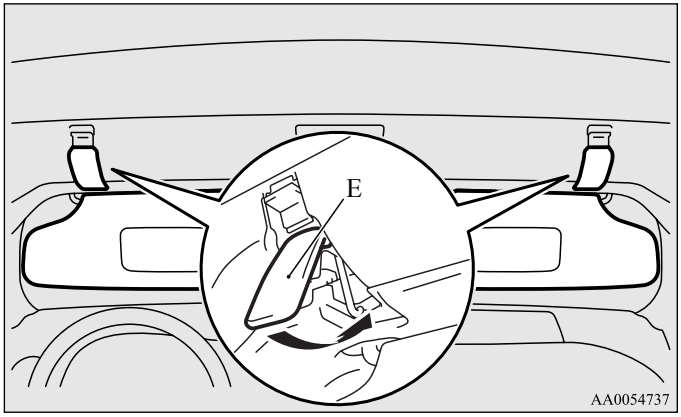


**WARNING**

- **Make sure the latch handles (E) are securely locked in place. Driving the vehicle without first locking the latch handles in position could cause the top to open, resulting in a serious accident.**

15. Step out of the vehicle. Remove the strap (F) that retains the top.

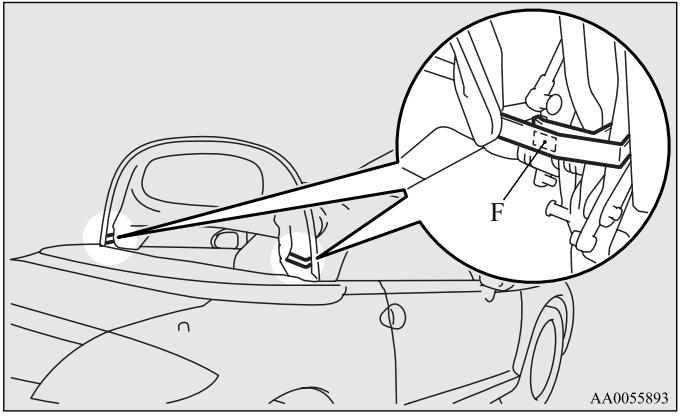


16. Open the cover (G) on the passenger-seat side of the space in which the top was stowed.

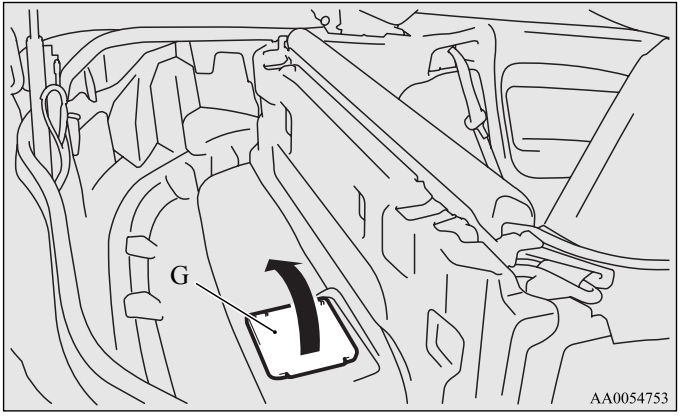

17. While holding the rear window, turn the handle of the valve (H) counterclockwise to release the pressure in the valve. At this time, turn the handle until it can be turned no further.

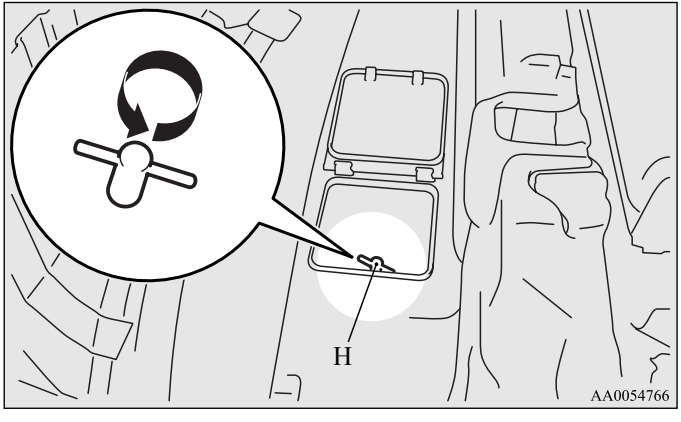


**⚠ CAUTION**

- **Be sure to hold the rear window while working. Otherwise, it may, depending on its position, fall down when you loosen the valve.**

NOTE
- Do not operate either top switch after loosening the valve.

18. While retaining the tonneau panel and the rear glass, remove the emergency tool from the specified insertion location in the tonneau hinge and close the tonneau panel.

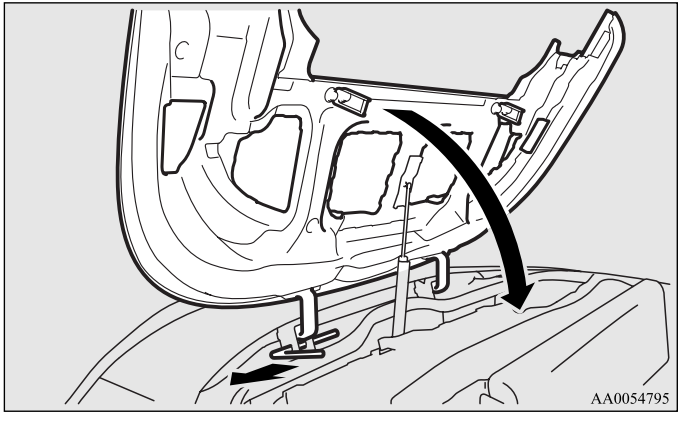


**⚠ CAUTION**

- **Be sure to hold the rear window while working. Otherwise, it may, depending on its position, fall down.**

NOTE
- When you close the tonneau panel, hydraulic pressure may make it stiff. Slowly press the tonneau panel downward.

19. Step into the vehicle. Insert the stamped end of the emergency tool into the specified location (C). Slowly move the emergency tool in the direction of the arrow to lock the tonneau panel.

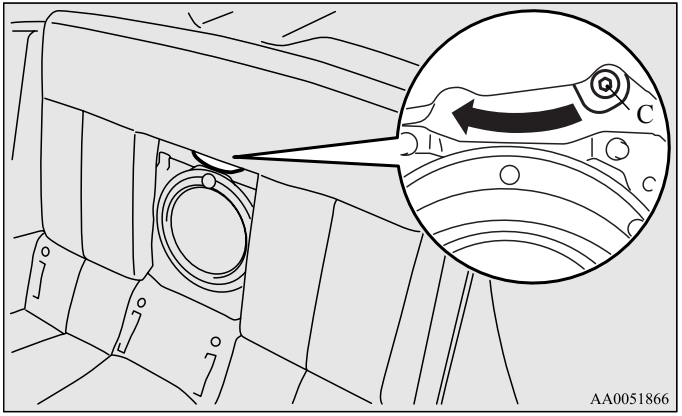


20. Close the rear window.

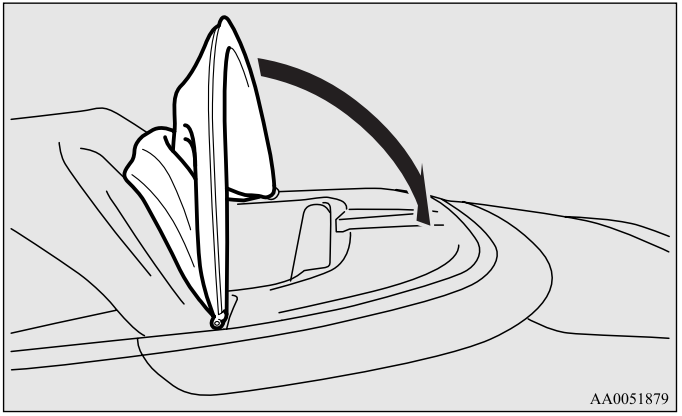


21. Pulling up the lining, remove the clips (I).

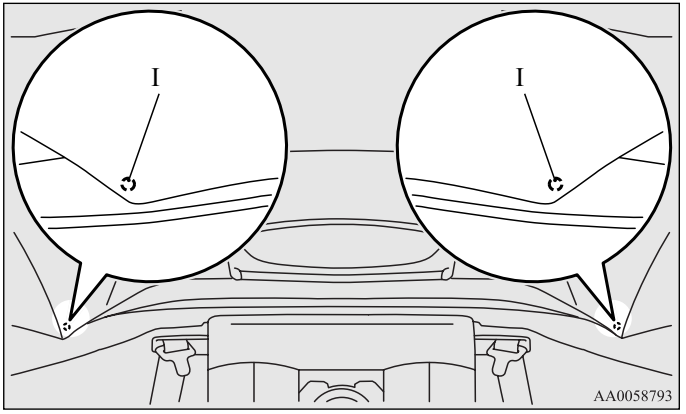

22. Lift up the cover on each side. Locate the holes (J) on each side into which you will insert the emergency tool.

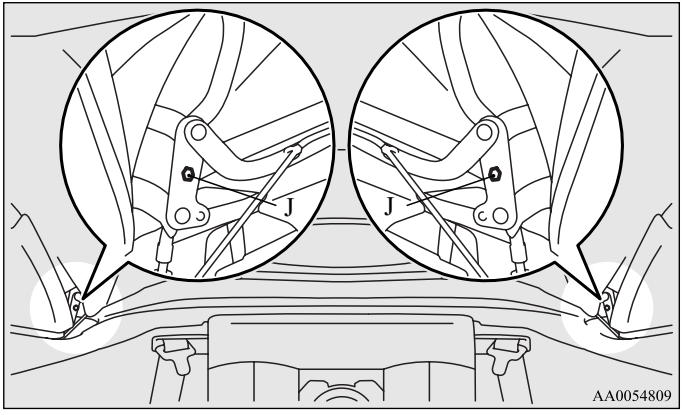


23. Insert the stamped end of the emergency tool into the holes (J). Push the emergency tool upward in the direction of the arrow to secure the rear window.
Do this on both sides.

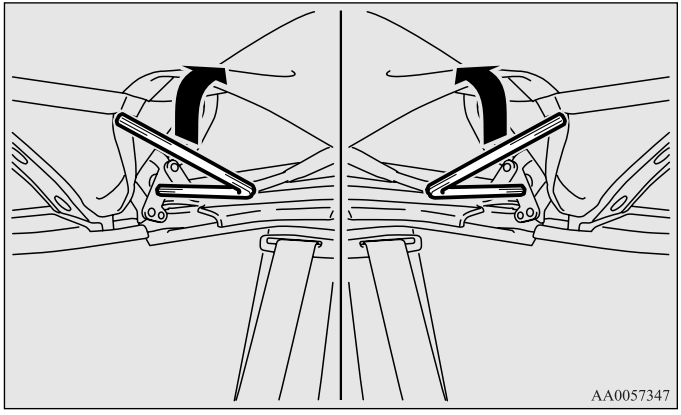


24. Return the emergency tool to its original position. Install the speaker cover.

NOTE
- When the work is complete, have the vehicle inspected by an authorized Mitsubishi Motors dealer as soon as possible.

# *Parking brake*

N00511400168

To park the vehicle, first bring it to a complete stop, fully engage the parking brake, and then move the gearshift lever to 1st (on a uphill) or “R” (Reverse) (on a downhill) position, for vehicles with a manual transaxle or set the selector lever to “P” (PARK) position on automatic transaxle vehicles.

## To apply

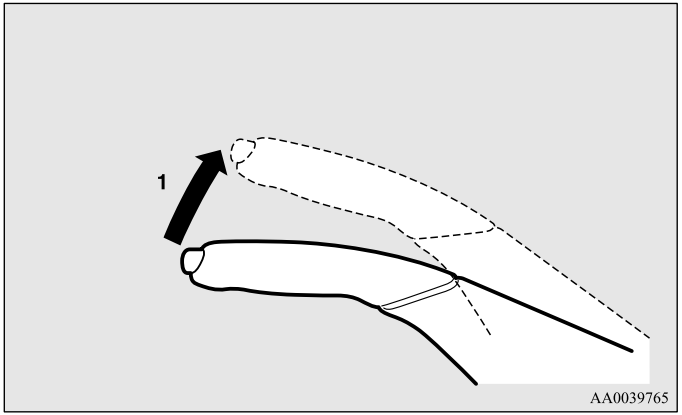


1- Pull the lever up without pushing the button at the end of hand grip.
When the parking brake is set and the ignition key is in the “ON” position, the brake warning light in the instrument cluster will come on.

Before driving, be sure to release the parking brake.

## To release

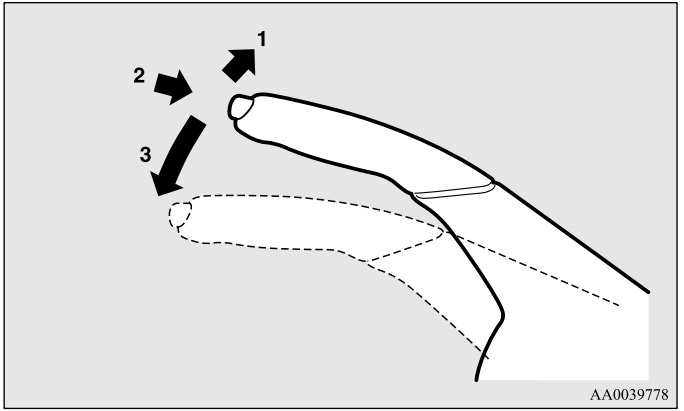


1- Pull the lever up slightly.
2- Press and hold the button at the end of the hand grip.
3- Push the lever downward.

When parking on a hill, apply the parking brake and turn the front wheels toward the curb on a downhill grade, away from the curb on an uphill grade.

**⚠ *CAUTION***

- **Before driving, be sure that the parking brake is fully released and brake warning light is off.**
  **If a vehicle is driven without releasing the parking brake, the brakes will be overheated, resulting in ineffective braking and possible brake failure.**

## *Steering wheel tilt lock lever*

N00511500130

To adjust the steering wheel height, release the tilt lock lever while holding the steering wheel by hand, and raise or lower the steering wheel to the desired height.
After adjustment, securely lock the lever by pulling it upward.

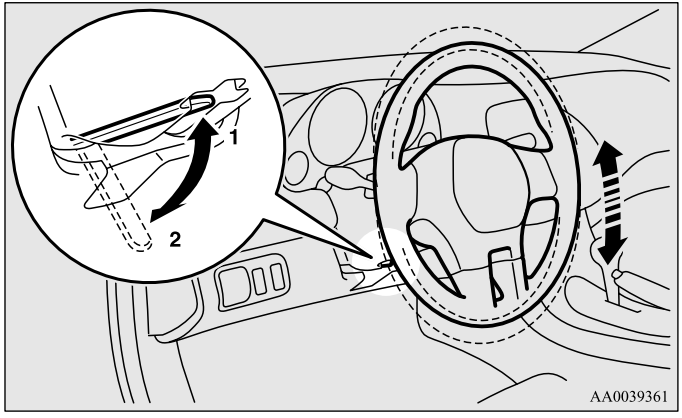


1- Locked
2- Released

**⚠ *WARNING***

- **After adjusting, make sure the lock lever is secured in the locked (1) position.**
- **Do not attempt to adjust the steering wheel while driving. This can be dangerous.**
- **When releasing the tilt lock lever {moving it to the position (2)}, be sure to hold the steering wheel firmly. Otherwise, the steering wheel may slip down too suddenly.**

## *Inside rearview mirror*

N00511600258

Adjust the inside rearview mirror only after making any seat adjustments so as to have a clear view to the rear of the vehicle.

**⚠ *WARNING***

- **Do not attempt to adjust the inside rearview mirror while driving. This can be dangerous.**
  **Be sure to adjust the mirror before driving.**

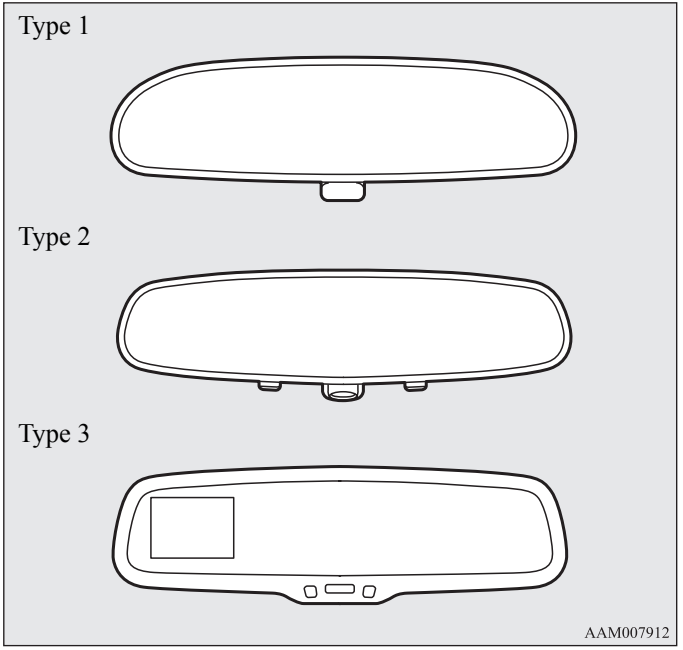


NOTE

- When the gearshift lever (for vehicle with manual transaxle) or the selector lever (for vehicle with automatic transaxle) is in “R” position with the ignition key in the “ON” position, the rear-view camera image will be displayed on the left portion of a type 3 mirror.
  For details, refer to “Rear-view camera” on page 3-101.

Adjust the inside mirror to maximize the view through the rear window.

## To adjust the vertical mirror position (Type 1, 3 only)

It is possible to move the mirror up and down to adjust its position.

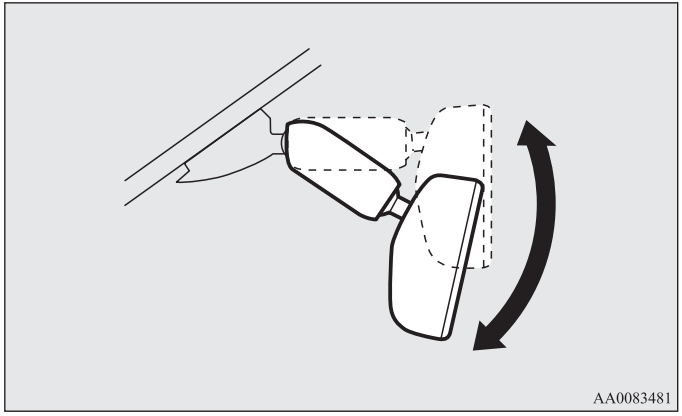


NOTE

- The position of a type 2 mirror cannot be adjusted up and down.

## To reduce the glare

### *Type 1, 2*

The day/night knob (A) at the bottom of the mirror can be used to adjust the mirror to reduce the glare from the headlights of vehicles behind you during night driving.

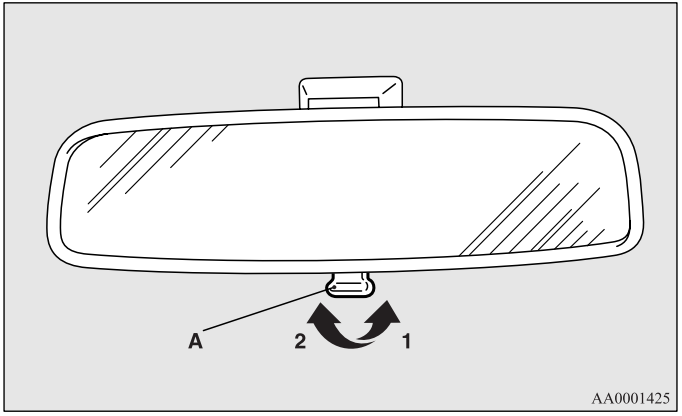


1- Daytime position
2- Night position

### *Type 3*

When the headlights of the vehicles behind you are very bright, the reflection factor of the rearview mirror is automatically changed to reduce the glare.

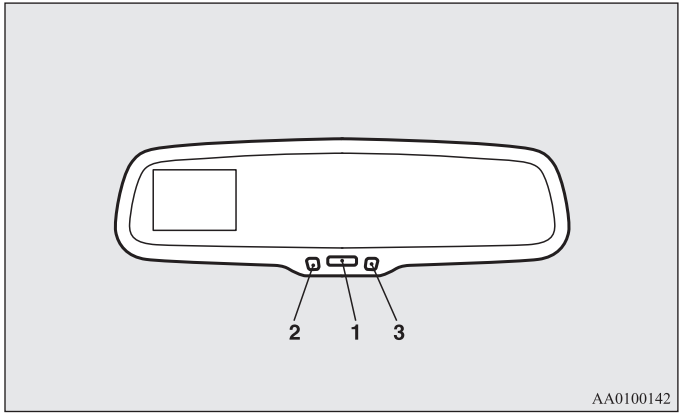


Normally, use the automatic mode. When the switch (1) is pressed, the indicator (2) illuminates and the reflection factor of the mirror is automatically changed.

NOTE

- Do not hang items on, or spray glass cleaner on the sensor (3), as reduced sensitivity could result.

## *Outside rearview mirrors*

N00512200150

Adjust the outside rearview mirrors only after making any seat adjustments so you have a clear view to the rear of the vehicle.

**⚠ *WARNING***

- **Do not attempt to adjust the outside rearview mirrors while driving. This can be dangerous.**
  **Be sure to adjust the mirrors before driving.**
- **Your front passenger's side mirror is convex. The objects you see in the mirror will look smaller and farther away than they appear in a regular flat mirror.**
  **Do not use this mirror to estimate the distance of vehicles following you when changing lanes.**

## To adjust the mirror position

The outside rearview mirrors can be adjusted when the ignition key is in the “ON” or “ACC” position.
Move the lever (A) to the same side as the mirror you wish to adjust.

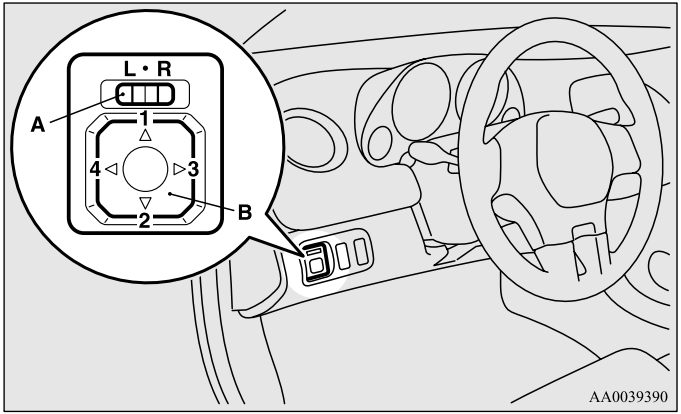


L- Left outside mirror adjustment
R- Right outside mirror adjustment

Press the switch (B) to adjust the mirror position.

1- Up
2- Down
3- Right
4- Left

NOTE
● After adjusting, return the lever to the “•” (off) position.

## To fold the mirror

The outside mirror can be folded in toward the side window to prevent damage when parking in tight locations.

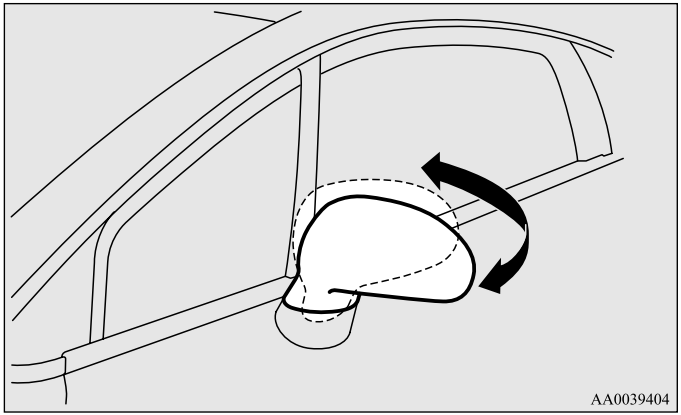

## Heated mirror (if so equipped)

N00549300146

When the rear window defogger switch is pressed, the outside rearview mirrors are defogged or defrosted. Current will flow through the heater element inside the mirrors, thus clearing away frost or condensation.
The indicator light (C) will illuminate while the defogger is on. The heater will be turned off automatically in about 17 minutes.

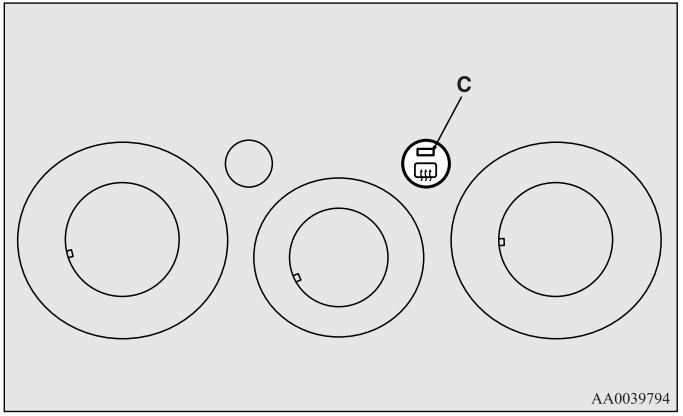


**⚠ CAUTION**

- **Electric current will flow through the heating wires on the rear window to help clear away moisture or frost when the rear defogger switch is pressed.**
  **When the top is completely lowered, keep the rear window defogger turned off to avoid damage to the top (ECLIPSE SPYDER only).**

# *Ignition switch*

N00512400631

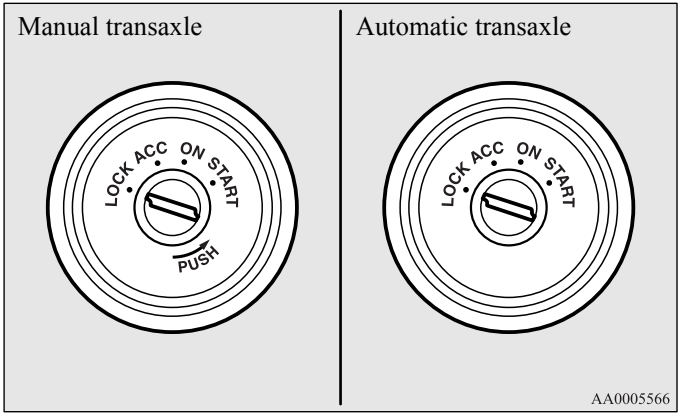


### LOCK

The engine is off and the steering wheel is locked. The key can be inserted and removed only when the switch is in this position.

### ACC

Allows operation of electrical accessories with the engine off.

### ON

The engine runs and all accessories can be used.

## START

Engages the starter. After the engine starts, release the key and it will return automatically to the “ON” position.

NOTE

- Your vehicle is equipped with ignition switch illumination.
  - The ignition switch illumination comes on while the driver’s door is opened and remains on for about 30 seconds after the driver’s door is closed.
  - When you remove the ignition key from the ignition switch, it will be illuminated for about 30 seconds.

    However, it will go off even while the illumination comes on if the ignition switch is turned to “ON” position.
- Your vehicle is equipped with an electronic immobilizer. To start the engine, the ID code which the transponder inside the key sends must match the one registered to the immobilizer computer.
  (Refer to “Electronic immobilizer” on page 3-3.)

## To remove the key

N00550900070

For vehicles with a manual transaxle, when removing the key, push the key in at the “ACC” position and keep it depressed until it is turned to the “LOCK” position, and remove.

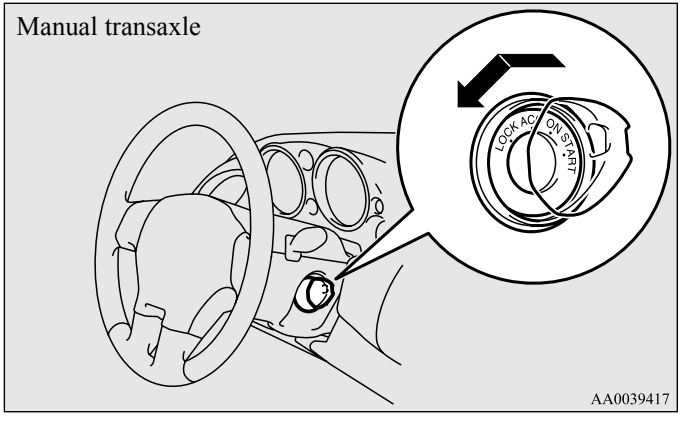

For vehicles with an automatic transaxle, when removing the key, first set the selector lever to the “P” (PARK) position, and then turn the key to the “LOCK” position and remove it.

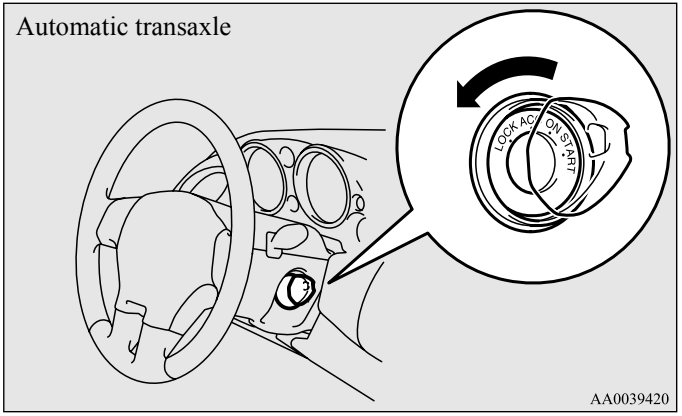


NOTE

- For vehicles with an automatic transaxle, the key cannot be removed unless the selector lever is set in the “P” (PARK) position.

**⚠ CAUTION**

- **Do not remove the ignition key from the ignition switch while driving. The steering wheel will lock, causing loss of control.**
- **If the engine is turned off while driving, the power brake booster will stop functioning and braking efficiency will be reduced. Also, the power steering system will not function and it will require greater effort to manually steer the vehicle.**
- **Do not leave the key in the “ON” position for a long time when the engine is not running. This will cause the battery to run down.**
- **Do not turn the key to the “START” position when the engine is running. It will damage the starter motor.**

## Key reminder buzzer

N00551000049

If the driver’s door is opened while the ignition key is in the “LOCK” or “ACC” position, a tone will sound.

## *Steering wheel lock*

N00512500108

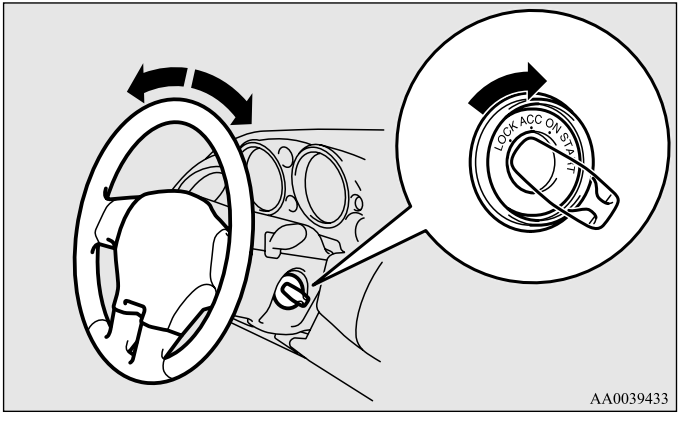


### To lock

Remove the key at the “LOCK” position.
Turn the steering wheel until it is locked.

### To unlock

Turn the key to the “ACC” position while moving the steering wheel slightly.

**⚠ *CAUTION***

- **Remove the key when leaving the vehicle.**
- **If your vehicle needs to be towed, turn the key to the “ACC” position to unlock the steering wheel.**

NOTE

- If the front wheels are turned, the anti-theft lock may sometimes make it difficult to turn the key from “LOCK” position to “ACC” position. Firmly turn the steering wheel to the left or to the right as you turn the key.

# Starting

N00512600734

## Tips for starting

- Do not operate the starter motor continuously for longer than 15 seconds as this could run the battery down or damage the starter motor. If the engine does not start, turn the ignition switch back to the “LOCK” position, wait a few seconds, and then try again. Trying repeatedly with the engine or starter motor still turning will damage the starter mechanism.
- If the engine will not start because the battery is weak or discharged, refer to “Jump-starting the engine” (on page 6-2) for instructions.
- The engine is warmed up enough for driving when the coolant temperature gauge indicator starts to move. A longer warm up period will only consume extra fuel.



**⚠ WARNING**

- **Never run the engine in a closed or poorly ventilated area any longer than is needed to move your vehicle out of the area. Carbon monoxide gas, which is odorless and extremely poisonous, could build up and cause serious injury or death.**

**⚠ CAUTION**

- **Do not push-start the vehicle.**
- **Do not run the engine at high rpms or drive at high speeds until the engine has had a chance to warm up.**

**⚠ CAUTION**

- **Release the ignition key as soon as the engine starts. Otherwise, the starter motor will be damaged.**

## Starting the engine

Your vehicle is equipped with an electronically controlled fuel injection system, which automatically controls the release of fuel. There is no need to depress the accelerator pedal when starting the engine.
The starter should not be run for more than 15 seconds at a time.
To prevent battery drain, wait a few seconds between attempts to restart the engine.

1. Make sure all occupants are properly seated with seat belts fastened.
2. Insert the ignition key.
3. Make sure the parking brake is applied.
4. Press and hold the brake pedal down with your right foot.
5. Press and hold the clutch pedal all the way down (manual transaxle).

NOTE

- For models equipped with a manual transaxle, the starter will not operate unless the clutch pedal is fully depressed (Clutch interlock). This is a safety feature.

6. On vehicles with manual transaxle, place the gearshift lever in the “N” (Neutral) position.
   On vehicles with automatic transaxle, make sure the selector lever is in the “P” (PARK) position.

7. Turn the ignition key to the “ON” position and make certain that all warning lights are functioning properly before starting the engine.
8. Turn the ignition key to the “START” position without pressing the accelerator pedal. Release the key when the engine starts.

NOTE
- Minor noises may be heard on engine start-up. These will disappear as the engine warms up.

***Startability of automatic transaxle vehicle with ambient temperature of -31 °F (-35 °C) or lower***

When the ambient temperature is -31 °F (-35 °C) or lower, it may not be possible to start from a standstill even with the selector lever in the “D” (DRIVE) position.
This phenomenon occurs because the transaxle has not warmed up sufficiently; it does not indicate a problem. If it occurs, place the selector lever in the “P” (PARK) position and let the engine idle for at least 10 minutes.
The transaxle will warm up, and you will be able to start normally.
Do not leave the vehicle during warm-up operation.

## Using the MIVEC engine

The MIVEC engine automatically switches its intake-valve control between a low-speed mode and a high-speed mode in accordance with driving conditions for maximum engine performance.

NOTE
- To protect the engine, the high-speed mode may not be selected while the engine coolant temperature is low. In such a case, the engine revolutions do not rise to over 5,000 rpm even if the accelerator pedal is depressed.

# *Manual transaxle*

N00512700025

The shift pattern below is shown on the gearshift lever. Press the clutch pedal all the way down while shifting gears.

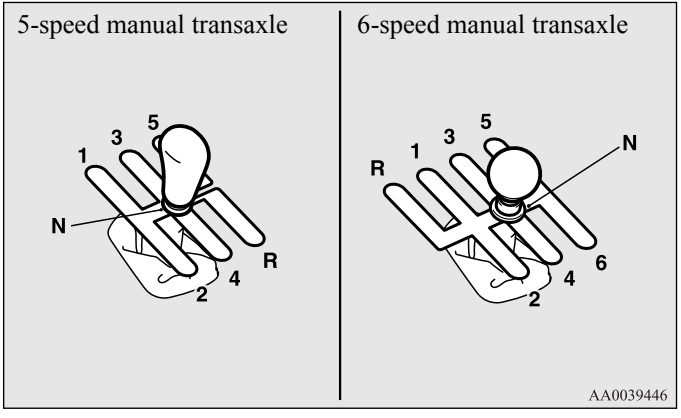


NOTE
- During cold weather, shifting may be difficult until the transaxle lubricant has warmed up. This is normal and not harmful to the transaxle.

## To start

Press the clutch pedal all the way down and shift into 1st. Then gradually release the clutch pedal while depressing the accelerator pedal.

**⚠ CAUTION**
- **Do not rest your foot on the clutch pedal because this will cause premature clutch wear or damage.**
- **Do not coast in the "N" (Neutral) position (illegal in many states).**
- **Do not use the gearshift lever as a handrest, because this can result in premature wear of the transaxle shift forks.**

NOTE
- If it is hard to shift into 1st, depress the clutch pedal a second time; the shift will then be easier.

## Moving the gearshift lever to the "R" (Reverse) position

N00538400017

**⚠ CAUTION**
- **Do not move the gearshift lever to the "R" (Reverse) position while the vehicle is moving forward. This could damage the transaxle.**

### *Vehicles equipped with 5-speed manual transaxle*

To shift into the "R" (Reverse) position from 5th gear, move the gearshift lever to the "N" (Neutral) position, and then move it to the "R" (Reverse) position.

### *Vehicles equipped with 6-speed manual transaxle*

Pull up the pull-ring (A), then move the gearshift lever to the "R" (Reverse) position with the pull-ring still pulled.

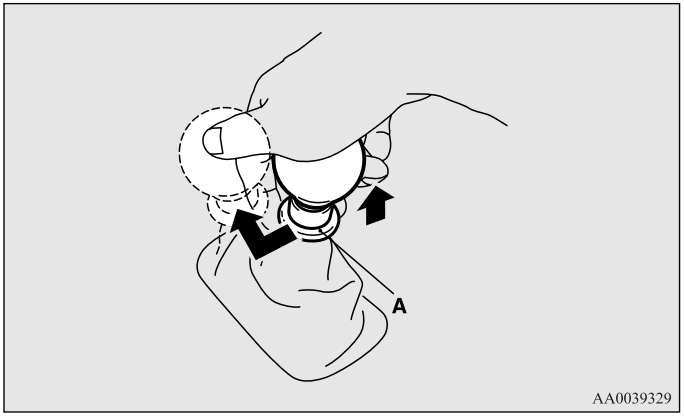


**⚠ *CAUTION***

- **Do not pull up the pull-ring (A) when moving the gearshift lever to any position other than the "R" (Reverse) position. If you always pulled up the pull-ring (A) when moving the gearshift lever, you could unintentionally move the gearshift lever to the "R" (Reverse) position and cause an accident and/or a problem in the transaxle.**

The pull-ring will return to its original position when you return the gearshift lever to the "N" (Neutral) position.

**⚠ *CAUTION***

- **If the pull-ring will not return from the pulled-up position, have the vehicle inspected at an authorized Mitsubishi Motors dealer or at a repair facility of your choice.**

## Proper shift points

N00537400023

Always use care to change the gear with the vehicle speed matched to the engine speed. Proper shifting will improve fuel economy and prolong engine life.

**⚠ CAUTION**

- **Avoid downshifting that may cause the tachometer pointer to enter the red zone.**
  **This puts the engine at risk of being damaged.**

## Upshifting

N00512900030

For the best fuel economy and performance in using your manual transaxle, upshift as listed below.

At low altitude locations, shift at the vehicle speeds listed. Upshifting earlier during cruise conditions (relatively steady speeds) will improve your fuel economy.

### *Vehicles equipped with 5-speed manual transaxle*

| Shift point | Upshift speeds | |
|---|---|---|
| | Acceleration | Cruise |
| 1st gear to 2nd gear | 15 mph (24 km/h) | 13 mph (21 km/h) |
| 2nd gear to 3rd gear | 23 mph (37 km/h) | 18 mph (29 km/h) |
| 3rd gear to 4th gear | 34 mph (55 km/h) | 33 mph (53 km/h) |
| 4th gear to 5th gear | 43 mph (69 km/h) | 40 mph (64 km/h) |

### *Vehicles equipped with 6-speed manual transaxle*

| Shift point | Upshift speeds | |
|---|---|---|
| | Acceleration | Cruise |
| 1st gear to 2nd gear | 13 mph (21 km/h) | 16 mph (26 km/h) |
| 2nd gear to 3rd gear | 22 mph (35 km/h) | 28 mph (45 km/h) |
| 3rd gear to 4th gear | 33 mph (53 km/h) | 38 mph (61 km/h) |
| 4th gear to 5th gear | 44 mph (71 km/h) | 46 mph (74 km/h) |
| 5th gear to 6th gear | 47 mph (76 km/h) | 49 mph (79 km/h) |

At high altitude locations, upshift as listed below.

***Vehicles equipped with 5-speed manual transaxle***

| Shift point | Upshift speeds |
|---|---|
| 1st gear to 2nd gear | 15 mph (24 km/h) |
| 2nd gear to 3rd gear | 25 mph (40 km/h) |
| 3rd gear to 4th gear | 40 mph (64 km/h) |
| 4th gear to 5th gear | 45 mph (72 km/h) |

***Vehicles equipped with 6-speed manual transaxle***

| Shift point | Upshift speeds |
|---|---|
| 1st gear to 2nd gear | 15 mph (24 km/h) |
| 2nd gear to 3rd gear | 25 mph (40 km/h) |
| 3rd gear to 4th gear | 40 mph (64 km/h) |
| 4th gear to 5th gear | 45 mph (72 km/h) |
| 5th gear to 6th gear | 50 mph (80 km/h) |

## Downshifting

N00513000096

It is recommended that you downshift to a lower gear when needed to maintain the desired speed, according to the table.
Avoid downshifting at too high a speed. The engine may suffer damage.
To maintain a safe speed and prolong brake life, shift down to 2nd or 1st when descending a steep hill.
Downshifting is also important to avoid “lugging” the engine at too low a speed, such as when turning a corner or when driving up a steep hill.

***Recommended downshifting speed***

| Downshifting speed | Shift point |
|---|---|
| Under 20 mph (32 km/h) | Shift down from current gear to 2nd gear. |
| 20 to 30 mph (32 to 48 km/h) | Shift down from current gear to 3rd gear. |

## Driving precautions

N00513100101

- The table below shows the maximum recommended driving speed for in each gear. Do not drive near or at these speeds for prolonged periods of time.

### *Possible driving speed*

| Shift points | Possible driving speed | |
|---|---|---|
| | Vehicles equipped with 5-speed manual transaxle | Vehicles equipped with 6-speed manual transaxle |
| 1st gear | 30 mph (50 km/h) | 37 mph (60 km/h) |
| 2nd gear | 55 mph (90 km/h) | 55 mph (90 km/h) |
| 3rd gear | 80 mph (130 km/h) | 80 mph (130 km/h) |
| 4th gear | 108 mph (175 km/h) | 108 mph (175 km/h) |
| 5th gear | — | 130 mph (210 km/h) |

- Do not use the gearshift lever as a handrest. This can result in premature wear of the transaxle shift forks.



## *Automatic transaxle*

N00513200102

Designed for the most efficient control and equipped with self-adapting capabilities, the electronically controlled transaxle used in your vehicle selects the most favorable gear for each type of driving and road condition.

### DRIVING UPHILL

The transaxle may not shift to a higher gear if the computer determines your current speed would be affected.
For smoother operation, the transaxle may not shift if you release the throttle while climbing a steep hill. This is normal because the computer controls the shifting. After reaching the top of the hill, your normal gear shift function will resume.

### DRIVING DOWNHILL

When traveling down steep grades and using the brakes, the computer may automatically select a lower gear. This helps engine braking efforts, reducing your need to use the brakes.

**⚠ *CAUTION***

- **The electronically controlled transaxle system is strictly intended to provide supplementary functions. When driving downhill under certain conditions, when the automatic transaxle is cold immediately after starting, no automatic downshift may be made. The driver should move the selector lever to shift down to a lower gear (3rd gear or 2nd gear), which will permit the engine to begin braking.**

NOTE
- During the break-in period or immediately after reconnecting the battery, your vehicle may not shift smoothly. This does not indicate a problem in the transaxle. Shifting will become smoother once the transaxle has been shifted several times by the electronic control system.

## Selector lever operation

N00513800182

As an additional safety precaution, models equipped with an automatic transaxle have a shift-lock device that holds the selector lever in the “P” (PARK) position. To move the selector lever from the “P” (PARK) position to another position, follow the steps below.

1. Press and hold the brake pedal down.
2. Move the selector lever to the desired position.

NOTE
- The selector lever cannot be moved from “P” (PARK) to another position if the ignition key is at the “LOCK” position, or has been removed, or if the brake pedal is not pressed and held down.

The transaxle has 4 forward (4-speed automatic transaxle) or 5 forward (5-speed automatic transaxle) gears and 1 reverse gear. The individual gears are selected automatically, depending on the position of the gear selector lever, the speed of the vehicle and the position of the accelerator pedal.
The selector lever has 2 “gates”: the main gate (A) and the manual gate (B).

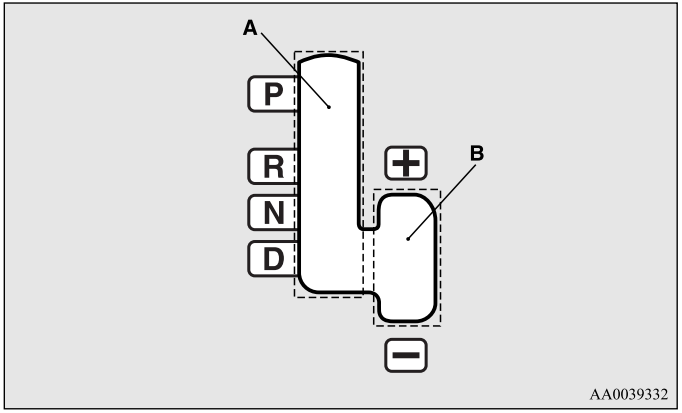


NOTE
- For information on manual gate operation, refer to “Sports mode” on page 3-76.

In the main gate, the selector lever has 4 positions, and is equipped with a lock button (C) to prevent inadvertent selection of the wrong gear.

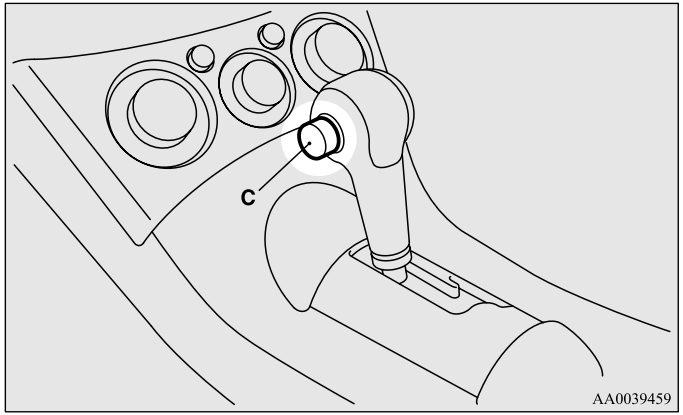


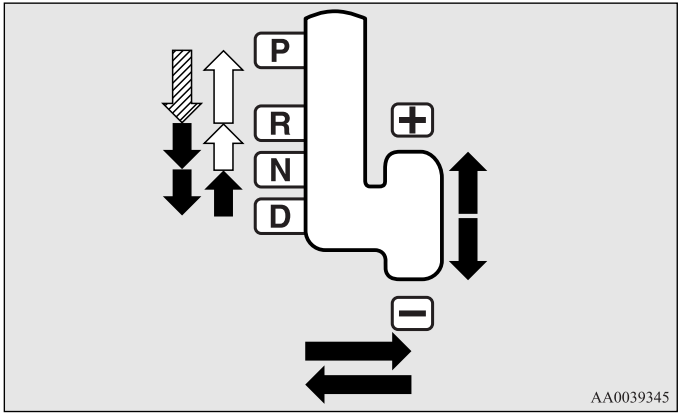


| | |
|---|---|
| ⇩ | The lock button must be pushed while the brake pedal is depressed to move the selector lever. |
| ⬇ | The selector lever will move without pushing the lock button. |
| ⇩ | The lock button must be pushed to move the selector lever. |

**⚠ WARNING**

- **If the lock button is always pressed when using the selector lever, the lever may be accidentally shifted into the "P" (PARK) or "R" (REVERSE) position. Do not press the lock button when making shifts shown by ⬇ in the illustration.**

**⚠ WARNING**

- **Always depress the brake pedal when shifting the selector lever into a gear from the "N" (NEUTRAL) position. When beginning to drive, do not shift the selector lever from the "N" (NEUTRAL) position while depressing the accelerator pedal. This will cause the vehicle to "jump" forward or backward.**

NOTE

- If the brake pedal is not depressed and held, the shift-lock device activates to prevent the selector lever from being moved from the "P" (PARK) position.

## Selector lever position indicator

N00513900327

When the ignition key is turned to the "ON" position, the currently position of the selector lever is indicated by the indicator (A) shown on the instrument cluster {i.e. "P" (PARK), "R" (REVERSE), "N" (NEUTRAL) or "D" (DRIVE)}.
In sports mode, the currently selected gear is indicated by the indicator (A).

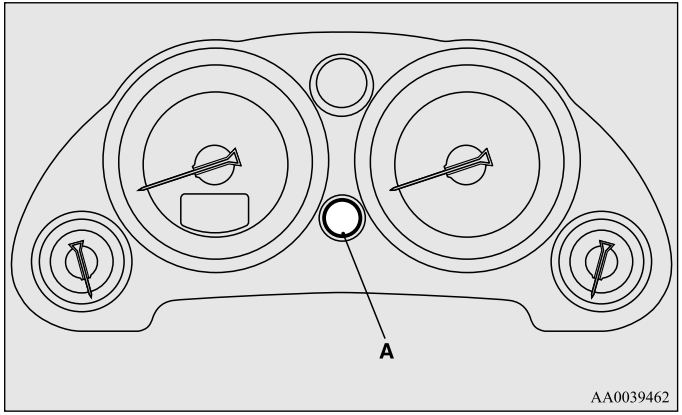

When the selector lever position indicator flashes while you are driving, there could be a malfunction in the automatic transaxle.

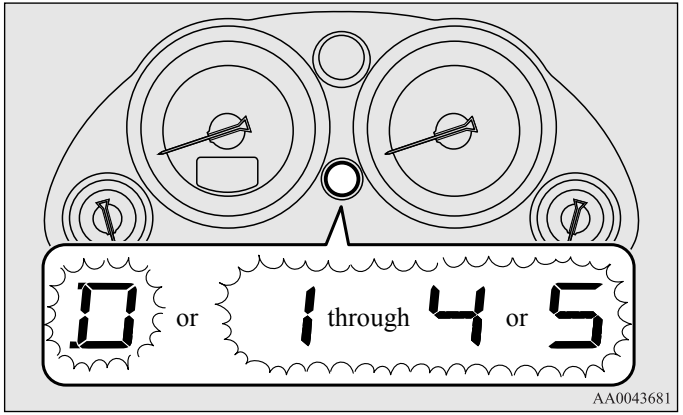


NOTE

- In sports mode, the indication of the currently selected gear flashes.
- If the selector lever position is in the “P” (PARK), “R” (REVERSE) or “N” (NEUTRAL) position, the indicator does not flash.

## ⚠ CAUTION

- **If a malfunction occurs in the automatic transaxle while driving, the selector lever position indicator will flash.**
  **In this case, immediately park your vehicle in a safe place and follow these procedures:**
  **{The selector lever position indicator warning function does not operate with the selector lever in the “P” (PARK), “R” (REVERSE) or “N” (NEUTRAL) position.}**
  **[The selector lever position indicator flashes rapidly (twice per second)]**
  **The automatic transaxle fluid is overheating.**
  **Park your vehicle in a safe place but do not turn off the engine. Move the selector lever to the “P” (PARK) position and open the engine hood. Keep the engine idling.**
  **After a while, move the selector lever to the “D” (DRIVE) position and confirm that the selector lever position indicator stops flashing. It is safe to continue driving if the selector lever position indicator no longer flashes.**
  **If the selector lever position indicator continues flashing or flashes intermittently, have your vehicle inspected by an authorized Mitsubishi Motors dealer or a repair facility of your choice.**
  **[The selector lever position indicator flashes slowly (once per second)]**
  **The automatic transaxle safety device may be operating due to a malfunction.**
  **Have your vehicle inspected by an authorized Mitsubishi Motors dealer or a repair facility of your choice as soon as possible.**

## Selector lever positions (Main gate)

N00514200183

### *"P" PARK*

This position locks the transaxle to prevent the vehicle from moving. The engine can be started from the "PARK" position.

### *"R" REVERSE*

Move the lever to this position only after the vehicle has come to a complete stop.

**⚠ CAUTION**

- **Never shift into the "P" (PARK) or "R" (REVERSE) position while the vehicle is in motion. If the lever is shifted into the "P" (PARK) or "R" (REVERSE) position while the vehicle is in motion, the transaxle may be damaged.**

### *"N" NEUTRAL*

At this position, the transaxle is disengaged. It is the same as the neutral position on a manual transaxle and should be used when the vehicle is not moving for an extended length of time during driving, such as in a traffic jam.

**⚠ WARNING**

- **Never move the selector lever to the "N" (NEUTRAL) position while driving since you could accidentally slip it into the "P" (PARK) or "R"(REVERSE) position, damaging the transaxle.**
- **To prevent the vehicle from rolling when stopped on a slope, the engine should be started in the "P" (PARK) position, not in "N" (NEUTRAL) position.**
- **Always keep your foot on the brake pedal when the vehicle is in "N" (NEUTRAL) position, or when shifting into or out of "N" (NEUTRAL) position, to prevent rolling.**

### *"D" DRIVE*

This position is used for most city and highway driving. Engine shifting and braking are done automatically as needed, depending on road conditions.

NOTE

- For information on manual gate operation, please refer to "Sports mode" on page 3-76.



## Sports mode

N00514400169

Whether the vehicle is stationary or in motion, sports mode is selected by pushing the selector lever from the "D" position into the manual gate. To return to "D" range operation, push the selector lever back into the main gate.
In sports mode, gear shifts can be made rapidly simply by moving the selector lever backward and forward. Sports mode allows gear shifts with the accelerator pedal depressed.

### *Manual gate*

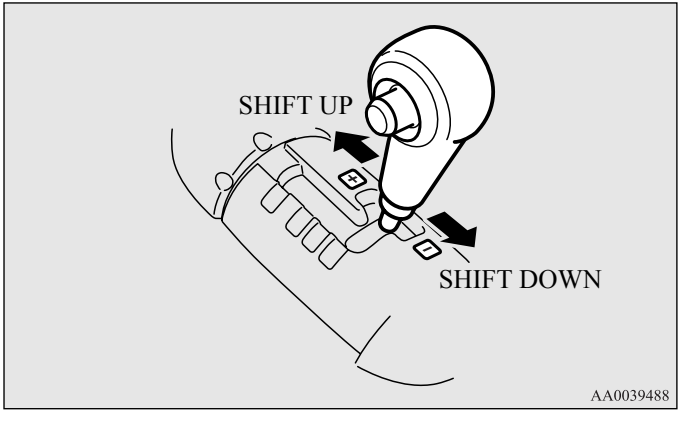


**+ (SHIFT UP)**
Push the lever forward once to shift up one gear.

**- (SHIFT DOWN)**
Pull the lever backward once to shift down one gear.

**⚠ CAUTION**

- **Upward shifts do not take place automatically in sports mode. The driver must make upward shifts in accordance with prevailing road conditions, making sure the engine rpm remains below the red zone on the tachometer.**
- **By rapidly moving the selector lever backwards (SHIFT DOWN) twice, it is possible to skip one gear (i.e., 3rd to 1st, 4th to 2nd or 5th to 3rd). Since sudden engine deceleration or acceleration can cause a loss of traction, downshifts must be made carefully in accordance with the vehicle's speed.**

NOTE

- In sports mode, only the 4 forward gears (4-speed automatic transaxle) or 5 forward gears (5-speed automatic transaxle) can be selected. To reverse or park the vehicle, move the selector lever to the "R" (REVERSE) or "P" (PARK) position in the main gate.
- To maintain the required levels of vehicle performance and safety, the system may not execute certain gear shifts when the selector lever is operated, such as 4th or 5th gear at low speed.
- In sports mode, downward shifts are made automatically when the vehicle slows down. When the vehicle stops, 1st gear is automatically selected.
- When pulling away from a standstill on a slippery road, push the selector lever forward to the + (SHIFT UP) position. This causes the transaxle to select 2nd gear, which is better for safe driving on slippery roads. Push the selector lever to the - (SHIFT DOWN) side to shift back to 1st gear.
- Move the selector lever gently between the manual and main gates and between positions in the manual gate. Excessive force could damage the selector lever.

## Operation of the automatic transaxle

N00514500346

**⚠ CAUTION**

- **Before selecting a gear with the engine running and the vehicle stationary, fully depress the brake pedal to prevent the vehicle from creeping.**
  **The vehicle will begin to move as soon as the gear is engaged, especially when the engine speed is high, at fast idle or with the air conditioning operating, the brakes should only be released when you are ready to drive away.**
- **Depress the brake pedal with the right foot at all times.**
  **Using the left foot could cause driver movement delay in case of an emergency.**
- **To prevent sudden acceleration, never run the engine at high rpms when shifting from the "P" (PARK) or "N" (NEUTRAL) position.**
- **Operating the accelerator pedal while the other foot is resting on the brake pedal will affect braking efficiency and may cause premature wear of brake pads.**
  **Do not rev the engine with the brake pedal pressed. This can damage the transaxle.**
- **Use the gearshift lever in the correct shift position in accordance with driving conditions.**
  **Never coast downhill backward in the driving shift position {"D" (DRIVE) or sports mode} or coast forward in the "R" (REVERSE) position.**
  **Engine stopping and increased brake pedal and steering effort could lead to an accident.**

### *Passing acceleration*

N00514900047

To gain extra acceleration in "D" (DRIVE) position (when passing another vehicle) push the accelerator to the floor. The automatic transaxle will automatically downshift.

NOTE

- In sports mode, downshifts do not take place when the accelerator is depressed all the way to the floor.

### *Waiting*

N00515000058

For short waiting periods, such as at traffic lights, the vehicle can be left in gear and held stationary with the service brake.
For longer waiting periods with the engine running, the selector lever should be placed in the "N" (NEUTRAL) position.

**⚠ CAUTION**

- **To avoid transaxle overheating, never try to keep your vehicle stationary on a hill by using the accelerator pedal. Always apply the parking brake and/or service brake.**
- **Unexpected acceleration may occur if the selector lever is in a position other than "P" (PARK) or "N" (NEUTRAL).**
  **Prior to moving off after having stopped the vehicle, make sure that the selector lever is in "D" (DRIVE) position or "Sports mode" position.**

### *Parking*

N00515100017

To park the vehicle, first bring it to a complete stop, fully engage the parking brake, and then move the selector lever to the “P” (PARK) position.

### *When the automatic transaxle makes no speed change*

N00515300064

If the transaxle does not change gears while driving, or your vehicle does not pick up enough speed when starting on an uphill slope, it may be that there is something unusual happening in the transaxle, causing a safety device to activate. Have your vehicle checked at an authorized Mitsubishi Motors dealer or a repair facility of your choice as soon as possible.

1. If your vehicle has difficulty moving uphill, shift the selector lever into 2nd gear of the sports mode.
   This method might not work depending on the type of transaxle malfunction.
2. Once the vehicle is moving on a level road, move the selector lever back to “D” (DRIVE) position.

NOTE

- When the selector lever position indicator in the instrument cluster flashes, it means that there is an abnormal condition in the transaxle. Refer to “Selector lever position indicator” on page 3-73.

## *Service brake*

N00517500187

### Brake pedal

Overuse of the brake can cause poor brake response and premature wear of the brake pads.
When driving down a long or steep hill, use engine braking by shifting the transaxle into a lower gear (manual transaxle) or a lower gear of the sports mode (automatic transaxle).

**⚠ *WARNING***

- **Do not leave any objects near the brake pedal or let a floor mat slide under it; doing so could prevent the full pedal stroke that would be necessary in an emergency. Make sure that the pedal can be operated freely at all times. Make sure the floor mat is securely held in place.**

**⚠ *CAUTION***

- **It is important not to drive the vehicle with your foot resting on the brake pedal when braking is not required. This practice can result in very high brake temperatures, premature pad wear, and possible damage to the brakes.**

## Power brakes

N00517600247

Your vehicle is equipped with power brakes for more braking force with minimal brake pedal effort.
Your brakes are designed to operate at full capacity, even if the power assist is lost.
If the power assist is lost, the effort needed to press the brake pedal is greater.
If you should loose the power assist for some reason, the brakes will still work.
If the power brake unit or either of the two brake hydraulic systems stops working properly, the rest of the brake system will still work, but the vehicle will not slow down as quickly.
You will know this has happened if you find you need to depress the brake pedal down further, or harder when slowing down or stopping, or if the brake warning light comes on.



**⚠ WARNING**

- **Never coast downhill with the engine OFF. Keep the engine running whenever your vehicle is in motion. If you turn off the engine while driving, the power brake booster will stop working and your brakes will not work as well.**
- **If the power assist is lost or if either brake hydraulic system stops working properly, take your vehicle to an authorized Mitsubishi Motors dealer or a repair facility of your choice immediately.**

### *Brake pad wear alarm*

N00532500087

The disc brakes have an alarm that makes a metallic squeal when the brake pads have worn down enough to need service. If you hear this sound, have the brake pads replaced at an authorized Mitsubishi Motors dealer or a repair facility of your choice.

**⚠ WARNING**

- **Driving with worn brake pads will make it harder to stop, and can cause an accident.**

## *Anti-lock braking system*

N00517900224

The anti-lock braking system helps prevent the wheels from locking up when braking. This helps you keep control of your vehicle and its direction.

### Driving hints

- When using the anti-lock brakes (sudden braking), steering is slightly different from normal driving conditions. Use the steering wheel carefully.
- Always keep a safe distance from the vehicle in front of you. Even if your vehicle is equipped with the anti-lock braking system, leave a greater braking distance when:
  - Driving on gravel or snow-covered roads.
  - Driving on uneven road surfaces.
- Operation of anti-lock braking system is not restricted to situations where brakes are applied suddenly. This system may also prevent the wheels from locking when you drive over manholes, steel roadwork plates, road markings, or any uneven road surface.
- When the anti-lock braking system is in use, you may feel the brake pedal vibrating and hear a unique sound. You may also feel as if the pedal resists being pressed.

  **In this situation, simply hold the brake pedal down firmly. Do not pump the brake, which will result in reduced braking performance.**

**⚠ *CAUTION***

- **The anti-lock braking system cannot prevent accidents. It is your responsibility to take safety precautions and to drive carefully.**
- **To prevent failure of the anti-lock braking system, be sure all four wheels and tires are the same size and the same type.**

## Anti-lock braking system warning light

N00531600313

This light comes on in the event of a malfunction in the anti-lock braking system. It will also come on as a self-check for a few seconds when the ignition key is turned to the “ON” position. Always make sure that the light goes out before beginning to drive.

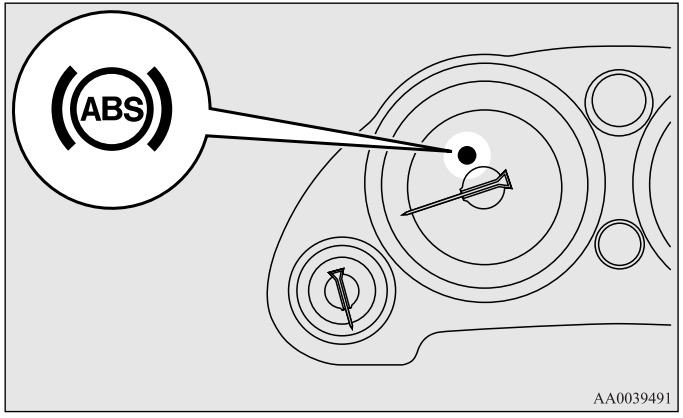


**⚠ CAUTION**

- **If the anti-lock braking system warning light comes on and stays on after starting the engine or while driving, it means that the anti-lock braking system is not working and that only the standard brake system is available. (The standard brake system will still work properly.) If this happens, take your vehicle to an authorized Mitsubishi Motors dealer or a repair facility of your choice as soon as possible.**

## If the warning light illuminates while driving

N00531700473

- Since there is always a risk of your vehicle becoming unstable if you apply the brakes suddenly, be sure to brake gently and do not attempt high-speed driving. Be sure to stop the vehicle in a safe place. Test the system by restarting the engine and driving at a speed of about 12 mph (20 km/h) or higher.
- If the light goes out, there is no abnormal condition. If the light does not go out after driving as instructed here, or if it comes on again, the anti-lock braking system is not functioning. Only the ordinary braking system is functioning. If this happens, take your vehicle to an authorized Mitsubishi Motors dealer or a repair facility of your choice and have the system checked as soon as possible.

NOTE

- After your vehicle is driven a short distance after starting the engine, you will hear a whining sound and the sound of a motor operating coming from the engine compartment. These are the normal sounds the anti-lock braking system makes when performing a self-check. It does not indicate a malfunction.
- The anti-lock braking system can be used after the vehicle has reached a speed over approximately 6 mph (10 km/h). It stops working when the vehicle slows below approximately 3 mph (5 km/h).
- After driving on snow or icy roads, remove any snow and ice which may have been left around the wheels. On vehicles that have an anti-lock braking system, be careful not to damage the wheel speed sensors (A) or the cables located at each wheel.

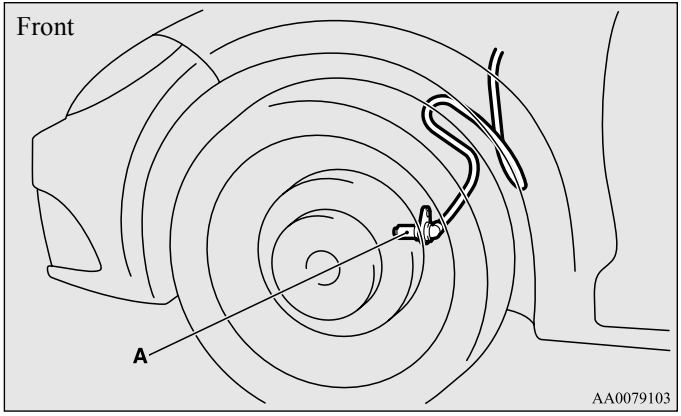


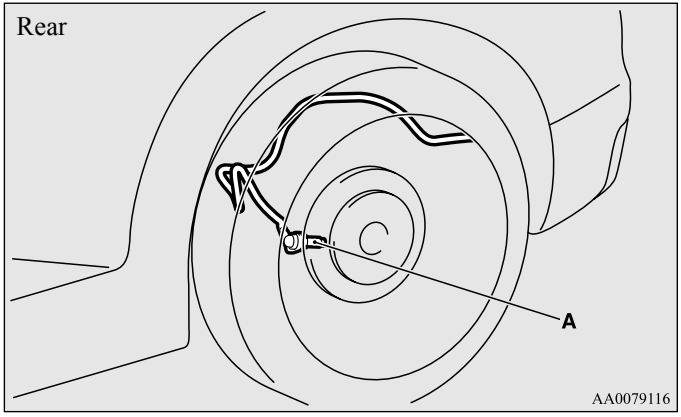

# *Active stability control (ASC)*

N00559100088

The active stability control (ASC) takes overall control of the anti-lock braking system, traction control function and skid control function to help maintain the vehicle's control and traction. Also refer to the following pages on the anti-lock braking system, traction control function and skid control function.

Anti-lock braking system (ABS) → P.3-81
Traction control function → P.3-84
Skid control function → P.3-85



**⚠ *CAUTION***

- **Do not over-rely on the ASC. Even the ASC cannot prevent the natural laws of physics from acting on the vehicle. This system, like any other system, has limits and cannot help you to maintain traction and control of the vehicle in all circumstances. Reckless driving can lead to accidents. It is the driver's responsibility to drive carefully. This means taking into account the traffic, road and environmental conditions.**
- **Be sure to use the same specified type and size of tire on all four wheels. Otherwise, the ASC may not work properly.**
- **Do not install any aftermarket limited slip differential (LSD) on your vehicle. The ASC may stop functioning properly.**

NOTE

- A whining sound may be heard from the engine compartment in the following situations. The sound is associated with the ASC self-check operations. It does not indicate a malfunction.
  - When the ignition key is set to the "ON" position.
  - When the vehicle is driven for a while after the engine is turned on.
- When the ASC is activated, you may feel a vibration in the vehicle body or hear a whining sound from the engine compartment.
  This indicates that the system is operating normally. It does not indicate a malfunction.
- When the anti-lock braking system warning light is illuminated, the ASC is not active.

## Traction control function

N00559200050

On slippery surfaces, the traction control function prevents the drive wheels from spinning excessively, thus helping the vehicle to start moving from a stopped condition. It also provides sufficient driving force and steering performance as the vehicle turns while pressing the acceleration pedal.

**⚠ *CAUTION***

- **When driving a vehicle on a snowy or icy road, be sure to install snow tires and drive the vehicle at moderate speeds.**

## Skid control function

N00546800036

The skid control function is designed to help the driver maintain control of the vehicle on slippery roads or during rapid steering maneuvers. It works by controlling the engine output and the brake on each wheel.

NOTE

- The skid control function operates at speeds of about 9 mph (15 km/h) or higher.

## ASC OFF switch

N00559400225

The ASC is automatically activated when the ignition key is turned to the “ON” position. You can deactivate the system by pressing down the ASC OFF switch for 3 seconds or longer.

When the ASC is deactivated, the ASC OFF/ OFF indicator will be illuminated. To reactivate the ASC, momentarily press the ASC OFF switch; the ASC OFF/ OFF indicator is turned off.

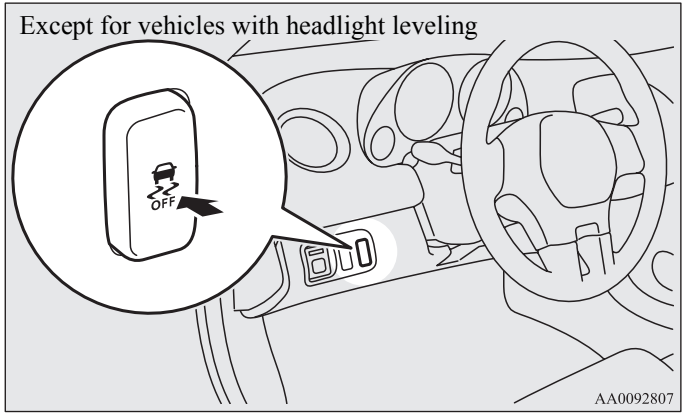

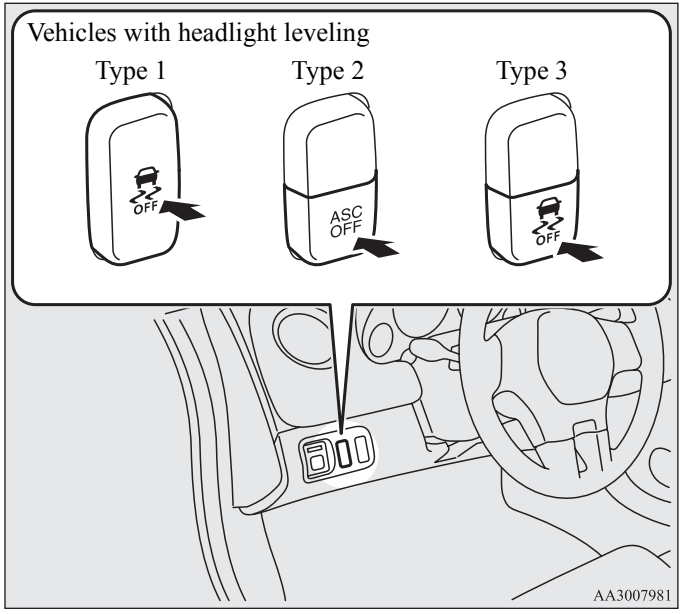


**⚠ CAUTION**

- **For safety reasons, the ASC OFF switch should be operated when your vehicle is stopped.**
- **Be sure to keep the ASC on while driving in normal circumstances.**

NOTE

- Using the ASC OFF switch turns off both the skid control function and the traction control function.
- When moving out of mud, sand or fresh snow, pressing the accelerator pedal may not allow the engine speed to increase. In such situations, temporarily deactivate the ASC, using the ASC OFF switch.
- If you continue to press the ASC OFF switch after the ASC is turned off, the “mistaken operation protection function” will activate and the ASC will turn back on.
  After the “mistaken operation protection function” is activated, it will not be possible to turn the ASC off.
  To turn the system off again, return the ignition key to the “ACC” or “LOCK” position, restart the engine and press the ASC OFF switch.

## ASC indicator, ASC OFF indicator

N00546900037

The indicators should illuminate when the ignition key is turned to the “ON” position, and should turn off after a few seconds.
If the indicator stays on or does not illuminate when the ignition key is turned to the “ON” position, have the vehicle inspected by an authorized Mitsubishi Motors dealer or a repair facility of your choice as soon as possible.

/ indicator blinks when the ASC is operating.
ASC OFF/ OFF indicator is illuminated when the ASC is deactivated.

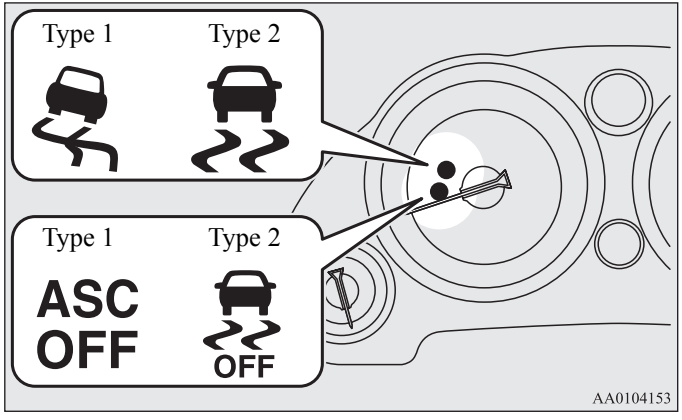


**⚠ CAUTION**

- **When / indicator blinks, the ASC is operating, which means that the road is slippery or that your vehicle’s wheels are beginning to slip. If this happens, drive slower.**

NOTE
- When a spare tire has been put on your vehicle, the gripping ability of the tire will be lower, making it more likely that the / indicator will blink.

**⚠ CAUTION**

- **If an abnormal condition occurs in the system while driving, the and ASC OFF/ and OFF indicators will illuminate at the same time, or the ASC OFF/ OFF indicator will blink.**
  **In these cases, follow these procedures:**

3

## ⚠ CAUTION

**[If the and ASC OFF/ and OFF indicators continuously illuminate]**

- **Park your vehicle in a safe place and stop the engine. Restart the engine again and check whether the and ASC OFF/ and OFF indicators go out. If these indicators go out, there is no abnormal condition.**

  **If the and ASC OFF/ and OFF indicators remain on even after your vehicle is driven a short distance after re-starting the engine, have the vehicle inspected by an authorized Mitsubishi Motors dealer or a repair facility of your choice as soon as possible.**

**[If the ASC OFF/ OFF indicator blinks]**

- **If the temperature of the braking system increases excessively, due to continuous brake control on a slippery road surface, the ASC OFF/ OFF indicator will blinks and operation of the traction control function will be suspended to protect the brake system. (Normal operation of the vehicle will not be affected.) Park your vehicle in a safe place. When the temperature in the braking system has come down, the ASC OFF/ OFF indicator will be turned off and the traction control function will start operating again.**

## ⚠ CAUTION

- **If the vehicle is towed with the ignition key in the "ON" position and only the front wheels or only the rear wheels raised off the ground, the ASC may operate, resulting in an accident. When towing the vehicle with the front wheels raised, keep the ignition key in the "LOCK" or "ACC" position. When towing the vehicle with the rear wheels raised, keep the ignition key in the "ACC" position.**
  **Refer to "Towing" on page 6-20.**

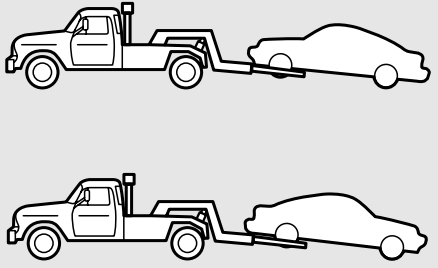

AA0039547

## Power steering system

N00518000307

The power steering system operates while the engine is running. It helps reduce the effort needed to turn the steering wheel.

The power steering system has mechanical steering capability in case the power assist is lost. If the power assist is lost for some reason, you will still be able to steer your vehicle. If the power assist is lost, you will notice it takes much more effort to steer and that there is much more "free play" in the steering wheel. If this happens, take your vehicle to an authorized Mitsubishi Motors dealer or a repair facility of your choice.

**WARNING**

- **Do not stop the engine while the vehicle is moving. Stopping the engine would make the steering wheel extremely hard to turn, possibly resulting in an accident.**

**CAUTION**

- **Do not leave the steering wheel turned all the way in one direction. This can cause damage to the power steering system.**

## Cruise control

N00518300355

Cruise control is an automatic speed control system. It lets you keep the same driving speed. Cruise control can be used at speeds of about 25 mph (40 km/h) or more. It is especially useful for freeway driving. Cruise control does not work at speeds below about 25 mph (40 km/h).

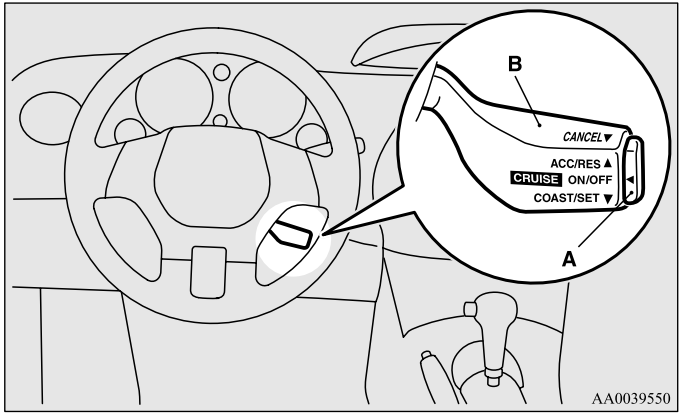


A- Main switch
B- Cruise control lever

**CAUTION**

- **For safety reasons, deactivate cruise control system using the main switch (A) when you are not using the cruise control system.**
  **(Refer to "To deactivate" on page 3-94.)**

**⚠ CAUTION**

- **Cruise control is not recommended when driving conditions will not allow you to stay at the same speed, such as in heavy traffic or on roads that are winding, icy, snow-covered, wet, or slippery, or on a steep downhill.**
- **For vehicles with manual transaxle, if you shift to "N" (Neutral) in cruise control mode without pressing the clutch first, the engine will run too fast and might be damaged.**



NOTE

- Cruise control may not be able to keep your speed on uphills or downhills.
- Your speed may drop on a steep uphill. You may have to use the accelerator pedal if you want to stay at your set speed.
- Your speed may increase to more than the set speed on a steep downhill. You must use the brake to control your speed. If your speed increases too much, turn off the cruise control. (Refer to "To deactivate" on page 3-94.)

## Cruise control indicator

N00550100186

This indicator comes on when cruise control is activated by operation of the cruise control main switch.

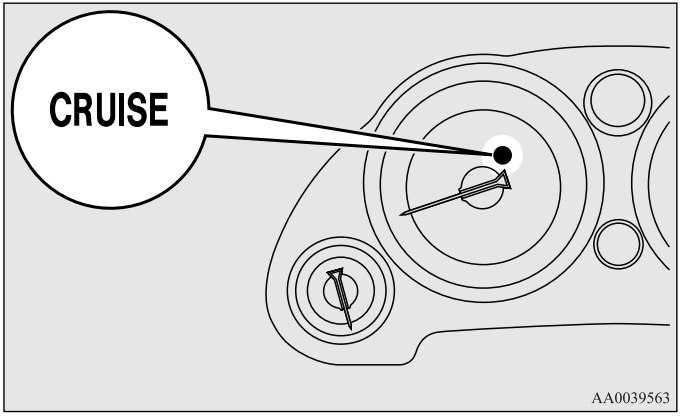

## To activate

N00518400170

1. Momentarily push in the main switch (A) at the end of the cruise control lever.

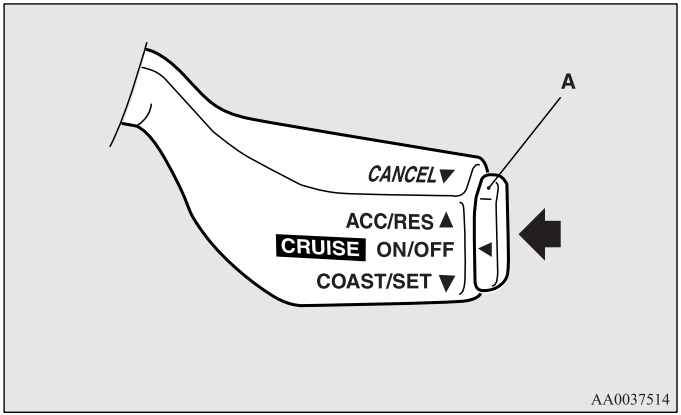


2. Pull the lever (B) down while driving at the desired speed.

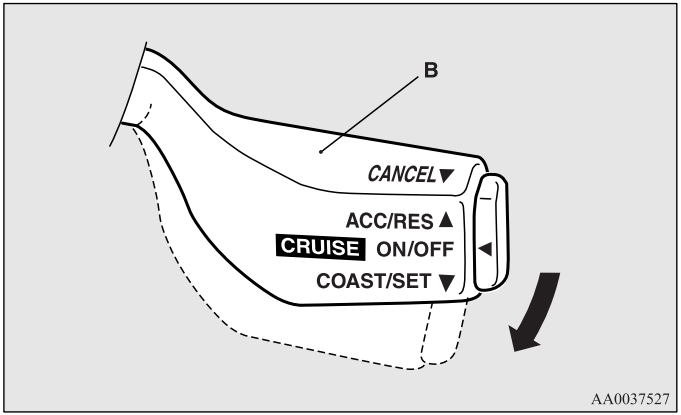


NOTE

- If the main switch is on when the ignition key is turned off, cruise control will be on automatically the next time you start the engine. The “CRUISE” indicator will also be on. You will need to reset the speed however, if you want to use cruise control.
- If the battery voltage is insufficient, the memory data for the main switch will be erased.
  As a result, the “CRUISE” indicator may not come on when you restart the engine.
  If this happens, push in the main switch once again to activate the system.

## To increase the set speed

N00518500256

There are 2 ways to increase the set speed.

### *Cruise control lever*

Pull the cruise control lever up and hold it while driving at the set speed, and you will increase gradually.
When you reach your desired speed, release the switch. Your cruising speed is now set.

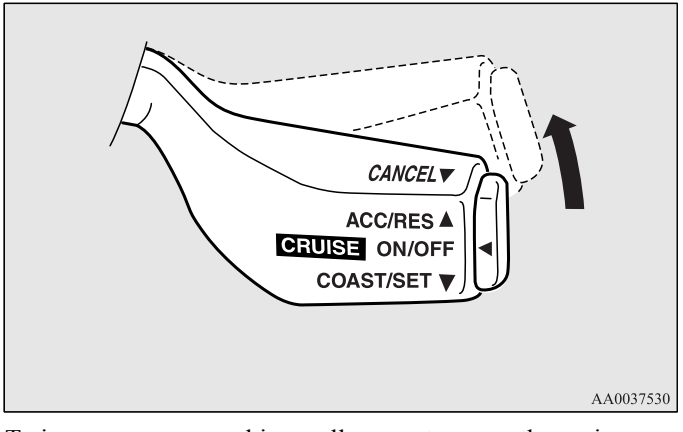


To increase your speed in small amounts, press the cruise control lever up for less than 1 second and release it. Each time you press the lever up, your vehicle will go about 1 mph (1.6 km/h) faster.

### *Accelerator pedal*

Press the accelerator pedal to reach your desired speed. Pull the cruise control lever down for a moment, then release it.

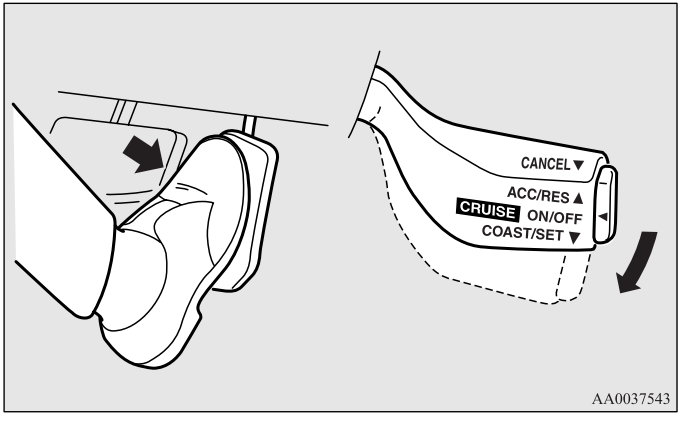

## To decrease the set speed

N00518600198

There are 2 ways to reduce the set speed.

### *Cruise control lever*

Pull the cruise control lever down and hold it while driving at the set speed, and you will slow down (coast) gradually.
When you reach your desired speed, release the switch. Your cruising speed is now set.

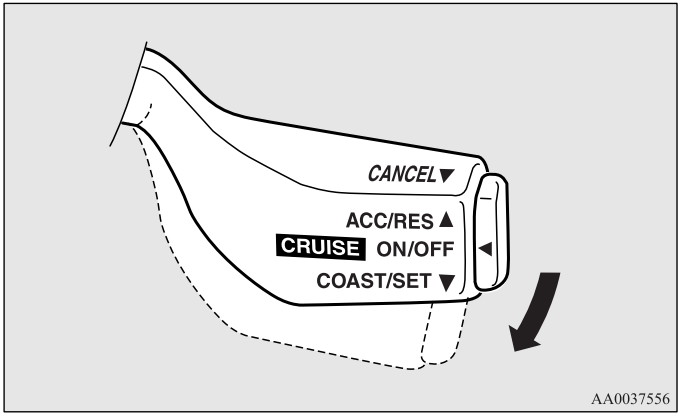


To slow down in small amounts, press the cruise control lever down for less than 1 second and release it.
Each time you press the lever down, your vehicle will slow down by about 1 mph (1.6 km/h).

### *Brake pedal*

Press the brake pedal (which disengages the cruise control), then pull the cruise control lever down momentarily to set a new desired cruise speed.

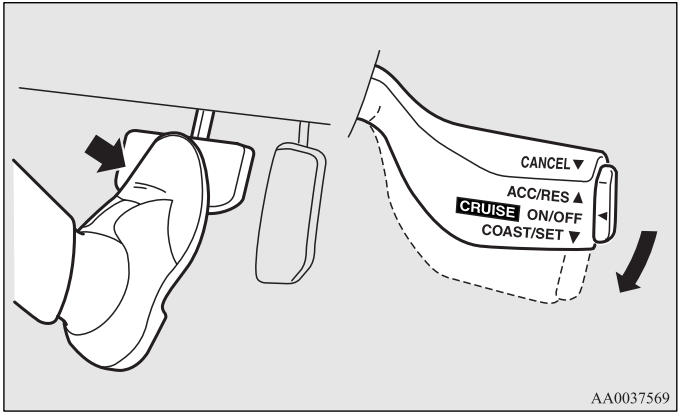

## To accelerate for passing

N00518700072

Press the accelerator pedal as you would normally. When you release the pedal, the cruise control will return to your set speed.

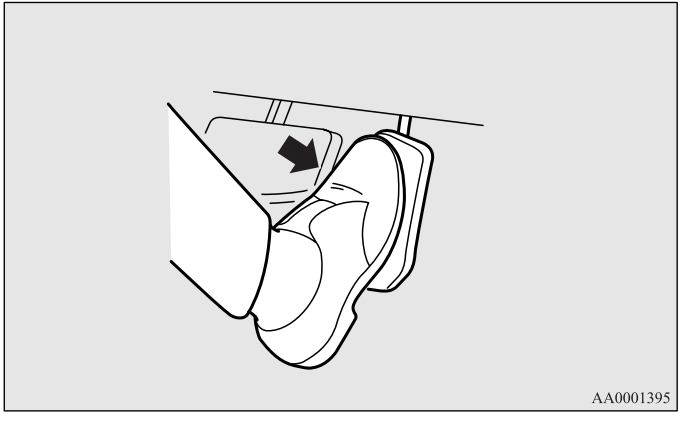


## To deactivate

N00518800464

The cruise control can be turned off as follows:

- Push the main switch (A) at the end of the lever. (Main switch OFF)
- Pull the cruise control lever (B) toward you.

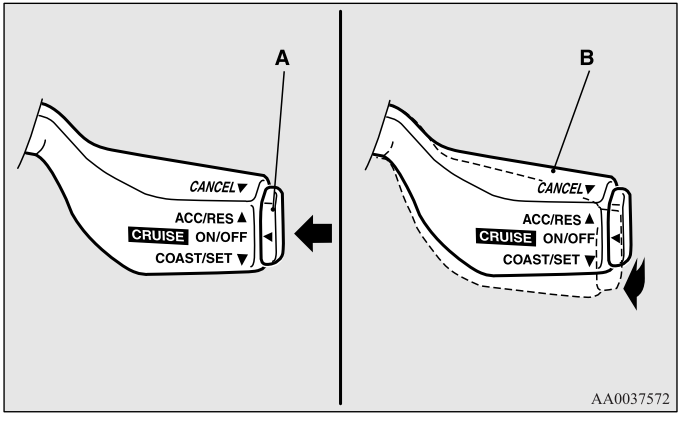


The cruise control can be turned off automatically in any of the following ways:

- By slightly tapping the brake pedal or pressing down on it to slow your speed.
- By pressing the clutch pedal down (for vehicles with manual transaxle).
- By moving the selector lever to “N” (NEUTRAL) position (for vehicles with automatic transaxle).
- When your speed slows to about 10 mph (15 km/h) or more below the set speed because of a hill, etc.

- When your speed slows to about 25 mph (40 km/h) or less.
- When the active stability control starts operating.
  Refer to “Active stability control (ASC)” on page 3-84.

**⚠ WARNING**

- **For vehicles with automatic transaxle, although the cruise control can be turned off by moving the selector lever to the “N” (NEUTRAL) position, never move the selector lever to the “N” (NEUTRAL) position while driving.**
  **You would have no engine braking and could cause a serious accident.**

## To resume the set speed

N00518900191

If the speed memory has not been erased, resume the previously set speed by pulling the cruise control lever up while driving at a speed of about 25 mph (40 km/h) or higher.

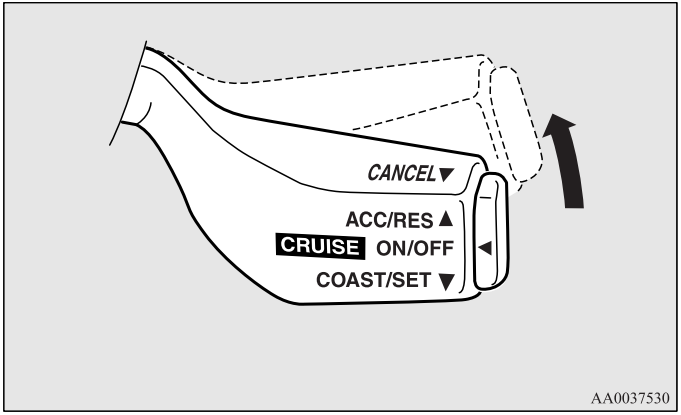


Under either of the following conditions, however, using the switch does not allow you to resume the previously set speed. In these situations, repeat the speed setting procedure:

- The ignition key is turned OFF.
- The main switch is turned OFF.

## *Tire pressure monitoring system*

N00530200325

The tire pressure monitoring system uses tire inflation pressure sensors (A) on the wheels to monitor the tire inflation pressures. The system only indicates when a tire is significantly under-inflated.

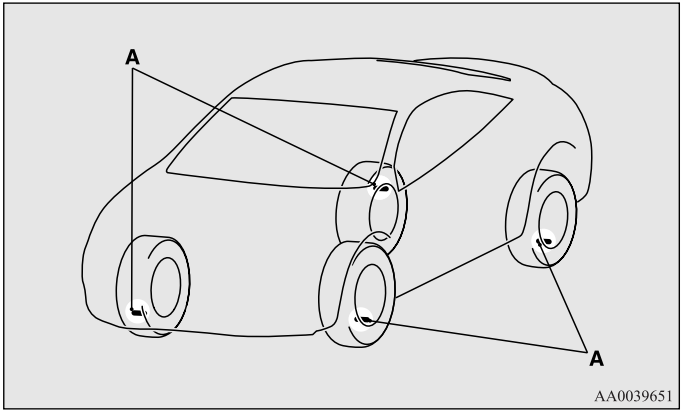


**⚠ *WARNING***

- **The compact spare wheel does not have a tire inflation pressure sensor.**
  **When the compact spare tire is used, the tire pressure monitoring system will not work properly.**
  **See an authorized Mitsubishi Motors dealer as soon as possible to replace or repair the original tire.**

NOTE

- The tire pressure monitoring system is not a substitute for regularly checking tire inflation pressures.
  Be sure to check the tire inflation pressures as described in “Tires” on page 7-20.
- The tire inflation pressure sensor (A) is installed in the illustrated location. Replace grommet (B) with a new one when the tire is replaced.
  For details, please contact your authorized Mitsubishi Motors dealer.

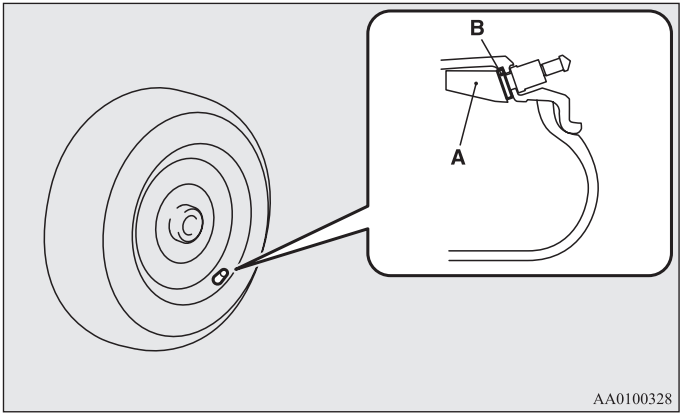

## Tire pressure monitoring system warning light

N00554800093

When the ignition key is turned to the “ON” position, this light normally illuminates and goes off a few seconds later.
If one or more of the vehicle tires (except for the compact spare tire) is significantly under-inflated, however, this light will remain illuminated while the key is in the “ON” position.
Refer to “If the warning light illuminates while driving” on page 3-99 and take the necessary measures.

**⚠ CAUTION**

- **If the tire pressure monitoring system warning light does not illuminate when the ignition key is turned to the “ON” position, it means that the tire pressure monitoring system is not working properly. Have the system inspected by an authorized Mitsubishi Motors dealer.**
  **In such situations, a malfunctioning of the system may be preventing the monitoring of the tire pressure. Avoid sudden braking, sharp turning and high-speed driving.**

**⚠ CAUTION**

- **If a malfunction is detected in the tire pressure monitoring system, the tire pressure monitoring system warning light will blink for approximately 1 minute and then remain continuously illuminated. The warning light will issue further warnings each time the engine is restarted as long as the malfunction exists.**
  **Check to see whether the warning light goes off after few minutes of driving.**
  **If it then goes off during driving, there is no problem.**
  **However, if the warning light does not go off, or if it blinks again when the engine is restarted, have the vehicle inspected by an authorized Mitsubishi Motors dealer.**
  **In such situations, a malfunctioning of the system may be preventing the monitoring of the tire pressure. For safety reasons, when the warning light appears while driving, avoid sudden braking, sharp turning and high-speed driving.**

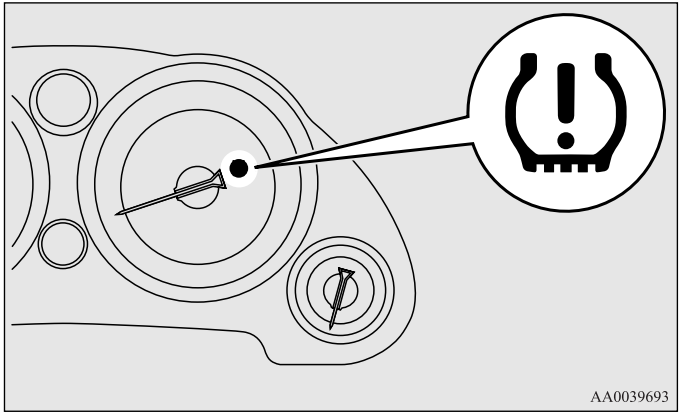


Each tire, including the spare (if provided), should be checked monthly when cold and inflated to the inflation pressure recommended by the vehicle manufacturer on the vehicle placard or tire inflation pressure label. (If your vehicle has tires of a different size than the size indicated on the vehicle placard or tire inflation pressure label, you should determine the proper tire inflation pressure for those tires.)
As an added safety feature, your vehicle has been equipped with a tire pressure monitoring system (TPMS) that illuminates a low tire pressure telltale when one or more of your tires is significantly under-inflated.
Accordingly, when the low tire pressure telltale illuminates, you should stop and check your tires as soon as possible, and inflate them to the proper pressure.
Driving on a significantly under-inflated tire causes the tire to overheat and can lead to tire failure.
Under-inflation also reduces fuel efficiency and tire tread life, and may affect the vehicle's handling and stopping ability.
Please note that the TPMS is not a substitute for proper tire maintenance, and it is the driver's responsibility to maintain correct tire pressure, even if under-inflation has not reached the level to trigger illumination of the TPMS low tire pressure telltale.

Your vehicle has also been equipped with a TPMS malfunction indicator to indicate when the system is not operating properly. The TPMS malfunction indicator is combined with the low tire pressure telltale.
When the system detects a malfunction, the telltale will flash for approximately one minute and then remain continuously illuminated. This sequence will continue upon subsequent vehicle start-ups as long as the malfunction exists.
When the malfunction indicator is illuminated, the system may not be able to detect or signal low tire pressure as intended.
TPMS malfunctions may occur for a variety of reasons, including the installation of replacement or alternate tires or wheels on the vehicle that prevent the TPMS from functioning properly. Always check the TPMS malfunction telltale after replacing one or more tires or wheels on your vehicle to ensure that the replacement or alternate tires and wheels allow the TPMS to continue to function properly.

## If the warning light illuminates while driving

N00532800341

1. If the low tire pressure monitoring system warning light illuminates, avoiding hard braking, sharp steering maneuvers and high speeds. You should stop and adjust the tires to the proper inflation pressure as soon as possible. Adjust the spare tire at the same time. Refer to “Tires” on page 7-20.

NOTE
- When inspecting or adjusting the tire pressure, do not apply excessive force to the valve stem to avoid breakage.
- After inspecting or adjusting the tire pressure, always reinstall the valve cap on the valve stem.
  Without the valve cap, dirt or moisture could get into the valve, resulting in damage to the tire inflation pressure sensor.
- Do not use metal valve caps, which may cause a metal reaction, resulting in corrosion and damage of the tire inflation pressure sensors.
- Once adjustments have been made, the warning light will go off after a few minutes of driving.

2. If the tire pressure monitoring system warning light remains illuminated after you have been driving for about 20 minutes after you adjust the tire inflation pressure, one or more of the tires may have a puncture. Inspect the tire and if it has a puncture, have it repaired by an authorized Mitsubishi Motors dealer as soon as possible.

**⚠ WARNING**

- **If the tire pressure monitoring system warning light illuminates while you are driving, avoid hard braking, sharp steering maneuvers and high speeds. Driving with an under-inflated tire adversely affects vehicle performance and can result in an accident.**

**⚠ CAUTION**

- **If a tire has a puncture, replace that tire with the spare tire. Driving on a punctured tire could lead to an accident.**
- **The tire pressure monitoring system warning light may not illuminate immediately in the event of a tire blowout or rapid leak.**

NOTE
- To avoid the risk of damage to the tire inflation pressure sensors, have any punctured tire repaired by an authorized Mitsubishi Motors dealer. If the tire repair is not done by an authorized Mitsubishi Motors dealer, it is not covered by your warranty.
- Do not use an aerosol puncture-repair spray on any tire. Such a spray could damage the tire inflation pressure sensors. Have any puncture repaired by an authorized Mitsubishi Motors dealer.

The tire pressure monitoring system may not work normally in the following circumstances:

- A wireless facility or device using the same frequency is near the vehicle.
- Snow or ice is stuck inside the fenders and/or on the wheels.
- The tire inflation pressure sensors' battery is exhausted.
- Wheels other than Mitsubishi Motors genuine wheels are being used.
- Wheels that are not fitted with tire inflation pressure sensors are being used.
- Wheels whose ID codes are not memorized by the vehicle are used.
- Compact spare tire is fitted on a road wheel.
- A window tint that affects the radio wave signals is installed.

NOTE

- Tire inflation pressures vary with the ambient temperature. If the vehicle is subjected to large variations in ambient temperature, the tire inflation pressures may be underinflated (causing the warning light to come on) when the ambient temperature is relatively low. If the warning light comes on, adjust the tire inflation pressure.



## Whenever the tires and wheels are replaced with new ones

N00532900036

If you use new wheels with new tire inflation pressure sensors, their ID codes must be programmed into the tire pressure monitoring system. Have tire and wheel replacement performed by an authorized Mitsubishi Motors dealer to avoid the risk of damaging the tire inflation pressure sensors. If the wheel replacement is not done by an authorized Mitsubishi Motors dealer, it is not covered by your warranty.

**⚠ *CAUTION***

- **The use of non-genuine wheels will prevent the proper fit of the tire inflation pressure sensors, resulting air leakage or damage of the sensors.**

## General information

N00533000207

Your tire pressure monitoring system operates on a radio frequency subject to Federal Communications Commission (FCC) Rules (For vehicles sold in U.S.A.) and Industry Canada Rules (For vehicles sold in Canada). This device complies with Part 15 of the FCC Rules and RSS- Gen of the Industry Canada Rules.

Operation is subject to the following two conditions.

- This device may not cause harmful interference.
- This device must accept any interference received, including interference that may cause undesired operation.

**⚠ CAUTION**

- **Changes or modifications not expressly approved by the manufacturer for compliance could void the user's authority to operate the equipment.**

## *Rear-view camera (if so equipped)*

N00546200085

When the gearshift lever (for vehicles with manual transaxle) or the selector lever (for vehicles with automatic transaxle) is in the "R" position with the ignition key in the "ON" position, the rear-view camera image will be displayed on the left portion of the inside rearview mirror.

When the gearshift lever or the selector lever is shifted out of the "R" position, the rear-view camera image will turn off.

**⚠ WARNING**

- **Never rely solely on the rear-view camera to clear the area behind your vehicle. Always check visually behind and all around your vehicle for persons, animals, obstructions or other vehicles. Failure to do so can result in vehicle damage, serious injury or death.**
- **The rear-view camera is an aid system for backing up, but it is not a substitute for your visual confirmation.**
- **The view on the rear-view camera display is limited, and objects outside the view, such as under the bumper or around either corner of the bumper end, cannot be seen on the display.**

## Location of rear-view camera

The rear-view camera (A) is in the rear bumper.

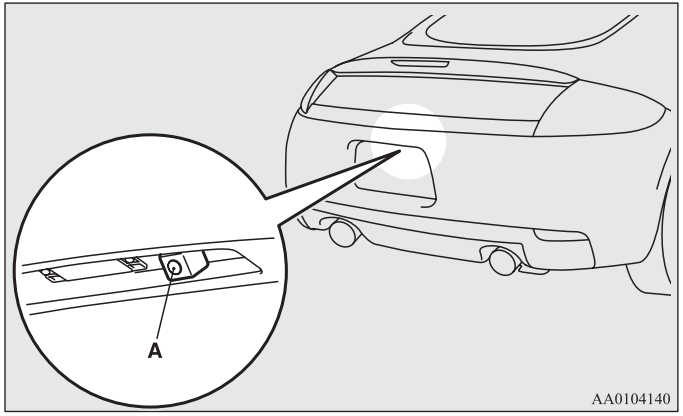


**CAUTION**

- **If the camera lens gets dirty, a clear image cannot be obtained. As necessary, rinse the lens with clean water and gently wipe with a clean, soft cloth.**
- **To avoid damaging the camera;**
  - **Do not rub the cover excessively or polish it by using an abrasive compound.**
  - **Do not disassemble the camera.**
  - **Do not splash hot water directly on the lens.**
  - **Do not spray the camera and its surroundings with high-pressure water.**

## Rear-view camera display

N00547700016

The rear-view camera image appears on the left portion of the rear-view mirror.

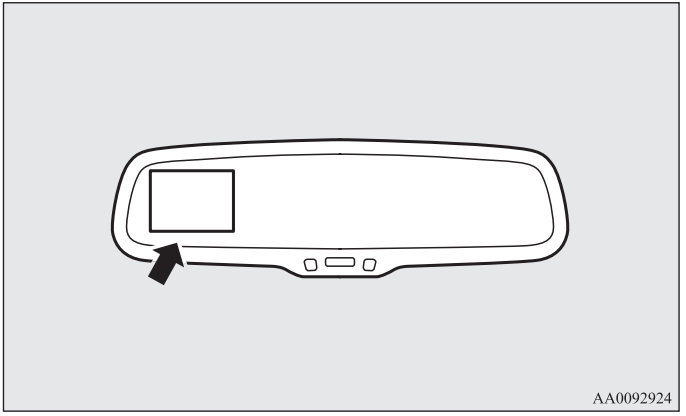


**CAUTION**

- **The rear-view camera uses a wide-angle lens. As a result, images and distances shown on the rear-view camera display are not exact.**

NOTE

- Mirror image is displayed on the rear-view camera display.
- Monitor brightness is adjusted automatically by sensors.
- In the event the monitor is continuously used for more than 5 minutes, the monitor will automatically turn off.
- Under certain circumstances, it may become difficult to see an image on the display, even when the system is functioning correctly.
  - In a dark area, such as at night.
  - When water drops or condensation are on the lens.
  - When sun light or headlights shine directly into the lens.
    → When the camera picks up extremely bright light, such as sunlight reflected off the rear bumper, a bright vertical line may appear on the display.

# *Instrument cluster*

N00519000186

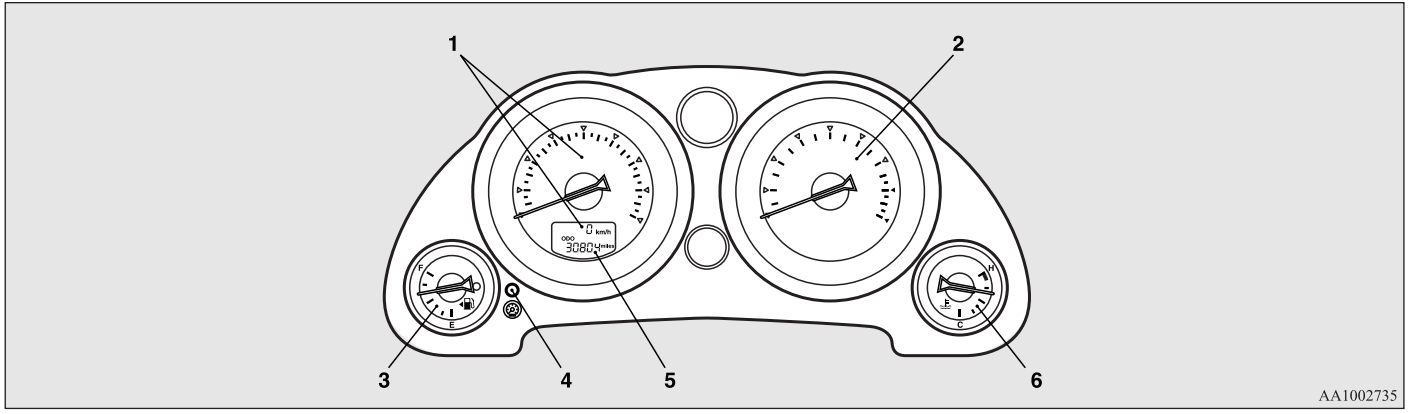


1- Speedometer
2- Tachometer
3- Fuel gauge
4- Light dimmer/Trip odometer control
5- Odometer/Trip odometer
6- Engine coolant temperature gauge

## Speedometer

N00519100086

The speedometer indicates the vehicle's speed in miles per hour (mph) and kilometers per hour (km/h).

Type 1

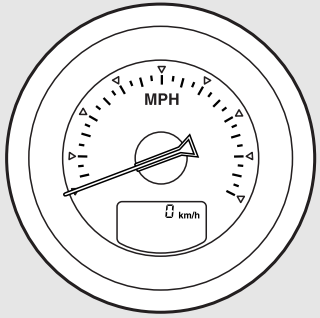


AA0040228

Type 2

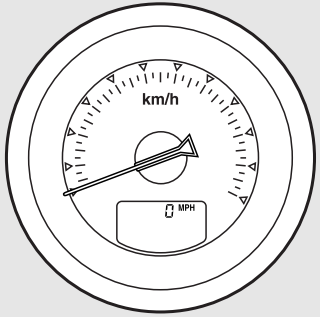


AA0040231

## Tachometer

N00519200159

The tachometer shows engine revolutions per minute. This allows the driver to determine the most efficient gear range and engine speed combinations.
This gauge also assists in evaluating engine performance.

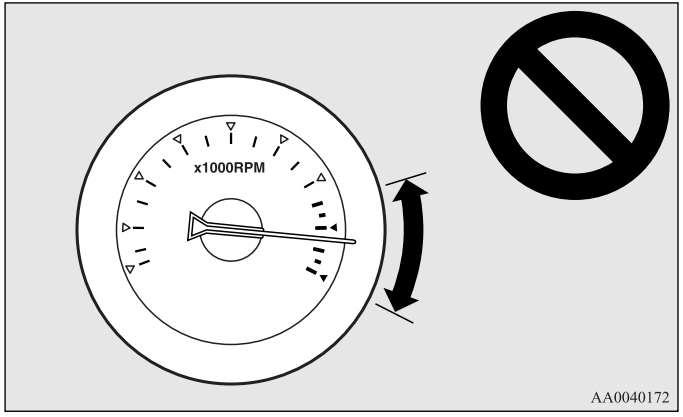


**⚠ CAUTION**

- **The red zone indicates an engine speed beyond the range of safe operation.**

  **Select the correct gear to control the engine speed so that the tachometer indicator does not enter the red zone.**

## Odometer/Trip odometer

N00519500282

When the ignition switch is in the “ON” position, an “ODO” or “TRIP” indicator is displayed.

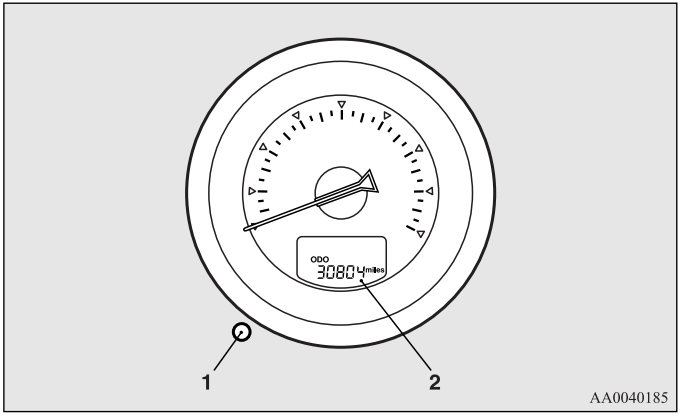


1- Reset button
2- Odometer/Trip odometer

Every time the reset button (1) is pressed lightly (less than one second), the indicators are changed.

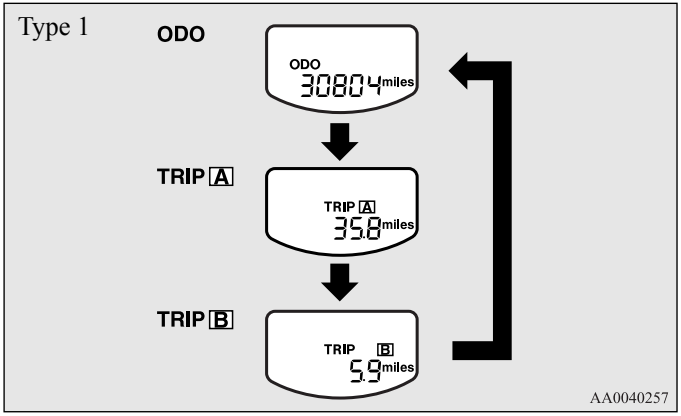


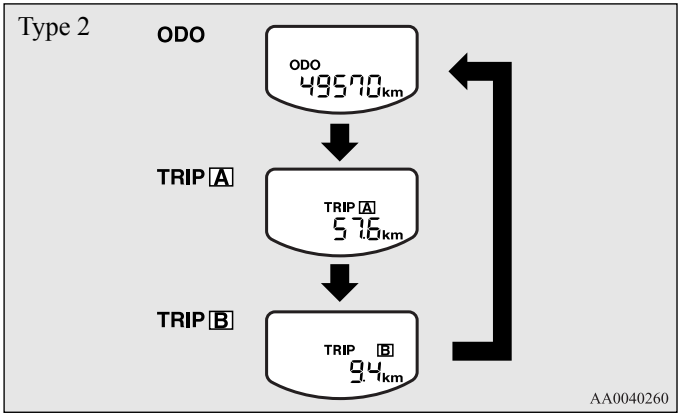


### *ODO-Odometer*

The odometer shows the total distance the vehicle has traveled.

### *TRIP-Trip odometer*

The trip odometer shows the distance traveled since the last time it was reset.

There are two trip odometer displays: A and B.

TRIP A can be used to measure the distance traveled since the current trip began.

At the same time, TRIP B can be used to measure the distance from a second location.

**To reset the trip odometer**

To zero the counter, press and hold the reset button for more than one second. Only the currently displayed value will be reset.

If TRIP A is displayed, for example, only TRIP A will be reset.

NOTE

- Both TRIP A and TRIP B can measure trips up to 9999.9 miles/kilometers.
- Even when the engine has been stopped, the odometer/trip odometer indication is given for about 30 seconds if any of the following steps is taken.
  - The ignition key is turned to the “OFF” position.
  - The driver’s door is opened.
  - The odometer/trip odometer reset button is pressed.
- If the battery is disconnected for a long time, both of these displays will be reset to “0”.

## Fuel gauge

N00519600225

This gauge shows the amount of fuel in the fuel tank when the ignition key is turned to the “ON” position.

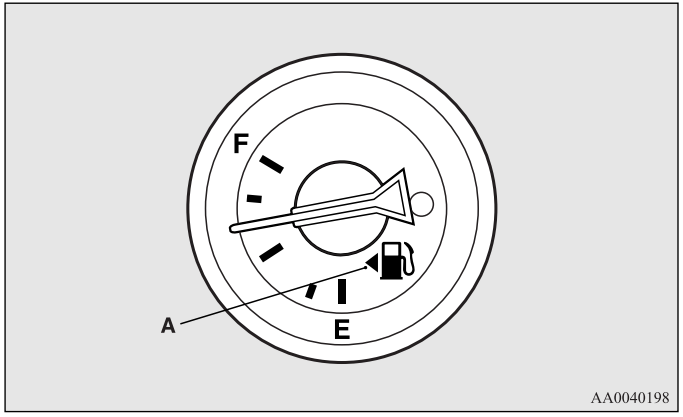


**⚠ CAUTION**

- **Do not drive with an extremely low fuel level. Running out of gas could cause damage to the catalytic converter.**

NOTE

- It takes a little time after refueling for the gauge to register the newly added fuel.
- If you refuel when the ignition key is in the “ON” position, the gauge may differ from the actual level.

### *Fuel tank filler door mark*

The arrow (A) indicates that the fuel tank filler door is located on the left side of the vehicle (Refer to “Filling the fuel tank” on page 1-4).

### *Low-fuel warning light*

N00532000226

The warning light (B) comes on with the ignition key in the “ON” position when the fuel level is getting low. Refuel as soon as possible.

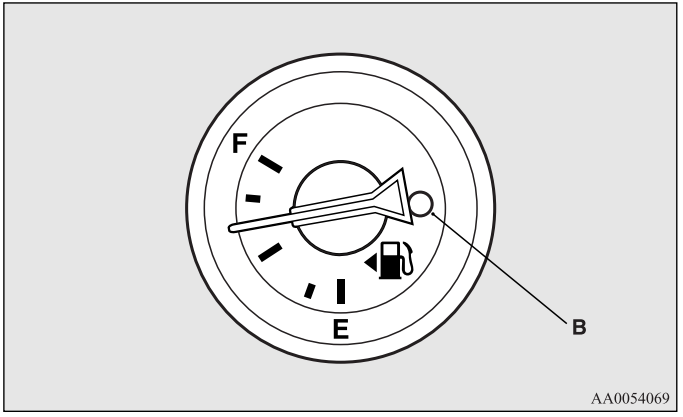


NOTE

- On inclines or curves, due to the movement of fuel in the tank, the low-fuel warning light may indicate incorrectly.

## Engine coolant temperature gauge

N00519700112

This gauge shows the engine coolant temperature. If the temperature is low when the ignition key is turned to the “ON” position, the indicator will remain at the “C” (cold) position until the engine begins to warm up.

The indicator will normally stay near the center while driving, but may rise slightly in stop-and-go traffic or when the engine is under a heavy load.

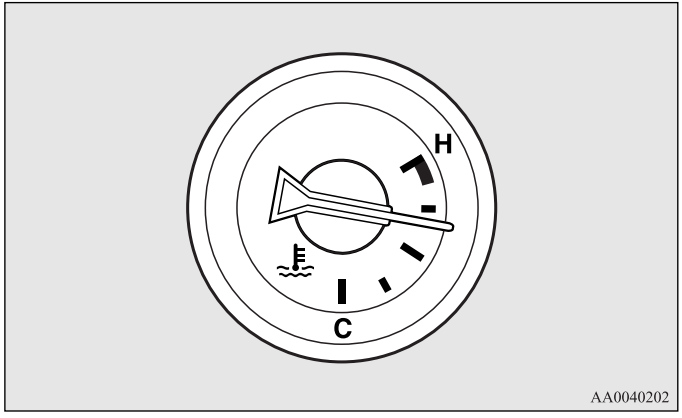


**⚠ CAUTION**

- **Take care to keep the engine operating temperature within the normal range while driving. If the indicator enters the “H” (hot) position, the engine is overheating (Refer to “Engine overheating” on page 6-6).**

## Light dimmer control (meter illumination control)

N00552700030

The rheostat can be adjusted while the headlights or tail lights are on.
Turn the dial to adjust the illumination (meter, multi center display, audio system’s control panel, heater control panel, etc.) to the desired brightness.

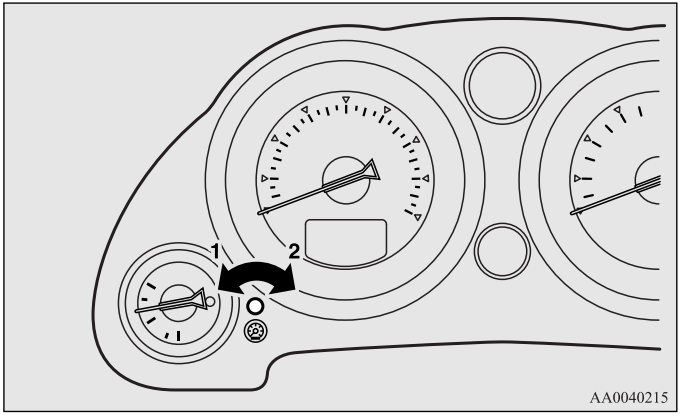


1- To reduce brightness
2- To increase brightness

# *Indicator and warning light package*

N00519800810

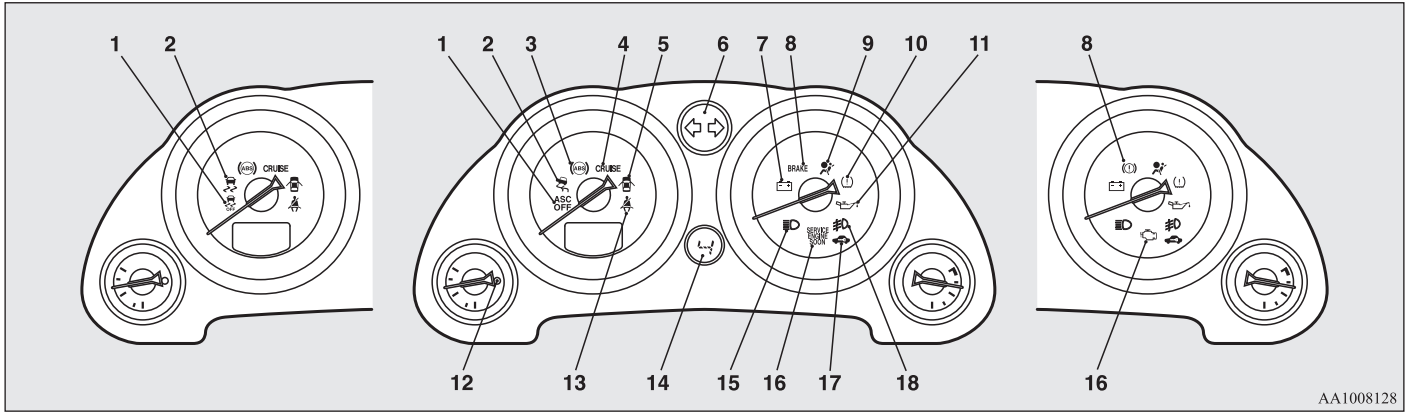


1- ASC OFF indicator → P.3-87
2- ASC indicator → P.3-87
3- Anti-lock braking system warning light → P.3-82
4- Cruise control indicator → P.3-90
5- Door-ajar warning light → P.3-114
6- Turn signal indicators/Hazard warning lights → P.3-111
7- Charging system warning light → P.3-113
8- Brake warning light → P.3-111
9- Supplemental Restraint System (SRS) warning light → P.2-44
10- Tire pressure monitoring system warning light → P.3-97
11- Oil pressure warning light → P.3-113
12- Low-fuel warning light → P.3-108
13- Driver's seat belt reminder/warning light → P.2-18
14- Selector lever position indicator (if so equipped) → P.3-73
15- High beam indicator → P.3-111
16- Engine malfunction indicator ("SERVICE ENGINE SOON" or "Check engine light") → P.3-112
17- Immobilizer indicator → P.3-3
18- Front fog light indicator (if so equipped) → P.3-111

# Indicator

N00519900042

## Turn signal indicators/Hazard warning lights

N00520000173

The arrows will flash in time with the corresponding exterior turn signals when the turn signal lever is used.

Both arrows will flash when the hazard warning flasher switch is pressed.

NOTE
- If the indicator flashes faster than usual or if the indicator stays on without flashing, check for a malfunctioning turn signal light bulb or turn signal connection.

## High beam indicator

N00520100060

A blue light comes on when the headlights are on high beam.

## Front fog light indicator (if so equipped)

N00520200218

This indicator comes on while the front fog lights are on.

# Warning lights

N00520300062

## Brake warning light

N00520400210

This light comes on when the ignition key is turned to the "ON" position (engine off).
When the engine is started, the light should go off.
The light will illuminate under the following conditions:
- When the parking brake lever is engaged.
- When the brake fluid level in the reservoir falls to a low level.
- When the brake circuit is not operating correctly.

Before driving your vehicle, release the parking brake and make certain that the brake warning light has gone out.

**⚠ CAUTION**

- **Brake performance or your ability to control the vehicle may be compromised or the vehicle may become unstable if the brakes are applied suddenly in the following situations:**
  - **The brake warning light does not illuminate when the parking brake is applied or does not turn off when the parking brake is released.**
  - **The brake warning light remains illuminated during driving.**
  - **If any of the above situations occur, stop the vehicle in a safe location, avoiding any sudden brake application, contact and your nearest authorized Mitsubishi Motors dealer or a repair facility of your choice.**

**⚠ CAUTION**

- **The vehicle should be brought to a stop in the following manner when brake performance has deteriorated while driving.**
  - **Press the brake pedal harder than usual.**
  - **Should the brakes fail, shift down to a lower gear to reduce your speed and slowly pull the parking brake lever to park your vehicle. Press the brake pedal to operate your rear brake lights to alert vehicles behind you.**



## Engine malfunction indicator (“SERVICE ENGINE SOON” or “Check engine light”)

N00520500396

This indicator is a part of the onboard diagnostic (OBD) system which monitors the emissions, engine, and automatic transaxle control systems. If a problem is detected in one of these systems, this indicator comes on. When the ignition key is turned to the “ON” position, this indicator normally comes on and goes off a few seconds later.

This indicator will come on if the fuel tank filler cap is not properly tightened. If the indicator comes on and stays on after refueling, stop the engine and check that the cap is properly tightened. (Turn the cap clockwise until you hear clicking sounds.)
If this indicator does not go off after several seconds or lights up while driving, have the system checked as soon as possible at an authorized Mitsubishi Motors dealer or a repair facility of your choice.

**⚠ CAUTION**

- **Driving for a long time with the engine malfunction indicator on may cause more damage to the emission control system. This could also affect fuel economy and drivability.**
- **If this indicator does not come on when the ignition key is turned to the “ON” position, have the system checked by an authorized Mitsubishi Motors dealer or a repair facility of your choice.**
- **If the indicator comes on while the engine is running, avoid driving at high speeds.**
  **During vehicle operation with the indicator on, the vehicle may not accelerate when you depress the accelerator pedal.**
  **When the vehicle is stationary with the indicator on, you must depress the brake pedal more firmly than usual since the engine idling speed is higher than usual and the vehicle with an automatic transaxle has a stronger tendency to creep forward.**

NOTE

- Do not disconnect the battery cable when the Engine malfunction indicator (“SERVICE ENGINE SOON” or “Check engine light”) is on.
  The engine electronic control module stores critical OBD information (especially exhaust emission data), which may be lost if the battery cable is disconnected while the engine malfunction indicator is on. This will make it difficult to diagnose the cause of future problems.

## Charging system warning light

N00520600166

This light comes on in the event of a malfunction in the charging system or when the ignition key is turned to the "ON" position (engine off). When the engine is started, the light should go out. Check to make sure that the light has gone out before driving.

**⚠ CAUTION**

- **If the warning light stays on after the engine has started, the battery charging system may be malfunctioning. In this case, take your vehicle to an authorized Mitsubishi Motors dealer or a repair facility of your choice and have the system checked.**

## Oil pressure warning light

N00520700154

This light comes on when the engine oil pressure is below normal. If the light stays on while driving, stop the engine as soon as possible. Do not run the engine until the cause of the low oil pressure is corrected.

**⚠ CAUTION**

- **If this light comes on when the engine oil level is not low, have your vehicle checked at an authorized Mitsubishi Motors dealer or a repair facility of your choice.**
- **This warning light does not show the amount of oil in the crankcase. This can only be determined by checking the oil level with the dipstick with the engine turned off.**

## Door-ajar warning light and buzzer

N00520900231

This light comes on when any door or rear hatch (ECLIPSE) is open or not completely closed.
When the vehicle is moving at more than 5 mph (8 km/h) and any door or rear hatch is open or ajar, a tone will sound 4 times and the warning light will flash 4 times to inform the driver that a door or rear hatch is not properly shut.

**⚠ CAUTION**

- **Before driving, make sure that the door-ajar warning light is off.**



NOTE

- The goes out automatically after about 30 minutes to prevent complete discharge of the battery.
  Refer to “Interior light auto-cutout function (dome light and other lights)” on page 3-175.

## *Multi center display*

N00522100080

When the ignition key is in the “ACC” or “ON” position, the digital clock, the outside temperature (if so equipped) and the electronic compass (if so equipped) are displayed in the multi center display. When the ignition key is in the “ACC” or “ON” position and the audio system is activate, the audio information is displayed in the multi center display.

**⚠ WARNING**

- **When operating the system for a prolonged period, make sure the vehicle is parked in a well ventilated area to avoid the accumulation of toxic fumes inside and outside of the passenger compartment.**

**⚠ CAUTION**

- **The driver should not operate the display while the vehicle is in motion.**
- **When operating the system, stop the vehicle in a safe area.**

NOTE

- Putting a cellular phone in the monitor’s small storage compartment may weaken the phone’s reception. This is typical and does not mean that something is wrong with the system.
- Use of wireless devices such as transceivers near the monitor may make the screen go dark temporarily. This is typical and does not mean that something is wrong with the system.

# Controls and display

N00533100051

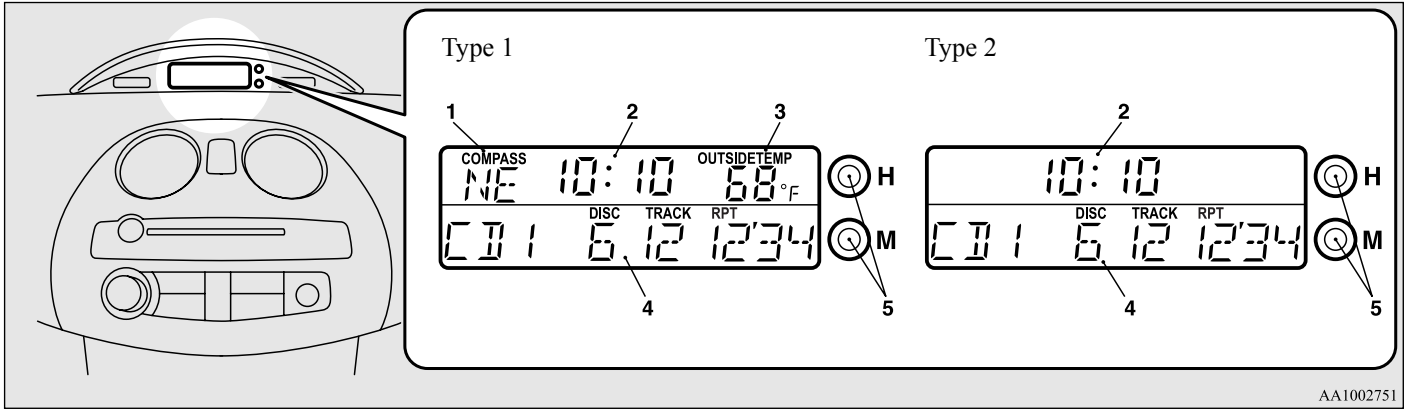


1- Electronic compass (type 1 only) → P.3-116
   This display shows the compass direction of the vehicle.
2- Digital clock → P.3-123
3- Outside temperature (type 1 only) → P.3-123
4- Audio
   This display shows the audio condition.
   Refer to “Audio system” on page 5-24.
5- “H” button/“M” button
   These buttons can change the display.
   “To adjust for compass variance” → P.3-117
   “Compass calibration” → P.3-120
   “Digital clock” → P.3-123
   “Change of the outside temperature unit” → P.3-124

## Electronic compass (type 1 only)

N00522400070

The electronic compass (A) shows the direction of the vehicle by the 8 direction using the earth's magnetic field.

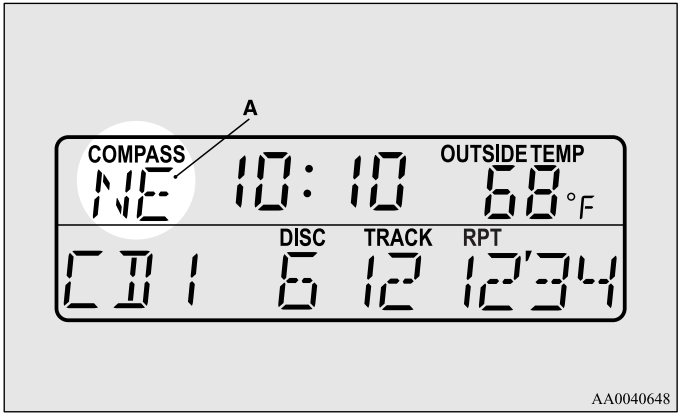


The direction of the vehicle is indicated by the symbols shown below.

| Direction | Symbol | Direction | Symbol |
|---|---|---|---|
| North | N | South | S |
| Northeast | NE | Southwest | SW |
| East | E | West | W |
| Southeast | SE | Northwest | NW |

NOTE

- The electronic compass may not show the correct direction in the following places where the earth's magnetic field is disrupted.
  In these cases, the correct direction will be displayed once the vehicle returns to a place where the earth's magnetic field is stable.
  - Vehicle in tunnels or parked in buildings
  - Expressways, near railroads, underneath railroad cables, or over subways
  - Near transformer stations or high voltage power lines
- Do not attach ski racks, antennas, or any other object to the vehicle by means of a magnet.
  Such magnets will affect the operation of the electronic compass.

### *Compass variance*

Under certain circumstances, as during a long distance cross-country trip, it will be necessary to adjust for compass variance.

Compass variance is the difference between the earth's magnetic north and the true geographic north. If not adjusted to account for this compass variance, your compass could give false readings.

**⚠ *CAUTION***

- **Adjust for compass variance when the vehicle is safely parked.**
  **Although the compass variance can be adjusted at speeds of less than 2 mph (3 km/h), it should be adjusted when the vehicle is safely parked.**

NOTE

- The compass adjustment mode will automatically shut off, if no adjustment is made within about 10 seconds.

### *To adjust for compass variance*

N00554000011

1. Find your current geographic location and the correct corresponding zone number on the zone map.

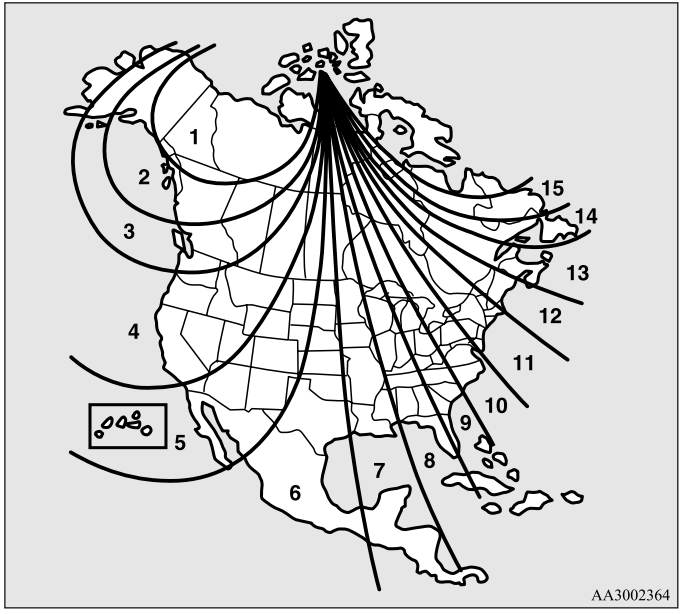

2. When the ignition key is in the “ON” position, simultaneously press the “H” button and “M” button. Release the “H” button and “M” button within 10 seconds, and the electronic compass will switch to its compass setting mode.

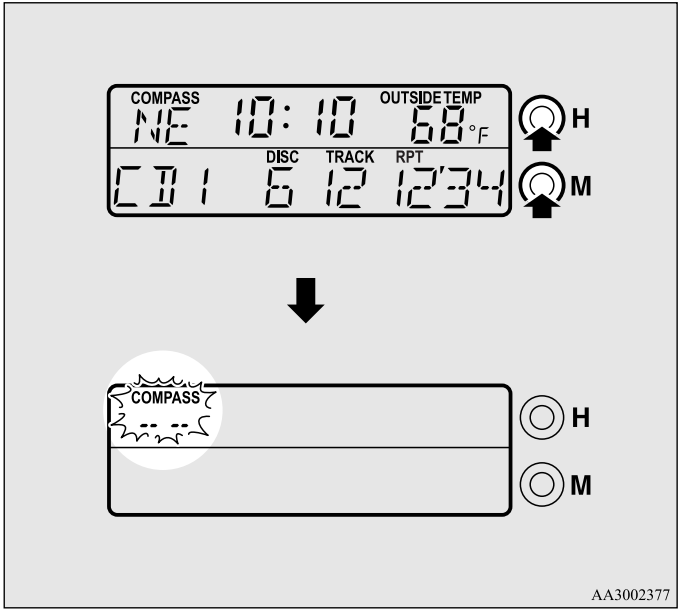


3. With the electronic compass in its compass setting mode, press the “M” button to cause the display (A) to show the zone number that is set.

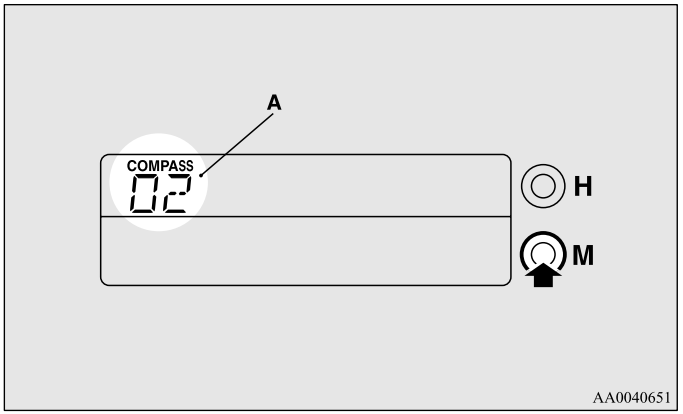

4. Press the “M” button until the correct zone number appears in the display.

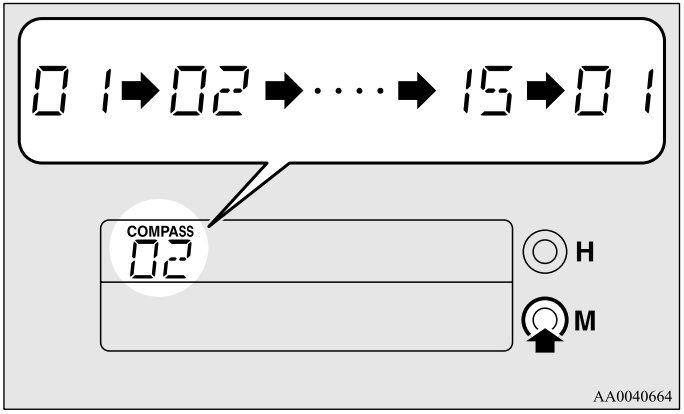


NOTE

- Every time the “M” button is pressed, the zone number changes as follows:

  01 → 02 → … 15 → 01

5. When the zone number adjustment has been completed, press the “H” button.
   The display will return to its previous display.

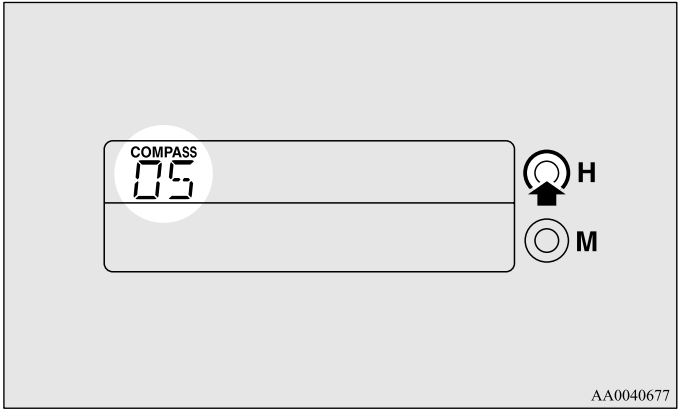

## Compass calibration

N00553000014

This compass is self-calibrating, which means it automatically makes corrections against magnetization of its components when the vehicle is running. It should not be necessary to manually calibrate the compass. If the indicated direction appears to be wrong, first check the compass variance.
If the compass variance is correct, but the compass still shows the wrong direction, calibrate the compass by the following steps.

**⚠ CAUTION**

- **Adjust for compass calibration when the vehicle is safely parked.**
  **Although the compass calibration can be adjusted at speeds of less than 2 mph (3 km/h), it should be adjusted when the vehicle is safely parked.**

NOTE
- The compass adjustment mode will automatically shut off, if no adjustment is made within about 10 seconds.

1. When the ignition key is in the “ON” position, simultaneously press the “H” button and “M” button. Release the “H” button and “M” button within 10 seconds, and the electronic compass will switch to its compass setting mode.

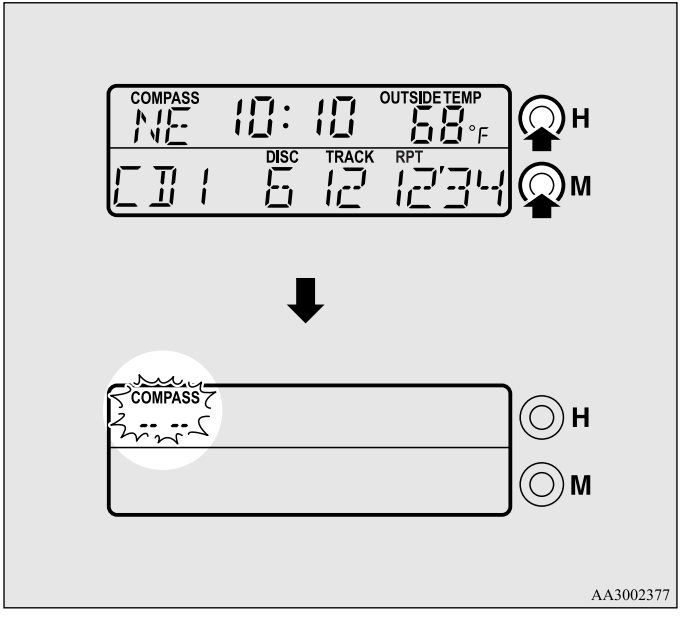

2. With the electronic compass in its compass setting mode, press the “H” button to cause the electronic compass to switch to its compass calibration mode.

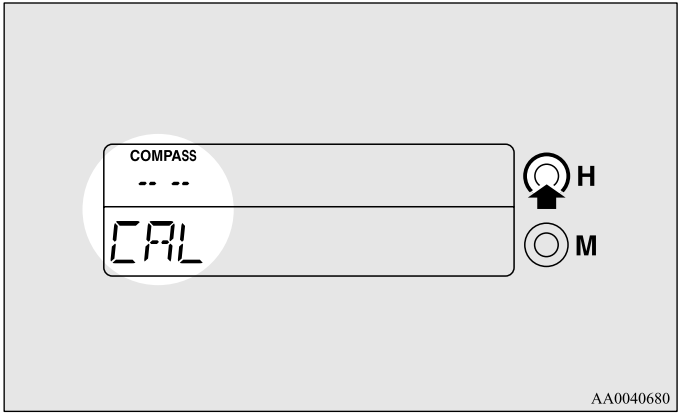


3. Drive the vehicle slowly through one or more 360° turns until the calibration has been completed in either direction in a safe, open space with no other vehicles or buildings around. This will automatically complete the adjustment, calibrating the compass to the correct azimuth.

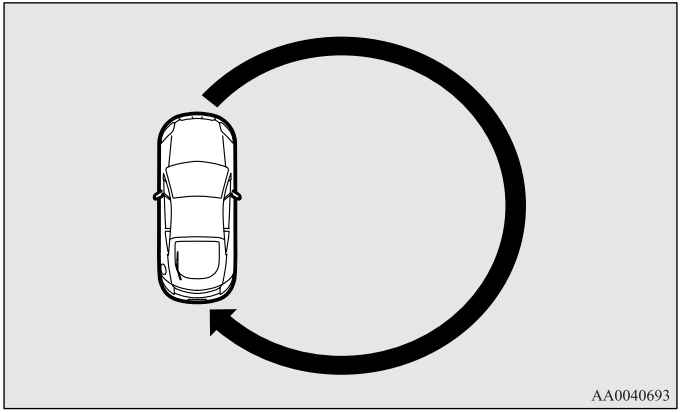

NOTE

- If you drive through multiple 360° turns but calibration is still not successfully completed, try performing the calibration procedure in an open space that is completely free of rail lines, tall buildings, and high-voltage power lines.
- The display (A) will show "-- --" in the following circumstances.
  If this happens, repeat the procedure starting with step 1.
  - The "H" button is pressed again after selection of the compass calibration mode.
  - The vehicle is driven through one or more 360° turns for compass calibration, but the procedure is not successful.

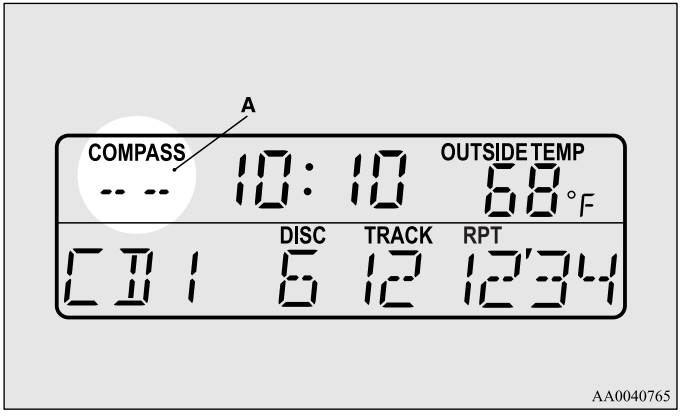


### *Error message*

N00553200016

In the event of a malfunction in the electronic compass, the display (A) will show "EE".
Please have your vehicle inspected at an authorized Mitsubishi Motors dealer or a repair facility of your choice.

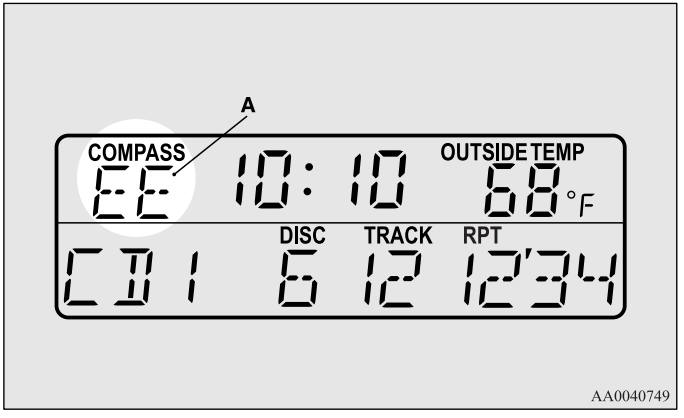

## Digital clock

N00553100015

The time (A) is shown in the center of the display.

### *Adjusting the time*

Set the time by pressing the various buttons as described below.

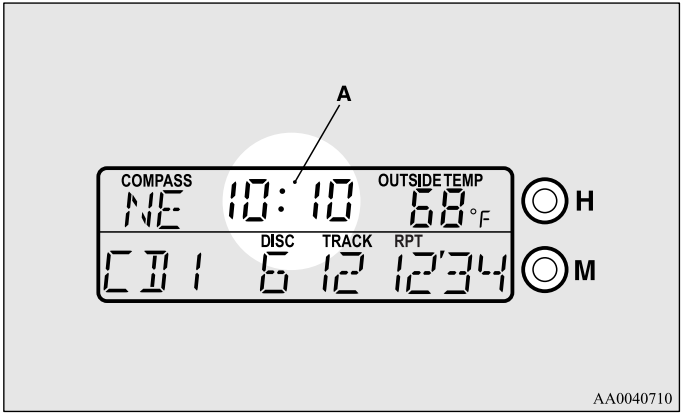


| | |
|---|---|
| H (HOUR)- | Press and hold the “H” button until the correct hour appears. |
| M (MINUTE)- | Press and hold the “M” button until the correct minute appears. |

NOTE

- If the battery cables are disconnected or the battery becomes discharged, the clock will have to be reset.

## Outside temperature (type 1 only)

N00522300053

This value (A) shows the outside temperature of the vehicle.

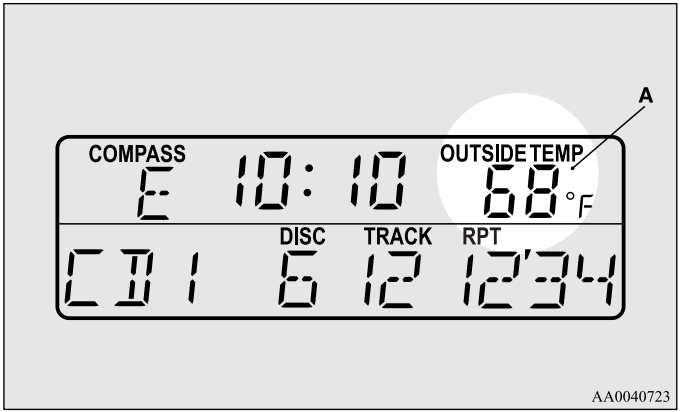


NOTE

- The outside temperature can be displayed from -40 °F (-40 °C) to 122 °F (50 °C).
- When the outside temperature is over 122 °F (50 °C) or below -40 °F (-40 °C), the display will remain 122 °F (50 °C) or -40 °F (-40 °C).
- The outside temperature displayed may differ from the actual temperature on account of surrounding conditions, driving conditions, etc.

If the outside temperature drops below approximately 37 °F (3 °C), the outside temperature figure changes to “ICE” and the “ICE”, “OUTSIDE TEMP”, and unit indications flash for approximately 30 seconds to show there is a danger the road might be icy.

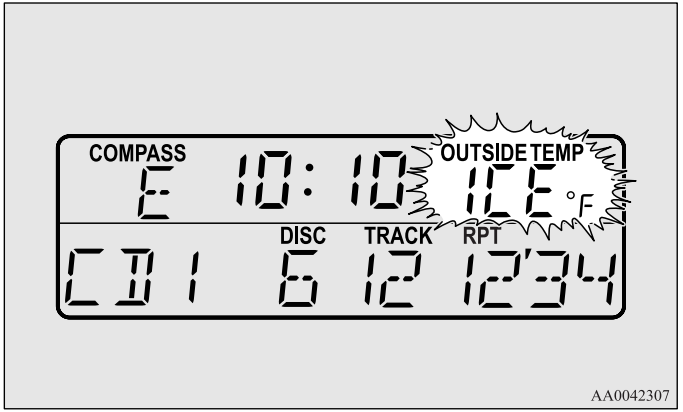


**⚠ CAUTION**

- **Even when the “ICE”, “OUTSIDE TEMP”, and unit indications do not flash, the road may be icy, so please take care when driving.**

### *Change of the outside temperature unit*

N00553400018

When the ignition key is in the “ACC” or “ON” position, pressing the “H” button and “M” button simultaneously for more than 10 seconds will switch the outside temperature unit between °F and °C.

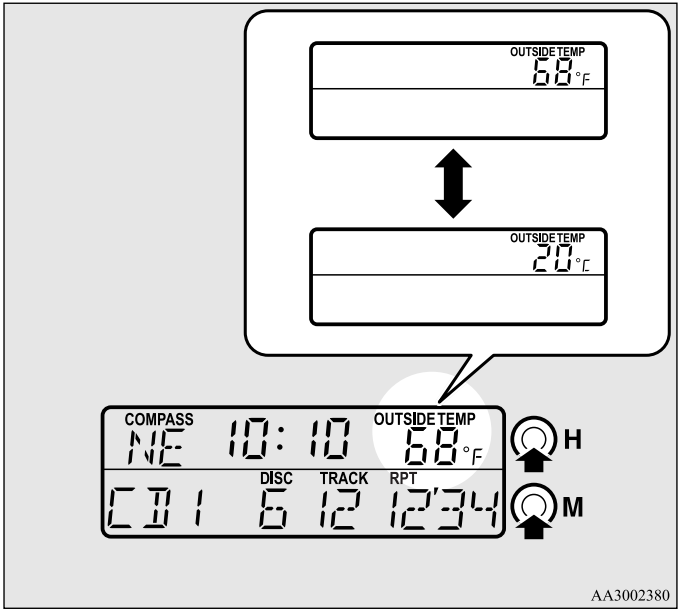


NOTE

- Disconnecting the battery cable causes the outside temperature unit memory to be erased. If it has been disconnected, readjust the unit by the above procedure.

# *Combination headlights and dimmer switch*

N00522500521

## Headlights

Rotate the switch to operate the lights.

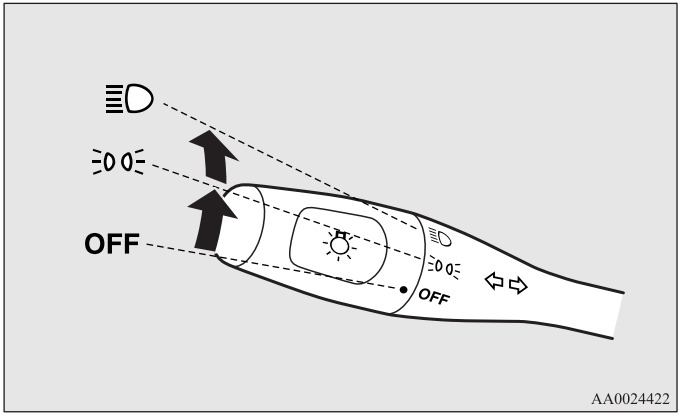


As your vehicle is equipped with daytime running lights, the combinations of switch operations and illuminated lights differ in accordance with the following conditions.

[When the engine is started and the parking brake is released]

The daytime running lights come on.

| | | |
|---|---|---|
| OFF | *1 | Headlights illuminate dimly |
| | *2 | Headlights illuminate, tail, front and rear side-marker lights, license plate |
| | *1 | Headlights illuminate dimly and Parking, tail, front and rear side-marker lights, license plate and instrument panel lights on |
| | *2 | Headlights illuminate and Parking, tail, front and rear side-marker lights, license plate and instrument panel lights on |
| | | Headlights and other lights on |

*1: Except for vehicles with high intensity discharge headlights
*2: Vehicles with high intensity discharge headlights

NOTE

- Once the daytime running lights have been turned on, the illuminated lights do not go off until the ignition switch is turned to the “LOCK” or “ACC” position.

[The engine is not running, or the engine is running but the parking brake has not been released]

The engine can be started with the headlights off when the vehicle is stationary.

| | |
|---|---|
| OFF | All lights off |
| | Parking, tail, front and rear side-marker lights, license plate and instrument panel lights on |
| | Headlights and other lights on |

NOTE

- Do not leave the headlights and other lights on for a long period of time when the engine is not running. The battery will run down.
- When it rains, or when the vehicle has been washed, the inside of the lens sometimes becomes foggy. This is the same as when window glass mists up on a humid day, and does not indicate a problem. When the light is switched on, the heat will dry out the fog. However, if water collects inside the light, have it checked by an authorized Mitsubishi Motors dealer or a repair facility of your choice.

## Light auto-cutout function (headlights and other lights)

N00532600264

- If the ignition key is turned to “LOCK” or “ACC” position or removed from the ignition switch and the driver’s door is opened with the light switch in the “” or “” position, the lights automatically turn off.
  - If the driver’s door is opened after the key is removed from the ignition switch, a high-pitched constant tone will sound to remind you to turn off the lights.
  - If the driver’s door is opened with the key in the ignition switch, a low-pitched tone will sound to remind you to remove the key.
- If the ignition key is turned to “LOCK” or “ACC” position or removed from the ignition switch with the driver’s door closed and the light switch in the “” or “” position, the lights will stay on for about 3 minutes and then turn off automatically.

### *When you want to keep the lights on:*

If the light switch is turned to the “ ” or “ ” position again after the engine is turned off, the 3 minute auto-cutout function described above will not work. The lights (the parking lights, tail lights and license plate lights) will stay on and will not turn off automatically.

NOTE

- When the driver’s door is opened, a continuous high-pitched tone will sound if the key has been removed; a continuous low-pitched tone will sound if the key is in the ignition switch.
  The tone stops sounding when the driver’s door is closed.

## Headlight reminder buzzer

N00549800138

If the driver’s door is opened with the key in the “LOCK” or “ACC” position or removed from the ignition switch while the lights are on, the tone will sound to remind you to turn off the lights. The lights will turn off automatically and so will the tone. Or you can turn the light switch to the “OFF” position to stop the tone.

## Dimmer (high/low beam change)

N00549900168

To change the headlights from high beam to low beam and vice versa, turn the light switch to the “ ” position, then pull the turn signal lever to fully toward you (1). Switch the headlights to low beam as a courtesy whenever there are oncoming vehicles, or when there is traffic moving ahead of you. An illuminated blue light in the instrument cluster indicates when the headlights are on high beam.

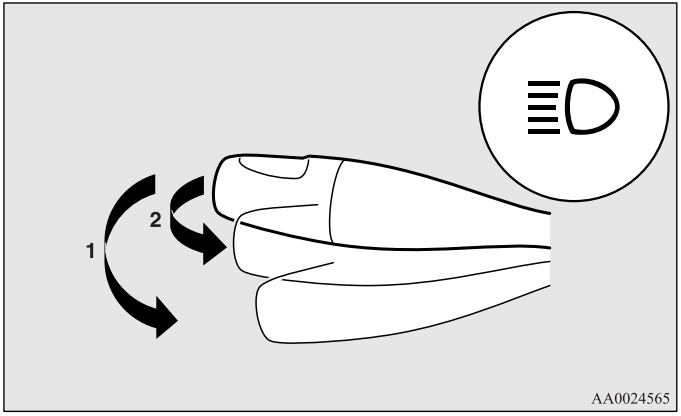

## Headlight flasher

N00550000156

You can flash the high beams by pulling the lever gently toward you (2). The lights will go back to normal when you let go. While the high beam is on, you will see a blue light on the instrument panel.

NOTE

- You can flash the high beams by pulling the lever toward you, even if the light switch is off.
- If you turn the lights off with the headlights set to high-beam illumination, the headlights are automatically returned to their low-beam setting when the light switch is next turned to the "≣D" position.



## *Headlight levelling switch (if so equipped)*

N00537100046

The direction of the headlight beam (the direction which the light shines in) alters according to the number of people and the load in the vehicle. Lower the headlight angle if it is too high due to the number of people and/or the load in the vehicle so that the headlights' glare does not distract the drivers of approaching vehicles. First set the light switch to the "≣D" position, then turn the headlight levelling switch knob to lower the beam. The greater the number on the headlight levelling switch knob, the lower the beam will point.
Set the switch to the appropriate position so that the headlight beam is level with the road.

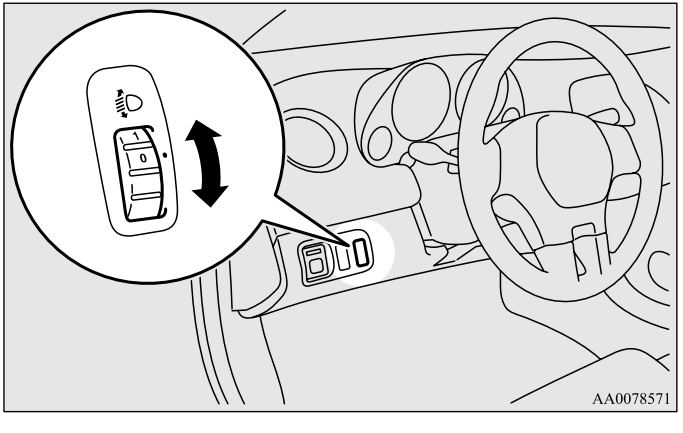

NOTE

- Start adjusting when the knob is at the “0” position (when the beam is at its highest).
- Keep the knob in the “0” position except when using the knob to lower the headlight beam angle.
- Always return the knob to the “0” position when the baggage is removed and the people have left the vehicle.

## *Turn signal lever*

N00522600287

When changing lanes, or to making a gradual turn, hold the lever in the “lane change” position (1). It will return to the neutral position when you let go. Use the full position (2) when making a normal turn. The lever will return to the neutral position when the turn is complete. There may be times when the lever does not return to the neutral position. This usually happens when the steering wheel is turned only slightly. You can easily return the lever by hand.

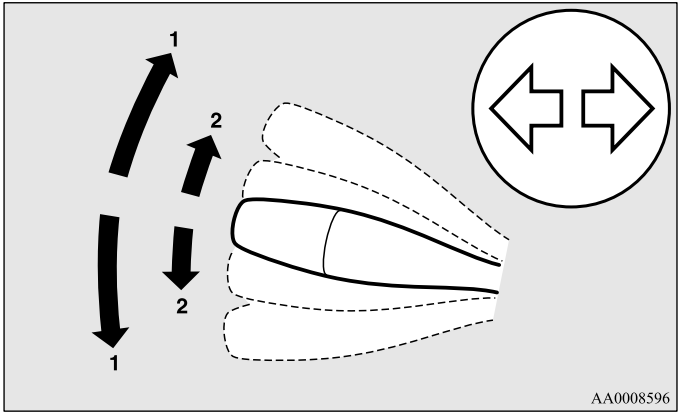

NOTE

- A light in the instrument panel flashes to show when the front and rear turn signal lights are working properly.
  If this light flashes faster than usual, check for a burned out lamp bulb or malfunctioning connection.
  If the panel light does not come on when the lever is moved, check for a blown fuse or a burned out bulb in the panel.
  Have the vehicle inspected by an authorized Mitsubishi Motors dealer or a repair facility of your choice.



## *Hazard warning flasher switch*

N00522700246

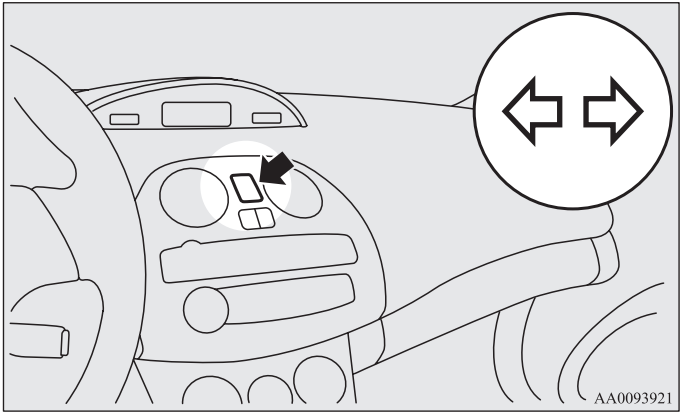


If you press the flasher switch, the front and rear turn signals will flash intermittently, and so will the hazard warning lights. This is an emergency warning system and should not be used when the vehicle is in motion, except for emergencies.
If you need to leave your vehicle, the flashers will keep working after the ignition key is removed.

NOTE

- If you keep the flashers on for several hours with the engine turned off, the battery will run down.

## *Front fog light switch (if so equipped)*

N00522800380

The front fog lights illuminate only when the headlights are on low beam. Press the switch to illuminate. Press the switch again to turn the lights off.
The indicator in the instrument cluster will illuminate while the front fog lights are on.

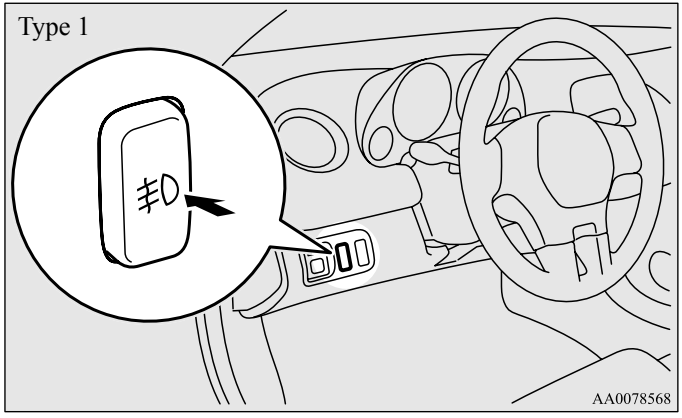


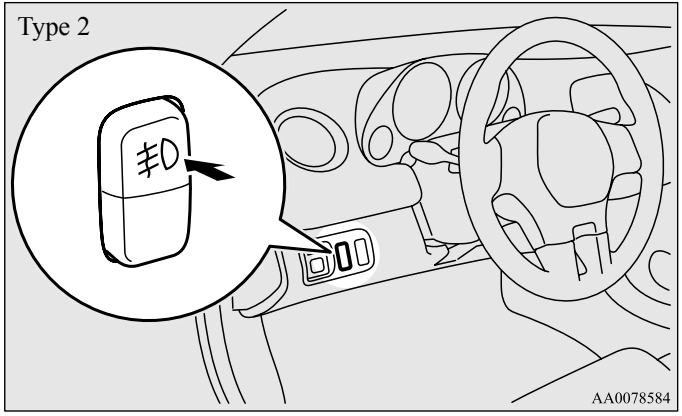


NOTE

- If the daytime running lights are on, the front fog lights will not illuminate.
  The headlights must be on for the front fog lights to illuminate.
- If the headlights are switched to high beam, the front fog lights will go out; they will illuminate again when the headlights are switched back to low beam.
- If the light switch is rotated to the “OFF” or “≣D◁≡” position while the front fog lights are illuminated, they will automatically turn off. They can be turned back on again by rotating the light switch back to “≣D” position, and pressing the front fog light switch once again.

# *Wiper and washer switch*

N00523000422

## Windshield wipers

The windshield wipers wipe when the wiper lever is moved as shown in the illustration and the ignition key is in the “ON” or “ACC” position.

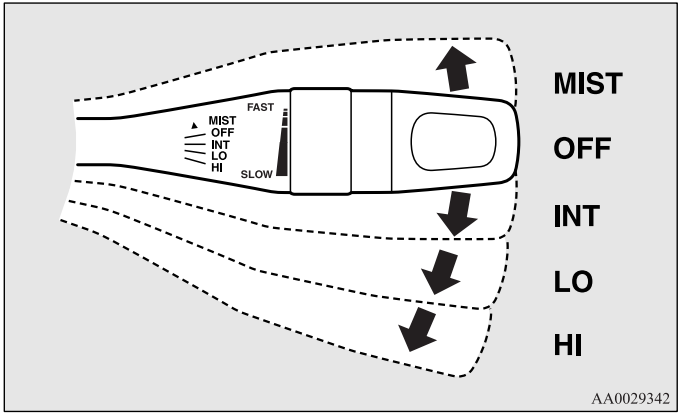


MIST- Misting function
The wipers will wipe one time.
OFF- Off
INT- Speed sensitive intermittent operation
Interval between wiper sweeps varies in accordance with vehicle speed.
LO- Slow
HI- Fast

### *To adjust intermittent intervals*

With the lever in the “INT” (speed-sensitive) position, the intermittent intervals can be adjusted by turning the knob (A).

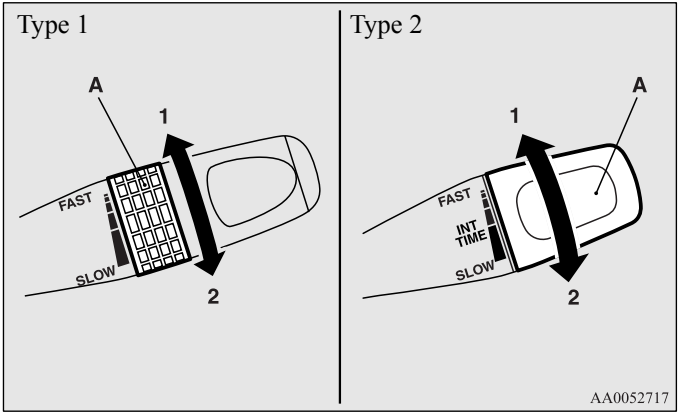


1- Fast
2- Slow

### *Misting function*

Move the lever in the direction of the arrow and release, and the wipers will operate once.
Use this function when you are driving in mist or drizzle.
If the lever is held in the upward position (MIST), the wipers continue operating until the lever is released.

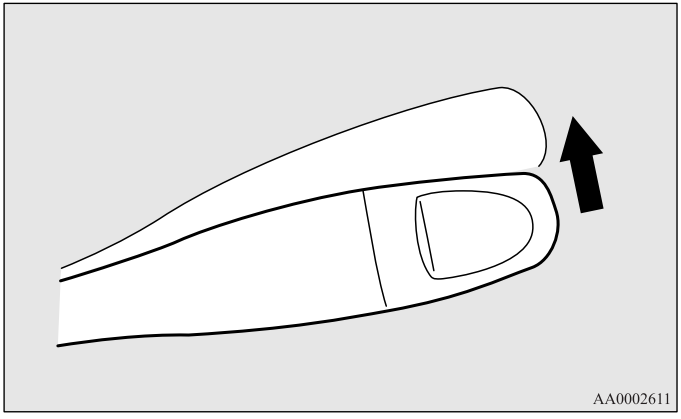


## Windshield washer

N00504600096

To turn on the windshield washer, pull the lever toward you with the ignition key in either the “ON” or “ACC” position.
The wipers will wipe automatically several times when the washer fluid is sprayed.

To turn off the spray, release the lever.

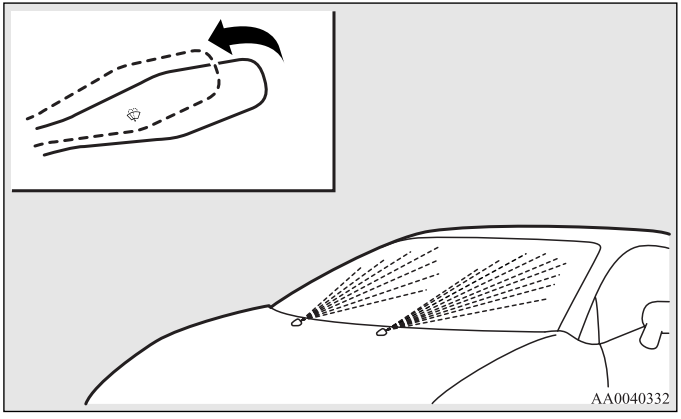

## Rear window wiper and washer (ECLIPSE only)

N00523200264

The rear window wiper and washer can be operated when the ignition key is in the “ON” or “ACC” position.

Turn the knob to operate the rear window wiper.

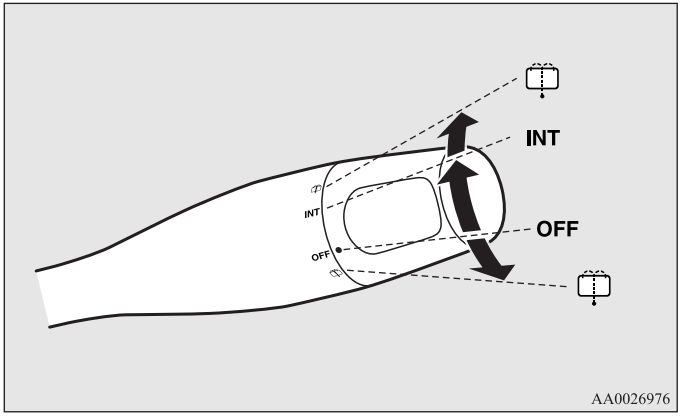


OFF- Off

INT- The wiper operates continuously for several seconds then operates intermittently at intervals of about 8 seconds.

- Washer fluid will be sprayed onto the rear window glass while the knob is turned fully in either direction.
  When the washer fluid is sprayed, the wiper will automatically operate 2 or 3 times.

NOTE

- To ensure a clear rearward view, the wiper performs a number of continuous operations either when the switch is moved to the “INT” position or when the gearshift lever (manual transmission) or the selector lever (automatic transmission) is moved to the “R” (REVERSE) position while the switch is in the “INT” position.
  Following this continuous operation, the wiper will automatically switch to intermittent operation.
- The washer fluid reservoir is located in the engine compartment.
  Check the fluid level regularly and refill if necessary. (See “Washer fluid” on page 7-14.)

## Precautions to observe when using wipers and washers

N00523500111

**⚠ CAUTION**

- **If the washer is used in cold weather, the washer fluid sprayed onto the glass might freeze, blocking your view. In cold weather, heat the glass with the defroster before using the washer.**

NOTE

- Do not use the wipers when the windshield is dry. This could scratch the glass and wear the wiper blades prematurely.
- Before using the wipers in cold weather, check to be sure that the wiper blades are not frozen to the windshield or rear window. Using the wipers while the blades are frozen could cause the wiper motor to burn out.

- If the wipers become blocked by ice or other deposits on the glass, the motor may still burn out even if the wiper switch is OFF. If deposits form on the windshield, park your vehicle in a safe place, turn off the engine, and clean the glass so that the wipers can operate smoothly.
- Avoid using the washer for more than 20 seconds at a time. Do not operate the washer when the fluid reservoir is empty or the pump may fail.
- During cold weather, add a recommended washer solution that will not freeze in the washer reservoir. Otherwise the washer may not work or may be damaged.
- Replace the wiper blades when they are worn. Use the proper size replacement blades. If you have questions, ask your authorized Mitsubishi Motors dealer.

## *Electric rear window defogger switch*

N00523700214

The electric rear window defogger can be used with the ignition key in the “ON” position.
The indicator light (A) will come on when you press the electric rear window defogger switch. Electric current will flow through the heating wires on the rear window to help clear away moisture or frost.

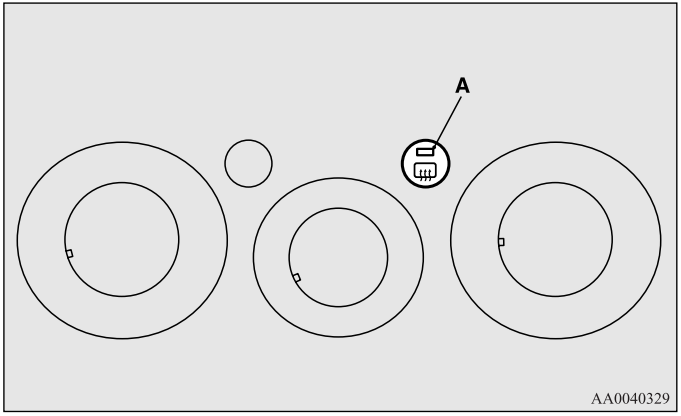


After about 17 minutes of operation, the system will shut off automatically.
To switch the defogger OFF before 17 minutes have passed, press the switch again. The indicator light will go out and the defogger will turn off.
If you need the defogger for more than 17 minutes, press the switch again. This will add 17 more minutes.

**⚠ CAUTION**

- **The rear window defogger is not designed to melt snow. Remove any snow manually before using the rear window defogger.**
- **Use the rear window defogger only after the engine has started and is running. Be sure to turn the defogger switch off immediately after the window is clear to save on battery power.**
- **Do not place stickers, tape, or other items that are attached with adhesive over the grid wires on the rear window.**
- **When cleaning the inside rear window, use a soft cloth and wipe lightly over the grid wires.**



NOTE

- If your vehicle is equipped with heated mirrors, mist can also be removed from the outside rearview mirrors when the rear window defogger switch is pressed. (Refer to “Heated mirror” on page 3-60.)

## *Horn switch*

N00523800143

To honk the horn, press around the “” mark on the steering wheel.

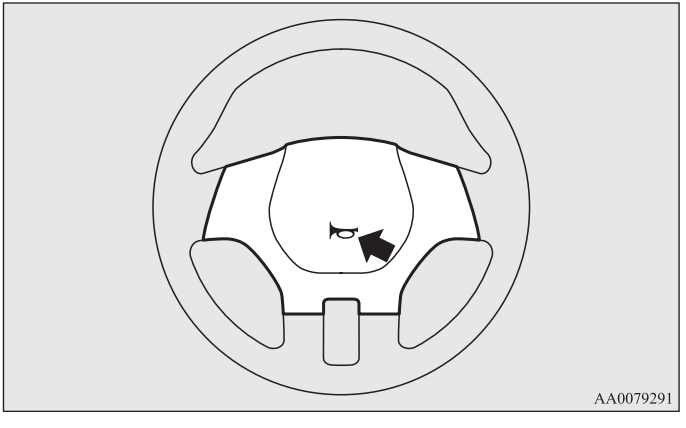

## *Hands-free Bluetooth® cellular phone interface system with voice recognition (if so equipped)*

N00506400069

The Hands-free Bluetooth® cellular phone interface system with voice recognition (Bluetooth® HFP) uses a wireless communication technology known as Bluetooth® to allow you to make hands-free calls in your vehicle using your Bluetooth® compatible cellular phone with Hands-free profile.
The system is equipped with a voice recognition function, which lets you make hands-free calls by simple switch operations and voice command operations using a defined voice tree.

The Bluetooth® HFP can be used when the ignition switch is in the "ON" or "ACC" position.
To use the Bluetooth® HFP, you should first connect your Bluetooth® compatible cellular phone to the Bluetooth® HFP. Refer to "Pairing a cellular phone" on page 3-145.

Bluetooth® is a registered trademark of BLUETOOTH SIG, INC.

**⚠ *WARNING***

- **Although the Bluetooth® HFP allows you to make hands-free calls, if you choose to use the cellular phone while driving, you must not allow that usage to distract you in the safe operation of your vehicle. Anything, including cellular phone usage, that distracts you from the safe operation of your vehicle increases your risk of an accident. Refer to and follow all state and local laws in your area regarding cellular phone usage while driving.**

NOTE

- You cannot use the Bluetooth® HFP if your cellular phone has a dead battery or is turned off.
- Hands-free calls will not be possible in areas outside your cellular phone service area or locations where a signal cannot reach your phone.

## Instrument panel control switch

N00547000019

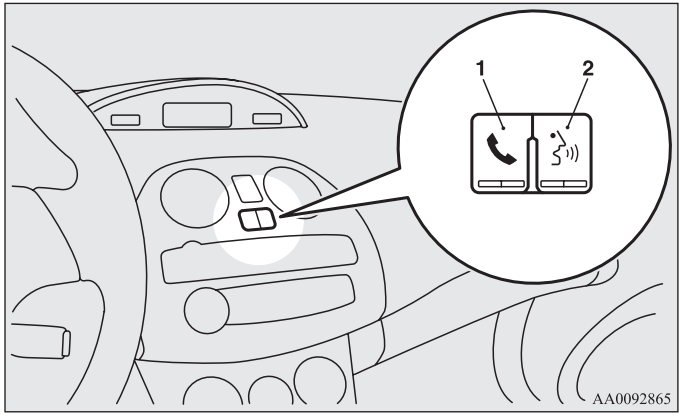


1- PHONE button
2- SPEECH button

### *PHONE button*

- Press the PHONE button (1) to answer an incoming call.
- When another call is received during a call, press the PHONE button to put the first caller on hold and talk to the new caller.
  - Lightly press the PHONE button to switch between callers.
  - To establish a three-way call in such situations, press the SPEECH button to enter voice recognition mode and then say “Join Calls.”
- Press and hold the PHONE button when an incoming call is received to refuse the call.
- Press and hold the PHONE button during a call to end the current call.
  When another call is on hold or there is an incoming call, you will switch to that call.

### *SPEECH button*

- Press the SPEECH button (2) to change to voice recognition mode.
- Lightly press the SPEECH button during a call or while in voice recognition mode to interrupt system prompting. Then you can give a voice command.
  Press and hold the SPEECH button to exit the voice recognition mode.

NOTE

- When you press the SPEECH button to enter voice recognition mode with a cellular phone paired to the system, current information on the cellular phone, such as “remaining battery life,” “signal strength” or “roaming,” will be displayed on the audio display.* (Refer to “Pairing a cellular phone” on page 3-145.)
  *: Some cellular phones will not send this information to the Bluetooth® HFP.
- Call waiting and three-way calls can be used by the Bluetooth® HFP, only when those services can be used with your cellular phone.
- Users may experience a delay in vehicle audio when placing or answering a call from the handset. To reduce delays, users should place calls and receive calls through the Hands-free System.

## Voice recognition function

N00506600090

The Bluetooth® HFP is equipped with a voice recognition function. Your voice will be recognized by a microphone in the front pillar (driver’s side), allowing you to make hands-free calls with voice commands.
Voice recognition is possible in US English, North American Spanish and Canadian French. The factory setting is US English.
Some of the voice commands indicated below have a number of alternative commands. For a table showing the voice commands in each language and the corresponding alternative commands, refer to “Commands and Alternatives” on page 3-159.

NOTE

- If the voice command that you say differs from the predefined command or cannot be recognized due to ambient noise or some other reason, the Bluetooth® HFP will ask you for the voice command again up to 3 times.
- For best performance and further reduction of ambient noise, the vehicle windows and the electric convertible top (ECLIPSE SPYDER only) should be closed while engaging the voice recognition function.

### *Selecting the Language*

There are two ways to change the language.

NOTE

- The more entries that are registered in the phonebook, the longer it will take to change the language.

**Change the language using the "Language" command**

1. Press the SPEECH button.
2. Say "Setup."
3. Say "Language."
4. The voice guide will say "Select a language: English, French or Spanish." Say the desired language. (Example: Say "English.")
5. The voice guide will say "English (Spanish or French) selected. Is this correct?" Say "Yes" to start the language change process. Say "No" to return to Step 4.
6. When the voice guide says "English (Spanish or French) selected, returning to main menu" the language change process will be completed and the system will return to the main menu.



**System recognizes the command that you said and changes the language**

From the main menu, say **English** (**Español** or **Français**) and the Bluetooth® HFP will recognize the 1 word spoken command in the native language, and ask you if you want to change to that language.

1. The voice guide will say "Would you like to change the language to English (Spanish or French)?"
2. If you say "Yes," the voice guide will say "Please Wait, Switching to English (Spanish or French) Phonebook" and it will start the language change process.
   If you do not want to change the language, say "No."
3. When the voice guide says "English (Spanish or French) selected, returning to main menu" the language change process will be completed and the system will return to the main menu.

## Speaker enrollment function

N00528900107

The Bluetooth® HFP can use the speaker enrollment function to create a voice model for one person per language.
Your voice characteristics and pronunciations are registered in this voice model. This makes it easier for the Bluetooth® HFP to recognize voice commands said by you.
You can turn a voice model registered with the speaker enrollment function on and off whenever you want.

NOTE

- Phone calls received during the speaker enrollment process cannot be answered and operations initiated by the instrument panel control switch or voice recognition will not work.

### *Speaker enrollment*

N00529000033

It takes a few minutes to complete the speaker enrolment process.
To ensure the best results, run through the process while in the driver's seat, in an environment that is as quiet as possible {when there is no rain, strong winds, the vehicle windows and electric convertible top (ECLIPSE SPYDER only) are closed}.
Use the following procedure for speaker enrollment.

1. Stop your vehicle in a safe area, put the gearshift lever in the "N" (Neutral) position (manual transaxle), or the selector lever in the "P" (PARK) position (automatic transaxle) and pull the parking brake lever.

NOTE
- Make sure you park the vehicle in a safe area before attempting speaker enrollment.
- Please turn off your phone while in speaker enrollment to prevent interruption of the process.

2. Press the SPEECH button.
3. Say "Voice training."
4. The voice guide will say "This operation should only be performed while the vehicle is parked. Please say continue to perform this operation." Say "Continue."
5. The voice guide will say "See the owner's manual for the list of required training phrases. Press and release the SPEECH button when you are ready to begin. Press and hold the SPEECH button to cancel at any time."
6. Press the SPEECH button to start the speaker enrollment process.

NOTE
- If you do not start the speaker enrollment process within 3 minutes of pressing the SPEECH button, the speaker enrollment function will time out.
  The voice guide will say "Speaker Enrollment has timed out." The system will then beep and the voice recognition mode will be exited.
- Phone calls received during the speaker enrollment process cannot be answered.

7. The voice guide will prompt for phrase 1. Repeat the corresponding phrase listed in table "Enrollment Commands" on page 3-165.
   The system will register your voice and then move on to the registration of the next command. Continue the process until all phrases have been registered.

NOTE
- If you press the SPEECH button within 5 seconds of the reading of an enrollment phase number by the voice guide, the registration of the same phase number will be repeated. Continue the process until all phrases have been registered.
- If you press and hold down the SPEECH button within 5 seconds of the reading of an enrollment phase number by the voice guide, the system will beep and stop the speaker enrollment process.

8. When all enrollment commands have been read out, the voice guide will say “Speaker Enrollment is complete.” The system will then end the speaker enrollment process and return to the main menu.

NOTE
- Completing the speaker enrollment process will turn on the voice model automatically.
- The commands “Help” and “Cancel” will not work in this mode.

### *Enabling and disabling the voice model and retraining*

N00529100047



You can turn a voice model registered with the speaker enrollment function on and off whenever you want.
You can also retrain the system.
Use the following procedure to perform these actions.

1. Press the SPEECH button.
2. Say “Voice training.”
3. If you have completed a speaker enrollment process once already, the voice guide will say either “Enrollment is enabled. Would you like to disable, or retrain?” or “Enrollment is disabled. Would you like to enable, or retrain?”
4. When enrollment is “enabled,” the voice model is on; when enrollment is “disabled,” the voice model is off. Say the command that fits your needs.
   Say “Retrain” to start the speaker enrollment process and create a new voice model. (Refer to “Speaker enrollment” on page 3-141.)

NOTE
- If you say “Retrain” you will proceed to Step 4 under “Speaker enrollment.” The voice guide will say “This operation should only be performed while the vehicle is parked. Please say continue to perform this operation.”

## Help function

N00506700033

The Bluetooth® HFP is equipped with a Help function.
If you say “Help” when the system is waiting for a voice command input, the system will tell you a list of the commands that can be used under the circumstances.

## Canceling

N00506800034

There are two cancel functions.
If you are at the main menu, say “Cancel” to exit from the Bluetooth® HFP. If you are anywhere else within the system, say “Cancel” to return to the main menu.

## MUTE function

N00506900019

At any time during a call, you can mute the vehicle microphone.
Pressing the SPEECH button and then saying “Mute” during a call will turn ON the MUTE function and mute the microphone.
Saying “Mute off” in the same way will turn off the MUTE function and cancel the mute on the microphone.

## Confirmation function setting

N00507000033

The Bluetooth® HFP is equipped with a confirmation function. With the confirmation function activated, you are given more opportunities than normal to confirm a command when making various settings to the Bluetooth® HFP. This allows you to decrease the possibility that a setting is accidentally changed.
The confirmation function can be turned on or off by following the steps below.

1. Press the SPEECH button.
2. Say “Setup.”
3. Say “Confirmation prompts.”
4. The voice guide will say “Confirmation prompts are <on/off>. Would you like to turn confirmation prompts <off/on>.”
   Answer “Yes” to change the setting or answer “No” to keep the current setting.
5. The voice guide will say “Confirmation prompts are <off/on>, ready” and then the system will return to the main menu.

## Security function

N00538900012

It is possible to use a passcode as a security function by setting a passcode of your choice for the Bluetooth® HFP.
When the security function is turned on, it is necessary to make a voice input of a 4-digit passcode in order to use all functions of the Bluetooth® HFP, except for reception.

### *Setting the passcode*

N00539000010

Use the following procedure to turn on the security function by setting a passcode.

1. Press the SPEECH button.
2. Say “Setup.”
3. Say “Passcode.”
4. The voice guide will say “Passcode is disabled. Would you like to enable it?” Answer “Yes.”
   Answer “No” to cancel the setting of the passcode and return to the main menu.
5. The voice guide will say “Please say a 4-digit passcode. Remember this passcode. It will be required to use this system.” Say 4 numbers of your choice from 0 to 9 in order to input the 4-digit passcode.
6. For confirmation purposes, the voice guide will say “Passcode <4-digit passcode>. Is this correct?” Answer “Yes.”
   Answer “No” to return to the passcode input in Step 5.
7. When the registration of the passcode is completed, the voice guide will say “Passcode is enabled returning to main menu, ready” and the system will return to the main menu.

### *Entering the passcode*

N00539100024

If a passcode has been set and the security function is enabled, the voice guide will say “Hands-free System is locked. State the passcode to continue” when the SPEECH button is pressed to enter voice recognition mode. Say the 4-digit passcode number to enter the passcode.

If the entered passcode is wrong, the voice guide will say “<4-digit passcode>, Incorrect Passcode. Please try again.” Enter the correct passcode.

NOTE

- You can reenter the passcode as many times as you want.
- If you have forgotten your passcode, say “Cancel” to quit the voice input mode and then check with an authorized Mitsubishi Motors dealer.

### *Disabling the passcode*

N00539200012

Use the following procedure to turn off the security function by disabling the passcode.

1. Press the SPEECH button.
2. Say “Setup.”
3. Say “Passcode.”
4. The voice guide will say “Passcode is enabled. Would you like to disable it?” Answer “Yes.”
   Answer “No” to cancel the disabling of the passcode and return to the main menu.
5. When the disabling of the passcode is completed, the voice guide will say “Passcode is disabled returning to main menu, ready” and the system will return to the main menu.

## Pairing a cellular phone

N00507100122

To use the Bluetooth® HFP, you need to pair a Bluetooth® compatible cellular phone to the Bluetooth® HFP.

The Bluetooth® HFP can register up to a maximum of 7 Bluetooth® compatible cellular phones. However, of the cellular phones registered, the cellular phone with the highest priority level will be automatically paired to the Bluetooth® HFP.

NOTE

- Some Bluetooth® compatible cellular phones may not be compatible with the Bluetooth® HFP.
  You can determine what types of Bluetooth® cellular phones with Hands-Free Profile can be used by checking the following website for the Bluetooth® HFP.
  www.mitsubishicars.com/owners

Use the following procedure to pair a Bluetooth® compatible cellular phone to the Bluetooth® HFP.

1. Stop your vehicle in a safe area, put the gearshift lever in the “N” (Neutral) position (manual transaxle), or the selector lever in the “P” (PARK) position (automatic transaxle) and pull the parking brake lever.

NOTE

- Make sure you park the vehicle in a safe area before pairing a cellular phone to the system.

2. Press the SPEECH button.
3. Say “Setup.”
4. Say “Pairing Options.”
5. The voice guide will say “Do you want to Pair a phone, delete a phone or list paired phones?” Say “Pair a phone.”

NOTE

- A maximum of 7 Bluetooth® compatible cellular phones can be registered.
  If 7 cellular phones are already registered, delete a phone and then pair the new phone. (Refer to “Deleting a phone” on page 3-148.)

6. The voice guide will say “This operation should only be performed while the vehicle is parked. Please say continue to perform this operation.” Say “Continue.”

7. After the voice guide says “Please say a 4-digit pairing code,” say a 4-digit code. The 4-digit code will be registered as a pairing code for the phone.
   When the confirmation function is on, the system will confirm whether the code said is acceptable. To continue with the code, answer “Yes.”
   Say “No” to return to pairing code selection.

NOTE

- The pairing code entered here is only used for the Bluetooth® connection certification. It is any 4-digit code the user would like to select.
  Remember the pairing code as it needs to be keyed into the phone later in the pairing process.
  Depending on the Bluetooth® connection settings selected, entry of this code may be required each time the phone attempts to “connect” to the Bluetooth® HFP. Refer to your cellular phone owner’s manual for connection defaults and settings.

8. The voice guide will say “Start pairing procedure on phone. See phone’s manual for instructions.” Refer to the owner’s manual for your cellular phone and enter into the phone the pairing code that was registered in Step 7.

9. When the system finds a Bluetooth® compatible cellular phone, the voice guide will say “Please say the name of the phone after the beep.” After you hear the beep, name the phone by saying a name of your preference.
   When the confirmation function is on, the system will say “Adding <name>, is this correct?”
   Answer “Yes” to accept that name or “No” to reenter a new name.

NOTE

- When the system cannot recognize the Bluetooth® compatible cellular phone, the pairing process will end and the system will beep and then return to normal status.
  Try the pairing process again after reconfirming whether or not the Bluetooth® HFP supports your Bluetooth® compatible cellular phone.

10. The voice guide will say “Assign a priority for this phone between 1 and 7 where 1 is the phone used most often.” Say a number between 1 and 7 to set a priority level for the cellular phone.

NOTE

- If you selected a priority level that has already been set for a different phone, the system will ask you whether you wish to override that priority level.
  To override the priority level, answer “Yes.”
  Answer “No” to return to the priority level selection in Step 10.

11. After the voice guide says “<phone tag> set to priority <priority>,” the system will start the pairing process. Wait a moment for the pairing process to complete.
    When the confirmation function is on, the system will confirm the assigned phone name and priority again. Answer “Yes.”
    Answer “No” to return to the priority level selection in Step 10.
12. When the pairing process is completed, the voice guide will say “Pairing Complete.” The system will then beep and the voice recognition mode will be exited.

NOTE
- If you are having difficulty pairing the phone, assistance can be obtained by calling Mitsubishi hands free consumer support line 1-888-702-4100.

## Selecting the phone

N00507200035

When multiple paired phones are present in range of the Bluetooth® HFP, the phone with the highest priority (set during the paring process) will be connected to the system.
Use the following procedure to connect to another paired phone with lower priority.

1. Press the SPEECH button.
2. Say “Setup.”
3. Say “Select phone.”
4. After the voice guide says “Please say,” it will read out each priority number and phone name pair in order, starting with the phone that has the highest priority level (from 1 to 7).
   Say the priority number of the phone that you want to connect to.

NOTE
- You can connect to a phone at any time by pressing the SPEECH button and saying the priority number, even before all of the priority number and phone name pairs are read out by the system.

5. After the voice guide says “<phone tag> selected,” the system will reconnect to the cellular phone. Wait a moment for the process to complete.
   When the confirmation prompts are on, the system will ask you again whether the phone that you want to reconnect to is correct. Answer “Yes” to continue and reconnect to the cellular phone. If you answer “No,” the system will ask “Which phone please?” Select the priority of the phone that you want to connect to.
6. When the reconnection of the cellular phone is completed, the voice guide will say “<phone tag> will temporarily override phone priorities” and then the system will return to the main menu.

NOTE
- To change the priority level of a specific phone, redo the pairing process for that phone. (Refer to “Pairing a cellular phone” on page 3-145.)

## Having the system tell you a list of the registered cellular phones

N00507300052

You can use the following procedure to hear a list of the cellular phones that are currently registered.

1. Press the SPEECH button.
2. Say “Setup.”
3. Say “Pairing Options.”
4. The voice guide will say “Do you want to Pair a phone, delete a phone or list paired phones?” Say “list paired phones.”
5. The Bluetooth® HFP will read out the paired phones in order, starting with the phone with the highest priority level.
6. When the voice guide is done reading all phone names, it will say “End of List, would you like to start from the beginning?”
   To hear the list again from the beginning, answer “Yes.” When you are done, answer “No” to return to the main menu.

NOTE

- If you press and release the SPEECH button and say “Continue” or “Previous” while the list is being read, the system will advance or rewind the list. Say “Continue” to proceed to the phone with the next highest priority level or “Previous” to return to the phone with the previous priority level.

## Deleting a phone

N00507400053

Use the following procedure to delete a paired Bluetooth® compatible cellular phone from the Bluetooth® HFP.

1. Press the SPEECH button.
2. Say “Setup.”
3. Say “Pairing Options.”
4. The voice guide will say “Do you want to Pair a phone, delete a phone or list paired phones?” Say “Delete a phone.”
5. After the voice guide says “Please say,” it will read out each priority number and phone name pair in order, starting with the phone that has the highest priority level (from 1 to 7). After it completes reading all pairs, the voice guide will say “or all or say cancel to return to main menu.”
   Say the priority number of the phone that you want to delete from the system.
   Say “All” to delete all paired phones from the system, or “Cancel” to end the deletion process and return to the main menu.
6. For confirmation purposes, the voice guide will say “Removing <phone tag> (all) is this correct?”
   Answer “Yes” to delete the phone(s). If you answer “No,” the voice guide will ask “Which phone please?” Say again the priority number of the phone that you want to delete from the system.

7. When the phone deletion process is completed, the voice guide will say “Deleted.” The system will then beep and the voice recognition mode will be exited.
   If the phone deletion process fails for some reason, the voice guide will say “Delete failed.” The system will then beep and the voice recognition mode will be exited. Start over again from Step 1.

## To make a call

N00507500038

To use the Bluetooth® HFP to make a call, a Bluetooth® cellular phones with Hands-free Profile must be paired to the system. If a cellular phone has not been paired to the system, do so in accordance with the instructions provided in “Pairing a cellular phone” on page 3-145.

### *Making a call by using the telephone number*

N00507600101

You can make a call by saying the telephone number.

1. Press the SPEECH button.
2. Say “Dial.”
3. After the voice guide says “Number Please,” say the telephone number.
   The Bluetooth® HFP will then make the call.
   When the confirmation function is on, the system will confirm the telephone number again. To continue with that number, answer “Yes.”
   To change the telephone number, answer “No” and then say the telephone number again.

NOTE

- In the case of English, the system will recognize both “zero” and “oh (Letter “o”) for the number “0.” Refer to “Commands and Alternatives” on page 3-159 for details.

### *Making a call by saying a name in the system phonebook*

N00507700056

You can make a call by saying a name that has been registered in the phonebook for the Bluetooth® HFP.
For more information on the phonebook, refer to “Phonebook function” on page 3-151.

1. Press the SPEECH button.
2. Say “Call.”
3. After the voice guide says “Name Please,” say the name of the person that you want to call that is registered in the phonebook.
4. If multiple telephone numbers are registered for the person, the voice guide will ask “Would you like to call <voice tag> at {home}, {work}, {mobile} or {pager}?” Say the location of the number that you want to call.

NOTE

- If a telephone number is not registered for the selected location, the voice guide will say “{home/work/mobile/pager} not found for <voice tag>. Would you like to add location or try again, or say “cancel” to return to main menu.”
  Say “Try again” to redo the phone call, “Add location” to add a new location to the telephone book, or “Cancel” to hang up the phone.

5. After the voice guide says “Calling <voice tag> at <location>,” the Bluetooth® HFP will make the call.
   When the confirmation function is on, the system will confirm whether or not the name of the recipient of the call is correct. Answer “Yes” to use that name.
   If you want to change the name or location to call, answer “No.” The system will return to Step 3.

### *Redialing*

N00507800015

You can redial the last number called, based on the history of dialed calls in the paired cellular phone.
Use the following procedure to redial.

1. Press the SPEECH button.
2. Say “Redial.”

## SEND function

N00508000030

During a call, press the SPEECH button to enter the voice recognition mode and then say “{number string} SEND” to generate a DTMF tone.
For example, if during a call you need to simulate the press of a PHONE button as a response to an automated system, press the SPEECH button and speak “1 2 3 4 pound SEND” and the 1234# will be sent on your cellular phone.

## Switching between hands-free mode and private mode

N00508100031

The Bluetooth® HFP can switch between Hands-free mode (Hands-free calls) and private mode (calls using cellular phone).
If you press the SPEECH button and say “Transfer call” during a Hands-free call, you can stop the Hands-free mode and talk in private mode on your cellular phone.
To return to Hands-free mode, press the SPEECH button again and say “Transfer call.”

## Receiving calls

N00508200032

If an incoming phone call is received while the ignition switch is in the “ACC” or “ON” position, the audio system will be automatically turned on and Incoming Call will be played, even when the audio system was originally off.
The voice guide announcement for the incoming call will be output from the front passenger’s seat speaker.
If the CD player or radio was playing when the incoming call was received, the audio system will mute the sound from the CD player or radio and output only the Incoming Call.
To receive the call, press the PHONE button on the overhead console control switch.
When the call is over, the audio system will return to its previous state.

## Phonebook function

N00508300020

The Bluetooth® HFP has its own phonebook separate from the phonebook on the cellular phone.
This phonebook is used when making calls with the voice recognition function.
You can register up to 32 names for each language in the phonebook.
Also, each entry has 4 locations associated with: HOME, WORK, MOBILE and PAGER. You can register one telephone number for each location.
The phonebook main menu is used to register or edit information in the phonebook.
Use the following procedure to call up the phonebook main menu.

1. Press the SPEECH button.
2. Say “Phonebook.”
3. The voice guide will say “Select one of the following: new entry, edit, list names, delete or erase all, or say cancel to return to main menu” and will wait for your command.

NOTE

- Disconnecting the battery cable will not delete information registered in the phonebook.

### *New entry*

N00508400050

You can register a new entry in the phonebook by saying “New entry” on the phonebook main menu. You can register up to a maximum of 32 entries. Use the following procedure to register a new entry.

1. If you have not reached the limit yet, the voice guide will say “Name Please.” Say your preferred name to register it.

NOTE

- If you have reached the limit, the voice guide will say “Phonebook full. Do you want to delete a name or say ‘Cancel’ to return to main menu.”
  Say “Delete” to delete an entry or “Cancel” to return to the main menu.

2. When the name has been registered, the voice guide will say “HOME, WORK, MOBILE, OR PAGER?” Say the location for which you want to register a number.

NOTE

- When the confirmation function is on, the system will confirm the location again. To continue with the current location, answer “Yes.”
  Answer “No” to return to location selection in Step 2.
  If a telephone number has been registered for the selected location, the voice guide will say “The current number is <number>, number please.”
  If you do not want to change the telephone number, say the original number to keep it registered.

3. Say the telephone number to register it.

NOTE

- In the case of English, the system will recognize both “zero” and “oh (Letter “o”) for the number “0.” Refer to “Commands and Alternatives” on page 3-159 for details.
- When the confirmation function is on, the system will confirm the telephone number again. To continue with the current telephone number, answer “Yes.”
  Say “No” to return to telephone number registration in Step 3.

4. When the telephone number has been registered, the voice guide will say “Number saved. Would you like to add another number for this entry?”
   To add another telephone number for a new location for the current entry, answer “Yes.” The system will return to location selection in Step 2.
   Answer “No” to end the registration process and return to the main menu.

### *Edit*

N00508500035

You can edit information in the phonebook by saying “Edit” on the phonebook main menu.

1. The voice guide will say “Please say the name of the entry you would like to edit, or say “list names,” or say “cancel” to return to main menu.” Say the name of the entry that you want to edit.

NOTE

- If the name that you said is not in the phonebook, the voice guide will say “Pardon, please say the name of the entry you would like to edit, or say “list names,” or say “cancel” to return to main menu.”
  Say “Try again” to try again or “Cancel” to end the edit process and return to the main menu.
- If you say “List Names,” the system will read out each name registered in the phonebook in order. Refer to “Having the system tell you a list of the phonebook entries” on page 3-154.

2. The voice guide will say “Home, Work, Mobile or Pager?” Select the location for which you want to change the telephone number.

NOTE

- When the confirmation function is on, the system will confirm again the name and location to edit. To continue with that information, answer “Yes.”
  Answer “No” to return to Step 1.

3. After the voice guide says “Number Please,” say the telephone number to register it.
   If a telephone number has been registered for the selected location, the voice guide will say “The current number is <current number>. New number, please.” Say a new telephone number to change the number.

NOTE

- When the confirmation function is on, the system will confirm again the telephone number. To continue with that number, answer “Yes.”
  To change the telephone number, answer “No” and then say the telephone number again.

4. When the telephone number change process is done, the voice guide will say “Number changed. Would you like to call this number, edit another entry, or say cancel to return to main menu?”
   Say “Call” to immediately call the number, “Edit” to edit another number, or “Cancel” to end the edit process and return to the main menu.

### *Having the system tell you a list of the phonebook entries*

N00508600052

You can hear a list of the names registered in the phonebook by saying “List names” on the phonebook main menu.

1. The Bluetooth® HFP will read out the entries in the phonebook in order.
2. When the voice guide is done reading the list, it will say “End of list, would you like to start from the beginning?”
   When you want to check the list again from the beginning, answer “Yes.”
   When you are done, answer “No” to return to the main menu.



NOTE

- You can call, edit or delete a name that is being read out. Press the SPEECH button and say “Call” to call the name, “Edit” to edit it, or “Delete” to delete it.
  The system will beep and then execute your command.
- If you press and release the SPEECH button and say “Continue” or “Previous” while the list is being read, the system will advance or rewind the list. Say “Continue” to proceed to the next entry or “Previous” to return to the previous entry.

### *Deleting a registered number*

N00511700057

You can delete a telephone number in the phonebook by saying “Delete” on the phonebook main menu.

1. The voice guide will say “Please say the name of the entry you would like to delete, or say “list names,” or say “cancel” to return to main menu.” Say the name of the entry that you want to delete.

NOTE

- If the name that you said is not in the phonebook, the voice guide will say “Name not found. Would you like to try again or say ‘Cancel’ to return to main menu?”
  Say “Try again” to try again or “Cancel” to end the deletion process and return to the main menu.
- If you say “List Names,” the system will read out each entry registered in the phonebook in order. Refer to “Having the system tell you a list of the phonebook entries” on page 3-154.

2. If there are telephone numbers registered for multiple locations for the selected name, the voice guide will say “Would you like to delete [Home,] [Work,] [Mobile,] [Pager,] or all.” Select the location that has the telephone number that you want to delete.
   Say “All” if you want to delete the telephone numbers for all locations.
3. The system will confirm whether it is ok to delete the telephone number of the selected location. Answer “Yes” to delete the number.
   Answer “No” to cancel the deletion process and return to Step 1.

4. When the deletion of the telephone number is completed, the voice guide will say “<voice tag> <location> deleted” and then the system will return to the main menu.

NOTE
- If you delete all telephone numbers registered for the 4 locations of an entry, the entry itself will be deleted from the phonebook.

### *Erasing the Phonebook*

N00511800045

You can delete all registered information in the phonebook by saying “Erase all” on the phonebook main menu.

1. For confirmation purposes, the voice guide will ask “Are you sure you want to erase everything from your Hands-free system phonebook?” Answer “Yes.”
   Answer “No” to cancel the deletion of all registered information in the phonebook and return to the main menu.
2. The system will confirm one more time. Answer “Yes” to continue.
   Answer “No” to cancel the deletion of all registered information in the phonebook and return to the main menu.
3. When the deletion of all information in the phonebook is completed, the voice guide will say “Hands-free system Phonebook Erased” and then return to the main menu.

## General information

N00511900046

MODEL: MMC FCC ID: CB2MBLUEC07 IC: 279B-MBLUEC07

Your Hands-free Bluetooth® cellular phone interface system with voice recognition operates on a radio frequency subject to Federal Communications Commission (FCC) Rules (For vehicles sold in U.S.A.) and Industry Canada Rules (For vehicles sold in Canada). This device complies with Part 15 of the FCC Rules and RSS-210 of the Industry Canada Rules. Operation is subject to the following two conditions.

- This device may not cause interference.
- This device must accept any interference received, including interference that may cause undesired operation.

**⚠ *CAUTION***

- **Changes or modifications not expressly approved by the manufacturer for compliance could void the user’s authority to operate the equipment.**

The term “IC:” before the radio certification number only signifies that Industry Canada technical specifications were met.
The antenna used for this transmitter must not be co-located or operating in conjunction with any other antenna or transmitter. End-users and installers must be provided with installation instructions and transmitter operating conditions for satisfying RF exposure compliance.

# Voice Command Tree

N00512000086

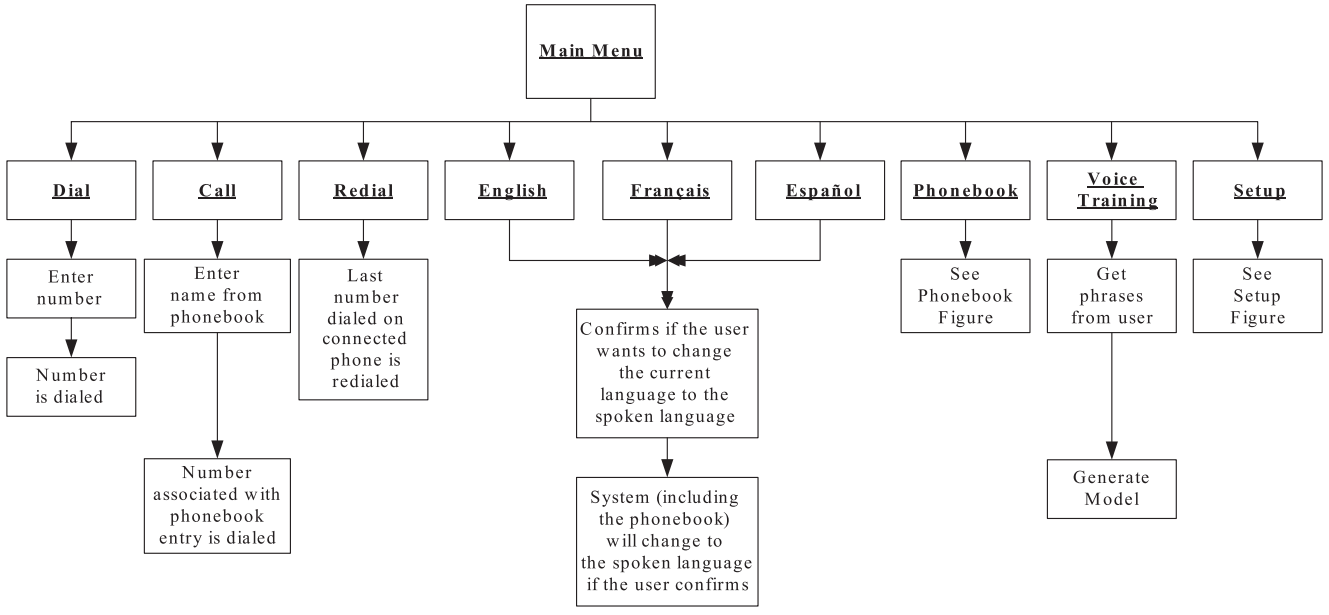


**Note:** Associated voice commands are shown in **bold** face and are underlined.

AA5009282

# Voice Command Tree - Phonebook

N00512100045

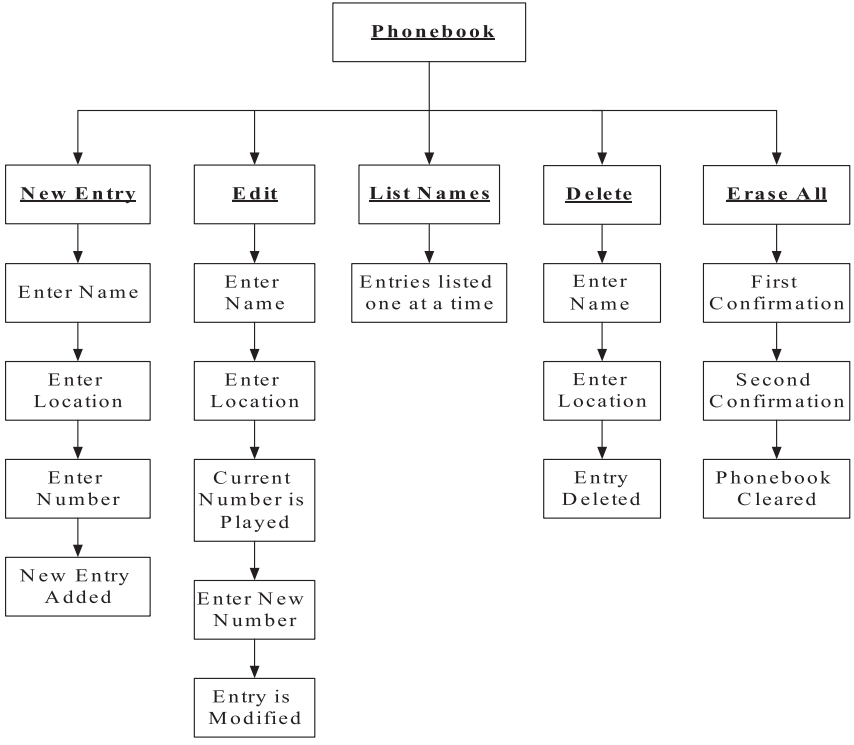


**Note:** Associated voice commands are shown in **bold** face and are underlined.

AA5008852

# Voice Command Tree - Setup

N00512800039

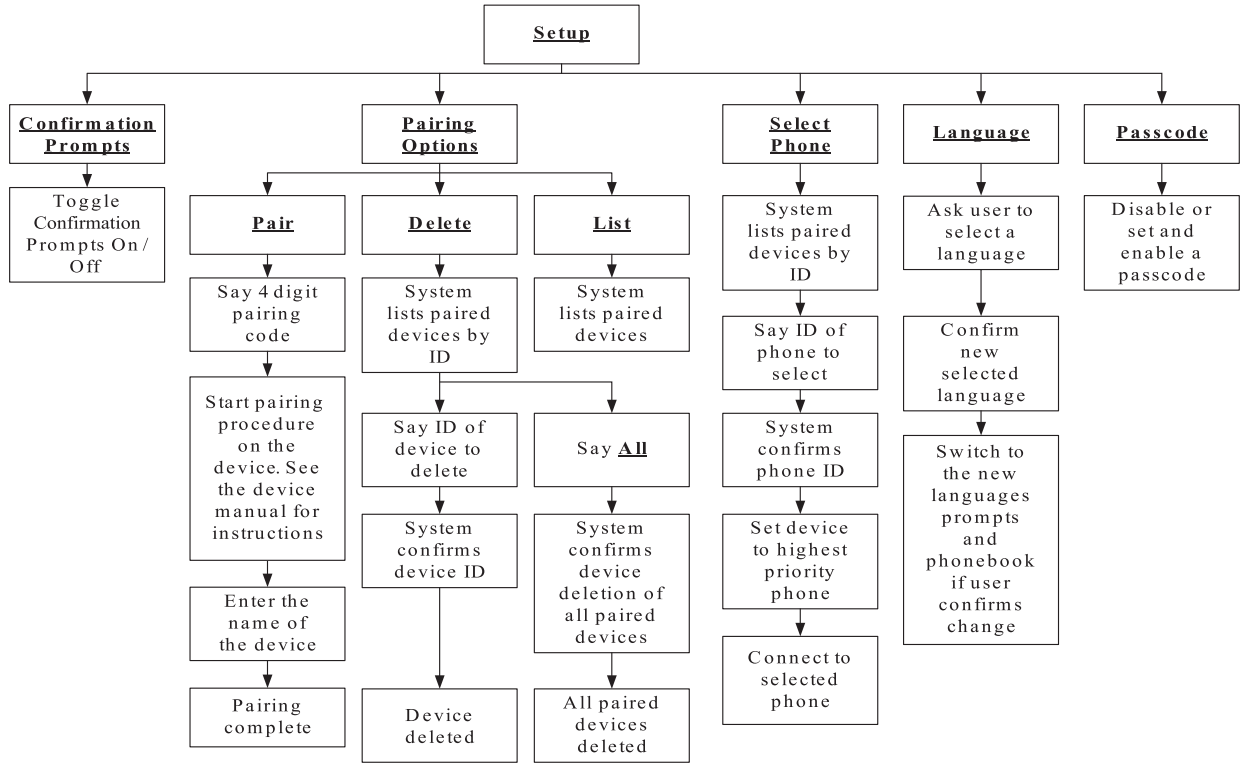


**Note:** Associated voice commands are shown in **bold** face and are underlined.

AA5008865

## Commands and Alternatives

N00513300073

| Command | Language | Primary Command | Alternative Commands |
|---|---|---|---|
| SETUP | English | Setup | - |
| | Spanish | Configuración | - |
| | French | Configurer | - |
| PHONE-BOOK | English | Phonebook | - |
| | Spanish | Agenda | - |
| | French | Répertoire | - |
| DIAL | English | Dial | - |
| | Spanish | Marcar | - |
| | French | Composer | - |
| CALL | English | Call | - |
| | Spanish | Llamar | - |
| | French | Appeler | - |
| REDIAL | English | Redial | - |
| | Spanish | Volver A Marcar | - |
| | French | Recomposer | - |
| PAIRING OPTIONS | English | Pairing Options | Pairing |
| | Spanish | Opciones De Emparejamiento | Emparejamiento |
| | French | Options De Jumelage | Jumelage |
| PAIR | English | Pair | - |
| | Spanish | Emparejar | - |
| | French | Jumeler | - |
| DELETE A PHONE | English | Delete A Phone | Delete |
| | Spanish | Eliminar Un Teléfono | Eliminar |
| | French | Supprimer Un Téléphone | Supprimer |
| LIST | English | List | List Phones |
| | Spanish | Listar | Listar Teléfonos |
| | French | Lister | Liste Des Téléphones |
| SELECT PHONE | English | Select Phone | - |
| | Spanish | Seleccionar Teléfono | - |
| | French | Sélectionner Un Téléphone | - |
| PREVIOUS | English | Previous | - |
| | Spanish | Anterior | - |
| | French | Précédent | - |
| TRANS-FER CALL | English | Transfer Call | - |
| | Spanish | Transferir Llamada | - |
| | French | Transférer L'appel | - |

| Command | Language | Primary Command | Alternative Commands |
|---|---|---|---|
| ADD LOCATION | English | Add Location | - |
| | Spanish | Agregar {Una} Ubicación | - |
| | French | Ajouter {Un} Emplacement | - |
| CONFIRMATION PROMPTS | English | Confirmation Prompts | Confirmations, Prompts |
| | Spanish | Mensajes De Confirmación | Confirmaciones, Mensajes |
| | French | Invites De Confirmation | Confirmations, Invites |
| LANGUAGE | English | Language | - |
| | Spanish | Idioma | - |
| | French | Langue | - |
| NEW ENTRY | English | New Entry | - |
| | Spanish | Nueva Entrada | - |
| | French | Nouvelle Inscription | - |
| DELETE | English | Delete | - |
| | Spanish | Eliminar | - |
| | French | Supprimer | - |

| Command | Language | Primary Command | Alternative Commands |
|---|---|---|---|
| EDIT | English | Edit | - |
| | Spanish | Editar | - |
| | French | Modifier | - |
| CALL THIS NUMBER | English | Call This Number | Call |
| | Spanish | Llamar A Este Número | Llamar |
| | French | Appeler Ce Numéro | Appeler |
| EDIT ANOTHER ENTRY | English | Edit Another Entry | Edit |
| | Spanish | Editar Otra Entrada | Editar |
| | French | Modifier Une Autre Inscription | Modifier |
| TRY AGAIN | English | Try Again | - |
| | Spanish | Intentarlo De Nuevo | - |
| | French | Réessayer | - |
| ERASE ALL | English | Erase All | - |
| | Spanish | Borrar Todo | - |
| | French | Effacer Tout | - |
| LIST NAMES | English | List Names | - |
| | Spanish | Listar Nombres | - |
| | French | Liste Des Noms | - |

| Command | Lan-guage | Primary Command | Alternative Commands |
|---|---|---|---|
| HOME | English | Home | - |
| | Spanish | Casa | En Su Casa |
| | French | Maison | À La Maison |
| WORK | English | Work | - |
| | Spanish | Trabajo | En Su Trabajo |
| | French | Travail | Au Travail |
| MOBILE | English | Mobile | - |
| | Spanish | Celular | En Su Celular |
| | French | Mobile | Sur Le Mobile |
| PAGER | English | Pager | - |
| | Spanish | Pager | Al Pager |
| | French | Téléavertisseur | Sur Le Téléaver-tisseur |
| HELP | English | Help | - |
| | Spanish | Ayuda | - |
| | French | Aide | - |
| CONTI-NUE | English | Continue | - |
| | Spanish | Continuar | - |
| | French | Continuer | - |

| Command | Lan-guage | Primary Command | Alternative Commands |
|---|---|---|---|
| ALL | English | All | - |
| | Spanish | Todos | - |
| | French | Tous | - |
| CANCEL | English | Cancel | - |
| | Spanish | Cancelar | - |
| | French | Annuler | - |
| MUTE | English | Mute | - |
| | Spanish | Silencio | - |
| | French | Sourdine | - |
| MUTE OFF | English | Mute Off | - |
| | Spanish | Silencio Desacti-vado | - |
| | French | Désactiver La Sour-dine | - |
| SEND | English | Send | - |
| | Spanish | Enviar | - |
| | French | Envoyer | - |
| YES | English | Yes | - |
| | Spanish | Sí | - |
| | French | Oui | - |

| Command | Lan-guage | Primary Command | Alternative Commands |
|---|---|---|---|
| NO | English | No | - |
| | Spanish | No | - |
| | French | Non | - |
| ZERO | English | Zero | Oh (letter “O” ) |
| | Spanish | Cero | O |
| | French | Zéro | O (lettre «o») |
| ONE | English | One | - |
| | Spanish | Uno | Una |
| | French | Un | Une |
| TWO | English | Two | - |
| | Spanish | Dos | - |
| | French | Deux | - |
| THREE | English | Three | - |
| | Spanish | Tres | - |
| | French | Trois | - |
| FOUR | English | Four | - |
| | Spanish | Cuatro | - |
| | French | Quatre | - |
| FIVE | English | Five | - |
| | Spanish | Cinco | - |
| | French | Cinq | - |

| Command | Lan-guage | Primary Command | Alternative Commands |
|---|---|---|---|
| SIX | English | Six | - |
| | Spanish | Seis | - |
| | French | Six | - |
| SEVEN | English | Seven | - |
| | Spanish | Siete | - |
| | French | Sept | - |
| EIGHT | English | Eight | - |
| | Spanish | Ocho | - |
| | French | Huit | - |
| NINE | English | Nine | - |
| | Spanish | Nueve | - |
| | French | Neuf | - |
| STAR | English | Star (*) | - |
| | Spanish | Estrella (*) | Asterisco (*) |
| | French | Étoile (*) | - |
| POUND | English | Pound (#) | - |
| | Spanish | Número (#) | Signo De Número (#) |
| | French | Dièse (#) | - |

| Command | Lan-guage | Primary Command | Alternative Commands |
|---|---|---|---|
| Spoken Language | English | English | - |
| | Spanish | Español | - |
| | French | Français | - |
| PHONE-BOOK NEW ENTRY | English | Phonebook New Entry | - |
| | Spanish | Agenda - Nueva Entrada | - |
| | French | Répertoire Nou-velle Inscription | - |
| PHONE-BOOK EDIT | English | Phonebook Edit | - |
| | Spanish | Agenda - Editar | - |
| | French | Répertoire Modifier | - |
| PHONE-BOOK DELETE | English | Phonebook Delete | - |
| | Spanish | Agenda - Eliminar | - |
| | French | Répertoire Suppri-mer | - |
| PHONE-BOOK ERASE ALL | English | Phonebook Erase All | - |
| | Spanish | Agenda - Borrar Todo | - |
| | French | Répertoire Effacer Tout | - |

| Command | Lan-guage | Primary Command | Alternative Commands |
|---|---|---|---|
| PHONE-BOOK LIST NAMES | English | Phonebook List Names | - |
| | Spanish | Agenda - Listar Nombres | - |
| | French | Répertoire Liste Des Noms | - |
| SETUP CONFIR-MATION PROMPTS | English | Setup Confirmation Prompts | Setup Confirma-tions, Setup Prompts |
| | Spanish | Configuración Men-sajes De Confirma-ción | Configuración Confirmaciones, Configuración Mensajes |
| | French | Configurer Les Invites De Confir-mation | Configurer la Confirmation, Configurer les Invites |
| SETUP SELECT PHONE | English | Setup Select Phone | Setup Select |
| | Spanish | Configuración Selección De Teléfono | Configuración Selección |
| | French | Configurer Sélec-tionner Un Téléphone | Configurer Sélec-tionner |

| Command | Language | Primary Command | Alternative Commands |
|---|---|---|---|
| SETUP PAIRING OPTIONS | English | Setup Pairing Options | Setup Pairing |
| | Spanish | Configuración Opciones De Emparejamiento | - |
| | French | Configurer Les Options De Jumelage | Configurer le Jumelage |
| DELETE A NAME | English | Delete A Name | Delete, Delete Name |
| | Spanish | Eliminar Un Nombre | Eliminar, Eliminar Nombre |
| | French | Supprimer Un Nom | Supprimer, Supprimer Nom |
| SETUP LANGUAGE | English | Setup Language | - |
| | Spanish | Configuración Idioma | - |
| | French | Configurer La Langue | - |
| VOICE TRAINING | English | Voice Training | - |
| | Spanish | Aprendizaje De Voz | - |
| | French | Entraînement À La Parole | - |

| Command | Language | Primary Command | Alternative Commands |
|---|---|---|---|
| PASSCODE | English | Passcode | - |
| | Spanish | Contraseña | - |
| | French | NIP | - |
| SETUP PASSCODE | English | Setup Passcode | - |
| | Spanish | Configuración Contraseña | - |
| | French | Configurer Le NIP | - |
| RETRAIN | English | Retrain | - |
| | Spanish | Volver A Educar | - |
| | French | Refaire L'entraînement | - |
| ENABLE | English | Enable | - |
| | Spanish | Activar | - |
| | French | Activer | L'activer |
| DISABLE | English | Disable | - |
| | Spanish | Desactivar | - |
| | French | Désactiver | - |
| SWAP CALLS | English | Swap Calls | - |
| | Spanish | Intercambiar llamadas | - |
| | French | Passer à l'autre appel | - |

| Command | Lan-guage | Primary Command | Alternative Commands |
|---|---|---|---|
| JOIN CALLS | English | Join Calls | - |
| | Spanish | Unir Llamadas | - |
| | French | Intégrer L'appel | - |
| ENGLISH | English | English | - |
| | Spanish | Inglés | - |
| | French | Anglais | l'anglais |
| SPANISH | English | Spanish | - |
| | Spanish | Español | - |
| | French | Espagnol | l'espagnol |
| FRENCH | English | French | - |
| | Spanish | Francés | - |
| | French | Français | - |

## Enrollment Commands

N00539500057

| Phrase # | English | Spanish | French |
|---|---|---|---|
| 1 | 01-23456789 | 01-23456789 | 01-23456789 |
| 2 | 888-555-1212 | 888-555-1212 | 888-555-1212 |
| 3 | Call | Llamar | Appeler |
| 4 | Dial | Marcar | Composer |
| 5 | Setup | Configuración | Configurer |
| 6 | Cancel | Cancelar | Annuler |
| 7 | Continue | Continuar | Continuer |
| 8 | Help | Ayude | Aide |

# *Sun visors*

N00524600236

Fold the sun visor downward (1) to reduce front glare while driving. To reduce side glare, turn the visor to the side (2).

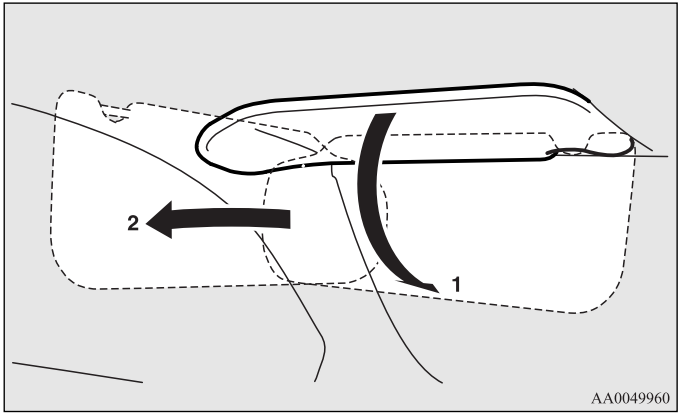


To block out additional side glare, swing the sun visor sideways and slide it backward (if so equipped).

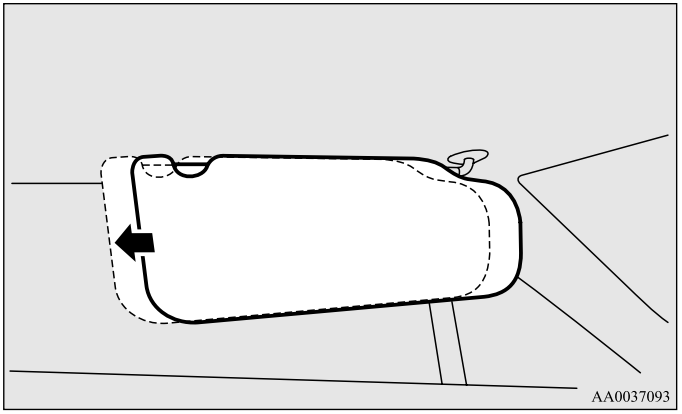

## *Vanity mirror (if so equipped)*

N00524700194

The vanity mirrors are located on the back of the sun visors. Opening the lid (A) of the vanity mirror will automatically turn on the mirror light (B).

**⚠ *CAUTION***

- **If the lid of the lighted vanity mirror is kept open for prolonged periods of time, the battery may be discharged.**

Type 1

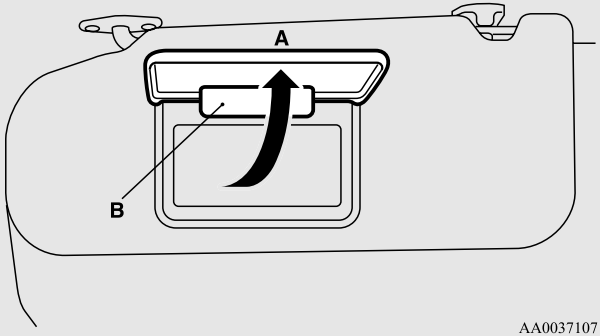


AA0037107

Type 2

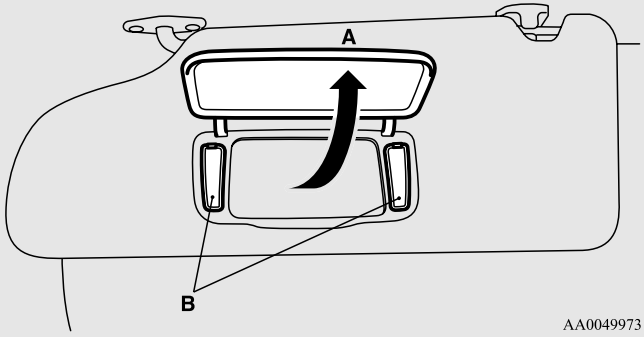


AA0049973

# Power outlet

N00525000530

Power outlets are located in front of the floor console (Type 1) and inside of the floor console box (Type 2).
The accessory can be operated when the ignition key is in the "ON" or "ACC" position.
To use a "plug-in" type accessory, open the cover, then insert the plug in the socket.

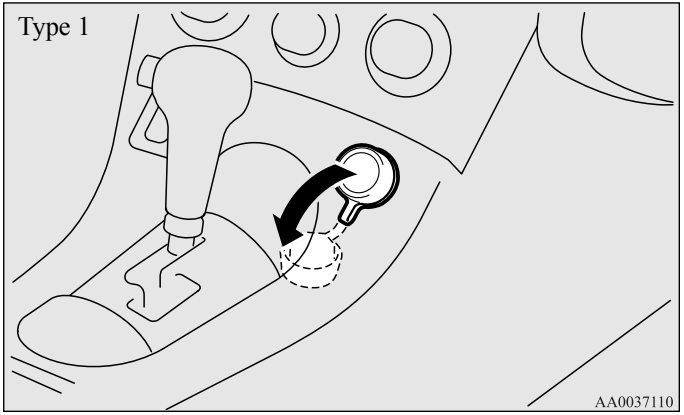


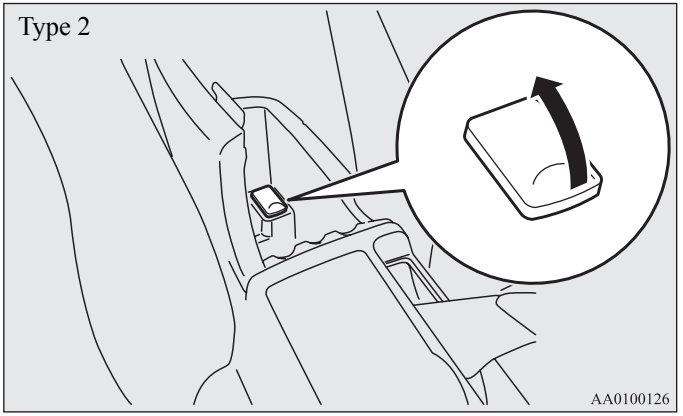


NOTE
- The power outlets can be used simultaneously.

## ⚠ CAUTION

- **Be sure to use a "plug-in" type accessory operating at 12 V and 120 W or less.**
  **When using two power outlets simultaneously, make sure that the total power consumption of these does not exceed 120 W at 12 V.**
- **Be aware that using electronic equipment with the engine off may run the battery down.**
- **When the power outlet is not in use, be sure to close the power outlet cover. This will prevent the power outlet from becoming dirty and possibly short-circuiting.**

# *Interior lights*

N00525300533

## ECLIPSE

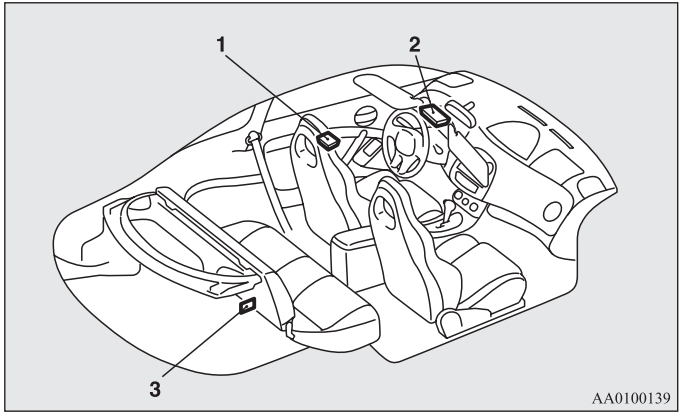


1- Dome light (Rear) → P.3-174
2- Dome light (Front)/Reading lights-Type 1 (if so equipped) → P.3-170
   Dome light (Front)/Reading lights-Type 2 (if so equipped) → P.3-171
3- Cargo area light → P.3-174

## ECLIPSE SPYDER

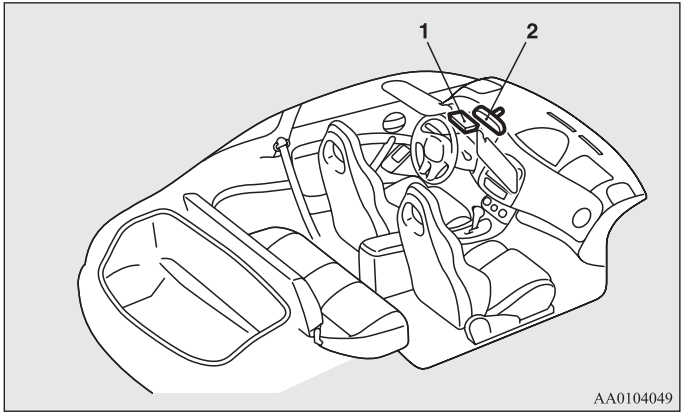


1- Dome light (Front)/Reading lights-Type 2 (if so equipped) → P.3-171
2- Reading lights (if so equipped) → P.3-173

## Dome light (Front)/Reading lights-Type1 (if so equipped)

N00525800147

### *Dome light (Front)*

The dome light can be turned on by sliding the dome light switch.

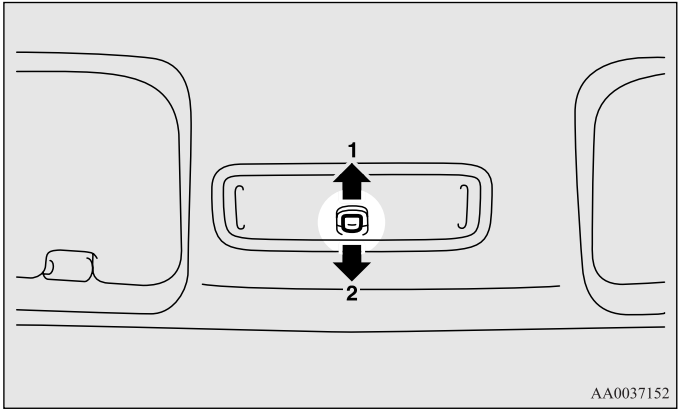


1 (DOOR) - The dome light comes on when any door or rear hatch is opened. When all the doors (including the rear hatch) are closed, the dome light is dimmed gradually for 30 seconds then goes out. However, the light goes out immediately without being dimmed if:

- The ignition switch is turned to the “ON” position.
- All the doors (including the rear hatch) are locked using the power door lock switch, or the remote control switch of the keyless entry system.

NOTE

- If the ignition key is removed with the doors and the rear hatch closed, the dome light comes on for 30 seconds and then goes out.

2 (OFF) - The dome light goes off.

### *Reading lights*

N00553800038

Push the reading light switch (A) to turn on the light. This light produces a spot beam for convenient use as a map light.

Push the reading light switch again to turn the light off.

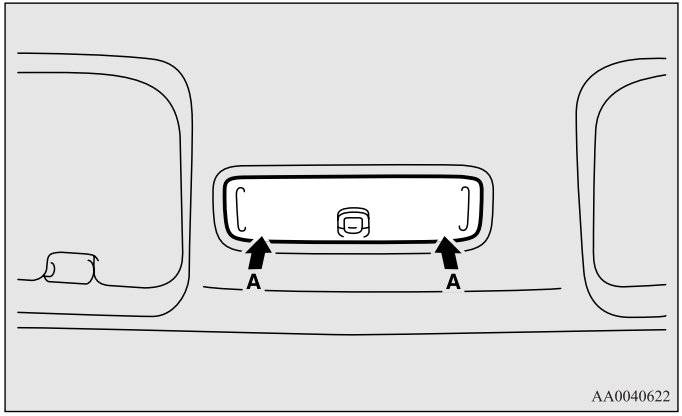


## Dome light (Front)/reading lights-Type 2 (if so equipped)

N00525800150

### *Dome light (Front)*

The dome light can be turned on by pushing the dome light switch (A).

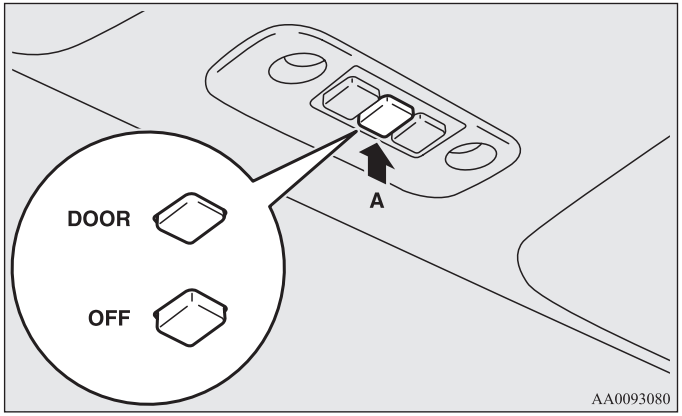

(DOOR) - The dome light comes on when any door or rear hatch is opened. When all the doors (including the rear hatch) are closed, the dome light is dimmed gradually for 30 seconds then goes out. However, the light goes out immediately without being dimmed if:

- The ignition switch is turned to the “ON” position.
- All the doors (including the rear hatch) are locked using the power door lock switch, or the remote control switch of the keyless entry system.

NOTE

- If the ignition key is removed with the doors and the rear hatch closed, the dome light comes on for 30 seconds and then goes out.

(OFF) - The dome light goes off.



## *Reading lights*

N00553800083

Push the reading light switch (B) to turn on the light. This light produces a spot beam for convenient use as a map light.

Push the reading light switch again to turn the light off.

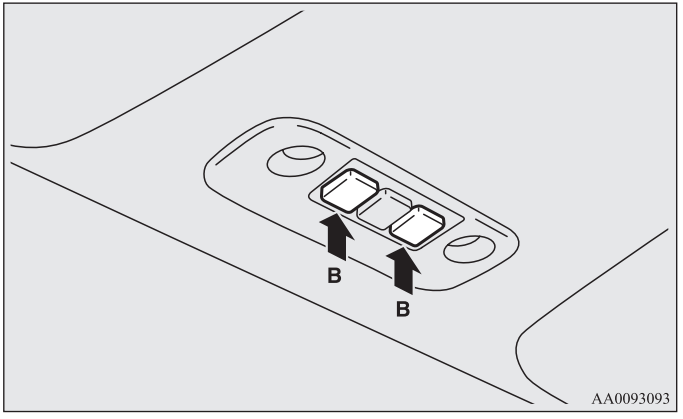

## Reading lights (ECLIPSE SPYDER only, if so equipped)

N00525700188

Push the reading light switch to turn on the light. This light produces a spot beam for convenient use as a map light.

Push the reading light switch again to turn the light off.

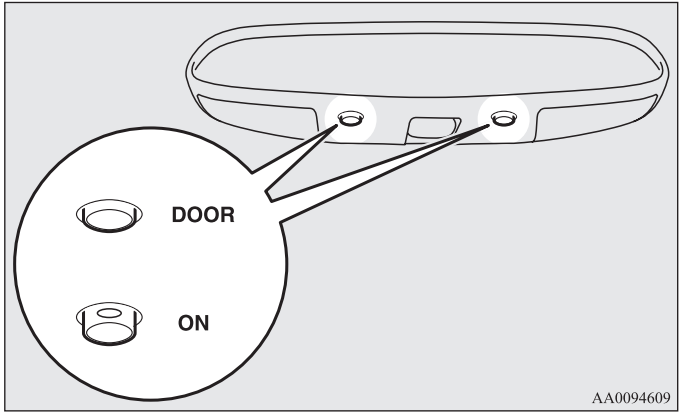


(ON) - The reading light comes on.

(DOOR) - The reading light comes on when any door is opened. When all the doors are closed, the reading light is dimmed gradually for 30 seconds then goes out. However, the light goes out immediately without being dimmed if:

- The ignition switch is turned to the “ON” position.
- All the doors are locked using the power door lock switch, or the remote control switch of the keyless entry system.

NOTE

- If the ignition key is removed with the doors closed, the reading light comes on for 30 seconds and then goes out.

## Dome light (Rear) (ECLIPSE only)

N00525400417

The dome light can be turned on by sliding the dome light switch.

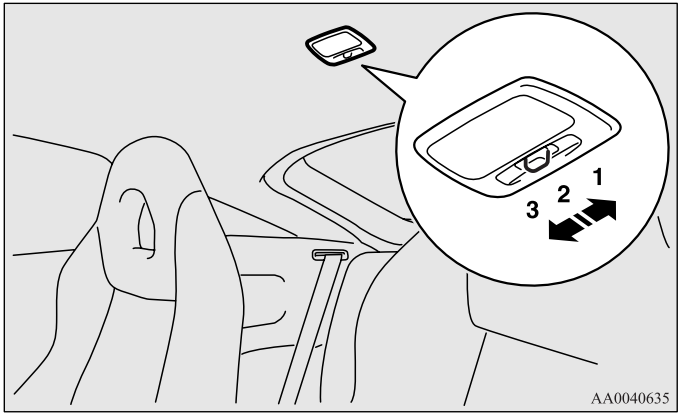


1 ( ) - The dome light comes on.

2 ( ) - The dome light comes on when any door or rear hatch is opened. When all the doors (including the rear hatch) are closed, the dome light is dimmed gradually for 30 seconds then goes out. However, the light goes out immediately without being dimmed if:

- The ignition switch is turned to the “ON” position.
- All the doors (including the rear hatch) are locked using the power door lock switch, or the remote control switch of the keyless entry system.

NOTE

- If the ignition key is removed with the doors and the rear hatch closed, the dome light comes on for 30 seconds and then goes out.

3 (○) - The dome light goes off.

## Cargo area light (ECLIPSE only)

N00526100150

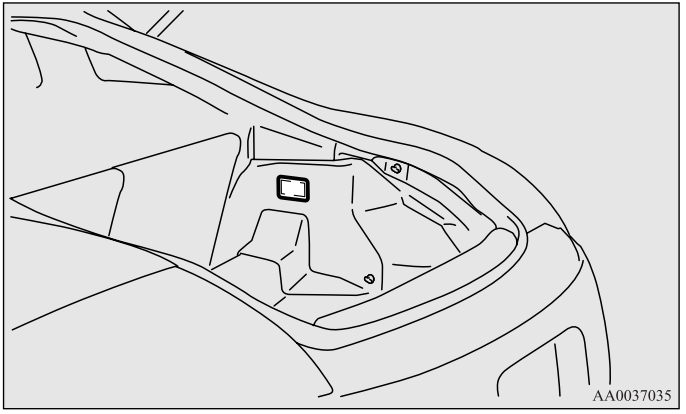


The cargo area light comes on when the rear hatch is opened. When the rear hatch is closed, the cargo area light goes off.

## Interior light auto-cutout function (dome light and other lights)

N00526300396

If any of the interior lights are left on with the ignition switch in the “LOCK” position, the lights go out automatically after about 30 minutes.
The lights come on again if the ignition switch is turned to the “ON” or “ACC” position, any door or the rear hatch (ECLIPSE) is opened and closed, or the keyless entry system is operated.

# *Glove compartment*

N00526500268

## Type 1

To open, pull the lever (A).

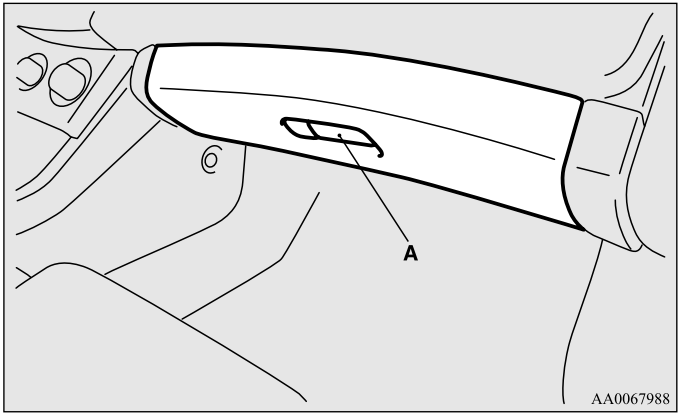

## Type 2

1. To lock.
2. To unlock.
3. To open, pull the lever (A).

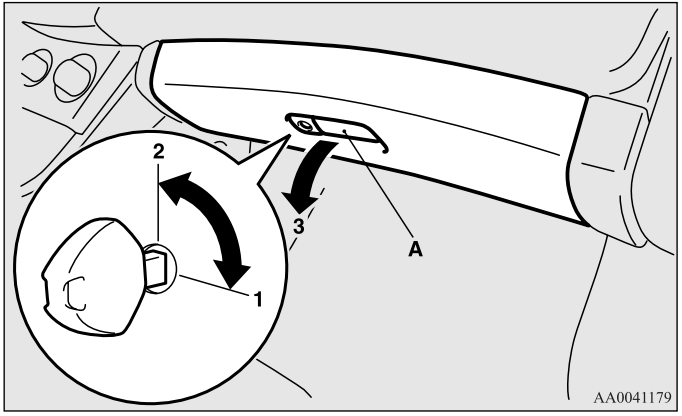


NOTE

- When the light switch is set in either the "≣DOE" or "≣D" position, the glove compartment light illuminates.
  Refer to "Combination headlights and dimmer switch" on page 3-125.

**⚠ WARNING**

- **An open glove compartment door can cause a serious injury or death to the front passenger in an accident, even if the passenger is wearing his/her seat belt. Always keep the glove compartment door closed when driving.**

# *Floor console box*

N00526600184

The floor console box is located under the arm rest.
To open the console box, lift the lever (A) and raise the arm rest (B).

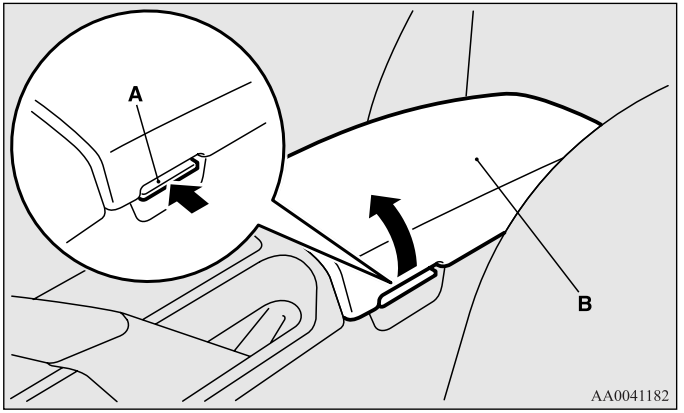


NOTE

- The Auxiliary Audio connector (mini-jack) is located in the floor console box. For details, refer to "To use the external audio input function" on page 5-63.

## Coin holder

N00552800015

The coin holders (A) are located inside the floor console box.

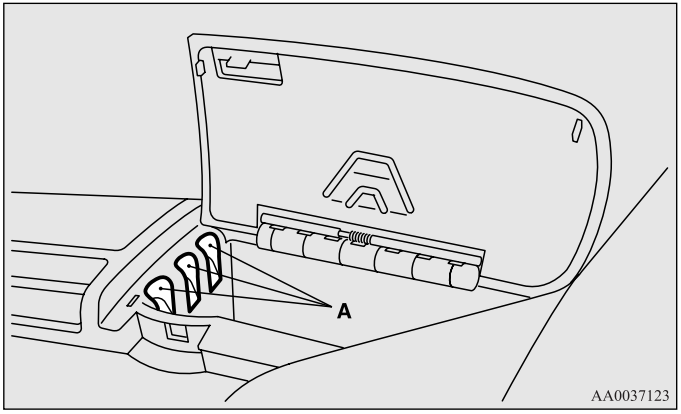


## Notepad holder/Pen holder

N00552900016

The notepad holder (A) and pen holder (B) are located on the back of the arm rest.

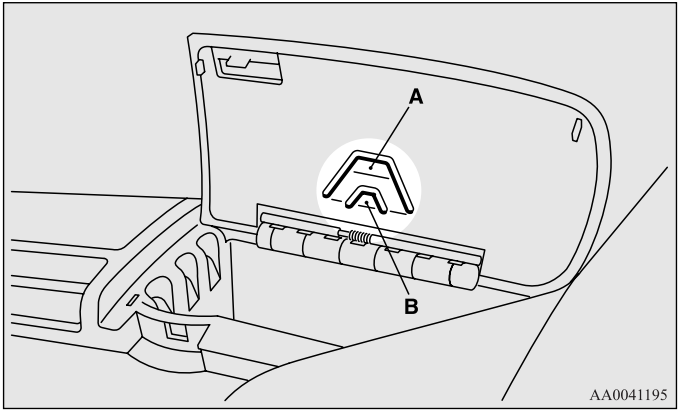

## Cup holder

N00527300188

The cup holder is located the middle of the floor console.
The cup holder is designed for holding cups or drink-cans securely in its holes.
To use the cup holder, open the lid (A).

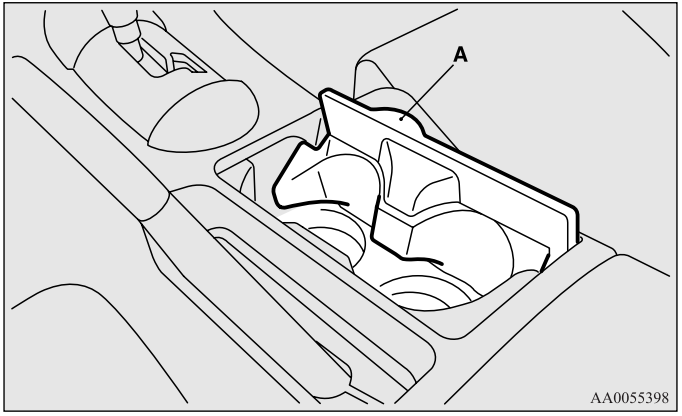


**⚠ CAUTION**

- **Do not drink beverages while driving your vehicle. This is distracting and could cause an accident.**

## Rear shelf panel (ECLIPSE only)

N00528200083

The rear shelf panel is provided for covering the cargo area and to protect its contents from direct sunlight.

NOTE

- Do not place luggage or other items on the rear shelf panel. Any items on the rear shelf panel would obstruct your rearward view, and they could fly forward and cause an injury or other mishap in the event of hard braking.

When opening the rear hatch, the rear shelf panel (A) will be lifted together with the rear hatch.

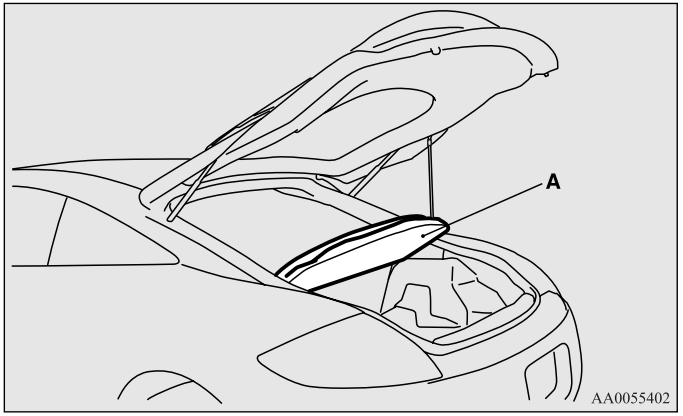

NOTE

- When closing the rear hatch, make sure no luggage touches the rear shelf panel. If you close the rear hatch with the rear shelf panel pressing against luggage, the rear shelf panel could break.

Remove the rear shelf panel when loading large items of luggage.

## To remove

1. Unlock the cord from the rear hatch.

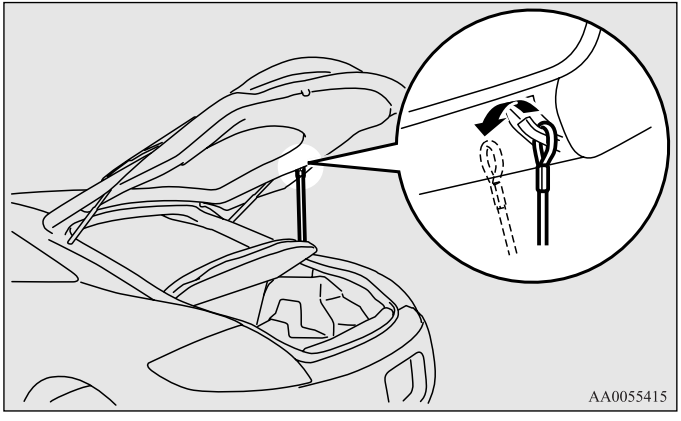


2. Unsnap by lifting the rear shelf panel pivoting points (B).

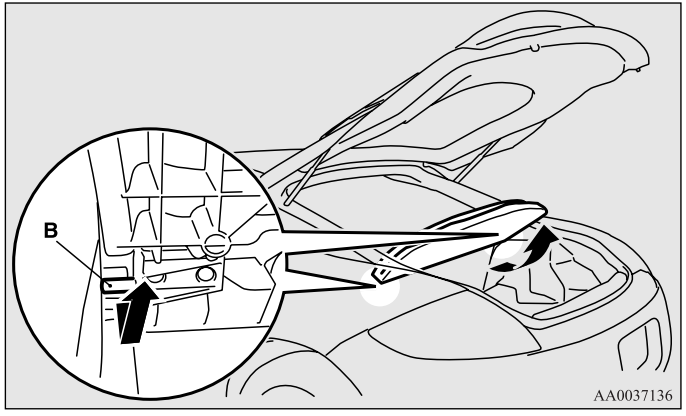


## To refit

Refit the rear shelf panel by performing the removal steps in reverse.

## Coat hooks (ECLIPSE only, if so equipped)

N00553600023

There are two hooks on the rear pillar for use in hanging clothes.

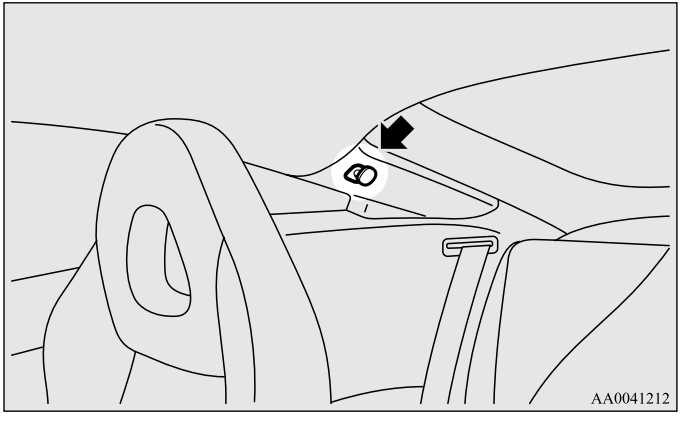


**WARNING**

- **Do not put a hanger or any heavy or pointed object on the coat hook. If the curtain air bag was activated, any such item could be propelled away with great force and could prevent the curtain air bag from inflating correctly. Hang clothes directly on the coat hook (without using a hanger). Make sure there are no heavy or sharp objects in the pockets of clothes that you hang on the coat hook.**

## Luggage hooks (ECLIPSE only)

N00528500233

There are four hooks on the side of the trunk for use in securing luggage.

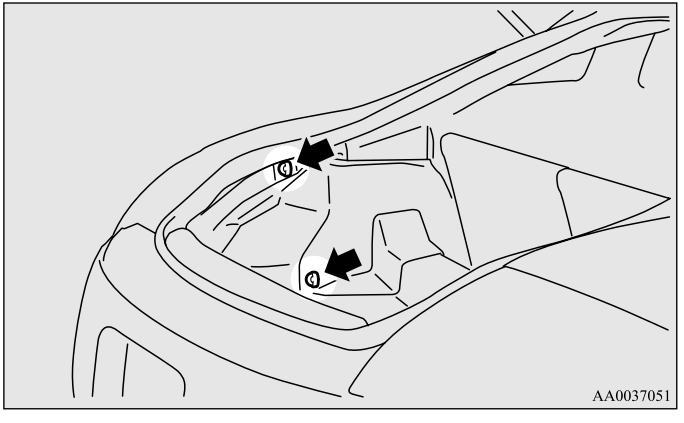


NOTE

- Do not hang heavy items {more than about 6.6 lbs. (3 kg)} on the hook. Doing so could damage the hook.

# *Driving safety*


Fuel economy . . . . . 4- 2
Driving, alcohol and drugs . . . . . 4- 2
Vehicle preparation before driving . . . . . 4- 3
Safe driving techniques . . . . . 4- 4
Driving during cold weather . . . . . 4- 5
Braking . . . . . 4- 6
Parking . . . . . 4- 6
Loading information . . . . . 4- 7
Cargo loads . . . . . 4- 12
Trailer towing . . . . . 4- 13

## Fuel economy

N00628800107

Fuel economy is dependent on many factors. Your personal driving habits can have a significant effect on your fuel use. Several recommendations for achieving the greatest fuel economy are listed below.

- Whenever accelerating from a stop, always accelerate slowly and smoothly.
- When parked for even a short period, do not idle the engine. Shut it off.
- Plan your trips to avoid unnecessary stops.
- Keep your tires inflated to the recommended pressures.
- For freeway driving, maintain a speed of approximately 50 mph (80 km/h) when traffic, roadway and weather conditions safely permit.
- Keep your air filter clean and your vehicle lubricated according to the recommendations in this manual.
- Always keep your vehicle well maintained. A poorly maintained engine wastes fuel and costs money.
- Do not overload your vehicle.

## Driving, alcohol and drugs

N00628900010

Drunk driving is one of the most frequent causes of accidents. Your driving ability can be seriously impaired even with blood alcohol levels far below the legal minimum. If you have been drinking, don't drive. Ride with a designated non-drinking driver, call a cab or a friend, or use public transportation. Drinking coffee or taking a cold shower will not make you sober.

Similarly, prescription and nonprescription drugs affect your alertness, perception and reaction time. Consult with your doctor or pharmacist before driving while under the influence of any of these medications.

**⚠ WARNING**

- **NEVER DRINK AND DRIVE.**
  **Your perceptions are less accurate, your reflexes are slower and your judgment is impaired.**

# *Vehicle preparation before driving*

N00629000500

For a safer and more enjoyable trip, always observe the following:

## Seat belts and seats

- Before starting the vehicle, make certain that you and all passengers are seated and wearing their seat belts properly (with children in the rear seat, in appropriate restraints), and that all the doors and the rear hatch are locked.
- Move the driver's seat as far backward as possible, while still keeping good visibility, and good control of the steering wheel, brakes, accelerator, and controls. Check the instrument panel indicators for any possible problem.
- Move the front passenger seat as far back as possible.
- Make sure that infants and small children are properly restrained in accordance with all laws and regulations.

## Floor mat

Always properly position floor mat and assure it does not interfere with operation of the pedals.

Always use retaining clip on the driver's floorboard to secure the Mitsubishi genuine floor mat. When used, this clip will help prevent the floor mat from moving forward and possibly interfering with the operation of the pedals.

To prevent the floor mat from moving forward and possibly interfering with the operation of the pedals, Mitsubishi genuine floor mats are recommended.

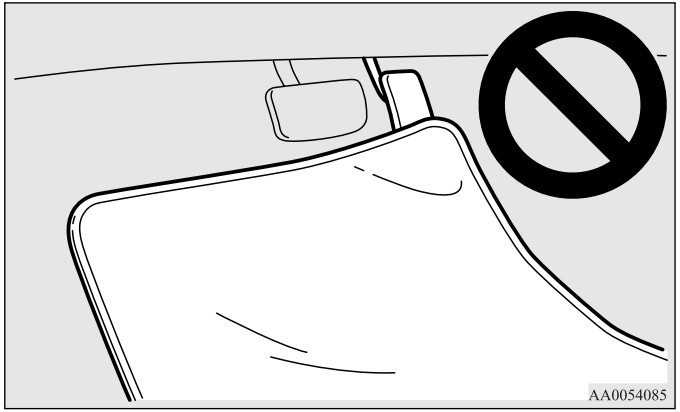


**⚠ *WARNING***

- **Always properly position floor mat and assure it does not interfere with operation of the pedals.**
- **Always use retaining clip on the driver's floorboard to secure the Mitsubishi genuine floor mat.**
- **Always install the mat with the correct side facing down.**
- **Never install a second mat over an existing floor mat.**

## Defrosters

Check these by selecting the defroster mode, and set the blower switch on high. You should be able to feel the air blowing against the windshield.

(Refer to “Defrosting or defogging the windshield and door windows” on page 5-12, 5-20.)

## Tires

Check all the tires for heavy tread wear or uneven wear patterns. Look for stones, nails, glass, or other objects stuck in the tread. Look for any tread cuts or sidewall cracks. Check the wheel nuts for tightness, and the tires (including spare tire) for proper pressures. Replace your tires before they are heavily worn out.

As your vehicle is equipped with a tire pressure monitoring system, there is a risk of damage to the tire inflation pressure sensors when the tire is replaced on the rim. Tire replacement should, therefore, be performed only by an authorized Mitsubishi Motors dealer.



## Lights

Have someone watch while you turn all the exterior lights on and off. Also check the turn signal indicators and high-beam indicators on the instrument panel.

## Fluid leaks

Check the ground under the vehicle after parking overnight, for fuel, water, oil, or other leaks. Make sure all the fluid levels are correct. Also, if you can smell fuel, you need to find out why immediately and have it fixed.

# *Safe driving techniques*

N00629200078

Even this vehicle’s safety equipment, and your safest driving, cannot guarantee that you can avoid an accident or injury. However, if you give extra attention to the following areas, you can better protect yourself and your passengers:

- Drive defensively. Be aware of traffic, road and weather conditions. Leave plenty of stopping distance between your vehicle and the vehicle ahead.
- Before changing lanes, check your mirrors and use your turn signal light.
- While driving, watch the behavior of other drivers, bicyclists, and pedestrians.
- Always obey applicable laws and regulations. Be a polite and alert driver. Always leave room for unexpected events, such as sudden braking.
- If you plan to drive in another country, obey their vehicle registration laws and make sure you will be able to get the right fuel.

## *Driving during cold weather*

N00629400168

- Check the battery, including terminals and cables. During extremely cold weather, the battery will not be as strong. Also, the battery power level may drop because more power is used for cold starting and driving.
  Before driving the vehicle, check to see if the engine runs at the proper speed and if the headlights are as bright as normally. Charge or replace the battery if necessary. During extreme cold weather, it is possible that a very low battery could freeze.

**⚠ *WARNING***

- **The battery gives off explosive hydrogen gas. Any spark or flame can cause the battery to explode, which could cause serious injury or death.**
  **Always wear protective clothes and a face mask when working with your battery, or let a skilled mechanic do it.**

- Warm the engine sufficiently. After starting the engine, allow a short warm-up time to distribute oil to all cylinders. Then drive your vehicle slowly.
- Stay at low speeds at first so that the manual transaxle oil or the automatic transaxle fluid has time to spread to all the lubrication points.
- Manual transaxle can be harder to shift in cold weather conditions. This is normal and shifting will get easier as the transaxle warms up.
- Check the engine antifreeze.
  If there is not enough coolant because of a leak or from engine overheating, add high-quality ethylene glycol anti-freeze and water. The recommended blend is about 50 % water and 50 % anti-freeze. Use a higher concentration (not over 60 %) when the outside temperature is -31 °F (-35 °C) or lower. When the engine is working very hard (for example, during mountain driving and/or when the outside temperature is high), use a 50 % concentration. This blend will provide adequate protection from corrosion and boiling.

**⚠ *WARNING***

- **Never open the radiator cap when the radiator is hot. You could be seriously burned.**

# Braking

N00629500260

All the parts of the brake system are critical to safety. Have the vehicle serviced by an authorized Mitsubishi Motors dealer or a repair facility of your choice at regular intervals according to the “WARRANTY AND MAINTENANCE MANUAL”.

## When brakes are wet

Check the brake system while driving at a low speed immediately after starting, especially when the brakes are wet, to confirm they work normally.
A film of water can be formed on the brake discs and prevent normal braking after driving in heavy rain or through large puddles, or after the vehicle is washed. If this occurs, dry the brakes out by driving slowly while lightly depressing the brake pedal.



## When driving in cold weather

On snowy roads, ice can form on the braking system, making the brakes less effective. While driving in such conditions, pay close attention to preceding and following vehicles and to the condition of the road surface. From time to time, lightly depress the brake pedal and check how effective the brakes are.

## When driving downhill

It is important to take advantage of the engine braking by shifting to a lower gear while driving on steep downhill roads in order to prevent the brakes from overheating.

# Parking

N00629600274

## Parking on a hill

When parking on a hill, set the parking brake, and turn the front wheels toward the curb on a downhill, or away from the curb on an uphill.
If necessary, apply chocks to wheels.

### *For vehicles with manual transaxle*

Place the gearshift lever into the “R” (Reverse) position when parking on a downhill slope, into the 1st position when parking on an uphill slope.

### *For vehicles with automatic transaxle*

Be sure that the parking brake is firmly set when parked and that the selector lever is in the “P” (PARK) position.
When parking on a hill, it is important to set the parking brake before moving the selector lever to the “P” (PARK) position. This prevents loading the parking brake against the transaxle gear. When this happens, it is difficult to move the selector lever out of the “P” (PARK) position.

## Parking with the engine running

Never leave the engine running while you take a short sleep/rest. Also, never leave the engine running in a closed or poorly ventilated place.

**⚠ WARNING**

- **Leaving the engine running risks injury or death from accidentally moving the gearshift lever (manual transaxle) or the selector lever (automatic transaxle) or the accumulation of toxic exhaust fumes in the passenger compartment.**

## Where you park

Your front bumper can be damaged if you scrape it over curbs or parking stop blocks. Be careful when traveling up or down steep slopes where your bumper can scrape the road.

**⚠ WARNING**

- **Do not park your vehicle in areas where combustible materials such as dry grass or leaves can come in contact with a hot exhaust, since a fire could occur.**

## When leaving the vehicle

Always remove the key from the ignition switch and lock all doors and the rear hatch when leaving the vehicle unattended. Always try to park your vehicle in a well lit area.

# *Loading information*

N00629900336

It is very important to know how much weight your vehicle can carry. This weight is called the vehicle capacity weight and includes the weight of all occupants, cargo and non-factory-installed options. The tire and loading information placard located on the driver's door sill of your vehicle will show how much weight it may properly carry.

**⚠ WARNING**

- **Never overload your vehicle. Overloading can damage your vehicle, adversely affect vehicle performance, including handling and braking, cause tire failure, and result in an accident.**



It is important to familiarize yourself with the following terms before loading your vehicle:

- Vehicle maximum load on the tire: load on an individual tire that is determined by distributing to each axle its share of the maximum loaded vehicle weight and dividing by two.
- Vehicle normal load on the tire: load on an individual tire that is determined by distributing to each axle its share of the curb weight, accessory weight, and normal occupant weight and dividing by two.
- Maximum loaded vehicle weight: the sum of -
  (a) Curb weight;
  (b) Accessory weight;
  (c) Vehicle capacity weight; and
  (d) Production options weight.

- Curb weight: the weight of a motor vehicle with standard equipment including the maximum capacity of fuel, oil, and coolant.
- Accessory weight: the combined weight (in excess of those standard items which may be replaced) of automatic transmission, power steering, power brakes, power windows, power seats, radio, and heater, to the extent that these items are available as factory- installed equipment (whether installed or not).
- Vehicle capacity weight: the rated cargo and luggage load plus 150 lbs (68 kg)* times the vehicle's designated seating capacity.
- Production options weight: the combined weight of those installed regular production options weighing over 5 lbs (2.3 kg) in excess of those standard items which they replace, not previously considered in curb weight or accessory weight, including heavy duty brakes, ride levelers, roof rack, heavy duty battery, and special trim.
- Normal occupant weight: 150 lbs (68 kg)* times the number of specified occupants. (In your vehicle the number is 2)
- Occupant distribution: distribution of occupants in a vehicle as specified. (In your vehicle the distribution is 2 in front seat)

*: 150 lbs (68 kg) is the weight of one person as defined by U.S.A. and Canadian regulations.



## Tire and loading information placard

N00630100354

The tire and loading information placard is located on the driver's door sill.

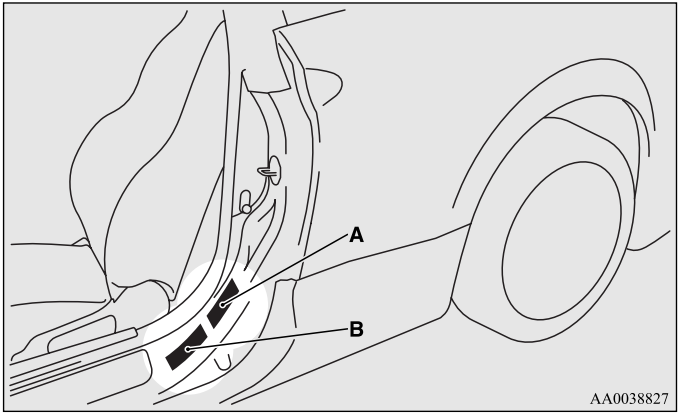


A- All vehicles (Type A)
B- Vehicles sold in Canada (Type B)

This placard shows the maximum number of occupants permitted to ride in your vehicle as well as “the combined weight of occupants and cargo” (C), which is called the vehicle capacity weight. This placard also tells you the size and recommended inflation pressure for the original equipment tires on your vehicle. For more information, refer to “Tires” on page 7-20.

Type A

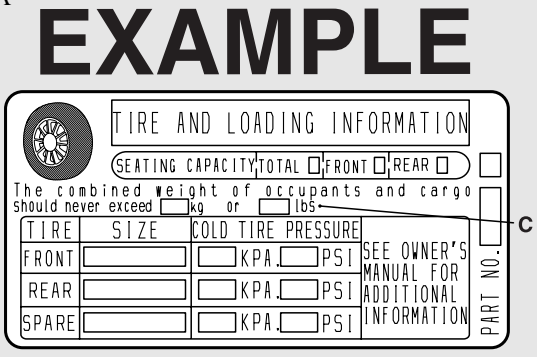


AA0046015

Type B

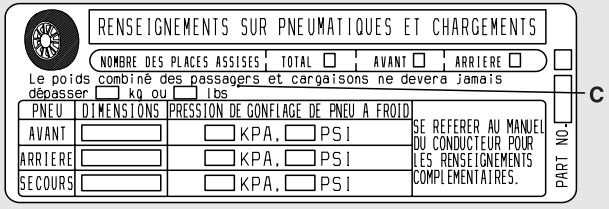


AA0046031

## Steps for Determining Correct Load Limit

N00630200081

1. Locate the statement “The combined weight of occupants and cargo should never exceed XXX kg or XXX lbs.” on your vehicle’s placard.
2. Determine the combined weight of the driver and passengers that will be riding in your vehicle.
3. Subtract the combined weight of the driver and passengers from XXX kg or XXX lbs.
4. The resulting figure equals the available amount of cargo and luggage load capacity. For example, if the “XXX” amount equals 1400 lbs. and there will be five 150 lbs. passengers in your vehicle, the amount of available cargo and luggage load capacity is 650 lbs. (1400 - 750 (5 x 150) = 650 lbs.)
5. Determine the combined weight of luggage and cargo being loaded on the vehicle. That weight may not safely exceed the available cargo and luggage load capacity calculated in Step 4.
6. If your vehicle will be towing a trailer, load from your trailer will be transferred to your vehicle. Consult this manual to determine how this reduces the available cargo and luggage load capacity of your vehicle.

NOTE

● The above steps for determining correct load limit were written in accordance with U.S.A. regulations. For your vehicle, please determine correct load limit bearing in mind the following differences:
  - Your vehicle’s seating capacity is 4 people.
  - Your vehicle cannot tow a trailer, so step 6 is irrelevant.

NOTE

- The following table shows examples on how to calculate total cargo/load capacity of your vehicle with varying seating configurations and number and size of occupants. This table is for illustration purposes only and may not be accurate for the seating and load capacity of your vehicle.
- For the following example the combined weight of occupants and cargo should never exceed 865 lbs (392 kg).

| Occupants | | | Combined weight of occupants and cargo from Tire Placard | MINUS | Combined Occupant's weight | = | AVAILABLE Cargo/Luggage Weight |
|---|---|---|---|---|---|---|---|
| TOTAL | FRONT | REAR | | | | | |
| EXAMPLE 1 | | | | | | | |
| 4 | 2 | 2 | 865 lbs (392 kg) | minus | Occupant 1: 200 lbs (91 kg)<br>Occupant 2: 130 lbs (59 kg)<br>Occupant 3: 160 lbs (73 kg)<br>Occupant 4: 100 lbs (45 kg)<br>TOTAL WEIGHT: 590 lbs (268 kg)<br>590 lbs (268 kg) | = | 275 lbs (124 kg) |
| EXAMPLE 2 | | | | | | | |
| 3 | 2 | 1 | 865 lbs (392 kg) | minus | Occupant 1: 210 lbs (95 kg)<br>Occupant 2: 180 lbs (82 kg)<br>Occupant 3: 150 lbs (68 kg)<br>TOTAL WEIGHT: 540 lbs (245 kg)<br>540 lbs (245 kg) | = | 325 lbs (147 kg) |
| EXAMPLE 3 | | | | | | | |
| 2 | 2 | 0 | 865 lbs (392 kg) | minus | Occupant 1: 200 lbs (91 kg)<br>Occupant 2: 200 lbs (91 kg)<br>TOTAL WEIGHT: 400 lbs (182 kg)<br>400 lbs (182 kg) | = | 465 lbs (210 kg) |

EXAMPLE

AAM002265

- Under a maximum loaded vehicle condition, gross axle weight ratings (GAWR's) for the front and rear axles must not be exceeded. For further information on GAWR's, vehicle loading, see the "Specifications" section of this manual.

# *Cargo loads*

N00629700347

## Cargo load precautions

To determine the cargo load capacity for your vehicle, subtract the weight of all vehicle occupants from the vehicle capacity weight. For added information, if needed, refer to “Step for Determining Correct Load Limit” on page 4-10.

DO NOT USE the Gross Vehicle Weight Rating and Gross Axle Weight Rating numbers listed on the safety certification label (A) located on the driver’s side door pillar as the guide for passengers and/or cargo weight.

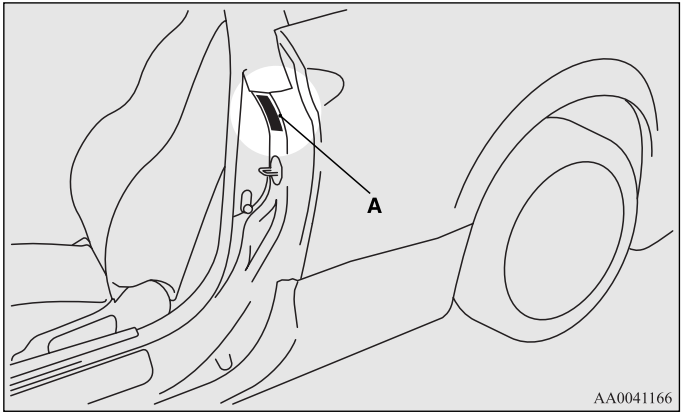


**⚠ *WARNING***

- **To reduce the risk of serious injury or death, the combined weights of the driver, passengers and cargo and must never exceed the vehicle capacity weight.**
- **Exceeding the vehicle capacity weight will adversely affect vehicle performance, including handling and braking, and may cause an accident.**
- **Do not load cargo or luggage higher than the top of the seatback. Be sure that your cargo or luggage cannot move when your vehicle is in motion.**
  **Having either the rear view blocked, or your cargo being thrown inside the cabin if you suddenly have to brake can cause a serious accident or injury or death.**
- **Put cargo or luggage in the cargo area of your vehicle. Try to spread the weight evenly.**

## *Trailer towing*

N00629800188

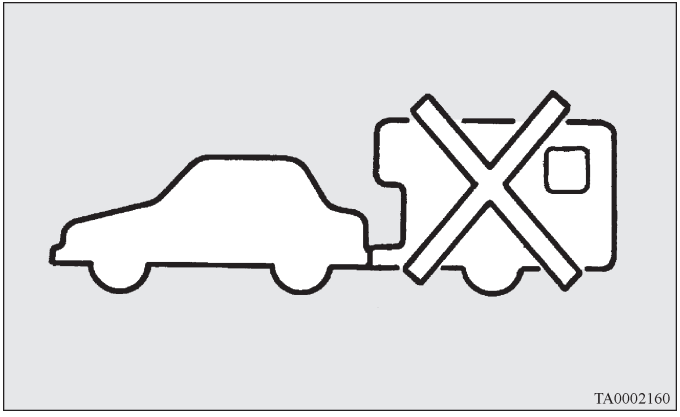


**⚠ *WARNING***

- **Do not use this vehicle for trailer towing. It may not be possible to maintain control or adequate braking.**

# *Comfort controls*


Vents. . . . . .5- 2
Manual air conditioning (if so equipped). . . . . .5- 5
Automatic air conditioning (if so equipped) . . . . .5- 14
Important air conditioning operating tips . . . . . .5- 22
Audio system . . . . . .5- 24
AM/FM electronically tuned radio
with CD player-Type 1 (if so equipped). . . . . .5- 26
AM/FM electronically tuned radio
with CD autochanger-Type 2 (if so equipped)
AM/FM/Satellite electronically tuned radio
with CD autochanger-Type 3 (if so equipped) . .5- 39
To use the external audio input function . . . . . .5- 63
Steering wheel audio remote control switch
(if so equipped). . . . . .5- 65
Error codes. . . . . .5- 67
Error codes (SIRIUS Satellite Radio) . . . . . .5- 69
Handling of compact discs. . . . . .5- 71
Antenna . . . . . .5- 74
General information about your radio . . . . . .5- 76

# *Vents*

N00729900135

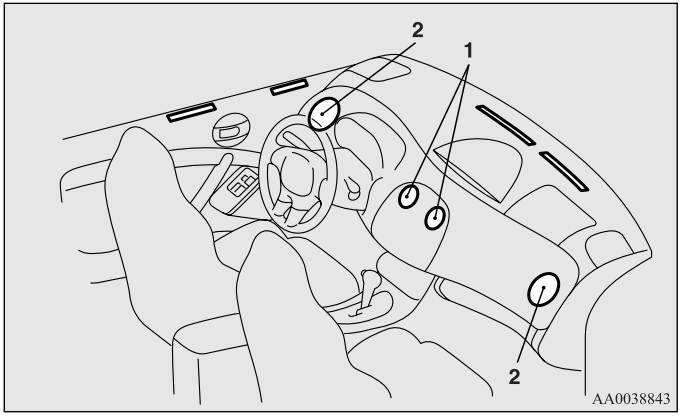


1- Center vents
2- Side vents

NOTE
- Do not place beverages on top of the instrument panel. If they splash into the air conditioning vents, they could damage the system.

## Air flow and direction adjustments

N00730200125

### *Center/Side vents*

Adjust the direction of the air flow by moving the knob (A).

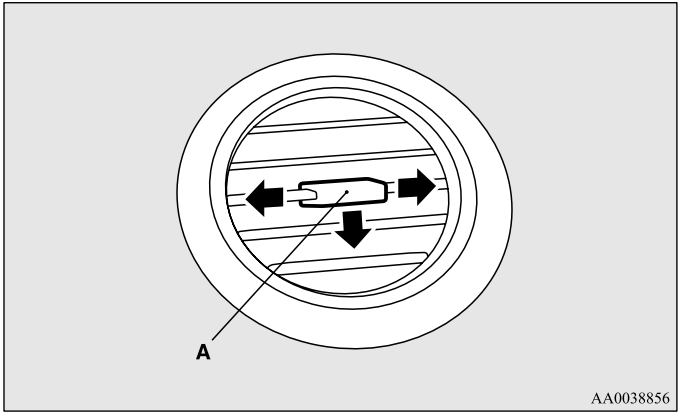


NOTE
- On rare occasions, air from the vents of an air-conditioned vehicle may be foggy. This is only moist air cooling suddenly and does not indicate a problem.

## Changing the mode selection

N00736400451

To change the position and amount of air flowing from the vents, turn the mode selection dial. (Refer to “Mode selection dial” on page 5-7, 5-17.)

These symbols are used in the next several illustrations to demonstrate the quantity of air coming from the vents.

→: Small amount of air from the vents

➔: Medium amount of air from the vents

➔: Large amount of air from the vents

### *Face position*

Air flows only to the upper part of the passenger compartment.

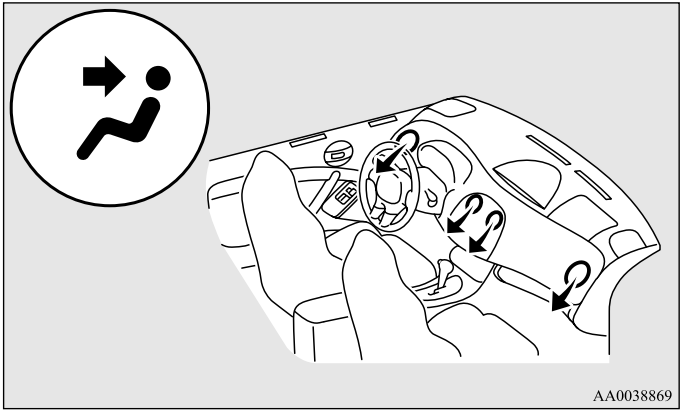


### *Foot/Face position*

Air flows to the upper part of the passenger compartment, and flows to the leg area.

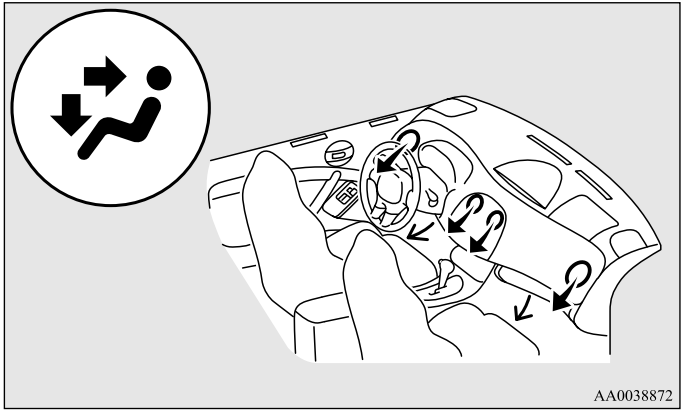


NOTE

- With the mode selection dial between the “ ” and “ ” positions, air flows mainly to the upper part of the passenger compartment. With the mode selection dial between the “ ” and “ ” positions, air flows mainly to the leg area.

### *Foot position*

Air flows mainly to the leg area.

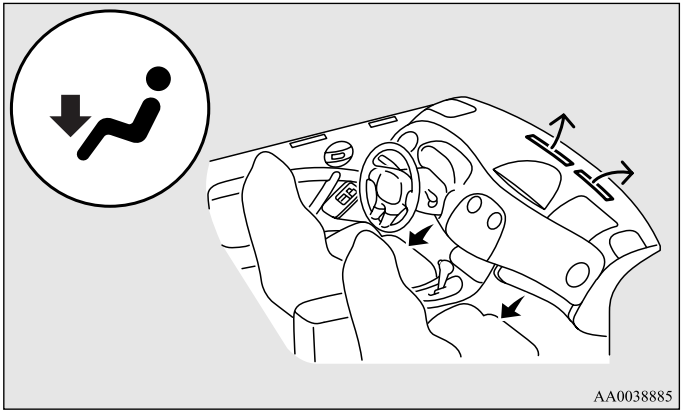


### *Foot/Defroster position*

Air flows to the leg area, the windshield and the door windows.

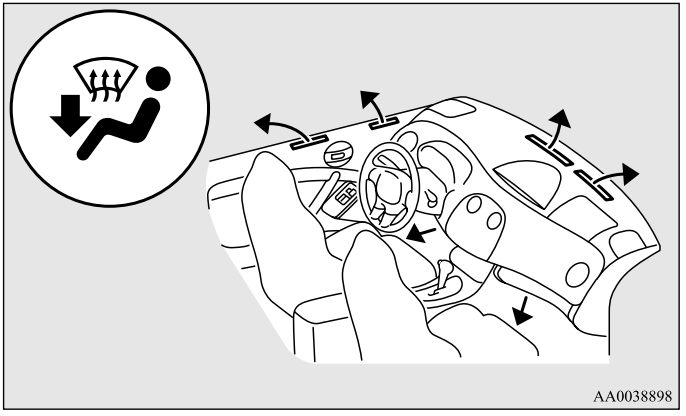


NOTE

- With the mode selection dial between the "" and "" positions, air flows mainly to the leg area. With the mode selection dial between the "" and "" positions, air flows mainly to the windshield and door windows.

### *Defroster position*

Air flows mainly to the windshield and the door windows.

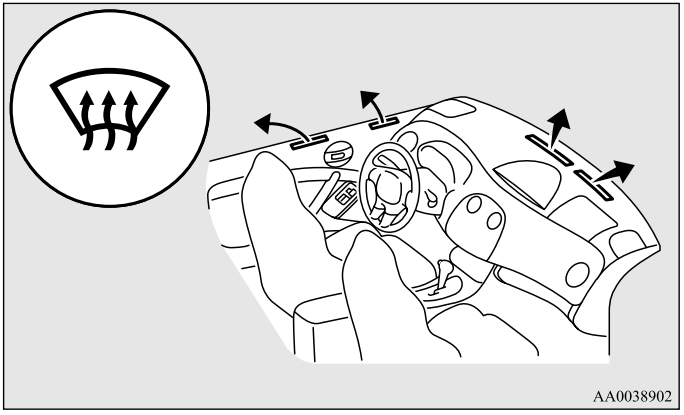


NOTE

- When the mode selection dial is set to the "" or "" position, the air conditioning compressor runs automatically. The outside air position will also be selected automatically. (In this case, the air conditioning indicator light will not change.)

## *Manual air conditioning (if so equipped)*

N00730300100

The air conditioning can only be used while the engine is running.

### Control panel

N00730500144

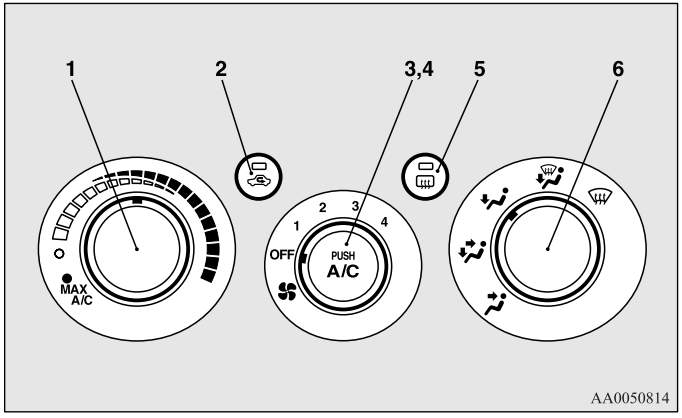


1- Temperature control dial
2- Air selection switch
3- Blower speed selection dial
4- Air conditioning switch
5- Electric rear window defogger switch → P.3-135
6- Mode selection dial

## *Blower speed selection dial*

N00736500087

When the ignition key is in the ON position, select the blower speed by turning the blower speed selection dial. The blower speed will gradually increase as the dial is turned to the right. When the blower speed selection dial is set to the “OFF” position, all fan-driven airflow will stop.

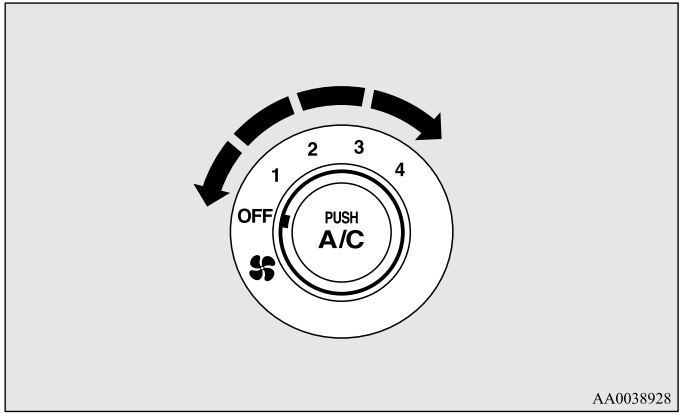


## *Temperature control dial*

N00736600121

Turn the temperature control dial clockwise to make the air warmer. Turn it counterclockwise to make the air cooler.

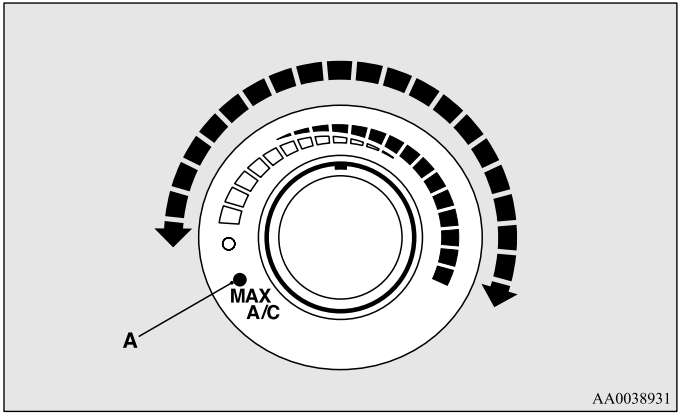


NOTE

- While the engine coolant temperature is low, the temperature of the air from the heater will be cool/cold until the engine warms up, even if you have selected warm air with the dial.
- For instructions on how to use the “MAX A/C” position (A), see “Cooling” on page 5-10.

## *Mode selection dial*

N00736700164

To change the position and amount of air flowing from the vents, turn the mode selection dial. (Refer to “Changing the mode selection” on page 5-3.)

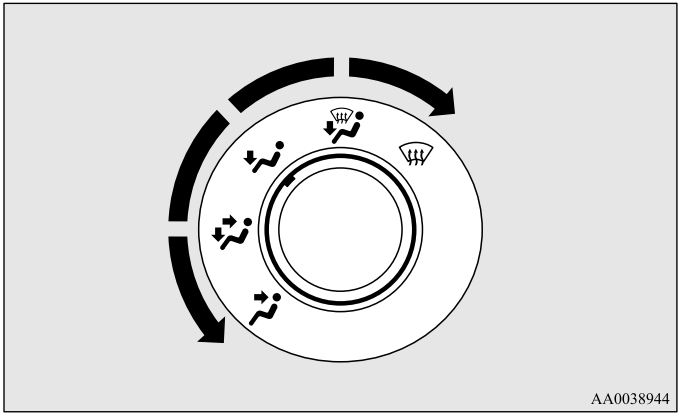


## *Air selection switch*

N00736800165

Normally, use the outside position to keep the windshield and side windows clear and to quickly remove fog or frost from the windshield.

To change the air selection, simply press the air selection switch.

- Outside air {Indicator light (A) is OFF}
- Recirculated air {Indicator light (A) is ON}

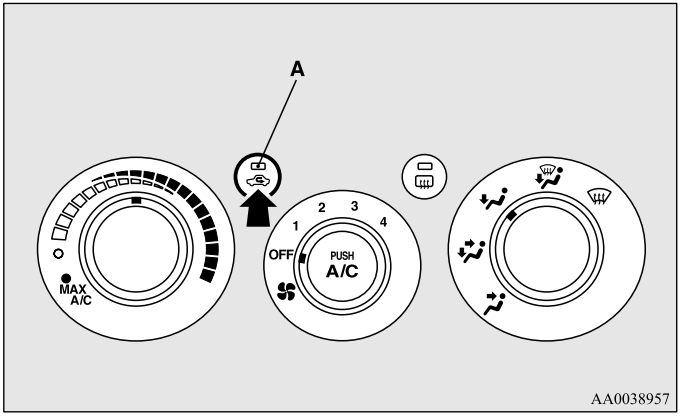


If the outside air is dusty or contaminated in some way, use the recirculation position. Switch to the outside position every now and then to keep the windows from fogging up.

**⚠ *CAUTION***

- **Using recirculated air for a long time may cause the windows to fog up.**

NOTE

- When the "" or "" position is selected, you cannot turn the air conditioning off or use the recirculation position.
  This prevents the windows from fogging up.
- When the mode selection dial is set to a position other than "" or "", the air selection will automatically change to outside air. The air conditioning will revert to the previous condition in which the "" or "" position was not selected.
- When the temperature control dial is set to the "MAX A/C" position, the air selection will be automatically set to the recirculation position.
- If the temperature dial is set to any position other than "MAX A/C", outside air will always be used when the ignition switch is turned on.
- When the coolant temperature rises above a certain point, the air selection is automatically switched to the recirculation position and the indicator light (A) turns on. When this occurs, the system will not switch to the outside air position until the coolant temperature goes down, even if the selection switch is pushed.

### *Air conditioning switch*

N00731000319

Push the switch, and the air conditioning compressor will turn on. The air conditioning indicator light (A) will come on.

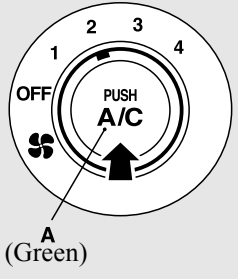


AA0038960

Push the switch again and the air conditioning compressor will stop and the indicator light (A) goes off.

**⚠ *CAUTION***

- **Using the air conditioning slightly increases the engine idle speed. Therefore, make sure your foot is firmly on the brake pedal when shifting the transaxle into drive.**

NOTE

- If a problem is detected in the air conditioning compressor, the air conditioning indicator light (A) blinks. Press the air conditioning switch once to turn it off, then once more to turn it back on. If the air conditioning indicator light (A) does not blink, there is no problem. If it does blink, have it checked at an authorized Mitsubishi Motors dealer or a repair facility of your choice.
- Sometimes, for example after using a high-pressure car wash, the condenser can get wet, and the air conditioning indicator light (A) blinks temporarily. In this case there is nothing wrong. Wait for a while, press the air conditioning switch once to turn the system off, then once more to turn it back on. Once the water evaporates, the blinking will stop.

## Operating the air conditioning system

N00731100150

### *Heating*

Set the mode selection dial to the "" position and set the air selection switch (A) to the outside position.
Turn the temperature control dial clockwise or counterclockwise to the desired temperature. Select the desired blower speed.

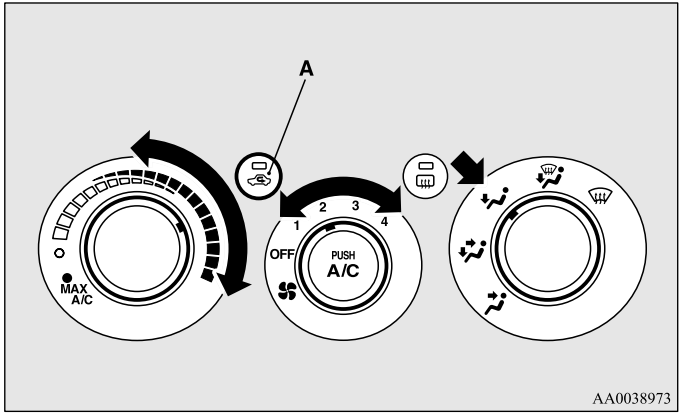

## *Cooling*

N00731200177

### For ordinary cooling

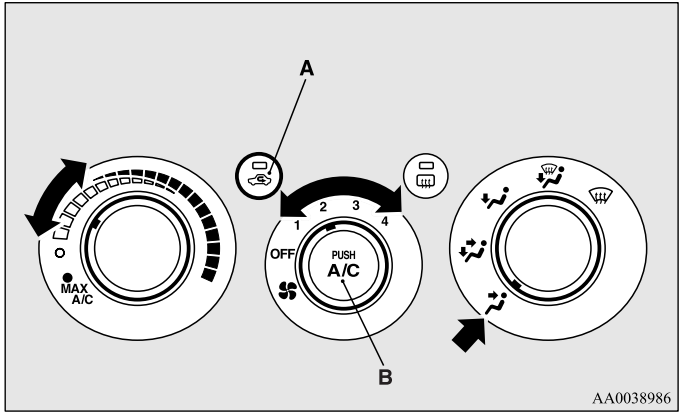


1. Set the mode selection dial to the “ ” position.
2. Set the air selection switch (A) to the outside position.
3. Push the air conditioning switch (B).
4. Change the temperature by turning the control dial clockwise or counterclockwise.
5. Select the desired blower speed.

NOTE

- If the outside air is dusty or contaminated in some way, set the air selection switch (A) to the recirculation position. Let in some outside air from time to time for good ventilation.
- To cool the leg areas, set the mode selection dial to the “ ” position.

### For quick cooling

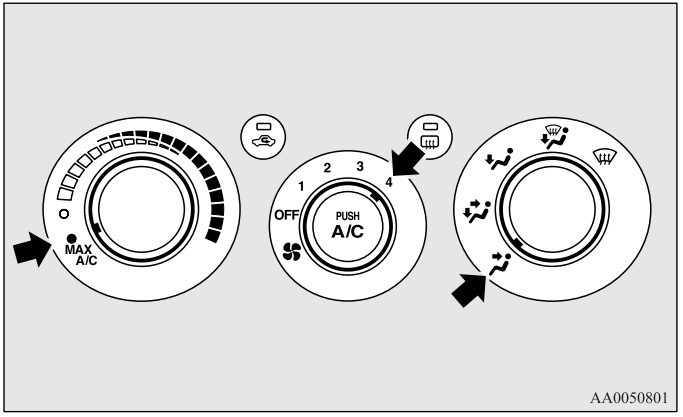


1. Set the mode selection dial to the “ ” position.
2. Set the temperature control dial to the “MAX A/C” position.
3. Set the blower speed to the highest position.

NOTE

- When the temperature control dial is set to the “MAX A/C” position, the air conditioning compressor will run automatically and the light will come on. The recirculation position will be selected automatically. In this case, you cannot turn the air conditioning off or select the outside position.
- When the temperature control dial is set to a position other than “MAX A/C”, the air selection will automatically change to outside air. The air conditioning compressor will continue running.

### *Combination of unheated air and heated air*

N00731300110

Select the mode selection dial to the positions shown in the illustration and set the air selection switch (A) to the outside position.

The air flow will be directed to the leg area and the upper part of the passenger compartment. Select the desired blower speed. Warm air flows to the leg area and unheated or slightly warm air (depending upon temperature setting) flows to the upper part of the passenger compartment.

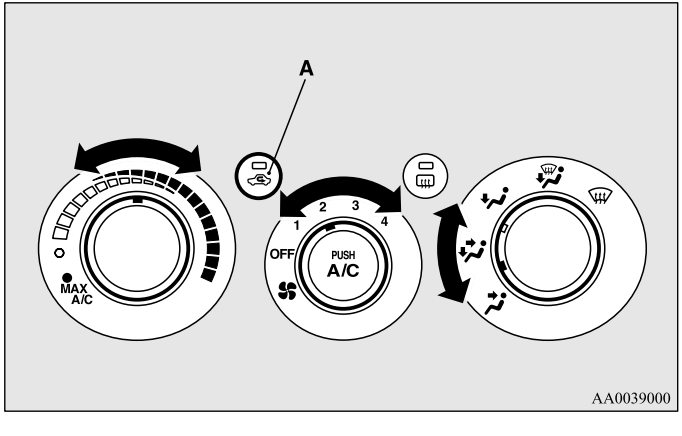

## *Defrosting or defogging the windshield and door windows*

N00731400430

**⚠ CAUTION**

- **For safety, make sure you have a clear view through all the windows.**

To remove frost or fog from the windshield and door windows, use the mode selection dial (“ ” or “ ”).

### For ordinary defrosting

Use this setting to keep the windshield and door windows clear of mist, and to keep the leg area heated (when driving in rain or snow).

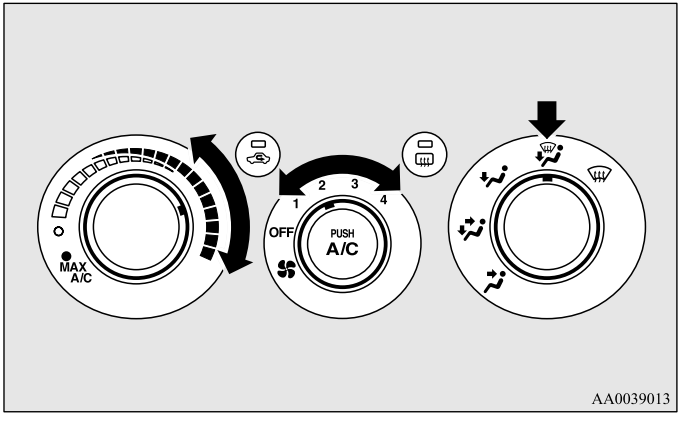


1. Set the mode selection dial to the “ ” position.
2. Select your desired blower speed by turning the blower speed selection dial.
3. Select your desired temperature by turning the temperature control dial.

### For quick defrosting

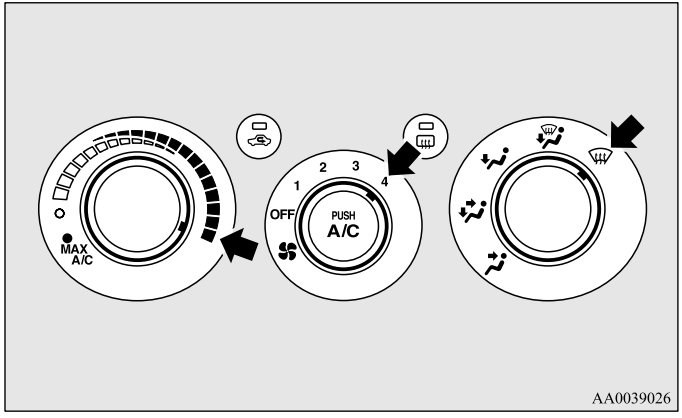


1. Set the mode selection dial to the "" position.
2. Set the blower to the maximum speed.
3. Set the temperature to the highest position.

NOTE

- When the mode selection dial is set to the "" or "" position, the air conditioning compressor runs automatically. The outside air position will be also selected automatically. (In this case, the air conditioning indicator light will not change.)
- When the "" or "" position is selected, you cannot turn the air conditioning off or use the recirculation position. This prevents the windows from fogging up.
- When defrosting, do not set the temperature control dial near the "MAX A/C" position. This would blow cool air on the window glass and fog it up.

# *Automatic air conditioning (if so equipped)*

N00731500066

The air conditioning can only be used while the engine is running.

## Control panel

N00711800382

Type 1

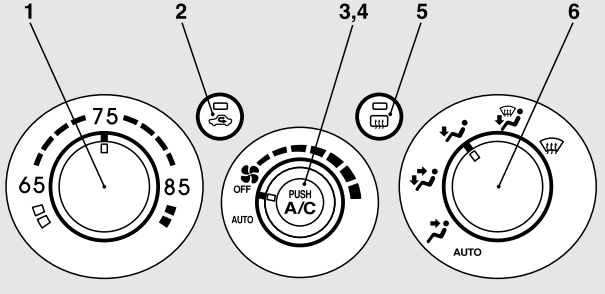


AA0058139

Type 2

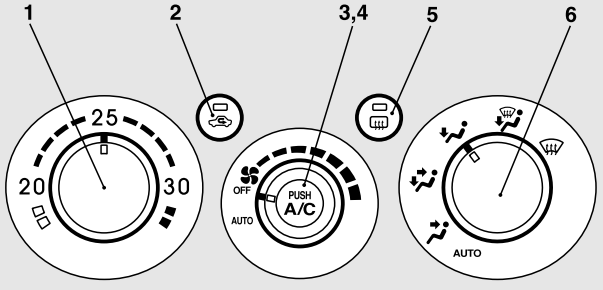


AA0058142

1- Temperature control dial
2- Air selection switch
3- Blower speed selection dial
4- Air conditioning switch
5- Electric rear window defogger switch → P.3-135
6- Mode selection dial

NOTE

- There is an interior air temperature sensor (A) in the illustrated position.
  Never place anything over the sensor, since doing so will prevent it from functioning properly.

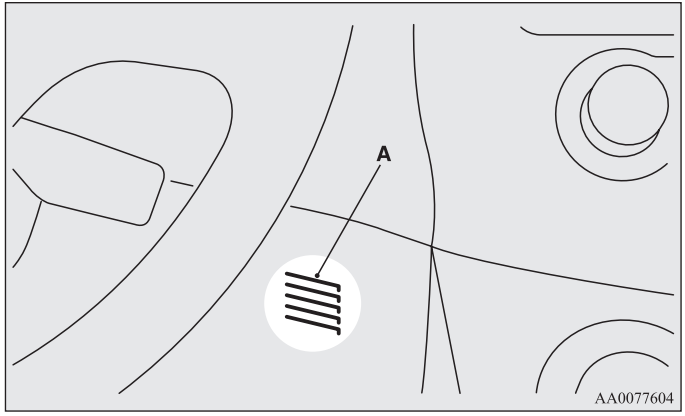


### *Blower speed selection dial*

N00736900081

When the ignition key is in the ON position, select the blower speed by turning the blower speed selection dial. The blower speed will gradually increase as the dial is turned to the right. When the blower speed selection dial is set to the “OFF” position, all fan-driven airflow will stop.

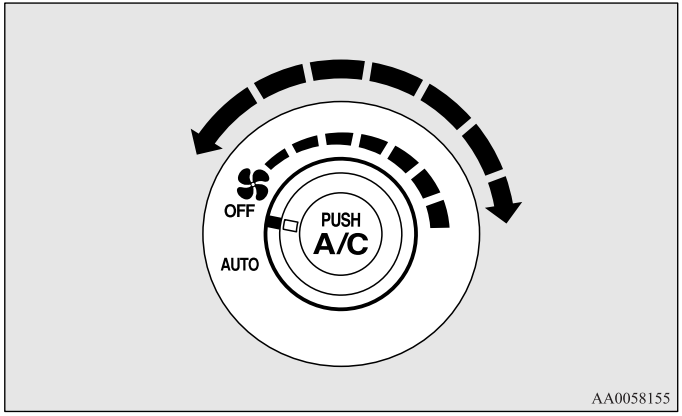

### *Temperature control dial*

N00737000164

Turn the temperature control dial clockwise to make the air warmer. Turn it counterclockwise to make the air cooler.

Type 1

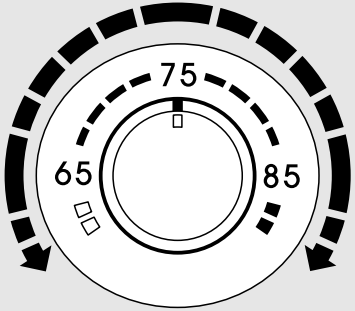


AA0058168

Type 2

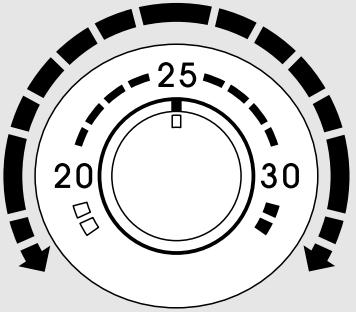


AA0058171

NOTE

- While the engine coolant temperature is low, the temperature of the air from the heater will be cool/cold until the engine warms up, even if you have selected warm air with the dial.

## *Mode selection dial*

N00737100152

To change the position and amount of air flowing from the vents, turn the mode selection dial. (Refer to “Changing the mode selection” on page 5-3.)

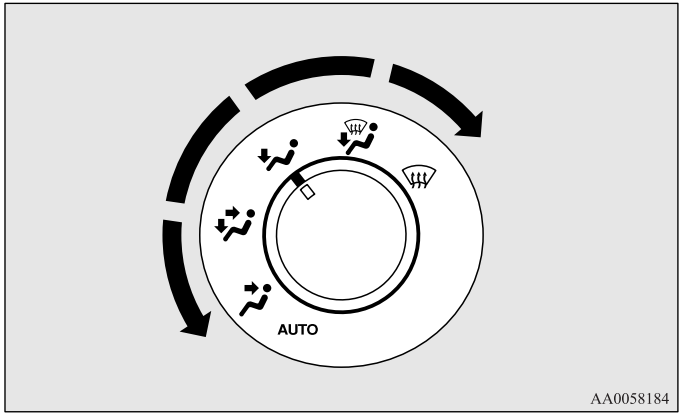


## *Air selection switch*

N00737200195

Normally, use the outside position to keep the windshield and side windows clear and to quickly remove fog or frost from the windshield.

To change the air selection, simply press the air selection switch.

- Outside air {Indicator light (A) is OFF}
- Recirculated air {Indicator light (A) is ON}

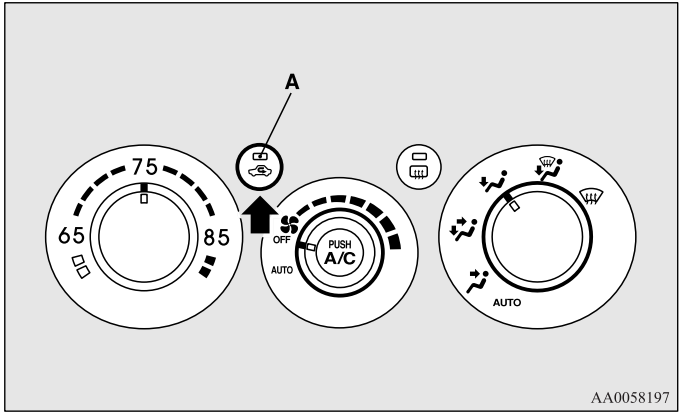


If high cooling performance is desired, or if the outside air is dusty or contaminated in some way, use the recirculation position. Switch to the outside position every now and then to keep the windows from fogging up.

**⚠ CAUTION**

- **Using recirculated air for a long time may cause the windows to fog up.**

NOTE

- When the "" or "" position is selected, you cannot turn the air conditioning off or select the recirculation position.
  This prevents the windows from fogging up.
- When the mode selection dial or the blower speed selection dial is set to the "AUTO" position again after manual operation, the air selection switch will also be automatically controlled.
- When the coolant temperature rises above a certain point, the air selection is automatically switched to the recirculation position and the indicator light (A) turns on. When this occurs, the system will not switch to the outside air position until the coolant temperature goes down, even if the selection switch is pushed.

### *Air conditioning switch*

N00737300196

Push the switch, and the air conditioning compressor will turn on. The air conditioning indicator light (A) will come on.

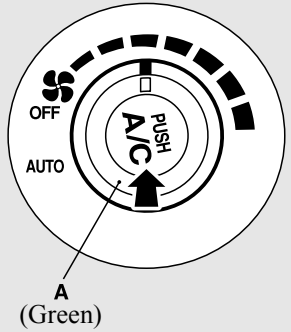


AA0058201

Push the switch again and the air conditioning compressor will stop and the air conditioning indicator light (A) goes off.

**⚠ CAUTION**

- **Using the air conditioning slightly increases the engine idle speed. Therefore, make sure your foot is firmly on the brake pedal when shifting the transaxle into drive.**

NOTE

- If a problem is detected in the air conditioning compressor, the air conditioning indicator light (A) blinks. Press the air conditioning switch once to turn it off, then once more to turn it back on. If the air conditioning indicator light (A) does not blink, there is no problem. If it does blink, have it checked at an authorized Mitsubishi Motors dealer or a repair facility of your choice.
- Sometimes, for example after using a high-pressure car wash, the condenser can get wet, and the air conditioning indicator light (A) blinks temporarily. In this case there is nothing wrong. Wait for a while, press the air conditioning switch once to turn the system off, then once more to turn it back on. Once the water evaporates, the blinking will stop.

## Operating the air conditioning system (automatic mode)

N00731700257

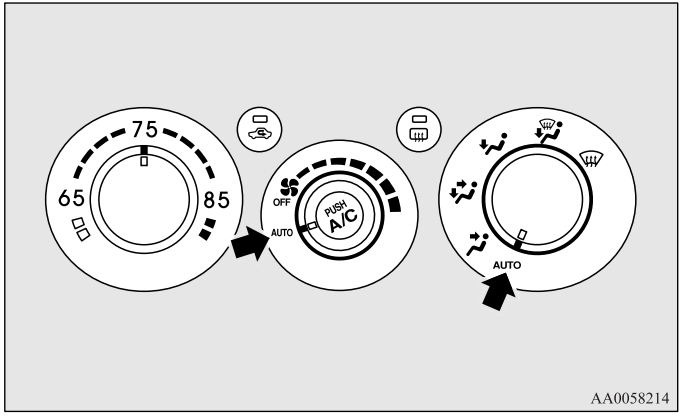


AA0058214

In normal conditions, use the system in the AUTO mode and follow these procedures:

1. Set the blower speed selection dial to the “AUTO” position.
2. Select the temperature control dial to the desired temperature. The temperature can be set within a range of around 61 to 89 (Type 1) or 18 to 32 (Type 2). The temperature may be set higher by turning the dial to the right.
3. Set the mode selection dial to the “AUTO” position.

The vents (except “” and “”), recirculation/outside air, blower speed, and ON/OFF of air conditioning will be controlled automatically.

NOTE

- Set the temperature {at about 75 (Type 1) or 25 (Type 2) under normal conditions}.
- When the temperature is set to the highest or the lowest setting under the AUTO operation, the air selection and the air conditioning will be automatically changed as follows.
  - Quick Heating (When the temperature is set to the highest setting)
    Outside air will be introduced and the air conditioning will stop.
  - Quick Cooling (When the temperature is set to the lowest setting)
    Inside air will be recirculated and the air conditioning will operate.
- When the temperature is set to the highest setting, you can turn the air conditioning on.

## Operating the air conditioning system (manual mode)

N00731800027

Blower speed and vent mode may be controlled manually by setting the blower speed selection dial and the mode selection dial to the desired positions. To return to automatic operation, set the dials to the “AUTO” position.

### *Defrosting or defogging the windshield and door windows*

N00732400349

**⚠ *CAUTION***

- **For safety, make sure you have a clear view through all the windows.**

To remove frost or fog from the windshield and door windows, use the mode selection dial (“ ” or “ ”).

**For ordinary defrosting**

Use this setting, to keep the windshield and door windows clear of mist, and to keep the leg area heated (when driving in rain or snow).

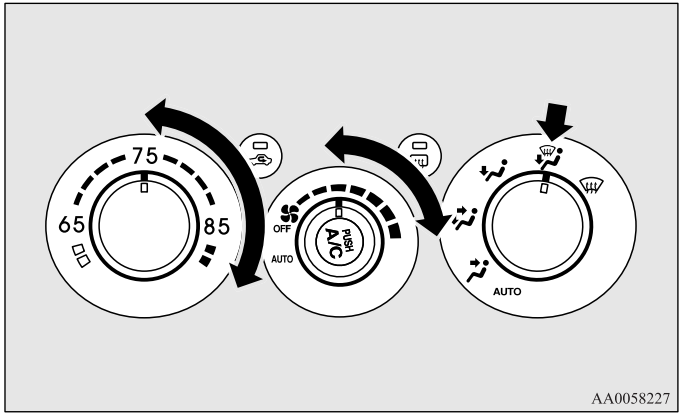


1. Set the mode selection dial to the "" position.
2. Select your desired blower speed by turning the blower speed selection dial.
3. Select your desired temperature by turning the temperature control dial.

**For quick defrosting**

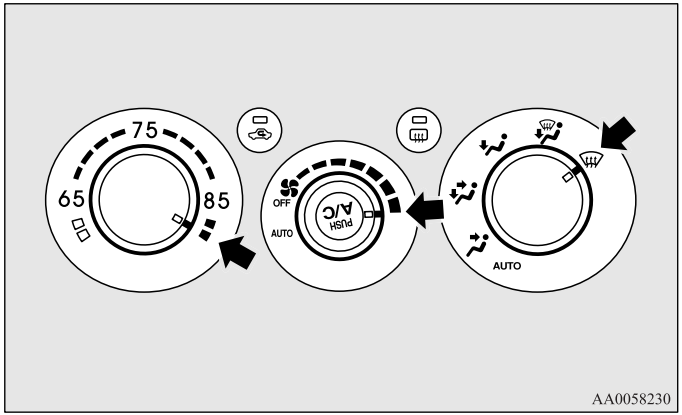


1. Set the mode selection dial to the "" position.
2. Set your blower to the maximum speed.
3. Set the temperature to the highest position.

NOTE

- When the mode selection dial is set to the "" or "" position, the air conditioning compressor runs automatically. The outside air position will be also selected automatically. (In this case, the air conditioning indicator light will not change.)
- When the "" or "" position is selected, you cannot turn the air conditioning off or use the recirculation position. This prevents the windows from fogging up.
- When defrosting, do not set the temperature control dial to the maximum cool position. This would blow cool air on the window glass and fog it up.

### *To stop the air conditioning*

N00732500164

To turn the air conditioning off, set the blower speed selection dial to the “OFF” position. All operations will stop except the air selection.

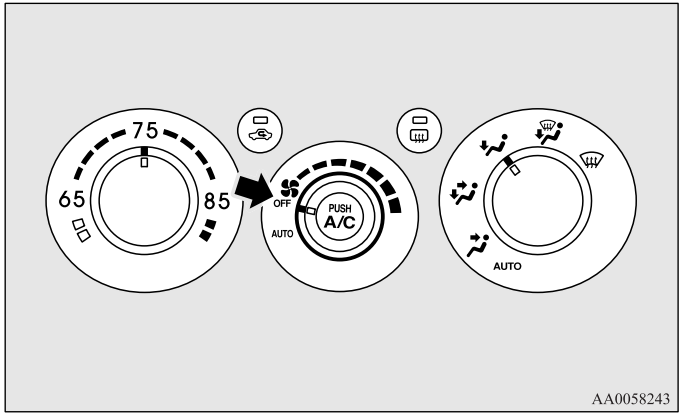


AA0058243

## *Important air conditioning operating tips*

N00733700150

1. Park the vehicle in the shade whenever possible. Parking in the hot sun makes the vehicle interior extremely hot which then requires more time to cool. If it is necessary to park in the sun, open the windows for the first few minutes of air conditioning to expel the hot air.
2. Afterwards, keep the windows closed when the air conditioning is in use. The entry of outside air through open windows will reduce cooling efficiency.
3. When running the air conditioning, make sure the air intake, which is located in front of the windshield, is free of obstructions such as leaves. Leaves collected in the air-intake chamber may reduce air flow and plug the water drains.

## Air conditioning system refrigerant and lubricant recommendations

If the air conditioning seems less effective than usual, the cause might be a refrigerant leak.

Have the system inspected by your authorized Mitsubishi Motors dealer or a repair facility of your choice.

**⚠ CAUTION**

- **The air conditioning system in your vehicle must be charged with the refrigerant HFC-134a and the lubricant SUN-PAG56.**
  **Use of any other refrigerant or lubricant will cause severe damage and may require replacing your vehicle's entire air conditioning system.**
  **The release of refrigerant into the atmosphere is not recommended.**
  **The new refrigerant HFC-134a in your vehicle is designed not to harm the earth's ozone layer. However, it may contribute slightly to global warming.**
  **It is recommended that the old refrigerant be saved and recycled for future use.**

## During a long period of disuse

The air conditioning should be operated for at least five minutes each week, even in cold weather. This includes the quick defrosting mode. Operating the air condition system weekly maintains lubrication of the compressor internal parts and maintains the air conditioning in the best operating condition.

# *Audio system*

N00734300906

Your vehicle is equipped with the following audio system:

(1) AM/FM electronically tuned radio with CD player (Type 1) → P.5-26
(2) AM/FM electronically tuned radio with CD autochanger (Type 2) → P.5-39
(3) AM/FM/Satellite electronically tuned radio with CD autochanger (Type 3) → P.5-39

The audio system can only be used when the ignition switch is in the “ON” or “ACC” position.

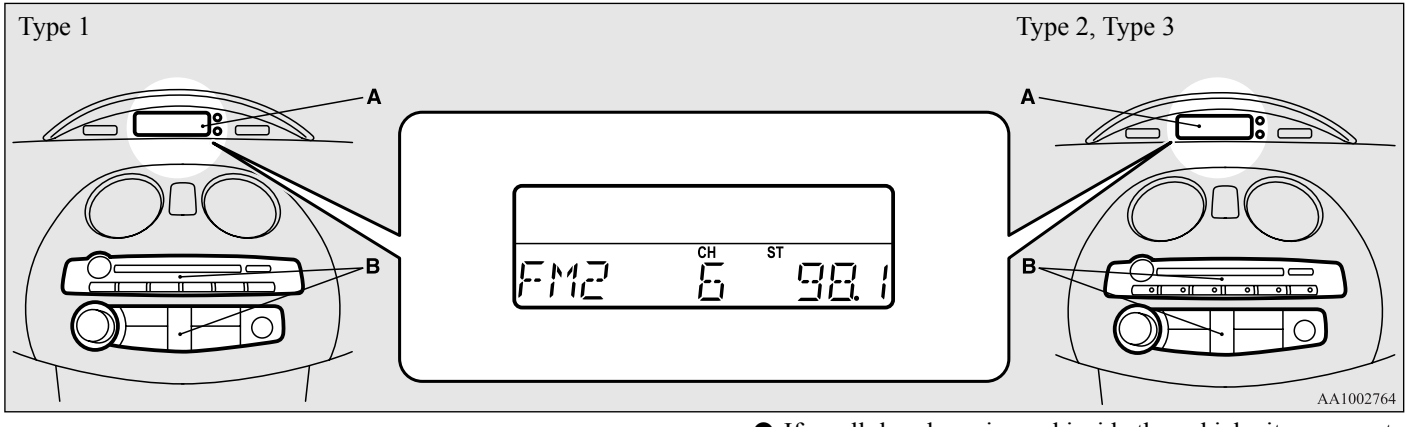


A- Display window
B- Audio system

NOTE

- To listen to the audio system while the engine is not running, turn the ignition key to the “ACC” position.
- If a cellular phone is used inside the vehicle, it may create noise in the audio equipment. This does not mean that anything is wrong with your audio equipment. In such a case, use the cellular phone at a place as far as possible from the audio equipment.

- If foreign objects or water get into the audio equipment, or if smoke or a strange odor comes from it, immediately turn off the audio system and have it checked at an authorized Mitsubishi Motors dealer or a repair facility of your choice. Never try to repair it yourself. Avoid using the audio system until it is inspected by a qualified person.
- If the audio system is damaged by foreign objects, water, or fire, have the system checked by a qualified Mitsubishi Motors technician.
- If you open or close the electric convertible top while listening to music, an audible beep will sound and the audio system's sound equalization will change to settings that are optimized for operation with the electric convertible top in its new, open or closed position (ECLIPSE SPYDER only).

## Satellite radio (if so equipped)

Satellite radio uses direct satellite to receiver broadcasting technology to provide clear digital sound, coast to coast. The subscription service provider is SIRIUS™ Satellite Radio. This service offers over 100 channels of music, sports, news, entertainment, and programming for listeners, directly from its satellites and broadcasting studios.

### *System activation*

To activate your SIRIUS Satellite Radio service, call the toll-free number 888-539-SIRIUS (7474), or visit the Sirius web site at www.sirius.com. Please have the following information available when activating your system:

1. The Sirius Identification Number (SIRIUS ID). Refer to the section "SIRIUS ID indication" on page 5-51.
2. Credit card information.
3. Your Vehicle Identification Number. Refer to "Vehicle identification number plate" on page 9-2.

"SIRIUS", the SIRIUS dog logo and channel names and logos are trademarks of SIRUS Satellite Radio, Inc.

# *AM/FM electronically tuned radio with CD player-Type 1 (if so equipped)*

N00734300124

## Volume and tone control panel

N00711900572

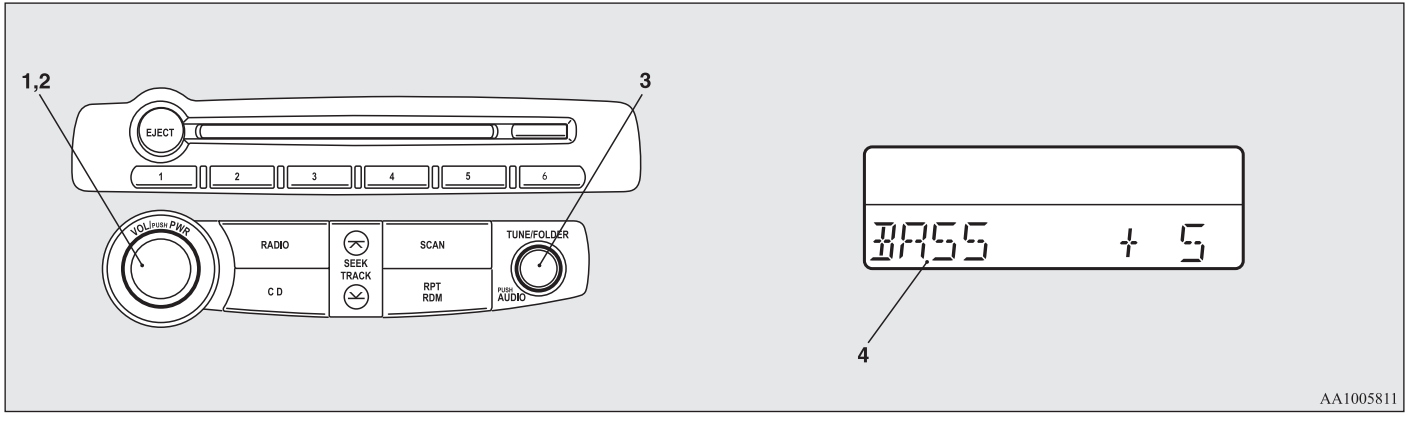


1- PWR (On-Off) switch
2- VOL (Volume control) knob
3- AUDIO switch
4- Display

## To adjust the volume

N00712000323

### *VOL (Volume control)*

Turn the VOL knob (2) clockwise to increase the volume; counterclockwise to decrease the volume.
The status will be displayed in the display (4).

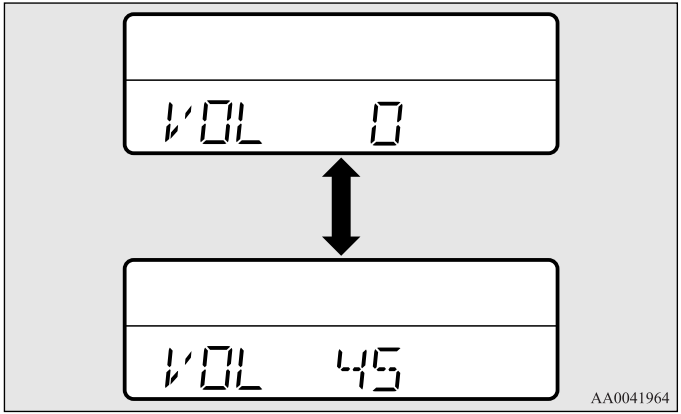


NOTE

- The volume control mode will shut off automatically if either the radio or CD is selected, or if no adjustment is made within about 2 seconds.

## To adjust the tone

N00712100281

1. Press the AUDIO switch (3) repeatedly to select the tone or balance control to change. The order is: BASS → TRE → FADE → BAL → Audio adjust mode off.
   The status will be displayed in the display (4).

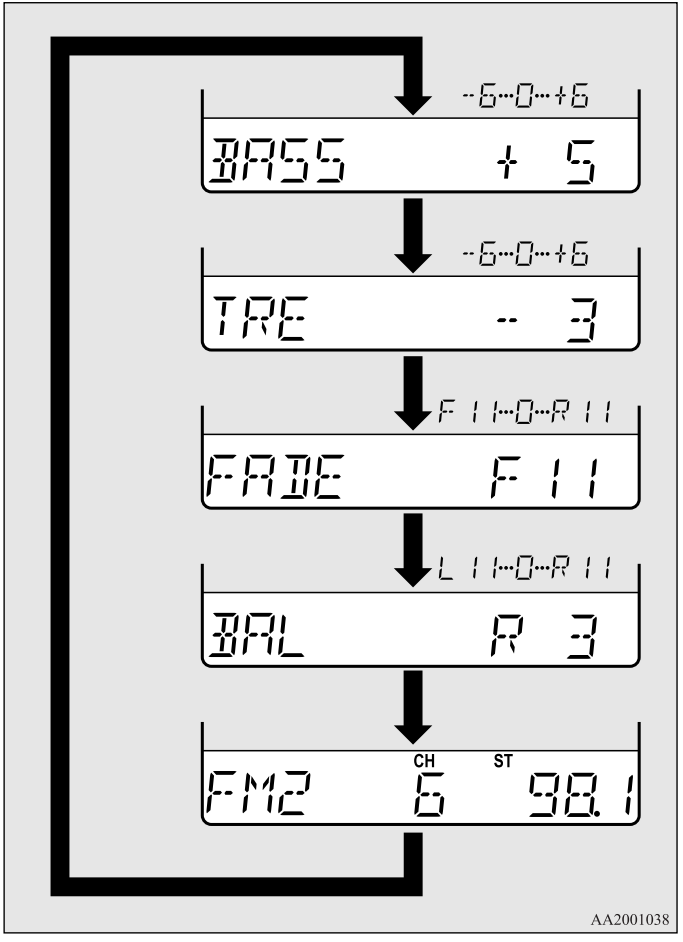

2. Turn the AUDIO switch (3) either clockwise or counter-clockwise to change the tone/balance setting.

| Mode | Adjusting operation | |
|---|---|---|
| | Clockwise | Counterclockwise |
| BASS | Increase | Decrease |
| TRE | Increase | Decrease |
| FADE | More sound from the rear speakers | More sound from the front speakers |
| BAL | More sound from the right speakers | More sound from the left speakers |

***BASS (Bass tone control)***
To select the desired bass level.

***TRE (Treble tone control)***
To select the desired treble level.

***FADE (Front/Rear balance control)***
To balance the volume from the F (front) and the R (rear) speakers.

***BAL (Left/Right balance control)***
To balance the volume from the L (left) and the R (right) speakers.

NOTE
- When set to “0”, it will beep.
- The audio adjust mode will automatically shut off when either the radio or CD is selected, or if no adjustment is made within about 7 seconds.

# Radio control panel and display

N00734900869

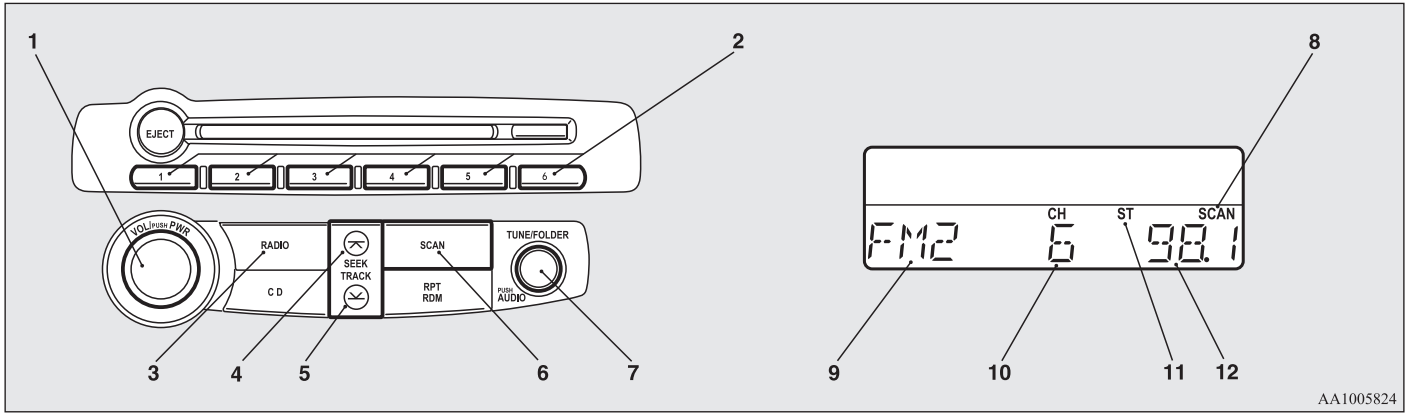


1- PWR (On-Off) switch
2- Memory select buttons
3- RADIO (AM/FM selection) button
4- SEEK (Up-seek) button
5- SEEK (Down-seek) button
6- SCAN button
7- TUNE/FOLDER switch
8- SCAN indicator
9- AM/FM (AM/FM1/FM2) indicator
10- Preset memory number display
11- ST (Stereo) indicator
12- Frequency display

## To listen to the radio

N00735000737

1. Press the PWR switch (1) to turn the audio system on and off. The system turns on in the last mode used.
2. Press the RADIO button (3) to select the desired band (AM/FM1/FM2).
3. Press the SEEK button (4 or 5) to tune to station, or press one of the memory select buttons (2) to tune in to a station memorized for that button.

### *To tune the radio*

**Automatic tuning**

1. After pressing the SEEK button (4 or 5), reception of the selected station will begin.
2. Press the SCAN button (6). SCAN indicator (8) will come on and the radio will tune consecutively to each available station for about 5 seconds per station. If you want to stop scanning, press the SCAN button again.
   The frequency display of the current station blinks once per second during SCAN.

**Manual tuning**

The frequency changes every time the TUNE/FOLDER switch (7) is turned.
Turn the switch to select the desired station.

### *To enter frequencies into the memory*

As many as 6 AM and 12 FM stations can be entered into the memory.

To store a frequency in the memory, follow these steps:

1. Press the SEEK button (4 or 5), or turn the TUNE/FOLDER switch (7) to tune to the frequency you wish to keep in the memory.
2. Press one of the memory select buttons (2) until it beeps. The sound will be momentarily interrupted while the frequency is being entered into the memory. The number of the button matching the entry in the memory as well as the frequency are displayed.

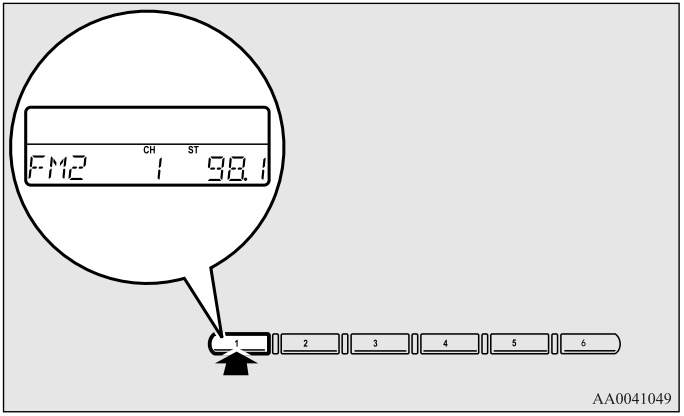


3. The preset memory setting is retrieved by pressing the button and then releasing it within about 2 seconds.

NOTE

- Disconnecting the battery cables erases all the radio station settings stored in the memory.

# CD control panel and display

N00735300583

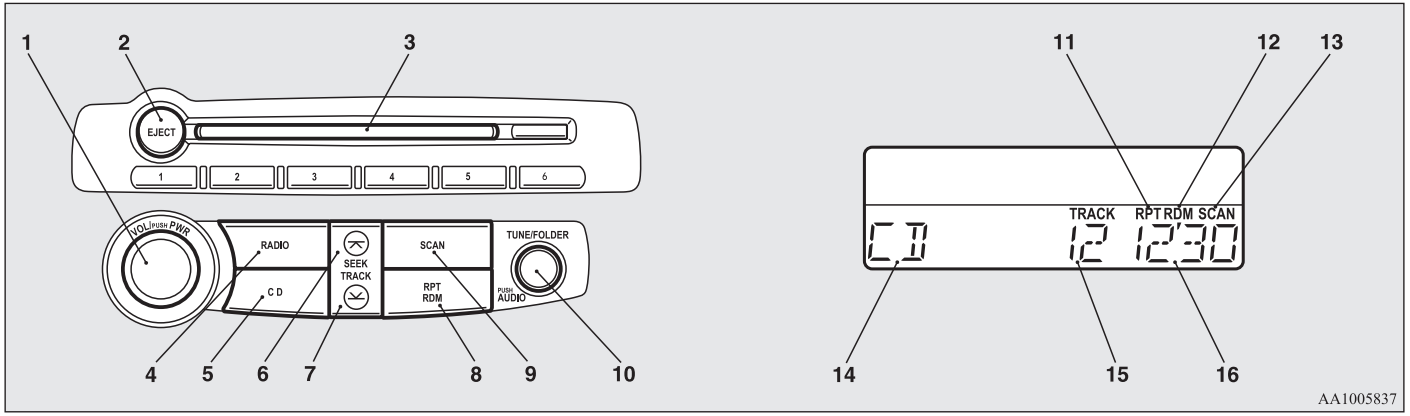


1- PWR (On-Off) switch
2- CD eject button
3- Disc loading slot
4- RADIO (AM/FM selection) button
5- CD (CD mode changeover) button
6- TRACK (Track up) button
7- TRACK (Track down) button
8- RPT/RDM (Repeat/Random) button
9- SCAN button
10- TUNE/FOLDER switch
11- RPT (Repeat-mode) indicator
12- RDM (Random-mode) indicator
13- SCAN indicator
14- CD indicator
15- TRACK indicator
16- Track play time display

## To listen to a CD

N00735500891

1. Press the CD button (5) and the CD mode will be selected, starting a playback.
2. To adjust the volume and tone, refer to “To adjust the volume” on page 5-27 and “To adjust the tone” on page 5-28.
3. To stop the CD, turn off the power by pressing the PWR switch (1) or switch to the other mode by pressing the RADIO button (4).

NOTE

- For information concerning the handling of the compact discs, refer to “Handling of compact discs” on page 5-71.

### *To listen an MP3 CD*

This player allows you to play MP3 (MPEG Audio Layer-3) files recorded on CD-ROMs, CD-Rs (recordable CDs), and CD-RWs (rewritable CDs) in ISO9660 Level 1/Level 2, Joliet, and Romeo formats. Each disc may have a maximum of 16 trees, 100 folders, and 255 files per disc.

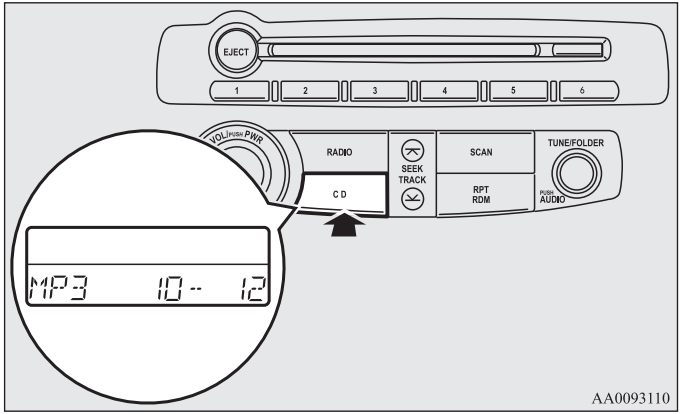


Push the CD button (5) if an MP3 CD is already in the slot.
The display show “FILE READING”, then playback will begin. The folder number and the track number will appear on the display.

NOTE

- While listening to a disc on which CD-DA (CD-Digital Audio) and MP3 files have both been recorded, you can switch between reading of the CD-DA and reading of the MP3 files, and the external audio input mode by pressing the CD button for 2 seconds or longer (until you hear a beep).
- With a disc that contains both CD-DA and MP3 files, the CD-DA files are automatically played first.
- The playback sound quality differs depending on the encoding software and the bit rate. For details, refer to the user manual of your encoding software.
- Depending on file/folder configurations on a disc, it may take some time before playback starts.
- MP3 encode software and writing software are not supplied to this unit.
- You may encounter trouble in playing an MP3 recorded with certain writing software or CD recorders (CD-R/RW drivers).
- If you record too many folders or files other than MP3 onto a disc, it may take some time before playback starts.
- This unit does not record MP3 files.
- For information concerning CD-Rs/RWs, refer to “Notes on CD-Rs/RWs” on page 5-73.

**⚠ CAUTION**

- **Attempting to play a file not in the MP3 format which has the “.mp3” file name may produce noise from the speakers and speaker damage, and can damage your hearing.**

**Folder selection order/MP3 file playback order (Example)**

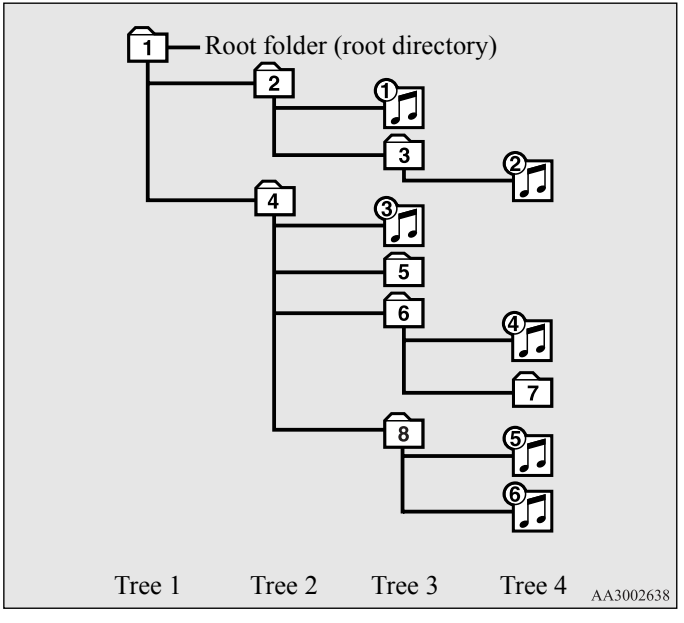


**Folder selection**
In the order 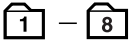


**File selection**
In the order

### *To fast forward/reverse the disc*

To fast forward or reverse, use the TRACK button (6 or 7).

**Fast forward**

You can fast forward by holding down the ⊼ side of the TRACK button (6) for more than about 1 second.

**Fast reverse**

You can fast reverse by holding down the ⊻ side of the TRACK button (7) for more than about 1 second.

### *To select a desired folder*

You can select your desired folder by turning the TUNE/FOLDER switch (10).

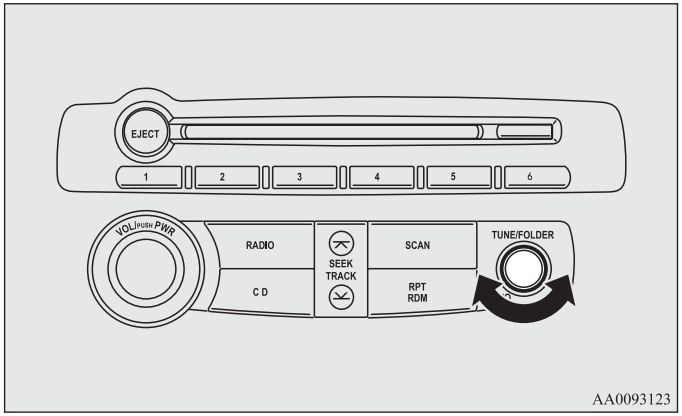


**Folder up**

Turn the TUNE/FOLDER switch (10) clockwise until the desired folder number appears on the display.

**Folder down**

Turn the TUNE/FOLDER switch (10) counterclockwise until the desired folder number appears on the display.

### *To select a desired track*

You can select by using the TRACK button (6 or 7).

**Track up**

Press the ⊼ side of the TRACK button (6) until the desired track is reached.
The TRACK indicator (15) will display the number of the selected track.

**Track down**

Press the ⊻ side of the TRACK button (7) until the desired track is reached.
The TRACK indicator (15) will display the number of the selected track.

NOTE

- Pressing the ⊻ side of the TRACK button (7) once during the song will cause the CD to restart playing from the beginning of the song.

### *To repeat the same track or change the order of tracks for playback*

Press the RPT/RDM button (8) to select RPT → RDM → RPT/RDM mode off.

### *To repeat the same track*

Select the RPT mode, and the RPT indicator (11) will come on. You can listen to the same track repeatedly.

NOTE

- The track repeat mode will be canceled by pressing the TRACK button (6 or 7), the SCAN button (9) or the CD eject button (2).
- With a disc that contains both CD-DA and MP3 files, the repeat mode causes only files of the same format (CD-DA only or MP3 files only) to be repeated.

### *To change the order of tracks for playback*

**Random playback for a disc (music CDs only)**

Select the RDM mode, and the RDM indicator (12) will come on. Tracks are randomly played.

**Random playback for all folders on a disc (MP3 CDs only)**
Select the RDM mode, and the RDM indicator (12) will come on. Tracks from all the folders on the disc will be played in a random sequence.

NOTE
- With a disc that contains both CD-DA and MP3 files, the random mode causes only files of the same format (CD-DA only or MP3 files only) to be played in a random sequence.

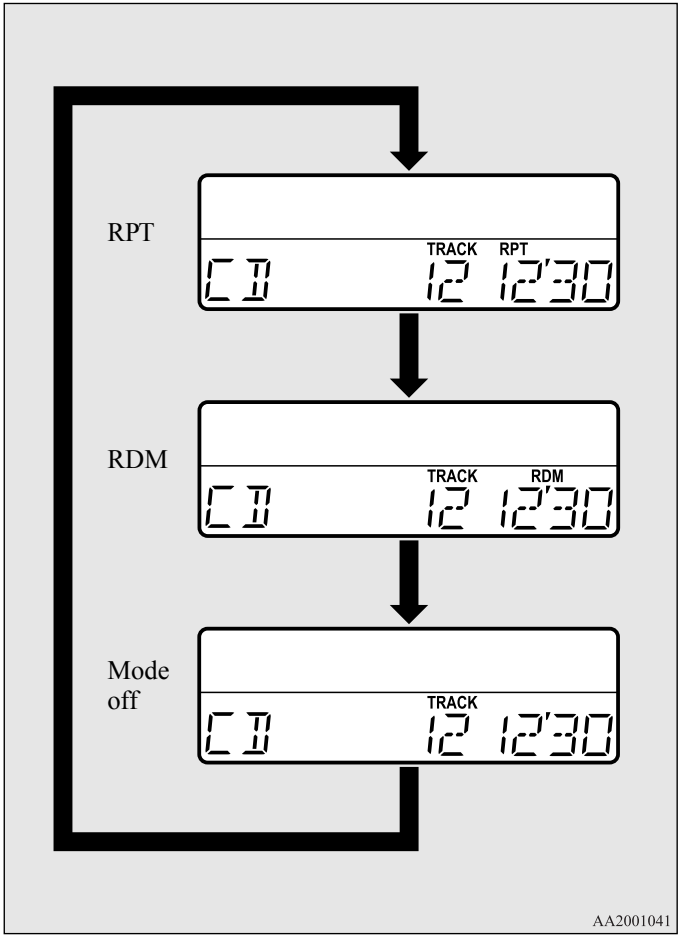

### *To find the start of each track on a disc for playback*

Press the SCAN button (9). “SCAN” will appear on the display and the player will play back the first 10 seconds of each track on the selected disc.
The track number will blink while the scan mode is selected. To exit the scan mode, press the SCAN button again.

NOTE

- Once all tracks on the disc have been scanned, playback of the disc will restart from the beginning of the track that was playing when scanning started.
- The scan mode will be canceled when radio or CD operation is selected.
- With a disc that contains both CD-DA and MP3 files, the scan mode causes only files of the same format (CD-DA only or MP3 files only) to be played.

### *To eject a disc*

When the CD eject button (2) is pressed, the disc automatically stops and is ejected. The system automatically switches to radio mode.

# *AM/FM electronically tuned radio with CD autochanger-Type 2 (if so equipped)*
# *AM/FM/Satellite electronically tuned radio with CD autochanger-Type 3 (if so equipped)*

N00734300821

## Volume and tone control panel-Type 2, Type 3

N00711900585

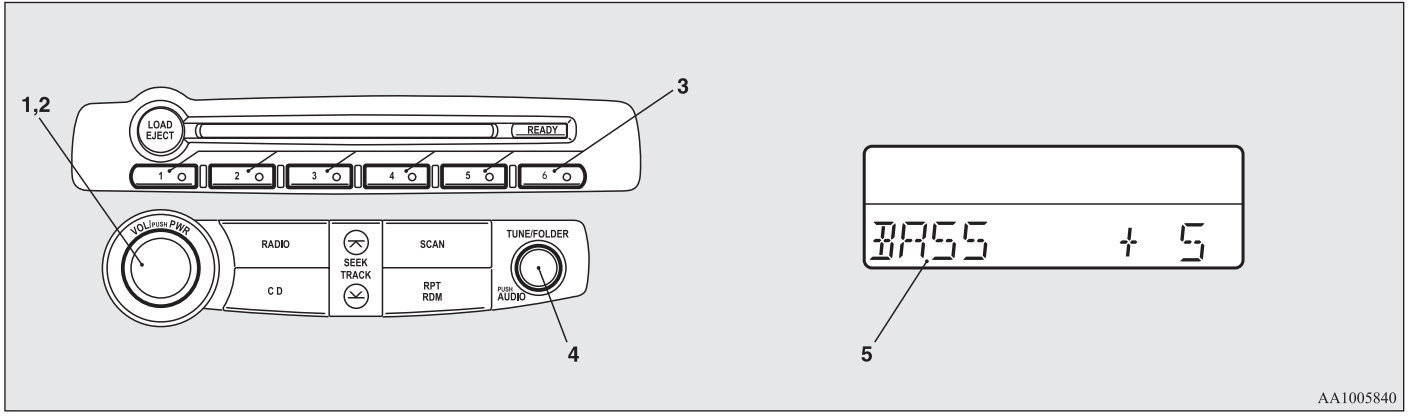


AA1005840

1- PWR (On-Off) switch
2- VOL (Volume control) knob
3- Memory select buttons
4- AUDIO switch
5- Display

## To adjust the volume

N00712000192

### *VOL (Volume control)*

Turn the VOL knob (2) clockwise to increase the volume; counterclockwise to decrease the volume.
The status will be displayed in the display (5).

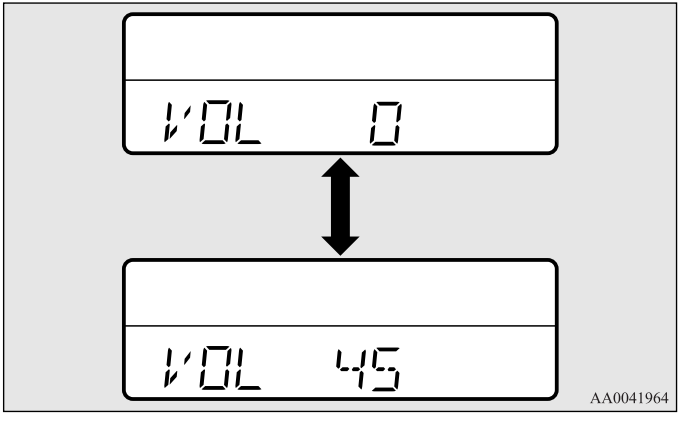


NOTE

- The volume control mode will shut off automatically if either the radio or CD is selected, or if no adjustment is made within about 2 seconds.

## To adjust the tone

N00712100584

1. Press the AUDIO switch (4) repeatedly to select your desired sound customization setting to change. The order is: SUB PUNCH → BASS → MID → TRE → FADE → BAL → FIELD → TYPE → SOUND PRESET → Sound customization mode off.
   The status will be displayed in the display (5).

### *QUICK ACCESS MODE*

To access the sound customization features quickly, push and hold the AUDIO switch (4), then turn the switch clockwise or counterclockwise to access your desired sound customization setting. Release the switch to adjust the setting.

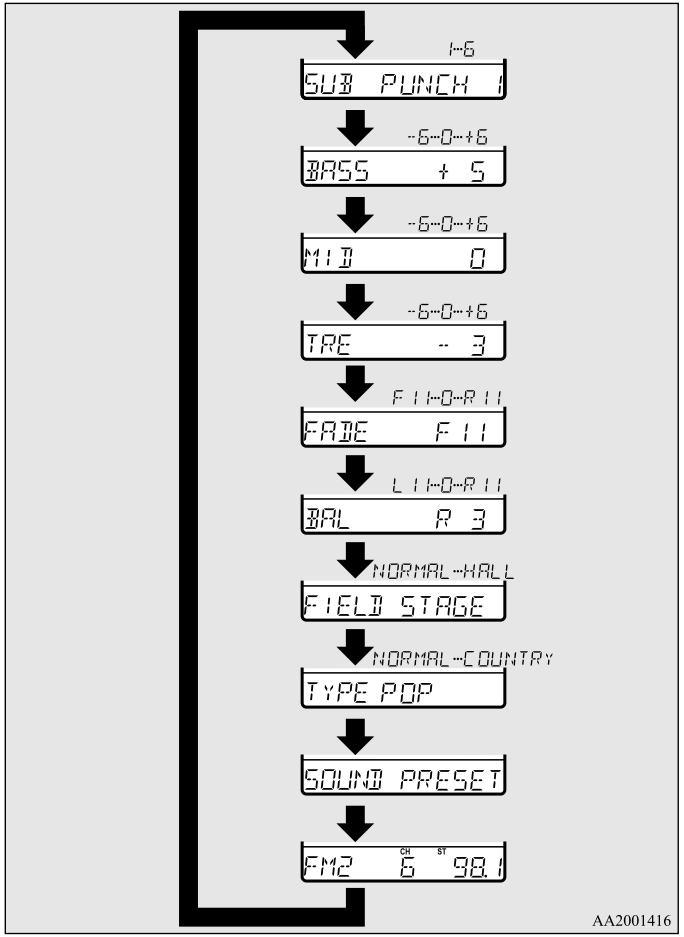

2. Turn the AUDIO switch (4) either clockwise or counterclockwise to adjust the sound customization features.

| Mode | Adjusting operation | |
|---|---|---|
| | Clockwise | Counterclockwise |
| SUB PUNCH | Increase | Decrease |
| BASS | Increase | Decrease |
| MID | Increase | Decrease |
| TRE | Increase | Decrease |
| FADE | More sound from the rear speakers | More sound from the front speakers |
| BAL | More sound from the right speakers | More sound from the left speakers |
| FIELD | NORMAL → STAGE → LIVE → HALL | HALL → LIVE→ STAGE → NORMAL |
| TYPE | NORMAL → POP → ROCK → HIP-HOP → COUNTRY | COUNTRY→ HIP-HOP → ROCK → POP → NORMAL |
| SOUND PRESET | — | — |

### *SUB PUNCH (Subwoofer tone control)*
To select the desired subwoofer PUNCH level.

### *BASS (Bass tone control)*
To select the desired bass level.

### *MID (Midrange tone control)*
To select the desired midrange level.

### *TRE (Treble tone control)*
To select the desired treble level.

### *FADE (Front/Rear balance control)*
To balance the volume from the F (front) and the R (rear) speakers.

### *BAL (Left/Right balance control)*
To balance the volume from the L (left) and the R (right) speakers.

### *FIELD (Sound field type select)*
To select the desired sound field.

| Sound field type | Description |
|---|---|
| NORMAL | Optimized for the Rockford Fosgate high bass output. |
| STAGE | Places the image of a sound stage in front of the driver with the vocalist in the center (for driver only). |
| LIVE | Front seat occupants are surrounded by sound from front and rear speakers. |
| HALL | Places the image of a sound stage in front of the driver with the vocalist in the center (for driver only). Sound reflections are added to the rear speakers to simulate the experience of being at a concert hall. Best with classical or vocalist music. |

### *TYPE (Music type select)*

To select the desired music type.

| Music type | Description |
|---|---|
| NORMAL | Sounds good for all types of music. |
| POP | Tight bass and high frequency sound |
| ROCK | Tuned for hard rock and heavy metal with powerful drums, guitars, and vocals. |
| HIP-HOP | Deep bass punch and well-defined vocals |
| COUNTRY | Enhanced main vocals |

### *SOUND PRESETS (sound setting storage)*

6 different sound settings can be stored into memory in the "SOUND PRESET" mode. For example:

| Settings | Preset 1 | Preset 2 | Preset 3 |
|---|---|---|---|
| SUB PUNCH | Punch 3 | Punch 5 | Punch 4 |
| BASS | +1 | 0 | 0 |
| MID | 0 | 0 | 0 |
| TRE | +2 | +1 | 0 |
| FADE | 0 | 0 | 0 |
| BAL | 0 | 0 | 0 |
| FIELD | Live | Normal | Stage |
| TYPE | POP | HIP-HOP | Rock |

To store your current sound settings into memory, follow these steps:

1. Go to the "SOUND PRESET" setting (preset button lights will be flashing).
2. Push one of the memory select buttons (3) for more than 2 seconds.

To recall the sound settings that are stored in memory, follow these steps:

1. Go to the "SOUND PRESET" setting (preset button lights will be flashing).
2. Push your desired memory select button (3) for less than 2 seconds.

NOTE

- The sound customization adjust mode will automatically shut off when either the radio or CD is selected, or if no adjustment is made within 10 seconds.
- If the AUDIO switch (4) is pushed and held for more than 2 seconds during the audio adjust mode, it will change to "Hold" mode. The selected audio mode will be held until the AUDIO switch (4) is pushed for more than 2 seconds again.

## Speed Compensated Volume function

N00752200255

Speed Compensated Volume function is a feature that automatically adjusts the VOL, BASS, MID, and TRE settings in accordance with the vehicle speed. It is possible to turn this function ON-OFF using the following methods:

1. If you are presently pushing the AUDIO switch (4) and making a tone adjustment, finish making the tone adjustment.
2. Push the AUDIO switch for at least about 2 seconds. The system will switch to MENU mode and the characters “SCV Select” will be shown on the display.
3. Turn the AUDIO switch (4) clockwise to turn the function ON. Turn it counterclockwise to turn the function OFF.

NOTE

- The MENU mode will automatically shut off when either the radio or CD is selected or the user does not move any of the switches for 10 seconds.

# Radio control panel and display-Type 2

N00734900872

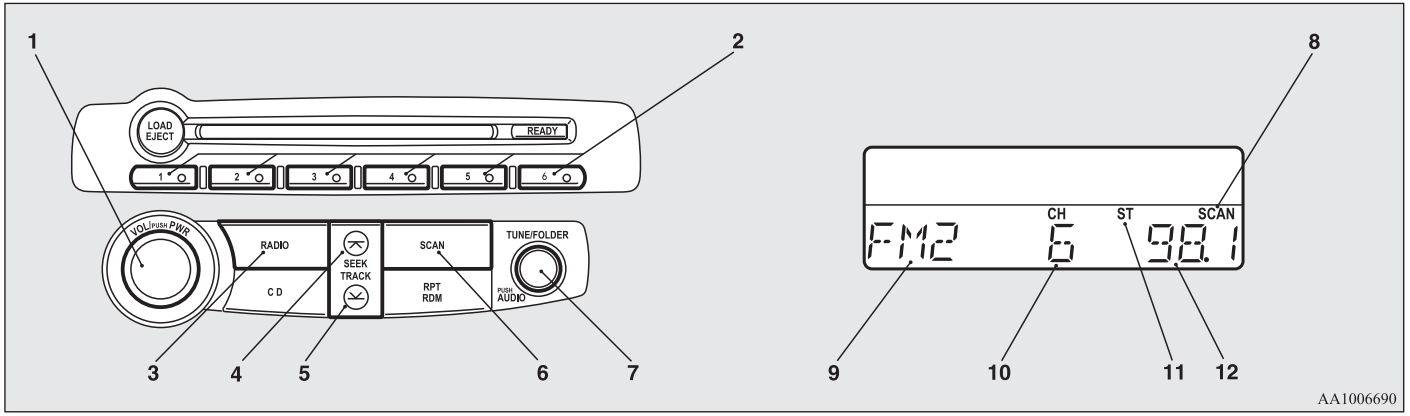


1- PWR (On-Off) switch
2- Memory select buttons
3- RADIO (AM/FM selection) button
4- SEEK (Up-seek) button
5- SEEK (Down-seek) button
6- SCAN button
7- TUNE/FOLDER switch
8- SCAN indicator
9- AM/FM (AM/FM1/FM2) indicator
10- Preset memory number display
11- ST (Stereo) indicator
12- Frequency display

## To listen to the radio

N00735000740

1. Press the PWR switch (1) to turn the audio system on and off. The system turns on in the last mode used.
2. Press the RADIO button (3) to select the desired band (AM/FM1/FM2).
3. Press the SEEK button (4 or 5) to tune to a station, or press one of the memory select buttons (2) to tune in to a station memorised for that button.

### *To tune the radio*

**Automatic tuning**

1. After pressing the SEEK button (4 or 5), reception of the selected station will begin.
2. Press the SCAN button (6). SCAN indicator (8) will come on and the radio will tune consecutively to each available station for about 5 seconds per station. If you want to stop scanning, press the SCAN button again.
   The frequency display of the current station blinks once per second during SCAN.

**Manual tuning**

The frequency changes every time the TUNE/FOLDER switch (7) is turned.
Turn the switch to select the desired station.

### *To enter frequencies into the memory*

As many as 6 AM and 12 FM stations can be entered into the memory.

To store a frequency in the memory, follow these steps:

1. Press the SEEK button (4 or 5), or turn the TUNE/FOLDER switch (7) to tune to the frequency you wish to keep in the memory.
2. Press one of the memory select buttons (2) until it beeps. The sound will be momentarily interrupted while the frequency is being entered into the memory. The number of the button matching the entry in the memory as well as the frequency are displayed.

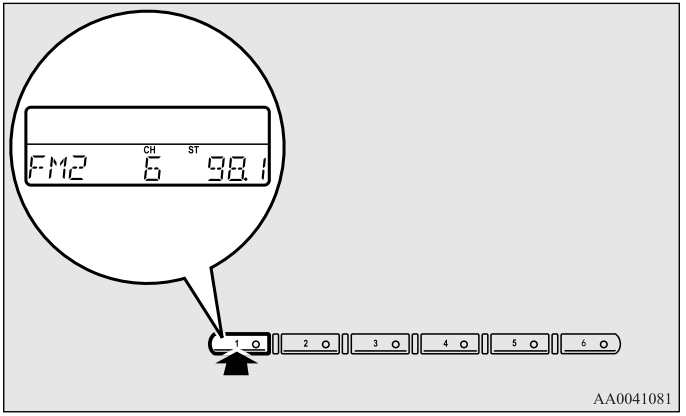


3. The preset memory setting is retrieved by pressing the button and then releasing it within about 2 seconds.

NOTE

- Disconnecting the battery cables erases all the radio stations settings stored in the memory.

# Radio control panel and display-Type 3

N00734900885

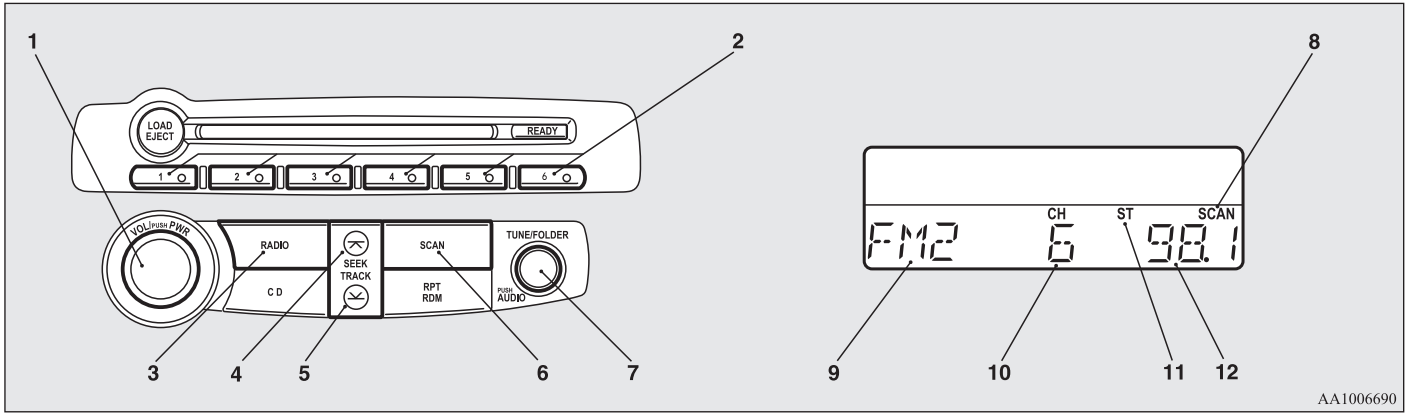


1- PWR (On-Off) switch
2- Memory select buttons
3- RADIO (AM/FM/Satellite selection) button
4- SEEK (Up-seek) button
5- SEEK (Down-seek) button
6- SCAN button
7- TUNE/FOLDER switch
8- SCAN indicator
9- AM/FM/SAT (AM/FM1/FM2/SAT1/SAT2/SAT3/SAT4) indicator
10- Preset memory number display
11- ST (Stereo) indicator
12- Frequency display

## To listen to the radio

N00735000753

1. Press the PWR switch (1) to turn the audio system on and off. The system turns on in the last mode used.
2. Press the RADIO button (3) to select the desired band (AM/FM1/FM2/SAT1/SAT2/SAT3/SAT4).
3. Press the SEEK button (4 or 5) to tune to a station, or press one of the memory select buttons (2) to tune in to a station memorised for that button.

### *To tune the radio*

**Automatic tuning**

1. After pressing the SEEK button (4 or 5), reception of the selected station will begin.
2. Press the SCAN button (6). SCAN indicator (8) will come on and the radio will tune consecutively to each available station for about 5 seconds per station. If you want to stop scanning, press the SCAN button again.
   The frequency display of the current station blinks once per second during SCAN.

**Manual tuning**

The frequency changes every time the TUNE/FOLDER switch (7) is turned.
Turn the switch to select the desired station.

### *To enter frequencies into the memory*

As many as 6 AM, 12 FM and 24 SAT stations can be entered into the memory.

To store a frequency in the memory, follow these steps:

1. Press the SEEK button (4 or 5), or turn the TUNE/FOLDER switch (7) to tune to the frequency you wish to keep in the memory.
2. Press one of the memory select buttons (2) until it beeps. The sound will be momentarily interrupted while the frequency is being entered into the memory. The number of the button matching the entry in the memory as well as the frequency are displayed.

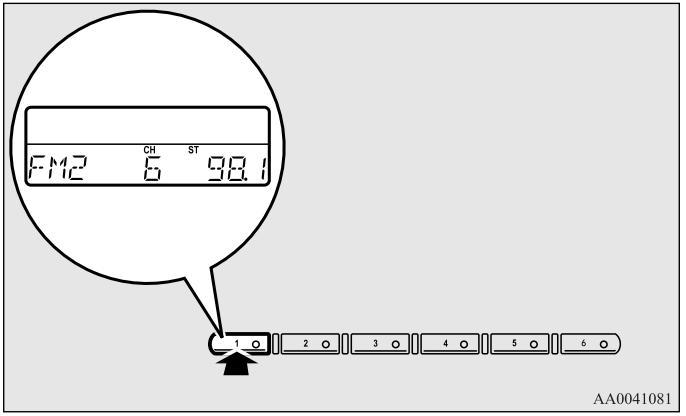


3. The preset memory setting is retrieved by pressing the button and then releasing it within about 2 seconds.

NOTE

- Disconnecting the battery cables erases all the radio stations settings stored in the memory.

# SIRIUS Satellite Radio control panel and display-Type 3

N00700200168

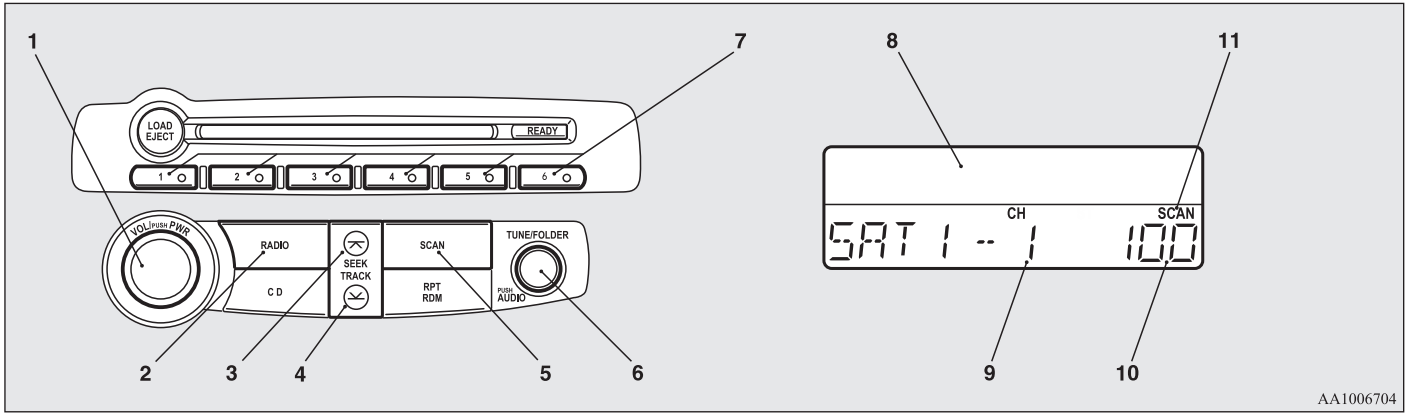


1. PWR (On-Off) switch
2. RADIO (AM/FM/Satellite selection) button
3. SEEK (Down-seek) button
4. SEEK (Up-seek) button
5. SCAN button
6. TUNE/FOLDER (Category selection) switch/AUDIO switch
7. Memory select buttons
8. Display
9. Preset memory number display
10. Channel number
11. SCAN indicator

## To listen to SIRIUS Satellite Radio

N00760500130

1. If the audio system is OFF, turn it ON by pushing the PWR switch (1). The audio system will start working in the previously used mode. Push the RADIO button (2) to turn ON the radio.
2. Push the RADIO button (2) to select your desired band (SAT1/SAT2/SAT3/SAT4). Each time you push the button, the indication will change to the next one in the following sequence: AM → FM1 → FM2 → SAT1 → SAT2 → SAT3 → SAT4. When "SIRIUS" has appeared on the display, the radio will receive satellite radio.

### *Category selection*

N00760600030

1. Turn the TUNE/FOLDER switch (6) to activate the category selection mode. The category number (CAT1 to CAT12) of the channel currently being received will be indicated.
2. Turn the TUNE/FOLDER switch (6) to select your desired category.

NOTE
- Even when categories are changed, the currently selected channel does not change. To select your desired channel, use the SEEK button (3 or 4).
- If you do not operate any switch for 15 seconds, the category selection mode will be cancelled.

### *Channel selection*

N00760700028

Push the SEEK button (3 or 4) to select a channel.

NOTE
- While the system is in category selection mode, only the channels in the currently selected category can be selected.

### *Scan function*

N00760800016

1. If you push the SCAN button (5), the system will select receivable channels one by one, receiving each one for about 7 seconds.
2. To cancel the SCAN mode, push the SCAN button (5) once more.

NOTE
- While the system is in category selection mode, only channels in the currently selected category are scanned.

### *To store a channel in memory*

N00760900033

It is possible to store one channel for each memory select buttons (7) in memory. (It is possible to store a maximum of 24 channels in memory.) Store a channel in memory using the following procedure:

1. Push the SEEK button (3 or 4) to select the channel you wish to store in memory.
2. Store the channel in memory by pushing one of the memory select buttons (7) until you hear a beep.

NOTE

- Once you have stored channels in memory, you can instantly call up a desired channel by just pushing the corresponding memory select buttons (7).

### *SIRIUS ID indication*

N00761000031

If you push the SEEK button (3 or 4) to select “CH 0”, the SIRIUS ID will be indicated.

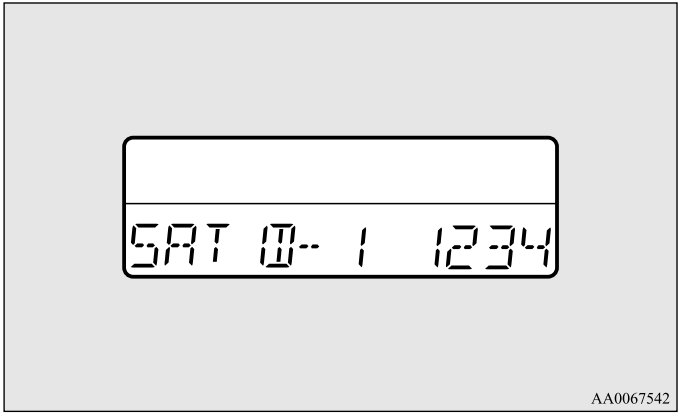


1. If you select “CH 0”, the first 4 digits of the 12-digit SIRIUS ID will be indicated 2 seconds later.
2. Turn the AUDIO switch (6) clockwise to view the next 4 digits. If you turn it clockwise while the last 4 digits are indicated, the first four digits will be indicated again. If you turn the AUDIO switch counterclockwise, indications will be given in the opposite sequence. The indications are given in the following sequence: first 4 digits ↔ middle 4 digits ↔ last 4 digits.
3. To stop the SIRIUS ID indication, push the SEEK button (3 or 4) to select a channel other than “CH 0”.

NOTE

- If you wait 15 seconds without operating any switch while the SIRIUS ID is being indicated, the indication will change to “CH 0”. 2 seconds later, the SIRIUS ID will again be indicated.

### *To skip or lock a desired channel using the MENU mode*

N00761100032

It is possible to make a setting to skip or lock a desired channel during channel selection.

1. If you push the AUDIO switch (6) for at least about 2 seconds while the system is receiving a satellite radio channel, the system will switch to MENU mode.
2. In the MENU mode, satellite radio channel SKIP setting and LOCK setting and Speed Compensated Volume function (refer to “Speed Compensated Volume function” on page 5-44) is possible.
   Each time you push the AUDIO switch (6), the status will change to the next one in the following sequence: “SCV Select” (Speed Compensated Volume function) → “SKIP setting” (the SKIP setting mode) → “LOCK setting” (the LOCK setting mode) → Menu mode off

NOTE

- The MENU mode will automatically shut off when either the radio or CD is selected or the user does not move any of the switches for 10 seconds.
- SKIP settings, LOCK settings, and the lock cancellation code are stored in memory. If a battery cable is disconnected, they will be erased. (The code will return to the “1111” that was set at the factory.)



### *SKIP setting (SKIP setting mode)*

N00761200033

It is possible to set a channel to be skipped during channel selection. It is also possible to cancel a skip setting.
By turning the AUDIO switch (6), you can select “SKIP” or “ALL UNSKIP”. These functions are described below.

| | |
|---|---|
| SKIP | : Sets the channel that is currently being received to be skipped. |
| ALL UNSKIP | : Cancels all channel skip settings. |

### *LOCK setting (LOCK setting mode)*

N00761300034

It is possible to lock a channel. It is also possible to cancel a lock setting.
By turning the AUDIO switch (6), you can select “CH LOCK” (or “UN LOCK”), “UN LOCK AL”, or “CODE EDIT”. These functions are described below:

| | |
|---|---|
| CH LOCK | : Sets the channel that is currently being received to be locked. |
| UN LOCK | : Sets the channel that is currently being received to be unlocked. |
| UN LOCK AL | : Cancels all channel lock settings. |
| CODE EDIT | : Changes the lock cancellation code. |

NOTE

- When the channel that is currently being received is not locked, you can select “CH LOCK”. When the channel that is currently being received is locked, you can select “UN LOCK”.

### *To skip a desired channel*

N00761400048

It is possible to set a channel to not be received during channel selection.

1. Select the channel you wish to be skipped.
2. Push the AUDIO switch (6) for at least about 2 seconds to select the MENU mode. Then select the SKIP setting mode.
3. In the SKIP setting mode, turn the AUDIO switch (6) to select “SKIP”.
4. Push the AUDIO switch (6) to set the channel that is currently being received to be skipped. When you have made the setting, the system will return to the SKIP setting mode. (The display will show “SKIP setting” after showing “STORED”.)

NOTE

- Any channel for which a skip setting has been made is automatically skipped during channel selection.
- A channel that is stored in the preset memory is also skipped during channel selection. If you push the corresponding memory select buttons (7) to call up the channel, the display will show “SKIPD” and the audio will be muted.

### *To cancel skip settings*

N00761500036

It is possible to cancel channel skip settings.

1. Push the AUDIO switch (6) for at least about 2 seconds to select the MENU mode. Then select the SKIP setting mode.
2. In the SKIP setting mode, turn the AUDIO switch (6) to select “ALL UNSKIP”.
3. Push the AUDIO switch (6). All channel skip settings will be cancelled. Then, the system will return to the SKIP setting mode. (The display will show “SKIP setting” after showing “STORED”.)

### *To lock a desired channel*

N00761600037

It is possible to lock a desired channel so that it cannot be selected.

1. Select the channel you wish to lock.
2. Push the AUDIO switch (6) for at least about 2 seconds to select the MENU mode. Then select the LOCK setting mode.
3. In the LOCK setting mode, turn the AUDIO switch (6) to select “CH LOCK”.
4. Push the AUDIO switch (6). The channel currently being received will be locked. Then, the system will return to the LOCK setting mode.

NOTE

- If you attempt to select a locked channel, the display will show “LOCKED”.
- Channels stored in the preset memory are also locked.

### *To unlock locked channels*

N00761700054

You can unlock one or all locked channels. Unlocking one or more channels requires entry of the code.

NOTE
- The code is set to “1111” at the factory.
- It is possible to change the code to any desired number using “CODE EDIT”.

1. If you wish to unlock a single desired channel, select the channel you wish to unlock. (If you wish to unlock all locked channels, it doesn’t matter which channel you select.)
2. Push the AUDIO switch (6) for at least about two seconds to select the MENU mode. Then select the LOCK setting mode.
3. In the LOCK setting mode, turn the AUDIO switch (6) to select “UN LOCK” if you wish to unlock a single desired channel or “UN LOCK AL” if you wish to unlock all locked channels.
4. Push the AUDIO switch (6). The code entry window will display.
5. Use the memory select buttons (7) to enter the code (1111 to 6666).

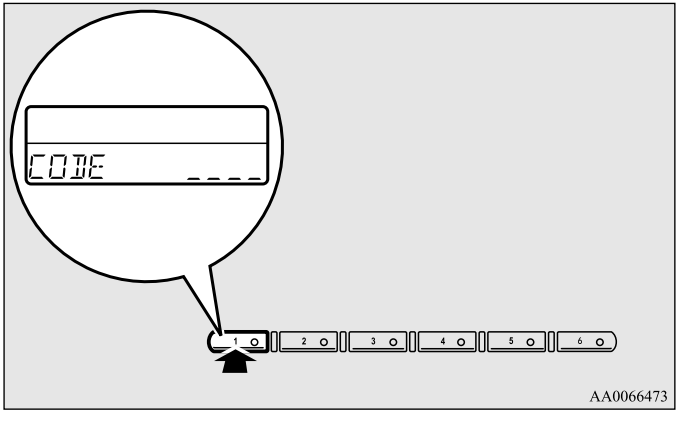


6. If you entered the correct code, the channel lock setting will be cancelled and the system will return to the LOCK setting mode.
   If you entered an incorrect code, a warning sound will be emitted and “CODE E” will be displayed. Then, the code entry window will again display. You can retry the code entry any number of times.

### *To change the lock cancellation code*

N00761800055

It is possible to change the code for lock cancellation to any desired number.

1. Push the AUDIO switch (6) for at least about 2 seconds to select the MENU mode. Then select the LOCK setting mode.
2. In the LOCK setting mode, turn the AUDIO switch (6) to select “CODE EDIT”.
3. Push the AUDIO switch (6). The code entry window will display.
4. Use the memory select buttons (7) to enter the current code (the code prior to the change).
5. If you entered the correct code, the code entry window will again be shown. Enter your desired code.
   If you entered an incorrect code, a warning sound will be emitted and “CODE E” will be displayed. Then, the code entry window will again be shown. You can retry the code entry any number of times.
6. After entering the new code, push the AUDIO switch (6). The code entry window will again be shown for confirmation. Enter the new code again, then push the AUDIO switch (6).
7. The code will be changed, and the system will return to the LOCK setting mode.

NOTE

- The code is stored in memory. If a battery cable is disconnected, such settings will be erased. (The code will return to the “1111” that was set at the factory.)

### *To reset the lock cancellation code*

N00761900030

In case you forget the code, it is possible to reset the code to the “1111” that was set at the factory.

1. With the audio power OFF, push the PWR switch (1) and AUDIO switch (6) simultaneously. The display will show “CODE INITIAL”.
2. Push the AUDIO switch (6). The display will show “YES”. If you wish to reset the code, push the AUDIO switch (6) again. If you do not wish to reset the code, turn the AUDIO switch (6) so the display shows “CANCEL” and then push the AUDIO switch (6) again.

# CD control panel and display-Type 2, Type 3

N00735300596

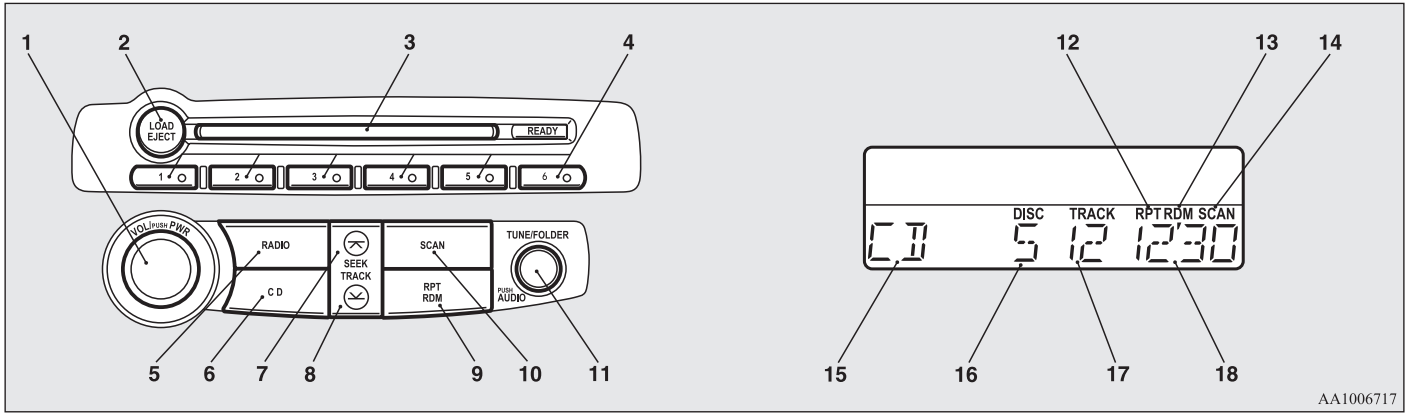


1- PWR (On-Off) switch
2- LOAD/EJECT button
3- Disc loading slot
4- DISC select buttons
5- RADIO (AM/FM selection) button
6- CD (CD mode changeover) button
7- TRACK (Track up) button
8- TRACK (Track down) button
9- RPT/RDM (Repeat/Random) button
10- SCAN button
11- TUNE/FOLDER switch
12- RPT (Repeat-mode) indicator
13- RDM (Random-mode) indicator
14- SCAN indicator
15- CD indicator
16- DISC indicator
17- TRACK indicator
18- Track play time display

## To listen to a CD

N00735500905

1. Press the CD button (6) and the CD mode will be selected, starting a playback.

NOTE
- As many as 6 CDs can be inserted into the CD autochanger.

2. To adjust the volume and tone, refer to “To adjust the volume” on page 5-40 and “To adjust the tone” on page 5-41.
3. To stop the CD, turn off the power by pressing the PWR switch (1) or switch to the other mode by pressing the RADIO button (5).

NOTE
- For information concerning the handling of the compact discs, refer to “Handling of compact discs” on page 5-71.

### *To set a disc*

The indicator light (A) shows the condition of each CD slot.

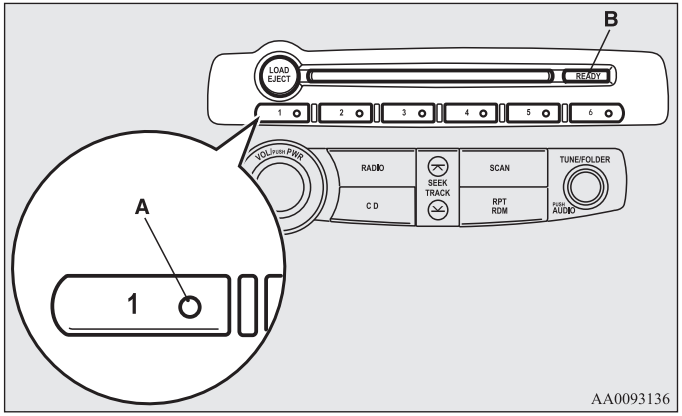


| | |
|---|---|
| Light off: | No disc |
| Amber: | CD is set |
| Green: | CD is played (or selected) |

To set a disc:

1. Press the LOAD/EJECT button (2).
2. Press one of the Disc select buttons (4) to select the CD which you wish to insert.
3. If there is already a CD loaded in the slot, the CD is automatically ejected. If there is no CD, insert the CD in the slot (3) after the READY light (B) illuminates.

NOTE

- When the first CD has played to the end, the second CD will start to play automatically. When the second, third, fourth, fifth, and sixth CDs have each played to the end, the sequence will begin again from the first CD.

### *To listen an MP3 CD*

This autochanger allows you to play MP3 (MPEG Audio Layer-3) files recorded on CD-ROMs, CD-Rs (recordable CDs), and CD-RWs (rewritable CDs) in ISO9660 Level 1/Level 2, Joliet, and Romeo formats. Each disc may have a maximum of 16 trees, 100 folders, and 255 files per disc.

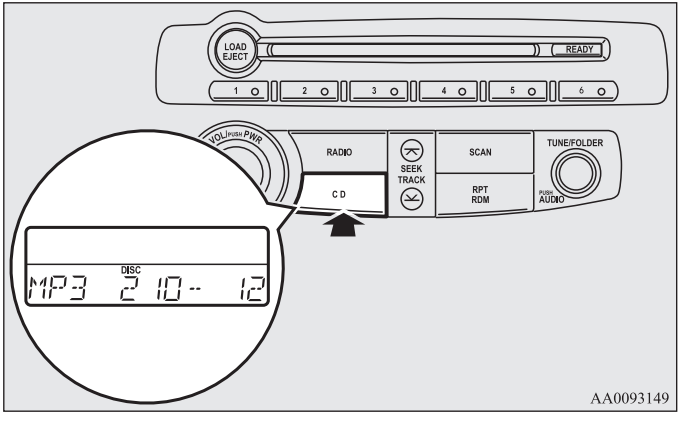


Push the CD button (6) if MP3 CDs are already in the autochanger.

The display show “FILE READING”, then playback will begin. The folder number and the track number will appear on the display.

NOTE

- While listening to a disc on which CD-DA (CD-Digital Audio) and MP3 files have both been recorded, you can switch between reading of the CD-DA and reading of the MP3 files, and the external audio input mode by pressing the CD button for 2 seconds or longer (until you hear a beep).
- With a disc that contains both CD-DA and MP3 files, the CD-DA files are automatically played first.
- The playback sound quality differs depending on the encoding software and the bit rate. For details, refer to the user manual of your encoding software.
- Depending on file/folder configurations on a disc, it may take some time before playback starts.
- MP3 encode software and writing software are not supplied to this unit.
- You may encounter trouble in playing an MP3 recorded with certain writing software or CD recorders (CD-R/RW drivers).
- If you record too many folders or files other than MP3 onto a disc, it may take some time before playback starts.
- This unit does not record MP3 files.
- For information concerning CD-Rs/RWs, refer to “Notes on CD-Rs/RWs” on page 5-73.

**⚠ CAUTION**

- **Attempting to play a file not in the MP3 format which has the “.mp3” file name may produce noise from the speakers and speaker damage, and can damage your hearing.**

**Folder selection order/MP3 file playback order (Example)**

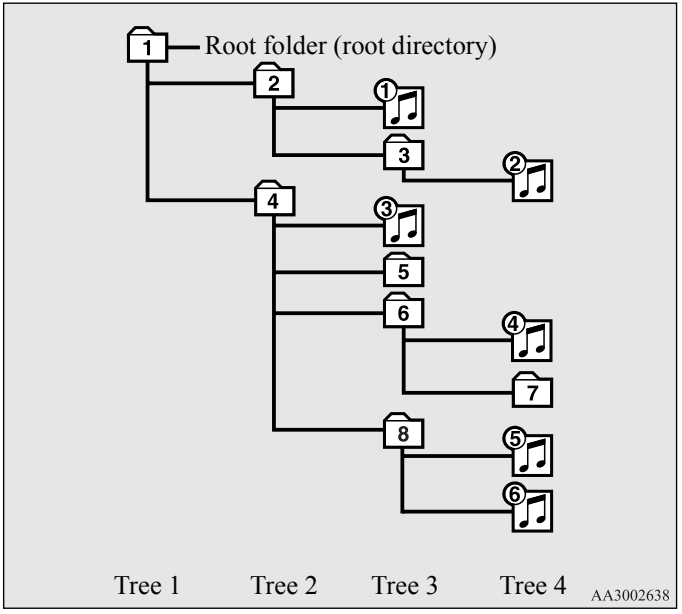


**Folder selection**
In the order 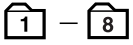

**File selection**
In the order

### *To fast forward/reverse the disc*

To fast forward or reverse, use the TRACK button (7 or 8).

**Fast forward**

You can fast forward by holding down the ⊼ side of the TRACK button (7) for more than about 1 second.

**Fast reverse**

You can fast reverse by holding down the ⊻ side of the TRACK button (8) for more than about 1 second.

### *To select a desired folder (MP3 CDs only)*

You can select your desired folder by turning the TUNE/FOLDER switch (11).

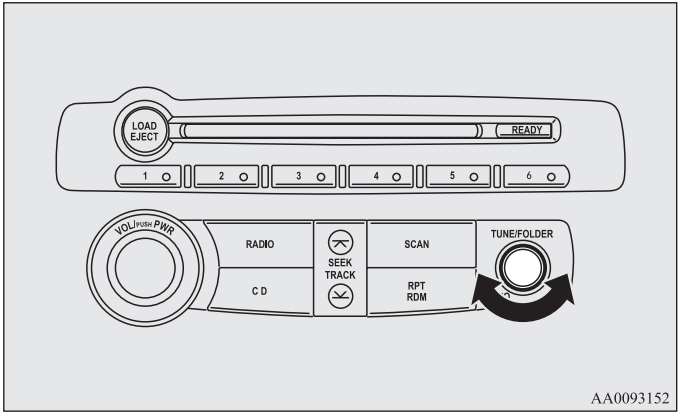


**Folder up**

Turn the TUNE/FOLDER switch (11) clockwise until the desired folder number appears on the display.

**Folder down**

Turn the TUNE/FOLDER switch (11) counterclockwise until the desired folder number appears on the display.

### *To select a desired track*

You can select by using the TRACK button (7 or 8).

**Track up**

Press the ⊼ side of the TRACK button (7) until the desired track is reached.
The TRACK indicator (17) will display the number of the selected track.

**Track down**

Press the ⊻ side of the TRACK button (8) until the desired track is reached.
The TRACK indicator (17) will display the number of the selected track.

NOTE

- Pressing the ⊻ side of the TRACK button (8) once during the song will cause the CD to restart playing from the beginning of the song.

### *To repeat the same track or change the order of tracks for playback*

Press the RPT/RDM button (9) to select RPT → RDM → RPT/RDM mode off.

### *To repeat the same track*

Select the RPT mode, and the RPT indicator (12) will come on. You can listen to the same track repeatedly.

NOTE

- The track repeat mode will be canceled by pressing the TRACK button (7 or 8), the SCAN button (10) or the LOAD/EJECT button (2).
- With a disc that contains both CD-DA and MP3 files, the repeat mode causes only files of the same format (CD-DA only or MP3 files only) to be repeated.

### *To change the order of tracks for playback*

**Random playback for all discs in the autochanger (music CDs only)**

Select the RDM mode, and the RDM indicator (13) will come on. Tracks are randomly selected from all discs loaded in the autochanger.

**Random playback for all folders on a disc (MP3 CDs only)**
Select the RDM mode, and the RDM indicator (13) will come on. Tracks from all the folders on the currently selected disc will be played in a random sequence.

NOTE
- In the all discs random mode, if an MP3 CD has been loaded in the autochanger, the autochanger will skip over it to the next music CD.
- With a disc that contains both CD-DA and MP3 files, the random mode causes only files of the same format (CD-DA only or MP3 files only) to be played in a random sequence.

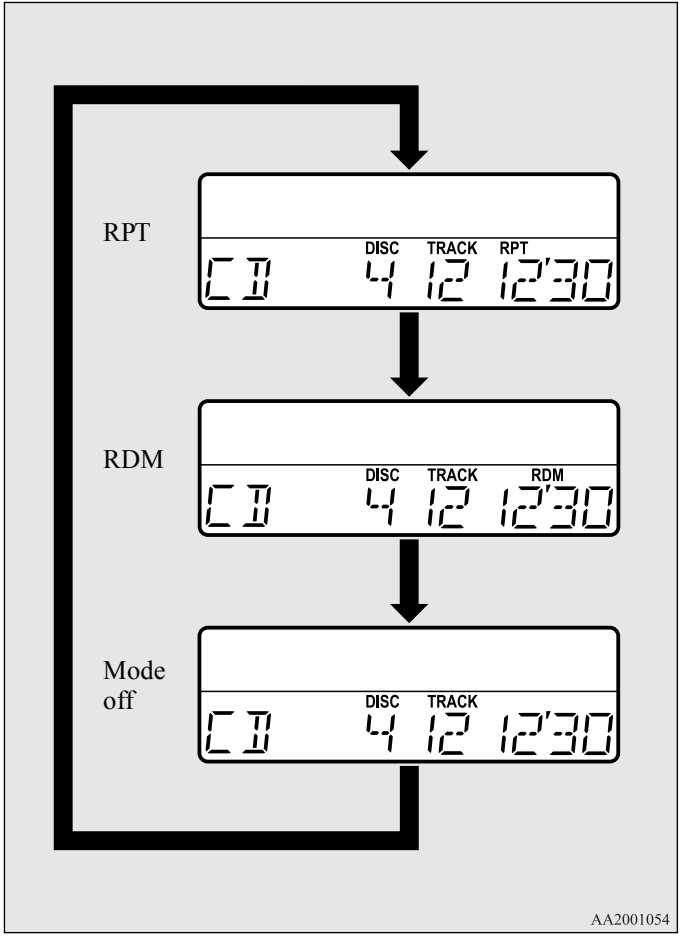

### *To find the start of each track on a disc for playback*

Press the SCAN button (10). “SCAN” will appear on the display and the autochanger will play back the first 10 seconds of each track on the selected disc.
The track number will blink while the scan mode is selected. To exit the scan mode, press the SCAN button again.

NOTE
- Once all tracks on the disc have been scanned, playback of the disc will restart from the beginning of the track that was playing when scanning started.
- The scan mode will be canceled when radio or CD operation is selected.
- With a disc that contains both CD-DA and MP3 files, the scan mode causes only files of the same format (CD-DA only or MP3 files only) to be played.

### *To eject a disc*

Press the LOAD/EJECT button (2). Then press one of the DISC select buttons (4) to select the CD which you would like to eject.

NOTE
- When any CD is ejected, the system automatically switches from CD mode to radio mode.

## *To use the external audio input function*

N00702200162

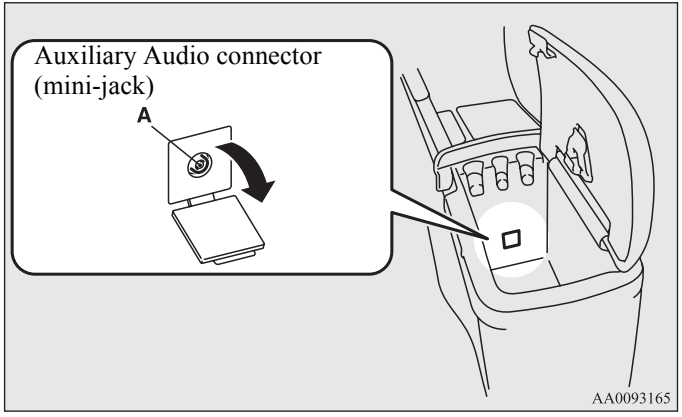


You can listen to commercially available audio equipment, such as a portable audio system, from your vehicle’s speakers, by connecting the audio equipment to the auxiliary audio connector (A).

NOTE
- Use a stereo mini-jack connector to connect the audio equipment to the auxiliary audio connector.

## To activate the external audio input mode

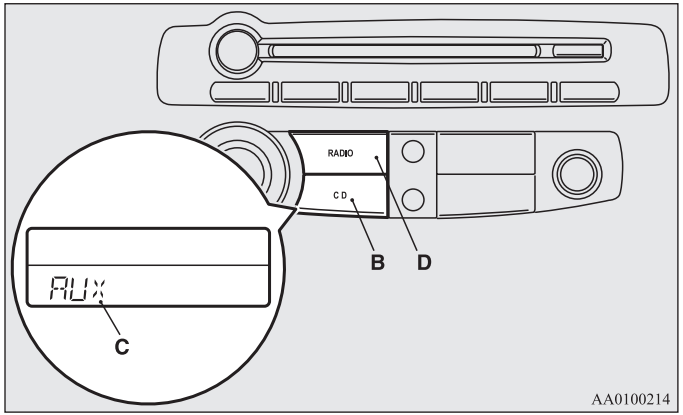


1. Connect the headphone port of the portable audio system to the auxiliary audio connector (A) using a commercially available connection cord.
2. Press the CD button (B) for more than 2 seconds.
   The display (C) will show “AUX” and then the external audio input mode will be activated.
3. To deactivate the external audio input mode, press the RADIO button (D) or the CD button (B) to switch to another mode.

**⚠ CAUTION**

- **Do not operate the connected audio equipment while driving.**
  **This could distract you and an accident might occur.**

NOTE

- The connected audio equipment cannot be operated with the vehicle’s audio system.
- Depending on the connected audio equipment, it may produce noise from the speakers.
- Use the connected audio equipment’s own power source, such as its battery.
  Noise may be produced from the speakers if the connected audio equipment is used while charging it using the accessory socket of the vehicle.
- Do not activate the external audio input mode when no audio equipment is connected.
  Otherwise, noise may be produced from the speakers.
- Connect audio equipment when the external audio input mode is deactivated or lower the vehicle’s speaker volume before connecting it.
  Noise may be produced from the speakers if audio equipment is connected after the external audio input mode is activated.
- Compared to the CD player mode and radio mode, the vehicle’s speaker volume will be lower in the external audio input mode. Therefore, be careful when switching from the external audio input mode to the CD player mode or radio mode since the speaker volume will be higher.
- Do not use excessive force on the connection cord. Otherwise, the cord and connectors may be damaged.
- If the connection cord alone is left connected to the auxiliary audio connector, noise may be produced from the speakers.
- For information on how to connect and operate the commercially available audio equipment, refer to the owner’s manual for the commercially available audio equipment.

# *Steering wheel audio remote control switch*

***(if so equipped)***

N00714800413

The remote control switches are located on the rear surface of the steering wheel. Reach behind the wheel to access the switches.
These switches can be used when the ignition switch is in the "ON" or "ACC" position.

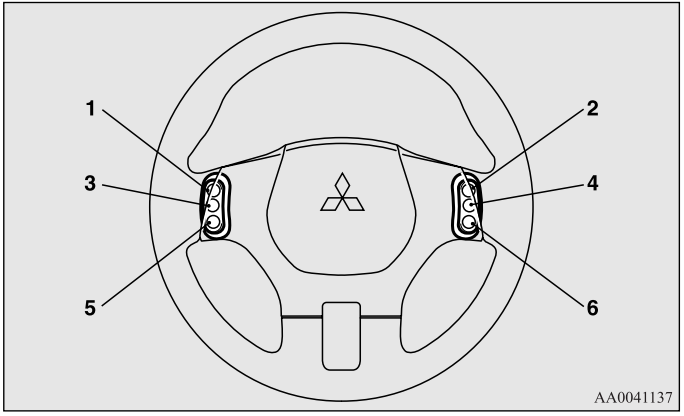


1- Seek up/Track up/Fast-forward button
2- Volume up button
3- Preset change/Folder up/Disc up button
4- PWR (ON/OFF)/Mode change button
5- Seek down/Track down/Fast-reverse button
6- Volume down button

NOTE
- Do not push two or more of the steering wheel remote control switches at the same time.

## To turn on the power

### *PWR ON/OFF button — 4*

When the power is off, press this button to turn the power on. To turn the power off, press this button for 2 seconds or longer.

## To adjust the volume

### *Volume up button — 2*

The volume will increase when this button is pressed.

### *Volume down button — 6*

The volume will decrease when this button is pressed.

## To listen to the audio system

Select the desired mode by lightly pressing the Mode change button (4).
The mode switches between the radio and CD with each push of the button.

## To listen to the radio

### *To select AM/FM/SAT mode*

**Mode change button — 4**

Select the desired band by pressing this button.
The order is: AM → FM1 → FM2 (SAT1 → SAT2 → SAT3 → SAT4) → CD → AM.

### *Automatic radio tuning*

**Seek up button — 1/Seek down button — 5**
After pressing these buttons, reception of the selected station will begin.

### *Category selection (vehicle with satellite radio)*

**Seek up button — 1/Seek down button — 5**
Keep one of the buttons pressed to scan through the categories. When your desired category is reached, release the button.

### *To select the preset memory*

**Preset change button — 3**
When the radio is on and this button is pressed, the preset station frequencies are sequentially selected each time the button is pressed; 1, 2, 3, 4, 5, 6, 1, 2 etc.

## To listen to a CD



### *To select a desired track*

**Track up button —1**
Press the button repeatedly until the desired track number appears on the display.

**Track down button —5**
Press the button repeatedly until the desired track number appears on the display.

### *To fast-forward/fast-reverse the disc (Type 1 and Type 2 audio system only)*

To fast-forward or fast-reverse the disc, press the fast-forward button (1) or the fast-reverse button (5).

**Fast-forward button —1**
You can fast-forward the disc by pressing the fast-forward button. While the button is kept pressed, the disc will be fast-forwarded.

**Fast-reverse button —5**
You can fast-reverse the disc by pressing the fast-reverse button. While the button is kept pressed, the disc will be fast-reversed.

### *To select a desired disc (CD autochanger only)*

**Disc up button — 3**
This function can be used only while a music CD is being played. Press this button until the desired disc is reached.

### *To select a desired folder (MP3 CDs only)*

**Folder up button — 3**
Press this button until the desired folder is reached.

# *Error codes*

N00736100748

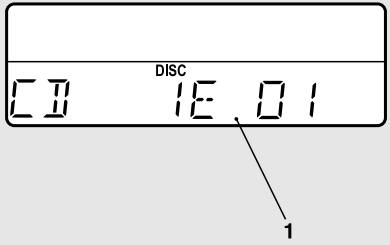


AA1002836

If an error code (1) appears in the display, take action in accordance with the table below.

| Error display | Problem | Description | Repair |
|---|---|---|---|
| E 01 | Focus error | Disc is not loaded correctly, or condensation on disc. | Insert disc with label facing up.<br>Remove moisture from disc. |
| E 02 | Disc error | Disc is dirty, scratched, or deformed; or excessive vehicle vibration. | Clean or replace disc. Retry when vibrations stop. |
| E 03 | Mechanism error | Loading or eject error. Pick-up is out of position. | Eject disc and reload. If disc will not eject, bring your vehicle to your authorized Mitsubishi Motors dealer or a repair facility of your choice for repair. |
| E HOT | High temperature | Internal protection against high temperatures. | Allow radio to cool by waiting about 30 minutes. |

| Error display | Problem | Description | Repair |
|---|---|---|---|
| E Com | Communication or power supply error | Communication error between external device and audio equipment.<br>Power supply error of external device. | Bring your vehicle to your authorized Mitsubishi Motors dealer or a repair facility of your choice for repair. |
| E DC | DC offset output voltage | Foreign material is inside of radio or amplifier (AM/FM electronically tuned radio with CD autochanger only). | Bring your vehicle to your authorized Mitsubishi Motors dealer or a repair facility of your choice for repair. |

# *Error codes (SIRIUS Satellite Radio)*

N00760300066

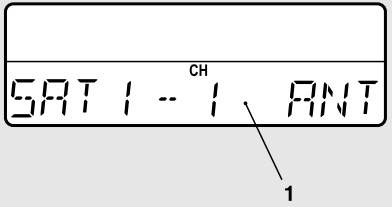


AA1004641

If an error code (1) appears in the display, take action in accordance with the table below.

| Error display | Problem | Description | Repair |
|---|---|---|---|
| ANT | Antenna error | The antenna may be faulty, not securely connected, or open-circuited. | Take the vehicle to your authorized Mitsubishi Motors dealer or a repair facility of your choice. |
| LINKING | Cannot pick up signal. | The signal is too weak to be received. | Move to a place where the signal is easy to receive. |
| CALL 888-539-SIRIUS | Unauthorized channel | Contract does not include reception of this channel. | Contact SIRIUS Satellite Radio and obtain a contract. |
| ----- (Hyphen) | There is no selectable channel. | There is no selectable channel. | Cancel SKIP settings. |

| Error display | Problem | Description | Repair |
|---|---|---|---|
| _ _ _ _ _ (Underscore) | Channel is invalid | No program is currently being broadcast on this channel; or reception is not possible with this channel. | Consult SIRIUS Satellite Radio at 888-539-SIR-IUS. |
| SAT E | Mechanical fault or bad connection | There is a mechanical fault or a bad connection. | Take the vehicle to your authorized Mitsubishi Motors dealer or a repair facility of your choice. |
| OFFAIR | OFF AIR | This channel is not broadcasting at the present time; or satellite radio broadcasting is suspended. | Check the broadcast times with SIRIUS Satellite Radio. |
| NOT ACT | ID not registered | The ID code in the receiver has not been registered with SIRIUS Satellite Radio. | Contact your authorized Mitsubishi Motors dealer or a repair facility of your choice. |
| READ | Data reading in progress | Reading of received data is in progress. | Received data are being read. Please wait. |
| UPDT | Channel data updating in progress | SIRIUS Satellite Radio is presently updating the channel data. | Wait until updating is complete. |
| SUB UPDT | Contract status updating complete | The contract status has been updated. | Press any audio key. |



NOTE

- Reception may not be possible in a place where the signal is interrupted by a tunnel, by the roof of a garage or other structure, by woods, or by a tall building. At such times, the audio is muted. This behavior does not indicate a fault.
- Reception conditions may vary according to the angle of the satellite used for the satellite radio service.
- Reception may deteriorate if a luggage carrier is attached to the roof or snow collects on the antenna.
- Satellite radio reception may not be possible in certain regions.

## *Handling of compact discs*

N00734100177

- Use only the type of compact discs that have the mark shown in the illustration below. (Playback of CD-R or CD-RW discs may cause problems.)

- The use of special shaped, damaged compact discs (like cracked discs) or low-quality compact discs (like warped discs or burrs on the discs) such as those shown will damage the CD player.

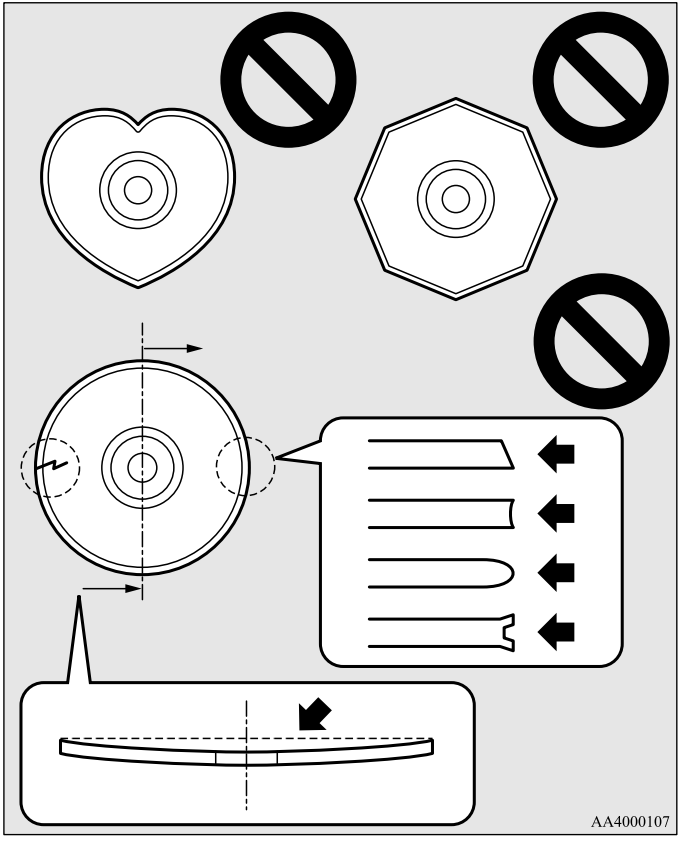

- In the following circumstances, moisture can form on compact discs and inside the audio system, preventing normal operation.
  - When there is high humidity (for example, when it is raining).
  - When the temperature suddenly rises, such as right after the heater is turned on in cold weather.

  In this case, wait until the moisture has had time to dry out.
- When the CD player is subjected to violent vibrations, such as during off-road driving, the tracking may not work.
- When storing compact discs, always store them in their separate cases. Never place compact discs in direct sunlight, or in any place where the temperature or humidity is high.
- Never touch the flat surface of the disc where there isn't a label. This will damage the disc surface and could affect the sound quality. When handling a compact disc, always hold it by the outer edge and the center hole.
- To clean a disc, use a soft, clean, dry cloth. Wipe directly from the center hole toward the outer edge. Do not wipe in a circle. Never use any chemicals such as benzine, paint thinner, a disc spray cleaner, or an anti-static agent on the disc.

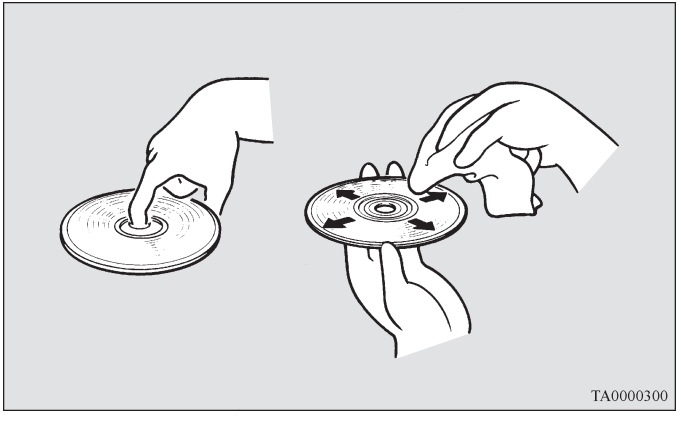


- Do not use a ball point pen, felt pen, pencil, etc. to write on the label surface of the disc.

- Do not put additional labels (A) or stickers (B) on compact discs. Also, do not use any compact disc on which a label or sticker has started to peel off or any compact disc that has stickiness or other contamination left by a peeled-off label or sticker. If you use such a compact disc, the CD player may stop working properly and you may not be able to eject the compact disc.

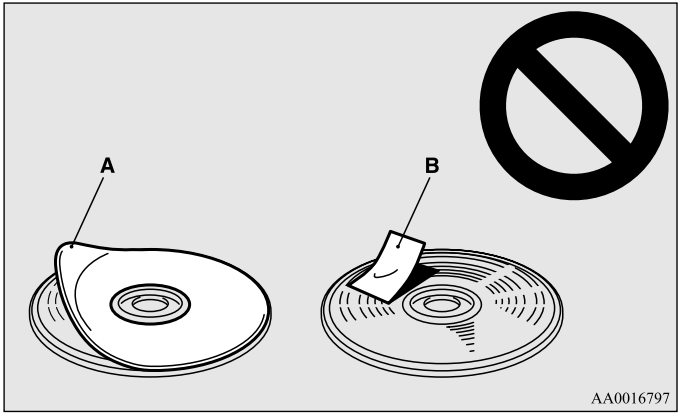


## Notes on CD-Rs/RWs

N00751900024

- You may have trouble playing back some CD-R/RW discs recorded on CD recorders (CD-R/RW drives), either due to their recording characteristics or dirt, fingerprints, scratches, etc. on the disc surface.
- CD-R/RW discs are less resistant to high temperatures and high humidity than ordinary music CDs. Leaving them inside a vehicle for extended periods may damage them and make playback impossible.
- The unit may not successfully play back a CD-R/RW that was made by the combination of writing software, a CD recorder (CD-R/RW drive) and a disc if they are incompatible with one another.
- This player cannot play the CD-R/RW discs if the session is not closed.
- This player cannot play CD-R/RW discs which contain other than CD-DA or MP3 data (Video CD, etc.).
- Be sure to observe the handling instructions for the CD-R/RW disc.

**⚠ WARNING**

- **Operating the CD player in a manner other than specifically instructed herein may result in hazardous radiation exposure.**
  **Do not remove the cover and attempt to repair the CD player by yourself. There are no user serviceable parts inside. In case of malfunction, contact an authorized Mitsubishi Motors dealer.**

# *Antenna*

N00734200107

## Glass antenna (if so equipped)

N00702300020

The antenna is embedded in the inner side of the rear window glass.

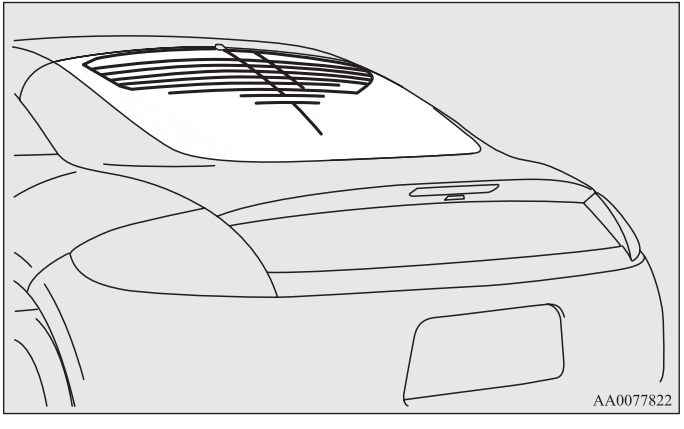


NOTE

- When the rear window glass is cleaned, wipe the glass with a soft cloth by moving the cloth along the antenna so as not to damage it.

## Whip antenna (if so equipped)

N00734400037

To remove the whip antenna, unscrew it by turning it counter-clockwise.

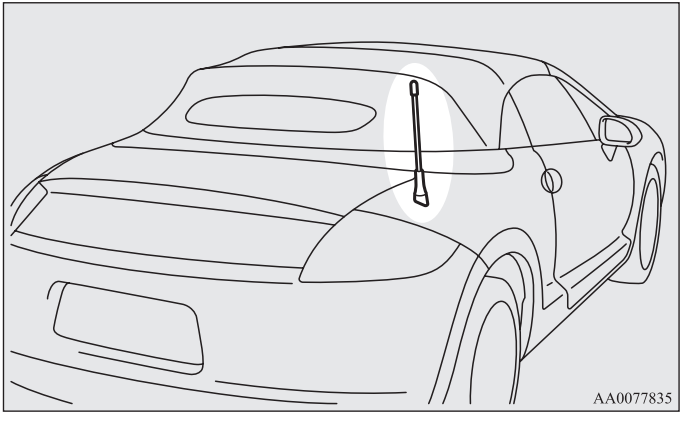


NOTE

- Be sure to remove the whip antenna in the following cases:
  - When entering a place with low clearance.
  - When going into an automatic car wash.
  - When placing a car cover over the vehicle.

## Satellite radio antenna (if so equipped)

N00702400021

The antenna is located as shown in the illustration.

### *ECLIPSE*

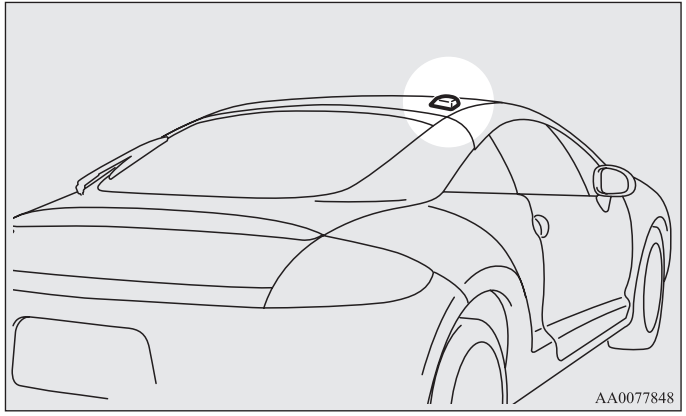


### *ECLIPSE SPYDER*

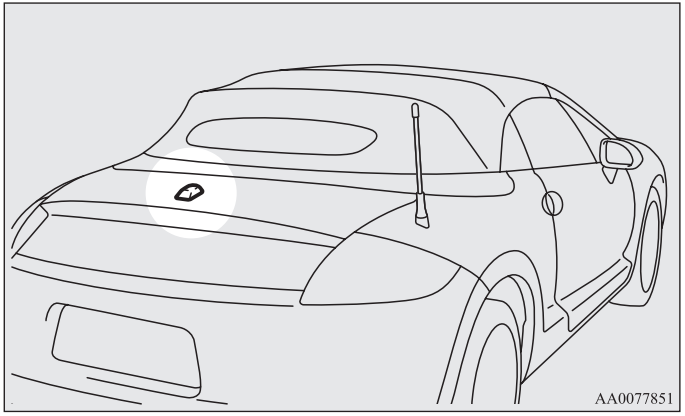

# *General information about your radio*

N00733900295

Your vehicle's radio receives both AM and FM stations.
The quality of your reception is affected by distance, obstacles, and signal interference.

## Signal transmission

FM signals do not follow the earth surface nor are they reflected by the upper atmosphere. For this reason, FM broadcasts cannot be received over long distances. AM signals follow the earth's surface and are reflected by the upper atmosphere. For this reason, AM broadcasts can be received over longer distances.

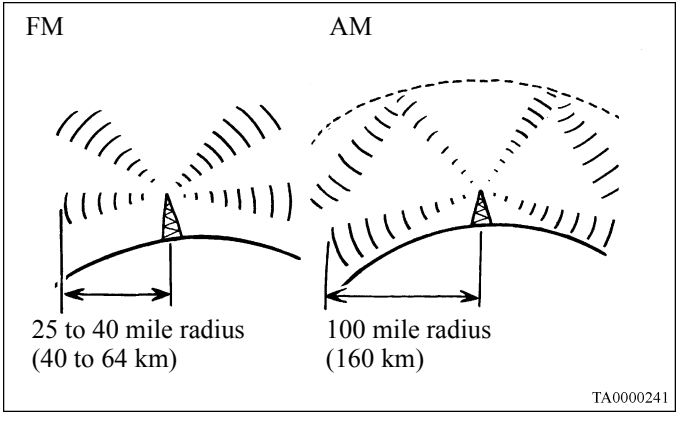


## Weak reception (fading)

Because of the limited range of FM signals and the way FM waves transmit, you may experience weak or fading FM reception. When the broadcast is blocked by mountains or similar obstructions, reception can be disturbed.

## Reflection

The reason why one can hear FM but not AM in parking garages, under bridges etc., is that FM signals, unlike AM signals, are reflected by solid objects such as buildings, etc.
Because FM signals are easily reflected by buildings, this can also cause reception disturbances.
The direct signal from the broadcast station reaches the antenna slightly before the reflected signal. This time difference may cause some reception disturbance or flutter.
This problem occurs primarily in urban areas.

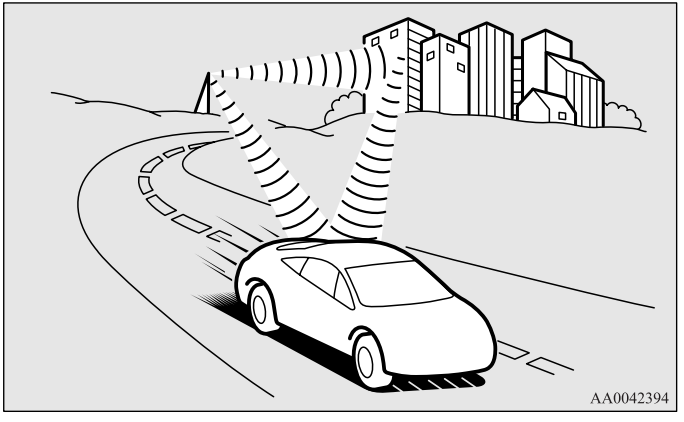

## Cross modulation

If one listens to a weak station and is in the vicinity of another strong station, both stations might be received simultaneously.

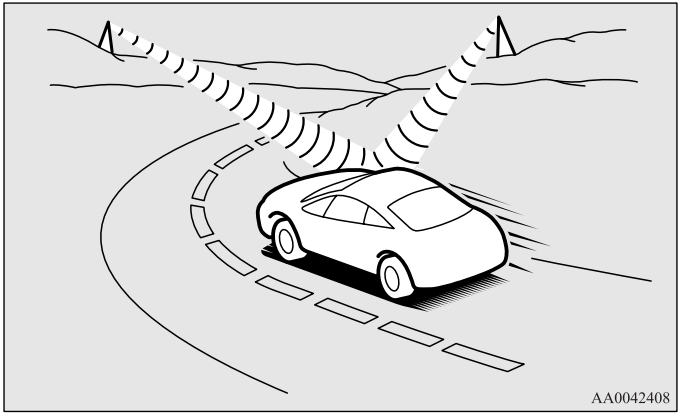


## FM stereo reception

Stereo reception requires a high quality broadcast signal. This means that types of disturbances mentioned previously become more marked and the reception range is somewhat diminished during stereo reception.

## Causes of disturbances

FM reception is affected by the electrical systems of vehicles in the vicinity, especially those without an electronic noise suppression device. The disturbance is even greater if the station is weak or poorly tuned.

FM reception is not as sensitive to electrical disturbances as AM. AM reception is sensitive to electrical disturbances such as power lines, lightning and other types of similar electrical phenomena.

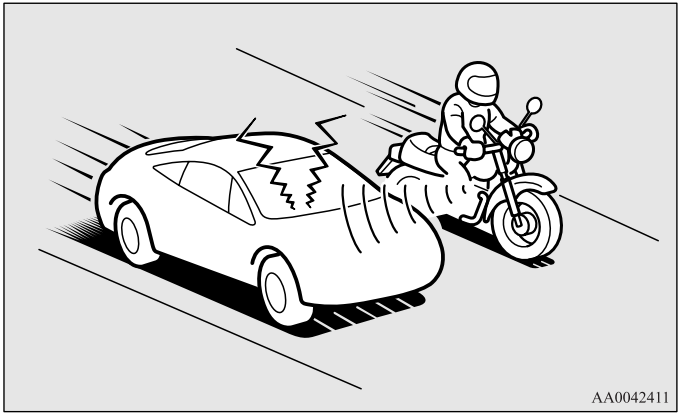

# *For emergencies*

If the vehicle breaks down . . . . . .6- 2
Jump-starting the engine . . . . . .6- 2
Engine overheating . . . . . .6- 6
Tools and jack . . . . . .6- 8
How to change a tire . . . . . .6- 9
Towing . . . . . .6- 20
Operation under adverse driving conditions . . . . .6- 22

## *If the vehicle breaks down*

N00836300174

If your vehicle breaks down on the road, move to the shoulder and turn on the hazard warning flashers. If there is no shoulder, or the shoulder is not safe, drive in the right lane slowly, with the hazard lights flashing, until you come to a safe stopping place. Keep the flashers flashing.

### If the engine stops/fails

If the engine stops, there will be no power assist to the steering and brakes, making these difficult to use.

- The brake booster will not work, so the brakes will not grip well. The brake pedal will be harder to press than usual.
- Since there is no power steering assist, the steering wheel will be hard to turn.

### When the engine fails at the intersection

Get help from your passengers, bystanders, etc. to push the vehicle and move it to a safe zone.

## *Jump-starting the engine*

N00836400638

If the engine cannot be started because the battery is weak or dead, you can start it with the battery from another vehicle using jumper cables.

**⚠ *WARNING***

- **When using jumper cables to start a vehicle, follow the procedures and be very cautious.**

**⚠ *CAUTION***

- **Do not try to start your vehicle by pushing or towing. Vehicles with automatic transaxles cannot be started this way. Pushing or towing a vehicle that has a manual transaxle may overheat and damage the catalytic converter. Also, there is more risk of an accident when a vehicle is being pushed or towed.**

1. Take off any metal jewelry such as watch bands or bracelets that might make an accidental electrical contact.
2. Position the vehicles close enough together so that the jumper cables can reach, but be sure the vehicles aren't touching each other.

**⚠ *CAUTION***

- **Check the other vehicle. It must have a 12-volt battery. If the other system isn't 12-volt, both systems can be damaged.**

3. You could be injured if the vehicles move. Set the parking brake firmly on each vehicle. Put an automatic transaxle in “P” (PARK) or a manual transaxle in “N” (Neutral). Turn the ignition key to the “LOCK” position.

**⚠ WARNING**

- **Turn the ignition key to the “LOCK” position on both vehicles. Make sure that the cables or your clothes cannot be caught by the fan or drive belt. Personal injury could result.**

NOTE

- Turn off all lights, heater, and other electrical loads. This will avoid sparks and help save both batteries.

4. Make sure your battery electrolyte is at the proper level. (Refer to “Battery” on page 7-16.)

**⚠ WARNING**

- **If the electrolyte fluid is not visible, or looks frozen, DO NOT ATTEMPT JUMP STARTING!!**
  **The battery might split open or explode if the temperature is below the freezing point or if it is not filled to the proper level.**

5. Connect one end of one jumper cable to the positive (+) terminal of the discharged battery (A), and the other end to the positive (+) terminal of the booster battery (B).

**2.4 liter engine**

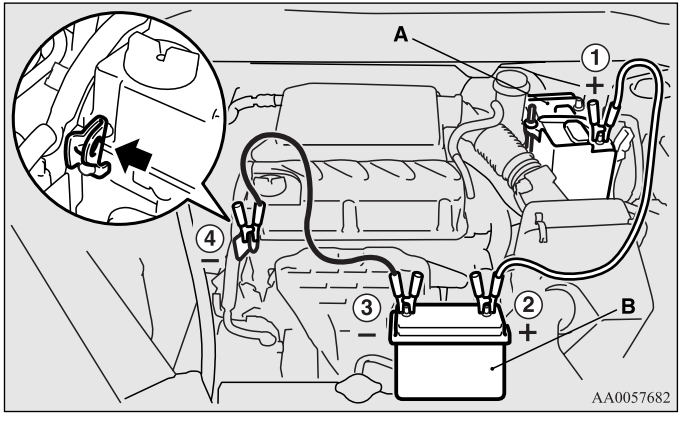

### 3.8 liter engine

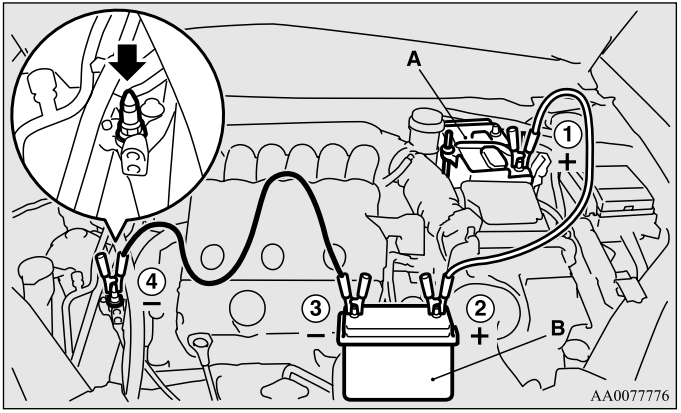


NOTE

- Open the terminal cover before connecting the jumper cable to the positive terminal of the battery.
  (Refer to “Battery” on page 7-18.)
- Use the proper cables suitable for the battery size. Otherwise heat damage to the cables could result.
- Check the jumper cables for damage and corrosion before use.

6. Connect one end of the other jumper cable to the negative (-) terminal of the booster battery (B), and the other end to the engine block of the vehicle with the low battery (A) at the point farthest from the battery.

**⚠ WARNING**

- **Be sure to follow the proper order when connecting the batteries, of: ①→②→③→④.**
- **Make sure that the connection ④ is made to the engine properly. If the connection is directly made to the negative side of the battery, the flammable gases from inside the battery might catch fire and explode, causing personal injury.**
- **When connecting the jumper cable, do not connect the positive (+) cable to the negative (-) terminal. Otherwise sparks can make the battery explode.**

**⚠ CAUTION**

- **Make sure that the jumper cable will not be caught in the cooling fan or other moving parts in the engine compartment.**

7. Start the engine in the vehicle providing the boost. Let the engine idle a few minutes, then start the engine in the vehicle with the low battery.

8. After the engine is started, disconnect the cables in the reverse order from the way you connected them.

**⚠ *WARNING***

- **Charging your battery while it is still in your vehicle might cause the battery to catch fire and explode. If you have to charge it while in the vehicle, disconnect the negative terminal.**
- **Keep sparks, cigarettes and flames away from the battery because the battery may explode.**
- **Keep your work area well vented when charging or using the battery in an enclosed space.**
- **Remove all the caps before charging the battery.**
- **Electrolyte (battery acid) is corrosive diluted sulphuric acid. If electrolyte comes in contact with your hands, eyes, clothes, or the painted surface of your vehicle, thoroughly flush with water. If electrolyte gets in your eyes, flush them immediately and thoroughly with water, and get prompt medical attention.**
- **Always wear protective clothing and goggles when working near the battery.**
- **Keep the battery out of the reach of children.**

## As your vehicle has anti-lock brakes

If you drive your vehicle with a low battery charge, after the engine has been started by using jumper cables, the engine may misfire. This can cause the anti-lock braking system warning light to blink on and off. This is only due to the low battery voltage. It is not a problem with the brake system. If this happens, fully charge the battery and ensure the charging system is operating properly.

## *Engine overheating*

N00836500222

If the engine coolant temperature gauge indicator moves to the "H" (hot) position (red zone), the engine may be overheated. If this happens:

1. Stop the vehicle in a safe place. Turn on the hazard warning flashers.
2. With the engine still running, carefully raise the engine hood to vent the engine compartment.
3. Check that the cooling fan is running. If the fan is not turning, stop the engine immediately and contact an authorized Mitsubishi Motors dealer or a repair facility of your choice for assistance.

**⚠ *WARNING***

- **To avoid personal injury, keep hands, hair, jewelry and clothes away from the cooling fan. The cooling fan can start at any time.**

4. If you see steam or spray coming from under the hood, turn off the engine.
5. If you do not see steam or spray coming from under the hood, leave the engine on until the temperature indicator on the instrument panel moves below the red zone. When it is in the middle of the normal zone, you can start driving again. If the indicator stays in the red zone, turn off the engine.

**⚠ *WARNING***

- **Before raising the engine hood, check to see if there is steam or spray coming from under the hood. Steam or spray coming from an overheated engine could seriously scald you.**
  **Do not open the hood until there is no steam or spray.**

6. When you do not see any more steam or spray, open the hood. Look for obvious leaks, such as a split radiator hose. Be careful as components will be hot. Any leak source must be repaired.
7. If there is no obvious leak source, check the coolant level in the reserve tank. If there is none, or if it is too low, slowly add coolant.
8. If the reserve tank needs coolant, you will probably also need to add coolant to the radiator. Do not loosen or remove the radiator cap until the engine has cooled down.

**⚠ *WARNING***

- **Removing the radiator cap could scald you with escaping hot water or steam. When checking the radiator level, cover the cap with a cloth before trying to remove it. Turn it slowly counterclockwise, without pressing down, to the first notch. The pressure in the system will then be let out. When the pressure is COMPLETELY LET OUT, press down and keep turning the cap counterclockwise until it will come off.**

9. Start the engine, and slowly add coolant, up to the bottom of the filler neck. Use plain water if you have to (and replace it with the right coolant as soon as possible).
10. Replace the radiator cap and tighten it fully. Check the temperature indicator. You can drive when the indicator returns to the normal zone.
11. Have your vehicle checked by your authorized Mitsubishi Motors dealer or a repair facility of your choice.

# *Tools and jack*

N00836600223

## Storage

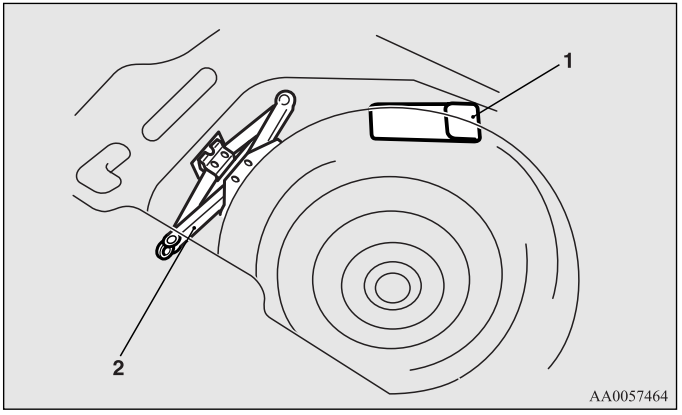


1- Tools
2- Jack

6

The tools and jack are stowed beneath the luggage floor board of the cargo area (trunk).

## Tools

N00832600108

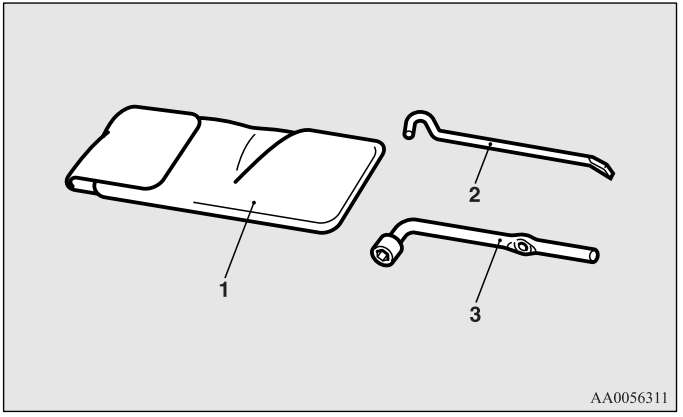


1- Tool bag
2- Bar
3- Wheel nut wrench

NOTE

- When returning the tools to the tool bag, place each one in its own pocket.

## Jack

N00832700109

Before removing the jack, lift up the luggage floor board.

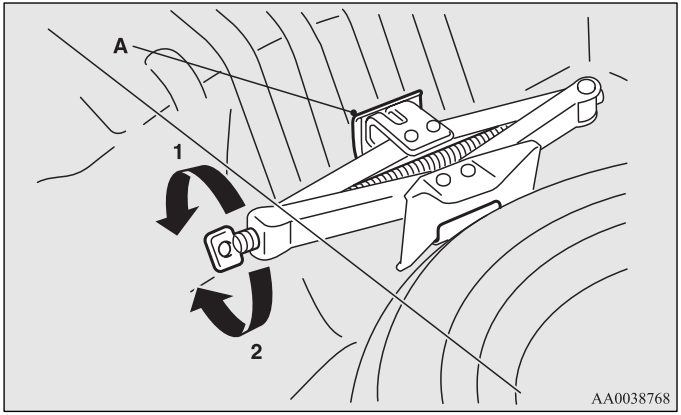


### *1-To remove*

Turn the shaft end so that the jack contracts, then remove it from the storage bracket (A).

### *2-To store*

Turn the shaft end by hand to expand the jack until it is held firmly in position.

# *How to change a tire*

N00836900721

Before changing a tire, first stop your vehicle in a safe, flat location.

1. Park the vehicle on level and stable ground.
2. Set the parking brake firmly.
3. On vehicles with manual transaxle, turn the ignition key to the “LOCK” position, then move the gearshift lever to the “R” (Reverse) position.
   On vehicles with automatic transaxle, move the selector lever to the “P” (PARK) position, then turn the ignition key to the “LOCK” position.
4. Turn on the hazard flashers and set up a warning triangle, flashing signal light, etc., at an adequate distance from the vehicle, and have all your passengers leave the vehicle.

5. To prevent the vehicle from rolling when it is raised on the jack, place chocks or blocks (A) at the tire that is diagonally opposite from the tire (B) you are changing.

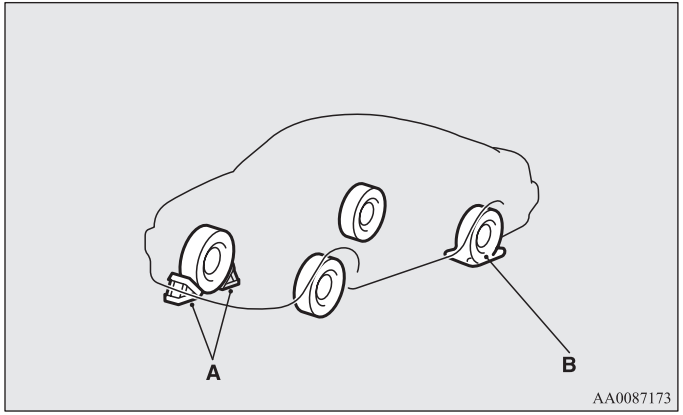


**⚠ WARNING**

- **Be sure to apply chocks or blocks to the correct tire when jacking up the vehicle. If the vehicle moves while jacked up, the jack could slip out of position, leading to an accident.**

NOTE

- The chocks shown in the illustration do not come with your vehicle. It is recommended that you purchase chocks or blocks and keep them in the vehicle for use if needed.
- If chocks or blocks are not available, use stones or any other objects that are large enough to hold the wheel in position.

6. Get the jack, bar and wheel nut wrench ready.
   Refer to “Tools and jack” on page 6-8.

## Spare tire information

N00849600285

### *Compact spare tire*

The compact spare tire is designed to save space in the cargo area (trunk). Its lighter weight makes it easier to use if a flat tire occurs.

**⚠ *WARNING***

- **Tires, including spare tire, degrade over time with age even when they are not being used.**
  **It is recommended that tires over 6 years generally be replaced even if damage is not obvious.**

**⚠ *CAUTION***

- **While the compact spare tire is stowed, the inflation pressure should be checked at least once a month to assure that it remains at the recommended inflation pressure. See the tire and loading information placard attached to the driver's door sill.**
  **Refer to "Tire and loading information placard" on page 9-4.**
- **Driving with an improperly inflated tire can cause an accident. If you have no choice but to drive with an under-inflated tire, keep your speed down and avoid sudden steering or braking, if possible. Inflate the tire to the correct pressure as soon as possible. Refer to "Tire inflation pressures" on page 7-23.**
- **The compact spare tire should only be used temporarily. When the compact spare tire is used, the tire pressure monitoring system will not work properly. See an authorized Mitsubishi Motors dealer as soon as possible to replace or repair the original tire.**
- **If your vehicle has aluminum type wheels, you can use the same wheel nuts on the compact spare tire wheel.**
- **Do not go over 50 mph (80 km/h) when driving with the compact spare tire.**
- **Avoid fast starting and braking when driving with the compact spare tire.**
- **Do not drive through automatic car washes and over obstacles that could possibly damage the underside of your vehicle. Because the compact spare tire is smaller than the original tire, there is less clearance between the ground and your vehicle.**

**⚠ CAUTION**

- **Because the compact spare tire is designed only for your vehicle, do not use it on any other vehicle.**
- **Do not put the compact spare tire on a different wheel, and do not put standard tires, snow tires, wheel covers or trim rings on the compact spare wheel. Damage may result.**
- **Do not use snow chain with your compact spare tire. Using a chain could cause damage to your vehicle and loss of the chains.**

## To remove the spare tire

N00849700101

1. Lift up the luggage floor board.
2. To remove the spare tire, remove the installation clamp (A) by turning it counterclockwise.

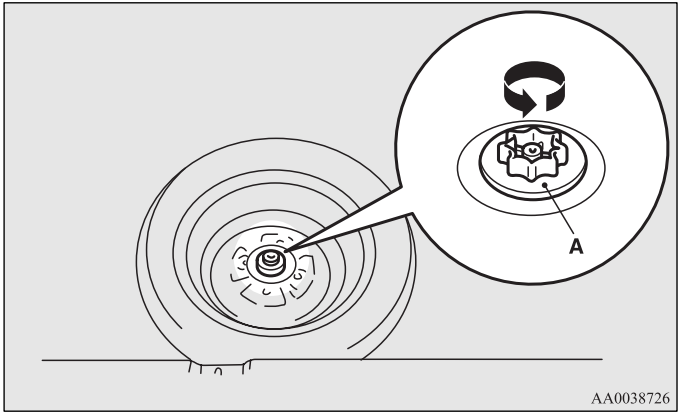


NOTE

- The clamp cannot be used for a normal tire. Store the normal tire in the cargo area (trunk).

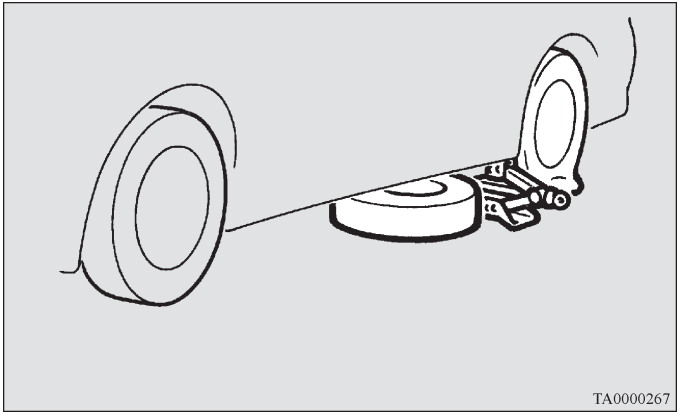


NOTE

- Put the spare tire under the vehicle body near the jack. This makes it safer if the jack slips out of position.

## To change a tire

N00849800320

1. Loosen the wheel nuts with the wheel nut wrench. Do not remove the wheel nuts yet.

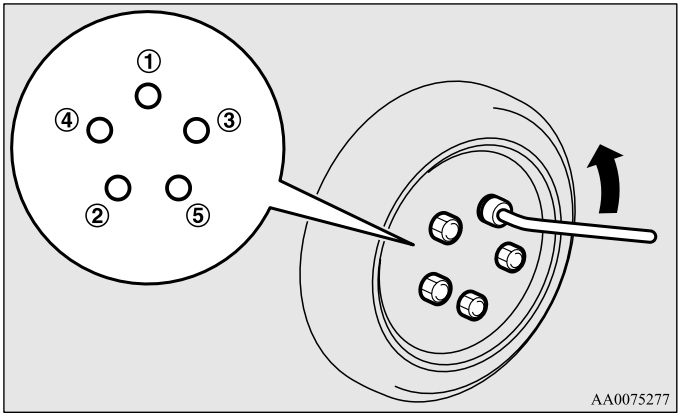

2. Place the jack under one of the jacking points (A) shown in the illustration. Use the jacking point closest to the tire you wish to change.

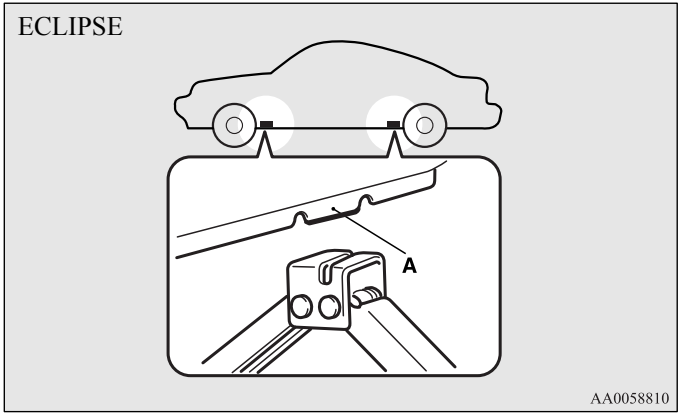


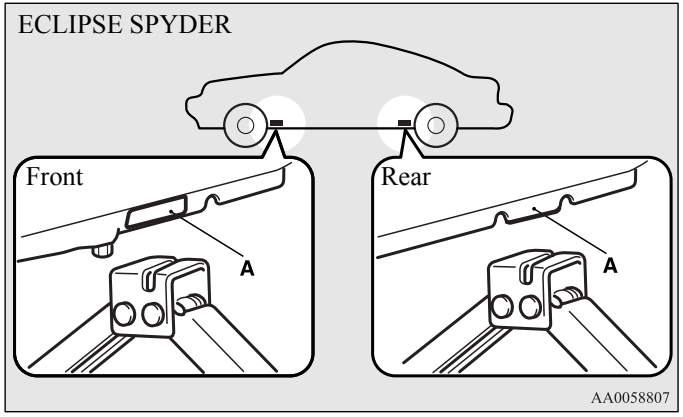


**⚠ WARNING**

- **Set the jack only at the positions shown here. If the jack is set at a wrong position, it could dent your vehicle or the jack might fall over and cause personal injury.**
- **Do not use the jack on a tilted or soft surface. Otherwise, the jack might slip and cause personal injury. Always use the jack on a flat, hard surface. Before setting the jack, make sure there are no sand or pebbles under the jack base.**

3. Rotate the jack by hand until the flange portion (B) fits in the groove (C) at the top of the jack.

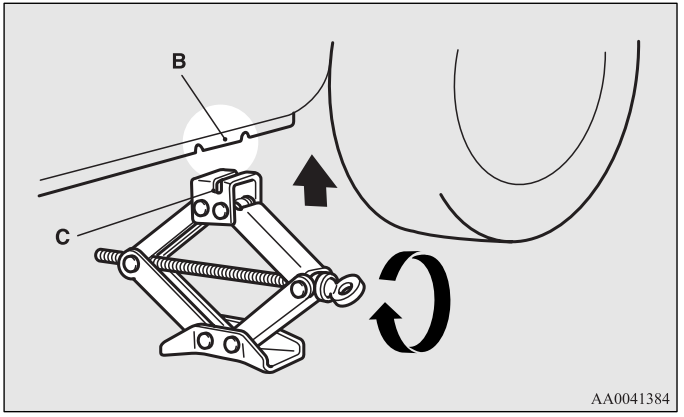

4. Insert the bar (D) into the wheel nut wrench (E). Then put the end of the bar into the shaft's jack end, as shown in the illustration.
   Slowly rotate the wheel nut wrench until the tire is raised slightly off the ground surface.

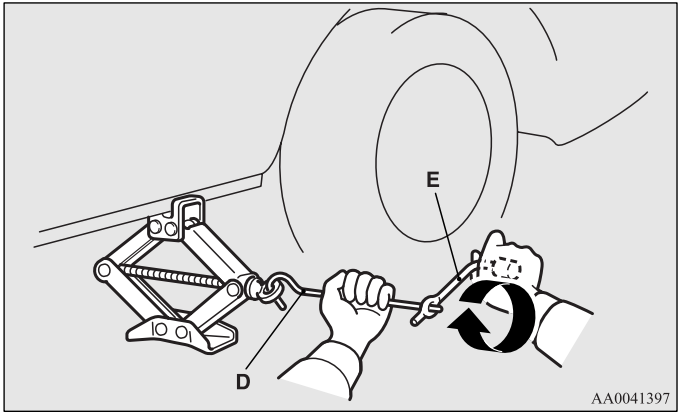


**⚠ WARNING**

- **Stop jacking up the vehicle as soon as the tire is raised off the ground. It is dangerous to raise the vehicle any higher.**
- **Do not get under your vehicle while using the jack.**
- **Do not bump the raised vehicle or leave it sitting on the jack for a long time. Both are very dangerous.**
- **Do not use a jack except the one that came with your vehicle.**
- **The jack should not be used for any purpose other than to change a tire.**

**⚠ WARNING**

- **No one should be in your vehicle when using the jack.**
- **Do not start or run the engine while your vehicle is on the jack.**
- **Do not turn the raised wheel. The tires that are still on the ground could turn and make your vehicle fall off the jack.**

5. Remove the wheel nuts with the wheel nut wrench, then take the wheel off.

**⚠ CAUTION**

- **Handle the wheel carefully when changing the tire, to avoid scratching the wheel surface.**

6. Clean out any mud, etc. on the hub surface (F), hub bolts (G) or in the installation holes (H) in the wheel, and then mount the spare tire.

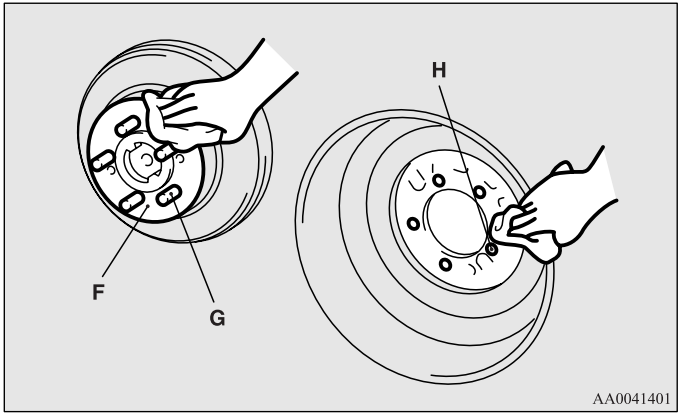


**⚠ WARNING**

- **Mount the spare wheel with the valve stem (I) facing outboard. If you cannot see the valve stem (I), you have installed the wheel backwards.**
  **Operating the vehicle with the spare wheel installed backwards can cause vehicle damage and result in an accident.**

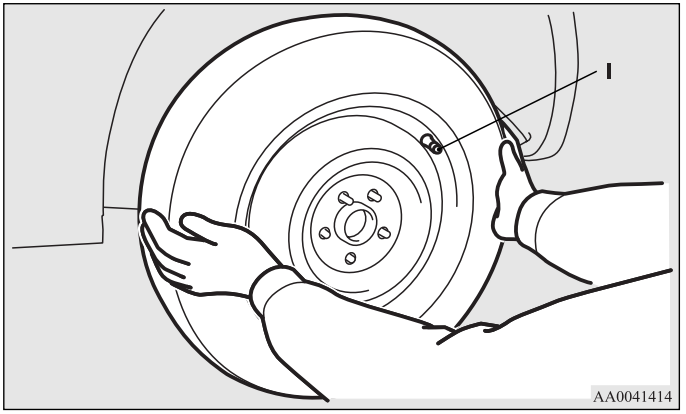

7. [Normal wheels]
   Temporarily tighten the wheel nuts (flange nuts) until their flange section comes in contact with the wheel and it is no longer loose.

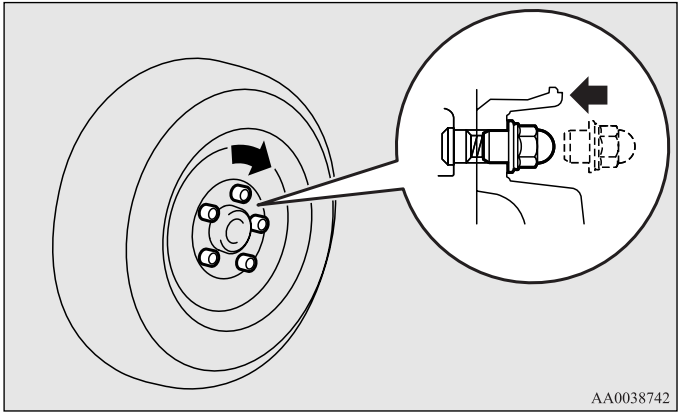


[Compact spare wheel]
Install the wheel nuts with their tapered ends facing inward, then tighten by hand until the wheel is no longer loose.

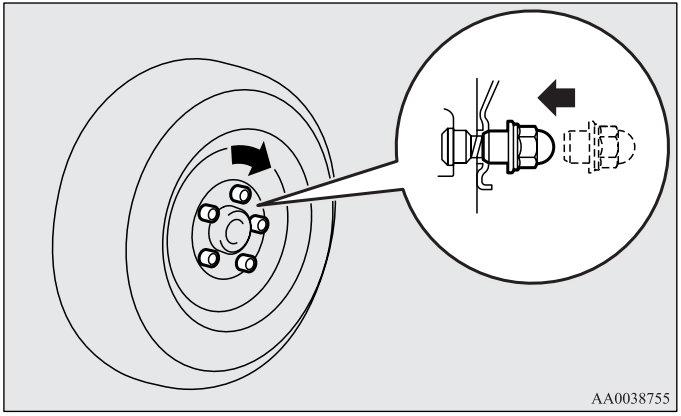


**⚠ CAUTION**

- **Never apply oil to either the wheel bolts or the nuts or they will tighten too much.**

NOTE
- Flange nuts can be temporarily used on the compact spare or steel wheel, but return them to the original wheel and tire as soon as possible.
- If all four wheels are changed to steel wheels, use tapered nuts.

8. Lower the vehicle slowly by rotating the wheel nut wrench counterclockwise until the tire touches the ground.

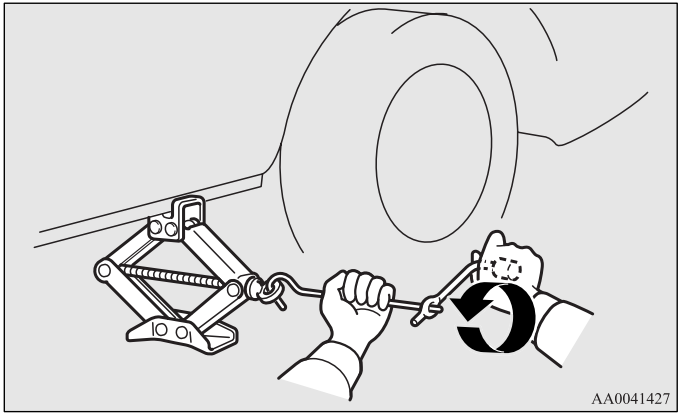


9. Tighten the nuts in the order shown in the illustration until each nut has been tightened to the torque listed here.
**88 to 108 N•m (65 to 80 ft-lb)**

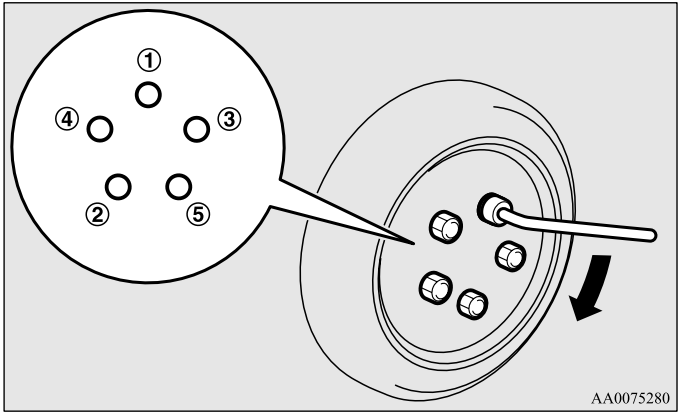


**⚠ CAUTION**

- **Never use your foot or a pipe extension to apply added force to the wheel nut wrench when tightening the wheel nuts. If you do so, you can over-tighten the wheel nuts and damage the wheel.**

10. Lower the jack all the way and remove it.

11. Check the tire inflation pressure. The recommended tire pressure for your vehicle is listed on the tire and loading information placard attached to the driver's door sill as shown in the illustration.
    Refer to "Tire inflation pressures" on page 7-23.

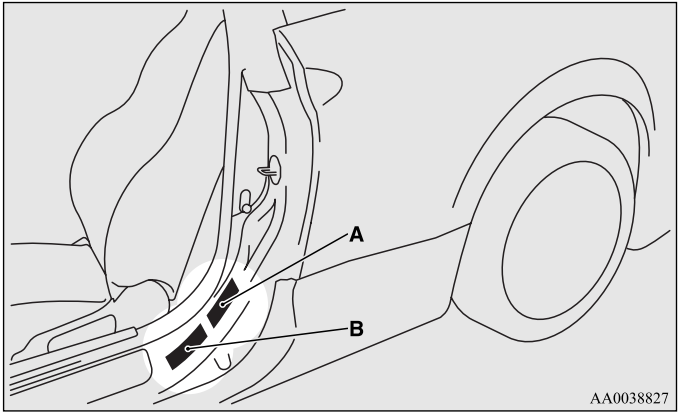


A- All vehicles
B- Vehicles sold in Canada

**⚠ CAUTION**

- **While the compact spare tire is stowed, the inflation pressure should be checked at least once a month to assure that it remains at the recommended inflation pressure. See the tire and loading information placard attached to the driver's door sill.**
  **Refer to "Tire and loading information placard" on page 9-4.**

**⚠ CAUTION**

- **Driving with an improperly inflated tire can cause an accident. If you have no choice but to drive with an under-inflated tire, keep your speed down and avoid sudden steering or braking, if possible. Inflate the tire to the correct pressure as soon as possible. Refer to "Tire inflation pressures" on page 7-23.**
- **The compact spare tire should only be used temporarily. When the compact spare tire is used, the tire pressure monitoring system will not work properly. See an authorized Mitsubishi Motors dealer as soon as possible to replace or repair the original tire.**
- **After changing the tire and driving the vehicle about 620 miles (1,000 km), retighten the wheel nuts to make sure that they have not come loose.**
- **If the steering wheel vibrates when driving after changing the tire, have the tire checked for balance at your nearest authorized Mitsubishi Motors dealer or a repair facility of your choice.**
- **Do not mix one type of tire with another or use a different size from the one listed. This would cause early wear and poor handling.**

## To store the flat tire or spare tire, jack, bar and wheel nut wrench

N00850000087

Reverse the removing procedure when storing the flat tire or spare tire, jack, bar and wheel nut wrench.
Refer to "To remove the spare tire" on page 6-12 and "Tools and jack" on page 6-8.

# *Towing*

N00837000732

## If your vehicle needs to be towed

If towing is necessary, we recommend you to have it done by a commercial tow truck service.
When towing is required, transport the vehicle using a tow truck.
Incorrect towing equipment could damage your vehicle.

**⚠ *CAUTION***

- **Do not attempt to be towed by another vehicle with a rope.**

There may be local regulations concerning towing in your area. Obey the regulations of the area where you are driving your vehicle.

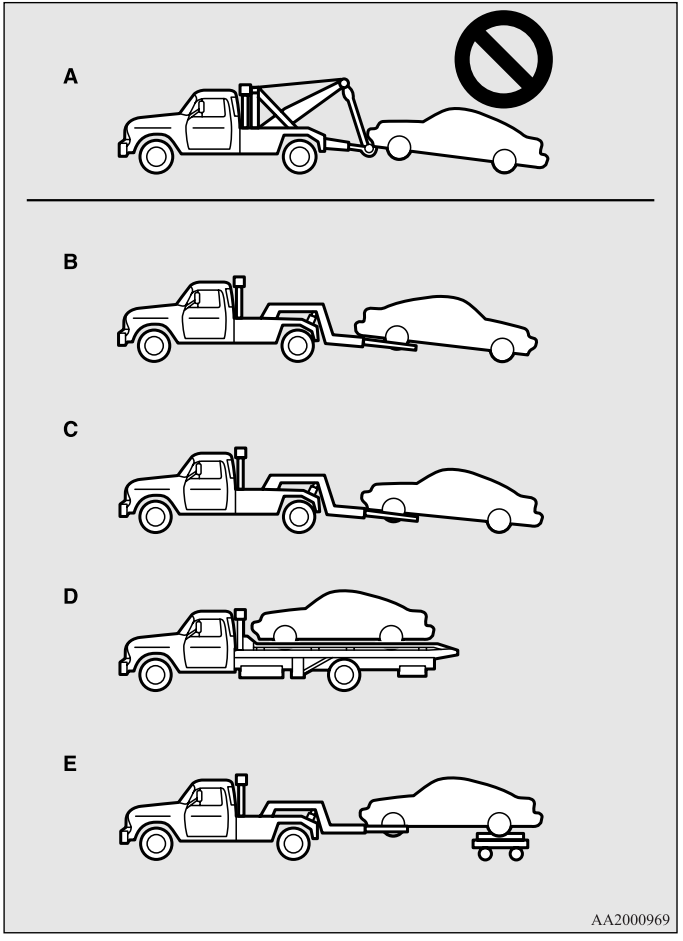

## Towing the vehicle by a tow truck

**⚠ CAUTION**

- **This vehicle must not be towed by a tow truck using sling lift type equipment (Type A) as illustrated. Using a sling lift will damage the bumper and front end.**
- **If the engine or transaxle is malfunctioning or damaged, transport the vehicle with the driving wheels on a carriage (Type C, D or E) as illustrated.**
- **If the vehicle is towed with the ignition key in the "ON" position and only the front wheels or only the rear wheels raised off the ground, the ASC may operate, resulting in an accident. When towing the vehicle with the front wheels raised, keep the ignition key in the "LOCK" or "ACC" position. When towing the vehicle with the rear wheels raised, keep the ignition key in the "ACC" position.**
- **If you tow the vehicles with an automatic transaxle with the driving wheels on the ground (Type B) as illustrated, make sure that the towing speed and distance given below are never exceeded, causing the transaxle damage.**
  **Towing speed: 31 mph (50 km/h)**
  **Towing distance: 18 miles (30 km)**

  **For the towing speed and the towing distance, follow the local driving laws and regulations.**

### *Towing with rear wheels off the ground (Type B)*

Place the gearshift lever in the "Neutral" position (manual transaxle) or the selector lever in the "N" (NEUTRAL) position (automatic transaxle).
Turn the ignition key to the "ACC" position and secure the steering wheel in a straight-ahead position with a rope or tie-down strap. Never place the ignition key in the "LOCK" position when towing.

**⚠ CAUTION**

- **Never tow an automatic transaxle vehicle with the rear wheels up (and the front wheels on the ground) (Type B) when the automatic transaxle fluid level is low. This may cause serious and expensive damage to the transaxle.**

### *Towing with front wheels off the ground (Type C)*

Release the parking brake.
Place the gearshift lever in the “Neutral” position (manual transaxle) or the selector lever in the “N” (NEUTRAL) position (automatic transaxle).

**⚠ *WARNING***

- **To prevent entry of exhaust gas from the towing vehicle, set the selection switch to the recirculation position.**

## *Operation under adverse driving conditions*

N00837200721

### If your vehicle becomes stuck in sand, mud or snow

If your vehicle becomes stuck in snow, sand, or mud, it can often be moved by a rocking motion. Move the gearshift lever (manual transaxle) or selector lever (automatic transaxle) rhythmically between 1st and Reverse position (with manual transaxle) or “Sports mode” and “R” (REVERSE) position (with automatic transaxle), while pressing lightly on the accelerator pedal.
Do not race the engine nor spin the wheels. Constant efforts to free a stuck vehicle can cause overheating and transaxle failure. Let the engine idle for a few minutes to cool the transaxle before trying again.
If your vehicle is still stuck after several rocking attempts, call for a commercial tow truck service.

**⚠ *WARNING***

- **When trying to rock your vehicle out of a stuck position, make sure that there are no people nearby. The rocking motion can make your vehicle suddenly lurch forward or backward, and injure any bystanders.**

## On wet roads

**⚠ CAUTION**

- **Avoid flooded roads. Water is often deeper than it looks, and you could be seriously hurt by driving into flood water.**
- **When driving in rain, on water-covered roads, or through a car wash, water could get into the brake discs and make them fail temporarily. In such cases, lightly press the brake pedal to see if they are working properly. If they are not, press the pedal lightly several times while driving to dry the brake pads, then check them again.**
- **When driving in rain, a layer of water may form between the tires and the road surface (aquaplaning). This loosens your tires' grip on the road, making it difficult to steer or brake properly. When driving on a wet road:**
  - **Drive your vehicle at a safe speed.**
  - **Do not drive on worn tires.**
  - **Always keep the tires at the correct inflation pressures.**

## On snowy or icy roads

- When driving on a road covered with snow or ice, use snow tires. Tire chains cannot be used on your vehicle. There may be state or local regulations about using snow tires. Always check the regulations in your local area before using them. Refer to the section entitled "Snow tires" on page 7-28 and "Tire chains" on page 7-29.
- Drive slowly. Do not make sudden starts or stops, sharp turns, or slam on the brakes.
- Pressing the brake pedal when driving on snowy or icy roads can make your tires slip and skid. When a skid occurs, take your foot off the accelerator. Steer gently into the skid. As your vehicle is equipped with an anti-lock braking system (ABS), brake by pressing the brake pedal firmly and keep it depressed.
- Allow extra distance between your vehicle and the vehicle in front of you, and avoid sudden braking.
- After parking on snowy or icy road, it may be difficult to move your vehicle due to freeze-up of the brake. Depress the accelerator pedal little by little to move the vehicle after confirming safety of the vehicle.

**⚠ CAUTION**

- **Do not depress the accelerator pedal rapidly. The vehicle could start moving when it breaks free from the ice, possibly resulting in an accident.**

## On a bumpy or rutted road

Drive as slow as possible when driving on bumpy or rutted roads or over pothole etc.

**⚠ *CAUTION***

- **Driving on bumpy, rutted roads or over potholes can damage the tires and wheels.**
  **Wheels with low-profiles tires or under-inflated tires are especially at risk for damage.**
- **The vehicle's body, bumper, muffler and other parts may be damaged if the vehicle is:**
  - **driven over a step (for example, at the entrance or exit of a parking lot);**
  - **parked too closely against a curb or parking block, or by the side of a road with curbstones;**
  - **driven on a steep slope.**

# *Vehicle care and maintenance*


Service precautions . . . . . 7- 2
Catalytic converter . . . . . 7- 3
Engine hood . . . . . 7- 4
View of the engine compartment . . . . . 7- 6
Engine oil and oil filter . . . . . 7- 7
Engine coolant . . . . . 7- 10
Air cleaner filter . . . . . 7- 11
Automatic transaxle fluid (if so equipped) . . . . . 7- 12
Manual transaxle oil (if so equipped) . . . . . 7- 14
Washer fluid . . . . . 7- 14
Brake fluid/Clutch fluid (if so equipped) . . . . . 7- 15
Power steering fluid . . . . . 7- 16
Battery . . . . . 7- 16
Tires . . . . . 7- 20
Clutch pedal free play (if so equipped) . . . . . 7- 29
Brake pedal free play . . . . . 7- 30
Parking brake lever stroke . . . . . 7- 30
Wiper blades . . . . . 7- 31
Emission-control system maintenance . . . . . 7- 31
General maintenance . . . . . 7- 33
For cold and snowy weather . . . . . 7- 37
Fuse links . . . . . 7- 37
Fuses . . . . . 7- 38
Replacement of light bulbs . . . . . 7- 47
Vehicle care precautions . . . . . 7- 71
Cleaning the inside of your vehicle . . . . . 7- 72
Cleaning the outside of your vehicle . . . . . 7- 73

## *Service precautions*

N00937300156

Taking regular care of your vehicle will preserve its value and appearance as long as possible.

You can do some of the maintenance work yourself, and the rest should only be performed by an authorized Mitsubishi Motors dealer or a repair facility of your choice.
If you discover a malfunction or other problem, have it corrected by an authorized Mitsubishi Motors dealer or a repair facility of your choice.
This section describes the maintenance inspections that you can do yourself, if you so desire. Follow the instructions and precautions for each procedure.

**⚠ *WARNING***

- **When checking or servicing the inside of the engine compartment, be sure the engine is stopped and has had a chance to cool down.**
- **If you need to work in the engine compartment with the engine running, be especially careful that your clothing, hair, etc. does not get caught in the fan, drive belts, or other moving parts.**
- **The fan can turn on automatically even if the engine is not running. Turn the ignition key to the "LOCK" position and remove the key to be safe while you work in the engine compartment.**
- **Do not smoke or allow open flames around fuel or the battery. The fumes are flammable.**

**⚠ *WARNING***

- **Be extremely careful when working around the battery. It contains poisonous and corrosive sulfuric acid.**
- **Do not get under your vehicle while it is on a jack. Always use properly rated automotive jack stands.**
- **Handling your vehicle's parts and materials in the wrong way can injure you. Ask an authorized Mitsubishi Motors dealer or a repair facility of your choice if you have questions.**

MITSUBISHI MOTORS

DIAMOND CARE™ PROTECTION PLAN

Have you purchased the Mitsubishi Motors Diamond Care Protection Plan? The Plan supplements your new vehicle warranties. See your authorized Mitsubishi Motors dealer for details.

## *Catalytic converter*

N00937400391

The catalytic converter requires you to use unleaded fuel only. Leaded gasoline will destroy the emission-control effectiveness of the converter.

Normally, the catalytic converter does not require maintenance. However, it is important to keep the engine properly tuned for the converter to continue to work properly.

**⚠ *CAUTION***

- **Damage to the catalytic converter can result if your vehicle is not kept in proper operating condition. If the engine malfunctions or misfires, or if your vehicle performance suffers, have it serviced promptly. Running your vehicle when it is overheated may result in damage to the converter and vehicle.**

**⚠ *WARNING***

- **Do not park or run your vehicle in areas where combustible materials such as dry grass or leaves can come in contact with a hot exhaust, since a fire could occur.**
- **Do not put undercoat paint on the catalytic converter.**

To reduce the possibility of catalytic converter damage:

- Use UNLEADED GASOLINE ONLY of the type of recommended in “Fuel selection”.
- Do not drive with an extremely low fuel level. Running out of gas could damage the catalytic converter.
- Do not try to start the engine by pushing or towing the vehicle. If the battery is weak or run down, use jumper cables to properly start the engine.
- Do not idle the engine with any spark plug wires disconnected or removed, such as when performing diagnostic tests.
- Do not idle the engine for a long time if it is idling roughly or otherwise obviously malfunctioning.
- To prevent the catalytic converter from being damaged from unburned gas, do not race the engine when turning off the ignition switch.
- Stop driving the vehicle if you think the performance is noticeably low, or the engine has a malfunction. If you are not able to stop driving immediately, slow down and drive for only a short time. Have an inspection made by an authorized Mitsubishi Motors dealer or a repair facility of your choice as soon as possible.
- In unusual situations involving major engine problems, a burning odor may indicate severe and abnormal catalytic converter overheating. If this occurs, stop in a safe place, shut the engine off and let the vehicle cool. Once the engine is cool, immediately take your vehicle to an authorized Mitsubishi Motors dealer or a repair facility of your choice for service.

# *Engine hood*

N00937500536

## To open

Use the engine hood release lever (located under the instrument panel near the driver's door) to unlock the engine hood.

Pull the lever toward you to release the engine hood latch.

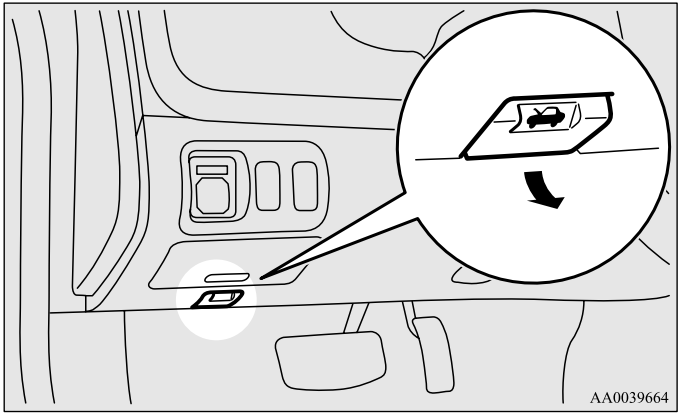


**⚠ *WARNING***

- **Never use the release lever to unlatch the engine hood while the vehicle is in motion.**
- **Do not drive your vehicle unless the engine hood is locked.**

Release the safety lever and lift the engine hood.

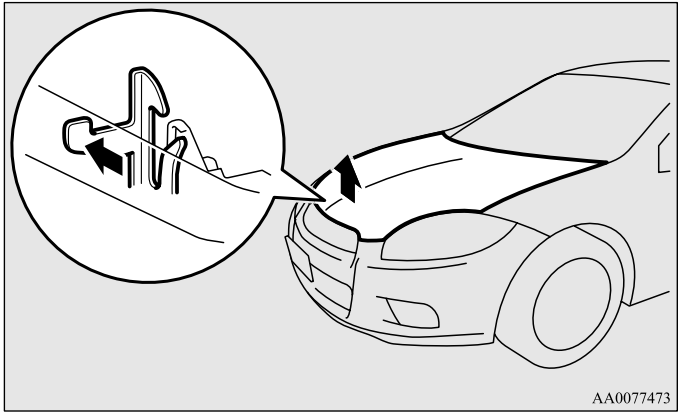


NOTE

- To prevent damage to the engine hood and wipers, make sure the wipers are at resting position when you open the engine hood.

Support the engine hood with the hood prop. Insert the hood prop securely in the opening under the hood marked with an arrow.

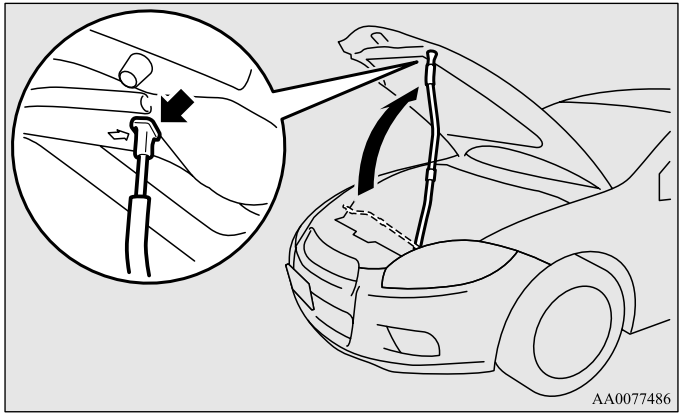


**⚠ CAUTION**

- **Always insert the support prop into the hole specially made for it. Propping the engine hood at any other place could cause the prop to slip out and lead to an accident.**
- **The hood prop can fall out if the hood is lifted by a strong wind.**

## To close

Unlatch the prop from the engine hood and put it back in its retainer.

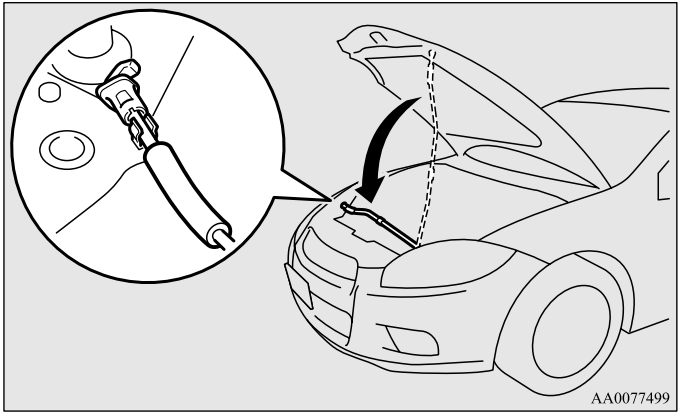


Slowly lower the engine hood about 8 inches (20 cm), then let it drop from its own weight.

NOTE

- If this does not close the engine hood properly, drop it again from a slightly higher position.

**⚠ CAUTION**

- **Be careful not to trap your hands or fingers when closing the engine hood.**

# *View of the engine compartment*

N00937600540

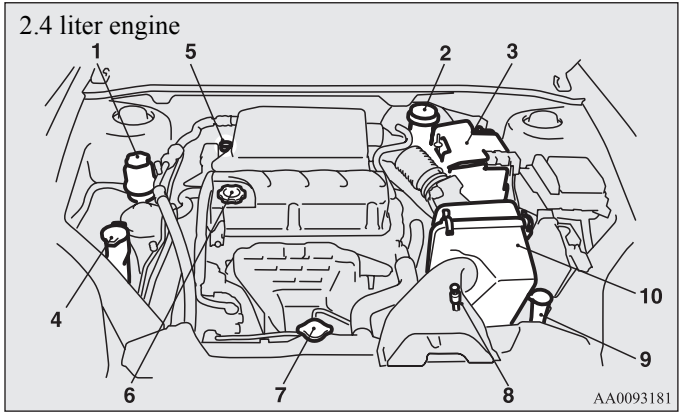


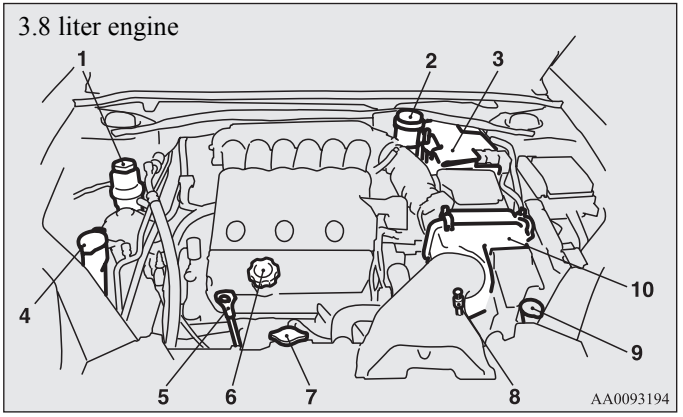


1- Power steering fluid reservoir
2- Brake fluid/Clutch fluid reservoir (if so equipped)
3- Battery
4- Windshield and rear window washer (ECLIPSE only) fluid reservoir
5- Engine oil level dipstick
6- Engine oil filler cap
7- Radiator cap
8- Automatic transaxle fluid level dipstick (if so equipped)
9- Engine coolant reservoir
10- Air cleaner filter

# *Engine oil and oil filter*

N00937700828

## To check and refill engine oil

It is normal for an engine to use oil. You may need to add oil between the recommended oil change intervals. Before starting the engine, check the engine oil level. Refill if necessary.

To check the oil level, remove the dipstick, wipe it off, and gently insert it all the way into the crankcase. Slowly remove it again. The oil level must not go above the line on the dipstick.

If the level does not reach the line, which shows the smallest amount of oil required, remove the oil filler cap on the engine valve cover, and fill to within the “Good” range.

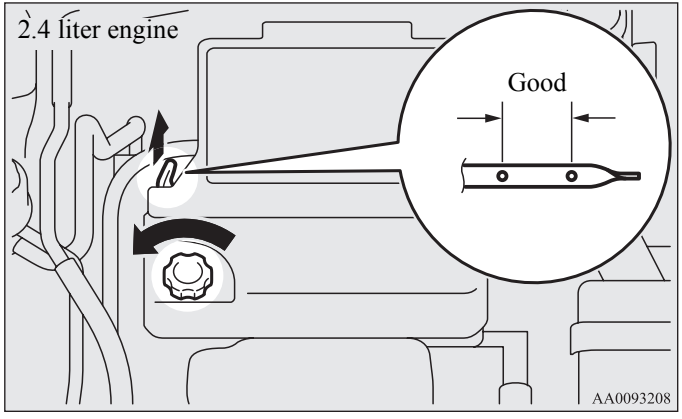


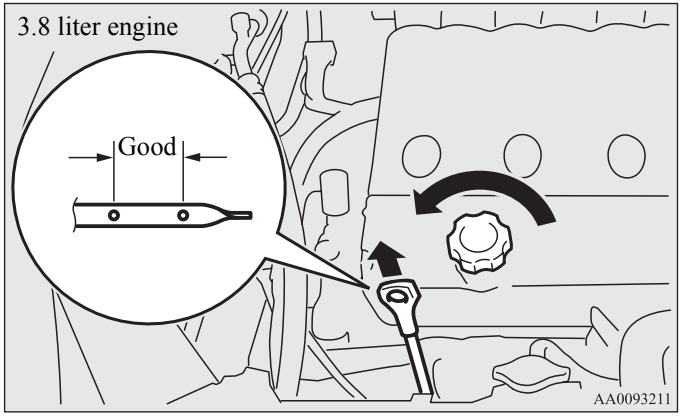


**⚠ CAUTION**

- **Overfilling the crankcase will cause oil aeration and loss of oil pressure, which could damage the engine.**

**⚠ WARNING**

- **Used engine oil is poisonous, and can damage your skin. Prolonged and repeated contact may cause serious skin disorders, including dermatitis and cancer. Don’t let used oil touch your skin. Wash thoroughly after working with it.**
- **Keep used oil out of the reach of children.**

NOTE
- Engine oil consumption is greatly influenced by payload, engine speed, etc.
- The engine oil will deteriorate rapidly if the vehicle is subjected to severe conditions (for example, repeated operation on rough roads, in mountainous regions, on roads with many uphill and downhill gradients, or over short distances). Consequently, the oil will require earlier replacement in accordance with the schedule in the “WARRANTY AND MAINTENANCE MANUAL”.

### *Engine oil identification mark*

Mitsubishi Motors recommends using only engine oils with the ILSAC certification symbol on the front of the container.

ILSAC certification symbol

TA0000313

If you cannot find oils with the ILSAC certification symbol, use an API classification SM or higher oil with the following label.
This mark appears on the top of the oil container and tells you two important things about the oil.

API service symbol

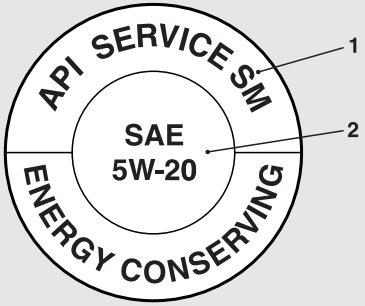


AA0052557

1- The top portion shows the quality of the oil.
2- The center portion shows the SAE grade of the oil viscosity.

## Recommended engine oil viscosity

SAE 5W-20 engine oil is strongly recommended for optimum fuel economy and cold starting.

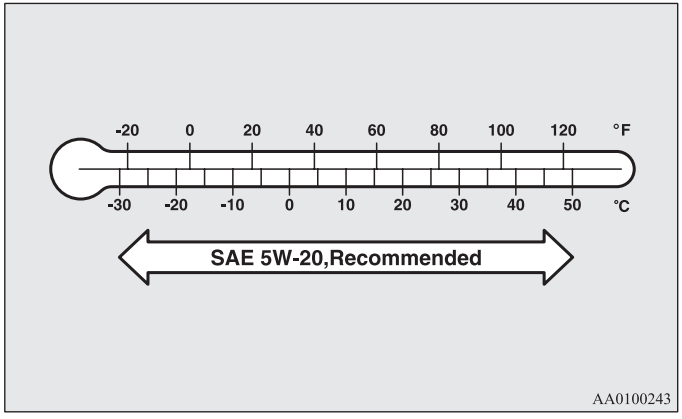


## To replace the oil filter

The oil filter should be replaced at the time or mileage specified in the “WARRANTY AND MAINTENANCE MANUAL”.

Only use high quality replacement filters on this vehicle. The manufacturer’s specifications for Genuine Mitsubishi oil filters require that the filter can withstand a pressure of 256 psi (1.8 MPa). A Genuine Mitsubishi oil filter is the best replacement filter.

Follow the installation instructions printed on the filter.

**⚠ *CAUTION***

- **Take care not to bend the oil filter cover when replacing the oil filter.**

# *Engine coolant*

N00937800281

## To check the coolant level

The coolant reserve system provides a quick visual method for determining the coolant level. When the engine is cold, the level of the coolant in the reserve tank should be between the "F" (FULL) and "L" (LOW) marks. The radiator normally remains completely full so there is no need to remove the radiator cap except for checking the coolant freeze point or replacing the antifreeze coolant.

## To add coolant

Use Mitsubishi Genuine Coolant or an equivalent.

Mitsubishi Genuine Coolant provides excellent protection against corrosion and rust formation on all metals, including aluminum, and prevents blockages in the radiator, heater, cylinder head, engine block, etc.

If you need to add coolant often, or if the level in the reserve tank does not drop when the engine cools, the cooling system should be pressure-tested for leaks. Take your vehicle to an authorized Mitsubishi Motors dealer or a repair facility of your choice for testing.

**⚠ *CAUTION***

- **Do not use alcohol or methanol antifreeze or any engine coolants that contain them. Using the wrong antifreeze can corrode aluminum parts.**
- **When you need to add coolant to the reserve tank, use at least a 50 % concentration of ethylene-glycol antifreeze in water. Do not overfill. Use a higher concentration (not over 60 %) when the outside temperature is -31 °F (-35 °C) or lower. When the engine is working very hard (for example, during mountain driving and/or when the outside temperature is high), use a 50 % concentration. You can check the concentration level with a gauge from an automotive supply store, or your authorized Mitsubishi Motors dealer or service station can check it for you. Use only high quality ethylene-glycol antifreeze coolant that is made to prevent corrosion of all cooling system metals.**
- **Do not top off the tank with plain water only. Water by itself boils at a lower temperature and does not stop rust or freezing. If the water freezes, it will damage your cooling system. Do not use tapwater. It can cause corrosion and rust.**

## Radiator cap

The radiator cap must be tight sealed to prevent losing coolant which may result in engine damage. Only use a Genuine Mitsubishi Parts radiator cap, or an approved equivalent.

**⚠ WARNING**

- **Wait for the engine to cool down before opening the radiator cap. Otherwise hot steam or boiling coolant could spray up from the radiator and scald you.**

## Points to remember

- Do not overfill the reserve tank.
- Your vehicle uses a special radiator cap that stays sealed and lets the coolant flow from the reserve tank back to the radiator when the engine cools down. If you need to change the cap, use the exact same kind.
- Check the coolant freeze point in the radiator with the proper gauge, and only when it is safe. If you add anti-freeze, the contents of the reserve tank must be protected against freezing.
- Keep the front of the radiator and condenser clean.
- If the temperature of the engine coolant does not rise after the engine is warmed-up, take your vehicle to an authorized Mitsubishi Motors dealer or a repair facility of your choice to have the thermostat checked, and replaced if necessary.

# *Air cleaner filter*

N00937900165

The air cleaner filter will get dirty and dusty from use and not filter properly. Replace it with a new filter using the schedule in the “WARRANTY AND MAINTENANCE MANUAL”.

## 2.4 liter models

Unclamp and take out the air cleaner filter.

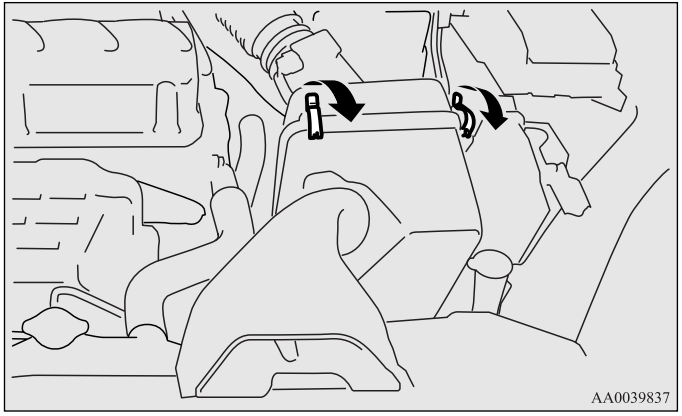


After replacing the air cleaner filter, put the cover back on in its original position.

## 3.8 liter models

1. Loosen the bolt of the resonator using a screwdriver.
2. Remove the resonator.

3. Unclamp and take out the air cleaner filter.

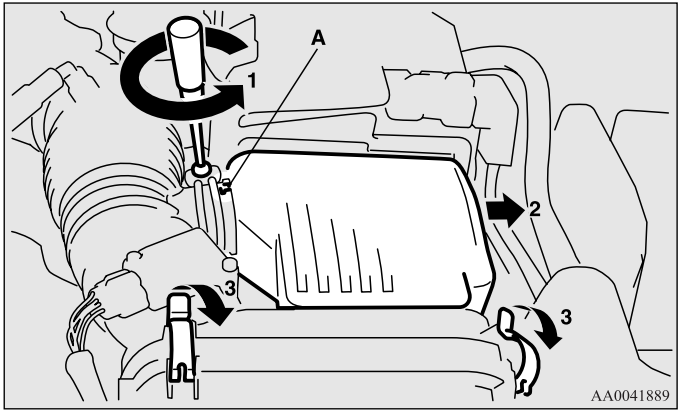


After replacing the air cleaner filter, install the resonator by following the removal steps in reverse. Fit the resonator with careful reference to the alignment position (A), and securely tighten the bolt.

NOTE
- Genuine Mitsubishi Motors Parts are recommended when replacing the air cleaner filter.

7

**⚠ CAUTION**

- **Take care not to scratch the engine air flow sensor when removing the air cleaner cover.**

# *Automatic transaxle fluid (if so equipped)*

N00938000512

The automatic transaxle should be maintained and serviced by an authorized Mitsubishi Motors dealer or a repair facility of your choice to obtain the best performance and longest life. It is important that the transaxle fluid is kept at the correct level.

## To check the fluid level

The fluid level should be checked when the engine temperature gauge shows the engine is warmed up and the fluid in the transaxle is heated to its normal working temperature. Driving with the wrong fluid level will rapidly wear out the transaxle and destroy the fluid.

## Procedure for checking the fluid level

1. With the brake pedal fully depressed and the engine idling, select each gear momentarily, ending with the selector lever in the “P” (PARK) position.
2. The fluid level should be at the HOT mark, but never above the HOT mark when the engine is warmed up. Add or drain fluid to get to the correct level.
3. Make certain that the dipstick cap is installed properly to keep dirt and water out of the transaxle.

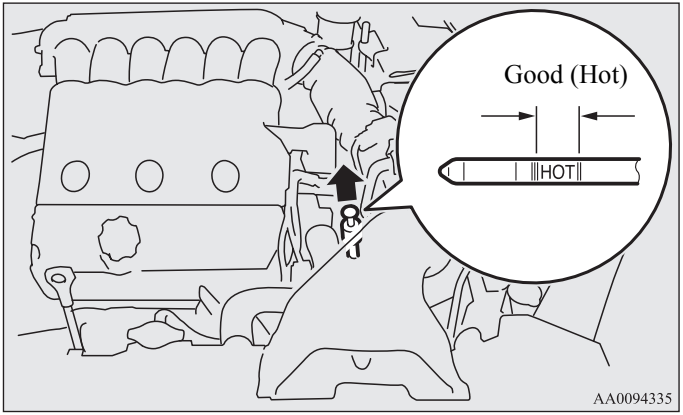


**⚠ WARNING**

- **Transaxle fluid is extremely flammable and poisonous. Do not spill fluid when adding or draining.**

## Fluid type

Use only “DIAMOND ATF SP III” transaxle fluid to ensure optimum transaxle performance.

## Special additives

Mitsubishi Motors Corporation does not recommend the addition of any fluid additives to the transaxle.

## *Manual transaxle oil (if so equipped)*

N00938200149

Whenever the manual transaxle oil level is checked, add oil to maintain the proper level, if necessary.
Refill or change the oil according to the table.

### Oil type

| | |
|---|---|
| Lubricant | DiaQueen NEW MULTI GEAR OIL<br>API Classification GL-3 |
| Viscosity range | SAE 75W-80 |

## *Washer fluid*

N00938600202

The windshield and rear window washer (ECLIPSE only) fluid reservoir is in the engine compartment.
Check the washer fluid level at regular intervals and add washer fluid to reservoir if necessary.

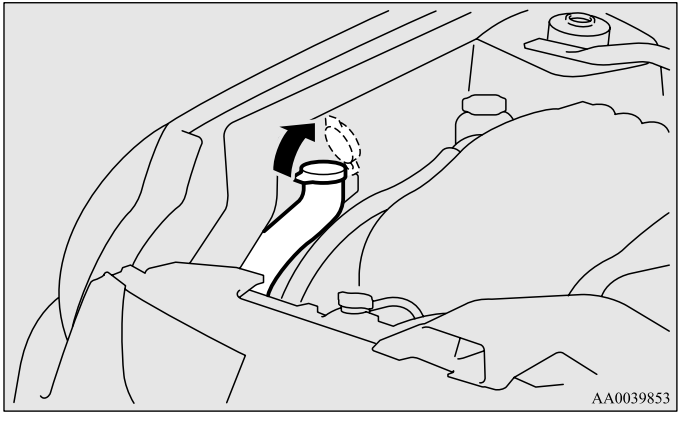


### During cold weather

When freezing weather is anticipated, flush out the water in the reservoir by operating the pump. Fill the reservoir with windshield antifreeze (not radiator antifreeze), and operate the system for a few seconds to flush out the residual water.

## *Brake fluid/Clutch fluid (if so equipped)*

N00938700229

The brake fluid and the clutch fluid share the reservoir tank.

### To check the fluid level

The fluid level must be between the “MAX” and “MIN” marks on the reservoir.

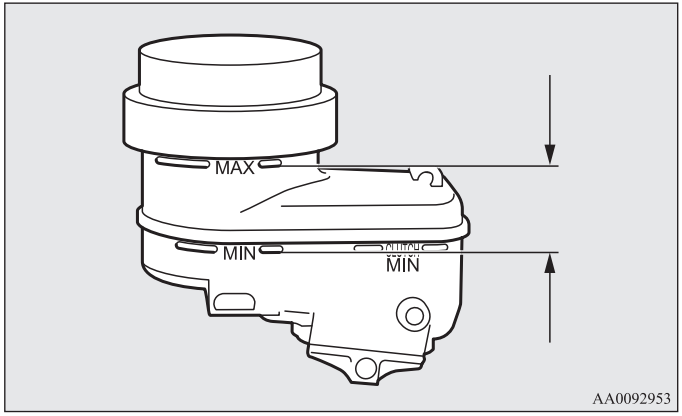


The fluid level is monitored by a float. When the brake fluid level falls below the “MIN” mark, the brake fluid warning lamp lights up.
The fluid level falls slightly with wear of the brake pads, but this does not indicate any abnormality.

The fluid in the master cylinder should be checked when doing other work under the engine hood. The brake system should also be checked for leaks at the same time.

If the fluid level falls markedly in a short length of time, it indicates leaks from the brake system.
If this occurs, have the vehicle checked by an authorized Mitsubishi Motors dealer or a repair facility of your choice.

### Fluid type

Use the brake fluid conforming to DOT 3 or DOT 4. The reservoir cap must be tightly sealed to keep dirt and water out.

**⚠ *CAUTION***

- **Do not let any petroleum-based fluid touch, mix with, or get into the brake fluid. This will damage the seals.**
- **Be careful when handling brake fluid. It can damage painted surfaces.**
- **Use only the listed brake fluid. Different brands of brake fluid have different additives, and these can cause a chemical reaction. Do not mix brands of brake fluid.**
- **Keep the reservoir tank cap closed to keep the brake fluid from evaporating.**

# *Power steering fluid*

N00939000333

## To check the fluid level

Check the fluid level in the reservoir while the engine is idling. Check to make certain that the power steering fluid level is always between the “MAX” and “MIN” level markings on the fluid reservoir and refill the fluid, if necessary.

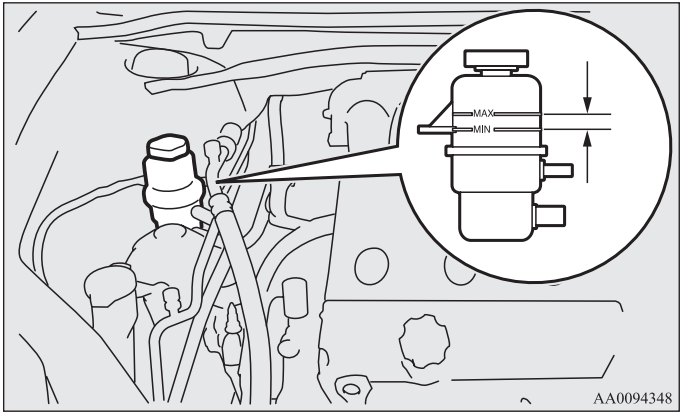


## Fluid type

| | |
|---|---|
| Lubricant | Genuine Mitsubishi Power Steering Fluid |

# *Battery*

N00939100318

The condition of the battery is very important for quick starting and to keep the vehicle’s electrical system working properly. Check the battery regularly.

If battery performance is suspect, have the battery and charging system tested by an authorized Mitsubishi Motors dealer or a repair facility of your choice.

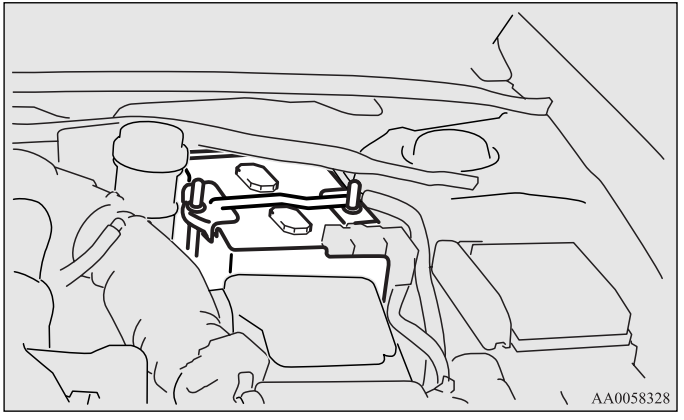

## Checking battery electrolyte level

Use the following procedure to check the battery electrolyte level.

1. Insert the tip of a screwdriver at the edge of the cap, pry gently to remove the cap.

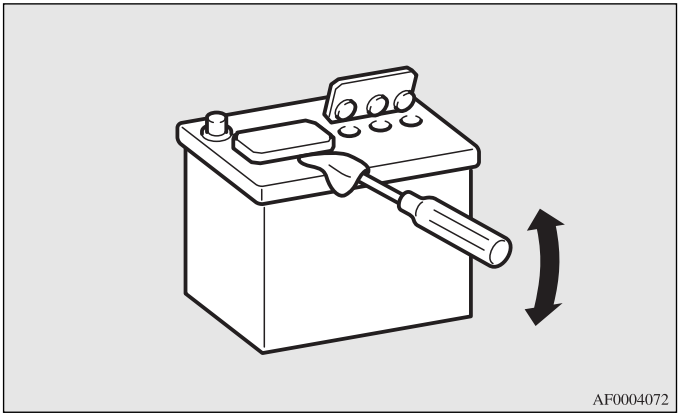


2. The inside of the battery is divided into several compartments.
   Check the electrolyte level (A) in each cell.
   The electrolyte level must be within the range (B) shown in the illustration.
   If it is necessary to add fluid, add only distilled water. Do not overfill above the top of the range because a spill during driving could cause damage.

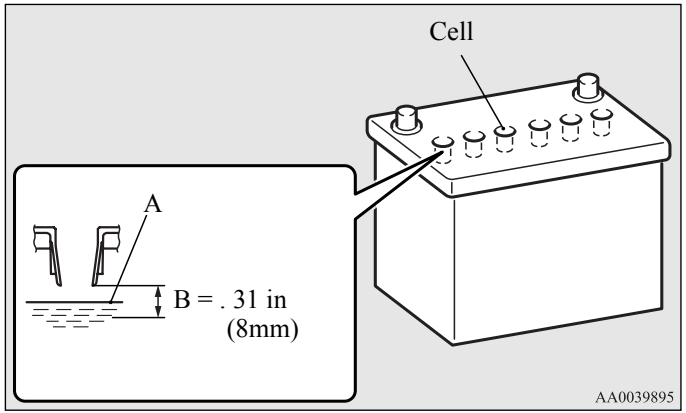


**⚠ WARNING**

- **If the battery goes flat, be sure to check the battery electrolyte level before connecting booster cables.**
- **After checking the battery electrolyte level, make sure the caps are fitted securely.**
- **If any of the caps has a loose fit, replace the battery.**

## During cold weather

The battery is weaker in cold temperatures. This has to do with its chemical and physical properties and is why a very cold battery, especially one with a low charge, will have a hard time starting your vehicle.

It is recommended that you have your battery and charging system checked by an authorized Mitsubishi Motors dealer or a repair facility of your choice before the start of cold weather. If necessary, have it charged. This will guarantee more reliable starting, and longer battery life.

## Disconnection and connection

To disconnect the battery cable, stop the engine. Disconnect the negative (-) terminal first, then the positive (+) terminal. To reconnect the battery, first connect the positive (+) terminal and then the negative (-) terminal, before starting the vehicle.

NOTE

- Open the terminal cover (A) before disconnecting or connecting the positive (+) terminal of the battery.

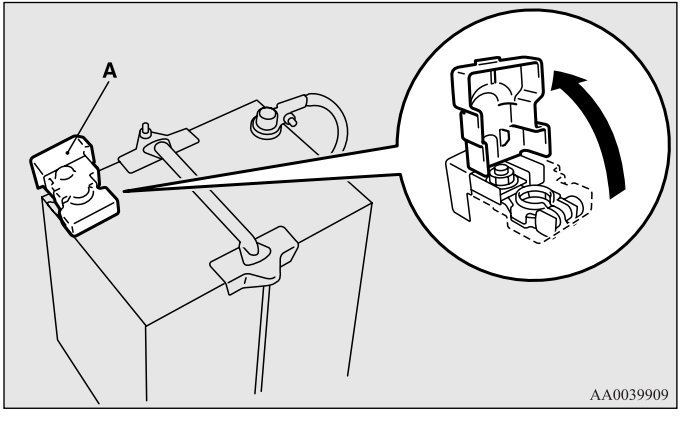

**⚠ WARNING**

- **Never disconnect the battery while the engine is running, or you could damage the vehicle's electrical parts.**
- **Never short-circuit the battery. This could cause it to overheat and be damaged.**
- **Keep sparks, cigarettes, and flames away from the battery because the battery could explode.**
- **Electrolyte (battery acid) is made of corrosive diluted sulfuric acid. If it spills on nearby parts, it can crack, stain, or discolor them. And if gets on your skin or in your eyes, it can cause burns or blindness. Please observe the following handling instructions:**
  - **If electrolyte gets on plastic parts or other nearby parts, wipe it off with a soft cloth or chamois soaked in a solution of water and neutral detergent then immediately rinse the affected parts with plenty of water.**
  - **If electrolyte gets on your hands or clothes, rinse thoroughly with water. If electrolyte gets in your eyes, flush them with water immediately and get immediate medical attention.**
- **Open doors and windows in any closed space where you may be charging or working with the battery.**
- **Always wear protective clothing and goggles when working with the battery, or have a skilled automobile technician do it.**
- **If you are quick-charging your battery, first disconnect the battery cables.**

**⚠ WARNING**

- **In order to prevent a short circuit, be sure to disconnect the negative (-) terminal first, and reconnect it last.**
- **If the electrolyte level is very low, have the battery checked at an authorized Mitsubishi Motors dealer or a repair facility of your choice.**
- **Battery terminals and related accessories contain lead and lead compounds. Wash hands after handling.**

NOTE

- Check each battery terminal for corrosion. You can stop more corrosion by washing with a solution of baking soda and water. Grease the posts and clamps after cleaning or tightening them.
- Check to see that the battery is securely installed and cannot be moved. Also check each terminal for tightness.
- If you will not be driving your vehicle for a long period of time, remove the battery and store it in a place where the battery fluid will not freeze. The battery only should be stored with a full charge.

# *Tires*

N00939200478

**⚠ *WARNING***

- **Driving with tires that are worn, damaged or improperly inflated is dangerous.**
  **These type tire conditions will adversely affect vehicle performance.**
  **These type tire conditions can also cause a tread separation or blowout which may result in an accident causing serious injury or death.**
- **Tires, including spare tire, degrade over time with age even when they are not being used. It is recommended that tires over 6 years generally be replaced even if damage is not obvious.**

It is important to familiarize yourself with the following terms:

- Cold tire pressure:
  - The measured pressure after the vehicle has been parked for at least three hours,
    or
  - The measured pressure when the vehicle is driven less than 1 mile (1.6 km) after having been parked for three hours.
- Maximum inflation pressure: the maximum permissible cold tire inflation pressure for this tire.
- Recommended inflation pressure: the inflation pressure for optimum tire performance.
- Intended outboard sidewall:
  - The sidewall that contains a whitewall, bears white lettering or bears manufacturer, brand, and/or model name molding that is higher or deeper than the same molding on the other sidewall of the tire,
    or
  - The outward facing sidewall of an asymmetrical tire that has a particular side that must always face outward when mounted on a vehicle.
- Passenger car tire: a tire intended for use on passenger cars, multipurpose passenger vehicles, and trucks, that have a gross vehicle weight rating (GVWR) of 10,000 pounds or less.
- Light truck (LT) tire: a tire designated by its manufacturer as primarily intended for use on lightweight trucks or multipurpose passenger vehicles.
- Tread: portion of a tire that comes into contact with the road.
- Tread rib: a tread section running circumferentially around a tire.
- Tread separation: pulling away of the tread from the tire carcass.
- Carcass: the tire structure, except tread and sidewall rubber which, when inflated, bears the load.
- Sidewall: portion of a tire between the tread and bead.
- Section width: the linear distance between the exteriors of the sidewalls of an inflated tire, excluding elevations due to labeling, decoration, or protective bands.
- Bead: the part of the tire that is made of steel wires, wrapped or reinforced by ply cords and that is shaped to fit the rim.
- Ply: a layer of rubber-coated parallel cords.

- Cord: the strands forming the plies in the tire.
- Rim: a metal support for a tire or a tire and tube assembly upon which the tire beads are seated.
- Rim diameter: nominal diameter of the bead seat.
- Groove: the space between two adjacent tread ribs.

## Tire Markings

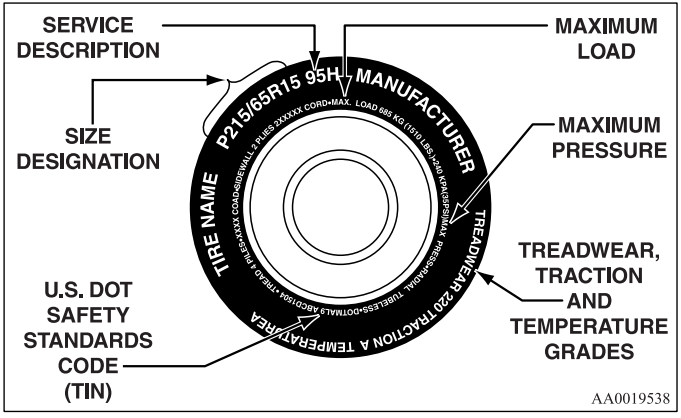


### *Size Designation*

**EXAMPLE:P215/65R15**

| | |
|---|---|
| P | Passenger car tire size based on U.S.A. design standards |
| 215 | Section width in millimeters (MM.) |
| 65 | Aspect ratio in percent (%)<br>Ratio of section height to section width of tire. |
| R | Construction code<br>• “R” means radial construction.<br>• “D” means diagonal or bias construction. |
| 15 | Rim diameter in inches (in) |

NOTE

- European/Japanese metric tire sizing is based on European/Japanese design standards. Tires designed to these standards have the tire size molded into the sidewall beginning with the section width. The letter “P” is absent from this tire size designation. Example: 215/65R15 96H.
- LT (Light Truck) -metric tire sizing is based on U.S.A. design standards. The size designation for LT-metric tires is the same as for P-metric tires except for the letters “LT” that are molded into the sidewall preceding the size designation. Example: LT235/85R16.
- Temporary spare tires are high pressure compact spares designed for temporary emergency use only. Tires designed to this standard have the letter “T” molded into the sidewall preceding the size designation. Example: T145/80D18 103M.

### *Service Description*

**EXAMPLE: 95H**

| | |
|---|---|
| 95 | Load index<br>A numerical code associated with the maximum load a tire can carry. |
| H | Speed symbol<br>A symbol indicating the range of speeds at which a tire can carry a load corresponding to its load index under certain operating conditions.<br>The maximum speed corresponding to the speed symbol should only be achieved under specified operating conditions. (i.e. tire pressure, vehicle loading, road conditions and posted speed limits) |

### *Maximum Load*

Maximum load indicates the maximum load this tire is designed to carry.

**⚠ WARNING**

- **Overloading of your tire is dangerous. Overloading can cause tire failure, affect vehicle handling, and increase your stopping distance. Use tires of the recommended load capacity for your vehicle. Never overload them.**

### *Maximum Pressure*

Maximum Pressure indicates the maximum permissible cold tire inflation pressure for this tire.

### *Tire Identification Number (TIN)*

The TIN may be found on both sides of the tire but the date code and optional code may only be on one side. Look for the TIN on the outboard side of tires as mounted on the vehicle. If the TIN is not found on the outboard side then you will find it on the inboard side of the tire.

**EXAMPLE: DOT MA L9 ABCD 1504**

| | |
|---|---|
| DOT | Department of Transportation<br>This symbol certifies that the tire is in compliance with the U.S. Department of Transportation tire safety standards, and is approved for highway use. |
| MA | Code representing the tire manufacturing location. (2 digits) |
| L9<br>ABCD | Code representing the tire size. (2 digits)<br>Code used by tire manufacturer. (1 to 4 digits) |
| 15 | Number representing the week in which the tire was manufactured. (2 digits) |
| 04 | Number representing the year in which the tire was manufactured. (2 digits) |

### *Treadwear, Traction and Temperature Grades*

**Treadwear**
The treadwear grade is a comparative rating based on the wear rate of the tire when tested under controlled conditions on a specified government test course. For example, a tire graded 150 would wear one and one-half ($1^1/_2$) times as well on the government course as a tire graded 100. The relative performance of tires depends upon the actual conditions of their use, however, and may depart significantly from the norm due to variations in driving habits, service practices and differences in road characteristics and climate.

**Traction**
The traction grades, from highest to lowest, are AA, A, B and C. Those grades represent the tire's ability to stop on wet pavement as measured under controlled conditions on specified government test surfaces of asphalt and concrete. A tire marked C may have poor traction performance.

**Temperature**
The temperature grades are A (the highest), B and C, representing the tire's resistance to the generation of heat and its ability to dissipate heat when tested under controlled conditions on a specified indoor laboratory test wheel. Sustained high temperature can cause the material of the tire to degenerate and reduce tire life, and excessive temperature can lead to sudden tire failure. The grade C corresponds to a level of performance which all passenger car tires must meet under the Federal Motor Vehicle Safety Standard No. 109. Grades B and A represent higher levels of performance on the laboratory test wheel than the minimum required by law.

## Tire inflation pressures

N00939300831

Proper tire inflation pressure is essential for the safe and satisfactory operation of your vehicle. The wrong tire pressure will cause problems in three major areas:

- Safety
  Too little pressure increases flexing in the tire and can cause tire failure. Too much pressure can cause a tire to lose its ability to cushion shock. Objects on the road and potholes could then cause tire damage that may result in tire failure.
- Economy
  The wrong tire pressure can cause uneven wear patterns in the tire tread. These abnormal wear patterns will reduce the tread life, and the tire will have to be replaced sooner. Too little pressure also makes it harder for the tire to roll, and this uses up more fuel.
- Ride comfort and vehicle stability
  The superior riding experience built into your vehicle partly depends on the correct tire pressure. Too much pressure gives an uncomfortable and jarring ride. Too little pressure feels as if your vehicle is slow to respond.
  Unequal tire pressures can make steering your vehicle uneven and unpredictable.

The correct tire pressure for your vehicle is listed on the placard attached to the driver's door sill.
(Refer to "Tire and loading information placard" on page 9-4.)

The recommended inflation pressures should be used for the tires listed below.

| Item | Tire size | Front | Rear |
|---|---|---|---|
| Normal tire | P235/45R18 | 220 KPA, 32 PSI | 220 KPA, 32 PSI |
| Compact spare tire | T125/70D16 | 420 KPA, 60 PSI | |

Tire pressures should be checked, and adjusted if necessary, at least once a month.
Pressures should be checked more often whenever weather temperatures change severely, because tire pressures change with outdoor temperatures. The pressures listed on the placard are always “cold inflation pressure”.
Cold inflation pressure is measured after the vehicle has been parked for at least three hours or is driven less than 1 mile (1.6 km) after having been parked for three hours.
Cold inflation pressure must not go above the maximum values molded into the tire sidewall. After driving several miles, your tire inflation pressure may increase 14 to 41 KPA, 2 to 6 PSI from the cold inflation pressure. Do not let air out of the tires to get back to the specified cold pressure, or your tire pressure will be too low.
Check your tires each time you refuel. If one tire looks lower than the others, check the pressure for all of them.

You should also take the following safety precautions:

- Keep your tires inflated to the recommended pressures. (See the tire and loading information placard attached to the driver’s door sill.)
- Stay within the recommended load limits.
- Make sure that the weight of any load in your vehicle is evenly distributed.
- Drive at safe speeds.
- After filling your tires to the correct pressure, check them for damage and air leaks. Be sure to reinstall the caps on the valve stems.

## Replacing tires and wheels

N00939600296

**⚠ CAUTION**

- **Avoid using different size tires and wheels from the ones listed, and avoid the combined use of different types of tires and wheels. Using different size or type tires and wheels may affect driving safety.**
  **Refer to "Tires and wheels" on page 9-8.**
- **Even if a wheel has the same rim size and offset as the specified type of wheel, its shape may prevent it from being fitted correctly. Consult an authorized Mitsubishi Motors dealer or a repair facility of your choice before using wheels that you have.**
- **As your vehicle is equipped with a tire pressure monitoring system, use only Mitsubishi genuine wheels.**
  **Other wheels do not permit correct installation of tire inflation pressure sensors and can cause air leakage and sensor failure, which would not be covered by your vehicle's warranty.**
  **See an authorized Mitsubishi Motors dealer when you replace a tire or wheel.**

## Tire maintenance

N00939700167

The following maintenance steps are recommended:

- Check tire pressures regularly.
- Have regular maintenance done on the wheel balance and front and rear suspension alignment.
- Rotate your tires regularly as described in the "Tire rotation" section on page 7-26.

## Tread wear indicators

N00939800054

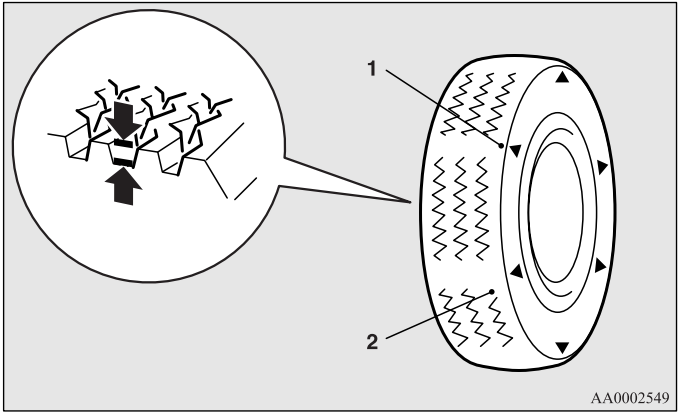


1- Location of the tread wear indicator
2- Tread wear indicator

Tread wear indicators are built into the original equipment tires on your vehicle to help you know when your tires should be replaced. Many states have laws requiring that you replace your tires at this point.
These indicators are molded into the bottom of the tread grooves and will appear when the tire tread is worn down to 1/16 inch (1.6 mm).
When the bands appear next to one another in two or more places, replace your tires.

NOTE
- Tire wear indicators can have different marks and locations depending on the tire manufacturer.

## Tire rotation

N00939900390

To even out the wear on your tires and make them last longer, Mitsubishi Motors Corporation recommends that you rotate your tires at the mileage listed in the “WARRANTY AND MAINTENANCE MANUAL”.
However, the timing for tire rotation may vary according to your vehicle condition, road surface conditions, and your own personal driving habits. Any time you notice unusual wear, rotate your tires as soon as possible.

When rotating tires, check for uneven wear, damage, and wheel alignment. Abnormal wear is usually caused by a wrong tire pressure, wheels that are not aligned properly, wheels that are out-of-balance, or severe braking.
Check with an authorized Mitsubishi Motors dealer or a repair facility of your choice to find out the reason for uneven tread wear.

The first tire rotation is the most important one. It will allow all your tires to wear evenly.

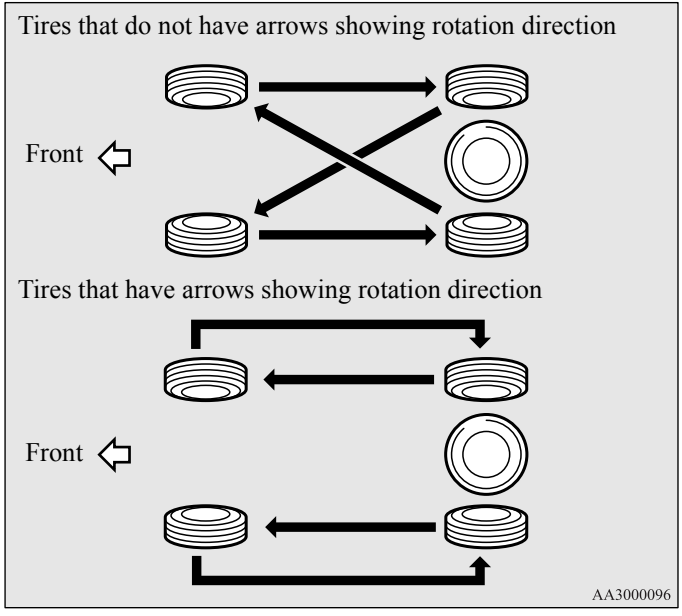


**⚠ CAUTION**

- **A compact spare tire can be installed temporarily in place of a tire that has been removed during the tire rotation. However, it must not be included in the regular tire rotation sequence.**

**⚠ CAUTION**

- **If the tires have arrows (A) indicating the correct direction of rotation, swap the front and rear tires on the left-hand side of the vehicle and the front and rear tires on the right-hand side of the vehicle separately. Keep each tire on its original side of the vehicle. When installing the tires, make sure the arrows point in the direction in which the wheels will turn when the vehicle moves forward. Any tire whose arrow points in the wrong direction will not perform to its full potential.**

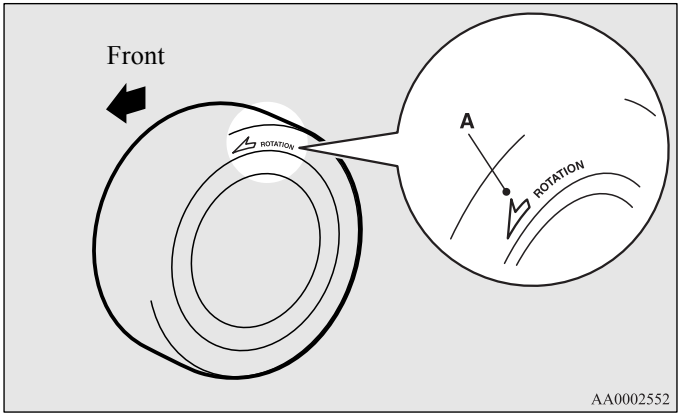


**CAUTION**

- **Avoid the combined use of different types of tires. Using different types of tires can affect vehicle performance and safety.**

## Snow tires

N00940000362

In some areas of the country, snow tires are required for winter driving. If snow tires are required in your area, you must choose snow tires of the same size and type as the original tires provided with your vehicle. Snow tires should also be installed on all four wheels. Otherwise your safety and vehicle handling can be reduced.

Even where laws may permit it, snow tires should not be operated at sustained speeds over 75 mph (120 km/h).

**CAUTION**

- **Change to tapered nuts when using snow tires with steel wheels.**
- **As your vehicle is equipped with a tire pressure monitoring system, use only Mitsubishi genuine wheels.**
  **Other wheels do not permit correct installation of tire inflation pressure sensors and can cause air leakage and sensor failure, which would not be covered by your vehicle's warranty.**
  **See an authorized Mitsubishi Motors dealer when you replace a tire or wheel.**

## Tire chains

N00940100015

**⚠ CAUTION**

- **Tire chains cannot be used on your vehicle. The clearance between the chains and the body is not sufficient to allow proper clearance, and the vehicle body might be damaged.**

## *Clutch pedal free play (if so equipped)*

N00940200045

To check the clutch pedal free play (A), turn off the engine and press the pedal until you feel resistance.

Clutch pedal free play:
**.2 to .5 inch (6 to 13 mm)**

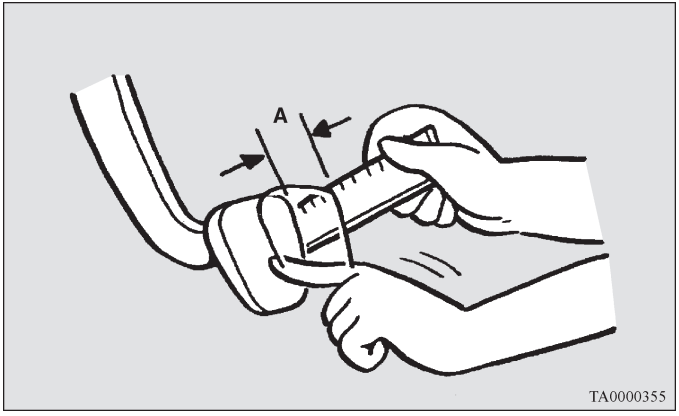

## *Brake pedal free play*

N00940300176

To check the brake pedal free play (A), turn off the engine and press the brake pedal several times with your foot. Then press the pedal down with your fingers until you first feel resistance.

Brake pedal free play:
**.1 to .3 inch (3 to 8 mm)**

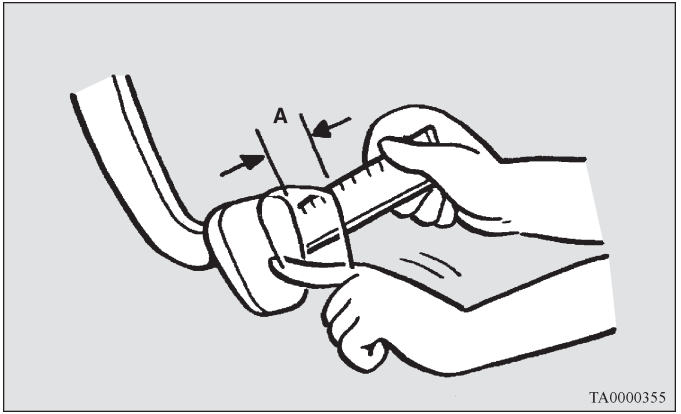


If the free play is not within these limits, take your vehicle to an authorized Mitsubishi Motors dealer or a repair facility of your choice for adjustment.

## *Parking brake lever stroke*

N00940400063

Check the parking brake lever travel occasionally. To check this, pull the lever up slowly and count the number of clicks of the ratchet.

Parking brake lever stroke:
**5 to 7 notches**

Also check to see if the lever stays gripped by the ratchet after pulling.

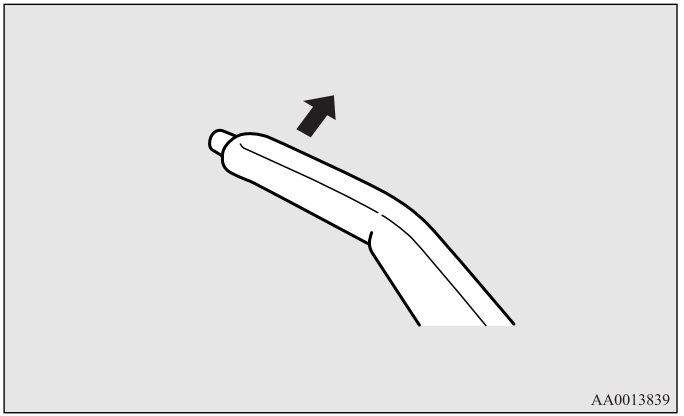


**⚠ *WARNING***

- **Continued operation of the vehicle with the parking brake lever out of adjustment may result in the vehicle moving when unattended.**

## *Wiper blades*

N00940700011

Check the wiper blades occasionally. Clean them regularly to remove deposits of salt and road film. Use a sponge or cloth and a mild detergent or non-abrasive cleaner to clean the blades and glass areas.
Replace the blades if they continue to streak or smear.

NOTE
- Do not run the wipers on dry glass for a long time. This wears out the rubber and can scratch the glass.

### During cold weather

If the blades are frozen to the windshield or rear window, do not operate the wipers until the ice has melted and the blades are freed, otherwise the wiper motor may be damaged.

## *Emission-control system maintenance*

N00940800201

Your vehicle is equipped with an emission-control system that meets all the requirements of the U.S. Environmental Protection Agency and Environment Canada. The emission-control system is made of:
- a positive crankcase ventilation system
- an evaporative emission-control system
- an exhaust emission-control system

The maintenance services listed in the “WARRANTY AND MAINTENANCE MANUAL” must be performed at the times or mileages listed to keep the emission-control system working properly. These, and all the other “general” maintenance services listed in this manual, need to be performed to keep your vehicle running properly and reliably.

You may need more frequent maintenance if you drive your vehicle in harsh conditions such as dusty areas or do a lot of start-and-stop driving.

To be sure the emission-control system works properly, have your vehicle inspected and maintained by an authorized Mitsubishi Motors dealer or a repair facility of your choice following the schedule in the “WARRANTY AND MAINTENANCE MANUAL”.
You should also have an inspection and service any time you suspect a malfunction.

NOTE

- To meet government regulations and promote cleaner air, your vehicle is equipped with an onboard diagnostic system (OBD). The engine electronic control module that controls OBD functions stores various data (especially about the exhaust emissions). This data will be erased if the battery cable is disconnected, which could make a rapid diagnosis difficult. Do not disconnect the battery cable when the engine malfunction indicator ("SERVICE ENGINE SOON" or "Check engine light") is on.

## Spark plugs

N00940900039

Spark plugs must fire properly for good engine performance and emission-control.
Do not reuse them by cleaning or regapping. Change them at the mileage listed in the "WARRANTY AND MAINTENANCE MANUAL".
Your vehicle may be equipped with iridium tipped spark plugs, which are identified by marks on the ceramic. They do not require replacement as frequently as the conventional type spare plug and will last much longer.

NOTE

- Use the spark plugs listed under "Engine specifications" on page 9-7 or plugs that are exactly the same. Other plugs could cause engine damage, performance problems or radio noise.

## Fuel hoses

N00941000037

Check the hose surfaces for any heat and mechanical damage, hard and brittle rubber, cracking, tears, cuts and abrasions. Pay special attention to the hoses closest to high heat sources such as the exhaust manifold. Check all the hose connections, such as clamps and couplings, to make sure they are secure and that there are no leaks. If you see any wear or damage, replace the hoses immediately.

## Fuel system (tank, pipe line and connection, and fuel tank filler cap)

N00941300085

Check these regularly for damage or leaks in the fuel lines and connections. Check the fuel tank filler cap for damage or looseness. Pay special attention to the fuel lines closest to high heat sources such as the exhaust manifold.

**⚠ *WARNING***

- **If you see a fuel leak or if you smell fuel, do not run the engine. Any spark (including from the ignition), flame or smoking material could cause an explosion or fire. Call an authorized Mitsubishi Motors dealer or a repair facility of your choice for assistance.**

## Evaporative emission control system (except evaporative emission canister)

N00941400116

If the fuel-vapor vent line is clogged or damaged, the fuel-vapor mixture will escape, polluting the air.
Have the system checked at an authorized Mitsubishi Motors dealer at the mileage specified in the “WARRANTY AND MAINTENANCE MANUAL”.

# *General maintenance*

N00941500159

The next pages list the maintenance service recommended by Mitsubishi Motors Corporation. In addition to the general maintenance that needs to be performed at the times listed, there are other parts which do not usually need regular maintenance.
But, if any of these parts stops working properly, your vehicle performance could suffer. Have these items checked if you notice a problem with them.

See your authorized Mitsubishi Motors dealer for assistance, if you have any questions.

## Disc brake pads

N00941600020

Good brakes are essential to safe driving. Check the brake pads for wear. For good braking performance, replace the brake pads with the same type pads as the originals.

## Brake hoses

N00941700047

Brake hoses and tubing should be checked for:

- Severe surface cracking, scuffing or worn spots. If the fabric casing of the hose is showing through any cracks or worn spots in the rubber hose cover, the hose should be replaced. The brakes can fail if the hose wears through.
- Improper installation may cause twisting, or wheel, tire or chassis interference.

## Ball joint, steering linkage seals and drive shaft boots

N00941800077

Check the following parts for damage and grease leaks:

- Ball joint boots of the front suspension and steering linkage
- Bellows on both ends of the drive shaft

## Drive belt (for generator, power steering pump, air conditioning compressor)

N00941900124

### *2.4 liter models*

Check the tension of the drive belt. Make certain that the indicator (A) is between the specified lines as shown in the illustration.

Check the drive belt for cuts and cracks, and replace it if it is damaged. When replacing the belt, make sure that there is no interference between the belt and other engine components. After replacing, recheck the tension to make sure the indicator (A) is between the specified lines.

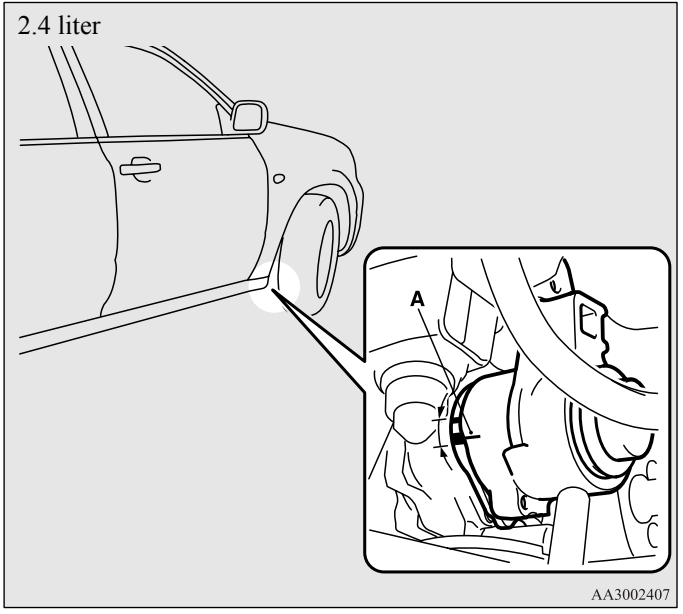


**⚠ *WARNING***

- **Do not check or touch the drive belt with the engine running, or serious injury or death may result.**

### *3.8 liter models*

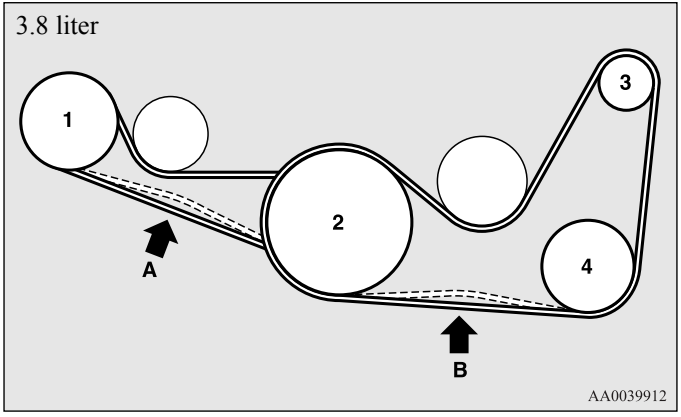


1- Power steering pump pulley
2- Crank shaft pulley
3- Generator pulley
4- Air conditioning pulley

Check the tension of the drive belt. The deflection must be within specifications, when pressed at a point halfway between the pulleys as shown in the illustration with a force of about 22 pounds (100N).

Check the drive belt for cuts and cracks, and replace it if it is damaged.

When replacing the belt with a new belt, make sure that there is no interference between the belt and other engine components. Then, check the tension of the belt at the designated point. The deflection must be within the specifications.

### *Amount of belt deflection*

| | Standard value | Used belt | New belt |
|---|---|---|---|
| A | .48 to .64 inch (12.3 to 16.2 mm) | .52 to .59 inch (13.2 to 15.1 mm) | .38 to .48 inch (9.6 to 12.3 mm) |
| B | .33 to .42 inch (8.4 to 10.7 mm) | .35 to .40 inch (8.9 to 10.1 mm) | .24 to .30 inch (6.2 to 7.5 mm) |

**⚠ *WARNING***

- **Do not check or touch the drive belt with the engine running, or serious injury or death may result.**

## Exhaust system

N00942200078

**⚠ WARNING**

- **Carbon monoxide gas from your vehicle's exhaust is poisonous. Breathing these fumes can cause unconsciousness or death.**

The best way to keep carbon monoxide gas from entering inside your vehicle is to have the engine exhaust system properly serviced.
Have a competent mechanic inspect the complete exhaust system and nearby body areas for broken, damaged, deteriorated, or mispositioned parts if you notice any of the following:

- A change in the sound of the exhaust system
- The smell of exhaust fumes inside the vehicle
- The underside or rear of the vehicle is damaged

Also check the exhaust system each time the vehicle is raised for lubrication, oil changes, or required service. Any open seams or loose connections could let dangerous exhaust fumes seep into the cargo area and passenger compartments.

***Check for any of the following conditions:***

- Check for holes or exhaust gas leaks caused by corrosion or damage.
- Check the joints and connections for looseness or exhaust gas leaks.
- Check the rubber hangers and brackets for damage.

## Timing belt

N00942300053

The timing belt should be replaced with a new one at the mileage listed in the "WARRANTY AND MAINTENANCE MANUAL".

## Hood lock release mechanism and safety catch

N00942500042

The hood lock release mechanism and hood safety catch should be checked, cleaned, and oiled when needed for easy movement and to stop rust and wear. Use Multipurpose Grease NLGI Grade 2 sparingly for all sliding parts of the hood latch and release lever. Work the grease into the hood lock mechanism until all the movable surfaces are covered.
Also, put a light coat of the same grease on the safety catch wherever moving parts touch.

## *For cold and snowy weather*

N00942600115

### Ventilation slots

The ventilation slots in front of the windshield should be kept clear of leaves or brushed clear after a heavy snowfall, so that the operation of the heating and ventilation systems will not be impaired.

### Weatherstripping

To prevent freezing of the weatherstripping on the doors, engine hood, etc., they should be treated with silicone grease.

### Additional equipment (For regions where snow is encountered)

It is a good idea to carry a shovel or a short-handled spade in the vehicle during the winter so that you can clear away snow if you get stranded. A small hand-brush for sweeping snow off the vehicle and a plastic scraper for the windshield, side and rear window are also useful.

## *Fuse links*

N00942700099

The fuse links will melt to prevent a fire if a large current attempts to flow through certain electrical systems.
In case of a melted fuse link, see your authorized Mitsubishi Motors dealer or a repair facility of your choice for inspection and replacement.

# Fuses

N00942800263

## Fuse block location

N00901000064

To prevent damage to the electrical system from short-circuiting or overloading, each individual circuit is equipped with a fuse. The fuse blocks are located in the passenger compartment and in the engine compartment.

### *Passenger compartment*

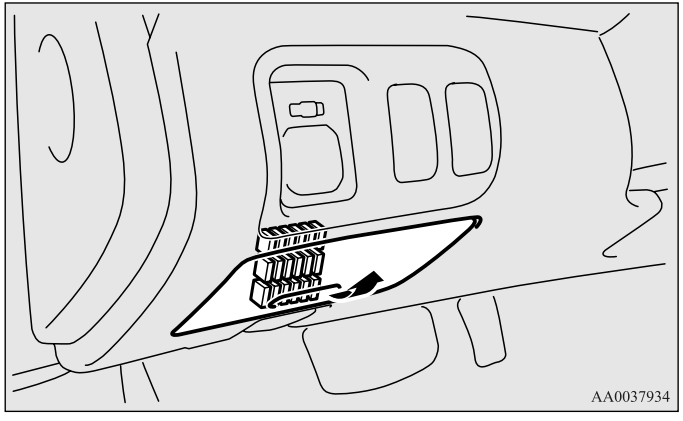


The fuse block in the passenger compartment is located in front of the driver's seat at the position shown in the illustration.

### *Engine compartment*

In the engine compartment, the fuse block is located as shown in the illustration.

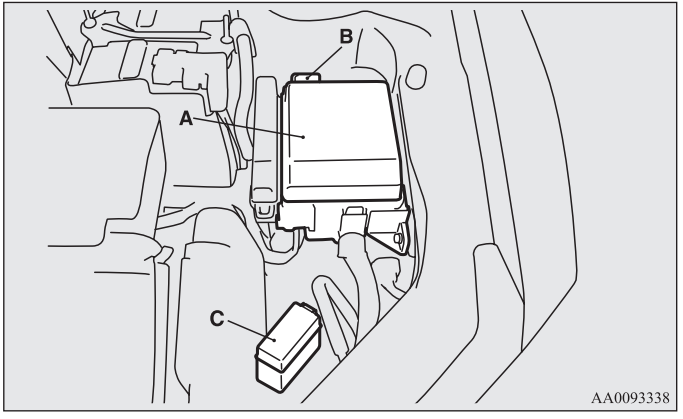


A- Type A
B- Type B (ECLIPSE SPYDER only)
C- Type C (2.4 liter models only)

**Type A**

1. Push the lock lever.
2. Remove the fuse block cover.

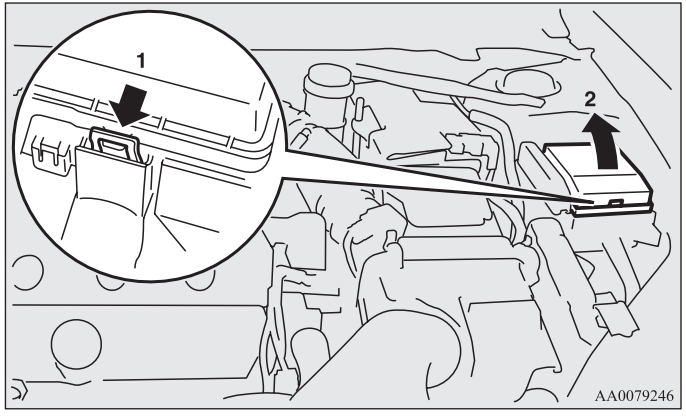


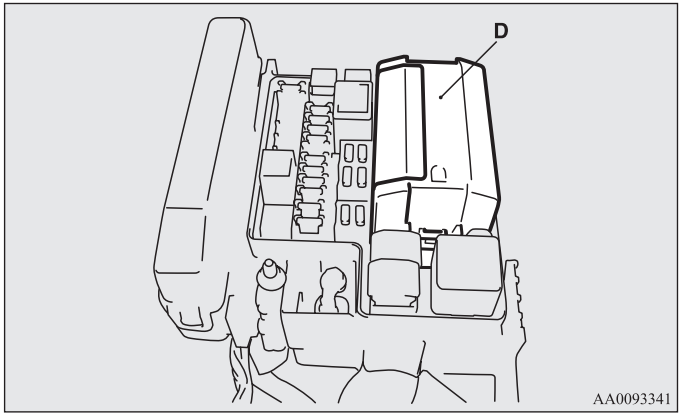


**WARNING**

- **Do not touch the electronic control module (D). The module surface can be too hot.**
  **Wait for the electronic control module to cool down before replacing a fuse.**

**Type B (ECLIPSE SPYDER only)**

1. Pull the lock lever.
2. Open the cover.

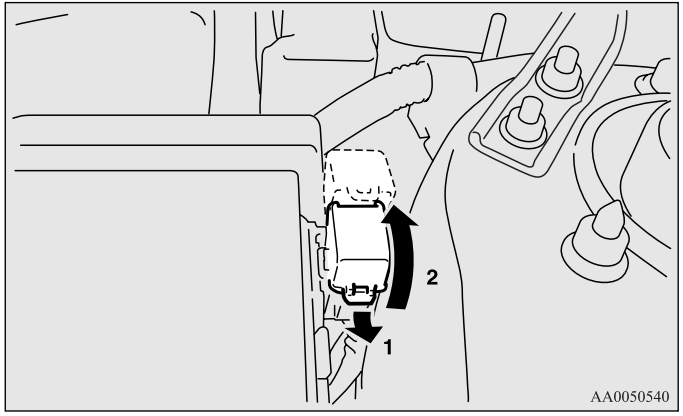


**Type C (2.4 liter models only)**

1. Push the lock lever.
2. Remove the relay box cover.

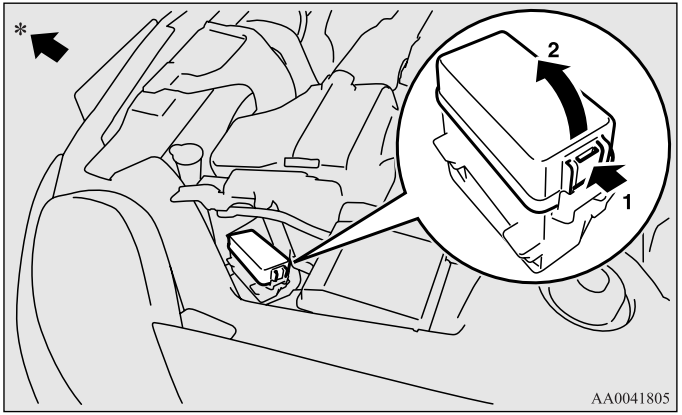


*- Front of the vehicle

## Fuse load capacities

N00954800127

This fuse list shows the names of the electrical systems and their fuse capacities.

There are spare fuses in the cover of the instrument panel (driver's side). Always replace a blown fuse with one of the same capacity as the original.

### *Passenger compartment fuse location table*

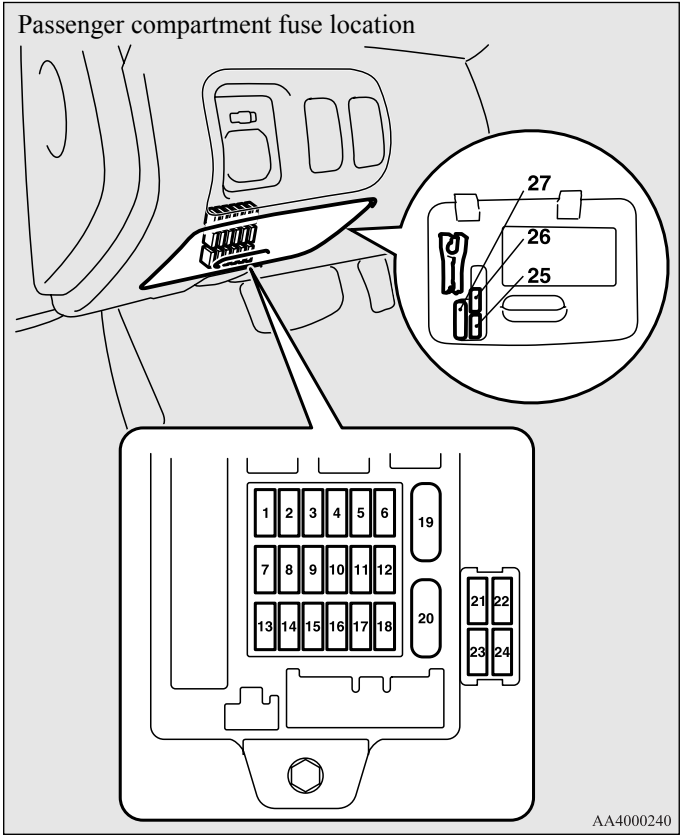


| No. | Symbol | Electrical system | Capacity |
|---|---|---|---|
| 1 | | Ignition coil | 10 A |
| 2 | | Gauge | 7.5 A |
| 3 | | Back-up lights | 7.5 A |
| 4 | | Electric convertible top | 7.5 A |
| 5 | | Relay | 7.5 A |
| 6 | | Door mirror heater | 7.5 A |
| 7 | — | — | — |
| 8 | | Engine control | 7.5 A |
| 9 | — | — | — |
| 10 | — | — | — |
| 11 | | Outside rearview mirrors | 7.5 A |
| 12 | | Engine control | 7.5 A |
| 13 | — | — | — |
| 14 | | Rear window wiper | 15 A |
| 15 | | Power door locks | 15 A |
| 16 | | Power outlet | 15 A |
| 17 | — | — | — |
| 18 | — | — | — |
| 19 | | Heater | 30 A |
| 20 | | Rear window defogger | 30 A |

| No. | Symbol | Electrical system | Capacity |
|---|---|---|---|
| 21 | | Sunroof | 20 A |
| 22 | — | — | — |
| 23 | | Electric window control | 7.5 A |
| 24 | | Electric convertible top | 15 A |
| 25 | — | Spare fuse | 20 A |
| 26 | — | Spare fuse | 30 A |
| 27 | — | Spare fuse | 30 A |

- Some fuses may not be installed on your vehicle, depending on the vehicle model or specifications.
- The table above shows the main equipment corresponding to each fuse.
  The fuse block does not contain spare 7.5 A, 10 A and 15 A fuses. If a fuse of one of these capacities blows, replace it temporarily by borrowing the one that matches from:
  **7.5 A: Door mirror heater**
  **10 A: Dome light (in engine compartment)**
  **15 A: Power outlet**
  Replace the borrowed fuse as soon as possible.

## *Engine compartment fuse location table*

### 2.4 liter & 3.8 liter models

Engine compartment fuse location

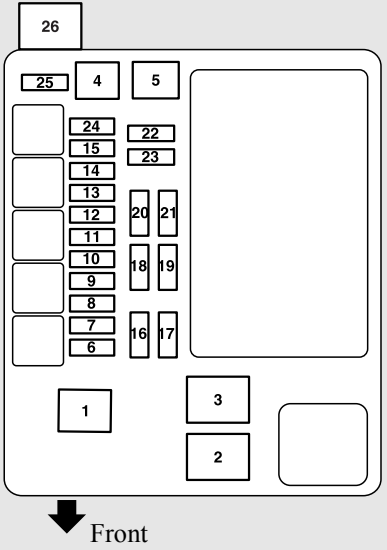


AA3002700

| No. | Symbol | Electrical system | Capacity |
|---|---|---|---|
| 1 | | Fuse (+B) | 80 A*1 |
| 2 | | Radiator fan motor | 30 A*2, 50 A*3 |
| 3 | ABS | Anti-lock braking system | 60 A*1 |
| 4 | | Ignition switch | 40 A*1 |
| 5 | | Power window control | 30 A*1 |
| 6 | | Front fog lights | 15 A |
| 7 | | Heated seat | 20 A |
| 8 | | Horn | 15 A |
| 9 | | Engine control | 20 A |
| 10 | | Air conditioning | 10 A |
| 11 | STOP | Stop lights | 7.5 A |
| 12 | | Audio | 30 A |
| 13 | | Alternator | 7.5 A |
| 14 | | Hazard warning flasher | 10 A |
| 15 | A/T | Automatic transaxle | 20 A |
| 16 | | Headlight high beam (right) | 10 A |
| 17 | | Headlight high beam (left) | 10 A |
| 18 | | Headlight low beam (right) | 10 A*4, 20 A*5 |
| 19 | | Headlight low beam (left) | 10 A*4, 20 A*5 |
| 20 | | Position light (right) | 7.5 A |
| 21 | | Position light (left) | 7.5 A |
| 22 | | Dome light | 10 A |
| 23 | | Radio | 15 A |
| 24 | | Fuel pump | 15 A |
| 25 | | Windshield wiper | 30 A |
| 26 | | Electric convertible top | 40 A*1 |

*1: Fusible link
*2: Fusible link (2.4 liter models)
*3: Fusible link (3.8 liter models)
*4: Except for vehicles with high intensity discharge headlights
*5: Vehicles with high intensity discharge headlights

## 2.4 liter models

Engine compartment fuse location

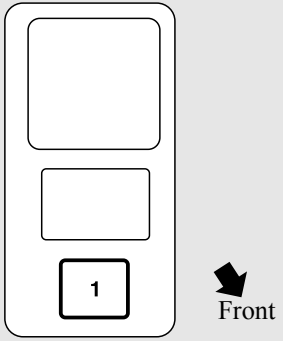


AA0041818

| No. | Symbol | Electrical system | Capacity |
|---|---|---|---|
| 1 | ❄ | Condenser fan motor | 20 A* |

*: Fusible link

- Some fuses may not be installed on your vehicle, depending on the vehicle model or specifications.
- The table above shows the main equipment corresponding to each fuse.

## *Identification of fuse*

N00901100049

| Capacity | Color |
|---|---|
| 7.5 A | Brown |
| 10 A | Red |
| 15 A | Blue |
| 20 A | Yellow (fuse type) / Light blue (fusible link type) |
| 30 A | Green (fuse type) / Pink (fusible link type) |
| 40 A | Green |
| 50 A | Red |
| 60 A | Yellow |
| 80 A | White |

## Fuse replacement

N00954900069

1. Before replacing a fuse, always turn off the electrical item connected to the fuse and turn the ignition key to the “LOCK” position.
2. There is a fuse puller in the cover of the instrument panel (driver’s side).
3. Remove the fuse puller from the cover.

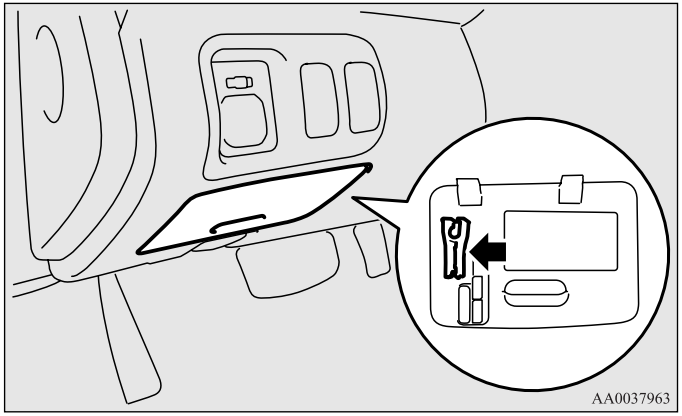


4. Clamp it on the fuse you wish to remove, and pull the fuse straight out from the fuse block.

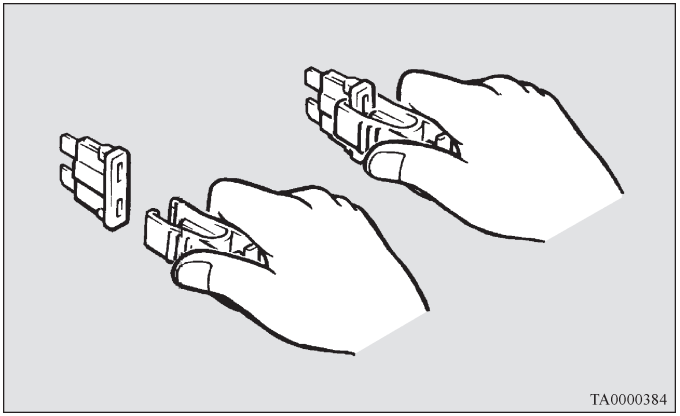

5. Use the fuse location diagrams and the matching tables, to check the fuse that is related to the problem. If the fuse is not blown, something else must be causing the problem. Contact an authorized Mitsubishi Motors dealer or a repair facility of your choice to have the problem checked.

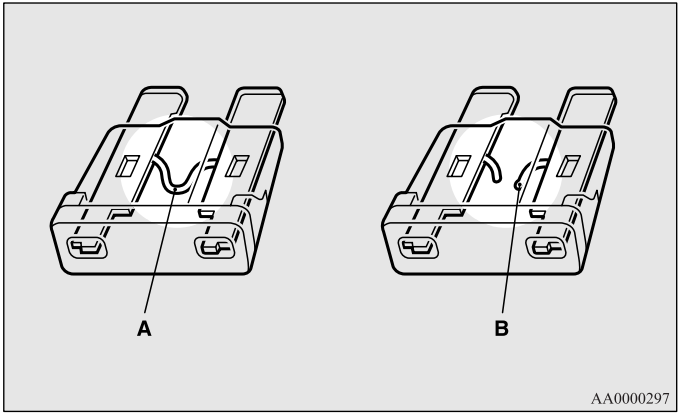


A- Fuse is OK
B- Blown fuse

6. Insert a new fuse of the same capacity securely into the appropriate slot.

**⚠ CAUTION**

- **Never use a fuse with a capacity greater than the one listed or any substitute, such as wire, foil etc. This would cause the circuit wiring to heat up and could cause a fire.**
- **If the replacement fuse blows again after a short time, have the electrical system checked by an authorized Mitsubishi Motors dealer or a repair facility of your choice to find and correct the cause.**

## *Replacement of light bulbs*

N00942900219

Before replacing a bulb, be sure the light is off. Do not touch the glass part of the new bulb with your bare fingers; the oil from your skin will stay on the glass and dim or destroy the bulb when it gets hot.

**⚠ *CAUTION***

- **Bulbs are extremely hot immediately after being turned off.**
  **When replacing a bulb, wait for it to cool sufficiently before touching it. You could otherwise be burned.**

NOTE

- If you are unsure of how to carry out the work as required, it is recommended that these procedures be carried out by an authorized Mitsubishi Motors dealer or a repair facility of your choice.
- Be careful not to scratch the vehicle body when removing a light and lens.
- When it rains, or when the vehicle has been washed, the inside of the lens sometimes becomes temporarily foggy. This is the same phenomenon as when window glass mists up on a humid day, and does not indicate a functional problem.
  When the light is switched on, the heat will remove the fog. However, if water gathers inside the light, please have it checked by an authorized Mitsubishi Motors dealer or a repair facility of your choice.

### Bulb capacity

N00943000099

The bulb should only be replaced with a new bulb with the same rating and type. The type and rating are listed on the base of the bulb.

## *Outside (front)*

N00900900040

### Vehicles with high intensity discharge headlights

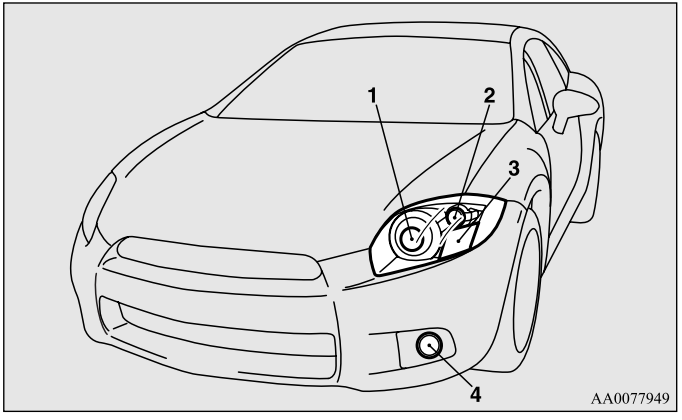


| Description | Wattage or Candle power | ANSI Trade No. or Bulb type |
|---|---|---|
| 1- Headlight | 35 W | D1S |
| 2- Parking and side-marker light | 1.5 cp | 194NA |
| 3- Front turn signal light | 27/7 W | 3757AK |
| 4- Front fog light | 45 W | H10 |

### Except for vehicles with high intensity discharge headlights

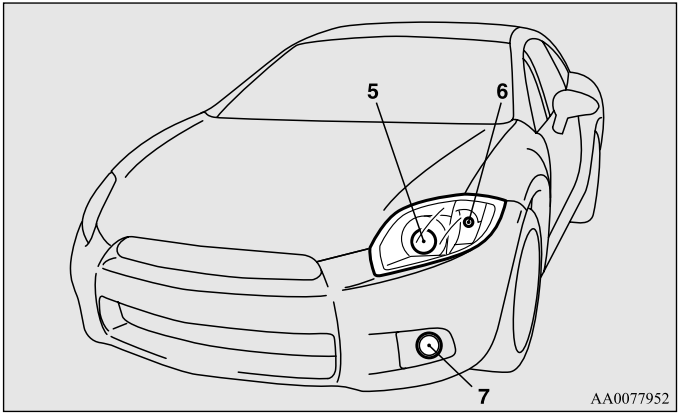


| Description | Wattage or Candle power | ANSI Trade No. or Bulb type |
|---|---|---|
| 5- Headlight | 60/55 W | H13 |
| 6- Front turn signal, parking and side-marker light | 30/2.2 cp | 3457AK |
| 7- Front fog light (if so equipped) | 45 W | H10 |

### *Outside (rear)*

N00900800052

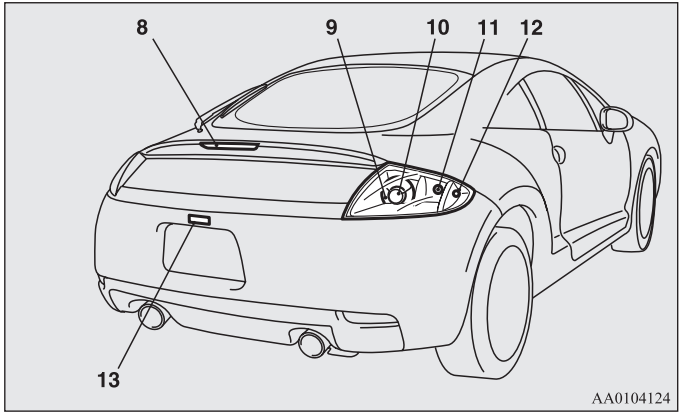


| Description | Wattage or Candle power | ANSI Trade No. or Bulb type |
|---|---|---|
| 8- High-mounted stop light | — | — |
| 9- Stop and tail light | — | — |
| 10- Back-up light | 32 cp | 3156K |
| 11- Rear turn signal light | 30 cp | 3457AK |
| 12- Rear side-marker light | 3 cp | 168 |
| 13- License plate light | 5 W | W5W |

NOTE

- The high-mounted stop light and the stop and tail lights use LEDs rather than bulbs. For repair and replacement, contact an authorized Mitsubishi Motors dealer or a repair facility of your choice.

## *Inside*

N00950400590

### ECLIPSE

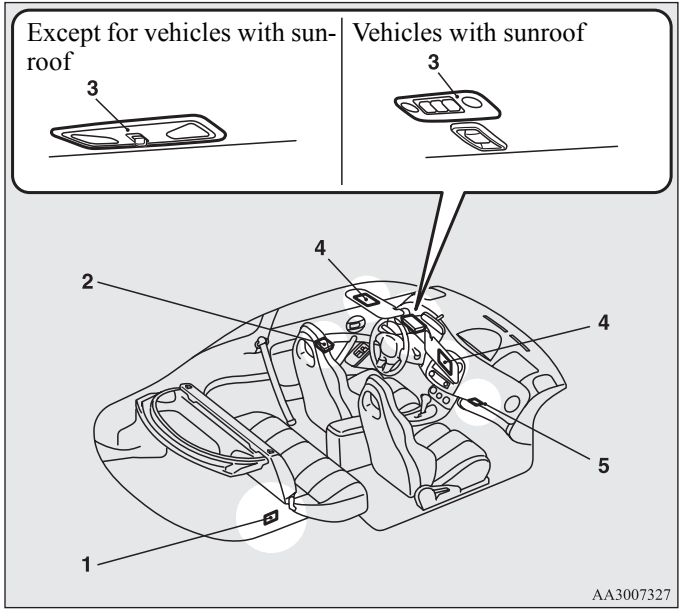


| Description | | Wattage |
|---|---|---|
| 1- Cargo area light | | 5 W |
| 2- Dome light (Rear) | | 8 W |
| 3- Dome light (Front)/ Reading light | Except for vehicles with sunroof | 8 W |
| | Vehicles with sun-roof | — |
| 4- Vanity mirror light | | 1.4 W |
| 5- Glove compartment light | | 1.4 W |

NOTE

- The dome light (front)/reading lights (vehicles with sun-roof) use LEDs rather than bulbs. For repair and replacement, contact an authorized Mitsubishi Motors dealer or a repair facility of your choice.

**ECLIPSE SPYDER**

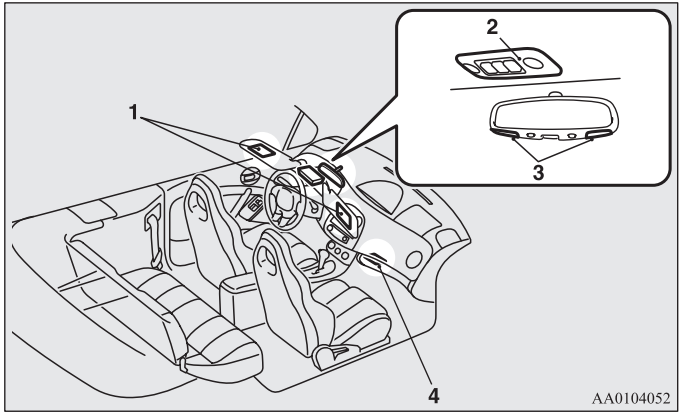


| Description | Wattage |
|---|---|
| 1- Vanity mirror light | 1.4 W |
| 2- Dome light (Front) /Reading lights (if so equipped) | — |
| 3- Reading lights on an inside rearview mirror (if so equipped) | 4.3 W |
| 4- Glove compartment light | 1.4 W |

NOTE

- The dome light/reading lights use LEDs rather than bulbs. For repair and replacement, contact an authorized Mitsubishi Motors dealer or a repair facility of your choice.

## Headlights (vehicles with high intensity discharge headlights)

N00943100159

Do not attempt to disassemble or repair headlights, and do not attempt to replace their bulbs.

**⚠ WARNING**

- **A high voltage is present in the power circuit and in the bulbs and bulb terminals. To avoid the risk of an electric shock, contact an authorized Mitsubishi Motors dealer whenever repair or replacement is necessary.**

## Headlights (except for vehicles with high intensity discharge headlights)

N00943100162

1. Depress the tab (A) on the harness connector and pull the harness connector toward you to remove it.

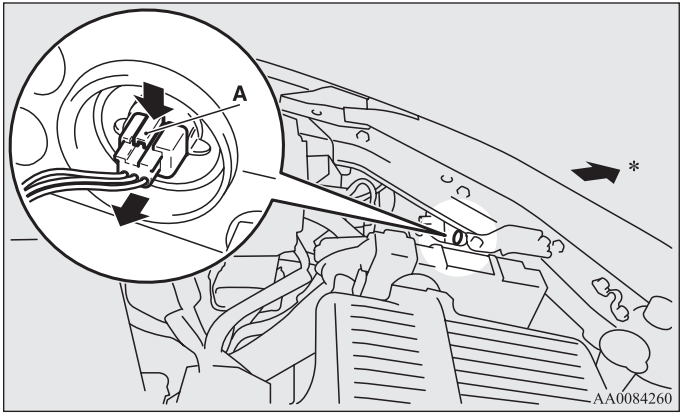


*- Front of the vehicle

2. Turn the bulb (B) counterclockwise, and then remove the headlight bulb with holder.

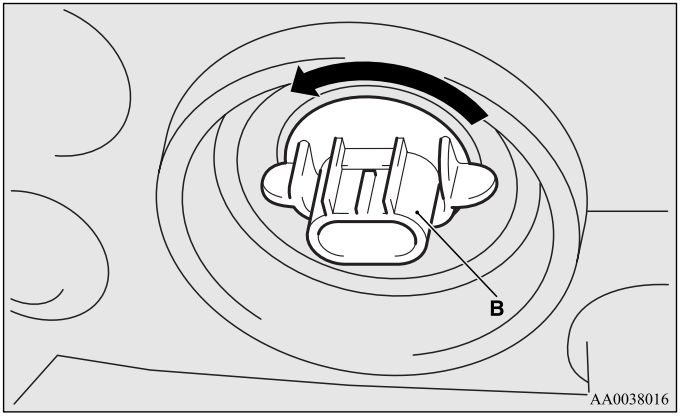


3. To install the bulb, perform the removal steps in reverse.

**⚠ CAUTION**

- **Handle halogen light bulb with care. The gas inside a halogen light bulb is highly pressurized, so dropping, knocking, or scratching a halogen light bulb can cause it to shatter.**
- **Never hold the halogen light bulb with a bare hand, dirty glove, etc. The oil from your hand could cause the bulb to break the next time the headlights are used.**
  **If the glass surface is dirty, clean it with alcohol and let it dry completely before installing the bulb.**

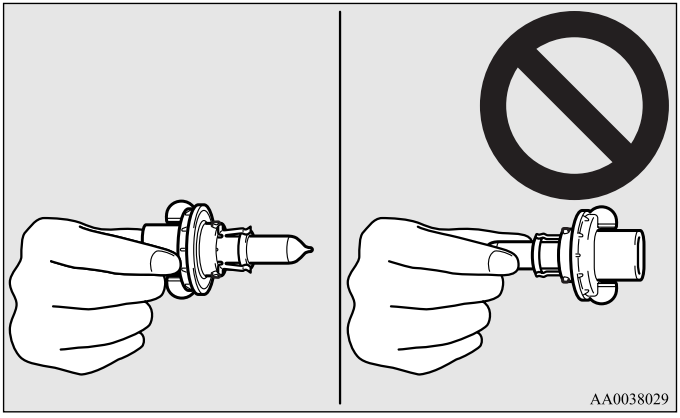


## Adjustment of headlight aim

N00943200121

The alignment of the headlights should be checked by an authorized Mitsubishi Motors dealer or a repair facility of your choice.

## Parking and side-marker lights (vehicles with high intensity discharge headlights)

N00917300525

1. When replacing the bulb on the left side, remove the cap (A) of the headlight by turning it counterclockwise.

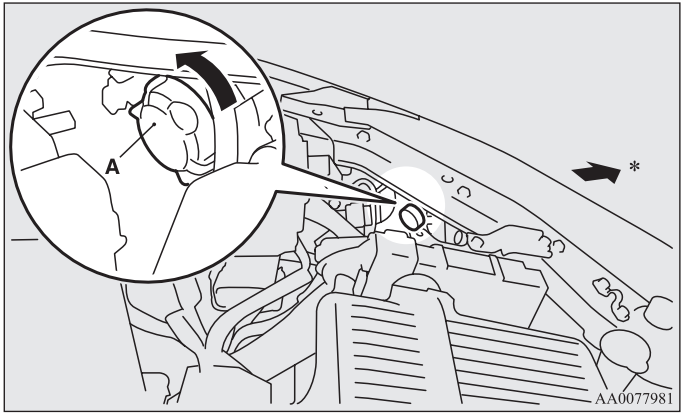


* - Front of the vehicle

2. Remove the socket and bulb assembly (B) together by turning it counterclockwise.

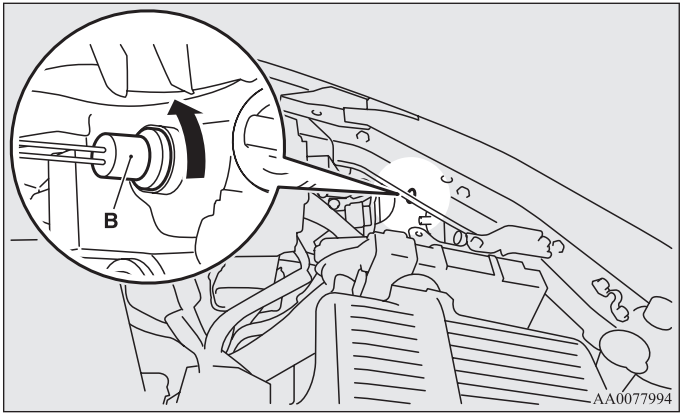


3. Remove the bulb by pulling it out.

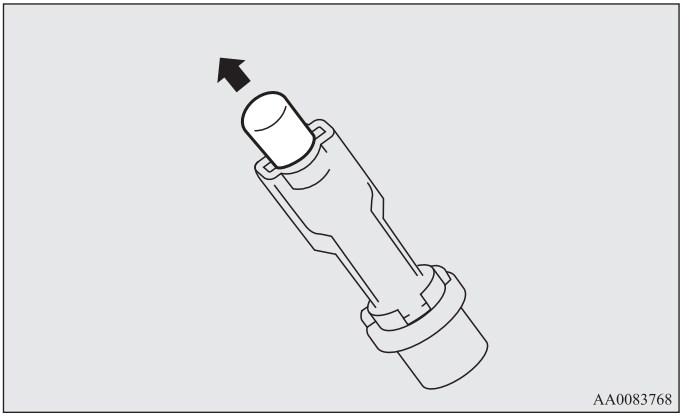


4. To install the bulb, perform the removal steps in reverse.

## Front turn signal lights (vehicles with high intensity discharge headlights)

N00943400022

1. When replacing the bulb on the left side, remove the cap (A) of the headlight by turning it counterclockwise.

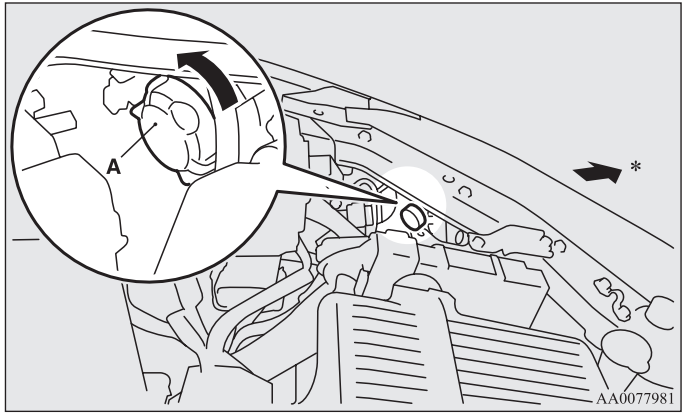


* - Front of the vehicle

2. Remove the socket and bulb assembly (B) together by turning it counterclockwise.

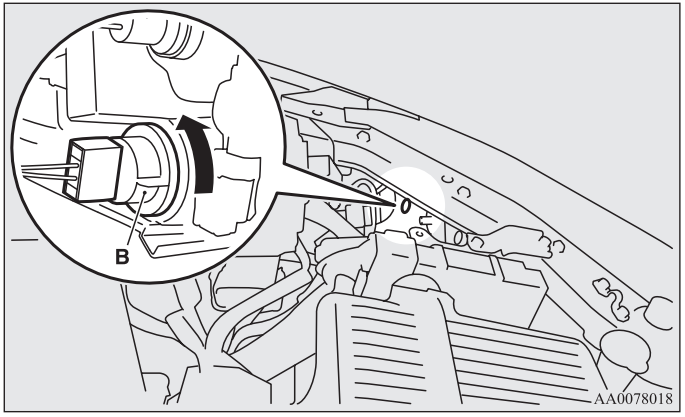

3. Remove the bulb by pulling it out.

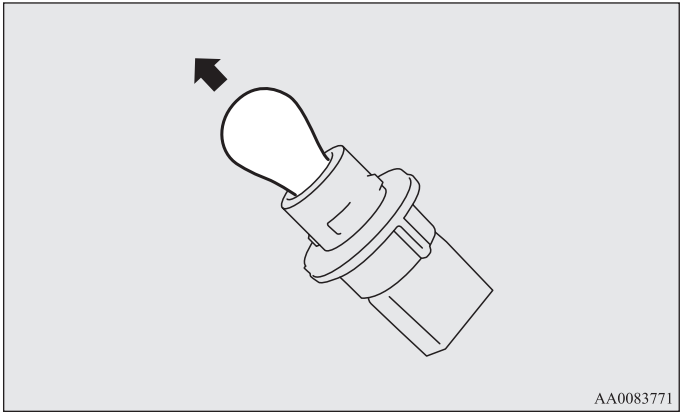


4. To install the bulb, perform the removal steps in reverse.

## Front turn signal, parking and side-marker lights (except for vehicles with high intensity discharge headlights)

N00943400048

1. Remove the entire socket and bulb assembly (A) by turning it clockwise (the left side) or counterclockwise (the right side).

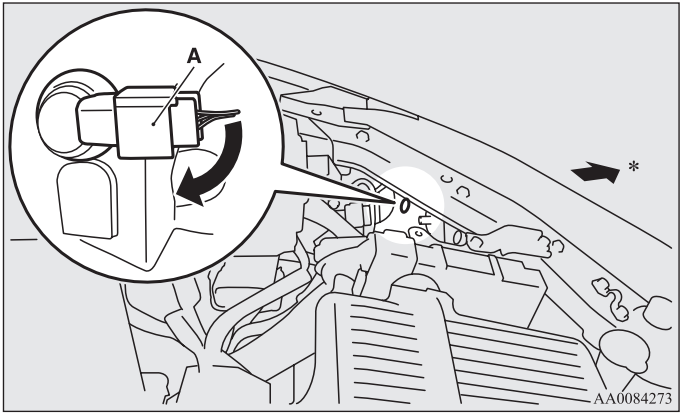


*- Front of the vehicle

2. Depress the tab (B) on the harness connector and pull the harness connector to remove it.

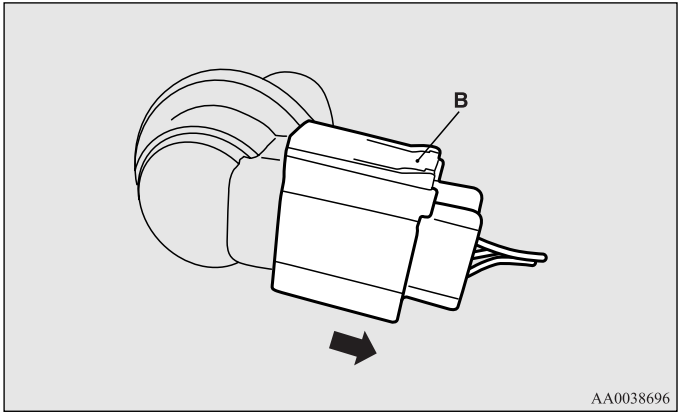


3. To install the bulb, perform the removal steps in reverse.

## Front fog lights (if so equipped)

N00943600675

1. Remove the three clips (A) by turning them counterclockwise or prying them, and remove the two screws (B) by turning them counterclockwise, then remove the cover (C).

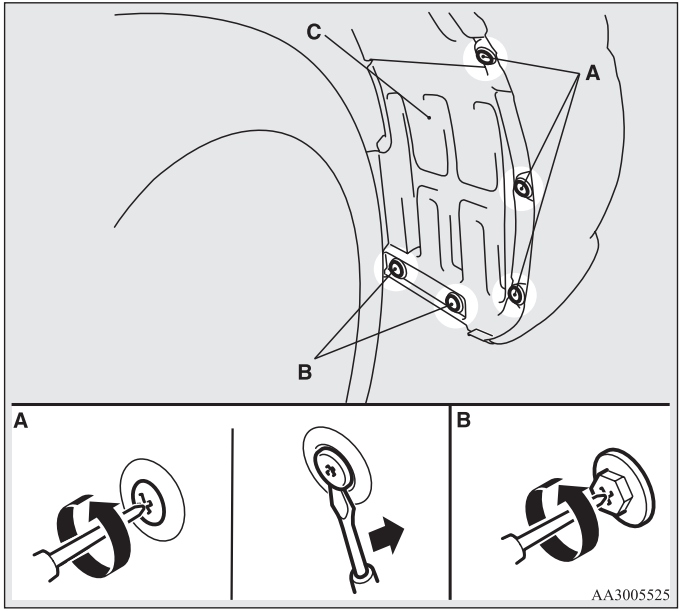

2. Remove the socket and bulb assembly (D) by turning them counterclockwise.

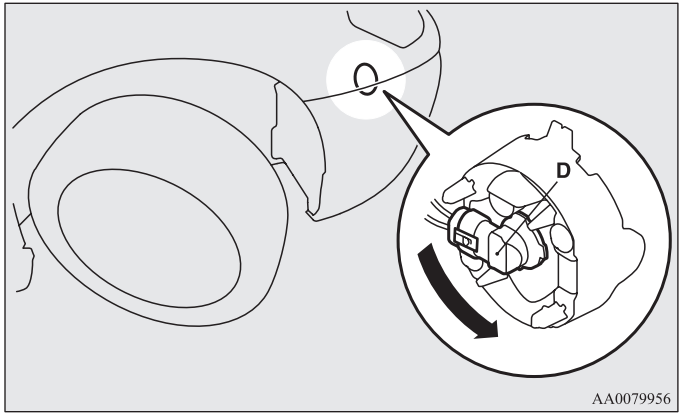


3. Disconnect the harness connector by pulling the tab (E) in the direction of the arrow as shown. Then pull the harness connector (F) to remove the bulb.

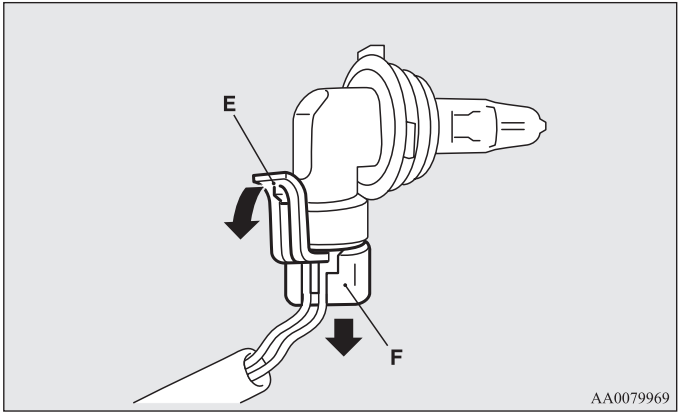


4. To install the bulb, perform the removal steps in reverse.

**⚠ CAUTION**

- **Handle halogen light bulb with care. The gas inside a halogen light bulb is highly pressurized, so dropping, knocking, or scratching a halogen light bulb can cause it to shatter.**
- **Never hold the halogen lights bulb with a bare hand, dirty glove, etc. The oil from your hand could cause the bulb to break the next time the front fog lights are used.**
  **If the glass surface is dirty, clean it with alcohol and let it dry completely before installing the bulb.**

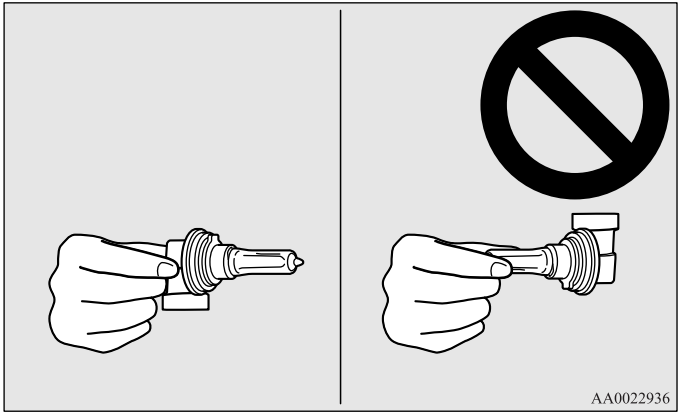


## Rear combination lights

N00943700461

### *ECLIPSE*

1. Open the rear hatch.
   Push the center of the clips (A) and remove them. Then remove the cover (B).

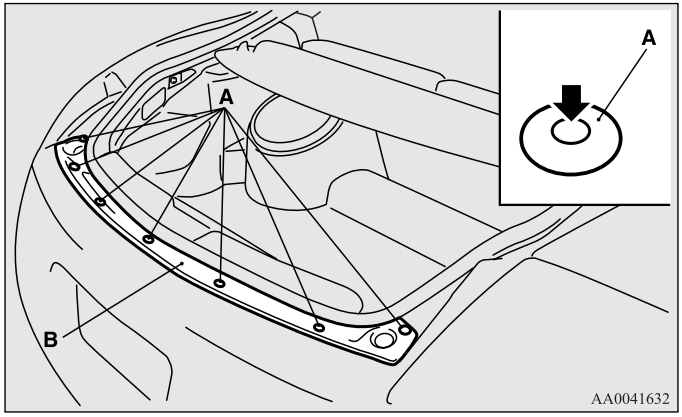

2. Remove the clip (A) and the bolt (C).

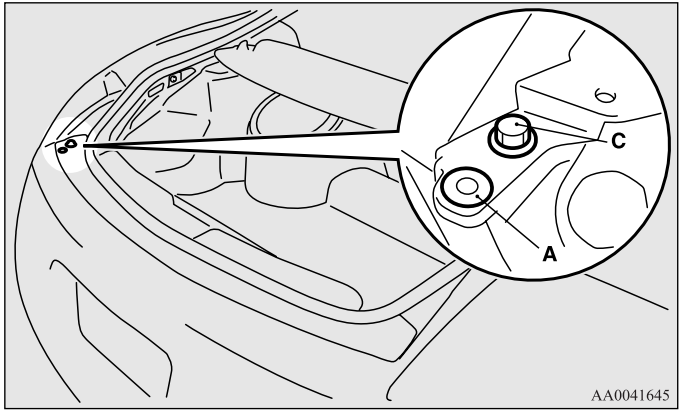


3. Take off the trim cover (D). Remove the light case mounting nut (E).

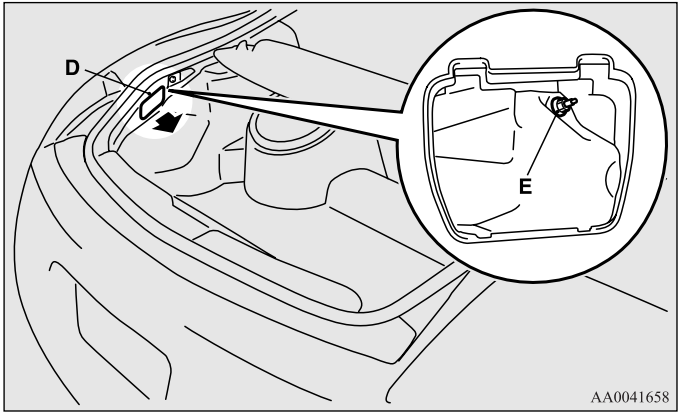

4. Insert the tip of the screwdriver at the edge of the light unit, pry gently to remove the light unit.
   Then move the light unit toward the rear of the vehicle and remove the clip (F).

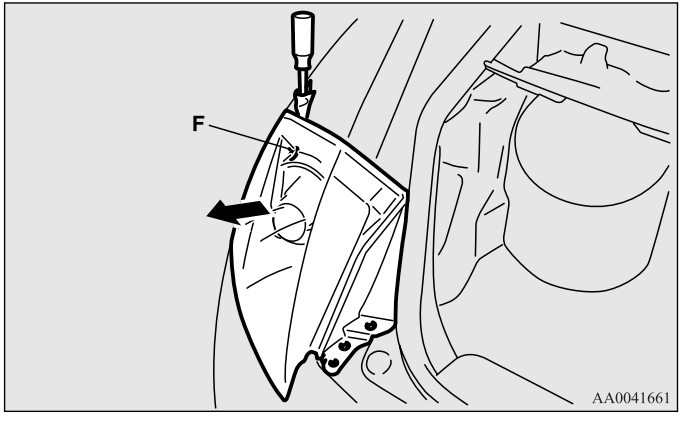


NOTE
- Wrap a cloth around the tip of the screwdriver to keep from scratching the lens.

5. Remove the socket and bulb assemblies by turning them counterclockwise.
   Remove the bulb by pulling it out.

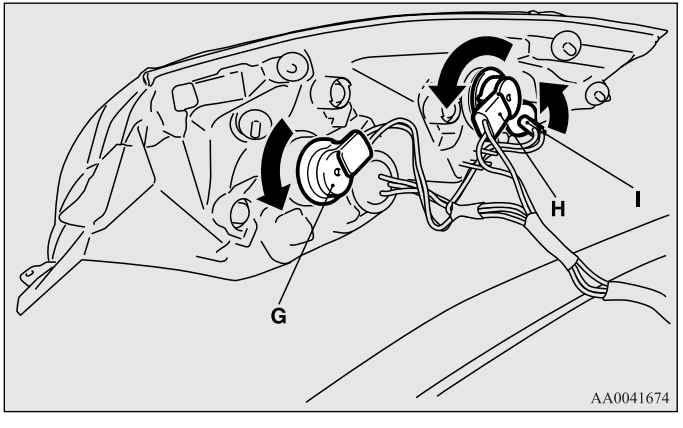


G- Back-up light
H- Rear turn signal light
I- Rear side-marker light

6. To install the bulb, perform the removal steps in reverse.

NOTE

- When mounting the light unit, align the clip (F), pins and bolts (J) on the light unit with the holes in the body.

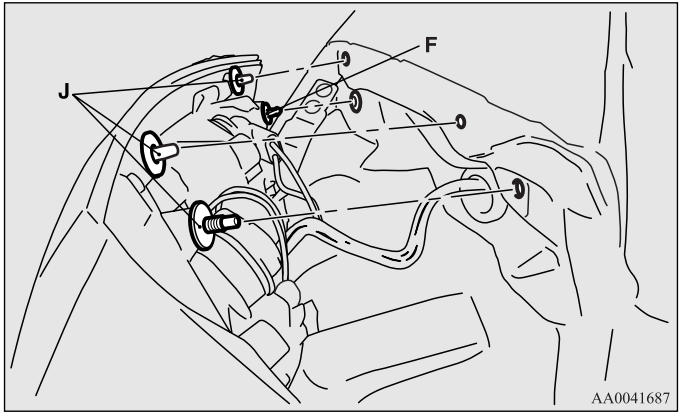


## *ECLIPSE SPYDER*

1. Open the trunk lid.
   Push the center of the clips (A) and remove them. Then remove the cover (B).

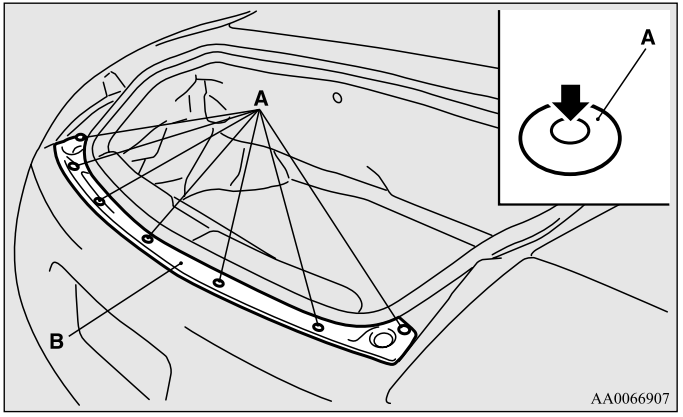

2. Remove the clip (A) and the bolt (C).

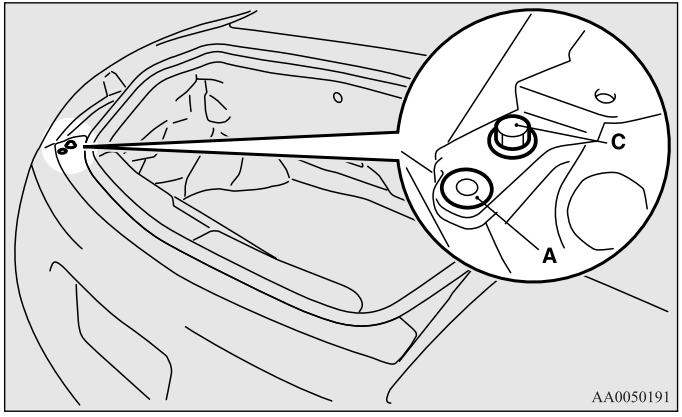


3. Remove the trim cover clips (D) in the order of their numbers (1, 2).

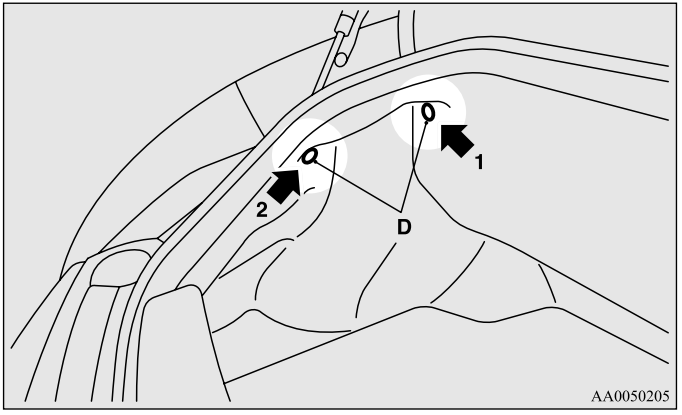

Grasp the trim cover and pull it toward you to remove the clips.

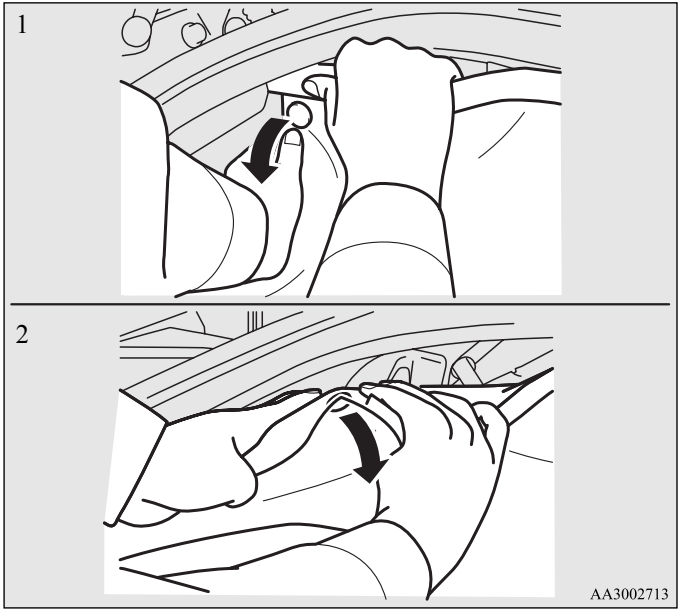


4. Lift the trim cover. Remove the light case mounting nut (E).

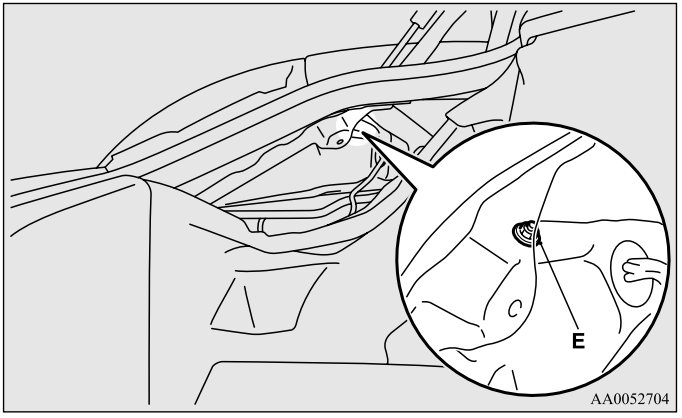

5. Insert the tip of the screwdriver at the edge of the light unit, pry gently to remove the light unit.
   Then move the light unit toward the rear of the vehicle and remove the clip (F).

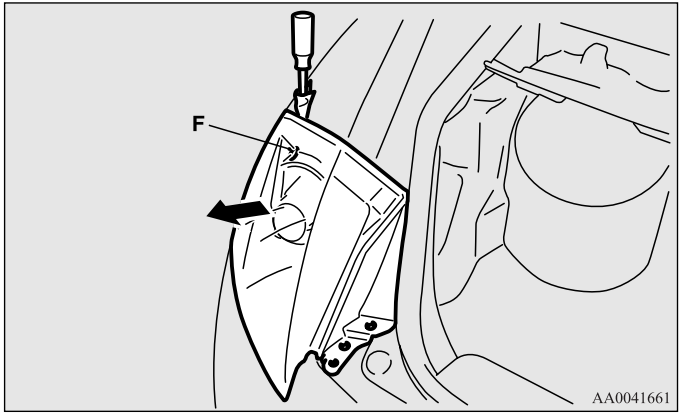


NOTE
- Wrap a cloth around the tip of the screwdriver to keep from scratching the lens.

6. Remove the socket and bulb assemblies by turning them counterclockwise.
   Remove the bulb by pulling it out.

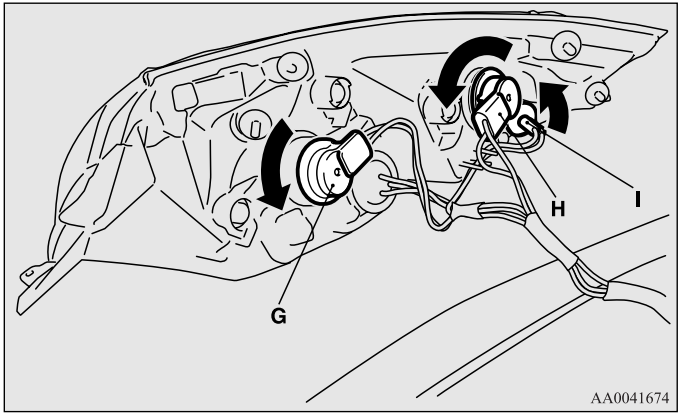


G- Back-up light
H- Rear turn signal light
I- Rear side-marker light

7. To install the bulb, perform the removal steps in reverse.

NOTE
- When mounting the light unit, align the clip (F), pins and bolts (J) on the light unit with the holes in the body.

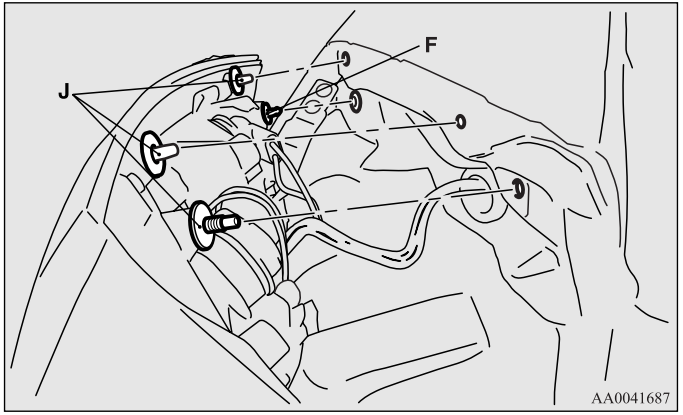


## License plate light

N00944000272

1. Remove the mounting screws (A) and remove the light unit (B).

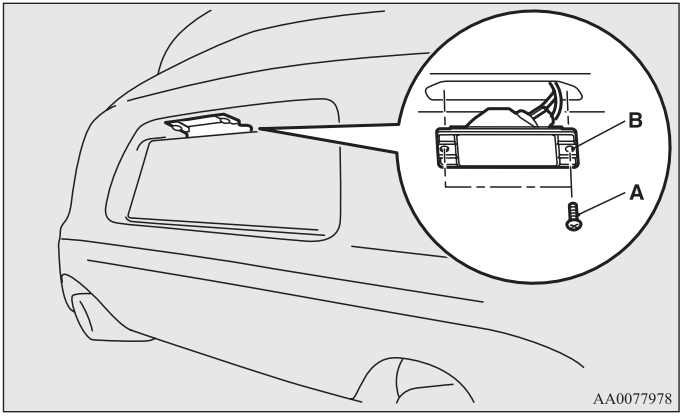

2. Remove the socket and bulb assembly together by turning it counterclockwise.

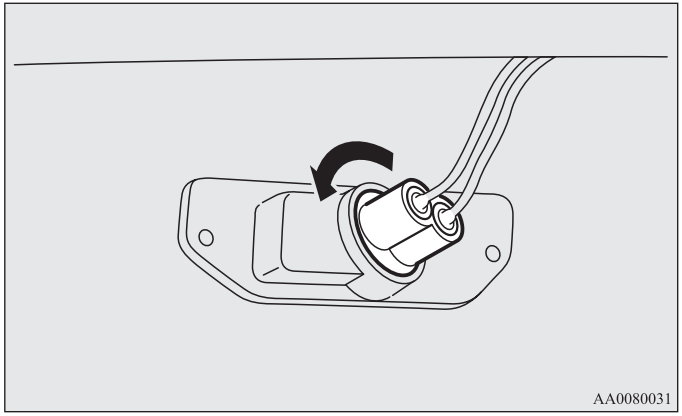


3. Remove the bulb by pulling it out.

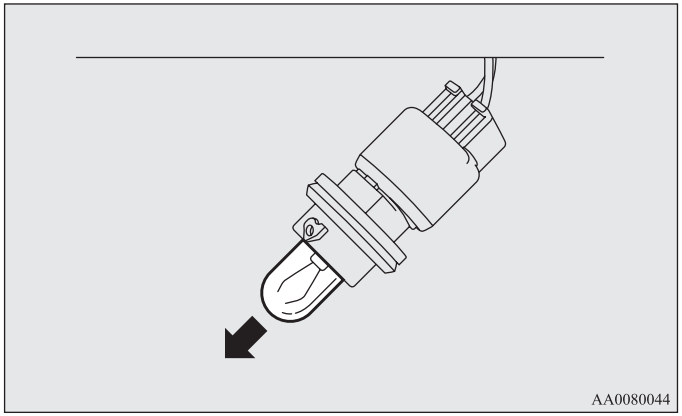


4. To install the bulb, perform the removal steps in reverse.

## Dome light (Rear) (ECLIPSE only)

N00944100303

1. Insert the tip of a screwdriver at the edge of the lens, pry gently to remove the lens, and then remove the bulb from the light holder.

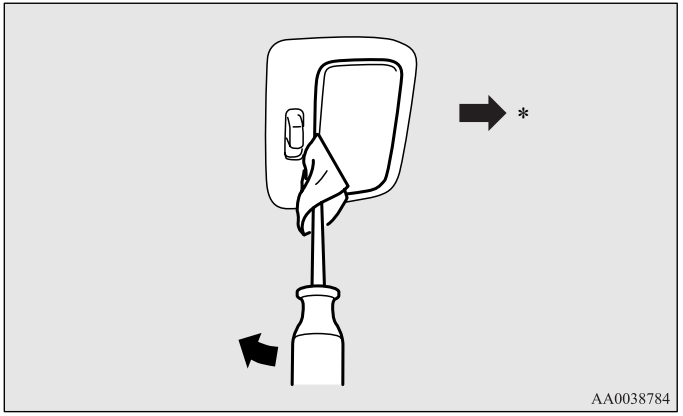


* - Front of the vehicle

NOTE

- Wrap a cloth around the tip of the screwdriver to keep from scratching the lens.

2. To install the bulb, perform the removal steps in reverse.

## Dome light (Front)/Reading light

N00944500277

### *ECLIPSE (except for vehicles with sunroof)*

1. Insert the tip of a screwdriver at the edge of the lens, pry gently to remove the lens, and then remove the bulb from the light holder.

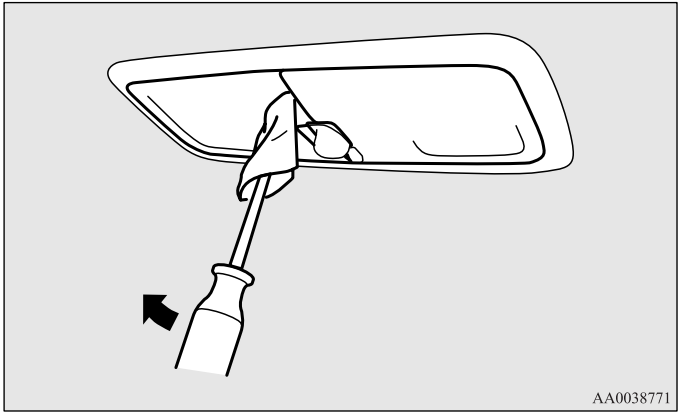


NOTE

- Wrap a cloth around the tip of the screwdriver to keep from scratching the lens.

2. To install the bulb, perform the removal steps in reverse.

### *ECLIPSE (vehicles with sunroof)/ECLIPSE SPYDER*

Have the dome light (front)/reading light bulbs replaced at an authorized Mitsubishi Motors dealer or a repair facility of your choice.

## Reading lights on an inside rearview mirror (ECLIPSE SPYDER only, if so equipped)

N00944400188

Have the reading light bulbs replaced at an authorized Mitsubishi Motors dealer or a repair facility of your choice.

## Cargo area light (ECLIPSE only)

N00950000062

1. Insert the tip of a screwdriver at the edge of the lens, pry gently to remove the lens, and then remove the bulb from the light holder.

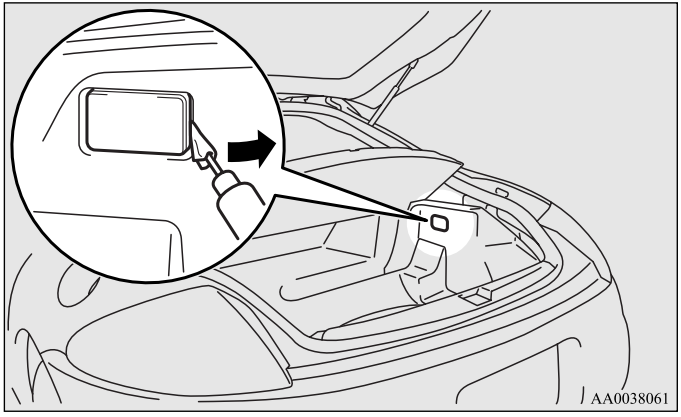


2. To install the bulb, perform the removal steps in reverse.

## Glove compartment light

N00954200059

Have the glove compartment light bulbs replaced at an authorized Mitsubishi Motors dealer or a repair facility of your choice.

## Vanity mirror light (if so equipped)

N00952800077

### *ECLIPSE*

1. Insert the tip of a screwdriver at the edge of the lens, pry gently to remove the lens, and then remove the bulb from the light holder.

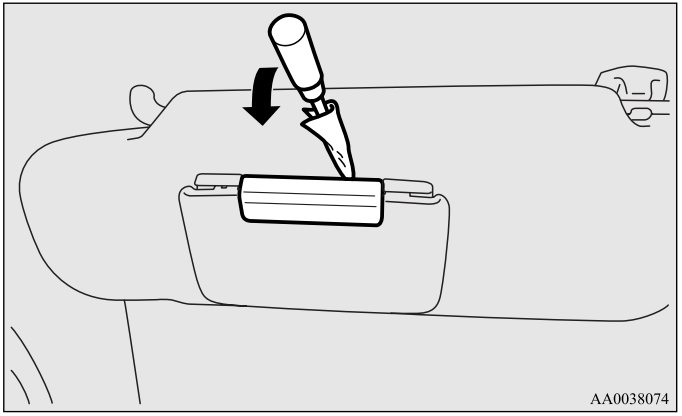


NOTE
- Wrap a cloth around the tip of the screwdriver to keep from scratching the lens.

2. To install the bulb, perform the removal steps in reverse.

### *ECLIPSE SPYDER*

1. Insert the tip of a screwdriver into the notch of the lens, pry gently to remove the lens, and then remove the bulb from the light holder.

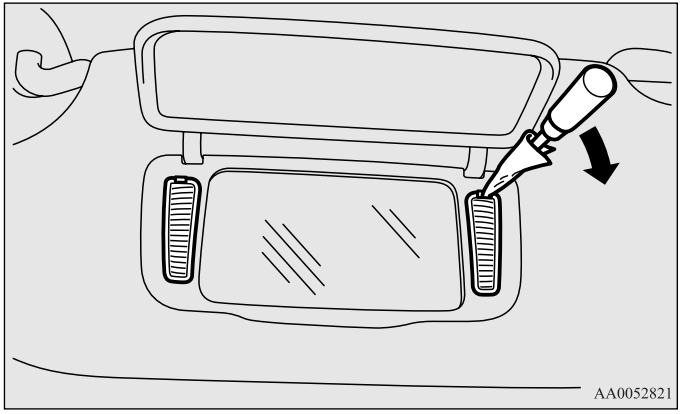


NOTE
- Wrap a cloth around the tip of the screwdriver to keep from scratching the lens.

2. To install the bulb, perform the removal steps in reverse.

NOTE
- When installing the lens, align the tab on the lens with the holes on the sun visor side.

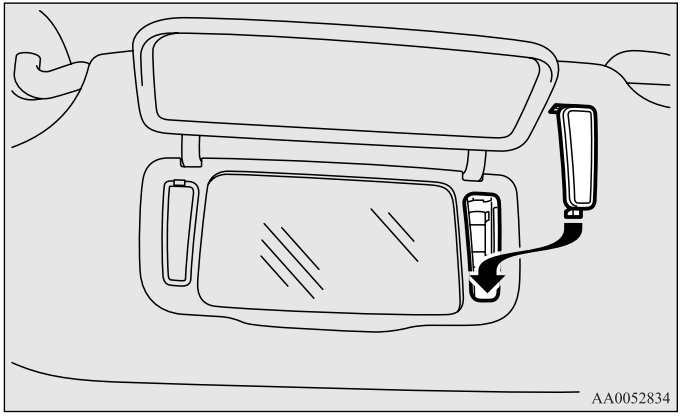


## *Vehicle care precautions*

N00945100078

In order to maintain the value of your vehicle, perform regular maintenance using the proper materials and procedures. Be sure to use only those materials and procedures that meet your local environmental pollution control regulations. Choose the materials you will use carefully, to be sure that they do not contain corrosives. If you are not sure, contact an authorized Mitsubishi Motors dealer for help in choosing these materials.

### ⚠ *CAUTION*

- **Cleaning products can be dangerous. Some are poisonous. Others are highly flammable. Some are dangerous if you breathe their fumes in a closed space. When you use anything in a container to clean your vehicle, be sure to follow the instructions. Always open your vehicle doors or windows when you're cleaning the inside. Never use the following chemicals to clean your vehicle:**
  - **Gasoline**
  - **Carbon Tetrachloride**
  - **Benzine**
  - **Naphtha**
  - **Acetone**
  - **Turpentine**
  - **Paint Thinner**
  - **Lacquer Thinner**
  - **Nail Polish Remover**

These can all be dangerous, and they all can damage your vehicle.

# *Cleaning the inside of your vehicle*

N00945200037

After washing the inside of your vehicle with any cleaner, wipe it dry in a shady, well ventilated area.

**⚠ *CAUTION***

- **Do not use organic substances (solvents, kerosene, alcohol, gasoline, etc.) or alkaline or acidic solutions. These chemicals can cause discoloring, staining or cracking of the surface.**
  **If you use cleaners or polishing agents, make sure their ingredients do not include the substances mentioned above.**

NOTE
- Always read the instructions on the cleaner label.

## Plastic, vinyl leather, fabric and flocked parts

N00945300201

1. Lightly wipe these off with a soft cloth soaked in a 3% solution of gentle soap and water.
2. Dip cloth in fresh water and wring out well. Using this cloth, wipe off the detergent thoroughly.



NOTE
- Do not use cleaners, conditioners, and protectants containing silicones or wax.
  Such products, when applied to the instrument panels or other parts, may cause reflections on the windscreen and obscure vision.
  Also, if such products get on the switches of the electrical accessories, it may lead to failure of these accessories.

## Upholstery

N00945500030

1. To maintain the value of your new vehicle, maintain the upholstery carefully and keep the interior clean.
   Use a vacuum cleaner and brush to clean the seats. If stained, vinyl and synthetic leather should be cleaned with an appropriate cleaner. Cloth fabrics can be cleaned with either upholstery cleaner or a 3% solution of gentle soap in lukewarm water.
2. Clean the carpeting with a vacuum cleaner and remove any stains with carpet cleaner. Oil and grease can be removed by lightly dabbing with a clean white cloth and spot remover.

NOTE
- If fuzzing is difficult to remove from the seat upholstery, draw a suitable defuzzing brush over the surface in one direction.

## Genuine leather (if so equipped)

N00945600246

1. To clean, lightly wipe the leather with a soft cloth soaked in a 5% solution of gentle soap and water.
2. To rinse, dip the cloth in fresh water, wring it out well, and wipe off all the soap.
3. To preserve and protect, use a leather protecting agent on the genuine leather surface.

NOTE
- If genuine leather is wet with water, wipe it with a dry, soft cloth.
  If left damp, mildew may grow and damage the leather surface.

- The genuine leather surface can be damaged if brushed with a nylon or synthetic fiber brush.
- Organic solvents such as benzine, alcohol, gasoline, acid or alkaline solvents can discolor the genuine leather surface and should not be used.
- Remove dirty patches or oil substances quickly as they can stain genuine leather.
- The genuine leather surface may harden and shrink if it is exposed to the direct sunlight for long hours. When your vehicle is parked, place it in the shade as much as possible.
- When the temperature of the vehicle interior rises in summer, vinyl products left on the genuine leather seat may deteriorate and stick to the seat.

# *Cleaning the outside of your vehicle*

N00945700016

To protect your vehicle's finish, wash it often and thoroughly. If desired, you may wax your vehicle using a nonabrasive automobile wax.

## Foreign material

N00945800017

Industrial pollution, road tar, bird droppings, tree sap, insect remains, sea water and other foreign matters can damage the finish on your vehicle.
Generally, the longer any foreign material stays on the finish, the worse the damage. Wash your vehicle as soon as possible whenever the finish gets soiled.

## Washing

N00945900584

Chemicals contained in the dirt and dust picked up from air, rain, snow or road surfaces can damage the paint and body of your vehicle if left on.
Frequent washing and waxing is the best way to protect your vehicle from this damage.
Do not wash the vehicle in direct sunlight. Park the vehicle in the shade and spray it with water to remove dust. Next, using plenty of clean water and a car washing mitt or sponge, wash the vehicle from top to bottom.
Use a mild car washing soap if necessary. Rinse thoroughly and wipe dry with a chamois or soft cloth. After washing the vehicle, carefully clean the joints and flanges of the doors, hood, etc., where dirt is likely to remain.

**⚠ CAUTION**

- **When washing the underside of your vehicle or the wheels, wear a pair of rubber gloves to protect your hands.**
- **Never spray or splash water on the electrical parts in the engine compartment. This may damage them. Be careful also when washing the underbody. Do not spray water into the engine compartment.**
- **Avoid automatic car washers that use rotating brushes. These brushes may scratch the paint surface and make it dull.**
  **Scratches are more noticeable on darker colored vehicles.**
- **Some hot water washing equipment uses high pressure and heat to clean your vehicle. This heated water may damage your vehicle's resin parts. It can flood the interior of the vehicle. Therefore, be sure of the following:**
  - **Keep the washing nozzle at least 20 inches (50 cm) away from the vehicle body.**
  - **When washing around the door glass, hold the nozzle at a distance of more than 20 inches (50 cm) and at right angles to the glass surface.**
  - **It is recommended that the water should be sprayed at a 45° angle to the side windows and top seals. (ECLIPSE SPYDER only)**

**⚠ CAUTION**

- **Make sure to do the following when using an automatic car wash, with help from either this manual or the car wash operator, to avoid damaging your vehicle:**
  - **Fold the outside rearview mirrors.**
  - **Remove the antenna.**
  - **Tape or remove the rear wiper arm assembly. (ECLIPSE only)**
  - **As your vehicle is equipped with rear spoiler, check with the car wash operator before using the car wash.**

***During cold weather***

Salt and other chemicals spread on winter roads in some geographical areas can have a detrimental effect on the vehicle underbody. You should flush the underbody with a high pressure hose every time you wash the outside of your vehicle.
Take special care to remove mud or other debris which could trap and hold salt and moisture.
After washing your vehicle, wipe off all waterdrops from the rubber parts around the doors to prevent the doors from freezing.

NOTE

- When the door is frozen, opening it by force may tear off or crack the rubber gasket installed around the door. Pour warm water to melt the ice. Be sure to thoroughly wipe off the water after opening the door. To prevent freezing of the weatherstripping on the doors, hood, etc., treat with silicone lubricant.

## Waxing

N00946000074

Wax your vehicle once or twice a year, or when water does not bead up on the paint.
Use a soft cloth to put a small amount of wax on the painted surfaces. After the wax has dried, polish with a dry soft cloth.
Do not wax your vehicle in direct sunlight.
You should wax when the painted surfaces are cool.

**⚠ CAUTION**

- **Waxes containing high abrasive compounds should not be used. These waxes remove rust and stain effectively from the paintwork, but are harmful to the finish of the paint, because they also remove paint/clearcoat.**
  **They are also harmful to other glossy surfaces such as the grille, trim, moldings, etc.**
- **Do not use gasoline, kerosene, benzene or paint thinners to remove road tar or other dirt from the vehicle surface.**
- **Do not put wax on the areas having black matte coating because it can cause uneven discoloration, patches, blurs, etc. If these get wax on them, wipe the wax off right away with a soft cloth and warm water.**
- **On vehicles with sunroof, be careful not to apply any wax on the weatherstrip (black rubber) when waxing the area around the sunroof opening.**
  **If stained with wax, the weatherstrip cannot maintain a weatherproof seal with the sunroof.**

## Polishing

N00946100062

If painted surfaces have been severely damaged and lost their original luster and color tone, polish the surface lightly with a fine polishing compound. Avoid limiting your polishing to the damaged surface only; polish a somewhat wider area, moving the polishing cloth in one direction. After polishing, flush the compound from the surface and apply a coat of wax to regain a beautiful luster.

## Damaged paint

N00946200076

Small cracks and scratches in the paint coat should be touched up as soon as possible with touch-up paint to prevent corrosion. Check body areas facing the road or the tires carefully for damage to the paint caused by flying stones, etc. The paint code number for your vehicle can be found on the vehicle information code plate. Refer to “Vehicle information code plate” on page 9-2.

## Cleaning plastic parts

N00946300178

Use a sponge or chamois to clean these parts.
If a vehicle wax sticks to a gray or black rough surface of the bumper, molding or lights, the surface may appear white in color. In this case, wipe it off using lukewarm water and a soft cloth or chamois.

**⚠ CAUTION**

- **Do not use a scrubbing brush or other rough scrubber as these may damage the plastic surface.**
- **Do not use wax containing compounds (polishing powder) which may damage the plastic surface.**
- **Do not let the plastic parts get soiled with gasoline, oil, brake fluids, engine oils, greases, paint thinner, and sulfuric acid (battery electrolyte). These fluids, etc., may crack, stain or discolor the plastic parts.**
  **If any of these get on the plastic parts, wipe them up with a soft cloth or chamois and a mild solution of soap and water. Then rinse them immediately with water.**

## Chrome parts

N00946400010

To prevent spots and corrosion of chrome parts, wash with water, dry thoroughly, and apply a nonabrasive automotive wax. If the chrome is severely damaged or pitted, use a commercially available chrome polish.

## Aluminum wheels

N00946500213

1. Remove dirt using a wet sponge.
2. Use a mild detergent on any dirt that cannot be removed easily with water.
   Rinse off the detergent after washing the wheel.
3. Dry the wheel thoroughly using a chamois leather or a soft cloth.

**⚠ CAUTION**

- **Do not use a brush or other hard implement on the wheels.**
  **Doing so could scratch the wheels.**
- **Do not use any cleaner that contains an abrasive substance or is acidic or alkaline. Doing so could cause the coating on the wheels to peel or become discolored or stained.**
- **Do not directly apply hot water using a steam cleaner or by any other means.**
- **Contact with seawater or road salt used for de-icing can cause corrosion. Rinse off such substances as soon as possible.**

## Window glass

N00946600012

The window glass can usually be cleaned using only a sponge and water. Glass cleaner can be used to remove wax, oil, grease, dead insects, etc. After washing the glass, wipe it dry with a clean, dry, soft cloth.

## Wiper blades

N00946700013

Use a soft cloth and glass cleaner to remove grease, dead insects, etc., from the wiper blades.
Replace the wiper blades when they no longer clean the windshield and rear window properly.

## Cleaning the sunroof (ECLIPSE only, if so equipped)

N00946800056

Clean the inside of the sunroof with a soft cloth. Hard deposits should be wiped away with a cloth dipped in warm, neutral detergent solution. Wipe away the solution with a sponge dipped in fresh water.

NOTE
- The surface treatment on the inside of the glass may be removed if a hard cloth or organic solvent is used.

## Convertible top (ECLIPSE SPYDER only)

N00946900031

Wash the top with water and a soft nylon brush or something similar. Wash the window sections with a sponge. If dirt or mud cannot be washed off in this way, use a 0.1 concentration of household laundry powder in water and a cloth to scrub lightly, and then wash with plain water again. If laundry powder is used, rinse thoroughly; be sure that none of the soap remains on the top. If soap does remain on the top, it could cause cracking and/ or discoloration.
After cleaning, always be sure the top is completely dry before it is lowered. Lowering the top while wet or damp may cause interior water damage, water stains or mildew of the top material.

NOTE
- Always sprinkle water from above.
- Do not run this vehicle through any automatic car washes. These car washes may cause water to enter the vehicle and cause damage to the convertible top. If you wash the vehicle by hand do not spray water directly at side windows and top seals which may cause water to enter the vehicle. Therefore, be sure to observe the following.
  - Maintain a good distance of approx. 16 inches (40 cm) or more between the vehicle body and the washing nozzle.
  - It is recommended that the water should be sprayed at a 45° angle to the side windows and top seals.
- Do not use harsh or abrasive type cleaners or bleaching agents on the top material or damage may result.

## Engine compartment

N00947000084

Never spray or splash water on the electrical components in the engine compartment, as this may cause damage.
Do not allow any nearby parts (such as plastic parts) come into contact with sulphuric acid (battery electrolyte), which may crack, stain, or discolour them.
If this occurs, wipe the parts with a soft cloth saturated with a mild detergent and water solution.
Then immediately rinse the affected parts with plenty of water.

# *Customer assistance/Reporting Safety Defects*

Consumer information
(For vehicles sold in U.S.A.) . . . . . .8- 2
Reporting Safety Defects . . . . . .8- 3
Important facts to know in case of an accident . . .8- 4

# *Consumer information (For vehicles sold in U.S.A.)*

N01047100100

This information is provided in compliance with the requirements of the National Highway Traffic Safety Administration, Department of Transportation. It provides the purchasers and/or prospective purchasers with information on reporting safety defects.

## Uniform tire quality grading

DOT quality grades - All passenger vehicle tires must conform to Federal Safety Requirements in addition to these grades. The specific grade rating in each grade category is shown on the side wall of the tires on your vehicle.

## Treadwear

The treadwear grade is a comparative rating based on the wear rate of the tire when tested under controlled conditions on a specified government test course. For example, a tire graded 150 would wear one and one-half ($1^1/_2$) times as well on the government course as a tire graded 100. The relative performance of tires depends upon the actual conditions of their use, however, and may depart significantly from the norm due to variations in driving habits, service practices and differences in road characteristics and climate.

## Traction AA, A, B, C

The traction grades, from highest to lowest, are AA, A, B and C. Those grades represent the tire's ability to stop on wet pavement as measured under controlled conditions on specified government test surfaces of asphalt and concrete. A tire marked C may have poor traction performance.

**⚠ *WARNING***

- **The traction grade assigned to this tire is based on straight-ahead braking traction tests, and does not include acceleration, cornering, hydroplaning, or peak traction characteristics.**

## Temperature A, B, C

The temperature grades are A (the highest), B and C, representing the tire's resistance to the generation of heat and its ability to dissipate heat when tested under controlled conditions on a specified indoor laboratory test wheel. Sustained high temperature can cause the material of the tire to degenerate and reduce tire life, and excessive temperature can lead to sudden tire failure. The grade C corresponds to a level of performance which all passenger car tires must meet under the Federal Motor Vehicle Safety Standard No. 109. Grades B and A represent higher levels of performance on the laboratory test wheel than the minimum required by law.

**⚠ *WARNING***

- **The temperature grade for this tire is established for a tire that is properly inflated and not overloaded. Excessive speed, underinflation, or excessive loading, either separately or in combination, can cause heat buildup and possible tire failure.**

# *Reporting Safety Defects*

N01047200345

## For vehicles sold in U.S.A.

If you believe that your vehicle has a defect which could cause a crash or could cause injury or death, you should immediately inform the National Highway Traffic Safety Administration (NHTSA) in addition to notifying Mitsubishi Motors North America, Inc.

If NHTSA receives similar complaints, it may open an investigation, and if it finds that a safety defect exists in a group of vehicles, it may order a recall and remedy campaign. However, NHTSA cannot become involved in individual problems between you, your dealer, or Mitsubishi Motors North America, Inc.

To contact NHTSA, you may call the Vehicle Safety Hotline toll-free at 1-888-327-4236 (TTY: 1-800-424-9153); go to
http://www.safercar.gov; or write to:

**Administrator, NHTSA, 400 Seventh Street, SW., Washington, DC 20590.**

You can also obtain other information about motor vehicle safety from http://www.safercar.gov.

To contact Mitsubishi Motors North America, Inc. call 1-888-648-7820 or write to:

**Mitsubishi Motors North America, Inc.**
**Customer Relations Department**
**P.O. Box 6400**
**Cypress, CA 90630-0064**

## For vehicles sold in Canada

If you live in Canada, and you believe that your vehicle has a safety defect, you should immediately notify Transport Canada, in addition to notifying Mitsubishi Motor Sales of Canada, Inc. You may write to:

**Transport Canada**
**330 Sparks Street**
**Tower C**
**Ottawa, Ontario K1A 0N5**

To contact Mitsubishi Motor Sales of Canada, Inc. call 1-888-576-4878 or write to:

**Mitsubishi Motor Sales of Canada, Inc.**
**Customer Relations Department**
**P.O. Box 41009**
**4141 Dixie Road**
**Mississauga, ON L4W 5C9**

# *Important facts to know in case of an accident*

N01047300098

We hope you will never be involved in an accident, but there is always that potential danger. So, please be sure to buckle up and drive safely.

## In the event of an accident

- Remain calm.
- Check for injuries. Report all injuries to the police, and, if necessary, call for an ambulance.
- Record all the details of the accident. This will provide you with accurate records of the accident for discussions with your insurance company and other persons who may be acting on your behalf.

## Key information to discuss with your insurance company

- Understand your repair estimate before approving repairs.
- Choosing the repair shop and the brands of parts that they use on your vehicle is your decision.
- Ask for genuine Mitsubishi Motors parts. Many times, to save money, your insurance company will recommend imitation parts that do not meet the original specifications of fit, finish, corrosion resistance or workmanship.

## Mitsubishi Motors built-in protection

The strength and integrity built into your Mitsubishi vehicle is the result of a specific design referred to as “Energy Management”. Individual body parts are designed to act as one unit in the event of an accident. Shock waves are absorbed by protective panels or are channeled around the passenger compartment. This important feature is possible because high tensile steel is used in Mitsubishi panels and structural parts, something that cannot be guaranteed by the manufacturers of imitation parts. All Genuine Mitsubishi body panels and support brackets are designed and constructed as important protection features in the event of an accident. By replacing body parts with imitations, your vehicle may no longer meet original equipment specifications.

## Consumer rights (For vehicles sold in U.S.A.)

As a consumer requesting repair on your vehicle, you have consumer rights. Across the country, State Insurance Commissioners have begun considering rules on the use of non-OEM parts. This could mean that repair shops will have to disclose to the consumer, when they intend to use non-OEM parts. Since regulations are not consistent on this point, remember you have a choice. So, if you want genuine Mitsubishi Motors parts, you may have to specifically request them. Make certain your insurance company understands imitations are not to be used in the repair of your vehicle. You deserve the best genuine Mitsubishi Motors parts.

## Genuine Mitsubishi Motors parts

Genuine Mitsubishi Motors parts are built with the high quality and durability standards you expect. Genuine Mitsubishi Motors replacements parts are your guarantee that your vehicle will have all the technological advantages and maintain the style and protection of a brand new Mitsubishi Motors. Remember to ask for genuine Mitsubishi Motors parts.

# *Specifications*


Vehicle labeling . . . . . 9- 2
Vehicle dimensions . . . . . 9- 5
Vehicle weights . . . . . 9- 6
Engine specifications . . . . . 9- 7
Battery . . . . . 9- 8
Tires and wheels. . . . . 9- 8
Capacities . . . . . 9- 9

# *Vehicle labeling*

N01147400612

Keep a record of the vehicle identification number. This information will assist the police if your vehicle is stolen.

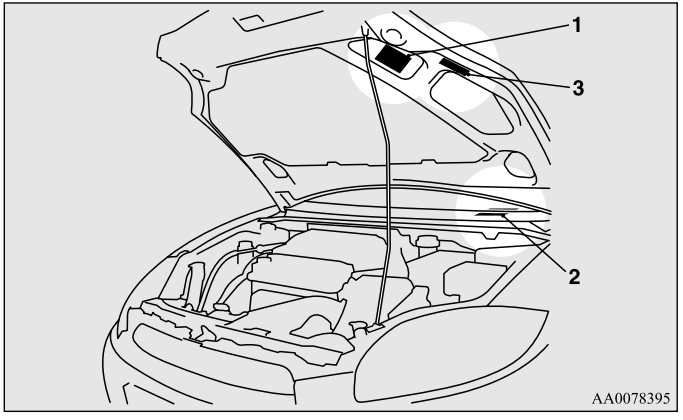


## 1 - Vehicle emission control information label

The vehicle emission control information label is affixed on the inside panel of the engine hood.

## 2 - Vehicle identification number plate

The vehicle identification number is stamped on the plate riveted to the left front corner of the dashboard. It is visible from outside of the vehicle through the windshield.

## 3 - Air conditioning label

The air conditioning label is affixed on the inside panel of the engine compartment.

## 4 - Vehicle information code plate

The vehicle information code plate is located on the driver's side door pillar.

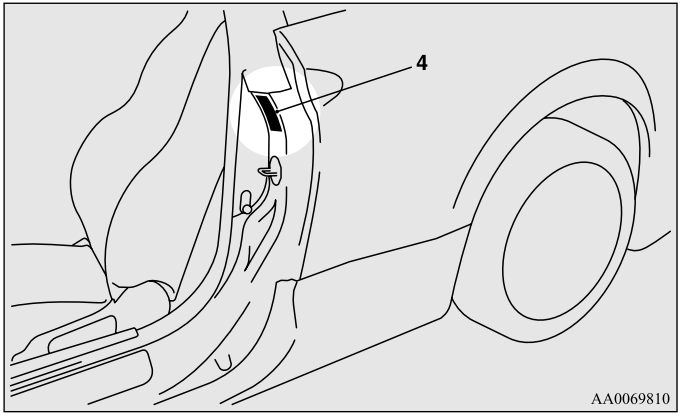

## Engine serial number

The engine serial number is stamped on the cylinder block as shown in the illustrations.

2.4 liter engine

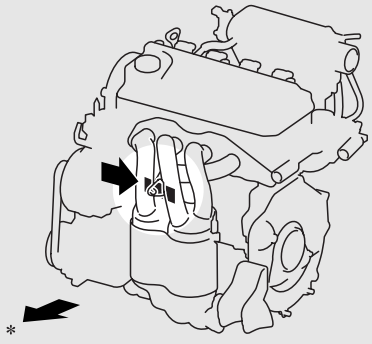


*- Front of the vehicle

3.8 liter engine

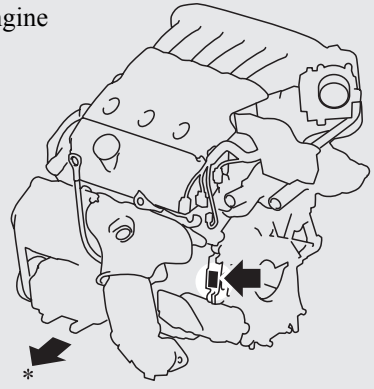


*- Front of the vehicle

## Tire and loading information placard

N01148100573

The tire and loading information placard is located on the driver's door sill.

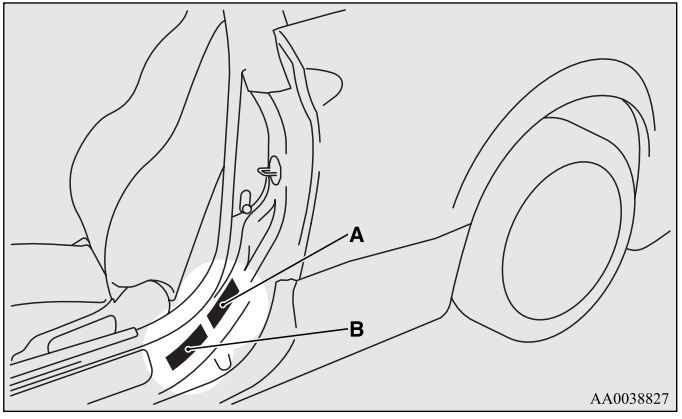


A- All vehicles (Type A)
B- Vehicles sold in Canada (Type B)

Type A

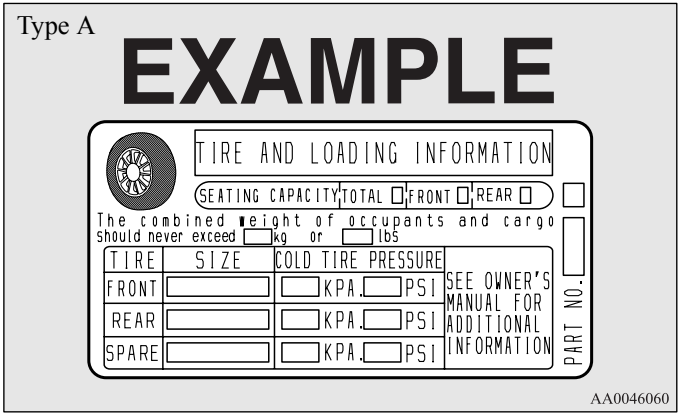


Type B

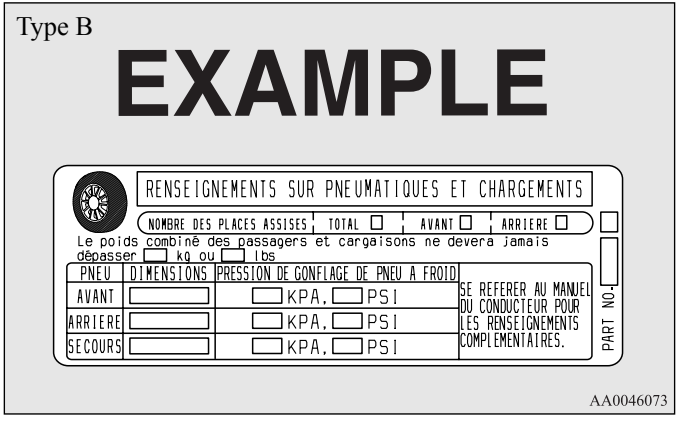

## Certification label

N01148200125

The certification label is located on the driver's side door pillar.

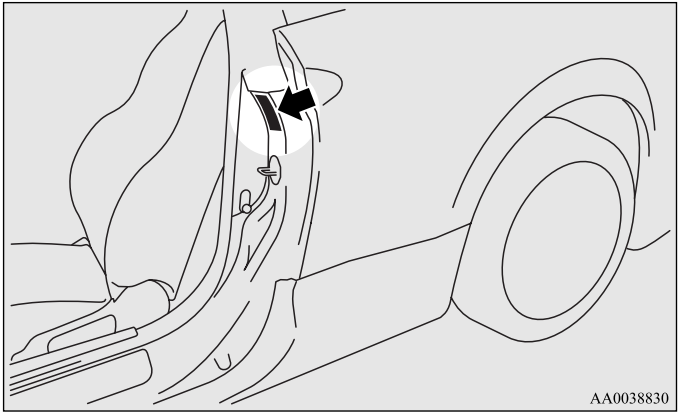


# *Vehicle dimensions*

N01147500512

## ECLIPSE

| | |
|---|---|
| Overall length | 180.4 in (4,583 mm) |
| Overall width | 72.2 in (1,835 mm) |
| Overall height | 53.2 in (1,351 mm) |
| Wheel base | 101.4 in (2,575 mm) |

## ECLIPSE SPYDER

| | |
|---|---|
| Overall length | 180.4 in (4,583 mm) |
| Overall width | 72.2 in (1,835 mm) |
| Overall height | 54.1 in (1,375 mm) |
| Wheel base | 101.4 in (2,575 mm) |

# *Vehicle weights*

N01147600757

## ECLIPSE

| Item | | 2.4 liter | 3.8 liter |
|---|---|---|---|
| Gross vehicle weight rating (GVWR) | | 4,090 lb (1,855 kg) | 4,332 lb (1,965 kg) |
| Gross axle weight rating (GAWR) | Front | 2,260 lb (1,025 kg) | 2,469 lb (1,120 kg) |
| | Rear | 1,852 lb (840 kg) | 1,885 lb (855 kg) |
| Vehicle capacity weight | | 661 lb (300 kg) | |
| Seating capacity | | 4 persons | |

## ECLIPSE SPYDER

| Item | | 2.4 liter | 3.8 liter |
|---|---|---|---|
| Gross vehicle weight rating (GVWR) | | 4,266 lb (1,935 kg) | 4,464 lb (2,025 kg) |
| Gross axle weight rating (GAWR) | Front | 2,304 lb (1,045 kg) | 2,491 lb (1,130 kg) |
| | Rear | 1,984 lb (900 kg) | 1,995 lb (905 kg) |
| Vehicle capacity weight | | 661 lb (300 kg) | |
| Seating capacity | | 4 persons | |

GVWR: maximum total weight (load) limit specified for the vehicle
GAWR: maximum weight (load) limit specified for the front or rear axle
Seating capacity: the number of maximum occupants

# *Engine specifications*

N01147700497

| Item | | 2.4 liter | 3.8 liter |
|---|---|---|---|
| Engine model | | 4G69 | 6G75 |
| Engine displacement | | 145.1 CID (2,378 cm³) | 233.6 CID (3,828 cm³) |
| No. of cylinders and cylinder arrangement | | 4 in-line | 6-V60° |
| Bore | | 3.43 in (87.0 mm) | 3.74 in (95.0 mm) |
| Stroke | | 3.93 in (100.0 mm) | 3.54 in (90.0 mm) |
| Compression ratio | | 9.5 | 10.5 |
| Thermostat valve opening temperature | | 188.6 °F (87.0 °C) | 179.6 °F (82.0 °C) |
| Spark plugs | NGK | LZFR6AI | IFR6B-K |
| Spark plug gap | | .028 to.031 in (0.7 to 0.8 mm) | |
| Firing order | | 1-3-4-2 | 1-2-3-4-5-6 |

## Battery

N01147800049

| | |
|---|---|
| 2.4 liter | **BCI Group No.86** |
| 3.8 liter | **BCI Group No.24** |

Battery is a 12 volt type.

NOTE

- There are various sizes of batteries in BCI Groups No.24 and 86.
  When you replace the battery, confirm the size of the replacement battery will not interfere with other components in the engine compartment.

## Tires and wheels

N01147900688

| | | |
|---|---|---|
| Tire | | P235/45R18 94V |
| Wheel | Size | 18 x 8J |
| | PCD | 4.5 in (114.3 mm) |
| | Offset | 1.81 in (46 mm) |

PCD: Pitch Circle Diameter (installation holes)

NOTE

- Contact an authorized Mitsubishi Motors dealer for details on the combination used on your vehicle.
- These tires satisfy vehicle loading conditions described in this owner's manual.

# Capacities

N01148000888

| Item | | | Capacity | Lubricants |
|---|---|---|---|---|
| Fuel (approximate) | | | 17.7 gal (67.0 L) | Refer to “Fuel selection” on page 1-2. |
| Engine oil | | Oil pan | 4.2 qt (4.0 L) | Engine oils displaying the ILSAC certification mark (“starbust” symbol) on the container.<br>If these oils are not available, an API classification SM can be used. |
| | | Oil filter | .32 qt (0.3 L) | |
| Power steering | | | As required | Genuine Mitsubishi Power Steering Fluid |
| Automatic transaxle | | 4A/T | 8.1 qt (7.7 L) | DIAMOND ATF SP III |
| | | 5A/T | 8.9 qt (8.4 L) | |
| Manual transaxle | | 5M/T | 2.3 qt (2.2 L) | DiaQueen NEW MULTI GEAR OIL<br>API classification GL-3<br>SAE 75W-80 |
| | | 6M/T | 2.1 qt (2.0 L) | |
| Brake | | | As required | Conforming to Brake fluid DOT3 or DOT4 |
| Hood lock release mechanism and safety catch | | | As required | Multipurpose type grease NLGI Grade 2 |
| Engine coolant {Includes .63 qt (0.6 L) in reserve tank} | 2.4 liter | Manual transaxle | 9.3 qt (8.8 L) | Long Life Antifreeze Coolant or an equivalent |
| | | Automatic transaxle | 9.2 qt (8.7 L) | |
| | 3.8 liter | Manual transaxle | 8.6 qt (8.1 L) | |
| | | Automatic transaxle | 8.5 qt (8.0 L) | |
| Washer fluid | | | 4.2 qt (4.0 L) | — |
| Refrigerant (air conditioning) | | | Refer to the air conditioning label on page 9-2. | HFC-134a |

## A

Accessory (installation) 1-7
Active stability control 3-84
ASC indicator 3-87
ASC OFF indicator 3-87
ASC OFF switch 3-85
Skid control function 3-85
Traction control function 3-84
Air cleaner filter 7-11
Air conditioning
Automatic air conditioning 5-14
Important operating tips for the air conditioning 5-22
Manual air conditioning 5-5
Air conditioning label 9-2
Aluminum wheels 7-76
Antenna
Glass antenna 5-74
Satellite radio antenna 5-75
Whip antenna 5-74
Anti-lock braking system 3-81
Warning light 3-82
ASC 3-84
ASC indicator 3-87
ASC OFF indicator 3-87
ASC OFF switch 3-85
Audio system 5-24
AM/FM electronically tuned radio with CD autochanger-Type 2 5-39
AM/FM electronically tuned radio with CD player-Type 1 5-26
AM/FM/Satellite electronically tuned radio with CD autochanger-Type 3 5-39
Error codes 5-67
Handling of compact discs 5-71
Steering wheel remote control switch 5-65
Automatic transaxle 3-70
Fluid 7-12, 9-9
Selector lever operation 3-71
Selector lever positions 3-75
Sports mode 3-76

## B

Back-up lights
Bulb capacity 7-49
Replacement 7-59
Ball joint, steering linkage seals and drive shaft boots 7-34
Battery 7-16
Charging system warning light 3-113
Checking battery electrolyte level 7-17
Disconnection and connection 7-18
During cold weather 7-18
Specification 9-8
Brake
Anti-lock braking system 3-81
Braking 4-6
Fluid 7-15, 9-9
Hose 7-33

Parking brake 3-54
Parking brake lever stroke 7-30
Pedal 3-79
Pedal free play 7-30
Power brakes 3-80
Service brake 3-79
Warning light 3-111
Break-in recommendations 3-2
Bulb capacity 7-47

## C

California Perchlorate Materials Requirements 1-9
Capacities 9-9
Cargo area light 3-174
Bulb capacity 7-50
Replacement 7-69
Cargo loads 4-12
Catalytic converter 7-3
Certification label 9-5
Charging system warning light 3-113
Child restraints 2-24
Cleaning
Inside of your vehicle 7-72
Outside of your vehicle 7-73
Clutch
Fluid 7-15
Pedal free play 7-29
Coat hooks 3-180
Coin holder 3-177
Combination headlights and dimmer switch 3-125
Consumer information 8-2
Convertible top 3-31, 7-77
Coolant (engine) 7-10, 9-9
Cruise control 3-89
Indicator 3-90
Cup holder 3-178

## D

Defogger (rear window) 3-135
Dimensions 9-5
Dimmer (high/low beam change) 3-127
Disc brake pads 7-33
Dome light
Bulb capacity 7-50
Replacement 7-68
Switch 3-174
Dome light/Reading lights
Bulb capacity 7-50
Replacement 7-68
Switch 3-170, 3-171
Door-ajar warning buzzer 3-114
Doors
Lock 3-13
Power door locks 3-15
Drive belt 7-34
Driving during cold weather 4-5
Driving, alcohol and drugs 4-2

## E

Electric convertible top 3-31
Electric rear window defogger switch 3-135
Electronic immobilizer (Anti-theft starting system) 3-3
Emission-control system maintenance 7-31
Engine
  Compartment 7-6
  Coolant 7-10, 9-9
  Coolant temperature gauge 3-109
  Hood 7-4
  Malfunction indicator 3-112
  Oil and oil filter 7-7, 9-9
  Overheating 6-6
  Serial number 9-3
  Specifications 9-7
Error codes 5-67, 5-69
Exhaust system 7-36

## F

Filling the fuel tank 1-4
Floor console box 3-176
Fluid
  Automatic transaxle fluid 7-12, 9-9
  Brake fluid 7-15, 9-9
  Clutch fluid 7-15
  Engine coolant 7-10, 9-9
  Manual transaxle fluid 9-9
  Power steering fluid 7-16, 9-9
  Washer fluid 7-14, 9-9
Fluid capacities and lubricants 9-9
Fog lights
  Bulb capacity 7-48
  Indicator 3-111
  Replacement 7-57
  Switch 3-131
For cold and snowy weather 7-37
Front seats 2-4
Front turn signal lights
  Bulb capacity 7-48
  Replacement 7-55
Front turn signal, parking and side-marker lights
  Bulb capacity 7-48
  Replacement 7-56
Fuel
  Fuel economy 4-2
  Fuel gauge 3-108
  Fuel hoses 7-32
  Low-fuel warning light 3-108
  Modification/alterations to the electrical or fuel systems 1-8
  Tank capacity 1-5, 9-9
Fuel selection 1-2
Fuse links 7-37
Fuses 7-38
  Block location 7-38
  Identification 7-44
  Load capacities 7-40
  Replacement 7-45

## G

Gauges 3-104
General maintenance 7-33
General vehicle data 9-5
Genuine parts 1-9
Glove compartment 3-175
Glove compartment light
  Bulb capacity 7-50, 7-51
  Replacement 7-69

## H

Hands-free Bluetooth® cellular phone interface system with voice recognition 3-137
Hazard warning flasher switch 3-130
Hazard warning lights 3-111
Head restraints 2-12
Headlight levelling switch 3-128
Headlights
  Bulb capacity 7-48
  Dimmer 3-127
  Headlight flasher 3-128
  High beam indicator 3-111
  Levelling switch 3-128
  Replacement 7-51, 7-52
  Switch 3-125
High-mounted stop light
  Bulb capacity 7-49
Hood lock release mechanism and safety catch 7-36
Horn switch 3-136

## I

If the vehicle breaks down 6-2
Ignition switch 3-60
Important facts to know in case of an accident 8-4
Indicator 3-111
Indicator and warning light package 3-110
Inside emergency trunk lid release 3-20
Inside rear hatch/trunk lid release 3-18
Inside rearview mirror 3-56
Instrument cluster 3-104
Instrument panel control switch 3-138
Interior lights 3-169

## J

Jack 6-9
  Storage 6-8
Jump-starting the engine 6-2

## K

Key reminder buzzer 3-14, 3-62
Keyless entry system 3-7
Keys 3-2

## L

Labeling 9-2
License plate light
  Bulb capacity 7-49

Replacement 7-66
Light dimmer control 3-109
Loading information 4-7
Low-fuel warning light 3-108
Lubricants 9-9
Luggage hooks 3-180

## M

Manual transaxle 3-66
Fluid 9-9
Oil 7-14
Shift points (recommended speed) 3-68
Mirror
Inside rearview mirror 3-56
Outside rearview mirrors 3-58
Modifications to and racing of your vehicle 1-7
Multi center display 3-114

## N

Notepad holder 3-177

## O

Octane requirement 1-2
Odometer 3-106
Oil
Engine oil 7-7
Manual transaxle oil 7-14
Oil pressure warning light 3-113
Operation under adverse driving conditions 6-22
Outside rearview mirrors 3-58
Overheating 6-6

## P

Parking 4-6
Parking brake 3-54
Parking brake lever stroke 7-30
Parking and side-marker lights
Bulb capacity 7-48
Replacement 7-53
Pen holder 3-177
Polishing 7-75
Power brakes 3-80
Power door locks 3-15
Power outlet 3-168
Power steering
Fluid 7-16, 9-9
System 3-89
Power windows 3-26
Puncture (Tire changing) 6-9

## R

Radiator cap 7-11
Radio
AM/FM electronically tuned radio with CD autochanger-Type 2 5-39
AM/FM electronically tuned radio with CD player-Type 1 5-26

AM/FM/Satellite electronically tuned radio with CD autochanger-Type 3 5-39
General information about your radio 5-76
Reading lights on an inside rearview mirror
Bulb capacity 7-51
Replacement 7-69
Switch 3-173
Rear combination lights 7-59
Rear hatch 3-16
Rear seat 2-11
Rear shelf panel 3-178
Rear side-marker lights
Bulb capacity 7-49
Replacement 7-59
Rear turn signal lights
Bulb capacity 7-49
Replacement 7-59
Rear window defogger switch 3-135
Rear-view camera 3-101
Rearview mirror
Inside 3-56
Outside 3-58
Refrigerant (air conditioning) 9-9
Replacement of light bulbs 7-47
Replacing tires and wheels 7-25
Reporting Safety Defects 8-3

## S

Safe driving techniques 4-4
Seat 2-2
Front seats 2-4
Heated seats 2-10
Rear seat 2-11
Seats and restraint systems 2-3
Seat belt 2-13
Adjustable seat belt shoulder anchor 2-19
Child restraints 2-24
Driver's seat belt reminder/warning light 2-18
Front passenger seat belt warning light 2-19
Maintenance and inspection 2-35
Pre-tensioner 2-22
Seat belt extender 2-21
Seat belt guide 2-20
Seat belt use during pregnancy 2-22
Service brake 3-79
Service precautions 7-2
Skid control function 3-85
Snow tires 7-28
Spark plugs 7-32
Speedometer 3-105
Steering
Power steering fluid 7-16, 9-9
Tilt lock lever 3-55
Wheel lock 3-63
Steering wheel remote control switch 5-65
Stop and tail light
Bulb capacity 7-49
Sun visors 3-166

Sunroof 3-28
Supplemental Restraint System 2-36
How the Supplement Restraint System works 2-39
Servicing 2-57
Warning light 2-44

## T

Tachometer 3-106
Tank capacity 1-5, 9-9
Theft-alarm system 3-22
Timing belt 7-36
Tire pressure monitoring system 3-96
Tires 7-20
How to change a tire 6-9
Inflation pressure 7-23
Maintenance 7-25
Quality grading 8-2
Replacing tires and wheels 7-25
Rotation 7-26
Size (tire and wheel) 9-8
Snow tires 7-28
Tire and loading information placard 4-8, 9-4
Tire chains 7-29
Tread wear indicators 7-26
Tools 6-8
Storage 6-8
Top stack 3-31
Towing 6-20
Traction control function 3-84
Trailer towing 4-13
Trip odometer 3-106
Trunk lid 3-16
Turn signal lights
Bulb capacity 7-48
Indicators 3-111
Lever 3-129
Replacement 7-55, 7-56, 7-59

## V

Vanity mirror 3-167
Vanity mirror lights
Bulb capacity 7-50, 7-51
Replacement 7-70
Vehicle care precautions 7-71
Vehicle dimensions 9-5
Vehicle emission control information label 9-2
Vehicle identification number plate 9-2
Vehicle information code plate 9-2
Vehicle labeling 9-2
Vehicle preparation before driving 4-3
Vehicle weights 9-6
Vents 5-2

## W

Warning lights 3-111
Washer
Fluid 7-14, 9-9
Rear window washer 3-134

Switch 3-133
Windshield washer 3-133
Waxing 7-75
Weights 9-6
Wheel
Specification 9-8
Wiper
Rear window wiper 3-134
Switch 3-132
Windshield wipers 3-132
Wiper blades 7-31

## *How to calculate your gasoline mileage*

You can calculate your miles-per-gallon or kilometers-per-litre by using the following process:

1. Fill your vehicle's fuel tank and record the odometer mileage.
2. Drive your vehicle as you normally do.
3. Refill the fuel tank. Record the odometer mileage again, as well as the gallons/litres of fuel used.
4. Subtract the first mileage number from the second number to know how many miles/kilometers were driven. Divide the number of miles/kilometers driven by the number of gallons/litres of fuel used. This is your approximate miles-per-gallon or kilometers-per-litre.

### Gas mileage record

| Date | Odometer | Gallons /Litres This Fill | Cost Per Gallon /Litre | Cost This Fill | Miles Per Gallon/Kilometers Per Litre (Miles/Gals.)/(Kilometers/Litres) |
|---|---|---|---|---|---|
| | | | | | |
| | | | | | |
| | | | | | |
| | | | | | |
| | | | | | |
| | | | | | |
| | | | | | |
| | | | | | |
| | | | | | |
| | | | | | |
| | | | | | |

### Gas mileage record

| Date | Odometer | Gallons /Litres This Fill | Cost Per Gallon /Litre | Cost This Fill | Miles Per Gallon/Kilometers Per Litre (Miles/Gals.)/(Kilometers/Litres) |
|---|---|---|---|---|---|
| | | | | | |
| | | | | | |
| | | | | | |
| | | | | | |
| | | | | | |
| | | | | | |
| | | | | | |
| | | | | | |
| | | | | | |
| | | | | | |
| | | | | | |

## NOTE

| | |
|---|---|
| Name of Owner | Date of Purchase |
| Address of Owner | Model of Vehicle |
| Name and Address of Dealer | Vehicle Identification Number |

## Maintenance record

| Service Performed | Date | Kilometers<br>Miles | Inspection and Maintenance Item |
|---|---|---|---|
| | | | |