2014 Scion xB
Quick Reference Guide

2014
Scion xB

This *Quick Reference Guide* is a summary of basic vehicle operations. It contains brief descriptions of fundamental operations so you can locate and use the vehicle's main equipment quickly and easily.

The *Quick Reference Guide* is not intended as a substitute for the *Owner's Manual* located in the vehicle's glove box. We strongly encourage you to review the *Owner's Manual* and supplementary manuals so you will have a better understanding of the vehicle's capabilities and limitations.

Your dealership and the entire staff of Toyota Motor Sales, U.S.A., Inc. wish you many years of satisfied driving in your new Scion xB.

A word about safe vehicle operations

This *Quick Reference Guide* is not a full description of Scion xB operations. Every Scion xB owner should review the *Owner's Manual* that accompanies this vehicle.

Pay special attention to the boxed information highlighted in color throughout the *Owner's Manual*. Each box contains safe operating instructions to help you avoid injury or equipment malfunction.

All information in this *Quick Reference Guide* is current at the time of printing. Toyota reserves the right to make changes at any time without notice.

INDEX

OVERVIEW	Engine maintenance	7
	Fuel tank door release and cap	7
	Hood release	6
	Indicator symbols	4-5
	Instrument cluster	4
	Instrument panel	2-3
	***Keyless entry*[1]**	***6***
	Light control-Instrument panel	6
FEATURES/OPERATIONS	Air Conditioning/Heating	12
	***Auto lock/unlock*[2]**	***8***
	Automatic Transmission	8
	AUX port/USB port	13
	Bottle holders	13
	Cruise control	11
	Lights & turn signals	10
	Multi-Information Display	14
	Parking brake	8
	Power outlet	14
	Seat adjustments-Front	9
	Seat-Folding down rear seat	9
	Seats-Head restraints	9
	Steering wheel switches	13
	Tilt steering wheel	12
	Windows	11
	Windshield wipers & washers	10
SAFETY AND EMERGENCY FEATURES	Door locks	15
	Doors-Child safety locks	15
	Floor mat installation	19
	Seat belts	16
	Seat belts-Shoulder belt anchor	15
	Spare tire & tools	17
	Star Safety System™	18
	Tire Pressure Monitoring (warning) System	16

[1] Visit your Scion dealer for information on customizing this feature.
[2] Programmable by customer. Refer to the Owner's Manual for instructions and more information.

OVERVIEW

Instrument panel

Steering wheel

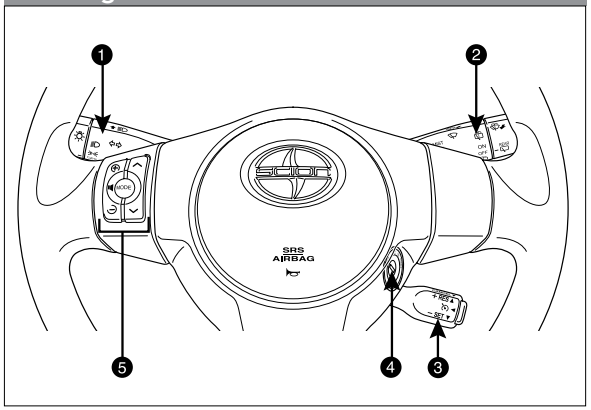

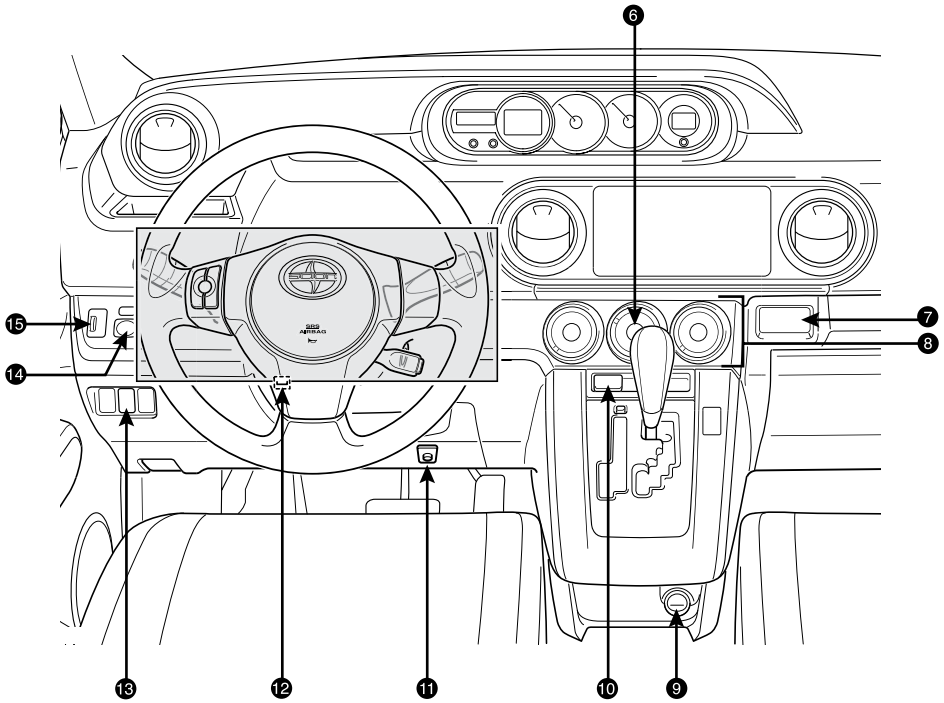

1. Headlight and turn signal controls
2. Wiper and washer controls
3. Cruise control
4. Ignition switch
5. Steering wheel audio controls*
6. Rear window defogger button
7. Front passenger occupant classification indicator/ Front passenger seat belt reminder light
8. Air Conditioning controls
9. Power outlet
10. Emergency flasher button
11. Tire Pressure Monitoring (warning) System reset
12. Tilt and telescopic steering lock release
13. “VSC OFF” (Vehicle Stability Control “OFF”)
14. Power outside rearview mirror controls
15. Instrument panel light control dial

* For details, refer to the *SCION Audio System Owner’s Manual* or *SCION Navigation System Owner’s Manual*.

Instrument cluster

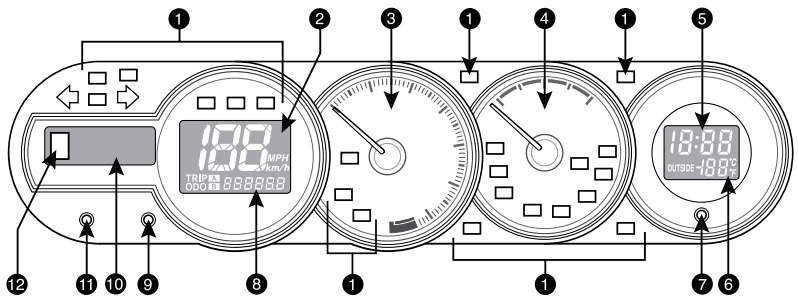

1. Service indicator and reminder
2. Speedometer
3. Tachometer
4. Fuel gauge
5. Clock
6. Outside temperature
7. Clock button
8. Odometer and two trip meters
9. Odometer/trip meter and trip meter reset button
10. Multi-Information Display
11. Multi-Information Display control switch
12. Automatic Transmission shift position indicator (if equipped)

Indicator symbols

For details, refer to "Indicators and warning lights," Section 2-2, *2014 Owner's Manual*.

- BRAKE — Brake system warning[1]
- Driver seat belt reminder (alarm will sound if speed is over 12 mph)
- PASSENGER — Front passenger seat belt reminder (alarm will sound if speed is over 12 mph)
- Charging system warning[1]
- CHECK — Malfunction/Check Engine indicator[1]
- Low engine oil pressure warning[1]
- Open door warning
- Airbag SRS warning[1]
- Low Tire Pressure Warning[1]
- MAINT REQD — Maintenance/Service required indicator[1]
- PASSENGER AIR BAG OFF AIR BAG ON — Front passenger occupant classification indicator[1]
- Headlight low beam indicator
- Headlight high beam indicator
- Turn signal indicator
- Low fuel level warning
- Slip indicator[1]
- OFF — Vehicle Stability Control OFF indicator[1]
- Cruise control indicator[2]
- SET — Cruise control SET indicator
- Electric power steering system warning[1]
- ABS — Anti-lock Brake System warning[1]
- TRAC OFF — Traction Control OFF indicator[1]
- Low engine coolant temperature indicator
- High engine coolant temperature warning light

[1] *If indicator does not turn off within a few seconds of starting engine, there may be a malfunction. Have vehicle inspected by your Scion dealer.*

[2] *If this light flashes, refer to "Cruise control," Section 2-4, 2014 Owner's Manual.*

Keyless entry

Locking operation

Push

Unlocking operation

Push ONCE: Driver door
TWICE: ALL doors

NOTE: If a door is not opened within 60 seconds of unlocking, all doors will relock for safety.

Panic button

Push and hold

Hood release

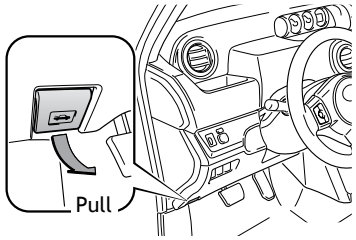

Pull

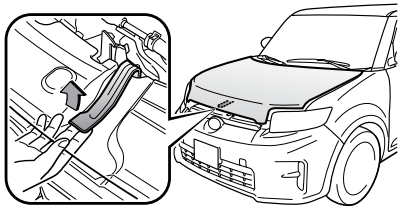

Pull up latch and raise hood

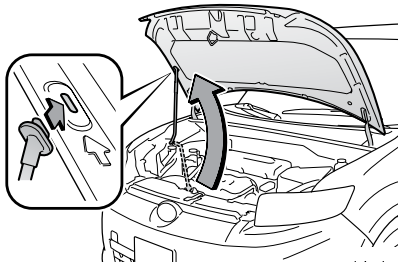

Engage support rod

Light control-Instrument panel

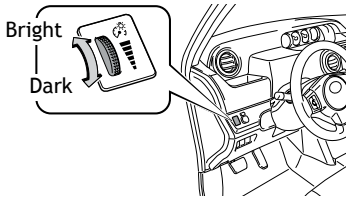

Fuel tank door release and cap

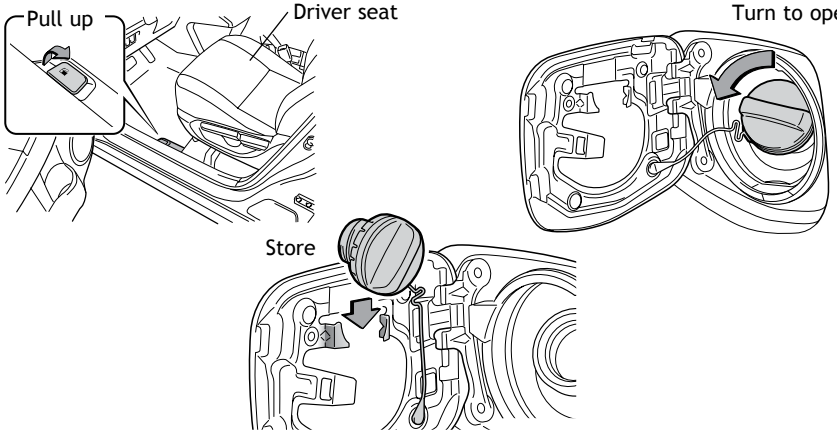

Engine maintenance

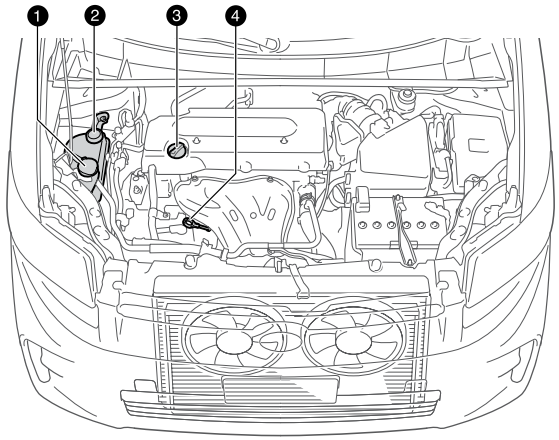

1. Windshield washer fluid tank
2. Engine coolant reservoir
3. Engine oil filler cap
4. Engine oil level dipstick

***NOTE:** Regularly scheduled maintenance, including oil changes, will help extend the life of your vehicle and maintain performance. Please refer to the "Warranty & Maintenance Guide."*

FEATURES/OPERATIONS

Auto lock/unlock

Automatic door locks can be programmed to operate in four different modes, or turned OFF.
-Doors lock when shifting from Park.[1]
-Doors lock when the vehicle speed goes above approximately 12 mph.[2]
-Doors unlock when ignition key is turned to “ACC” or “LOCK” position and driver’s door is opened.[2]
-Doors unlock when shifting into Park.[1]

[1] Automatic Transmission only
[2] Default setting is off

Refer to the *Owner’s Manual* for more details.

Automatic Transmission (if equipped)

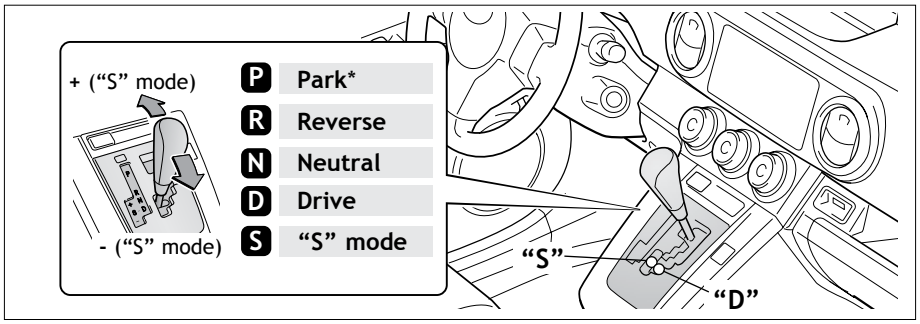

* The ignition switch must be “ON” and the brake pedal depressed to shift from Park.

“S” (Sequential) mode

Push shift lever to the left from “D” position.

+: Upshift (push and release)
-: Downshift (pull and release)

Downshifting increases power going uphill, or provides engine braking downhill. For best fuel economy during normal driving conditions, always drive with the shift lever in the “D” position.

Parking brake

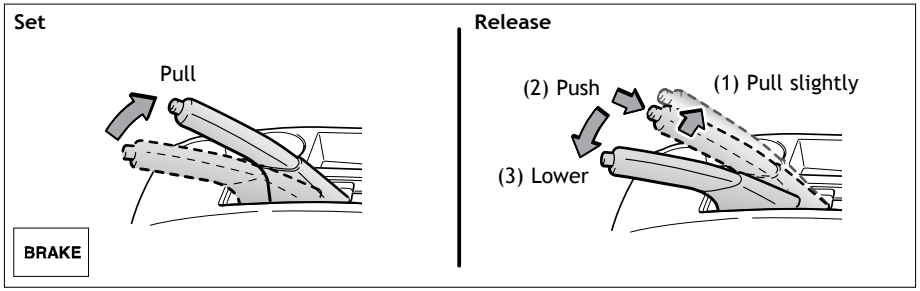

Seats-Head restraints

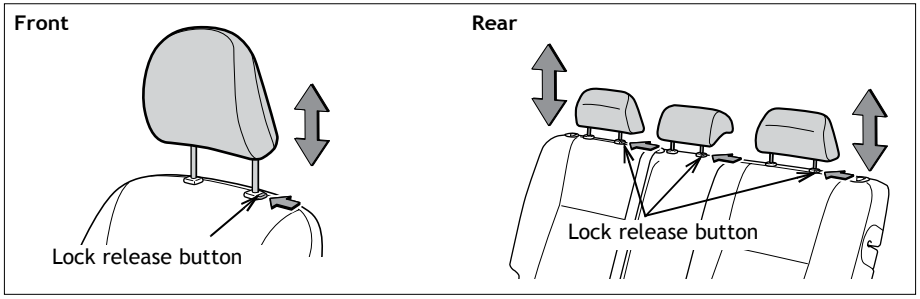

Seat adjustments-Front

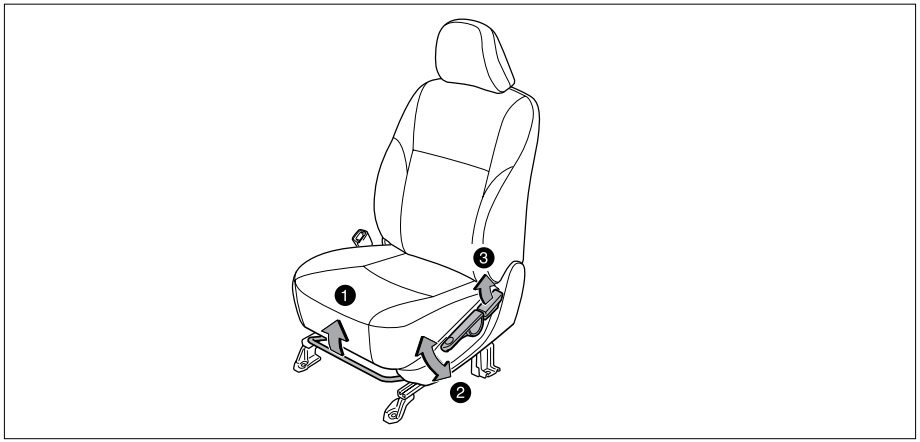

❶ Seat position (forward/backward)
❷ Height crank (driver side only)
❸ Seatback angle

Seat-Folding down rear seat

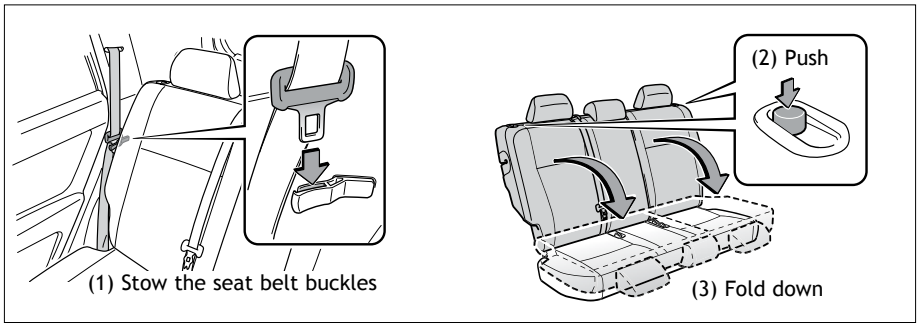

Lights & turn signals

Headlights

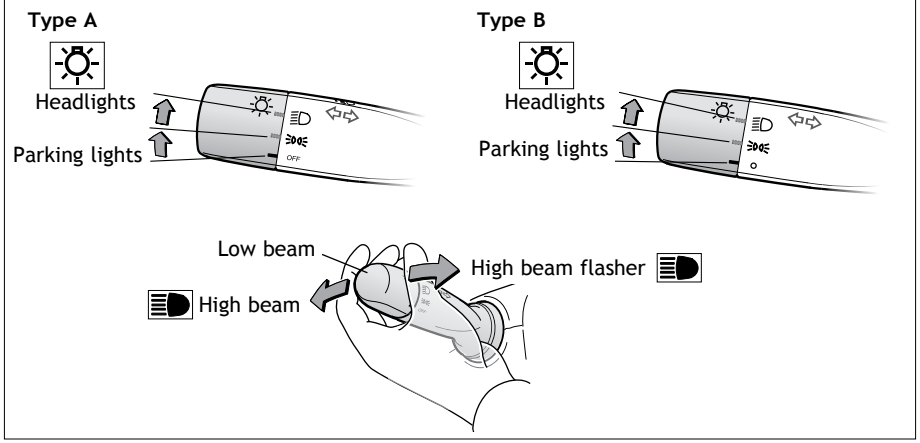

Turn signals

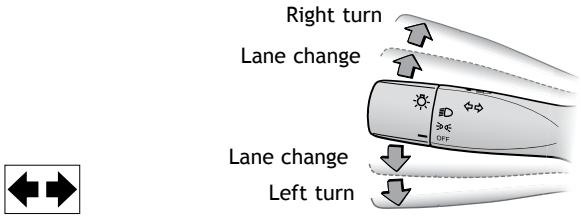

Windshield wipers & washers

Front

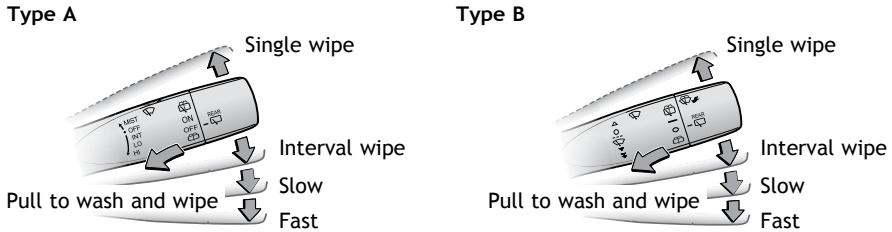

Rear

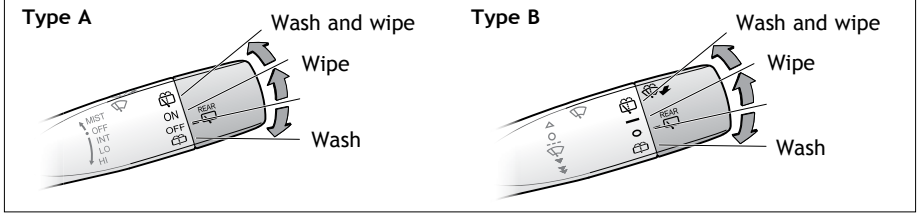

Windows

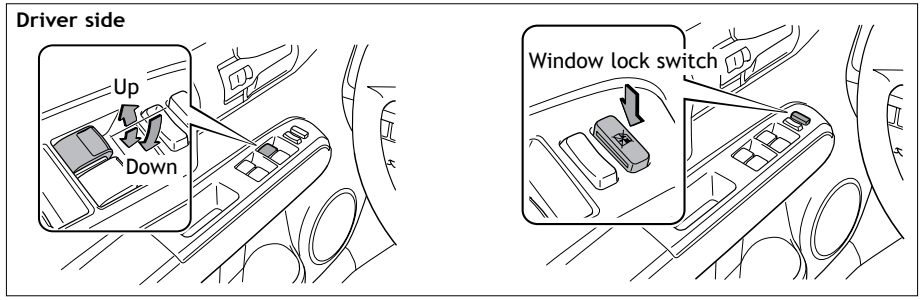

Automatic operation (driver's window only) Push the switch completely down and release to fully open. To stop the window partway, operate the switch in the opposite direction.

Window lock switch Deactivates all passenger windows. Driver's window remains operable.

Cruise control

System ON/OFF

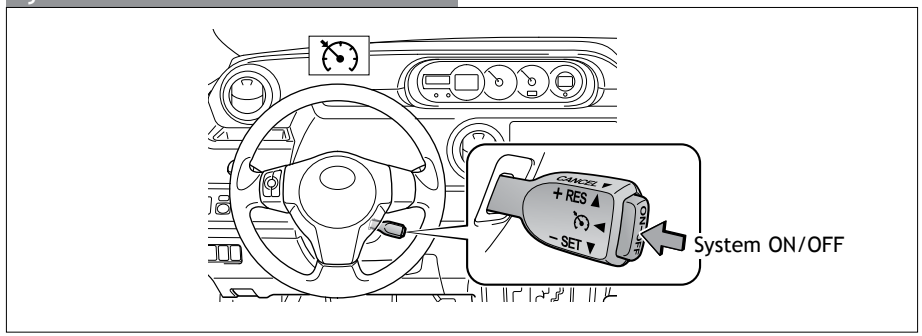

Functions

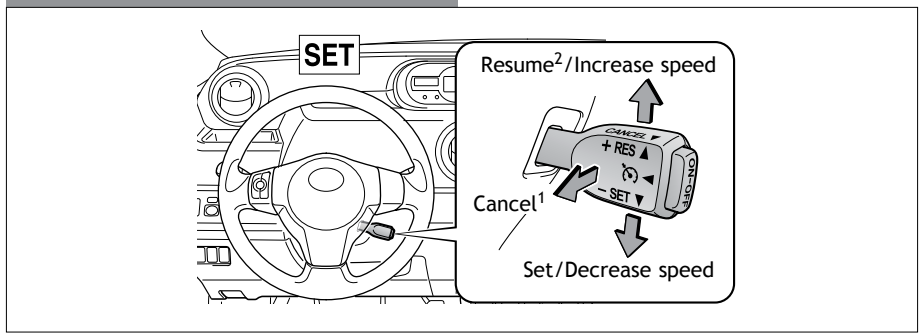

[1] The set speed may also be cancelled by depressing the brake pedal or the clutch pedal (manual transmission only).
[2] The set speed may be resumed once vehicle speed reaches approximately 25 mph.

Tilt steering wheel

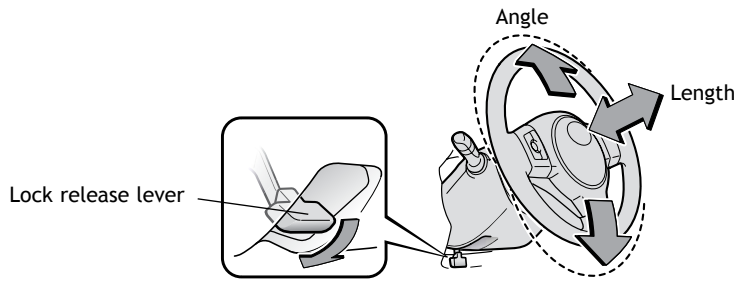

Hold wheel, push lever down, set angle and return lever.

NOTE: Do not attempt to adjust while the vehicle is in motion.

Air Conditioning/Heating

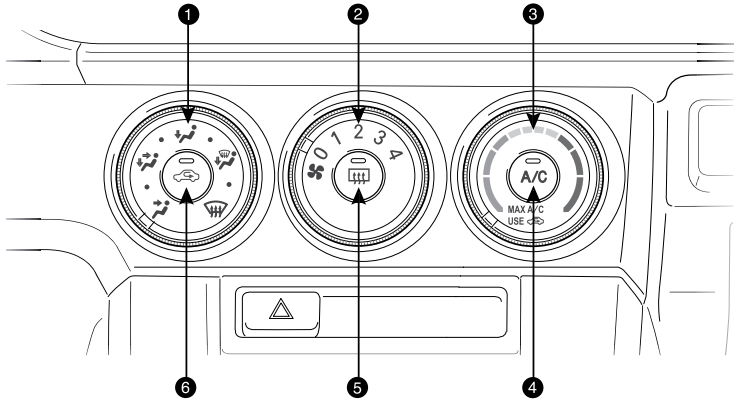

❶ Airflow vent
"" and "" mode use fresh air ("" indicator "OFF") to reduce window fogging.
❷ Fan speed
❸ Temperature selector
❹ Air Conditioning ON/OFF
Use fresh air to quickly cool interior, then change to recirculate for cooler air.
❺ Rear window defogger
❻ Recirculate cabin air (fresh air when OFF)

Steering wheel switches

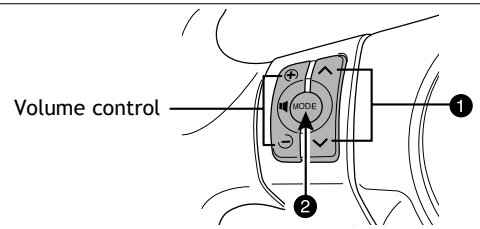

❶ **"∧ ∨"**
Use to search within the selected audio medium (radio, CD, iPod®, etc.).
❷ **"MODE"**
Push to turn audio ON and select an audio mode. Push and hold to turn the audio system OFF.

Refer to the *SCION Audio System Owner's Manual* or *SCION Navigation System Owner's Manual for more details.*

AUX port/USB port

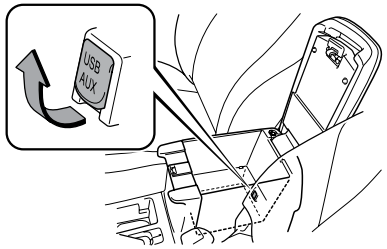

By inserting a mini plug into the AUX port/USB port, you can listen to music from a portable audio device through the vehicle's speaker system while in AUX or USB/AUX mode.

If you do not have a SCION genuine audio system, you will not be able to use the AUX port/USB port.

Refer to the *SCION Audio System Owner's Manual* or *SCION Navigation System Owner's Manual for more details.*

Bottle holders

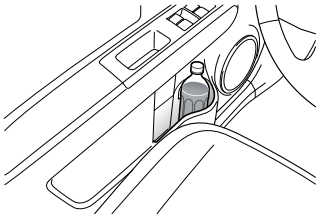

Multi-Information Display

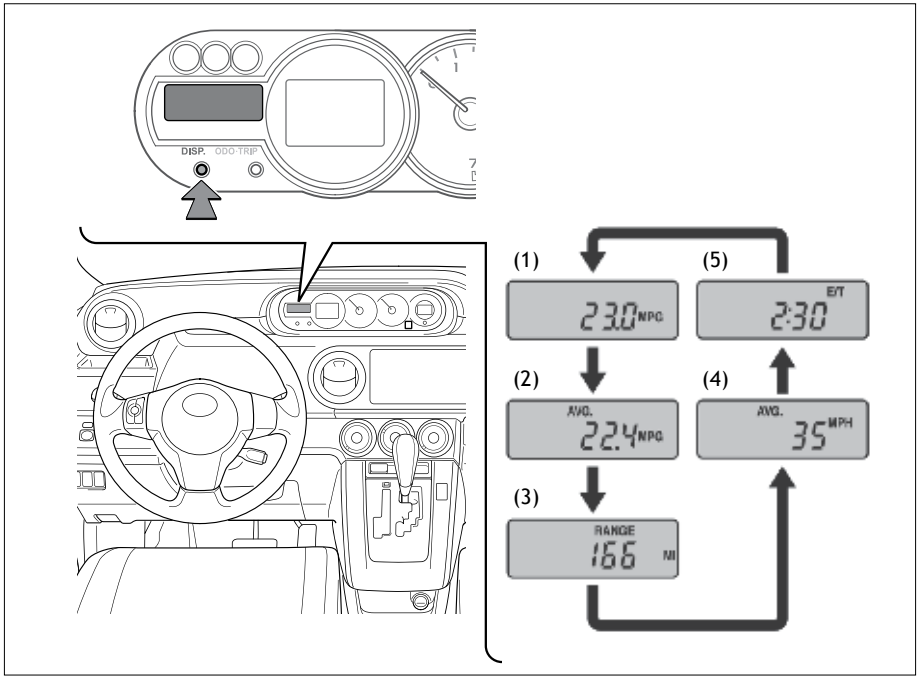

Push "DISP" to change information in the following succession:
(1) Current gas mileage (MPG)
(2) Average gas mileage (AVG/MPG)
(3) Miles left on remaining fuel (RANGE/MI)
(4) Average vehicle speed from engine start (AVG/MPH)
(5) Running time from engine start (E/T)

Power outlet

Instrument panel

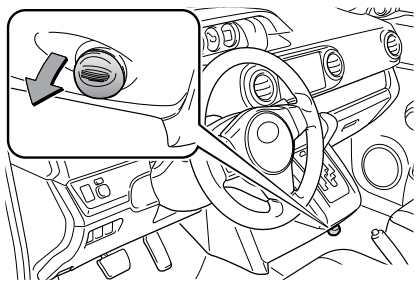

Designed for car accessories. Key must be in the "ACC" or "ON" position to use.

SAFETY AND EMERGENCY FEATURES

Door locks

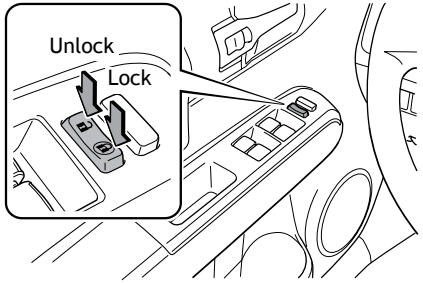

Doors-Child safety locks

Rear door

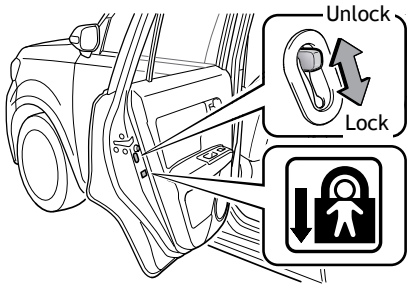

Moving the lever downward will allow the door to be opened only from the outside.

Seat belts-Shoulder belt anchor

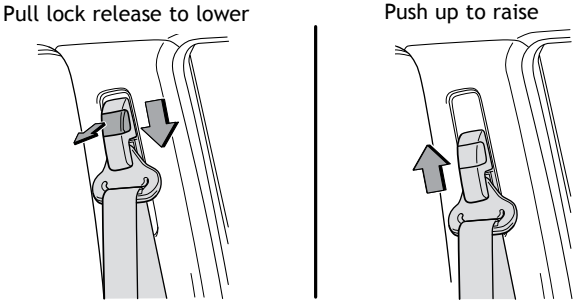

Seat belts

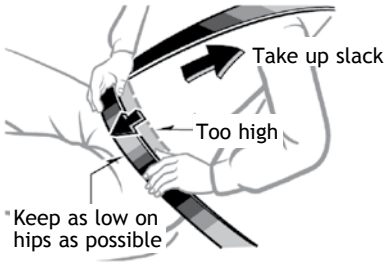

If belt is fully extended, then retracted even slightly, it cannot be re-extended beyond that point, unless fully retracted again. This feature is used to help hold child restraint systems securely.

To find more information about seat belts, and how to install a child restraint system, refer to the *Owner's Manual*.

Tire Pressure Monitoring (warning) System

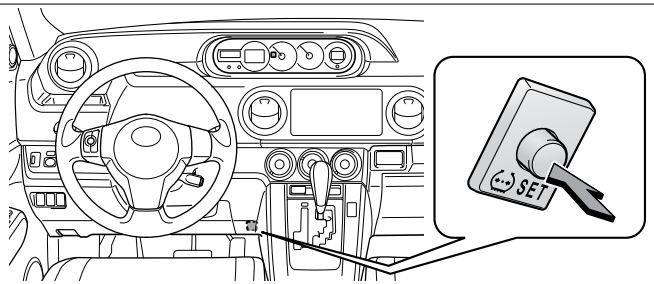

If tire pressure indicator is on, check/adjust each tire.

After adjusting tire pressures, or after tires have been rotated or replaced, turn the ignition switch to "ON" and press and hold the "SET" button until indicator blinks three times. Let the vehicle sit for a few minutes to allow initialization to complete.

Refer to the load label on the door jamb or the *Owner's Manual* for tire inflation specifications.

If the tire pressure indicator flashes for more than 60 seconds and then remains on, take the vehicle to your local Scion dealer.

NOTE: The warning light may come on due to temperature changes or changes in tire pressure from natural air leakage. If the system has not been initialized recently, setting the tire pressures to factory specifications should turn off the light.

Spare tire & tools

Tool and spare tire location

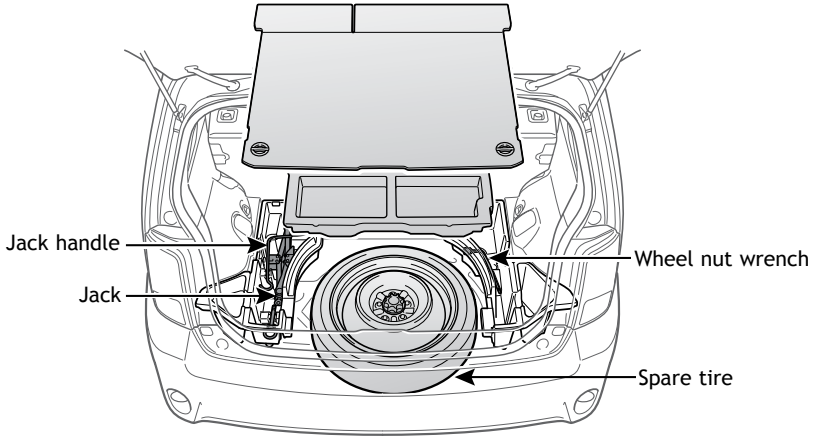

Removing the spare tire

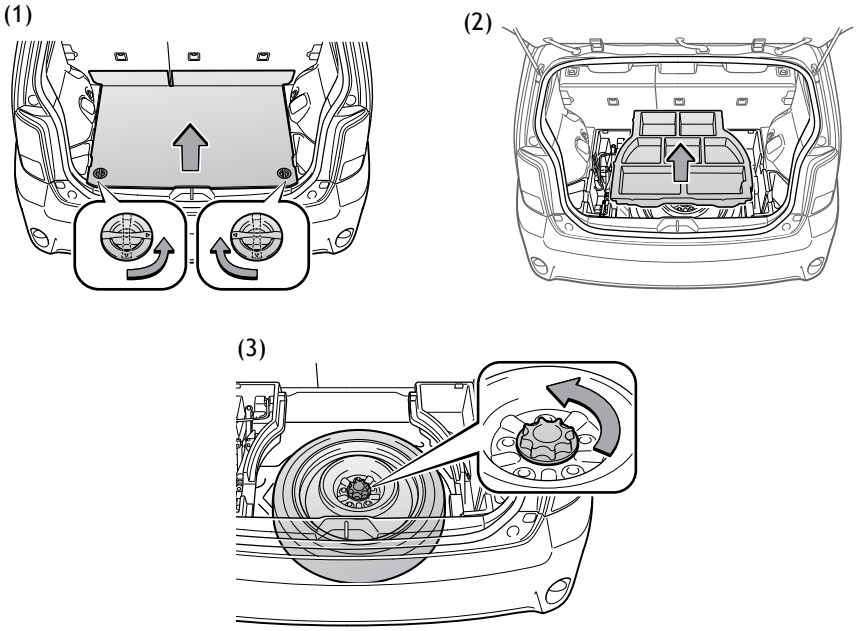

(1) Remove the luggage mat.
(2) Remove the center auxiliary boxes.
(3) Loosen the center fastener that secures the spare tire.

Refer to the *Owner's Manual* for jack positioning and tire changing procedures.

Star Safety System™

All new Toyota vehicles come standard with the Star Safety System™, which combines Traction Control (TRAC), Electronic Brake-force Distribution (EBD), Vehicle Stability Control (VSC), Brake Assist (BA), an Anti-lock Braking System (ABS) and Smart Stop Technology (SST).

Vehicle Stability Control (VSC)

VSC helps prevent loss of traction during cornering by reducing engine power and applying brake force to selected wheels.

Toyota's VSC monitors steering angle and the direction your vehicle is traveling. When it senses that the front or rear wheels begin to lose traction, VSC reduces engine power and applies braking to selected wheels. This helps restore traction and vehicle control.

Traction Control (TRAC)

VSC helps prevent loss of traction during cornering by reducing engine power, and Traction Control helps maintain traction on loose gravel and wet, icy, or uneven surfaces by applying brake force to the spinning wheel(s).

Toyota's TRAC sensors are activated when one of the drive wheels starts to slip. TRAC limits engine output and applies the brakes to the spinning wheel. This transfers power to the wheels that still have traction to help keep you on track.

Brake Assist (BA)

Brake Assist is designed to detect sudden or "panic" braking, and then add braking pressure to help decrease the vehicle's stopping distance. When there's only a split second to react, Brake Assist can add additional brake pressure more quickly than just the driver alone can.

Electronic Brake Force Distribution (EBD)

Toyota's ABS technology has Electronic Brake-force Distribution (EBD) to help maintain control and balance when braking. Abrupt stops can cause a vehicle to tilt forward, reducing the braking power of the rear wheels. EBD responds to sudden stops by redistributing brake force to enhance the braking effectiveness of all four wheels.

Anti-Lock Brake System (ABS)

ABS helps prevent brakes from locking up by "pulsing" brake pressure to each wheel. This limits brake lockup and helps provide directional control for the current road conditions.

Toyota's ABS sensors detect which wheels are locking up and limits wheel lockup by "pulsing" each wheel's brakes independently. Pulsing releases brake pressure repeatedly for fractions of a second. This helps the tires attain the traction that current road conditions will allow, helping you to stay in directional control.

Smart Stop Technology (SST)

Smart Stop Technology automatically reduces driving torque when the accelerator and brake pedals are pressed simultaneously under certain conditions.

SST engages when the accelerator is depressed first and the brakes are applied firmly for longer than one-half second at speeds greater than five miles per hour.

SST doesn't engage if the brake pedal is depressed before the accelerator pedal, allowing vehicles to start on a steep hill and safely accelerate without rolling backward.

Floor mat installation

There are two types of Toyota floor mats: carpeted and all-weather. Each vehicle has model-specific floor mats. Installation is easy.

To keep your floor mat properly positioned, follow these steps:

- Only use floor mats designed for your specific model.
- Use only one floor mat at a time, using the retaining hooks to keep the mat in place.
- Install floor mats right side up.

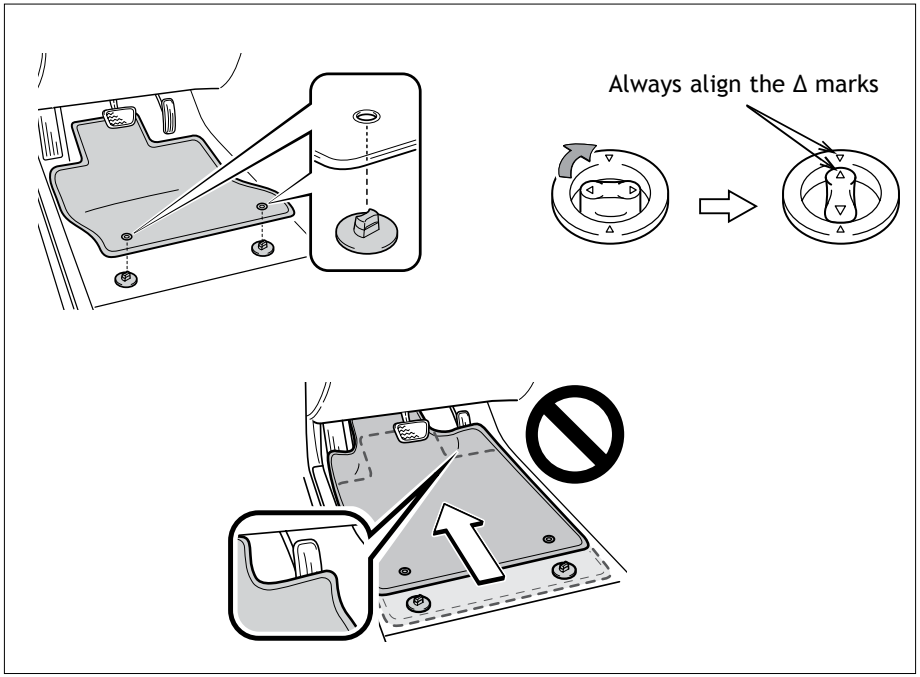

NOTES

00505-QRG14-XB
Printed in the USA 10/13