TO INDEX

AUTOMATIC TRANSMISSION

OUTLINE ..... **AT– 2**
SECTIONAL VIEW OF AUTOMATIC TRANSMISSION ..... **AT– 2**
COMPONENTS ..... **AT– 3**
COMPONENTS (INNER PARTS) ..... **AT– 5**
REMOVAL ..... **AT– 7**
INSPECTION **AT–17**
FRONT AND REAR MULTIPLE CLUTCH ASSEMBLY **AT–17**
ONE-WAY CLUTCH **AT–18**
ASSEMBLY **AT–19**
SST (Special Service Tools) **AT–36**
TIGHTENING TORQUE **AT–39**

JAT00001-00000

OUTLINE

SECTIONAL VIEW OF AUTOMATIC TRANSMISSION [A4Q-D1]

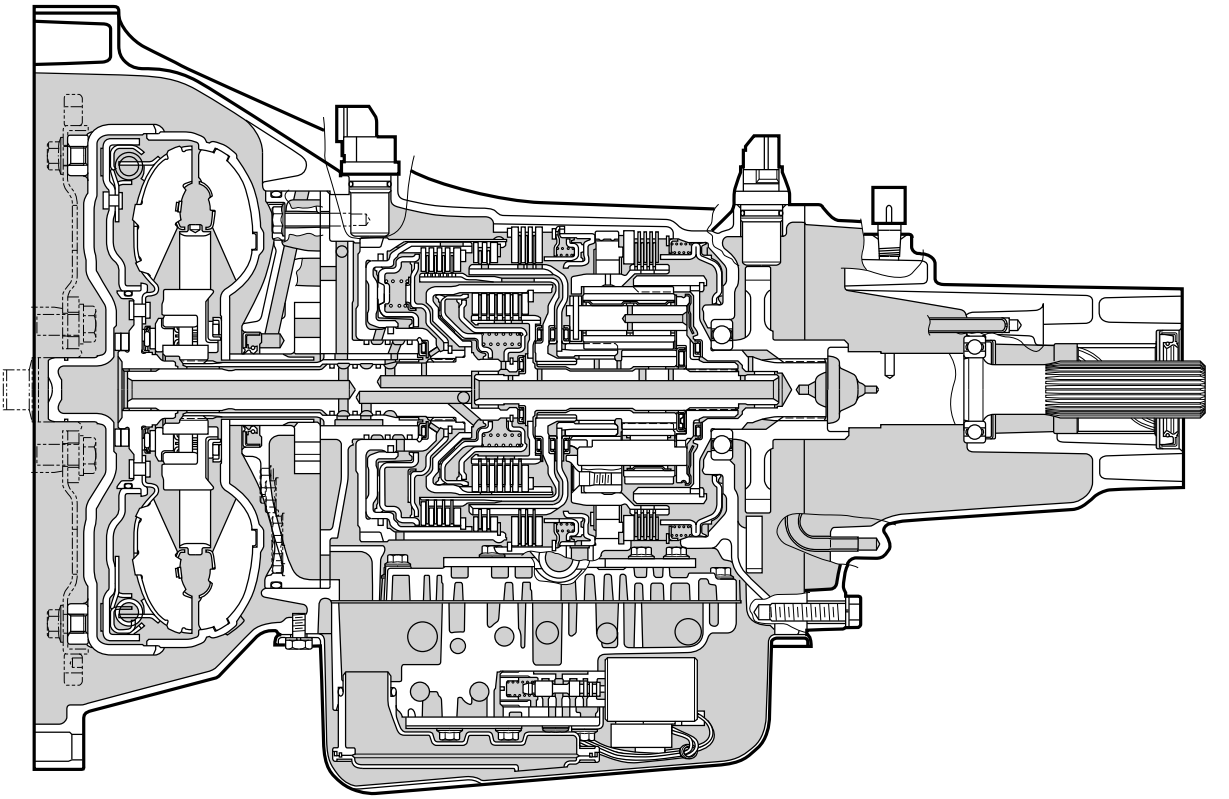

<2WD>

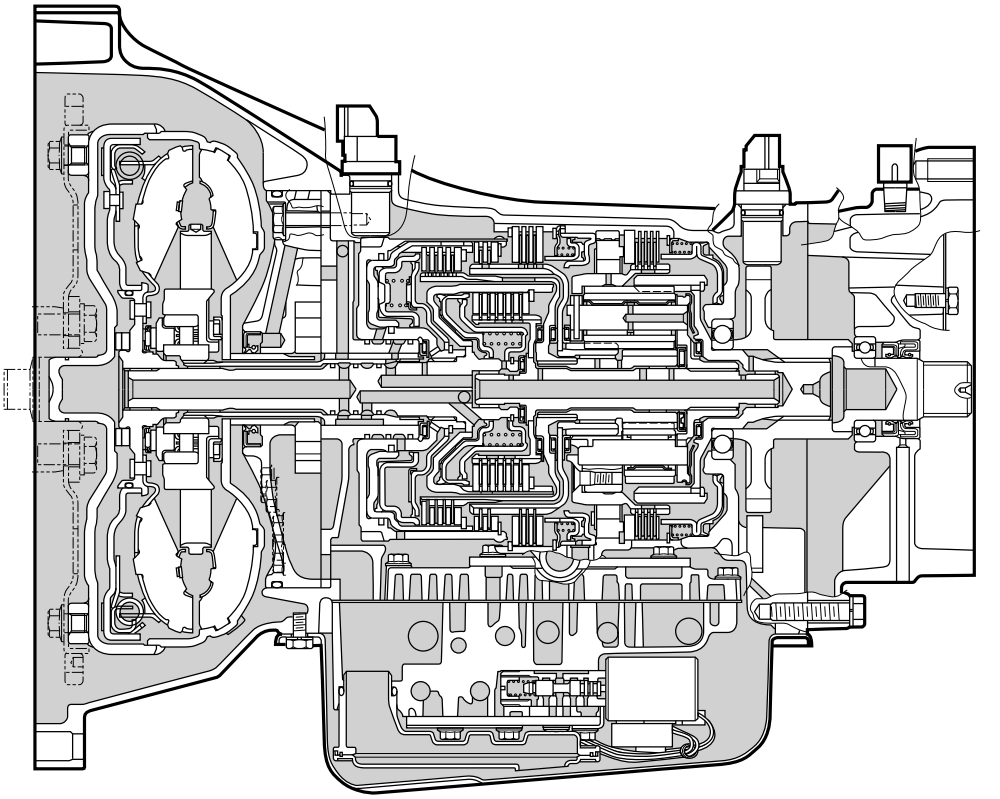

<4WD>

COMPONENTS

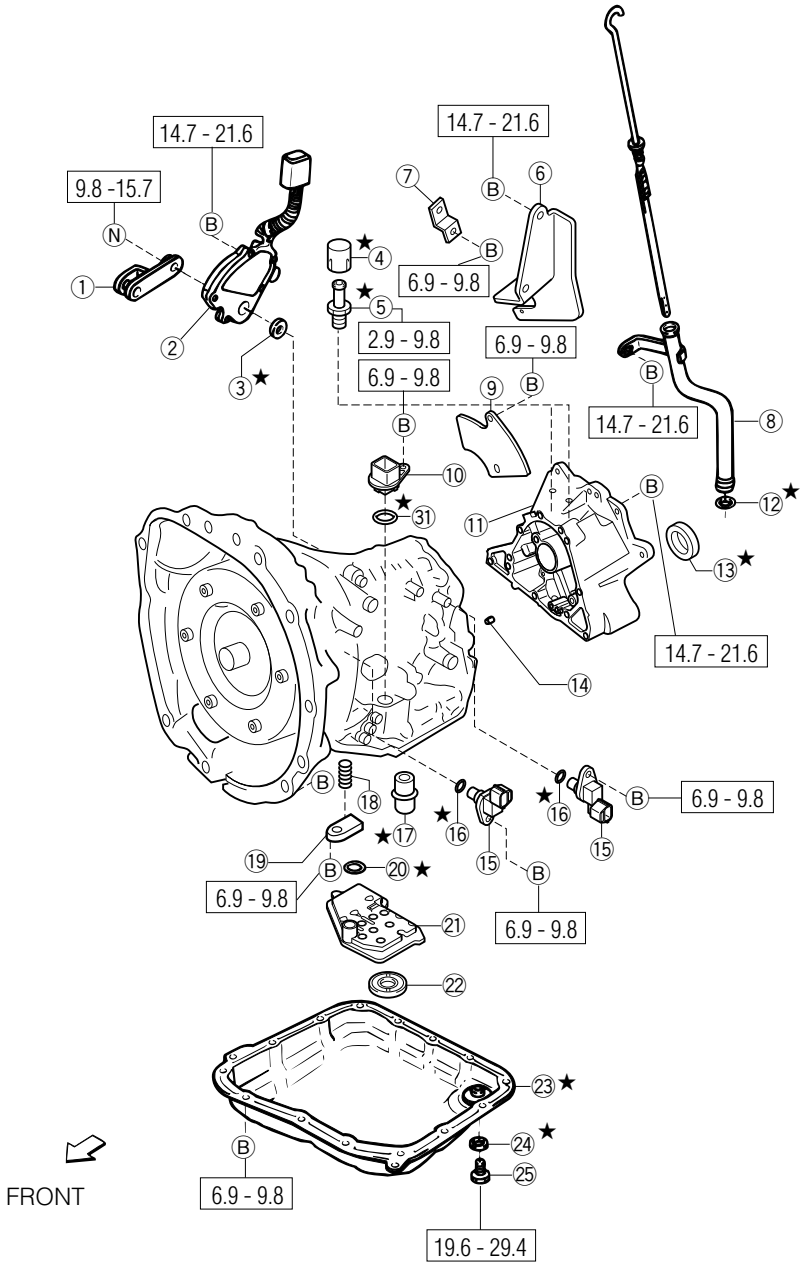

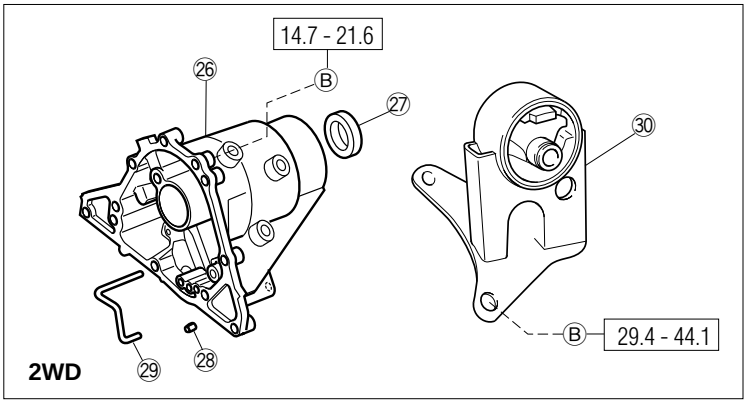

□ : Tightening torque
★ : Non-reusable parts
Unit : N·m

① Transmission control shaft lever sub-assembly
② Neutral start switch
③ T-type oil seal
④ Breather plug cap
⑤ Breather plug union
⑥ Control cable bracket [A4Q-D1, A4R-D1 (4WD)]
⑦ Neutral start switch bracket
⑧ Transmission oil filler tube
⑨ Oil guide plate
⑩ Transmission solenoid connector subassembly
⑪ Transmission case side cover
⑫ O-ring
⑬ T-type oil seal
⑭ Knock pin
⑮ Transmission revolution sensor
⑯ O-ring
⑰ 2nd & 4th brake cylinder tube
⑱ Compression spring
⑲ Plate
⑳ O-ring
㉑ Oil strainer
㉒ Magnet
㉓ Oil pan
㉔ Gasket
㉕ Drain plug
㉖ Extension housing
㉗ T-type oil seal
㉘ Knock pin
㉙ Oil pipe
㉚ Engine mount bracket [A4R-D1 (2WD)]

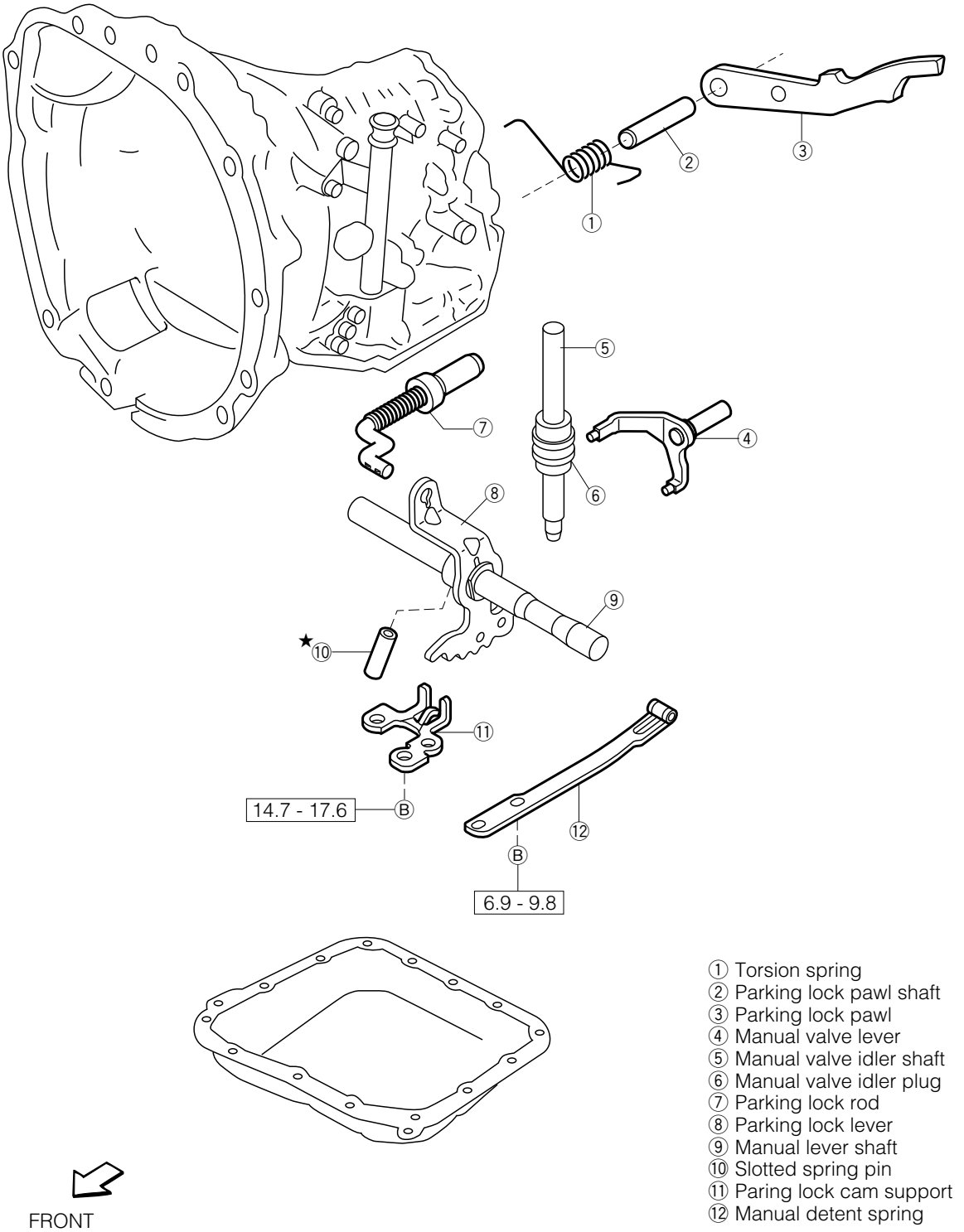

① Torsion spring
② Parking lock pawl shaft
③ Parking lock pawl
④ Manual valve lever
⑤ Manual valve idler shaft
⑥ Manual valve idler plug
⑦ Parking lock rod
⑧ Parking lock lever
⑨ Manual lever shaft
⑩ Slotted spring pin
⑪ Paring lock cam support
⑫ Manual detent spring

COMPONENTS (INNER PARTS)

Thrust bearing specification

	Ⓐ☆	Ⓑ	Ⓒ	Ⓓ
Outer diameter	44.5	30	57	44.5
Inner diameter	29.7	14	41.4	29.7
Thickness	3.81 3.41 4.21	3.62	3.91	3.81

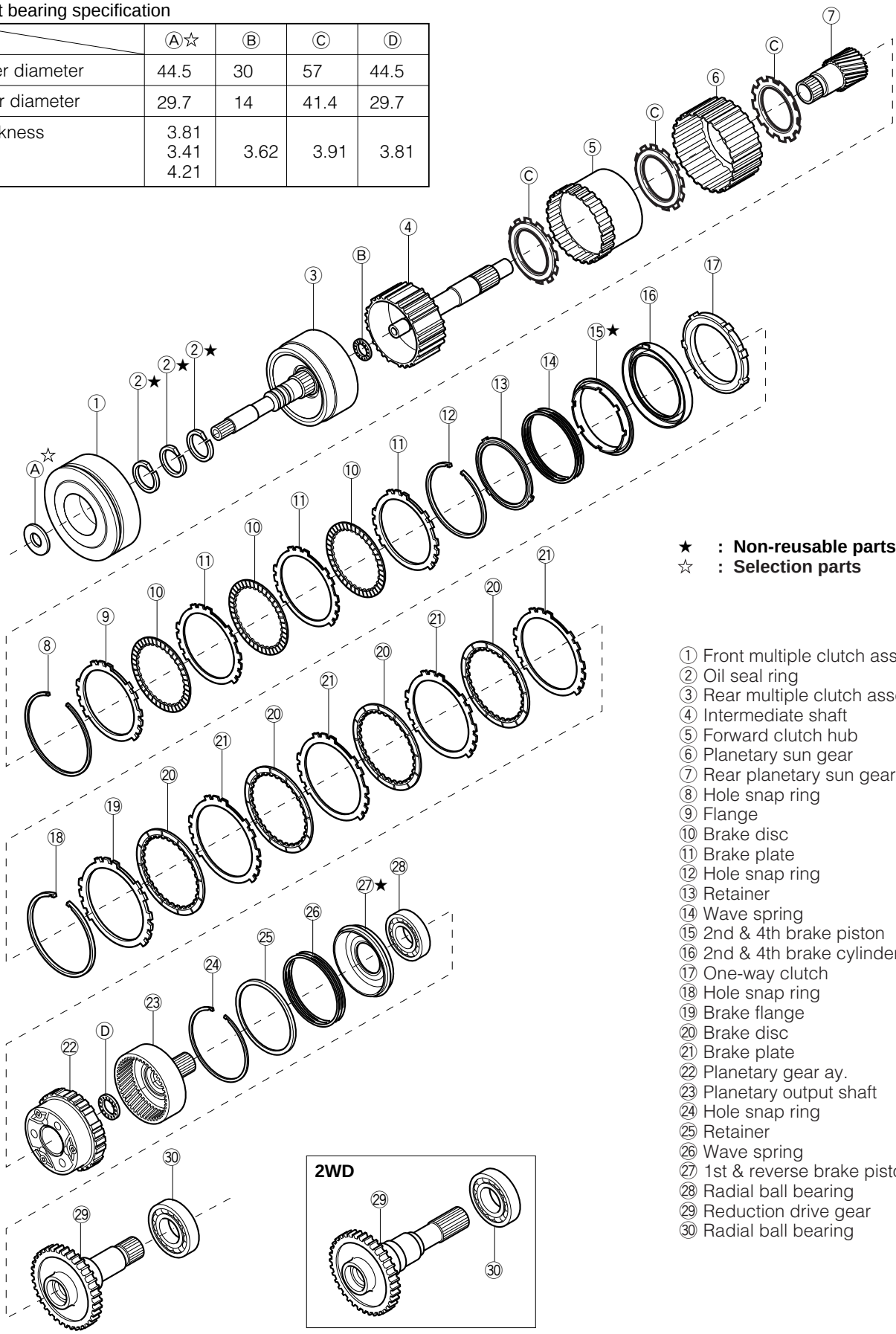

★ : **Non-reusable parts**
☆ : **Selection parts**

① Front multiple clutch assembly
② Oil seal ring
③ Rear multiple clutch assembly
④ Intermediate shaft
⑤ Forward clutch hub
⑥ Planetary sun gear
⑦ Rear planetary sun gear
⑧ Hole snap ring
⑨ Flange
⑩ Brake disc
⑪ Brake plate
⑫ Hole snap ring
⑬ Retainer
⑭ Wave spring
⑮ 2nd & 4th brake piston
⑯ 2nd & 4th brake cylinder
⑰ One-way clutch
⑱ Hole snap ring
⑲ Brake flange
⑳ Brake disc
㉑ Brake plate
㉒ Planetary gear ay.
㉓ Planetary output shaft
㉔ Hole snap ring
㉕ Retainer
㉖ Wave spring
㉗ 1st & reverse brake piston
㉘ Radial ball bearing
㉙ Reduction drive gear
㉚ Radial ball bearing

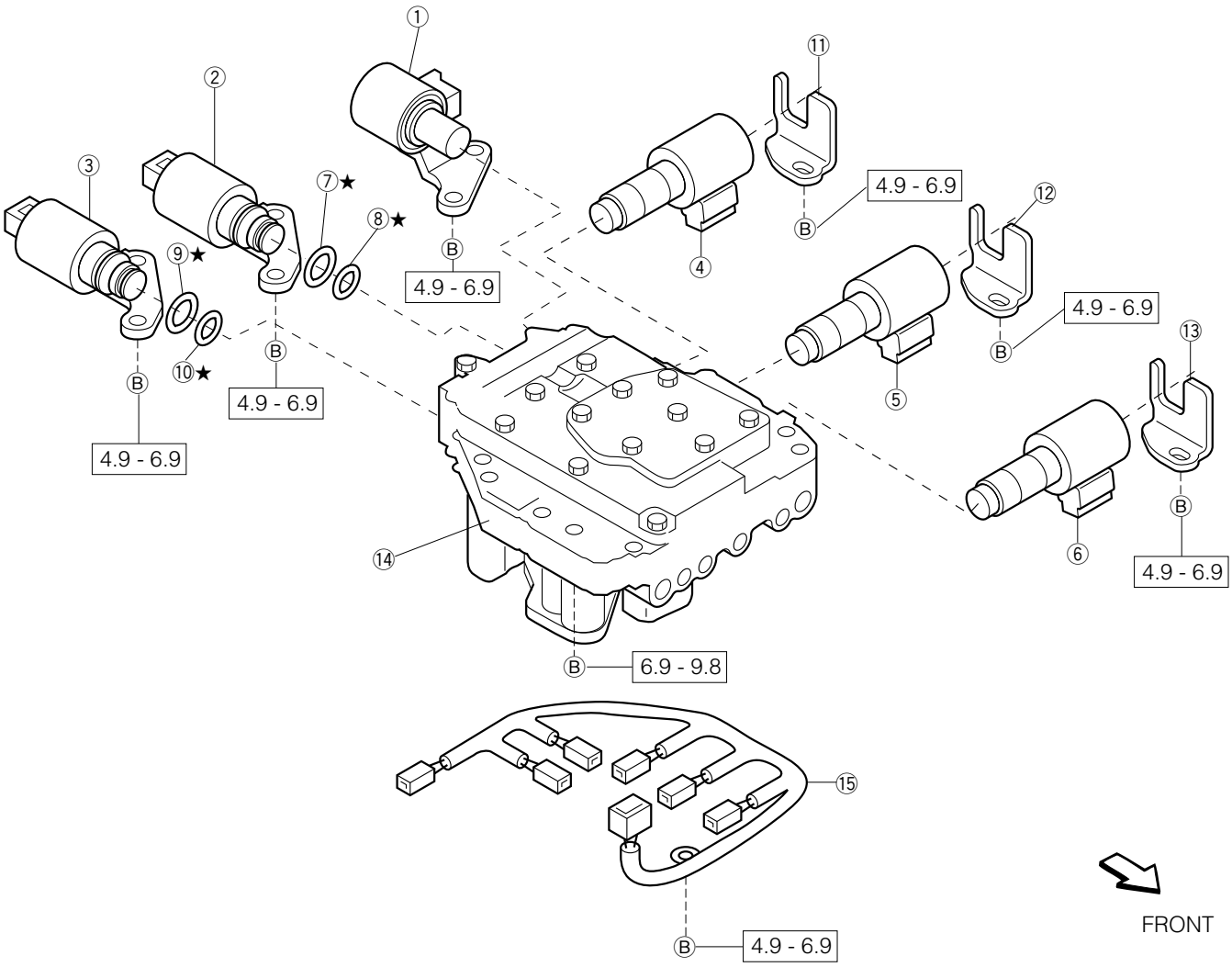

① Lockup clutch control solenoid Ay
② Transmission 3-way solenoid Ay
③ Transmission 3-way solenoid Ay
④ Clutch control solenoid Ay No. 1
⑤ Clutch control solenoid Ay No. 2
⑥ Clutch control solenoid Ay No. 3
⑦ O-ring
⑧ O-ring
⑨ O-ring
⑩ O-ring
⑪ Bracket
⑫ Bracket
⑬ Bracket
⑭ Valve body assembly
⑮ Wire harness

REMOVAL

1. Remove the bolt of the transmission oil filler tube subassembly.
2. Pull out the tube subassembly upwards.
3. Remove the O-ring from the tube subassembly.
   NOTE:
   - Never reuse the removed O-ring.

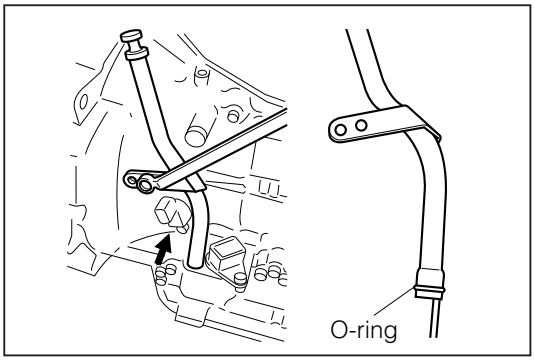

JAT00005-00004

4. Removal of breather plug.
   (1) Remove the breather plug cover and the breather plug union.
   NOTE:
   - Never reuse the removed unions, and cover.
   - Number of breather plugs.
     2WD: 1
     4WD: 2

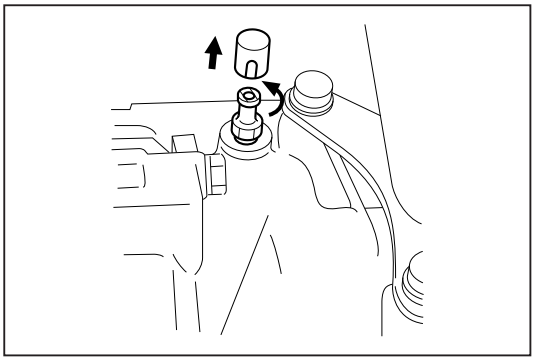
JAT00006-00005

5. Removal of bracket.
   (1) Remove the 3 bolts of the engine mount bracket. [A4R-D1 (2WD)]
   Remove the 2 bolts of the control cable bracket. [A4Q-D1, A4R-D1 (4WD)]

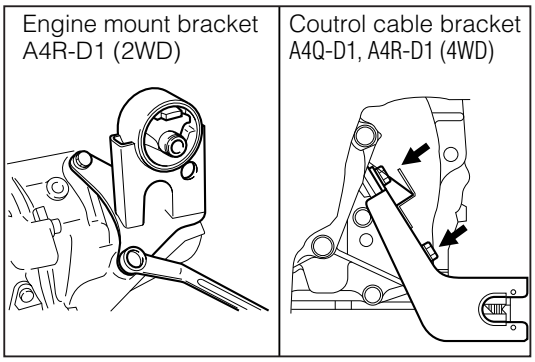

JAT00007-00006

6. Removal of speedometer shaft sleeve subassembly. [A4R-D1]
   (1) Remove the speedometer sleeve lock plate by removing a bolt.
   (2) Remove the speedometer shaft sleeve subassembly, using the flat screwdriver.
   NOTE:
   - Never reuse the removed O-ring of the speedometer shaft sleeve subassembly.

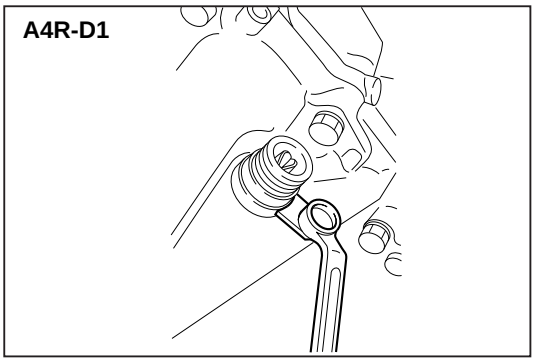

JAT00008-00007

7. Remove the two transmission revolution sensors by removing the bolts.
   NOTE:
   - Never reuse the removed O-rings of the transmission revolution sensors.

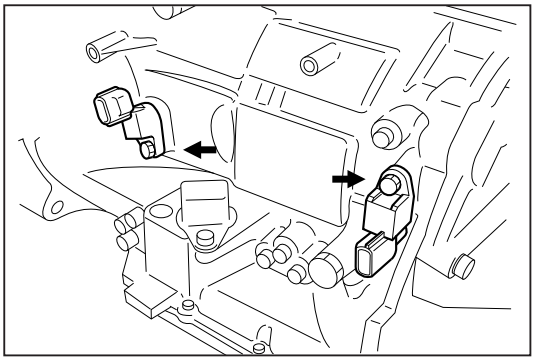
JAT00009-00008

8. Removal of neutral start switch assembly
   (1) Disassemble the coupler from the bracket using a flat screwdriver.
   NOTE:
   - In the case of A4Q-D1, the direction of the coupler differs from that of A4R-D1.

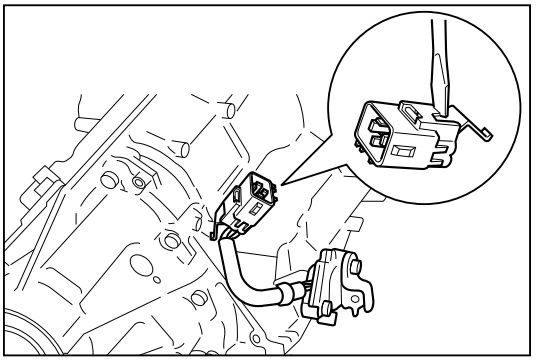
JAT00010-00009

   (2) Remove the neutral start switch assembly by removing the bolt and nut.

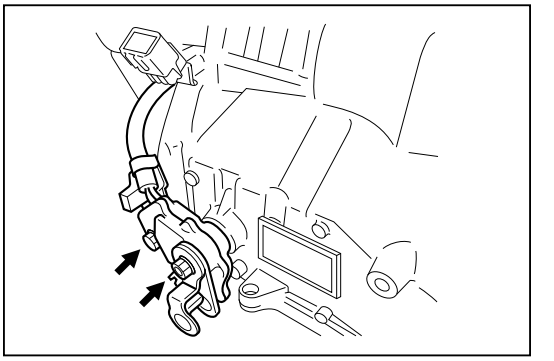
JAT00011-00010

9. Remove the valve body assembly.
   (1) Remove the 14 bolts of the transmission oil pan subassembly.
   (2) Remove the transmission oil pan subassembly by gently tapping on the rim, with a plastic hammer.
   CAUTION:
   - Do not turn over the transmission, for this will contaminate the valve body with foreign materials deposited at the bottom of the oil pan.

   NOTE:
   - Never reuse the removed transmission oil pan subassembly.

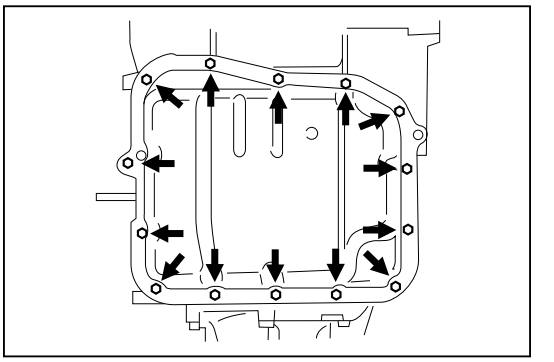
JAT00012-00011

   (3) Check of pan for particles.
   Remove the magnet and use it to collect any steel chips. Inspect the oil pan for any chips and particles collected on the magnet to find out the type of wear of the transmission.
   Steel (magnetic) ... Wear of bearing, gear and plate
   Brass (nonmagnetic) ... Wear of bush

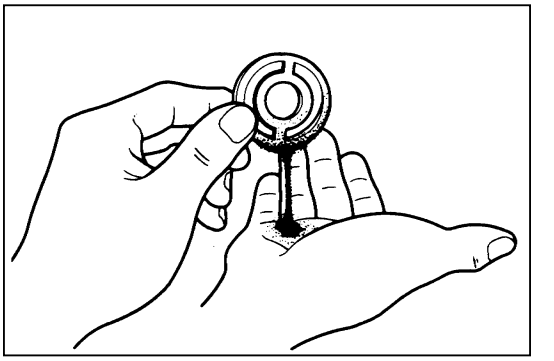
JAT00013-00012

   (4) Turn over the transmission.
   NOTE:
   - This turning-over of the transmission is necessary, for the control-related parts would drop when the valve body is removed if the transmission was not turned over.

   (5) Remove the oil strainer subassembly by pushing out the 3 pawls of the oil strainer using a flat screwdriver.
   CAUTION:
   - The strainer subassembly has 3 pawls. Be very careful not to break or bend them during removal.

   NOTE:
   - Be sure to check whether the mesh of oil strainer is clean.

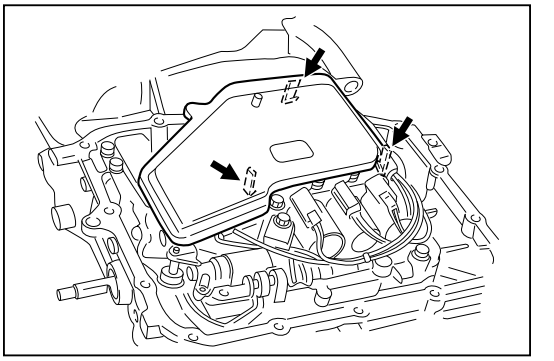
JAT00014-00013

(6) Remove the O-ring from the stem of the oil strainer.
NOTE:
- Never reuse the removed O-ring.

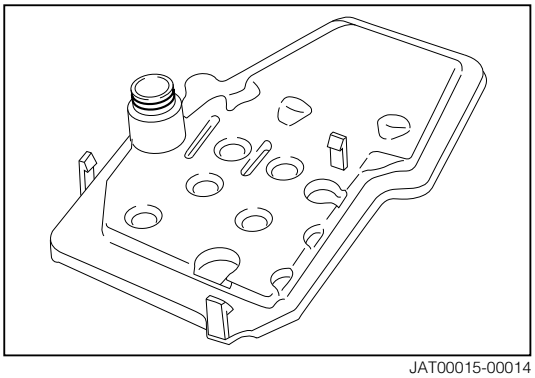
JAT00015-00014

(7) Remove the manual detent spring by removing the 2 bolts.
NOTE:
- Be sure to remove the bolts evenly and uniformity.

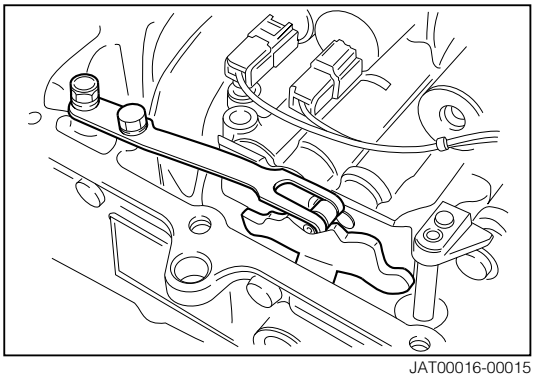
JAT00016-00015

(8) Detach the harness from the clamp of the valve body assembly.

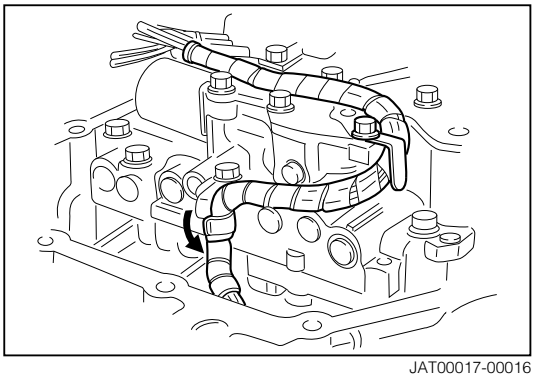
JAT00017-00016

(9) Disconnect the connector, using a flat screwdriver.
NOTE:
- Never pull out the wire itself directly when you disconnect the connector.

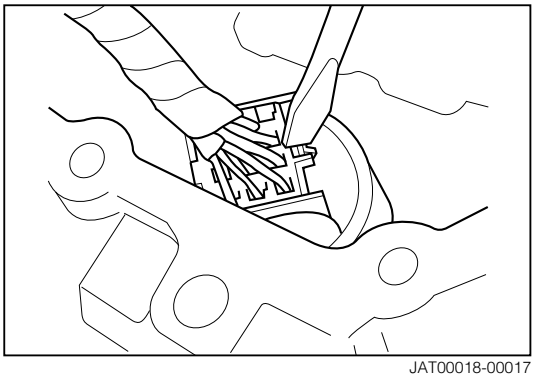
JAT00018-00017

10. Remove the valve body and the bracket by removing the 7 bolts.
NOTE:
- Be sure to remove the bolts evenly and diagonally.
- The numerals in the right illustration indicate the nominal length of the bolt.

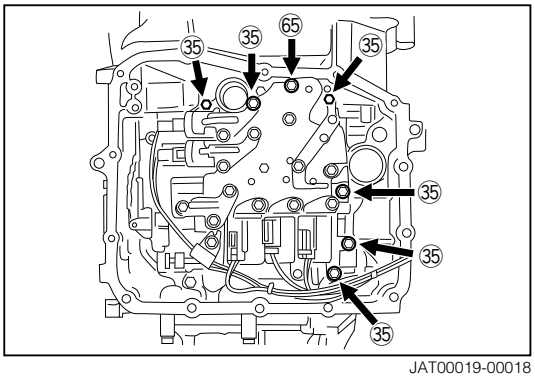

JAT00019-00018

11. Remove the manual valve sleeve by pulling up the manual valve lever pin.

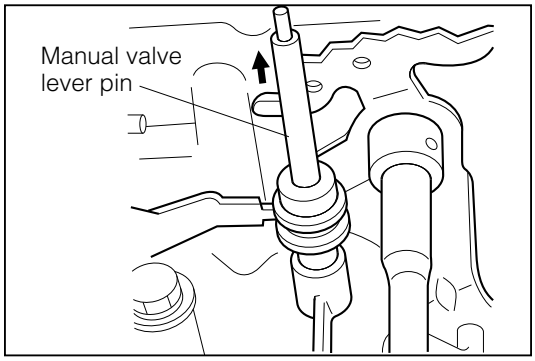

JAT00020-00019

12. Remove the compression spring by removing the bolt and plate.
13. Remove the 2nd & 4th brake cylinder seal.
    NOTE:
    - Never reuse the removed seal.

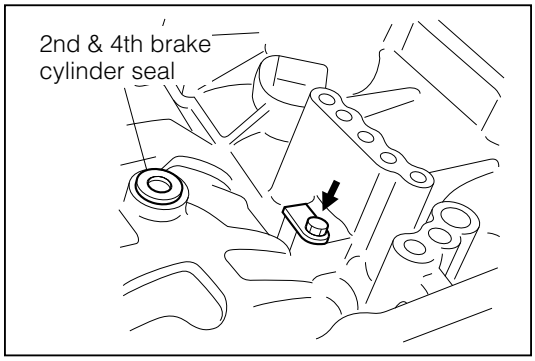

JAT00021-00020

14. Remove the manual lever subassembly.
    (1) Remove the slotted spring pin, using a pin punch and a hammer.
    NOTE:
    - When removing the pin, be very careful not to drop it into the transmission case.
    - Never reuse the removed pin.

    (2) Pull out the manual valve lever shaft toward the outside.

    (3) Remove the manual lever subassembly and parking lock rod subassembly.

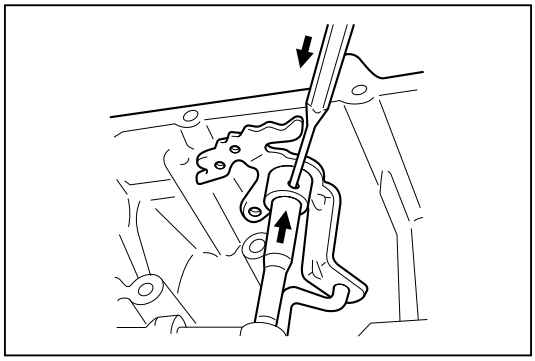
JAT00022-00021

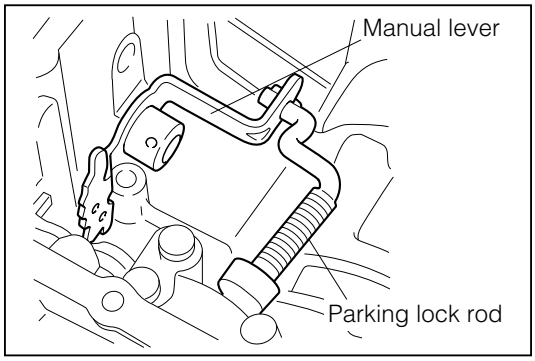

JAT00023-00022

15. Remove the stator shaft & oil pump assembly.
    (1) Measure the input shaft end play, using a dial gauge and following SST.
    SST: 09350-87202-000 (09351-87210-000)
    Specified Value: 0.26 - 0.88 mm

    NOTE:
    - Be sure to record the measured value for a guide during the assembly.

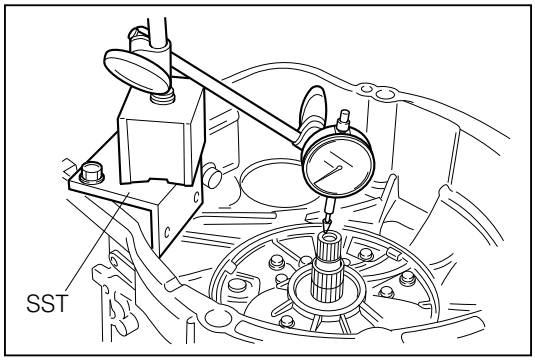

JAT00024-00023

(2) Remove the T-type oil seal, using the following SST.
SST: 09308-10010-000

NOTE:
- Never reuse the removed oil seal.

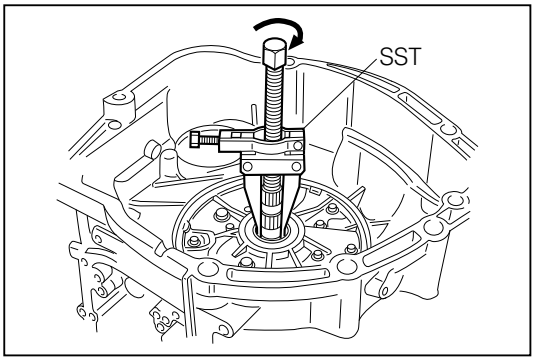

JAT00025-00024

(3) Remove the 7 bolts of the stator shaft & oil pump assembly.

NOTE:
- Be sure to remove the bolts evenly and diagonally.
- Never loosen any bolt other than the specified ones in the right figure.

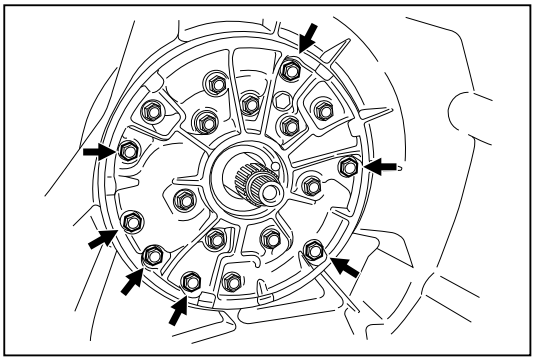
JAT00026-00025

(4) Remove the stator shaft & oil pump assembly with the O-ring, using the following SST.
SST: 09820-00021-000

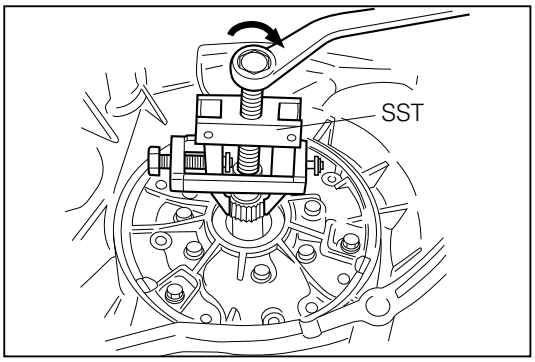

JAT00027-00026

(5) Remove the O-ring from the stator shaft & oil pump assembly and the 3 clutch drum oil seal rings.

NOTE:
- Never reuse the removed O-ring.
- Never reuse the removed oil seal rings.

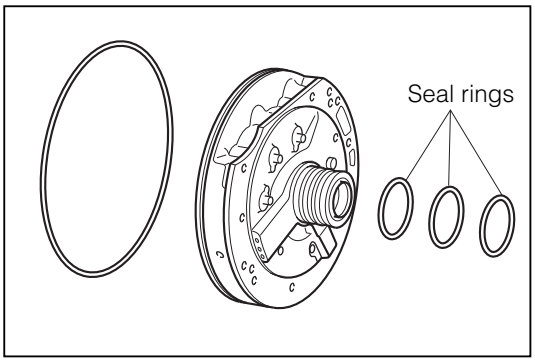

JAT00028-00027

16. Remove the front and rear multiple clutch assembly.
(1) Pull out the front and rear multiple clutch assembly by holding the stator shaft.

NOTE:
- Do not touch the seal rings.

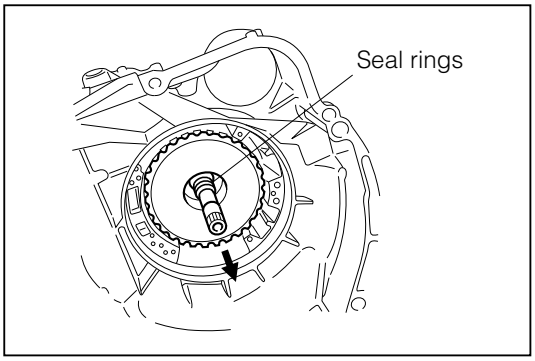

JAT00029-00028

(2) Separate the front multiple clutch assembly with the rear multiple clutch assembly.
(3) Remove the thrust needle bearing from the front multiple clutch assembly.
(4) Remove the 3 oil seal rings from the rear multiple clutch assembly.

NOTE:
- Never reuse the removed seal rings.

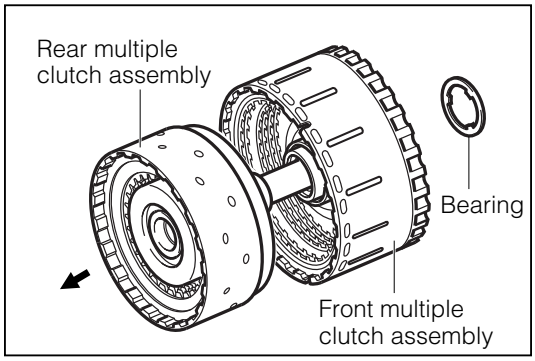

JAT00030-00029

17. Removal of intermediate shaft subassembly.
(1) Remove the intermediate shaft subassembly.
(2) Remove the thrust needle bearing from the intermediate shaft subassembly.

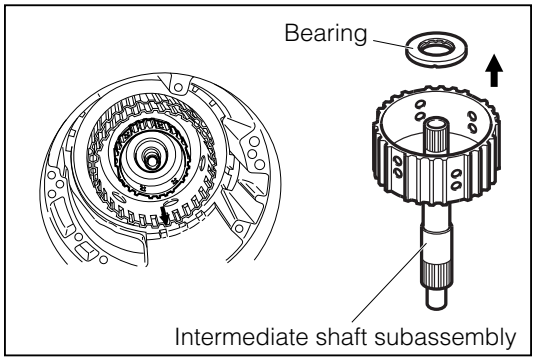

JAT00031-00030

18. Removal of forward clutch hub.
(1) Remove the forward clutch hub.
(2) Remove the thrust needle bearing from the forward clutch hub.

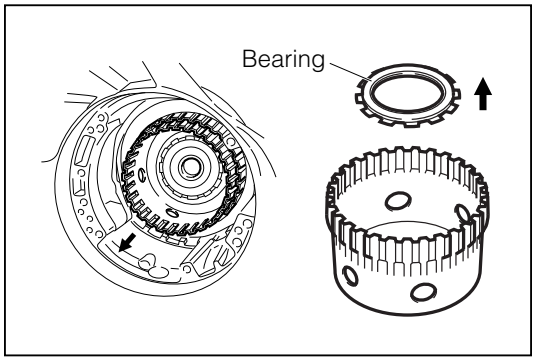

JAT00032-00031

19. Removal of planetary sun gear assembly.
(1) Remove the planetary sun gear assembly.
(2) Remove the two thrust needle bearings from the planetary sun gear assembly.

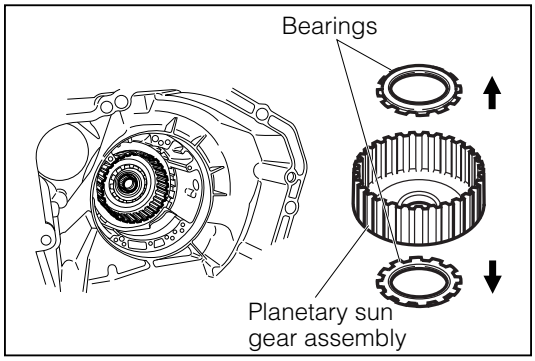

JAT00033-00032

20. Removal of the rear planetary sun gear subassembly.
(1) Remove the rear planetary sun gear subassembly.

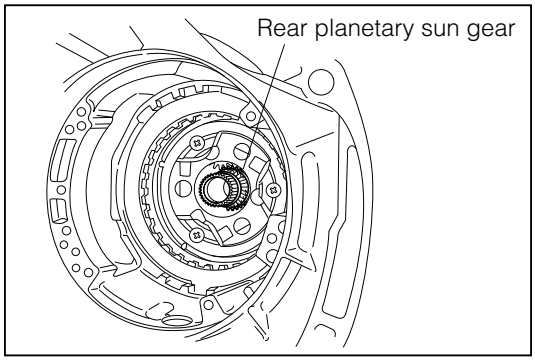

JAT00034-00033

21. Measurement of 2nd & 4th and 1st & reverse brake end play.
    (1) Turn over the transmission case.
    (2) Measure the 2nd & 4th brake end play from window (A), using a thickness gauge.
    Specified Value: 1.08 - 1.53 mm

    (3) Measure the 1st & reverse brake end play from window (B), using a thickness gauge.
    Specified Value: 0.69 - 1.18 mm

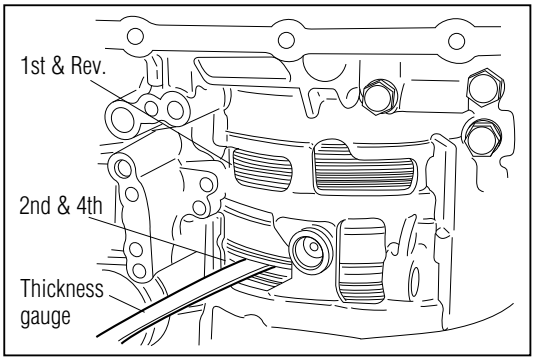

JAT00035-00034

NOTE:
- As for the 1st & reverse brake end play, the measurement should be conducted between the snap ring and the flange.
- Be sure to record the measured value for a guide during the assembly.
- The tightness which you encounter during this insertion/withdrawal of the thickness gauge should be virtually the same as the tightness which you would encounter during the thickness adjustment of the valve rocker arm.

22. Removal of 2nd & 4th brake discs and plates.
    (1) Remove the hole snap ring, using snap ring pliers.
    (2) Move the brake flanges, brake discs and brake plates in a set faces toward the front side and remove them in the following order.
    F = Brake flange, D = Brake disc, P = Brake plate
    F → D → P → D → P → D → F

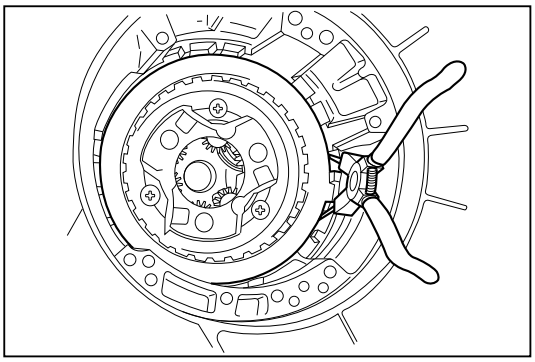
JAT00036-00035

23. Removal of 2nd & 4th brake piston assembly.
    (1) Remove the hole snap ring, using snap ring pliers.
    (2) Remove the piston return spring seat, piston return spring, and the 2nd and 4th piston.

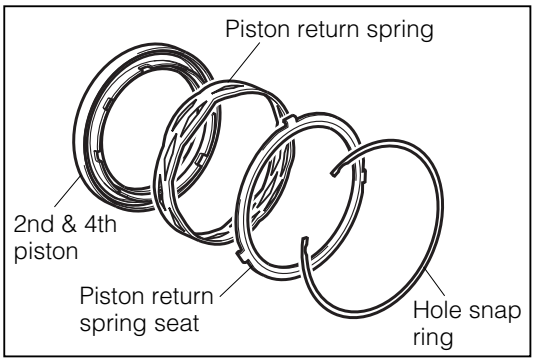

JAT00037-00036

    (3) Divide the 2nd and 4th brake piston using pliers.
    NOTE:
    - Never reuse the divided piston.

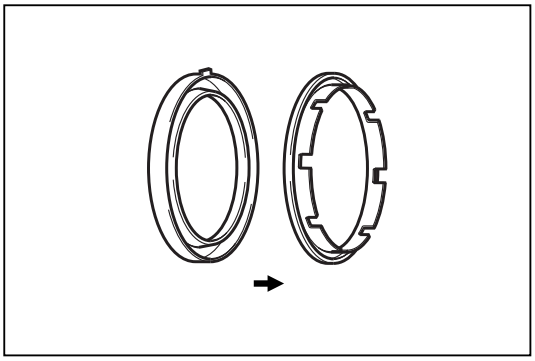
JAT00038-00037

24. Removal of the one-way clutch and the planetary gear assembly.
    (1) Remove the planetary gear assembly with the one-way clutch installed.
    (2) Remove the one-way clutch from the planetary gear assembly.

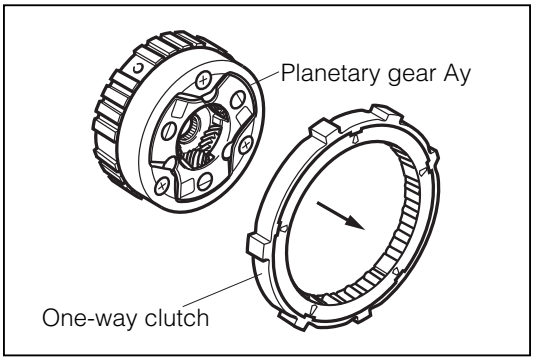

JAT00039-00038

25. Removal of the 1st and reverse brake discs and plates.
    (1) Remove the thrust needle roller bearing from the planetary output shaft subassembly.

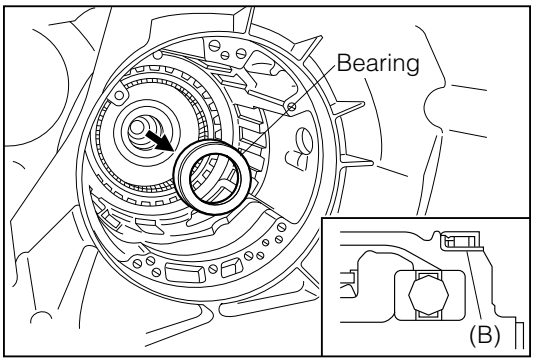

JAT00040-00039

    (2) Remove the hole snap ring, using snap ring pliers, and move the brake flange, brake discs and brake plates in a set faces toward the front side and remove them in the following order.
    F = Brake flange, D = Brake disc, P = Brake plate
    F → D → P → D → P → D → P → D → P

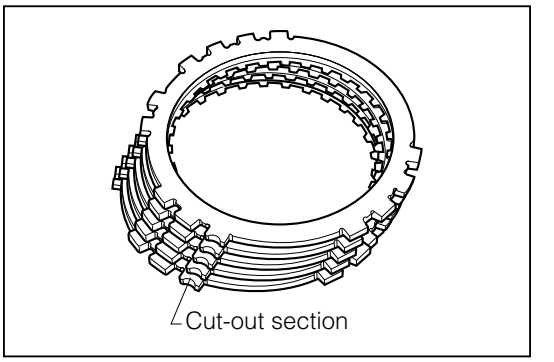

JAT00041-00040

26. Removal of the transfer assembly [4WD]
    (1) Remove the 7 bolts of the transfer assembly.
    NOTE:
    - Be sure to loosen the bolts evenly and diagonally
    - For A4Q-D1, remove the bolt marked (A), too. (Total 8 bolts)
    - The numeral in the right figure indicates the nominal length of the bolt.

    (2) Remove the transfer assembly.
    (3) Remove the oil guide plate, by removing the 2 bolts.

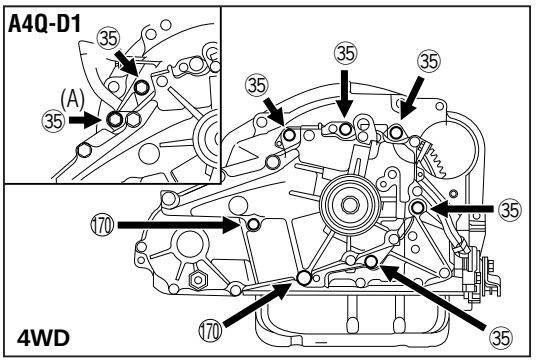

JAT00130-00126

Removal of the extension housing [2WD], side cover [4WD].
(1) Remove the oil seal, using the following SST given below.
SST: 09950-20017-000

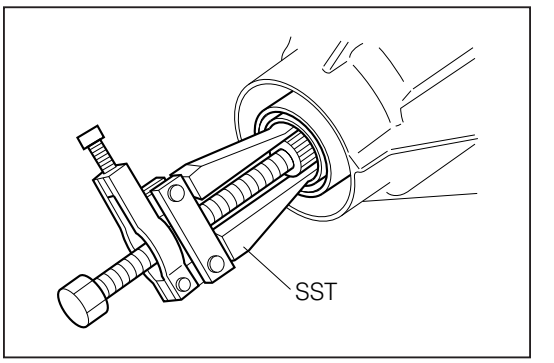

JAT00042-00041

(2) Remove the 8 bolts of the extension subassembly. [2WD]
Remove the 10 bolts of the side cover. [4WD]

NOTE:
- Be sure to loosen the bolts evenly and diagonally.
- For A4Q-D1, remove the bolts marked (A), too. (Total 10 bolts)

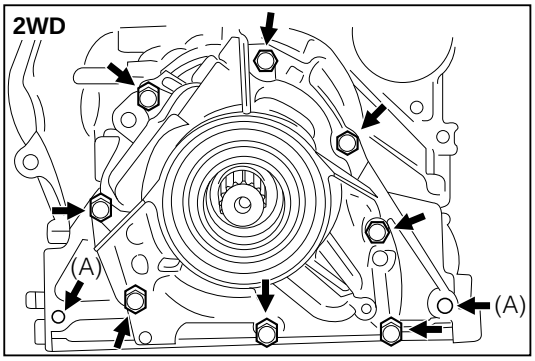

JAT00043-00042

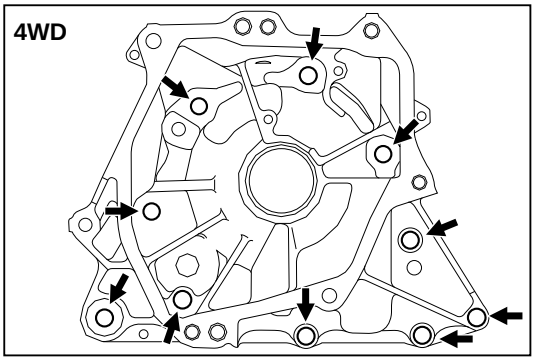

JAT00000-00127

(3) Remove the extension housing or side cover subassembly by lightly and uniformly tapping the 2 rib sections, using a plastic hammer.

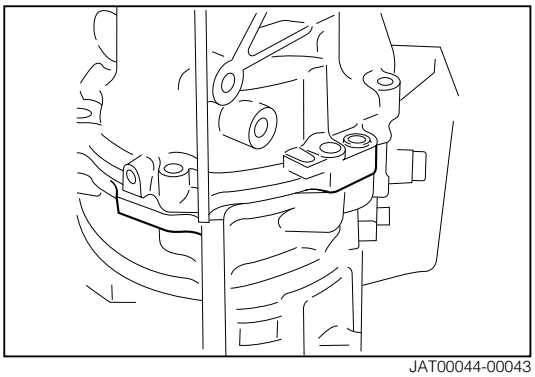
JAT00044-00043

27. Removal of the output shaft.
(1) Remove the output shaft.
(2) Remove the bearing by using SST.
SST: 09950-20017-000

NOTE:
- Never reuse the removed bearing.

(3) Remove the speedometer drive gear. [A4R-D1]

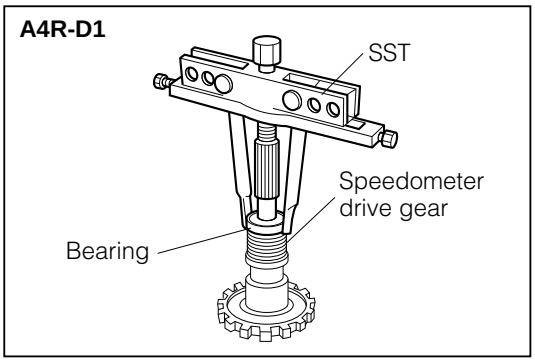

JAT00052-00051

28. Remove the parking lock pawl.
(1) Remove the torsion spring, the parking lock pawl and the parking lock pawl shaft.

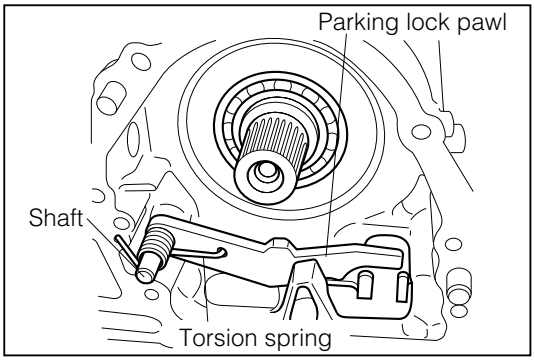

JAT00046-00045

29. Removal of the planetary output shaft.
    (1) Tap the planetary output shaft subassembly lightly, using a plastic hammer, until it becomes free.
    NOTE:
    - Be sure to place a cloth or the like under the transmission case in case that the planetary output shaft subassembly drops.

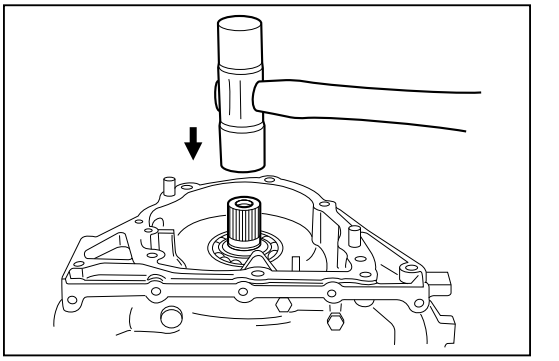

JAT00047-00046

    (2) Remove the bearing.
    NOTE:
    - If any difficulty is encountered in removing the bearing, remove it by applying a light impact from the inside of the transmission case, using a brass bar and a plastic hammer.

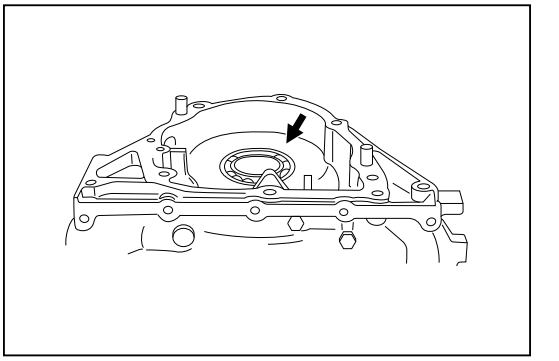

JAT00048-00047

30. Removal of control-related parts:
    (1) Remove the parking lock pawl can support by removing 3 bolts.
    (2) Remove the manual valve idler shaft.

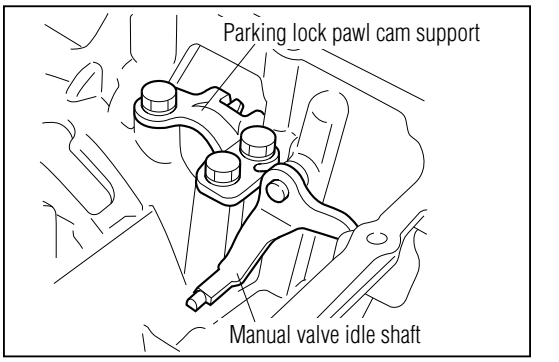

JAT00049-00048

31. Remove the 1st & reserve brake assembly.
    (1) Remove the shaft snap ring ①, using snap ring pliers.
    (2) Remove the piston return spring seat ② and, piston return spring ③.

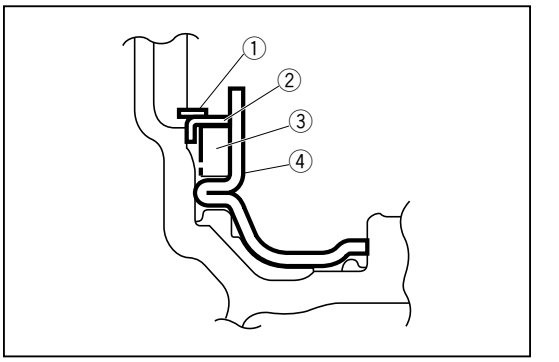

JAT00050-00049

    (3) Applying compressed air of 392 - 784 kPa from the oil hole indicated in the right figure.
    (4) Remove the 1st & reverse piston ④.
    WARNING:
    - Care must be exercised as to oil splashing when compressed air is used for blowing.

    NOTE:
    - Never reuse the removed 1st & reverse piston.

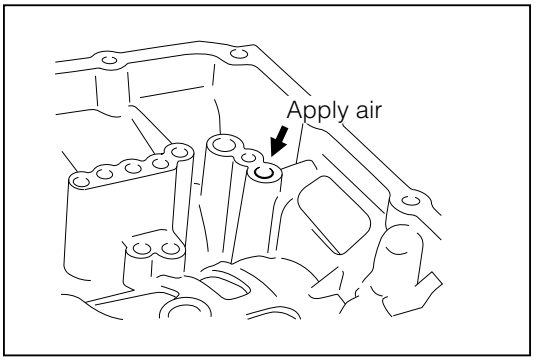

JAT00051-00050

INSPECTION

FRONT AND REAR MULTIPLE CLUTCH ASSEMBLY

1. Check of forward clutch (C2) piston stroke and Rear clutch (C3) piston stroke
   (1) Measure the forward clutch (C2) end play, Rear clutch end play using a thickness gauge.
   Specified Value:
   Forward Clutch (C2): 0.67 - 0.98 mm
   Rear Clutch (C3): 1.24 - 1.55 mm

   NOTE:
   - The tightness which you encounter during this insertion/withdrawal of the thickness gauge should be virtually the same as the tightness which you would encounter during the thickness adjustment of the engine valves.

   If the measured end play fails to conform to the specified value above, replace the multiple clutch assembly with a new one.

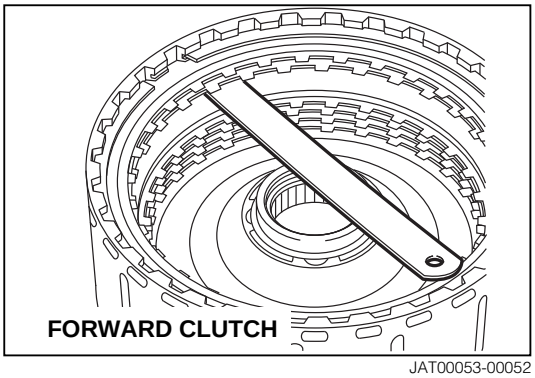

JAT00053-00052

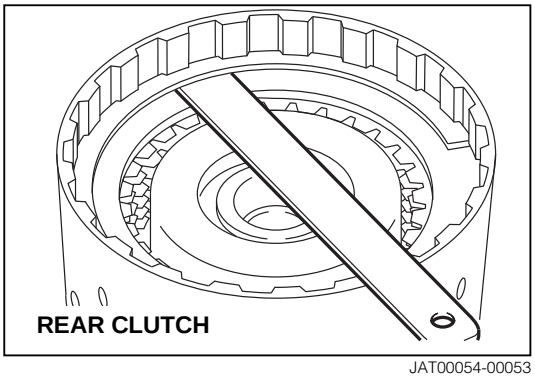

JAT00054-00053

2. Confirmation of turning effort of rear clutch disc
   (1) Install the thrust needle bearing to the rear multiple clutch assembly, in the right direction.
   (2) Assemble the intermediate shaft subassembly. Ensure that the clutch discs rotate smoothly.

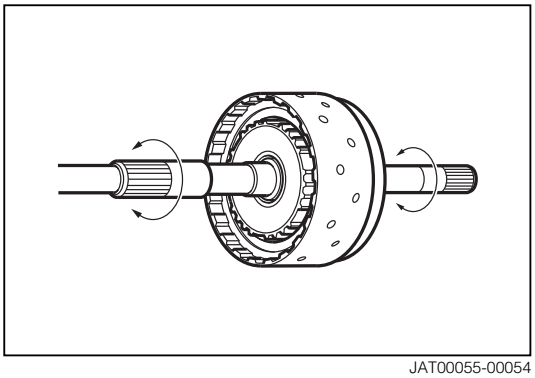
JAT00055-00054

3. Measure the bush inner diameter of the front multiple clutch assembly, using an inner caliper gauge.
   Specified Value: 44.50 - 44.53 mm
   Allowable Limit: 44.58 mm

   NOTE:
   - Ensure that the measurement should be performed at several points.
   - If the measured value exceeds the allowable limit, replace the front multiple clutch assembly with a new one.

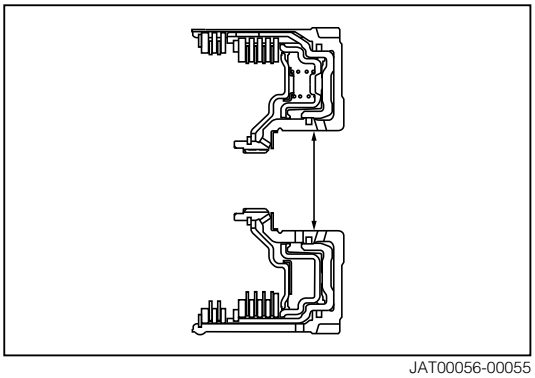
JAT00056-00055

4. Confirmation of turning effort of front multiple clutch assembly
   (1) Insert the rear multiple clutch assemble to the front multiple clutch assembly, with the 3 new oil seal rings assembled.
   NOTE:
   - Be careful not to damage the seal rings of the rear multiple clutch assembly, with the 3 new oil seal rings

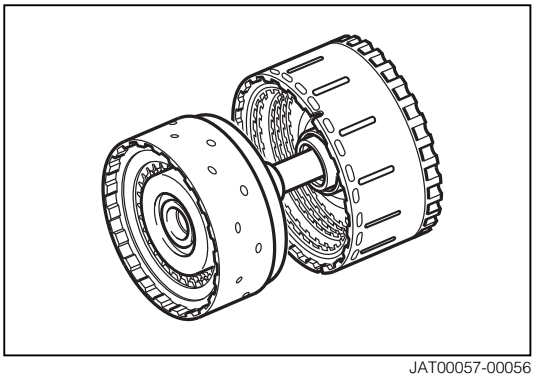
JAT00057-00056

(2) Install the thrust needle bearing to the rear multiple clutch assembly, in the right direction.
(3) Assemble the forward clutch hub. Ensure that it rotate smoothly.

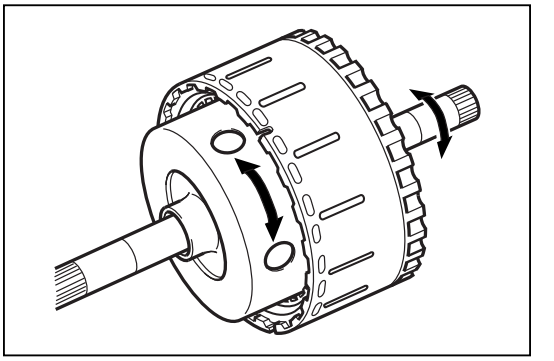

JAT00058-00057

(4) Install the thrust needle bearing to the rear multiple clutch assembly, in the right direction.
(5) Assemble the planetary sun gear assembly. Ensure that it rotate smoothly.

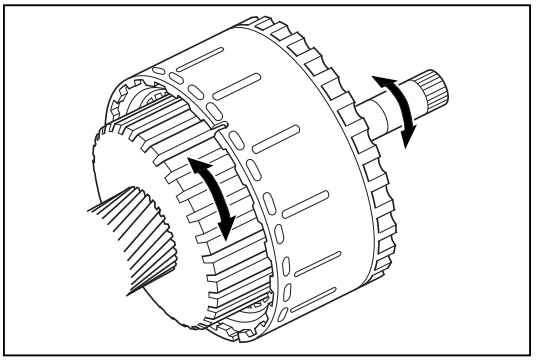

JAT00059-00058

ONE-WAY CLUTCH

Hold the planetary gear assembly and turn the one-way clutch.

NOTE:

- Ensure that it turns freely when turned counterclockwise and locked when turns clockwise.

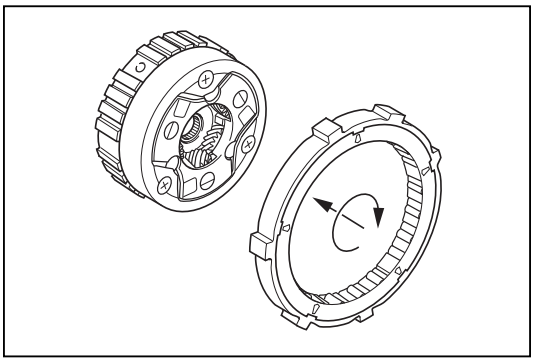

JAT00060-00059

ASSEMBLY

1. Selection of brake flanges, snap rings for 1st & reverse brake piston and 2nd & 4th brake piston
   Before assembling the unit, determine the thickness of the snap rings brake flanges, as follows.
   (1) Assemble the piston, brake discs and brake plates as shown in the right figure. Push them from the direction A with a load of 4.9 to 7.8 N. (Place a suitable weight).
   (2) Measure the dimension X with a height gauge. Based on this dimension, select a suitable brake flange (1st & Rev), snap ring (2nd & 4th) according to the table below.

   NOTE:
   - The dimension X is the distance measured between the following points.
   - The dimension X shall be the maximum value among values measured at three points on the circumference.
   - If the variation of the three measured values exceed 0.2 mm, redo the measurement of the dimension of each part.
     1st & Rev.: Brake disc end and brake piston end surface
     2nd & 4th: Brake flange end and brake piston end surface

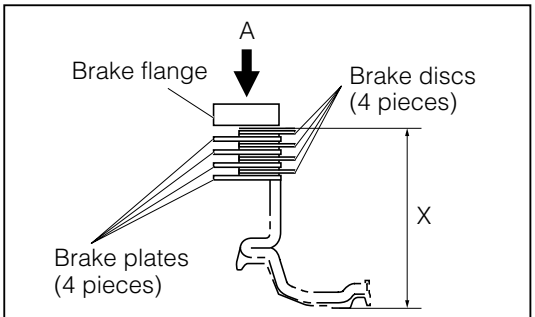

1st & reverse brake piston

JAT00131-00128

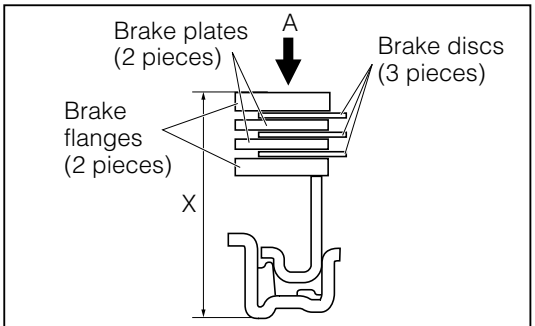

2nd & 4th brake piston

JAT00132-00129

Table Showing Availability of Brake Flanges for 1st & Reverse Brake Piston

No.	Dimension X	Part number	Thickness
1	39.45 - 39.661	35885-97201	4.0
2	39.25 - 39.45	35885-97202	4.2
3	39.05 - 39.25	35885-97203	4.4
4	38.85 - 39.05	35885-97204	4.6
5	38.65 - 38.85	35885-97205	4.8
6	38.439 - 38.65	35885-97206	5.0

Table Showing Availability of Snap Rings for 2nd & 4th Brake Piston

No.	Dimension X	Part number	Thickness	Identification color
1	35.854 - 36.11	90045-21179	2.25	Black
2	36.11 - 36.36	90045-21178	2.00	Brown
3	36.36 - 36.61	90045-21177	1.75	Blue
4	36.61 - 36.866	90045-21176	1.50	Silver

JAT00133-00000

2. Assembly of output shaft
   (1) Insert the speedometer drive gear to the output shaft. [A4R-D1]

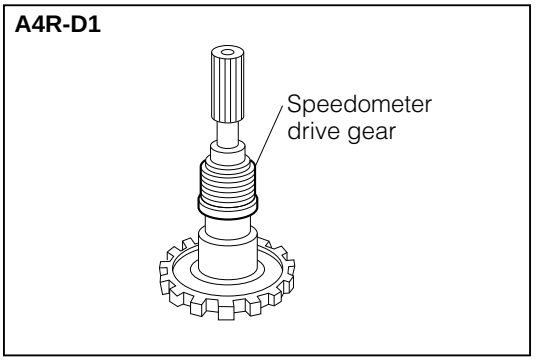

JAT00061-00060

   (2) Temporally insert a new radial ball bearing to the output shaft. Press the bearing in place, using a press in combination with the following SST given below.
   SST: 09309-87201-000

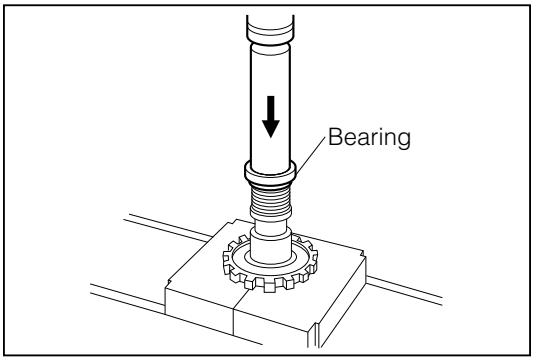

JAT00062-00061

3. Assembly of 1st & reverse brake piston.
   (1) Apply ATF to the outer and inner periphery of the new brake piston and to the inserted section of brake piston of the transmission case.

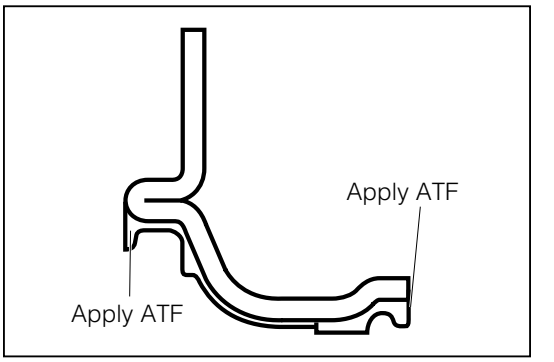

JAT00063-00062

   (2) Insert the new brake piston, piston return spring, and piston return spring seat into the transmission case.
   (3) Temporarily assemble the hole snap ring on the return spring seat using snap ring pliers.

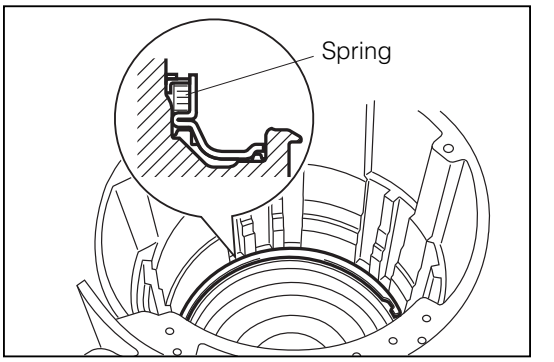

JAT00064-00063

   (4) Compress the piston return spring seat, using the following SST.
   SST: 09351-97201-000, 09350-87202-000

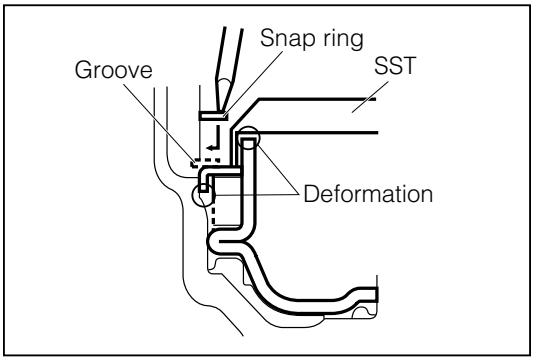

JAT00065-00064

NOTE:
- To prevent deformation, be sure to stop tightening the SST when the spring has been lowered 1 to 2 mm from the snap ring installation groove.
- Do not expand the ring excessively.
- The hole snap ring will become a center guide for the SST.

(5) Install the hole snap ring, using a flat screwdriver. And remove the SST.

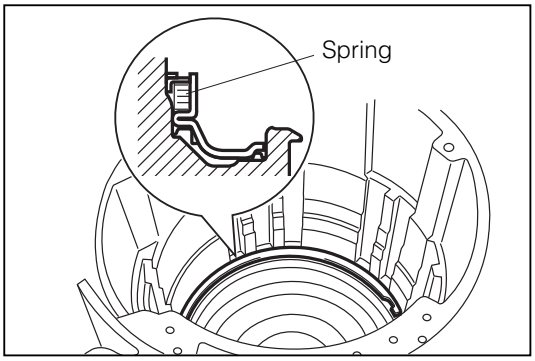

JAT00066-00065

(6) Install the parking lock pawl shaft and the parking lock pawl to the transmission case.
(7) Install the torsion spring, as indicated in the right figure.

NOTE:
- Push the parking lock pawl and release it. At this time, make sure that the pawl returns to the original position.

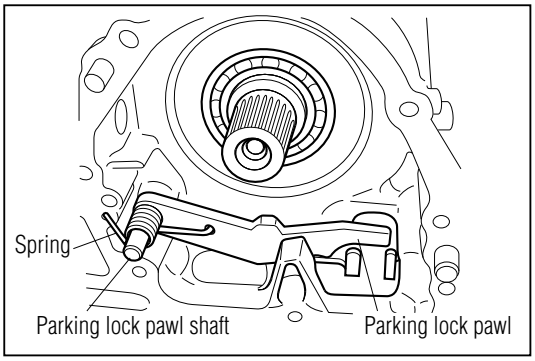

JAT00067-00066

4. Measure the inner diameter of the planetary output shaft subassembly, using an inner caliper gauge.
   Specified Value: 13.00 - 13.02 mm
   Allowable Limit: 13.07 mm

   NOTE:
   - Perform the measurement at several points. Calculate the mean value.
   - If the measured value exceeds the allowable limit, replace the planetary output shaft subassembly with a new one. Moreover, when replacing it, be sure to check the bush contacting surface of the planetary output shaft subassembly for scratch or discoloration. If the surface is scratched or discolored, replace the planetary output shaft subassembly with a new part.

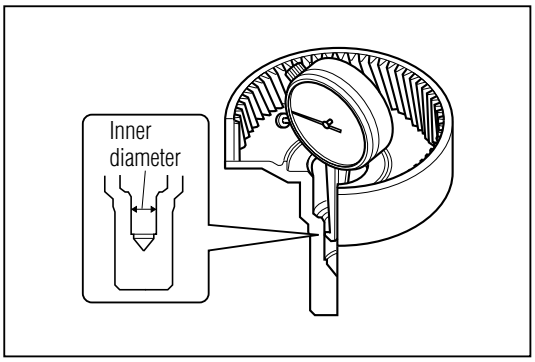

JAT00068-00067

5. Installation of planetary output shaft subassembly.
   (1) Install the radial ball bearing to the transmission case.

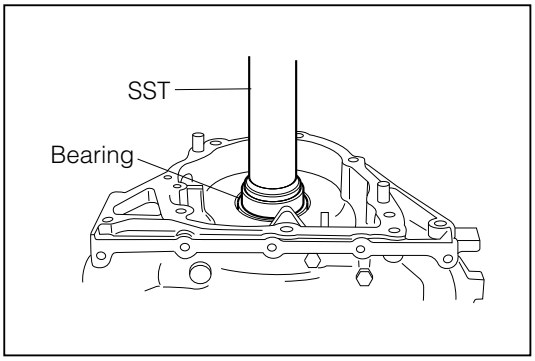

JAT00069-00068

   (2) Insert the planetary output shaft subassembly into the radial ball bearing with your hand.
   (3) Drive the reduction drive shaft subassembly, using the following SSTs, and a press.
   SSTs: 09309-87301-000 (A)
   09636-20010-000 (B)

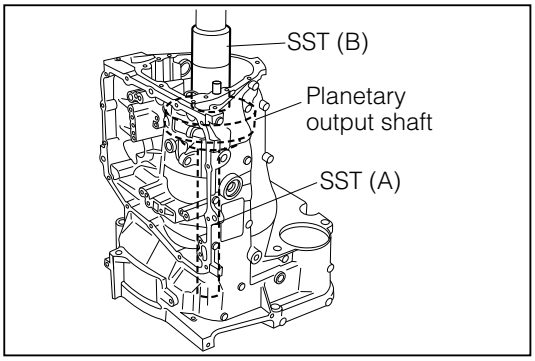

JAT00070-00069

6. Installation of extension housing [2WD], side cover [4WD]
   (1) Insert the extension housing bush apply tube to the extension housing. [2WD]

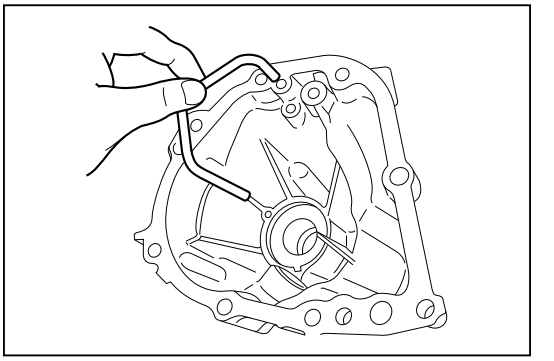

JAT00071-00070

   (2) Thoroughly remove any foreign matters (seal bond, grease, water, etc.) from both the mating surfaces.
   (3) Apply Three Bond TB1281B to the surface of the transmission case in such a way that a sealing may be formed without any discontinued spot, in a size equivalent to a 0.5 mm to 1.5 mm diameter, following the procedure given in the right figure.

   NOTE:
   - If the seal bond is applied in an excessive amount, the sealing agent may mix with the ATF, resulting in a restricted strainer. Therefore, care must be exercised not to apply the seal bond excessively.

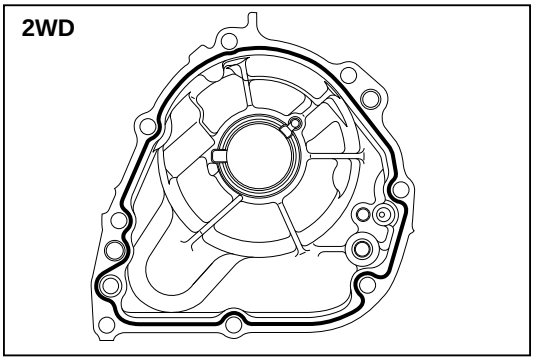

JAT00072-00071

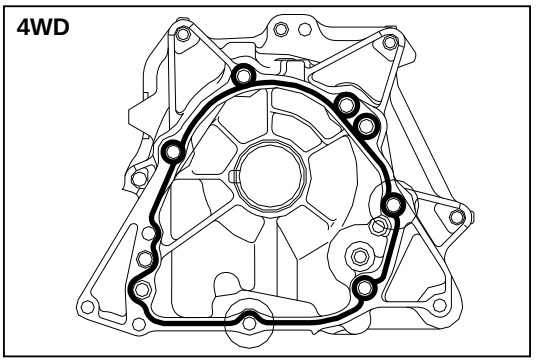

JAT00000-00130

   (4) Tighten the 8 bolts of the extension subassembly. [2WD]
   Tighten the 10 bolts of the side cover. [4WD]
   Tightening Torque: 14.7 - 21.6 N·m

   NOTE:
   - Be sure to tighten the bolts alternately and diagonally.
   - In the case of A4Q-D1, be sure to tighten the bolts located at the (A)-marked points.

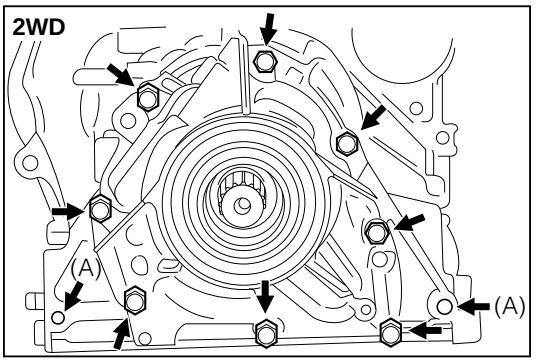

JAT00073-00072

7. Installation of the transfer assembly [4WD]
   (1) Install the oil guide plate to the side cover by tightening the 2 bolts.
   Tightening Torque: 6.9 - 9.8 N·m

   (2) Install the transfer by tightening the 7 bolts.
   Tightening Torque: 29.4 - 44.1 N·m

   NOTE:
   - Be sure to tighten the bolts alternately and diagonally
   - In the case of A4Q-D1, be sure to tighten the bolts located at the (A)-marked points.
   - The numeral in the right figure indicates the nominal length of the bolt.

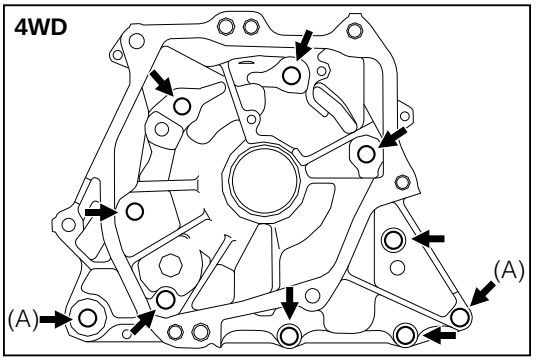

JAT00000-00131

8. Installation of 1st & reverse brake
   (1) Install the brake flanges, plates and discs in the following order.
   F = Brake flange, P = Brake plate, D = Brake disc
   P → D → P → D → P → D → P → D → F

   NOTE:
   - Before assembling new discs, soak them in the ATF for at least two hours.
   - Be sure to align the cut-out section of the brake plates and flange stalling the brake plate.
   - Install a new hole snap ring to the grooved section of the transmission case.

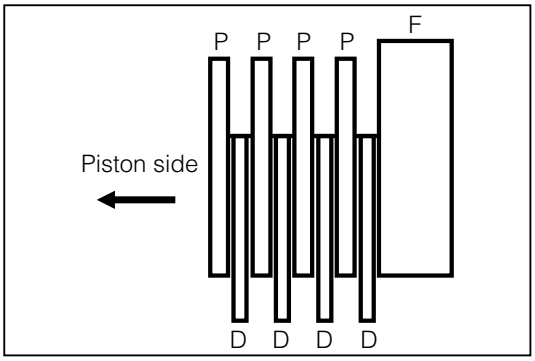

JAT00074-00073

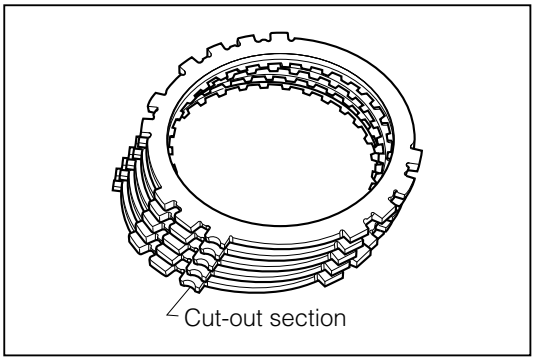

JAT00000-00074

9. Install the planetary gear assembly.
   (1) Install the thrust needle roller bearing to the planetary output shaft subassembly.
   Reference Value:
   Thrust Needle Roller Bearing Dimension:
   Refer to page AT–5

   NOTE:
   - Be sure to install the (B) section of the bearing faces toward the output shaft side.

   (2) Apply ATF to the surface of each gears and install the planetary gear assembly.
   NOTE:
   - Ensure that the assembly rotates smoothly.

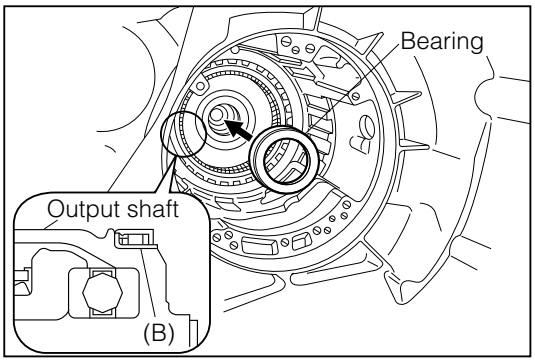

JAT00075-00075

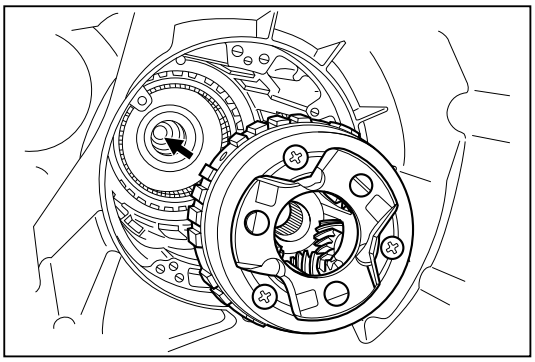
JAT00076-00076

10. Installation of one-way clutch
    (1) Coat the sliding section of the one-way clutch with the ATF.
    (2) Install the one-way clutch.
    NOTE:
    - Ensure that the one-way clutch with the snap ring faces toward the upside.
    - Align the cut-out section at the inside of the transmission case with the protruding section provided with the match mark of the one-way clutch.

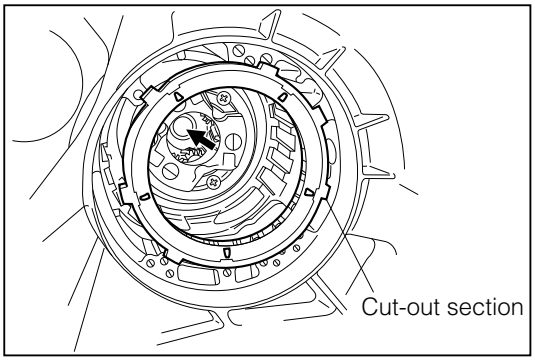

JAT00077-00077

11. Installation of the 2nd & 4th piston
    (1) Apply ATF to the outer periphery of the new brake piston and to the inserted section of brake piston of the transmission case.
    (2) Assemble the 2nd & 4th piston and cylinder.
    NOTE:
    - Be sure to insert the piston vertically.

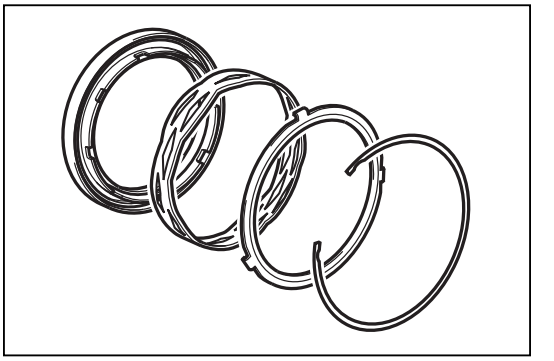
JAT00078-00078

    (3) Insert the new brake piston subassembly, piston return spring into the transmission case.
    (4) Insert the piston return spring seat in the right direction.
    (5) Assemble the hole snap ring using snap ring pliers and 2 flat screwdrivers.
    NOTE:
    - Be sure to align the cut-out section of the brake plate with the protruding section of the transmission when installing the brake plate.
    - Make sure to assemble the snap ring in such a way that its end gaps face upward of the unit.

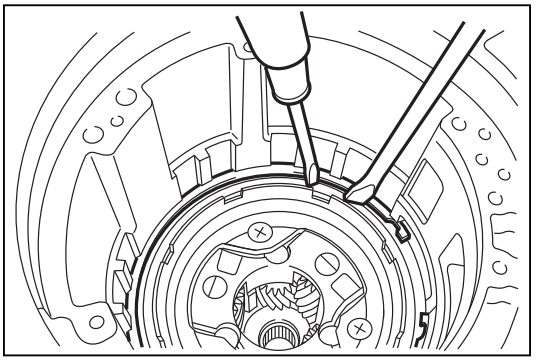
JAT00079-00079

12. Installation of 2nd & 4th brake
    (1) Install the brake flanges, plates and discs in the following order.
    F = Brake flange, P = Brake plate, D = Brake disc
    F → D → P → D → P → D → F

    NOTE:
    - Before assembling new discs, soak them in the ATF for at least two hours.
    - Be sure to align the cut-out section of the brake plate with the protruding section of the transmission when installing the brake plate.
    - Install a new hole snap ring to the grooved section of the transmission case.

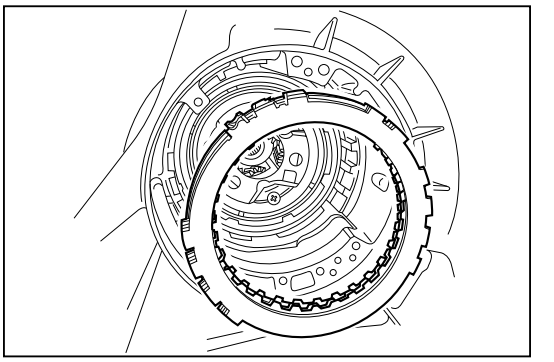
JAT00080-00080

13. Measurement of 1st & reverse brake and 2nd & 4th brake end play
    (1) Turn over the transmission case.
    (2) Measure the 1st & reverse brake and 2nd & 4th brake end play, using a flat thickness gauge.
    Specified Value:
    1st & Reverse Brake: 0.69 - 1.18 mm
    2nd & 4th Brake: 1.08 - 1.53 mm

    NOTE:
    - The tightness which you encounter during this insertion/withdrawal of the flat thickness gauge should be virtually the same as the tightness which you would encounter during the thickness adjustment of the valve rocker arm.
    - If the measured end play fails to conform to the specified value above, select a snap ring from the table, of the step 1.

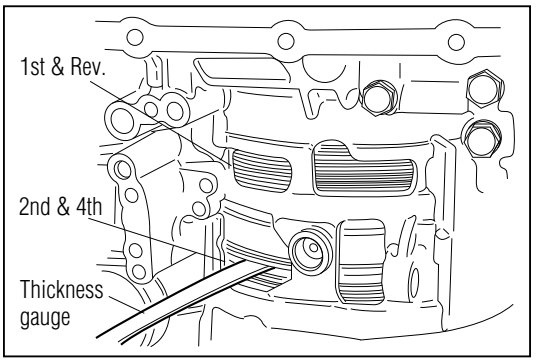

JAT00081-00081

14. Installation of rear planetary sun gear subassembly
    (1) Measure the bush bore diameter of the rear planetary sun gear subassembly.
    Specified Value: 18.00 - 18.02 mm
    Allowable Limit: 18.07 mm

    NOTE:
    - The measurement should be performed at several points. Determine the mean value.
    - If the bore diameter exceeds the allowable limit, replace the rear planetary sun gear subassembly.
    - When replacing the rear planetary sun gear subassembly, be sure to check the bush contacting surface of the intermediate shaft subassembly. If the contacting surface is scored or discolored, replace the intermediate shaft subassembly, too, with a new one at the same time.

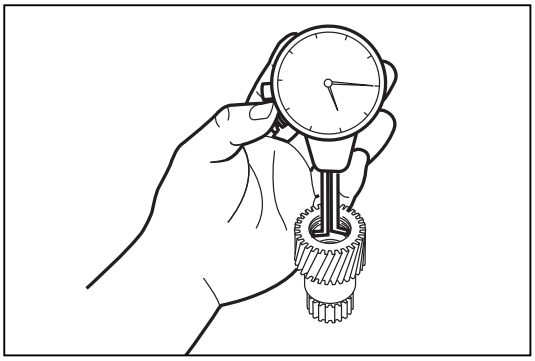
JAT00083-00083

    (2) Install the rear planetary sun gear subassembly to the planetary gear assembly.
    NOTE:
    - Apply ATF to the bush section.

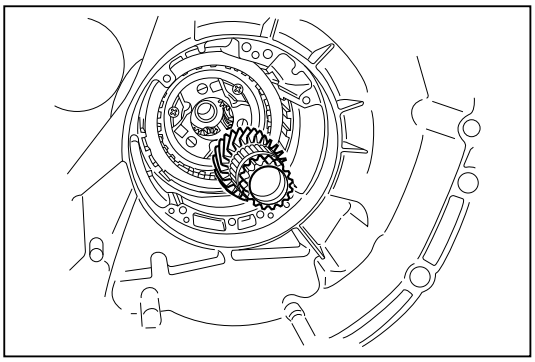
JAT00084-00084

15. Measure the bush inner diameter of the front multiple clutch assembly, using an inner caliper gauge.
    Specified Value: 44.50 - 44.53 mm
    Allowable Limit: 44.58 mm

    NOTE:
    - Ensure that the measurement should be performed at several points.
    - If the measured value exceeds the allowable limit, replace the front multiple clutch assembly with a new one.

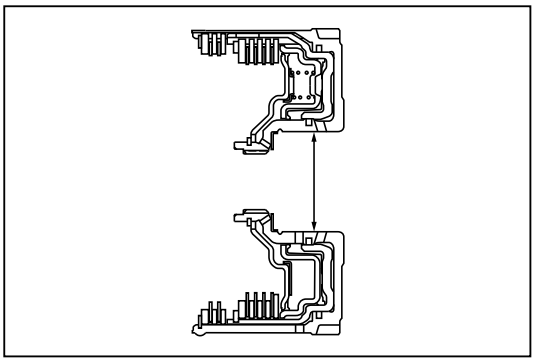
JAT00056-00055

16. Installation of the front planetary sun gear assembly, forward clutch hub and intermediate shaft subassembly
    (1) Measure the bush bore diameter of the planetary sun gear subassembly.
    Specified Value: 27.00 - 27.02 mm
    Allowable Limit: 27.07 mm

NOTE:
- The measurement should be performed at several points. Determine the mean value.
- If the bore diameter exceeds the allowable limit, replace the planetary sun gear subassembly.
- When replacing the planetary sun gear subassembly, be sure to check the bush contacting surface of the rear planetary sun gear subassembly. If the contacting surface is scored or discolored, replace the rear planetary sun gear subassembly with a new one, too, at the same time.

JAT00085-00000

(2) Assemble the front planetary sun gear assembly with the two thrust needle roller bearings to the planetary gear assembly.

NOTE:
- Apply ATF to the bush section.
- Make sure that the two thrust needle roller bearings are assembled in the correct direction.
- Assemble by aligning the pawls of the clutch disc of the 2 & 4 brake with the groove of the planetary sun gear assembly hub

REFERENCE:
- Dimensions of thrust needle roller bearing: Refer to page AT–5.

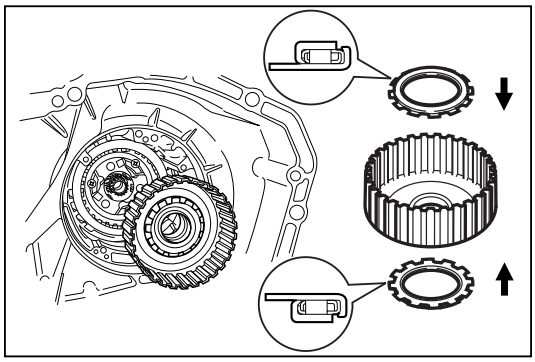

JAT00086-00085

(3) Assemble the forward clutch hub with the thrust needle roller bearing to the planetary sun gear assembly.

NOTE:
- Apply ATF to the forward clutch hub.
- Make sure that the thrust needle roller bearing is assembled in the correct direction.

REFERENCE:
- Dimensions of thrust needle roller bearing: Refer to page AT–5.

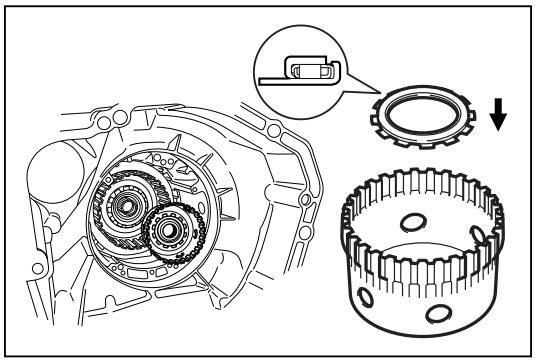

JAT00087-00086

(4) Assemble the Intermediate shaft subassembly with the thrust needle roller bearing to the forward clutch hub.

NOTE:
- Apply ATF to the Intermediate shaft subassembly.
- Make sure that the thrust needle roller bearing is assembled in the correct direction.

REFERENCE:
- Dimensions of thrust needle roller bearing: Refer to page AT–5.

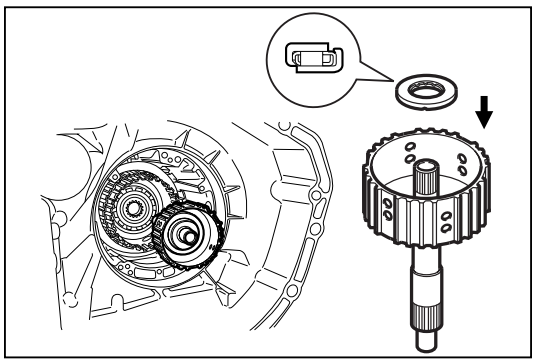

JAT00088-00087

17. Installation of the rear multiple clutch assembly
    Align the pawls of the clutch disc of the rear multiple clutch assembly with each other.
    Assemble the rear multiple clutch by aligning the pawls of the clutch disc of the rear multiple clutch assembly with the groove of the forward clutch hub and with the groove of the intermediate shaft subassembly.

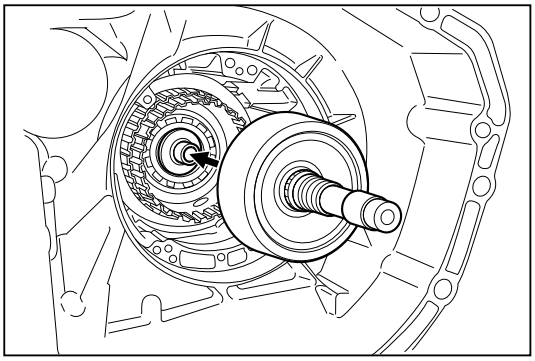

JAT00089-00088

18. Measure the height of the rear multiple clutch assembly between the installation section of the oil pump using the following SST & vernier calipers.
    SST: 09350-87202-000 (09351-87208-000)
    Specified Value: Approx. 43 mm
    Dimension X: Distance between oil pump contact surface and rear multiple clutch assembly.

    NOTE:
    - If the measured value is less than 43 mm, the pawl section of the forward clutch disc is probably not fitted in the groove of the forward clutch hub. Be sure to perform the operation of the step again.
    - Do not touch the seal rings.

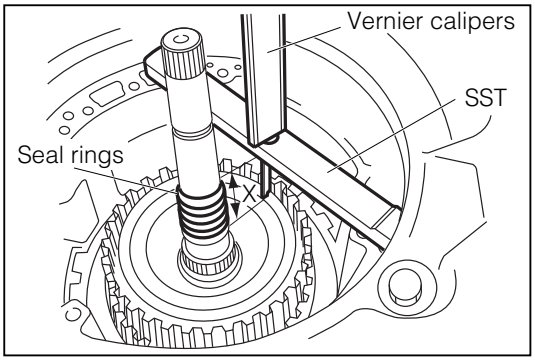

JAT00090-00135

19. Turn the forward clutch clockwise and counterclockwise. At this time, ensure that the forward clutch turns lightly and the planetary sun gear assembly makes a relative movement with the forward clutch.

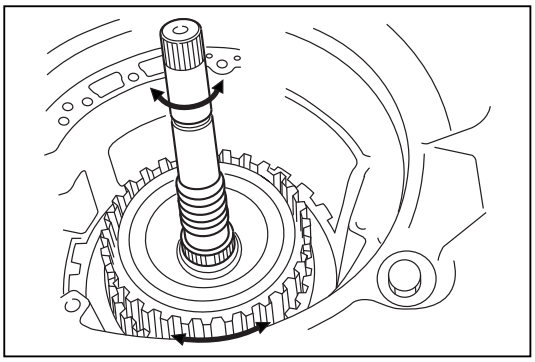

JAT00091-00089

20. Installation of front multiple clutch assembly
    (1) Measure and record the thickness of the thrust needle roller bearing.
    (2) Install the front multiple clutch assembly to the forward clutch drum and the planetary sun gear assembly as turning clockwise and counterclockwise.
    NOTE:
    - Be careful not to damage the seal rings of the rear multiple clutch assembly.

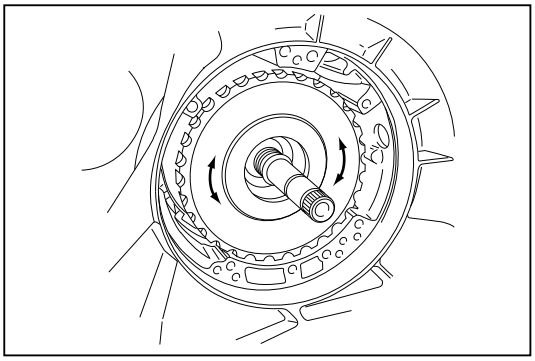

JAT00092-00090

(3) Confirm the height of the oil pump attaching surface from the front multiple clutch assembly upper surface, using the following SST.
SST: 09350-87202-000 (09351-87208-000)
Specified Height: Approx. 43.5 mm
Dimension X: Distance between oil pump contact surface and rear multiple clutch assembly.

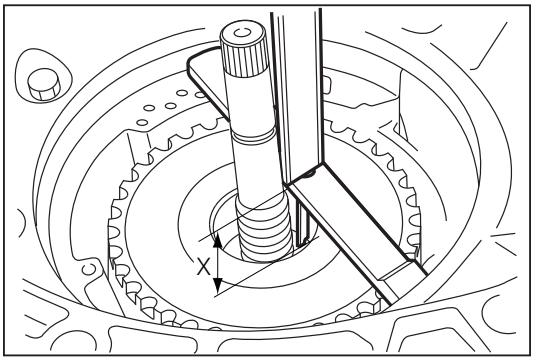

JAT00093-00091

NOTE:
- Perform the measurement at several points. Calculate the mean value.
- If the measured value is less then 43.5 mm, the two pawls of the clutch disc are probably not fitted into the groove of the forward clutch drum or the planetary sun gear assembly. Be sure to perform the operation of the step (3) above again.

(4) Install the thrust roller bearing into the front multiple clutch assembly.

NOTE:
- Make sure that the thrust needle roller bearing is assembled in the correct direction.

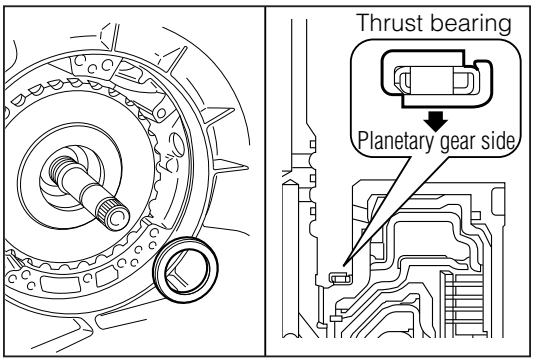

JAT00094-00092

21. Inspection of stator shaft & oil pump assembly
(1) Inspection of oil pump operation
Ensure that the oil pump drive gear rotates smoothly, using the following SST.
SST: 09350-87202-000 (09351-87206-000)

NOTE:
- Be sure to insert the flat sections (2 points) of the SST into the flat sections of the oil pump drive gear.

JAT00096-00000

(2) Measure the inner diameter of the oil pump bush section, using an inner caliper gauge.
Allowable Limit: ϕ23.52 mm

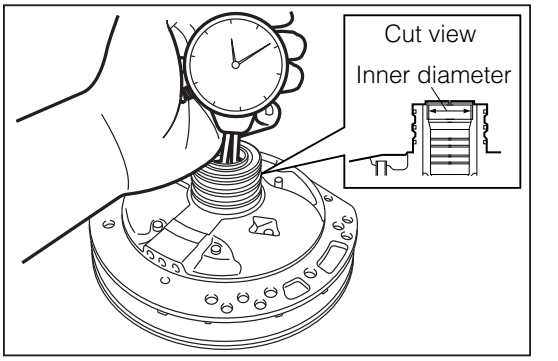

JAT00097-00094

NOTE:
- Perform the measurement at several points. Calculate the mean value.
- If the actually measured value exceeds the allowable limit, replace the stator shaft & oil pump assembly with a new one.
- When replacing it, be sure to check the bush contacting surface of the input shaft subassembly. If the surface is scratched or discolored, replace the shaft with a new one, too.

22. Assembly of stator shaft & oil pump assembly
    (1) Coat 3 new clutch drum oil seal rings with the ATF and install it to the stator shaft & oil pump assembly.
    NOTE:
    - Do not spread the new oil seal rings excessively.

    (2) Coat and install the new O-ring.
    (3) Assembly the stator shaft & oil pump assembly, following the procedure given in the steps 16–(1) through 16–(8).

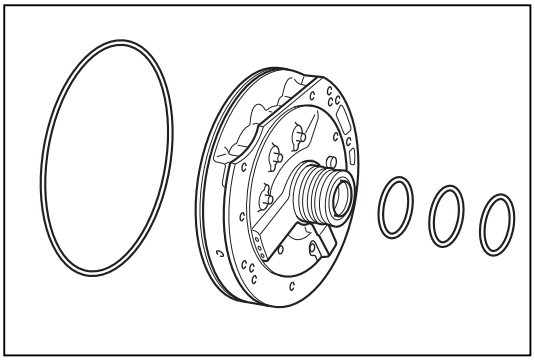

JAT00098-00095

23. Installation of stator shaft & oil pump assembly
    (1) Install the following SST to the transmission case.
    SST: 09350-87202-000 (09351-87207-000)

    (2) Apply the ATF to the outer periphery of the stator shaft & oil pump assembly and install it to the transmission case.
    NOTE:
    - Be very careful not to damage or twist the O-ring during the installation.

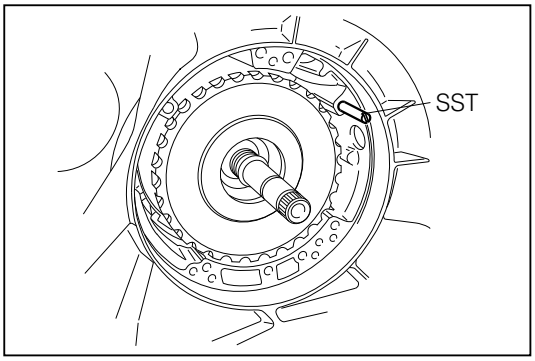

JAT00099-00096

    (3) Tighten the 7 bolts of the stator shaft & oil pump assembly.
    Tightening Torque: 6.9 - 9.8 N·m

    NOTE:
    - Be sure to tighten the bolts alternately and diagonally.

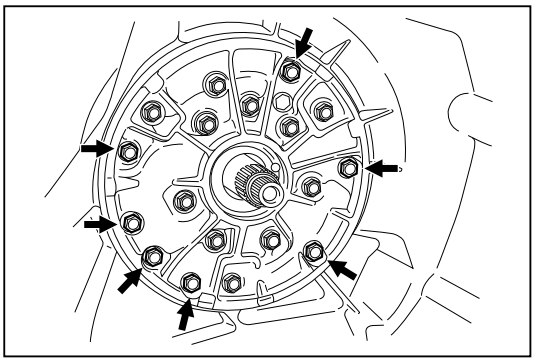

JAT00101-00098

    (4) Measure the input shaft end play with a dial gauge and the following SST.
    SST: 09350-87202-000 (09351-87210-000)
    Specified Value: 0.26 - 0.88 mm

    NOTE:
    - If the measured end play exceeds the specified value, remove the stator shaft & oil pump assembly and the direct clutch from the transmission case. Then, select the thickness of the thrust bearing race from the lower table. Proceed to perform the operations of the steps from 20–(4) to 23–(4).

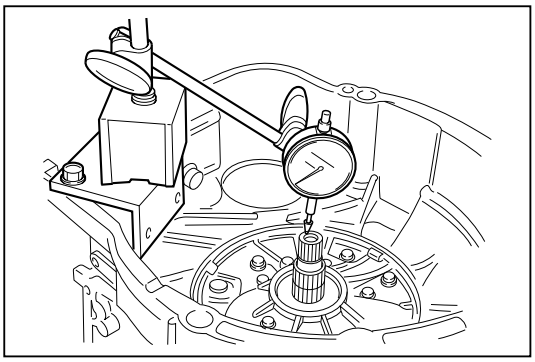

JAT00102-00099

Thrust bearing availability

Thrust bearing thickness mm	Part No.	Color
3.41	90043-74044-000	Brown
3.81	90043-74043-000	—
4.21	90043-74045-000	Black

JAT00135-00000

(5) Install a new T-type oil seal, using the following SST.
SST: 09310-87301-000

NOTE:
- Make sure that the T-type oil seal is in contact at right angles with the assembly.

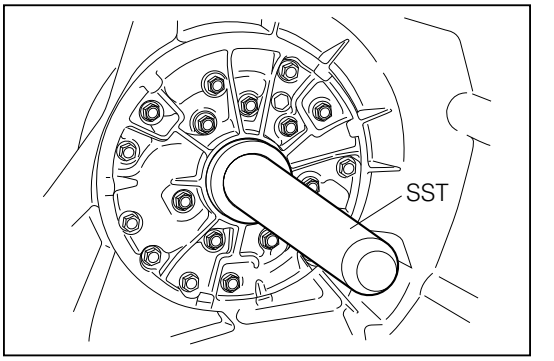

JAT00103-00100

24. Installation of manual valve lever shaft assembly
(1) Install the parking lock pawl cam support and manual valve idle shaft by first temporary tightening bolt (A). Then tighten the bolts to the tightening torque in the following order. Bolt (B) → (C) → (A)
Tightening Torque: 14.7 - 17.6 N·m

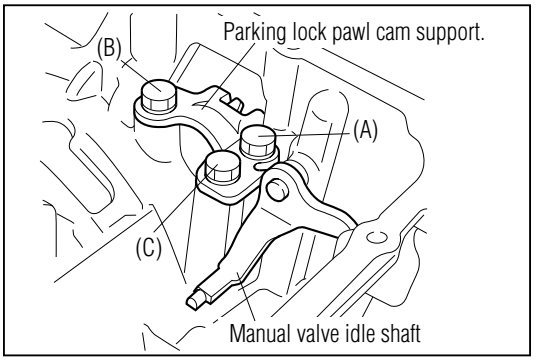

JAT00136-00133

(2) Install the cut-out groove of the manual valve lever and the protruding section of the parking lock rod to the manual valve lever.

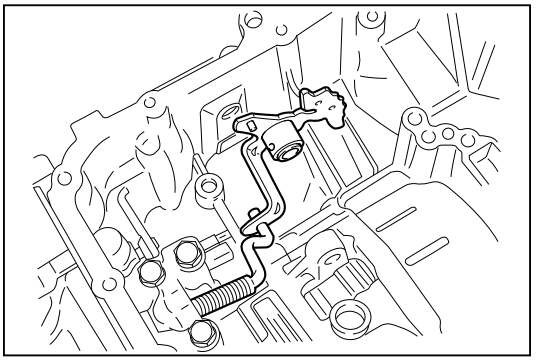
JAT00104-00101

(3) Install the parking lock lever shaft subassembly from the engine side.

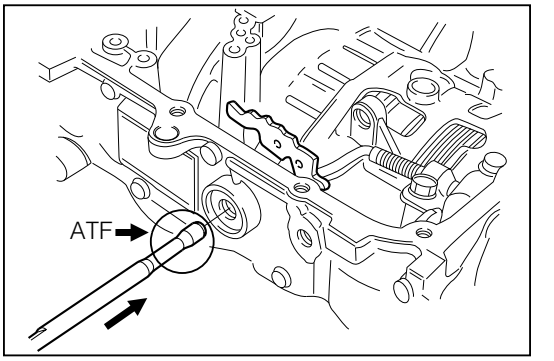

JAT00105-00102

(4) Install a new slotted spring pin, using a pin punch and a hammer.
NOTE:
- Be sure to install the pin, until it reaches the edge surface of the manual valve lever.

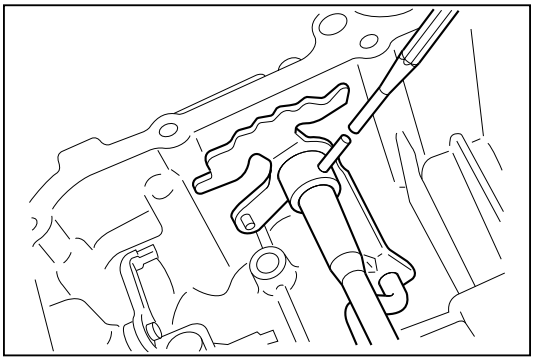
JAT00138-00103

(5) Install the the compression spring, bolt and plate.
Tightening Torque: 6.9 - 9.8 N·m

(6) Install the new 2nd & 4th brake cylinder seal.

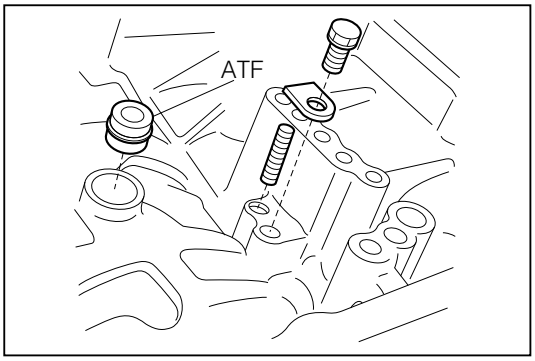

JAT00106-00104

25. Installation of the valve body assembly
(1) Assemble the manual valve idler plug (A) and manual valve idler shaft.

NOTE:
- Ensure that the pin sections of the manual valve lever subassembly (B) and the parking rod lever subassembly (C) are engaged with the groove section of the manual valve idler plug.
- Ensure that each link moves smoothly.

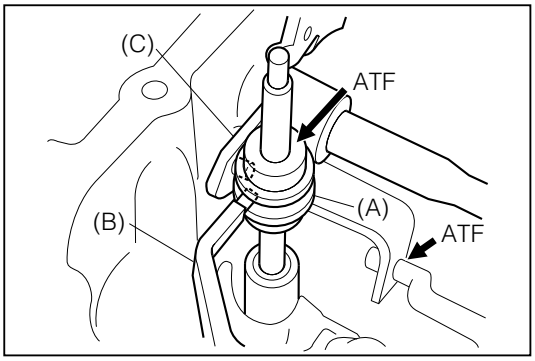

JAT00107-00105

(2) Install the valve body assembly to the transmission case.

NOTE:
- Ensure that the protrusion of the manual valve lever (A) and grooved section of the manual valve (B) are matched securely.
- Align the forward end of the manual valve idler shaft with the hole (C) of the valve body assembly.

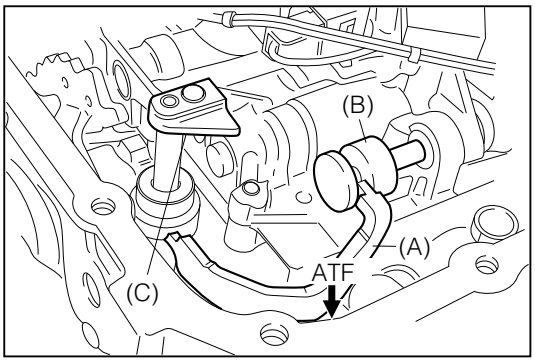

JAT00108-00106

(3) Tighten the 2 bolts with the (A) mark in the right figure, and then tighten the other 5 bolts.
Tightening Torque: 6.9 - 9.8 N·m

NOTE:
- One bolt should be tightened together with the bracket.
- The numeral in the right figure indicates the nominal length of the bolt.

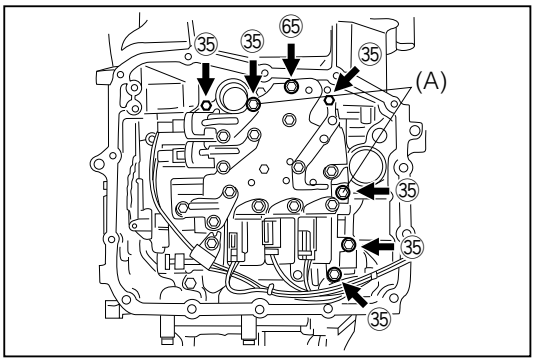

JAT00109-00107

(4) Ensure that the manual valve operates smoothly and set it to the neutral position, using the following SST.
SST: 09350-87202-000 (09351-87211-000)

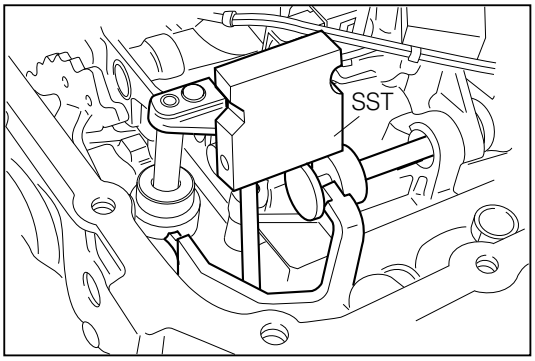

JAT00110-00108

(5) Tighten the 2 bolts of the manual detent spring.
Tightening Torque: 6.9 - 9.8 N·m

NOTE:
- Be sure to tighten the bolts alternately.

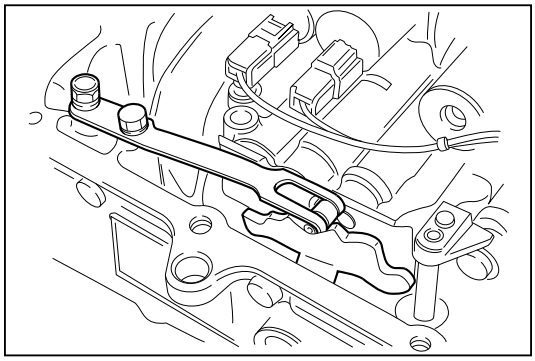
JAT00111-00109

(6) Attach the harness to the harness clamp.

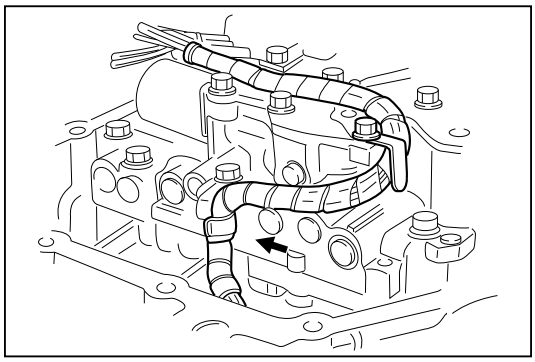
JAT00112-00110

(7) Apply ATF to the new O-ring. Install the oil strainer with the O-ring to the valve body assembly.
NOTE:
- Be sure that all 3 pawls are firmly set.

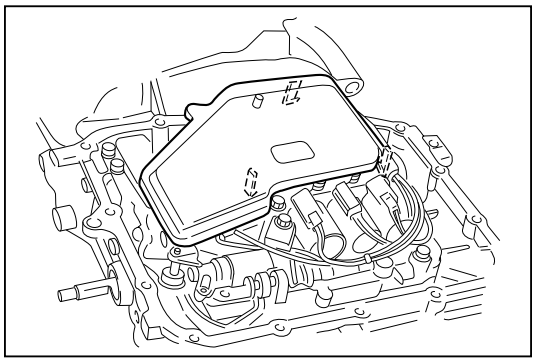
JAT00113-00111

(8) Connect the transmission solenoid connector.
NOTE:
- Make sure that the pawls are firmly set.

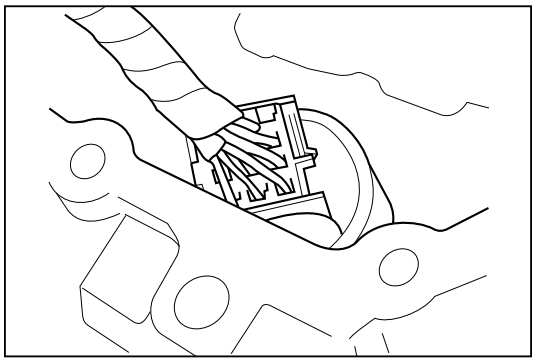
JAT00137-00134

26. Installation of transmission oil pan subassembly
(1) Place the oil cleaner magnet in the protrusion of the transmission oil pan subassembly.
(2) Toughly remove any foreign matter (grease and water, etc.) from both the transmission case and the transmission oil pan subassembly
(3) Apply Three Bond TB1281B or equivalent to the surface of the transmission case in such a way that a sealing may be formed without any discontinued spot, in a size equivalent to a 1.5 mm to 2.5 mm diameter, following the procedure given in the right figure.

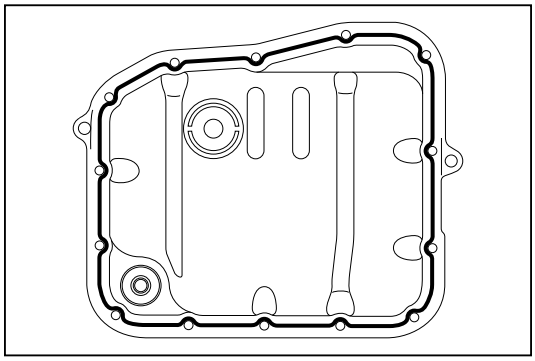
JAT00114-00112

(4) Tighten the 14 bolts
Tightening Torque: 6.9 - 9.8 N·m

NOTE:
- Be sure to tighten the bolts alternately and diagonally.

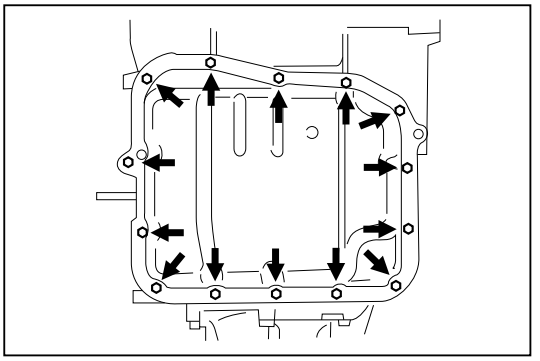

JAT00115-00113

27. Installation of the brackets.
Install the engine mount bracket by tightening the 3 bolts. [A4R-D1 (2WD)]
Tightening Torque: 29.4 - 44.1 N·m

Install the control cable bracket by tighten the 2 bolts. [A4Q-D1, A4R-D1 (4WD)]
Tightening Torque: 14.7 - 21.6 N·m

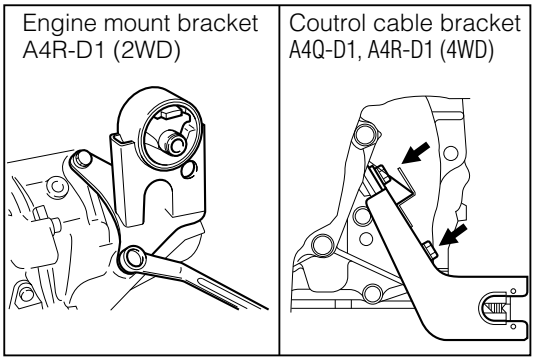

JAT00124-00122

28. Tighten the bracket with the bolt and clamp the connector of neutral start switch.
Tightening Torque: 6.9 - 9.8 N·m

NOTE:
- In the case of A4Q-D1, the direction of the coupler differs from that of A4R-D1.

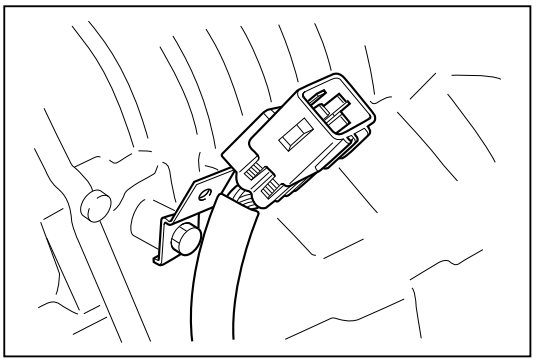

JAT00119-00117

29. Adjustment of neutral start switch
(1) Temporarily tighten the bolt of the neutral start switch assembly.
(2) Place the transmission control shaft lever subassembly.
(3) Push the lever toward the front side (ie: P range).
(4) Back off the lever two notches to the NEUTRAL position.
(5) Remove the lever subassembly.

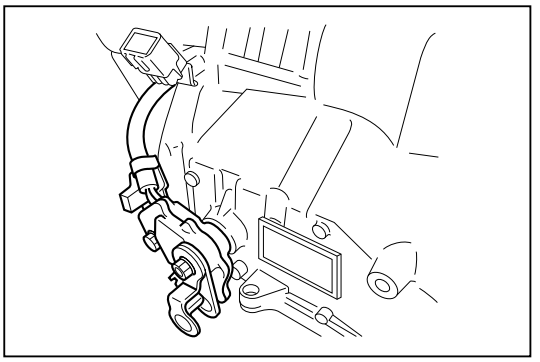

JAT00116-00114

(6) Install the following SST.
SST: 09302-87201-000

(7) Adjust the neutral start switch assembly until the neutral basic line on the SST should be aligned with SST above.
(8) Tighten the bolt.
Tightening Torque: 14.7 - 21.6 N·m

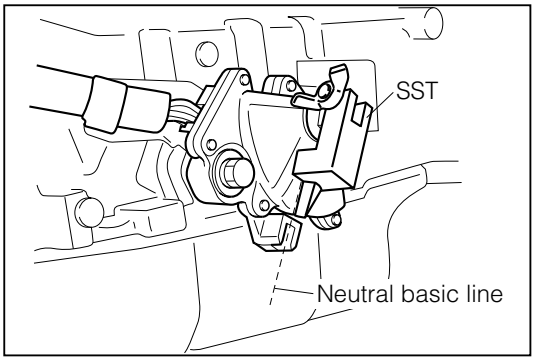

JAT00117-00115

30. Tighten the lever subassembly with a nut.
    Tightening Torque: 9.8 - 15.7 N·m

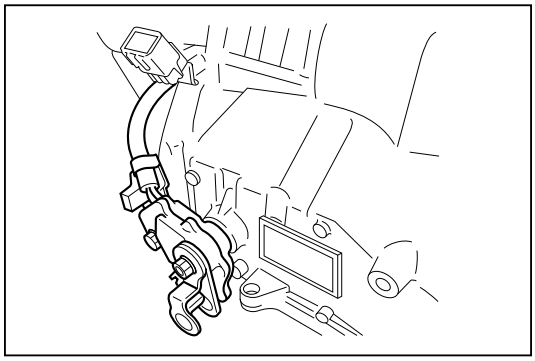

JAT00118-00116

31. Installation of the 2 transmission revolution sensors.
    (1) Coat the new O-ring section of the 2 transmission revolution sensors with the ATF and insert the 2 transmission revolution sensors into the transmission case.
    (2) Tighten the bolts
    Tightening Torque: 6.9 - 9.8 N·m

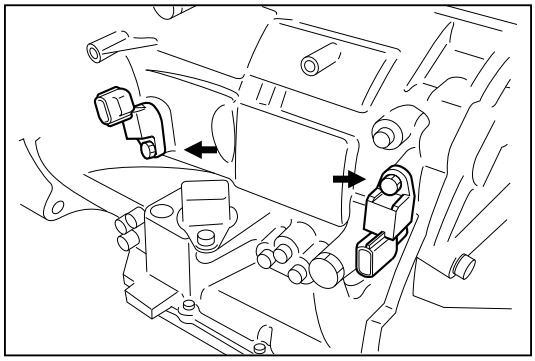

JAT00120-00118

32. Install the speedometer shaft sleeve assembly. [A4R-D1]
    (1) Coat the new O-ring section of the speedometer shaft sleave assembly, and insert it to the transmission case.
    (2) Tighten the bolt.
    Tightening Torque: 6.9 - 9.8 N·m

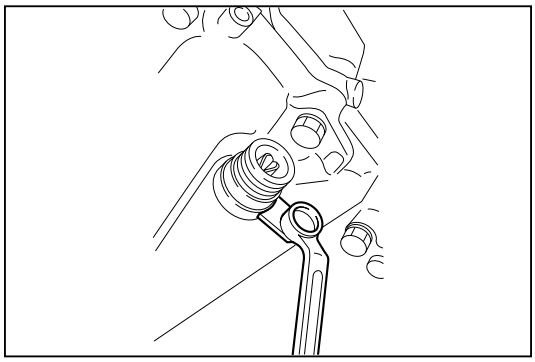

JAT00121-00119

33. Tighten the breather union and install the breather cap.
    Tightening Torque: 2.9 - 9.8 N·m

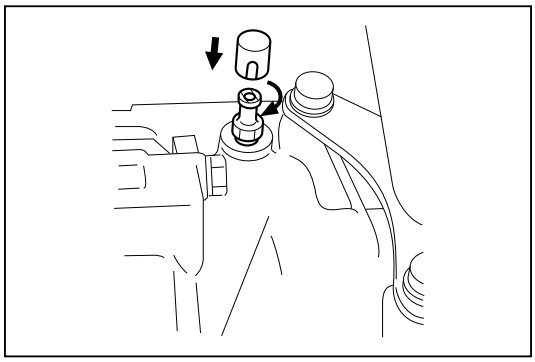

JAT00122-00120

34. Coat a new O-ring with the ATF and install it to the transmission oil filler tube subassembly.
    NOTE:
    - Be very careful not to twist or damage of the O-ring during installation.

35. Insert the transmission oil filler tube subassembly to the transmission case and tighten it with the bolt.
    Tightening Torque: 6.9 - 9.8 N·m

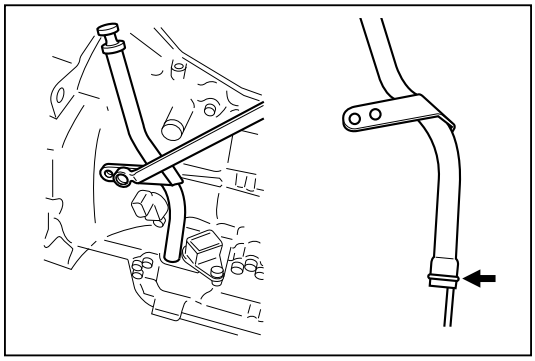

JAT00123-00121

36. Install the transmission case assembly to the vehicle.
    NOTE:
    - Be sure to follow instructions in the AT section of the Chassis Section of each model.

JAT00125-00000

SST (Special Service Tools)

Shape	Part No.	Part name
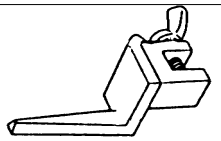	09302-87201-000	Gauge, neutral start switch adjust
	09301-87702-000	Tool, clutch guide
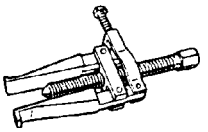	09308-10010-000	Puller, oil seal
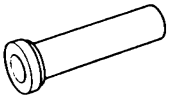	09310-87301-000	Replacer, counter shaft front bearing
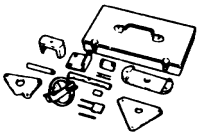	09350-87202-000	Tool set, automatic transmission
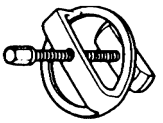	09351-87201-000	Compressor, piston spring No. 1
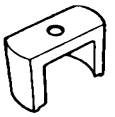	09351-87202-000	Compressor, piston spring No. 2
	09351-87203-000	Attachment, dial gauge
	09351-87204-000	Compressor, spring
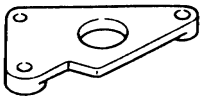	09351-87205-000	Holder, reduction drive gear holding
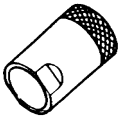	09351-87206-000	Driver, oil pump
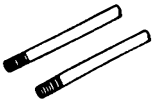	09351-87207-000	Guide, oil pump

*It should be noted that 09350-87202 contains SSTs other than those posted in this section.

Shape	Part No.	Part name
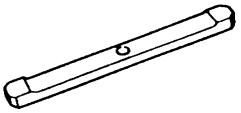	09351-87208-000	Measure, direct & forward clutch
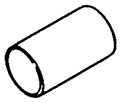	09351-87209-000	Stopper, drive gear
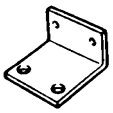	09351-87210-000	Base, dial gauge stand
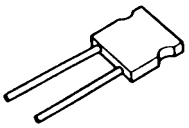	09351-87211-000	Tool, manual value setting
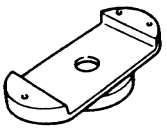	09351-87212-000	Holder, direct clutch
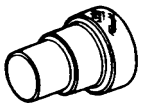	09351-87213-000	Gauge, centering side gear
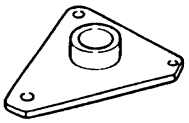	09351-87214-000	Holder, ball bearing
	09611-87506-000	Handle
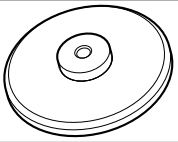	09351-97201-000	Replacer, hole snap ring
	09518-87709-000	Replacer, oil seal No. 8
	09636-20010-000	Replacer, upper ball joint dust cover
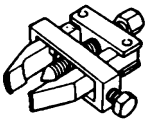	09820-00021-000	Puller, alternator rear bearing
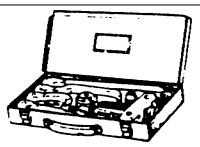	09950-20017-000	Puller, universal

*It should be noted that 09350-87202 contains SSTs other than those posted in this section.

Shape	Part No.	Part name
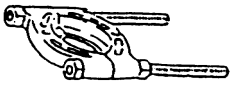	09950-87701-000	Bearing remover
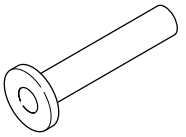	09309-87301-000	Replacer, output shaft bearing
	09517-87203-000	Replacer, oil seal No. 1
	09517-87205-000	Replacer, oil seal No. 2
	09215-00101-000	Remover & replacer, camshaft bearing
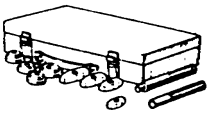	09608-30012-000	Tool set, front hub & drive pinion bearing

JAT00126-00123

TIGHTENING TORQUE

Tightening components	Tightening torque	
	N·m	kgf-m
Transfer × Side cover [4WD]	29.4 - 44.1	3.0 - 4.5
Side cover × Transmission case [4WD]	14.7 - 21.6	1.5 - 2.2
Oil guide plate × Side cover [4WD]	6.9 - 9.8	0.7 - 1.0
Extension × Transmission case [2WD]	14.7 - 21.6	1.5 - 2.2
Control cable bracket × Transmission case [A4Q-D1, A4R-D1 (4WD)]	14.7 - 21.6	1.5 - 2.2
Engine mount bracket × Extension [A4R-D1 (2WD)]	29.4 - 44.1	3.0 - 4.5
Speedometer sleeve lock plate × Transmission case [A4R-D1 (2WD)]	6.9 - 9.8	0.7 - 1.0
Stator shaft & oil pump × Transmission case	6.9 - 9.8	0.7 - 1.0
Oil pan × Transmission case	6.9 - 9.8	0.7 - 1.0
Drain plug × Oil pan	19.6 - 29.6	2.0 - 3.0
Valve body × Transmission case	6.9 - 9.8	0.7 - 1.0
Manual detent spring × Transmission case	6.9 - 9.8	0.7 - 1.0
Parking lock cam support × Transmission case	14.7 - 17.6	1.5 - 1.8
Neutral start switch × Transmission case	14.7 - 21.6	1.5 - 2.2
Transmission control shaft lever × NSS	9.8 - 15.7	1.0 - 1.6
Neutral start switch bracket × Transmission case	6.9 - 9.8	0.7 - 1.0
Transmission revolution sensor × Transmission case	6.9 - 9.8	0.7 - 1.0
Transmission solenoid connector × Transmission case	6.9 - 9.8	0.7 - 1.0
Oil filler tube × Transmission case	6.9 - 9.8	0.7 - 1.0
Breather plug union × Transmission case	2.9 - 9.8	0.3 - 1.0

JAT00127-00000