QUARTER PANEL WHEEL OPENING MOULDING LH

COMPONENTS

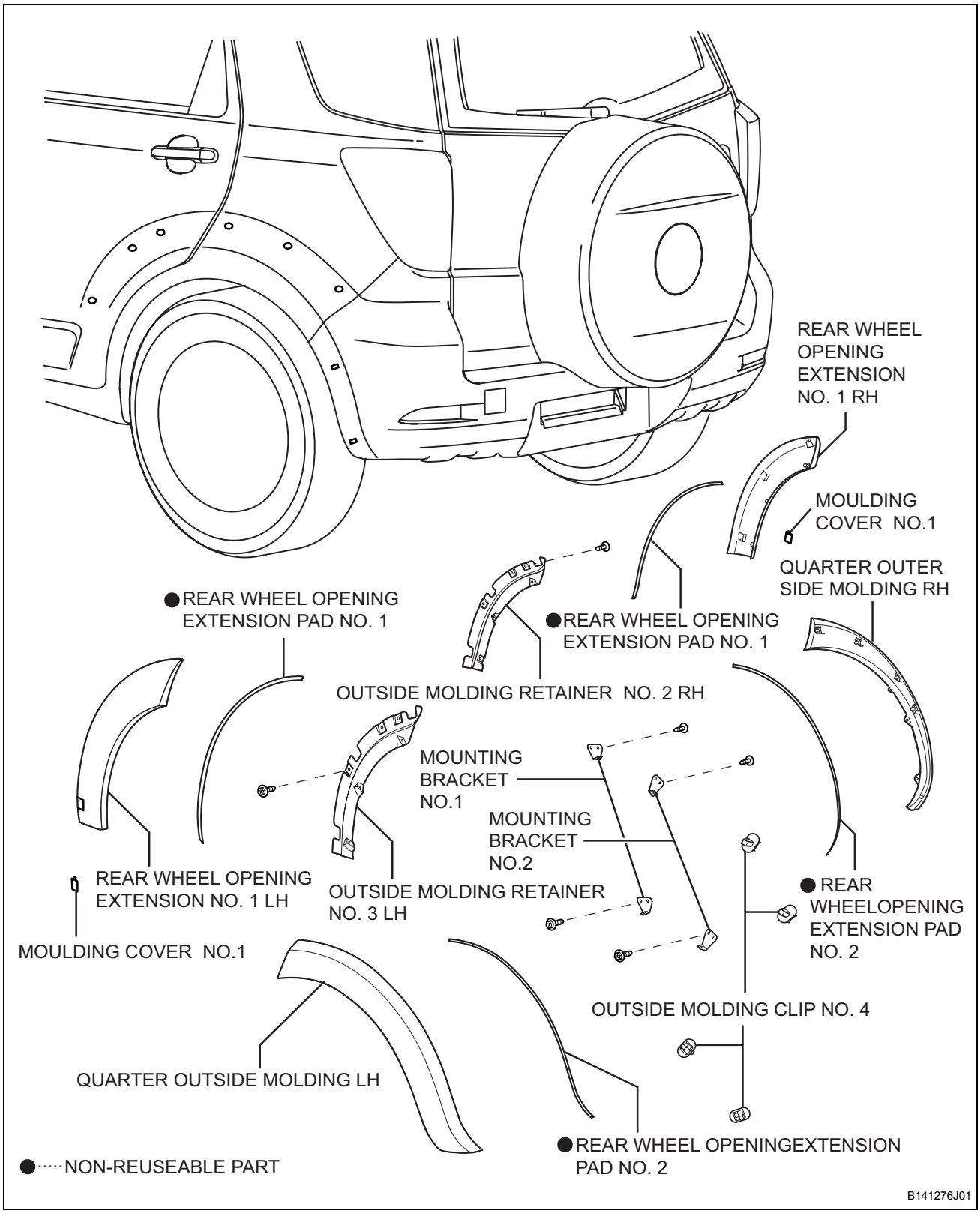

ET

REMOVAL

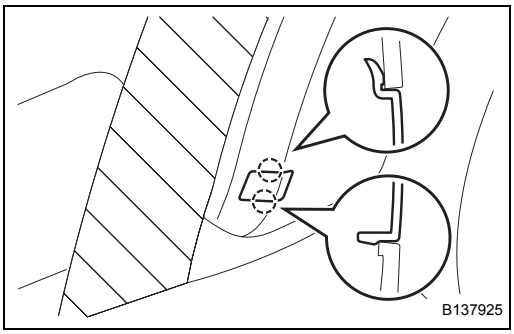

1. REMOVE MOLDING COVER NO. 1

(a) Disengage the 2 claws and remove the moulding cover No. 1.

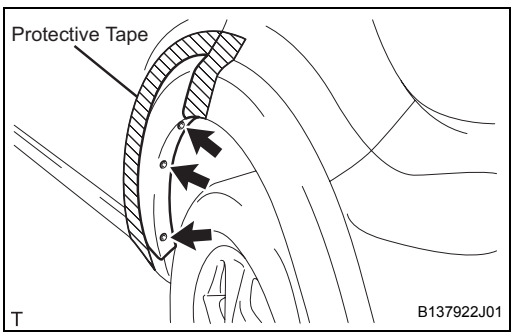

2. REMOVE REAR WHEEL OPENING EXTENSION NO. 1 LH

(a) Apply protective tape as shown in the illustration.

(b) Remove the rivet.

(1) Wrap tape around the drill bit leaving approximately 5 mm from the tip of the drill bit, as shown in the illustration.
HINT:
The purpose of wrapping the tape around the drill bit is to prevent the drill from drilling too deep.

(2) Apply and hold the drill to the rivet. Drill the rivet flange area and remove the rivet.

(c) Heat the rear wheel opening extension No. 1 using a heat gun.

(d) Remove the screw, disengage the cllips, and remove the rear wheel opening extension No. 1 LH.

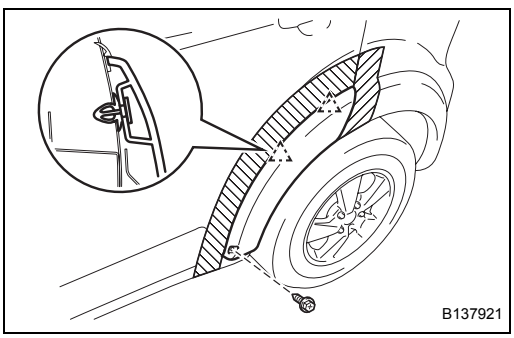

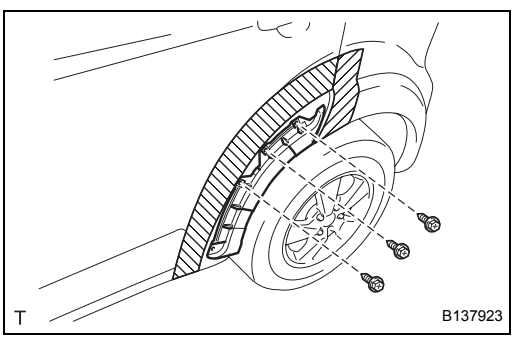

3. REMOVE OUTSIDE MOULDING RETAINER NO. 3 LH

(a) Remove the 3 screws and the outside moulding retainer No. 3 LH.

4. REMOVE REAR WHEEL OPENING EXTENSION PAD NO. 1

(a) Remove the rear wheel opening extension No. 1 from the rear wheel opening extension No. 1 LH.

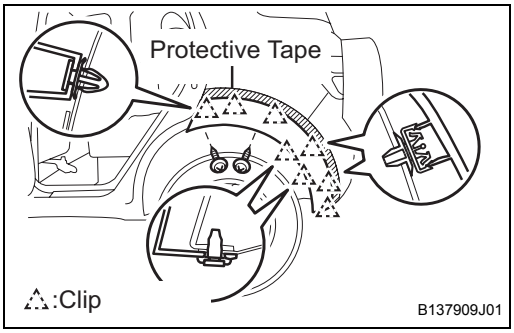

5. REMOVE QUARTER OUTSIDE MOULDING LH

(a) Apply protective tape as shown in the illustration.
(b) Remove the 2 screws and the 3 clips.
(c) Heat the quarter outside moulding RH using a heat gun.
(d) Disengage the 5 clips and remove the quarter outside moulding RH.

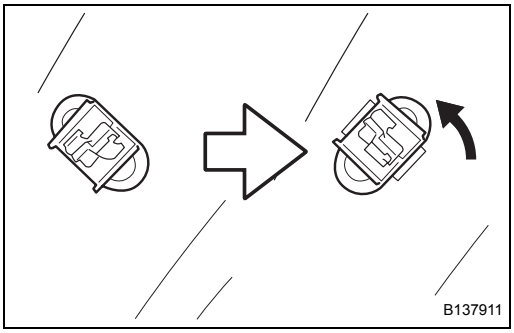

6. REMOVE OUTSIDE MOULDING CLIP NO. 4

(a) If the outside moulding clip No. 4 remains on the vehicle side, turn it to about 90° and remove it, as shown in the illustration.

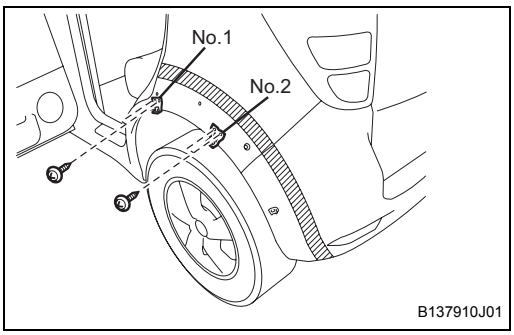

7. REMOVE MOUNTING BRACKET NO.1

(a) Remove the 2 screws and mounting bracket No. 1.

8. REMOVE MOUNTING BRACKET NO. 2

(a) Remove the 2 screws and mounting bracket No. 2.

9. REMOVE REAR WHEEL OPENING EXTENSION PAD NO. 2

(a) Remove the rear wheel opening extension pad No. 2 from the quarter outside moulding.

INSTALLATION

1. CLEAN INSTALLATION SURFACE

(a) Heat the double sided tape on the body using a heat gun. Then wipe off the tape using a rag or piece of cloth.
(b) Clean the surface with a solvent.

2. CLEAN QUARTER OUTSIDE MOULDING AND REAR WHEEL OPENING EXTENSION (WHEN REUSING)

(a) CLEAN DOUBLE SIDED TAPE INSTALLATION SURFACE
  (1) Heat the double sided tape that remains on the quarter outside moulding and the rear wheel opening extension using a heat gun.
  (2) While heating the tape with the heat gun, use a rag or piece of cloth to wipe off the double sided tape remaining on the quarter outside moulding and the rear wheel opening extension.

  NOTICE:

  - **Remove as much of the double sided tape as possible. Any tape that remains may cause attachment failure when the quarter outside moulding and the rear wheel opening extension are installed.**

- **Use a waste cloth to scrub off, because it may cause damage and attachment failure if using a driver.**

(3) Clean the surface with a solvent.

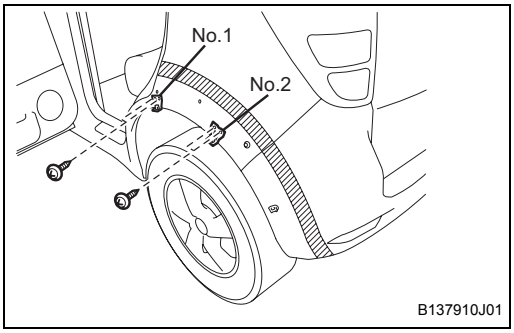

3. INSTALL MOUNTING BRACKET NO.1

(a) Install the 2 screws and mounting bracket No. 1.

NOTICE:

Do not confuse mounting bracket No. 1 with mounting bracket No. 2. The parts look alike.

4. INSTALL MOUNTING BRACKET NO. 2

(a) Install the 2 screws and mounting bracket No. 2.

NOTICE:

Do not confuse mounting bracket No. 2 with mounting bracket No. 1. The parts look alike.

5. INSTALL OUTSIDE MOULDING CLIP NO. 4

(a) Install the outside moulding clip No. 4 to the quarter outside moulding LH.

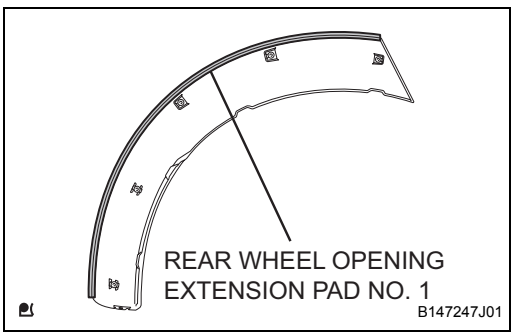

6. INSTALL REAR WHEEL OPENING EXTENSION PAD NO. 1

(a) Install the front wheel opening extension pad No. 2 to the front fender moulding LH using double sided tape.

7. INSTALL QUARTER OUTSIDE MOULDING LH

(a) Using a heat gun, heat both the quarter outside moulding LH and the surface of the body.

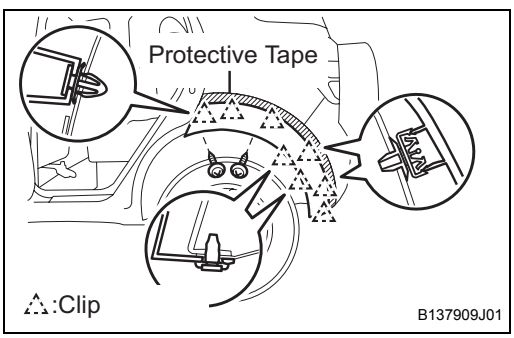

(b) Attach the 5 claws and install the quarter outside moulding LH.

(c) Connect the 2 screws and the 3 clips and attach it thoroughly.

NOTICE:

Be careful not to touch the adhesive surface with your fingers when removing the exfoliate paper from the double sided tape.

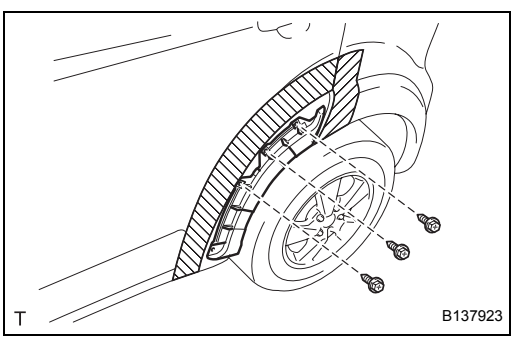

8. INSTALL OUTSIDE MOULDING RETAINER NO. 3 LH

(a) Install the outside moulding retainer No. 3 LH with the 3 screws.

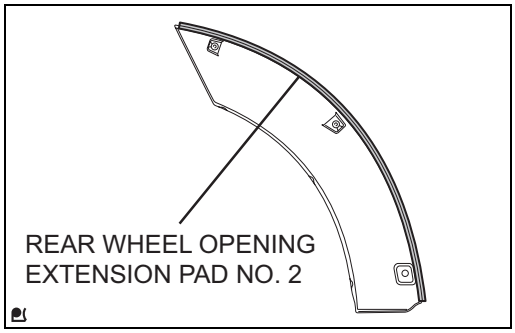

9. INSTALL REAR WHEEL OPENING EXTENSION PAD NO. 2

(a) Install the rear wheel opening extension pad No. 2 to the rear wheel opening extension No. 1 LH with double-sided tape.

10. INSTALL REAR WHEEL OPENING EXTENSION NO. 1

(a) Using a heat gun, heat both the rear wheel opening extension No. 1 LH and the surface of the body.

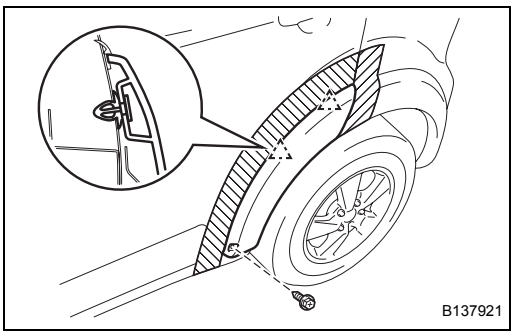

(b) Connect the 2 claws and the screw, and firmly press the extension to the vehicle body.

NOTICE:

Be careful not to touch the adhesive surface with your fingers when removing the exfoliate paper from the double sided tape.

(c) Install the rivet.

(1) Put nose piece No. 2 on the riveter.

(2) Using the riveter, install a new rivet. Operate the riveter while holding it perpendicular to the rivet hole.

ET

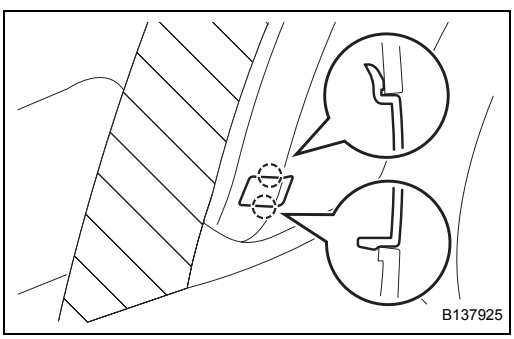

11. INSTALL MOULDING COVER NO.1

(a) Engage the 2 claws and install the moulding cover No. 1.