HEADLIGHT ASSEMBLY LH

COMPONENTS

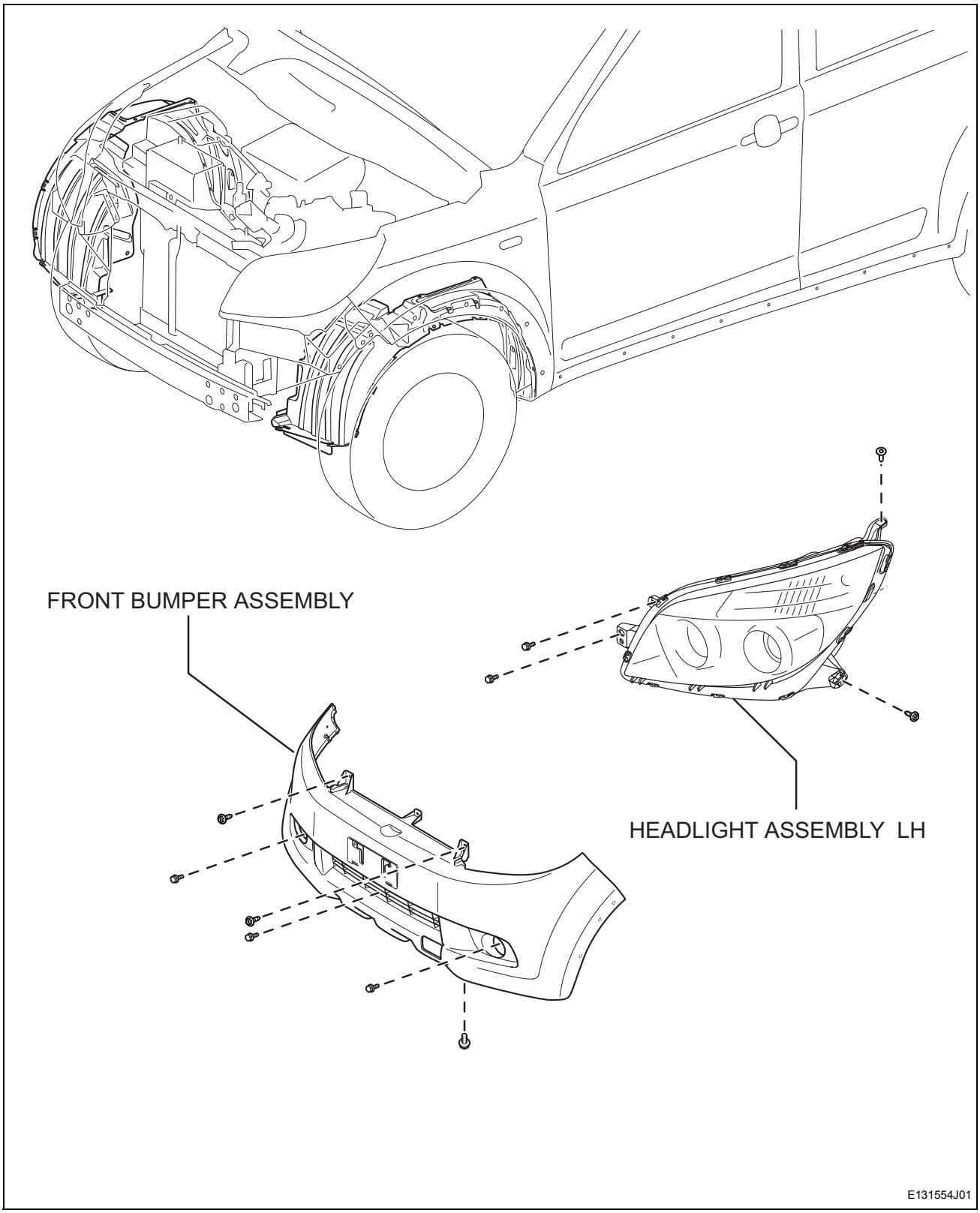

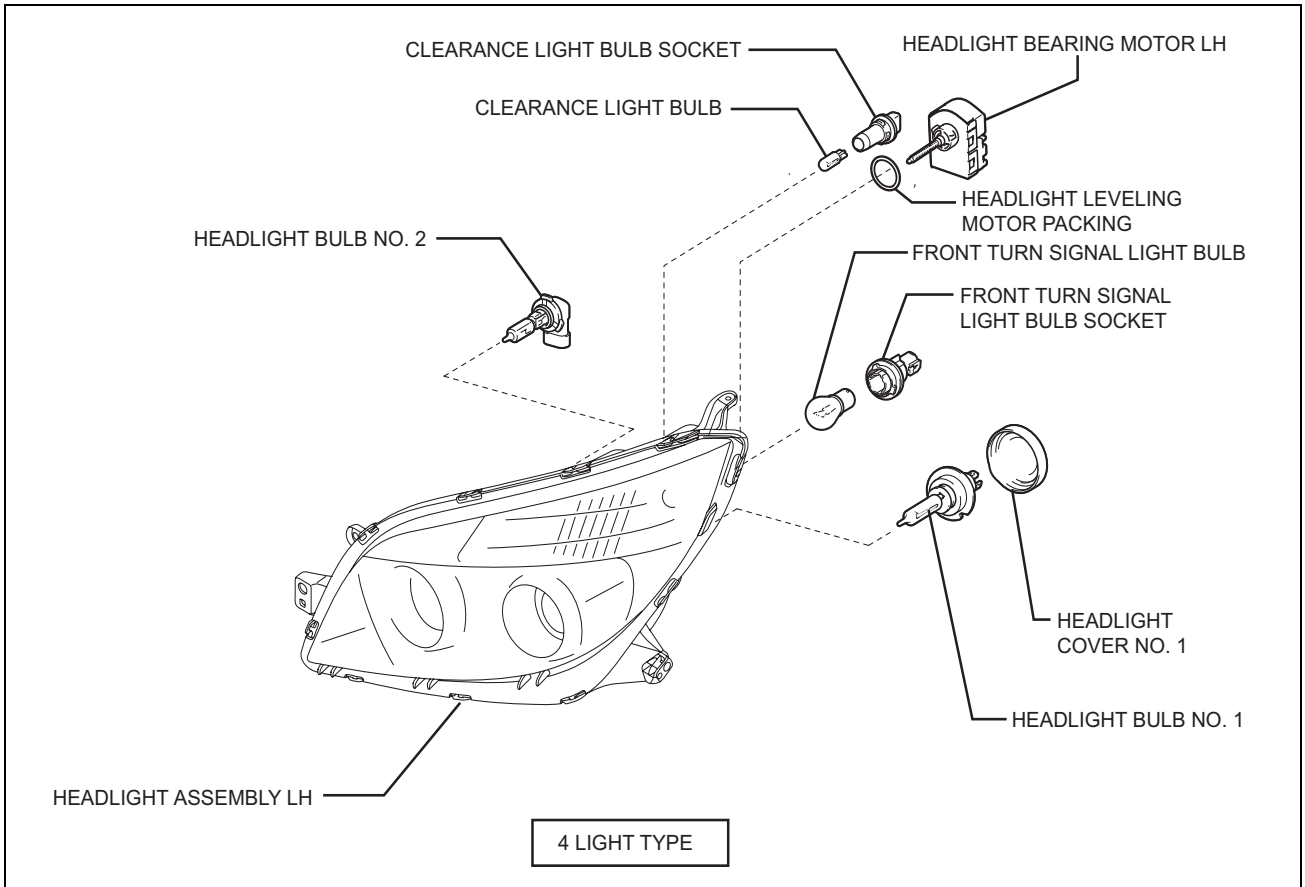

4 LIGHT TYPE

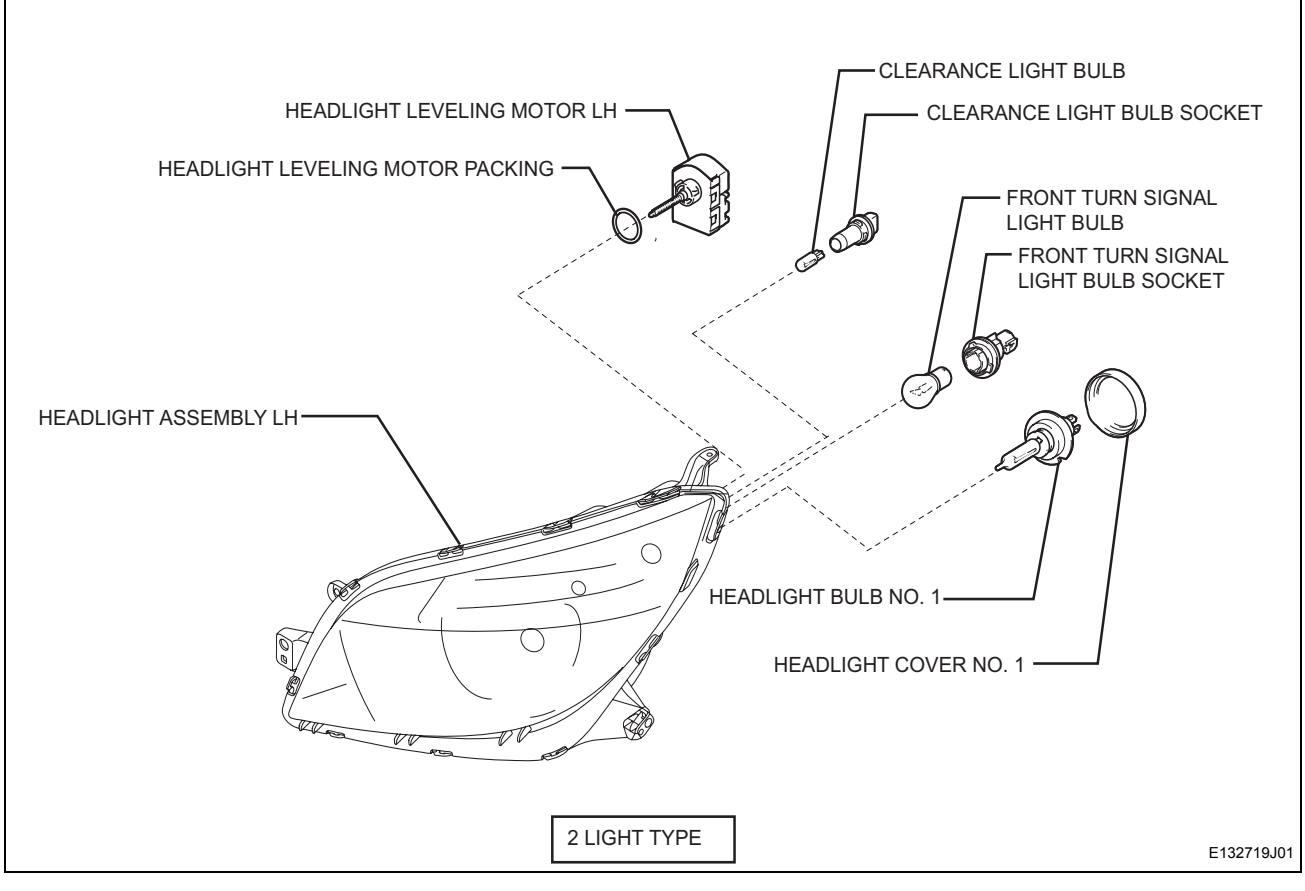

2 LIGHT TYPE

E132719J01

LI

LI

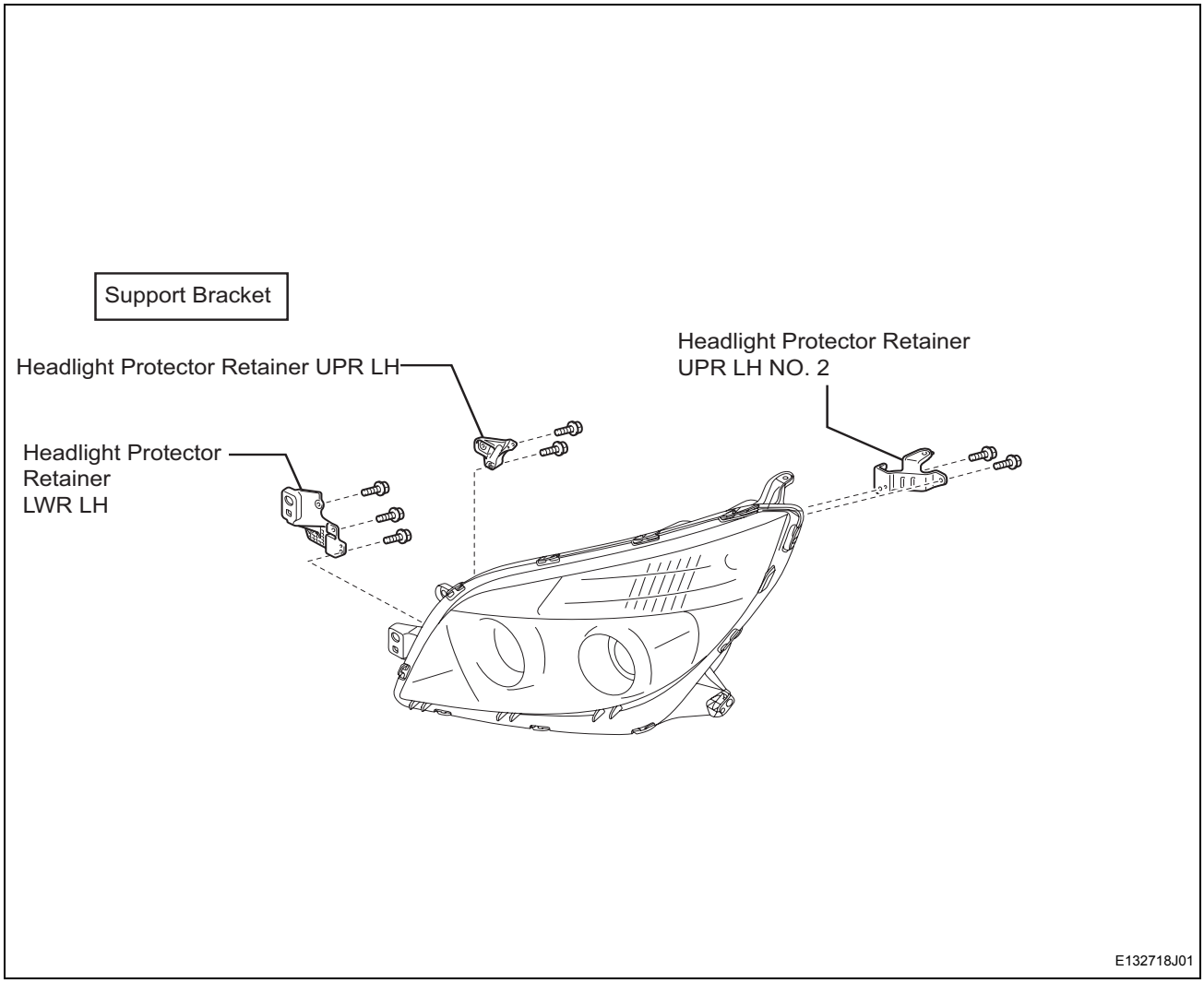

REMOVAL

1. **DISCONNECT BATTERY NEGATIVE TERMINAL**
2. **REMOVE FRONT BUMPER ASSEMBLY (See Page ET-2)**
3. **REMOVE HEADLIGHT ASSEMBLY LH**
   (a) Remove the 2 bolts, screw and clip.
   (b) Remove the pins of the headlight bracket. Then remove the headlight assembly LH.

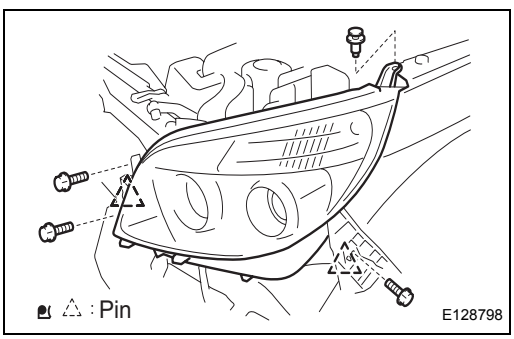

DISASSEMBLY

1. REMOVE NO. 2 HEADLIGHT BULB

(a) Turn in the direction of the arrow shown in the illustration and remove headlight bulb No. 2.

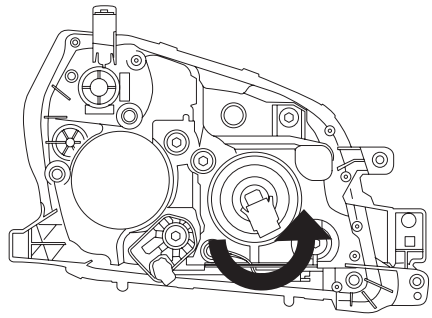

E132270J01

2. REMOVE HEADLIGHT BULB NO. 1 (4-LIGHT HEADLIGHT SYSTEMS)

(a) Remove the socket cover.

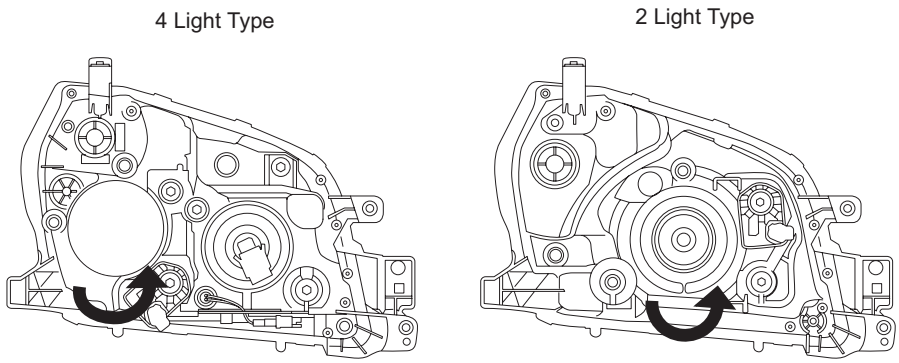

E132183J01

(b) Remove the set spring.

(c) Remove headlight bulb No. 1.

NOTICE:

Do not touch the glass part of the bulb.

3. REMOVE FRONT TURN SIGNAL LIGHT BULB

(a) Rotate the front turn signal light socket in the direction shown in the illustration, and remove the front turn signal light bulb together with the front turn signal light socket.

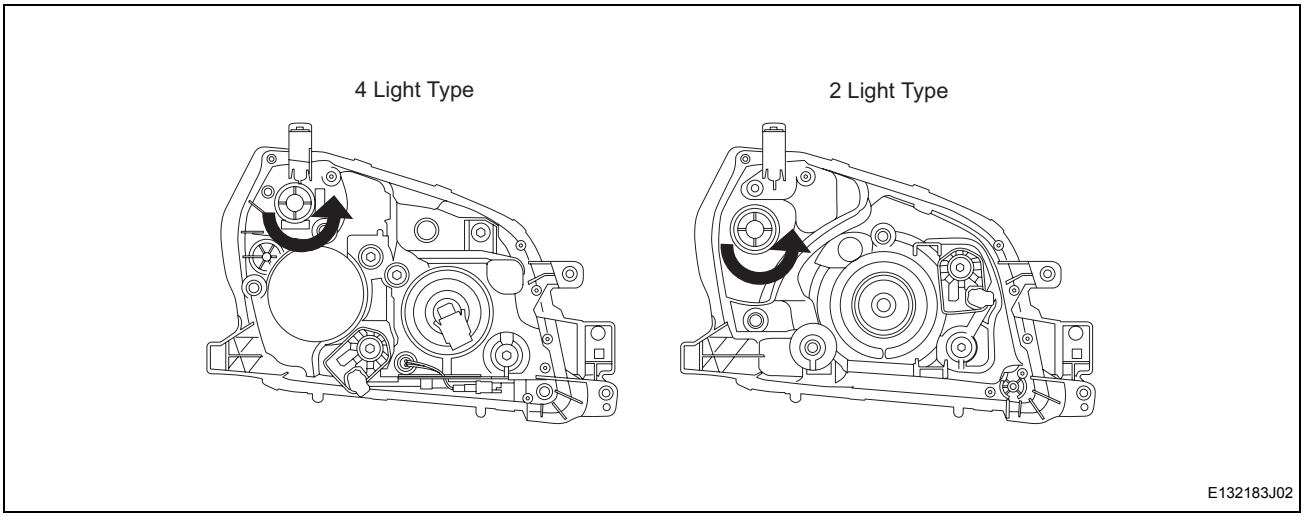

(b) Remove the front turn signal light bulb from the front turn signal light socket.

4. REMOVE CLEARANCE LIGHT BULB

(a) Turn the clearance light socket in the direction shown in the illustration, and remove the clearance light bulb together with the and clearance socket.

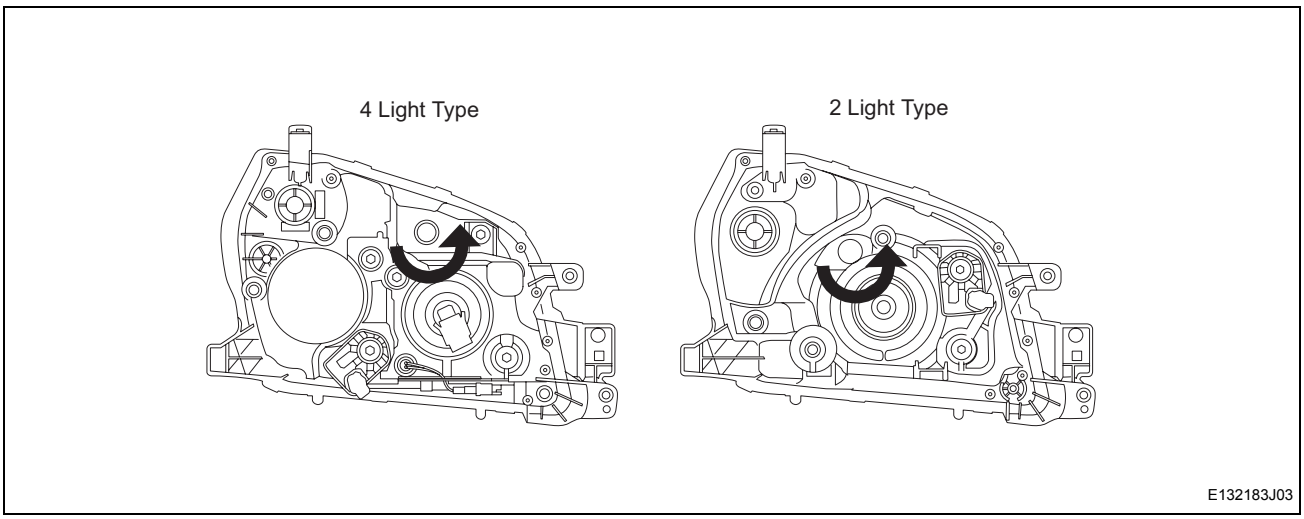

(b) Remove the clearance light bulb from the clearance light socket.

REASSEMBLY

1. INSTALL CLEARANCE LIGHT BULB

(a) Install the clearance light bulb in the clearance light socket.

(b) Install the clearance light bulb together with the clearance light socket.

2. **INSTALL FRONT TURN SIGNAL LIGHT BULB**
   (a) Install the front turn signal light bulb in the front turn signal light socket.
   (b) Install the front turn signal light bulb together with the front turn signal light socket.

3. **INSTALL HEADLIGHT BULB NO. 1**
   (a) Install headlight bulb No. 1.
   (b) Lock the set spring.
   (c) Install the socket cover.

4. **INSTALL HEADLIGHT BULB NO. 2 (4-LIGHT HEADLIGHT SYSTEMS)**
   (a) Install the headlight bulb No. 2.
   (b) Lock the set spring.
   (c) Install the socket cover.

INSTALLATION

1. **INSTALL HEADLIGHT ASSEMBLY LH**

2. **INSTALL FRONT BUMPER ASSEMBLY**

3. **CONNECT BATTERY NEGATIVE TERMINAL**

4. **PREPARATION FOR HEADLIGHT ADJUSTMENT(See Page LI-29)**

5. **ADJUSTMENT OF HEADLIGHT AIM (See Page LI-31)**

6. **PREPARATION FOR ADJUSTMENT OF FOG LIGHT BEAM AIM (See Page LI-34)**

7. **ADJUSTMENT OF FOG LIGHT AIM (See Page LI-34)**

8. **PERFORM INTIALIZATION**
   (See page SS-10 for details.)

ADJUSTMENT

1. **PREPARATION FOR HEADLIGHT ADJUSTMENT**
   (a) Adjust the tire air inflation pressure to the specified value.
   (b) Seat a person in the driver's seat.
   (c) Replenish oils to the specified levels. Fill up the tank with fuel.
   (d) Mount the tools, jack and spare tire at the specified positions.
   (e) Rock the vehicle in the up-and-down direction, as well as in the right-and-left direction to settle the suspension.
   (f) Set the engine speed to 1500 r/min or more. (If the engine speed is too low, the light terminal voltage drops, making it difficult to recognize the cut-off line.)
   HINT:
   Cut-off line: Boundary line between the bright zone and the dark zone in the low beam.
   (g) If the vehicle is equipped with a headlight leveling switch, adjust the leveling switch to zero.

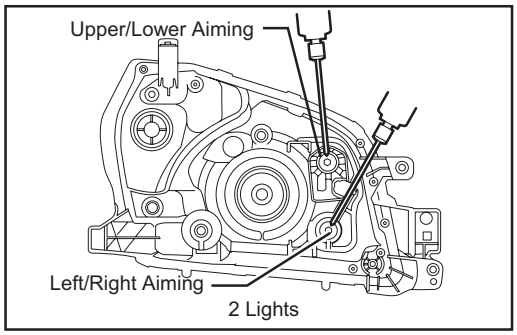

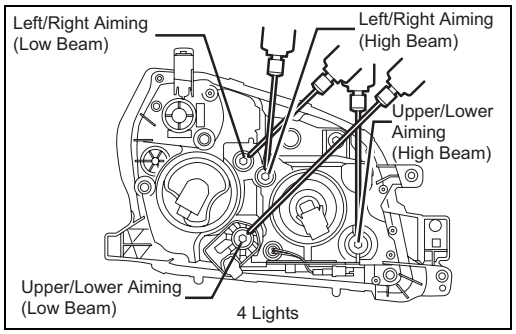

2. PHOTOMETRIC AXIS ADJUSTMENT

(a) Adjust the photometric axis of the low beam according to the instruction manual of the headlamp screen to be used.

3. ADJUSTMENT OF HEADLIGHT AIM (WHEN USING LOW BEAM SCREEN)

(a) Prepare a screen for the adjustment as indicated in the figure.

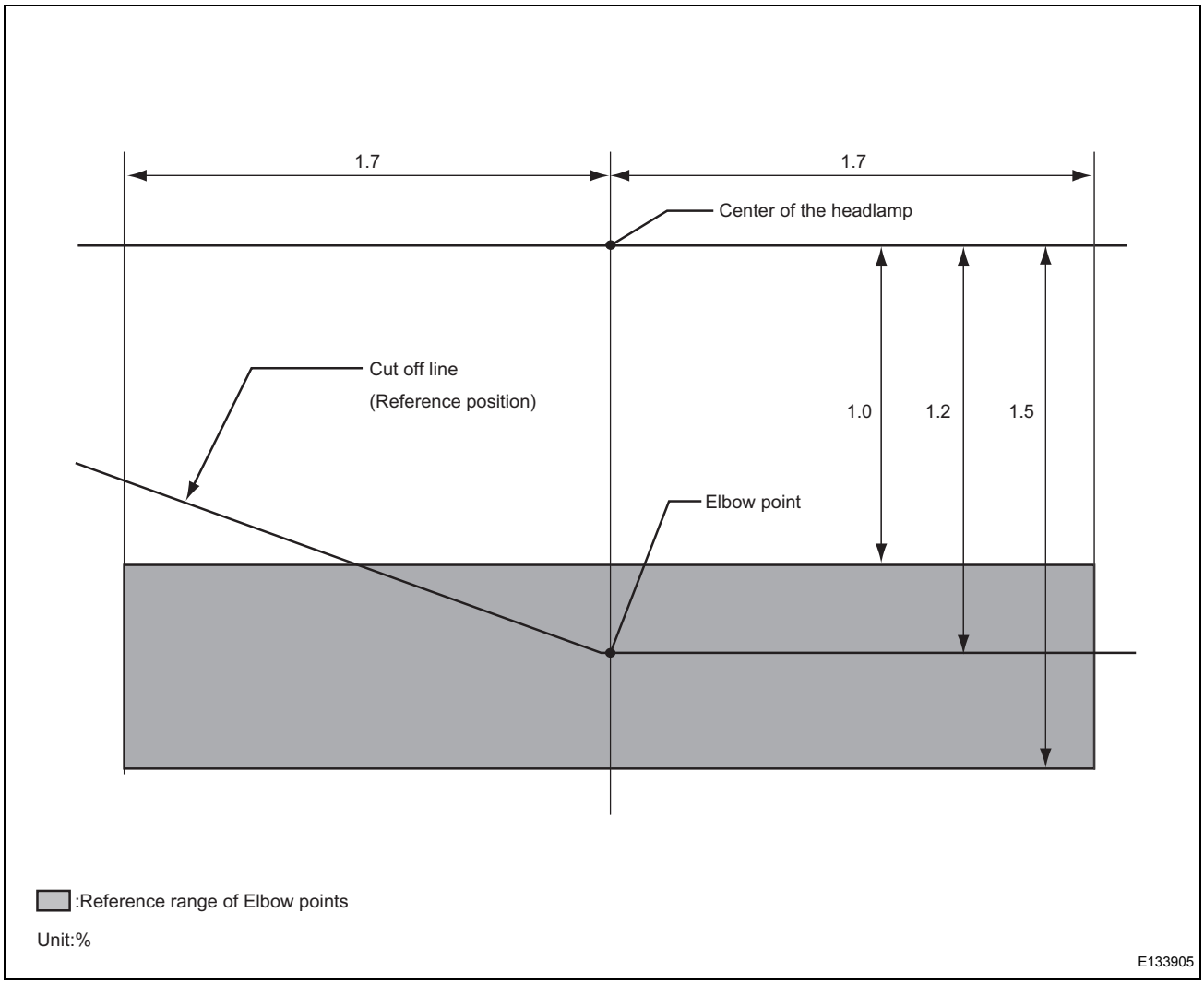

HINT:
The illustration is for RH vehicles. For LH vehicles, the illustration is symmetrically reverse in relation to the vertical center line.

(b) Place the screen at a distance of three meters ahead of the light. Align point F with the center of the light.
HINT:
This normal placing can be carried out easily when a screen is affixed to the lens of the headlamp tester (for high beam use).

(c) Turn on the low beams of the headlights. Perform the adjustment in such a way that the elbow point comes into the shadow section on the screen.
NOTICE:
Perform the adjustment by turning the aiming screw in the tightening direction. (When performing the adjustment in the loosening direction, first loosen the screw then turn it in the tightening direction.)
HINT:
Reference position of elbow point

Vertical position	Within the range between 1.0% and 1.5% below the horizontal line that passes through the center of the light (Reference position: 1.2% below)
Horizontal position	Within 1.7% left or right of the vertical line that passes through the center of the light (Reference position: on the vertical line that passes through the center of the light)

CORRECTION

1. INSTALL HEADLIGHT PROTECTOR RETAINER UPPER LH

HINT:

If the headlight unit LH is the only installed part that is damaged, you can use the repair bracket as shown in the illustration below as an inexpensive workaround. However, this is limited to cases in which the headlight assembly LH itself is not damaged.

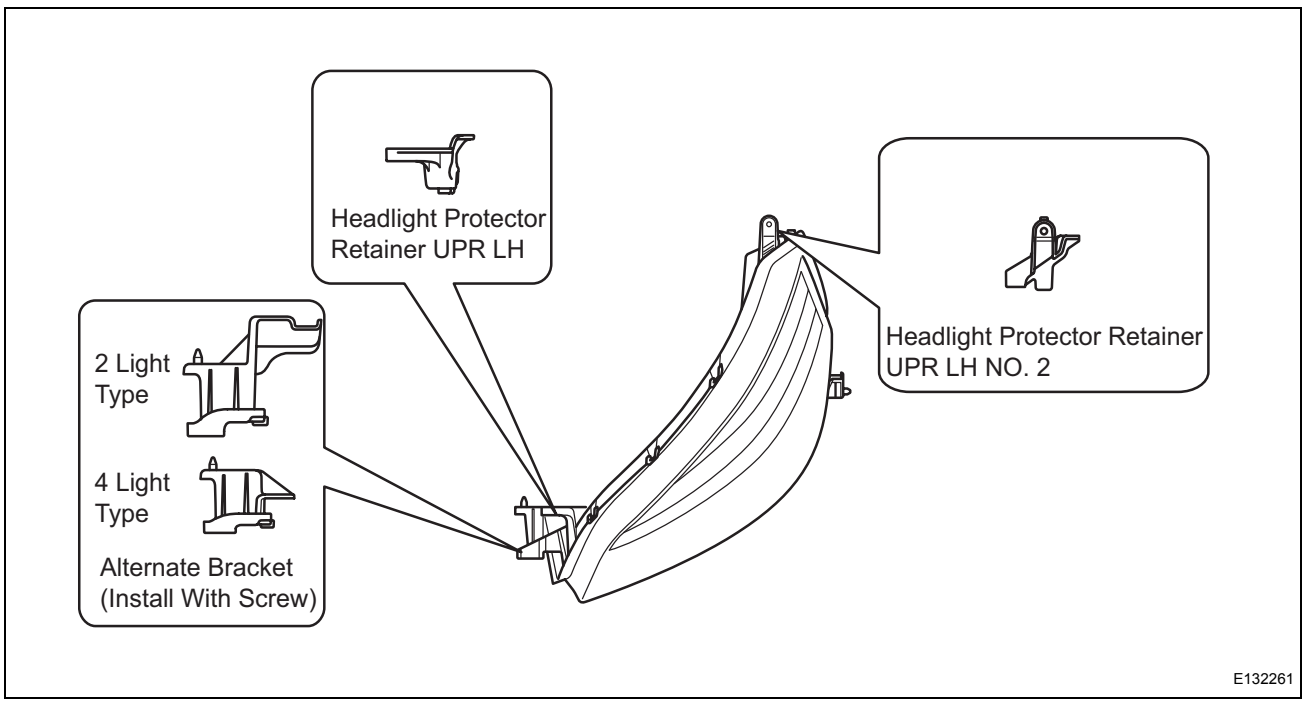

(a) After disconnecting the damaged part, reshape it using sandpaper.

NOTICE:

After shaving down the damaged spots in an approximate way, fit the headlight protector retainer into the boss part. Then shave down the parts that still do not fit in order to shape the retainer so that it can be installed.

(b) Install the headlight protector retainer upper LH with the 2 screws.

HINT:

Install the other retainers using the same method.

2. INSTALL HEADLIGHT PROTECTOR RETAINER UPPER LH N0. 2

3. INSTALL HEADLIGHT PROTECTOR RETAINER LOWER LH