LIGHTING SYSTEM

PRECAUTIONS

1. PRECAUTIONS WHEN REPLACING HEADLIGHT BULBS

(a) Because halogen lights become extremely hot when in use, the life of the bulb may be reduced in the event that the surface of the bulb comes in contact with oil or another similar substance. When replacing the bulb, hold the flange part and do not touch the glass with your bare hands.

(b) Halogen bulbs have pressurized gas inside and can be damaged or shattered if dropped, bumped or scratched.

(c) Because dirt and moisture can enter the lens of a bulb that is removed and left out for a long period of time, have a new bulb on hand before performing bulb replacement.

(d) When replacing a bulb, always use a bulb of the same specification.

(e) When replacing one-sided bulbs, keep in mind that there is a difference in the brightness and luminescent color of left and right bulbs.

(f) If bulbs are not properly installed in their sockets, water and mist may get inside the lens. Therefore, after replacing bulbs, make sure that they have been securely installed.

(g) Flying glass shards can cause injury. Therefore, do not break bulbs when disposing of them after use.

2. PRECAUTIONS WHEN ADJUSTING HEADLIGHT BEAMS

(a) Do not cover a headlight for more than 3 minutes when the headlights are ON.

(b) Because the outer lens of the headlight is made of resin, there is a possibility that the outer lens may melt if it is covered for too long while the adjustments are made.

OPERATION CHECK

1. BEFORE YOU TROUBLESHOOT

(a) Basic inspection

(1) Using a tester, measure the voltage of the battery.

Standard:

10 to 14 V (during engine stop)

(b) Visually check for broken light bulbs, broken fuses, disconnected wire harnesses, short circuits and connectors with bad connections.

2. CHECK HEADLIGHT MANUAL LEVELING FUNCTION (VEHICLES WITH HALOGEN HEADLIGHTS)

(a) With the ignition switch ON, turn the headlight dimmer switch assembly to the OFF → HEAD position. When the headlight leveling switch is re-enabled, check that the reflector is activated and that the headlight beam changes.

3. CHECK ILLUMINATED ENTRY SYSTEM ACTIVATION

HINT:

The applicable lights are shown below.

- MAP LIGHT ASSEMBLY (VEHICLES WITH A MAP LIGHT)
- ROOM LIGHT ASSEMBLY NO. 1 (VEHICLES WITHOUT A MAP LIGHT)

- ROOM LIGHT ASSEMBLY NO. 2

(a) Perform the following operations to check that the lights come on under the appropriate conditions.

(1) With the ignition switch (IG) OFF, close all the doors and lock the driver side door.

(2) With the doors unlocked, check that each light comes on when any of the doors is opened, and check that the lights go out 15 seconds after the doors are closed.

(3) With the ignition switch (IG) ON, check that when any of the doors is opened and then closed, each light goes out immediately.

(4) Starting with the ignition switch (IG) OFF, check that the lights go out immediately when any of the doors is opened and the ignition switch (IG) is turned on within 15 seconds (i.e., before the time at which the lights are supposed to go out automatically).

(5) With the ignition switch (IG) OFF, and with the doors open and each light illuminated, check that the lights go out immediately when the driver side door is locked within around 15 seconds (i.e., before the time at which the lights are supposed to go out automatically).

4. INSPECT BATTERY SAVER FUNCTION

(a) With the ignition (IG) OFF, check that each lamp that is illuminated by the illuminated entry control (lights are illuminated when any of the doors is opened) goes out after about 10 minutes.

HINT:

With the ignition switch (IG) ON, or, with the doors closed, the battery saver system is cancelled.

BASIC INSPECTION

1. CHECK OPERATION

(a) Check the operation of the lights.

(1) Visually check the operation of the vehicle's exterior lights.

- HEADLIGHTS (HI-LO MODES)
- CLEARANCE LIGHTS
- TAILLIGHTS
- STOP LIGHTS
- BACK-UP LIGHTS
- LICENSE PLATE LIGHTS
- TURN SIGNAL LIGHTS
- HAZARD LIGHTS
- FOG LIGHTS

Standard:

Illumination is normal.

2. CONDITION OF INSTALLATION

(a) Check the installation of the lights.

(1) Wiggle the lights with your hand to check that they are properly installed.

Standard:

The lights are not loose.

(2) Check that there is no damage, such as discoloration or cracks, to the reflectors or lenses of the lights. In addition, check for dirt and water penetration on the inside of the lamp.

Standard:

There is no damage, such as discoloration or cracks.

There is no dirt or water penetration.

LOCATION

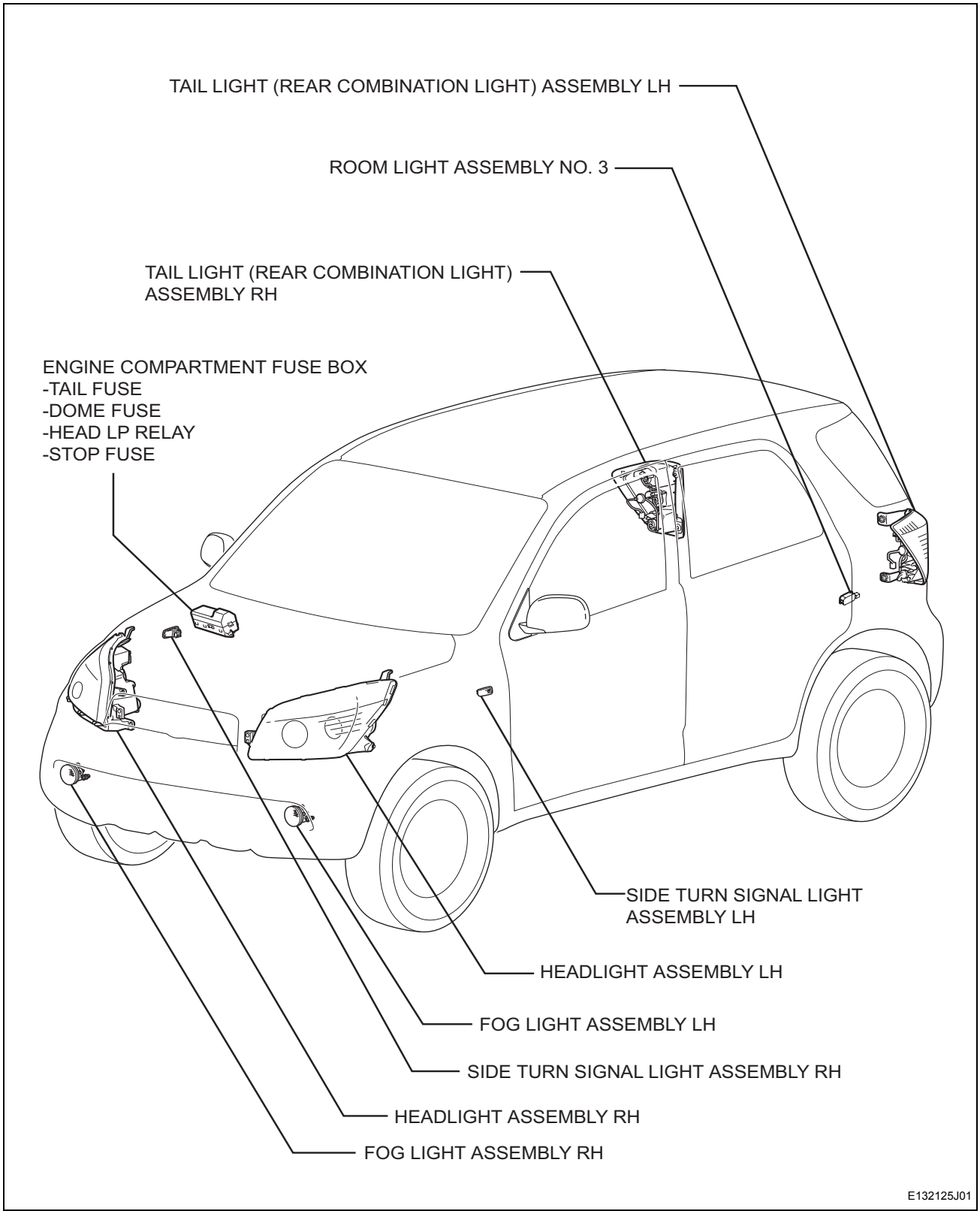
TAIL LIGHT (REAR COMBINATION LIGHT) ASSEMBLY LH
ROOM LIGHT ASSEMBLY NO. 3
TAIL LIGHT (REAR COMBINATION LIGHT) ASSEMBLY RH
ENGINE COMPARTMENT FUSE BOX
-TAIL FUSE
-DOME FUSE
-HEAD LP RELAY
-STOP FUSE
SIDE TURN SIGNAL LIGHT ASSEMBLY LH
HEADLIGHT ASSEMBLY LH
FOG LIGHT ASSEMBLY LH
SIDE TURN SIGNAL LIGHT ASSEMBLY RH
HEADLIGHT ASSEMBLY RH
FOG LIGHT ASSEMBLY RH
E132125J01

LI

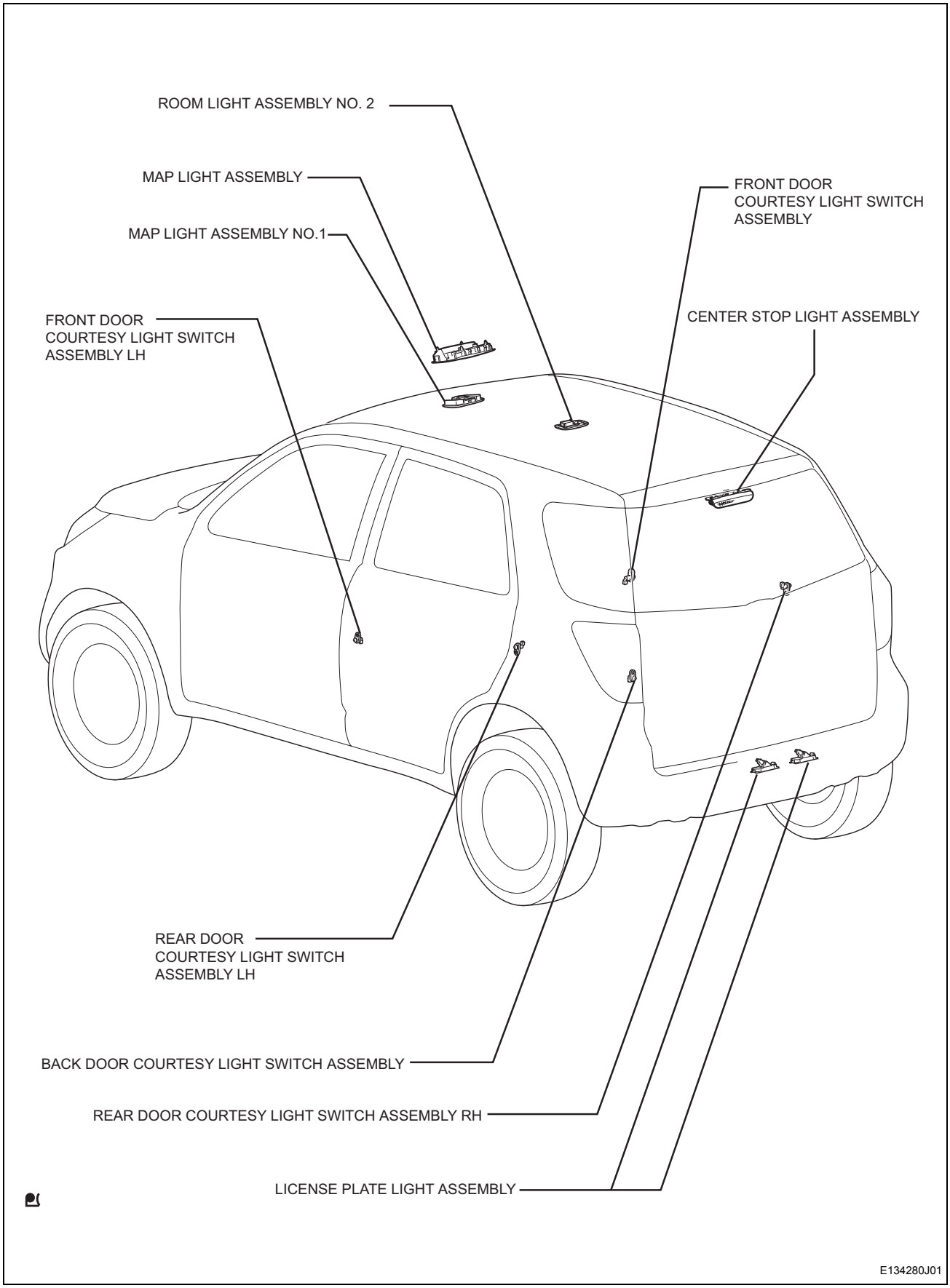
ROOM LIGHT ASSEMBLY NO. 2
MAP LIGHT ASSEMBLY
MAP LIGHT ASSEMBLY NO.1
FRONT DOOR COURTESY LIGHT SWITCH ASSEMBLY LH
FRONT DOOR COURTESY LIGHT SWITCH ASSEMBLY
CENTER STOP LIGHT ASSEMBLY
REAR DOOR COURTESY LIGHT SWITCH ASSEMBLY LH
BACK DOOR COURTESY LIGHT SWITCH ASSEMBLY
REAR DOOR COURTESY LIGHT SWITCH ASSEMBLY RH
LICENSE PLATE LIGHT ASSEMBLY
E134280J01

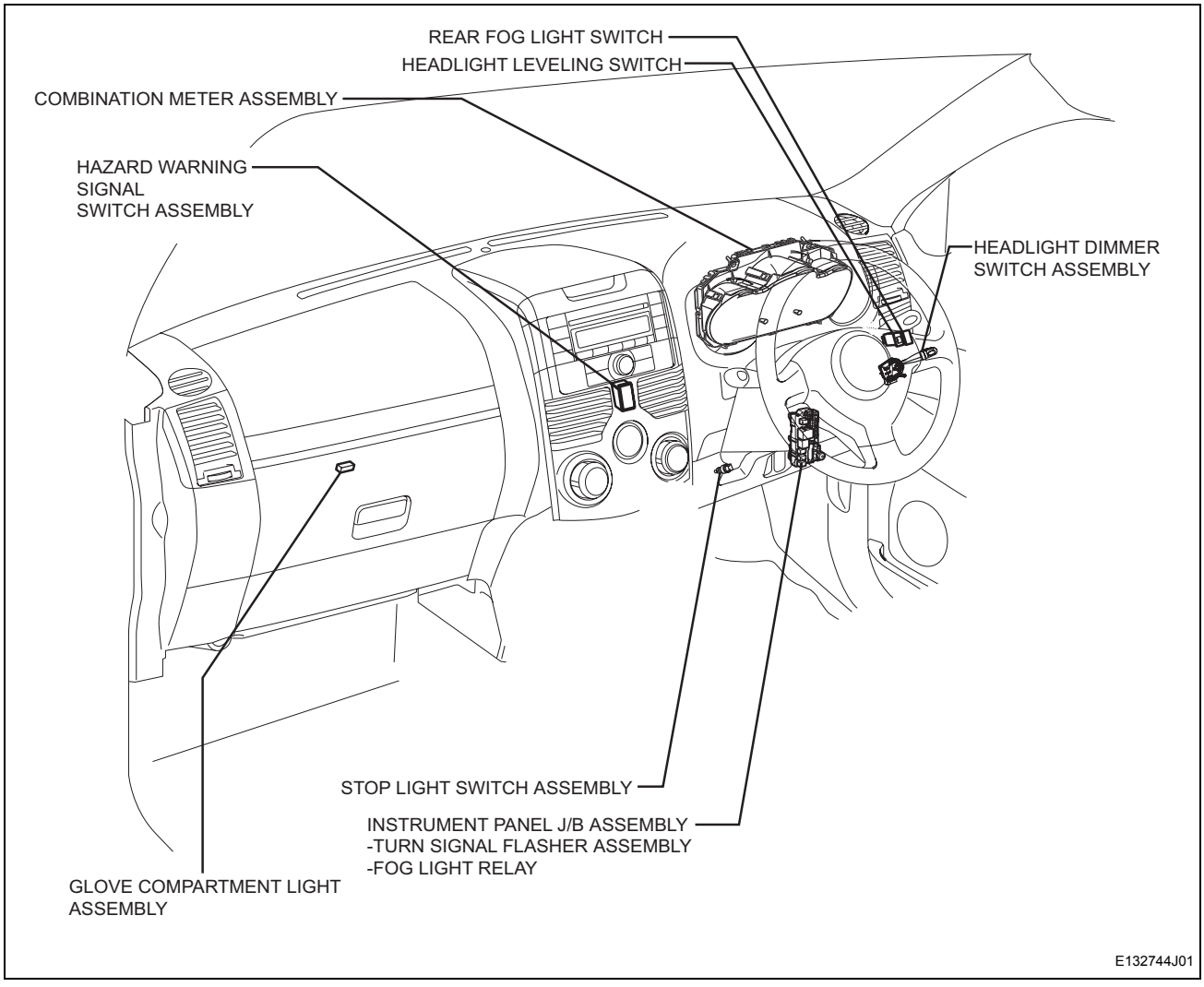

LI

PROBLEM SYMPTOMS TABLE

HEADLIGHTS

Symptom	Suspected Area	See Page
None of the headlights come on (but the taillights operate properly)	H-LP RH fuse, H-LP LH fuse	-
	Headlight bulbs	-
	Wire harness	-
None of the headlights come on (the taillights do not come on either)	Headlight dimmer switch assembly	LI-50
	Wire harness	-
The headlights on one side of the vehicle does not come on	H-LP RH fuse, H-LP LH fuse	-
	H-LP main fuse	-
	Headlight bulbs	-
	Wire harness	-
The clearance lights do not come on	Clearance light bulbs	-
	Headlight dimmer switch assembly	LI-50
	TAIL fuse	-
	Wire harness	-

Symptom	Suspected Area	See Page
The low beams do not come on	Headlight bulbs	-
	Headlight dimmer switch assembly	LI-50
	Wire harness	-
The high beams do not come on	Headlight bulbs	-
	Headlight dimmer switch assembly	LI-50
	Wire harness	-
Passing does not function	Headlight dimmer switch assembly	LI-50
	Wire harness	-
Headlight aim cannot be adjusted	Headlight leveling switch	LI-53
	Wire harness	-

TAILLIGHTS

Symptom	Suspected Area	See Page
None of the taillights come on (but the headlights operate properly)	TAIL fuse	-
	The inoperative taillight bulbs	-
	Wire harness	-
None of the taillights come on (the headlights do not come on either)	Headlight dimmer switch assembly	LI-50
	The inoperative taillight bulbs	-
	Wire harness	-
The taillights on one side of the vehicle do not come on	The inoperative taillight bulbs	-
	Wire harness	-

FRONT FOG LIGHTS

Symptom	Suspected Area	See Page
Even when the light control switch is set to TAIL or HEAD, the front fog lights still do not come on (but the headlights operate properly)	The inoperative front fog light bulb	-
	TAIL fuse	-
	FR FOG fuse	-
	Fog light relay	-
	Headlight dimmer switch assembly	LI-50
	Wire harness	-
The front fog light on one side of the vehicle does not come on	The inoperative front fog light bulb	-
	Wire harness	-

REAR FOG LIGHTS

Symptom	Suspected Area	See Page
Even when the fog light switch is set to ON, the rear fog lights still do not come on (but the front fog lights operate properly)	Rear fog light bulbs	-
	Rear fog light switch	LI-61
	Wire harness	-

BACK-UP LIGHTS

Symptom	Suspected Area	See Page
Neither of the back-up lights come on	The inoperative back-up light bulb	-
	NEUTRAL SWITCH ASSEMBLY (AUTOMATIC TRANSMISSION VEHICLES)	-
	Back-up light switch (vehicles with manual transmission)	-
	Wire harness	-
The back-up light on one side of the vehicle does not come on	The inoperative back-up light bulb	-
	Wire harness	-

STOP LIGHTS

Symptom	Suspected Area	See Page
None of the stop lights come on	STOP fuse	-
	STOP LIGHT SWITCH ASSEMBLY	LI-54
	Wire harness	-
Some of the stop lights do not come on	Rear combination light assembly	-
	Wire harness	-

CENTER STOP LIGHT

Symptom	Suspected Area	See Page
The center stop light does not come on (but the other stop lights operate properly)	CENTER STOP LIGHT ASSEMBLY	-
	Wire harness	-

TURN SIGNAL LIGHTS

Symptom	Suspected Area	See Page
None of the turn signal lights comes on	Turn signal flasher assembly	LI-58
	Headlight dimmer switch assembly	LI-50
	Wire harness	-
Turn signal lamps on one side of the vehicle do not come on	The inoperative turn signal light bulbs	-
	Wire harness	-

HAZARD WARNING SIGNAL LIGHTS

Symptom	Suspected Area	See Page
The hazard lights do not function (but the turn signal lights operate properly)	Hazard warning switch assembly	LI-52
	Door control relay assembly	LI-16
	Turn signal flasher assembly	LI-58
	Wire harness	-

LICENSE PLATE LIGHTS

Symptom	Suspected Area	See Page
The license plate lights do not come on (but the headlights operate properly)	License plate light bulbs	-
	TAIL fuse	-
	Headlight dimmer switch assembly	LI-50
	Wire harness	-

ROOM LAMP ASSY NO.1

Symptom	Suspected Area	See Page
Room light assembly no. 1 does not come on	ROOM LAMP ASSY NO.1	-
	Room light bulb No. 1	-
	Room light switch base	-
	Front door courtesy light switch assembly	-
	Rear door courtesy light switch assembly	-
	Back door courtesy light switch	-
	Door control relay assembly	-
	Wire harness	-

MAP LIGHT ASSEMBLY

Symptom	Suspected Area	See Page
The map light does not come on	MAP LIGHT ASSEMBLY	LI-44
	Room light bulb No. 1	-
	Room light switch base	-
	Front door courtesy light switch assembly	LI-55
	Rear door courtesy light switch assembly	LI-56
	Back door courtesy light switch assembly	LI-57
	Door control relay assembly	LI-16
	Wire harness	-

Room light assembly No. 2

Symptom	Suspected Area	See Page
The room light does not come on (but the illuminated entry system operates properly)	Room light assembly No. 2	LI-46
	Room light bulb No. 2	-
	Room light switch base	-
	Front door courtesy light switch assembly	LI-55
	Rear door courtesy light switch assembly	LI-56
	Back door courtesy light switch assembly	LI-57
	Door control relay assembly	LI-16
	Wire harness	-

Room light assembly No. 3

Symptom	Suspected Area	See Page
The room light does not come on	Room light assembly No. 3	LI-47
	Room light bulb No. 3	-
	Front door courtesy light switch assembly	LI-55
	Rear door courtesy light switch assembly	LI-56
	Back door courtesy light switch assembly	LI-57
	Wire harness	-

ILLUMINATED ENTRY SYSTEM

Symptom	Suspected Area	See Page
The illuminated entry system does not operate (the room light does not come on when a door is opened)	See troubleshooting flowchart (ILLUMINATED ENTRY SYSTEM DOES NOT OPERATE)	LI-18
	Wire harness	-

BATTERY SAVER CONTROL

Symptom	Suspected Area	See Page
Battery saver control does not operate (but the other control systems are normal)	Battery saver control does not operate	LI-2
	Door control relay assembly	LI-16
	Wire harness	-

HOW TO PROCEED WITH TROUBLESHOOTING

1	VEHICLE BROUGHT TO WORKSHOP

2	CONDUCT CUSTOMER PROBLEM ANALYSIS AND CHECK SYMPTOMS

3	PROBLEM SYMPTOMS TABLE

HINT:
See page LI-6.

A → **RELATED TO PROBLEM SYMPTOM (GO TO STEP 5)**

LI

B

NOT RELATED TO PROBLEM SYMPTOM (GO TO STEP 4)

4	BASED ON PROBLEM SYMPTOM, PERFORM TROUBLESHOOTING USING METHOD BELOW

(a) CHECK FUNCTION (See page LI-1.)
(b) ECU terminals (See page LI-16.)
(c) ON-VEHICLE INSPECTION
(d) INSPECTION

5	ADJUST, REPAIR OR REPLACE

6	CONFIRMATION TEST

END

CUSTOMER PROBLEM ANALYSIS CHECK

Lighting Problem Diagnosis Check Sheet

Date Vehicle Brought In
/ /

Customer's Name	License Plate No.		First registration year	
	Model		VIN	
Written By	Inspector's Name	Engine Type	Odometer reading	km
Description of Symptoms				
Date Problem First Occured				
Frequency Problem Occurs	Constant Occasional (_ times per day, _ times per month)			
Conditions (Method of use and results)	Air temperature approx.( ) °C			
Weather	Clear Cloudy Rainy Snowy Others ( )			
Road	City Suburbs Highway Others ( ) Paved Unpaved			
Malfunction Symptoms	Outside light			
	Illumination			
	Switch			

E052038J01

LI

CIRCUIT DIAGRAM

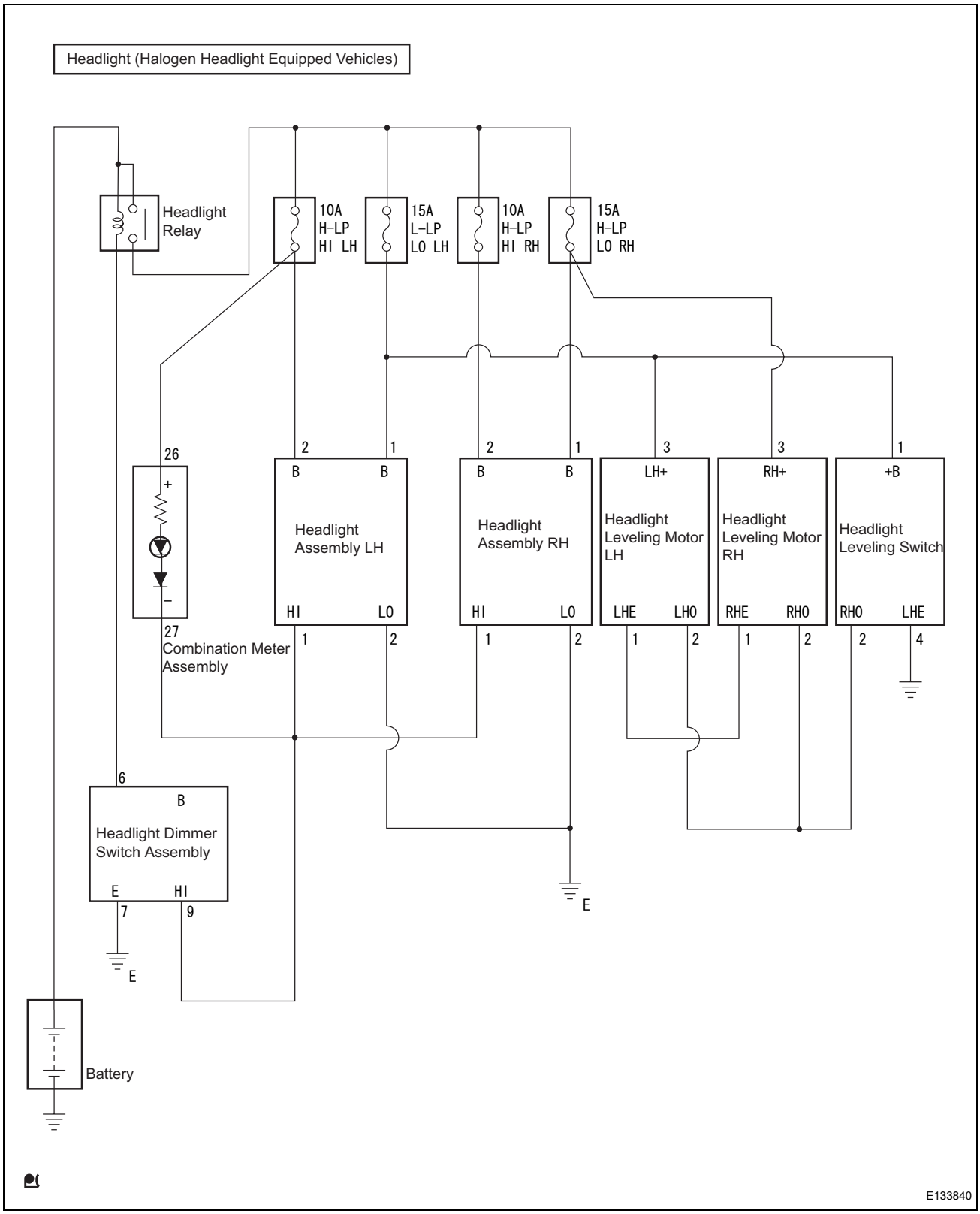

Turn Signal Light

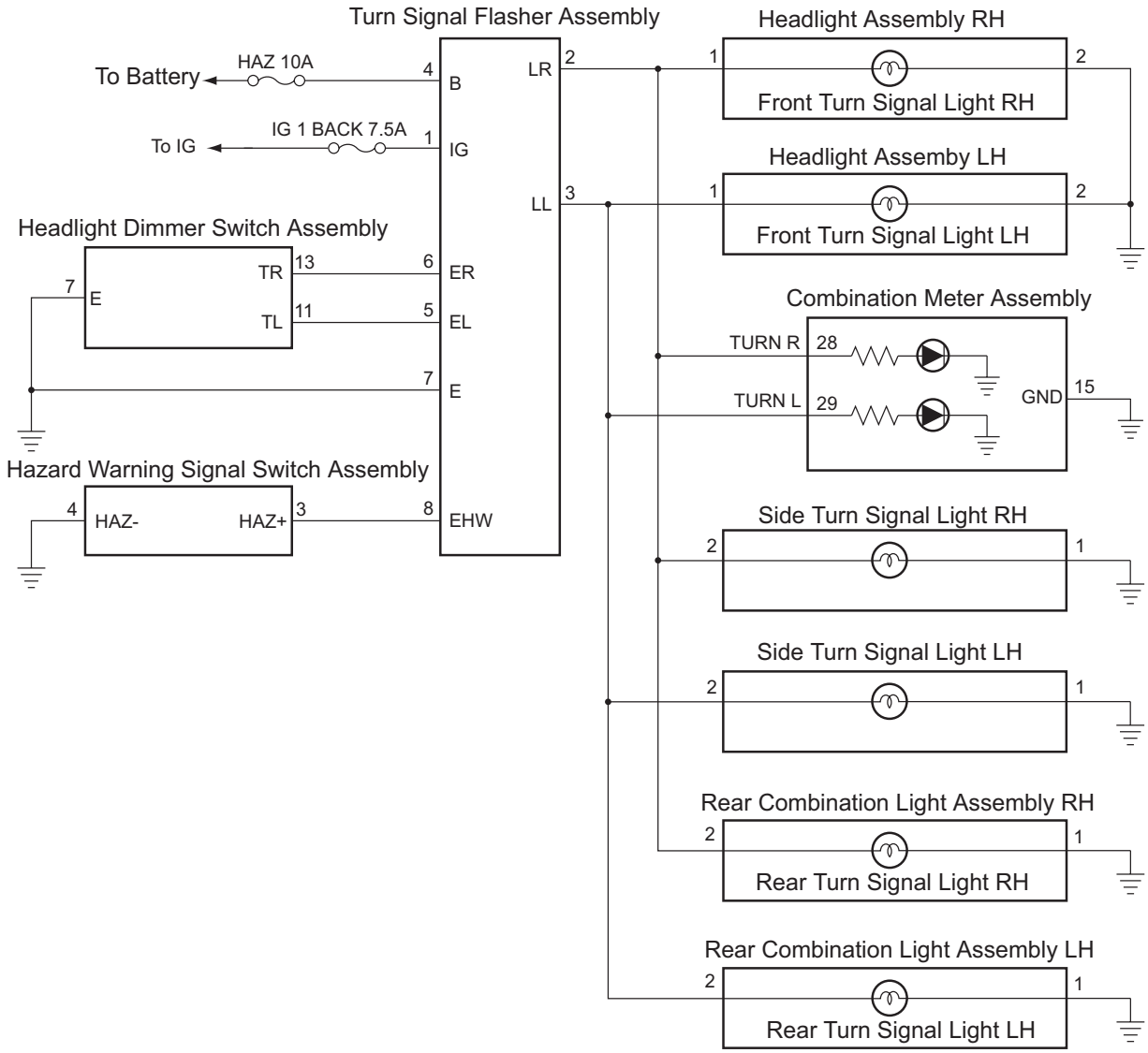

E131478

LI

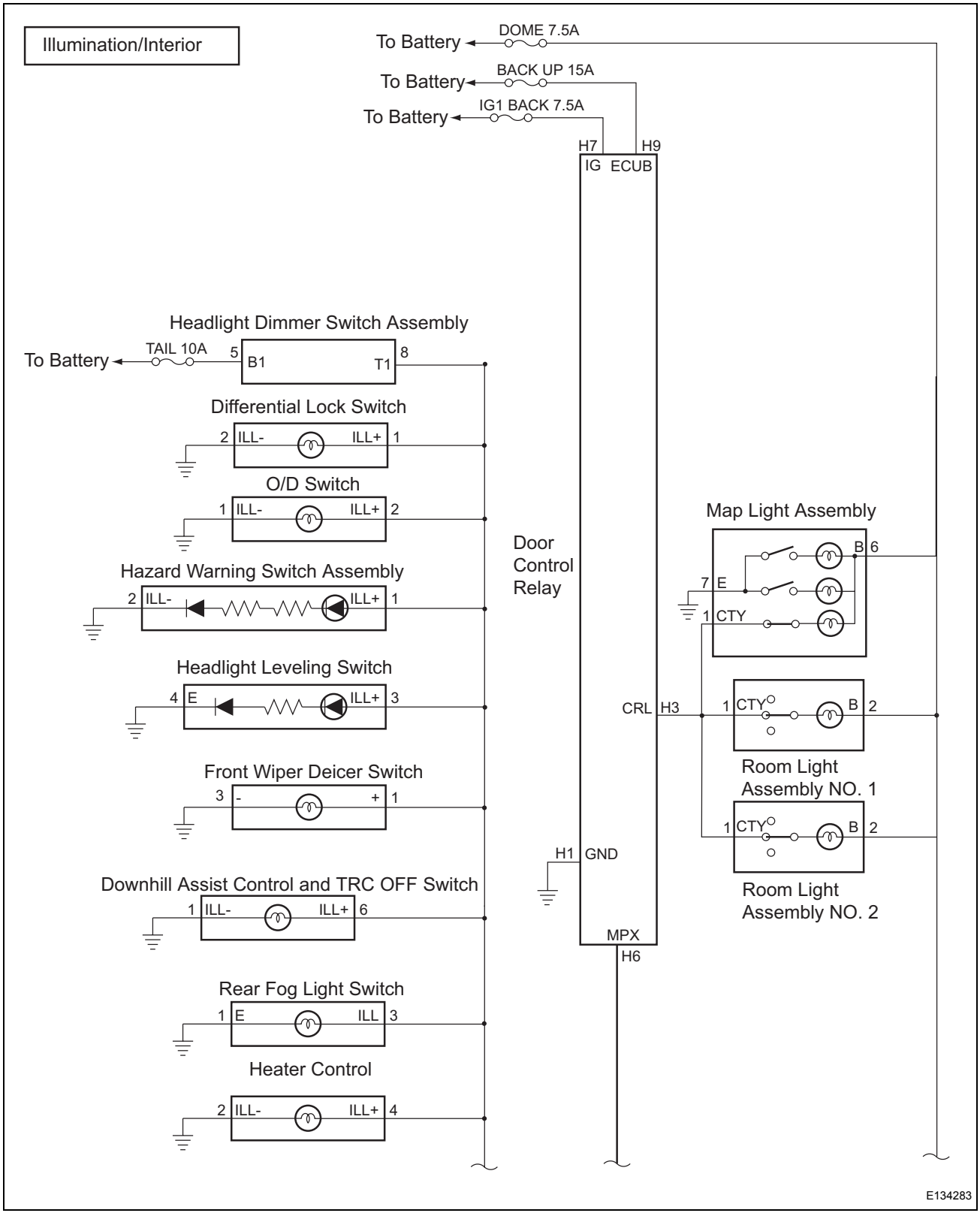
Illumination/Interior
To Battery
DOME 7.5A
To Battery
BACK UP 15A
To Battery
IG1 BACK 7.5A
H7
H9
IG
ECUB
Headlight Dimmer Switch Assembly
To Battery
TAIL 10A
5
B1
T1
8
Differential Lock Switch
2
ILL-
ILL+
1
O/D Switch
1
ILL-
ILL+
2
Hazard Warning Switch Assembly
2
ILL-
ILL+
1
Headlight Leveling Switch
4
E
ILL+
3
Front Wiper Deicer Switch
3
-
+
1
Downhill Assist Control and TRC OFF Switch
1
ILL-
ILL+
6
Rear Fog Light Switch
1
E
ILL
3
Heater Control
2
ILL-
ILL+
4
Door
Control
Relay
CRL
H3
H1
GND
MPX
H6
Map Light Assembly
B
6
7
E
1
CTY
1
CTY
B
2
Room Light
Assembly NO. 1
1
CTY
B
2
Room Light
Assembly NO. 2
E134283

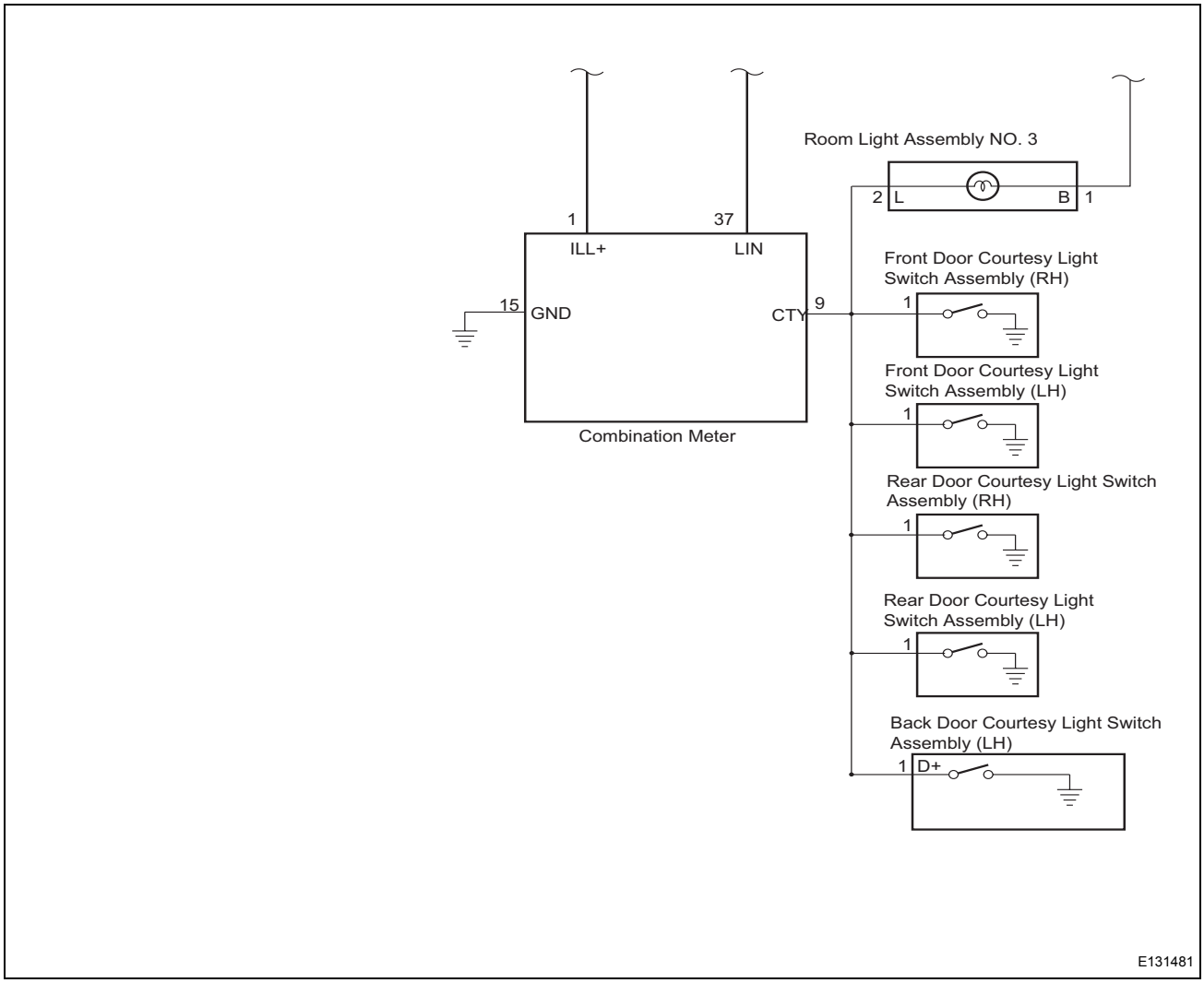
Room Light Assembly NO. 3
2
L
B
1
1
ILL+
37
LIN
15
GND
CTY
9
Combination Meter
Front Door Courtesy Light Switch Assembly (RH)
1
Front Door Courtesy Light Switch Assembly (LH)
1
Rear Door Courtesy Light Switch Assembly (RH)
1
Rear Door Courtesy Light Switch Assembly (LH)
1
Back Door Courtesy Light Switch Assembly (LH)
1
D+
E131481

ECU TERMINALS

1. INSTRUMENT PANEL JUNCTION BLOCK ASSEMBLY RH

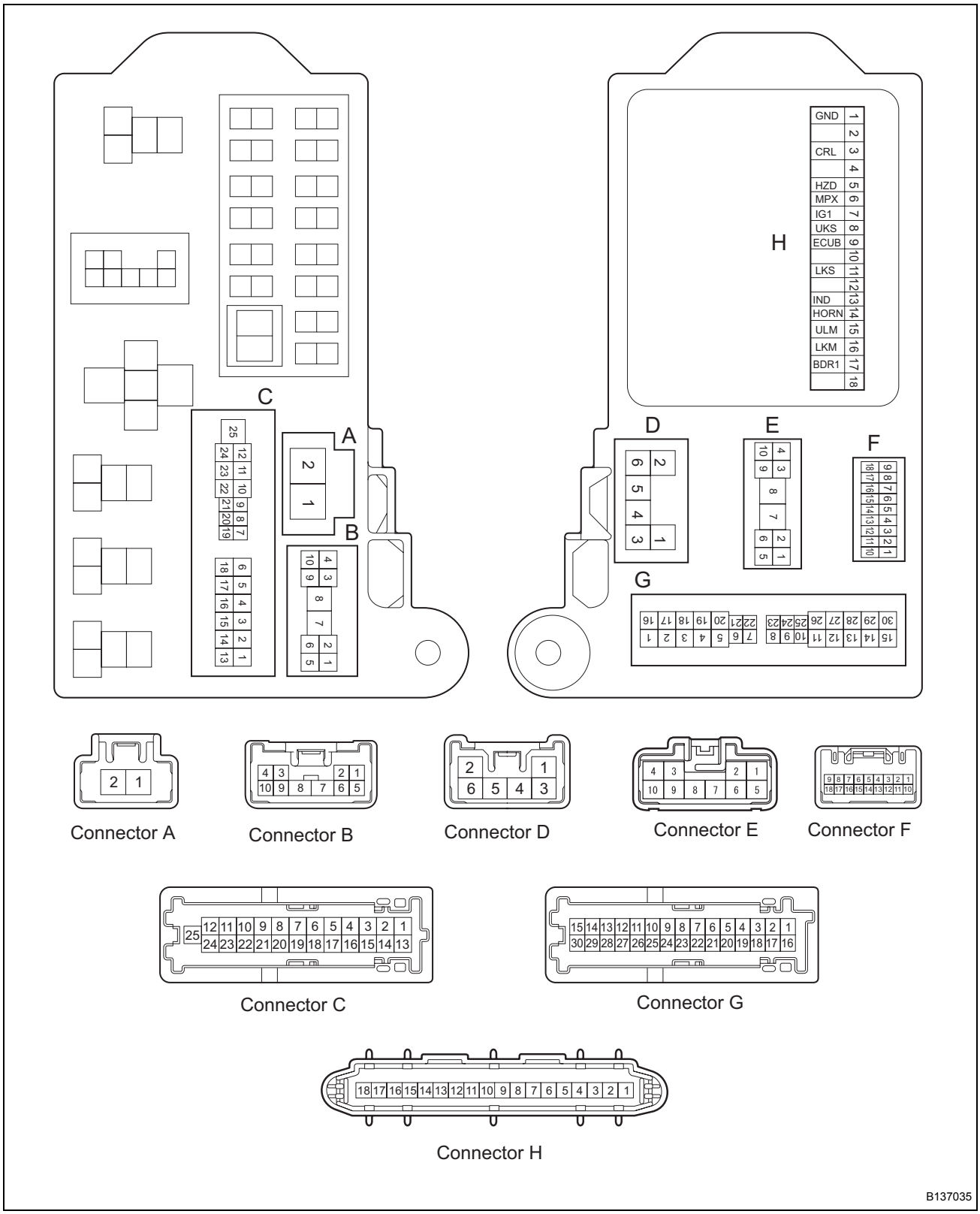

Standard

CONNECTOR - H

Terminal Symbol (Terminal No.)	Input / Output	Item	Measurement Condition	Standard
ECUB ←→ Body ground (H9 ←→ Body ground)	Output	Voltage	Always	10 to 14 V
IG ←→ Body ground (H7 ←→ Body ground)	Output	Voltage	IG ON, IG ACC	10 to 14 V
MPX ←→ Body ground (H6 ←→ Body ground)	Input / Output	Waveform	Always	Pulse is generated
HZD ←→ Body ground (H5 ←→ Body ground)	Output	Voltage	Hazard switch OFF → ON	10 to 14 V → 1.3 V or less
CRL ←→ Body ground (H3 ←→ Body ground)	Output	Voltage	Dome light assembly, room light assembly OFF → ON	10 to 14 V → 1 V or less
E1 ←→ Body ground (H1 ←→ Body ground)	-	Continuity	Always	Continuity

ILLUMINATED ENTRY SYSTEM DOES NOT OPERATE

CIRCUIT DIAGRAM

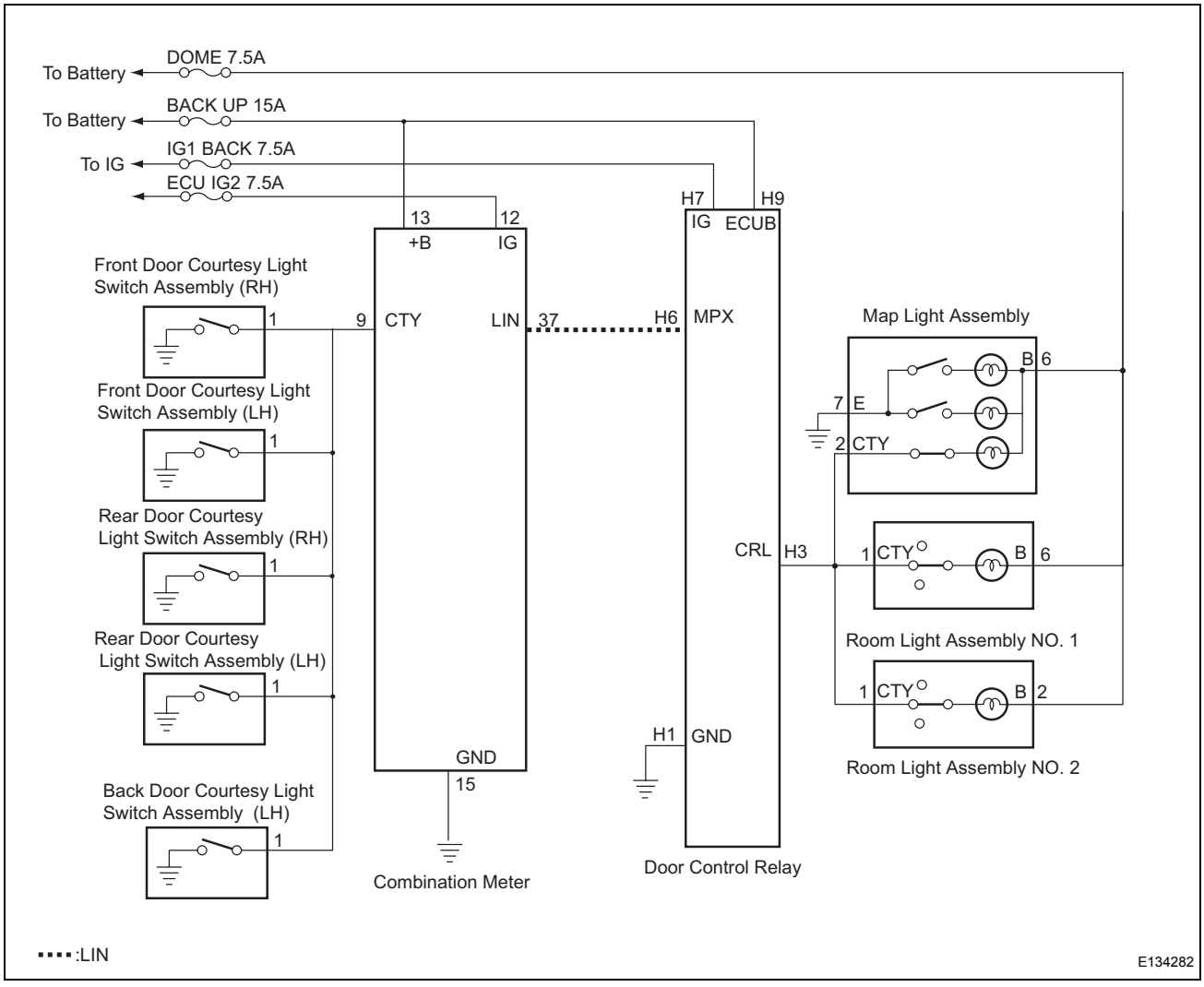

INSPECTION PROCEDURE

1	PROBLEM SYMPTOM CONFIRMATION

(a) Confirm the conditions in which the malfunction occurs.

Conditions of Malfunction Occurrence	Proceed to
Other than below	A
All doors are locked → When unlocking the driver's door	B

HINT:

- If the result is B, go to the problem symptoms table, ILLUMINATED ENTRY SYSTEM FOR UNLOCK DOORS DOES OPERATE.

B → **Proceed to PROBLEM SYMPTOMS CHART (See Page LI-6).**

A

2 CHECK ROOM LIGHT ASSEMBLY NO. 1 (VEHICLES WITHOUT A MAP LIGHT)

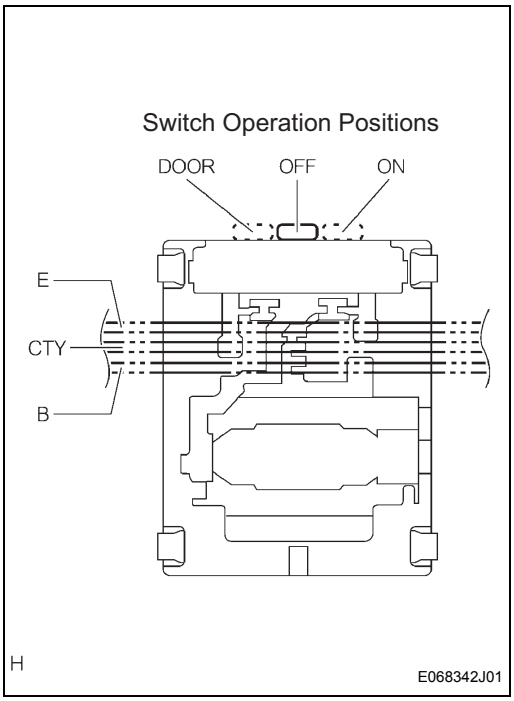

(a) Check the continuity.

(1) Using the tester, check the continuity between the terminals.

Standard

Switch	Terminal No. (Terminal Symbols)	Continuity
OFF	2 (CTY) ←→ 3 (E) 1 (B) ←→ 3 (E)	No continuity
DOOR	2 (CTY) ←→ 3 (E)	Continuity
ON	1 (B) ←→ 3 (E)	Continuity

OK → **GO TO STEP 3**

NG

REPLACE ROOM LIGHT ASSEMBLY NO. 1

3 CHECK MAP LIGHT ASSEMBLY (VEHICLES WITH A MAP LIGHT)

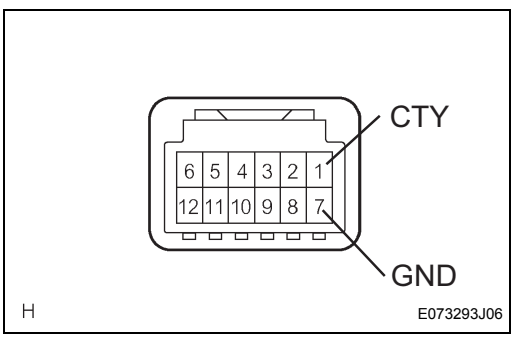

(a) Check the continuity of the room light.

(1) Using the tester, check the continuity between the terminals when the room light switch is operated.

Standard

Switch	Terminal No. (Terminal Symbols)	Continuity
OFF	1 (CTY) ←→ 7 (E)	No continuity
DOOR	1 (CTY) ←→ 7 (E)	Continuity

OK → **GO TO STEP 4**

NG

REPLACE MAP LIGHT ASSEMBLY

LI

4	CHECK ROOM LIGHT ASSEMBLY NO. 2

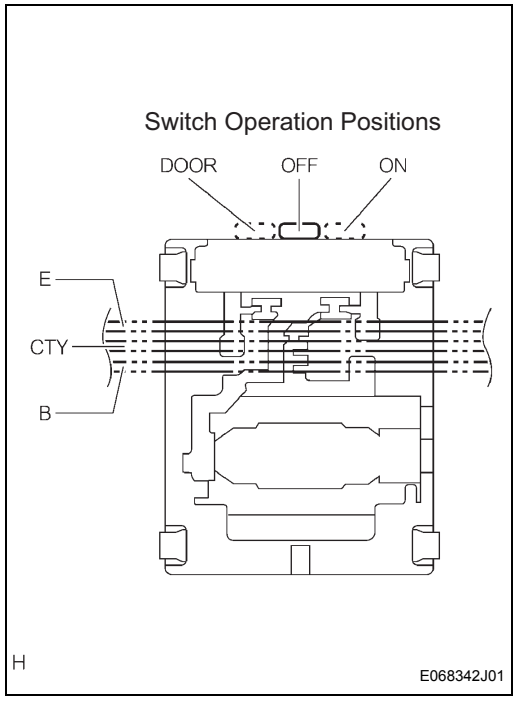

(a) Check the continuity.
(1) Using the tester, check the continuity between the terminals.
Standard

Switch	Terminal No. (Terminal Symbols)	Continuity
OFF	2 (CTY) ←→ 3 (E) 1 (B) ←→ 3 (E)	No continuity
DOOR	2 (CTY) ←→ 3 (E)	Continuity
ON	1 (B) ←→ 3 (E)	Continuity

OK → **GO TO STEP 5**

NG

REPLACE ROOM LIGHT ASSEMBLY NO. 2

5	CHECK COURTESY LIGHT SWITCH

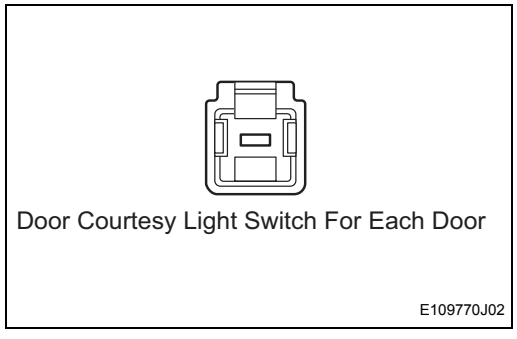

(a) Check the continuity.
(1) Using the tester, check the continuity between the connector terminal and the body ground (the courtesy light switch assembly for each door) or terminal 1 and terminal 2 (the courtesy light switch assembly for the back door).
Standard

Condition	Standard
With the shaft not depressed	Continuity
With the shaft depressed	No continuity

OK → **GO TO STEP 6**

NG

REPLACE COURTESY LIGHT SWITCH ASSEMBLY (APPLICABLE SWITCH)

6	CHECK WIRE HARNESS AND CONNECTOR (BETWEEN ROOM LIGHT ASSEMBLY AND DOOR CONTROL RELAY ASSEMBLY)

(a) Using the tester, check between the room light assembly No. 1 2 (CTY) terminal and the door control relay assembly side vehicle wire harness connector 3 (CRL) terminal.

OK → **GO TO STEP 7**

NG

REPAIR OR REPLACE WIRE HARNESS OR CONNECTOR

7	CHECK WIRE HARNESS AND CONNECTOR (BETWEEN MAP LIGHT ASSEMBLY AND DOOR CONTROL RELAY ASSEMBLY)

(a) Check the continuity.
(1) Disconnect connector H of the door control relay assembly (at the rear of the vehicle).
(2) Using the tester, check between the room light assembly No. 1 1 (CTY) terminal and the door control relay assembly side vehicle wire harness connector H 16 (CTR) terminal.

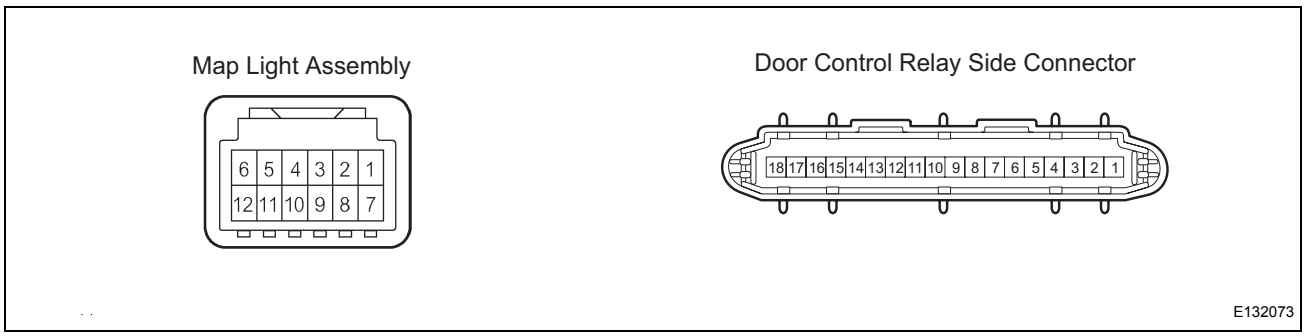

Standard

Terminal No. (Terminal Symbols)	Item	Measurement Condition	Standard
1 (CTY) ← → H3 (CRL)	Continuity	Always	Continuity

OK → **GO TO STEP 8**

NG

REPAIR OR REPLACE WIRE HARNESS OR CONNECTOR

8	CHECK WIRE HARNESS AND CONNECTOR (BETWEEN ROOM LIGHT ASSEMBLY NO. 2 AND DOOR CONTROL RELAY ASSEMBLY)

(a) Using the tester, check between the room light assembly No. 2 2 (CTY) terminal and the door control relay assembly side vehicle wire harness connector H16 (CTR) terminal.

OK → GO TO STEP 9

NG

REPAIR OR REPLACE WIRE HARNESS OR CONNECTOR

9	CHECK WIRE HARNESS AND CONNECTOR (BETWEEN COMBINATION METER AND DOOR COURTESY LIGHT SWITCH ASSEMBLY)

LI

(a) Check the continuity.

(1) Disconnect the connector of the combination meter assembly and the connector of the door courtesy switch for each door.

(2) Using the tester, check between the combination meter assembly 9 (CTY) on the vehicle's harness connector and each door's courtesy switch terminal. (See page ME-16.)

Standard

Combination Meter Assembly Terminal Number (Terminal Signal)	Item
9 (CTY) ←→ Each door's courtesy switch	Continuity

NOTICE:
Make sure that there is continuity between each terminal, and that the GND is not short-circuiting

OK → GO TO STEP 10

NG

REPAIR OR REPLACE WIRE HARNESS OR CONNECTOR

10	CHECK WIRE HARNESS AND CONNECTOR (BETWEEN COMBINATION METER AND DOOR CONTROL RELAY ASSEMBLY)

(a) Check the continuity.

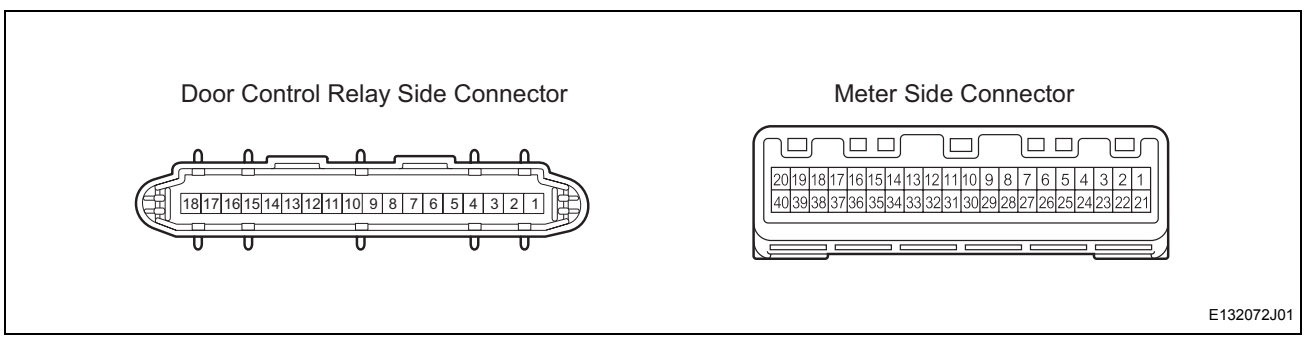

(1) Disconnect connector A of the door control relay assembly (at the rear of the vehicle) and disconnect the combination meter assembly connector.

(2) Using the tester, measure between terminals of the connector on the vehicle wire harness side.

Standard

Terminal No. (Terminal Symbols)	Item	Measurement Condition	Standard
37 (LIN) ←→ 6 (MPX)	Continuity	Always	Continuity

NOTICE:
Make sure that there is continuity between each terminal, and that the GND is not short-circuiting

OK → **REPLACE DOOR CONTROL RELAY ASSEMBLY**

NG

REPAIR OR REPLACE WIRE HARNESS OR CONNECTOR