INSTRUMENT PANEL PASSENGER AIRBAG ASSEMBLY

COMPONENTS

RS

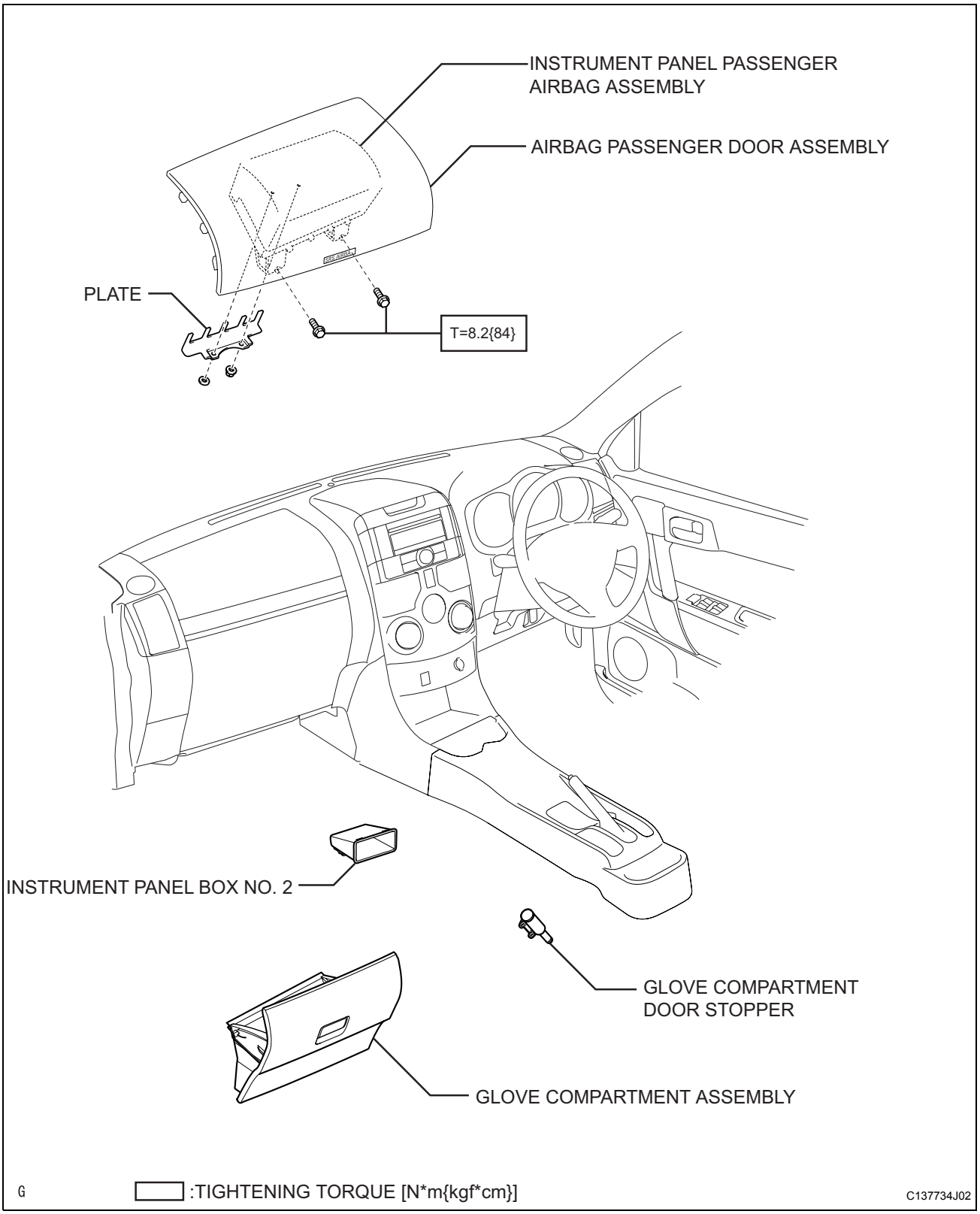

REMOVAL

1. **HANDLING AND OPERATING PRECAUTIONS(See page IP-8)**
2. **DISCONNECT BATTERY NEGATIVE TERMINAL**
3. **REMOVE GLOVE COMPARTMENT DOOR ASSEMBLY (See page IP-11)**
4. **REMOVE GLOVE COMPARTMENT DOOR STOPPER (See page IP-12)**
5. **REMOVE INSTRUMENT PANEL BOX NO. 2 (See page IP-12)**
6. **REMOVE INSTRUMENT PANEL PASSENGER AIRBAG ASSEMBLY**
   (a) Disconnect the connector.
   (b) Remove the 2 bolts.

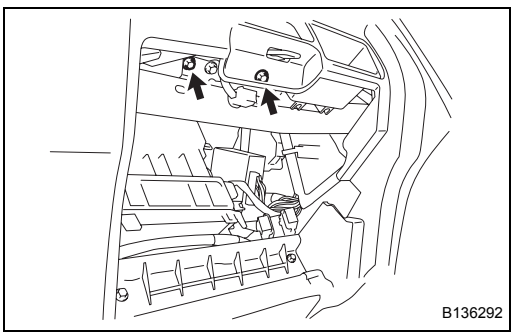

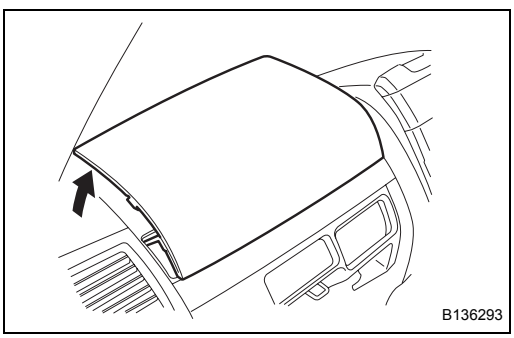

   (c) Place your hand through the opening in the instrument panel and disengage the claws to remove the instrument panel passenger airbag together with the airbag passenger door assembly.

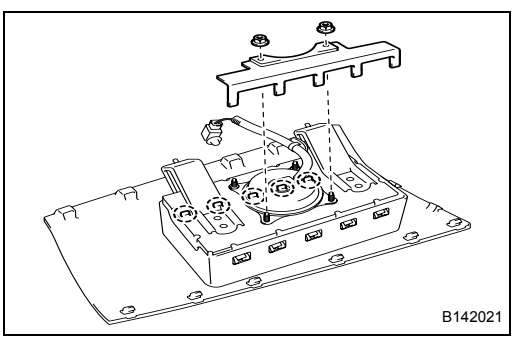

7. **REMOVE AIRBAG PASSENGER DOOR ASSEMBLY**
   (a) Remove the 2 nuts and the plate.
   (b) Lift up the airbag so that it rotates, disengage the 5 claws and remove the airbag from the airbag passenger door assembly.
8. **INSPECT INSTRUMENT PANEL PASSENGER AIRBAG ASSEMBLY (See page RS-2)**

INSTALLATION

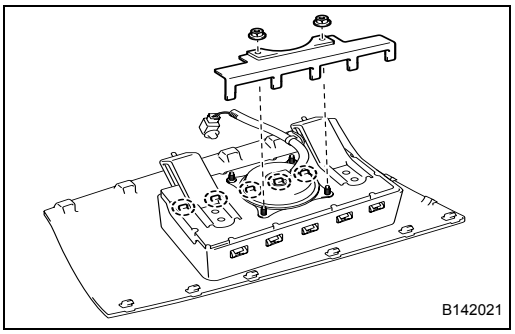

1. **INSTALL AIRBAG PASSENGER DOOR ASSEMBLY**
   (a) Engage the 5 claws and install the airbag in the airbag passenger door assembly.
   (b) Install the plate with the 2 nuts.

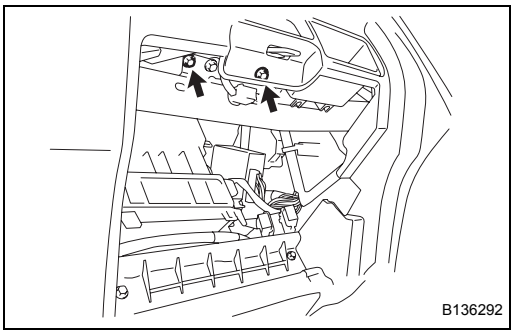

2. **INSTALL INSTRUMENT PANEL PASSENGER AIRBAG ASSEMBLY**
   (a) Install the instrument passenger airbag assembly with the 2 bolts.
   Torque: 8.2 N*m (84 kgf*cm)
   (b) Connect the connector.
3. **INSTALL INSTRUMENT PANEL BOX NO. 2**
4. **INSTALL GLOVE COMPARTMENT DOOR STOPPER (See page IP-17)**
5. **INSTALL GLOVE COMPARTMENT DOOR ASSEMBLY (See page IP-18)**
6. **CONNECT NEGATIVE BATTERY TERMINAL**

DISPOSAL

1. **DISPOSE OF INSTRUMENT PANEL PASSENGER AIRBAG ASSEMBLY (WHEN INSTALLED IN VEHICLE)**
   CAUTION:
   - **Conduct this work outside in a level location where safety can be assured. Avoid conducting this work in residential areas.**
   - **As this work is noisy, make it known to all people in the surrounding areas before proceeding.**
   (a) Disconnect the instrument panel passenger airbag connector. (See page RS-181.)
   (b) Activate instrument panel passenger airbag assembly.
   (1) Connect the following 2 SSTs.
   SST 09082-00711, 09082-00780
   (2) Short circuit the SST alligator clip and terminal.
   (3) Connect the SST and the instrument panel passenger airbag assembly connector (4P yellow) and lock it securely in place.
   CAUTION:
   - **Make sure there is no looseness in the instrument panel passenger airbag assembly.**
   - **Check that there are no objects on the upper door part of the instrument panel passenger airbag.**

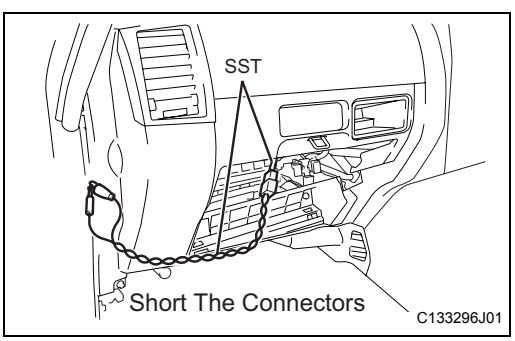

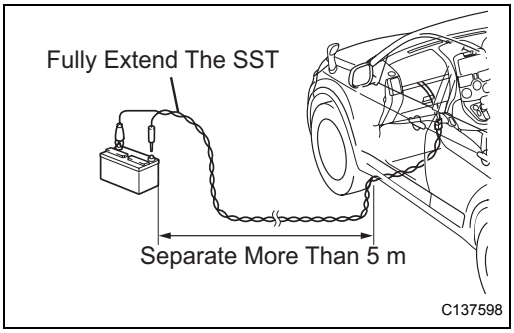

(4) Extend the SST as far as possible so that the battery is placed 5 m or more away from the vehicle.

(5) Check that the interior and the area surrounding the vehicle are safe and then attach the alligator clip of the SST to the battery negative terminal.

CAUTION:

Close all the doors and windows.

(6) Connect the SST terminal to the positive battery terminal and activate the instrument panel passenger airbag assembly.

CAUTION:

- **Before proceeding, check that no one is inside or near the vehicle.**
- **Before proceeding, call out in a loud voice to warn anyone near the vehicle for scrapping.**

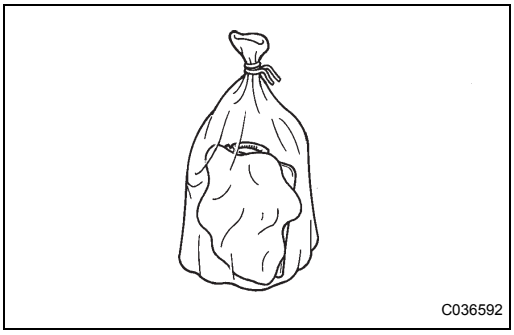

(c) Procedure for disposal of the instrument panel passenger airbag assembly

(1) Place the instrument panel passenger airbag assembly that has been activated in a strong, transparent plastic bag, tie it tightly and dispose of it.

CAUTION:

- **As parts of the instrument panel passenger airbag assembly may reach a temperature of several hundreds of degrees Celsius when the airbag is deployed, do not touch the airbag for at least 30 minutes after deployment.**
- **Do not apply water, etc. to an instrument panel passenger airbag assembly that has been activated.**
- **Use dust-proof safety glasses and gloves when handling an instrument panel passenger airbag assembly that has been activated.**
- **Never dispose of an instrument panel passenger airbag assembly that has not been activated.**
- **After completing the work, always wash your hands with water.**

2. DISPOSE OF INSTRUMENT PANEL PASSENGER AIRBAG ASSEMBLY (WHEN NOT INSTALLED IN VEHICLE)

CAUTION:

- **Conduct this work outside in a level location where safety can be assured. Avoid conducting this work in residential areas.**
- **As this work is noisy, make it known to all people in the surrounding areas before proceeding.**

RS

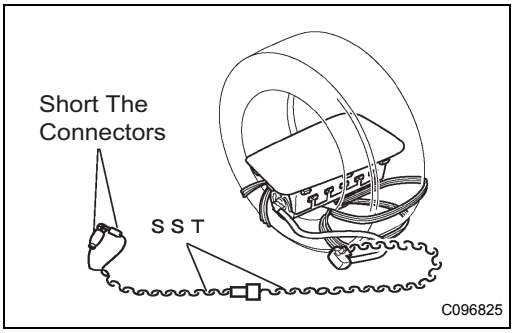

(a) SECURE INSTRUMENT PANEL PASSENGER AIRBAG ASSEMBLY

(1) Using a wire harness (core wire area: 1.25 mm^2 or more), fix the instrument panel passenger airbag assembly to a tire.

CAUTION:

- **Strictly adhere to the instructions for the following 2 items. If the instructions are not followed, the instrument panel passenger airbag assembly may activate or the tire could be blown off, resulting in serious injury.**
- **Tightly wind the wire harness 3 times and make sure that there is no slack as the wire harness is subjected to a force of approximately 1 ton when the instrument panel passenger airbag assembly is activated.**
- **Always tie down the instrument panel passenger airbag assembly with the deployment side facing toward the center of the tire, as shown in the illustration.**

(b) Activate instrument panel passenger airbag assembly.

(1) Connect the following 3 SSTs.

SST 09082-00711, 09082-00802 (09082-10801, 09082-30801)

(2) Short circuit the SST alligator clip and terminal.

(3) Connect the SST and the instrument panel passenger airbag assembly connector and lock it securely in place.

NOTICE:

- **Match the part color of the SST connector with the color of the connecting part of the horn button assembly connector and attach them.**
- **Make sure the SST is securely locked.**

(4) Stack 2 tires and place the tire that the instrument panel passenger airbag assembly is tied to on top of them, and then place another tire with a disc wheel on top, as shown in the illustration.

(5) Tie the tires together by tightly wrapping a wire of 1.8 mm diameter or more (normal steel wire for general use: equivalent to JIS SWM-B) around them 2 or more times, making sure there is no slack.

NOTICE:

Make sure that after the tires are fixed together they are capable of withstanding a load of 1 ton or more.

(6) Extend the SST as far as possible away from the instrument panel passenger airbag assembly so that the battery is placed 5 m or more away from the tires.

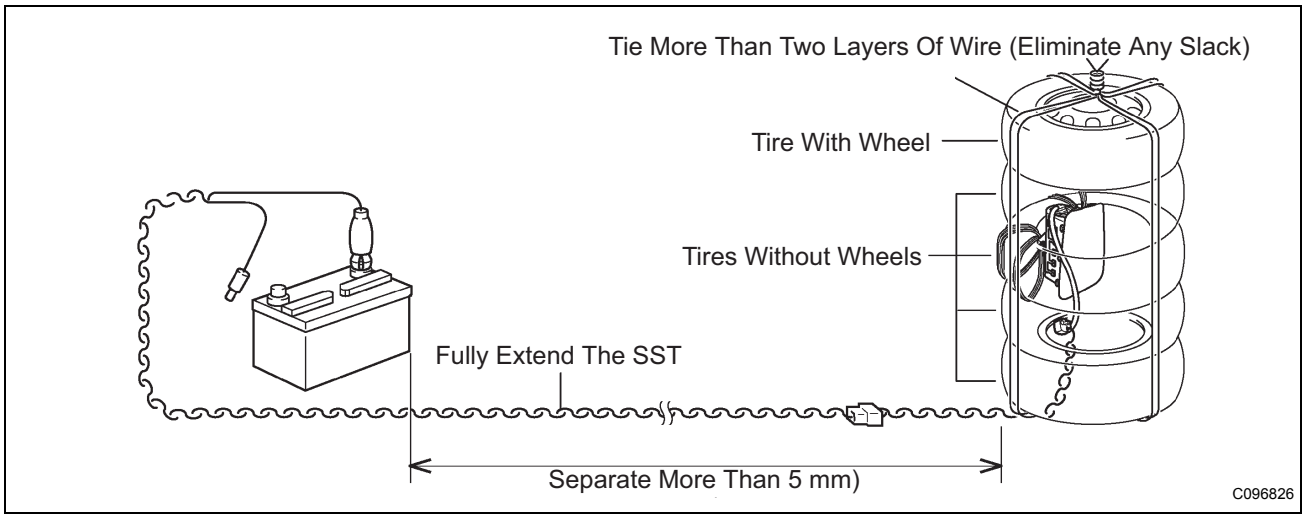

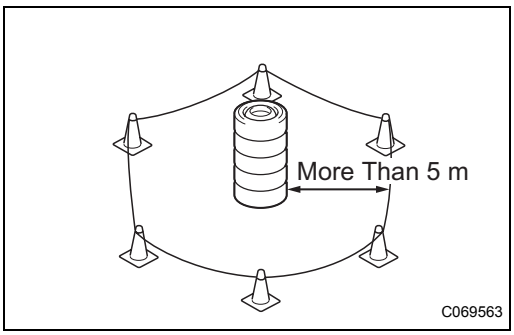

(7) Cordon off a 5 m-radius area from the outside edge of the tire with pylons and rope or similar to prevent people from getting any closer.

(8) Check that the surrounding area is safe and then connect the alligator clip of the SST to the negative battery terminal.

CAUTION:

- **Conduct this work outside in a level location where safety can be assured. Do not conduct this work in a residential area.**
- **Because the sound a pretensioner makes when it is activated is rather loud, give prior notice of activation to those around you.**

(9) Connect the SST terminal to the positive battery terminal and activate the instrument panel passenger airbag assembly.

CAUTION:

- **Before proceeding, check that no one is nearby.**
- **Before activating pretensioners, call out in a loud voice to warn anyone in or near the work area.**

HINT:

Note that the heat generated by the inflator when the airbag is deployed once will melt the connector of the SST (wire C) that is directly connected to the inflator.

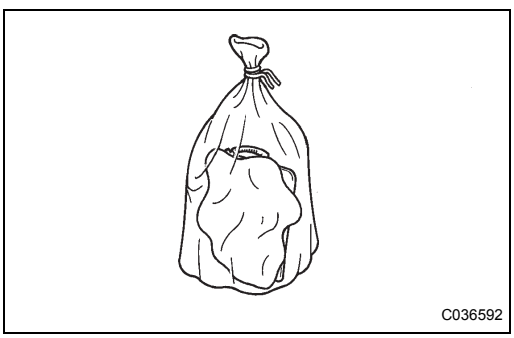

(c) Procedure for disposal of the instrument panel passenger airbag assembly

(1) Place the instrument panel passenger airbag assembly that has been activated in a strong, transparent plastic bag, tie it tightly and dispose of it.

CAUTION:

- **As parts of the instrument panel passenger airbag assembly may reach a temperature of several hundreds of degrees Celsius when the airbag is deployed, do not touch the airbag for at least 30 minutes after deployment.**

- **Do not apply water, etc. to an instrument panel passenger airbag assembly that has been activated.**
- **Use dust-proof safety glasses and gloves when handling an instrument panel passenger airbag assembly that has been activated.**
- **Never dispose of an instrument panel passenger airbag assembly that has not been activated.**
- **After completing the work, always wash your hands with water.**