REAR SUSPENSION

COMPONENTS

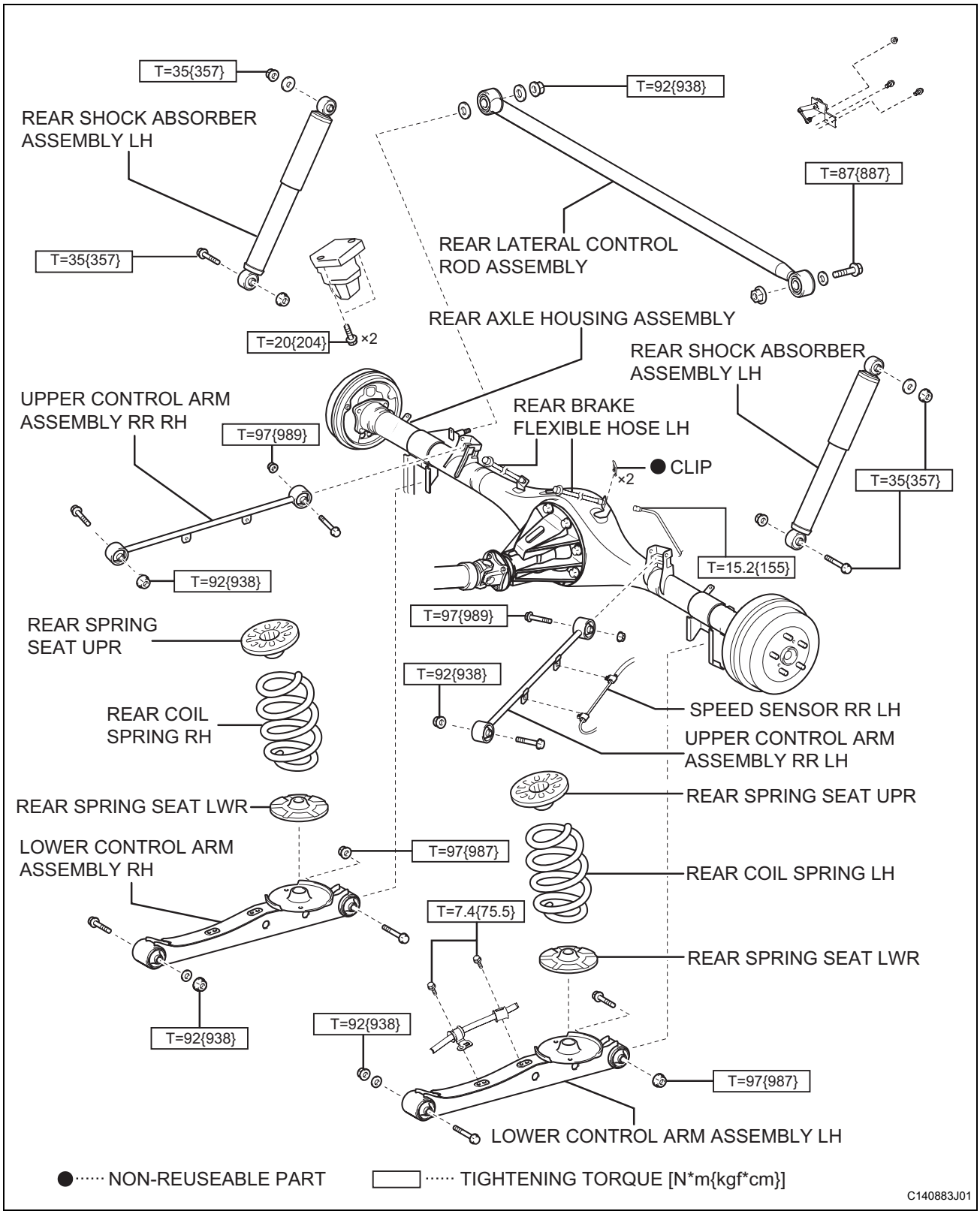

SP

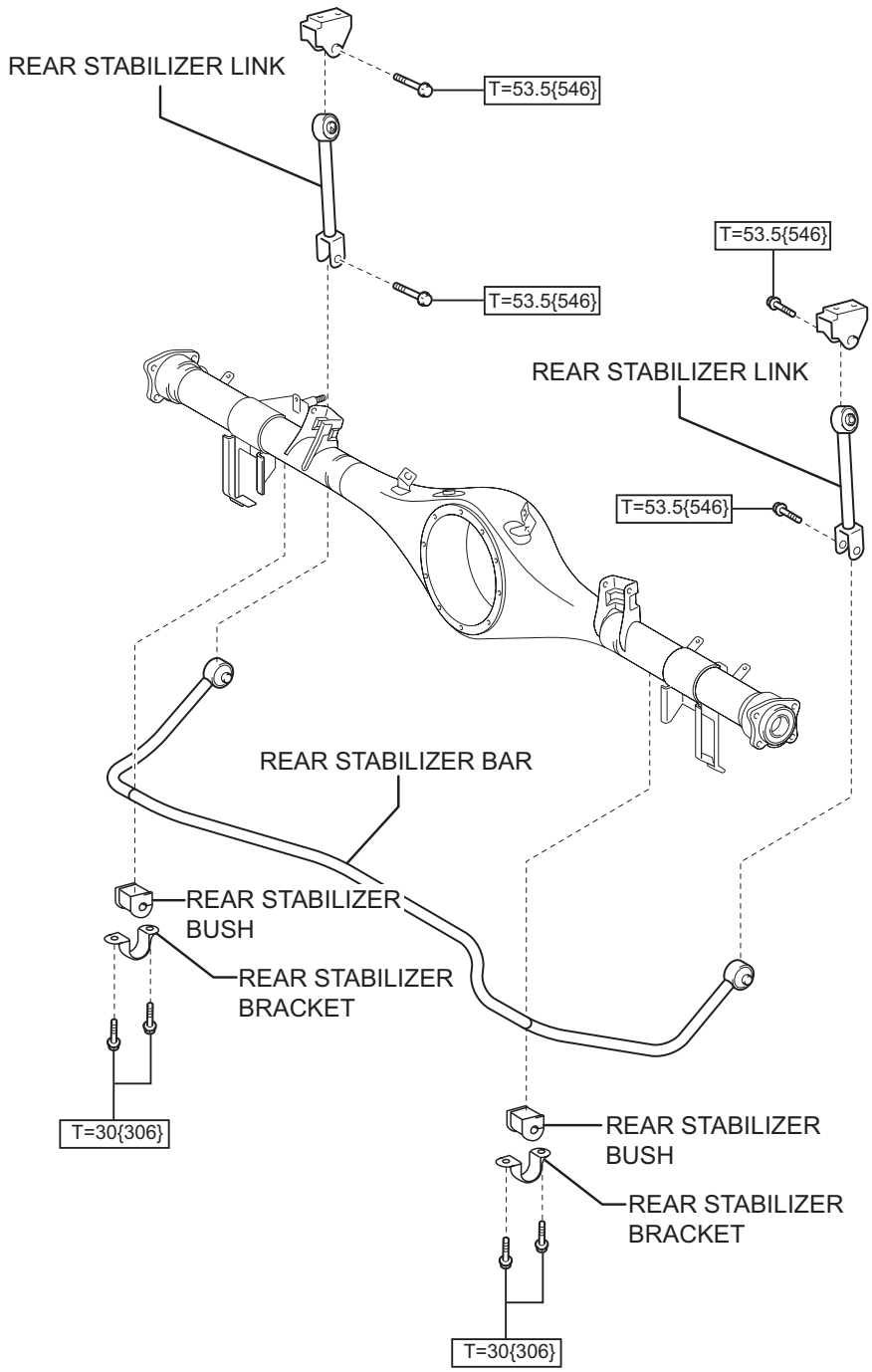

TIGHTENING TORQUE [N*m{kgf*cm}]

C143631J01

SP