STARTER ASSEMBLY (K3-VE)

COMPONENTS

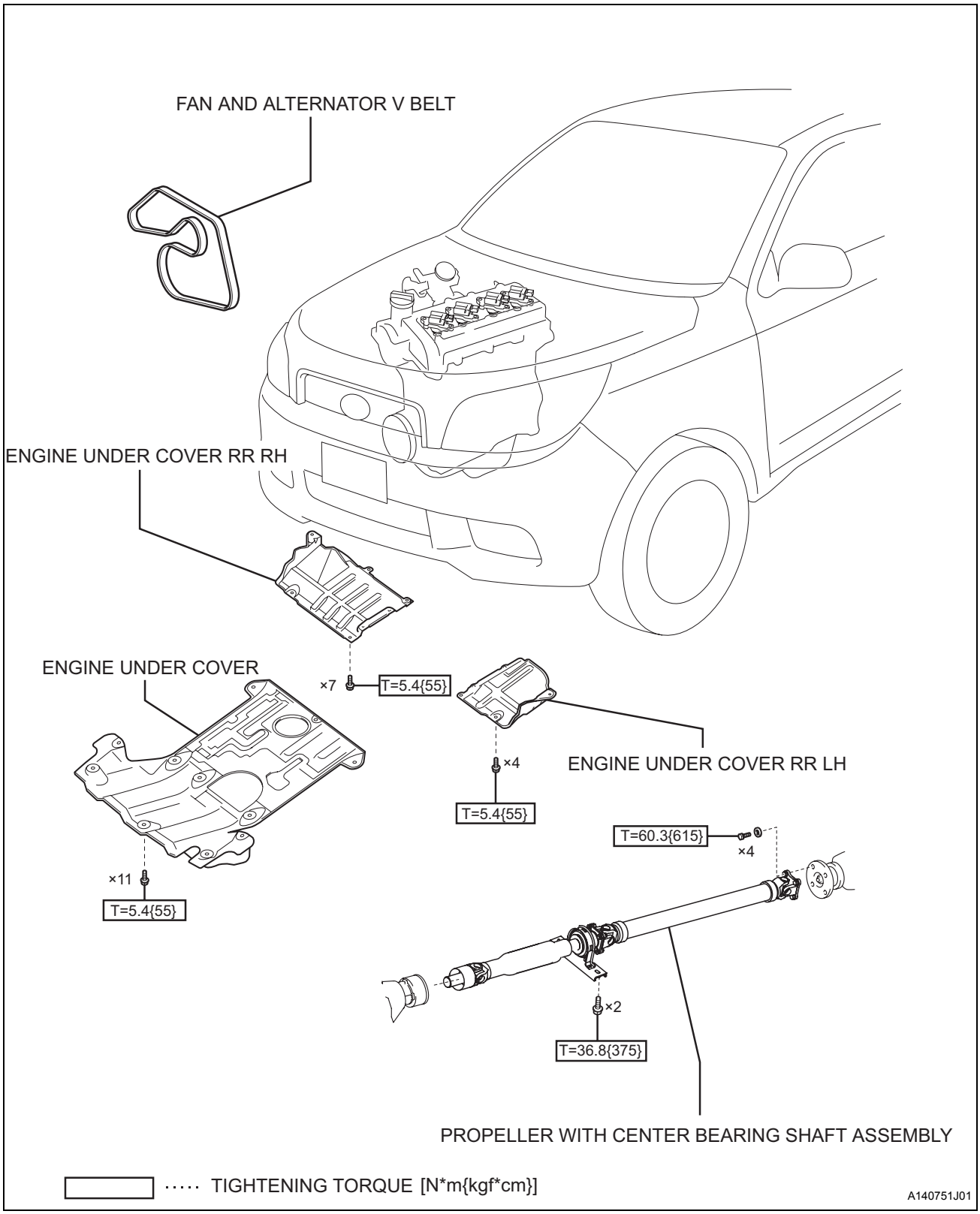

ST

ST

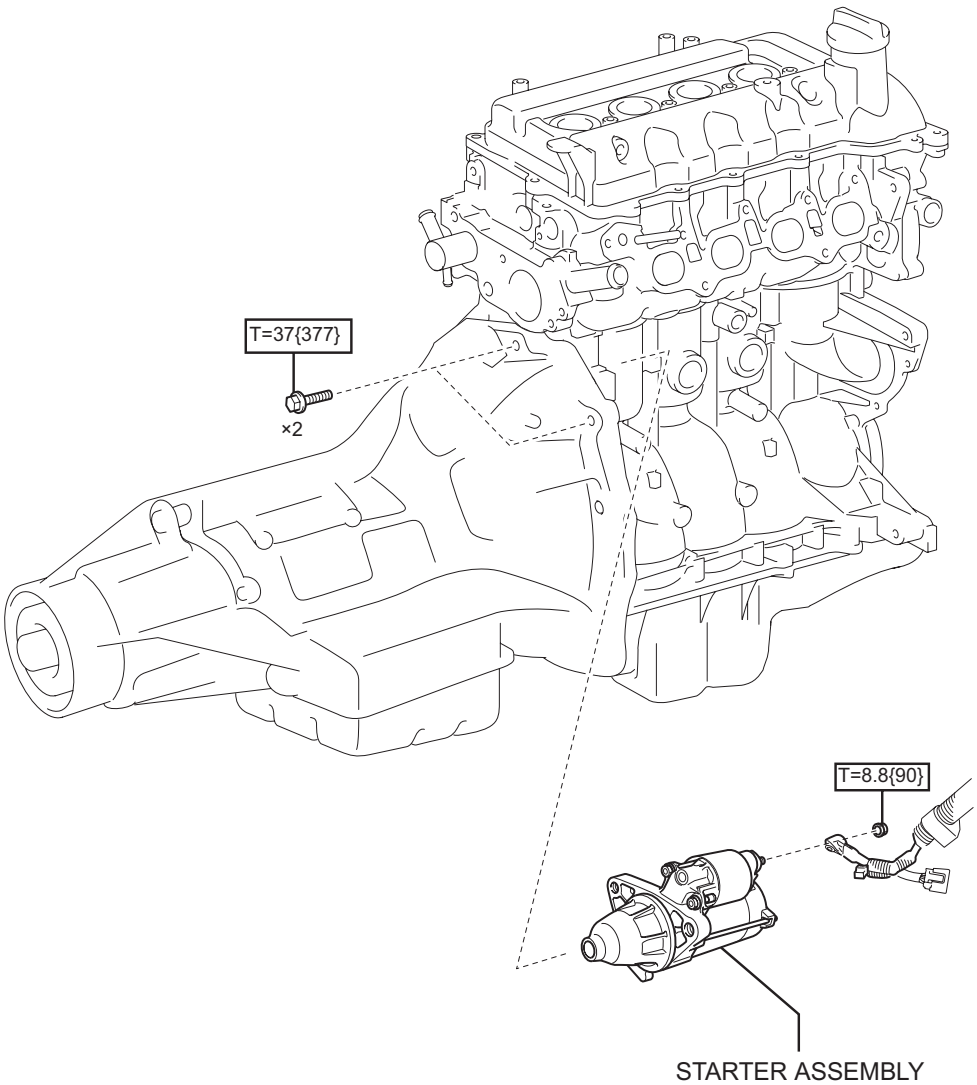

□ ····· TIGHTENING TORQUE [N*m{kgf*cm}]

A137005J01

REMOVAL

1. **DISCONNECT NEGATIVE BATTERY TERMINAL**
   (See page RS-164.)
2. **REMOVE FAN AND ALTERNATOR BELT (See page EM-12)**
3. **REMOVE ENGINE UNDER COVER**
4. **REMOVE ENGINE UNDER COVER RR RH**
5. **REMOVE ENGINE UNDER COVER RR LH**
6. **REMOVE PROPELLER WITH CENTER BEARING SHAFT ASSEMBLY (See page PR-6)**
7. **REMOVE STARTER ASSEMBLY**
   (a) Remove bolt A and bolt B. Then remove the fan belt adjusting slider.

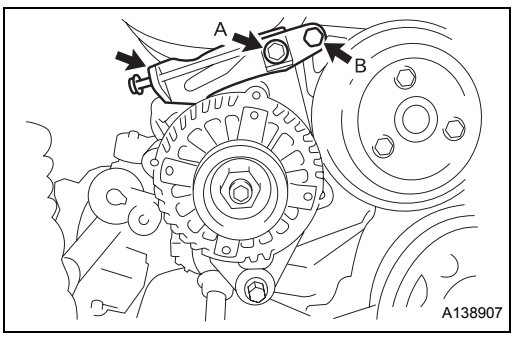

   (b) Remove the terminal cap.
   (c) Remove the nut using an extension bar (270mm). Then remove terminal 30.
   (d) Disconnect the connector.

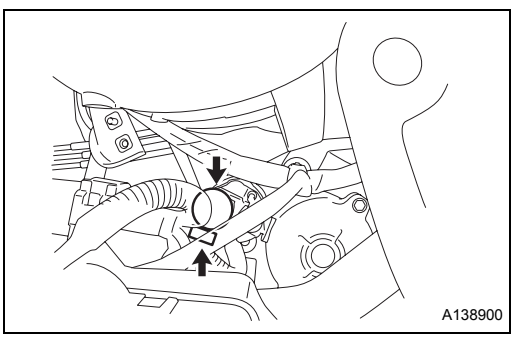

   (e) Disconnect the oxygen sensor No. 2 connector.

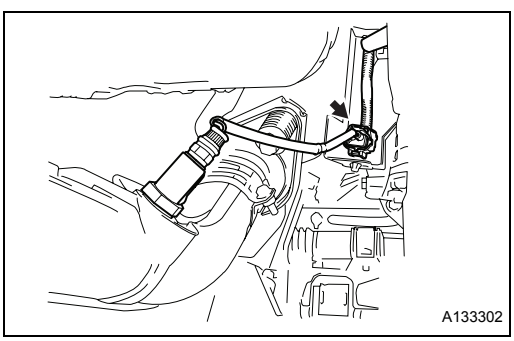

ST

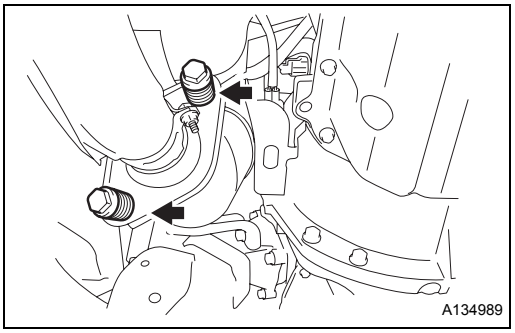

(f) Remove the 2 bolts and disconnect the exhaust pipe assembly FR.

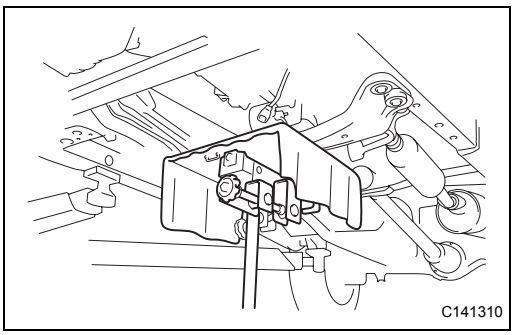

(g) Support the engine rear support member with a mission jack.

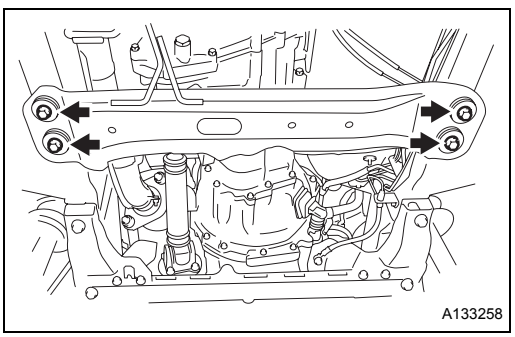

(h) Remove the 4 bolts and disconnect the engine rear support member.

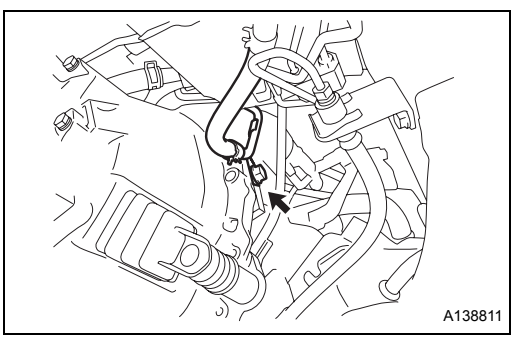

(i) Remove the bolt and disconnect the fuel delivery pipe.

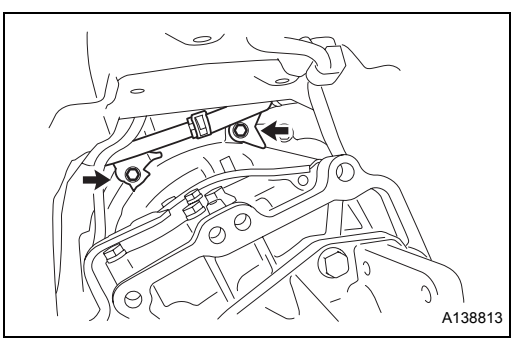

(j) Remove the 2 bolts using an extension bar (600mm). Then disconnect the fuel delivery pipe and the water bypass pipe No 2.

ST

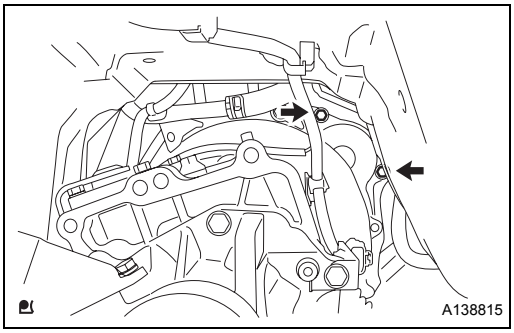

(k) Remove the 2 bolts.

(l) Remove the starter as shown in the illustration.

INSTALLATION

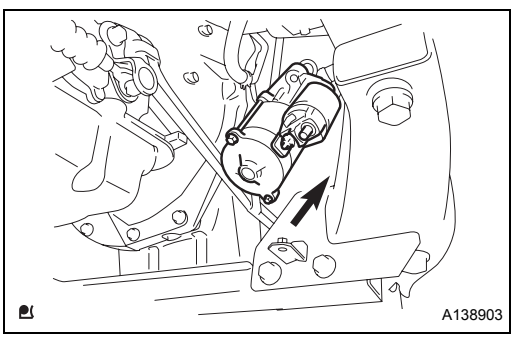

1. INSTALL STARTER ASSEMBLY

(a) Set in the starter assembly as shown in the illustration.

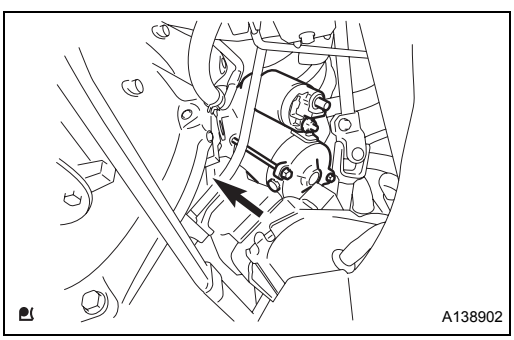

(b) Turn the starter assembly as shown in the illustration.

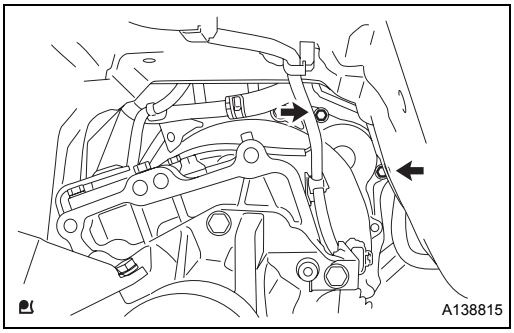

(c) Using an extension bar (600mm), install the starter assembly with the 2 bolts.
Torque: 37 N*m (377 kgf*cm)

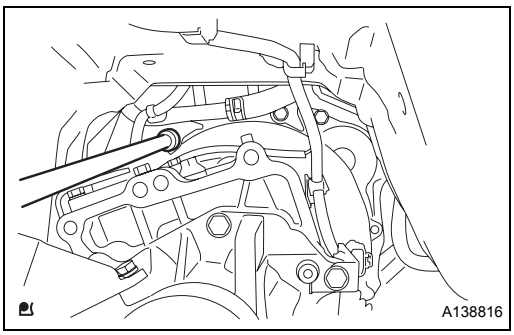

(d) Using an extension bar (600mm), install the water bypass pipe No. 2 with 2 new bolts.
Torque: 58.8 N*m (600 kgf*cm)

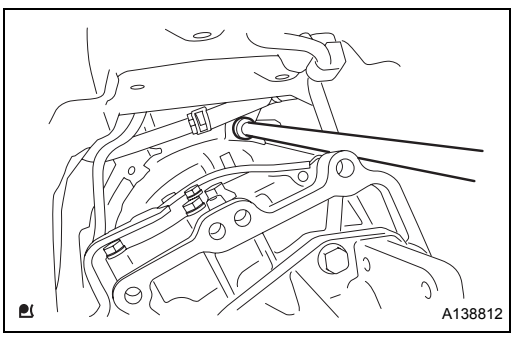

(e) Using an extension bar (600mm), install the fuel delivery pipe with a new bolt.
Torque: 58.8 N*m (600 kgf*cm)

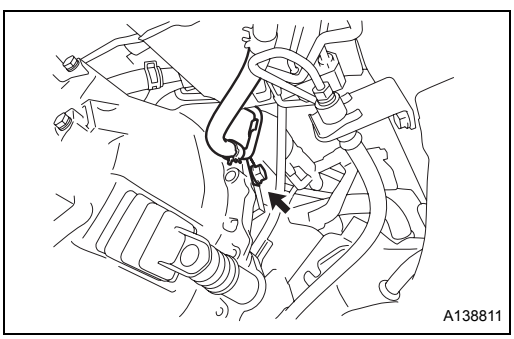

(f) Install the fuel delivery pipe with the bolt.

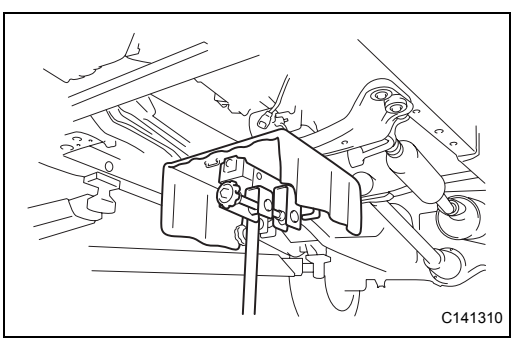

(g) Support the engine rear support member with a high-mission transmission jack.

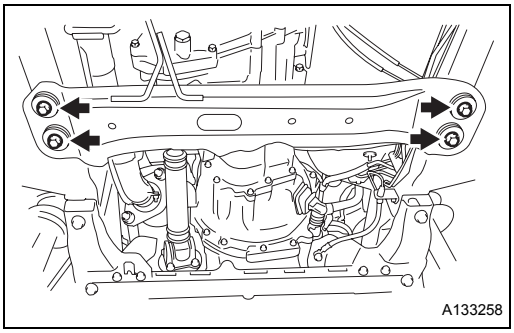

(h) Install the engine rear support member with the 4 bolts.
Torque: 48.1 N*m (490 kgf*cm)

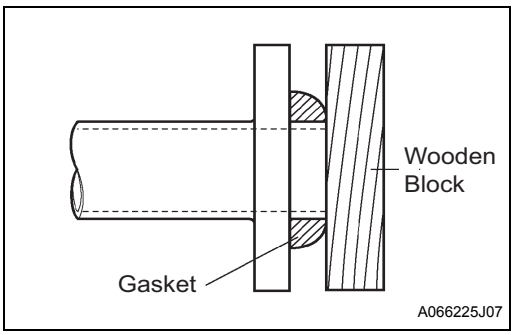

(i) Using a wooden block and hammer, tap in a new gasket until it is flush with the exhaust manifold.
NOTICE:
- **Make sure the gasket is installed in the correct direction.**
- **Do not re-use a gasket that has been previously removed.**
- **Never push a new gasket into the exhaust manifold when installing the exhaust pipe.**

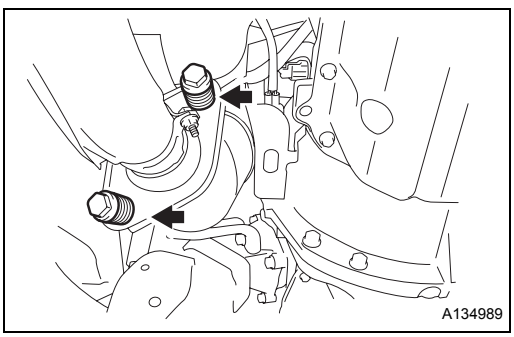

(j) Install the exhaust pipe assembly FR to the exhaust manifold with the 2 springs and the 2 bolts.
Torque: 46.5 N*m (474 kgf*cm)

ST

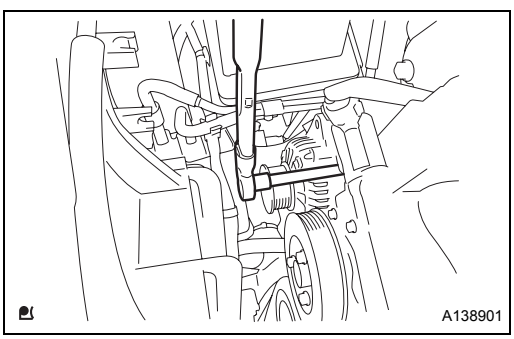

(k) Using an extension bar (270mm) and a preset torque wrench, install terminal 30 with the nut.
Torque: 8.8 N*m (90 kgf*cm)
(l) Close the terminal cap.
(m) Connect the connector.

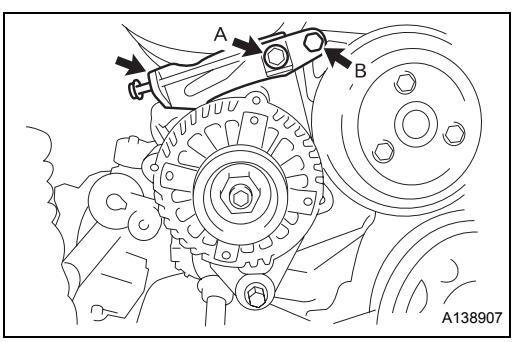

(n) Install the fan belt adjusting slider with bolt A and bolt B.
Torque: 19 N*m (194 kgf*cm) (Bolt A)
32 N*m (326 kgf*cm) (Bolt B)

2. **INSTALL PROPELLER WITH CENTER BEARING SHAFT ASSEMBLY (See page PR-7)**
3. **INSTALL FAN AND ALTERNATOR V BELT (See page EM-12)**
4. **ADJUST FAN AND ALTERNATOR V BELT (See page EM-13)**
5. **CHECK FAN AND ALTERNATOR V BELT (See page EM-13)**

6. **INSTALL AIR CLEANER ASSEMBLY (See page EM-194)**
7. **INSTALL AIR CLEANER HOSE NO. 1 (See page CO-26)**
8. **INSTALL ENGINE UNDER COVER RR LH (See page EM-104)**
9. **INSTALL ENGINE UNDER COVER RR RH (See page EM-104)**
10. **INSTALL ENGINE UNDER COVER (See page EM-104)**

INSPECTION

1. **CHECK STARTER ASSEMBLY**
   NOTICE:
   Perform each test for 3 - 5 seconds.

   (a) Remove the nut and disconnect the terminal C.

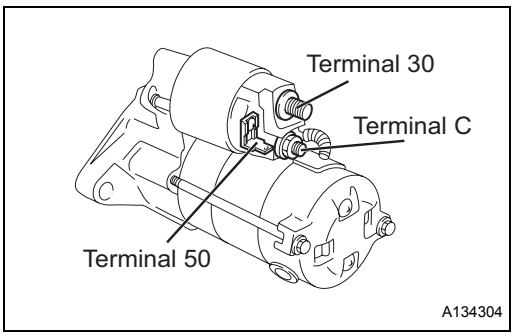

ST

   (b) Wire the terminals as shown in the illustration, and check that the pinion gear moves outward.

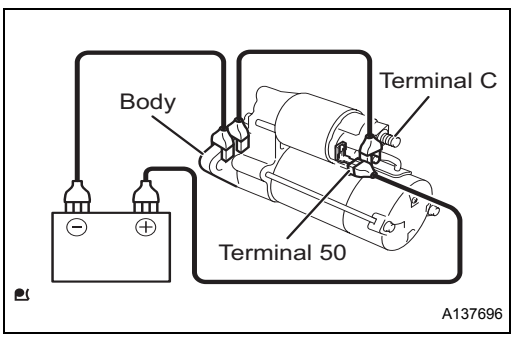

   (c) With the pinion gear out and the cable to terminal C disconnected, check that the pinion gear remains out.

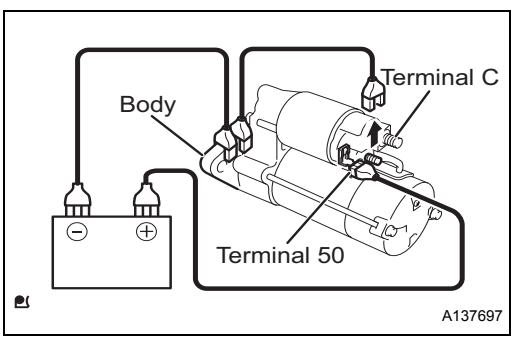

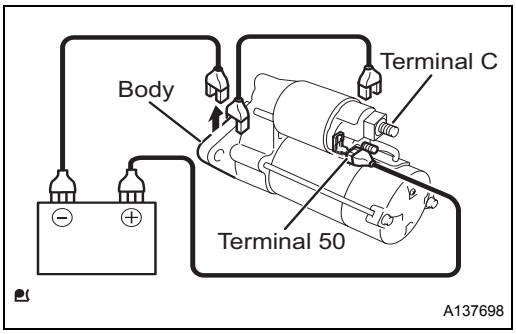

(d) With the pinion gear out and the cable to the starter body disconnected, check that the pinion gear returns inward.

(e) Install terminal C with the nut.
Torque: 8.8 N*m (90 kgf*cm)

(f) Secure the starter in the vise with aluminum plates inserted.

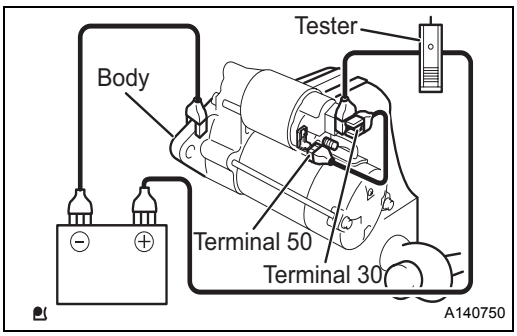

(g) Wire the cables and connect one of them to the positive (+) side as shown in the illustration.

(h) Connect terminal 50 and measure the current value when the tester indicator becomes stable.
Standard:
90 A (about 11.5 V) or less