RADIATOR ASSEMBLY (K3-VE)

COMPONENTS

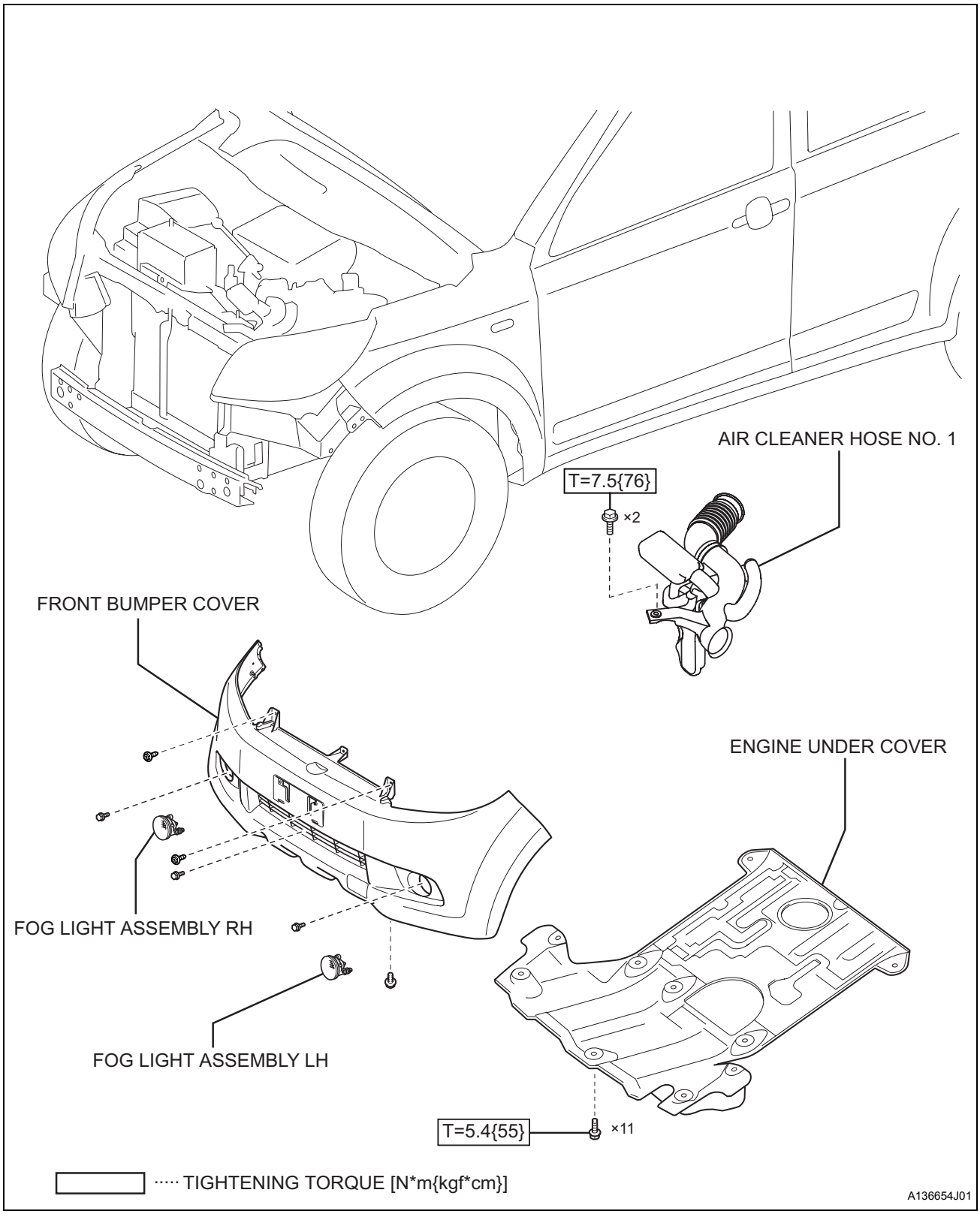

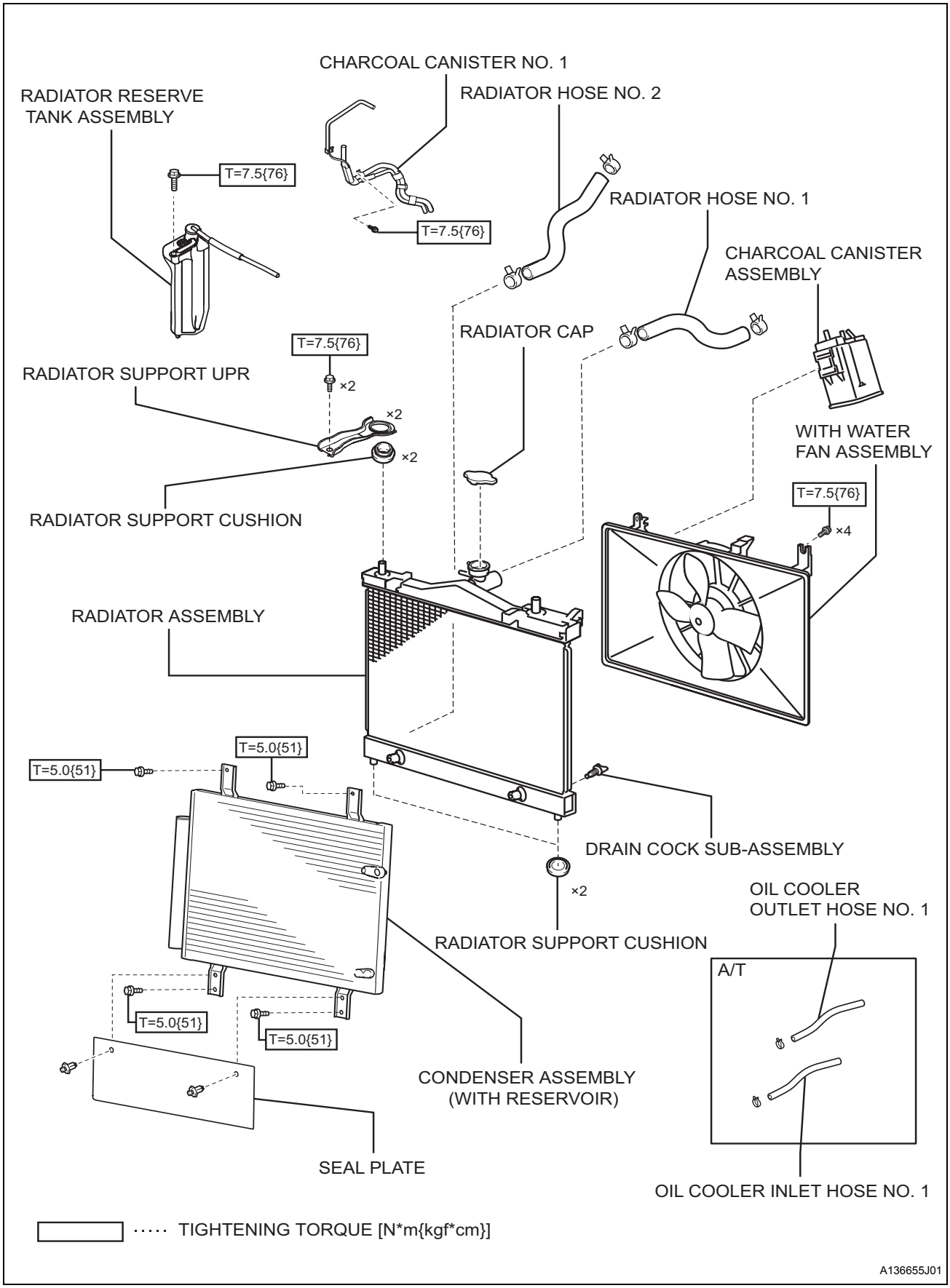
CHARCOAL CANISTER NO. 1
RADIATOR HOSE NO. 2
RADIATOR RESERVE TANK ASSEMBLY
T=7.5{76}
T=7.5{76}
RADIATOR HOSE NO. 1
CHARCOAL CANISTER ASSEMBLY
RADIATOR CAP
T=7.5{76}
×2
RADIATOR SUPPORT UPR
×2
×2
WITH WATER FAN ASSEMBLY
RADIATOR SUPPORT CUSHION
T=7.5{76}
×4
RADIATOR ASSEMBLY
T=5.0{51}
T=5.0{51}
DRAIN COCK SUB-ASSEMBLY
×2
OIL COOLER OUTLET HOSE NO. 1
RADIATOR SUPPORT CUSHION
A/T
T=5.0{51}
T=5.0{51}
CONDENSER ASSEMBLY (WITH RESERVOIR)
SEAL PLATE
OIL COOLER INLET HOSE NO. 1
TIGHTENING TORQUE [N*m{kgf*cm}]
A136655J01

CO

REMOVAL

1. **DISCONNECT NEGATIVE BATTERY TERMINAL**
2. **REMOVE ENGINE UNDER COVER**
3. **DRAIN ENGINE COOLANT (See page CO-11)**
4. **REMOVE FOG LIGHT ASSEMBLY LH (WITH FOG LIGHT) (See page LI-33)**
5. **REMOVE FOG LIGHT ASSEMBLY RH (WITH FOG LIGHT)**
6. **REMOVE FRONT BUMPER COVER (See page ET-2)**
7. **REMOVE AIR CLEANER HOSE NO. 1**
   (a) Remove the 2 bolts. Then remove the air cleaner hose No. 1.

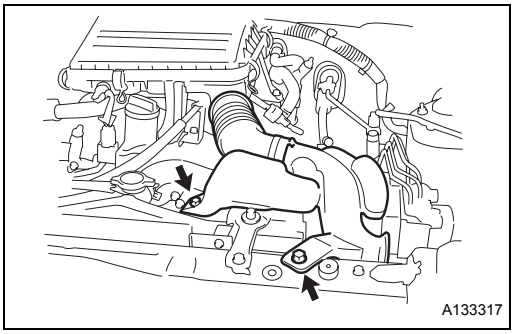

CO

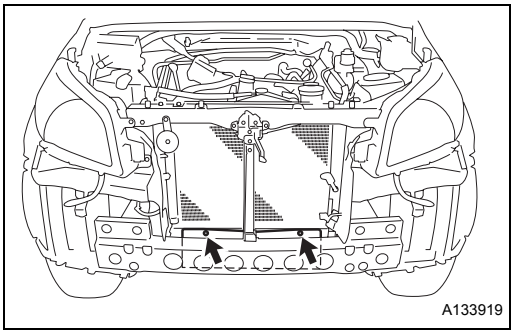

8. **REMOVE SEAL PLATE**
   (a) Detach the 2 clips and remove the seal plate.

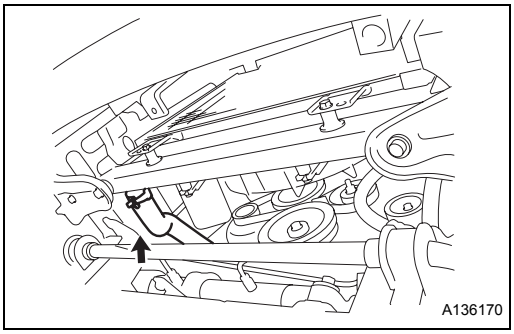

9. **REMOVE RADIATOR HOSE NO. 2**
   (a) Remove the clip. Then remove radiator hose No. 2.
10. **DISCONNECT OIL COOLER INLET HOSE NO. 1 (AUTOMATIC TRANSMISSION)**
    (a) Remove the clip and disconnect the oil cooler inlet hose No. 1 from the radiator assembly.
11. **DISCONNECT OIL COOLER OUTLET HOSE NO. 1 (AUTOMATIC TRANSMISSION)**
    (a) Remove the clip and disconnect oil cooler outlet hose No. 1 from the radiator assembly.
12. **REMOVE RADIATOR RESERVE TANK ASSEMBLY**
    (a) Disconnect the radiator reserve tank assembly hose.
    (b) Remove the bolt and pull out the pin on the lower side of the radiator reserve tank assembly from the bush.
13. **REMOVE RADIATOR HOSE NO. 1**
    (a) Remove the clip. Then remove radiator hose No. 1.

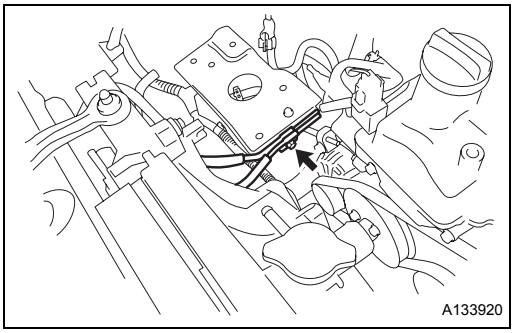

14. REMOVE CHARCOAL CANISTER ASSEMBLY

(a) Remove the bolt. Then remove the charcoal canister pipe No. 1 from the battery carrier.

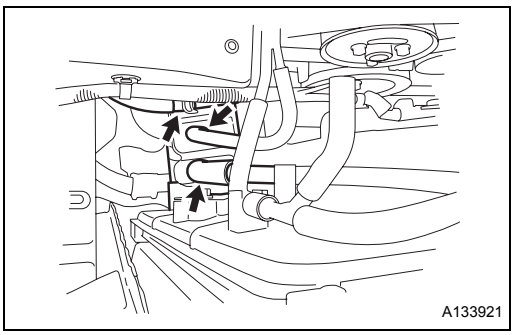

(b) Disconnect the 3 hoses and remove the charcoal canister assembly from the bracket by sliding it upward.

15. REMOVE RADIATOR SUPPORT UPPER

(a) Remove the bolt. Then remove the right and left radiator support uppers.

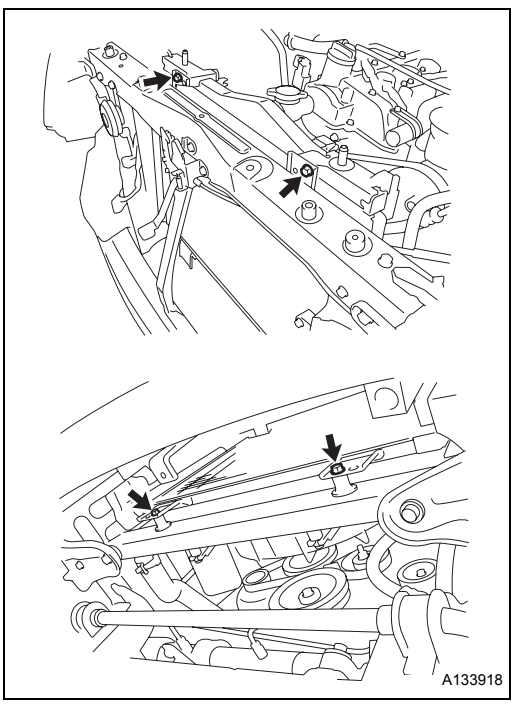

16. REMOVE CONDENSER ASSEMBLY (WITH RECEIVER)

(a) Remove the 4 bolts and disconnect the condenser assembly (with receiver).

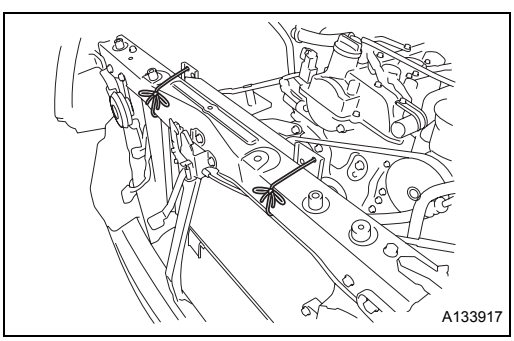

(b) Secure the condenser assembly (with receiver) to the radiator support upper with a string so that it does not fall.

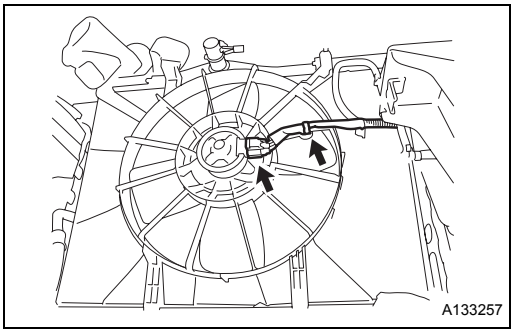

17. REMOVE RADIATOR ASSEMBLY

(a) Disconnect the cleaning fan motor connector and wire harness clamp.

(b) Remove the radiator assembly together with the with water fan assembly from the vehicle.

NOTICE:

When removing the radiator assembly, do not apply unreasonable force to the condenser assembly (with receiver) and the pipe.

18. REMOVE RADIATOR SUPPORT CUSHION

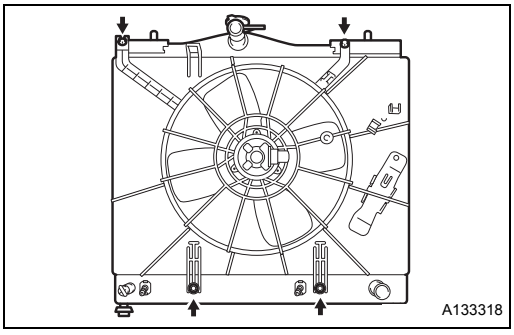

19. REMOVE WITH WATER FAN ASSEMBLY

(a) Remove the 4 bolts and the with water fan assembly.

20. REMOVE DRAIN COCK SUB-ASSEMBLY

(a) Remove the drain cock sub-assembly from the radiator assembly.

INSTALLATION

1. INSTALL DRAIN COCK SUB-ASSEMBLY

(a) Install the drain cock sub-assembly to the radiator assembly.

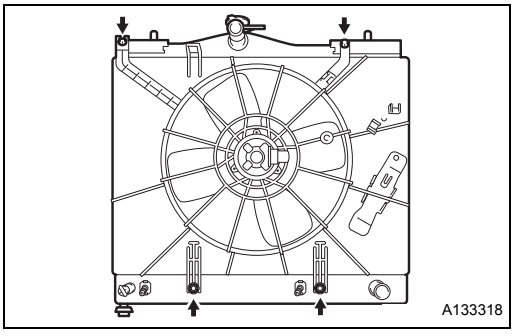

2. INSTALL WITH WATER FAN ASSEMBLY

(a) Install the floor shift assembly with the 4 bolts.

Torque: 7.5 N*m (76 kgf*cm)

3. INSTALL RADIATOR SUPPORT CUSHION

4. INSTALL RADIATOR ASSEMBLY

(a) Install the radiator assembly to the vehicle together with the cleaning fan assembly.

NOTICE:

Make sure the radiator assembly does not interfere with the cooler condenser assembly.

(b) Connect the cooling fan motor connector and the wire harness clamp.

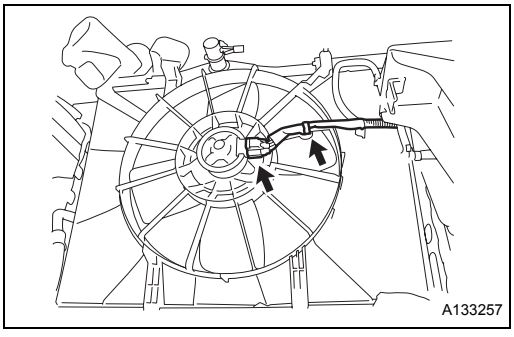

CO

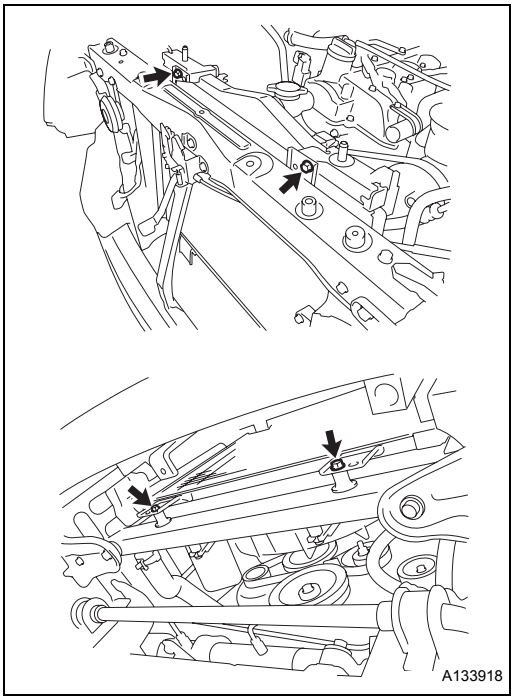

5. INSTALL CONDENSER ASSEMBLY (WITH RECEIVER)

(a) Install the condenser assembly (with receiver) with the 4 bolts.
Torque: 5.0 N*m (51 kgf*cm)

6. INSTALL RADIATOR SUPPORT UPPER

(a) Install the radiator support upper with the bolt.
Torque: 7.5 N*m (76 kgf*cm)

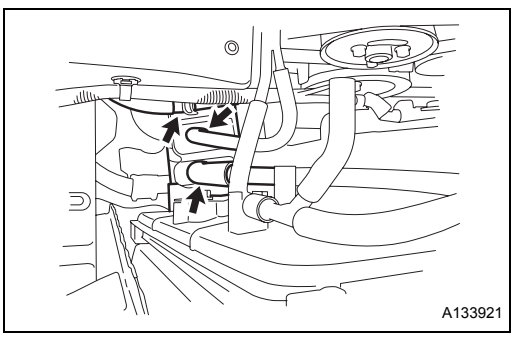

7. INSTALL CHARCOAL CANISTER ASSEMBLY

(a) Install the 3 hoses.

(b) Install the charcoal canister assembly to the bracket.

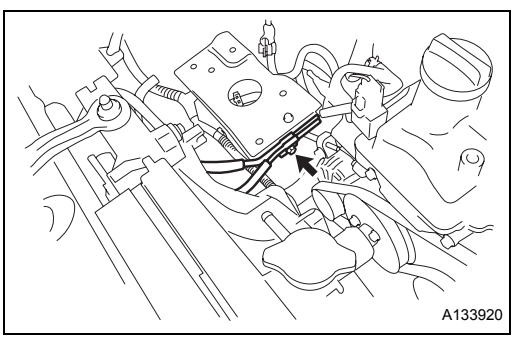

(c) Install the charcoal canister pipe No. 1 with the bolt.
Torque: 7.5 N*m (76 kgf*cm)

8. INSTALL RADIATOR HOSE NO. 1

(a) Install radiator hose No. 1 and fix it with the clamp.

9. INSTALL RADIATOR RESERVE TANK ASSEMBLY

(a) Install the radiator reserve tank assembly with the bolt.
Torque: 7.5 N*m (76 kgf*cm)

(b) Install the radiator reserve tank assembly hose.

10. CONNECT OIL COOLER OUTLET HOSE NO. 1 (AUTOMATIC TRANSMISSION)

(a) Install oil cooler outlet hose No. 1 and fix it with the clamp.

11. CONNECT OIL COOLER INLET HOSE NO. 1 (AUTOMATIC TRANSMISSION)

(a) Install oil cooler inlet hose No. 1 and fix it with the clamp.

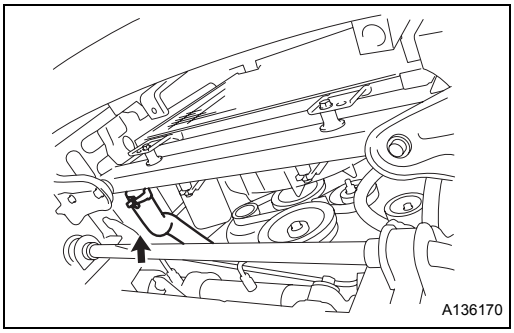

12. CONNECT RADIATOR HOSE NO. 2

(a) Install radiator hose No. 2 and fix it with the clamp.

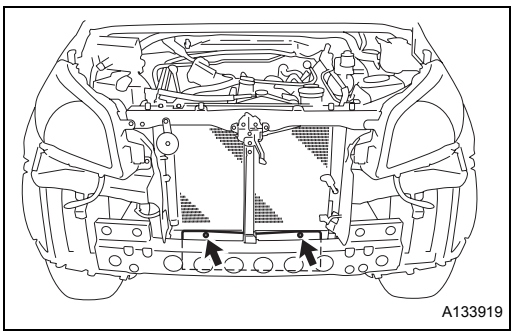

13. INSTALL SEAL PLATE

(a) Install the seal plate with the 2 clips.

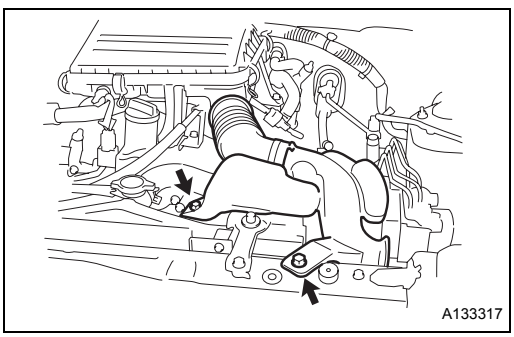

14. INSTALL AIR CLEANER HOSE NO. 1

(a) Install the air cleaner hose No. 1 with the 2 bolts.
Torque: 7.5 N*m (76 kgf*cm)

15. INSTALL ENGINE UNDER COVER

(a) Install the engine under cover with the 11 bolts.
Torque: 5.4 N*m (55 kgf*cm)

16. INSTALL FRONT BUMPER COVER (See page ET-5)

17. INSTALL FOG LIGHT ASSEMBLY LH (WITH FOG LIGHT) (See page LI-34)

18. INSTALL FOG LIGHT ASSEMBLY RH (WITH FOG LIGHT)

19. CONNECT NEGATIVE BATTERY TERMINAL
Torque: 5.4 N*m (55 kgf*cm)

20. REFILL ENGINE COOLANT (See page CO-11)

21. CHECK FOR ENGINE COOLANT LEAKS (See page CO-12)

22. CHECK COOLANT LEVEL (See page CO-12)