FUEL TANK ASSEMBLY (3SZ-VE)

COMPONENTS

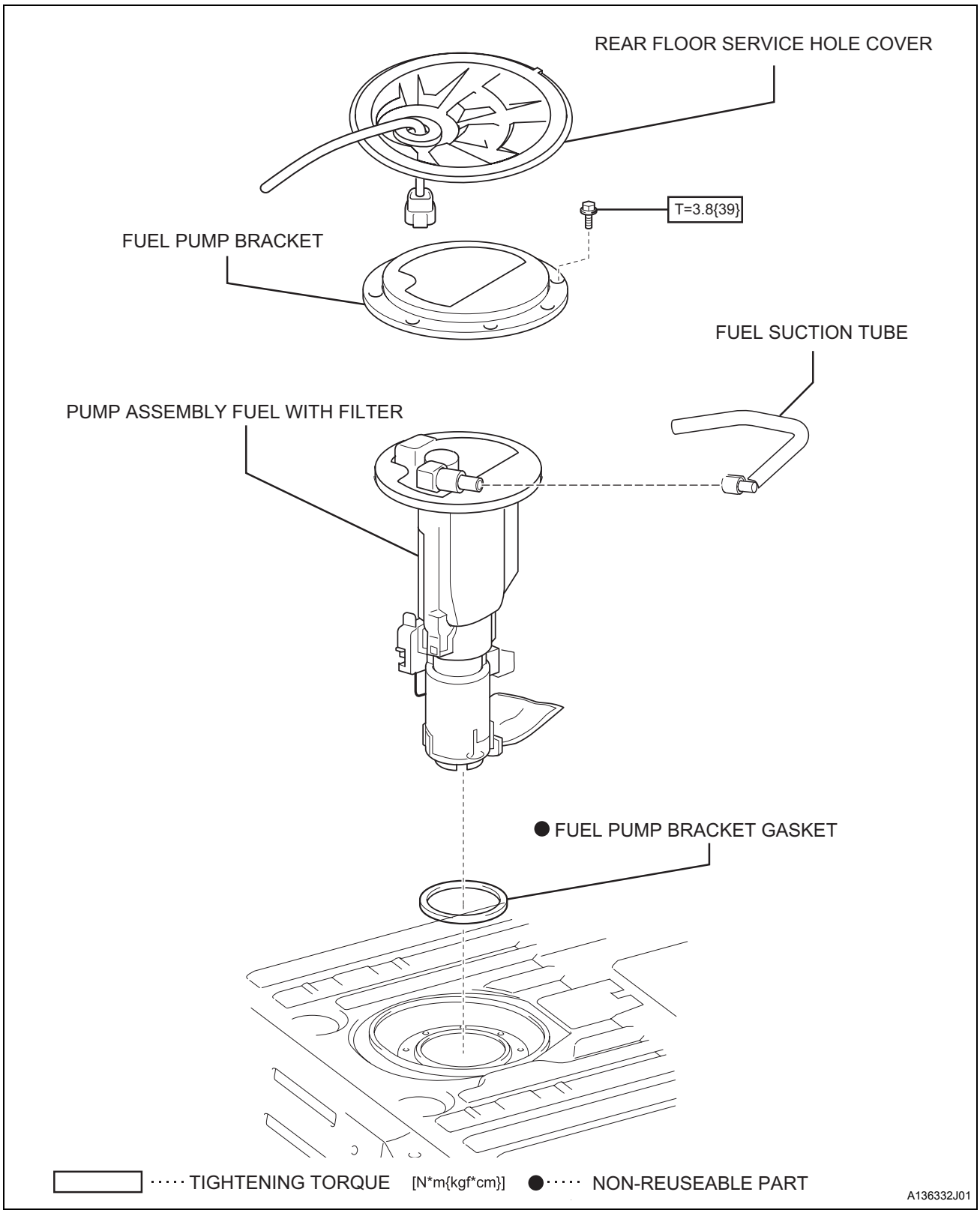

FU

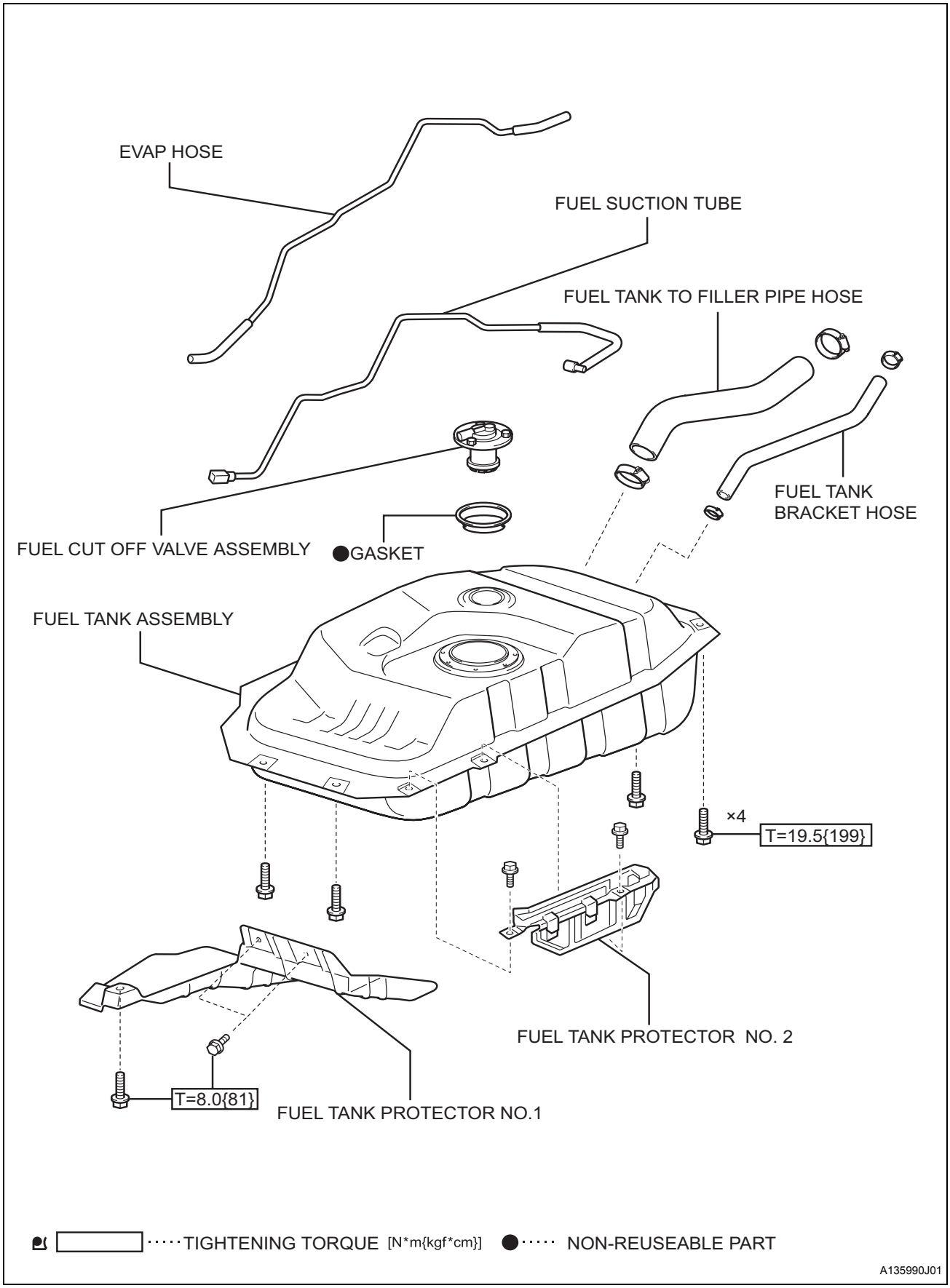
EVAP HOSE
FUEL SUCTION TUBE
FUEL TANK TO FILLER PIPE HOSE
FUEL TANK BRACKET HOSE
FUEL CUT OFF VALVE ASSEMBLY
●GASKET
FUEL TANK ASSEMBLY
×4
T=19.5{199}
FUEL TANK PROTECTOR NO. 2
T=8.0{81}
FUEL TANK PROTECTOR NO.1
TIGHTENING TORQUE [N*m{kgf*cm}]
● NON-REUSEABLE PART
A135990J01

FU

REMOVAL

1. **DISCHARGE FUEL SYSTEM PRESSURE (See page EM - 146)**
2. **DISCONNECT NEGATIVE BATTERY TERMINAL (See page** RS - 164**.)**
3. **REMOVE REAR FLOOR SERVICE HOLE COVER (See page FU - 21)**
4. **DISCONNECT FUEL SUCTION TUBE (See page FU - 21)**
5. **REMOVE PUMP ASSEMBLY FUEL WITH FILTER (See page FU - 22)**
6. **DRAIN FUEL**
7. **REMOVE FUEL TANK PROTECTOR NO. 1**
   (a) Remove the 3 bolts and the fuel tank protector No. 1.

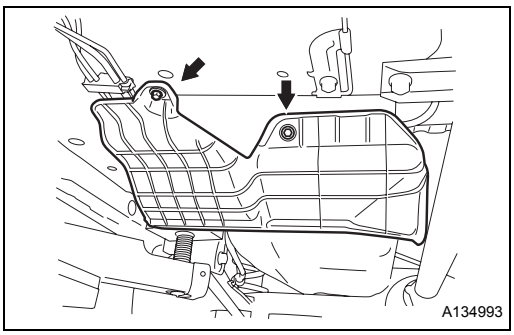

8. **DISCONNECT FUEL TANK BRACKET HOSE**
   (a) Disconnect the fuel tank bracket hose from the fuel tank.

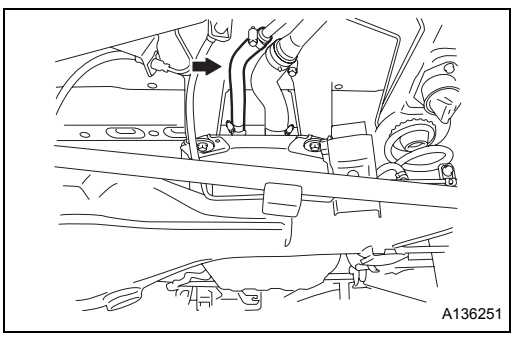

9. **DISCONNECT FUEL TANK TO FILLER PIPE HOSE**
   (a) Disconnect the fuel tank to filler pipe hose from the fuel tank.

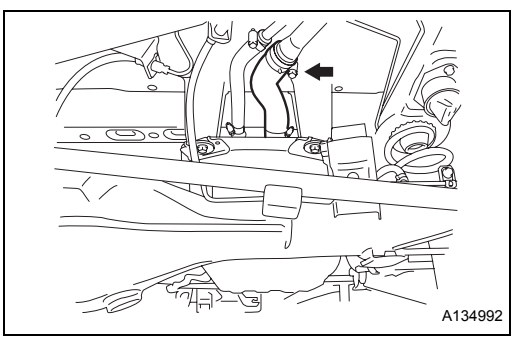

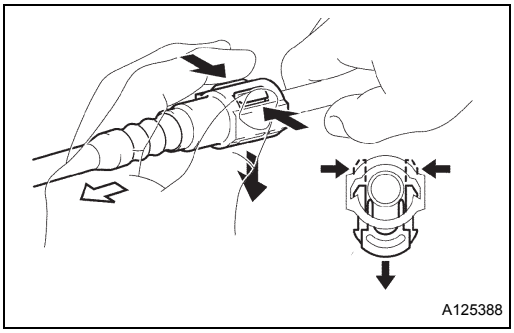

10. DISCONNECT FUEL SUCTION TUBE

(a) Release the lock as shown in the illustration, then pull out the fuel suction tube.

NOTICE:

- **Remove any dirt and foreign matter on the clip part before performing this work.**
- **As the quick connector seals the pipe and connector by the O-ring, make sure there is no damage to or foreign matter on the connection part when performing this work.**
- **Always install and remove by hand. Never use tools.**
- **Do not forcibly bend, fold or rotate the nylon tube.**
- **After disconnecting, protect the connected part by covering it with a plastic bag or similar.**
- **If the connector and the pipe are stuck, rotate the nylon tube by hand to release, then pull out and disconnect the nylon tube.**

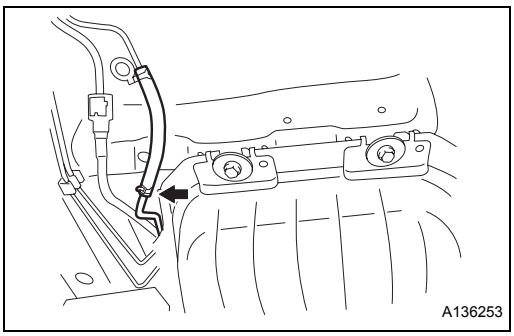

11. DISCONNECT EVAPORATOR HOSE

(a) Loosen the clip, then disconnect the evaporator hose.

NOTICE:

- **Remove any dirt and foreign matter on the clip part before performing this work.**
- **Always install and remove by hand. Never use tools.**
- **After disconnecting, protect the connected part by covering it with a plastic bag or similar.**

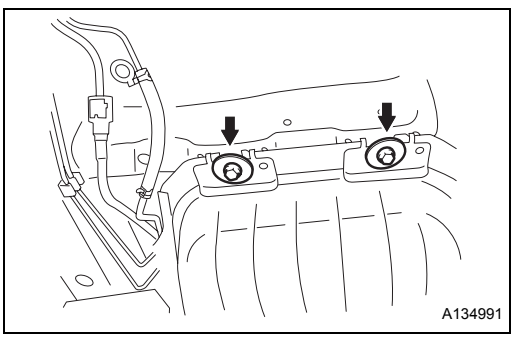

12. REMOVE FUEL TANK ASSEMBLY

(a) Remove the 2 front bolts.

(b) Remove the 2 bolts, and disconnect the fuel tank assembly.

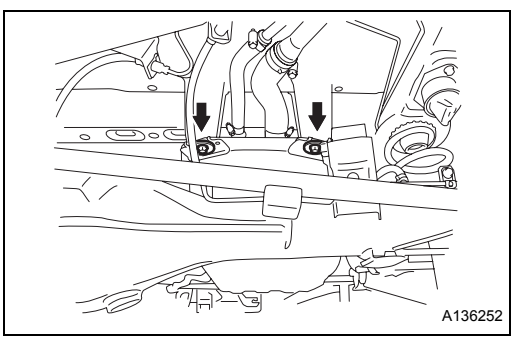

13. REMOVE FUEL TANK PROTECTOR NO. 2

(a) Remove the 2 bolts and the fuel tank protector No. 2.

14. REMOVE FUEL CUT-OFF VALVE ASSEMBLY

(a) Remove the fuel cut-off valve assembly, then remove the gasket.

INSTALLATION

1. INSTALL FUEL CUT-OFF VALVE ASSEMBLY

(a) Install the fuel cut-off valve assembly using the gasket.

NOTICE:

- **Press the fuel cut-off valve assembly firmly in until there is no gap between the upper face of the gasket and the face of the cut off flange.**

- **Do not deform the tank.**

2. INSTALL FUEL TANK PROTECTOR NO. 2

(a) Install fuel tank protector No. 2 with the 2 bolts.

3. INSTALL FUEL TANK ASSEMBLY

(a) Clean and degrease the bolt hole.

(b) Install the fuel tank assembly with the 4 bolts.

Torque: 19.5 N*m (199 kgf*cm)

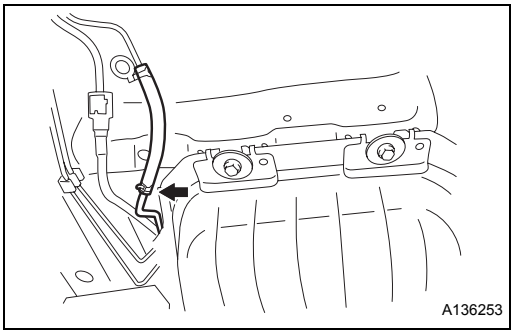

4. CONNECT EVAPORATOR HOSE

(a) Connect the hose with the clip.

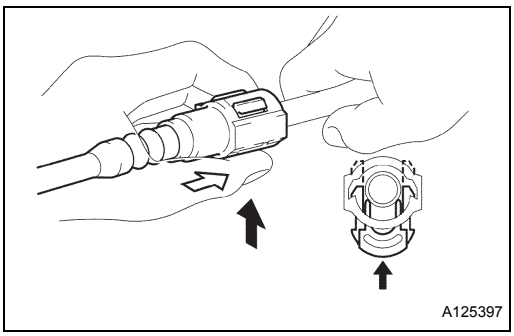

5. CONNECT FUEL SUCTION TUBE

(a) Match the axis of the fuel suction tube with the axis of the pipe, push in the fuel suction tube and push up the retainer.

NOTICE:

- **Before proceeding, check that there is no damage to or foreign matter on the connections of the pipe or the connector.**
- **After connecting the fuel pump tube, pull the fuel tube connector and fuel pump tube to check they are securely installed.**

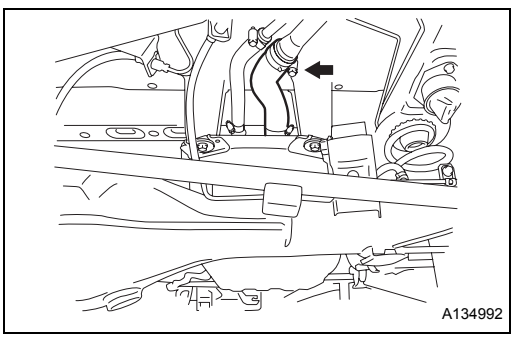

6. CONNECT FUEL TANK TO FILLER PIPE HOSE

(a) Connect the fuel tank to filler pipe hose to the fuel tank.

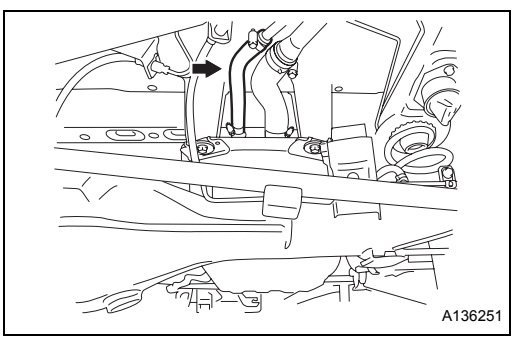

7. CONNECT FUEL TANK BRACKET HOSE

(a) Connect the fuel tank bracket hose to the fuel tank.

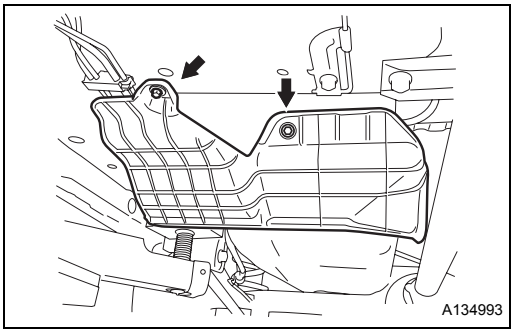

8. INSTALL FUEL TANK PROTECTOR NO. 1

(a) Install fuel tank protector No. 1 with the 3 bolts.

9. INSTALL PUMP ASSEMBLY FUEL WITH FILTER (See page FU - 23)

10. CONNECT FUEL SUCTION TUBE (See page FU - 23)

11. INSTALL REAR FLOOR SERVICE HOLE COVER (See page FU - 24)

12. CONNECT BATTERY NEGATIVE TERMINAL

Torque: 5.4 N*m (55 kgf*cm)

13. REFILL FUEL

14. CHECK FOR FUEL LEAKS

(a) Check the fuel pump operation.

(1) Connect the DS-II to the DLC.

(2) Follow the prompts on the screen and check the fuel pump operation.

(b) Check for fuel leaks.

(1) Check that there are no leaks in the fuel system when fuel pressure is applied.