FUEL INJECTOR ASSEMBLY (K3-VE)

COMPONENTS

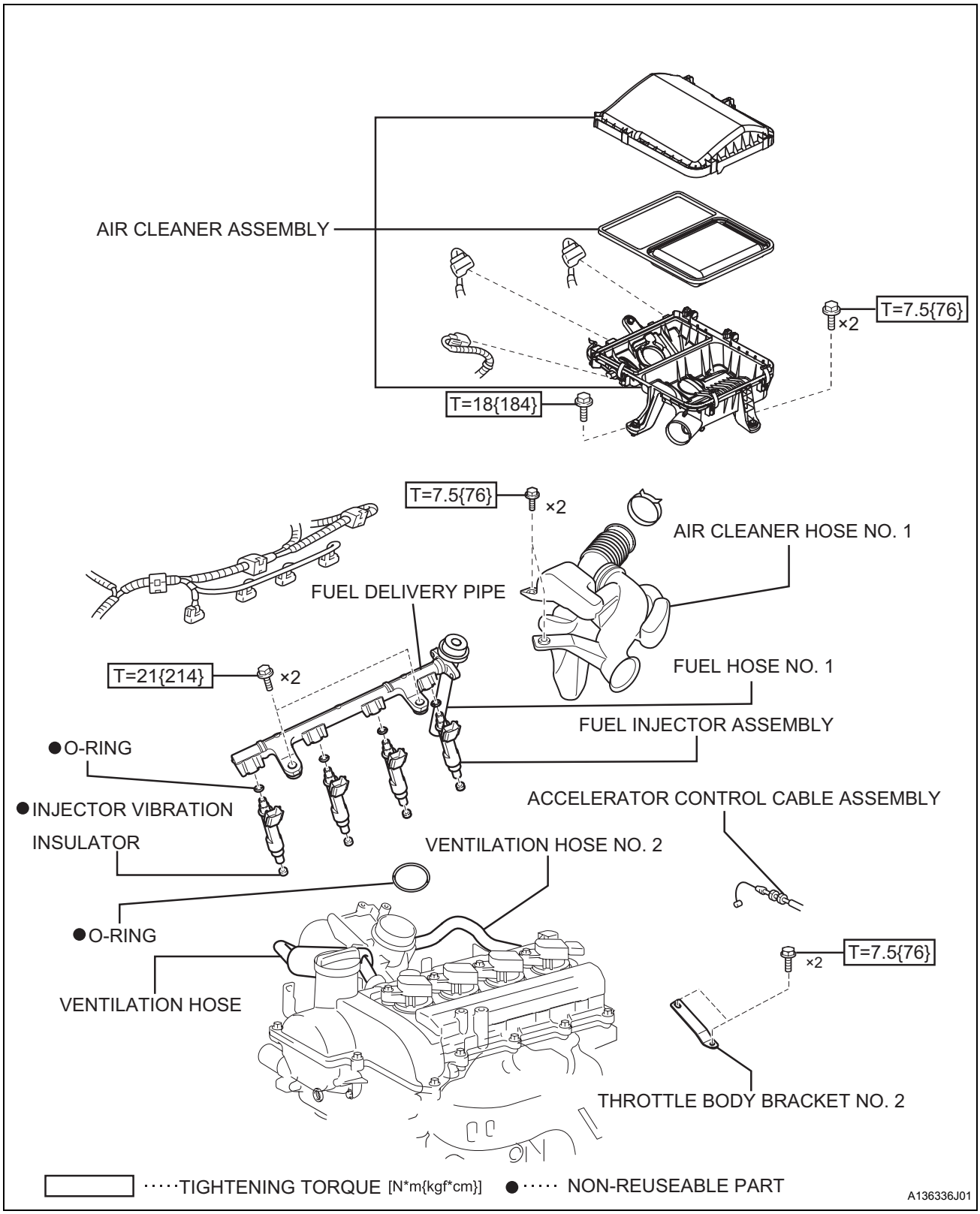

FU

REMOVAL

1. **DISCHARGE FUEL SYSTEM PRESSURE (See page EM - 173)**
2. **DISCONNECT NEGATIVE BATTERY TERMINAL**
   (See page RS - 164)
3. **REMOVE AIR CLEANER HOSE NO. 1 (See page CO - 22)**
4. **REMOVE AIR CLEANER ASSEMBLY (See page EM - 173)**
5. **REMOVE ACCELERATOR CONTROL CABLE ASSEMBLY (See page EM - 175)**
6. **REMOVE VENTILATION HOSE**
   (a) Loosen the clip and remove the ventilation hose.

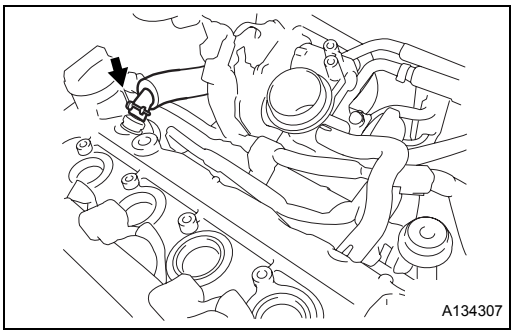

7. **REMOVE VENTILATION HOSE NO. 2**
   (a) Remove ventilation hose No. 2.
8. **DISCONNECT FUEL HOSE NO. 1**
   (a) Loosen the clip, then disconnect fuel hose No. 1.

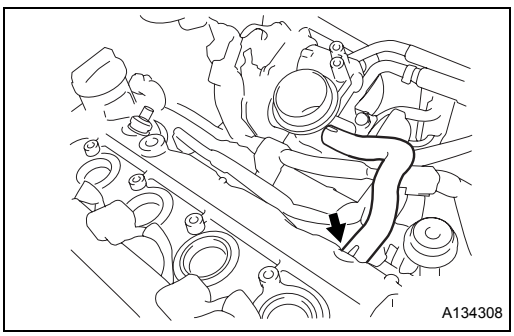

9. **REMOVE FUEL DELIVERY PIPE**
   (a) Remove the 2 bolts and the bracket.
   (b) Disconnect the connector.
   (c) Remove the clamp and disconnect fuel hose No. 1 from the pipe.
   (d) Protect the connections of the fuel hose and the pipe with a plastic bag to prevent any foreign matter from entering them.

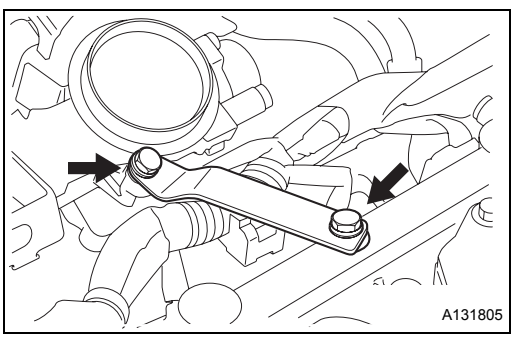

   (e) Remove the 2 bolts, then remove the fuel delivery pipe with the fuel injector assembly.
   NOTICE:
   Do not drop the fuel injector assembly.

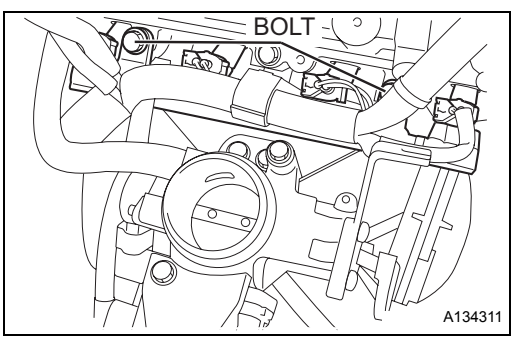

10. **REMOVE FUEL INJECTOR ASSEMBLY**
    (a) Remove the fuel injector assembly from the delivery pipe.
    NOTICE:
    - **The O-ring may be stuck, but even if it is, do not apply sideways force to the injector.**

- **If re-installing the injector instead of replacing it with a new one, note the cylinder number on a tag or similar to identify it.**

(b) Remove the O-rings.
(c) Remove the insulator.

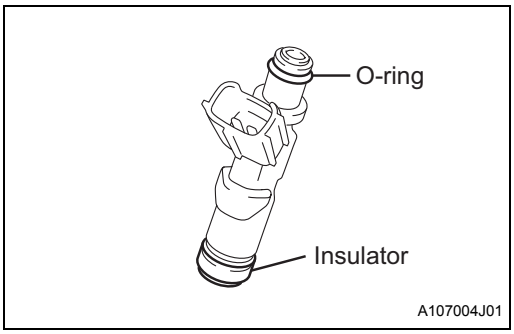

INSTALLATION

1. INSTALL FUEL INJECTOR ASSEMBLY

(a) Install a new insulator.
(b) Apply gasoline to the new fuel injector assembly O-ring.

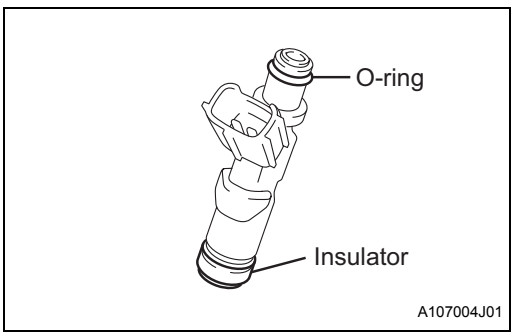

(c) Install the fuel delivery pipe while rotating the fuel injector assembly to the left and right.
NOTICE:
- **Take care that the O-ring does not get twisted.**
- **After installing the fuel injector assembly to the fuel delivery pipe, check that it can be rotated relatively lightly. If it cannot be rotated, replace the O-ring with a new one and re-install it.**

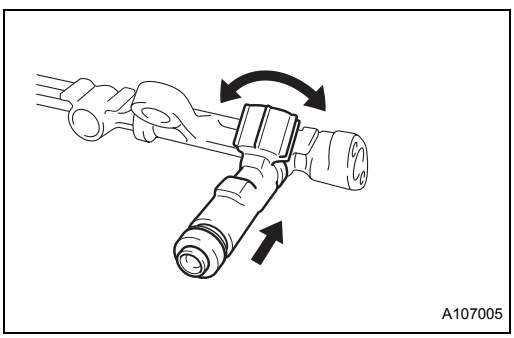

2. INSTALL FUEL DELIVERY PIPE

(a) Install the fuel delivery pipe with the 2 bolts.
Torque: 21 N*m (214 kgf*cm)
NOTICE:
- **Do not drop the fuel injector assembly when installing the fuel delivery pipe.**
- **If the tips of the fuel injector assembly are hit or dropped, replace it with a new one.**
- **Make sure there is no foreign matter in or damage to the insertion part of the fuel injector assembly (cylinder head).**
- **After installing the fuel delivery pipe, rotate the fuel injector assembly by hand to check that it is correctly and securely installed.If it does not rotate smoothly, reinstall it with a new O-ring.**

(b) Connect the connector.

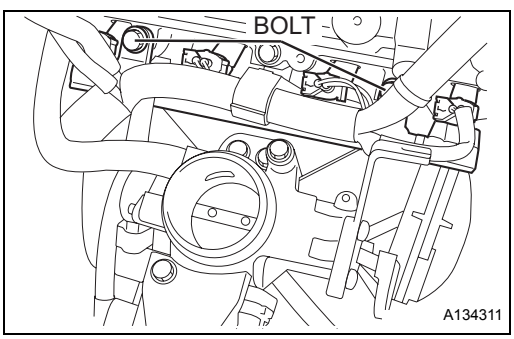

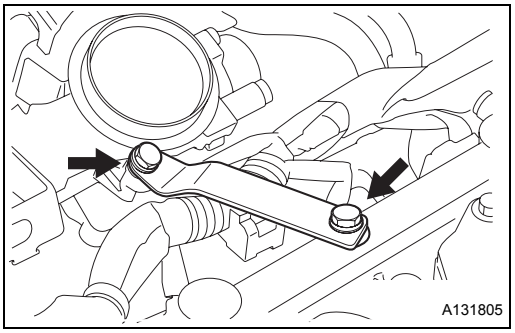

(c) Install the bracket with the 2 bolts.
Torque: 7.5 N*m (76 kgf*cm)

3. CONNECT FUEL HOSE NO. 1

(a) Connect fuel hose No. 1.
NOTICE:
- **Before proceeding, check that there is no damage to or foreign matter on the connection of the pipe or the hose.**

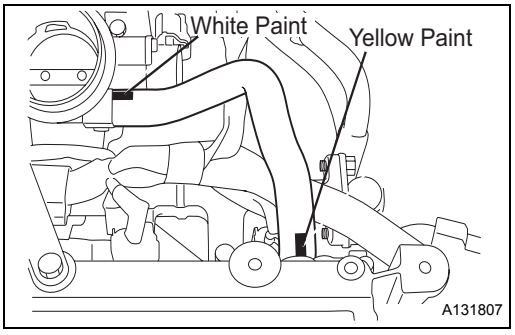

4. INSTALL VENTILATION HOSE NO. 2

(a) Install ventilation hose No. 2.

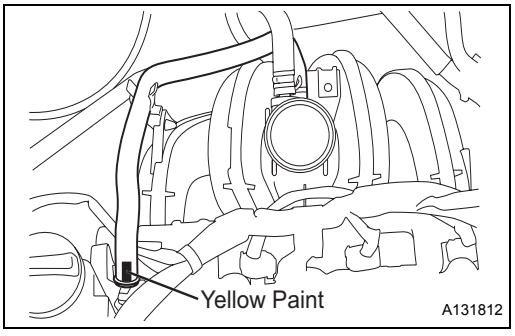

5. INSTALL VENTILATION HOSE

(a) Install the ventilation hose.

6. CONNECT ACCELERATOR CONTROL CABLE ASSEMBLY (See page EM - 193)

7. INSTALL AIR CLEANER ASSEMBLY (See page EM - 194)

8. INSTALL AIR CLEANER HOSE NO. 1 (See page CO - 26)

9. CONNECT NEGATIVE BATTERY TERMINAL
Torque: 5.4 N*m (55 kgf*cm)

10. CHECK FOR FUEL LEAKS (See page FU - 42)

INSPECTION

1. INSPECT FUEL INJECTOR ASSEMBLY

(a) Check the resistance.

(1) Using the tester, measure the resistance between the injector terminals.
Reference value:
12 Ω (20°C)
HINT:
If the measured resistance is not as specified, replace the terminals with known-good ones.

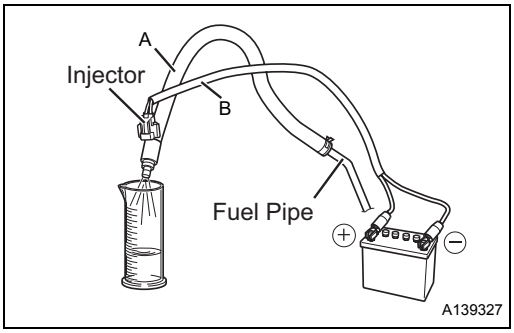

(b) Check the injection volume.

NOTICE:

Perform the test in a well-ventilated area and watch out for flames.

(1) Connect the SST (injection measuring tool set) to the fuel pipe (vehicle side).

SST 09843-97201, 09268-41047

(2) Set the injector to a graduated cylinder.

HINT:

Attach a suitable size of plastic tube or similar to prevent the fuel from splashing.

(3) Connect the DS-II to the DLC, then operate the fuel pump.

(4) Connect the injector to the SST (EFI inspection wire).

SST 09843-97201

(5) Connect the SST to the battery, then perform fuel injection (for 15 seconds) 2 or 3 times and calculate the average.

Standard

Injection Volume	Difference between Injectors
46 to 59 ml	13 ml or less

NOTICE:

Always switch at the battery terminal side.

HINT:

If the value is not within the standard range, replace with known-good parts.

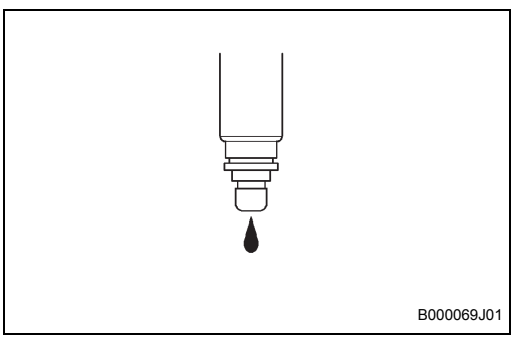

(c) Check for leaks.

(1) Check that there are no leaks from the fuel injector assembly when the SST is removed from the battery under the same conditions as above.

Standard:

1 drop or less per 12 minutes

FU