FUEL SYSTEM (K3-VE)

FU

PRECAUTIONS

1. PRECAUTIONS

(a) Disconnect the negative terminal from the battery before performing work on the fuel system.

(b) Do not smoke or work near an open flame when working on the fuel system.

(c) Keep rubber or leather parts away from gasoline.

2. DISCHARGE FUEL SYSTEM PRESSURE

NOTICE:

- **Always discharge fuel system pressure before removing any fuel system components.**
- **As some pressure will remain in the fuel line even after the fuel system pressure has been discharged, cover the opening with a shop rag or similar to prevent fuel from splashing.**

(a) Turn the ignition switch to the LOCK position.

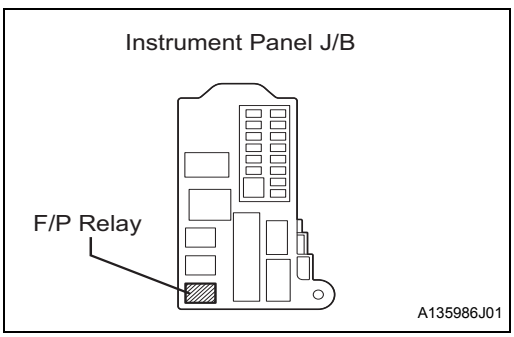

(b) Remove the F/P relay.

(c) After the engine has stopped on its own, turn the ignition switch off.

HINT:

DTC P0171/25 lean malfunction may be detected.

(d) Crank the engine again, then check that the engine does not start.

(e) Remove the fuel tank cap to discharge pressure from the fuel tank.

(f) Disconnect the negative terminal from the battery.

(g) Install the F/P relay.

3. FUEL SYSTEM

(a) Follow the procedures listed below as a large amount of gasoline will splash when the fuel line is removed.

(1) Discharge fuel system pressure.

(2) Remove the fuel tube retaining clips.

(3) Remove the fuel tube.

(4) Remove the fuel remaining in the fuel tube.

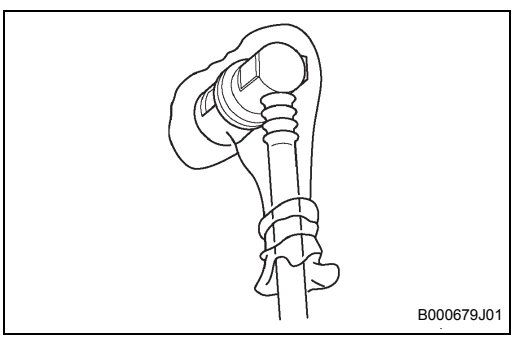

(5) Cover the fuel tube that was removed with a plastic bag to prevent it from being damaged and to prevent foreign matter from entering it.

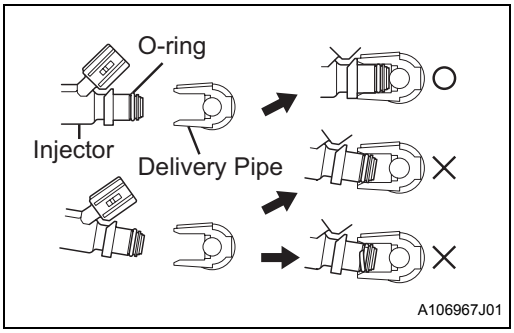

(b) Observe these precautions when removing and installing injectors.
(1) Never reuse an O-ring.
(2) When placing a new O-ring on the injector, do not damage it.
(3) Before installing new O-rings, apply spindle oil or gasoline to them. Do not use engine oil, gear oil or brake oil.

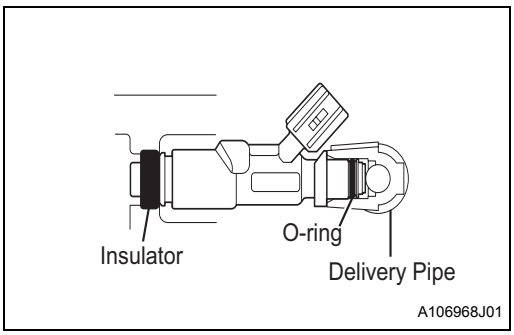

(c) Install the injector to the delivery pipe and the cylinder head as shown in the illustration. Before installing the injector, always apply gasoline or spindle oil to the parts on the injector O-ring that the delivery pipe will touch.

(d) Observe these precautions when removing the fuel tube connector.
(1) Before disconnecting the fuel tube connector, check that there is no mud or other dirt on the fuel tube connector and pipe. Clean if necessary.

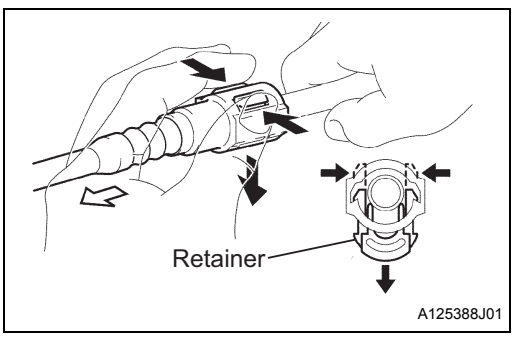

(2) Disengage and push down the 2 fuel tube connector retainer claws, then disconnect the fuel tube connector from the pipe.
NOTICE:
Never use tools for this procedure.

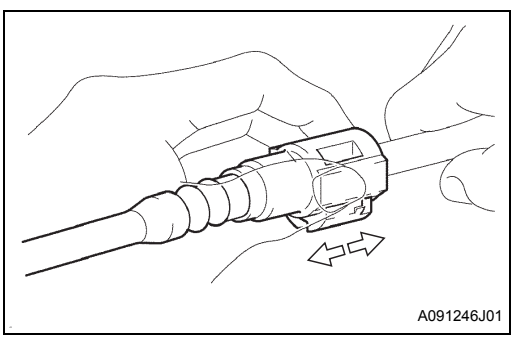

(3) If the fuel tube connector and pipe are stuck, pinch the pipe, then push and pull the fuel tube connector to release and disconnect the fuel tube connector.
NOTICE:
Never use tools for this procedure.
(4) After disconnecting the fuel tube, check that there is no mud or other dirt on the pipe seal surface. Clean if necessary.

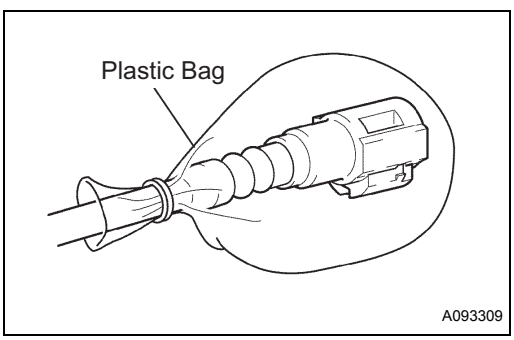

(5) Protect the disconnected fuel tube connector and pipe with a plastic bag.
NOTICE:
Do not damage the fuel tube connector and pipe or allow any foreign matter to get into the pipe.

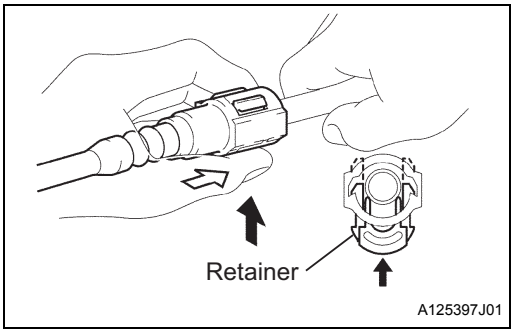

(e) Observe these precautions when connecting the fuel tube connector.
(1) Match the axis of the fuel tube connector with the axis of the pipe, push in the fuel tube connector and push up the retainer.

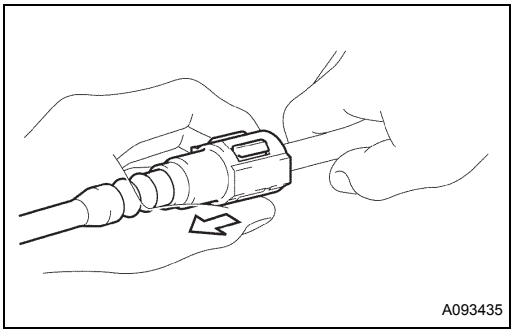

(2) After connecting the fuel tube connector, check that the fuel tube connector and pipe are securely connected by pulling them.

FU

4. CHECK FOR FUEL LEAKS

(a) Always check that there are no fuel leaks after repairing the fuel system.

OPERATION CHECK

1. CHECK FUEL PRESSURE

(a) Discharge fuel system pressure.
See page FU-5.

(b) Disengage the fuel tube clamp and disconnect the fuel tube (fuel tube connector).
See page FU-5.

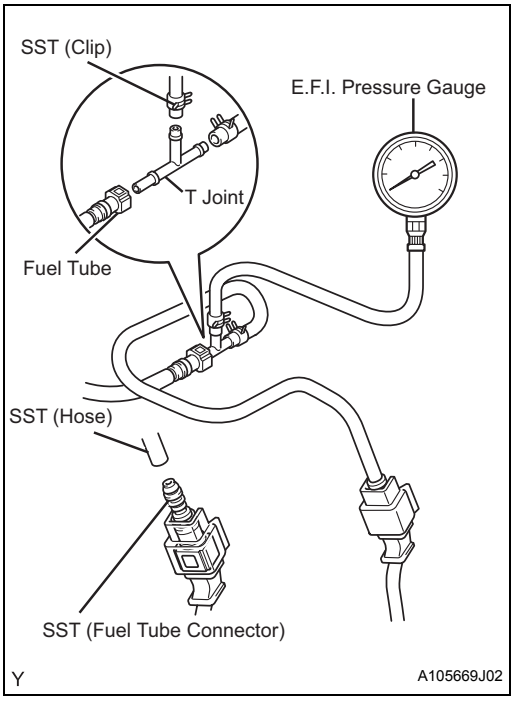

(c) Assemble the SST and gauge.
SST 09268-41047

(d) Wipe off any spilled gasoline.

(e) Start up the engine.

(f) Measure the fuel pressure at idle.
Standard:
304 to 343 kPa (3.1 to 3.5 kgf/cm^2)

(g) Stop the engine.

(h) After stopping the engine, check that the fuel pressure does not change for 5 minutes.
Standard:
147 kPa (1.5 kgf/cm^2) or more
HINT:
If the fuel pressure is not as specified, check the fuel pump, the fuel pressure regulator or the injector.

(i) After measuring the pressure, take care to prevent gasoline from splashing while removing the SST and the fuel tube connector.

(j) Connect the fuel tube (fuel tube connector).

(k) Install fuel pipe clamp No. 1.

2. CHECK FUEL PUMP OPERATION AND FOR FUEL LEAKS

(a) Check the fuel pump operation.
(1) Connect the DS-II to the DLC.
(2) Follow the prompts on the screen to select ACTIVE TEST / FUEL PUMP / ON and check the fuel pump operation.

(b) Check for fuel leaks.
(1) Check that there are no leaks in the fuel system when fuel pressure is applied.
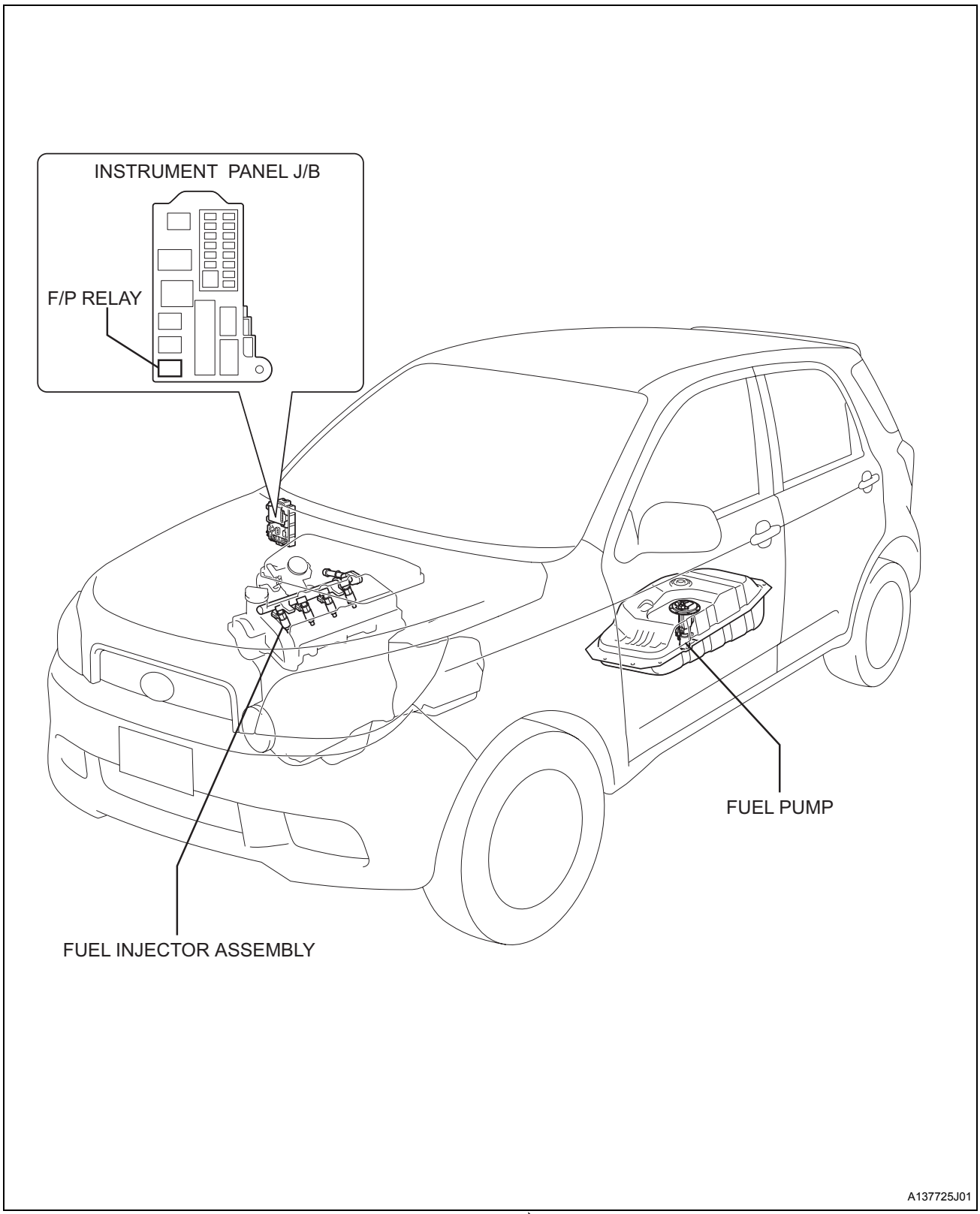
LOCATION