TIMING CHAIN (BELT) COVER OIL SEAL (K3-VE)

COMPONENTS

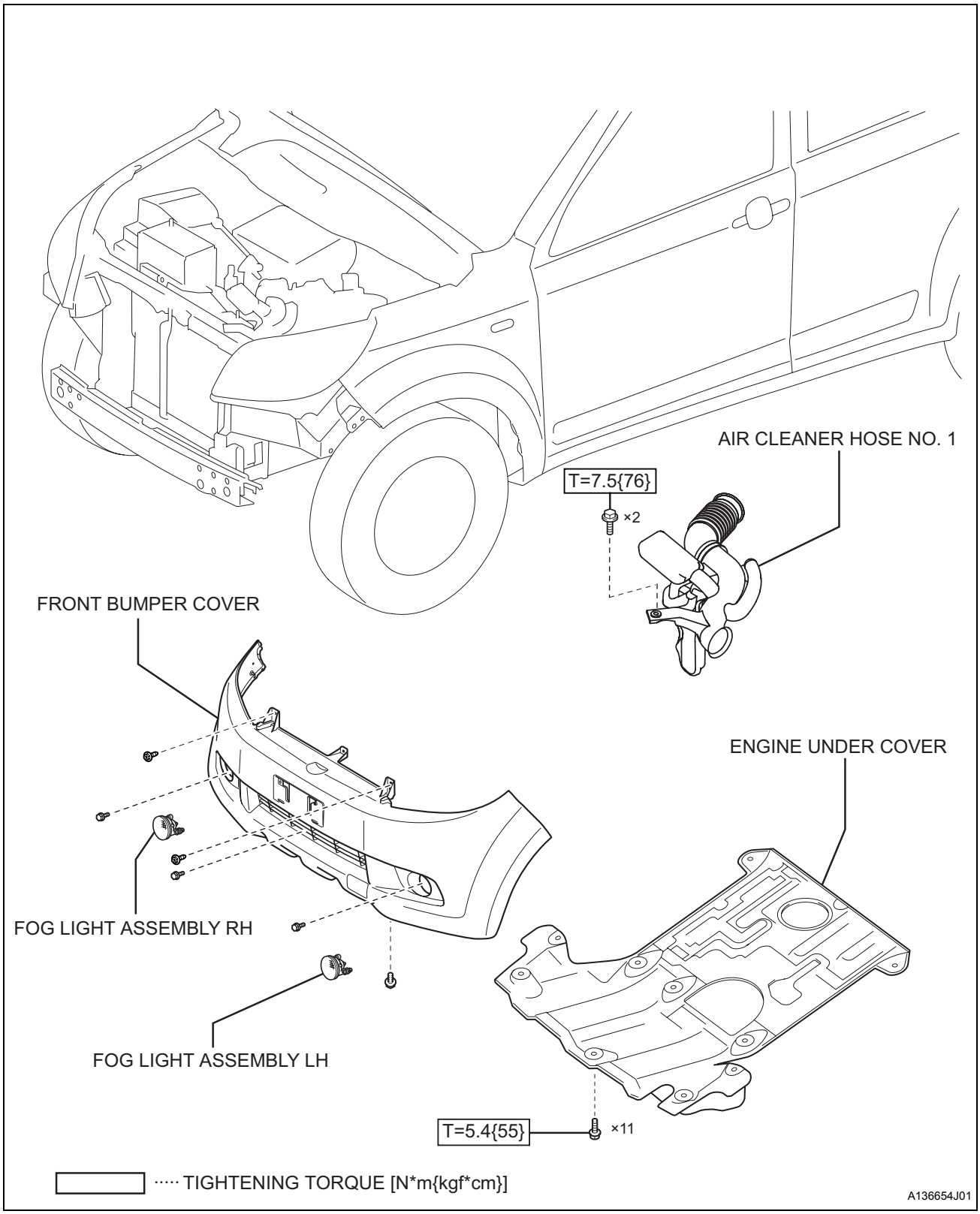

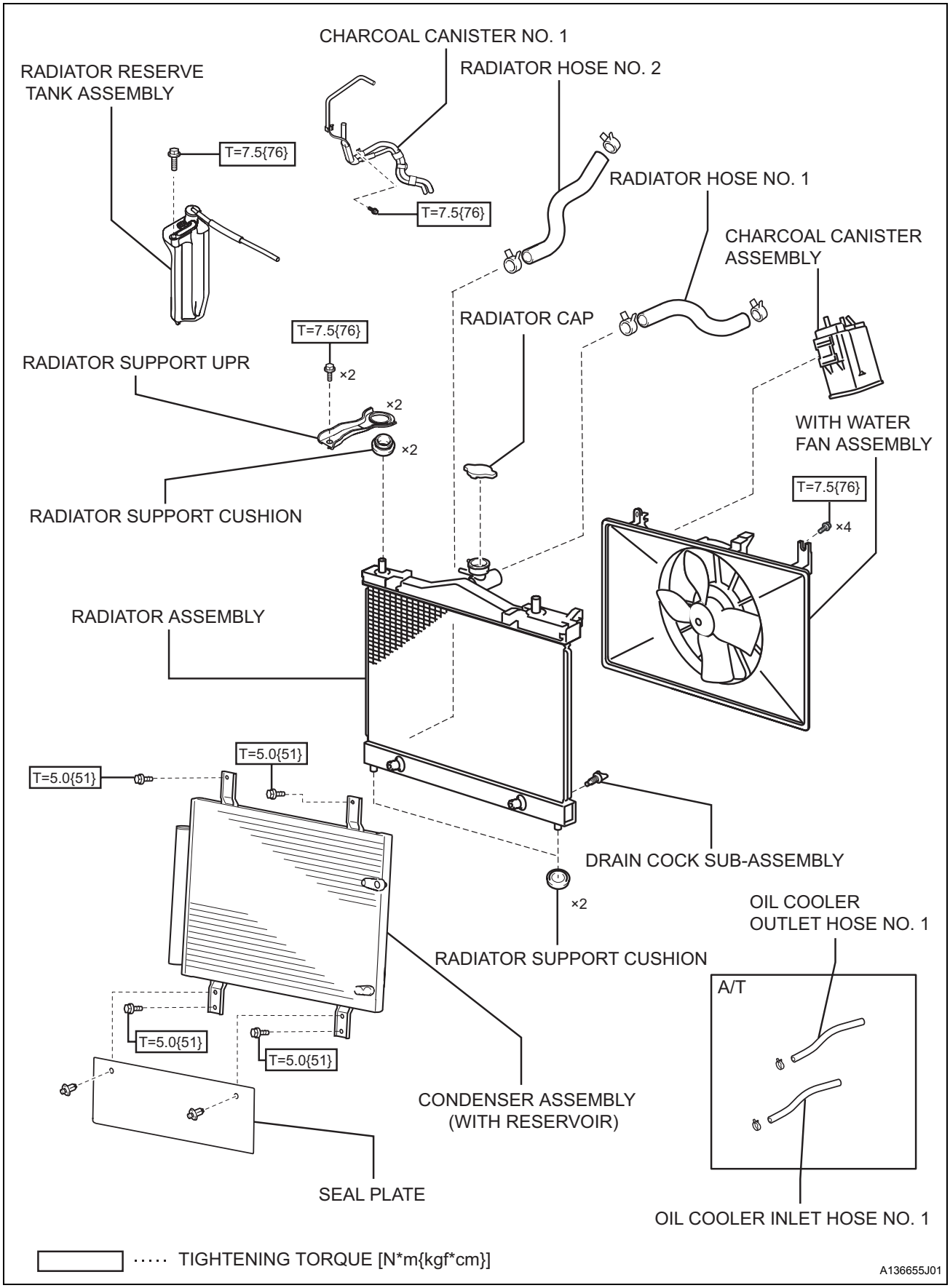
CHARCOAL CANISTER NO. 1
RADIATOR RESERVE TANK ASSEMBLY
RADIATOR HOSE NO. 2
T=7.5{76}
T=7.5{76}
RADIATOR HOSE NO. 1
CHARCOAL CANISTER ASSEMBLY
RADIATOR CAP
T=7.5{76}
×2
RADIATOR SUPPORT UPR
×2
×2
WITH WATER FAN ASSEMBLY
RADIATOR SUPPORT CUSHION
T=7.5{76}
×4
RADIATOR ASSEMBLY
T=5.0{51}
T=5.0{51}
DRAIN COCK SUB-ASSEMBLY
×2
OIL COOLER OUTLET HOSE NO. 1
RADIATOR SUPPORT CUSHION
A/T
T=5.0{51}
T=5.0{51}
CONDENSER ASSEMBLY (WITH RESERVOIR)
SEAL PLATE
OIL COOLER INLET HOSE NO. 1
TIGHTENING TORQUE [N*m{kgf*cm}]
A136655J01

EM

EM

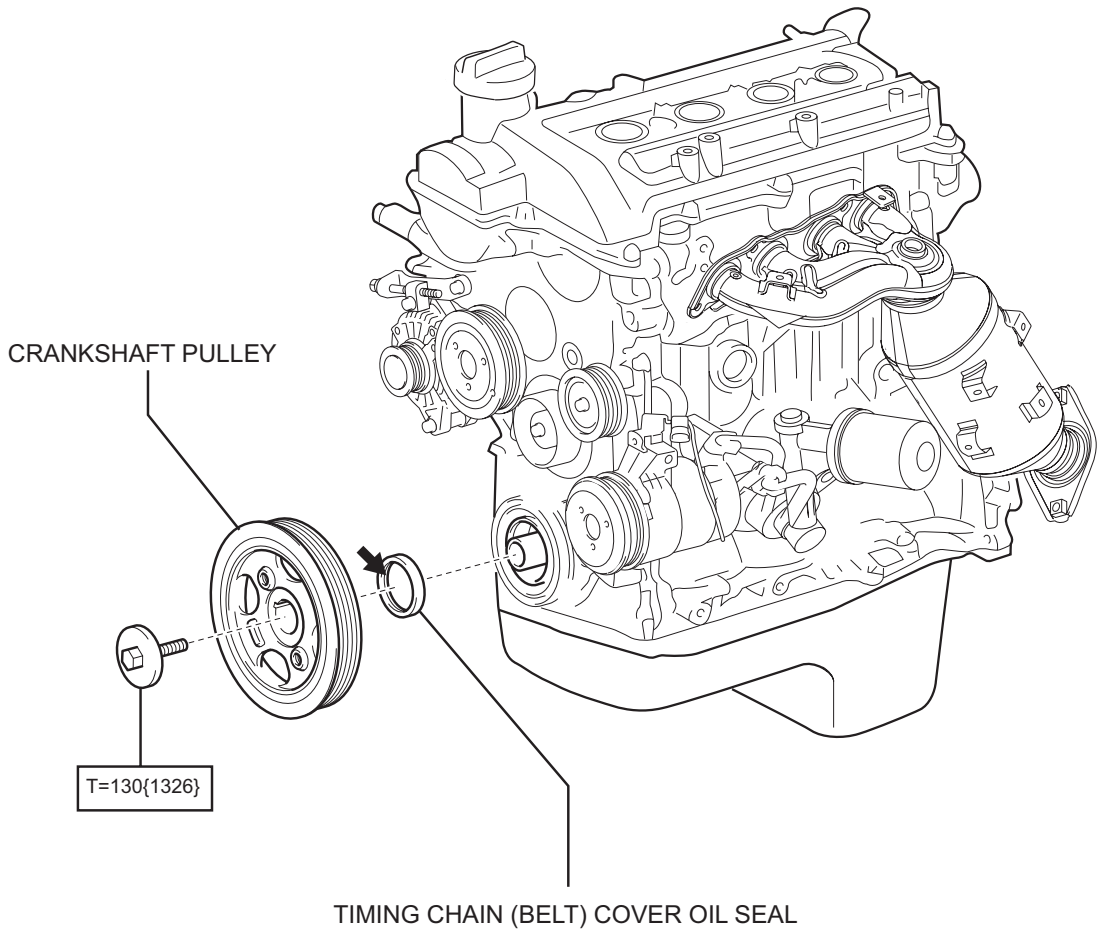

APPLY MP GREASE

TIGHTENING TORQUE [N*m{kgf*cm}]

A137089J02

REMOVAL

1. **DISCONNECT NEGATIVE BATTERY TERMINAL**
   (See page RS-164.)
2. **REMOVE ENGINE UNDER COVER**
3. **DRAIN ENGINE COOLANT (See page CO-11)**
4. **REMOVE FOG LIGHT ASSEMBLY LH (See page LI-33)**
5. **REMOVE FOG LIGHT ASSEMBLY RH**
6. **REMOVE FRONT BUMPER COVER (See page ET-2)**
7. **REMOVE AIR CLEANER HOSE NO. 1 (See page CO-22)**
8. **REMOVE SEAL PLATE (See page AC-57)**
9. **REMOVE RADIATOR HOSE NO. 2 (See page CO-22)**
10. **DISCONNECT OIL COOLER INLET HOSE NO. 1 (AUTOMATIC TRANSMISSION) (See page CO-22)**
11. **DISCONNECT OIL COOLER OUTLET HOSE NO. 1 (AUTOMATIC TRANSMISSION) (See page CO-22)**
12. **REMOVE RADIATOR RESERVE TANK ASSEMBLY (See page CO-22)**
13. **REMOVE RADIATOR HOSE NO. 1 (See page CO-22)**
14. **REMOVE CHARCOAL CANISTER ASSEMBLY (See page CO-23)**
15. **REMOVE RADIATOR SUPPORT UPPER (See page CO-23)**
16. **DISCONNECT CONDENSER ASSEMBLY (WITH RECEIVER) (See page CO-23)**
17. **REMOVE RADIATOR ASSEMBLY (See page CO-24)**
18. **REMOVE FAN AND ALTERNATOR V BELT (See page EM-12)**
19. **REMOVE CRANKSHAFT PULLEY**
    (a) Using the SST, hold the crankshaft pulley and loosen the bolt.
    SST 09278-87201

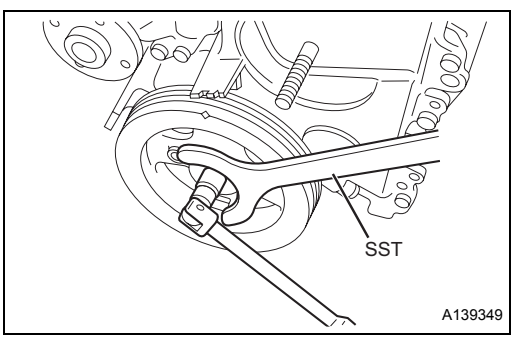

    (b) Using the SST and the crankshaft pulley bolt, remove the crankshaft pulley.
    SST 09306-87501
    NOTICE:
    Install the SST to the crankshaft pulley so that the fixing bolts for the SST do not contact with the chain cover.

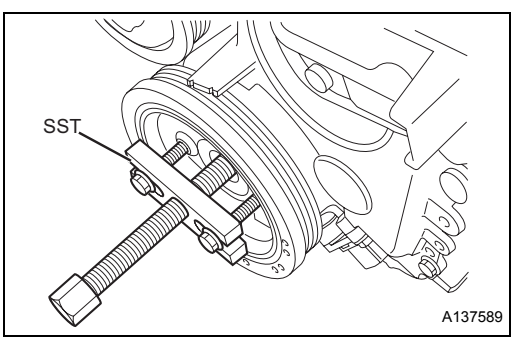

20. **REMOVE TIMING CHAIN (BELT) COVER OIL SEAL**
    (a) Using a cutter knife, cut off the lip of the oil seal.

EM

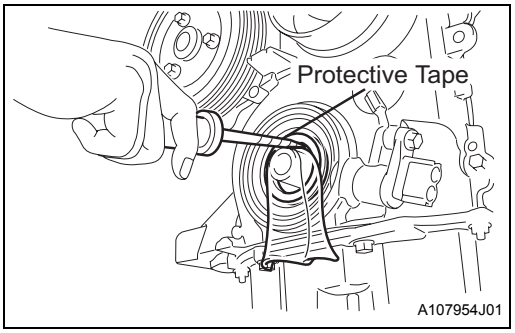

(b) Using a screwdriver wrapped with protective tape, lever off and remove the oil seal.

NOTICE:

After removing the oil seal, check there are no scratches or other damage to the crankshaft part.If there are any scratches, remove them using sandpaper (No. 400).

INSTALLATION

1. INSTALL TIMING CHAIN (BELT) COVER OIL SEAL

(a) Apply a light coat of MP grease to the lip of a new timing chain (belt) cover oil seal.

NOTICE:

- **Keep the lip free of chips, sand and other foreign matter.**
- **Wipe off any grease on the crankshaft.**

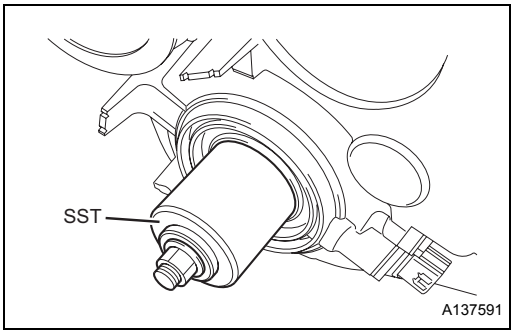

(b) Using the SST, pressure fit a new timing chain (belt) cover oil seal vertically.

SST 09223-87202

NOTICE:

- **Be careful not to tap the timing chain (belt) cover oil seal at an angle.**
- **After installing it, check that the timing chain (belt) cover oil seal has been driven in right to the end face of the timing gear (chain) case.**

(c) Standard

(1) Press fit margin

- Amount of protrusion from the end face of the timing chain (belt) cover: less than 0.5 mm
- Press fit depth from the end face of the timing chain (belt) cover: less than 1 mm

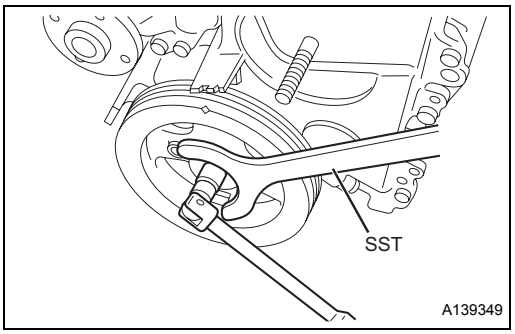

2. INSTALL CRANKSHAFT PULLEY

(a) Using the SST, hold the crankshaft pulley and tighten the bolt.

SST 09278-87201

Torque: 130 N*m (1,326 kgf*cm)

3. INSTALL FAN AND ALTERNATOR V BELT (See page EM-12)

4. ADJUST FAN AND ALTERNATOR V BELT (See page EM-13)

5. CHECK FAN AND ALTERNATOR V BELT (See page EM-13)

6. INSTALL RADIATOR ASSEMBLY (See page CO-24)

7. INSTALL CONDENSER ASSEMBLY (WITH RECEIVER) (See page CO-25)

8. INSTALL RADIATOR SUPPORT UPPER (See page CO-25)

9. INSTALL CHARCOAL CANISTER ASSEMBLY (See page CO-25)

10. INSTALL RADIATOR HOSE NO. 1 (See page CO-25)

11. INSTALL RADIATOR RESERVE TANK ASSEMBLY (See page CO-25)

12. CONNECT OIL COOLER OUTLET HOSE NO. 1 (AUTOMATIC TRANSMISSION)(See page CO-25)

13. CONNECT OIL COOLER INLET HOSE NO. 1 (AUTOMATIC TRANSMISSION) (See page CO-25)
14. CONNECT RADIATOR HOSE NO. 2 (See page CO-26)
15. INSTALL SEAL PLATE (See page CO-26)
16. INSTALL AIR CLEANER HOSE NO. 1 (See page CO-26)
17. INSTALL ENGINE UNDER COVER (See page EM-104)
18. INSTALL FRONT BUMPER COVER (See page ET-5)
19. INSTALL FOG LIGHT ASSEMBLY LH (See page LI-34)
20. INSTALL FOG LIGHT ASSEMBLY RH
21. CONNECT NEGATIVE BATTERY TERMINAL (See page EM-103)
22. ADD ENGINE COOLANT (See page CO-11)
23. CHECK FOR ENGINE COOLANT LEAKS (See page CO-12)
24. CHECK COOLANT LEVEL (See page CO-12)