# CAMSHAFT (3SZ-VE)

## COMPONENTS

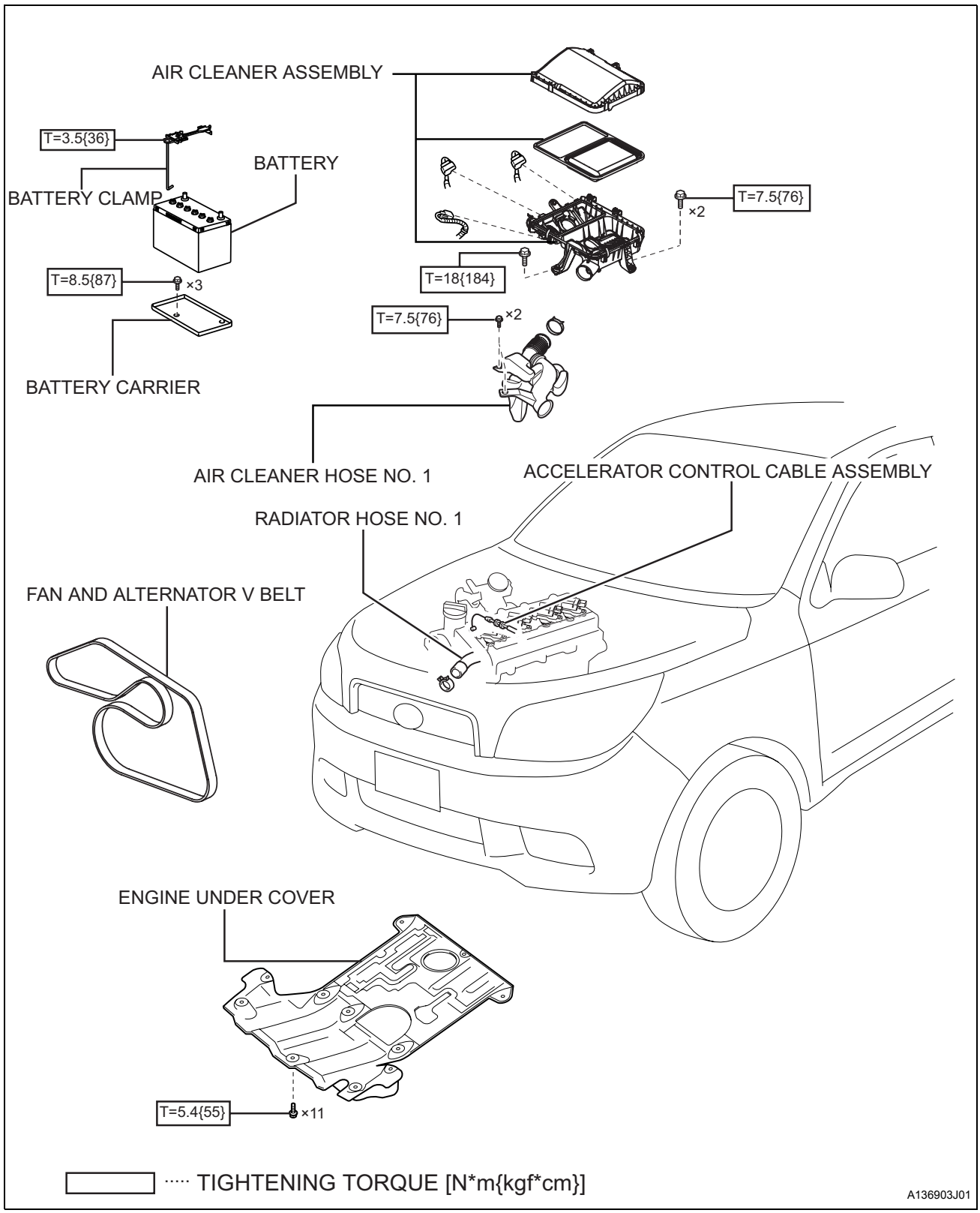


EM

EM

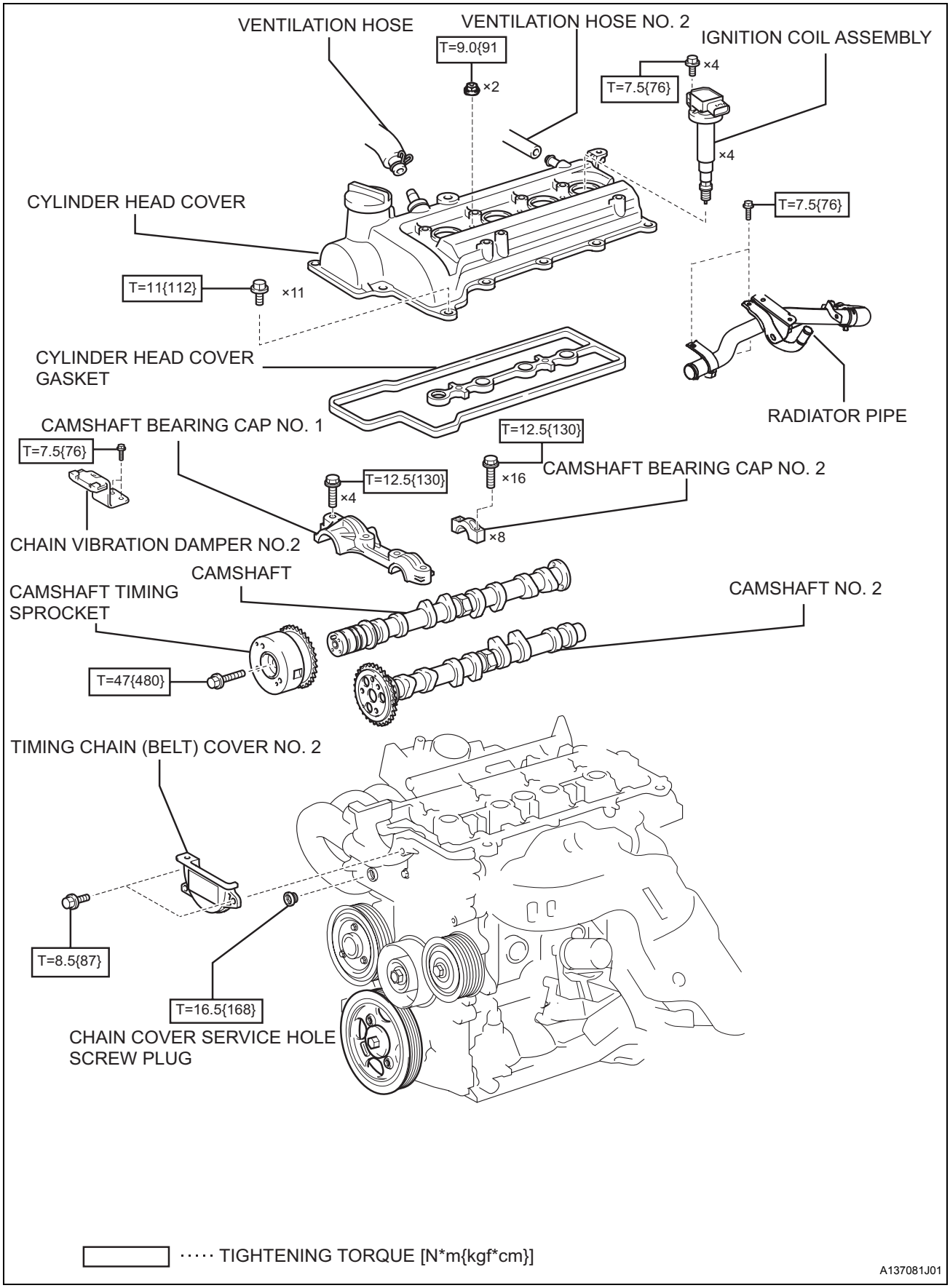
VENTILATION HOSE
VENTILATION HOSE NO. 2
T=9.0{91
×2
IGNITION COIL ASSEMBLY
T=7.5{76}
×4
×4
CYLINDER HEAD COVER
T=7.5{76}
T=11{112}
×11
CYLINDER HEAD COVER GASKET
RADIATOR PIPE
CAMSHAFT BEARING CAP NO. 1
T=12.5{130}
T=7.5{76}
T=12.5{130}
×16
CAMSHAFT BEARING CAP NO. 2
×4
×8
CHAIN VIBRATION DAMPER NO.2
CAMSHAFT
CAMSHAFT TIMING SPROCKET
CAMSHAFT NO. 2
T=47{480}
TIMING CHAIN (BELT) COVER NO. 2
T=8.5{87}
T=16.5{168}
CHAIN COVER SERVICE HOLE SCREW PLUG
····· TIGHTENING TORQUE [N*m{kgf*cm}]
A137081J01

# REMOVAL

1. **DISCONNECT NEGATIVE BATTERY TERMINAL**
   (See page RS-164.)
2. **REMOVE BATTERY CARRIER (See page EM-146 )**
3. **REMOVE ENGINE UNDER COVER**
4. **DRAIN ENGINE COOLANT (See page CO-9 )**
5. **REMOVE RADIATOR HOSE NO. 1 (See page CO-15 )**
6. **REMOVE AIR CLEANER ASSEMBLY (See page EM-146 )**
7. **REMOVE AIR CLEANER HOSE NO. 1 (See page CO-15 )**
8. **DISCONNECT ACCELERATOR CONTROL CABLE ASSEMBLY (See page EM-147 )**
9. **DISCONNECT VENTILATION HOSE (See page EM-147 )**
10. **DISCONNECT VENTILATION HOSE NO. 2 (See page EM-147 )**
11. **REMOVE ENGINE ROOM MAIN WIRE (See page EM-147 )**
12. **REMOVE RADIATOR PIPE (See page EM-147 )**
13. **REMOVE IGNITION COIL ASSEMBLY (See page EM-150 )**

    **REMOVE CHAIN VIBRATION DAMPER NO.2**
14. **REMOVE CYLINDER HEAD COVER (See page EM-151 )**
15. **REMOVE TIMING CHAIN (BELT) COVER NO. 2**
    (a) Remove the 2 bolts and the timing chain (belt) cover No. 2.
16. **REMOVE CHAIN**
    (a) Rotate the crankshaft pulley clockwise to align the timing mark (groove) so it is at 0°.Make sure that each timing mark is positioned as shown in the illustration.
    HINT:
    If the timing marks are not aligned, turn the crankshaft pulley clockwise again and align the marks.

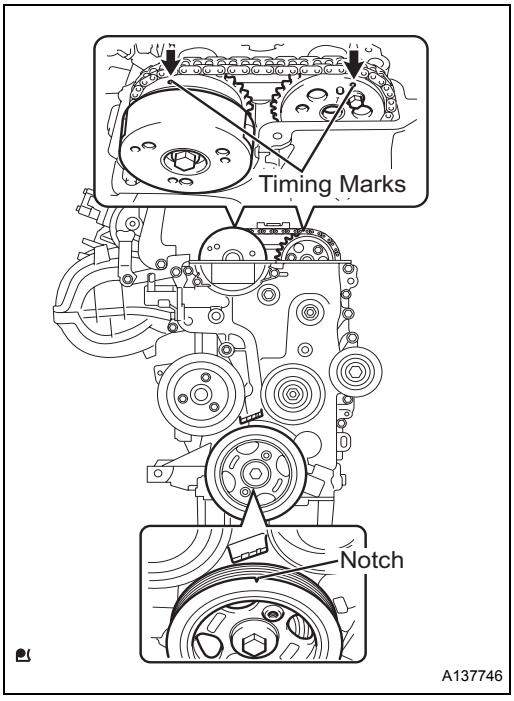

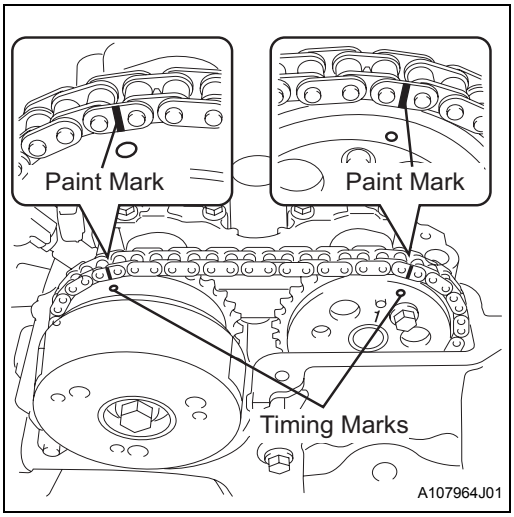


(b) Place a paint mark on each plate of the chains at the points where the camshaft timing gear and the timing mark of the camshaft timing sprocket are aligned.

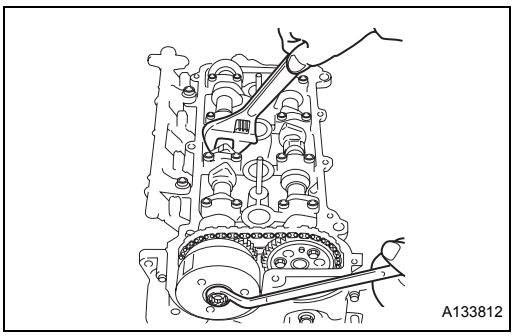


(c) Using the hexagon head portion of the camshaft, loosen the camshaft timing sprocket installation bolt.

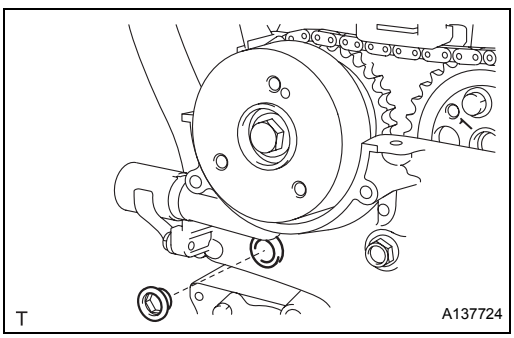


(d) Using a 10 mm socket hexagon wrench, remove the chain cover service hole screw plug.

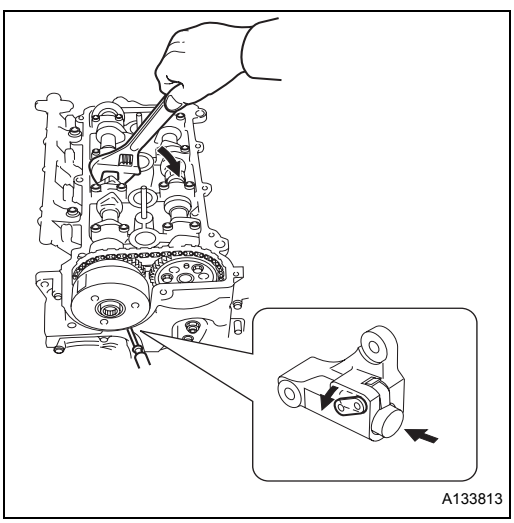


(e) Using a screwdriver, access the tensioner stopper plate through the chain tensioner service hole, move it downward and hold it with the lock released.[*1]
HINT:
If it is difficult to release the stopper plate lock, use the hexagon head portion of the camshaft and rotate the camshaft a little to the right and left.

(f) Under the conditions noted at [*1], use the hexagon head portion of the camshaft to rotate the camshaft a little to the right and hold.[*2]
HINT:
Rotating the camshaft to the right will press the tensioner plunger.

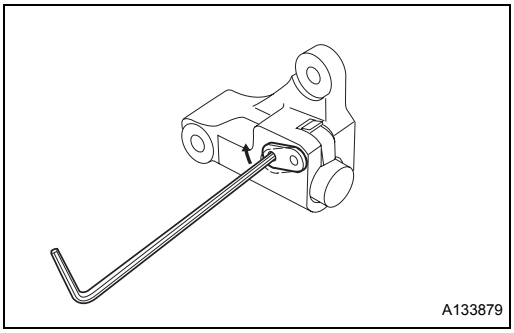


(g) Under the conditions noted at [*2], remove the screwdriver from the chain tensioner service hole, align the stopper plate and the tensioner holes, and insert a bar of 3 mm in diameter.

**NOTICE:**

- **If the 3 mm diameter bar is difficult to insert, rotate the camshaft a little to the left and then back a little to the right and insert the bar again.**
- **Hold the camshaft in the position using the hexagon head portion.**
- **Fix the 3 mm diameter bar using tape or similar so it does not come out.**

(h) Remove the chain from the camshaft timing sprocket.

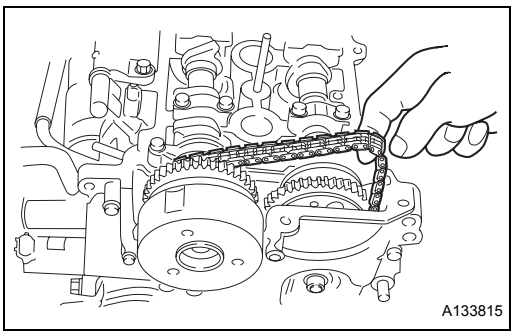


**17. REMOVE CAMSHAFT TIMING SPROCKET**

(a) Remove the bolt and the camshaft timing sprocket.

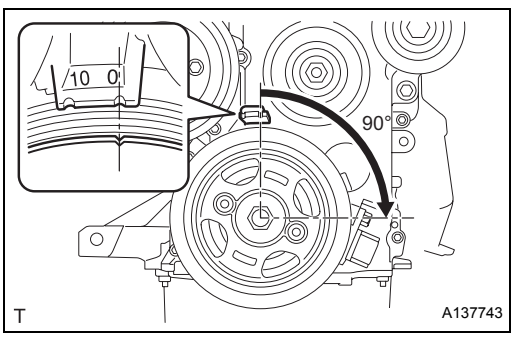


**18. REMOVE CAMSHAFT BEARING CAP NO. 1**

**NOTICE:**

**When rotating the camshaft with the chain disconnected, rotate it 90° clockwise with the valve fully open and check that the crankshaft pulley groove is located in the position shown in the illustration so that it does not interfere with the piston.**

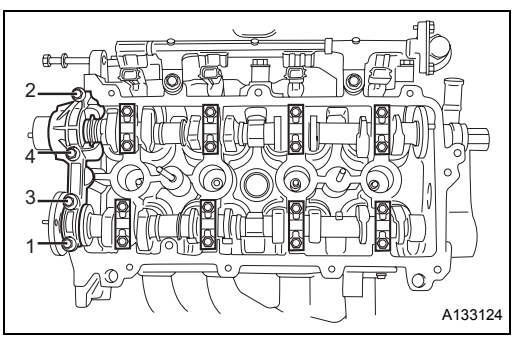


(a) Remove the camshaft bearing cap No. 1 in the order indicated in the illustration.

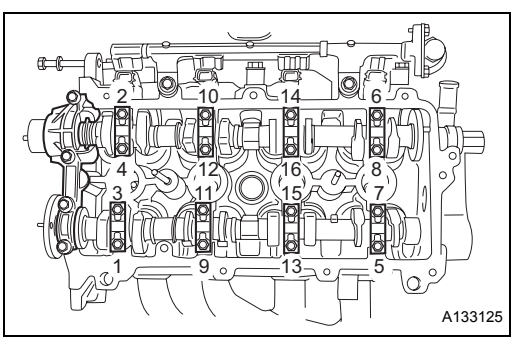


**19. REMOVE CAMSHAFT BEARING CAP NO. 2**

(a) Remove the camshaft bearing cap No. 2 in the order indicated in the illustration.

**NOTICE:**

**Uniformly loosen the bolts keeping the camshaft level.**

HINT:

Be sure to keep the removed parts separate according to the installation areas.

**20. REMOVE CAMSHAFT**

(a) Remove the camshaft.

**21. REMOVE CAMSHAFT NO. 2**

(a) Remove the camshaft No. 2.

(b) After removing the camshaft, hold the chain using a bar or rope so that it does not drop.

**NOTICE:**

**Do not allow any foreign matter to enter the timing chain cover.**

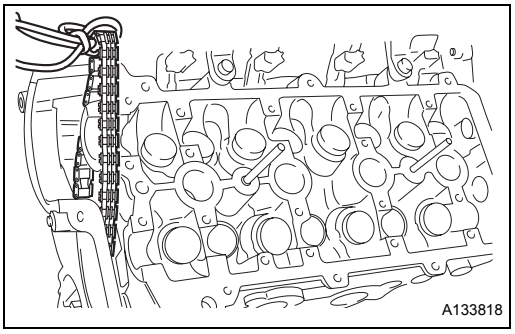


EM

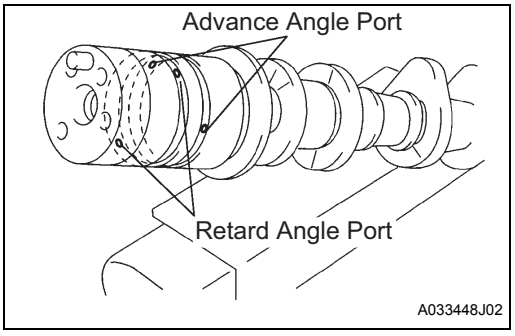


**22. INSPECT CAMSHAFT TIMING SPROCKET**

(a) Cover all the ports except one advance port shown in the illustration with plastic tape.

(b) Secure the service hexagon wrench head portion of the camshaft in a vise using an aluminum or other metal cap, and then install the camshaft timing sprocket with the bolt.

**NOTICE:**

- **Do not damage the camshaft.**
- **Do not tighten the vise too firmly.**
- **Do not press too firmly on the camshaft timing gear assembly as the seal surface can be easily damaged by the end of the camshaft knock pin which may cause the seal to fail.**
- **Do not remove the other 3 bolts.If the bolts are removed, replace the camshaft timing gear assembly.**

**Torque: 47 N*m (479 kgf*cm)**

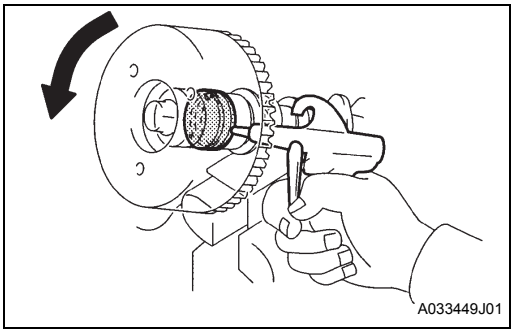


(c) Using an air gun, apply an air pressure of approximately 100 kPa (1 kgf/cm$^2$) to the advance port shown in the illustration.

**NOTICE:**

**Cover the ports with a piece of cloth to prevent oil from splattering when the air pressure is applied.**

HINT:

Air pressure is applied to release the lock pin for the most retarded angle.

(d) Under the above conditions, rotate the camshaft timing sprocket by hand in the advance direction (direction indicated by the arrow in the illustration).

**Standard:**

**Must rotate**

HINT:

- Applying air pressure will rotate the camshaft timing sprocket in the advance direction without applying manual force.Air leaking out from the ports will make it difficult to apply air pressure, which may also make it difficult to release the lock pin.
- Attempting to rotate the camshaft timing sprocket will make it difficult to release the lock pin due to pressure applied from the side.

(e) Unless it is in the most retarded position where the lock pin engages, rotate the camshaft timing sprocket fully 2 to 3 times and check the movable range and slide.

**Standard:**

**Movable in a range of approximately 30°.**

(f) Rotate the camshaft timing sprocket by hand and lock it in the most retarded position.

(g) Remove the bolt and the camshaft timing sprocket.

# INSTALLATION

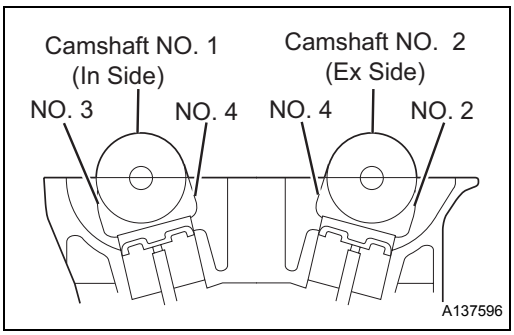


**1. INSTALL CAMSHAFT NO. 2**

(a) When installing camshaft No. 2, rotate the crankshaft 90° (crank angle) in the direction that the engine rotates from cylinder No. 1 TDC/compression so the lifted valve does not interfere with the piston.

(b) Apply engine oil to the cam part of camshaft No. 2 and the journal part of the cylinder head, and then install camshaft No. 2.

**NOTICE:**

**Position it so the cam nose of cylinders No. 2 and 4 of the camshaft No. 2 push down the lifter valve.**

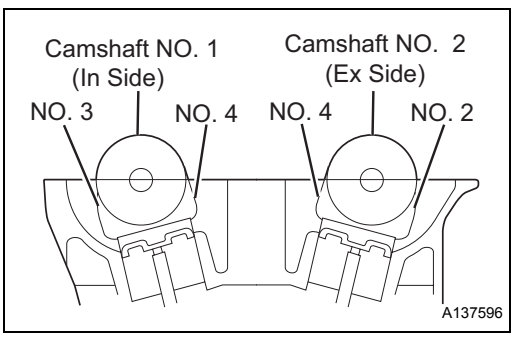


**2. INSTALL CAMSHAFT**

(a) Apply engine oil to the cam of the camshaft and the journal part of the cylinder head, and then install the camshaft.

**NOTICE:**

**Position it so the cam nose of cylinders No. 3 and 4 of the camshaft push down the lifter valve.**

**3. INSTALL CAMSHAFT BEARING CAP NO. 2**

(a) Confirm the front mark and number of the camshaft bearing cap No. 2 and install it.

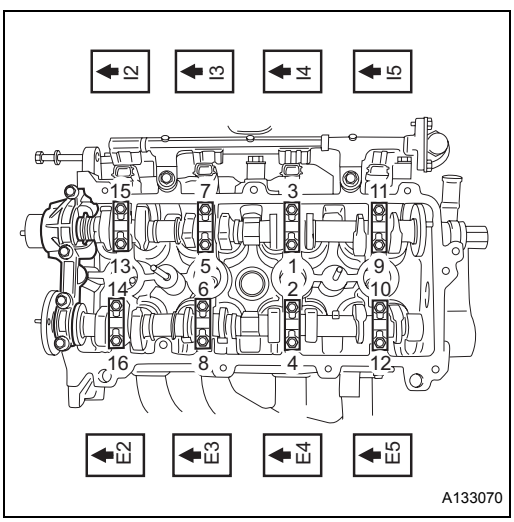


(b) Tighten the camshaft bearing cap No. 2 in the order shown in the illustration.

**Torque: 12.5 N*m (130 kgf*cm)**

**NOTICE:**

- **Position the cap so the arrows on it face toward the front of the engine, and install it so the punched numbers are positioned as shown in the illustration.**
- **Uniformly tighten the bolts, keeping the camshaft level.**

EM

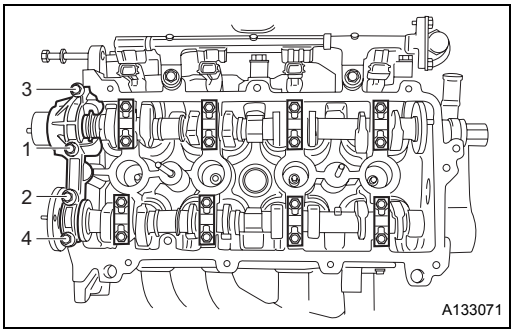


**4. INSTALL CAMSHAFT BEARING CAP NO. 1**

(a) Tighten the camshaft bearing cap No. 1 in the order shown in the illustration.

**Torque: 12.5 N*m (130 kgf*cm)**

**NOTICE:**

**Tighten it after checking that the thrust part of the camshaft is aligned with the groove on camshaft bearing cap No. 1.**

**5. INSTALL CAMSHAFT TIMING SPROCKET**

(a) Apply engine oil to the installation surface to the camshaft.

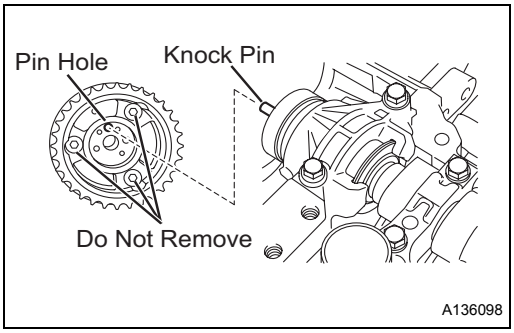


(b) Install the camshaft knock pin and the camshaft timing sprocket.

**NOTICE:**

- **If the knock pin and pin hole do not align, use the hexagon head portion of the camshaft and rotate the camshaft a little to the right and left so they align.Do not press too firmly on the camshaft timing sprocket as the seal surface can be easily damaged by the end of the knock pin which may cause the seal to fail.**
- **Do not remove the 3 bolts.If the bolts are removed, replace the camshaft timing sprocket.**

**6. INSTALL CHAIN**

(a) Install the chain so the matchmarks of the camshaft timing gear and the chain are aligned.

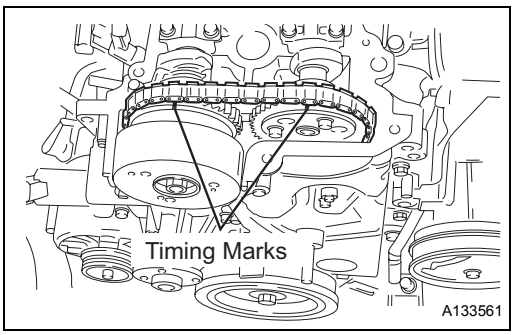


(b) Pull the 3 mm diameter bar out from the chain tensioner.

**NOTICE:**

**Using the hexagon head portion of the camshaft, rotate the camshaft a little to the left with the chain slightly slack on the tensioner side, and pull out the 3 mm diameter bar.**

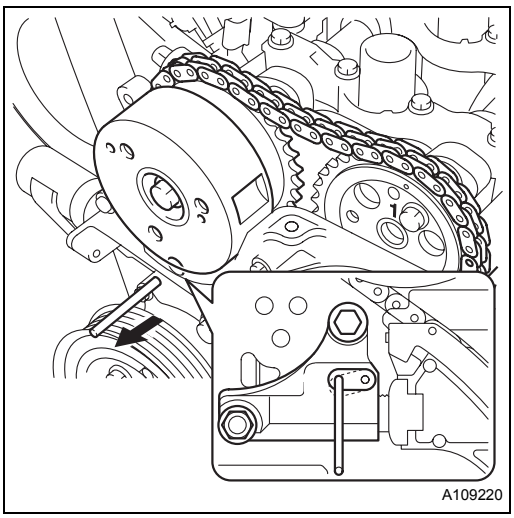

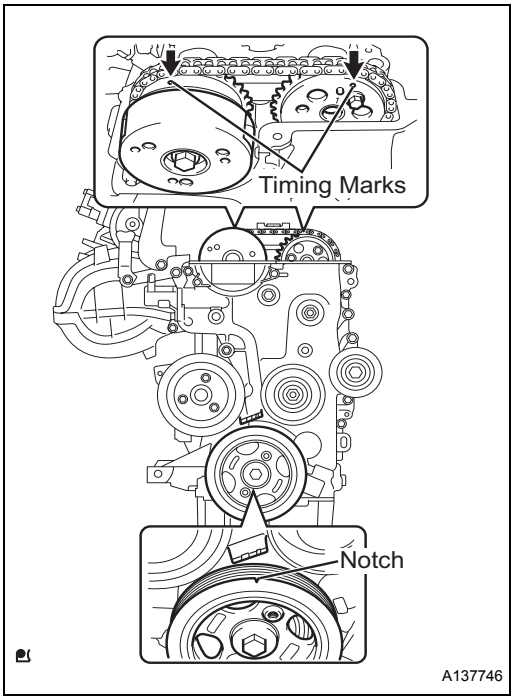


(c) Make sure that each timing mark is positioned as shown in the illustration.

(d) Apply Three Bond TB1324 to the first 2 to 3 threads of the chain cover service hole screw plug bolt.

**NOTICE:**

**Clean and degrease the bolt and bolt hole.**



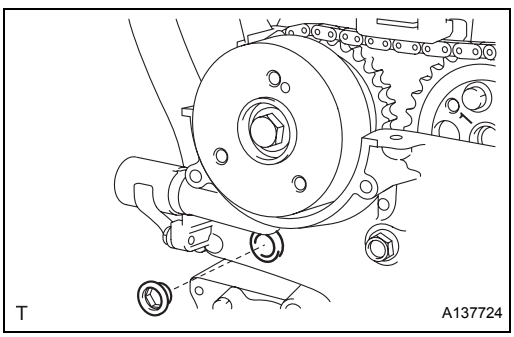


(e) Using a 10 mm socket hexagon wrench, install the chain cover service hole screw plug.

**Torque: 16.5 N*m (168 kgf*cm)**

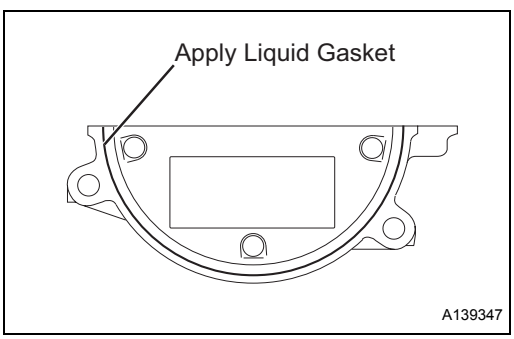


**7. INSTALL TIMING CHAIN (BELT) COVER NO. 2**

(a) Apply Three Bond TB1280E to the position shown in the illustration.

**CAUTION:**

- **Clean and degrease the installation surfaces.**
- **Install within 3 minutes of applying Three Bond TB1280E.**
- **Do not start the engine within 2 hours of installation.**

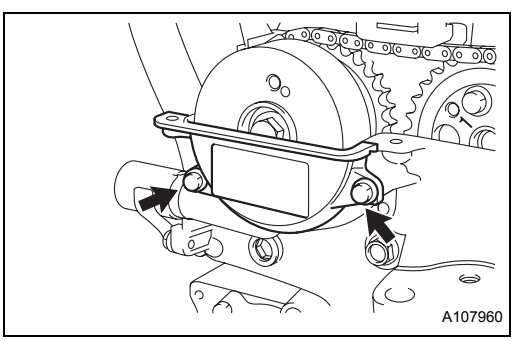


(b) Install the timing chain cover No. 2 with the 2 bolts.

**Torque: 8.5 N*m (87 kgf*cm)**

Install the chain vibration damper No. 2 to the camshaft bearing cap No. 1 with the 2 bolts.

**Torque: 7.5 N*m (76 kgf*cm)**

**8. INSTALL CYLINDER HEAD COVER (See page EM-162 )**

**9. INSTALL IGNITION COIL ASSEMBLY (See page EM-162 )**

**10. INSTALL RADIATOR PIPE (See page EM-166 )**

**11. INSTALL RADIATOR HOSE NO. 1 (See page CO-18 )**

EM

12. REMOVE ENGINE ROOM MAIN WIRE (See page EM-165 )
13. CONNECT VENTILATION HOSE NO. 2 (See page EM-166 )
14. CONNECT VENTILATION HOSE (See page EM-166 )
15. INSTALL ACCELERATOR CONTROL CABLE ASSEMBLY (See page EM-165 )
16. INSTALL AIR CLEANER ASSEMBLY (See page EM-167 )
17. INSTALL AIR CLEANER HOSE NO. 1 (See page CO-19 )
18. ADD ENGINE COOLANT (See page CO-9 )
19. INSPECT ENGINE OIL LEAKS
20. CHECK FOR ENGINE COOLANT LEAKS (See page CO-10 )
21. CHECK COOLANT LEVEL (See page CO-10 )
22. INSTALL ENGINE UNDER COVER (See page EM-69 )
23. CONNECT NEGATIVE BATTERY TERMINAL
    Torque: 5.4 N*m (55 kgf*cm)
24. CHECK IGNITION TIMING (See page EM-1 )
25. CHECK ENGINE IDLE SPEED (See page EM-2 )
26. CHECK DENSITY OF CO AND HC (See page EM-3 )