CHAIN (3SZ-VE)

COMPONENTS

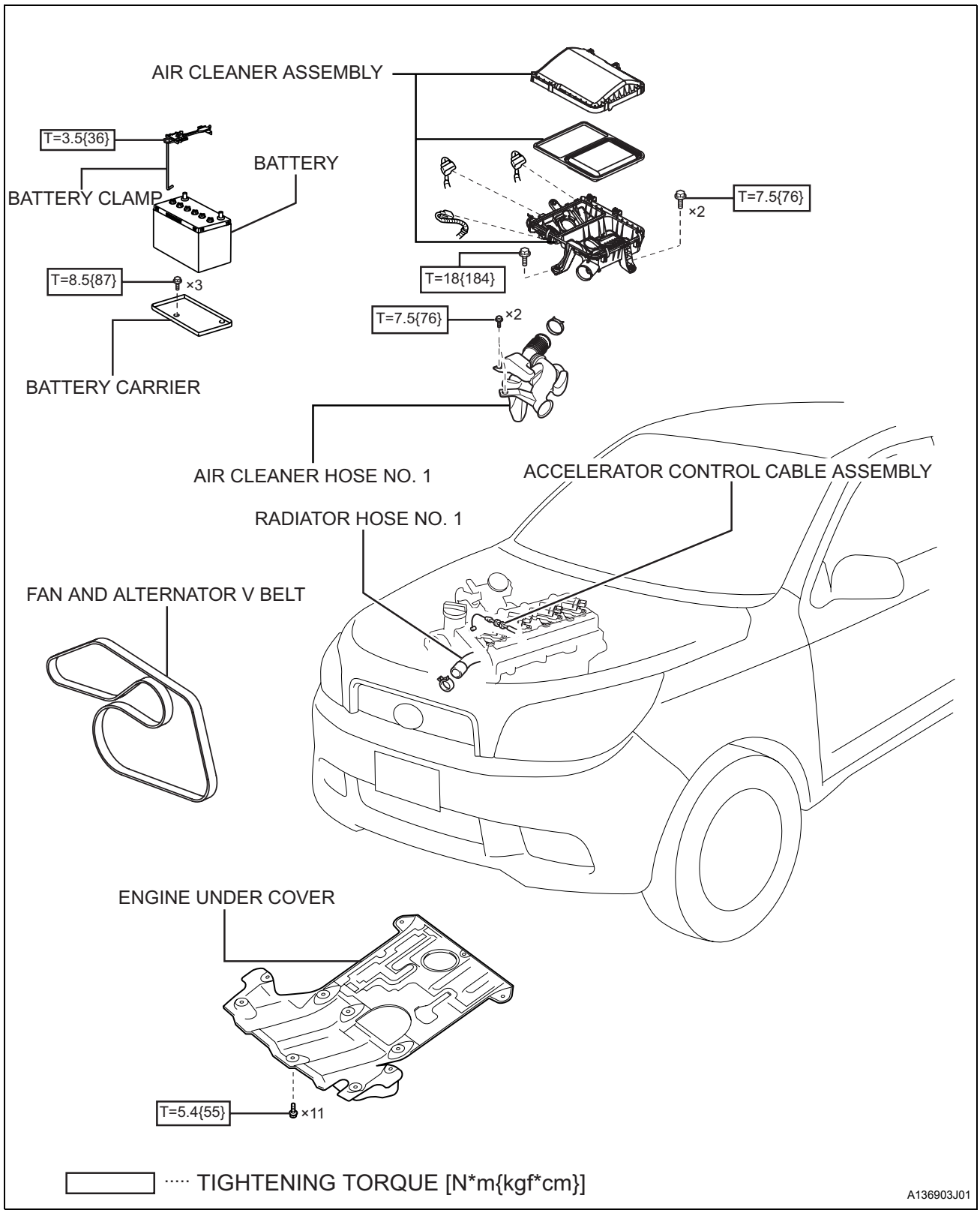

EM

EM

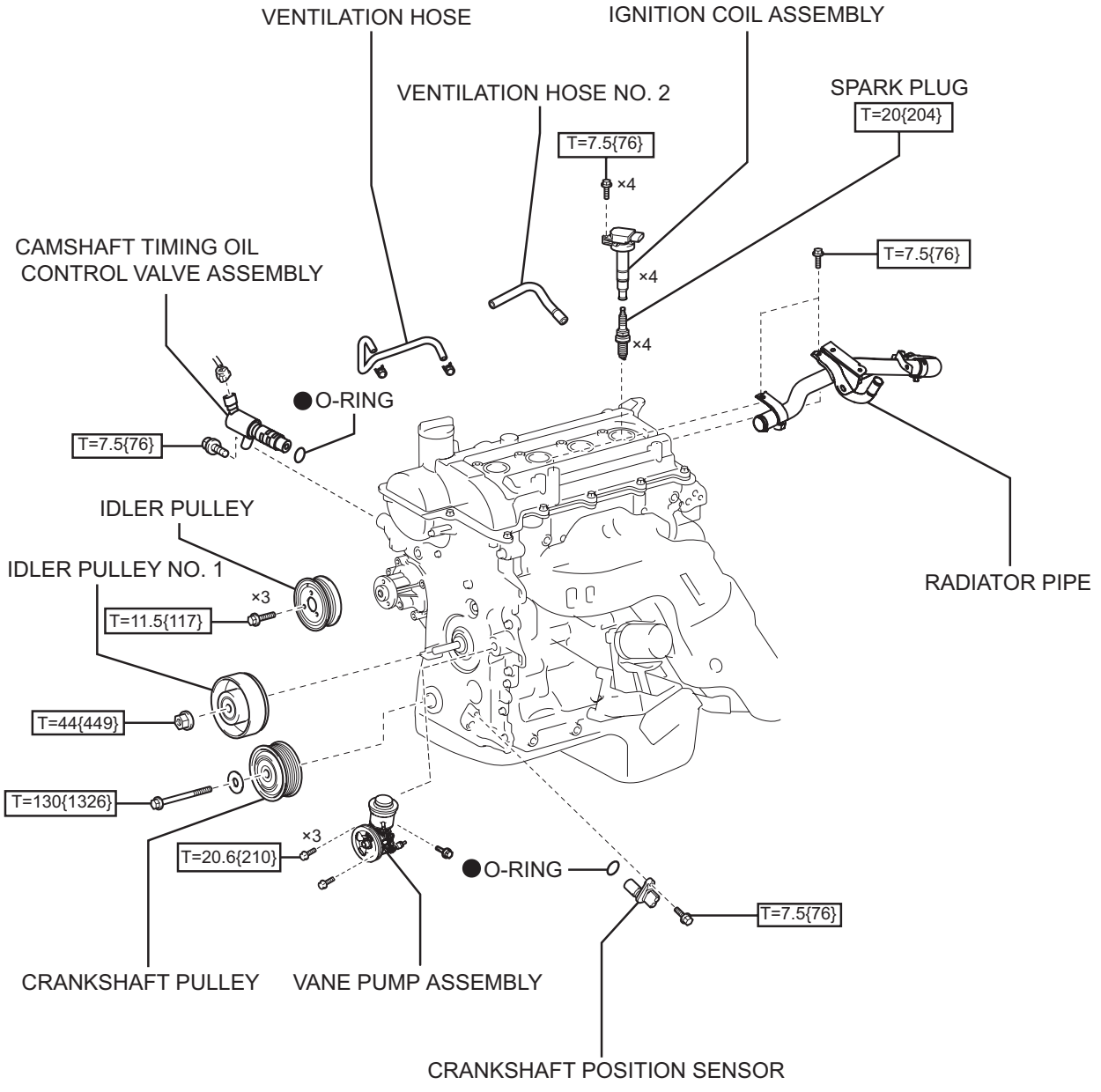

T ····· TIGHTENING TORQUE [N*m{kgf*cm}] ●····· NON-REUSEABLE PART

A136904J02

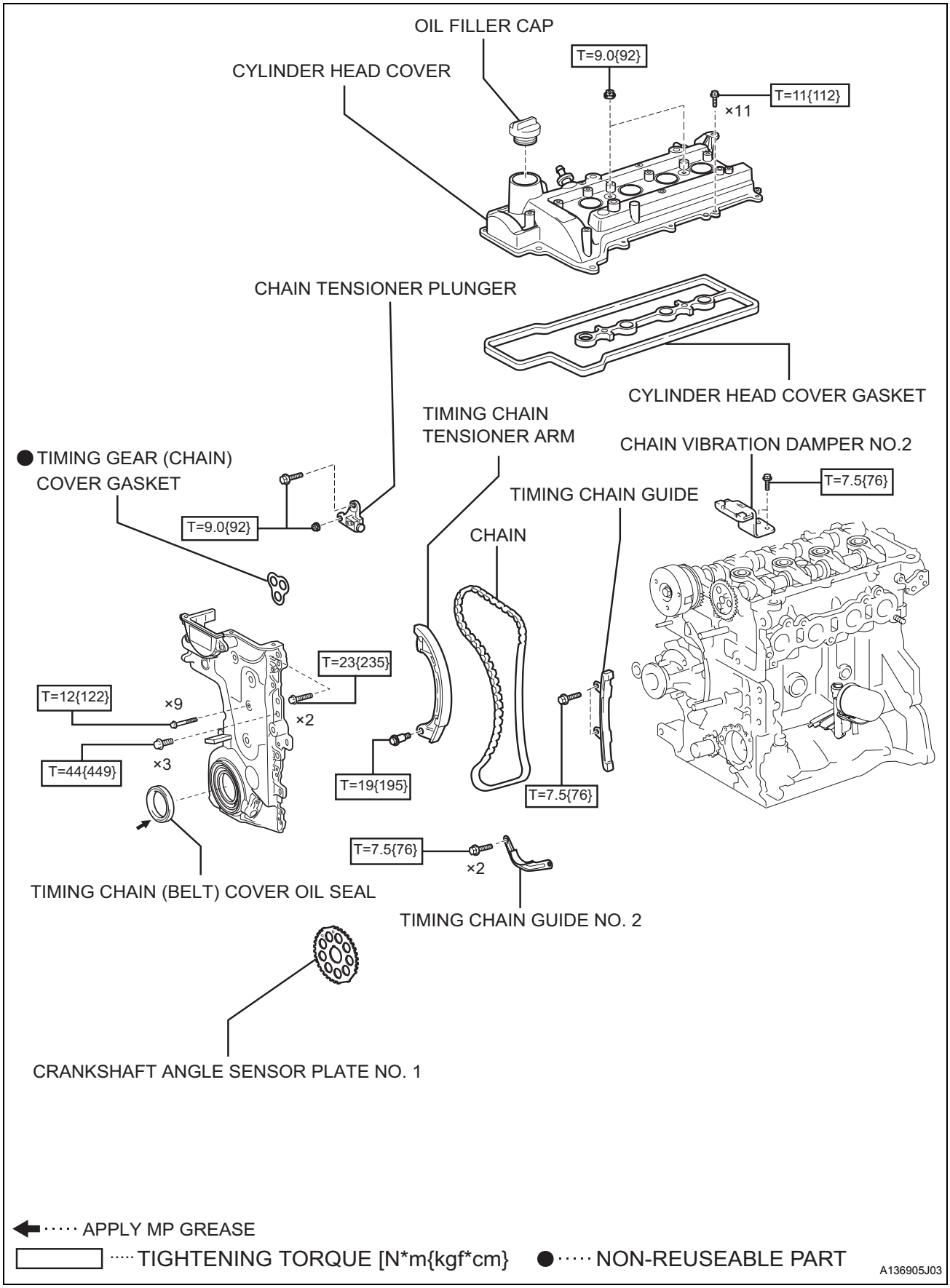
OIL FILLER CAP
T=9.0{92}
CYLINDER HEAD COVER
T=11{112}
×11
CHAIN TENSIONER PLUNGER
CYLINDER HEAD COVER GASKET
TIMING CHAIN
TENSIONER ARM
CHAIN VIBRATION DAMPER NO.2
● TIMING GEAR (CHAIN)
COVER GASKET
T=7.5{76}
TIMING CHAIN GUIDE
T=9.0{92}
CHAIN
T=23{235}
T=12{122}
×9
×2
T=44{449}
×3
T=19{195}
T=7.5{76}
T=7.5{76}
×2
TIMING CHAIN (BELT) COVER OIL SEAL
TIMING CHAIN GUIDE NO. 2
CRANKSHAFT ANGLE SENSOR PLATE NO. 1
APPLY MP GREASE
TIGHTENING TORQUE [N*m{kgf*cm}
● NON-REUSEABLE PART
A136905J03

EM

EM

REMOVAL

1. **DISCONNECT NEGATIVE BATTERY TERMINAL (See page RS-164)**
2. **REMOVE BATTERY CARRIER (See page EM-146)**
3. **REMOVE ENGINE UNDER COVER**
4. **DRAIN ENGINE OIL**
5. **DRAIN ENGINE COOLANT (See page CO-9)**
6. **REMOVE AIR CLEANER ASSEMBLY (See page EM-146)**
7. **REMOVE RADIATOR HOSE NO. 1 (See page CO-15)**
8. **REMOVE ACCELERATOR CONTROL CABLE ASSEMBLY (See page EM-147)**
9. **REMOVE FAN AND ALTERNATOR BELT (See page EM-8)**
10. **REMOVE FAN PULLEY (See page CO-29)**
11. **REMOVE VANE PUMP ASSEMBLY (See page EM-44)**
12. **REMOVE IDLER PULLEY NO. 1 (See page EM-150)**
13. **DISCONNECT VENTILATION HOSE (See page EM-147)**
14. **DISCONNECT VENTILATION HOSE NO. 2 (See page EM-147)**
15. **REMOVE ENGINE ROOM MAIN WIRE (See page EM-147)**
16. **REMOVE RADIATOR PIPE (See page EM-147)**
17. **REMOVE IGNITION COIL ASSEMBLY (See page EM-150)**
18. **REMOVE CYLINDER HEAD COVER (See page EM-151)**

    REMOVE CHAIN VIBRATION DAMPER NO.2
19. **REMOVE CRANKSHAFT PULLEY (See page EM-151)**
20. **REMOVE CAM POSITION SENSOR (See page IG-6)**
21. **REMOVE CAMSHAFT TIMING OIL CONTROL VALVE ASSEMBLY (See page EM-152)**
22. **REMOVE TIMING CHAIN (BELT) COVER (See page EM-152)**
23. **REMOVE TIMING CHAIN (BELT) COVER OIL SEAL (See page EM-153)**
24. **REMOVE CRANK ANGLE SENSOR PLATE NO. 1**
    (a) Remove the crank angle sensor plate No. 1.
25. **REMOVE CHAIN TENSIONER PLUNGER**
    (a) Move the stopper plate downward and hold it with the lock released.[*1]
    HINT:
    If it is difficult to release the stopper plate lock, use the hexagon head portion of the camshaft and rotate the camshaft a little to the right and left.

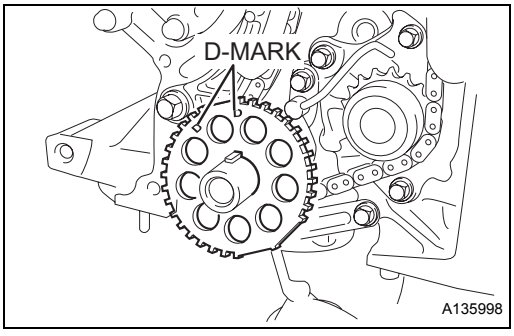

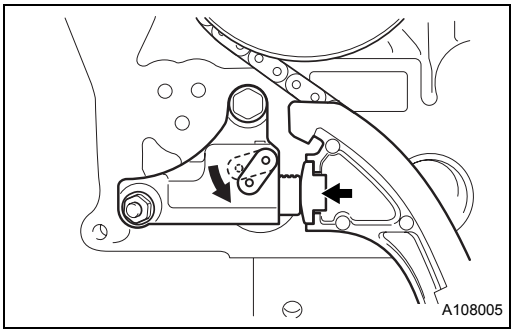

(b) Under the conditions noted at [*1], use the hexagon head portion of the camshaft to rotate the camshaft a little to the right and hold.[*2]
HINT:
Rotating the camshaft to the right will press the tensioner plunger.

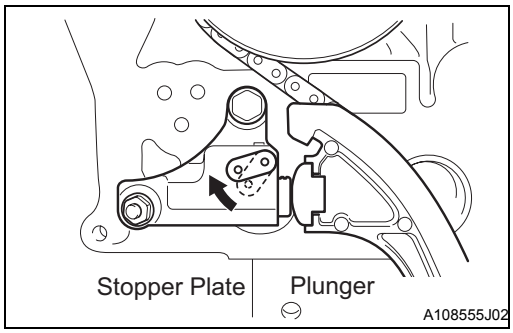

(c) Under the conditions noted at [*2], align the stopper plate and the chain tensioner plunger hole.[*3]
HINT:
If the stopper plate and the chain tensioner plunger hole are difficult to align, rotate the camshaft a little to the left and then back a little to the right again to align them.

EM

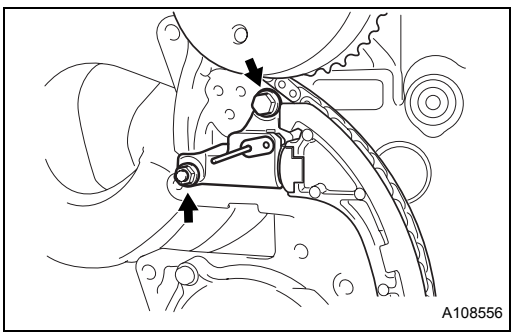

(d) Under the conditions noted at [*3], insert a bar of 3 mm in diameter into the stopper plate and the chain tensioner plunger hole.
(e) Remove the bolt and nut and then remove the chain tensioner plunger.

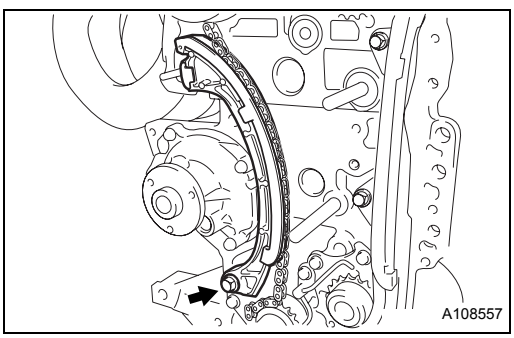

26. REMOVE TIMING CHAIN TENSION ARM

(a) Remove the bolt and the timing chain tensioner arm.

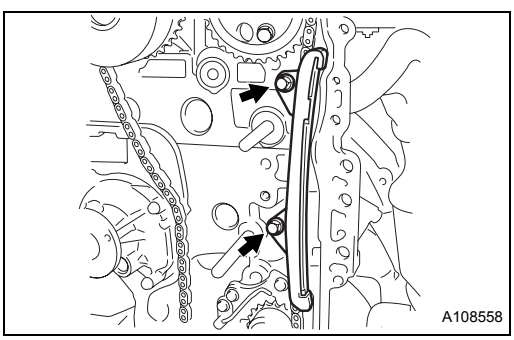

27. REMOVE TIMING CHAIN GUIDE

(a) Remove the 2 bolts and the timing chain guide.

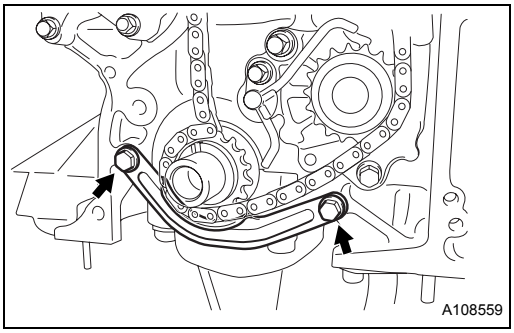

28. REMOVE TIMING CHAIN GUIDE NO. 2

(a) Remove the 2 bolts and the timing chain guide No. 2.

29. REMOVE CHAIN

INSTALLATION

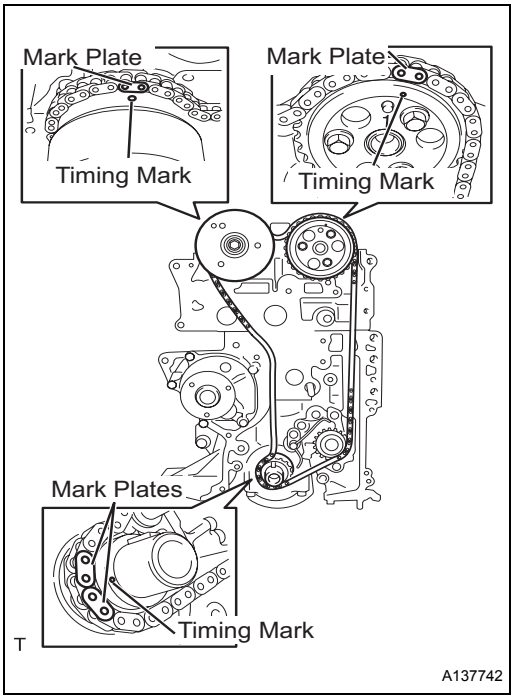

1. INSTALL CHAIN

(a) Align the mark plate (yellow) and the timing mark as shown in the illustration and install the chain.

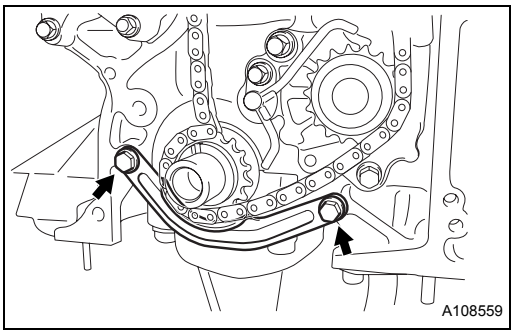

2. INSTALL TIMING CHAIN GUIDE NO. 2

(a) Install the timing chain guide No. 2 with the 2 bolts.

Torque: 7.5 N*m (76 kgf*cm)

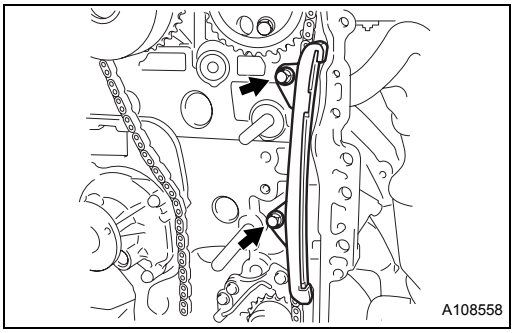

3. INSTALL TIMING CHAIN GUIDE

(a) Install the timing chain guide with the 2 bolts.
Torque: 7.5 N*m (76 kgf*cm)

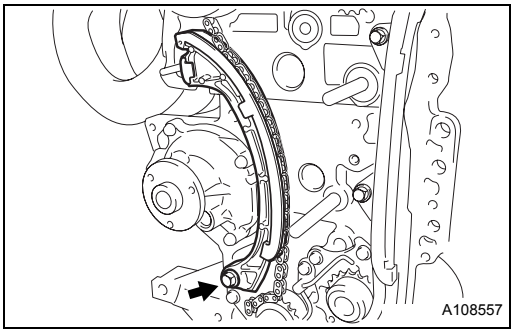

4. INSTALL TIMING CHAIN TENSION ARM

(a) Install the timing chain tension arm with the bolt.
Torque: 19 N*m (195 kgf*cm)

EM

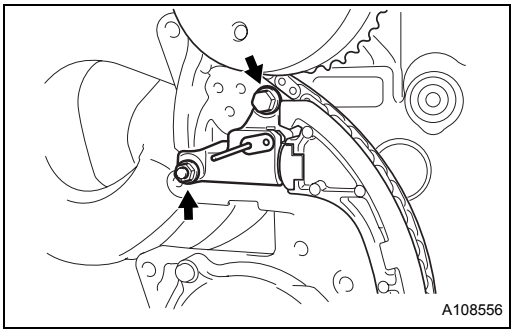

5. INSTALL CHAIN TENSIONER PLUNGER

(a) Install the chain tensioner plunger with the bolt and nut.
Torque: 9.0 N*m (92 kgf*cm)
HINT:
Using the hexagon wrench head portion of the camshaft, rotate the camshaft a little to the left, and with the chain slightly slack on the chain tensioner plunger side, attach the chain tensioner plunger.

(b) Pull the 3 mm diameter bar out from the chain tensioner plunger.

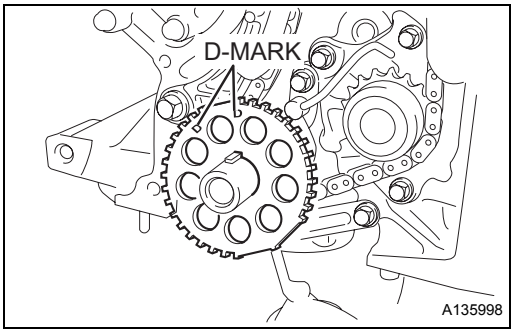

6. INSTALL CRANK ANGLE SENSOR PLATE NO. 1

(a) Install the crank angle sensor plate No. 1 so that the D mark is visible.

7. INSTALL TIMING CHAIN (BELT) COVER (See page EM-160)

8. INSTALL TIMING CHAIN (BELT) COVER OIL SEAL (See page EM-200)

9. INSTALL CRANK POSITION SENSOR (See page EM-57)

10. INSTALL CAMSHAFT TIMING OIL CONTROL VALVE ASSEMBLY (See page EM-162)

11. INSTALL CRANKSHAFT PULLEY (See page EM-161)

INSTALL CHAIN VIBRATION DAMPER NO.2

12. INSTALL CYLINDER HEAD COVER (See page EM-162)

13. INSTALL SPARK PLUG (See page EM-162)

14. INSTALL IGNITION COIL ASSEMBLY (See page EM-162)

15. INSTALL RADIATOR PIPE (See page EM-166)

16. INSTALL ENGINE ROOM MAIN WIRE (See page EM-165)

17. INSTALL VENTILATION HOSE (See page EM-166)
18. INSTALL VENTILATION HOSE NO. 2 (See page EM-166)
19. INSTALL IDLER PULLEY NO. 1 (See page EM-163)
20. INSTALL VANE PUMP ASSEMBLY (See page EM-68)
21. INSTALL FAN PULLEY (See page CO-29)
22. INSTALL FAN AND ALTERNATOR V BELT (See page EM-8)
23. ADJUST FAN AND ALTERNATOR V BELT (See page EM-9)
24. CHECK FAN AND ALTERNATOR V BELT (See page EM-9)
25. INSTALL ACCELERATOR CONTROL CABLE ASSEMBLY (See page EM-165)
26. INSTALL RADIATOR HOSE NO. 1 (See page CO-18)
27. INSTALL AIR CLEANER ASSEMBLY (See page EM-167)
28. INSTALL AIR CLEANER HOSE NO. 1 (See page CO-18)
29. INSTALL BATTERY CARRIER (See page EM-167)
30. INSTALL BATTERY
31. CONNECT NEGATIVE BATTERY TERMINAL
    Torque: 5.4 N*m (55 kgf*cm)
32. ADD ENGINE COOLANT (See page CO-9)
33. ADD ENGINE OIL
34. CHECK FOR ENGINE COOLANT LEAKS (See page CO-10)
35. INSPECT ENGINE OIL LEAKS
36. CHECK ENGINE OIL LEVEL (See page EM-167)
37. CHECK IGNITION TIMING (See page EM-1)
38. CHECK IDLE SPEED (See page EM-2)
39. INSTALL ENGINE UNDER COVER (See page EM-69)