VALVE CLEARANCE (3SZ-VE)

INSPECTION

1. **DISCONNECT NEGATIVE BATTERY TERMINAL (See page RS-164)**
2. **REMOVE ENGINE UNDER COVER**
3. **DRAIN ENGINE COOLANT (See page CO-9)**
4. **REMOVE AIR CLEANER HOSE NO. 1 (See page CO-15)**
5. **REMOVE AIR CLEANER ASSEMBLY (See page EM-146)**
6. **REMOVE RADIATOR HOSE NO. 1 (See page CO-15)**
7. **DISCONNECT ACCELERATOR CONTROL CABLE ASSEMBLY (See page EM-147)**
8. **REMOVE VENTILATION HOSE (See page EM-147)**
9. **REMOVE VENTILATION HOSE NO. 2 (See page EM-147)**
10. **REMOVE ENGINE ROOM MAIN WIRE (See page EM-147)**
11. **REMOVE RADIATOR PIPE (See page EM-147)**
12. **REMOVE IGNITION COIL ASSEMBLY (See page EM-150)**
13. **REMOVE CYLINDER HEAD COVER (See page EM-151)**
14. **INSPECT VALVE CLEARANCE**
    NOTICE:
    Check the valve clearance in cool conditions.

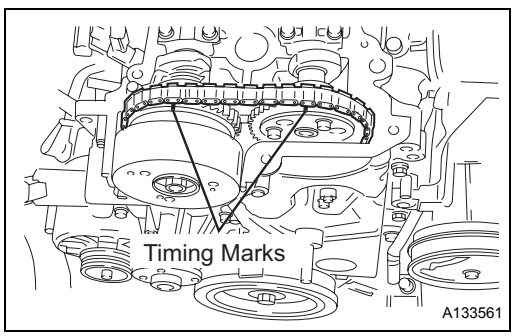

(a) Turn the crankshaft pulley clockwise and align the matchmarks as shown in the illustration, and then set cylinder No. 1 to TDC / compression.
HINT:
If the matchmarks are not aligned, turn the crankshaft to align the marks again.

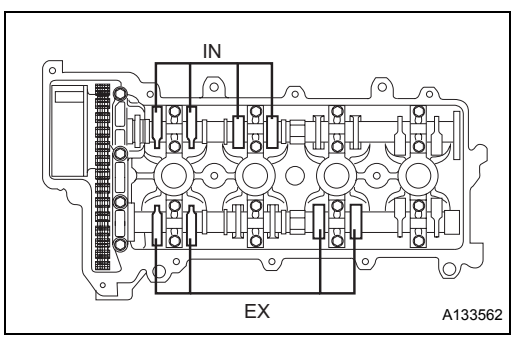

(b) Using a thickness gauge, measure the valve clearance at the position shown in the illustration.
HINT:
The thickness gauge should be inserted from the spark plug side (center).
Standard (in cool conditions)

Intake side	**0.145 to 0.235 mm**
Exhaust side	**0.275 to 0.365 mm**

Valves to be checked when cylinder No. 1 is set to TDC / compression

Cylinder No. 1		Cylinder No. 2		Cylinder No. 3		Cylinder No. 4	
IN	EX	IN	EX	IN	EX	IN	EX
O	O	O	-	-	O	-	-

HINT:
If not as specified, measure the clearance and record it.

(c) Turn the crankshaft pulley 360°clockwise, and then set cylinder No. 4 to TDC / compression.

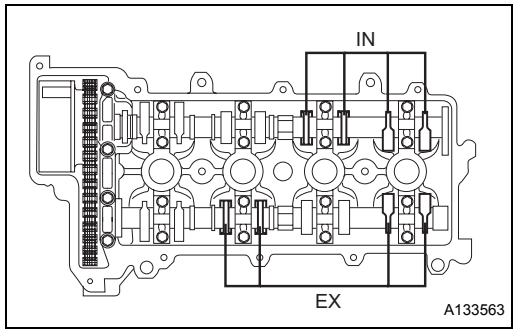

(d) Using a thickness gauge, measure the valve clearance at the position shown in the illustration.
HINT:
The thickness gauge should be inserted from the spark plug side (center).
Standard (in cool conditions)

Intake side	**0.145 to 0.235 mm**
Exhaust side	**0.275 to 0.365 mm**

Check the valves with cylinder No. 1 at TDC / ventilation

Cylinder No. 1		Cylinder No. 2		Cylinder No. 3		Cylinder No. 4	
IN	EX	IN	EX	IN	EX	IN	EX
-	-	-	O	O	-	O	O

HINT:
If not as specified, measure the clearance and record it.

ADJUSTMENT

1. ADJUST VALVE CLEARANCE

Remove the 2 bolts and the vibration damper No. 2 from the camshaft bearing cap No.1 .

(a) Remove the 2 bolts and the timing chain cover No. 2.

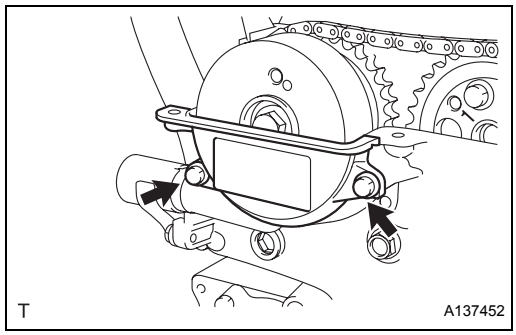

(b) Turn the crankshaft pulley clockwise and check that the timing marks of the camshaft timing gear are positioned as shown in the illustration.
NOTICE:
If the timing marks are not aligned, turn the crankshaft pulley clockwise again and align the marks.

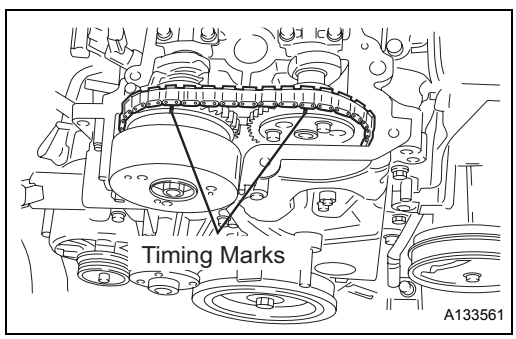

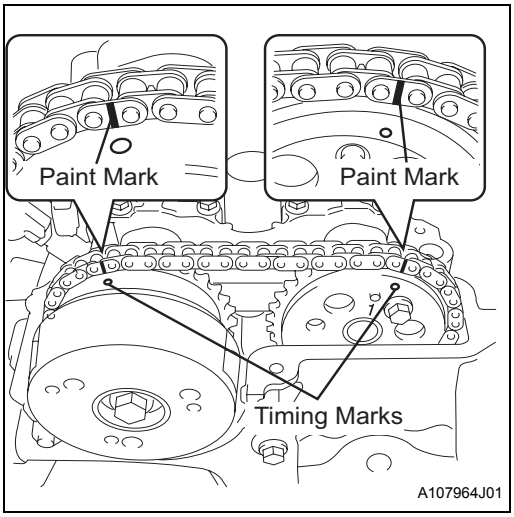

(c) Place a paint mark on each plate of the chains at the points where the camshaft timing gear and the timing mark of the camshaft timing sprocket are aligned.

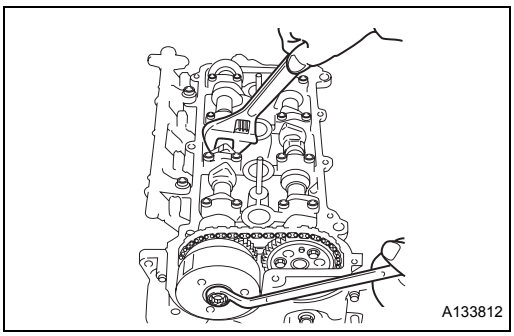

(d) Using the hexagon head portion of the camshaft, loosen the camshaft timing sprocket installation bolt.

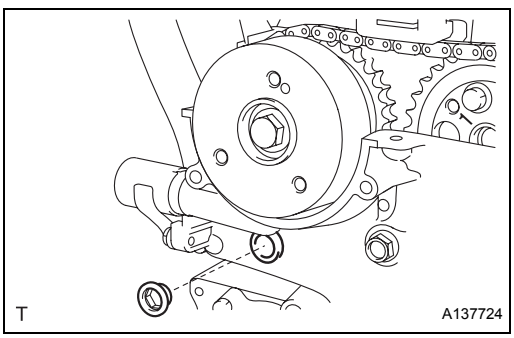

(e) Using a 10 mm socket hexagon wrench, remove the chain cover service hole screw plug.

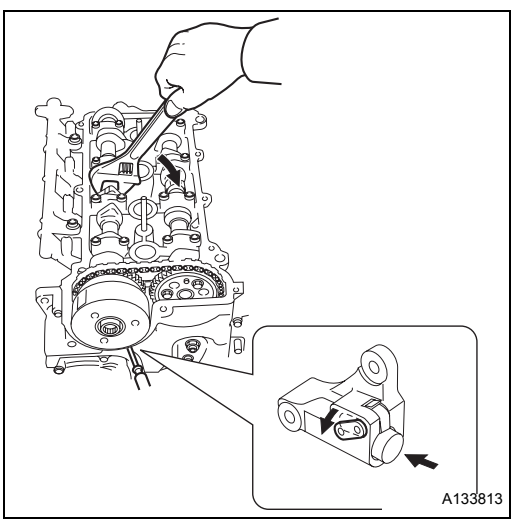

(f) Using a screwdriver, access the tensioner stopper plate through the chain tensioner service hole, move it downward and hold it with the lock released.[*1]

NOTICE:

If it is difficult to release the stopper plate lock, use the hexagon head portion of the camshaft and rotate the camshaft a little to the right and left.

(g) Under the conditions noted at [*1], use the hexagon head portion of the camshaft to rotate the camshaft a little to the right and hold.[*2]

HINT:

Rotating the camshaft to the right will press the tensioner plunger.

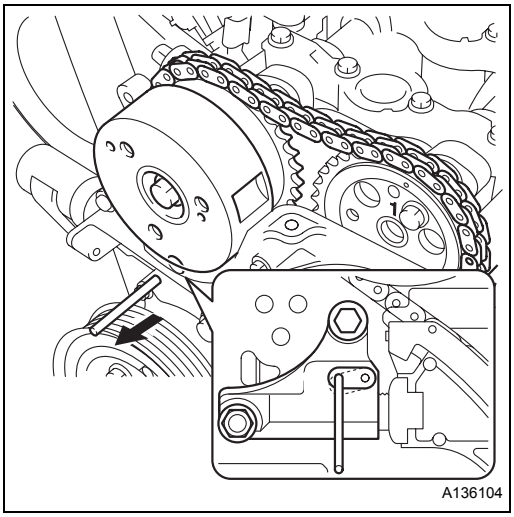

(h) Under the conditions noted at [*2], remove the screwdriver from the chain tensioner service hole, align the stopper plate and the tensioner holes, and insert a bar of 3 mm in diameter.

NOTICE:

- **If the 3 mm diameter bar is difficult to insert, rotate the camshaft a little to the left and then back a little to the right and insert the bar again.**
- **Hold the camshaft in the position using the hexagon head portion.**
- **Fix the 3 mm diameter bar using tape or similar so it does not come out.**

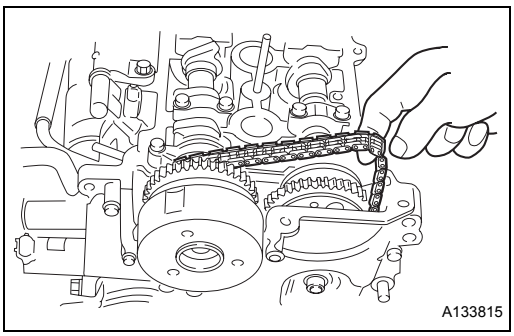

(i) Remove the timing chain from the camshaft timing sprocket.

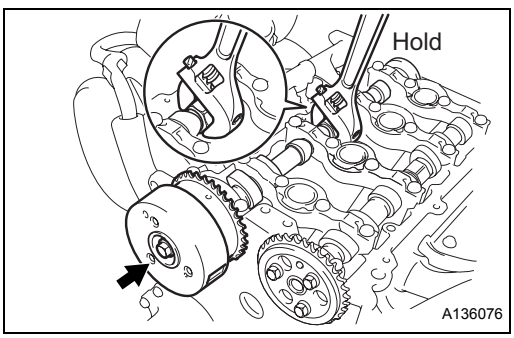

(j) Remove the bolt and the camshaft timing sprocket.

NOTICE:

When rotating the camshaft with the timing chain removed, rotate the crankshaft 90° (crank angle) in the direction that the engine rotates from cylinder No. 1 TDC / compression so the valve does not interfere with the piston.

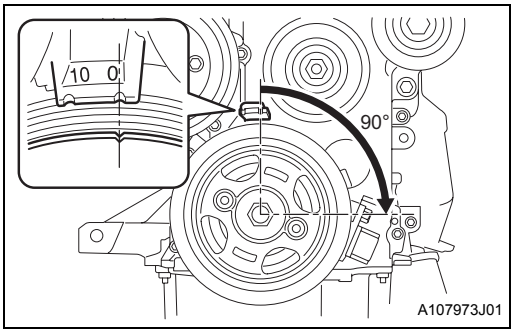

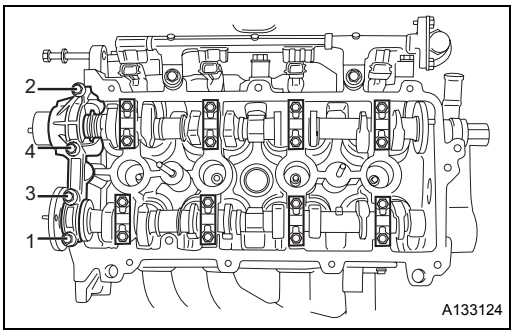

(k) Remove the camshaft bearing cap No. 1 in the order indicated in the illustration.

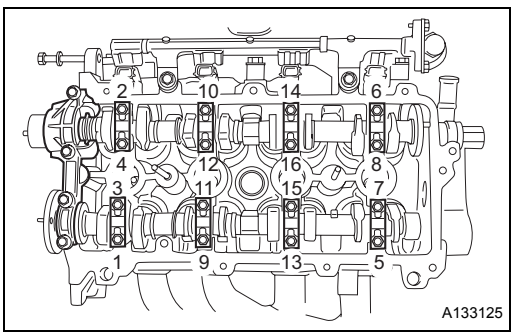

(l) Remove the camshaft bearing cap No. 2 in the order indicated in the illustration.
HINT:
Uniformly loosen the bolts keeping the camshaft level.

(m) Remove the camshaft.

(n) Remove the camshaft No. 2.

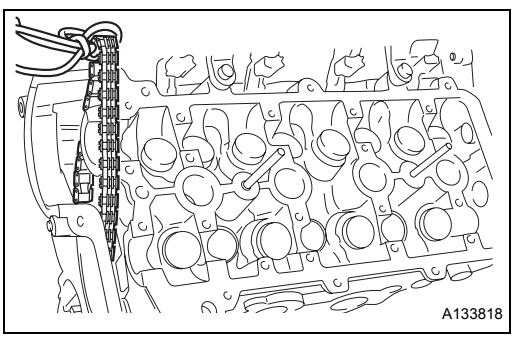

(o) After removing the camshaft, attach the timing chain to a rope or wire so that it does not drop.
NOTICE:
Do not allow any foreign matter to enter the timing chain cover.

(p) Remove the valve lifter.

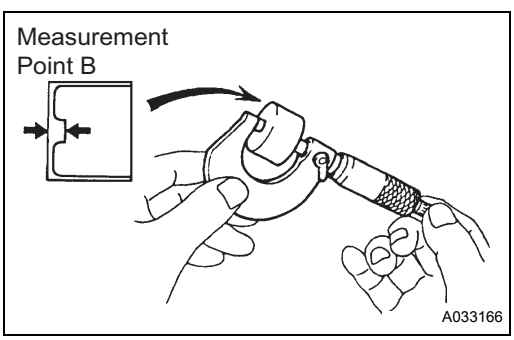

(q) Using a micrometer, measure the valve lifter thickness.

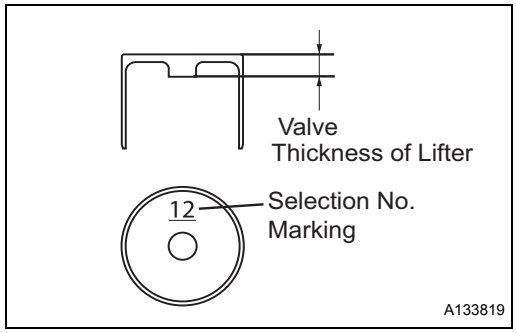

(r) Select and install a valve lifter so that the valve clearance is within the specified range.

Standard:

Intake: :

(Selected lifter thickness) = (Removed lifter thickness) + [(Measured clearance) - 0.18 mm]

Exhaust: :

(Selected lifter thickness) = (Removed lifter thickness) + [(Measured clearance) -0.31mm]

HINT:

Shims are available in 41 increments of 0.02 mm (0.0008 in.), from 5.120 mm to 5.680mm.

EM

Number	Lifter Thickness (mm)	Number	Lifter Thickness (mm)	Number	Lifter Thickness (mm)	Number	Lifter Thickness (mm)
12	5.120	28	5.280	44	5.440	60	5.600
14	5.140	30	5.300	46	5.460	62	5.620
16	5.160	32	5.320	48	5.480	64	5.640
18	5.180	34	5.340	50	5.500	66	5.660
20	5.200	36	5.360	52	5.520	68	5.680
22	5.220	38	5.380	54	5.540	-	-
24	5.240	40	5.400	56	5.560	-	-
26	5.260	42	5.420	58	5.580	-	-

(s) Install the valve lifter.

(t) Apply engine oil to the cam of camshaft No. 2 and the journal of the cylinder head, and then install the camshaft No. 2.

NOTICE:

Position it so the cam nose of cylinders No. 2 and 4 of the camshaft sub-assembly No. 2 push down the lifter valve.

(u) Apply engine oil to the cam of the camshaft and the journal part of the cylinder head, and then install the camshaft.

NOTICE:

Position it so the cam nose of cylinders No. 3 and 4 of the camshaft sub-assembly No. 1 pushes down the lifter valve.

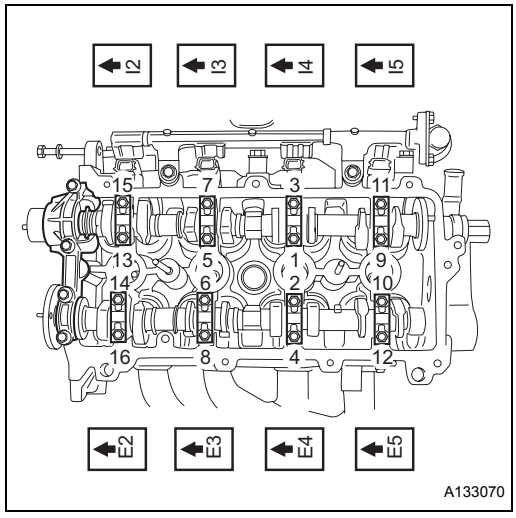

(v) Confirm the front mark and number of camshaft bearing cap No. 2 and install it.

(w) Tighten the camshaft bearing cap No. 2 in the order shown in the illustration.

Torque: 12.5 N*m (130 kgf*cm)

NOTICE:

- **Uniformly tighten the bolts, keeping the camshaft level.**
- **Position the cap so the arrow on it faces toward the front of the engine, and install it so the punched numbers are positioned as shown in the illustration.**

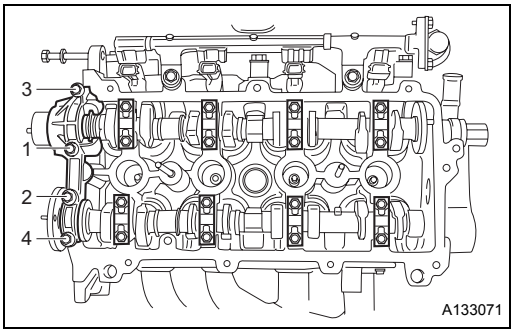

(x) Tighten the camshaft bearing cap No. 1 in the order shown in the illustration.

Torque: 12.5 N*m (130 kgf*cm)

NOTICE:

Tighten the bolts after checking that the thrust part of the camshaft is aligned with the groove on camshaft bearing cap No. 1.

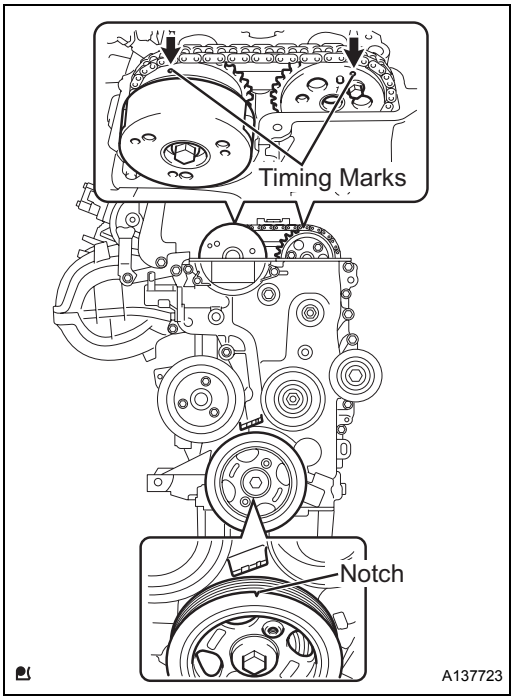

(y) Position the timing marks of the camshaft timing sprocket and the camshaft timing gear as shown in the illustration.

(z) Position the timing mark (groove) of the crankshaft pulley so it is at 0°.

EM

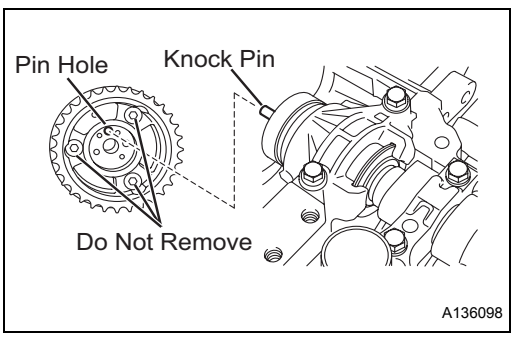

(aa) Align the camshaft knock pin and the camshaft timing sprocket pin hole, and install the camshaft timing sprocket to the camshaft.

NOTICE:

- **If the knock pin and pin hole do not align, use the hexagon head portion of the camshaft and rotate the camshaft a little to the right and left so they align.Do not press too firmly on the camshaft timing sprocket as the seal surface can be easily damaged by the end of the knock pin which may cause the seal to fail.**
- **Do not remove the 3 bolts.If the bolts are removed, replace the camshaft timing sprocket.**

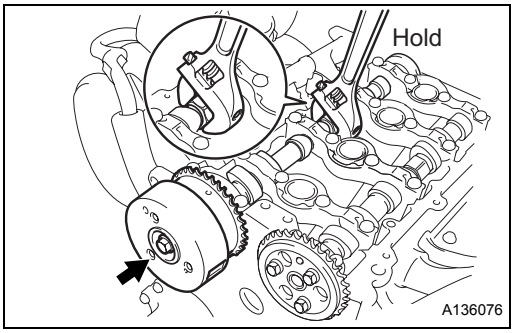

(ab) Apply a small amount of engine oil to the camshaft timing sprocket installation bolt thread and seating surface to temporarily install them.

(ac) Using the hexagon head portion of the camshaft, tighten the camshaft timing sprocket installation bolt.
Torque: 47 N*m (480 kgf*cm)

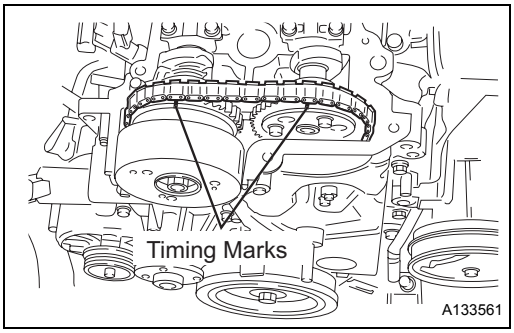

(ad) Install the chain so the matchmarks of the camshaft timing gear and the chain are aligned.

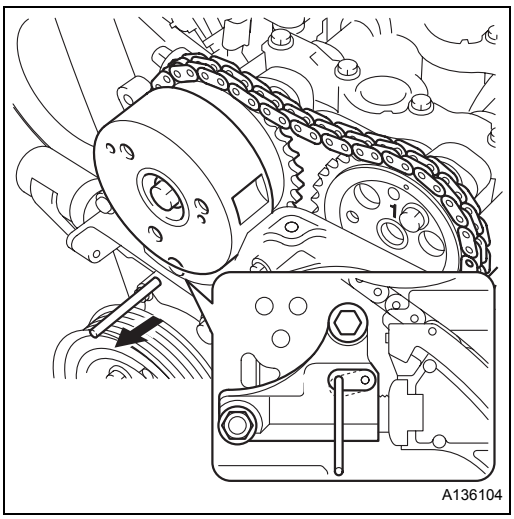

(ae) Pull the 3 mm diameter bar out from the chain tensioner.
NOTICE:
Using the hexagon head portion of the camshaft, rotate the camshaft a little to the left with the chain slightly slack on the tensioner side, and pull out the 3 mm diameter bar.

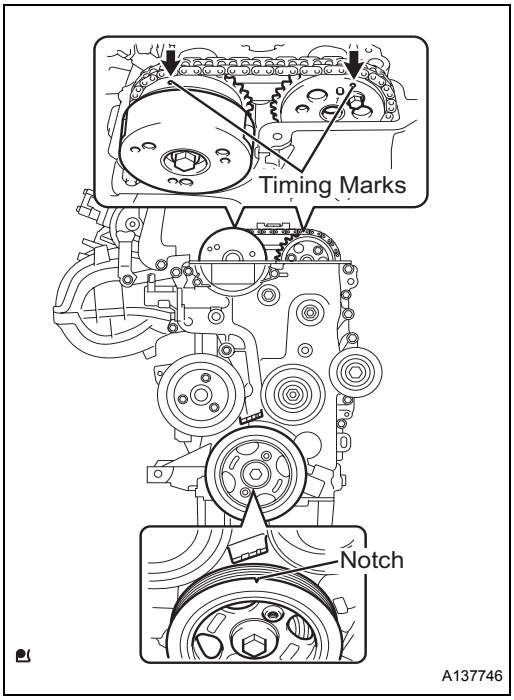

(af) Make sure that each timing mark is positioned as shown in the illustration.

(ag) Apply Three Bond TB1324 to the first 2 to 3 threads of the chain cover service hole screw plug bolt.

NOTICE:

Clean and degrease the bolt and bolt hole.

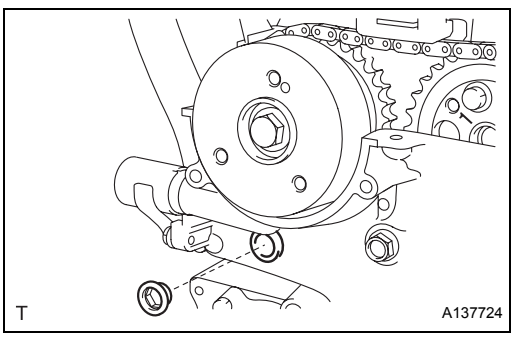

(ah) Using a 10 mm socket hexagon wrench, install the chain cover service hole screw plug.

Torque: 16.5 N*m (168 kgf*cm)

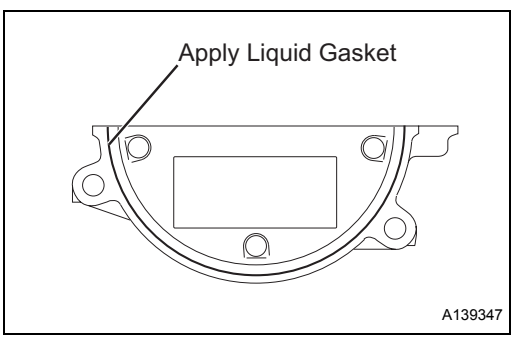

(ai) Apply Three Bond TB1280E to the position shown in the illustration.

NOTICE:

- **Clean and degrease the installation surfaces.**
- **Install within 3 minutes of applying Three Bond TB1280E.**
- **Do not start the engine within 2 hours of the installation.**

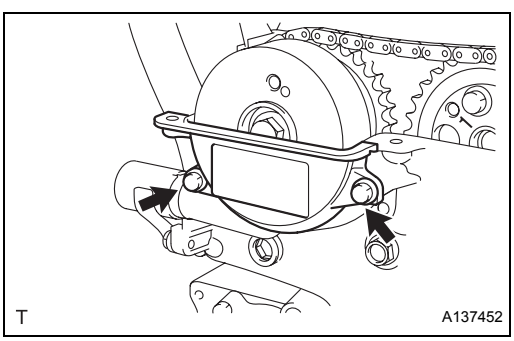

(aj) Install the timing chain cover No. 2 with the 2 bolts.

Torque: 8.5 N*m (87 kgf*cm)

Install the chain vibration damper No. 2 to the camshaft bearing cap No.1 with the 2 bolts.

Torque: 7.5 N*m (76 kgf*cm)

2. **INSTALL CYLINDER HEAD COVER (See page EM-162)**
3. **INSTALL IGNITION COIL ASSEMBLY (See page EM-162)**
4. **INSTALL RADIATOR PIPE (See page EM-166)**
5. **INSTALL ENGINE ROOM MAIN WIRE (See page EM-165)**

6. INSTALL VENTILATION HOSE (See page EM-166)
7. INSTALL VENTILATION HOSE NO. 2 (See page EM-166)
8. INSTALL ACCELERATOR CONTROL CABLE ASSEMBLY (See page EM-165)
9. INSTALL RADIATOR HOSE NO. 1 (See page CO-18)
10. INSTALL AIR CLEANER ASSEMBLY (See page EM-167)
11. INSTALL AIR CLEANER HOSE NO. 1 (See page CO-19)
12. ADD ENGINE COOLANT (See page CO-9)
13. CHECK FOR ENGINE COOLANT LEAKS (See page CO-10)
14. CHECK COOLANT LEVEL (See page CO-10)
15. INSTALL ENGINE UNDER COVER (See page EM-69)
16. CONNECT NEGATIVE BATTERY TERMINAL
    Torque: 5.4 N*m (55 kgf*cm)