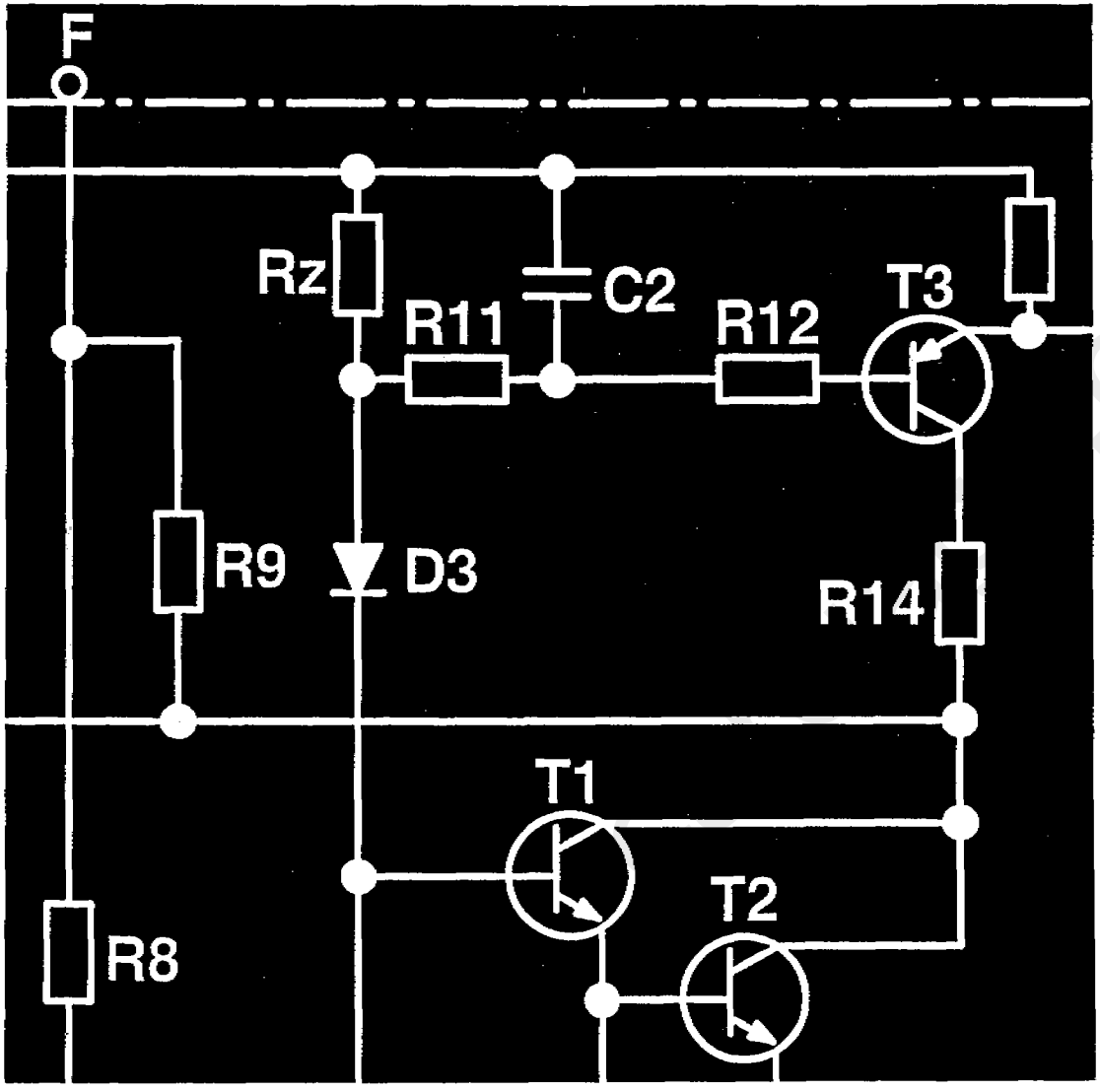

1991 BMW 850i (E31) Electrical Troubleshooting Manual

BMW NA

ELECTRICAL TROUBLESHOOTING MANUAL

8 SERIES – E31 (850i)

SCHEMATICS MODEL YEAR 1991

0100.0 INDEX
0110.0 INTRODUCTION
0140.0 SYMBOLS
0670.0 POWER DISTRIBUTION CHART
0670.1 FUSE CHART
0670.2 POWER DISTRIBUTION
0670.3 FUSE DETAILS
0670.4 GROUND DISTRIBUTION
0670.5 DATA LINK
1210.6 ENGINE CONTROL SYSTEM (DMEM1.7, 12-CYLINDER M70)
1230.0 CHARGING SYSTEM
1240.0 START
1270.1 ELECTRONIC THROTTLE CONTROL (EML12-CYLINDER)
1290.0 E-BOX FAN
2460.0z ELECTRONIC TRANSMISSION CONTROL(EGS)
3231.0 ELECTRIC STEERING COLUMN ADJUSTMENT
3231.1 STEERING COLUMN MEMORY (LSM)
3234.0 SUPPLEMENTAL RESTRAINT SYSTEM (AIRBAG)
3240.0 POWER ASSIST STEERING (SERVOTRONIC)
3450.1 SLIP CONTROL (ABS/ASC)
3450.2 SLIP CONTROL (ABS/ASC+T)
3623.0 TIRE PRESSURE CONTROL (RDC)
3715.1z ELECTRONIC SHOCK ABSORBER CONTROLIII+ (EDC III+)
5116.0 POWER MIRRORS
5120.0 ZKE DOOR LOCK HEATING (TSH)
5126.0 ZKE CENTRAL LOCKING (ZV)
5133.0 ZKE POWER WINDOWS (FH)
5146.0 POWER SUN SHADES
5200.0 POWER SEATS
5200.1 SEAT/MIRROR MEMORY SYSTEM (SM/SPM)
5203.0 HEATED SEATS
5410.0 ZKE SUNROOF (SHD)
6100.0z CENTRAL BODY ELECTRONICS (ZKE II)
6133.0 HORN
6160.0z ZKE WIPER/WASHER CONTROL
6164.0 ZKE WINDSHIELD WIPER PRESSURE CONTROL (ADV)
6167.0 ZKE HEADLIGHT WASHER (SRA)
6169.0 WINDSHIELD WASHER JET HEATERS
6210.0 BODY ELECTRONICS MODULE (EKM)
6211.0 INSTRUMENT CLUSTER

© BMW NA, Woodcliff Lake, NJ
ZU-S, Printed in U.S.A.

SCHEMATICS

6300.0 LIGHT SWITCH DETAILS
6301.0 LAMP MONITOR (LKM)
6312.0 HEADLIGHTS/FOG LIGHTS
6313.0 TURN/HAZARD LIGHTS
6314.0 PARK/TAIL/UNDERHOOD LIGHTS
6320.0 LICENSE PLATE/LUGGAGE COMPARTMENT LIGHTS
6322.0 BACK UP LIGHTS
6325.0 BRAKE LIGHTS
6330.0z ZKE INTERIOR LIGHTS (IB)
6332.0 INTERIOR ACCESSORIES
6350.0 CRASH CONTROL MODULE
6424.0z REAR WINDOW DEFOGGER/ANTENNA
6450.0 AUTOMATIC HEATING/AC CONTROL (IHKA)
6454.0 AUXILIARY FAN
6510.1 RADIO/CD-PLAYER (PROVISIONS)
6561.0 CELLULAR TELEPHONE (PROVISIONS)
6575.1 ANTI-THEFT SYSTEM III (DWA III)
6581.0z MULTI-INFORMATION DISPLAY (MID)
6610.0 INFRARED LOCKING (IRS)
7000.0 COMPONENT LOCATION CHART
7100.0 COMPONENT LOCATION VIEWS
8000.0 SPLICE LOCATION VIEWS
8500.0 CONNECTOR VIEWS

cardiagn.com

© BMW NA, Woodcliff Lake, NJ
ZU-S, Printed in U.S.A.

cardiagn.com

INDEX

A/C Relay 6454.0-01
A/C Compressor. 6450.0-01
ABS 3450.1-00
ABS 3450.2-00
ADV Motor 6164.0-01
Air Conditioner 6450.0-00
Air Intake Temperature Sensor 1210.6-08
Air Mass Meter 1210.6-03
Air Volume Control 6450.0-01
Airbag 3234.0-00
Alternator 1230.0-00
Antitheft Horn 6133.0-00
Antitheft System. 6575.1-00
ASC 3450.1-00
ASC + T 3450.2-00
Automatic Climate Control (IHKA) 6450.0-00
Automatic Inside Mirror 5116.0-02
Automatic Stability Control (ASC) 3450.1-00
Automatic Stability Control plus Traction (ASC + T) 3450.2-00
Auxiliary Fan 6454.0-00
Auxiliary Water Pump. 6450.0-11
Back Up Lights 6322.0-00
Battery B+ Start Point. 0670.2-00
Blower Motor. 6450.0-01
Brake Light 6325.0-00
Brake Light Switch. 1270.1-03
Brake Pad Sensor Front 6210.0-05
Brake Pad Sensor Rear 6210.0-05
Cassette Player Lights. 6300.0-02
Cellular Telephone Provisions 6561.0-00
Central Body Electronics (ZKE II) 6100.0-00
Central Locking System With ZKE 5126.0-00
Cigar Lighter. 6332.0-01
Cold Monitoring 6301.0-01
Component Location Chart 7000.0-00
Component Location Views 7100.0-00
Concealing Headlights 6312.0-04
Connector Views 8500.0-00
Crash Control Unit 6350.0-00
Cruise Control With EML 1270.1-00
Cylinder Identification Sensor 1210.6-15
Diagnostic Connector. 0670.5-10
Diagnostic Link 0670.5-00
Diagnostic Link RXD 0670.5-03
Diagnostic Link TXD 0670.5-01
Diagnostic Module (Airbag) 3234.0-00
Door Handle Switch 5120.0-00
Door Jamb Switch 6575.1-01
Door Lock Heating With ZKE 5120.0-00
Drive Away Protection 6575.1-03
E-Box Fan 1290.0-00
EGS 2460.0-00
Electronic Body Module (EKM) 6210.0-00
Electronic Damper Control III 3715.1-00
Electronic Transmission Control (EGS) 2460.0-00
EML 1270.1-00
Engine Compartment Light 6314.0-02
Engine Speed Sensor 1210.6-15
Fan E-Box 1290.0-00
Fog Lights 6312.0-01
Front Power Distribution Box 0670.2-00
Front Sensor (Airbag) 3234.0-01
Fuel Gauge 6211.0-00
Fuel Pump With DME M1.7, 12 Cylinder 1210.6-04
Fuel Pump With DME M1.7, 12 Cylinder 1210.6-14
Fuel Reserve Contact 6211.0-00
Fuse Chart 0670.1-00
Fuse Details 0670.3-00
Gear Selector Switch 6210.0-10
General Module 6100.0-00
General Module Safety Relay. 6100.0-01
Glove Box Switch 6575.1-02
Glove Compartment Light. 6332.0-00
Ground Distribution 0670.4-00

carmanual.com

INDEX

Hazard Indicators 6313.0-00
Headlight Flasher 6312.0-00
Headlight Washer 6167.0-00
Headlights 6312.0-00
High Beam 6312.0-03
Hood Switch 6575.1-02
Horn 6133.0-00
Hydraulic Unit 3450.1-02
Hydraulic Unit 3450.2-02
I-Bus 6210.0-00
Instrument Bus 0670.5-05
Ignition Coil DME 1210.6-10
Ignition Switch 0670.2-02
Ignition Timing Adjust (AEGS) 2460.0-03
IHKA Air Delivery 6450.0-05
IHKA Auxiliary Water Pump 6450.0-11
IHKA Compressor Controls 6450.0-12
IHKA Diagnostic Link And Starter Input 6450.0-14
IHKA Power 6450.0-00
IHKA Temperature Controls 6450.0-03
IHKA Water Valves 6450.0-02
Indicators
-ABS 6211.0-03
-Airbag 6211.0-03
-Brake Fluid Level 6211.0-03
-Brake Warning 6211.0-03
-Charge Light 6211.0-04
-Check Engine 6211.0-04
-EML 6313.0-02
-Fog Light 6312.0-00
-Fuel Reserve Indicator 6211.0-04
-Hazard Light 6211.0-04
-High Beam 6211.0-03
-Oil Pressure Gauge 6211.0-03
-Park Brake 6312.0-01
-Turn Signal Indicator 6211.0-04
Infrared Locking System 6610.0-00
Infrared Receiver 6610.0-00
Injection Electronics (DME M1.7, 12 Cylinder) 1210.6-00
Instrument Cluster 6211.0-00
Intensive Wash 6160.0-02
Interior Light Switch 6330.0-03
Interior Lights 6330.0-03
Interval Wipe 6160.0-00
Introduction 0110.0-00
Lamp Monitor (LKM) 6301.0-00
License Plate Lights 6320.0-00
Lock Sensor (IHKA) 6450.0-13
Lumbar Support 5200.0-00
Make-up Mirror 6300.0-00
Memory Seat/Mirrors (SM/SPM) 5200.1-00
Memory Switch 5200.1-01
Motor Electronics 1210.6-00
Multi-Information Display 6581.0-00
Oxygen Sensor 1210.6-05
Oxygen Sensor 1210.6-15
Parking Lights 6314.0-01
Passenger Compartment Lights 6330.0-00
Power Assist Steering (Servotronic) 3240.0-00
Power Distribution 0670.0-00
Power Mirrors 5116.0-00
Power Mirrors With Memory (SM/SPM) 5200.1-06
Power Seats 5200.0-00
Power Seats With Memory 5200.1-00
Power Sun Shades 5146.0-00
Pulse Wipe 6160.0-00
Radio 6510.0-00
Radio Antitheft Switch (DWA) 6575.1-02

cardiagn.com

INDEX

Rear Axle Reed Contact 6210.0-08
Rear Fog Lights 6312.0-03
Rear Lights 6314.0-01
Rear Power Distribution Box 0670.2-06
Rear View Mirror 5116.0-02
Rear Window Antenna 6424.0-00
Rear Window Defogger 6424.0-00
Relay Module 6100.0-04
Seat Heating 5203.0-00
Shift Lock 2460.0-01
Signal Horn 6575.1-00
Solenoid Controlled Valve 3240.0-00
Speed Control With EML 1270.1-02
Speed Sensor 6210.0-08
Speed Sensor 6211.0-01
Speed Signal 6210.0-02
Speed Signal (TD) 6211.0-00
Speedometer 6211.0-00
Splice Location Views 8000.0-00
SRA-Module 6167.0-02
Starter 1240.0-01
Steering, Speed Dependent 3240.0-00
Sunroof 5410.0-00
Symbols 0140.0-00
Tachometer 6211.0-00
Telephone 6561.0-00
Temperature Gauge 6211.0-00
Transmission 2460.0-02
Transmission Control Unit 2460.0-01
Trunk Lid Switch 6575.1-00
Trunk Light 6320.0-00
Turn Signal 6313.0-00
Unloader Relay 0670.2-04
Vehicle Speed Control 1270.1-02
Washer Pump 6160.0-02
Washer Unit 6160.0-00
Window Monitor (DWA) 6575.1-05
Window Switch 5133.0-00
Windshield Washer 6160.0-00
Windshield Washer Jet Heaters 6169.0-00
Wiper Motor 6160.0-01
Wiper Pressure Control (ADV) 6164.0-00
ZKE II 6100.0-00

carmagn.com

cardiagn.com

Schematics

The schematics divide the entire vehicle electrical system into individual circuits. Interacting electrical components are shown on one common schematic.

Switches and other components are represented in such a way that their general layout and function are self-explicit. They are arranged on the sheet such that the current path can be followed from positive (top) to negative (bottom).

Important: The components and wires are not drawn to scale. For instance, a lead with a length of over 1m can be shown as a lead which is only a few cm long. To enhance the clarity of the schematics, all connectors and splices between fuses and components as well as between grounds and components have been omitted. If this information should be required, it may be referenced in cells 0670.3 Fuse Details and 0670.4 Ground Distribution.

All circuit symbols used are listed and explained in cell **0140.0 Symbols.**

In cell **7000.0 Component Location Chart** all important connectors, ground points and components are listed in tabular form. It provides a precise description of the component locations in the vehicle.

In cell **7100.0 Component Location Views** the locations of the connectors and components which are difficult to locate are shown in photographs. In cell **8500.0 Connector Views** diagrams of all connectors with more than three pins are illustrated.

Example

General conventions can be explained based on the following schematic example.

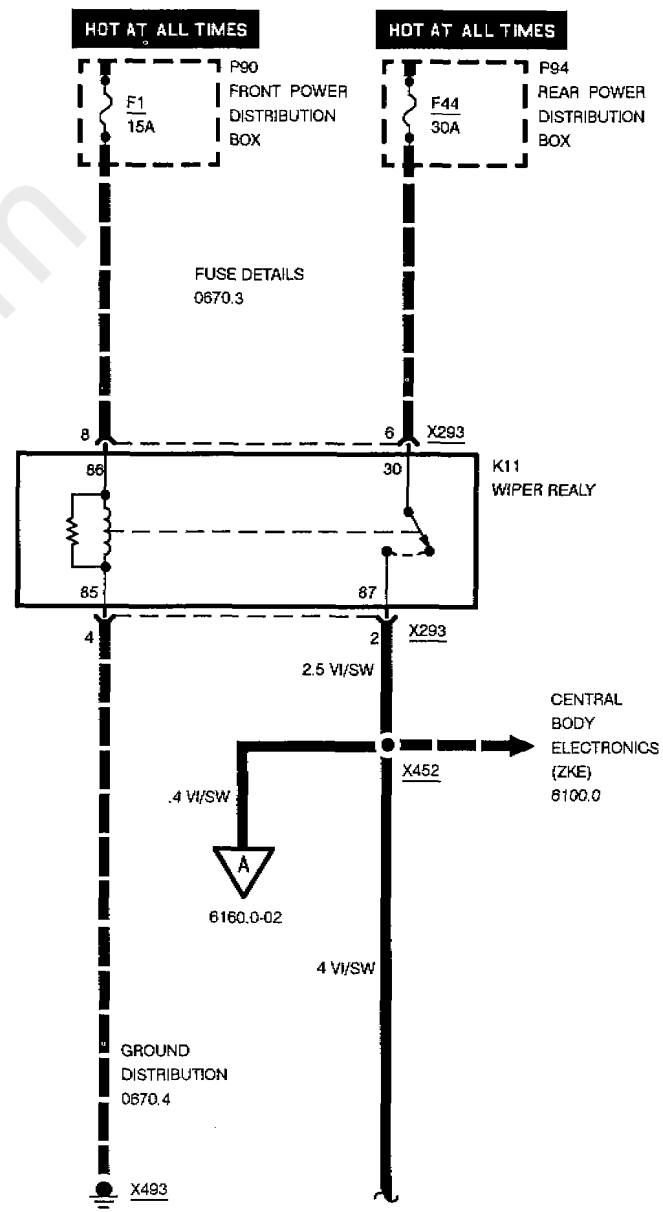

cardiagn.com

General Conventions

1. Switches and relays are always shown in rest position (e.g. K11).

2. A component shown in a dashed frame signifies that the component is illustrated only in part (e.g. P90 and P94).

3. A component shown in a completely drawn frame signifies that the component is illustrated in full (e.g. K11).

4. The dashed line between pin 8 and pin 6 of connector X293 indicates that both pins belong connector X293.

5. The dashed line from fuse F1 to pin 8 of the connector X293 shows the positive supply of the relay K11. Detailed information regarding connectors and splices between fuse F1 and Pin 8 of X293, as well as other wires coming from fuse F1, are illustrated in 0670.3 Fuse Details at fuse F1.

6. The dashed line with arrow at connector X452 indicates that several wires lead to connector X452 to another circuit. All wires leading to the splice are illustrated in cell 6100.0 Central Body Electronics (ZKE). An solid line with an arrow indicates that only this one wire leads to another circuit.

7. The dashed line from pin 4 of connector X293 to ground X493 shows the ground supply for relay K11. Detailed information regarding connectors and splices between pin 4 and the ground point X493, as well as other wires leading to the ground point, are illustrated in 0670.4 Ground Distribution at ground X493.

8. The solid line from splice X452 with an **A** in the open arrow indicates that the wire continues on another page. The page reference is located underneath the arrow.

9. Termination of the 4 VI/SW from splice X452 with a wavy line indicates that the wire is continued on the opposite page.

cardiagn.com

SYMBOLS

BATTERY

FUSE

CIRCUIT BREAKER

VARIABLE RESISTANCE SENSOR
VARIABLE CONTACT IS MOVED BY AN EXTERNAL FORCE

VARIABLE RESISTOR
RESISTANCE IS CHANGED BY TEMPERATURE OR PRESSURE

DIODE
CURRENT CAN FLOW ONLY IN DIRECTION OF ARROW

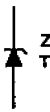
ZENER DIODE
TO REGULATE VOLTAGE

LIGHT EMITTING DIODE

LIGHT

BIFILAMENT LIGHT

PERMANENT MAGNET MOTOR ONE SPEED

PERMANENT MAGNET MOTOR TWO SPEED

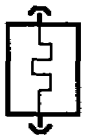
HEATING ELEMENT

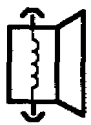
LOUDSPEAKER OR HORN

COIL OR SOLENOID

SOLENOID CONTROLLER VALVE OR CLUTCH SOLENOID

TRANSISTORIZED SWITCH

cardiagn.com

SYMBOLS

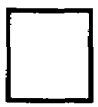

ENTIRE COMPONENT SHOWN

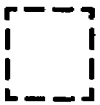

PART OF A COMPONENT SHOWN

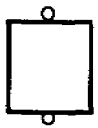

COMPONENT WITH SCREW TERMINALS

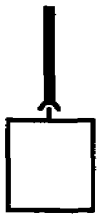

CONNECTOR ATTACHED TO COMPONENT

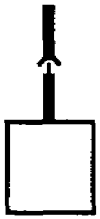

CONNECTOR ATTACHED TO COMPONENT LEAD (PIGTAIL)

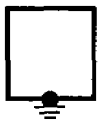

COMPONENT CASE DIRECTLY ATTACHED TO METAL PART OF CAR (GROUNDED)

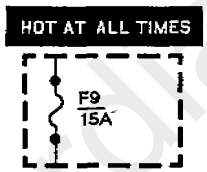

INDICATES THAT FUSE 9 IS SUPPLIED WITH POWER AT ALL TIMES

TERMINAL NUMBER	DESCRIPTION
50	VOLTAGE: IGNITION SWITCH IN START
30	VOLTAGE: SUPPLIED AT ALL TIMES
15	VOLTAGE: IGNITION SWITCH IN RUN OR START
15I	VOLTAGE: IGNITION SWITCH IN RUN
R	VOLTAGE: IGNITION SWITCH IN ACCESSORY, RUN OR START
31	GROUND

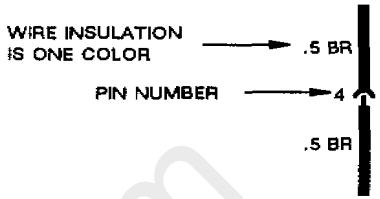

1. FIRST COLOR IS THE WIRE INSULATION.
2. SECOND COLOR IS THE "TRACER" OR "STRIPE" COLOR.
3. THIRD COLOR IS THE COLOR OF THE DOTS.

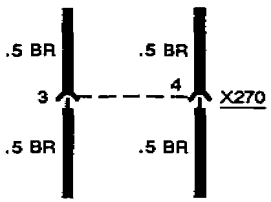

TWO CONNECTIONS (PINS) IN THE SAME CONNECTOR

DASHED LINE INDICATES TERMINALS OF THE SAME CONNECTOR

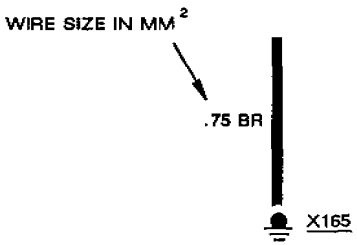

WIRE ATTACHED TO METAL PART OF CAR (GROUNDED)

GROUND NUMBERED FOR REFERENCE ON COMPONENT LOCATION CHART

cardiagn.com

SYMBOLS

ONE POLE, TWO POSITION SWITCH

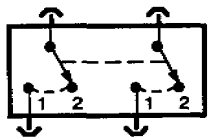

SWITCHES THAT MOVE TOGETHER

DASHED LINE SHOWS A MECHANICAL CONNECTION BETWEEN SWITCHES

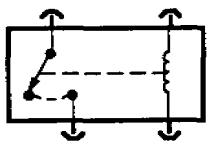

RELAY WITH NO CURRENT FLOWING THROUGH COIL

WHEN COIL IS ENERGIZED, SWITCH IS PULLED CLOSED

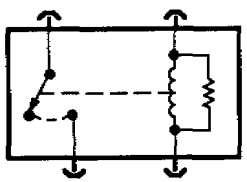

RELAY WITH RESISTOR ACROSS COIL

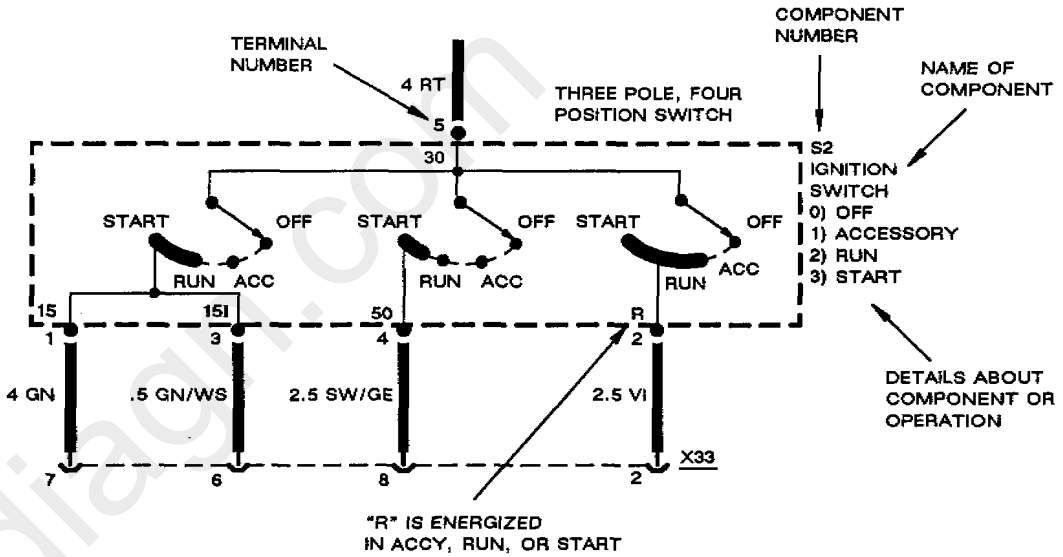

TERMINAL NUMBER	DESCRIPTION
50	VOLTAGE: IGNITION SWITCH IN START
30	VOLTAGE: SUPPLIED AT ALL TIMES
15	VOLTAGE: IGNITION SWITCH IN RUN OR START
15I	VOLTAGE: IGNITION SWITCH IN RUN
R	VOLTAGE: IGNITION SWITCH IN ACCESSORY, RUN, OR START
31	GROUND

cardiagn.com

SYMBOLS

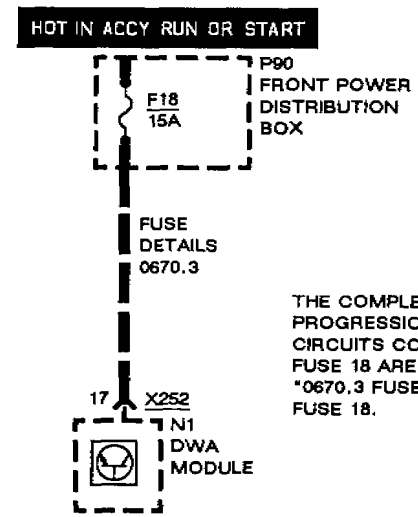

THE COMPLETE WIRE PROGRESSION AND FURTHER CIRCUITS CONNECTED TO FUSE 18 ARE SHOWN IN CELL "0670.3 FUSE DETAILS" AT FUSE 18.

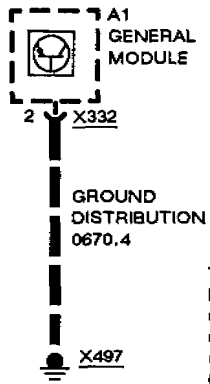

THE COMPLETE WIRE PROGRESSION AND FURTHER CIRCUITS CONNECTED AT GROUND X497 ARE SHOWN IN CELL "0670.4 GROUND DISTRIBUTION" AT GROUND X497.

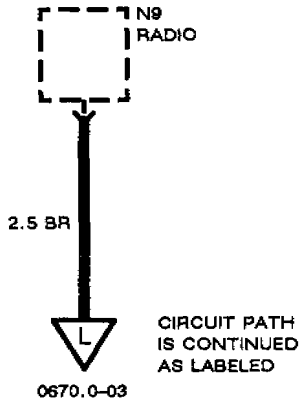

CIRCUIT PATH IS CONTINUED AS LABELED

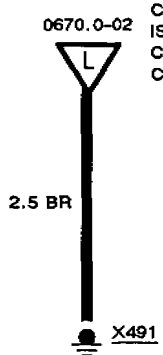

ARROW SHOWS DIRECTION OF CURRENT FLOW AND IS REPEATED WHERE CURRENT PATH CONTINUES

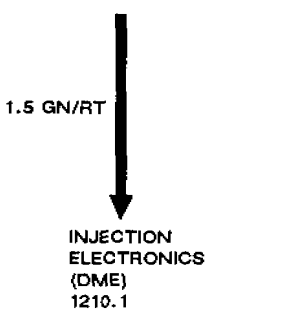

CIRCUIT REFERENCE– A WIRE WHICH CONNECTS TO ANOTHER CIRCUIT

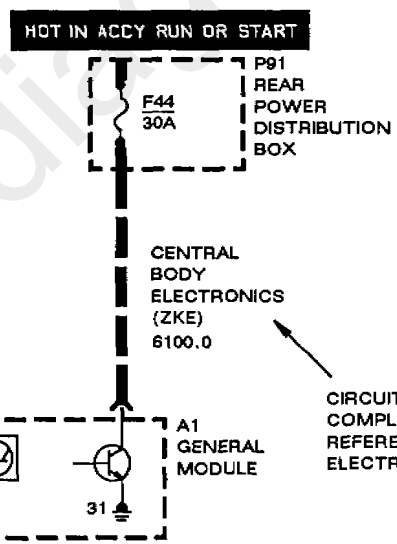

SYMBOL INDICATES A SOLID STATE DEVICE (INCLUDES ONLY ELECTRONIC PARTS)

CIRCUIT SHOWN IS INCOMPLETE COMPLETE CIRCUIT CAN BE REFERENCED IN CENTRAL BODY ELECTRONICS (ZKE)

cardiagn.com

cardiagn.com

cardiagn.com

POWER DISTRIBUTION CHART

FRONT POWER DISTRIBUTION BOX

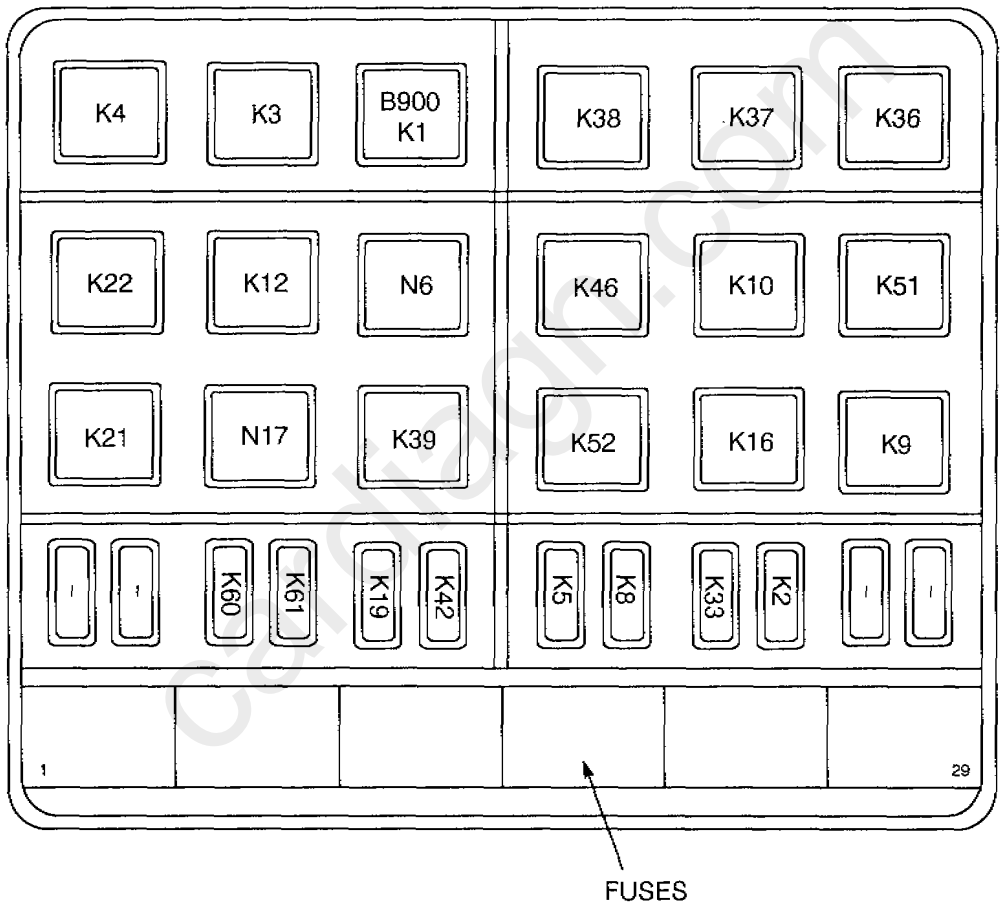

cardiagn.com

POWER DISTRIBUTION CHART

FRONT POWER DISTRIBUTION BOX

COMPONENTS IN FRONT POWER DISTRIBUTION BOX

NUMBER	CONNECTOR	DESCRIPTION
B900	X55	JUMPER PLUG
K1	X55	STARTER RELAY
K2	X10039	HORN RELAY
K3	X57	UNLOADER RELAY TERMINAL R
K4	X58	BLOWER RELAY
K5	X10040	WASHER PUMP RELAY
K8	X10040	AUXILIARY WATER PUMP RELAY
K9	X63	UNLOADER RELAY, KL15
K10	X54	ABS OVERVOLTAGE PROTECTION RELAY, WITHOUT ASC+T
K12	X291	WIPER PRESSURE CONTROL RELAY (ADV)
K16	X64	HAZARD FLASHER RELAY
K19	X10041	AIR CONDITIONING MOTRONIC RELAY
K21	X52	NORMAL SPEED RELAY

COMPONENTS IN FRONT POWER DISTRIBUTION BOX

NUMBER	CONNECTOR	DESCRIPTION
K22	X53	HIGH SPEED RELAY
K33	X10039	AIR CONDITIONING RELAY
K36	X10044	WIPER RELAY I
K37	X10045	WIPER RELAY II
K38	X10047	WIPER RELAY III
K39	X280	CONCEALING HEADLIGHTS RELAY
K42	X10041	INTENSIVE WASH RELAY
K46	X43	HIGH BEAM LIGHT RELAY
K51	X941	RELAY FOR HORN TELEPHONE US
K52	X281	HEADLIGHT FLASHER RELAY
K60	X10042	COMPRESSOR CUT-OFF RELAY
K61	X10042	KL61 UNLOADER RELAY
N6	X61	HEADLIGHT/FRONT FOG LIGHT MODULE
N17	X65	CRASH CONTROL UNIT

carpiagri.com

POWER DISTRIBUTION CHART

P94 REAR POWER DISTRIBUTION BOX

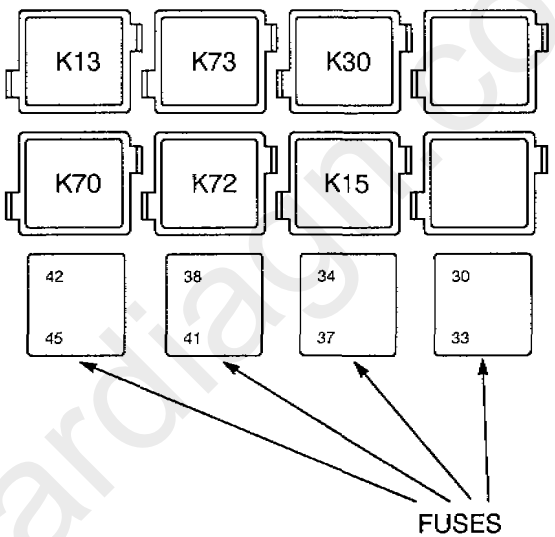

cardiagn.com

POWER DISTRIBUTION CHART

P94 REAR POWER DISTRIBUTION BOX

COMPONENTS IN FRONT POWER DISTRIBUTION BOX		
NUMBER	CONNECTOR	DESCRIPTION
K13	X292	REAR DEFOGGER RELAY
K15	X294	ELECTRIC POWER PROTECTION RELAY
K30	X287	ELECTRIC POWER PROTECTION RELAY II
K70	X1376	CENTRAL LOCKING TRUNK LID MOTOR RELAY
K72	X13001	CONSUMER CUT-OFF RELAY I
K73	X13015	CONSUMER CUT-OFF RELAY II

cardiagn.com

FUSE CHART

FUSES 1 TO 29

		FUSE NUMBER																											
		1	2	3	4	5	6	7	8	9	10	11	12	13	14	15	16	17	18	19	20	21	22	23	24	25	26	27	28	29
		7.5A	7.5A	7.5A	7.5A	10A	15A	30A	7.5A	20A	7.5A	7.5A	15A	7.5A	7.5A	10A	20A	7.5A	7.5A	30A	30A	7.5A	30A	15A	15A	30A	15A	30A	15A	7.5A
1210.6	INJECTION ELECTRONICS (DME M1.7, 12 CYLINDER)												●											●	●				●	
1230.0	CHARGING SYSTEM																	●												
1240.0	START												●																	
1270.1	ELECTRONIC THROTTLE CONTROL (EML, 12 CYLINDER)	●							●				●																	
1290.0	E-BOX FAN																													
2460.0	ELECTRONIC TRANSMISSION CONTROL (EGS)								●				●																	
3231.0	ELECTRIC STEERING COLUMN ADJUSTMENT																													
3231.1	MEMORY STEERING COLUMN ADJUSTMENT (LSM)																●		●											
3234.0	SUPPLEMENTAL RESTRAINT SYSTEM (AIR BAG)																													
3240.0	POWER ASSIST STEERING (SERVOTRONIC)																												●	
3450.1	ANTILOCK BRAKE SYSTEM WITH AUTOMATIC STABILITY CONTROL (ABS/ASC)								●									●												●
3450.2	AUTOMATIC STABILITY CONTROL PLUS TRACTION (ASC + T)								●									●												
3623.0	TIRE PRESSURE CONTROL (RDC)																		●											●
3715.1	ELECTRONIC DAMPER CONTROL III (EDC III)																													●
5116.0	POWER MIRRORS												●					●												
5120.0	ZKE DOOR LOCK HEATING (TSH)																													
5126.0	ZKE CENTRAL LOCKING (ZV)																													
5133.0	ZKE POWER WINDOWS (FH)																													●
5146.0	POWER SUN SHADES																		●											

cardiagn.com

BMW 8

FUSE CHART

FUSES 1 TO 29

		FUSE NUMBER																												
		1	2	3	4	5	6	7	8	9	10	11	12	13	14	15	16	17	18	19	20	21	22	23	24	25	26	27	28	29
		7.5A	7.5A	7.5A	7.5A	10A	15A	30A	7.5A	20A	7.5A	7.5A	15A	7.5A	7.5A	10A	20A	7.5A	7.5A	30A	30A	7.5A	30A	15A	15A	30A	15A	30A	15A	7.5A
5200.0	POWER SEATS																													
5200.1	MEMORY SEATS/ MIRRORS (SM/SPM)												●				●	●	●											
5203.0	HEATED SEATS																●													
5410.0	ZKE SUNROOF (SHD)															●														●
6100.0	CENTRAL BODY ELECTRONICS (ZKE)															●														●
6133.0	HORN									●																				
6160.0	ZKE WIPER CONTROL (SWS)	●														●							●							●
6164.0	ZKE WINDSHIELD WIPER PRESSURE CONTROL (ADV)									●						●														●
6167.0	ZKE HEADLIGHT WASHER (SRA)		●													●												●		●
6169.0	WINDSHIELD WASHER JET HEATERS												●																	
6210.0	ELECTRONIC BODY MODULE (EKM)												●					●	●											
6211.0	INSTRUMENT CLUSTER	●											●					●	●											
6300.0	LIGHT SWITCH DETAILS		●	●	●	●																								
6301.0	LAMP MONITOR (LKM)		●	●	●	●		●	●	●	●	●									●									
6312.0	HEADLIGHTS/ FOG LIGHTS		●	●		●		●		●	●	●		●	●						●						●			
6313.0	TURN/ HAZARD LIGHTS			●			●																							
6314.0	PARK/ TAIL/ UNDERHOOD LIGHTS			●	●	●																								
6320.0	LICENSE PLATE/ LUGGAGE COMPARTMENT LIGHTS			●		●																								
6322.0	BACK UP LIGHTS																	●												

cardiagn.com

BMW 8

FUSE CHART

FUSES 1 TO 29

		FUSE NUMBER																												
		1	2	3	4	5	6	7	8	9	10	11	12	13	14	15	16	17	18	19	20	21	22	23	24	25	26	27	28	29
		7.5A	7.5A	7.5A	7.5A	10A	15A	30A	7.5A	20A	7.5A	7.5A	15A	7.5A	7.5A	10A	20A	7.5A	7.5A	30A	30A	7.5A	30A	15A	15A	30A	15A	30A	15A	7.5A
6325.0	BRAKE LIGHTS			●					●																					
6330.0	ZKE INTERIOR LIGHTS (IB)															●														
6332.0	GLOVE COMPARTMENT LIGHT/ CIGAR LIGHTER/ CHARGING SOCKET					●																								
6350.0	CRASH CONTROL UNIT						●																							
6424.0	REAR WINDOW DEFOGGER/ ANTENNA																					●								
6450.0	AUTOMATIC CLIMATE CONTROL (IHKA)	●																		●		●								●
6454.0	AUXILIARY FAN																									●				●
6510.0	RADIO/ CD PLAYER (PROVISIONS)																		●											
6561.0	CELLULAR TELEPHONE (PROVISIONS)									●									●											
6575.1	ANTITHEFT SYSTEM III (DWA III)																	●	●											
6581.0	MULTI- INFORMATION DISPLAY (MID)																	●	●											
6610.0	INFRARED LOCKING (IRS)																	●	●											

cardiagn.com

FUSE CHART

FUSES 30 TO 53

		FUSE NUMBER																											
		30	31	32	33	34		36	37	38	39	40	41	42	43		45					50	51		53				
		15A	7.5A	20A	7.5A	30A		15A	30A	30A	30A	15A	30A	30A	10A		30A					10A	25A		15A				
1210.6	INJECTION ELECTRONICS (DME M1.7, 12 CYLINDER)																												
1230.0	CHARGING SYSTEM																												
1240.0	START																												
1270.1	ELECTRONIC THROTTLE CONTROL (EML, 12 CYLINDER)																												
1290.0	E-BOX FAN																												
2460.0	ELECTRONIC TRANSMISSION CONTROL (EGS)																												
3231.0	ELECTRIC STEERING COLUMN ADJUSTMENT											●																	
3231.1	MEMORY STEERING COLUMN ADJUSTMENT (LSM)											●																	
3234.0	SUPPLEMENTAL RESTRAINT SYSTEM (AIR BAG)																												
3240.0	POWER ASSIST STEERING (SERVOTRONIC)																												
3450.1	ANTILOCK BRAKE SYSTEM WITH AUTOMATIC STABILITY CONTROL (ABS/ASC)																												
3450.2	AUTOMATIC STABILITY CONTROL PLUS TRACTION (ASC + T)																												
3623.0	TIRE PRESSURE CONTROL (RDC)																												
3715.1	ELECTRONIC DAMPER CONTROL III (EDC III)			●	●																								
5116.0	POWER MIRRORS																												
5120.0	ZKE DOOR LOCK HEATING (TSH)														●														
5126.0	ZKE CENTRAL LOCKING (ZV)		●		●	●								●	●														
5133.0	ZKE POWER WINDOWS (FH)		●		●	●								●	●														
5146.0	POWER SUN SHADES			●																									

cardiagn.com

BMW 8

FUSE CHART

FUSES 30 TO 53

		FUSE NUMBER																											
		30	31	32	33	34		36	37	38	39	40	41	42	43		45					50	51		53				
		15A	7.5A	20A	7.5A	30A		15A	30A	30A	30A	15A	30A	30A	10A		30A					10A	25A		15A				
5200.0	POWER SEATS								●	●																			
5200.1	MEMORY SEATS/ MIRRORS (SM/SPM)								●																				
5203.0	HEATED SEATS																												
5410.0	ZKE SUNROOF (SHD)		●		●	●								●	●														
6100.0	CENTRAL BODY ELECTRONICS (ZKE II)		●		●	●								●	●														
6133.0	HORN																												
6160.0	ZKE WIPER/WASHER CONTROL		●		●	●								●	●														
6164.0	ZKE WINDSHIELD WIPER PRESSURE CONTROL (ADV)																												
6167.0	ZKE HEADLIGHT WASHER (SRA)																												
6169.0	WINDSHIELD WASHER JET HEATERS																												
6210.0	ELECTRONIC BODY MODULE (EKM)		●		●																								
6211.0	INSTRUMENT CLUSTER		●																										
6300.0	LIGHT SWITCH DETAILS																												
6301.0	LAMP MONITOR (LKM)																												
6312.0	HEADLIGHTS/ FOG LIGHTS																												
6313.0	TURN/ HAZARD LIGHTS																												
6314.0	PARK/ TAIL/ UNDERHOOD LIGHTS																												
6320.0	LICENSE PLATE/ LUGGAGE COMPARTMENT LIGHTS				●																								
6322.0	BACK UP LIGHTS																												

cardiagn.com

BMW 8

FUSE CHART

FUSES 30 TO 53

		FUSE NUMBER																											
		30	31	32	33	34		36	37	38	39	40	41	42	43		45					50	51		53				
		15A	7.5A	20A	7.5A	30A		15A	30A	30A	30A	15A	30A	30A	10A		30A					10A	25A		15A				
6325.0	BRAKE LIGHTS																												
6330.0	ZKE INTERIOR LIGHTS (IB)				●										●														
6332.0	GLOVE COMPARTMENT LIGHT/ CIGAR LIGHTER/ CHARGING SOCKET				●						●																		
6350.0	CRASH CONTROL UNIT																												
6424.0	REAR WINDOW DEFOGGER/ ANTENNA												●																
6450.0	AUTOMATIC CLIMATE CONTROL (IHKA)							●																					
6454.0	AUXILIARY FAN																												
6510.0	RADIO/ CD PLAYER (PROVISIONS)							●																					
6561.0	CELLULAR TELEPHONE (PROVISIONS)	●																											
6575.1	ANTITHEFT SYSTEM III (DWA III)		●																										
6581.0	MULTI- INFORMATION DISPLAY (MID)		●																										
6610.0	INFRARED LOCKING (IRS)		●																										

cardiagn.com

POWER DISTRIBUTION

FRONT POWER DISTRIBUTION BOX

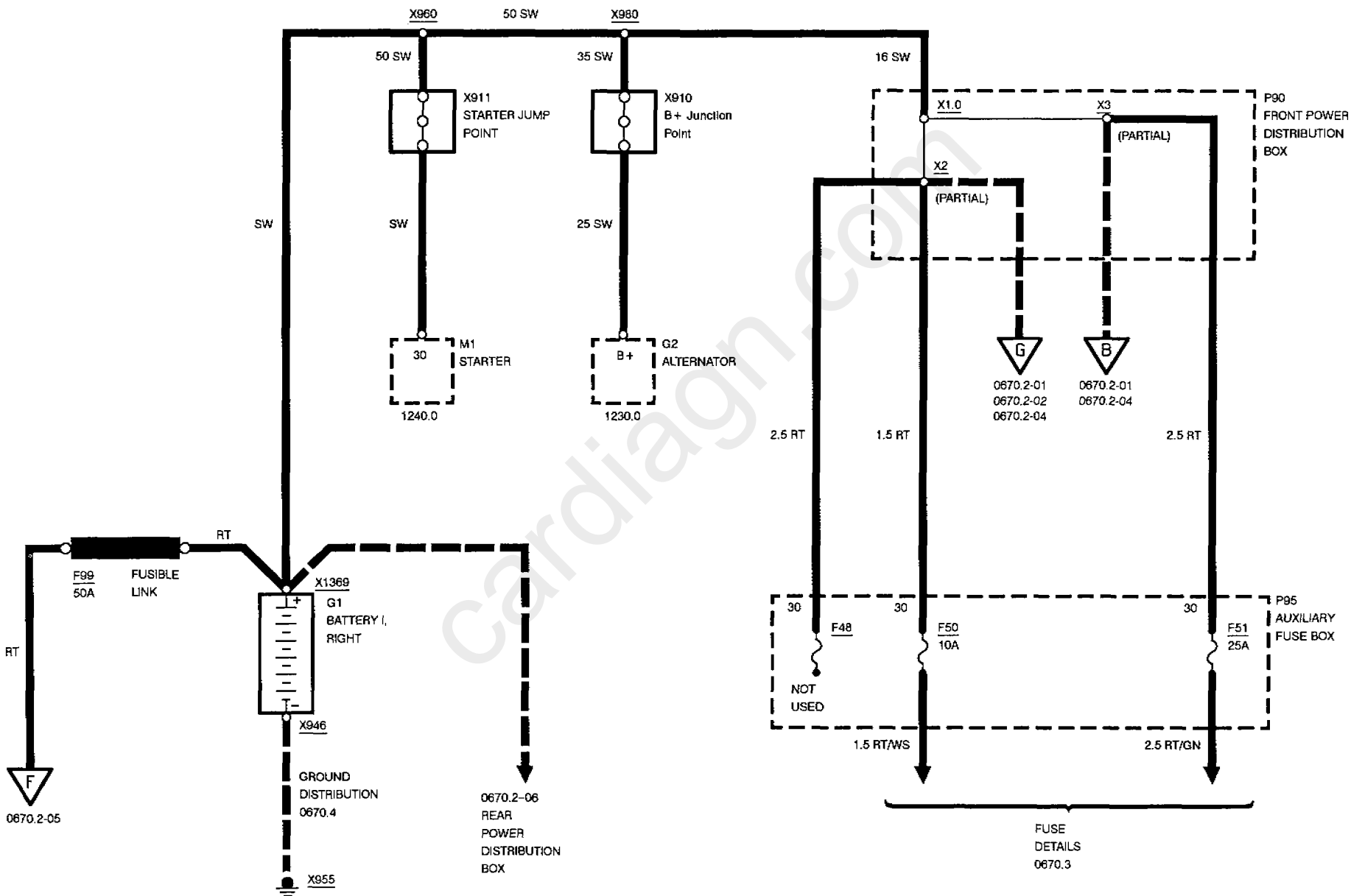

cardiagn.com

POWER DISTRIBUTION

FRONT POWER DISTRIBUTION BOX

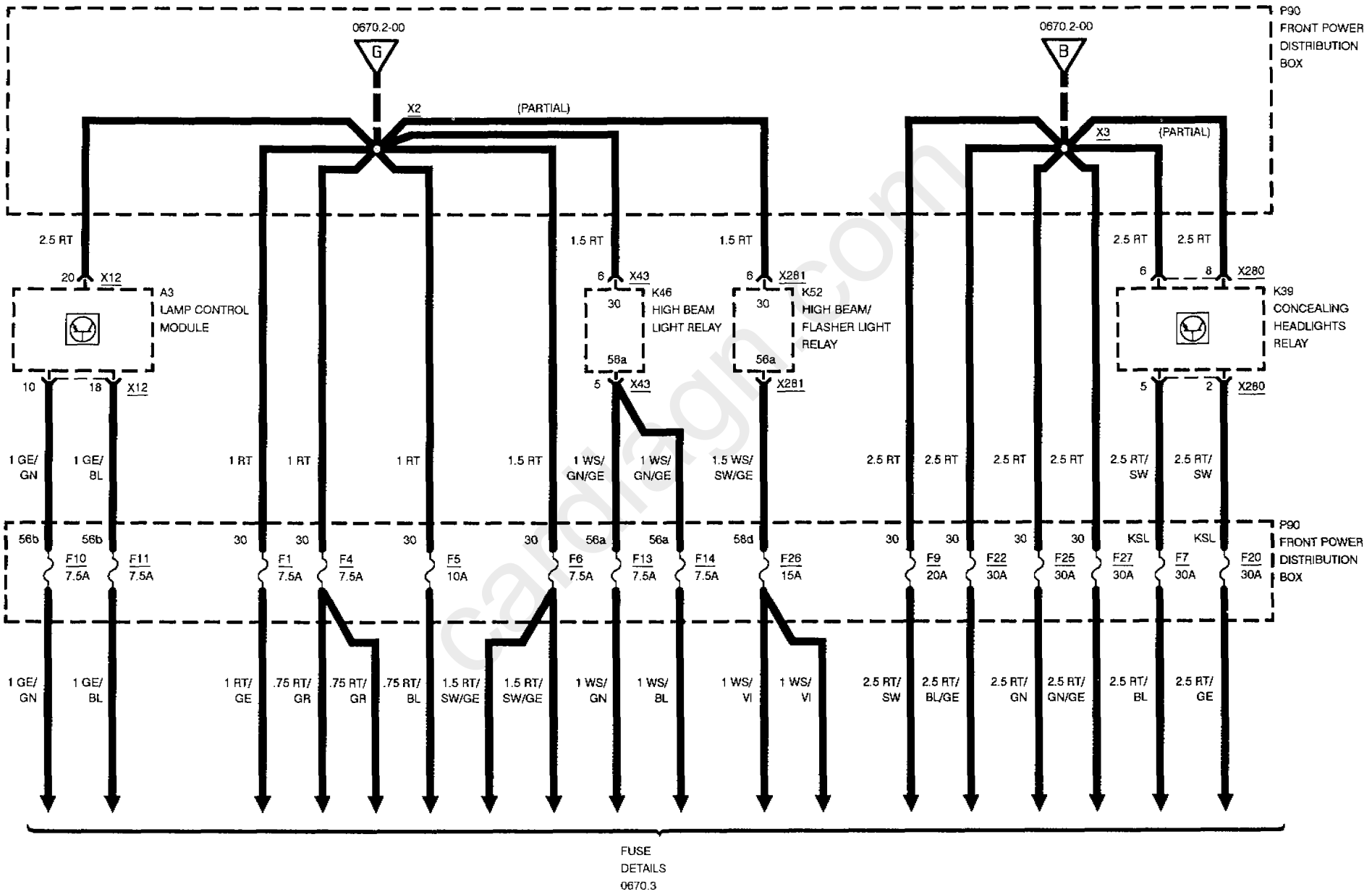

cardiagn.com

POWER DISTRIBUTION

FRONT POWER DISTRIBUTION BOX

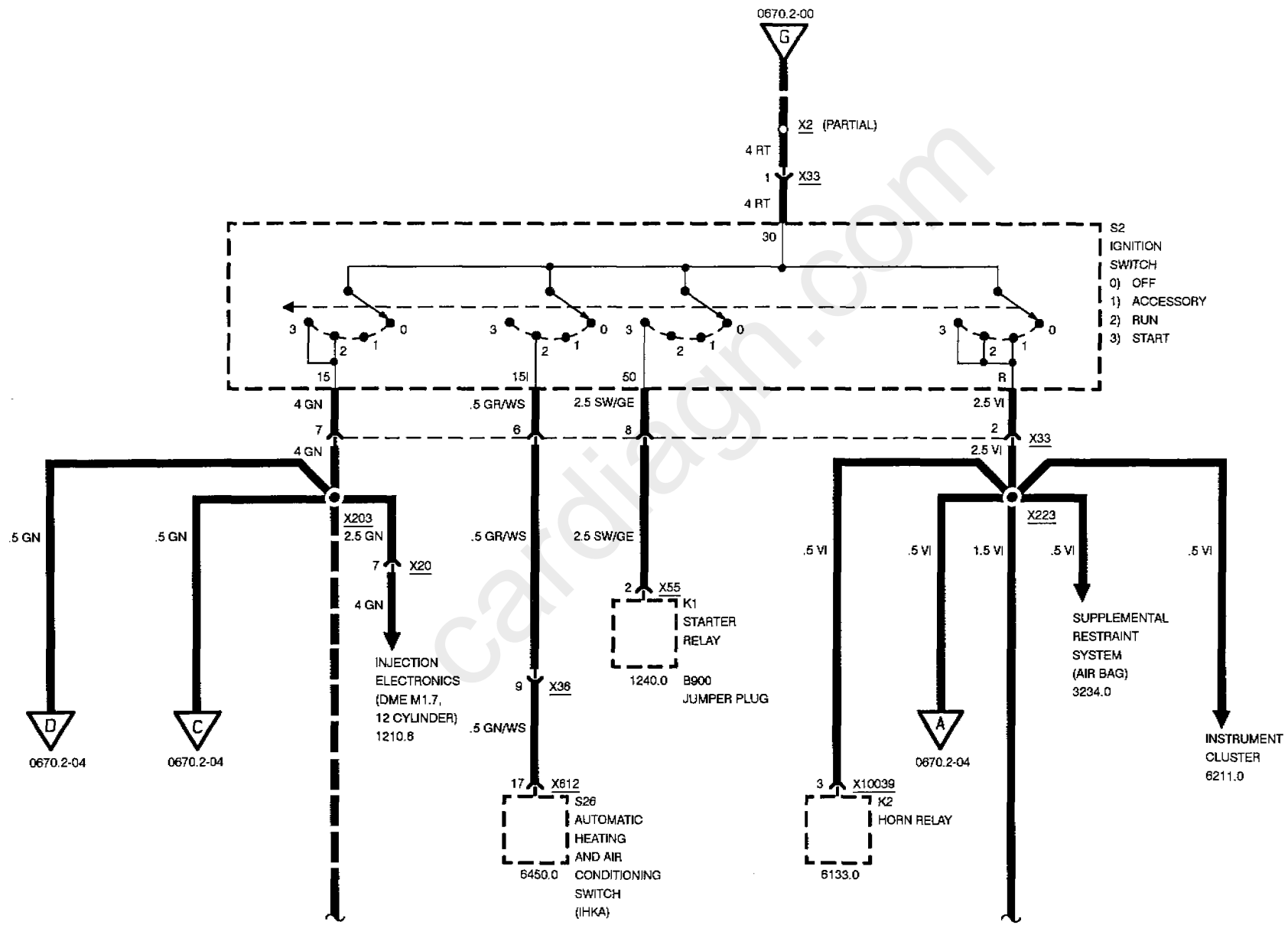

cardiagn.com

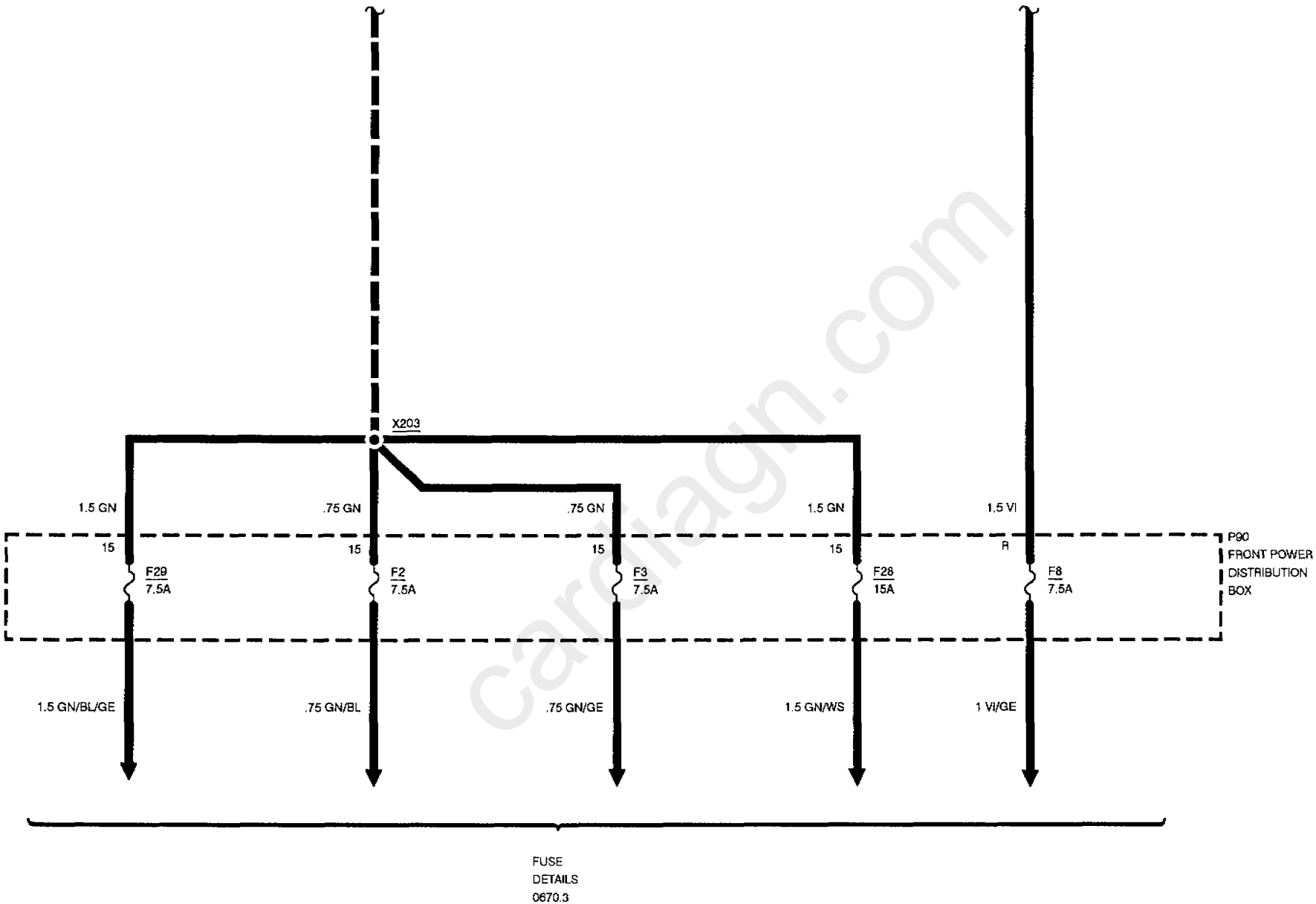

cardiagn.com

POWER DISTRIBUTION

FRONT POWER DISTRIBUTION BOX

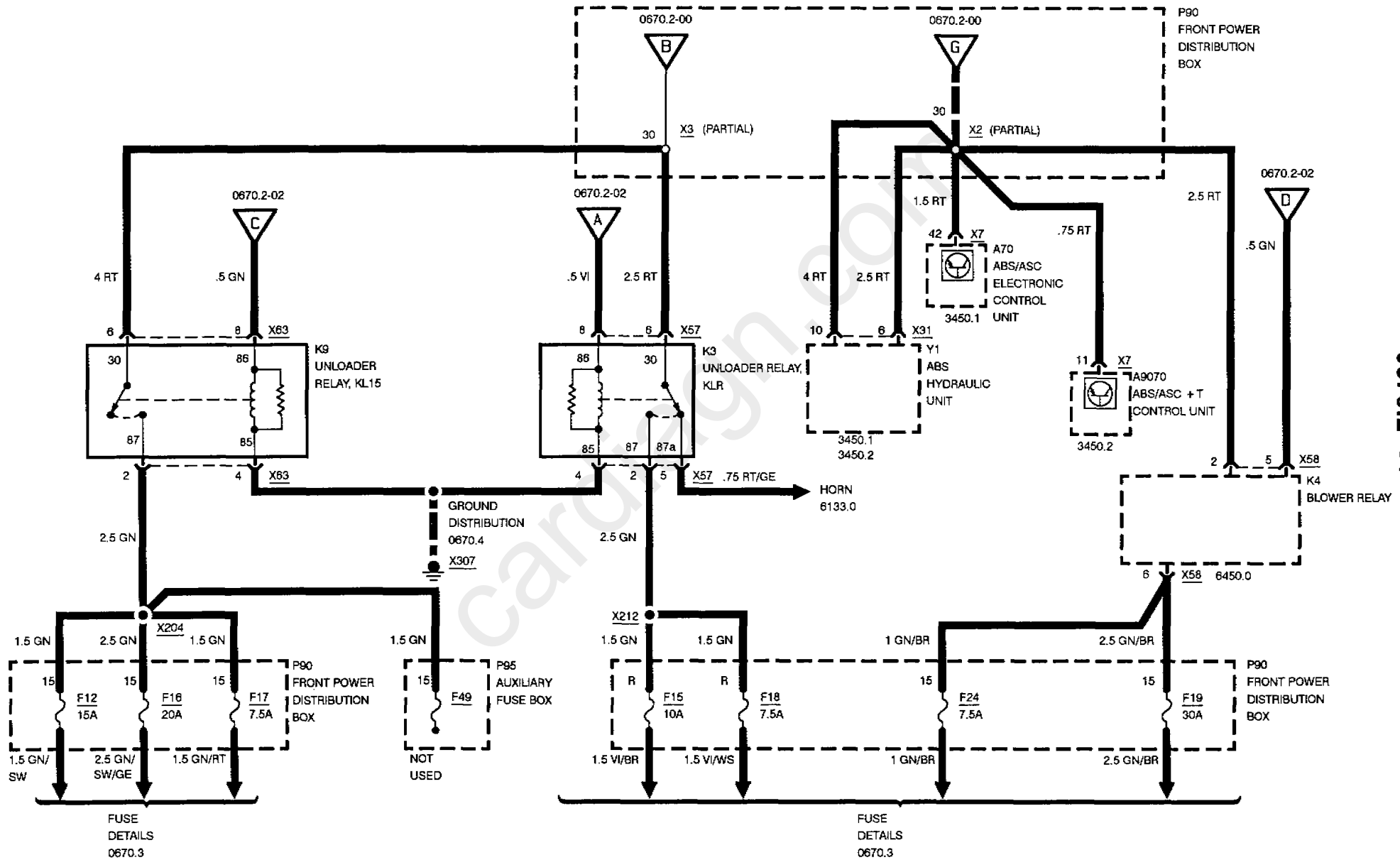

cardiagn.com

POWER DISTRIBUTION

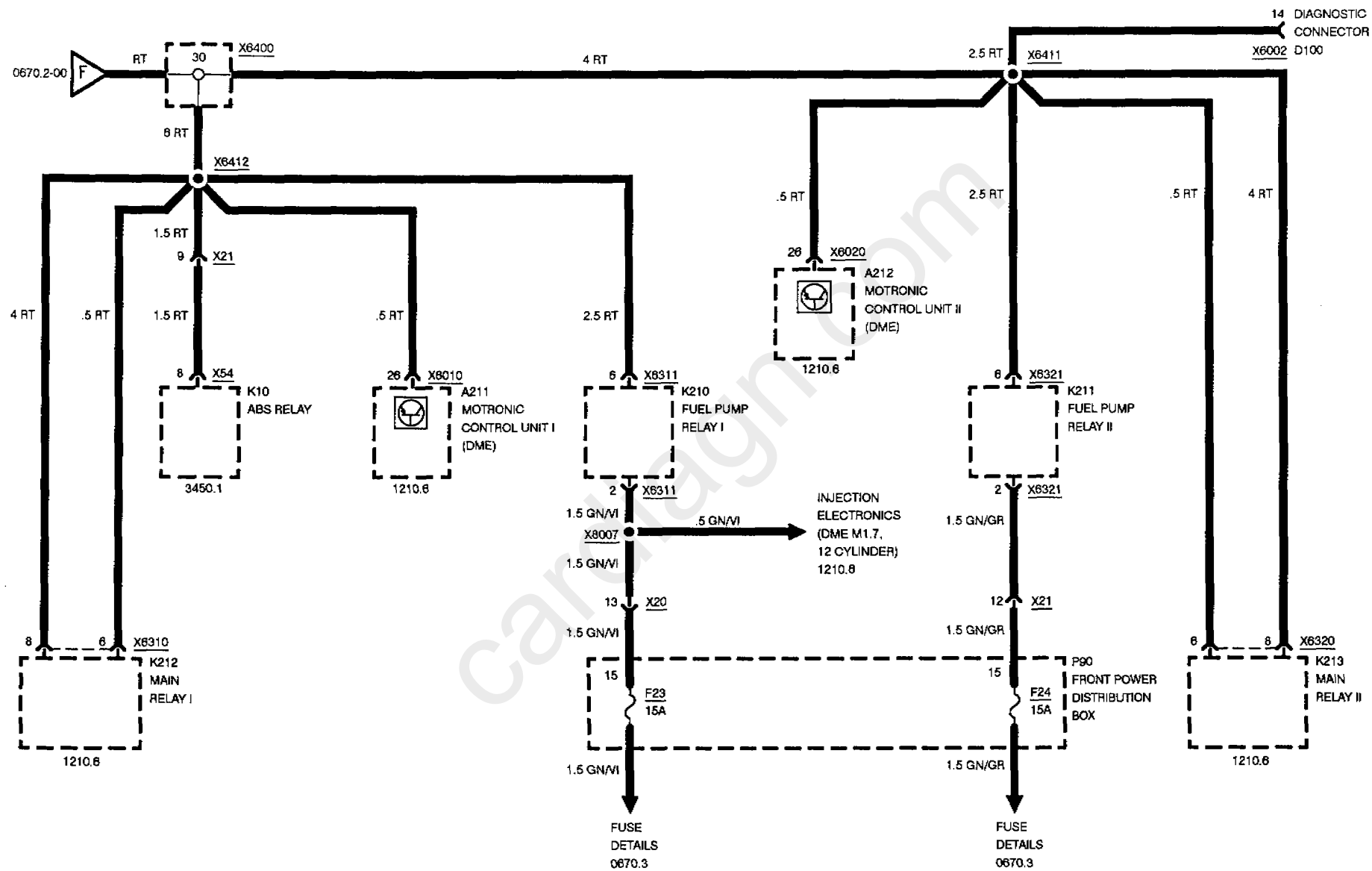

carmanual.com

POWER DISTRIBUTION

REAR POWER DISTRIBUTION BOX

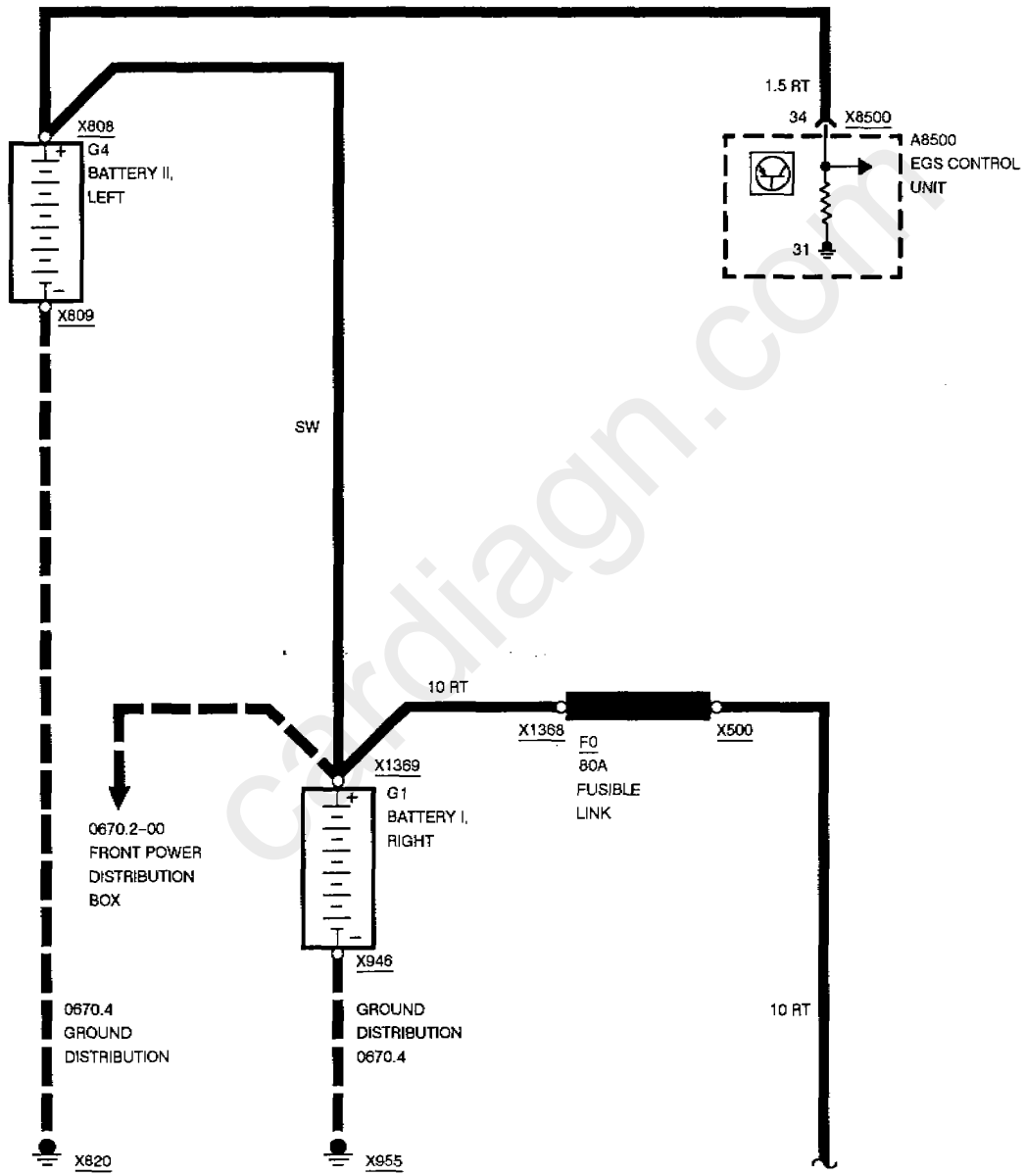

cardiagn.com

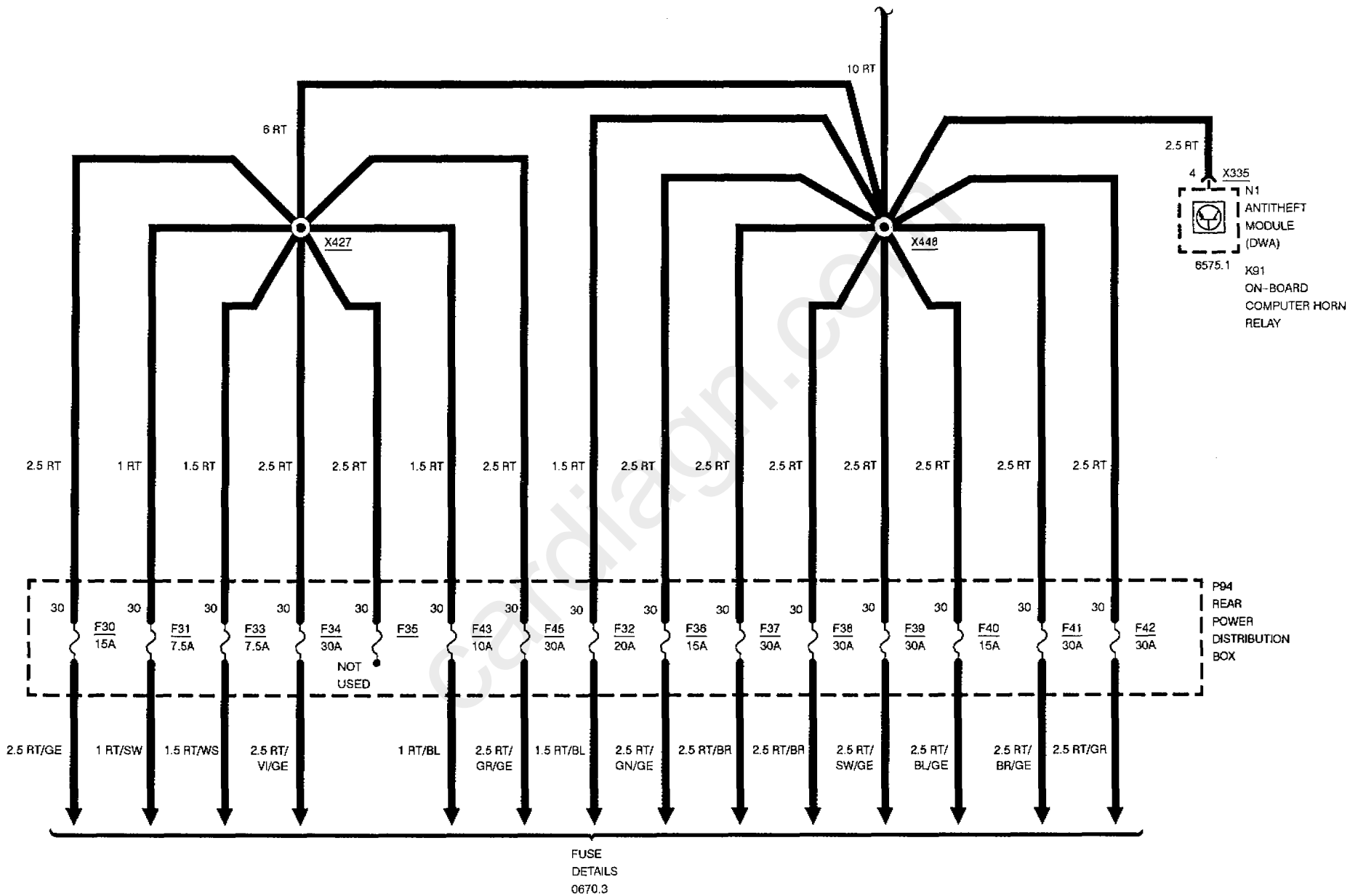

cardiagn.com

FUSE DETAILS

FUSES 1 AND 2

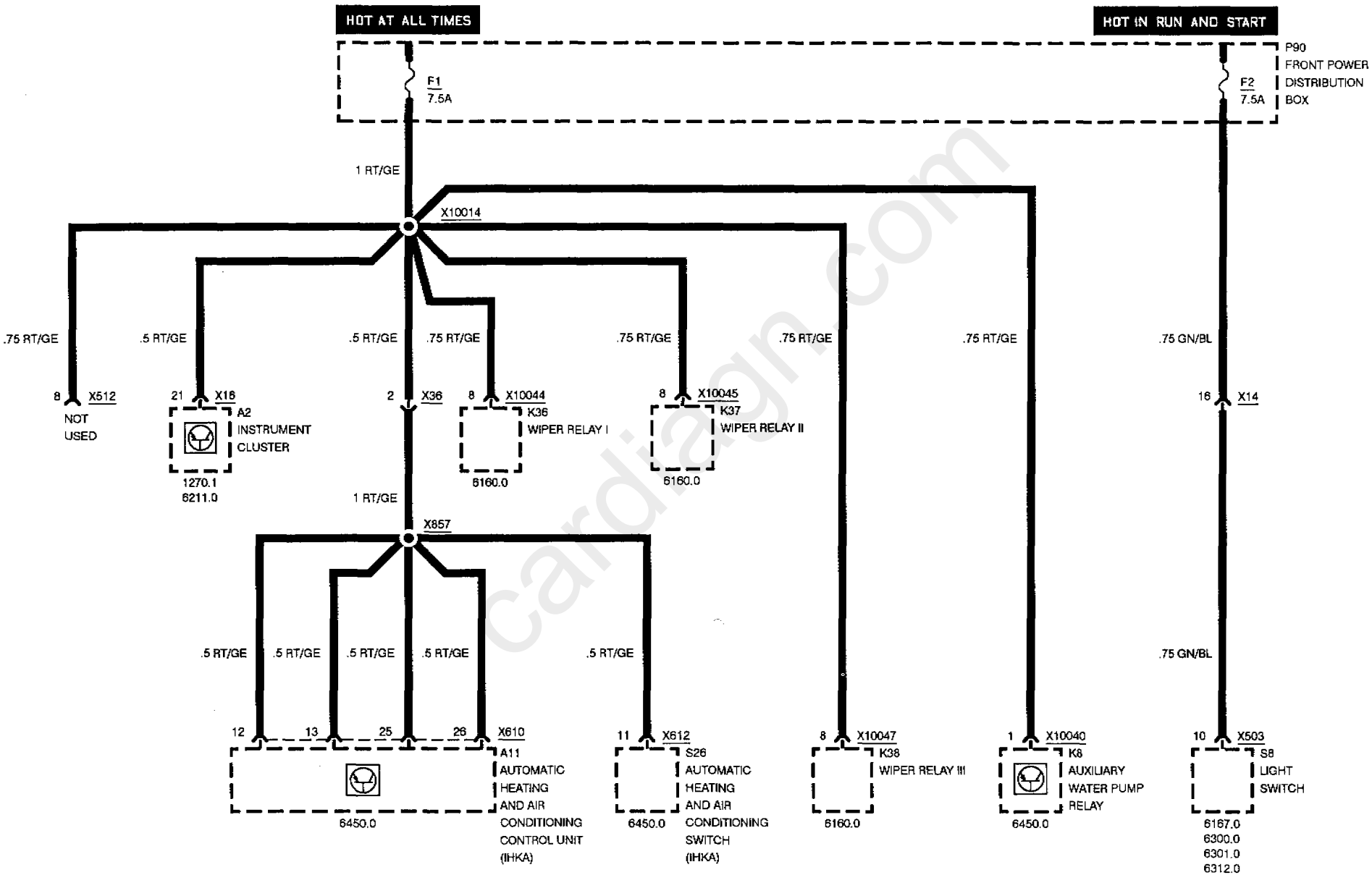

cardiagn.com

FUSE DETAILS

FUSES 3, 4, 5 AND 6

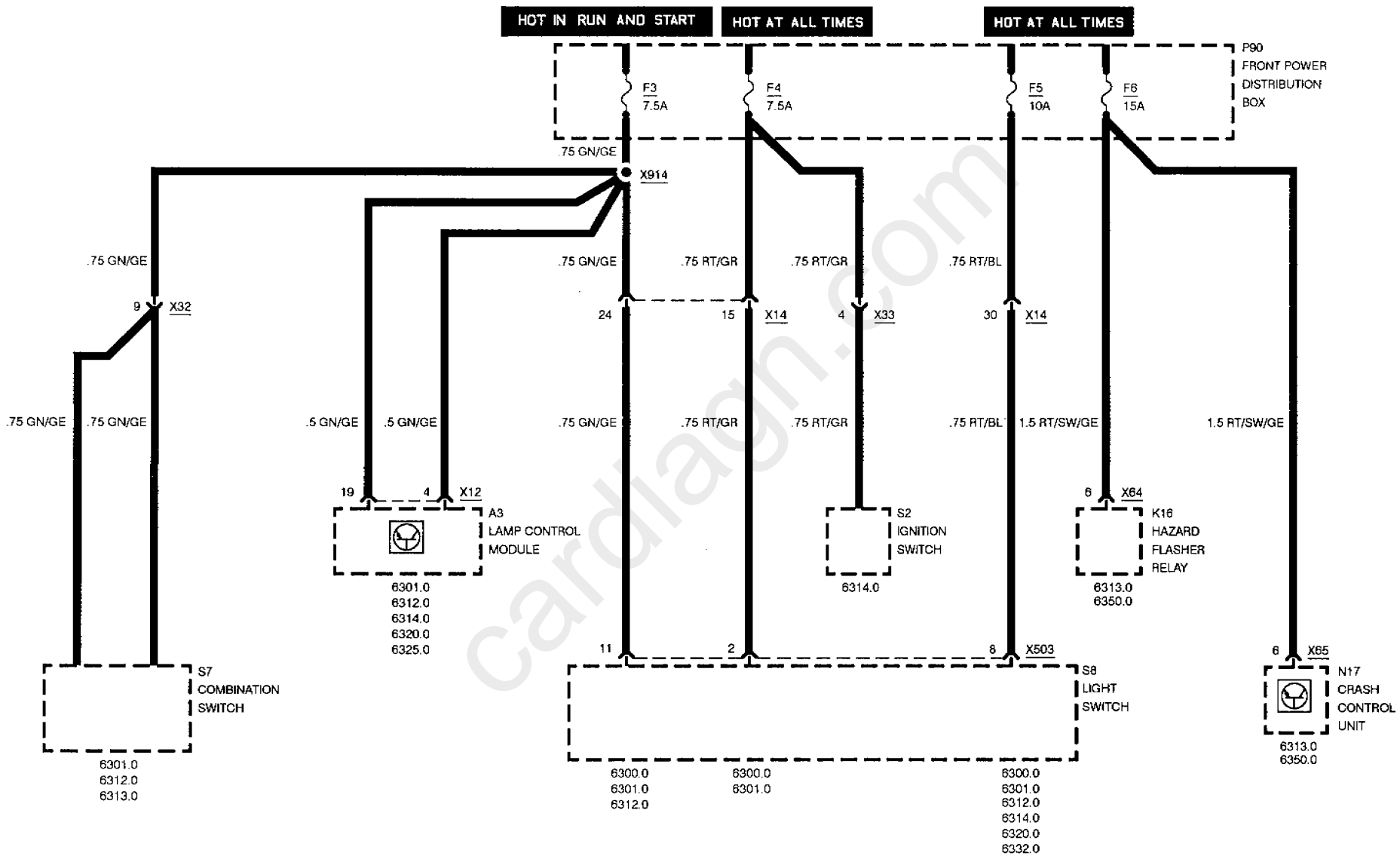

cardiagn.com

FUSE DETAILS

FUSES 7, 8, 9, 10, AND 11

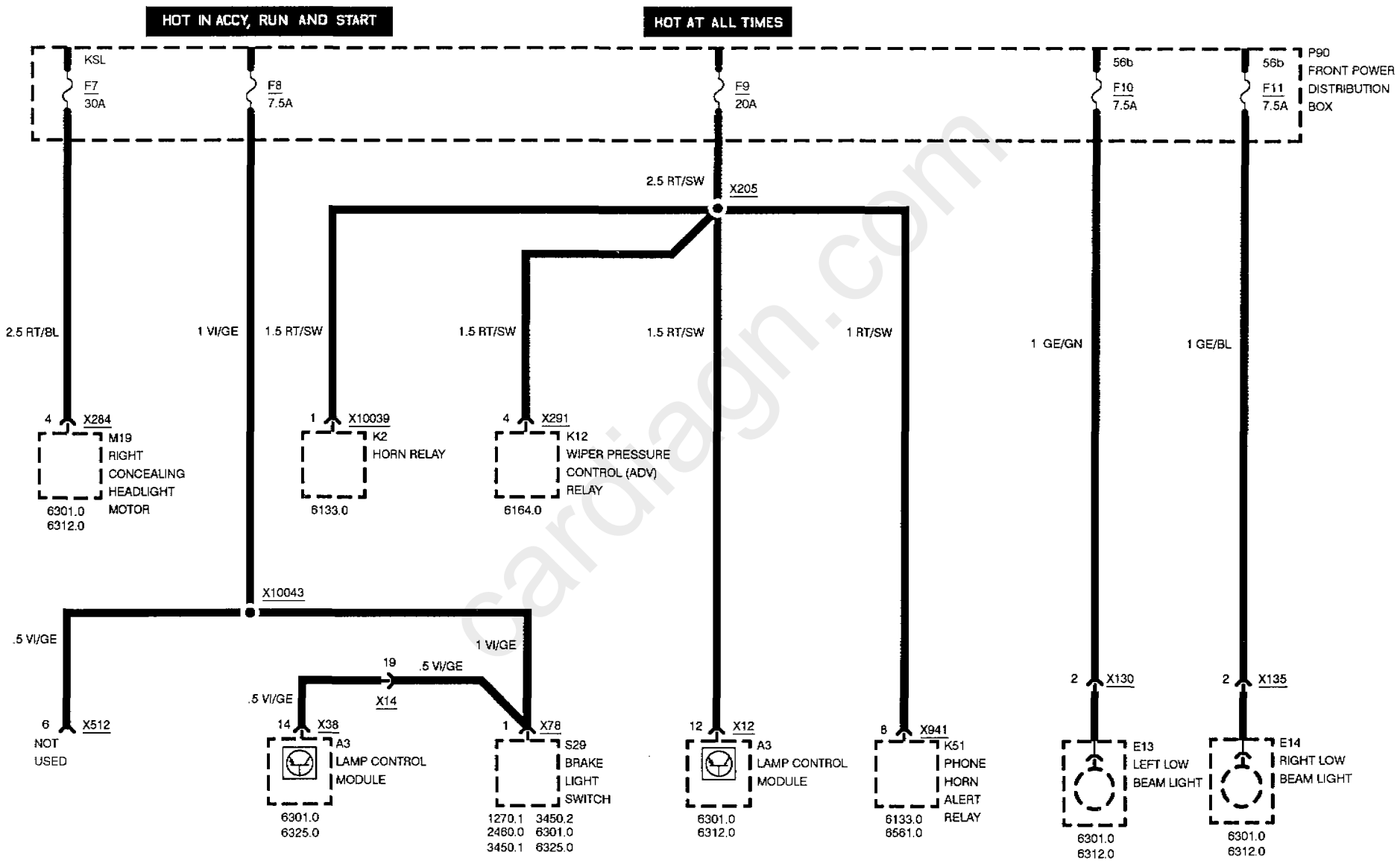

cardiagn.com

FUSE DETAILS

FUSE 12

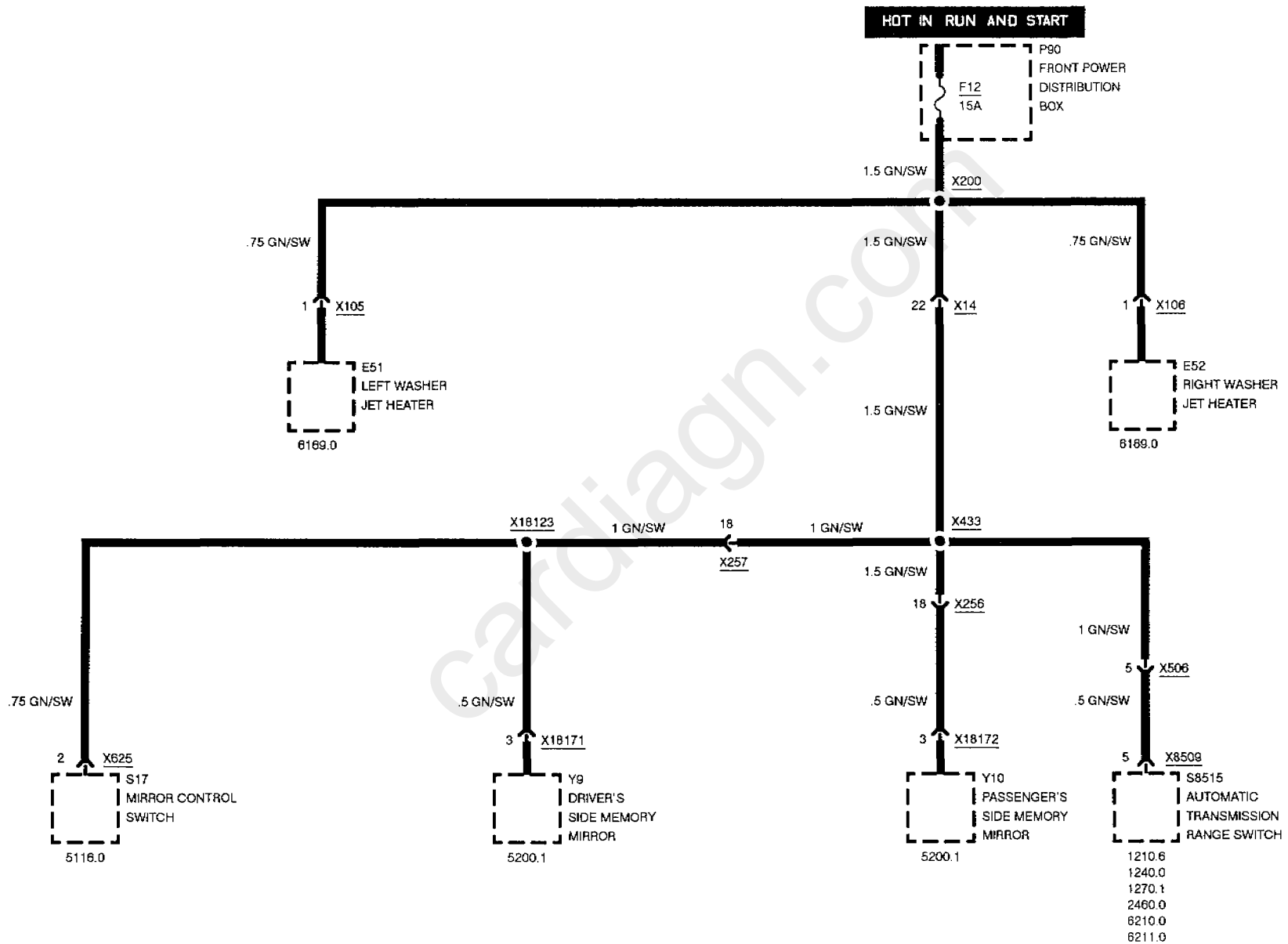

cardiagn.com

BMW 8

FUSE DETAILS

FUSES 13, 14, AND 15

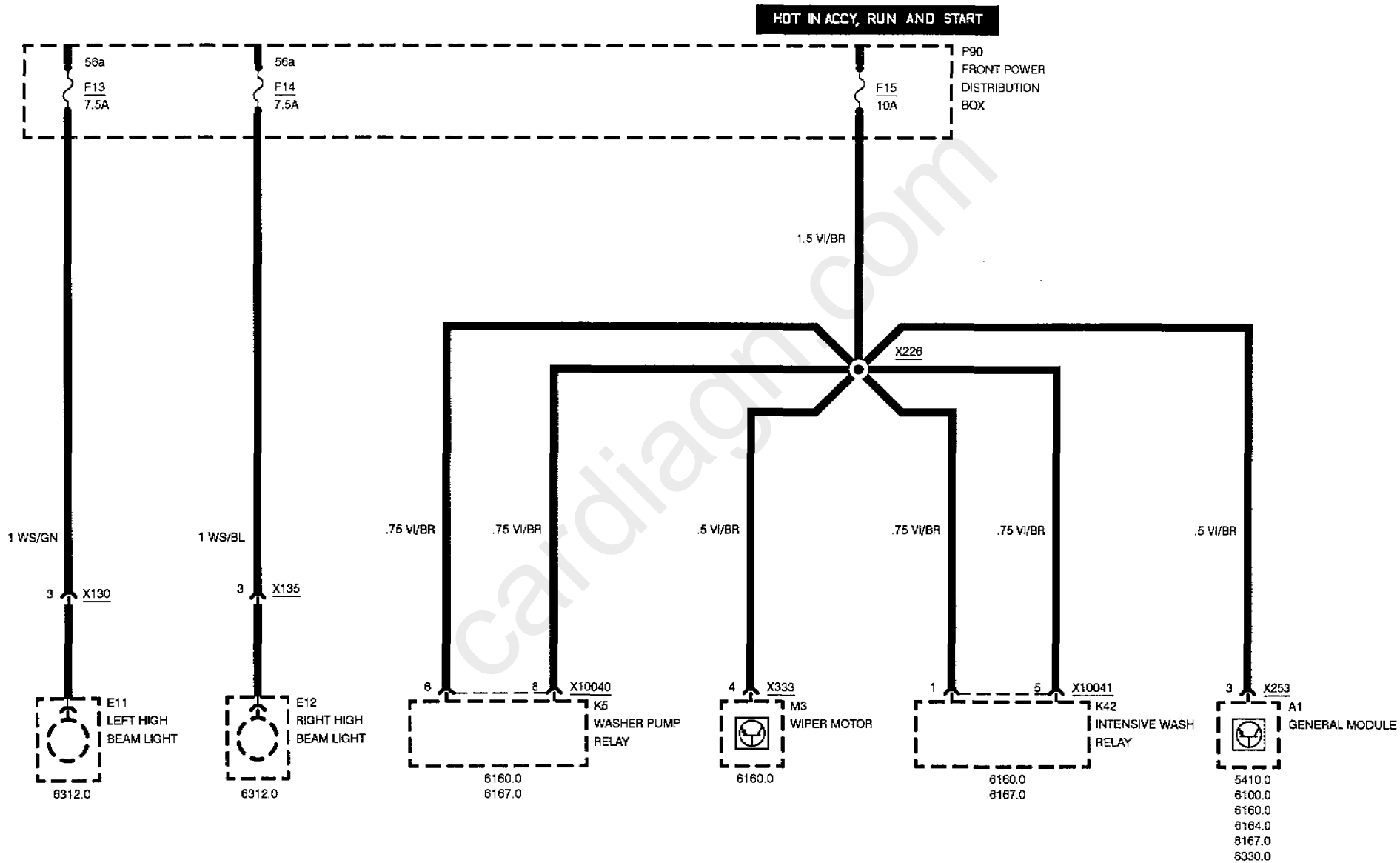

FUSE DETAILS

FUSE 16

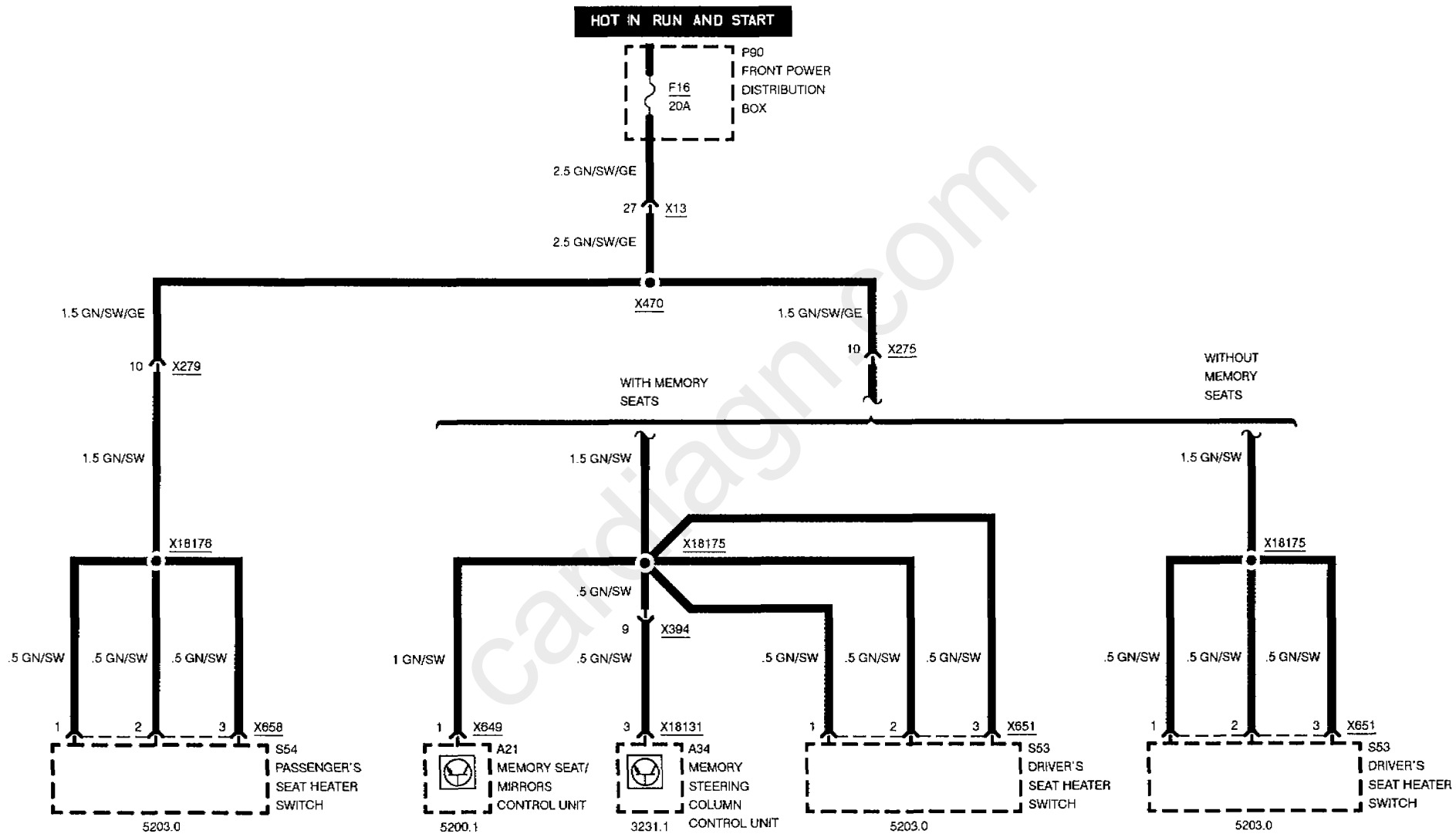

cardiagn.com

FUSE DETAILS

FUSE 17

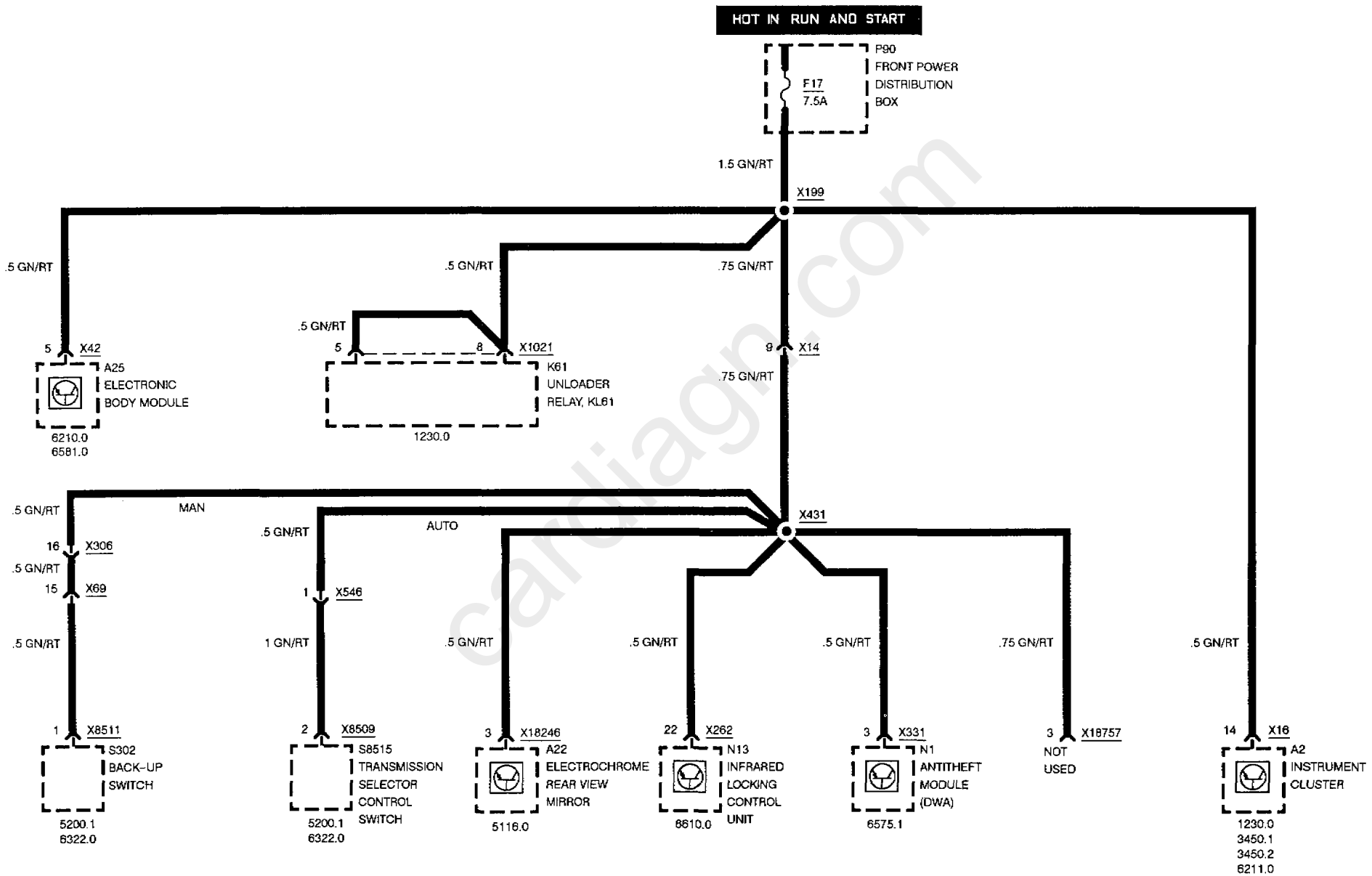

cardiagn.com

FUSE DETAILS

FUSE 18

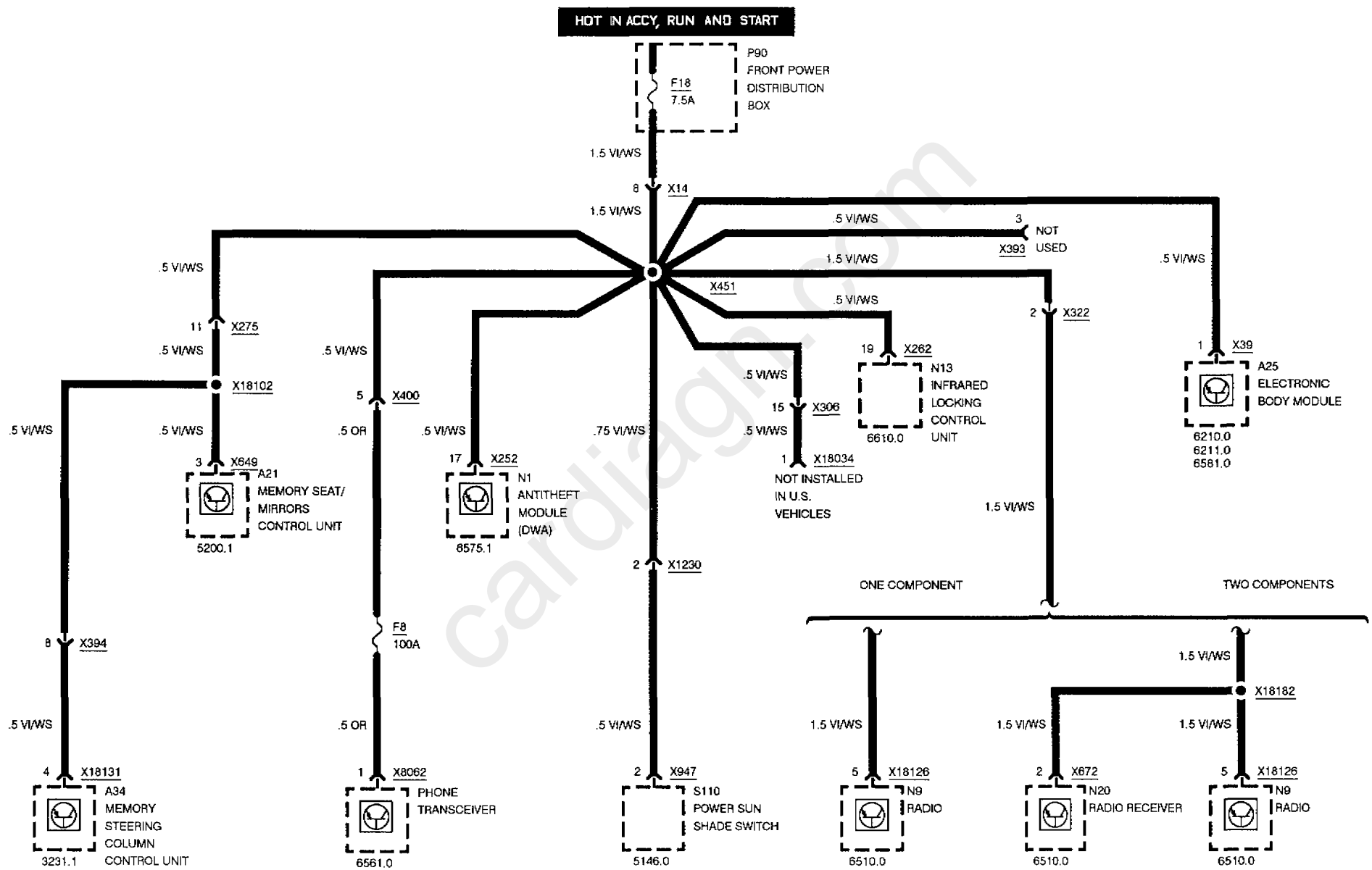

cardiagn.com

FUSE DETAILS

FUSES 19, 20, AND 21

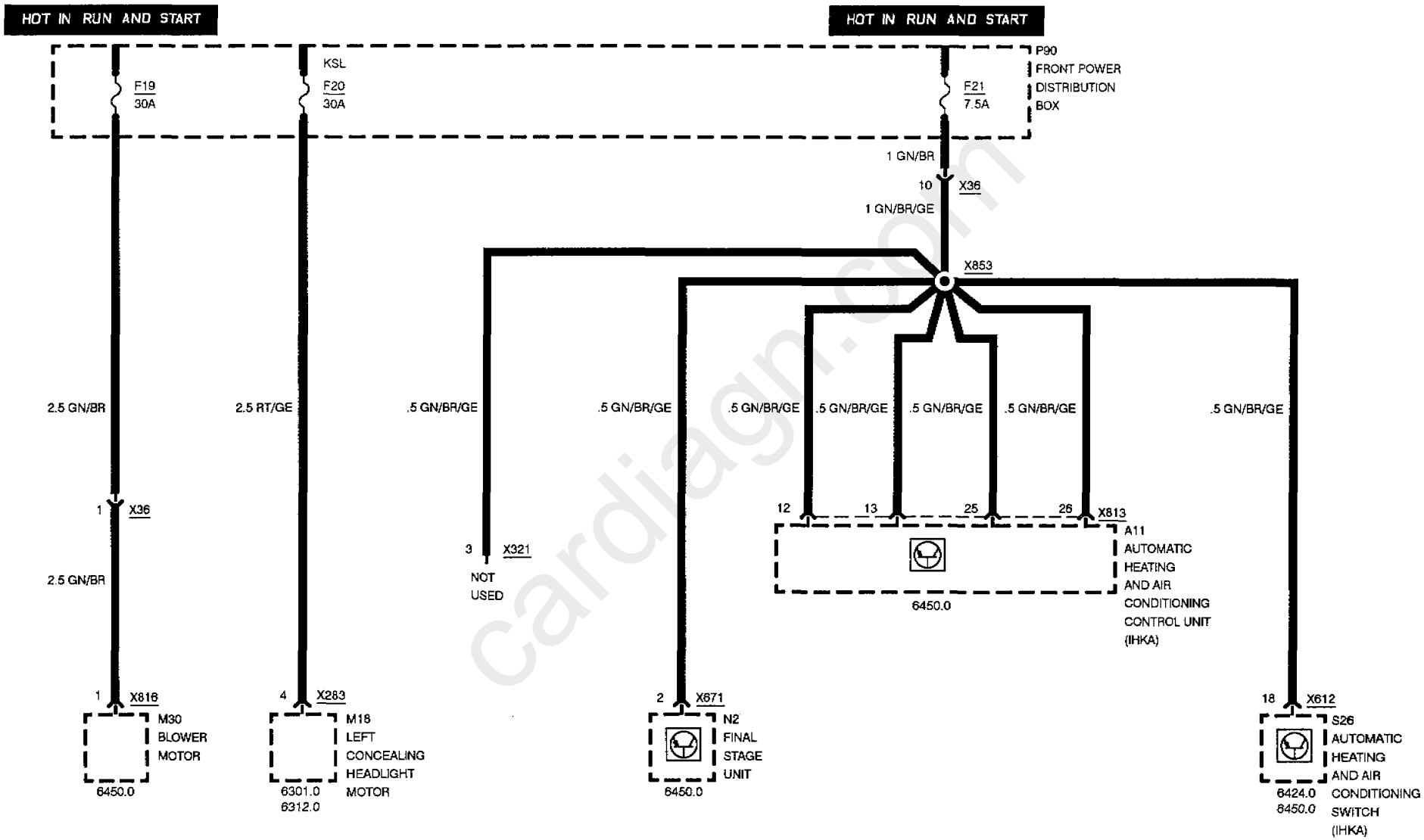

cardiagn.com

FUSE DETAILS

FUSES 22, 23 AND 24

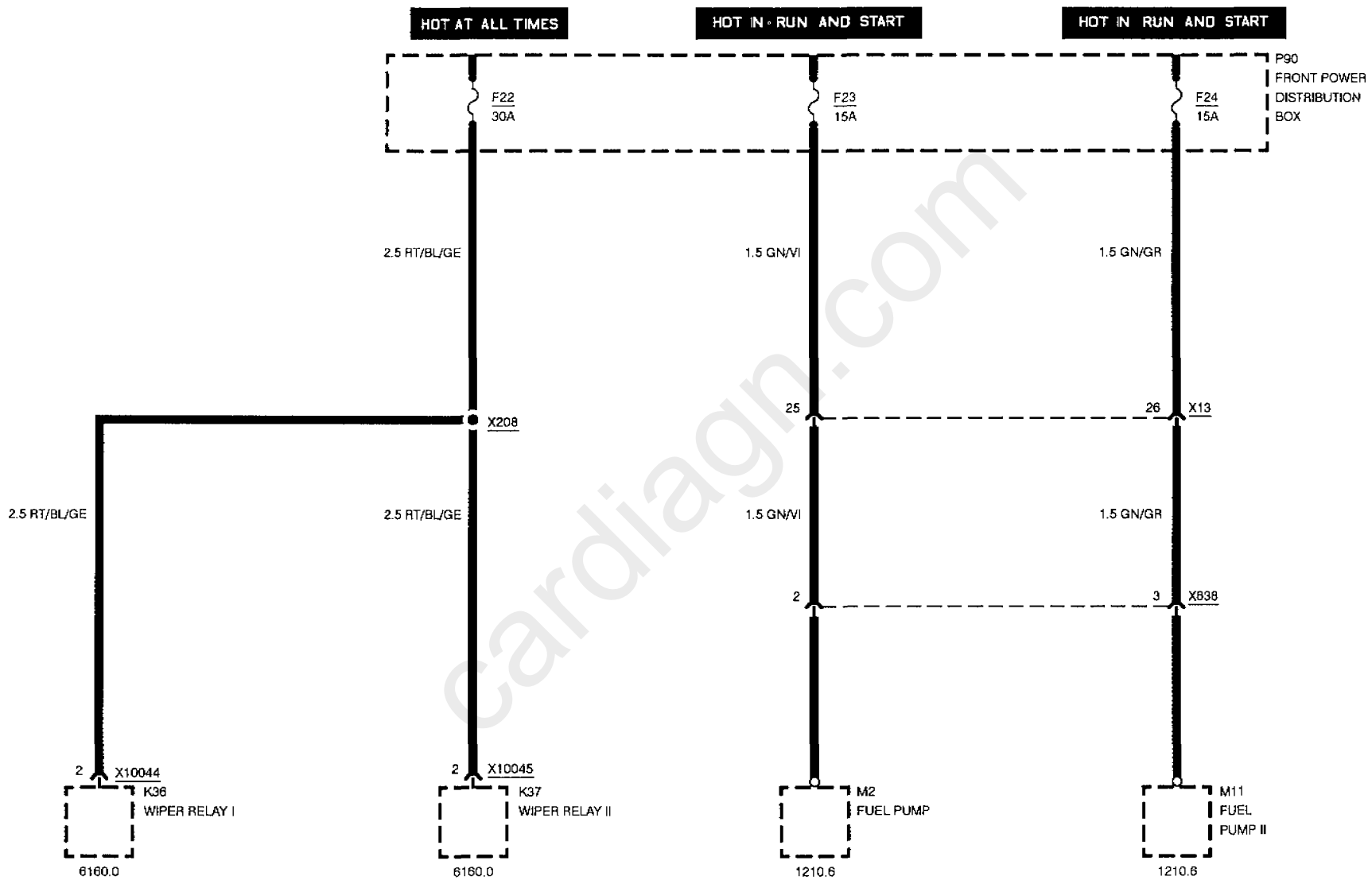

cardiagn.com

FUSE DETAILS

FUSES 25, 26, 27, AND 28

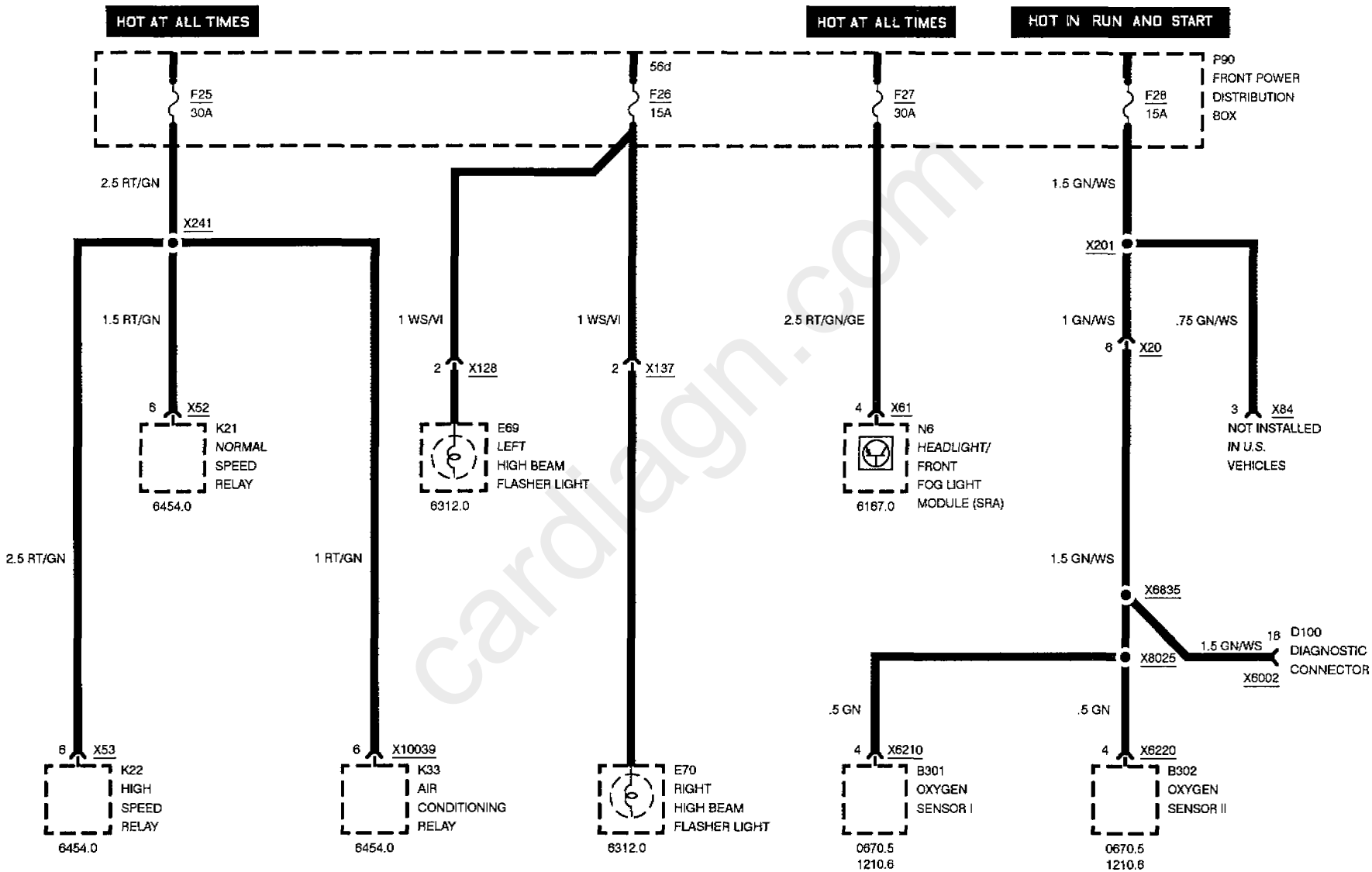

cardiagn.com

FUSE DETAILS

FUSE 29

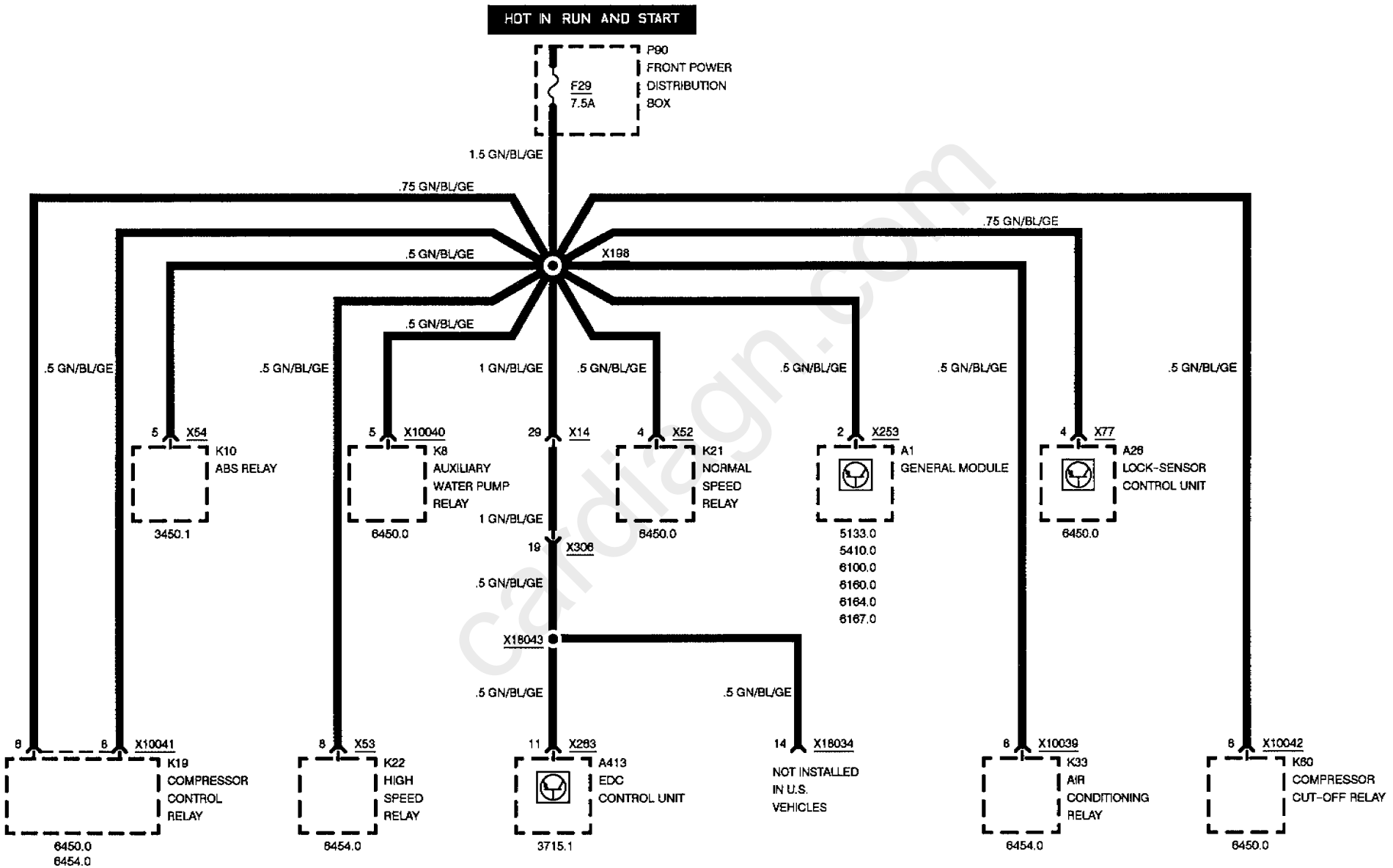

cardiagn.com

FUSE DETAILS

FUSES 30, 31, AND 32

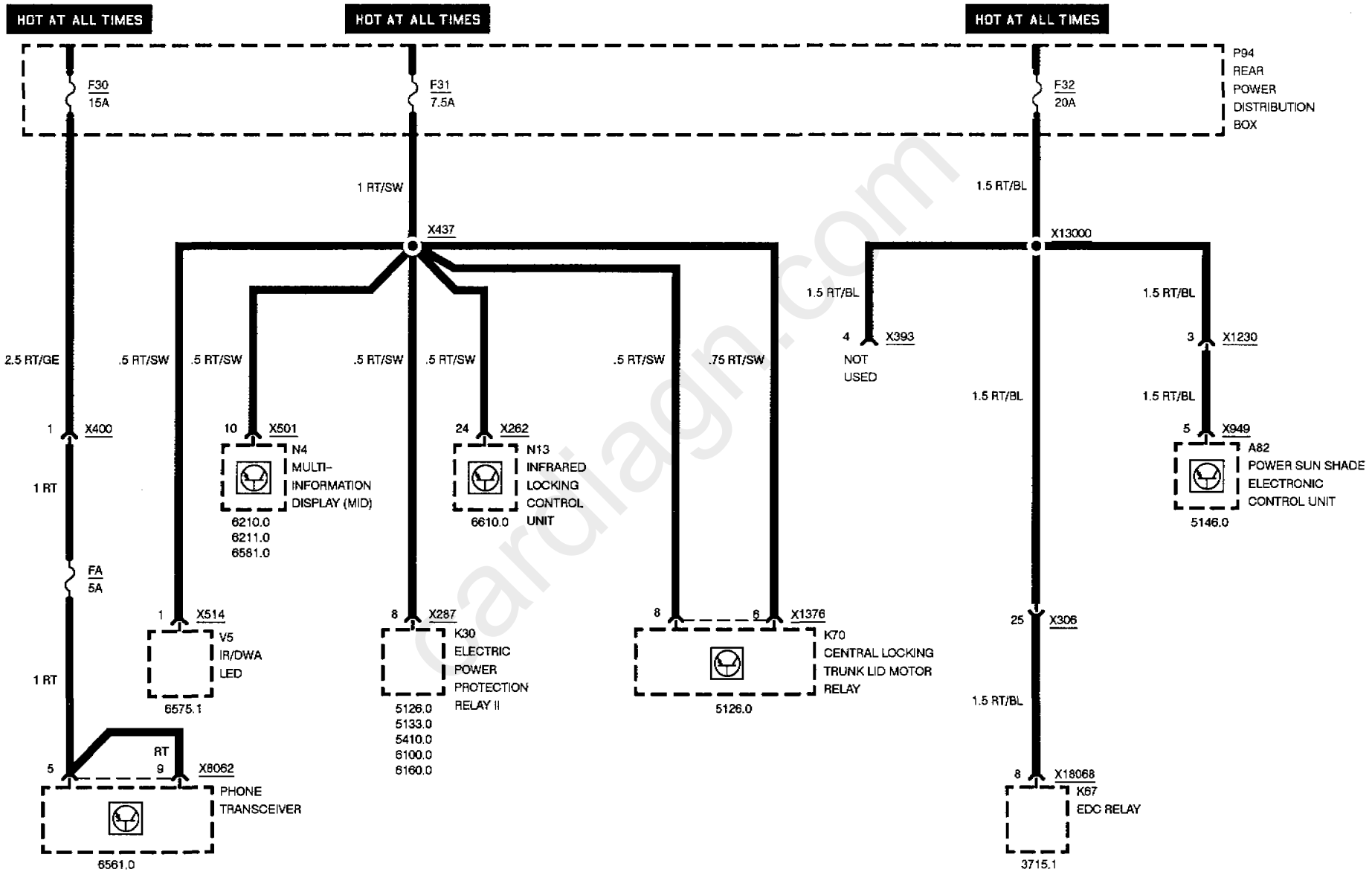

cardiagn.com

FUSE DETAILS

FUSE 33

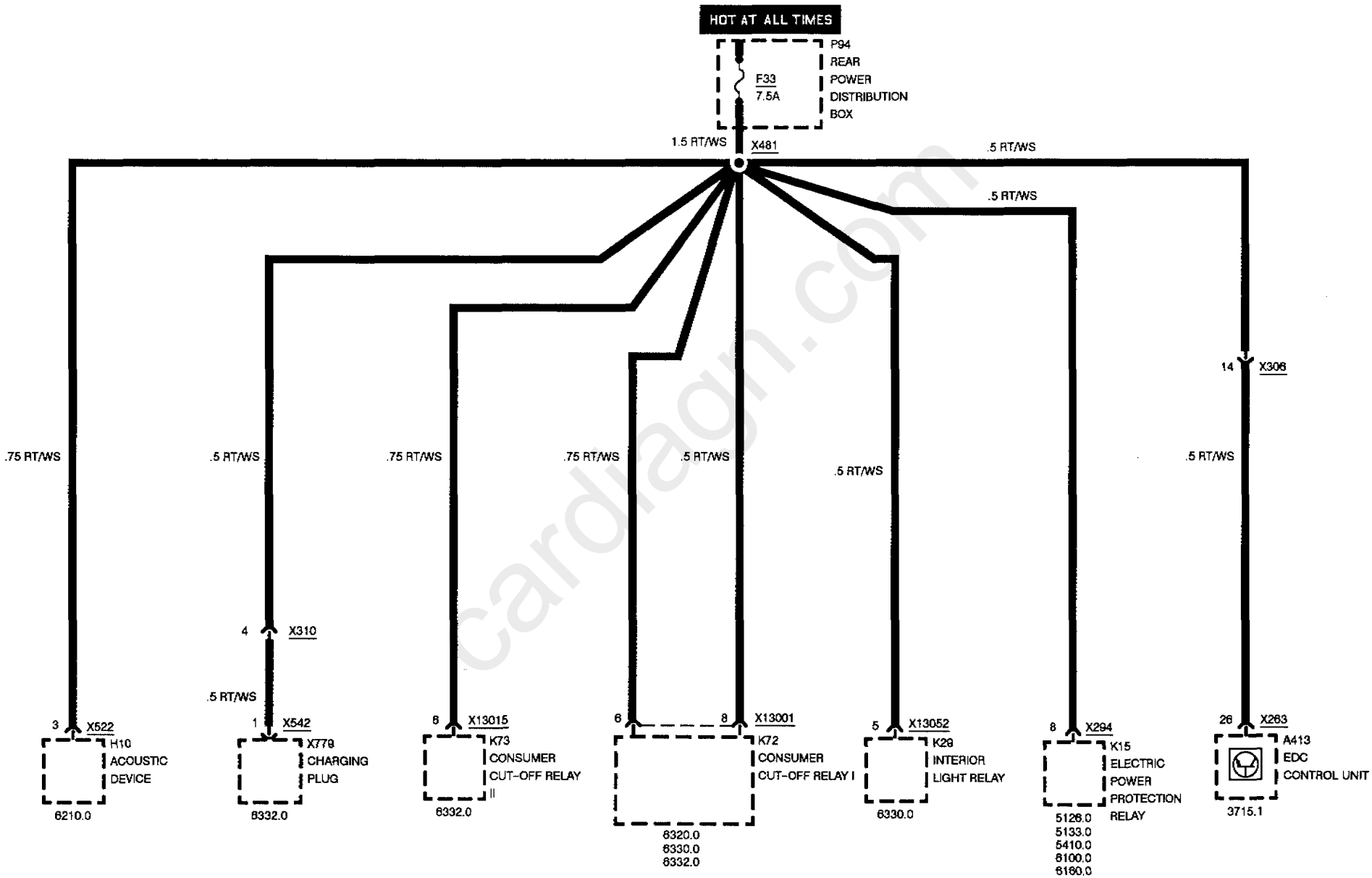

cardiagn.com

FUSE DETAILS

FUSES 34 AND 36

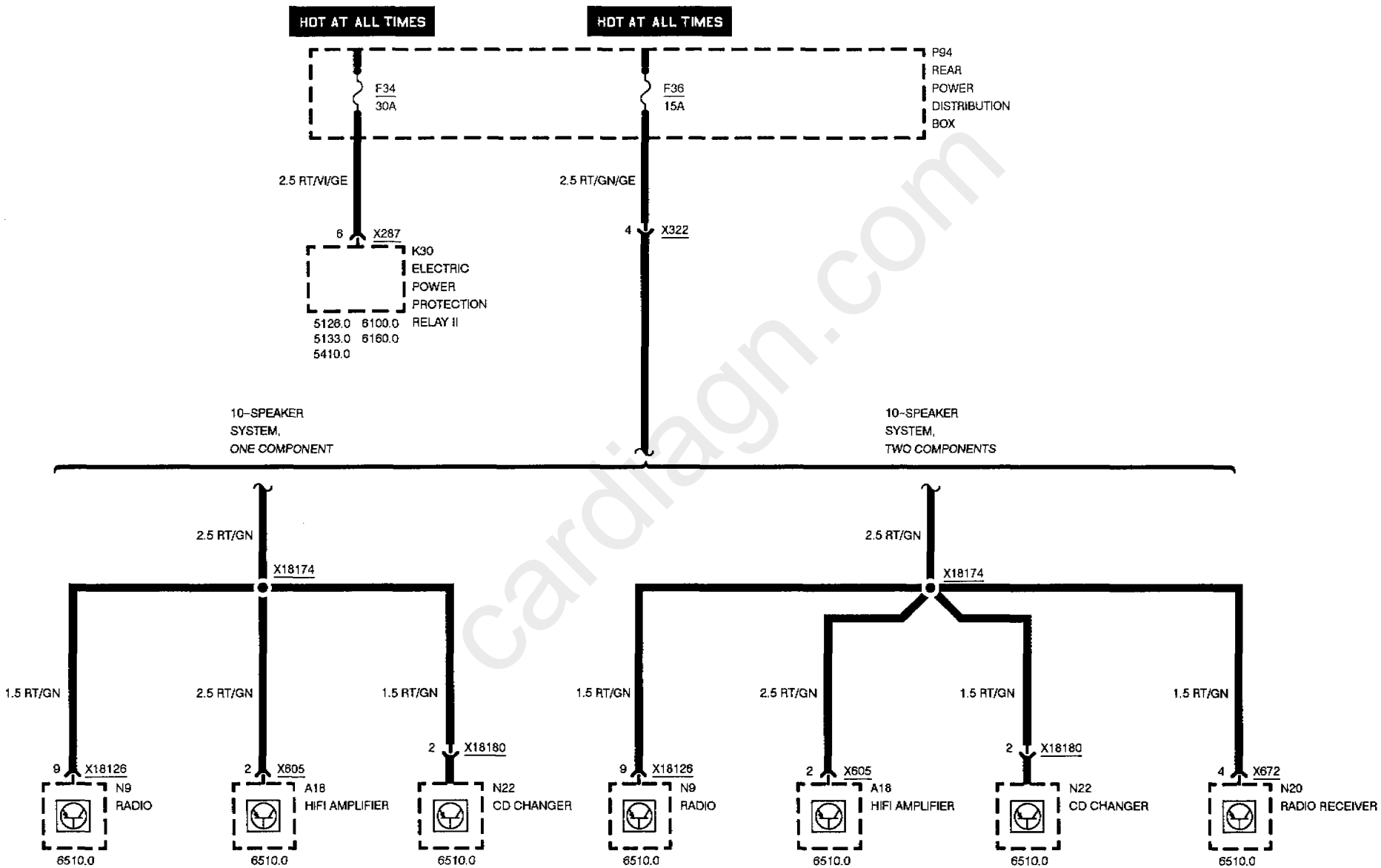

cardiagn.com

FUSE DETAILS

FUSE 37

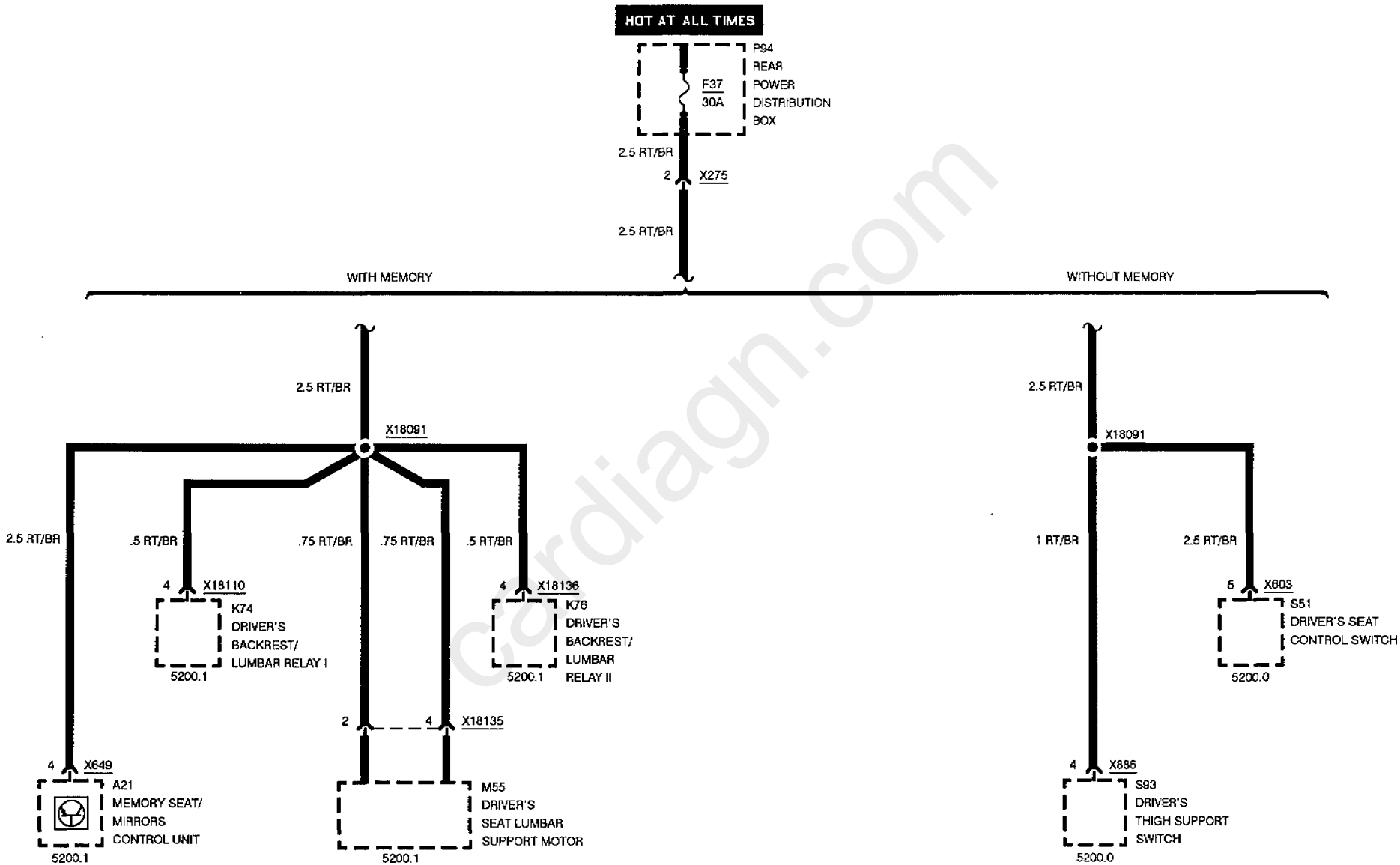

cardiagn.com

FUSE DETAILS

FUSES 38, 39, 40, AND 41

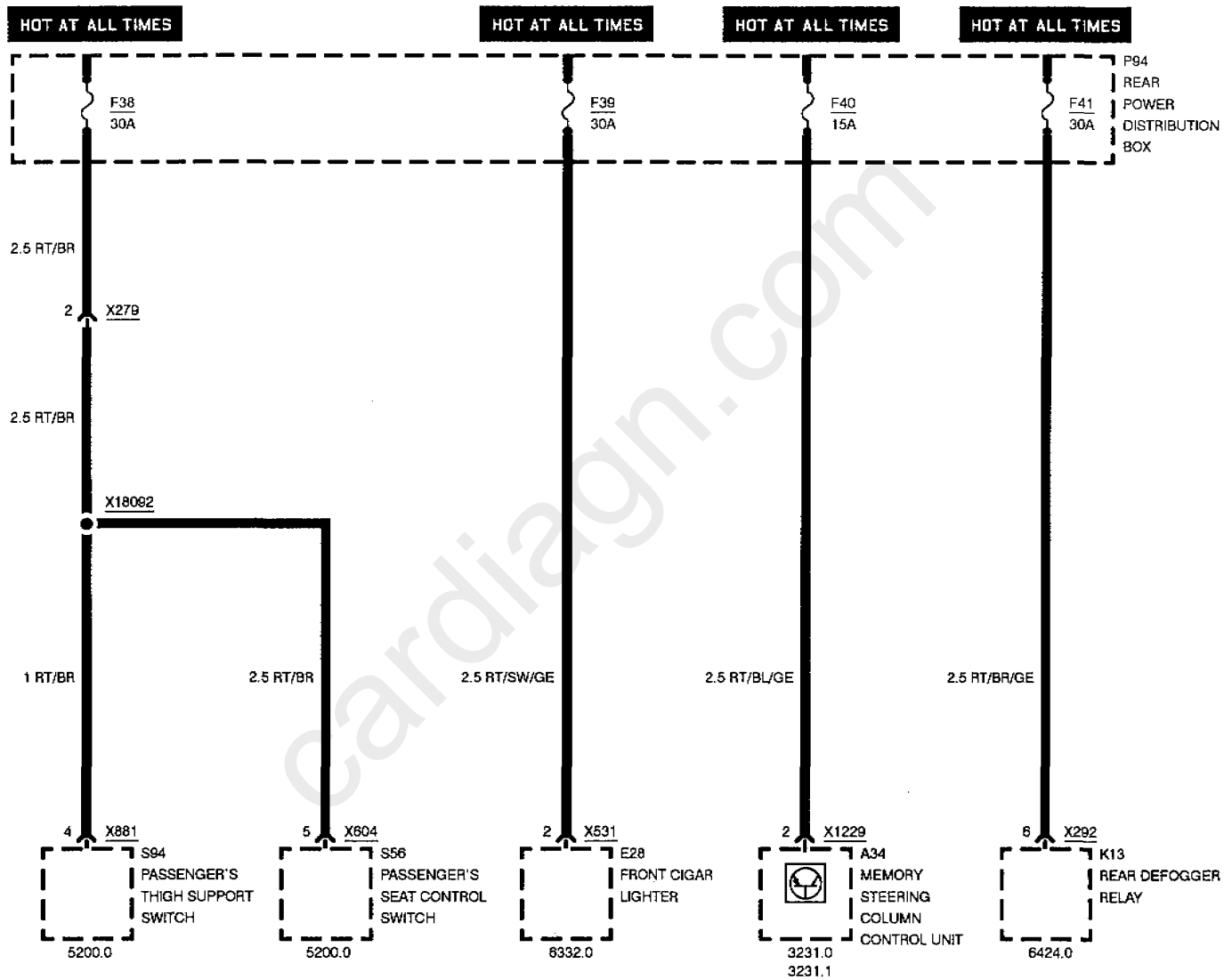

cardiagn.com

BMW 8

FUSE DETAILS

FUSES 42, 43, 45, 50 AND 51

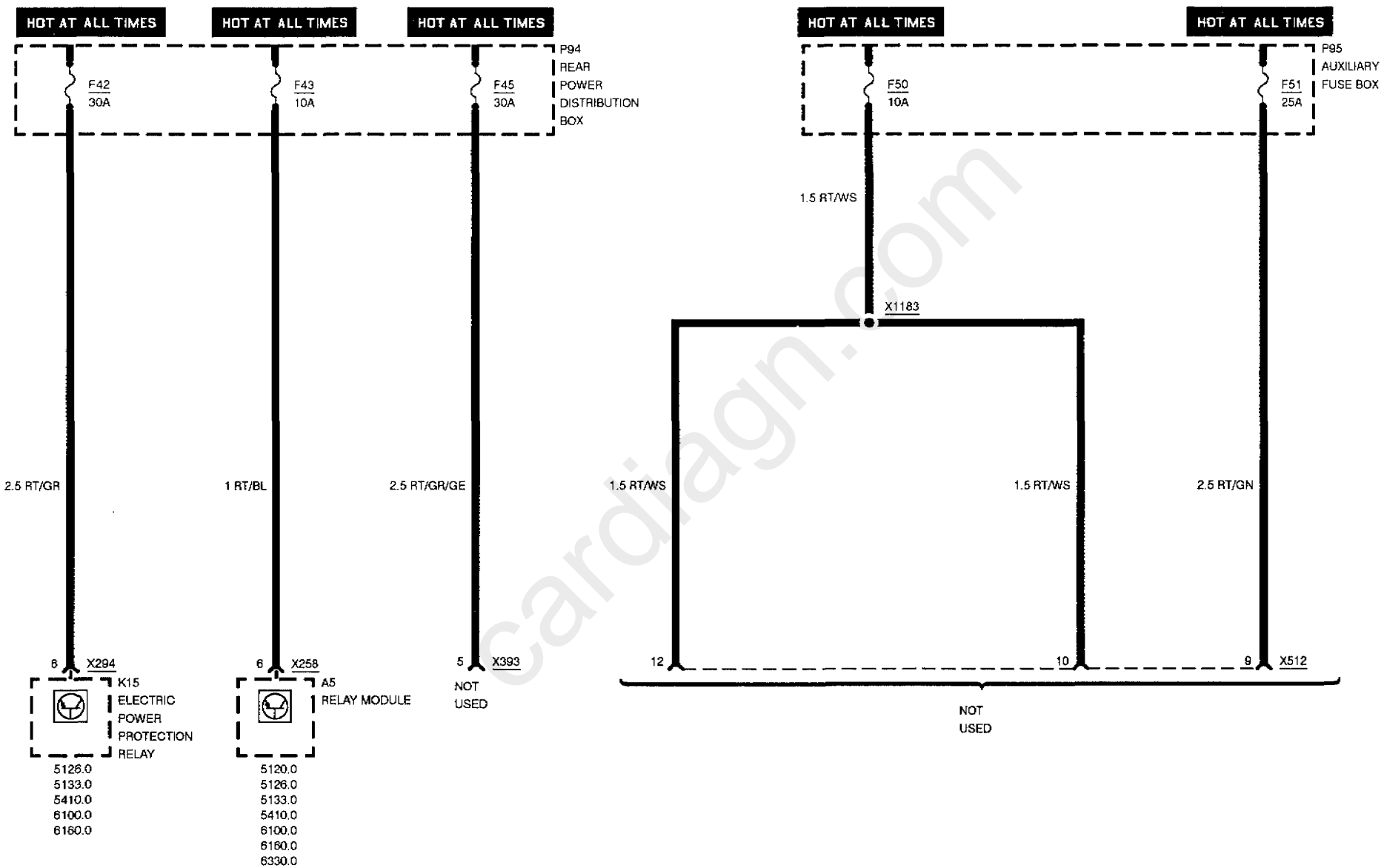

cardiagn.com

GROUND DISTRIBUTION

GROUND X165

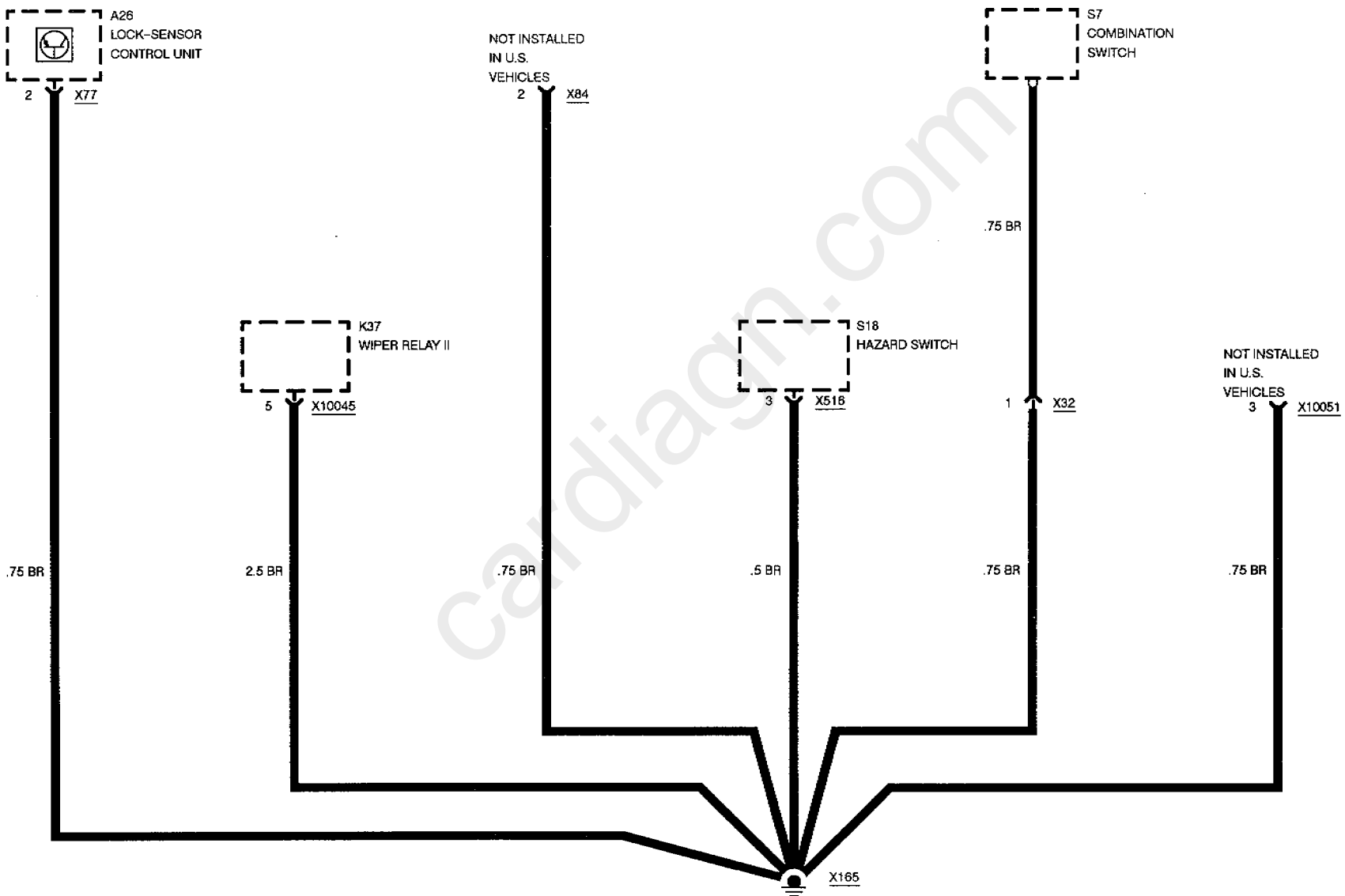

cardiagn.com

GROUND DISTRIBUTION

GROUND X167

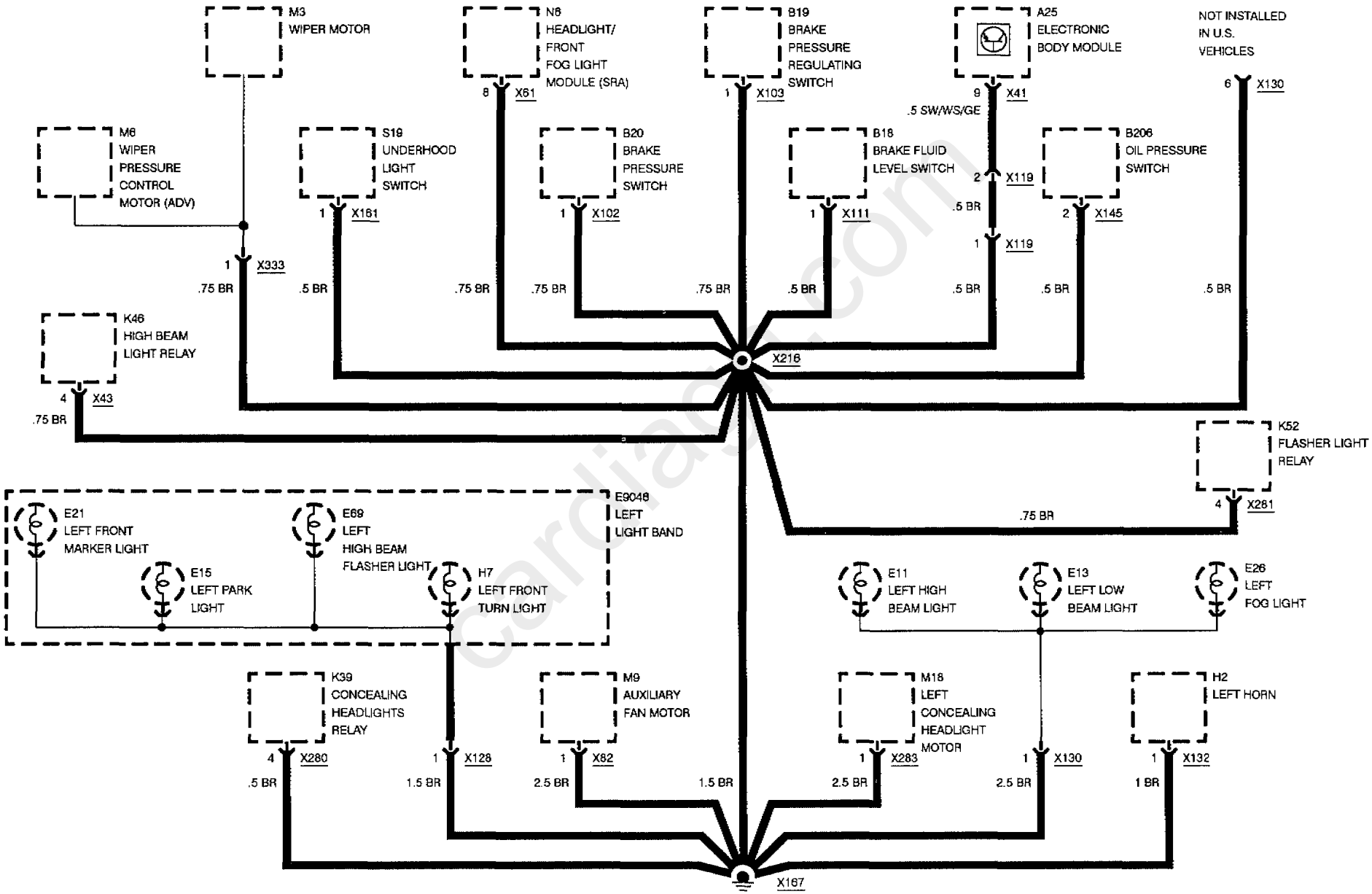

GROUND DISTRIBUTION

GROUND X173

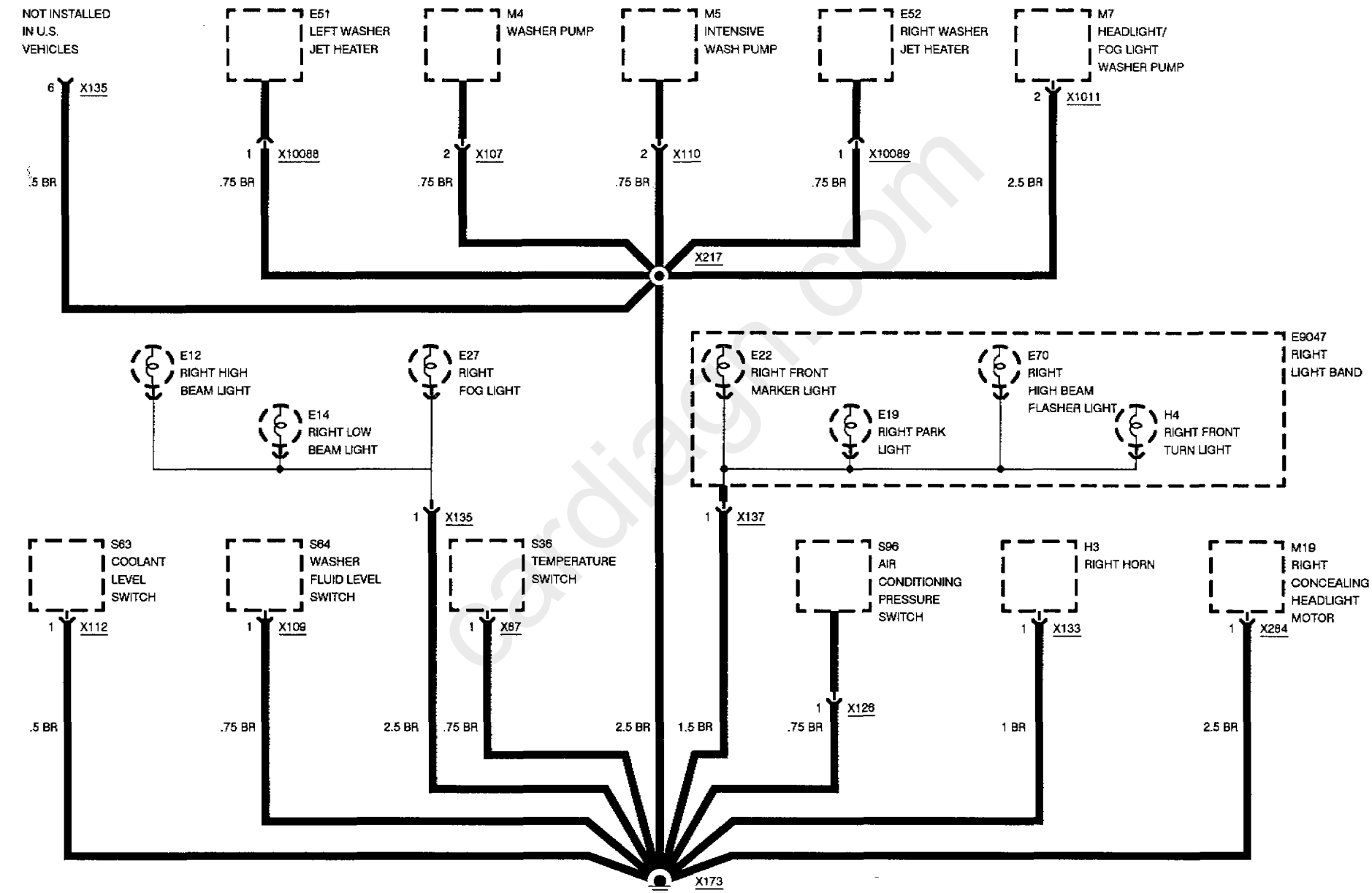

cardiagn.com

GROUND DISTRIBUTION

GROUND X307

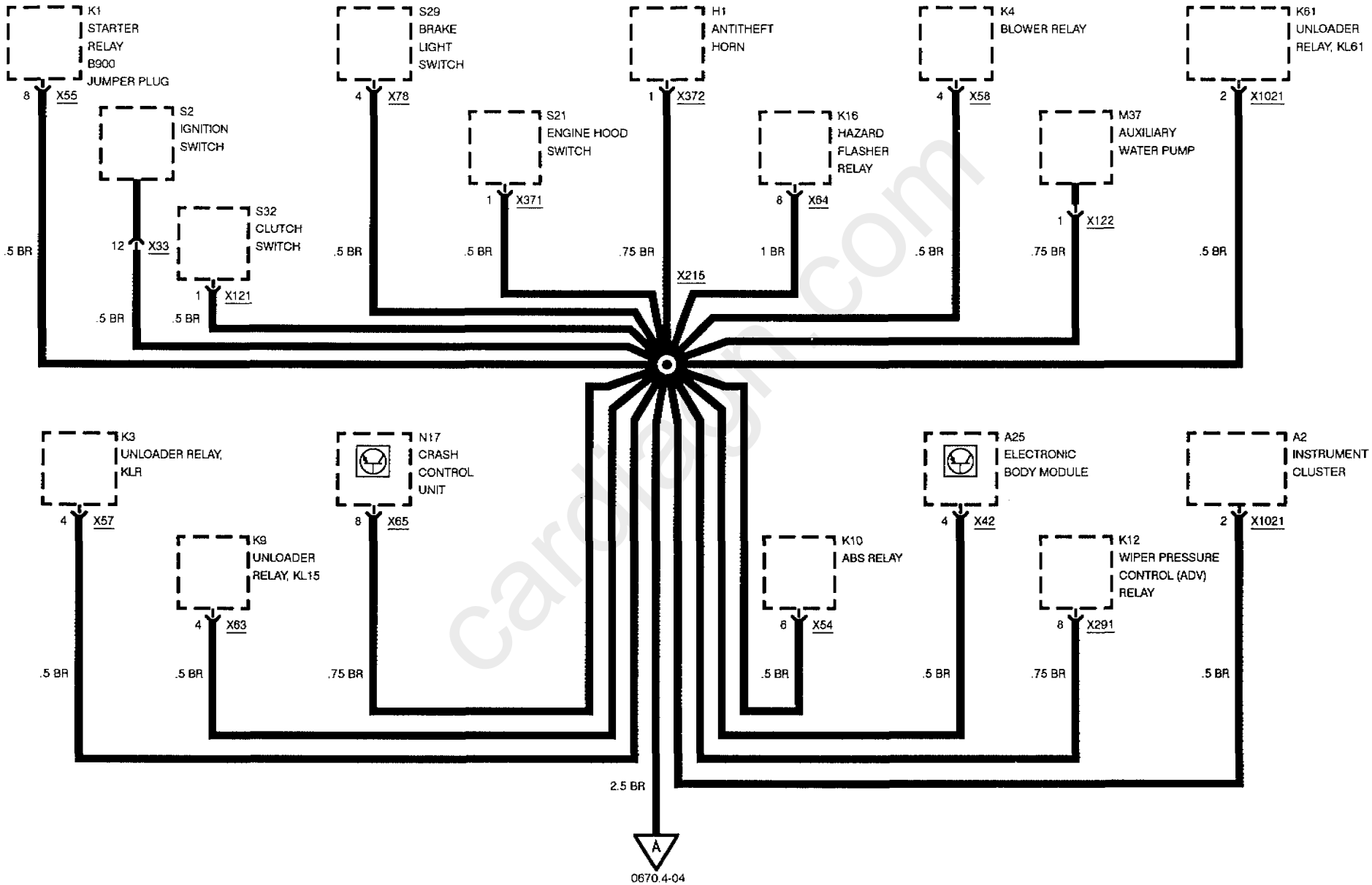

carmanual.com

GROUND DISTRIBUTION

GROUND X307

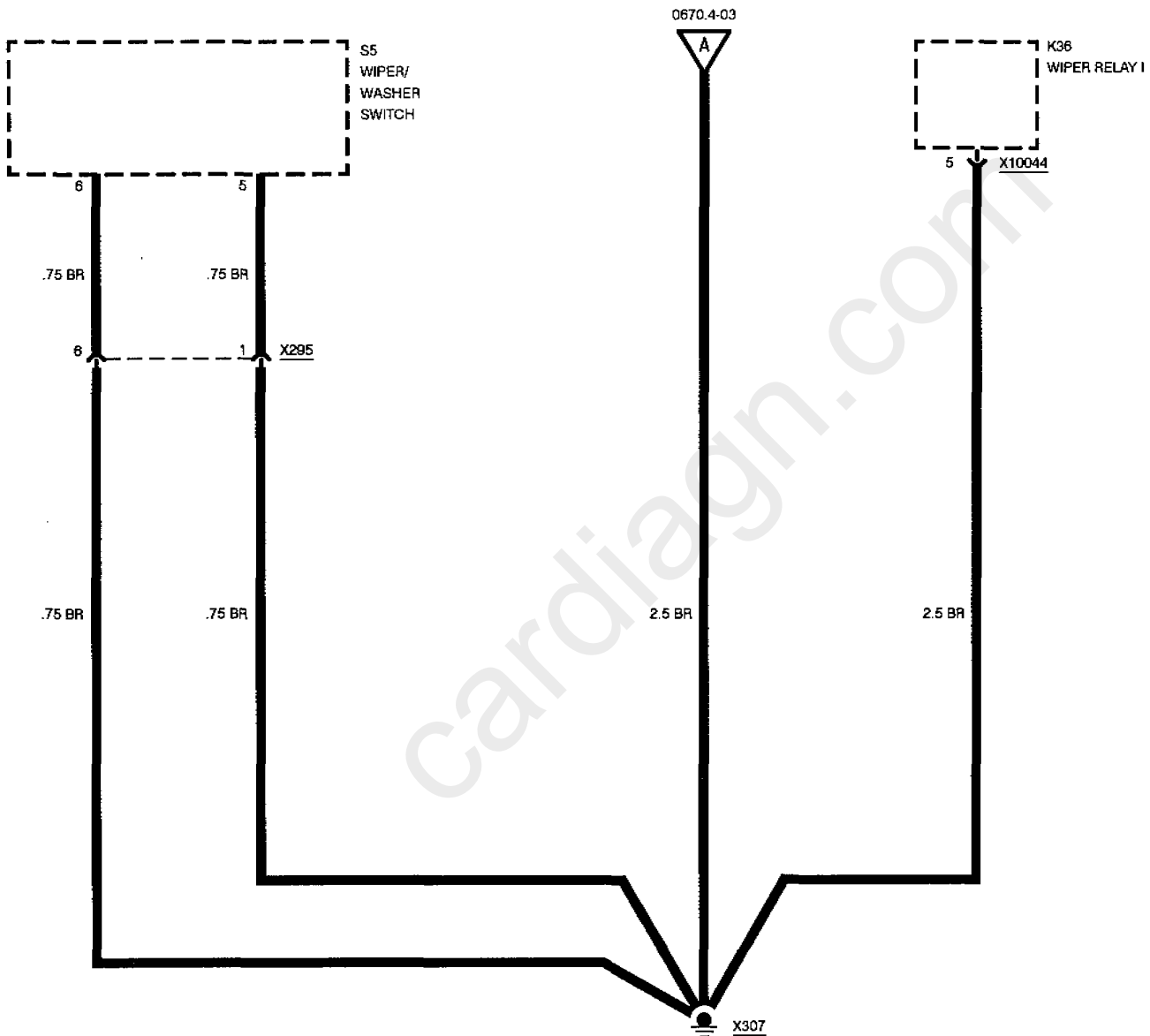

cardiagn.com

GROUND DISTRIBUTION

GROUND X490

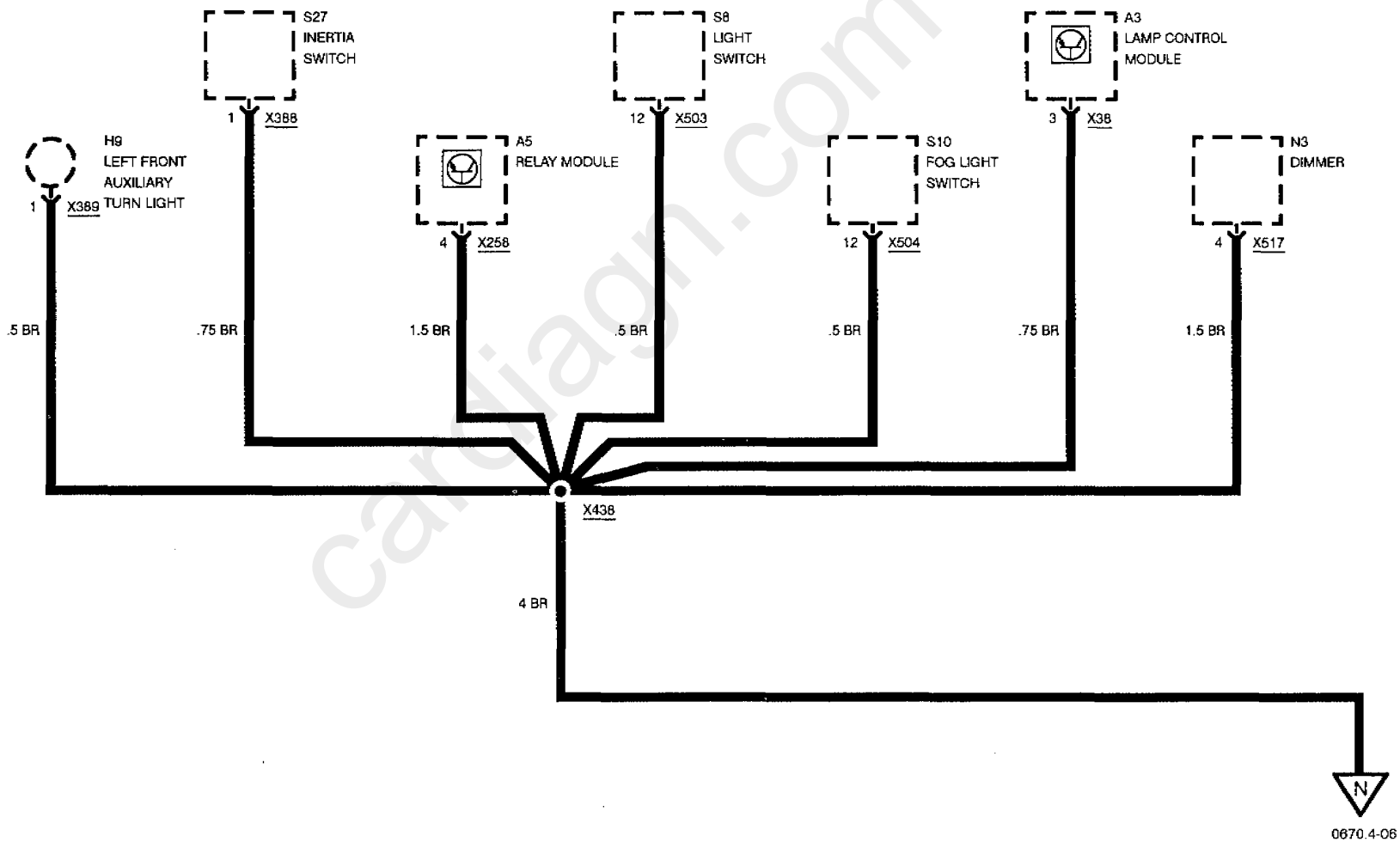

cardiagn.com

GROUND DISTRIBUTION

GROUND X490

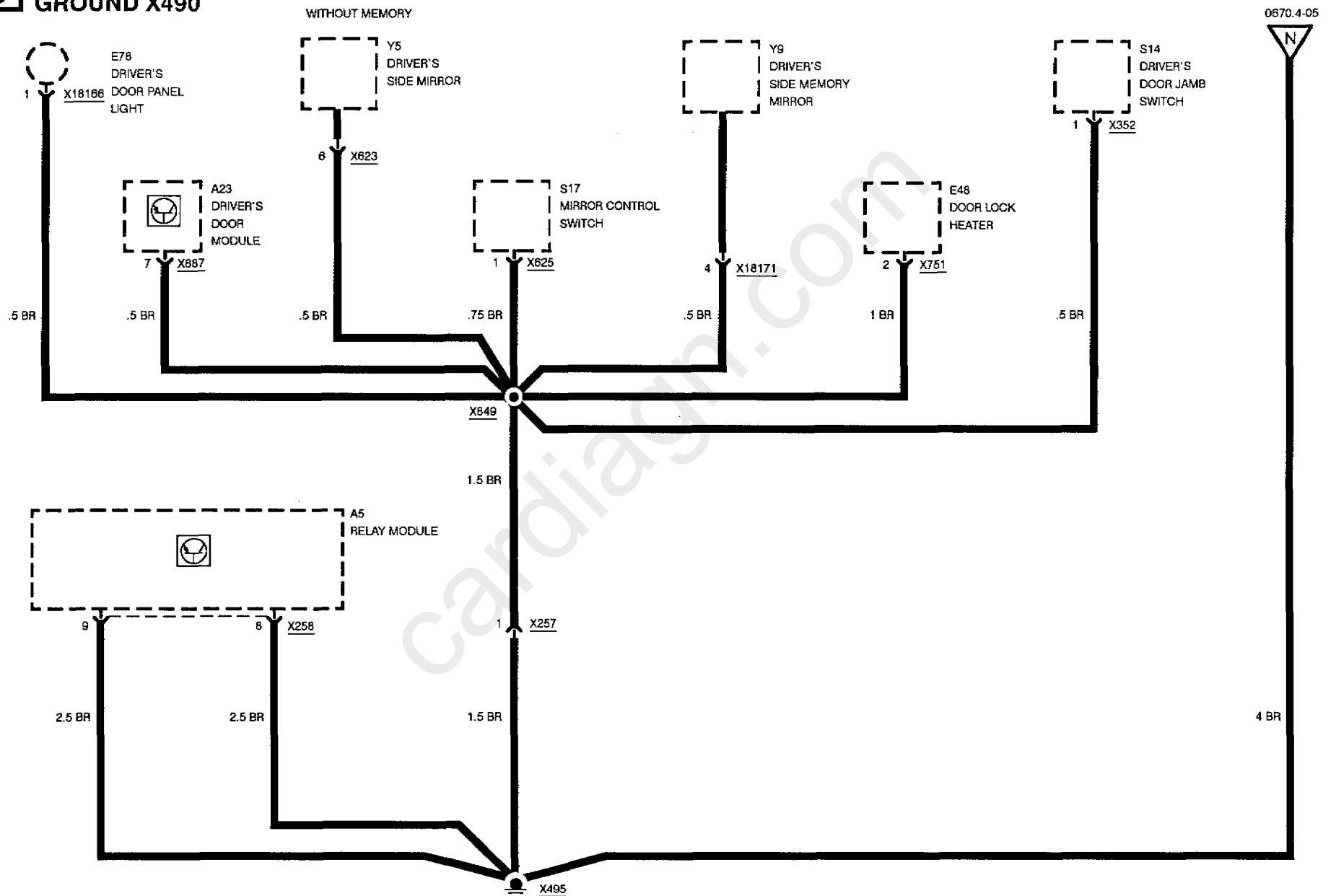

cardiagn.com

GROUND DISTRIBUTION

GROUND X492

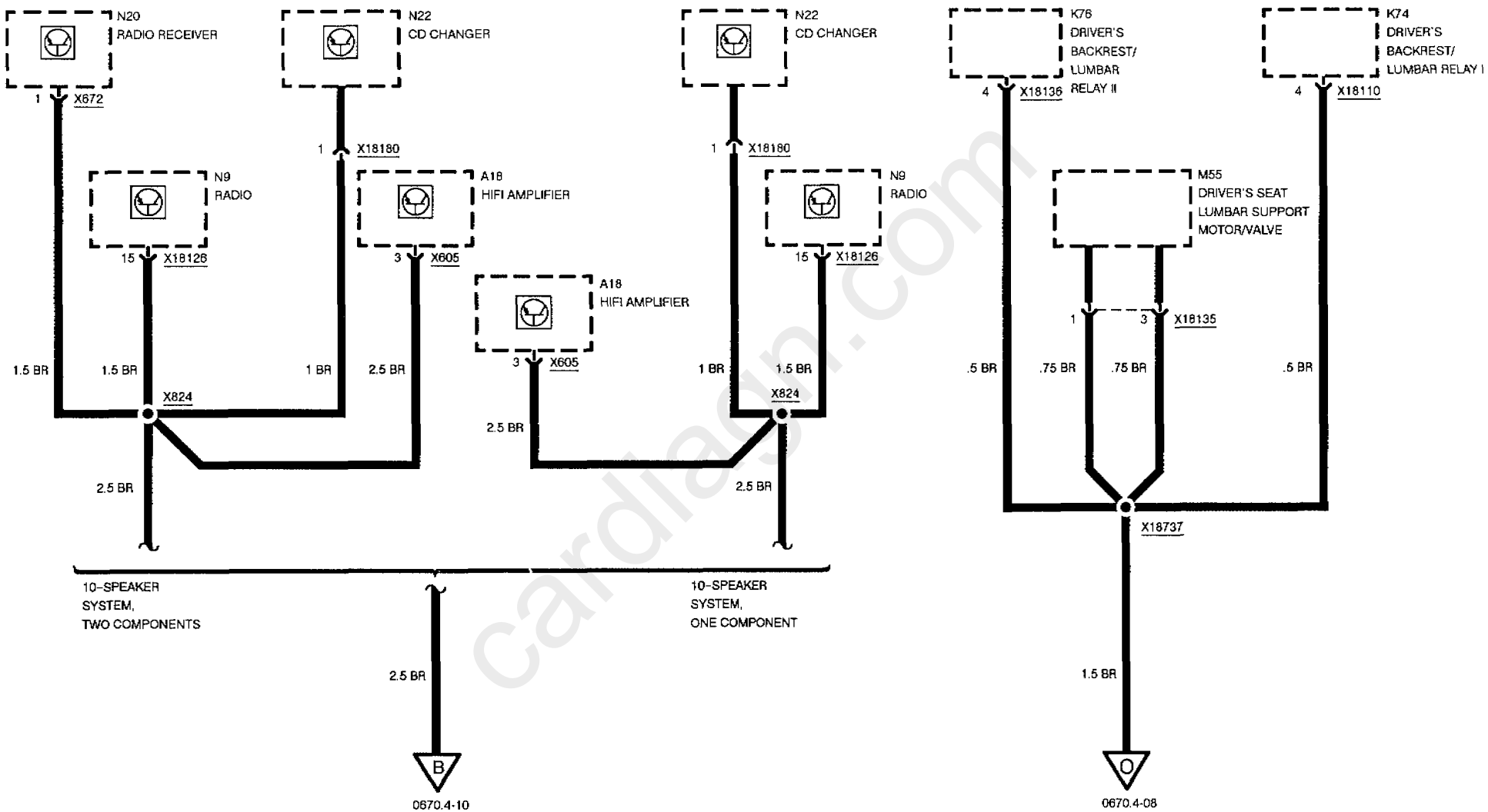

cardiagn.com

GROUND DISTRIBUTION

GROUND X492

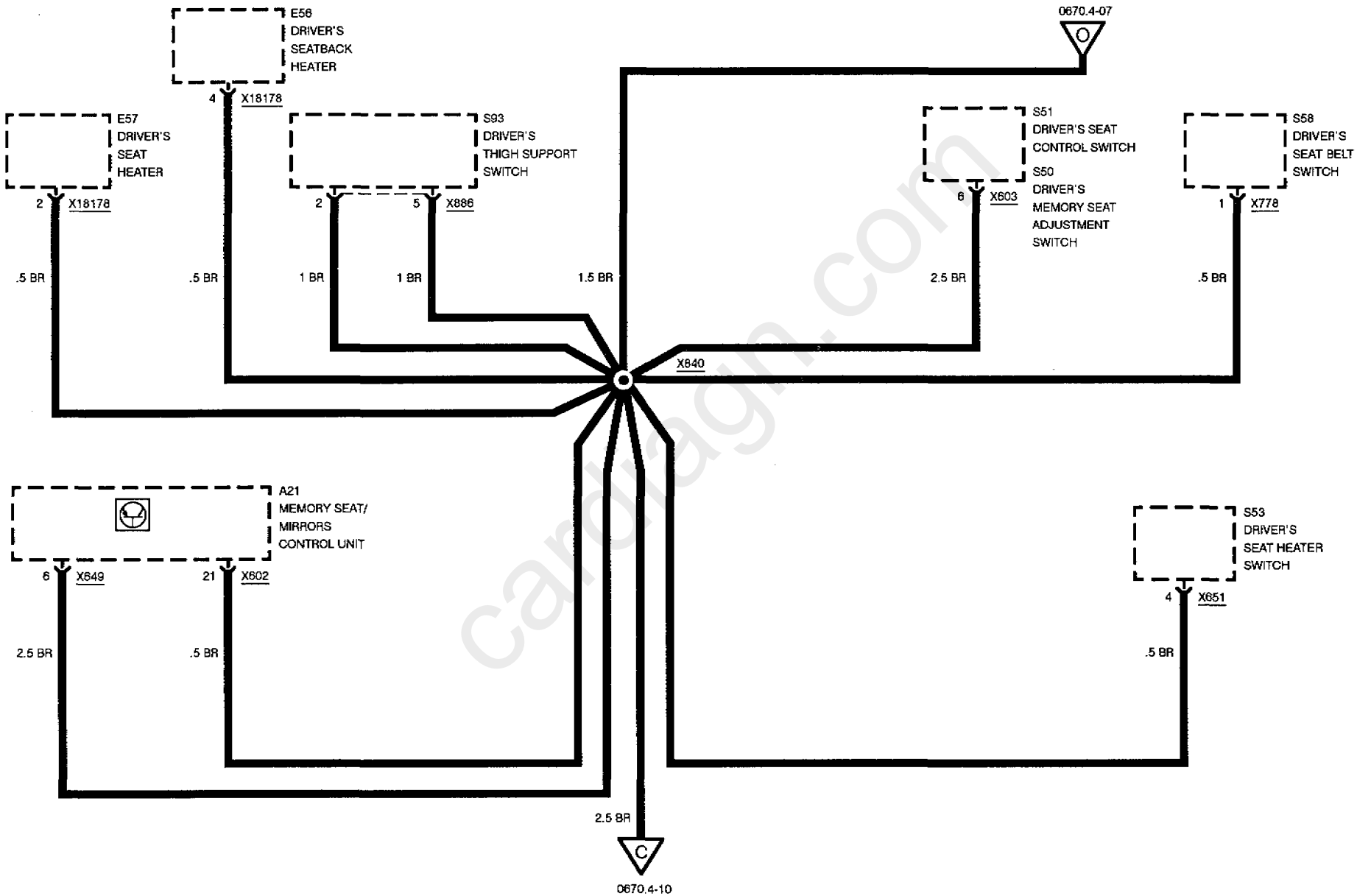

cardiagn.com

GROUND DISTRIBUTION

GROUND X492

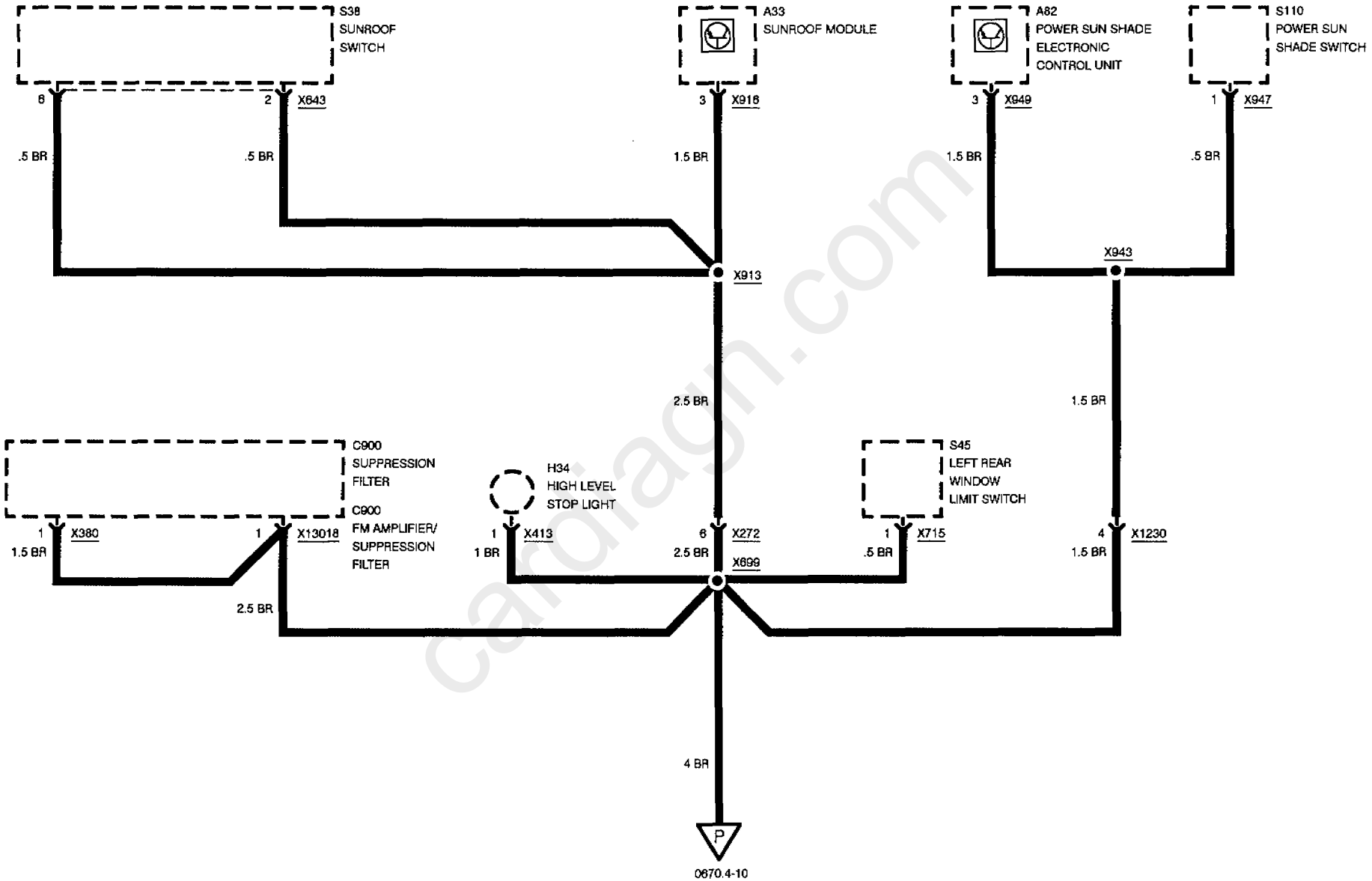

cardiagn.com

GROUND DISTRIBUTION

GROUND X492

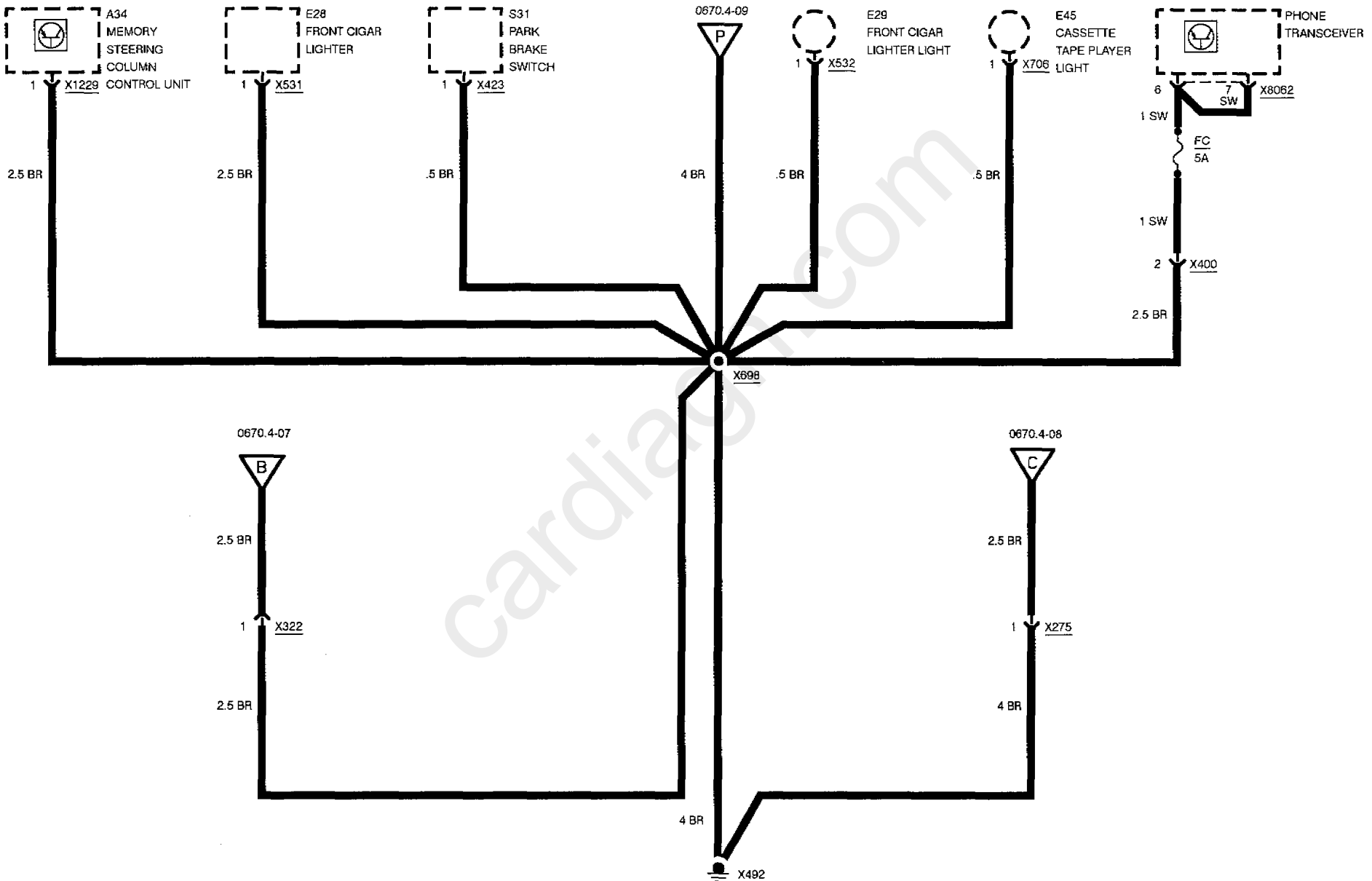

cardiagn.com

GROUND DISTRIBUTION

GROUND X494

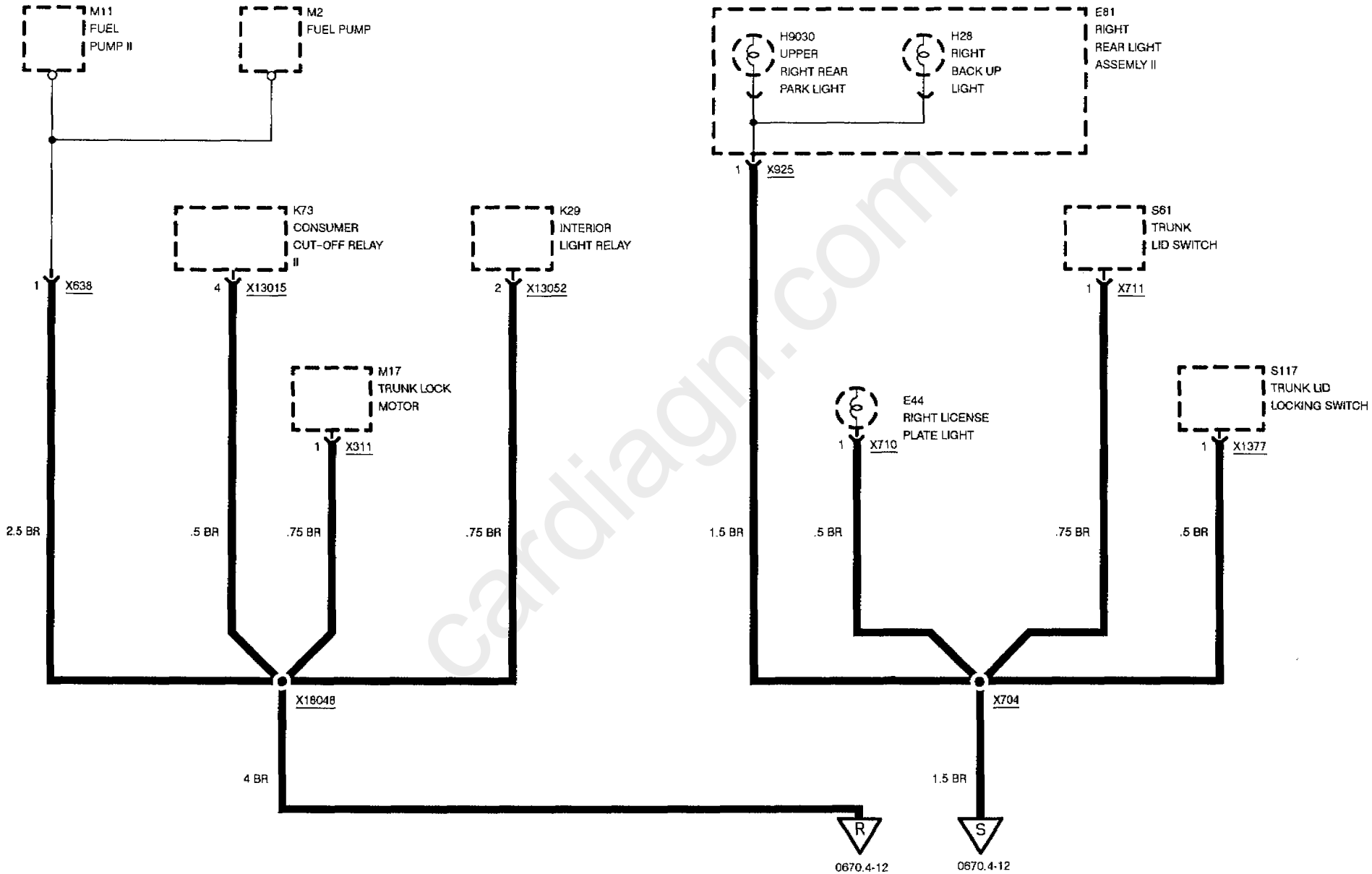

cardiagn.com

GROUND DISTRIBUTION

GROUND X494

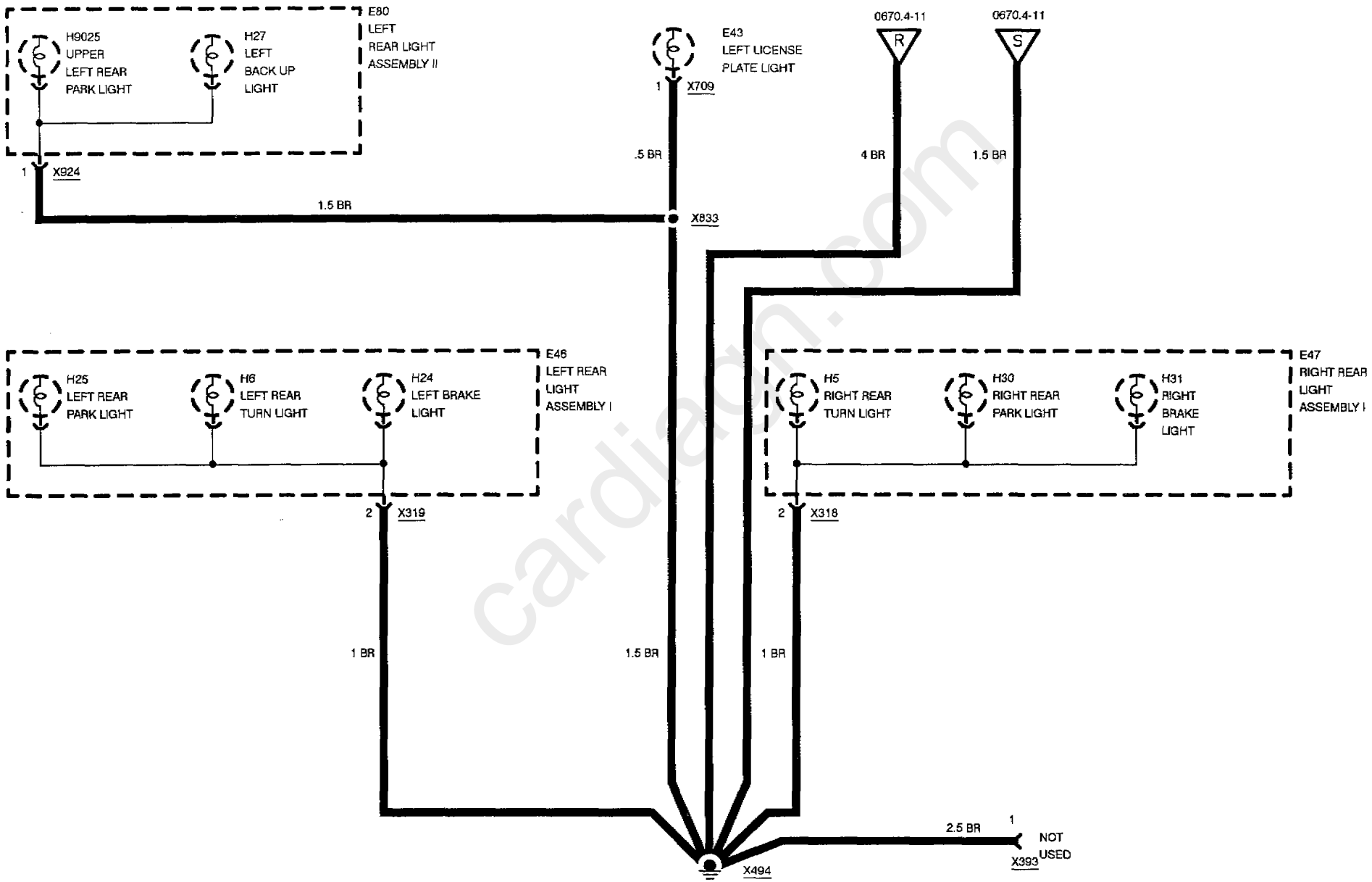

cardiagn.com

GROUND DISTRIBUTION

GROUND X495

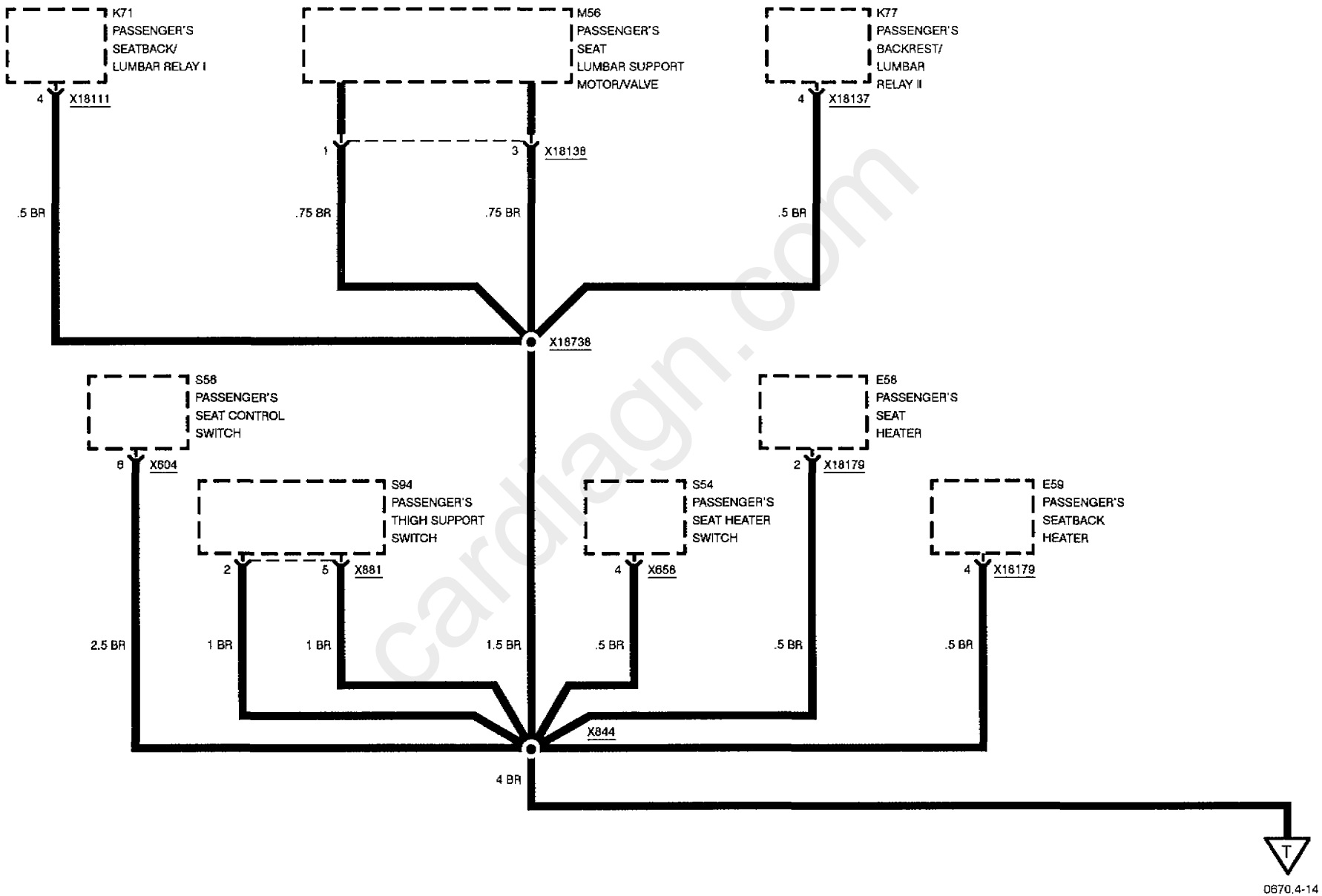

cardiagn.com

GROUND DISTRIBUTION

GROUND X495

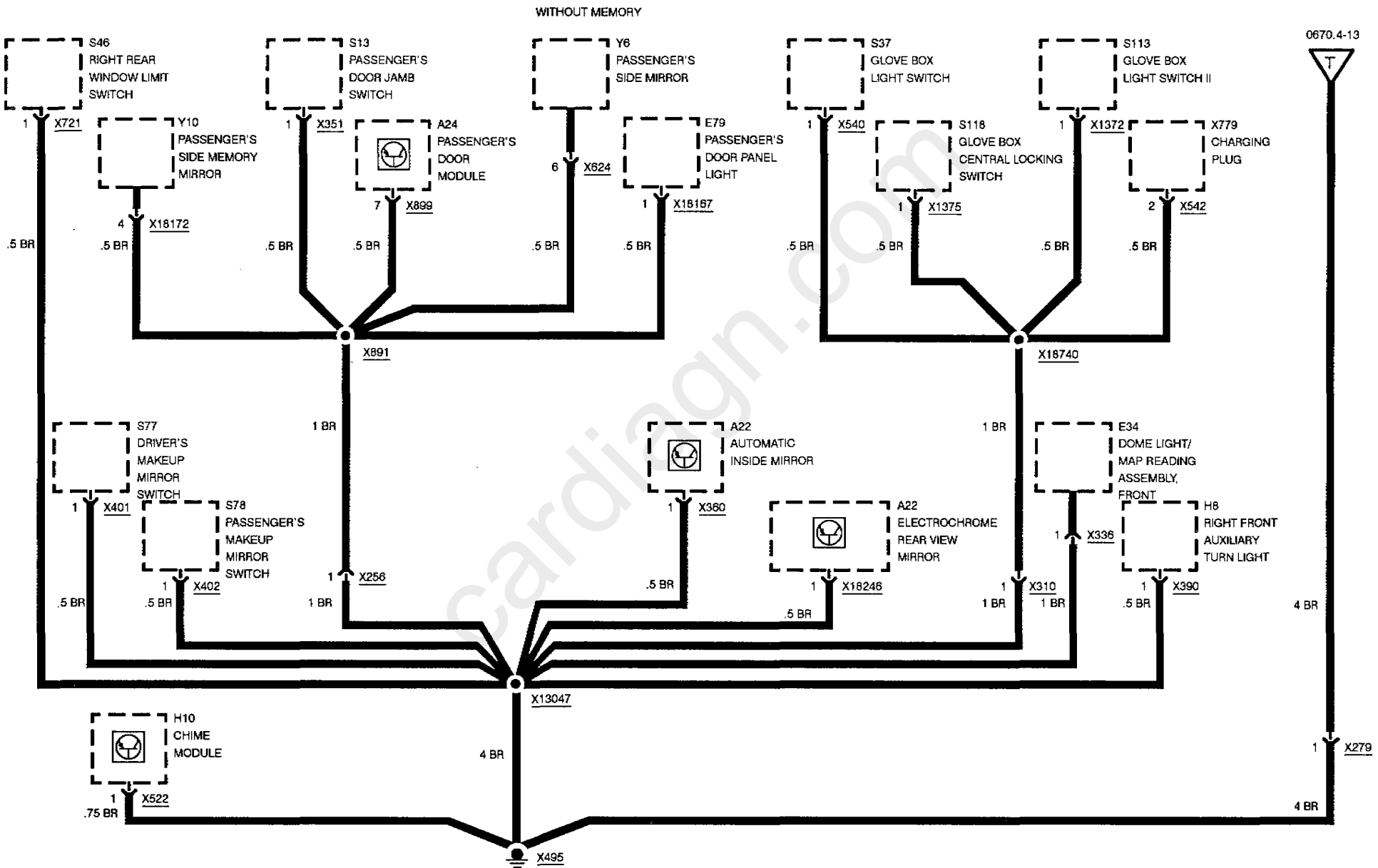

cardiagn.com

GROUND DISTRIBUTION

GROUND X497

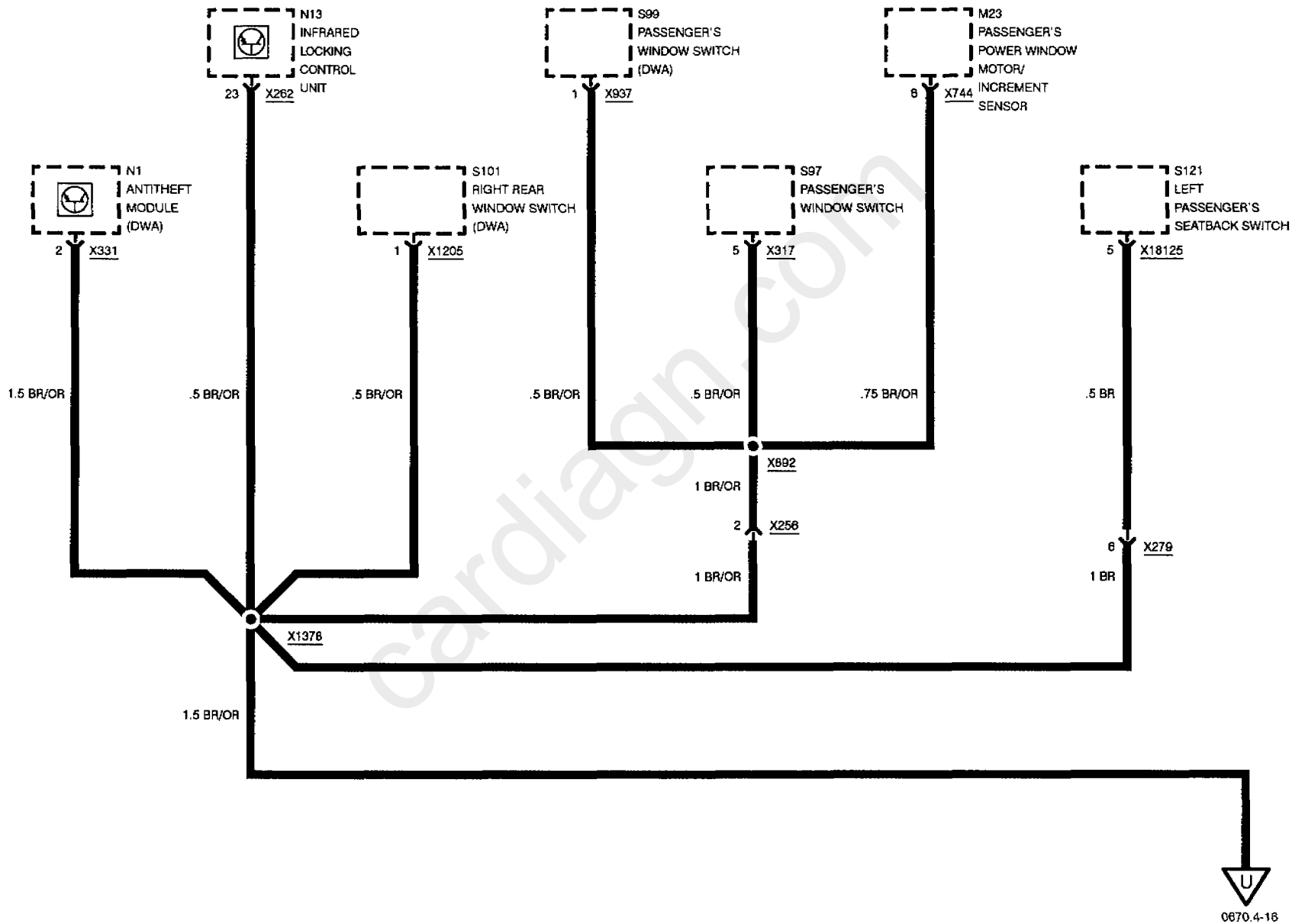

cardiagn.com

GROUND DISTRIBUTION

GROUND X497

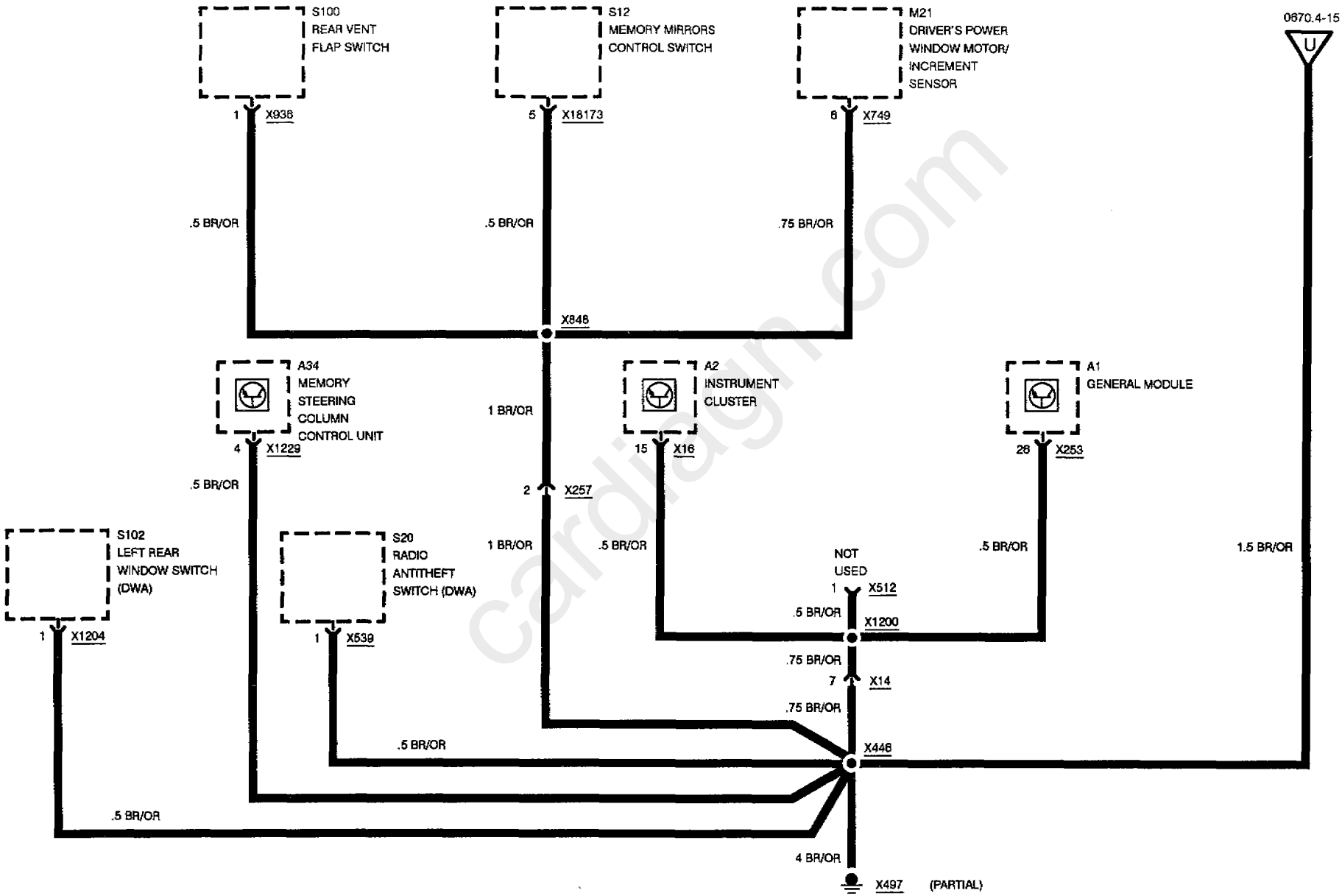

cardiagn.com

GROUND DISTRIBUTION

GROUND X497

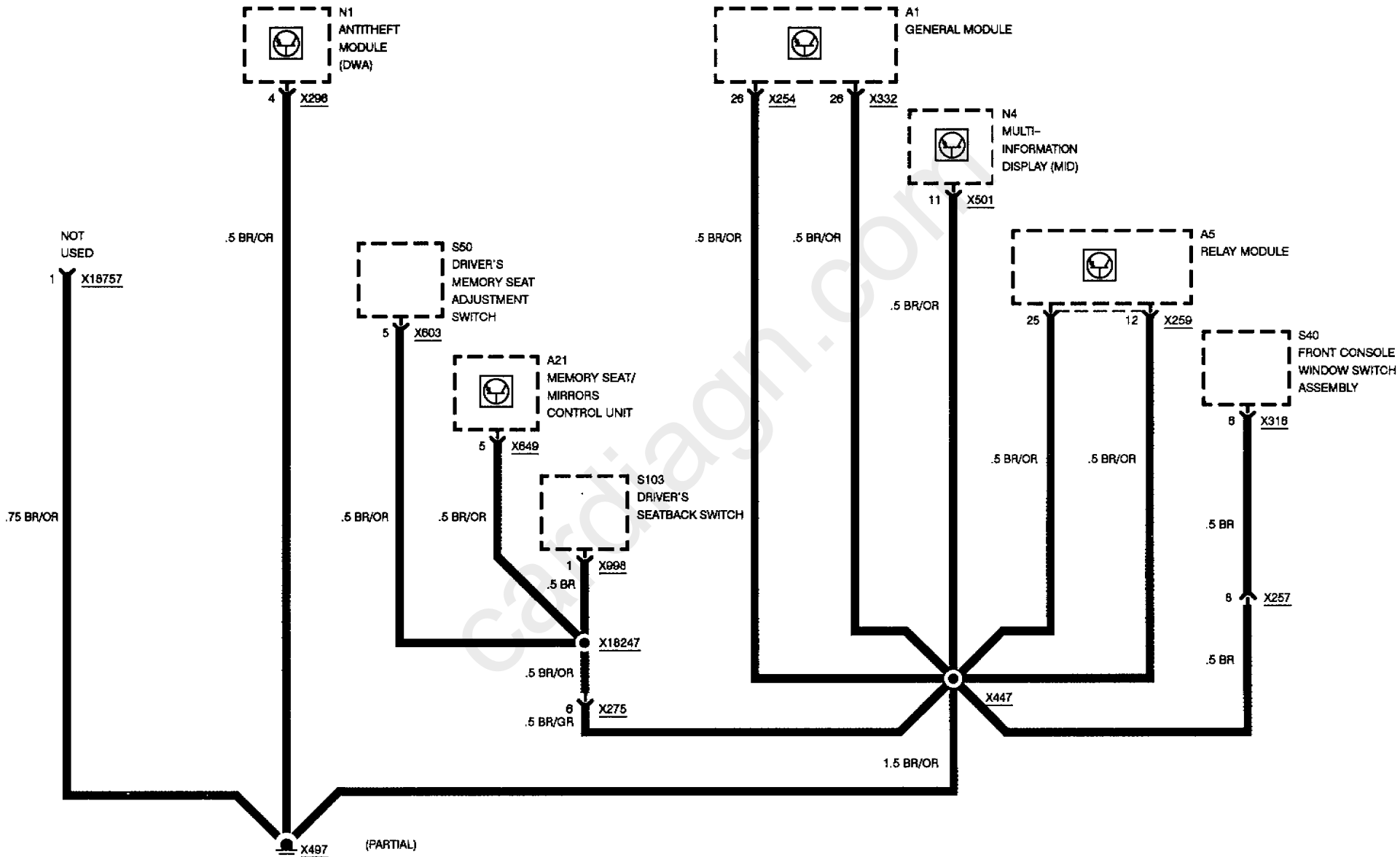

GROUND DISTRIBUTION

GROUND X818

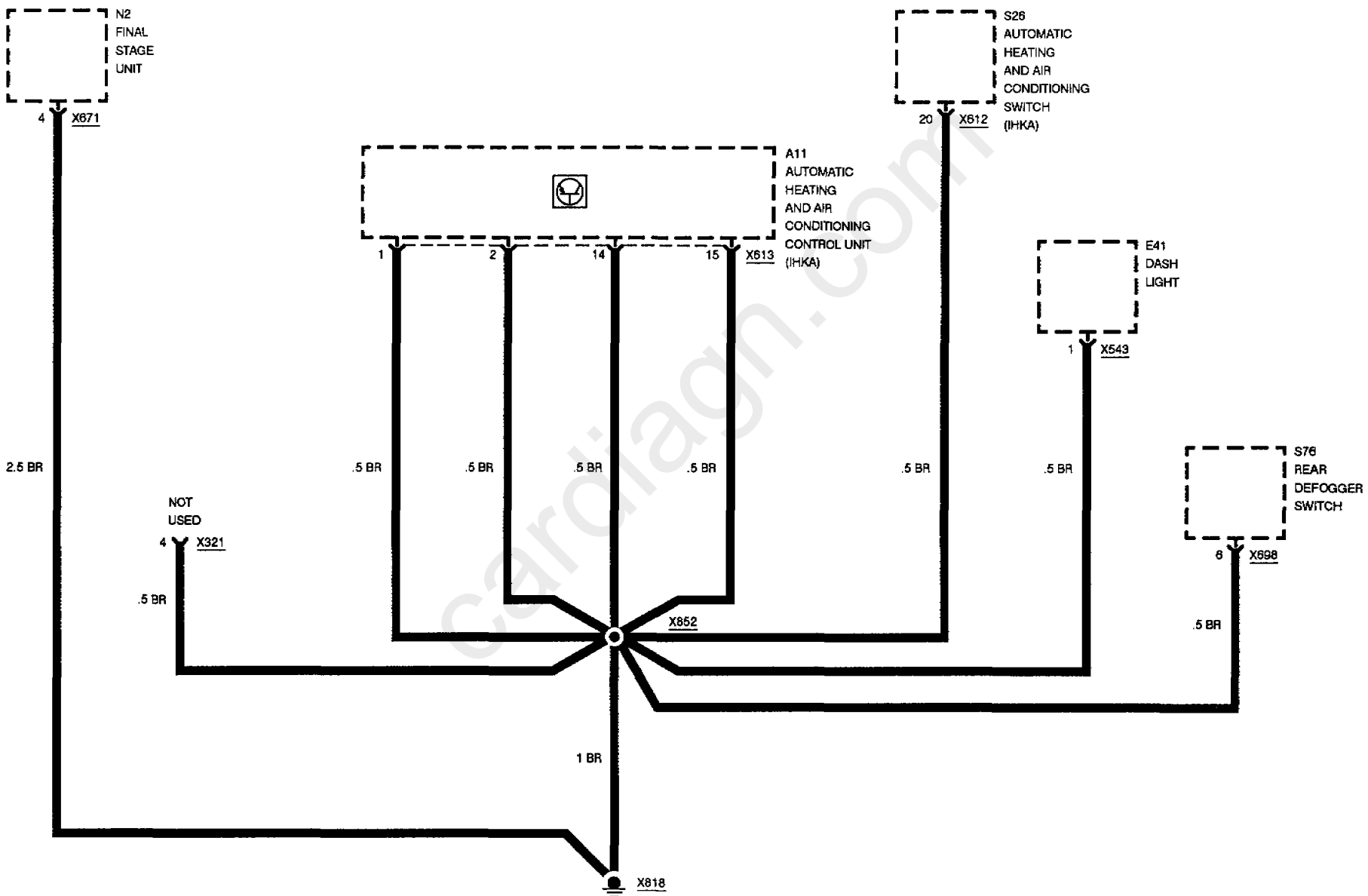

cardiagn.com

GROUND DISTRIBUTION

GROUND X820, X955, X1165 AND X6402

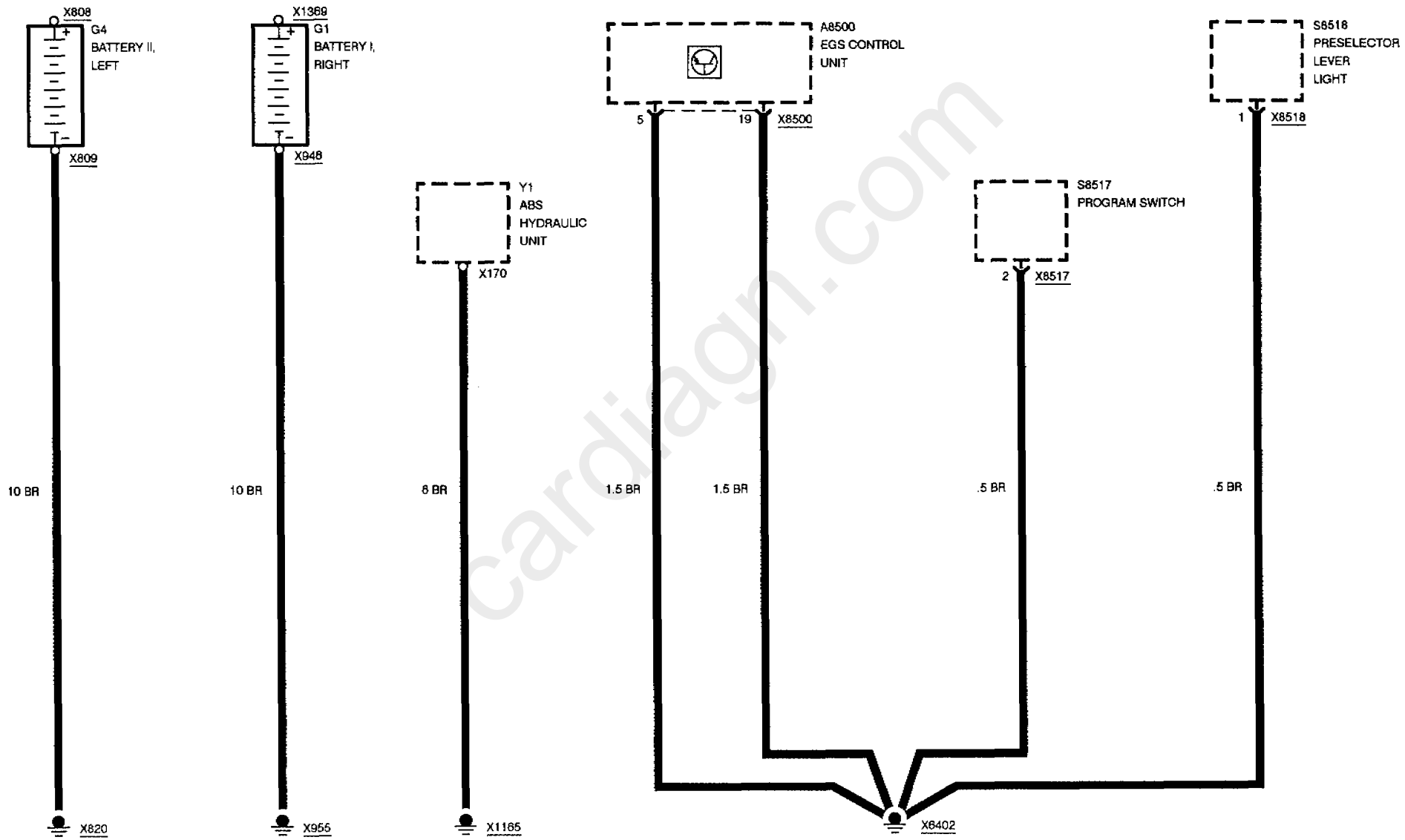

cardiagn.com

GROUND DISTRIBUTION

GROUND X6452

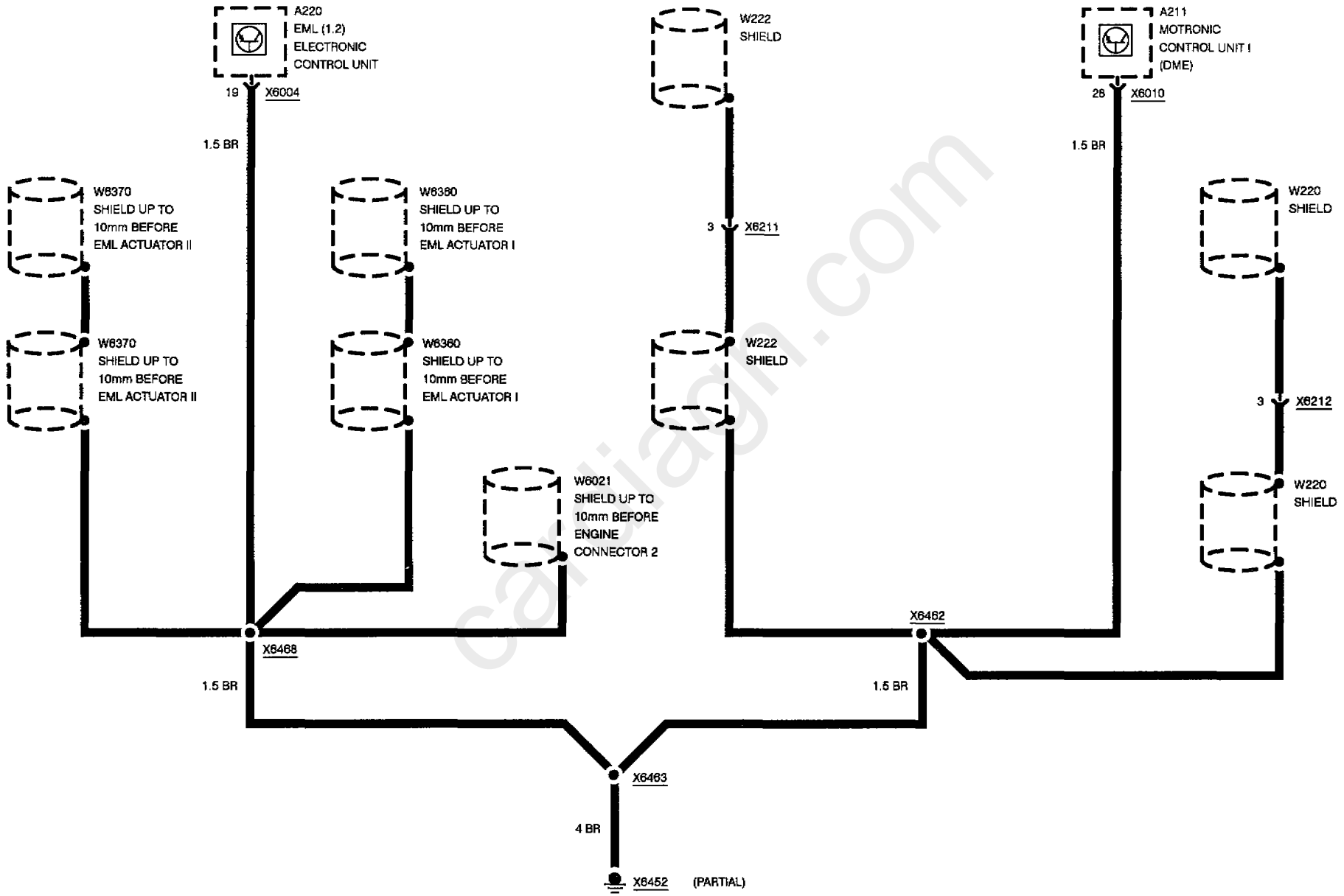

cartiagn.com

GROUND DISTRIBUTION

GROUND X6452

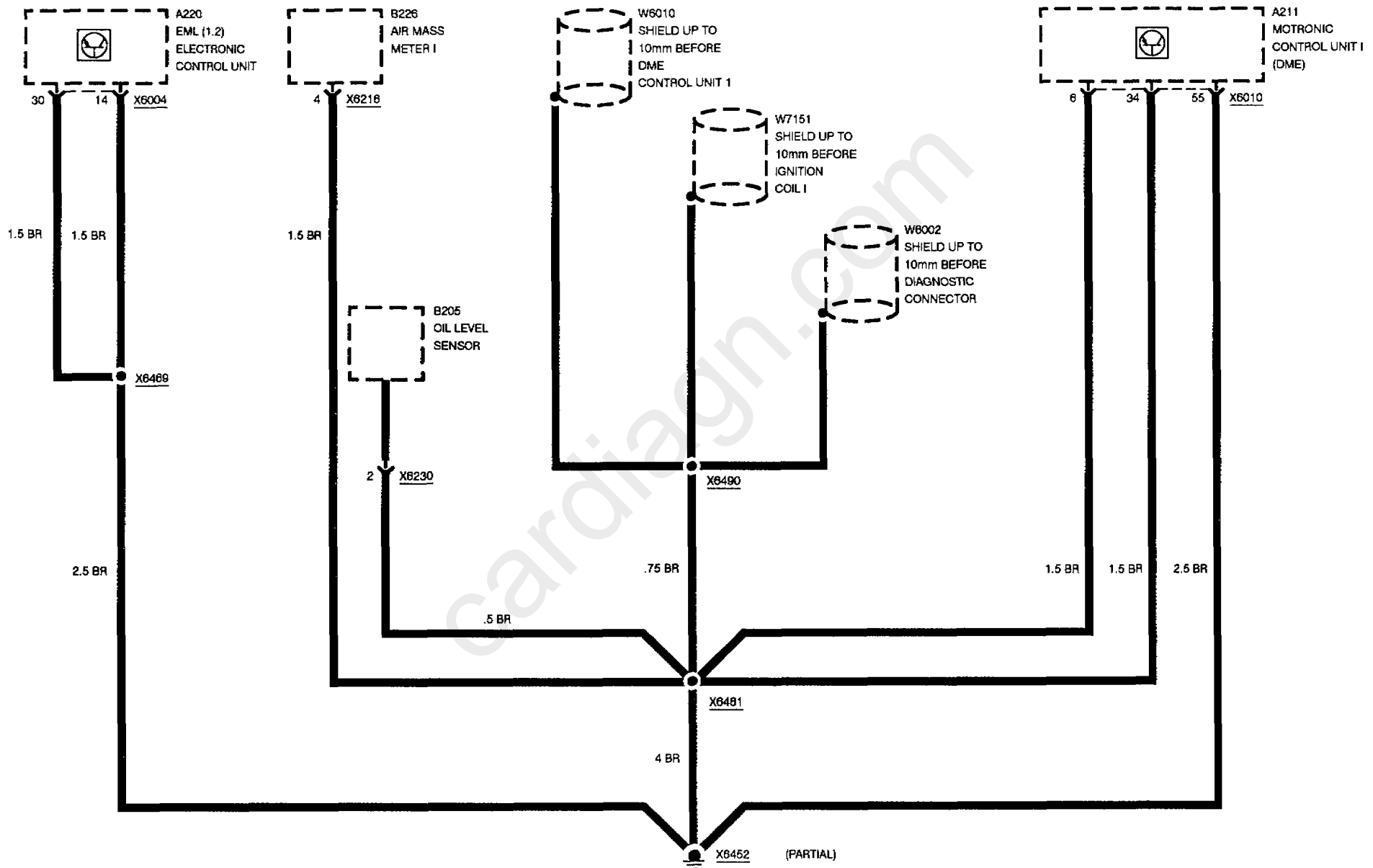

cardiagn.com

GROUND DISTRIBUTION

GROUND X6453

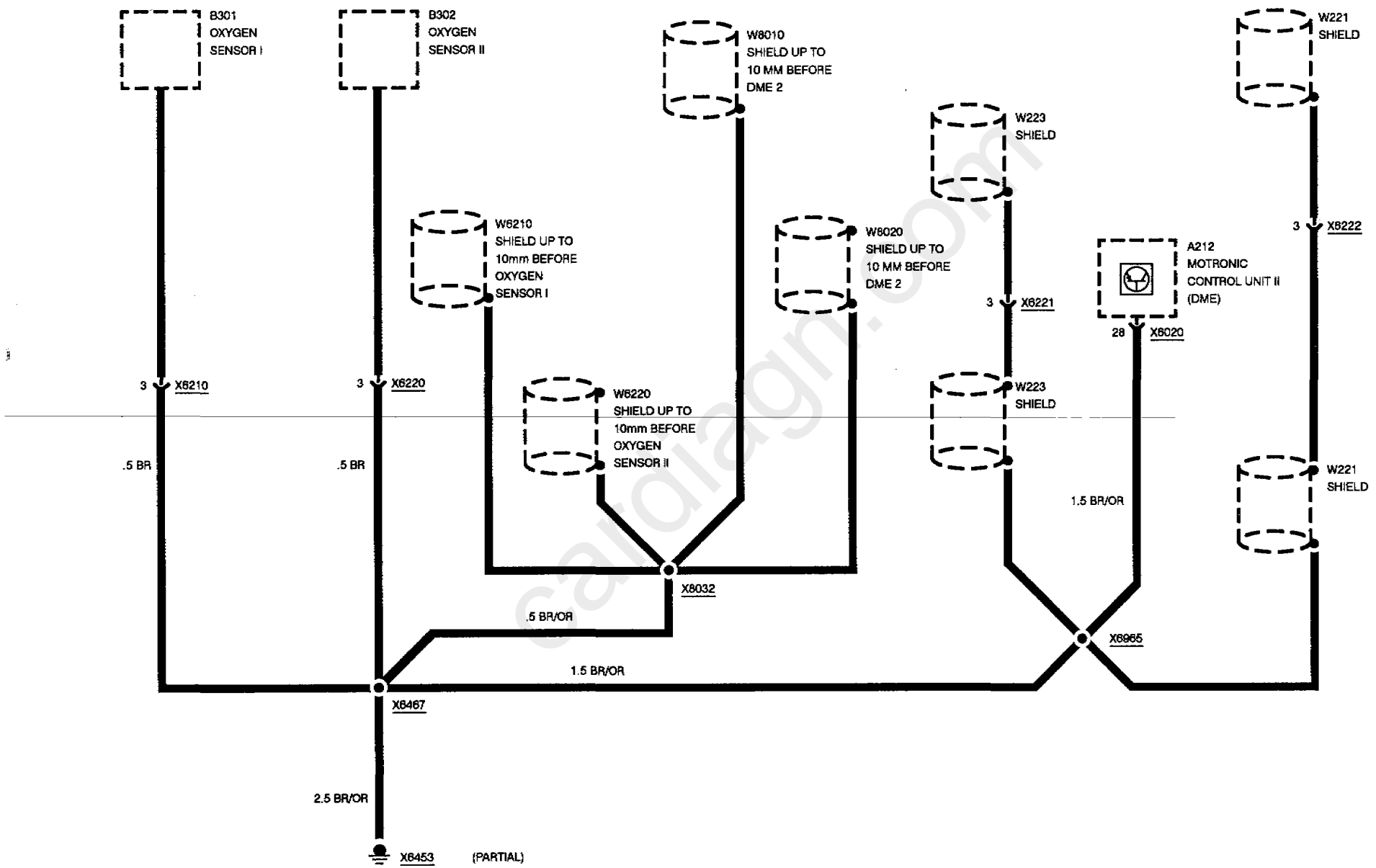

caldiagn.com

BMW 8

GROUND DISTRIBUTION

GROUND X6453

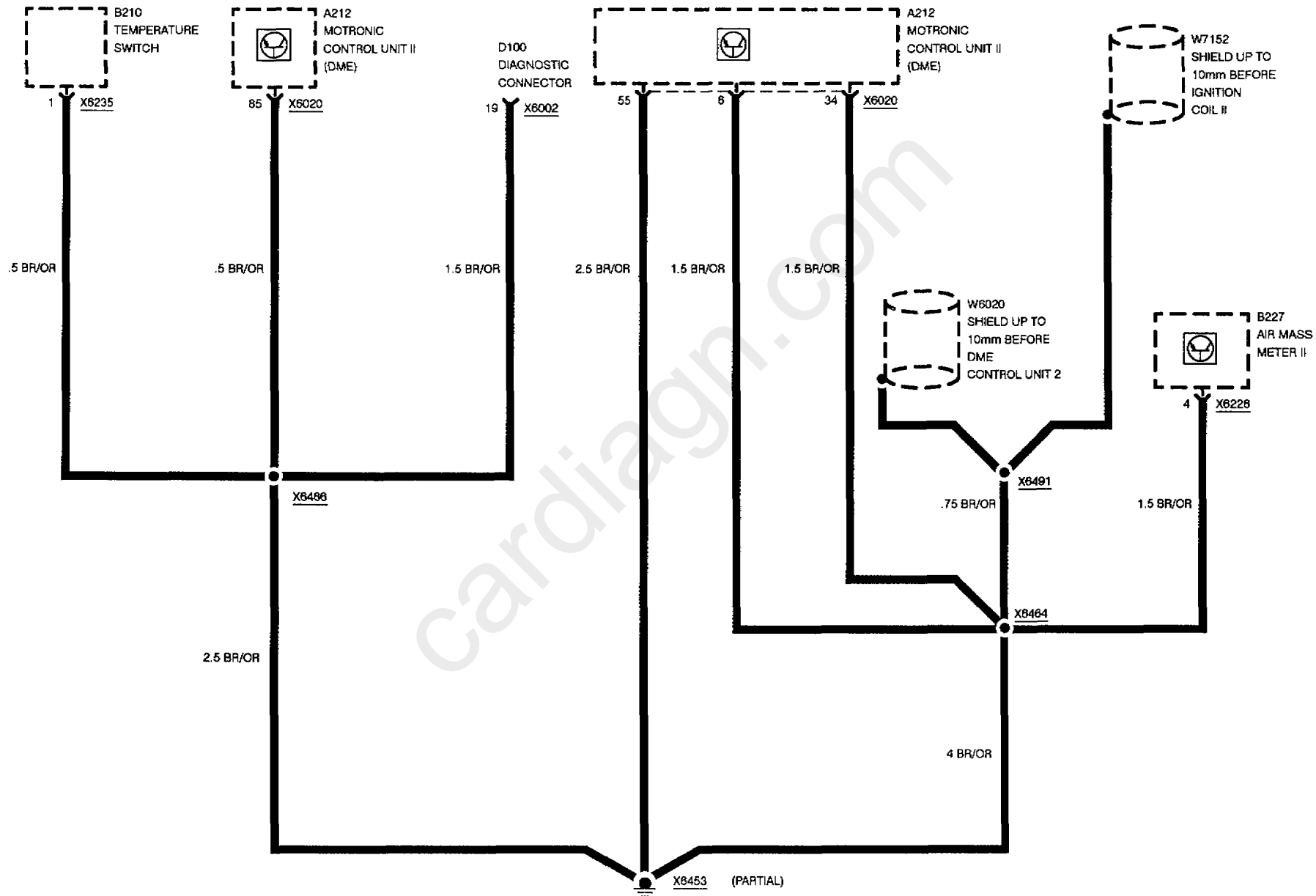

cardiagn.com

GROUND DISTRIBUTION

GROUND X18170

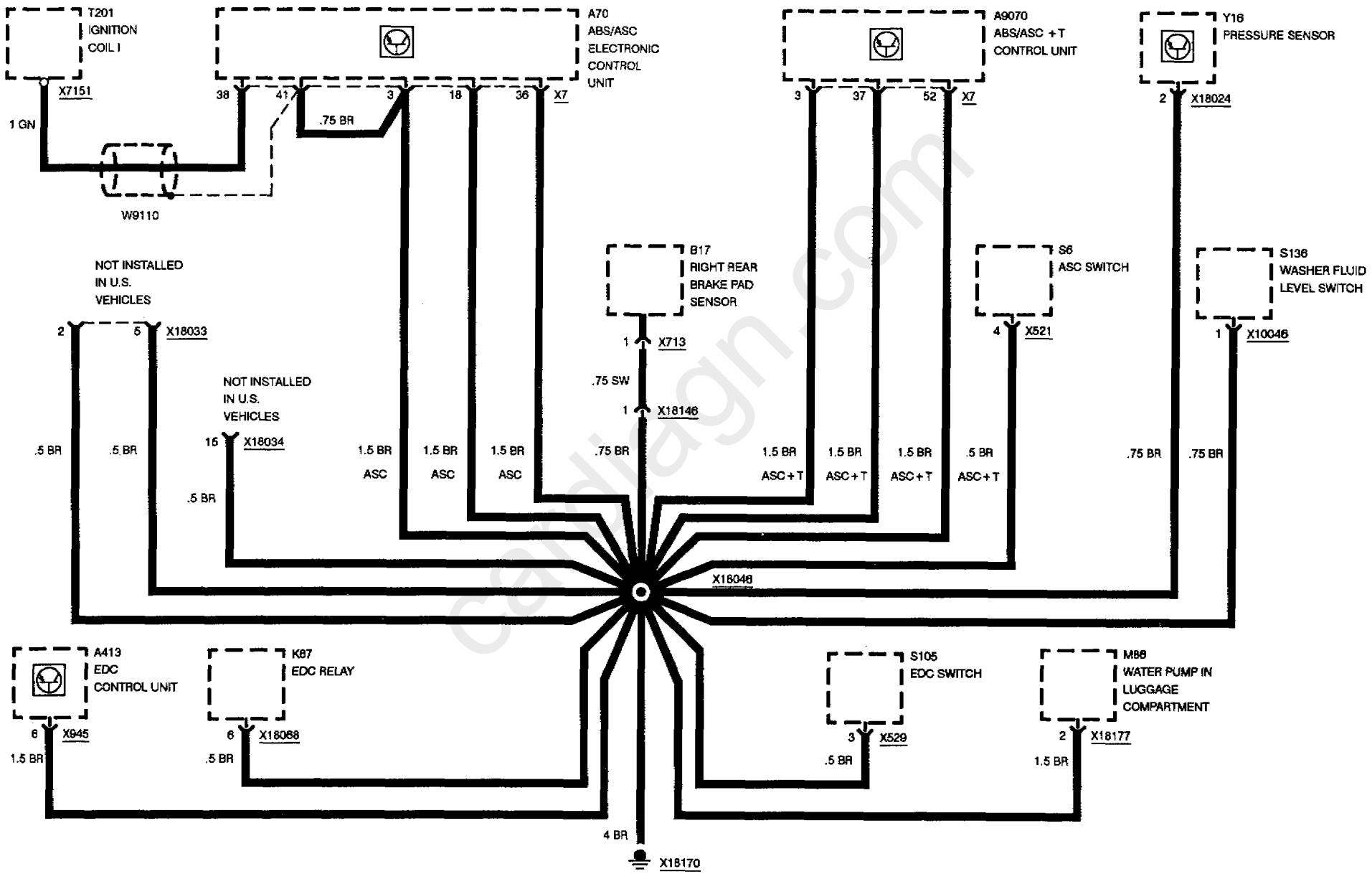

cardiagn.com

DIAGNOSTIC LINK

BLOCK DIAGRAM

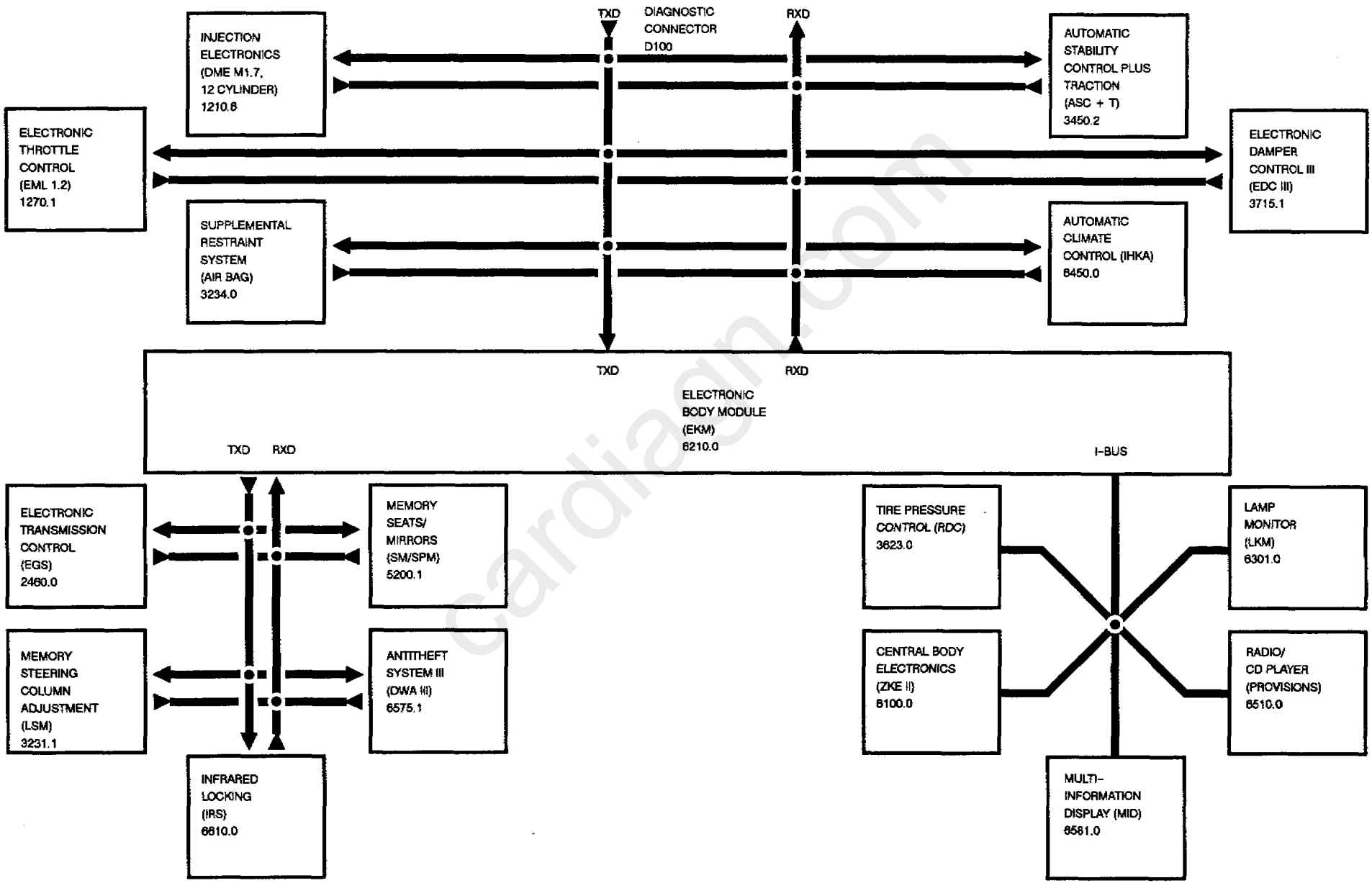

cardiagn.com

DIAGNOSTIC LINK

TXD

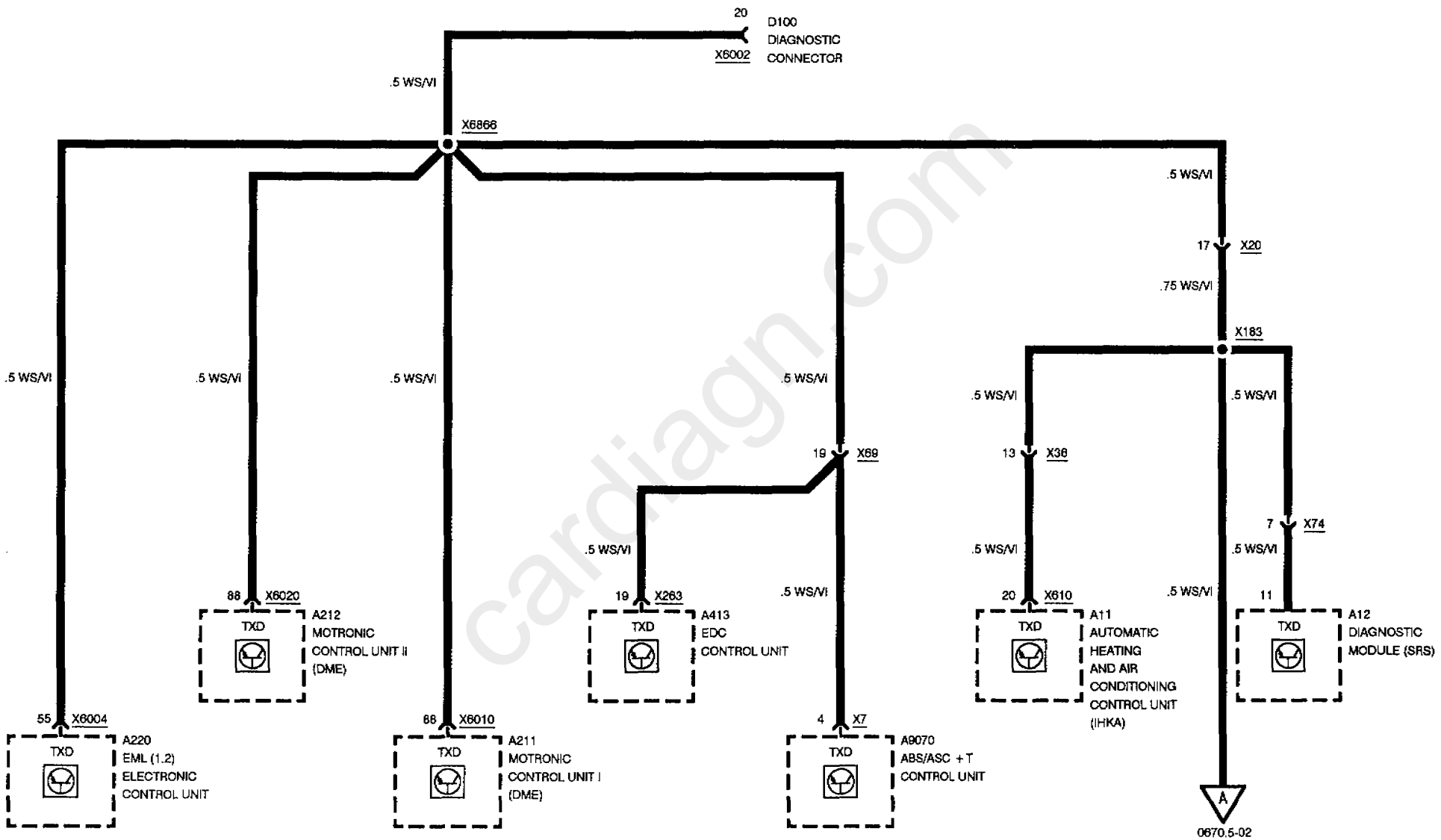

cardiagn.com

DIAGNOSTIC LINK

TXD

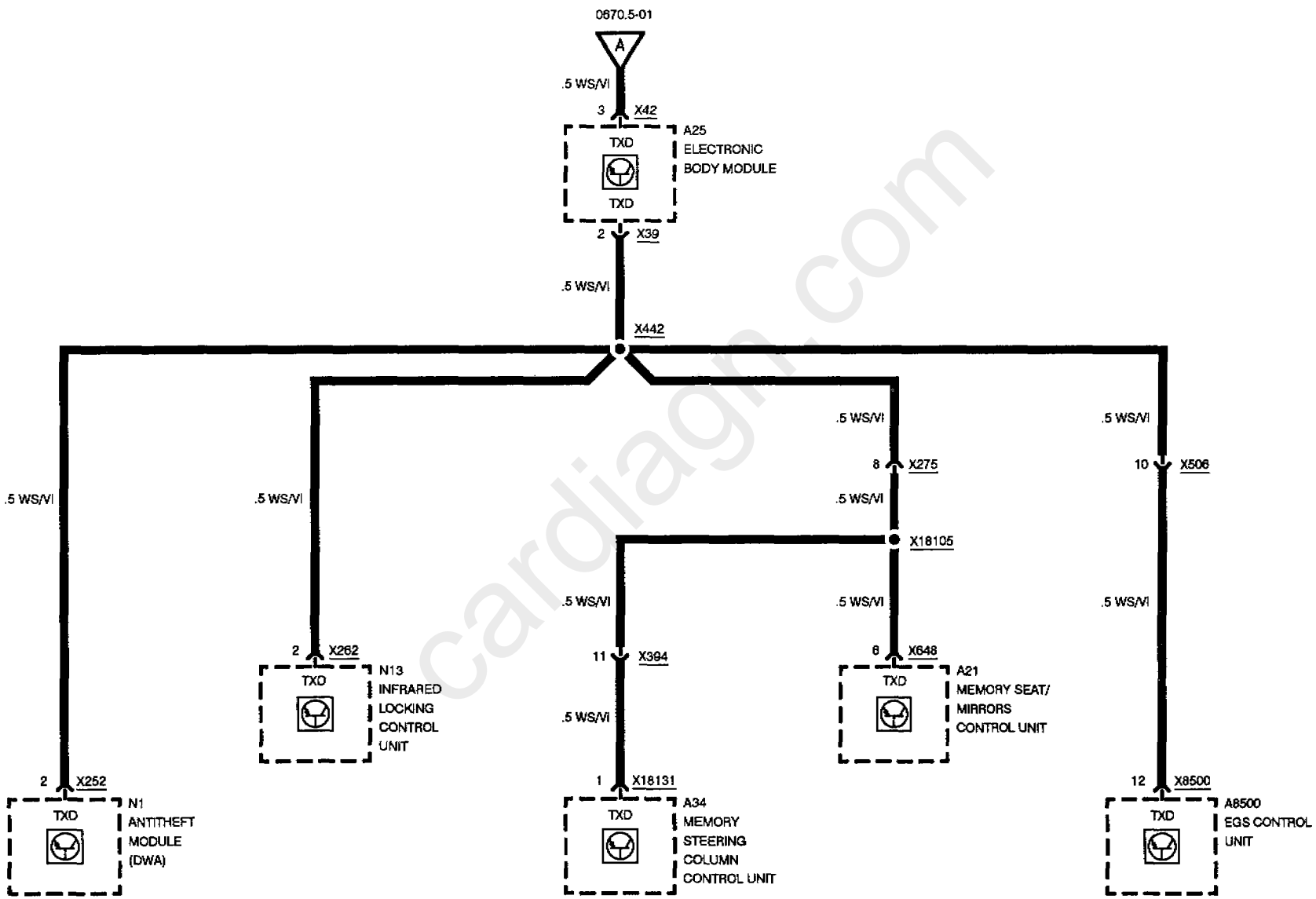

cardiagn.com

DIAGNOSTIC LINK

RXD

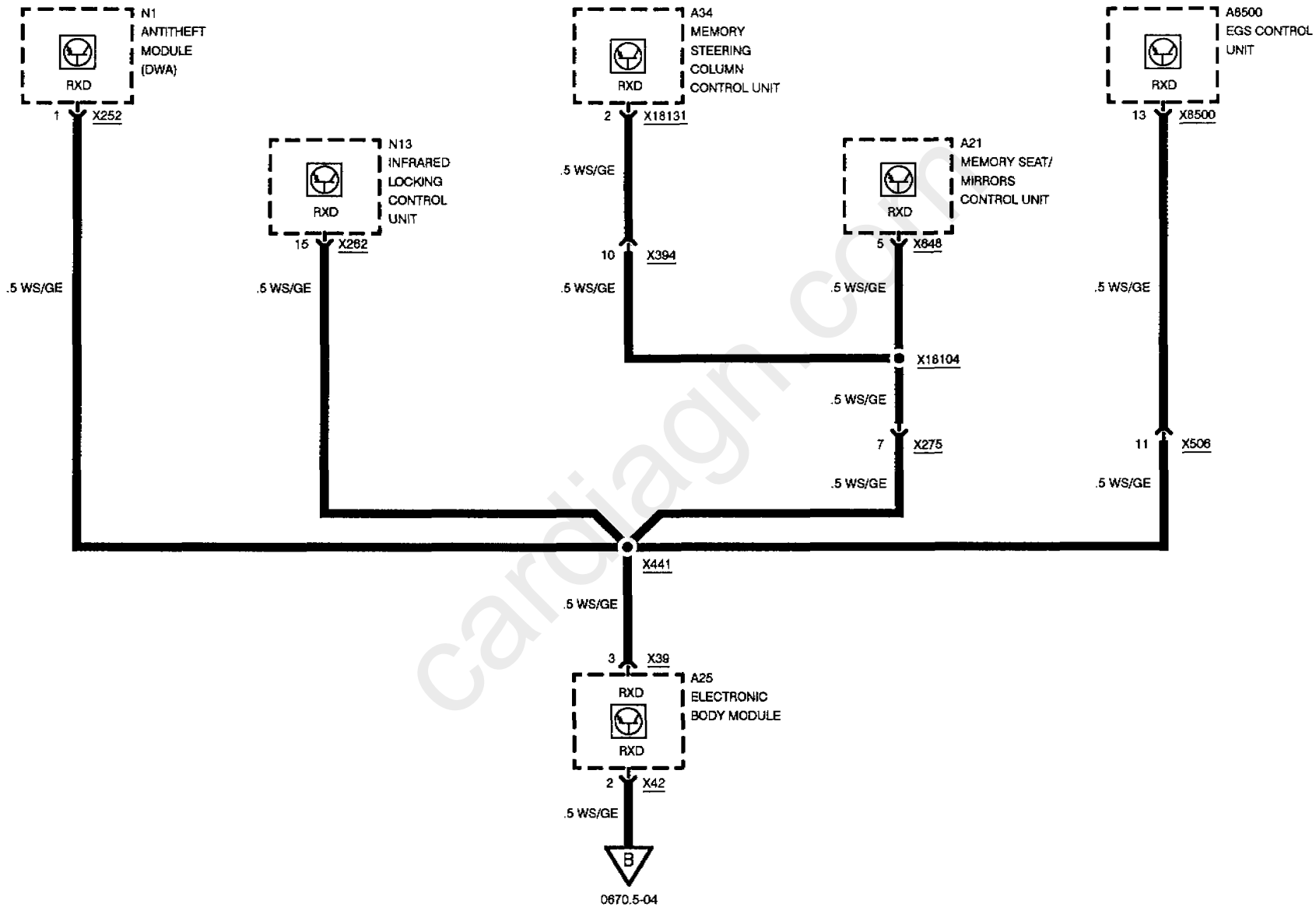

cardiagn.com

DIAGNOSTIC LINK

RXD

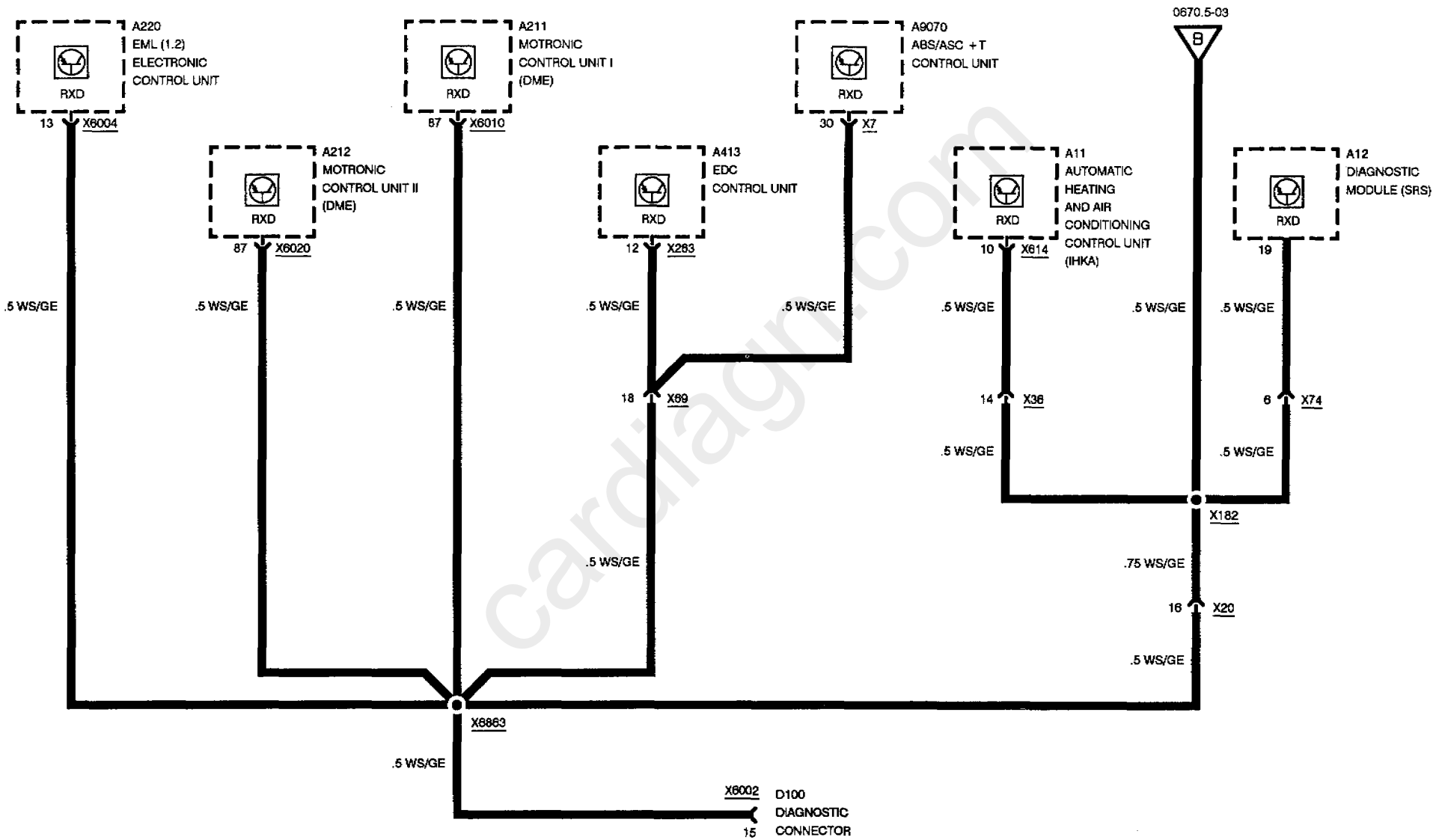

cardiagn.com

DIAGNOSTIC LINK

INSTRUMENTATION BUS (I-BUS)

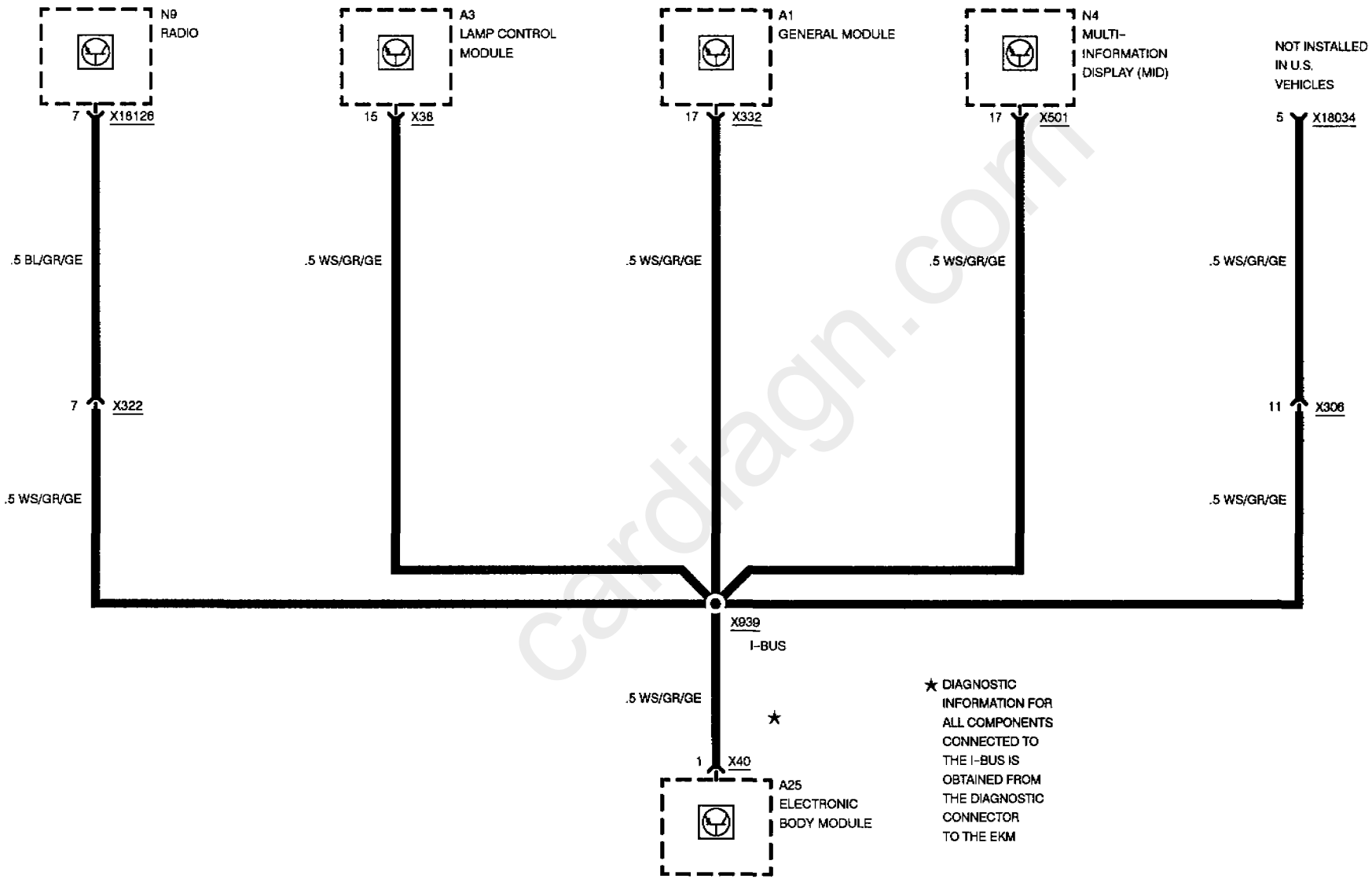

cardiagn.com

DIAGNOSTIC LINK

DIAGNOSTIC CONNECTOR PINS 1 AND 12

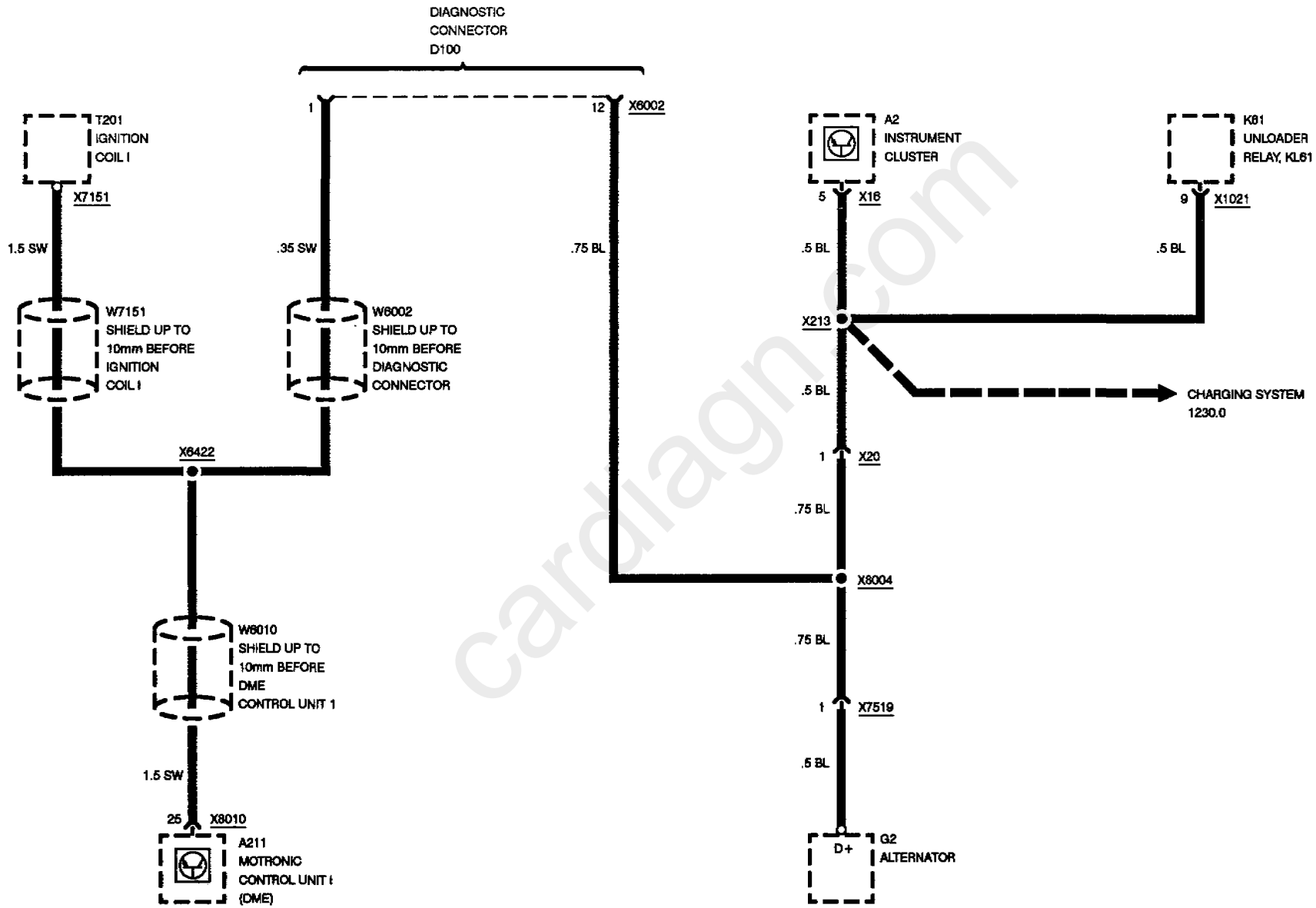

cardiagn.com

DIAGNOSTIC LINK

DIAGNOSTIC CONNECTOR PIN 13

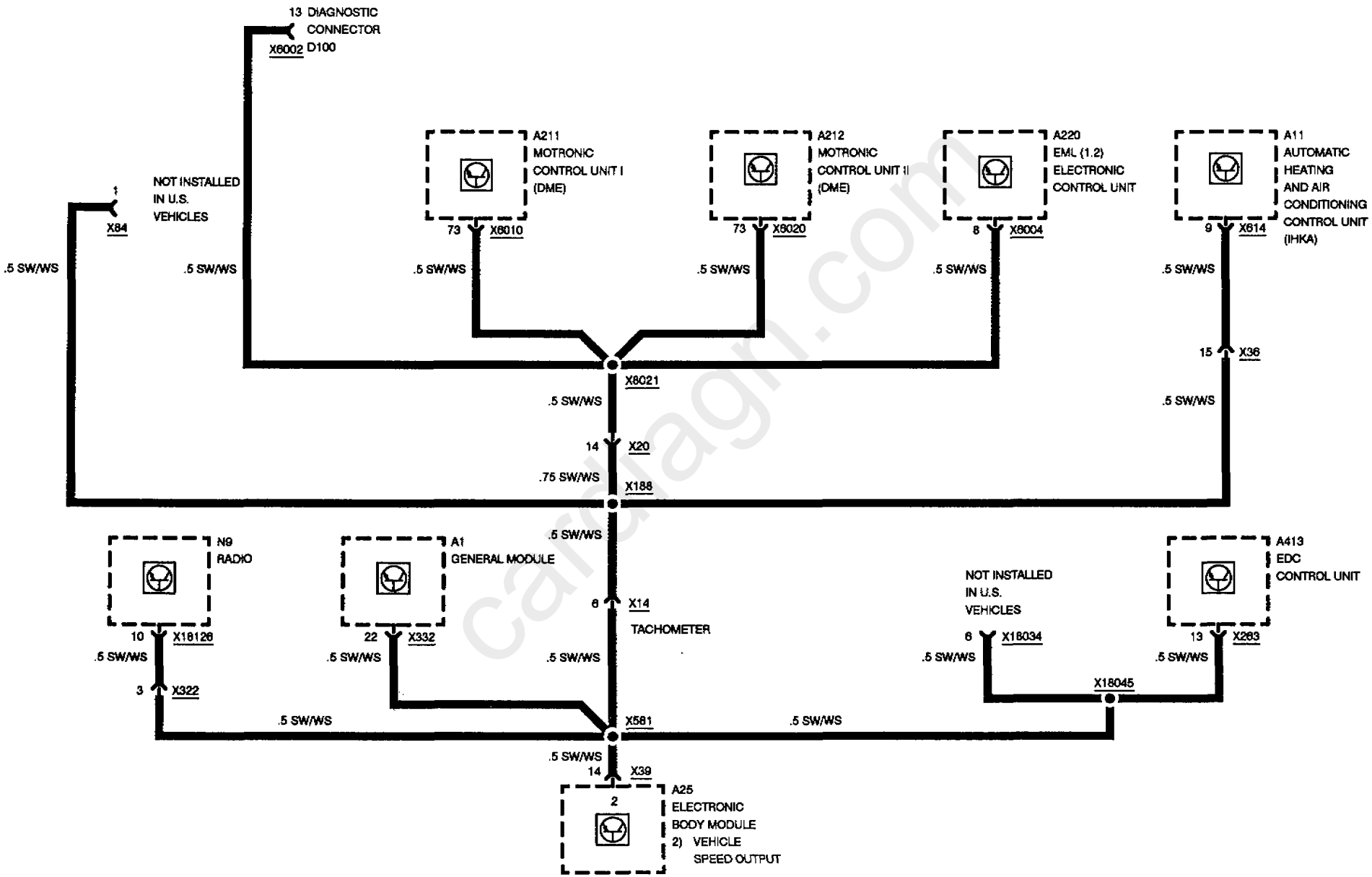

carmagn.com

DIAGNOSTIC LINK

DIAGNOSTIC CONNECTOR PINS 7, 11, 14, AND 16

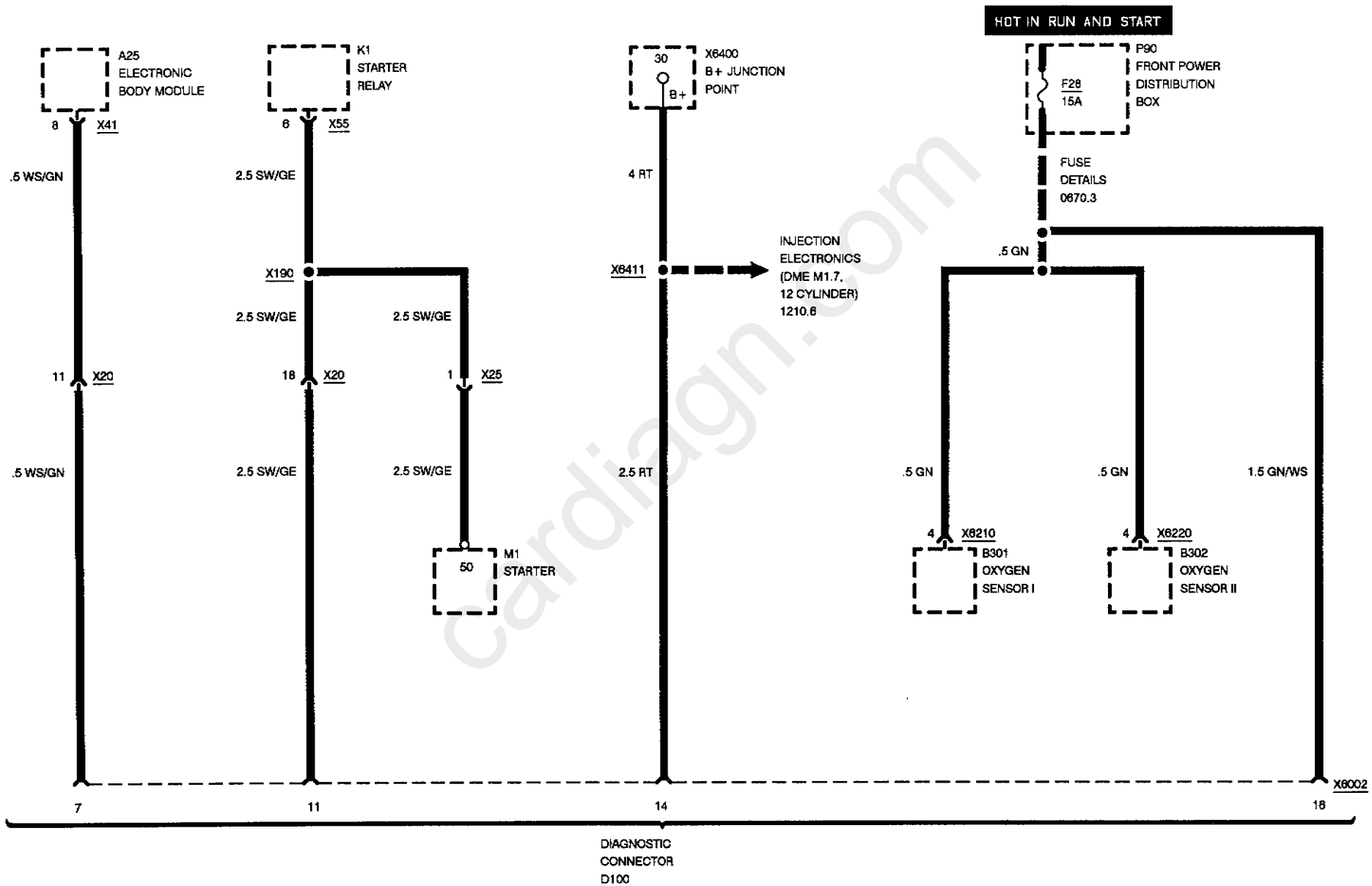

cardiagn.com

DIAGNOSTIC LINK

DIAGNOSTIC CONNECTOR PINS 18 AND 19

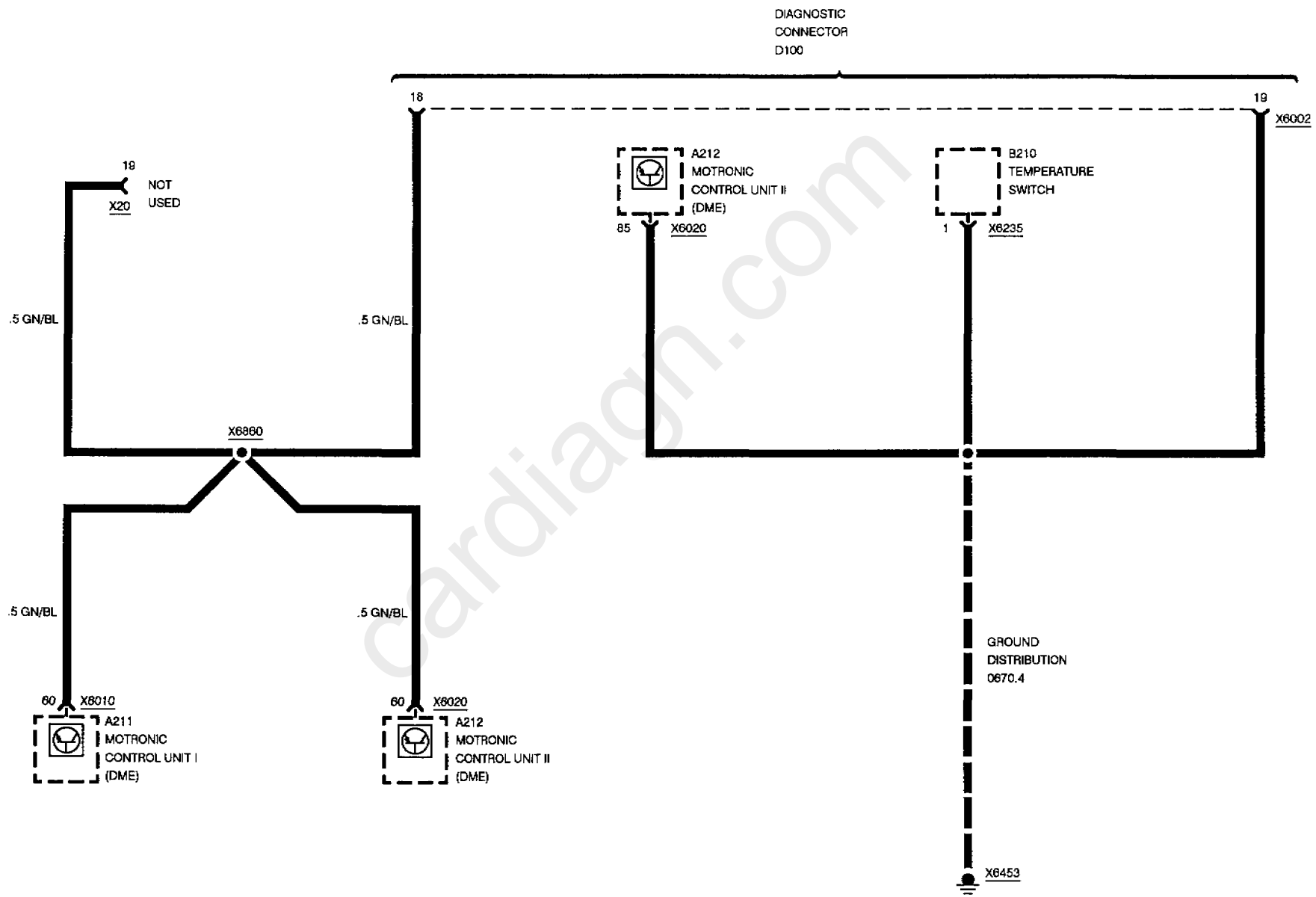

cardiagn.com

DIAGNOSTIC LINK

DIAGNOSTIC CONNECTOR (X6002)

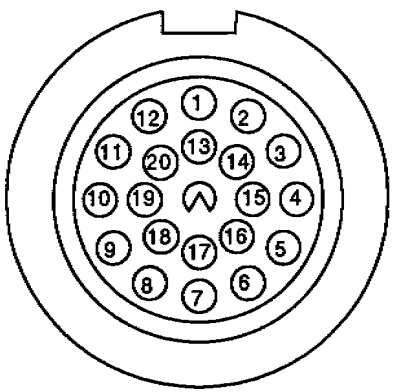

PIN NUMBER	TERMINAL NUMBER	TERMINAL DESCRIPTION	WIRE COLOR
1	1	IGNITION COIL	SW
2	–	LATE PRODUCTION	
3	–	LATE PRODUCTION	
4	–	LATE PRODUCTION	
5	–	LATE PRODUCTION	
6	–	LATE PRODUCTION	
7	SI	SERVICE INTERVAL RESET	WS/GN
8	–	LATE PRODUCTION	
9	–	LATE PRODUCTION	
10	–	LATE PRODUCTION	
11	50	VOLTAGE: IGNITION SWITCH IN START	SW/GE
12	61(D+)	ALTERNATOR CHARGE INDICATOR	BL
13	TACH	SPEEDOMETER SIGNAL-OUTPUT	SW/WS
14	30	VOLTAGE: HOT AT ALL TIMES	RT
15	RXD	DIAGNOSTIC DATALINK	WS/GE
16	15S	VOLTAGE: IGNITION SWITCH IN RUN AND START	GN/WS
17	–	LATE PRODUCTION	
18	–	PROGRAM SELECT FOR DME CONTROL UNIT	GN/BL
19	31	GROUND	BR
20	TXD	DIAGNOSTIC DATALINK	WS/VI

cardiagn.com

INJECTION ELECTRONICS (DME M1.7, 12 CYLINDER)

MOTRONIC CONTROL UNIT I

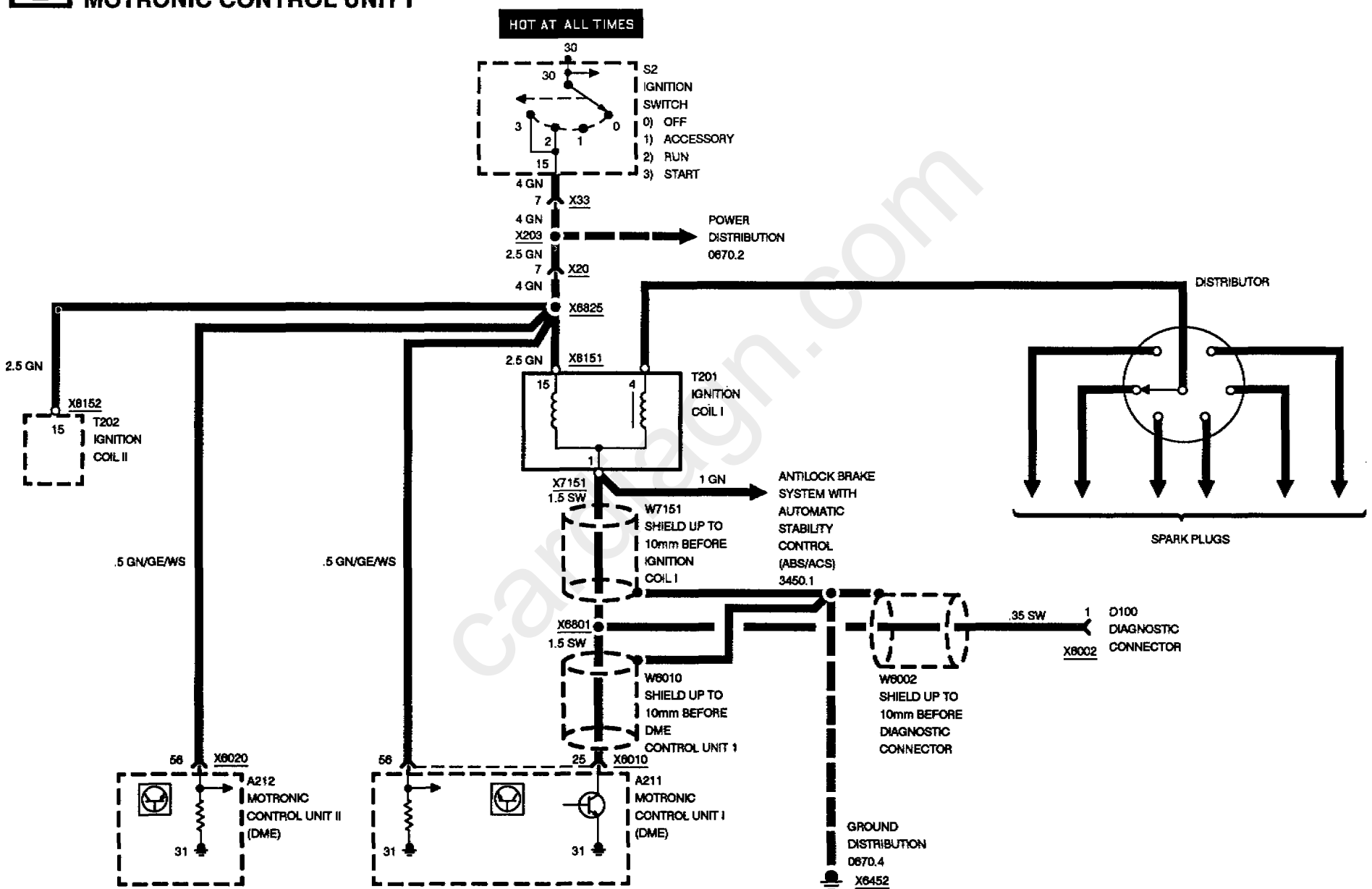

INJECTION ELECTRONICS (DME M1.7, 12 CYLINDER)

MOTRONIC CONTROL UNIT I

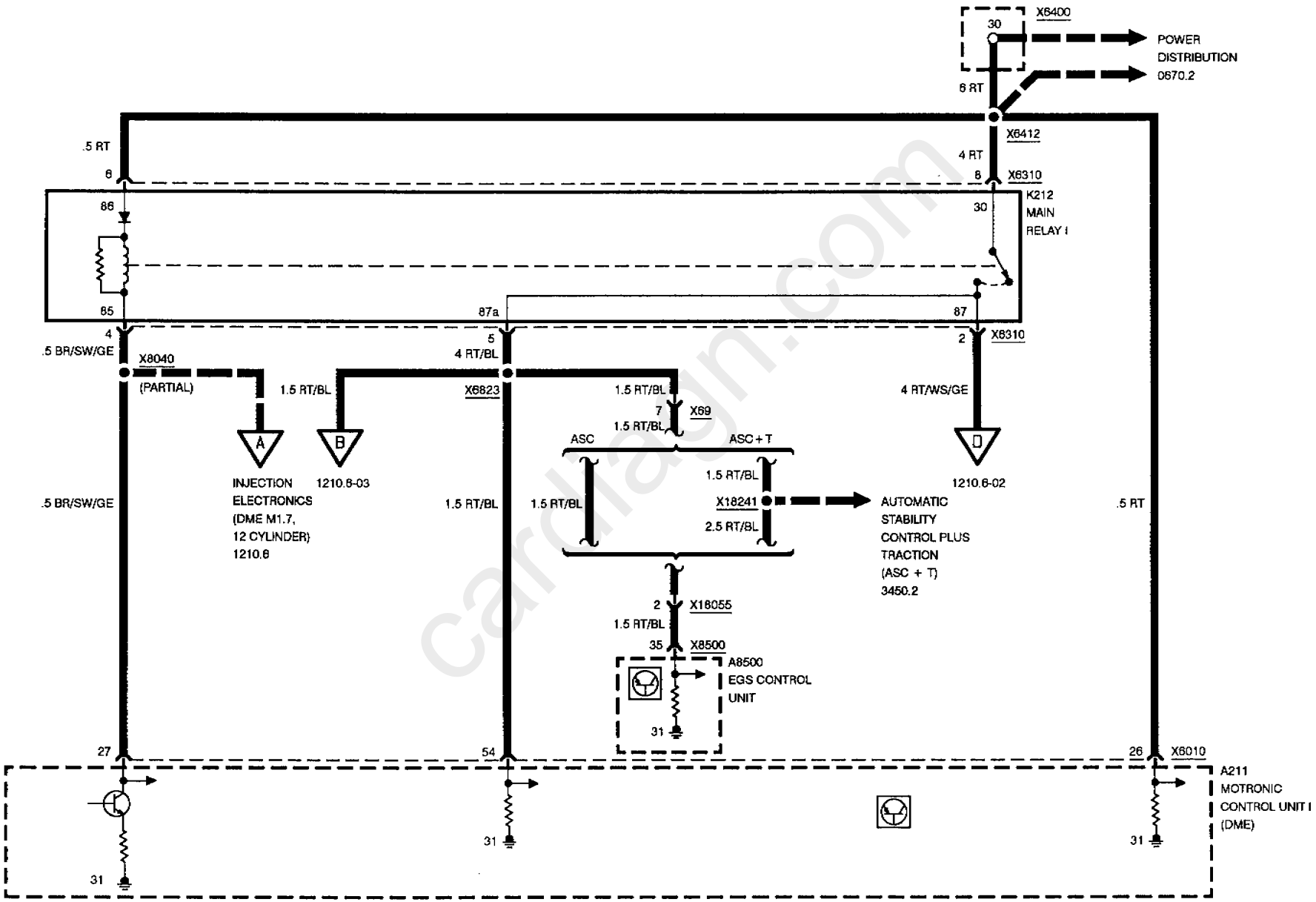

cardiagn.com

INJECTION ELECTRONICS (DME M1.7, 12 CYLINDER)

FUEL INJECTORS

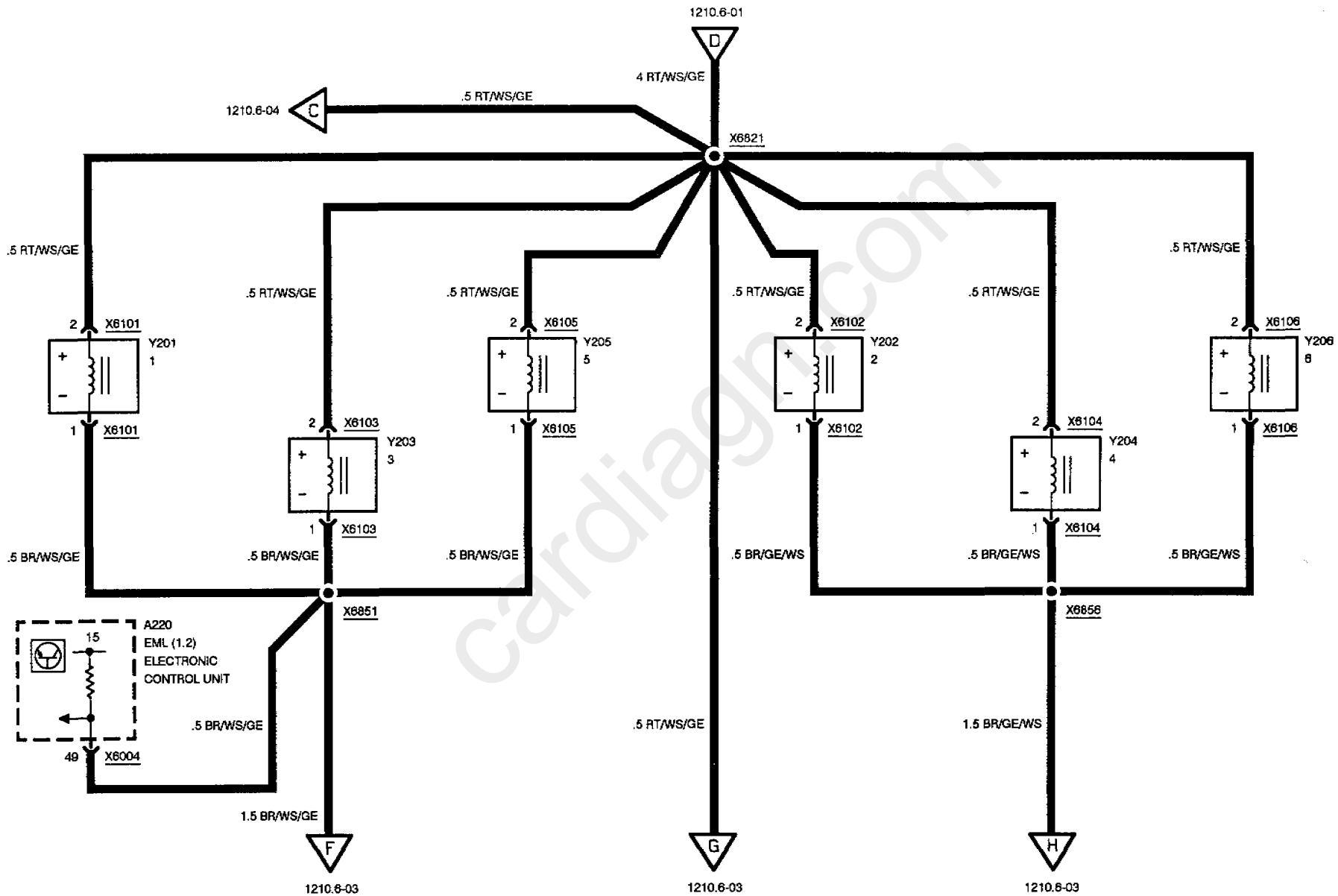

cardiagn.com

INJECTION ELECTRONICS (DME M1.7, 12 CYLINDER)

MOTRONIC CONTROL UNIT I

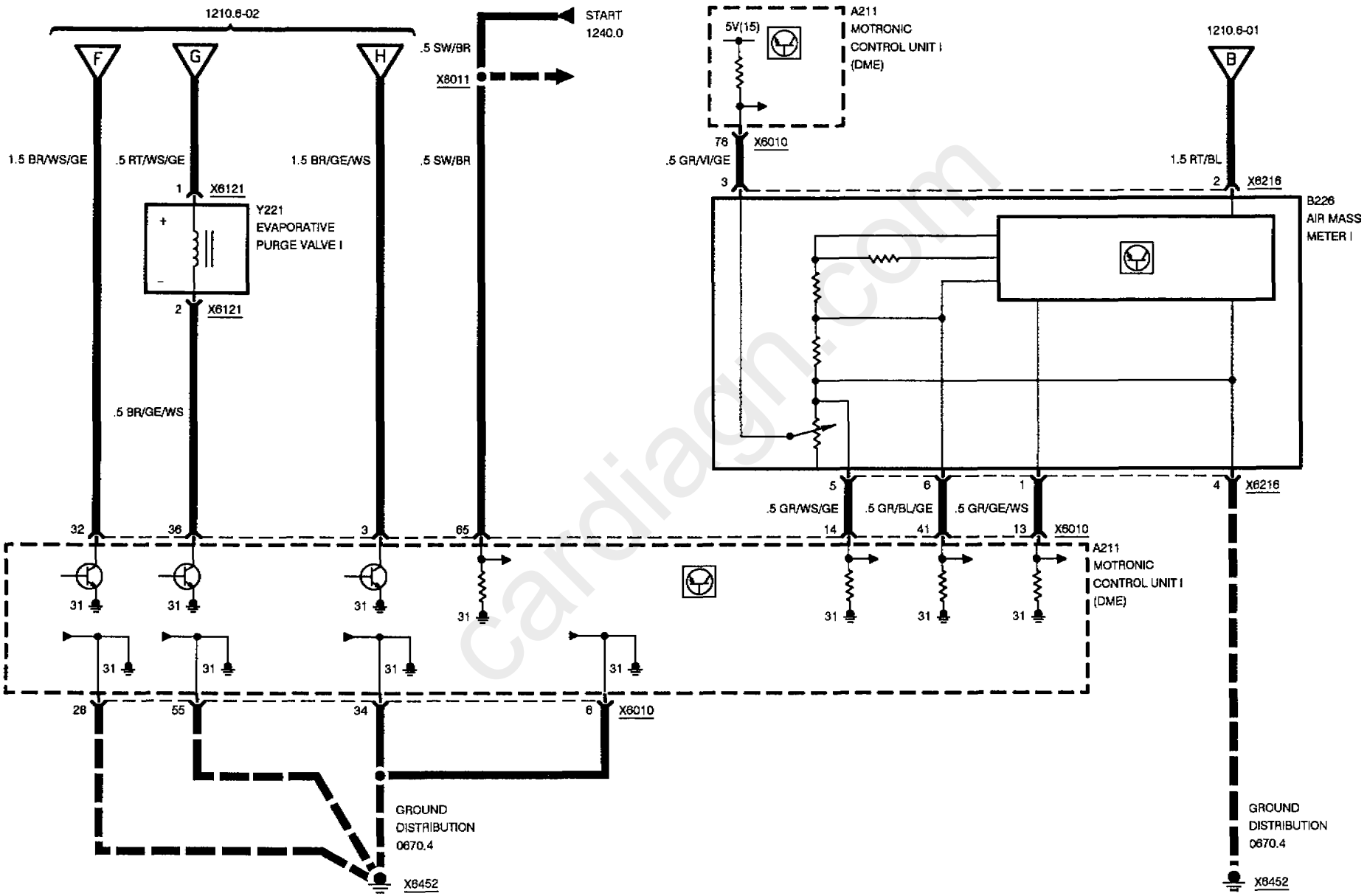

cardiagn.com

INJECTION ELECTRONICS (DME M1.7, 12 CYLINDER)

MOTRONIC CONTROL UNIT I

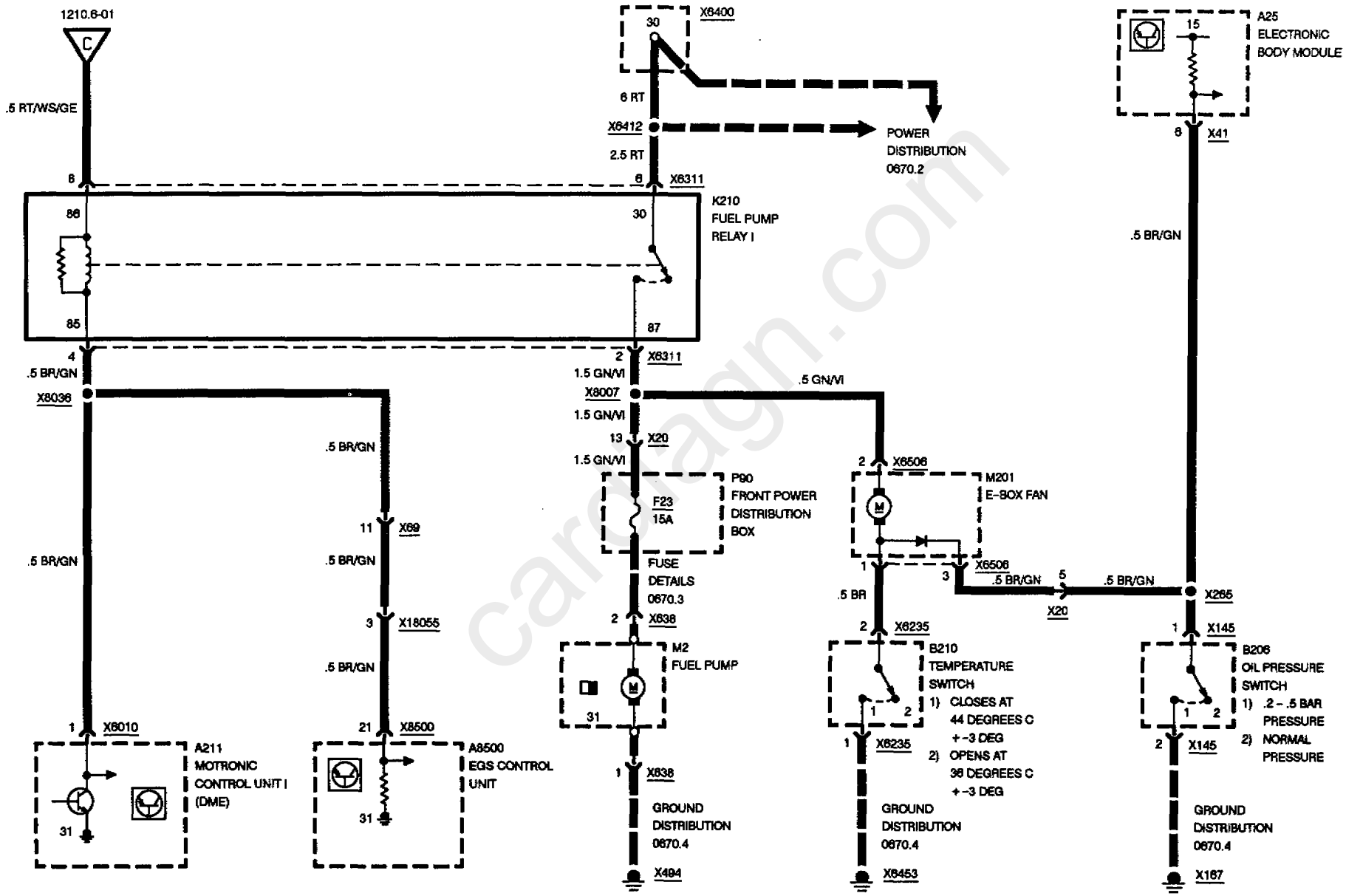

cardiagn.com

INJECTION ELECTRONICS (DME M1.7, 12 CYLINDER)

MOTRONIC CONTROL UNIT I

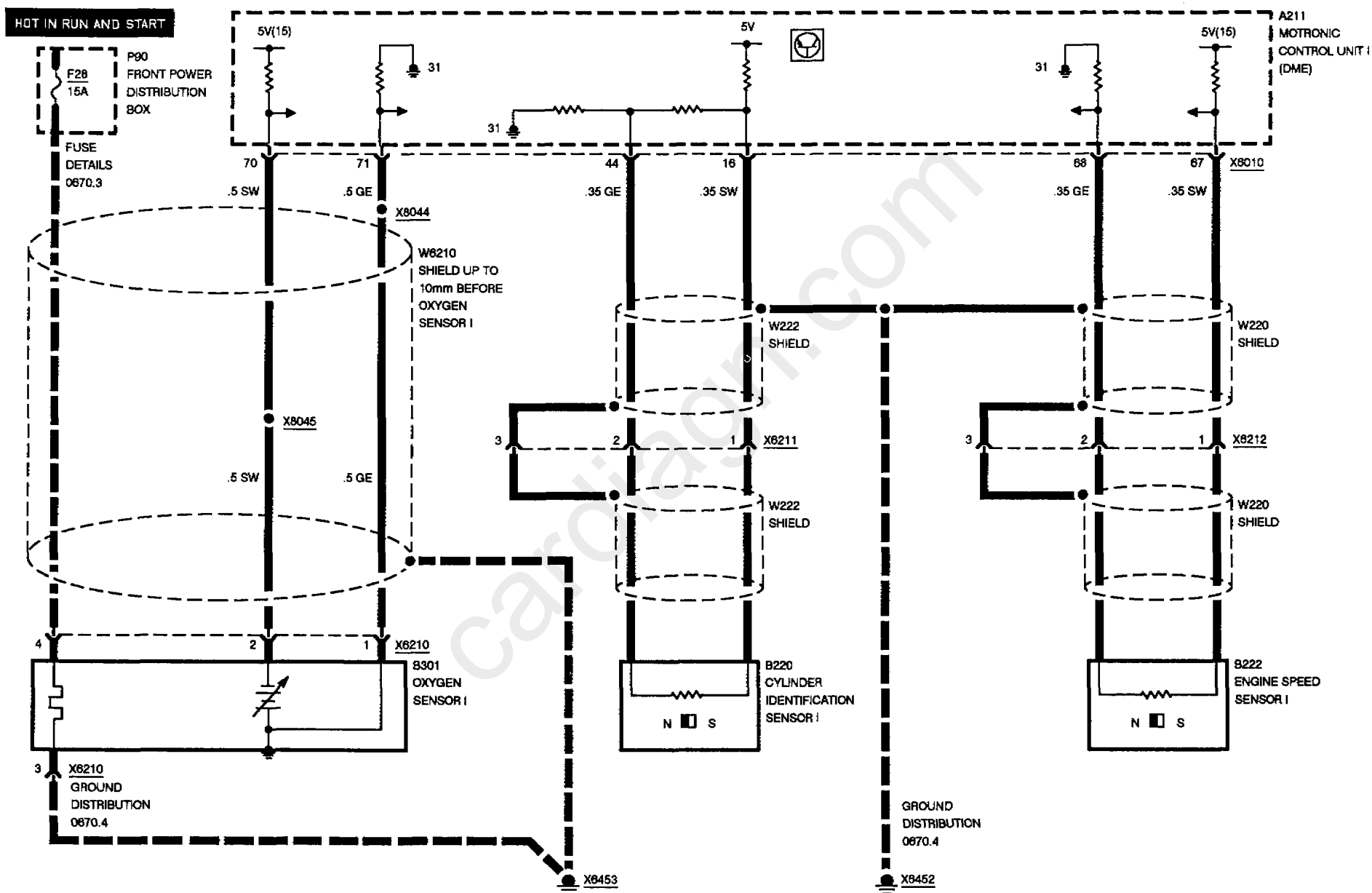

INJECTION ELECTRONICS (DME M1.7, 12 CYLINDER)

MOTRONIC CONTROL UNIT I

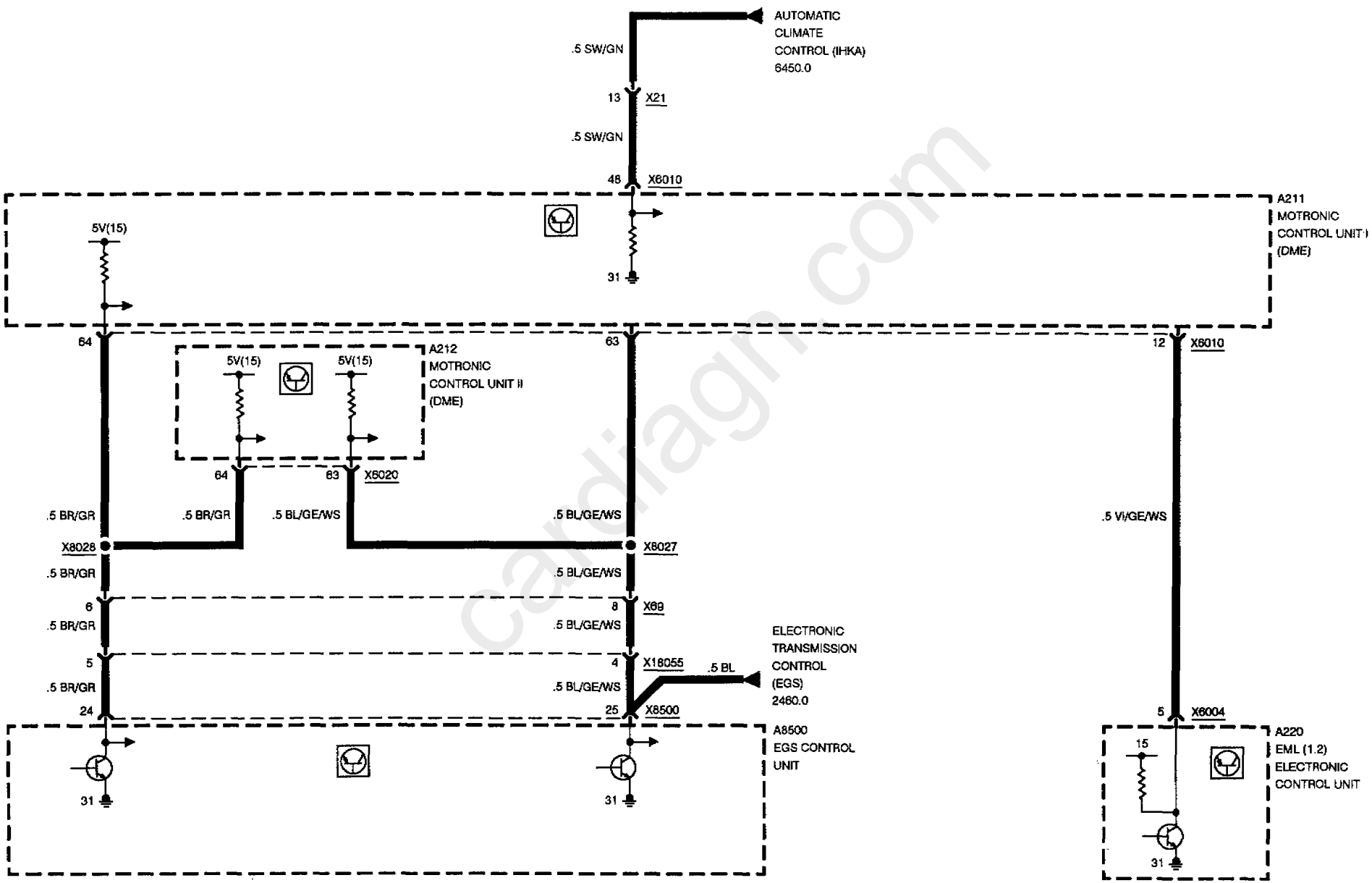

cardiagn.com

INJECTION ELECTRONICS (DME M1.7, 12 CYLINDER)

MOTRONIC CONTROL UNIT I

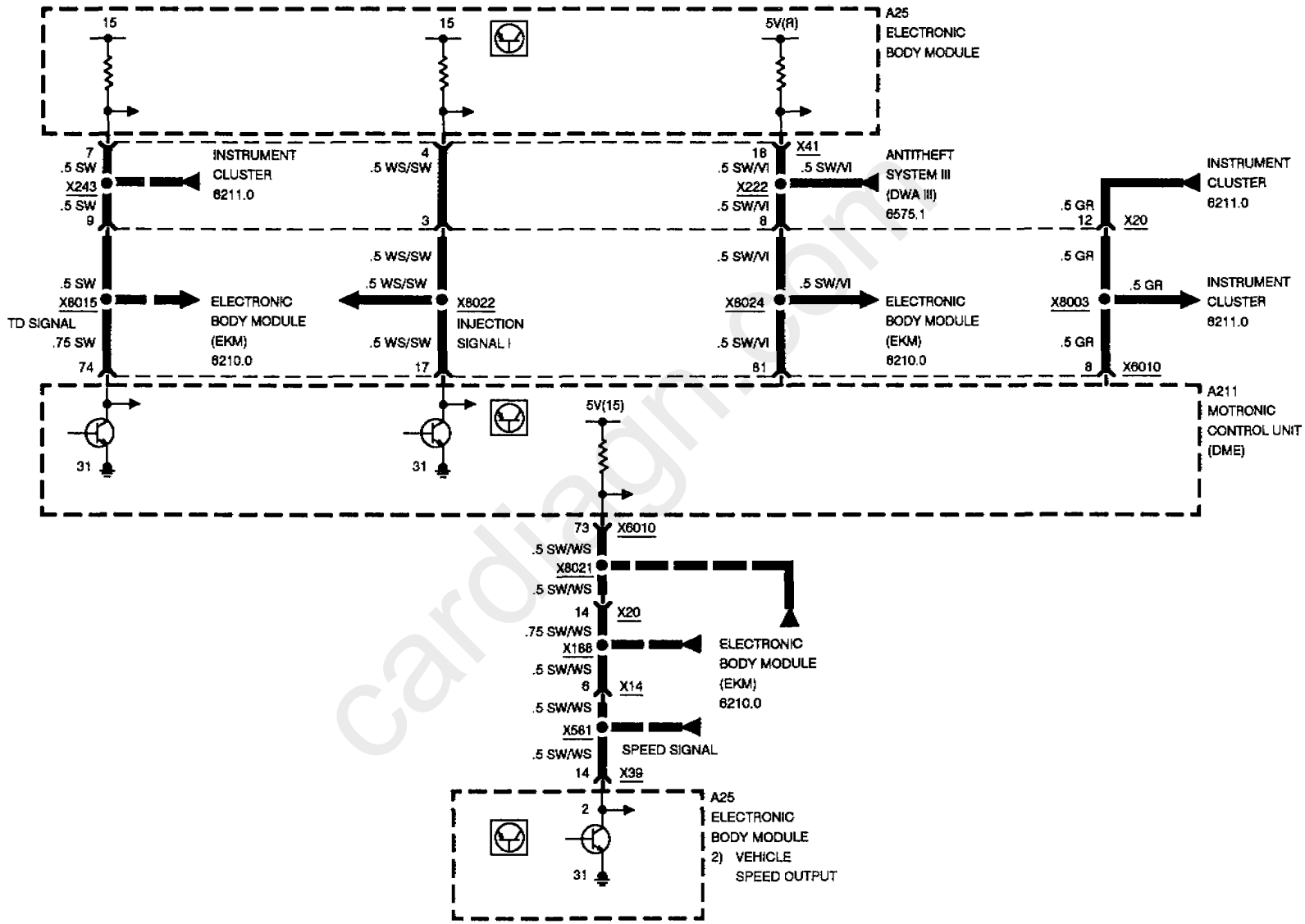

cardiagn.com

INJECTION ELECTRONICS (DME M1.7, 12 CYLINDER)

MOTRONIC CONTROL UNIT I

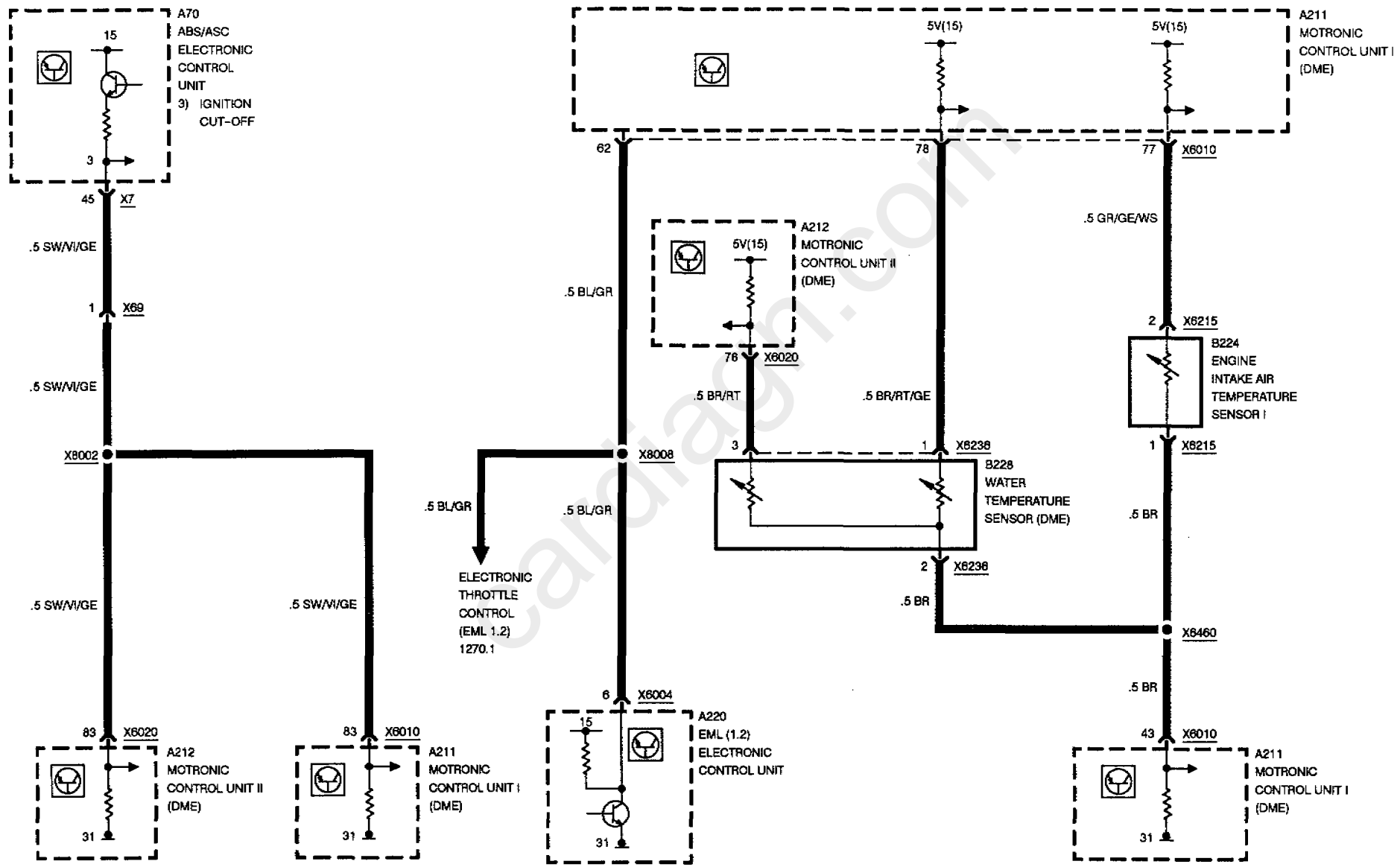

cardiagn.com

INJECTION ELECTRONICS (DME M1.7, 12 CYLINDER)

MOTRONIC CONTROL UNIT I

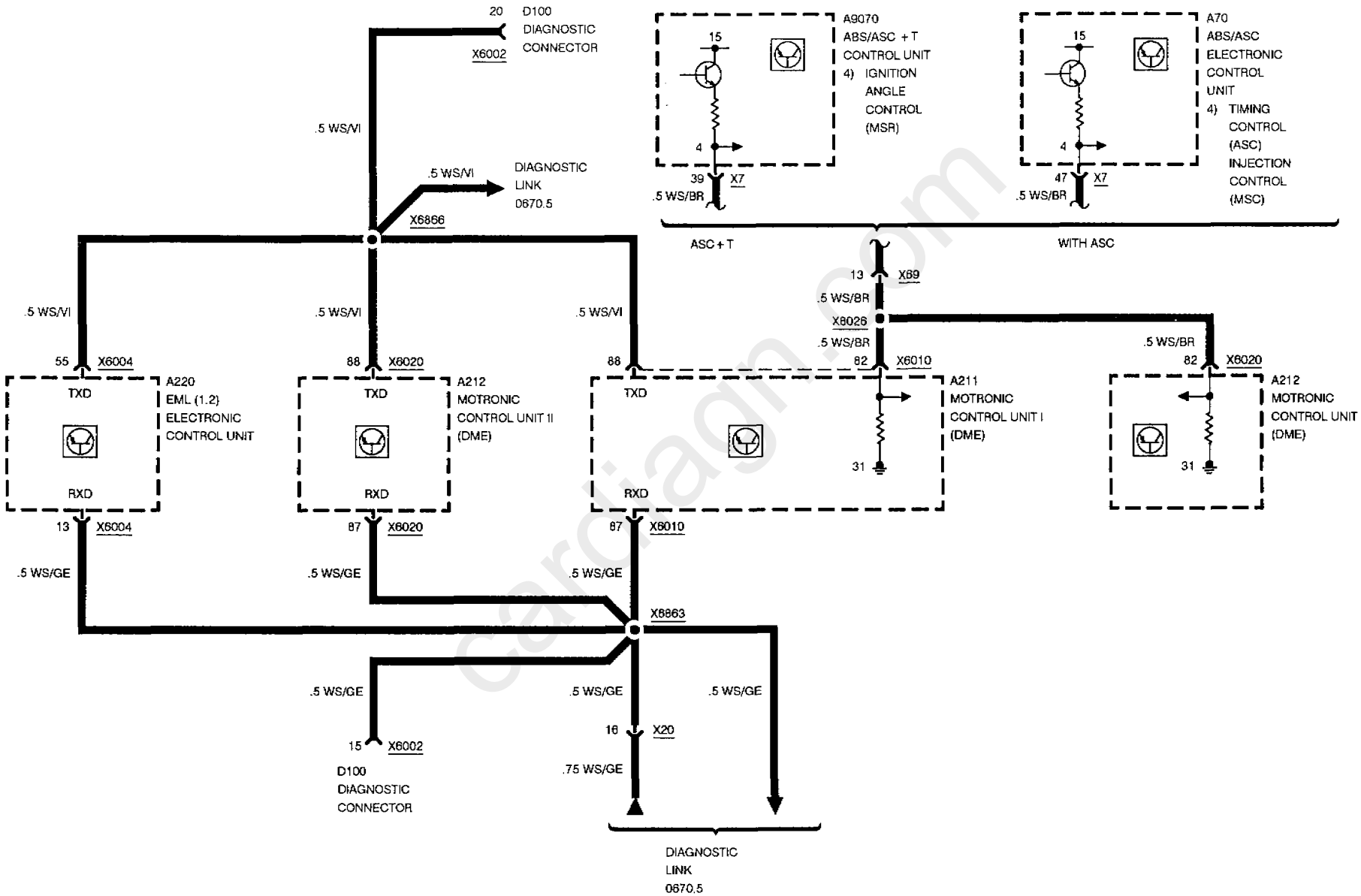

cardiagn.com

INJECTION ELECTRONICS (DME M1.7, 12 CYLINDER)

MOTRONIC CONTROL UNIT II

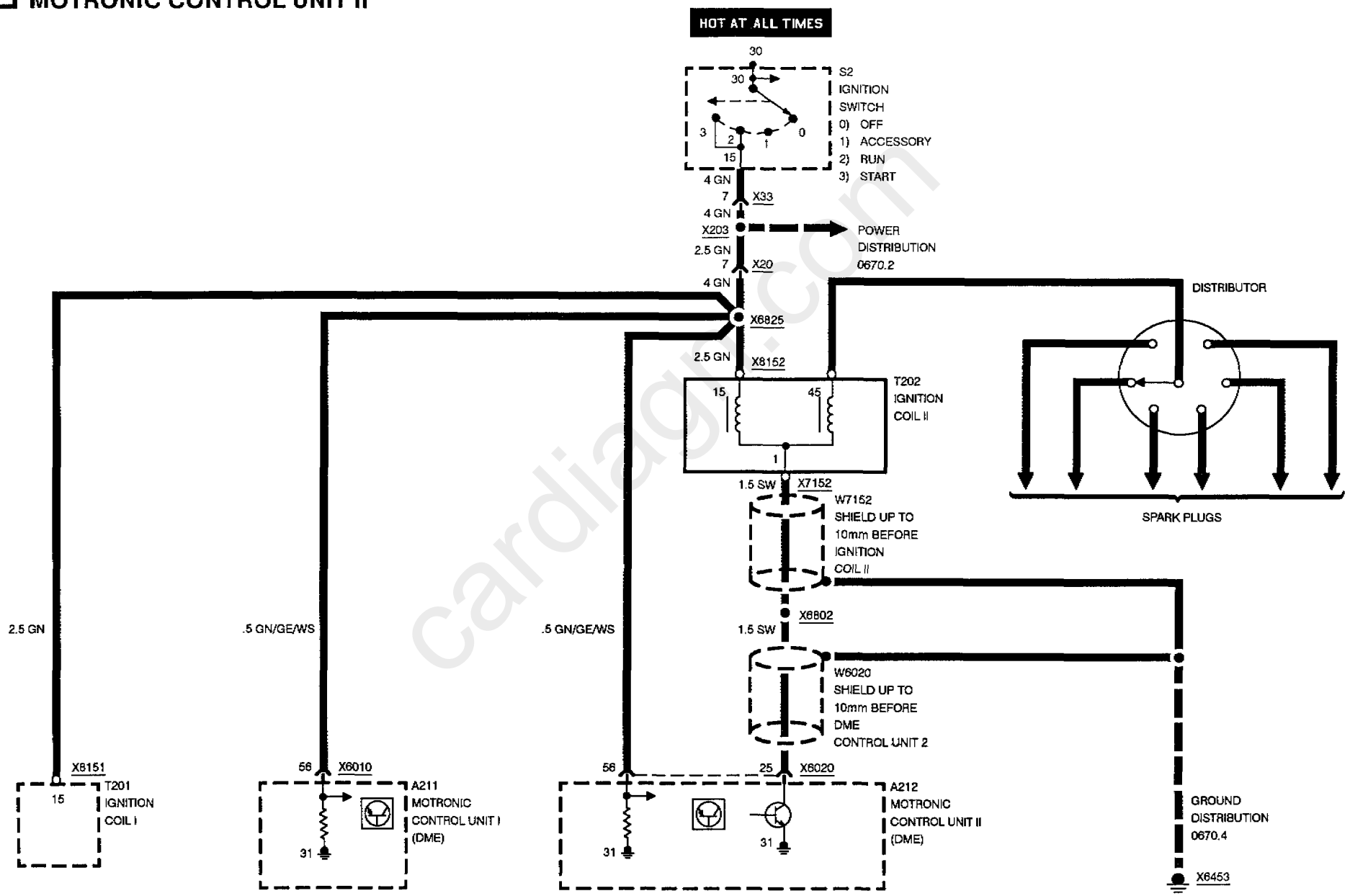

cardiagn.com

INJECTION ELECTRONICS (DME M1.7, 12 CYLINDER)

MOTRONIC CONTROL UNIT II

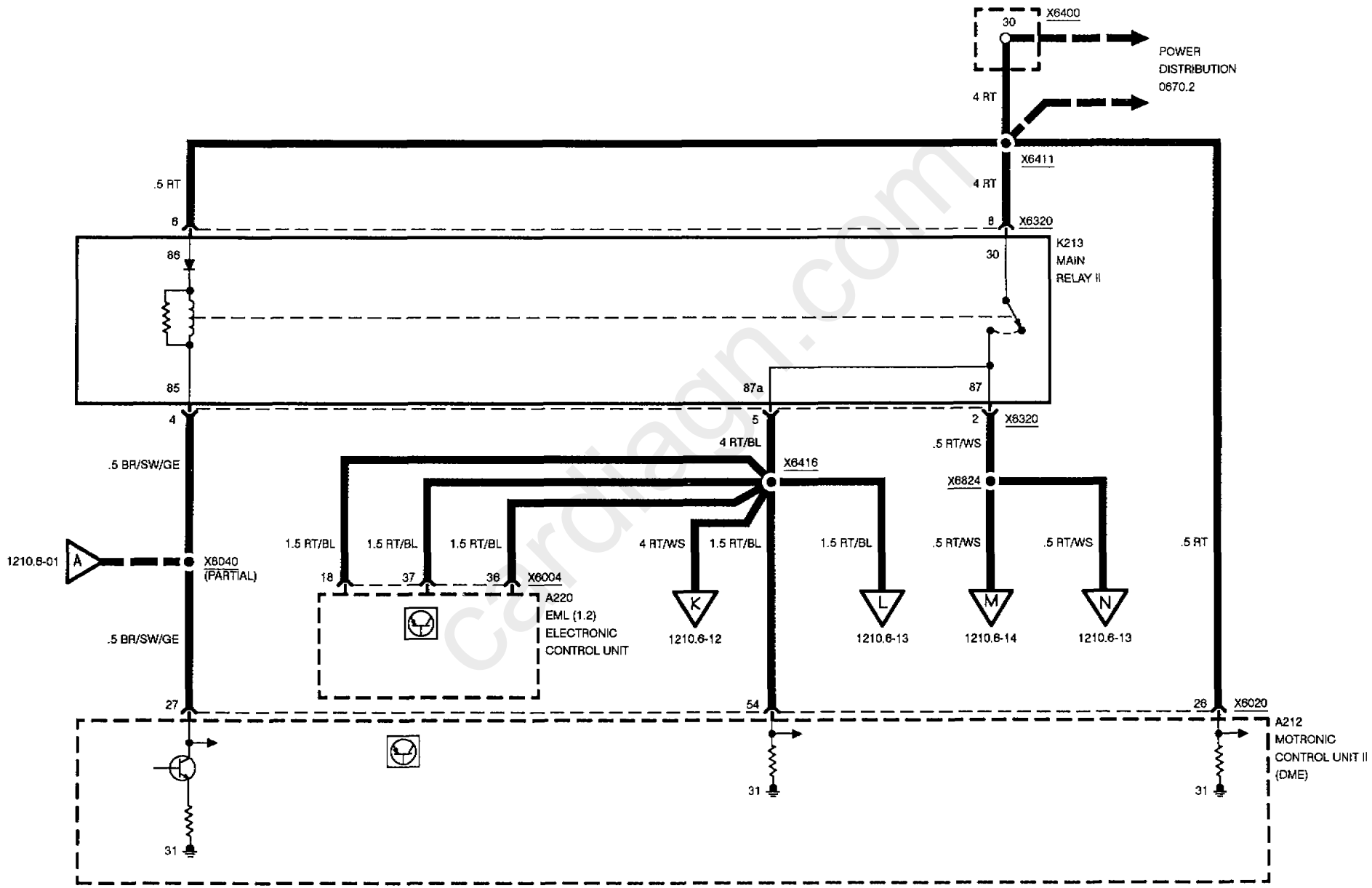

cardiagn.com

INJECTION ELECTRONICS (DME M1.7, 12 CYLINDER)

FUEL INJECTORS

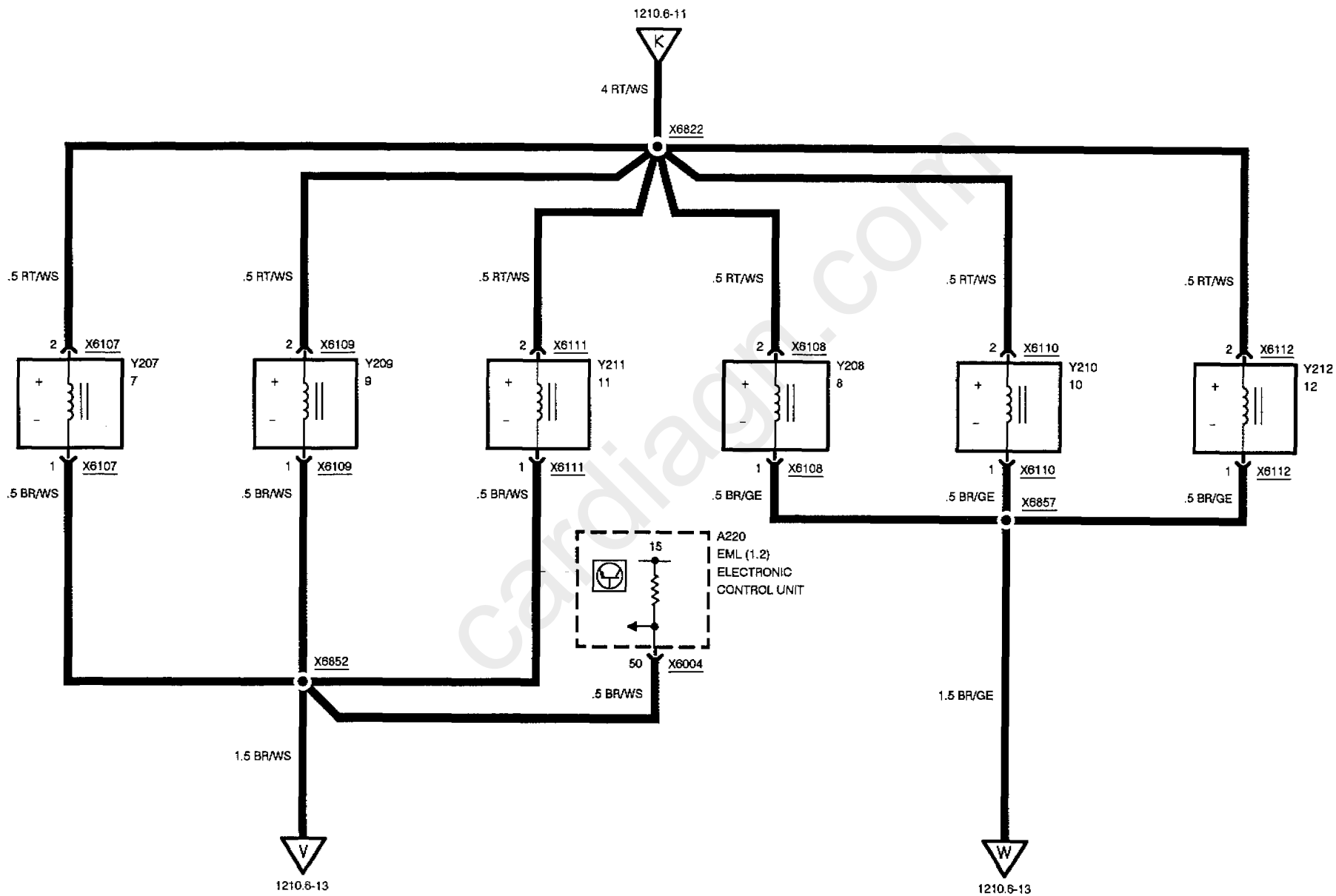

INJECTION ELECTRONICS (DME M1.7, 12 CYLINDER)

MOTRONIC CONTROL UNIT II

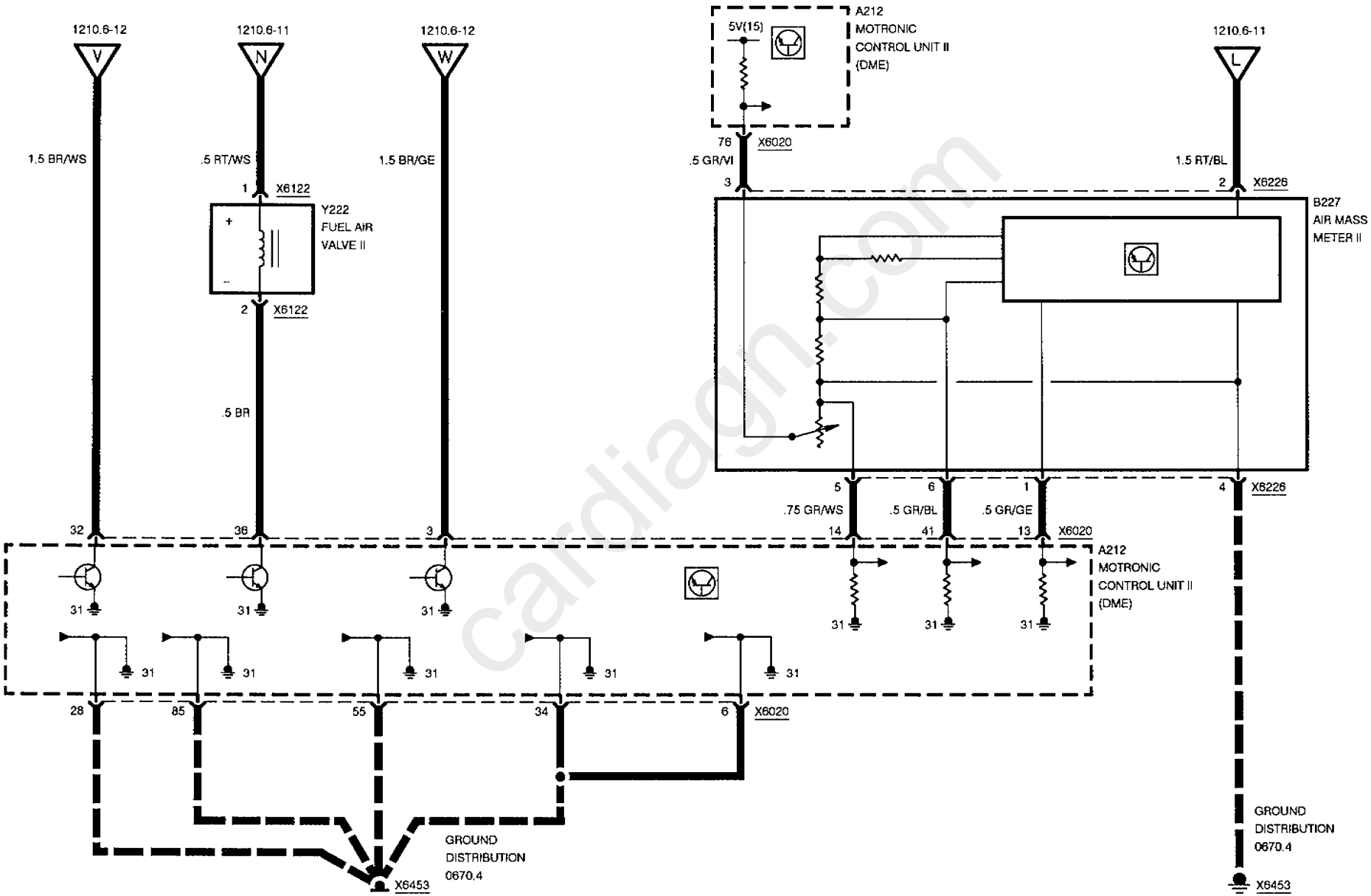

cardiagn.com

INJECTION ELECTRONICS (DME M1.7, 12 CYLINDER)

MOTRONIC CONTROL UNIT II

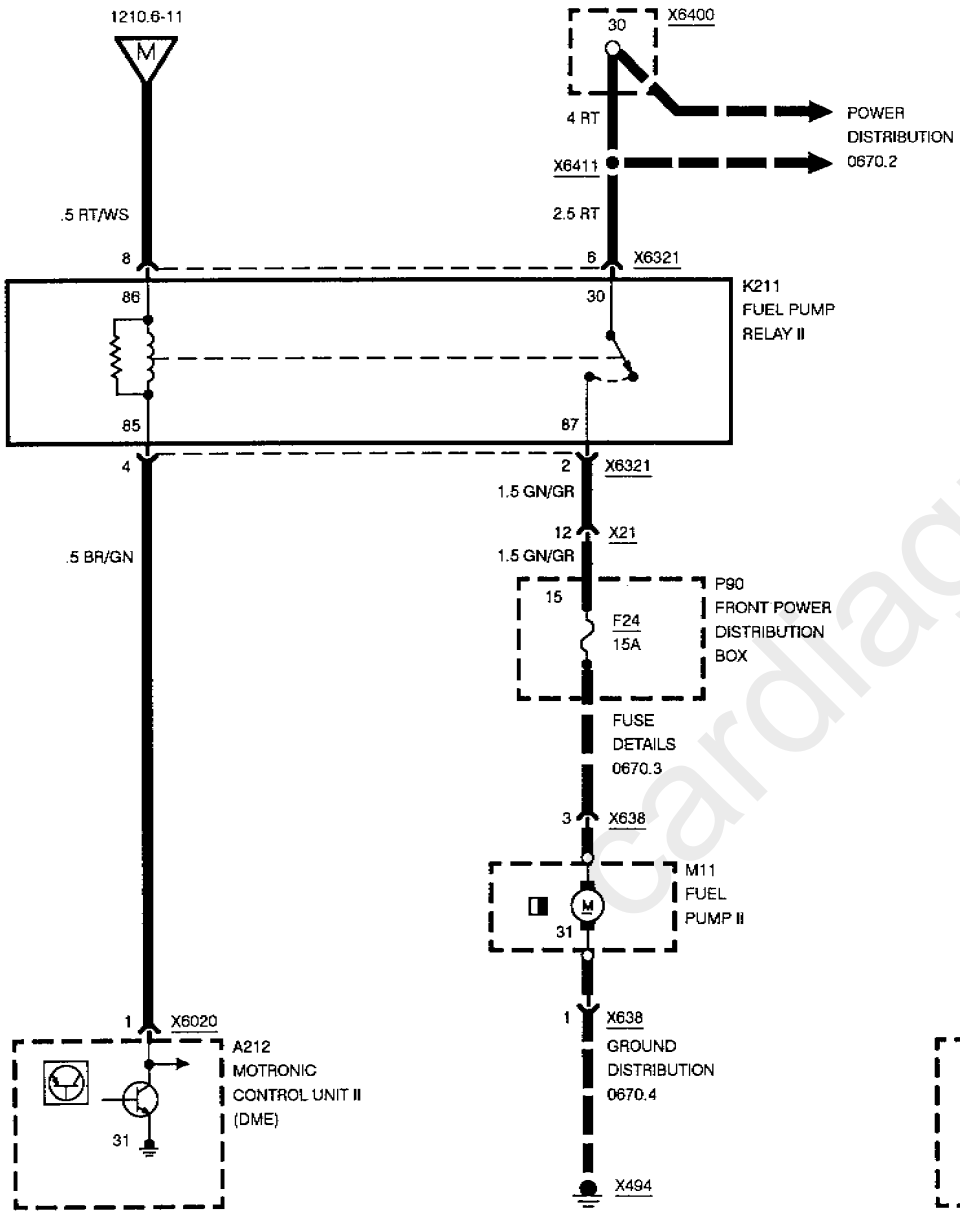

	L1	L2	L3	L4
P	1	1	0	0
R	1	0	0	1
N	0	1	1	0
D	0	0	0	1
3	0	0	1	0
2	1	0	0	0
1	1	0	1	0

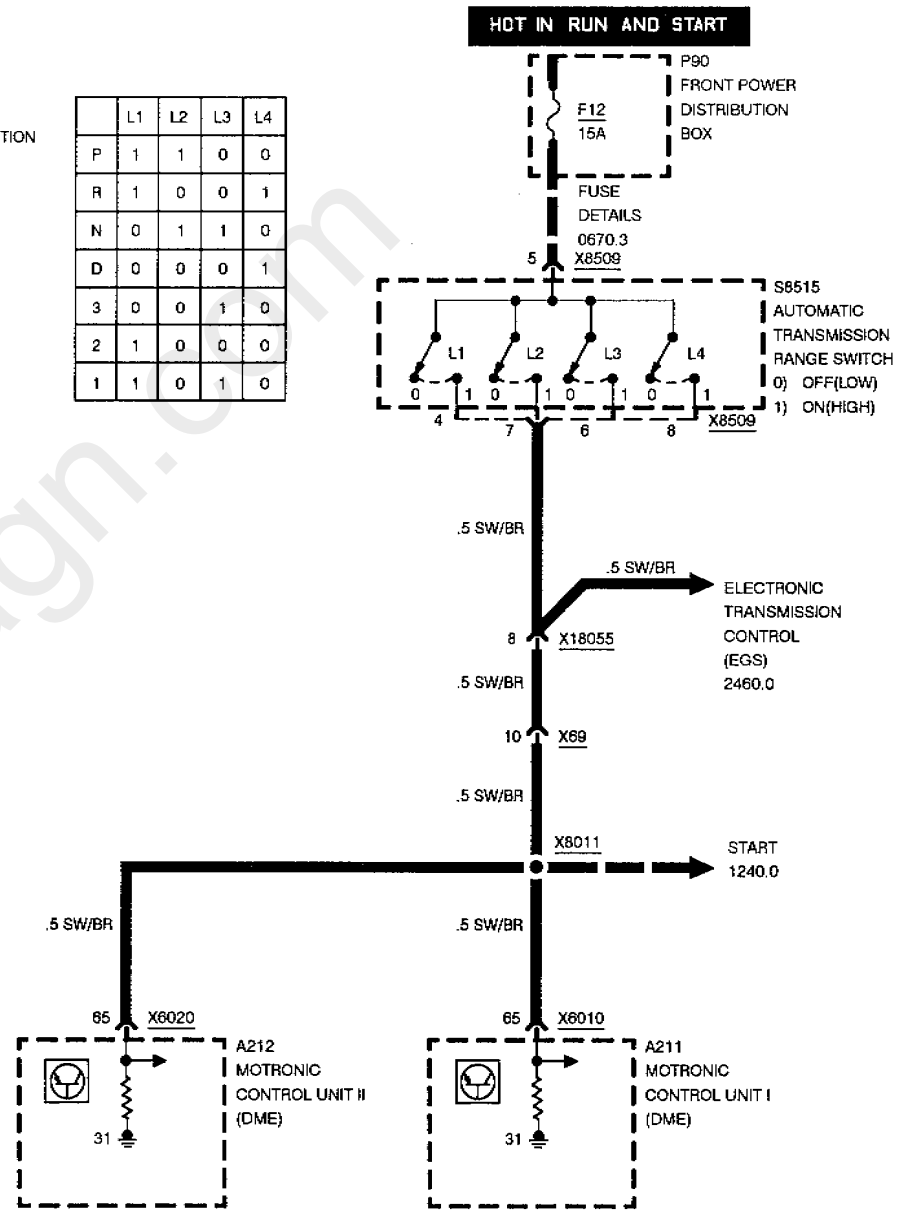

cardiagn.com

INJECTION ELECTRONICS (DME M1.7, 12 CYLINDER)

MOTRONIC CONTROL UNIT II

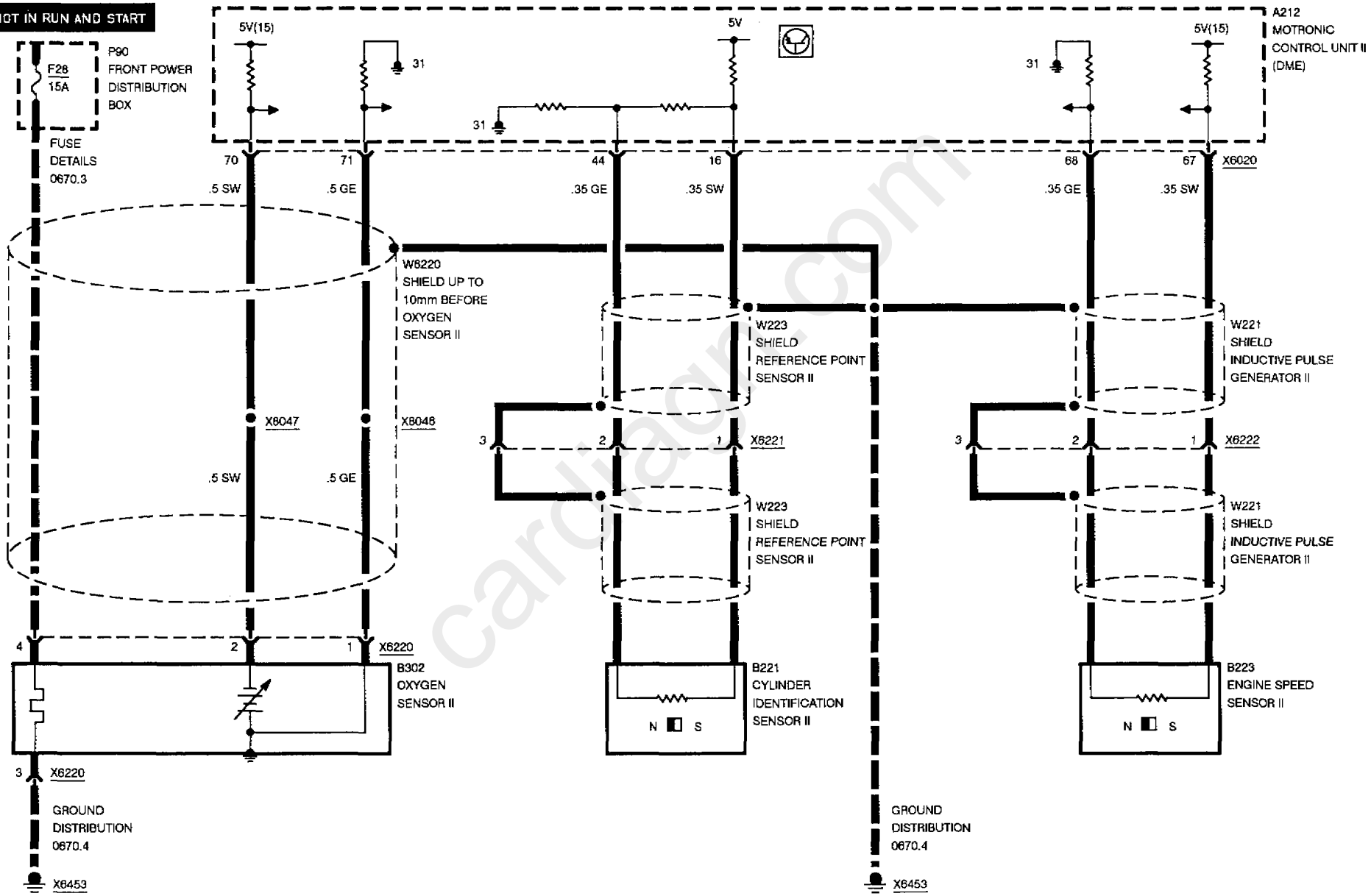

BMW 8

INJECTION ELECTRONICS (DME M1.7, 12 CYLINDER)

MOTRONIC CONTROL UNIT II

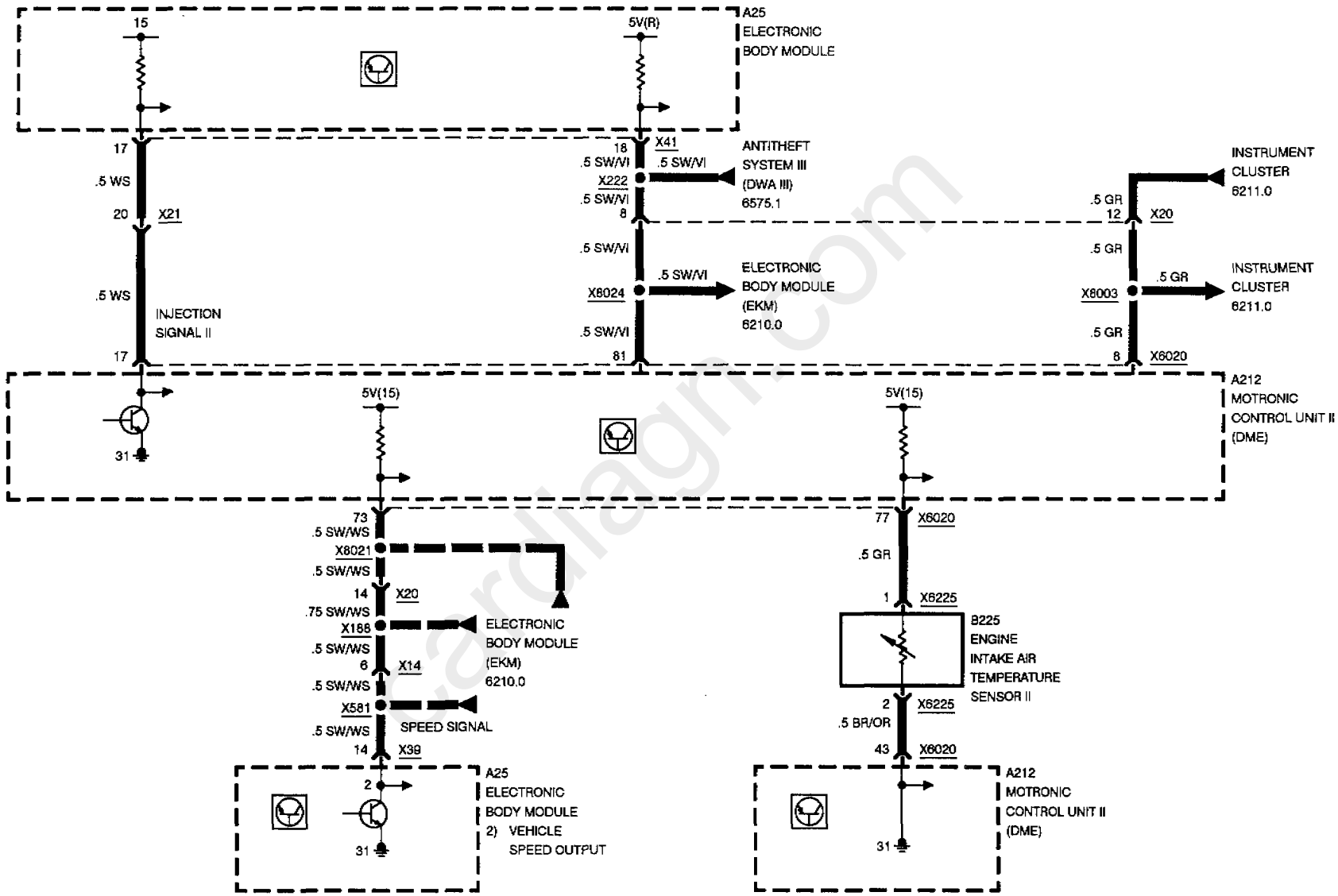

INJECTION ELECTRONICS (DME M1.7, 12 CYLINDER)

MOTRONIC CONTROL UNIT II

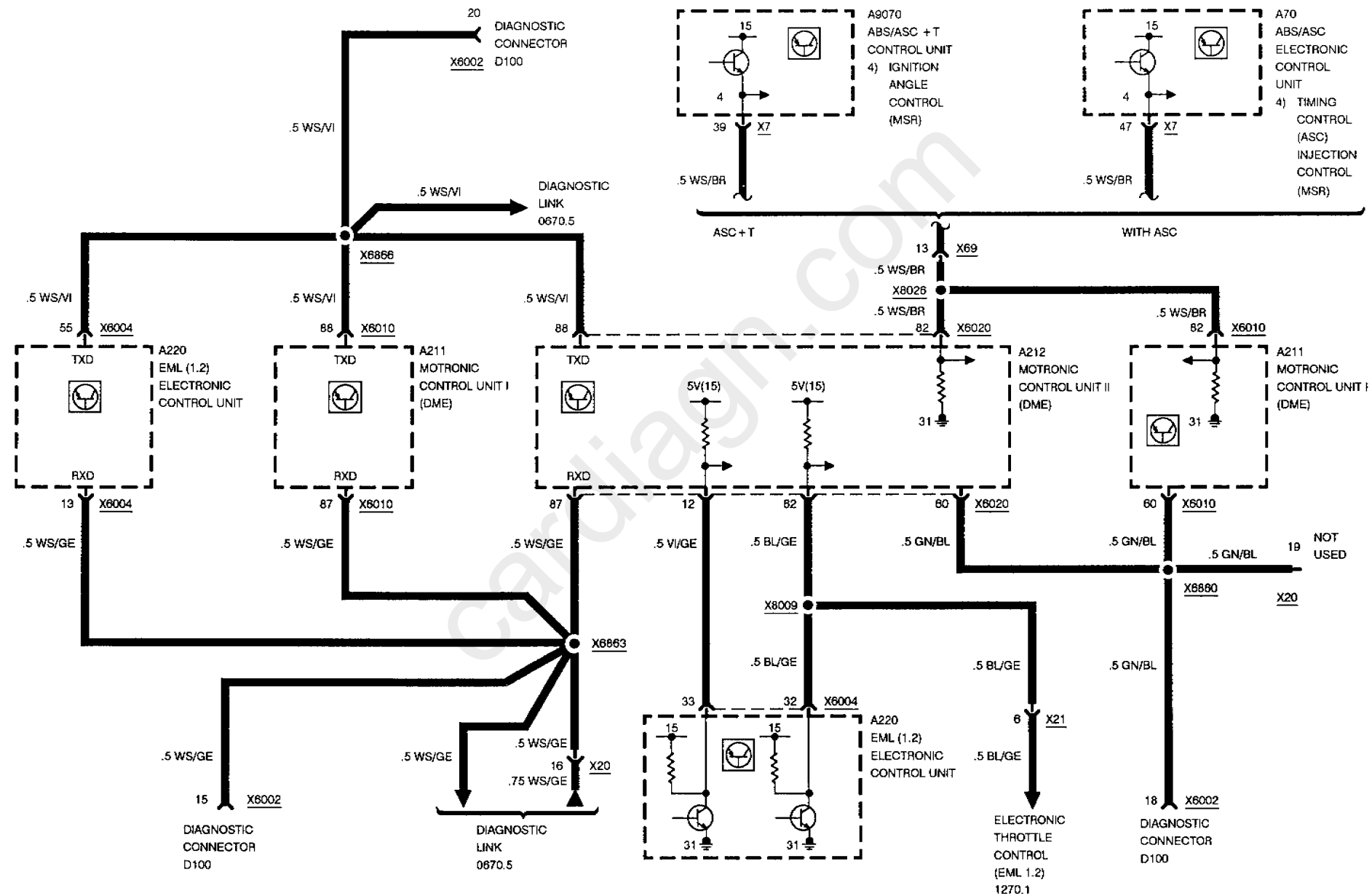

cardiagn.com

CHARGING SYSTEM

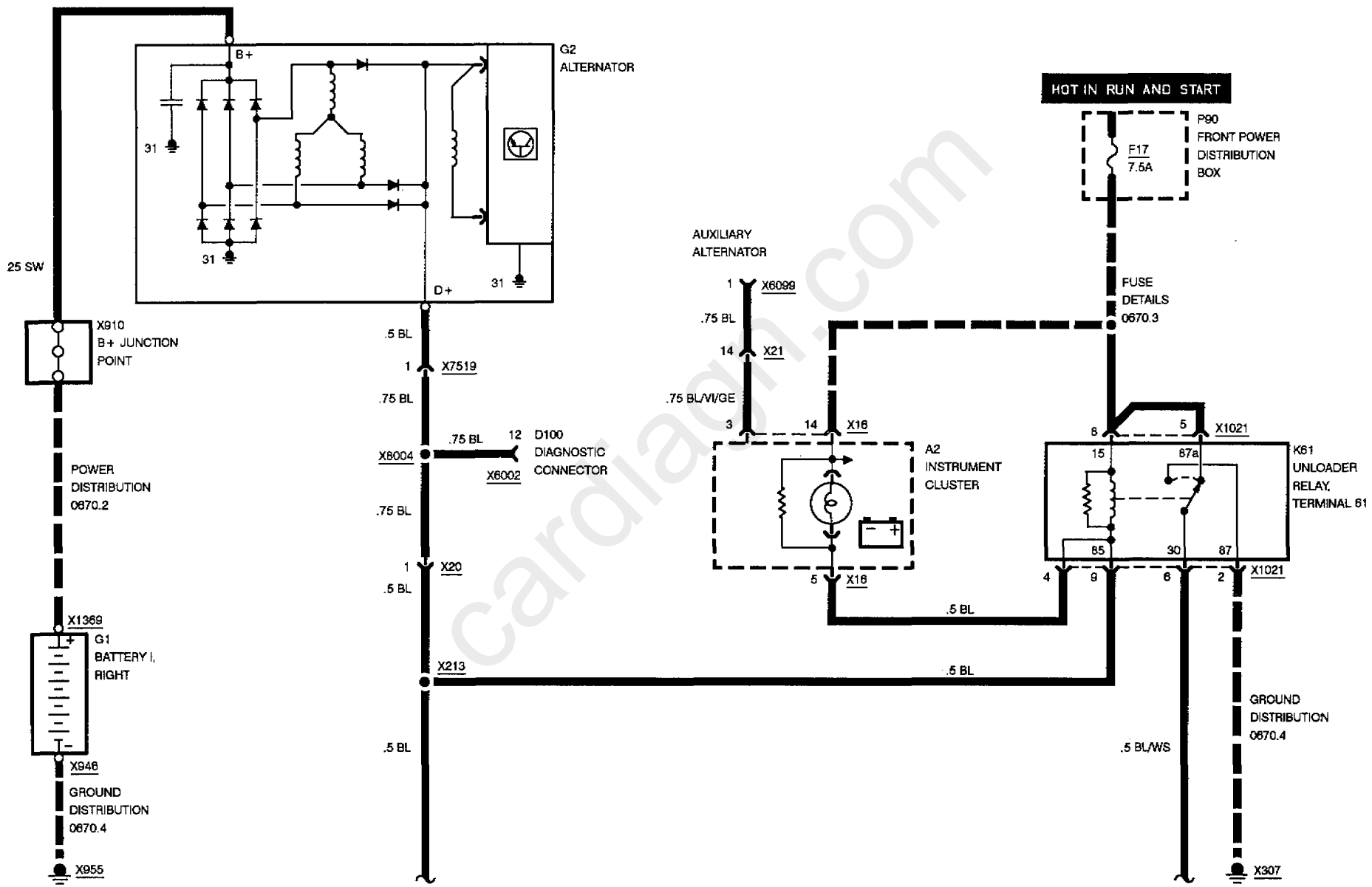

cardiagn.com

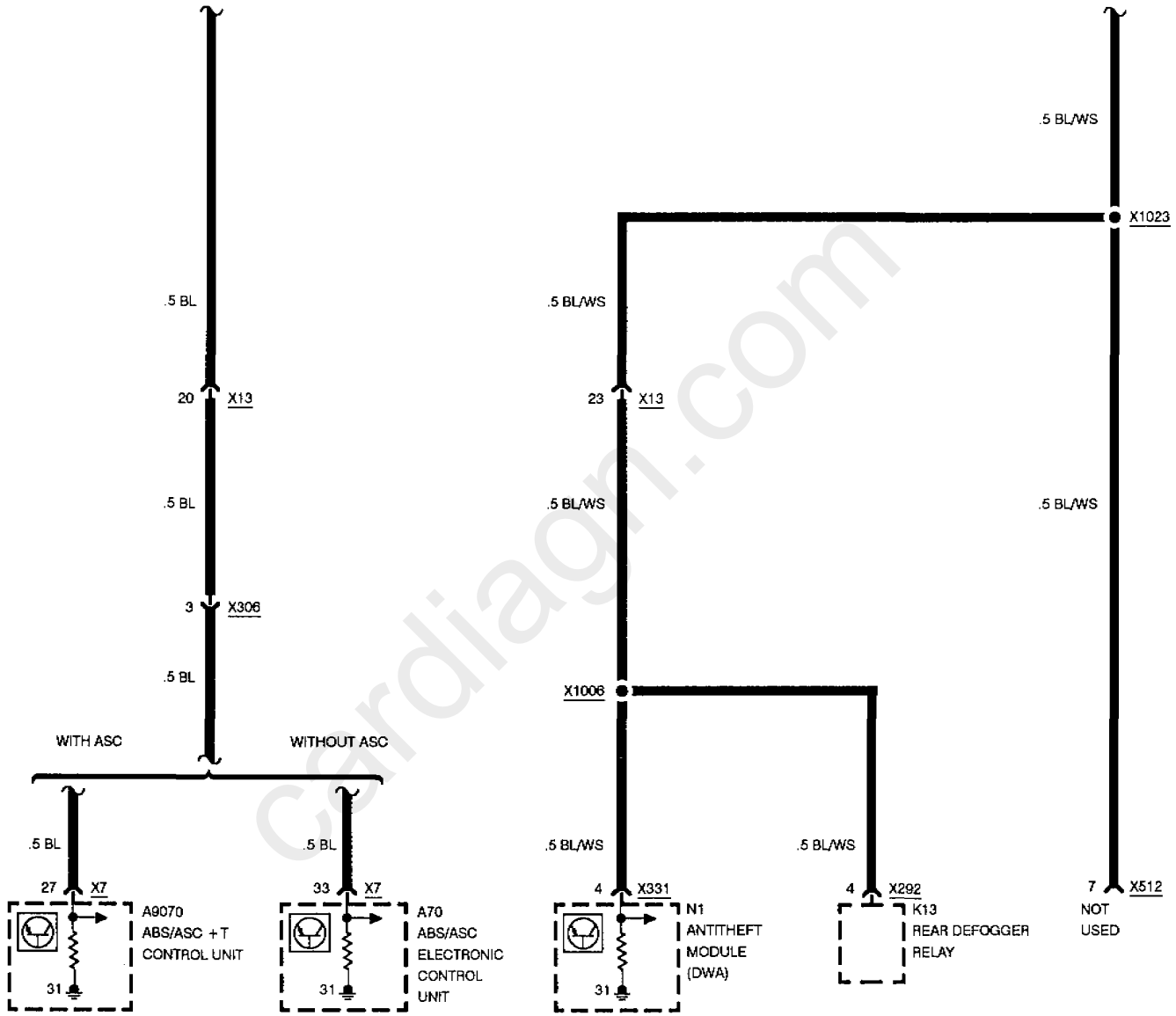

cardiagn.com

START

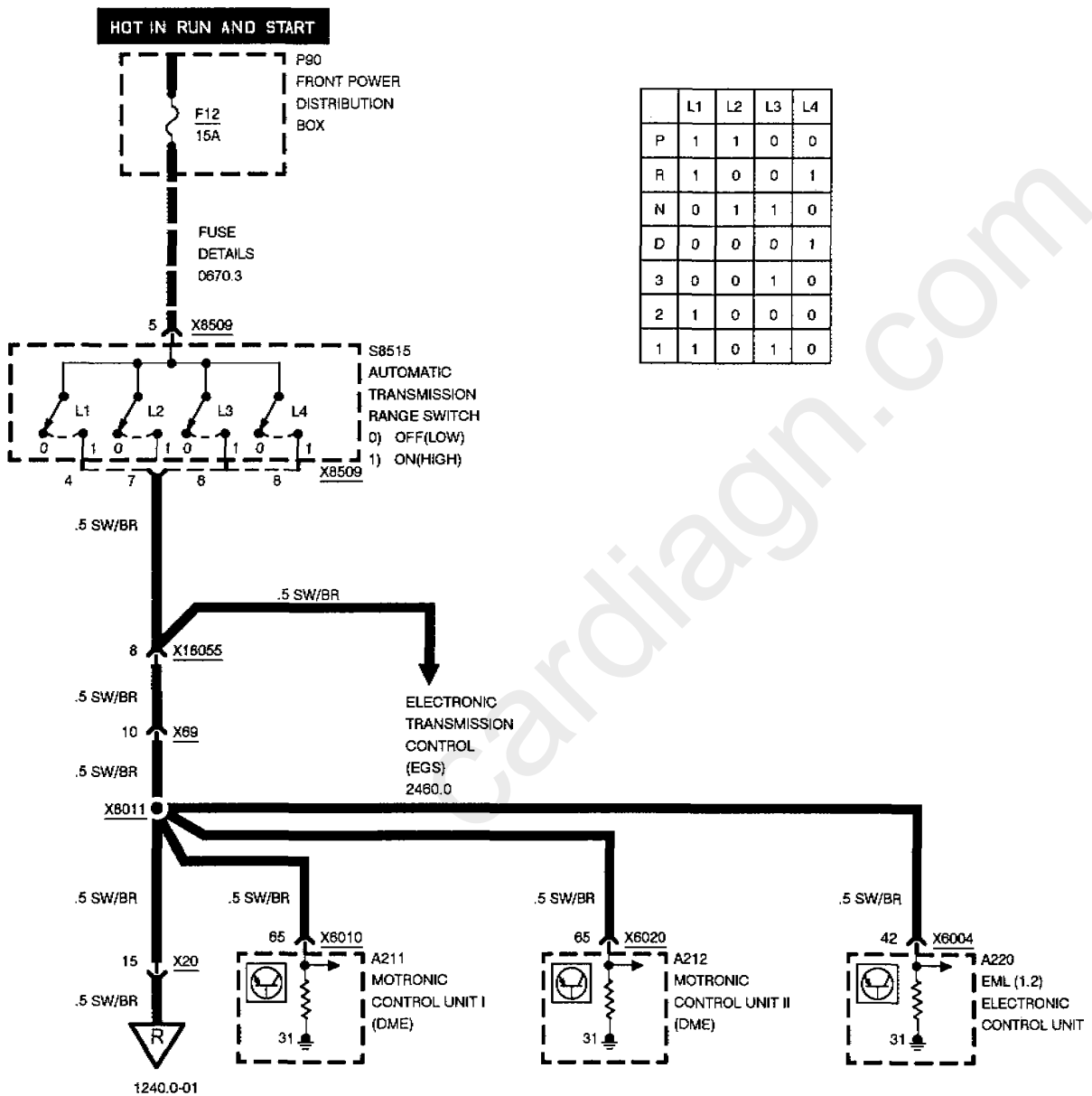

	L1	L2	L3	L4
P	1	1	0	0
R	1	0	0	1
N	0	1	1	0
D	0	0	0	1
3	0	0	1	0
2	1	0	0	0
1	1	0	1	0

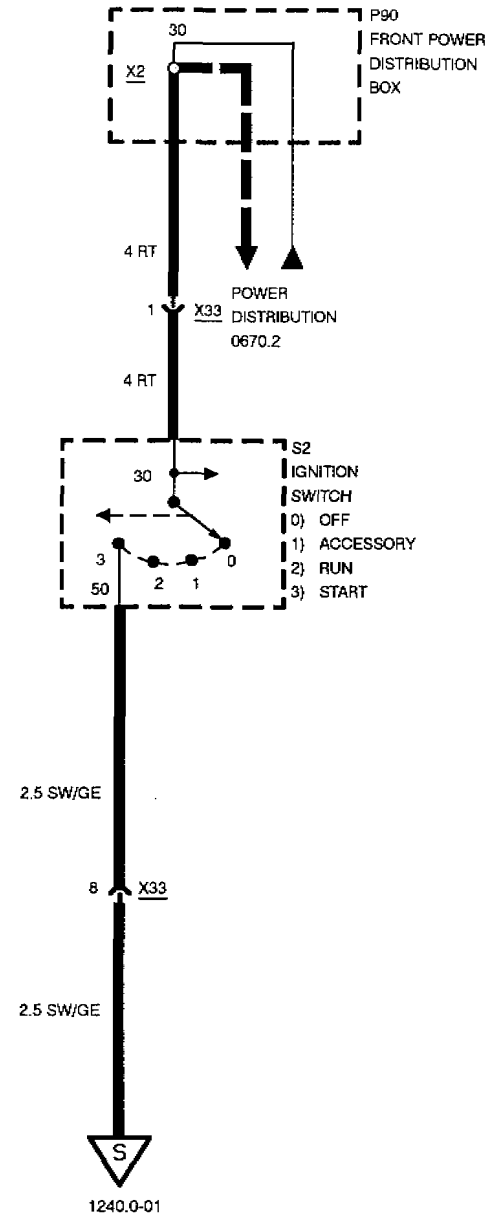

cardiagn.com

START

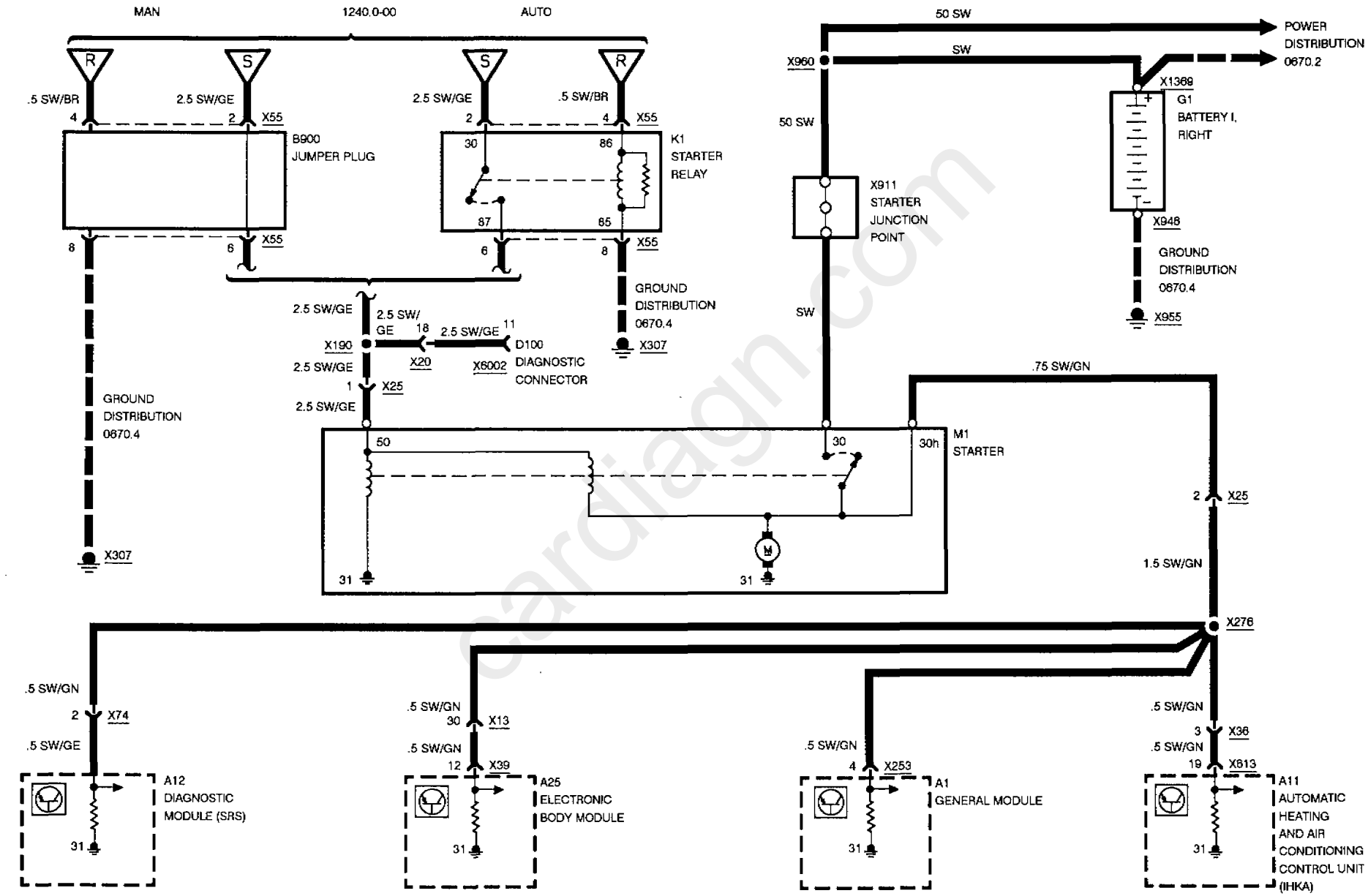

cardiagn.com

cardiagn.com

cardiagn.com

ELECTRONIC THROTTLE CONTROL (EML 1.2)

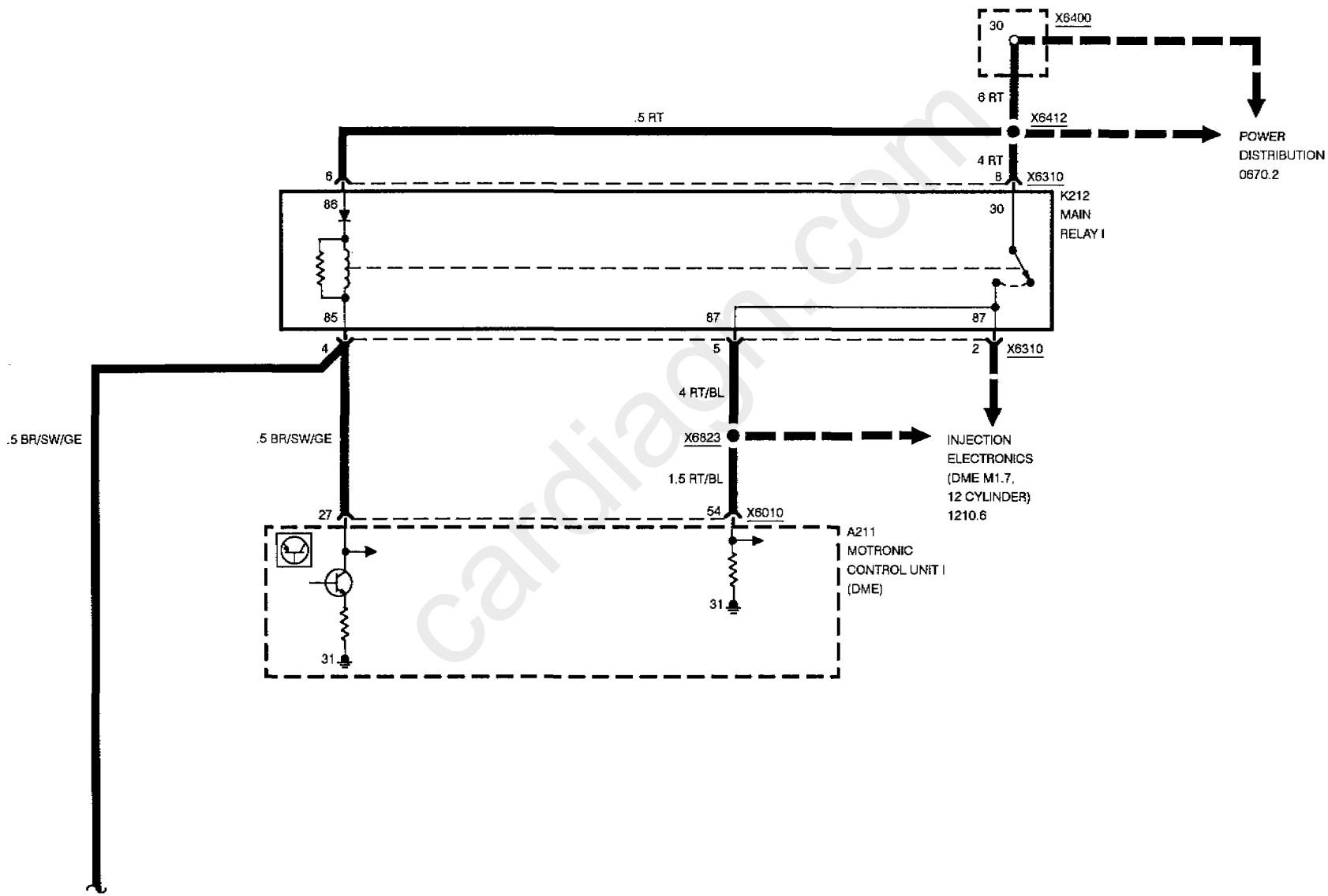

cardiagn.com

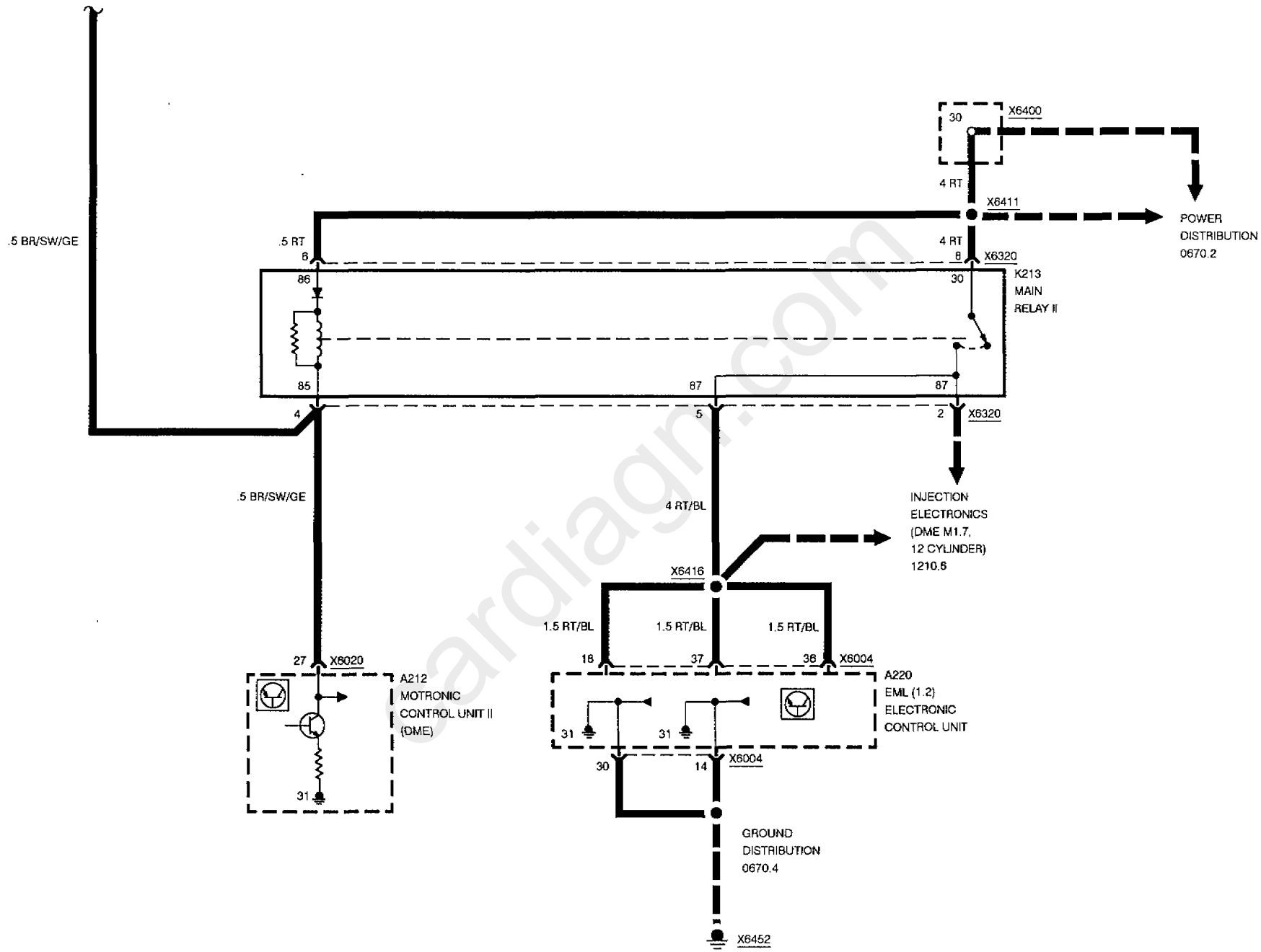

cardiagn.com

ELECTRONIC THROTTLE CONTROL (EML 1.2)

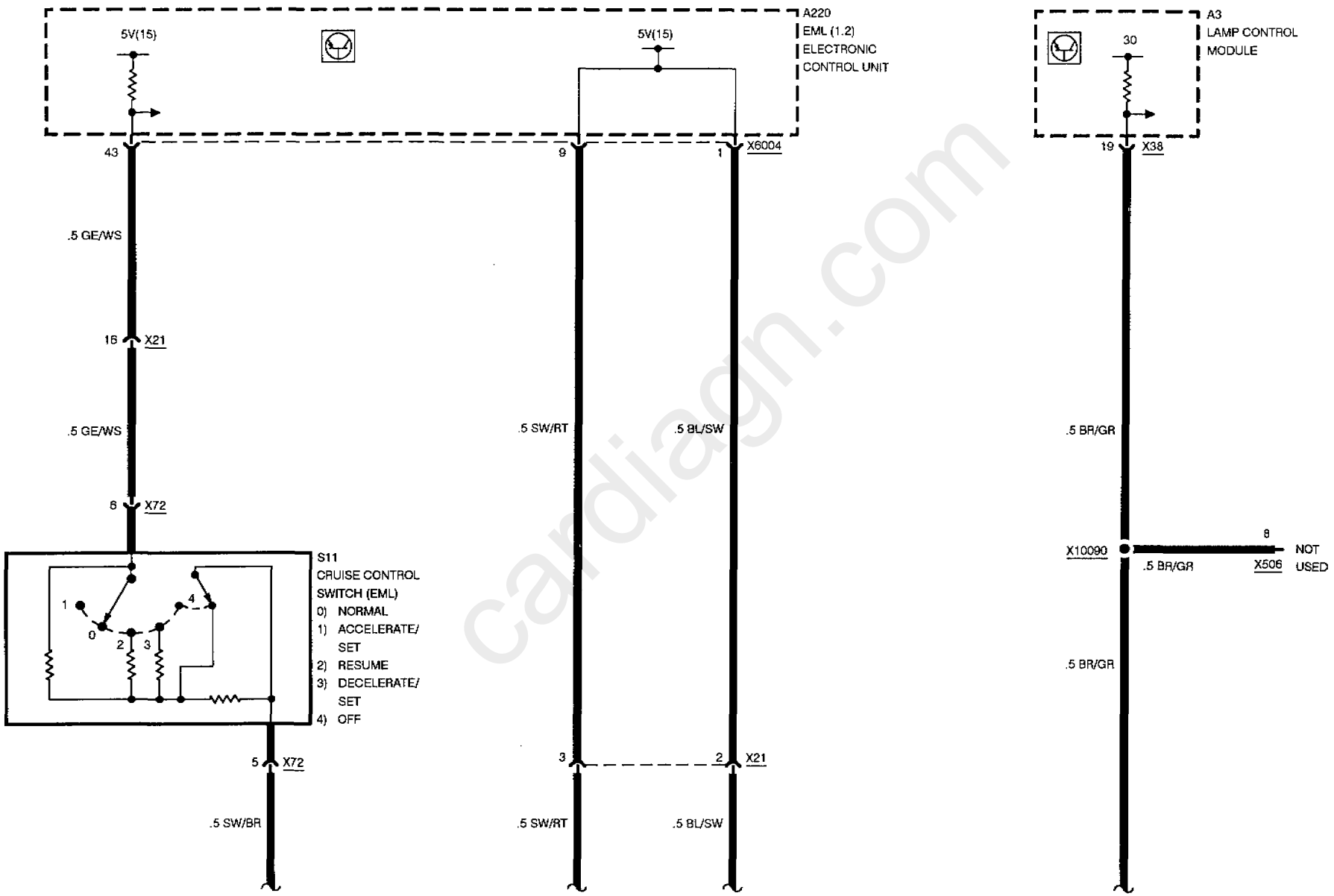

cardiagn.com

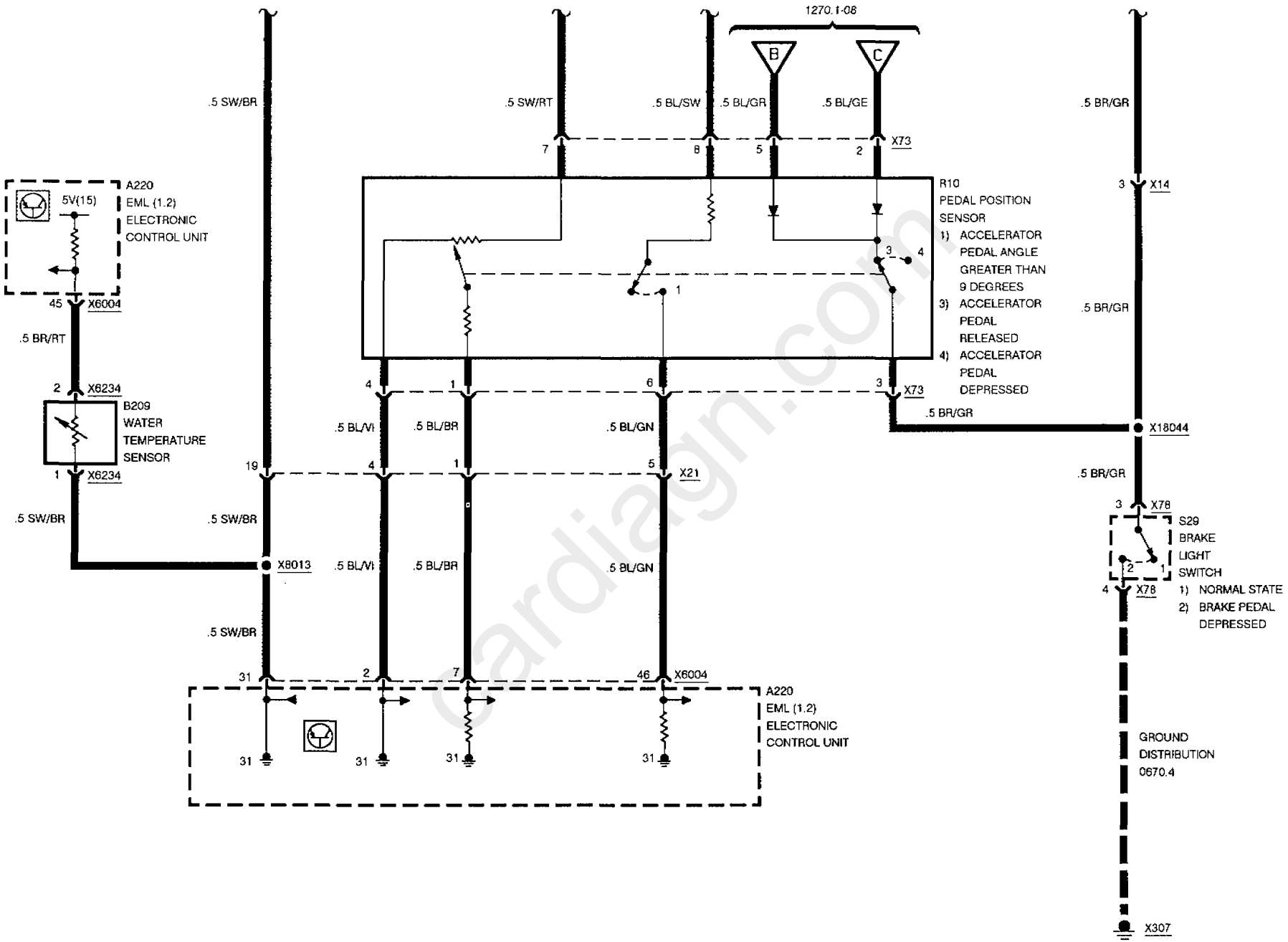

cardiagn.com

ELECTRONIC THROTTLE CONTROL (EML 1.2)

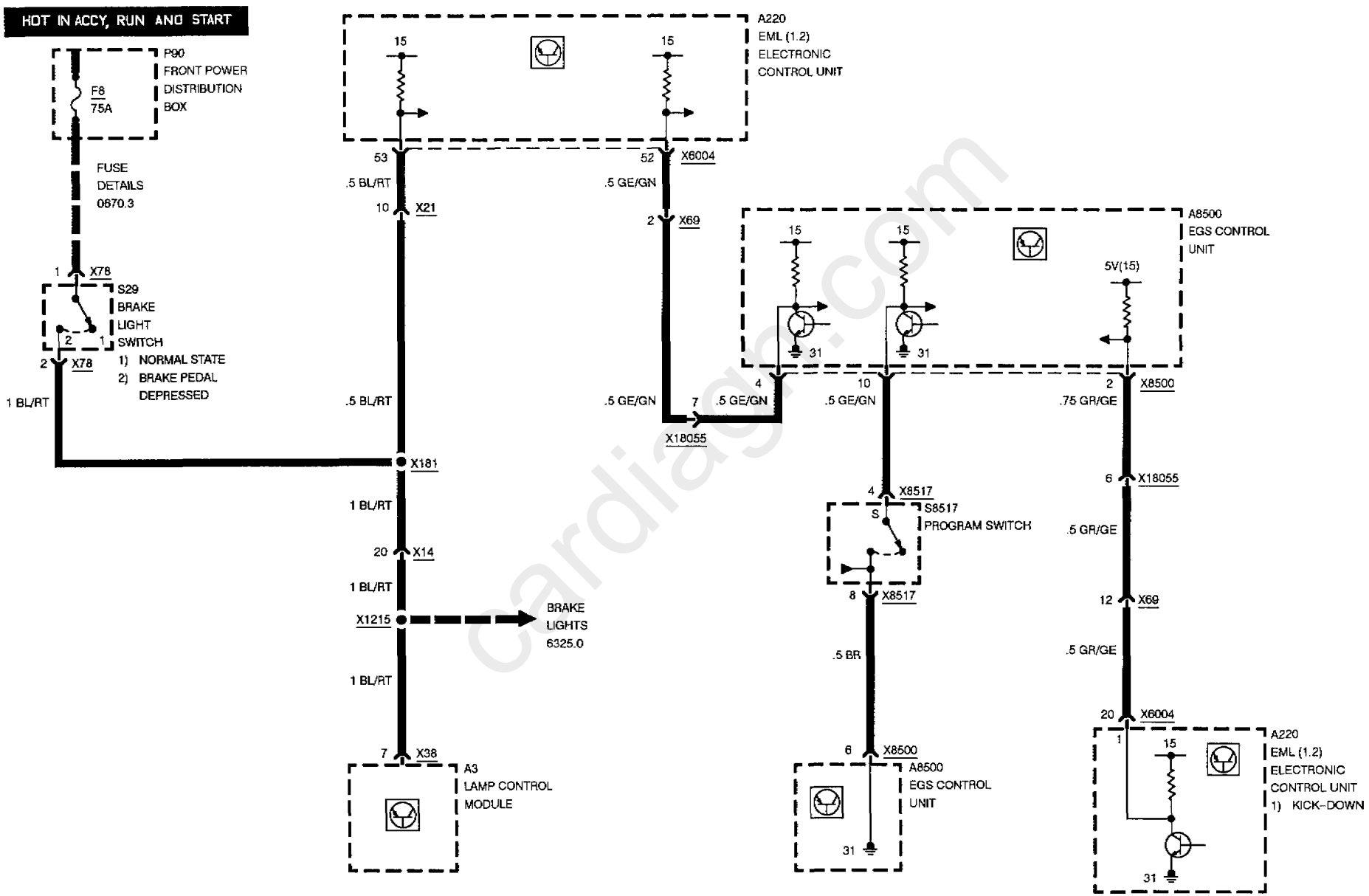

cardiagn.com

ELECTRONIC THROTTLE CONTROL (EML 1.2)

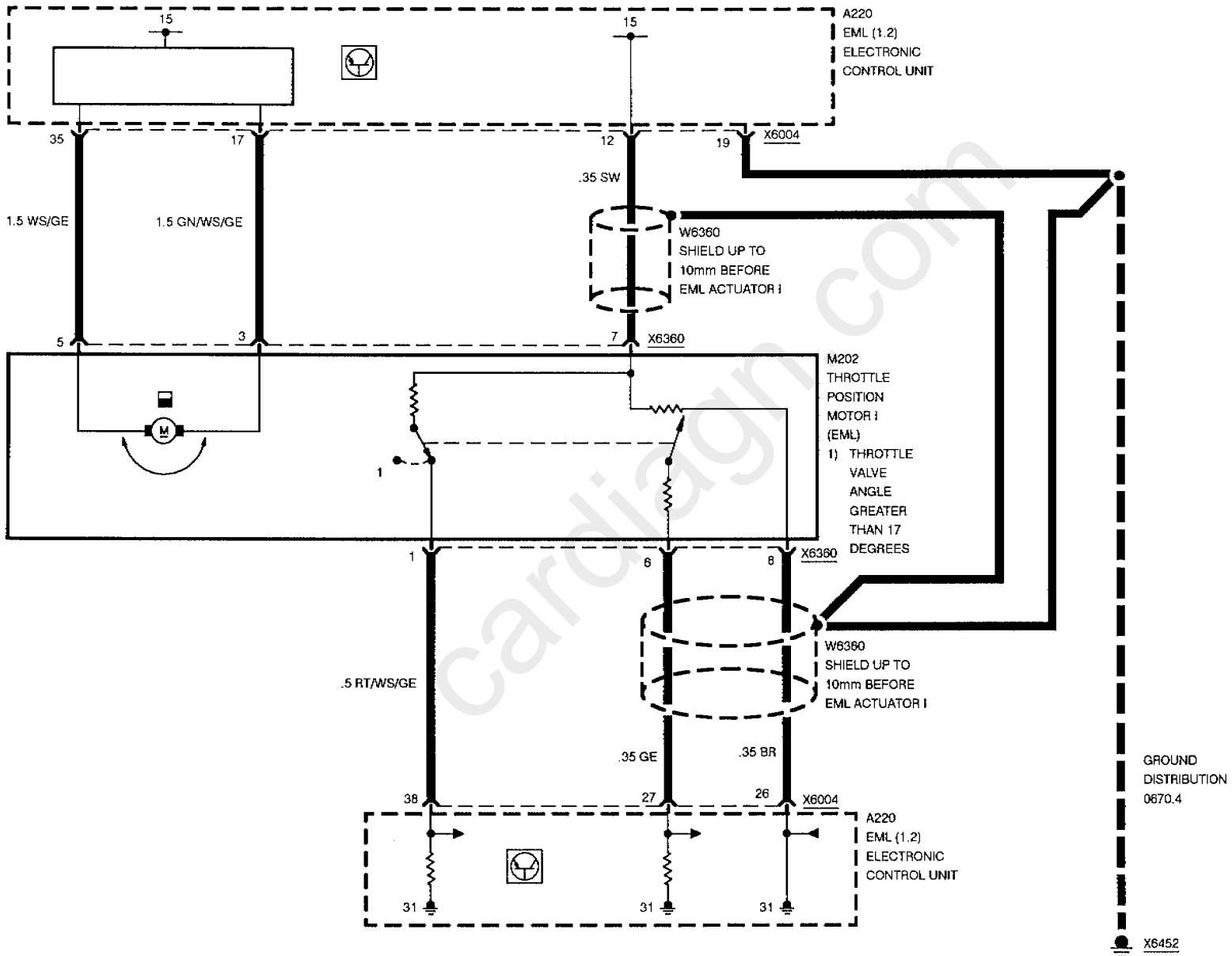

cardiagn.com

ELECTRONIC THROTTLE CONTROL (EML 1.2)

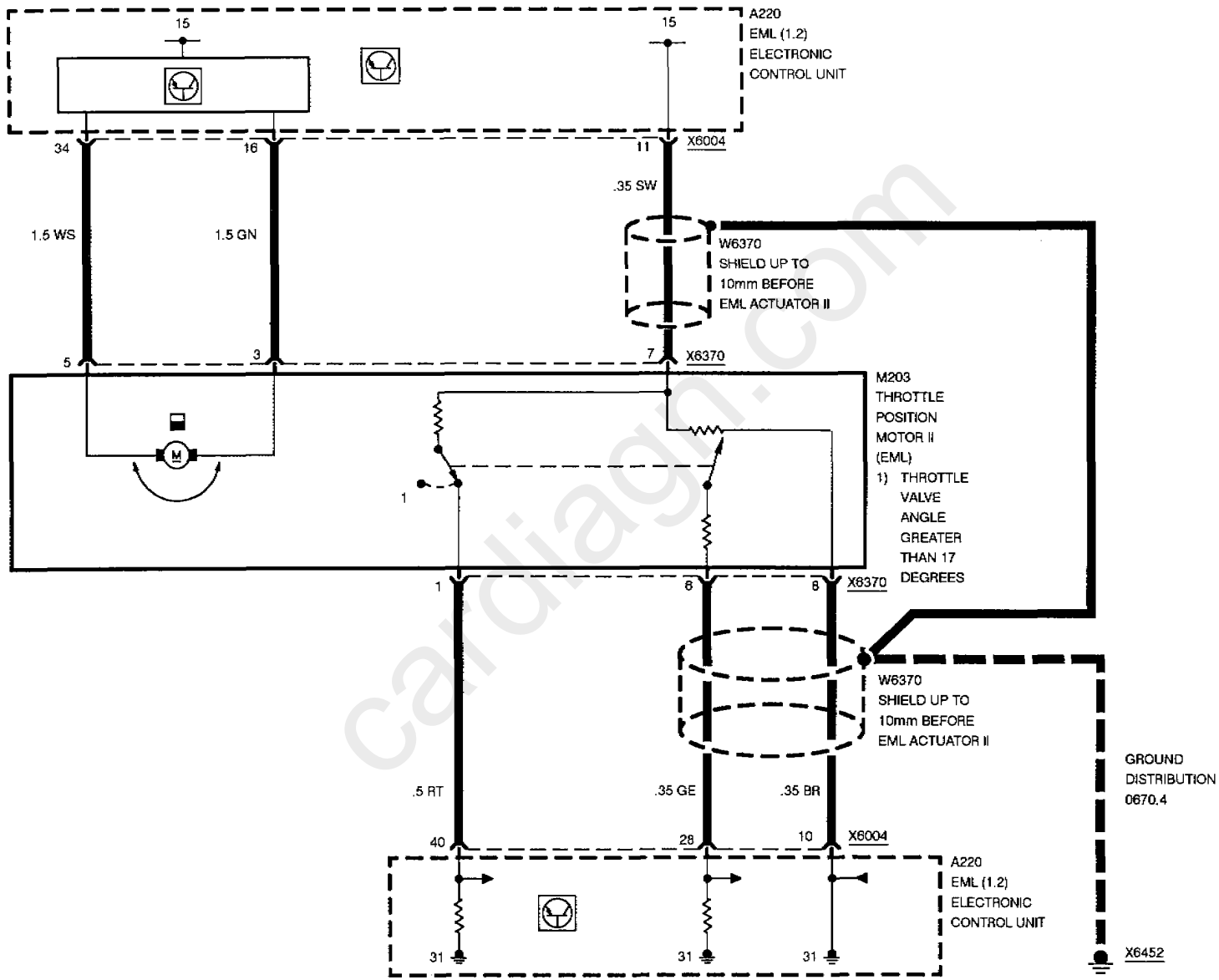

cardiagn.com

ELECTRONIC THROTTLE CONTROL (EML 1.2)

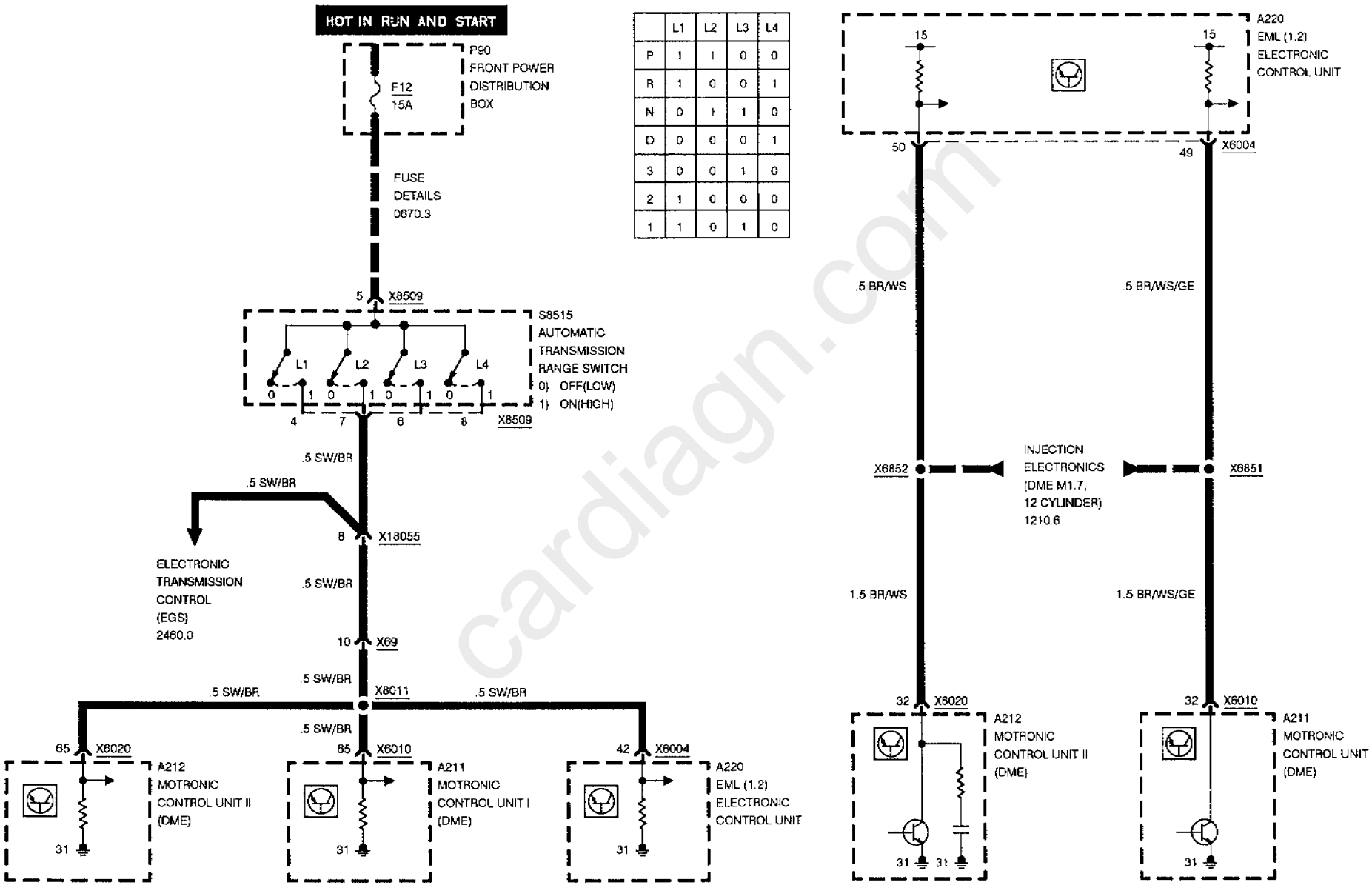

	L1	L2	L3	L4
P	1	1	0	0
R	1	0	0	1
N	0	1	1	0
D	0	0	0	1
3	0	0	1	0
2	1	0	0	0
1	1	0	1	0

cardiagn.com

ELECTRONIC THROTTLE CONTROL (EML 1.2)

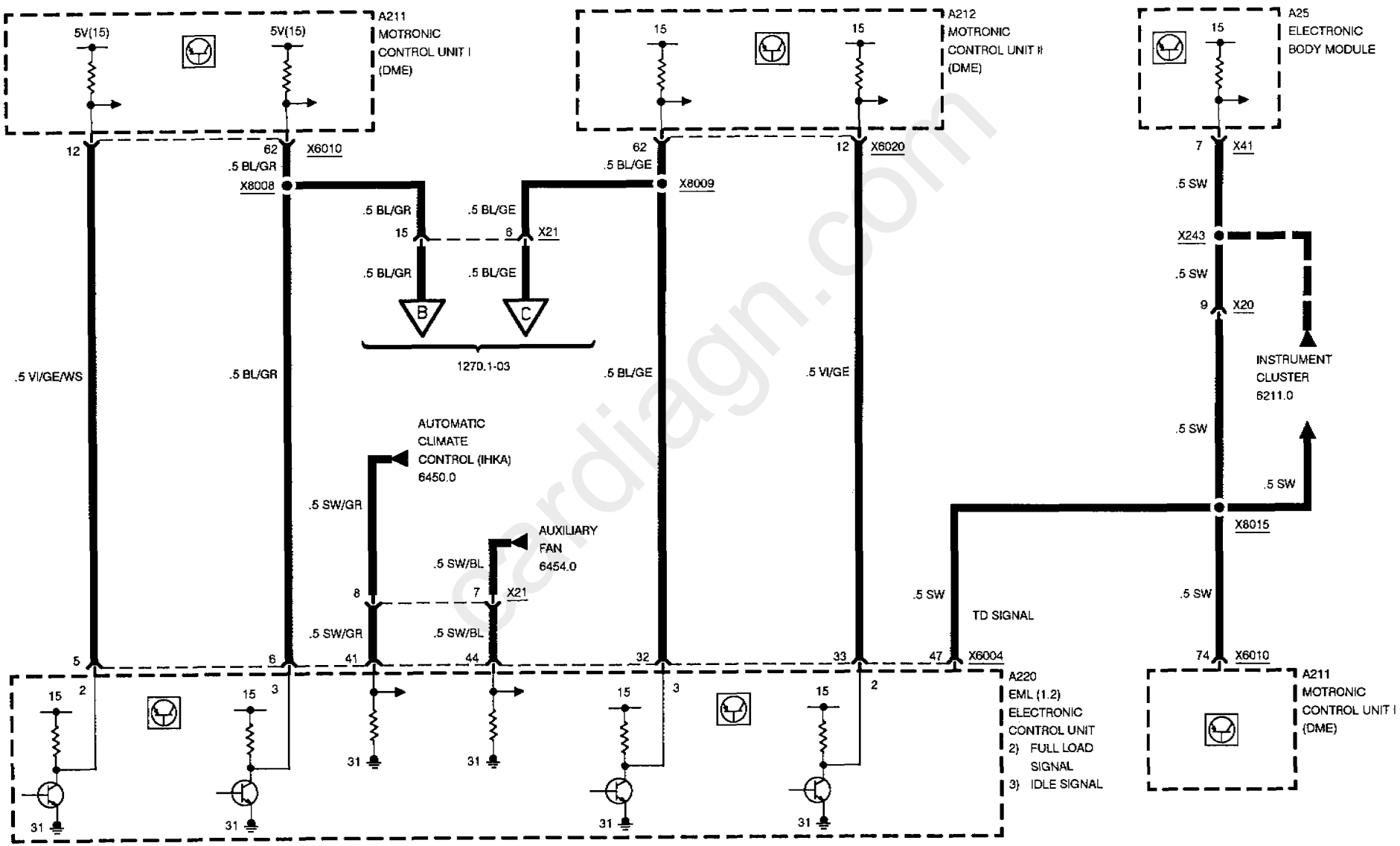

cardiagn.com

ELECTRONIC THROTTLE CONTROL (EML 1.2)

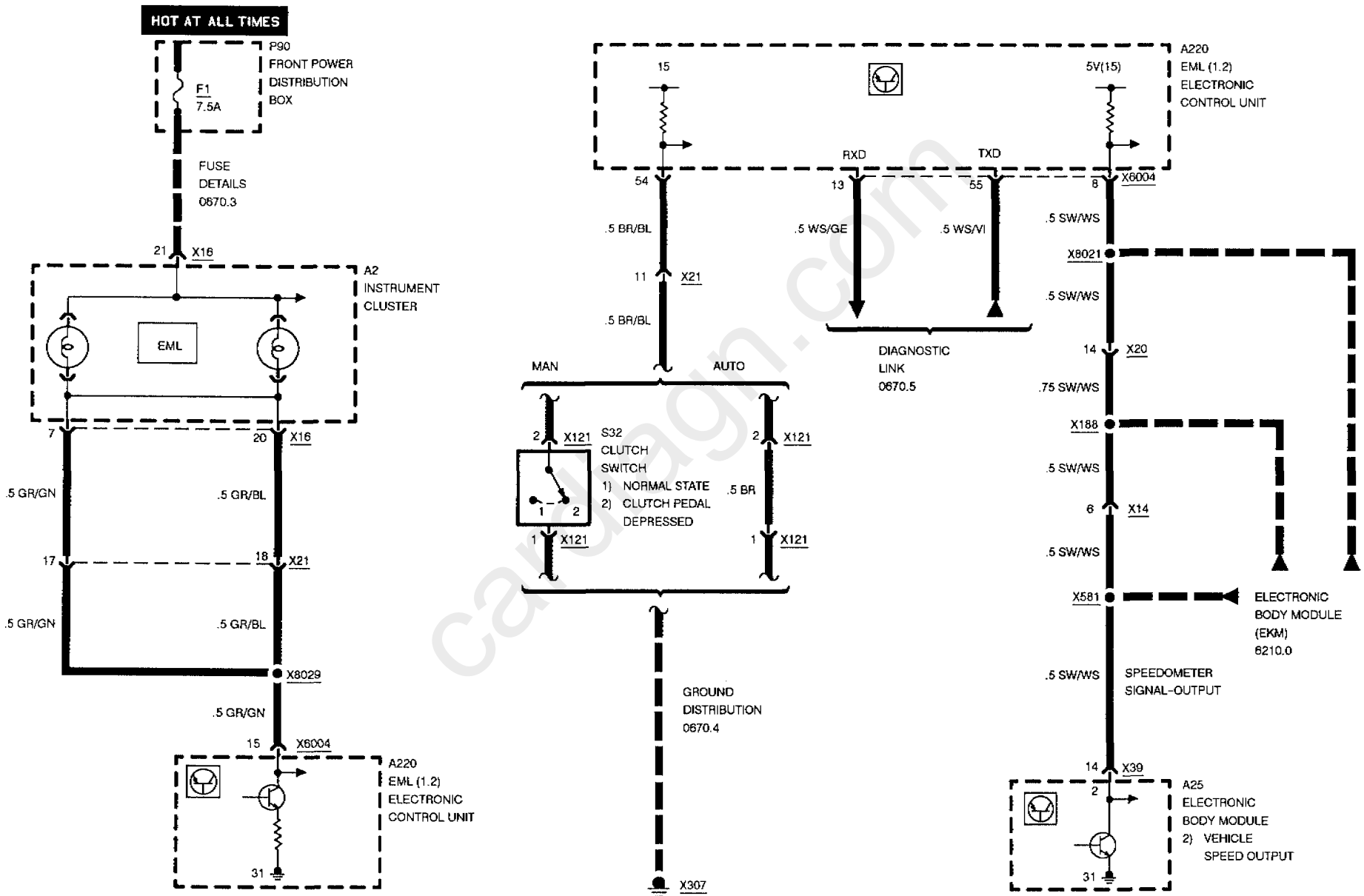

cardiagn.com

ELECTRONIC THROTTLE CONTROL (EML 1.2)

EML INTERFACE

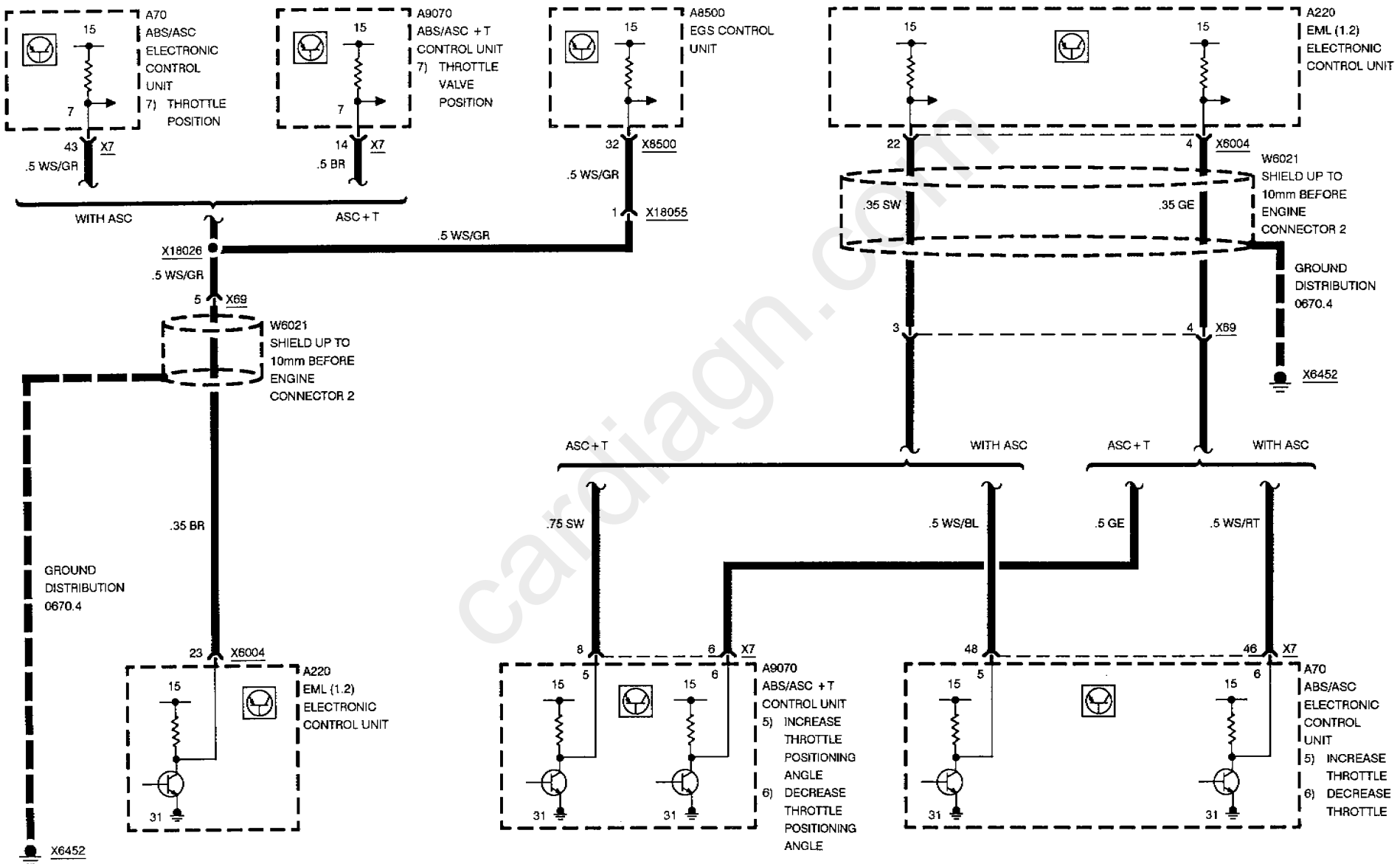

cardiagn.com

cardiagn.com

E-BOX FAN

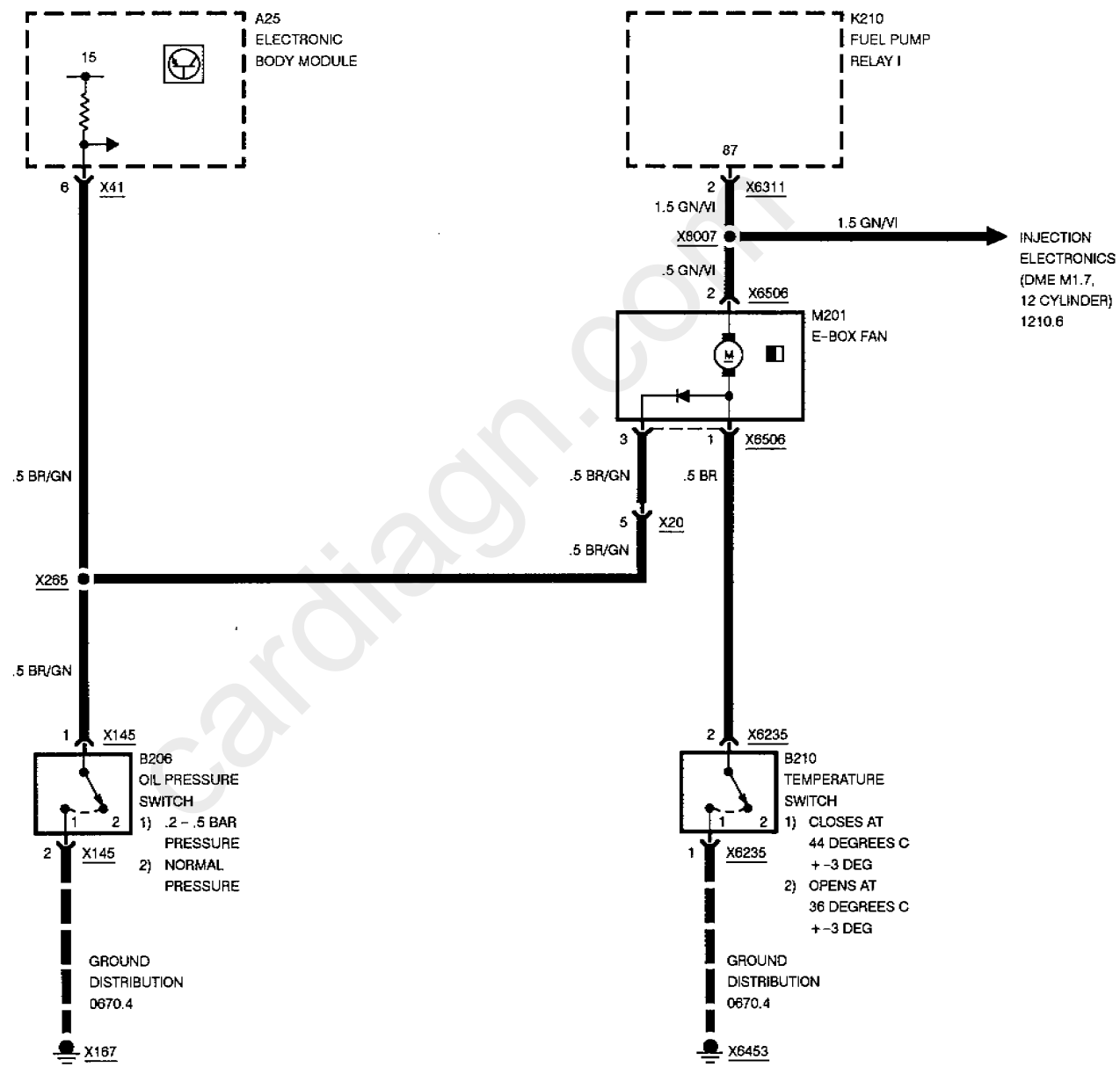

cardiagn.com

cardiagn.com

ELECTRONIC TRANSMISSION CONTROL (EGS)

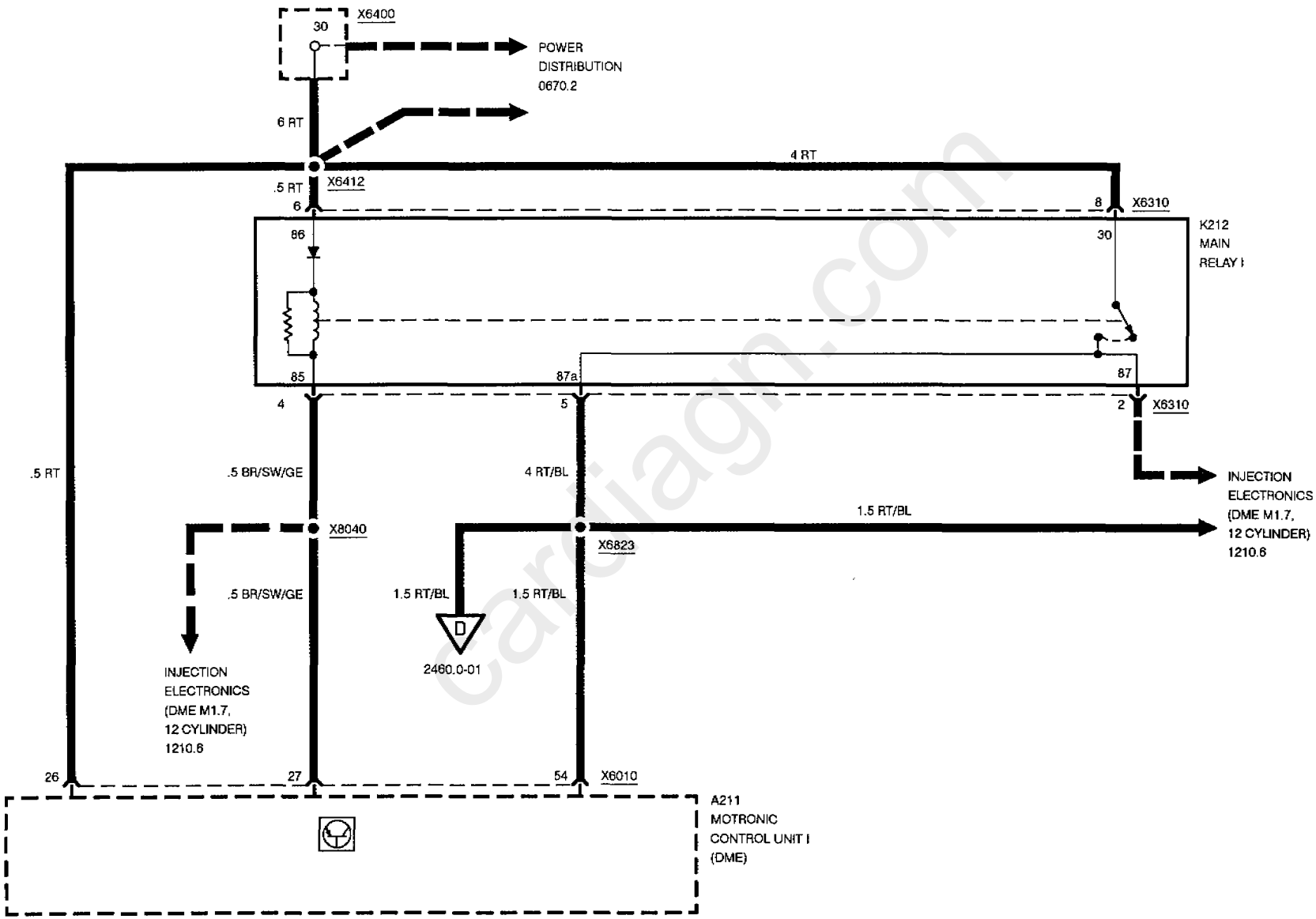

cardiagn.com

ELECTRONIC TRANSMISSION CONTROL (EGS)

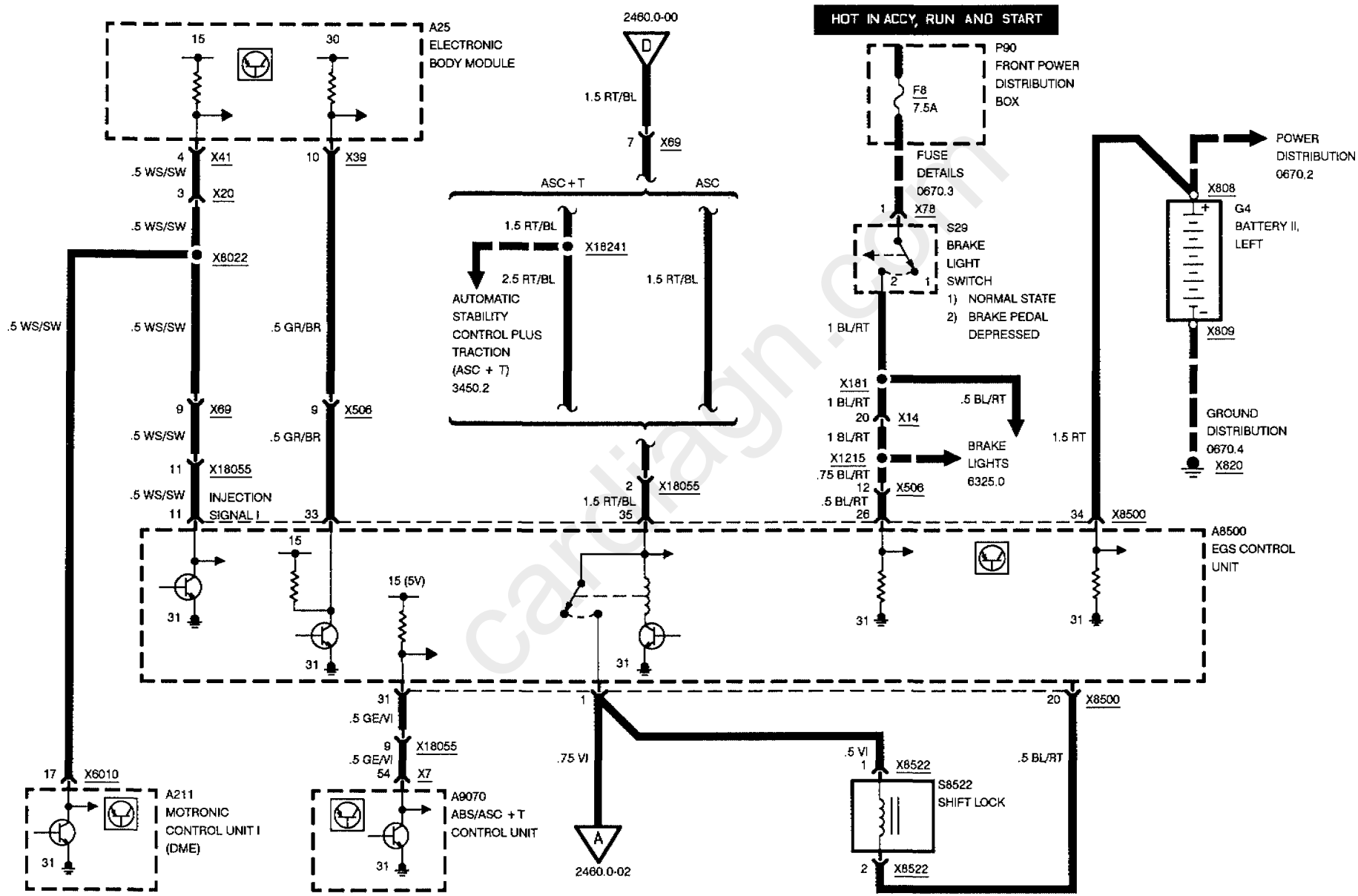

ELECTRONIC TRANSMISSION CONTROL (EGS)

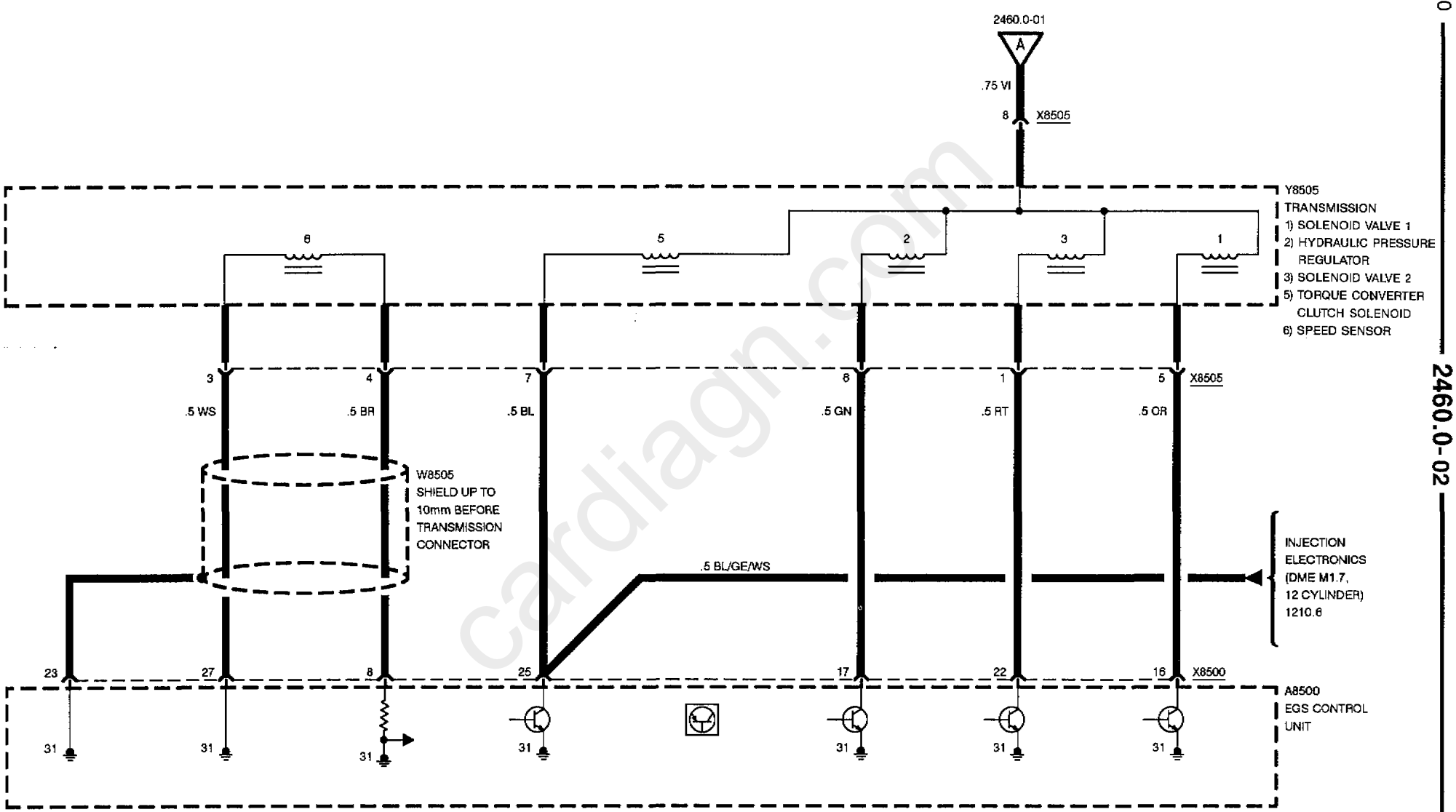

cardiagn.com

ELECTRONIC TRANSMISSION CONTROL (EGS)

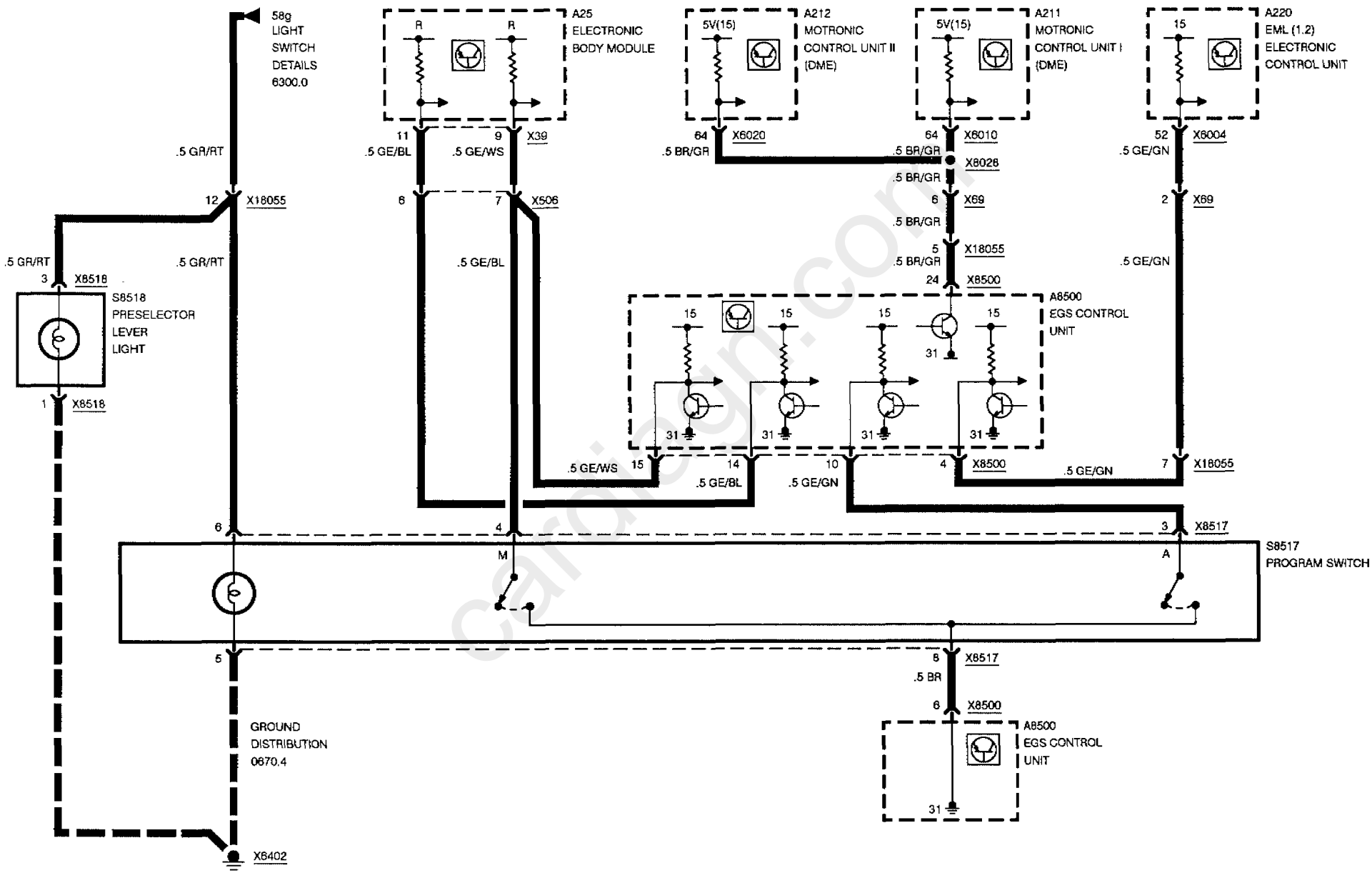

ELECTRONIC TRANSMISSION CONTROL (EGS)

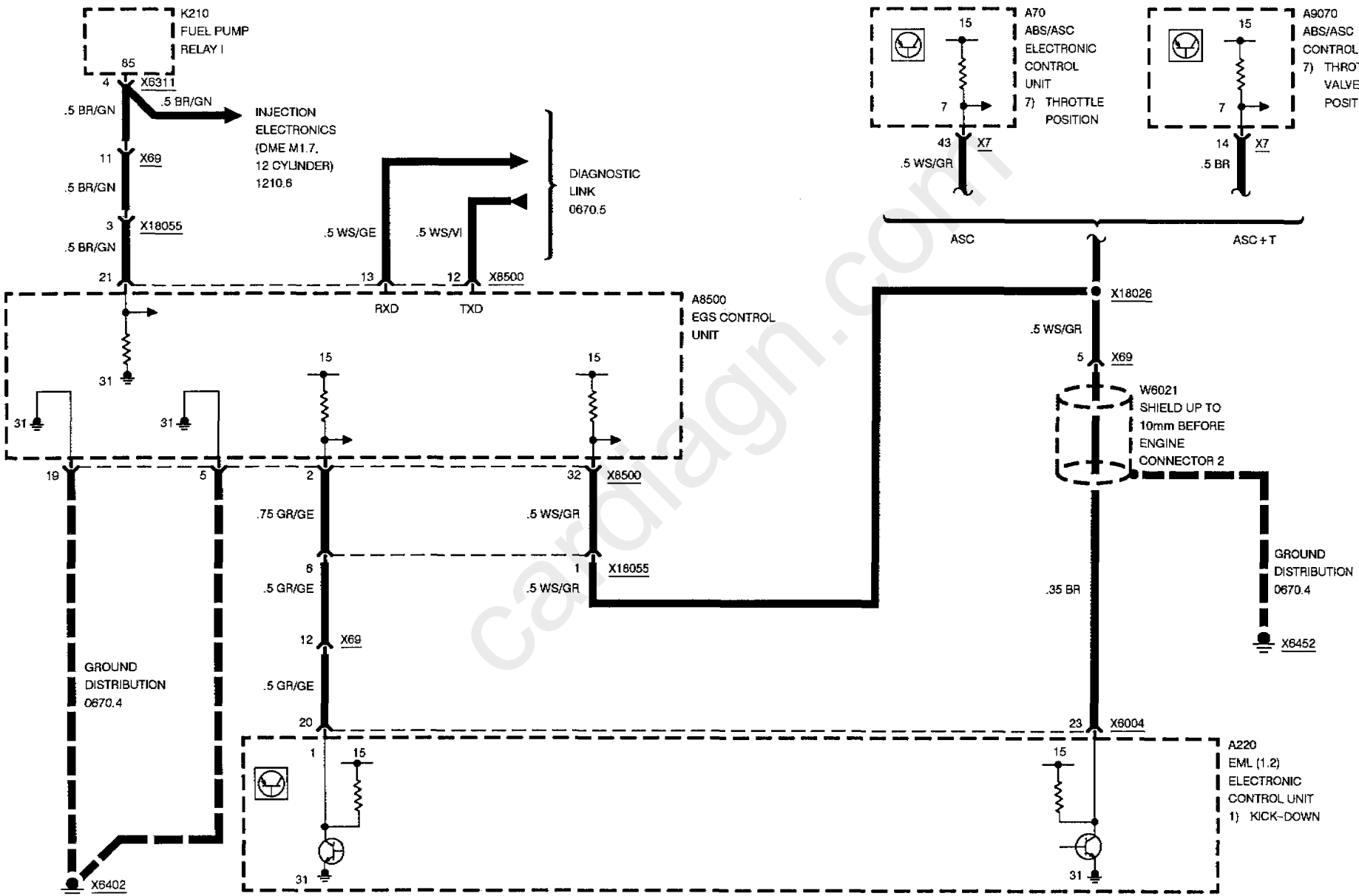

cardiagn.com

ELECTRONIC TRANSMISSION CONTROL (EGS)

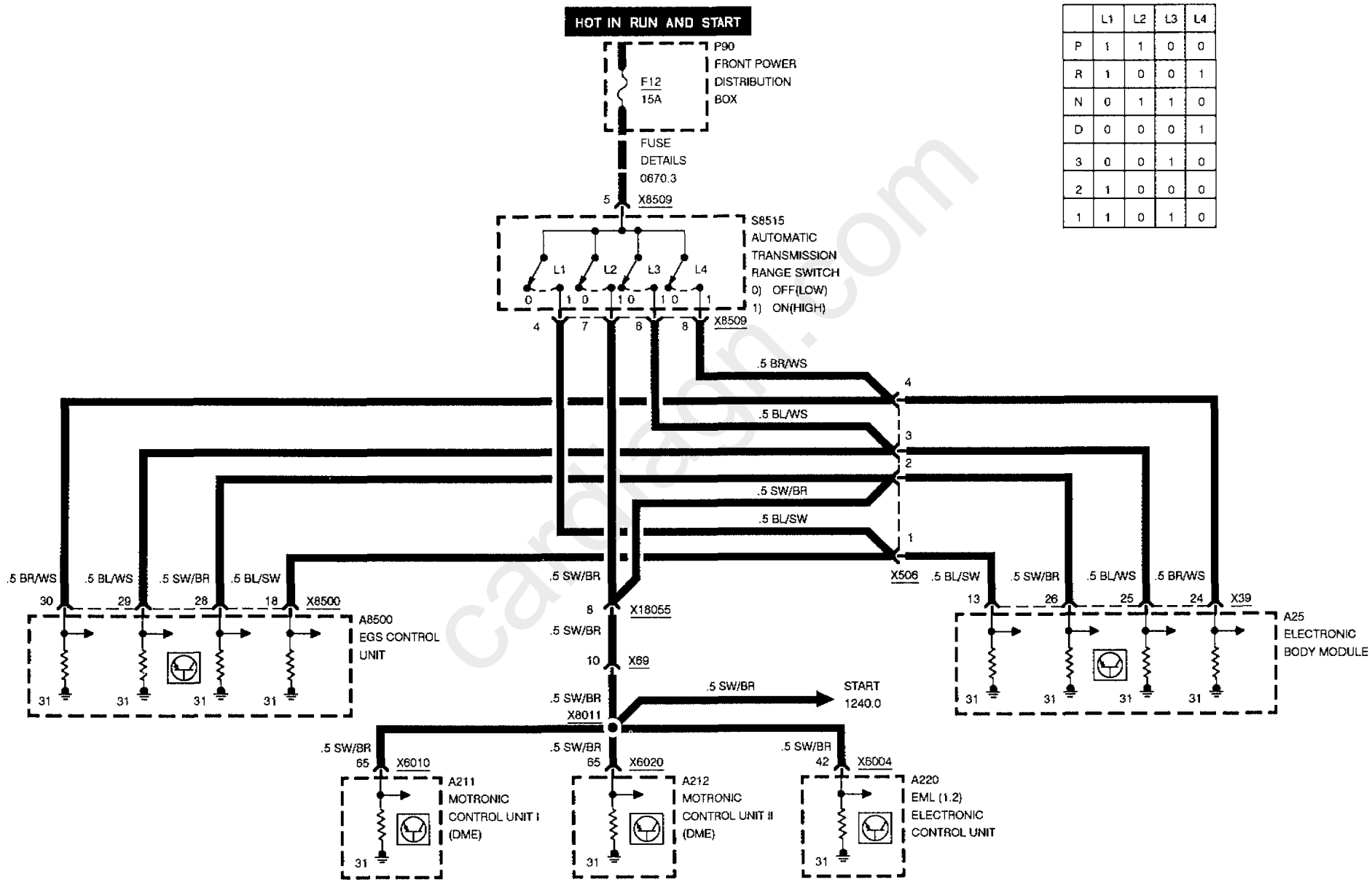

	L1	L2	L3	L4
P	1	1	0	0
R	1	0	0	1
N	0	1	1	0
D	0	0	0	1
3	0	0	1	0
2	1	0	0	0
1	1	0	1	0

cargeon.com

ELECTRIC STEERING COLUMN ADJUSTMENT

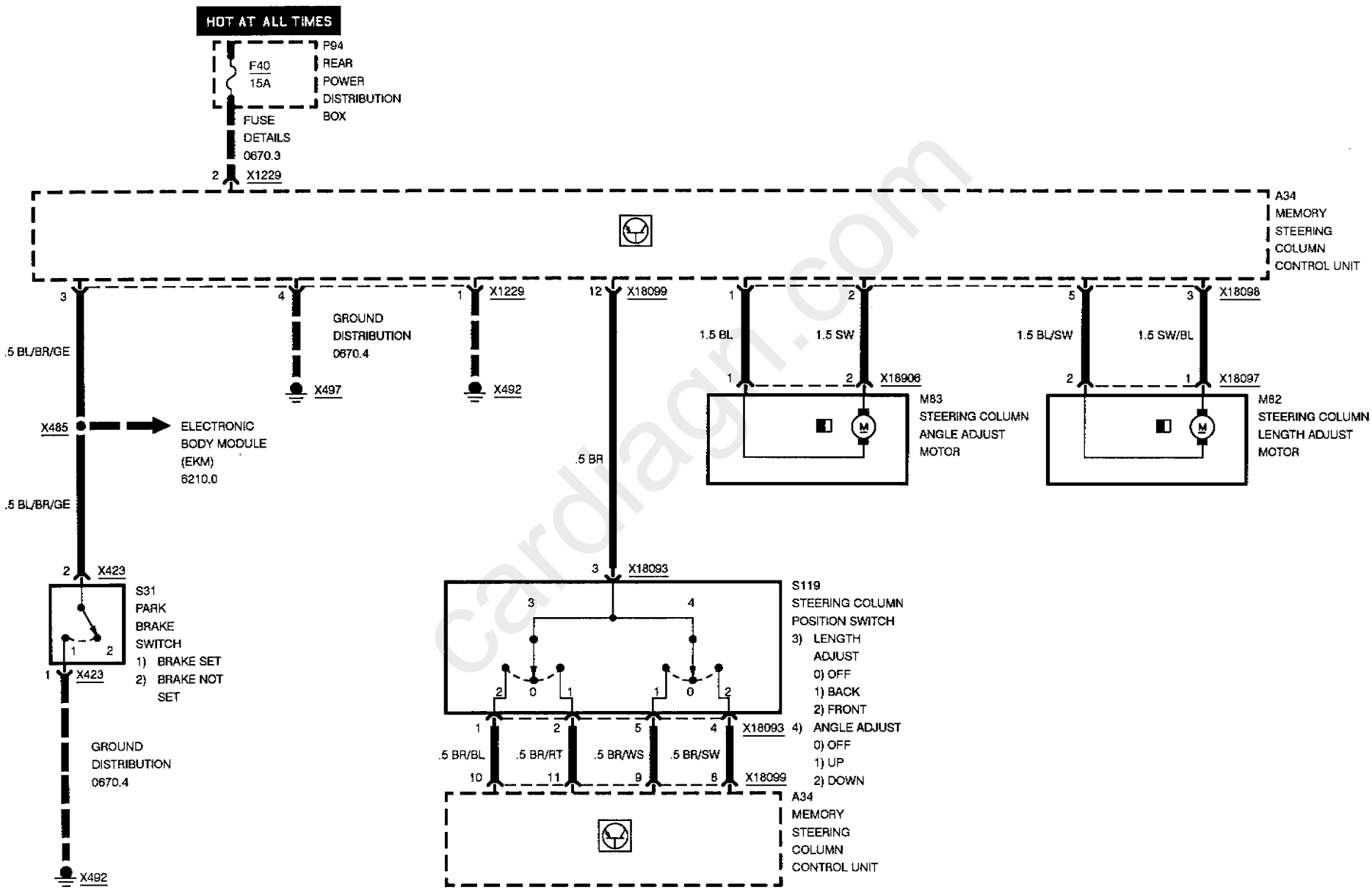

cardiagn.com

cardiagn.com

MEMORY STEERING COLUMN ADJUSTMENT (LSM)

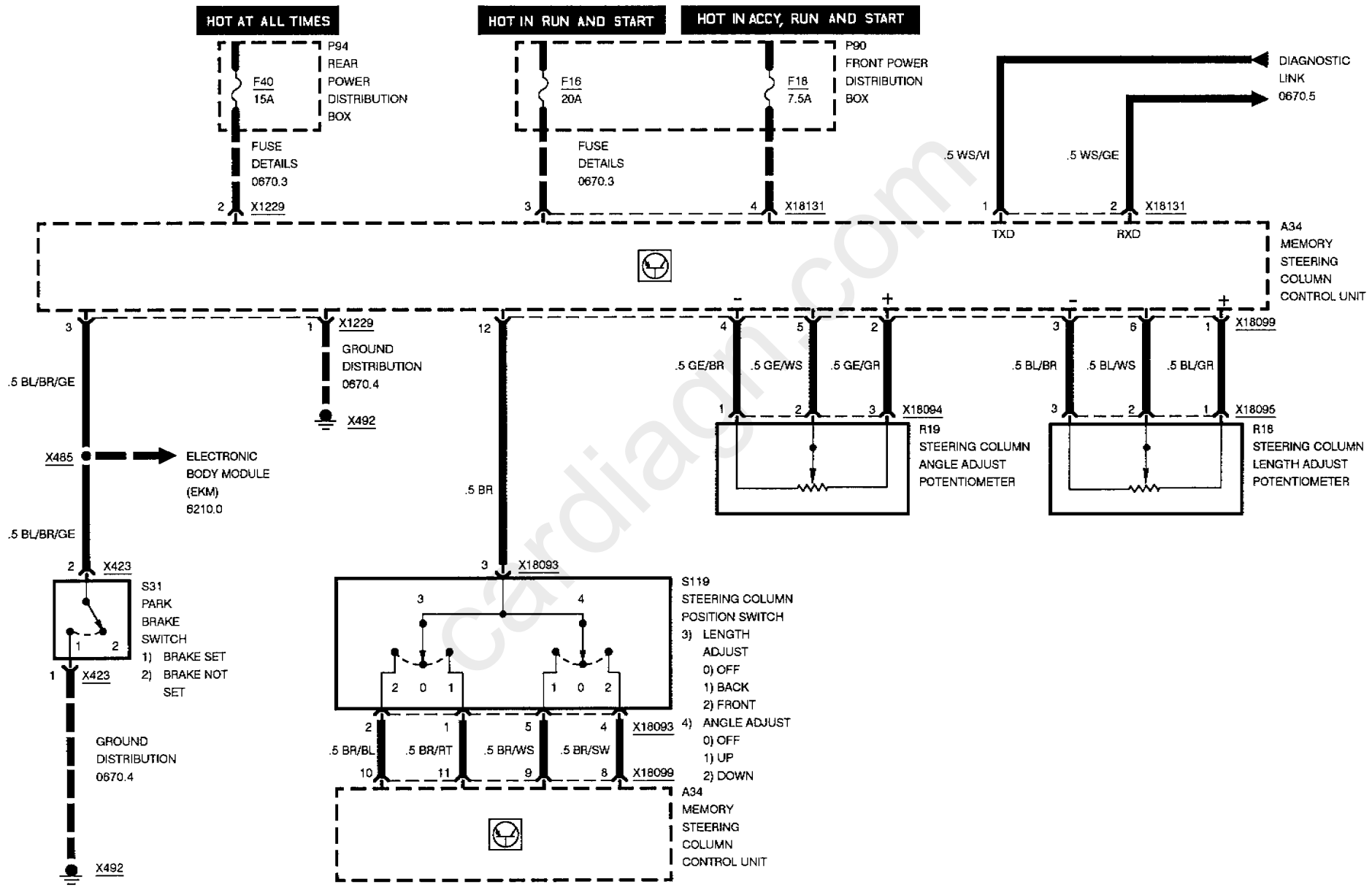

cardiagn.com

MEMORY STEERING COLUMN ADJUSTMENT (LSM)

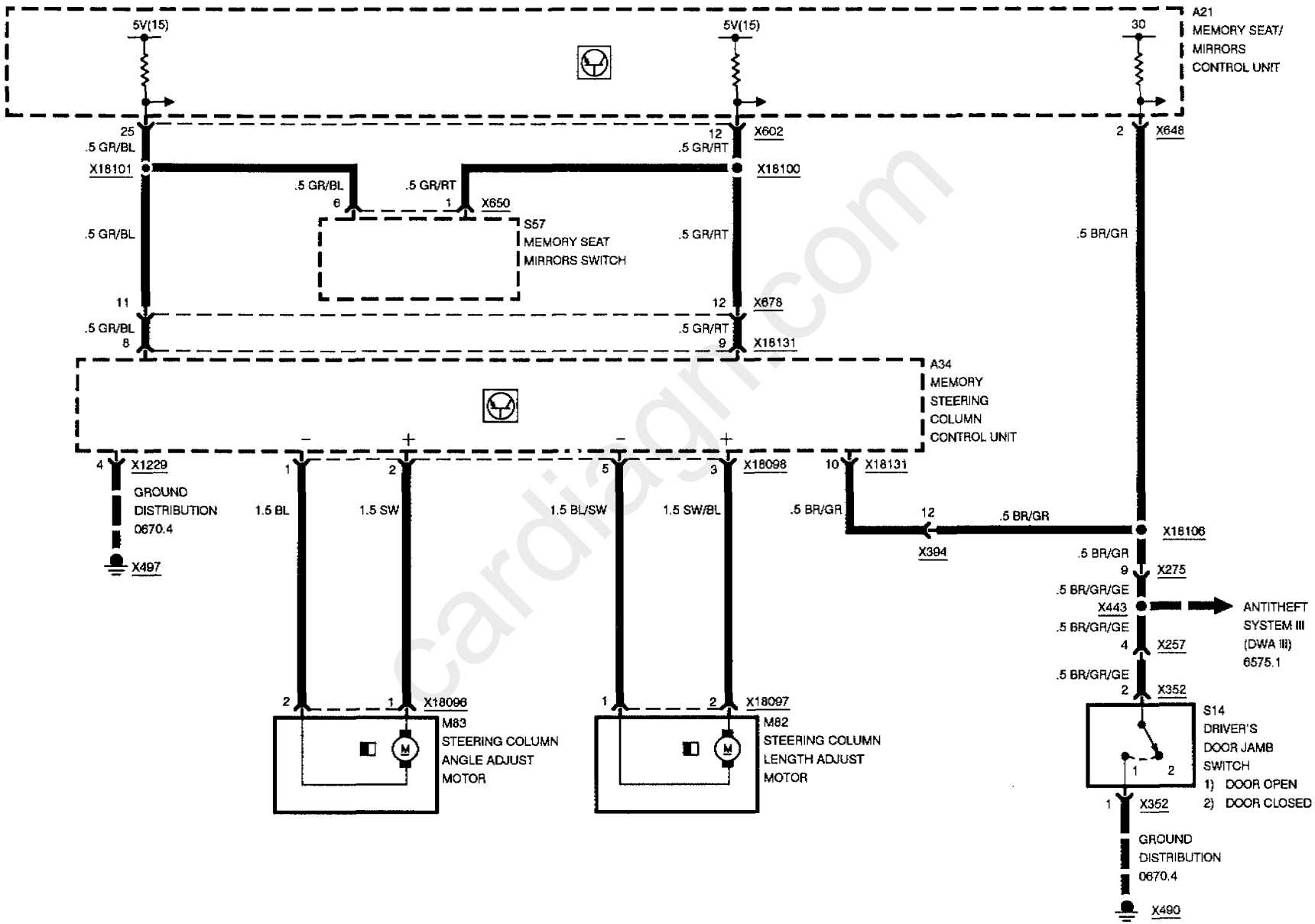

cardiagn.com

SUPPLEMENTAL RESTRAINT SYSTEM (AIR BAG)

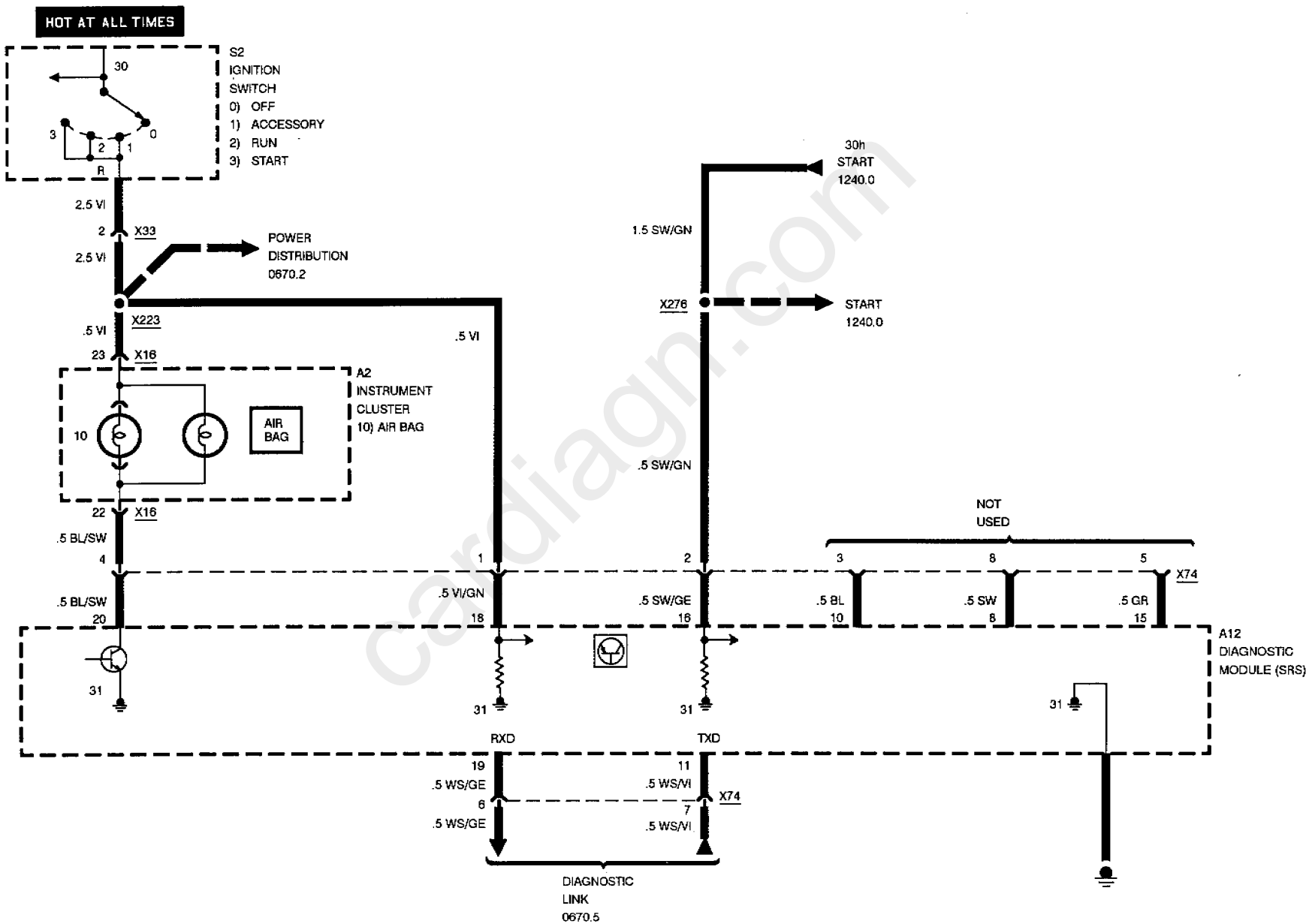

cardiagn.com

SUPPLEMENTAL RESTRAINT SYSTEM (AIR BAG)

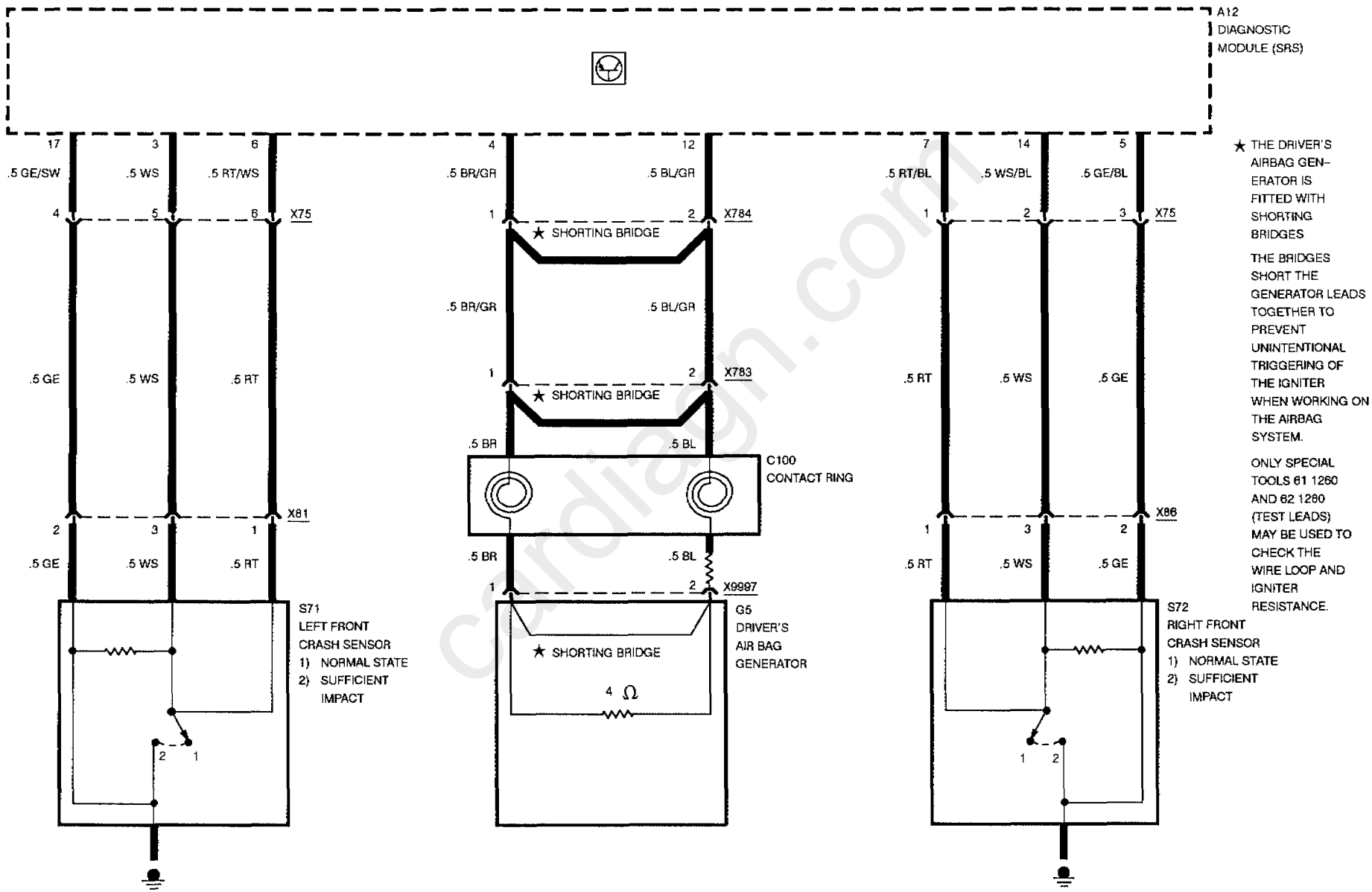

★ THE DRIVER'S AIRBAG GENERATOR IS FITTED WITH SHORTING BRIDGES

THE BRIDGES SHORT THE GENERATOR LEADS TOGETHER TO PREVENT UNINTENTIONAL TRIGGERING OF THE IGNITER WHEN WORKING ON THE AIRBAG SYSTEM.

ONLY SPECIAL TOOLS 61 1260 AND 62 1260 (TEST LEADS) MAY BE USED TO CHECK THE WIRE LOOP AND IGNITER RESISTANCE.

cardiagn.com

SUPPLEMENTAL RESTRAINT SYSTEM (AIR BAG)

WITH PASSENGER'S AIRBAG

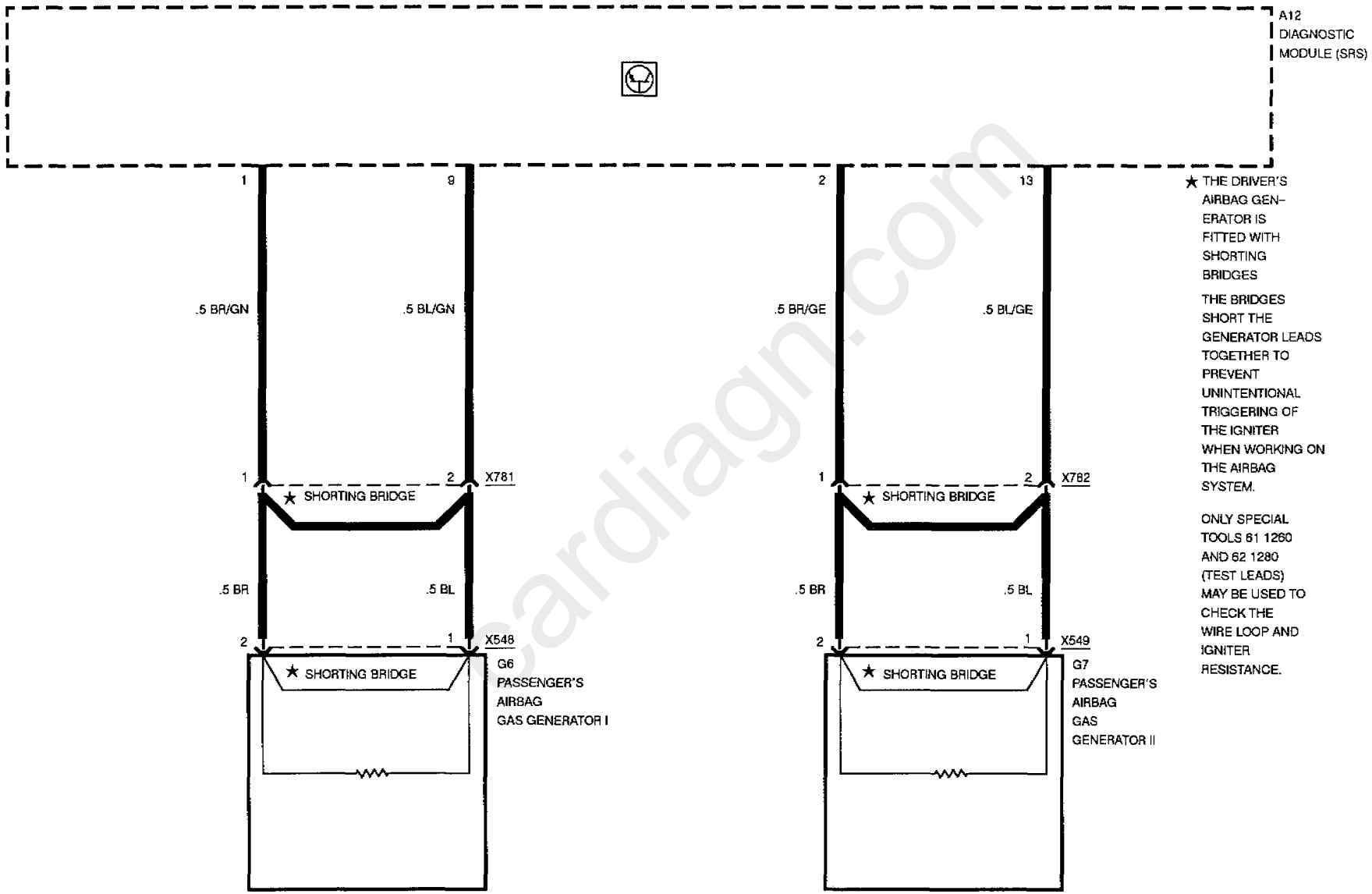

★ THE DRIVER'S AIRBAG GENERATOR IS FITTED WITH SHORTING BRIDGES

THE BRIDGES SHORT THE GENERATOR LEADS TOGETHER TO PREVENT UNINTENTIONAL TRIGGERING OF THE IGNITER WHEN WORKING ON THE AIRBAG SYSTEM.

ONLY SPECIAL TOOLS 61 1260 AND 62 1280 (TEST LEADS) MAY BE USED TO CHECK THE WIRE LOOP AND IGNITER RESISTANCE.

cardiagn.com

cardiagn.com

POWER ASSIST STEERING (SERVOTRONIC)

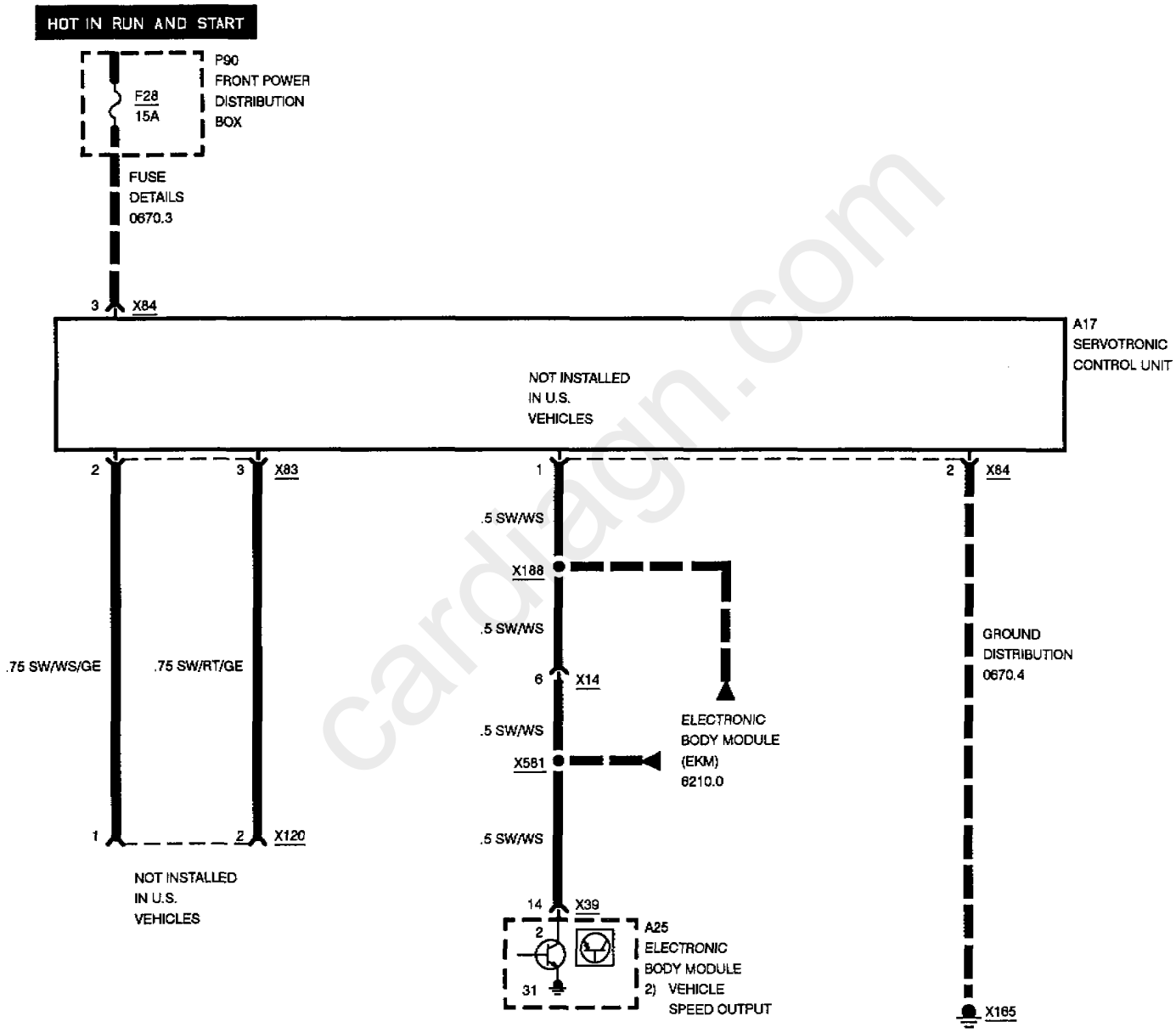

cardiagn.com

cardiagn.com

ANTILOCK BRAKE SYSTEM WITH AUTOMATIC STABILITY CONTROL (ABS/ASC)

850iA

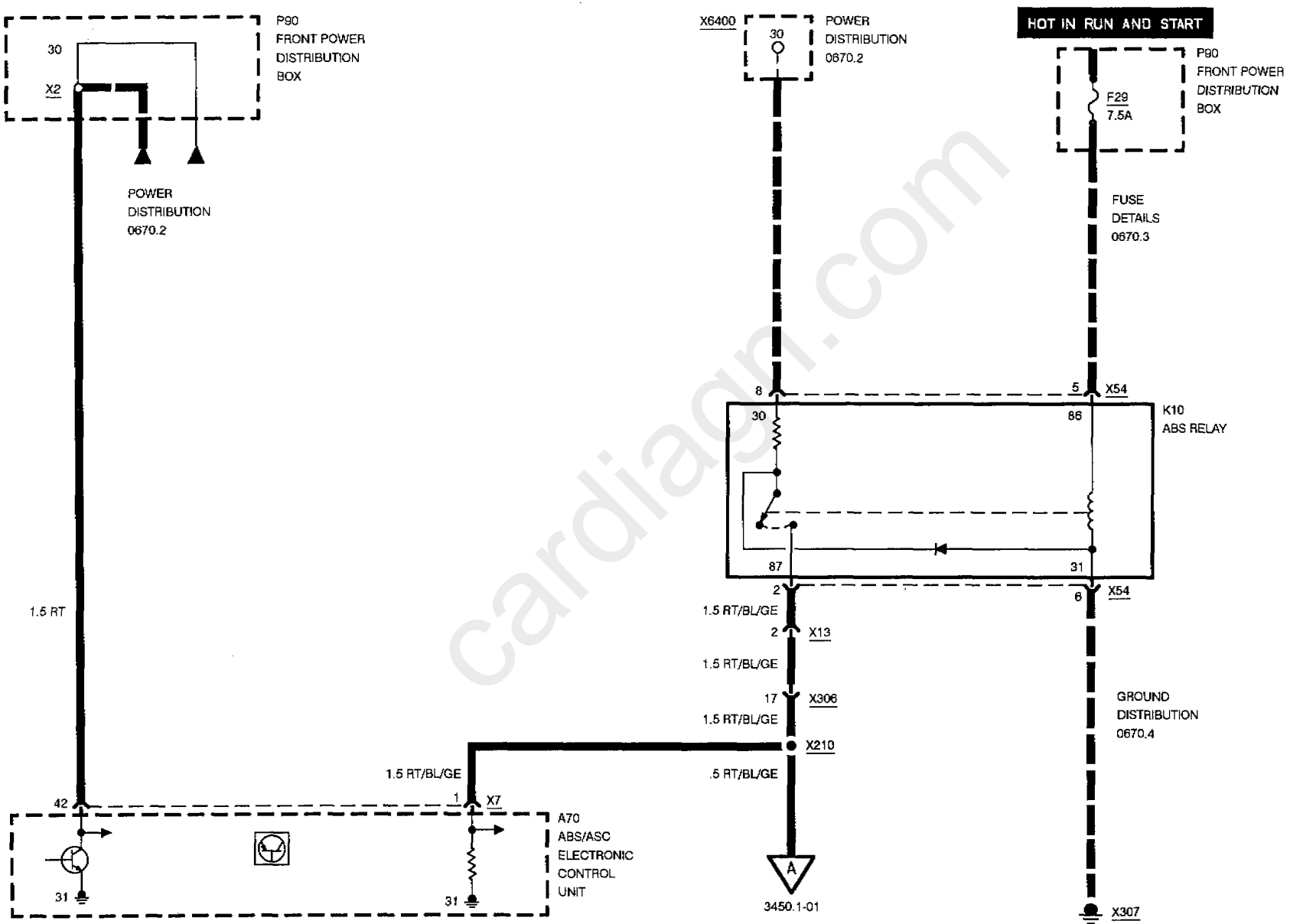

cardiagn.com

ANTILOCK BRAKE SYSTEM WITH AUTOMATIC STABILITY CONTROL (ABS/ASC)

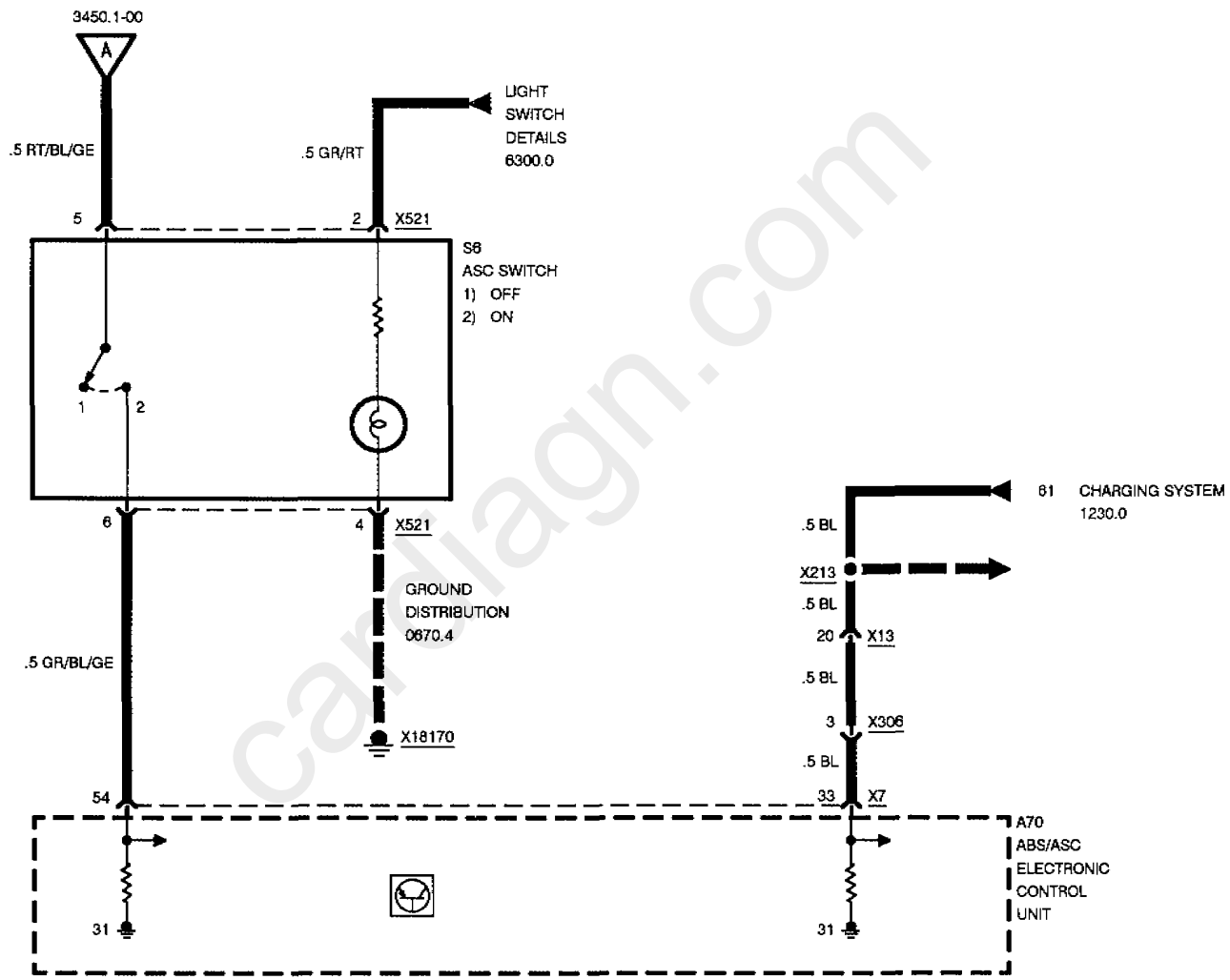

cardiagn.com

ANTILOCK BRAKE SYSTEM WITH AUTOMATIC STABILITY CONTROL (ABS/ASC)

850iA

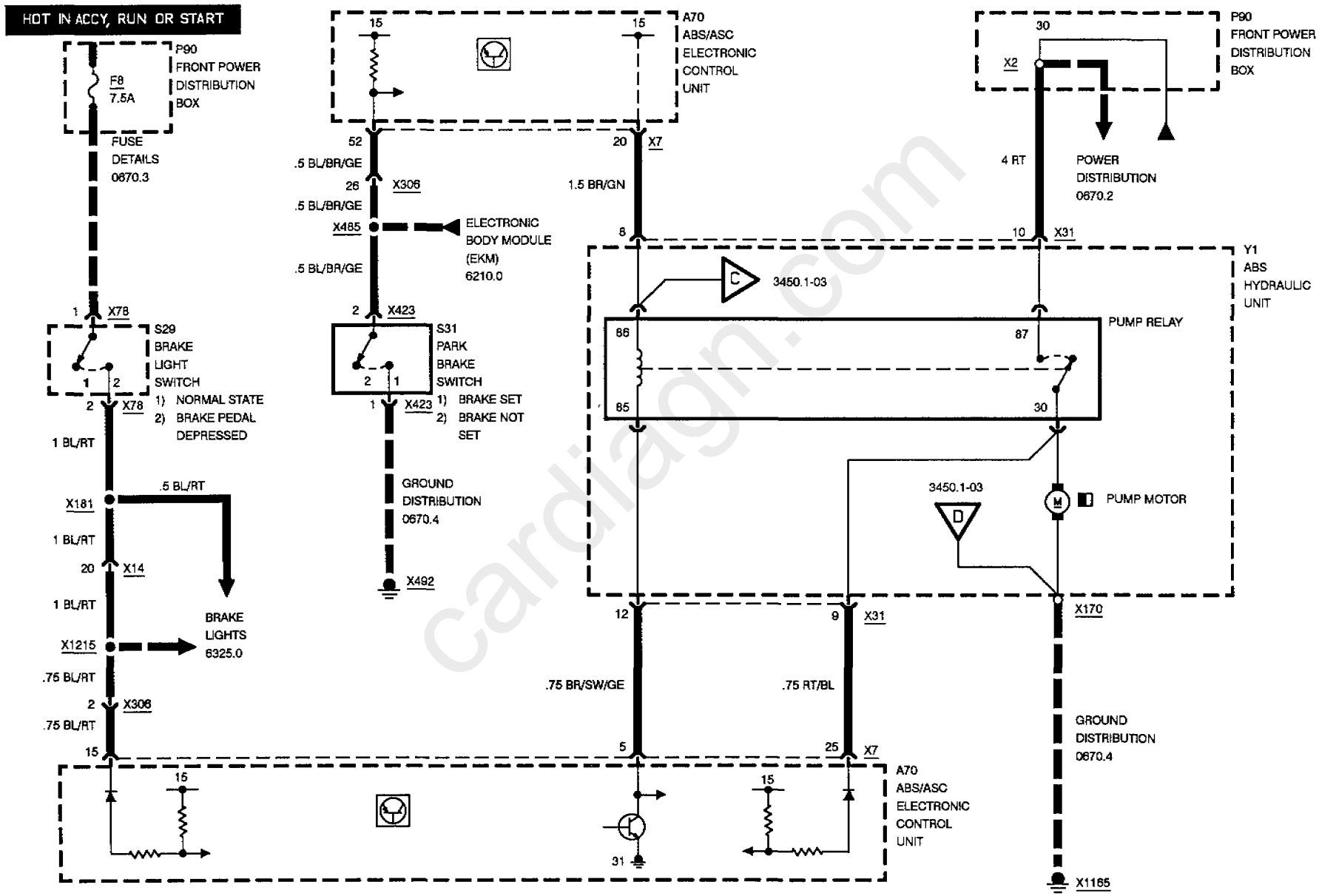

cardiagn.com

ANTILOCK BRAKE SYSTEM WITH AUTOMATIC STABILITY CONTROL (ABS/ASC)

850iA

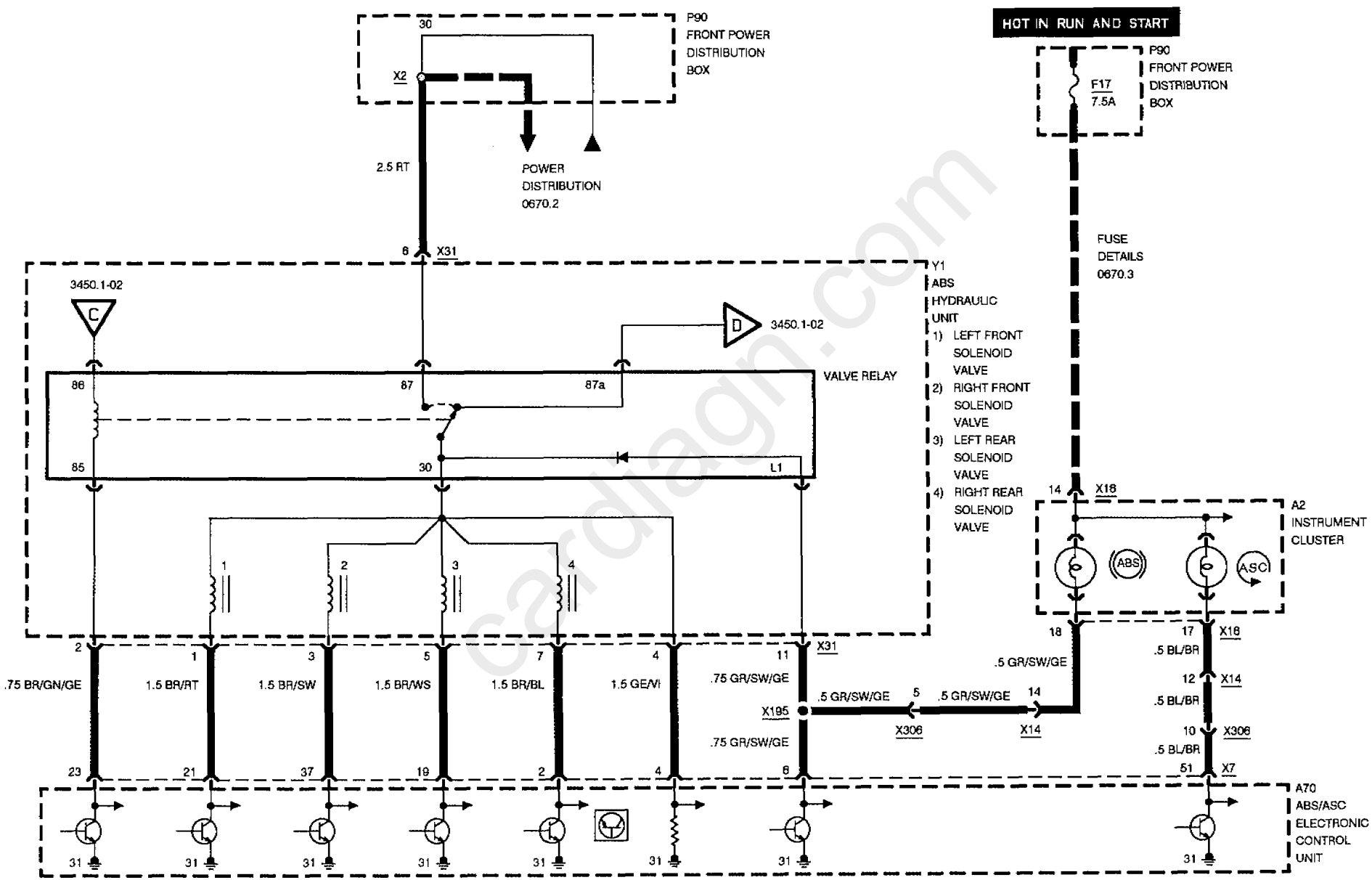

cardiagn.com

ANTILOCK BRAKE SYSTEM WITH AUTOMATIC STABILITY CONTROL (ABS/ASC)

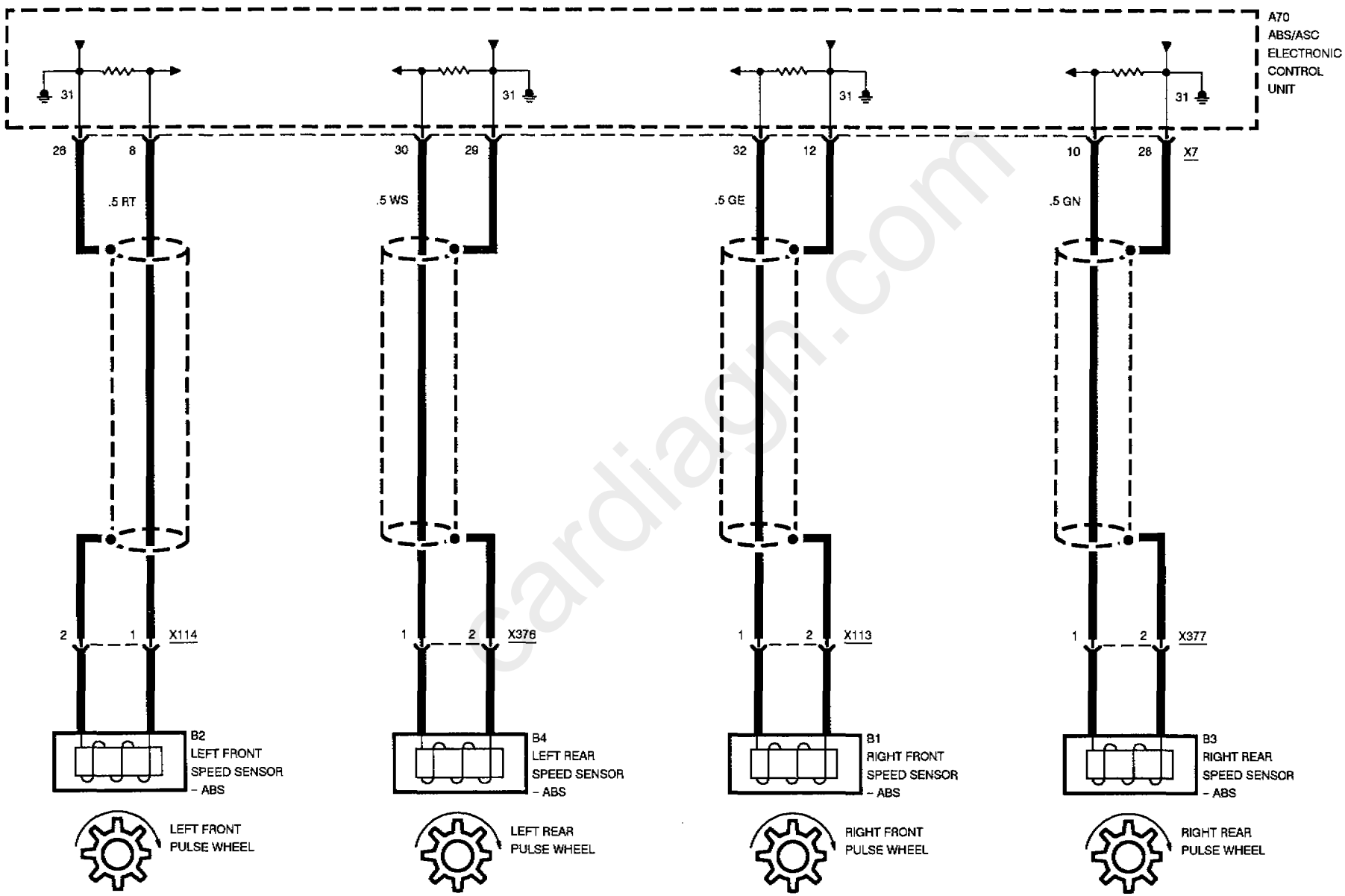

cardiagn.com

ANTILOCK BRAKE SYSTEM WITH AUTOMATIC STABILITY CONTROL (ABS/ASC)

850iA

DME INTERFACE

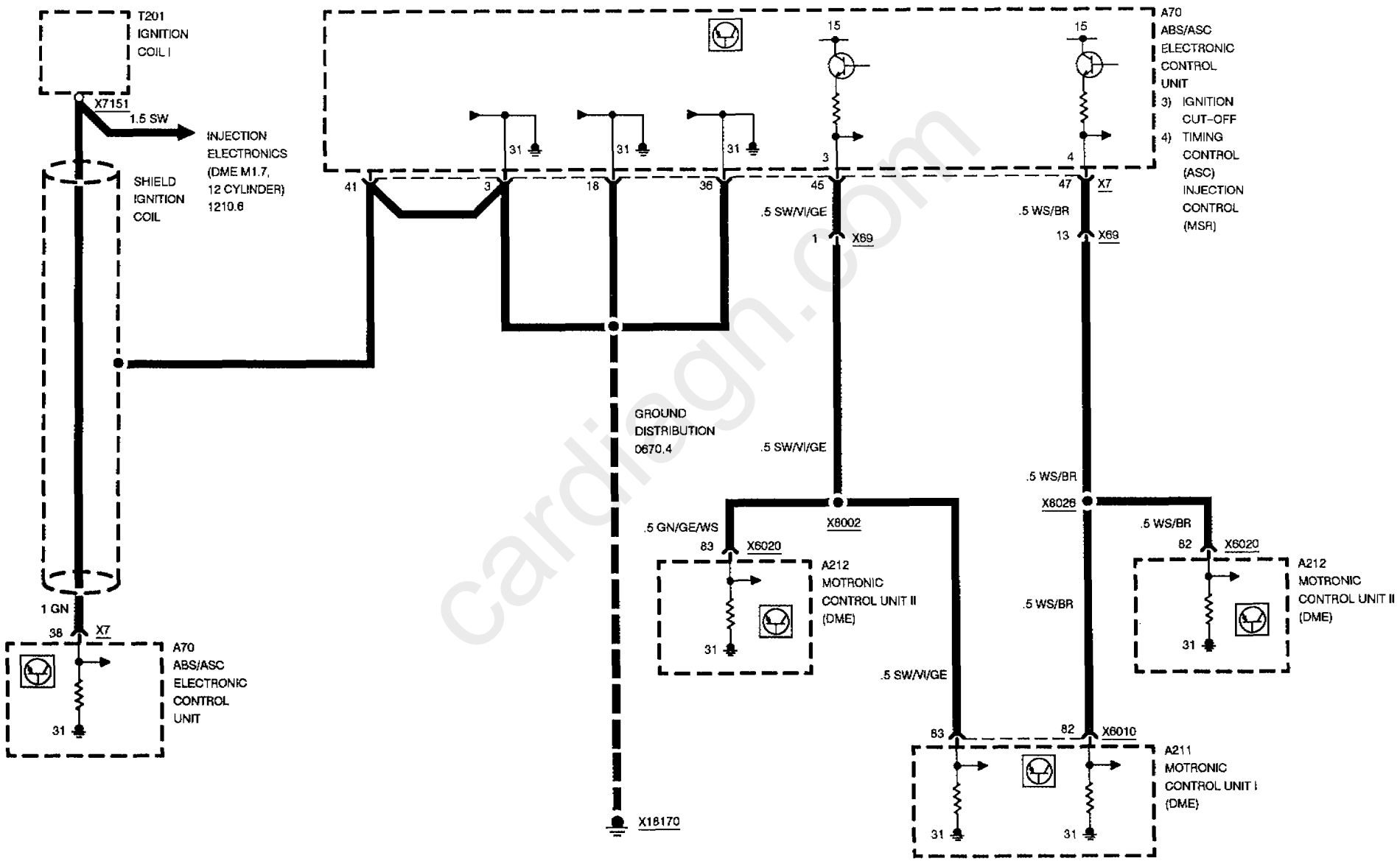

cardiagn.com

ANTILOCK BRAKE SYSTEM WITH AUTOMATIC STABILITY CONTROL (ABS/ASC)

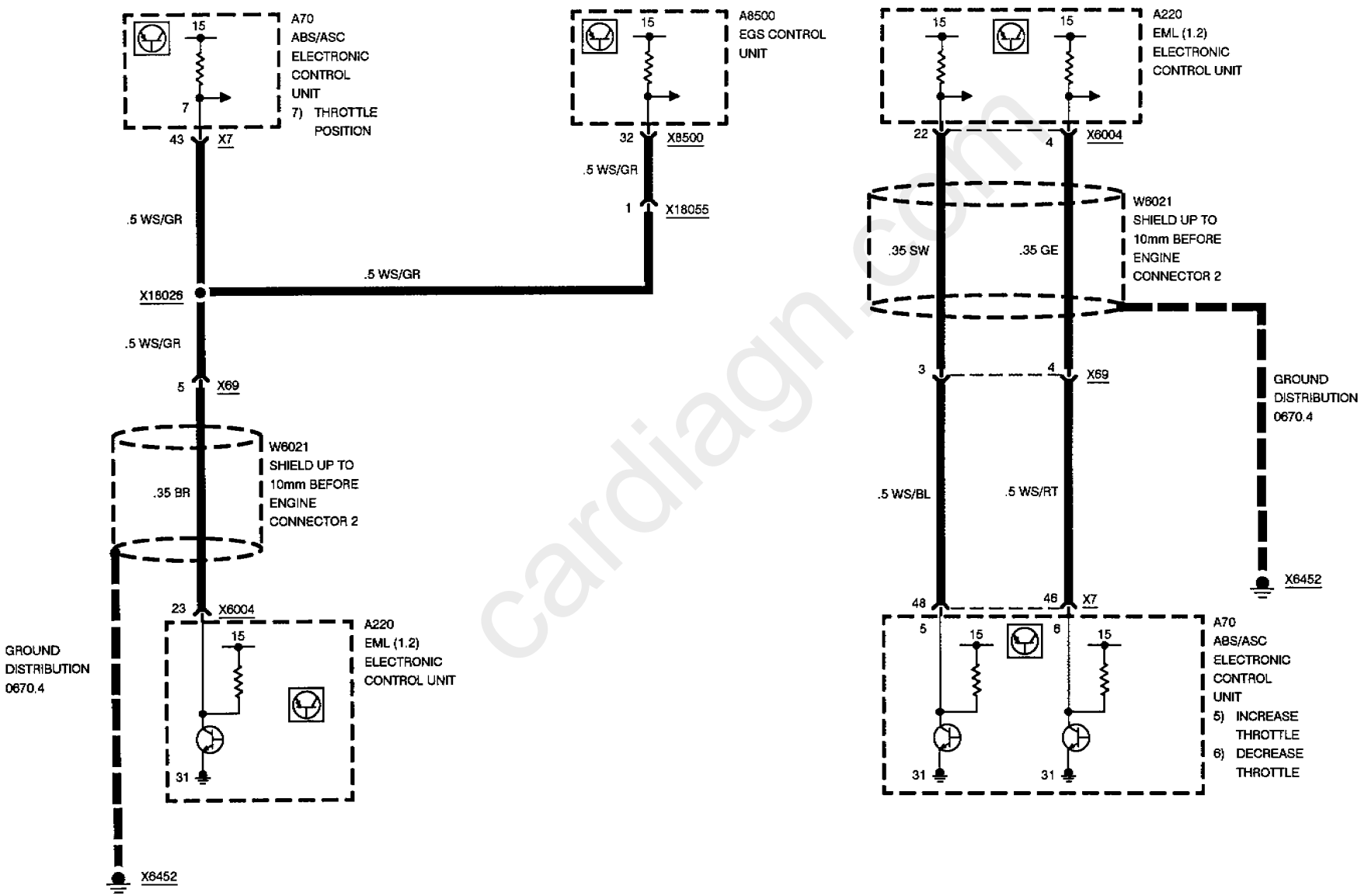

cardiagn.com

cardiagn.com

AUTOMATIC STABILITY CONTROL PLUS TRACTION (ASC + T)

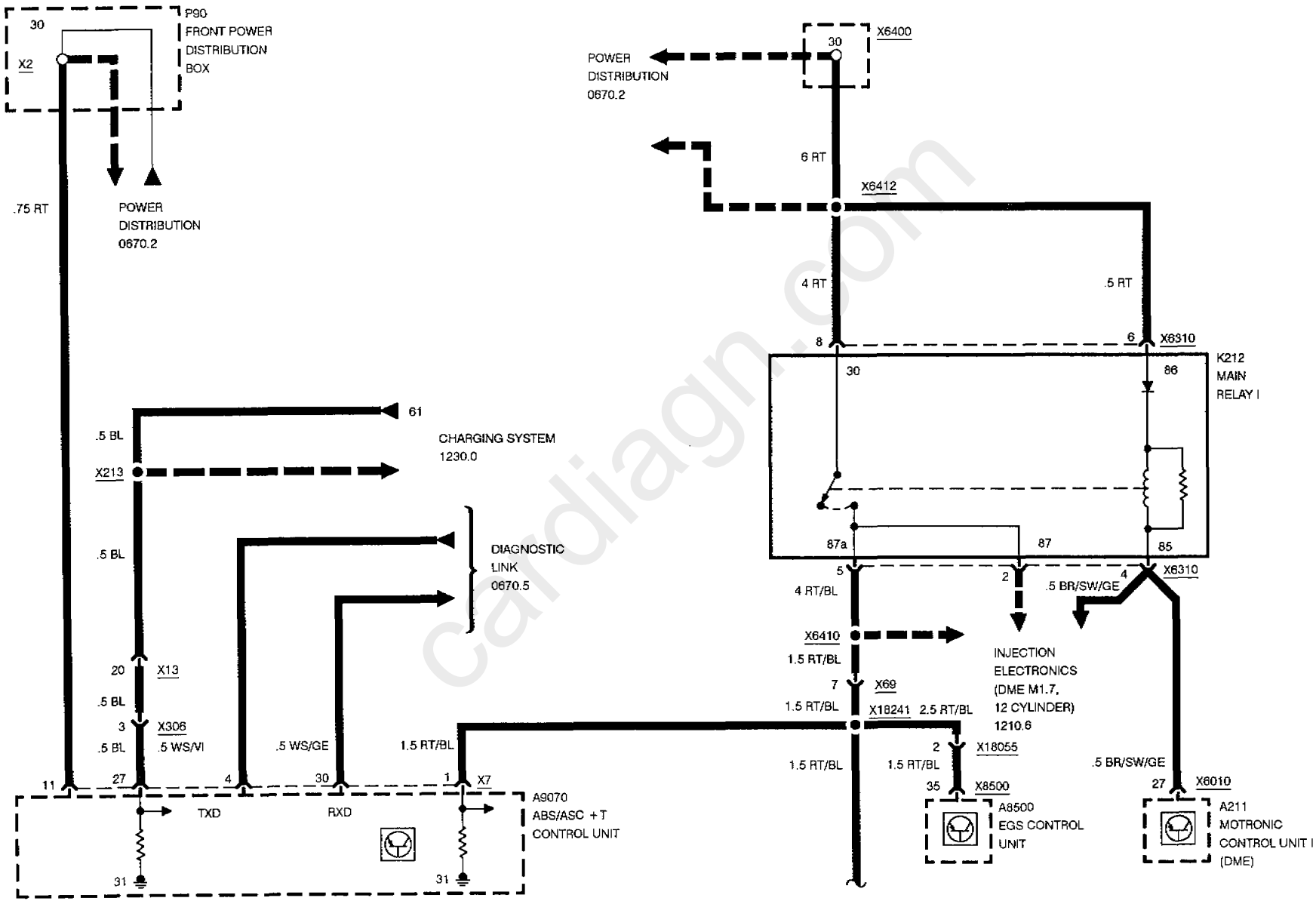

cardiagn.com

AUTOMATIC STABILITY CONTROL PLUS TRACTION (ASC + T)

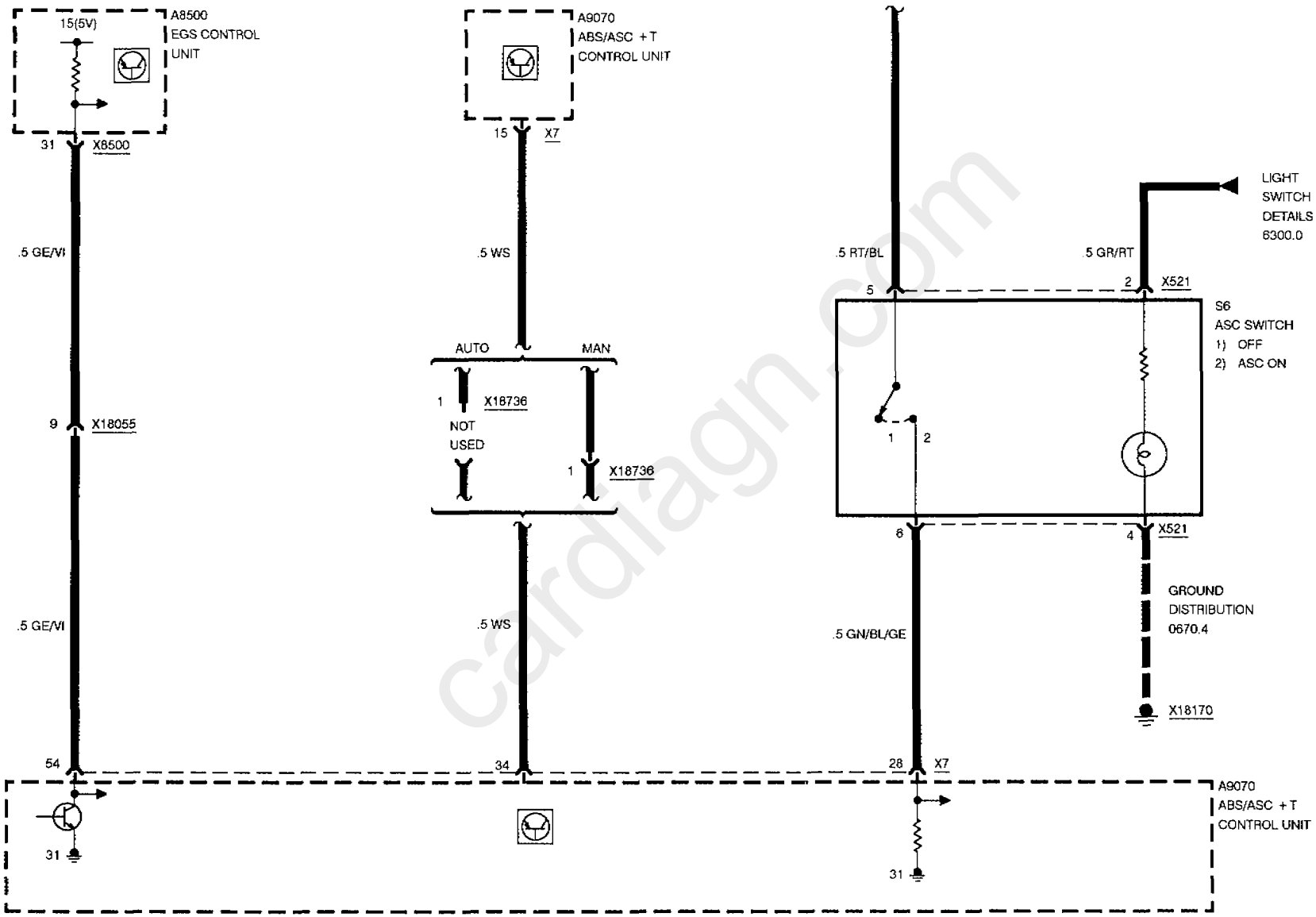

cardiagn.com

AUTOMATIC STABILITY CONTROL PLUS TRACTION (ASC + T)

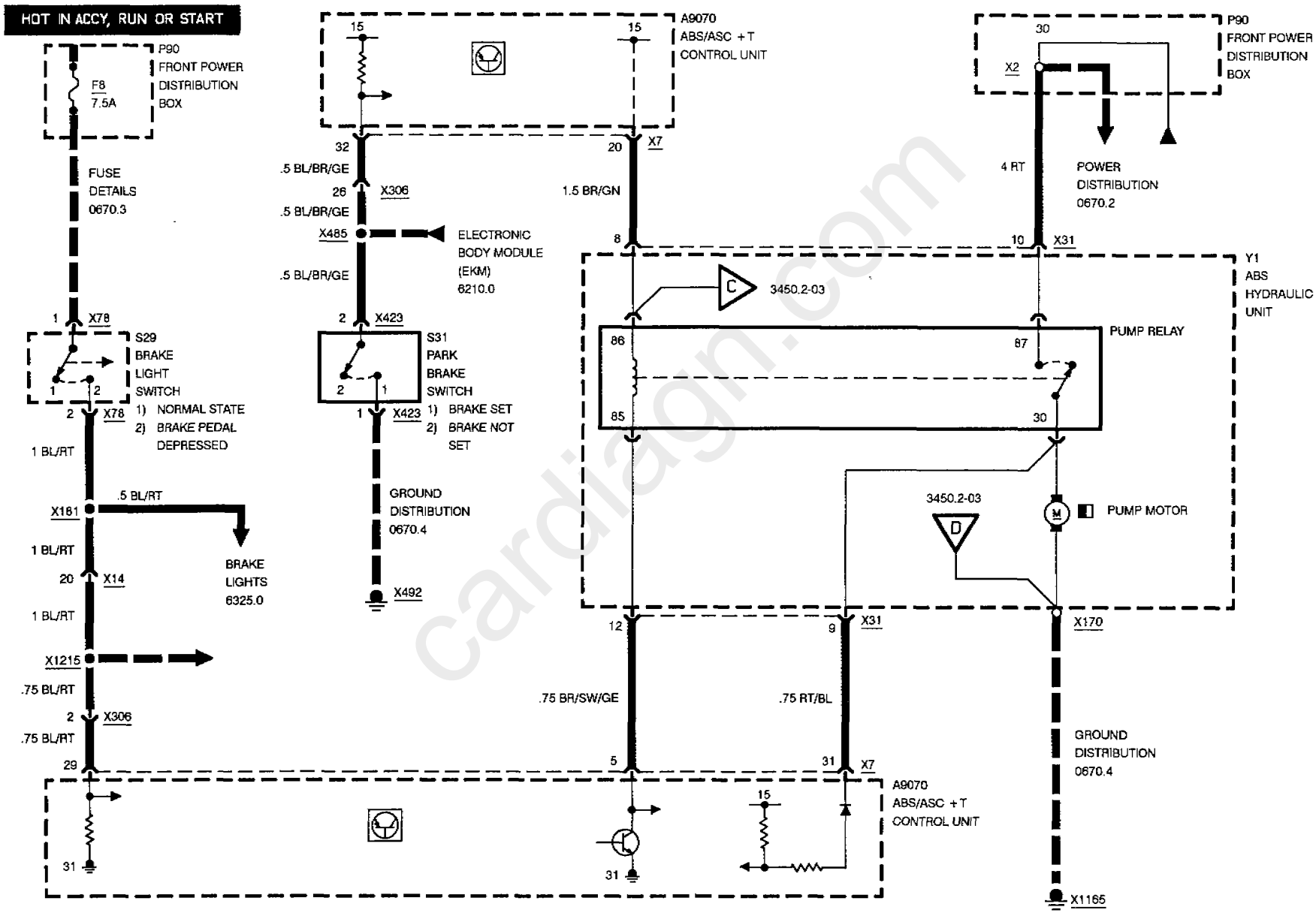

cardiagn.com

AUTOMATIC STABILITY CONTROL PLUS TRACTION (ASC + T)

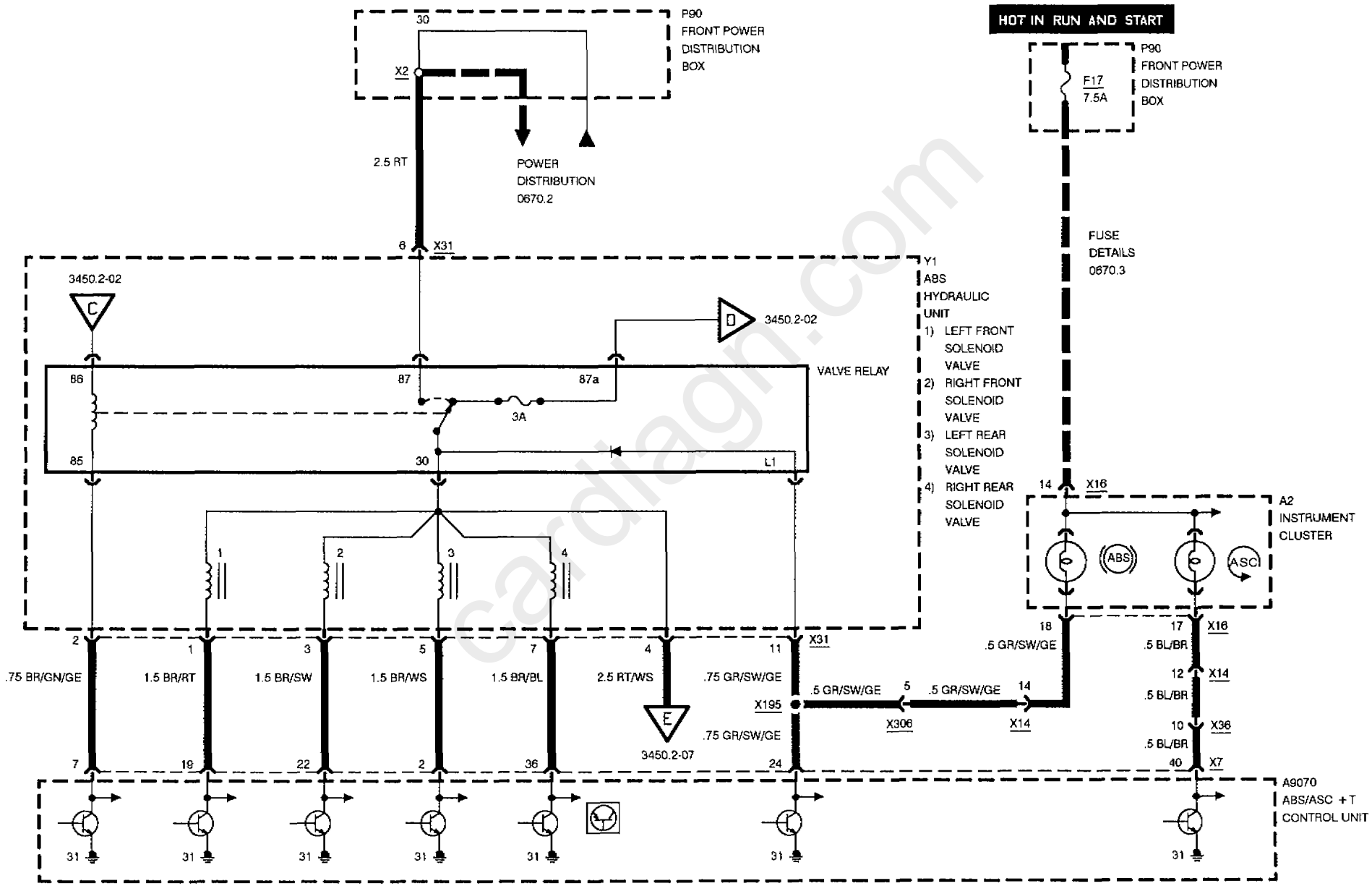

cardiagn.com

AUTOMATIC STABILITY CONTROL PLUS TRACTION (ASC + T)

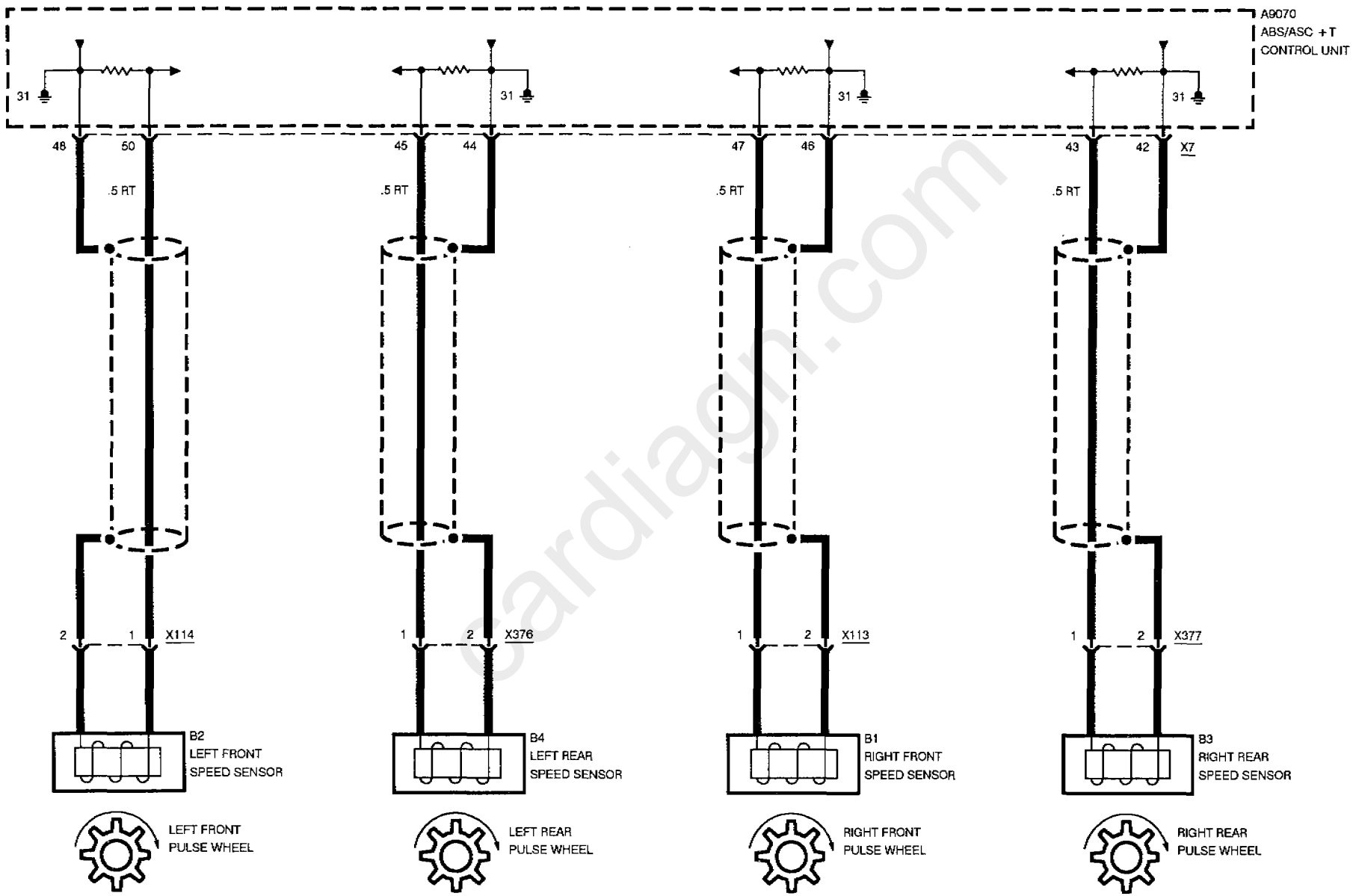

cardiagn.com

AUTOMATIC STABILITY CONTROL PLUS TRACTION (ASC + T)

DME INTERFACE

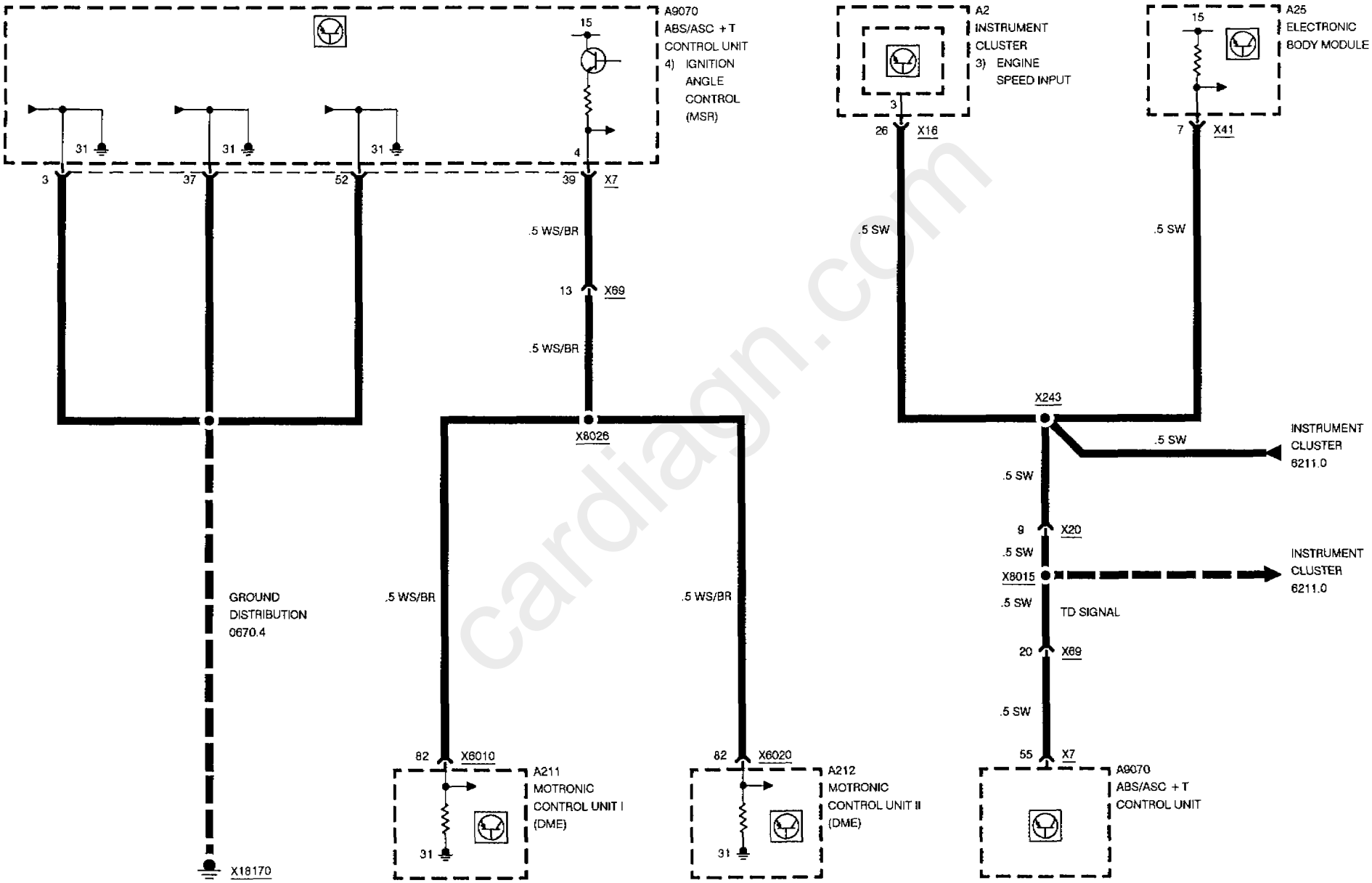

cardiagn.com

AUTOMATIC STABILITY CONTROL PLUS TRACTION (ASC + T)

EML INTERFACE

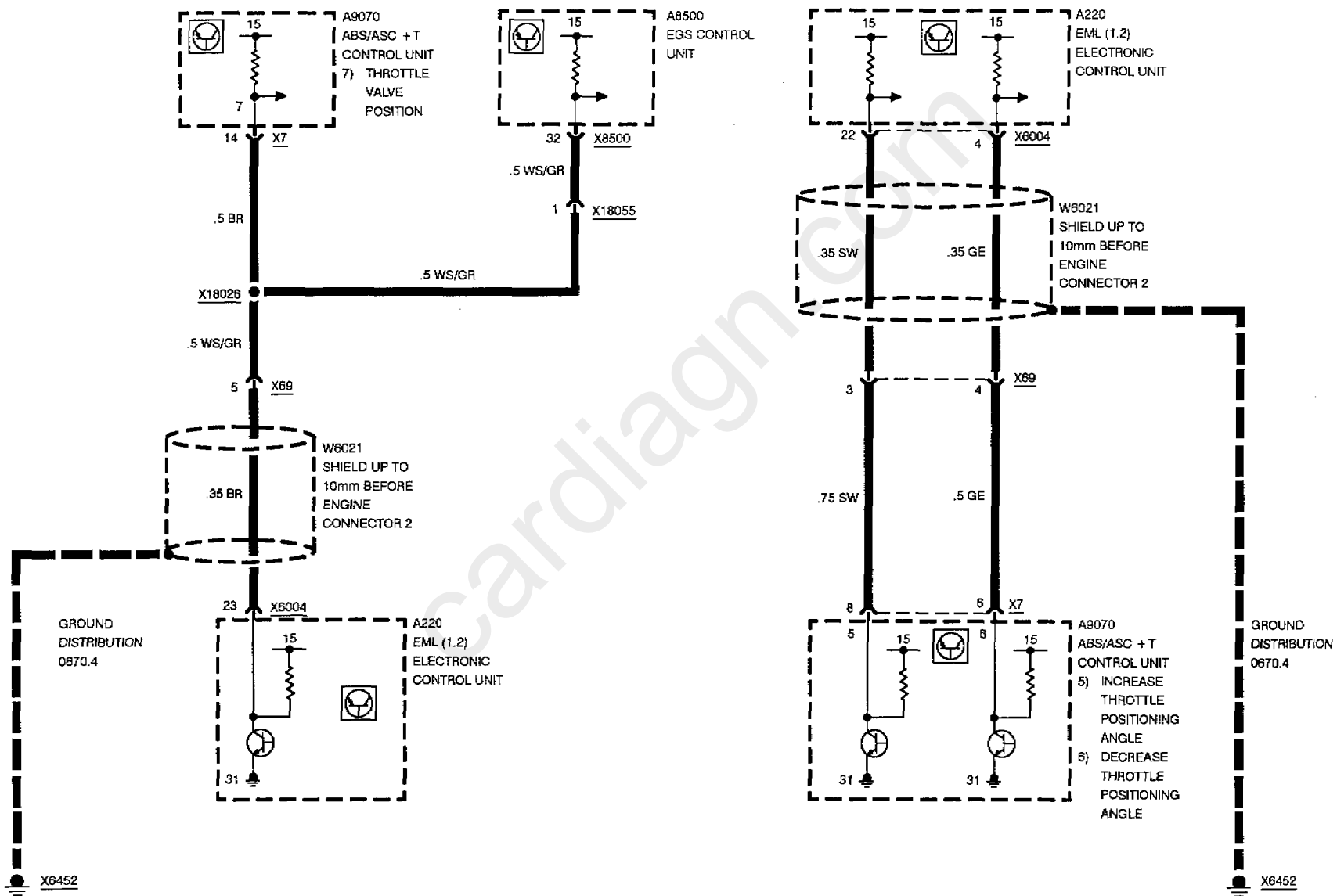

cardiagn.com

AUTOMATIC STABILITY CONTROL PLUS TRACTION (ASC + T)

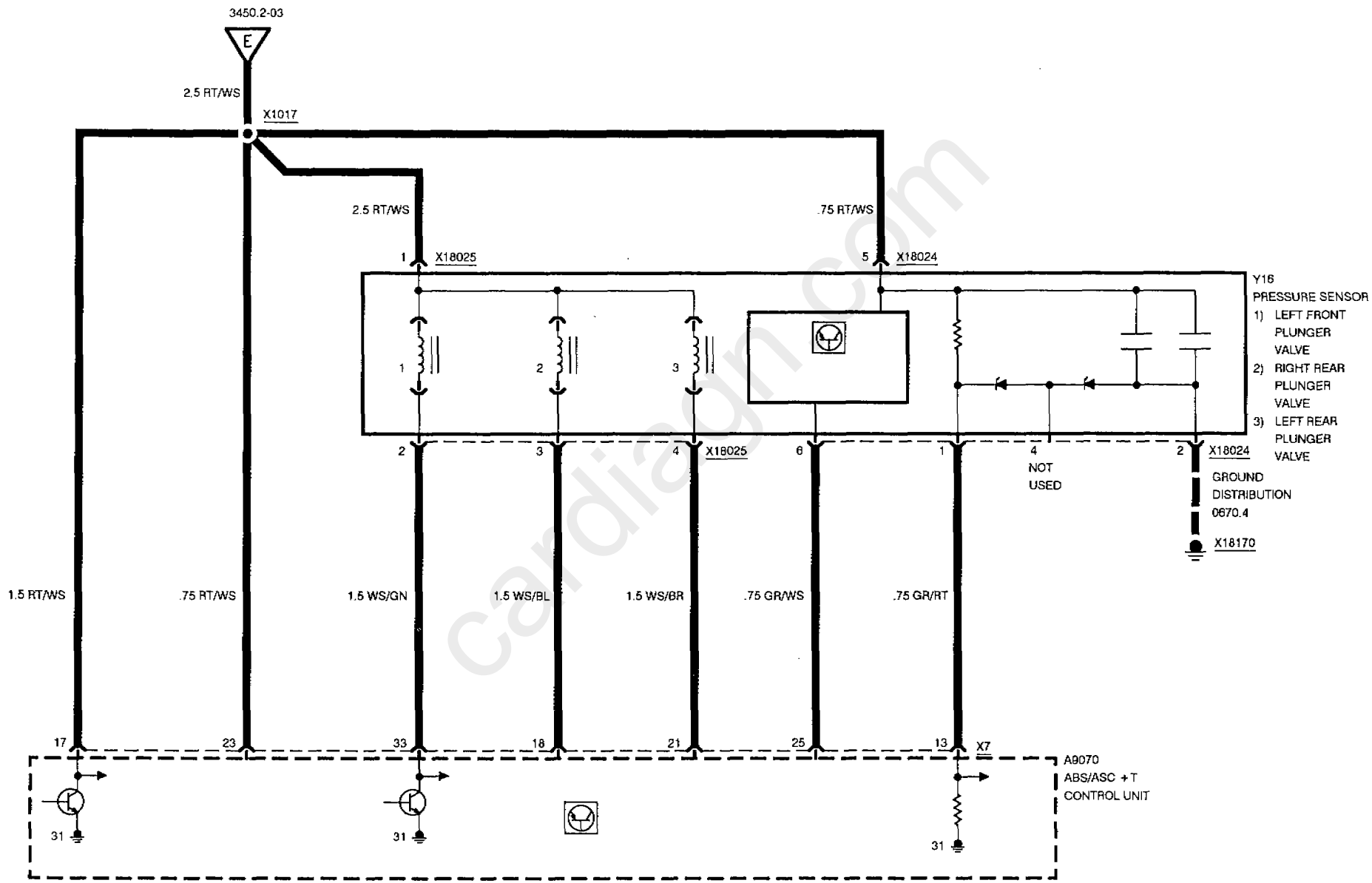

cardiagn.com

TIRE PRESSURE CONTROL (RDC)

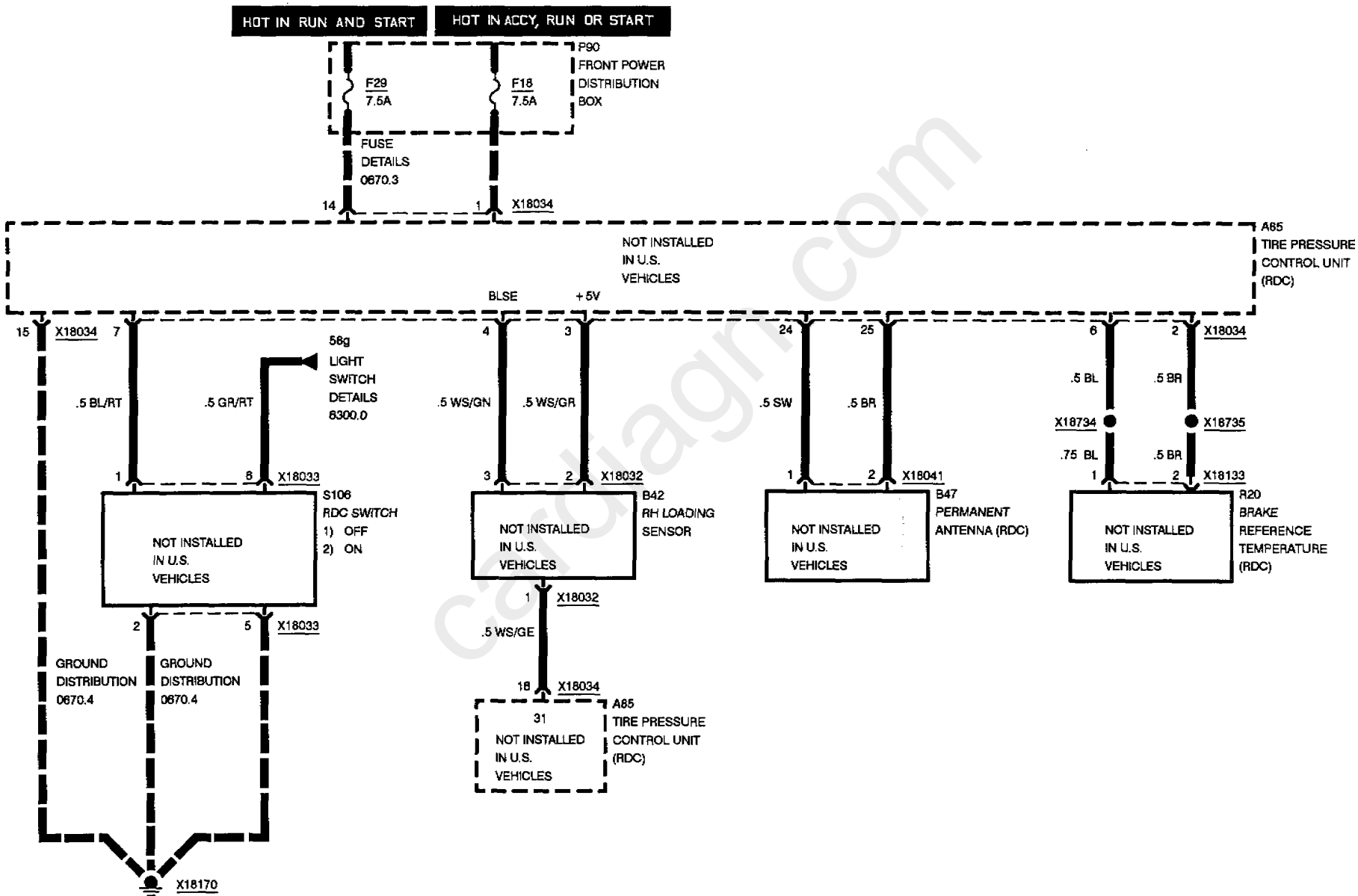

TIRE PRESSURE CONTROL (RDC)

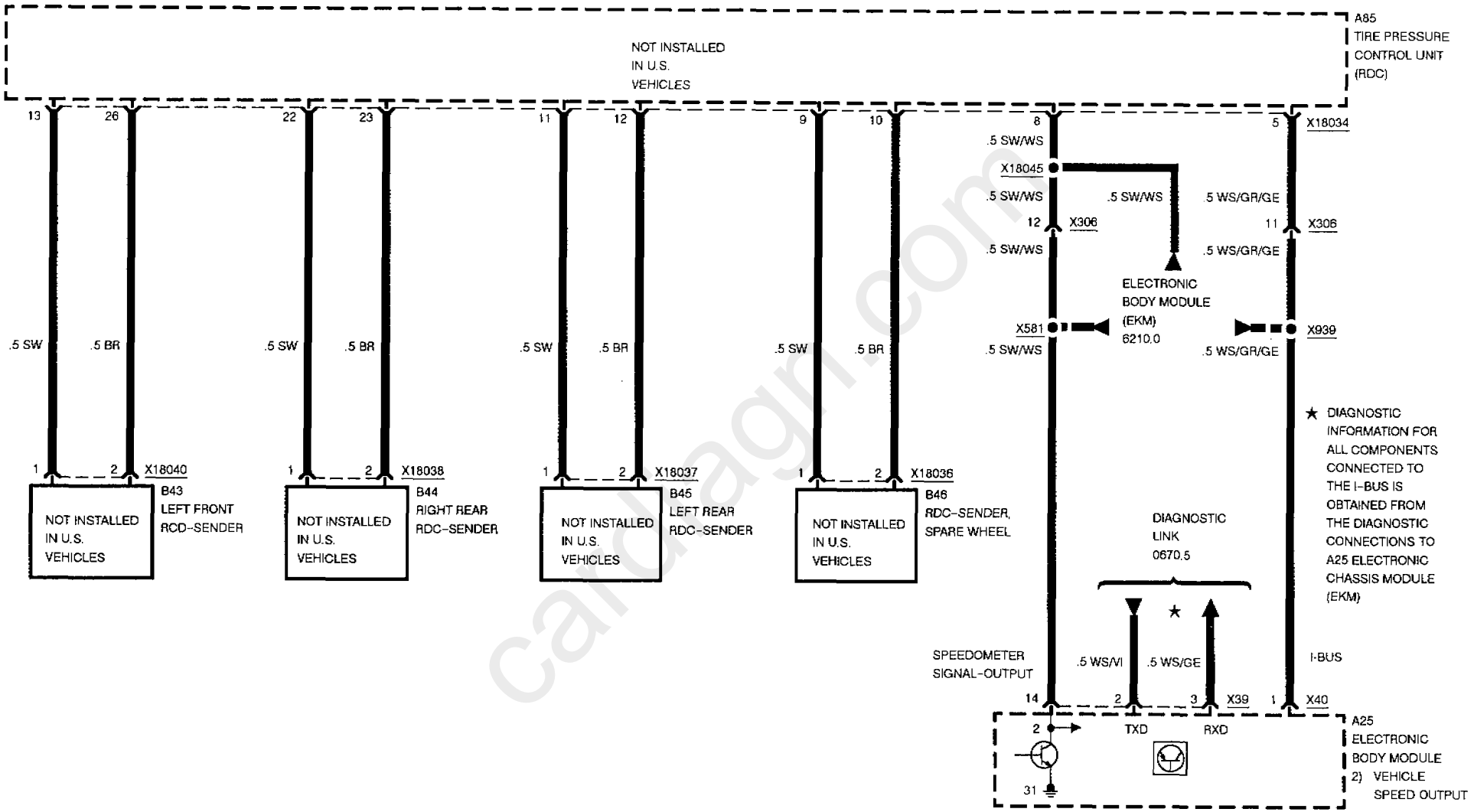

cardiagn.com

ELECTRONIC DAMPER CONTROL III (EDC III)

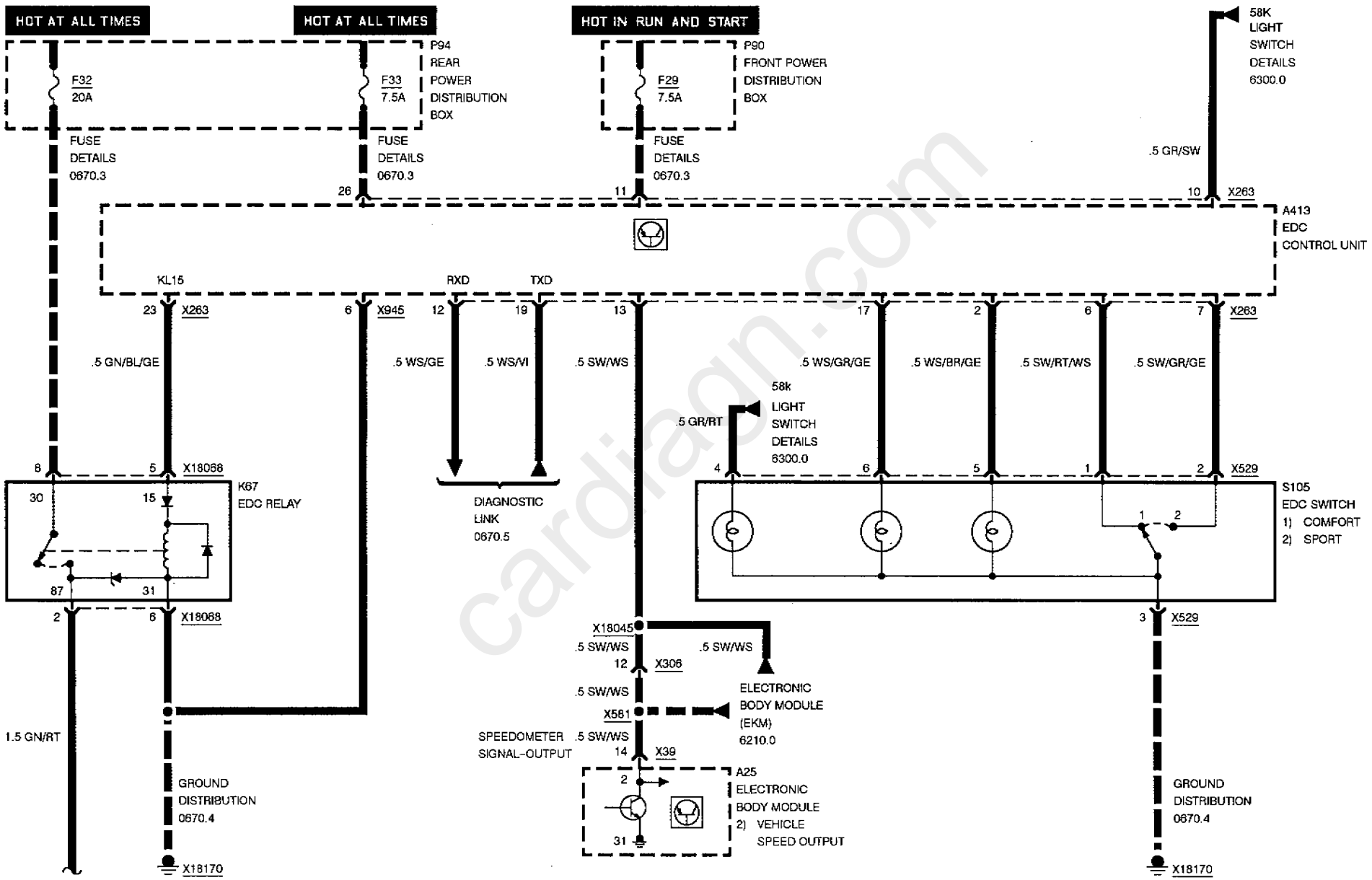

cardiagn.com

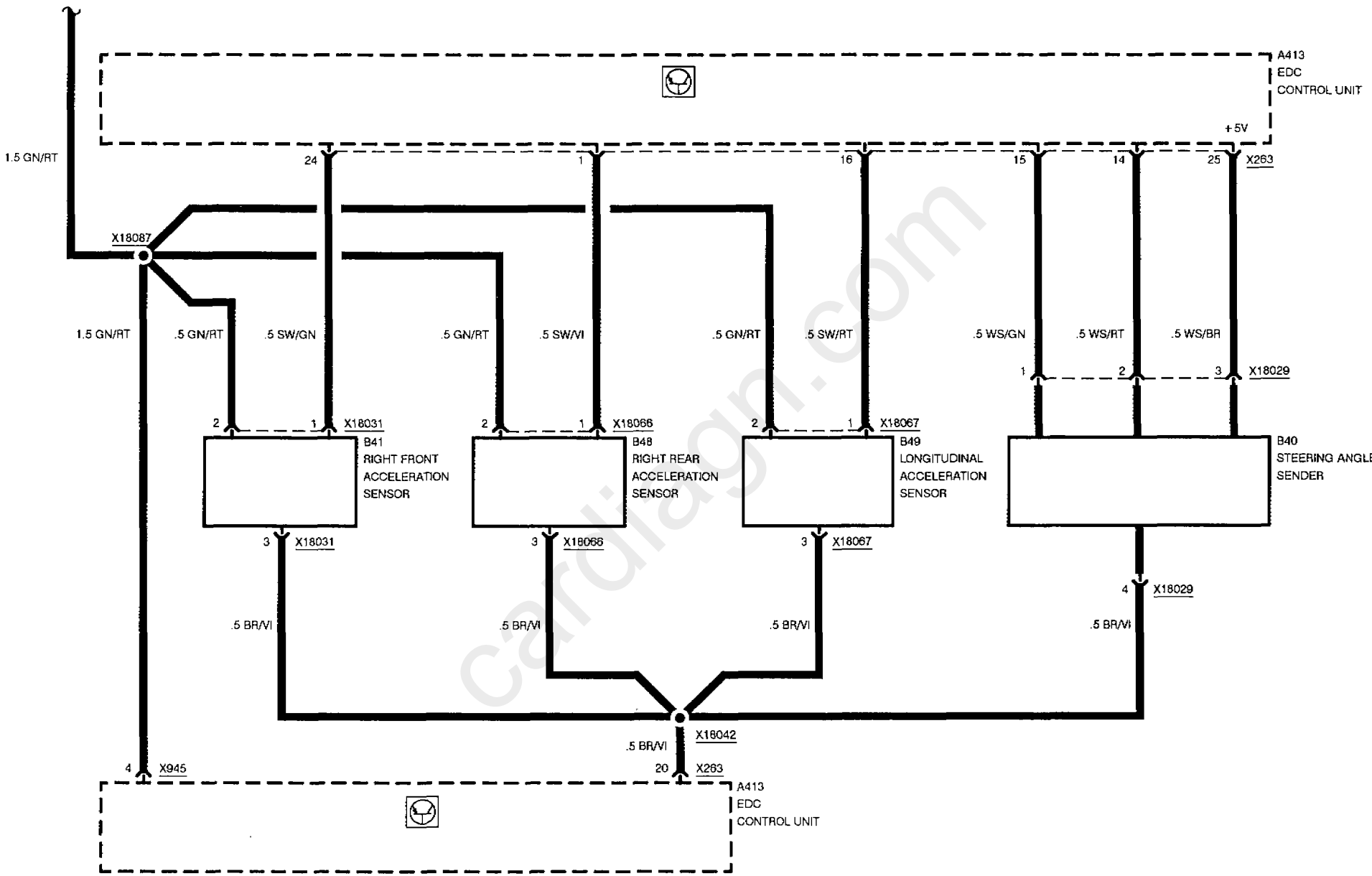

cardiagn.com

ELECTRONIC DAMPER CONTROL III (EDC III)

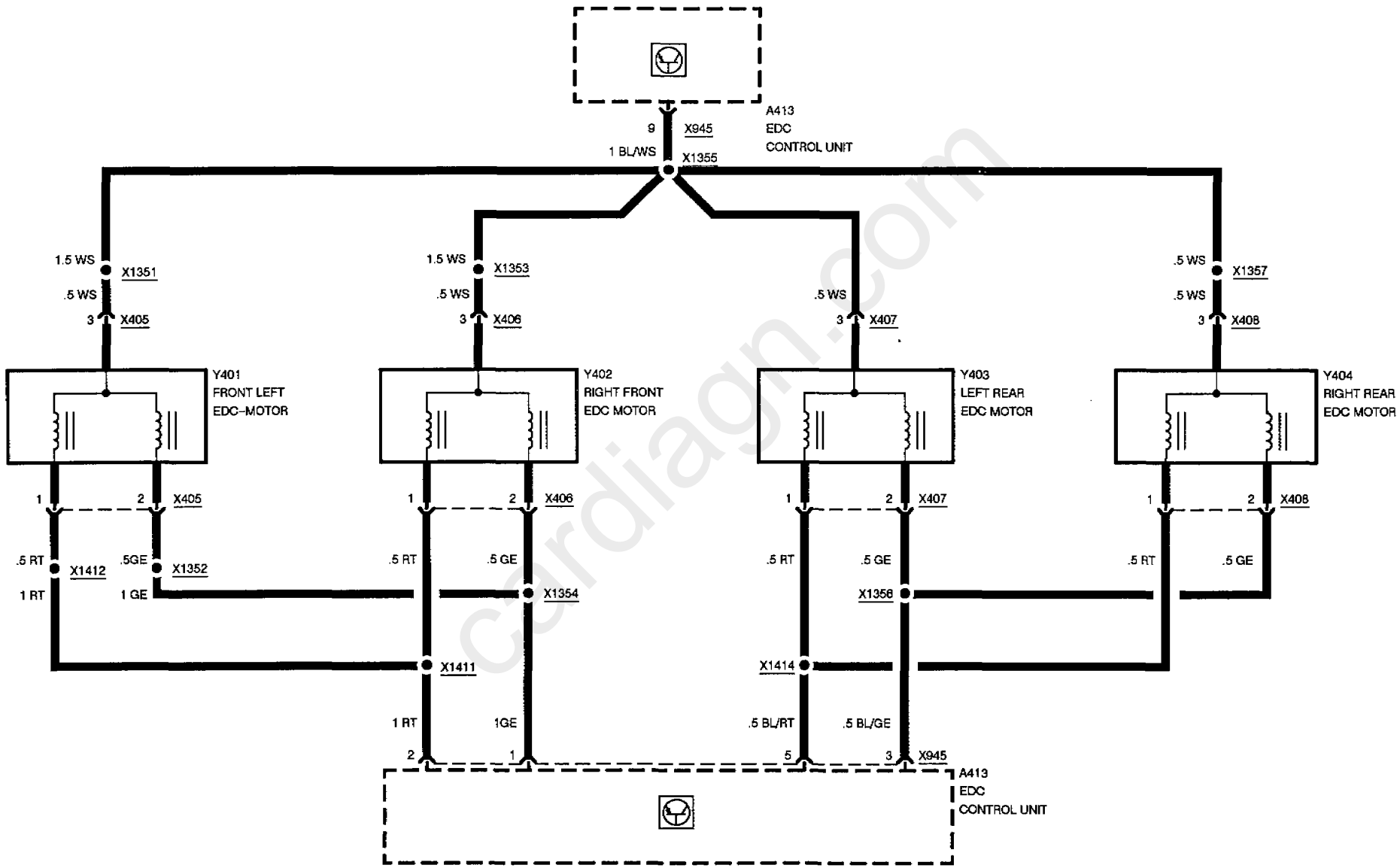

cardiagn.com

cardiagn.com

POWER MIRRORS

OUTSIDE MIRRORS

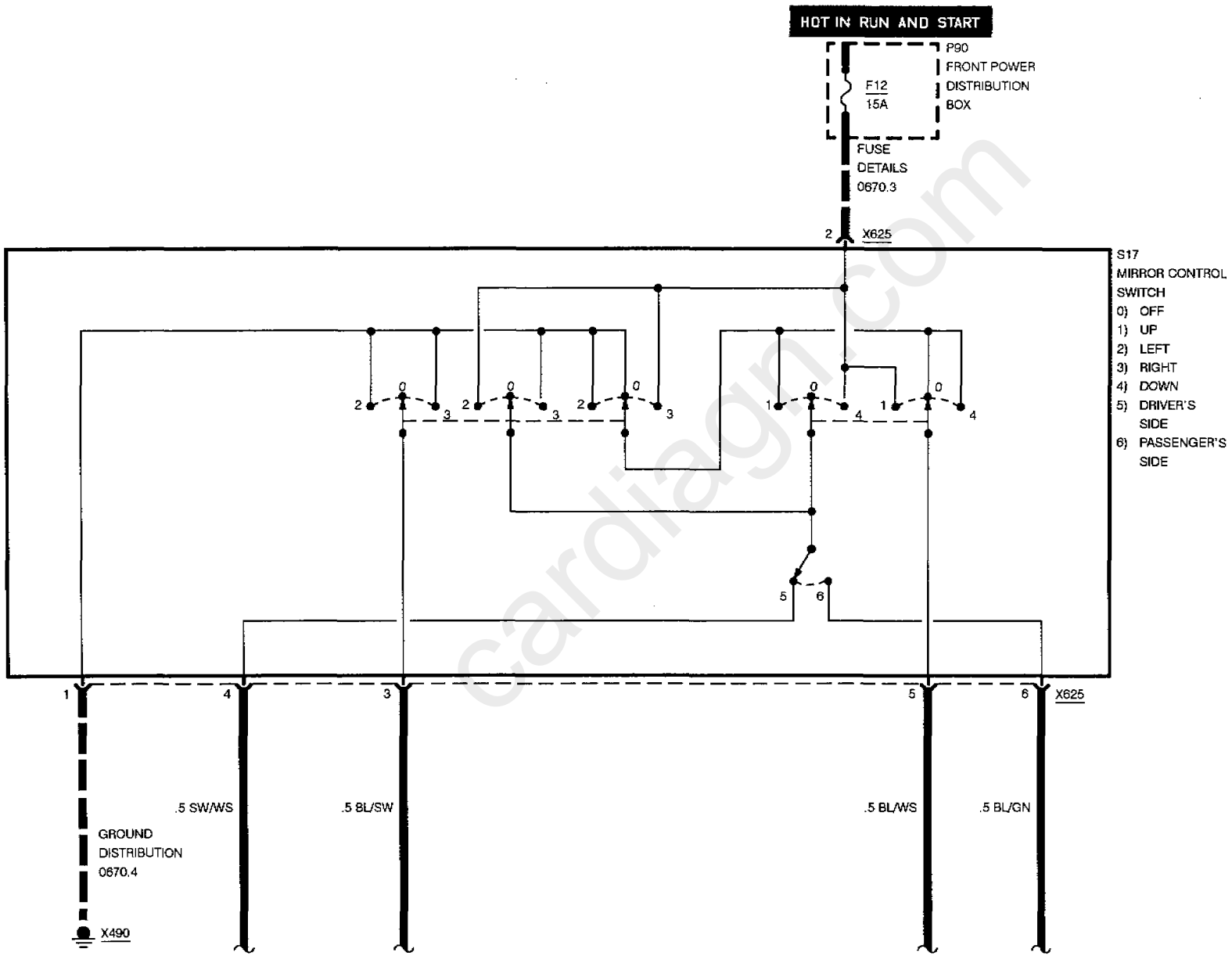

cardiagn.com

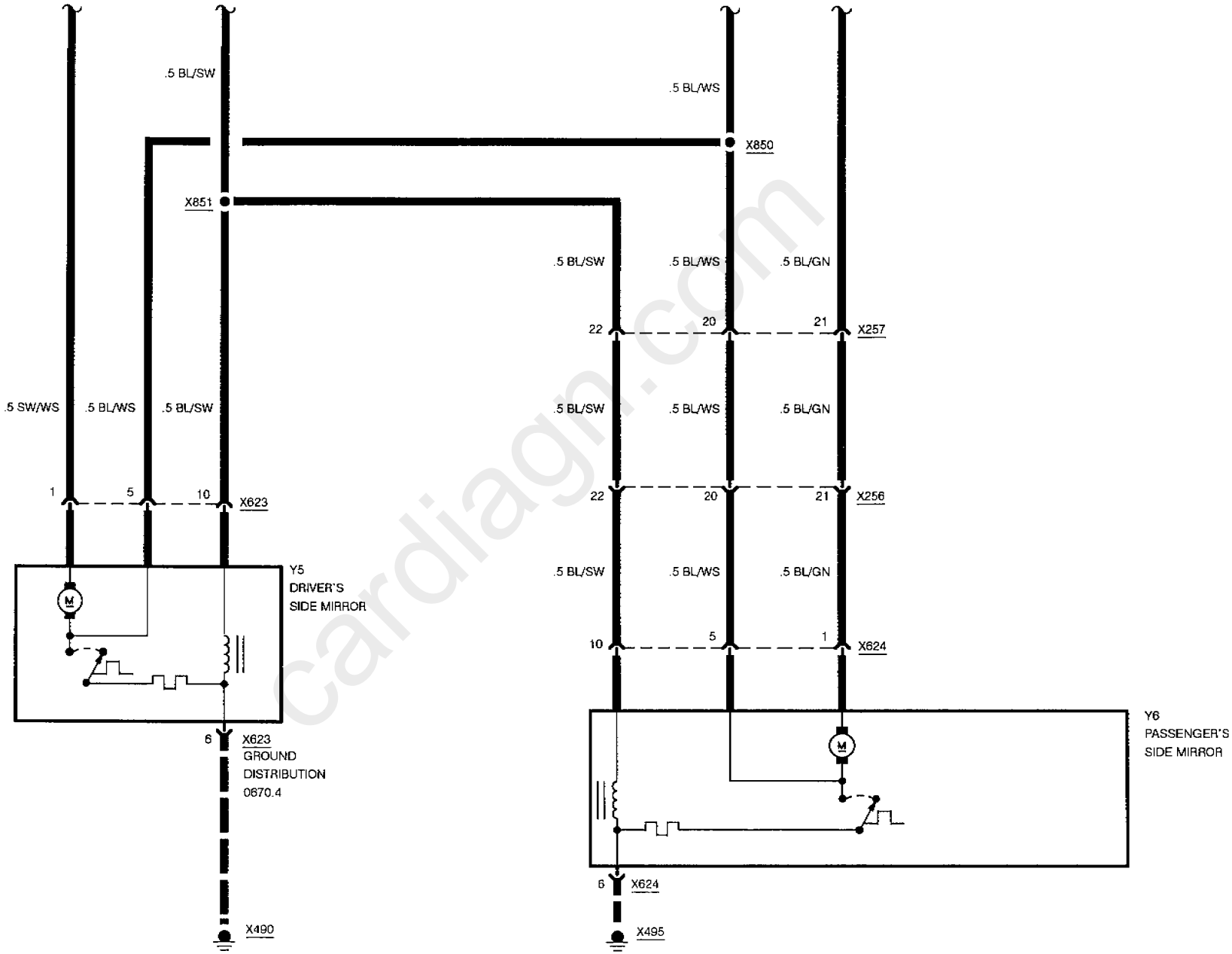

cardiagn.com

POWER MIRRORS

INSIDE MIRRORS

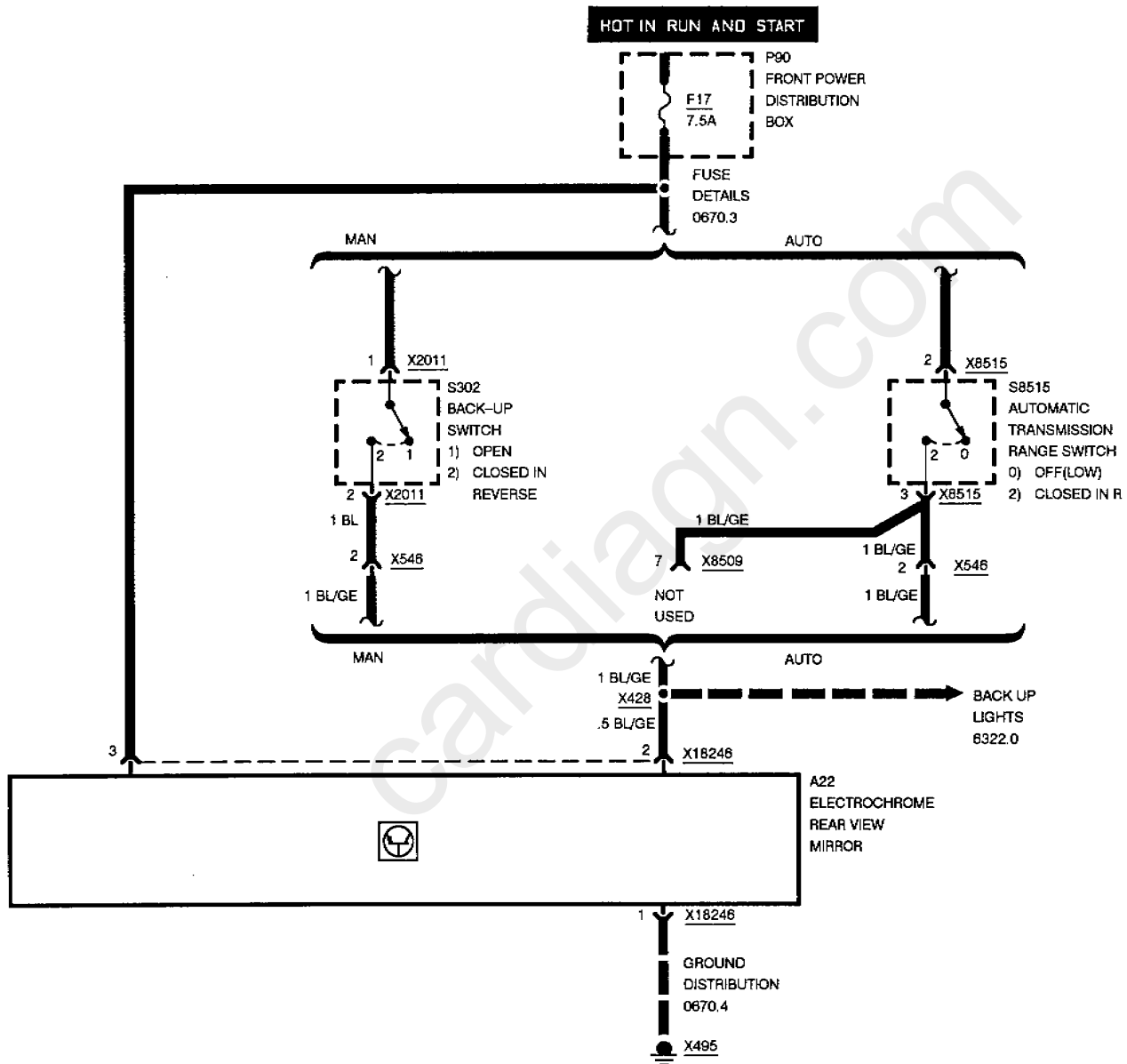

cardiagn.com

cardiagn.com

ZKE DOOR LOCK HEATING (TSH)

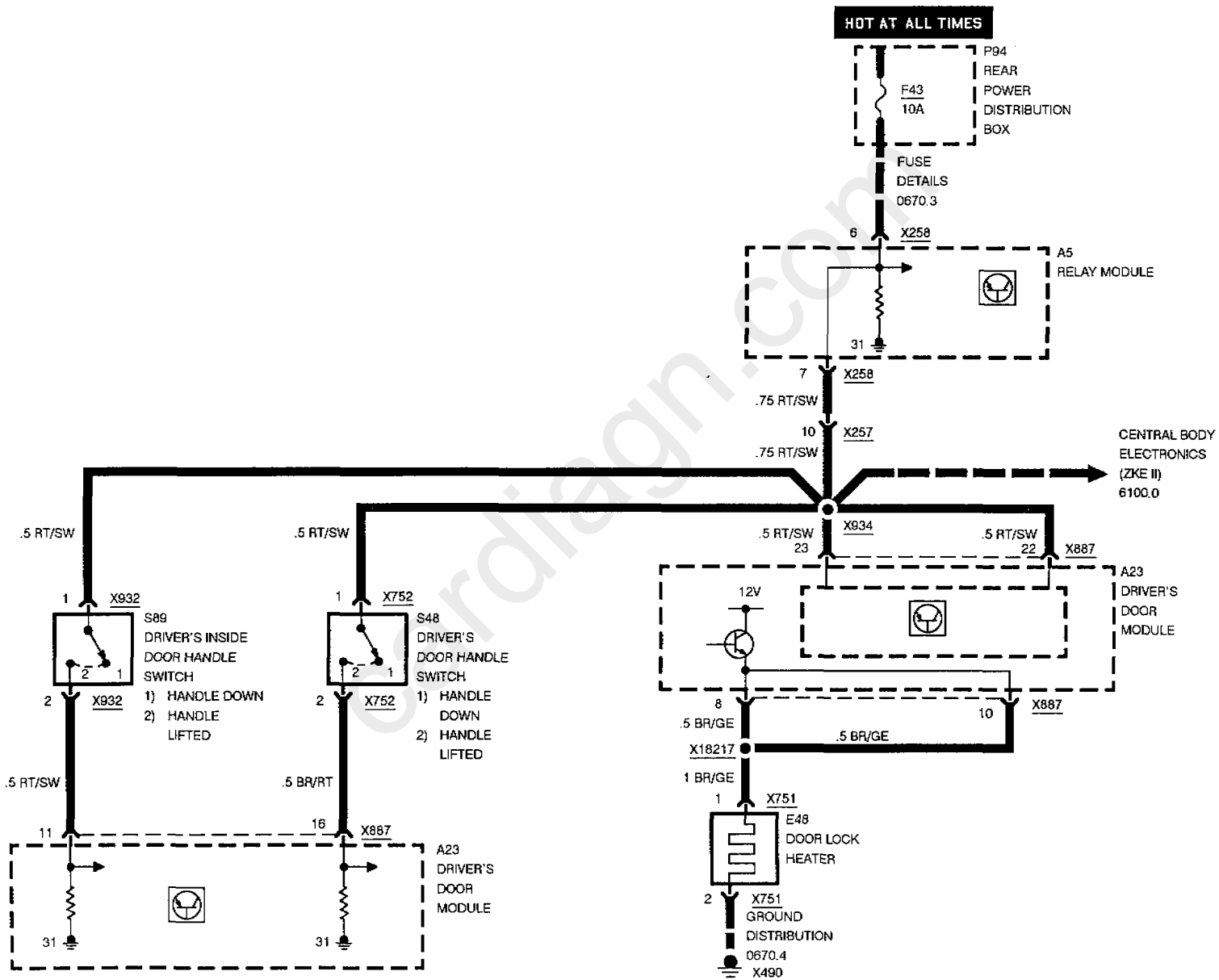

cardiagn.com

cardiagn.com

ZKE CENTRAL LOCKING (ZV)

(INPUTS)

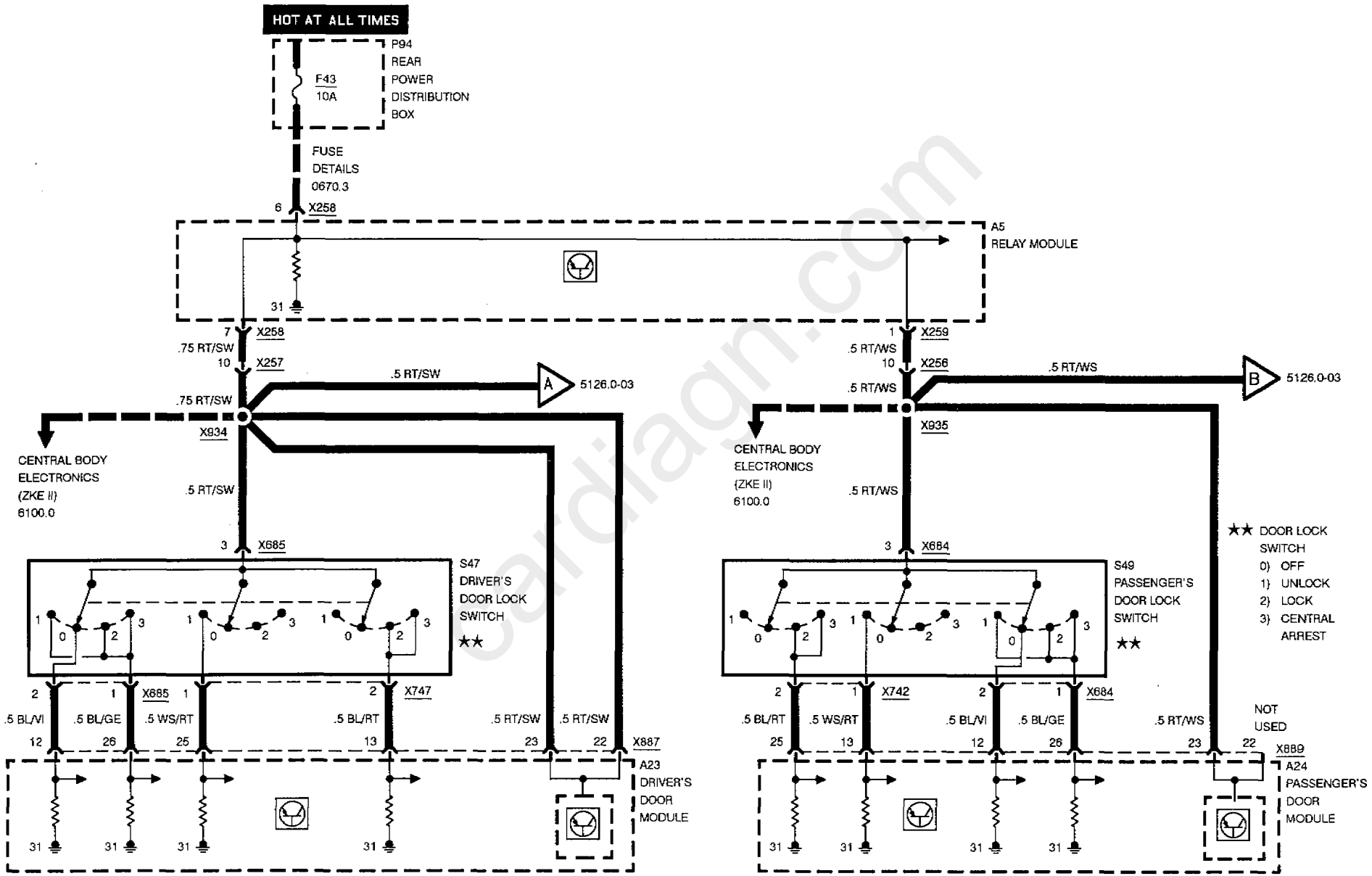

cardiagn.com

ZKE CENTRAL LOCKING (ZV)

(INPUTS)

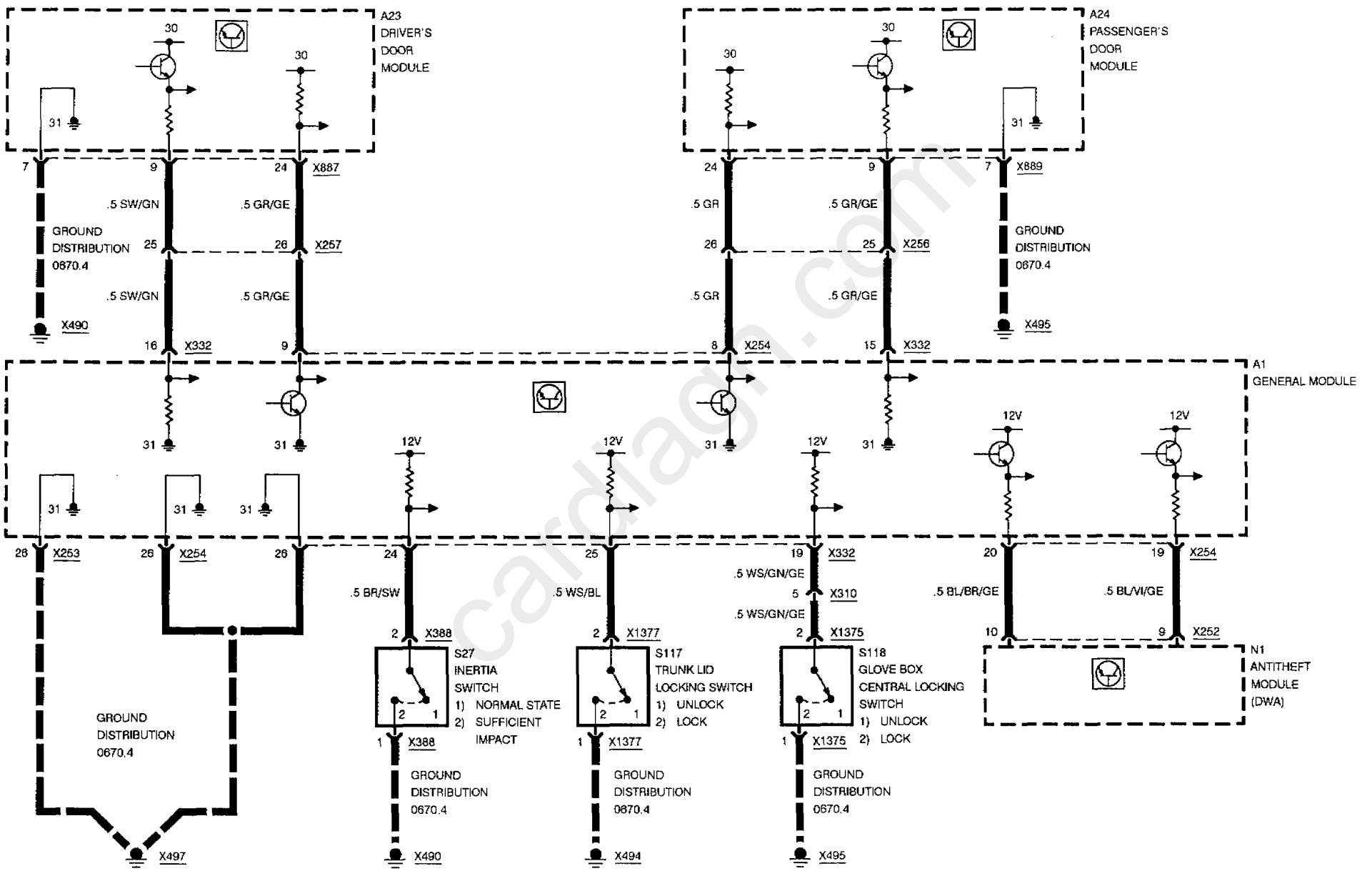

cardiagn.com

ZKE CENTRAL LOCKING (ZV)

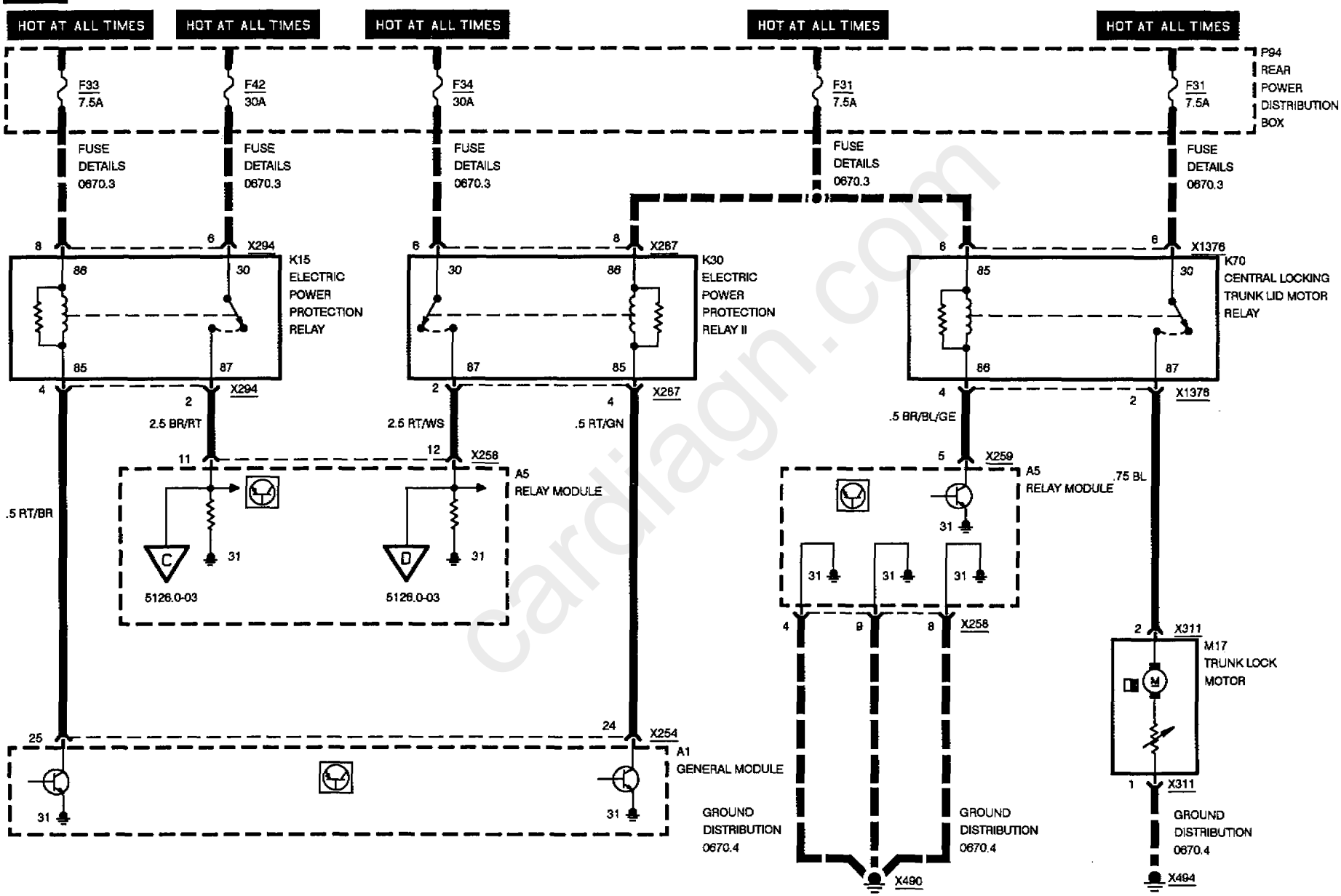

cardiagn.com

ZKE CENTRAL LOCKING (ZV)

(OUTPUTS)

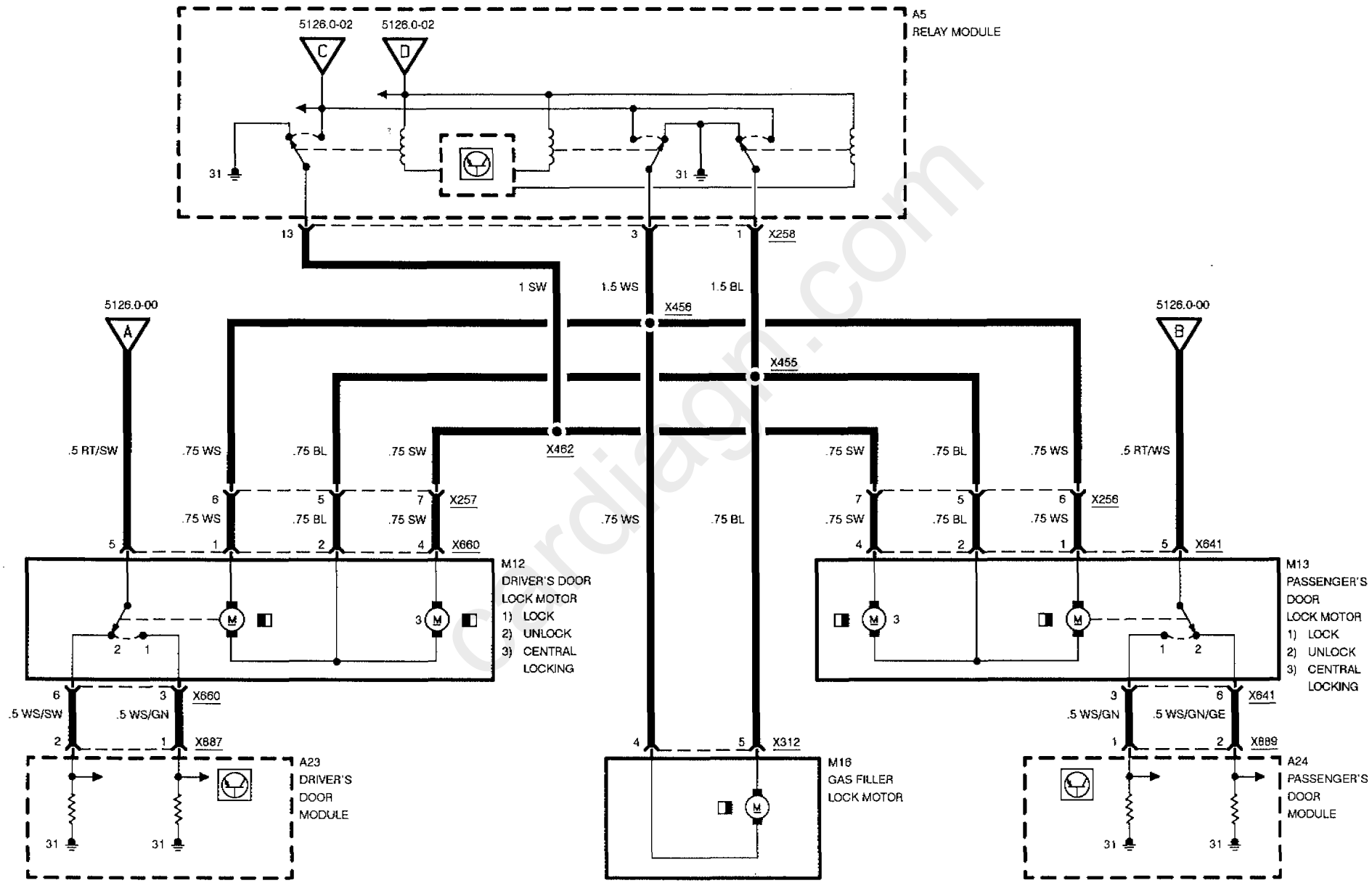

Cardiagn.com

ZKE POWER WINDOWS (FH)

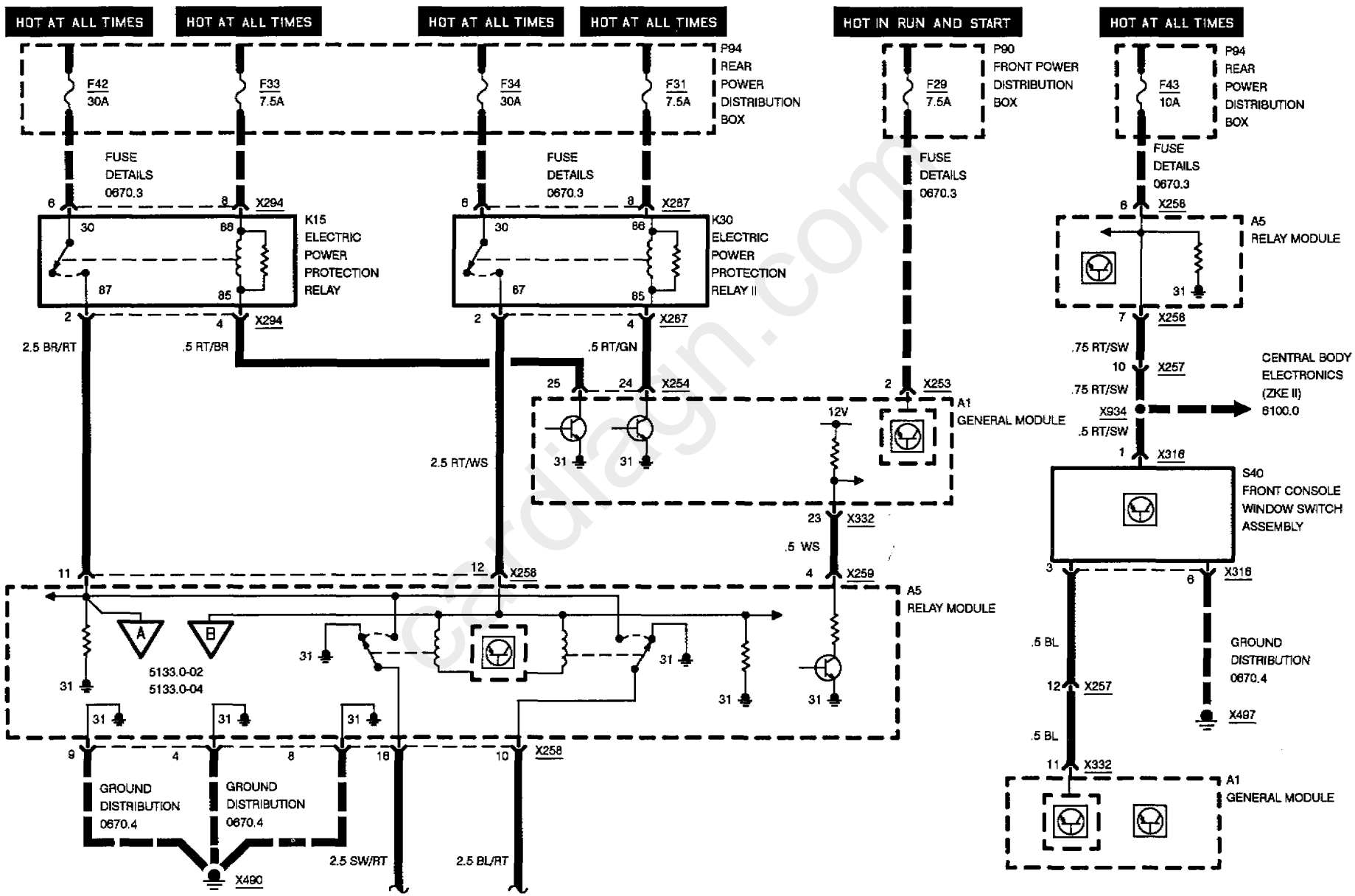

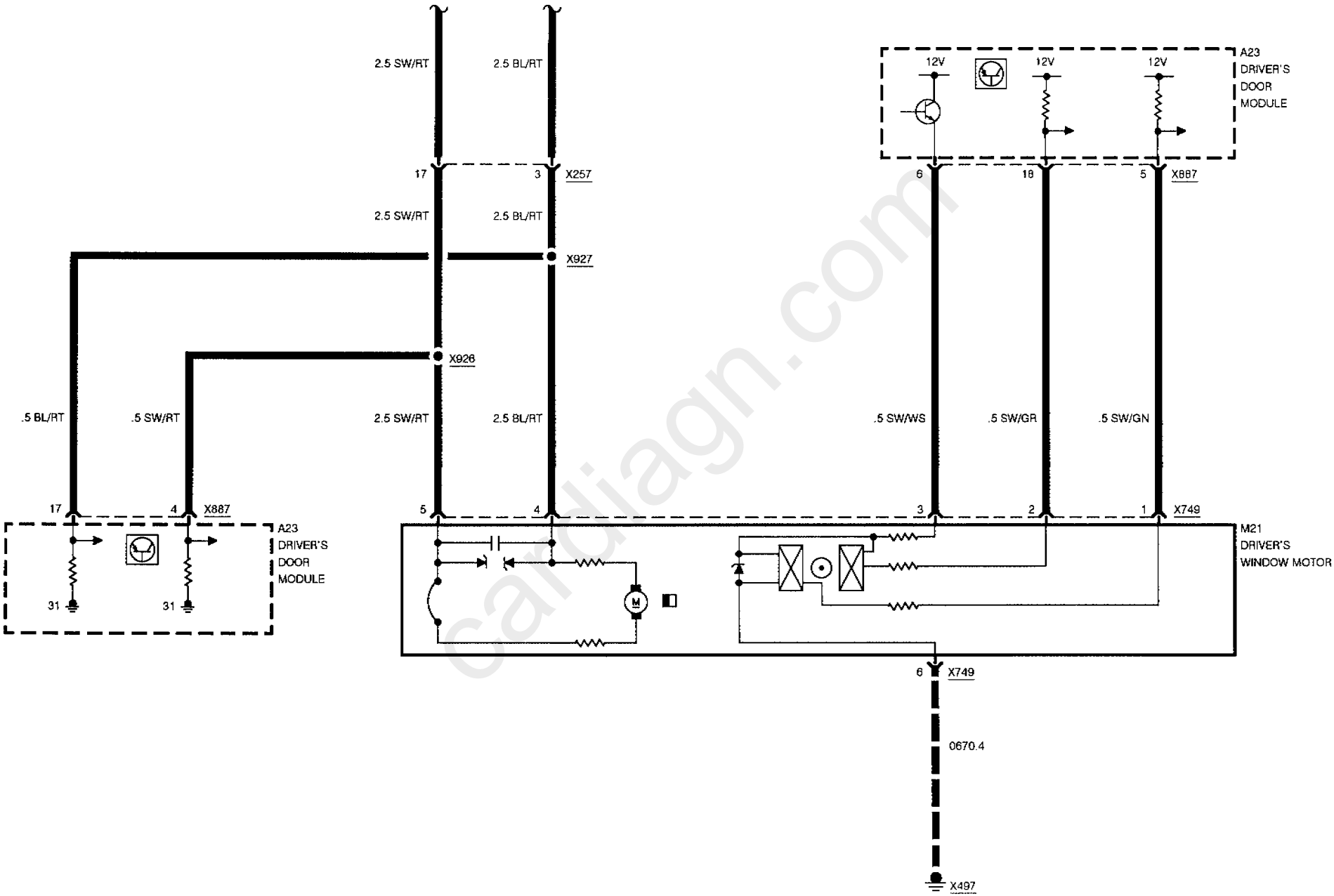

cardiagn.com

ZKE POWER WINDOWS (FH)

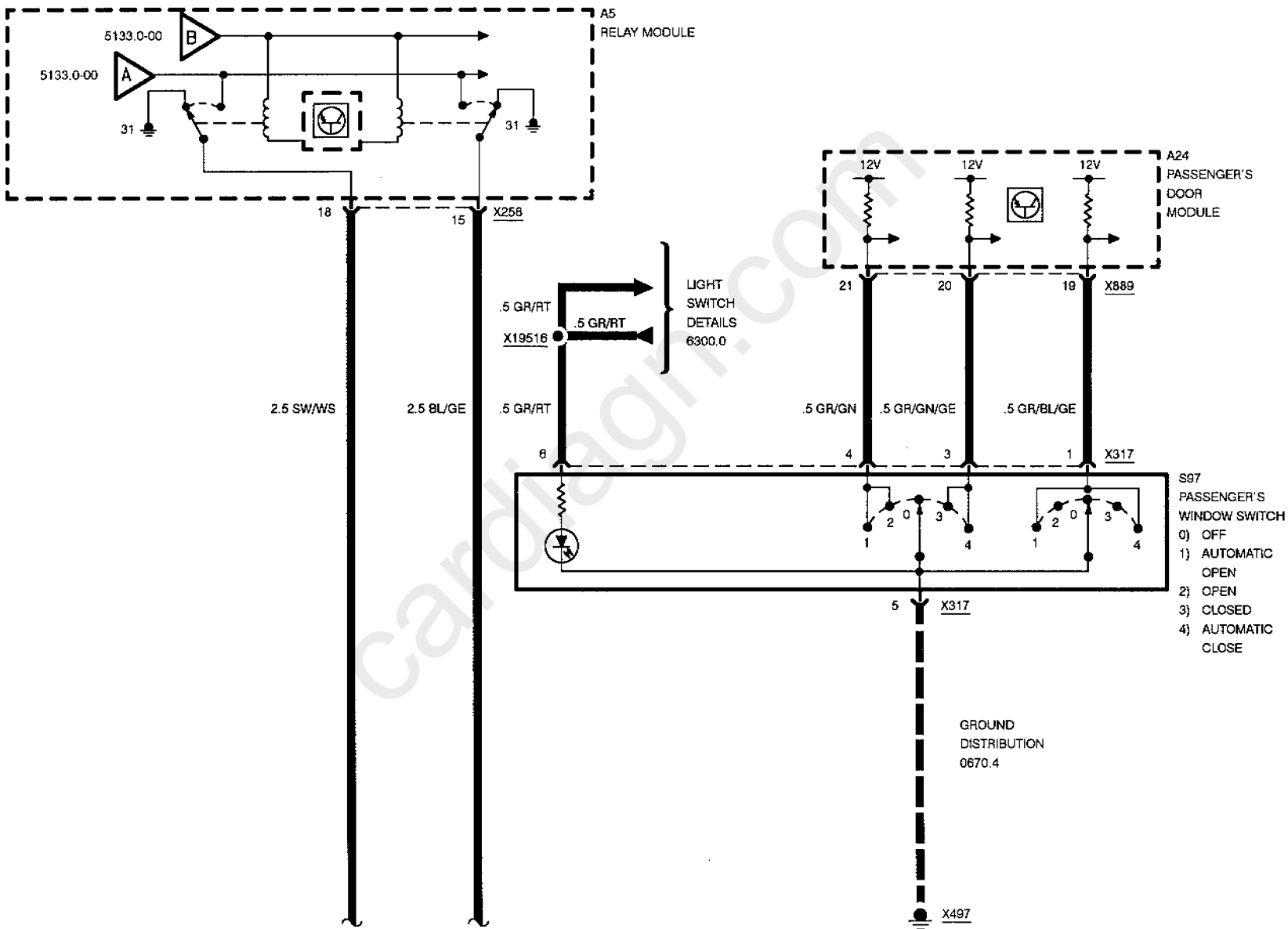

cardiagn.com

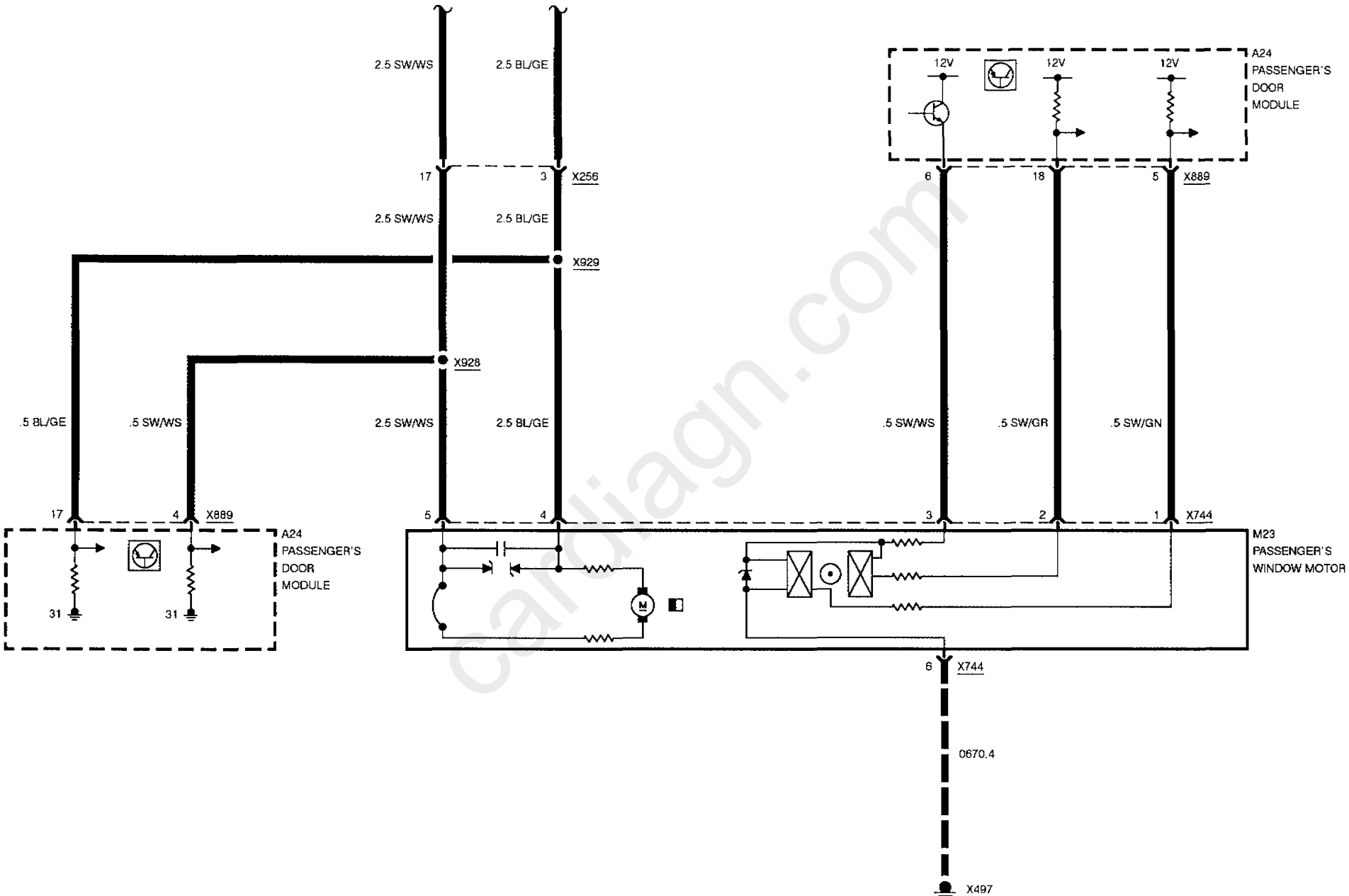

cardiagn.com

ZKE POWER WINDOWS (FH)

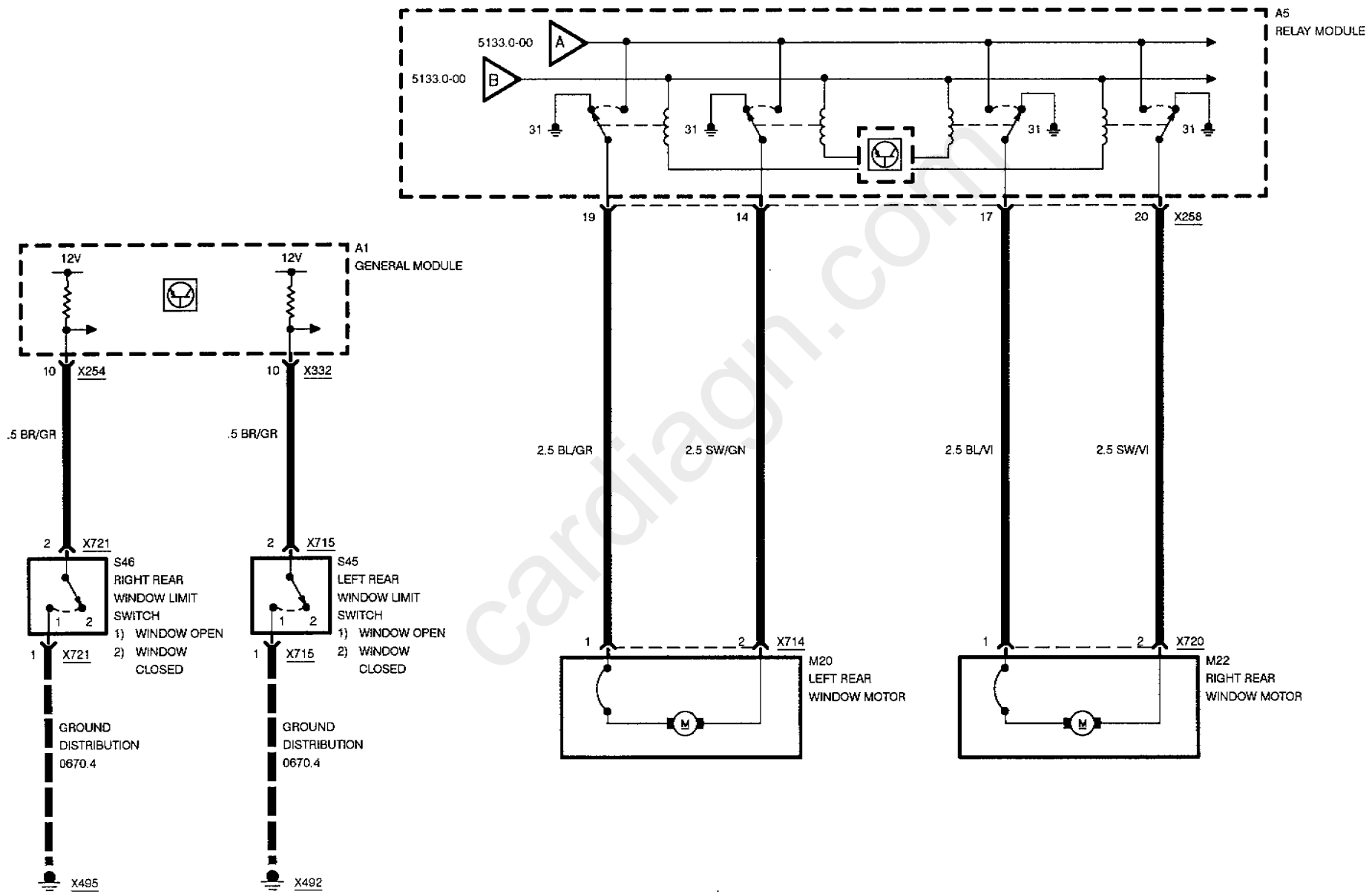

cardiagn.com

cardiagn.com

POWER SUN SHADES

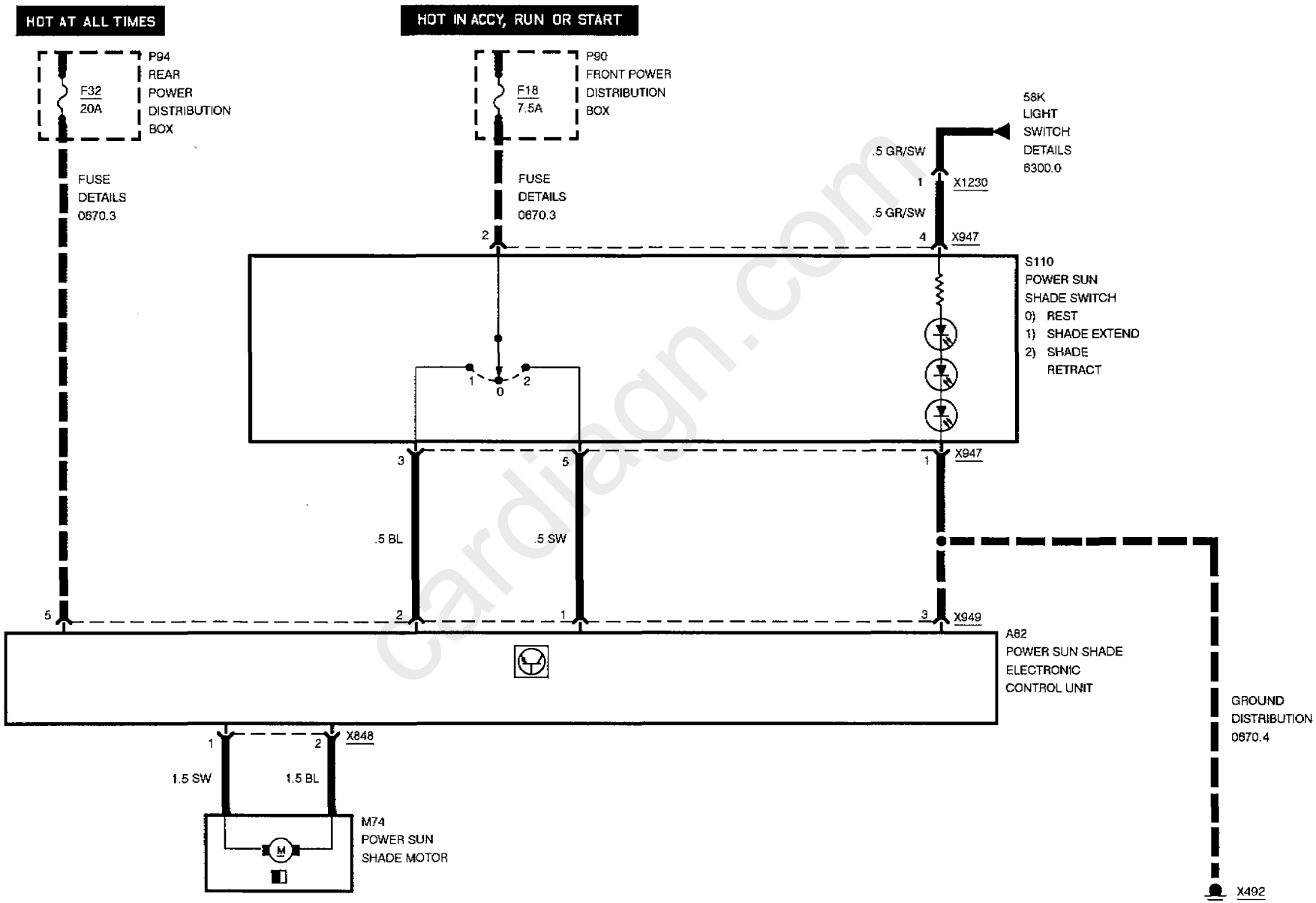

cardiagn.com

cardiagn.com

POWER SEATS

DRIVER'S SEAT

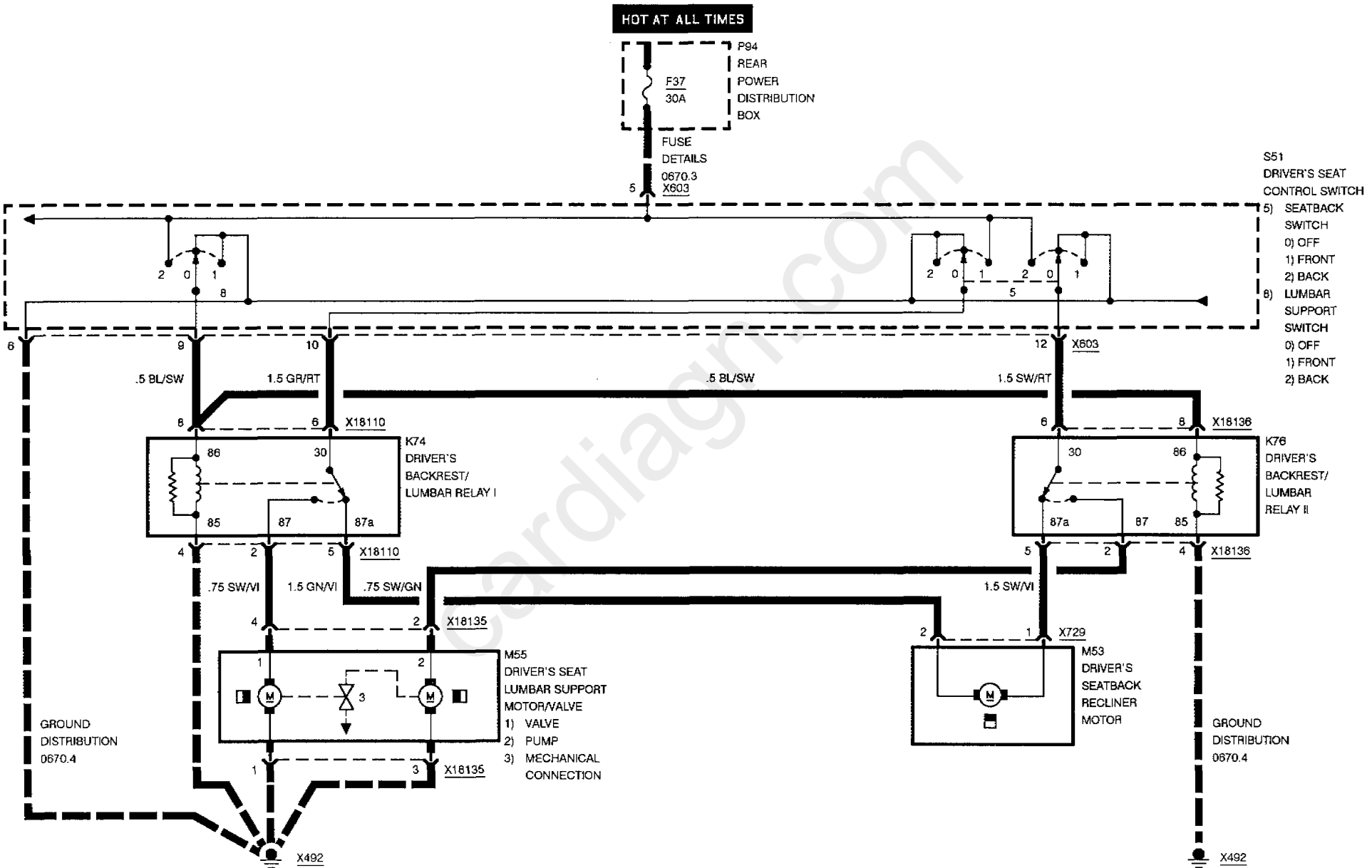

cardiagn.com

POWER SEATS

DRIVER'S SEAT

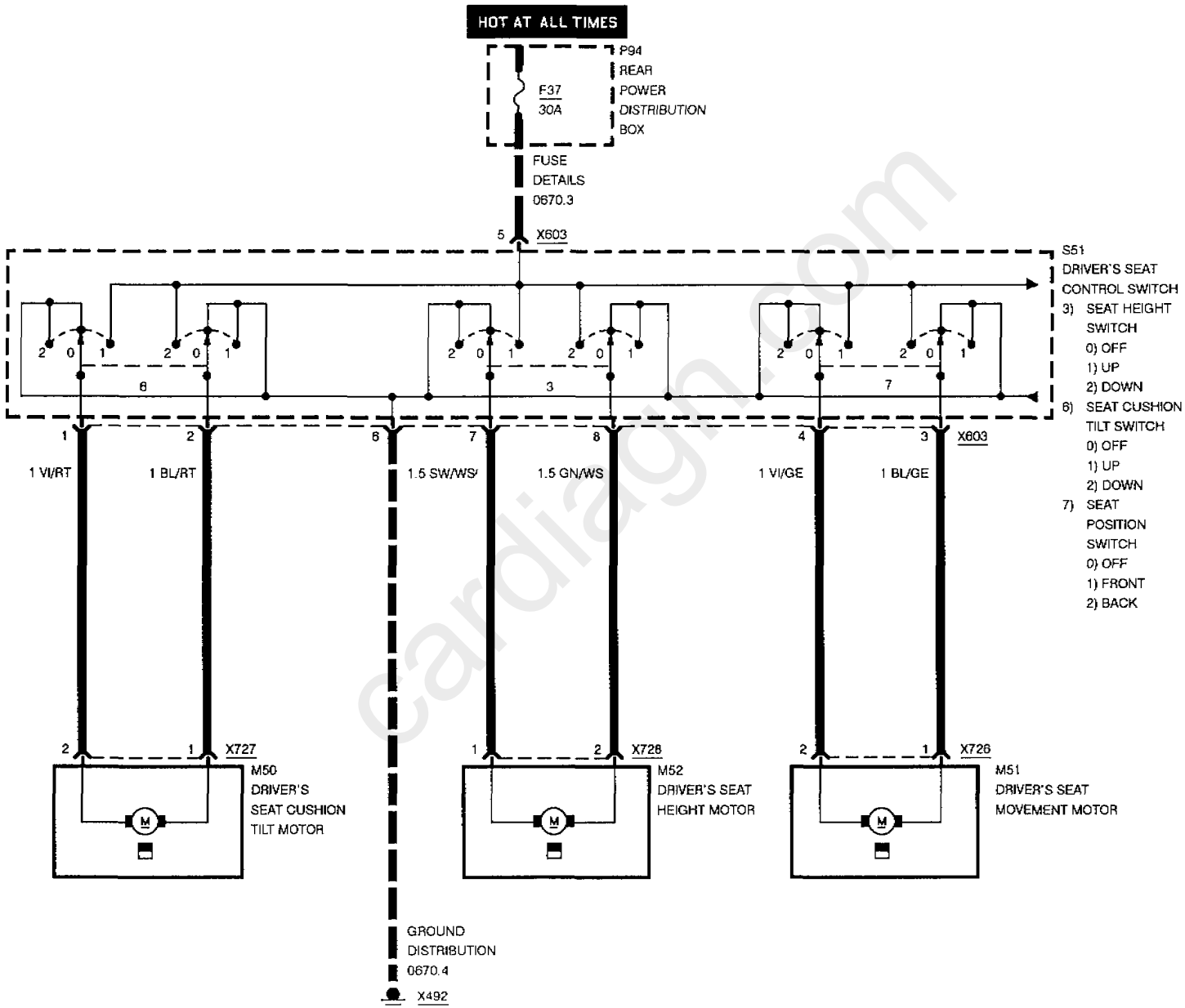

cardiagn.com

POWER SEATS

PASSENGER'S SEAT

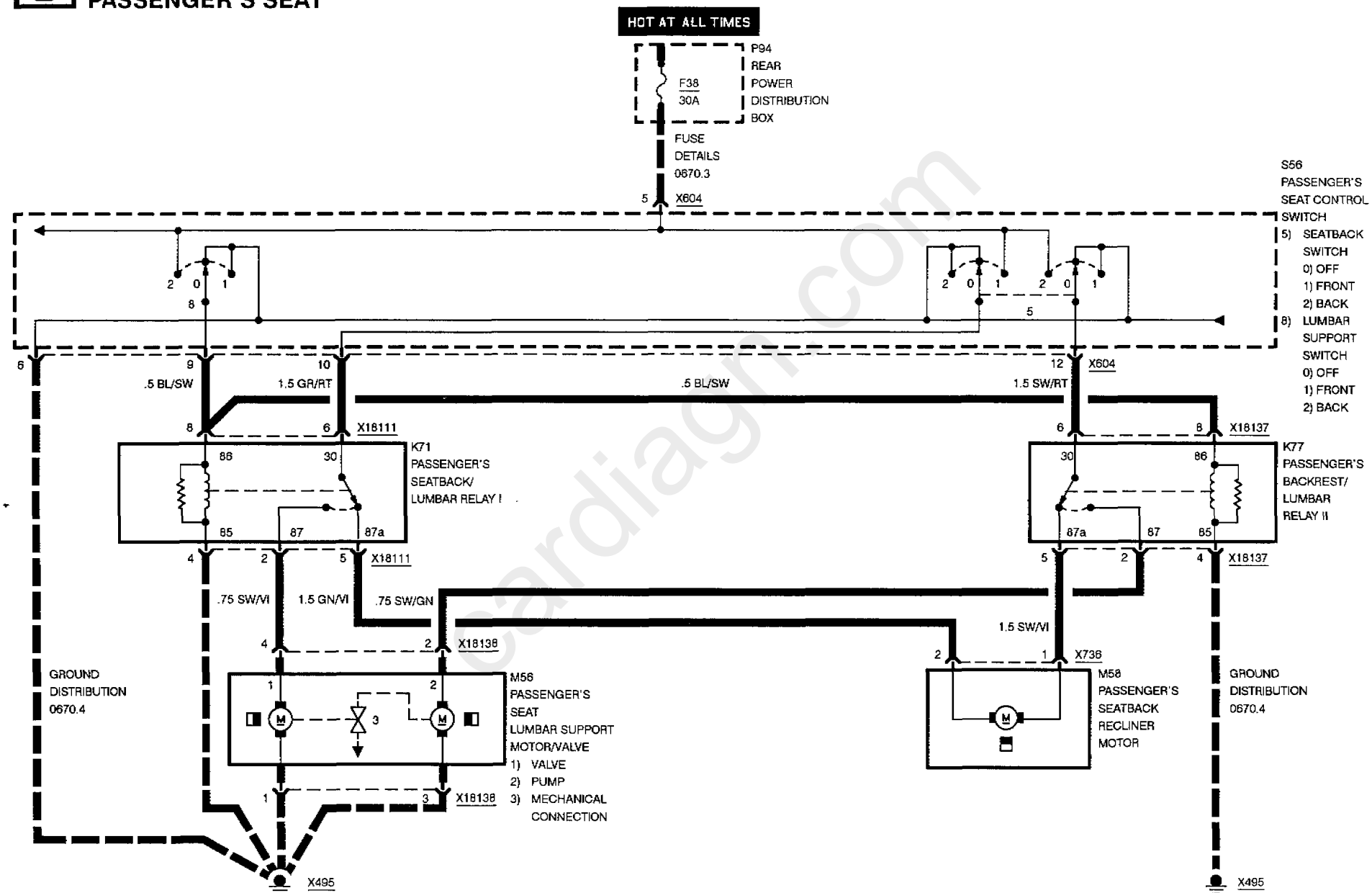

POWER SEATS

PASSENGER'S SEAT

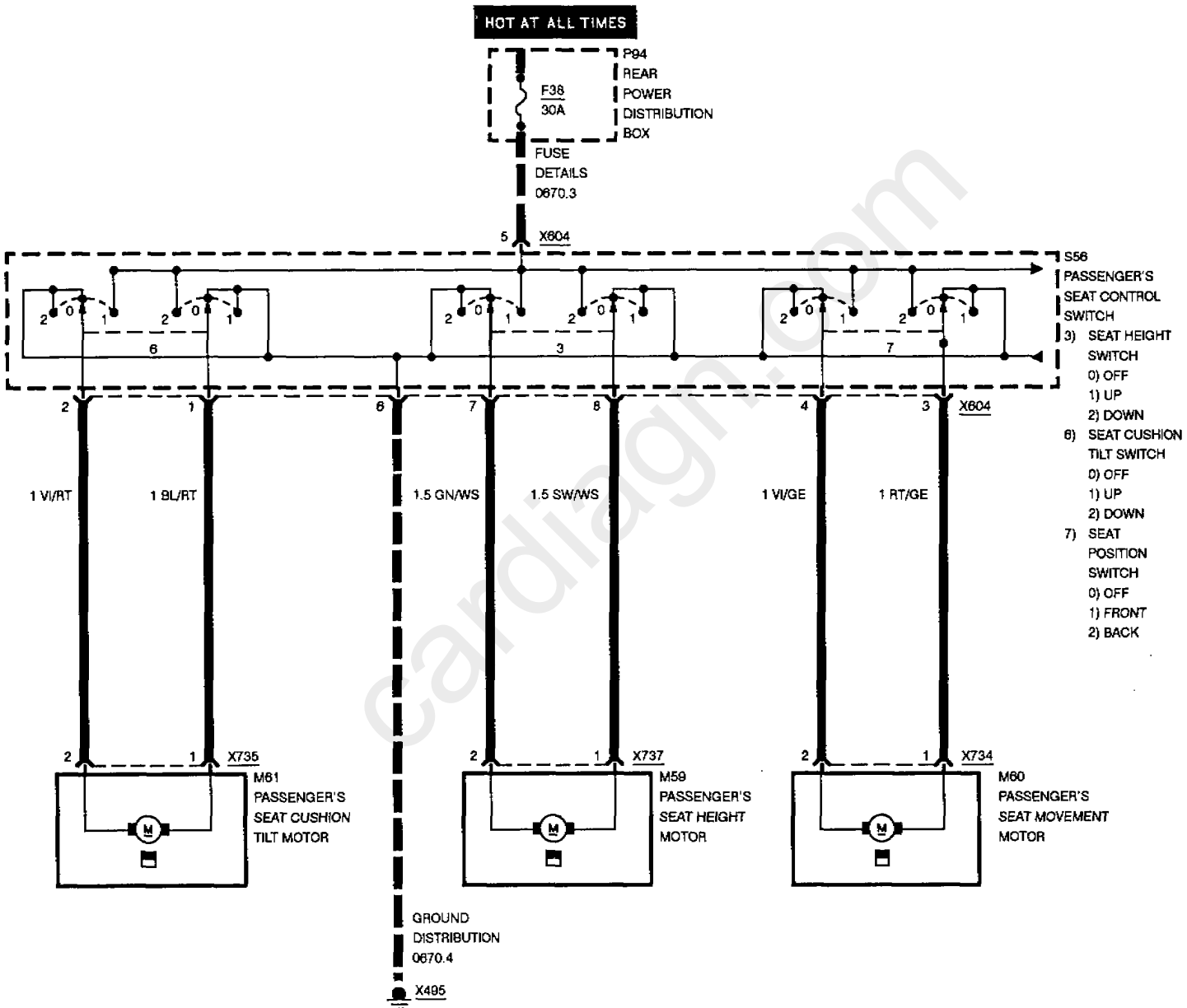

cardiagn.com

POWER SEATS
THIGH SUPPORT

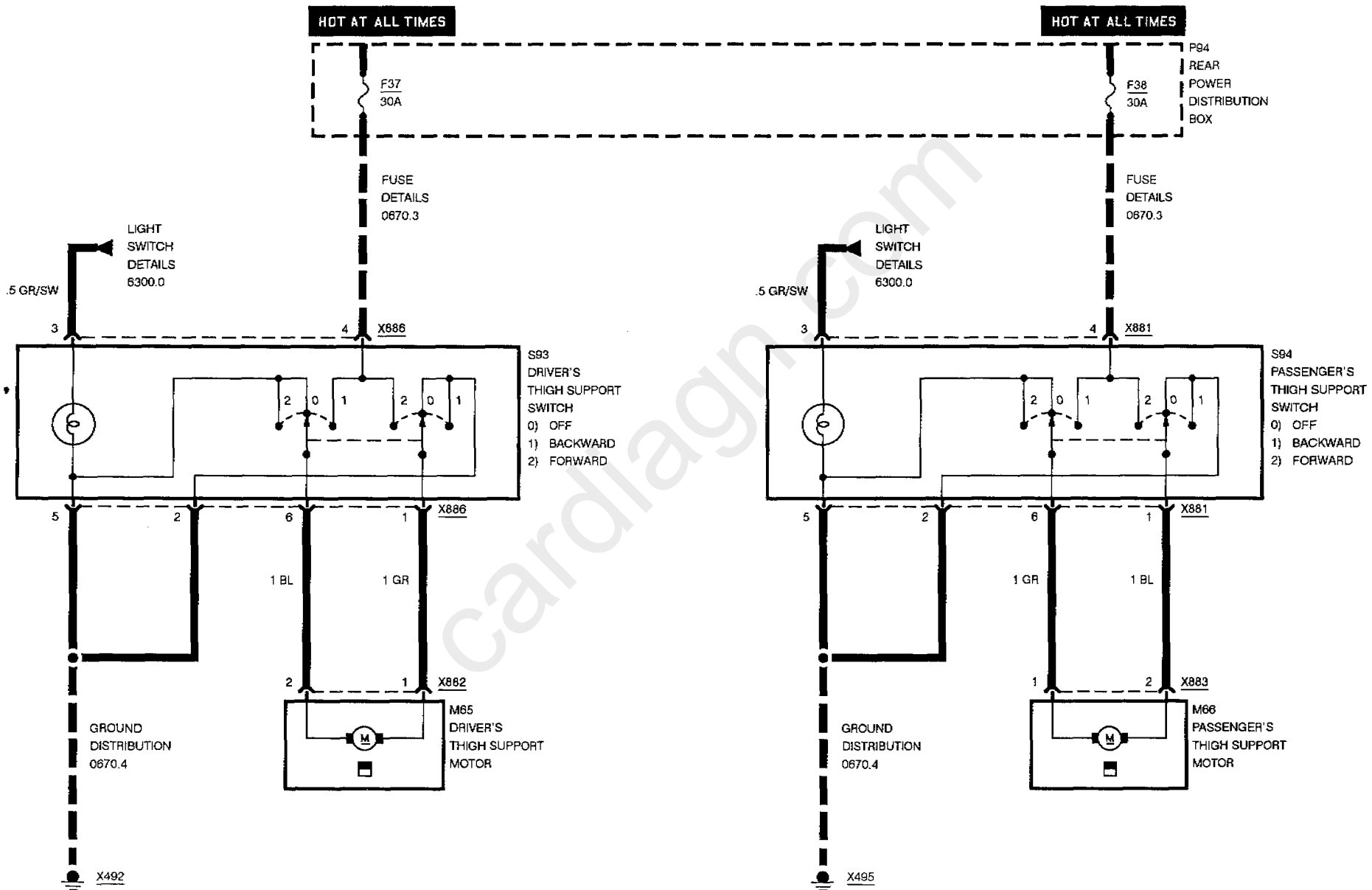

cardiagn.com

POWER SEATS

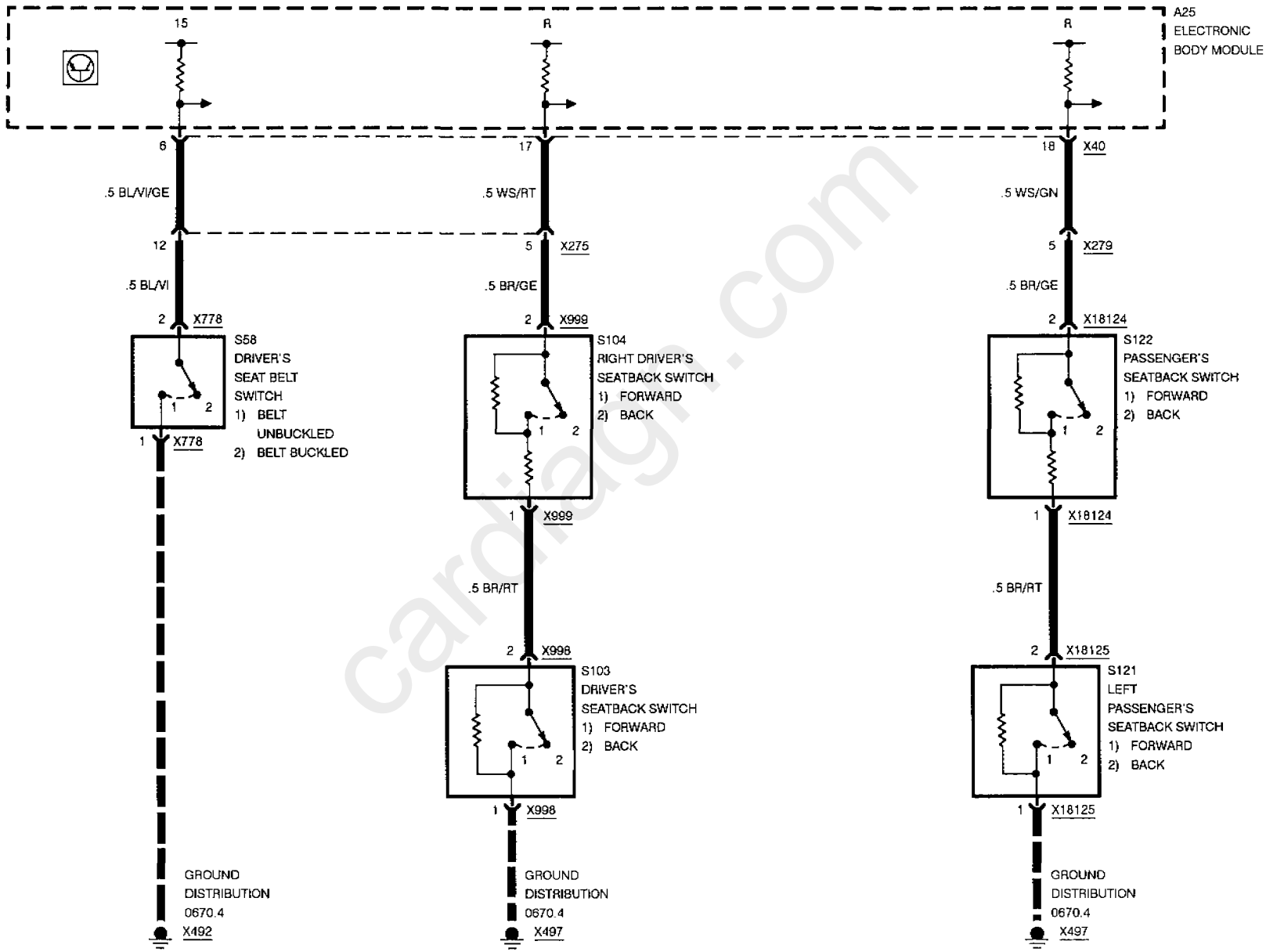

cardiagn.com

cardiagn.com

cardiagn.com

MEMORY SEATS/ MIRRORS (SM/SPM)

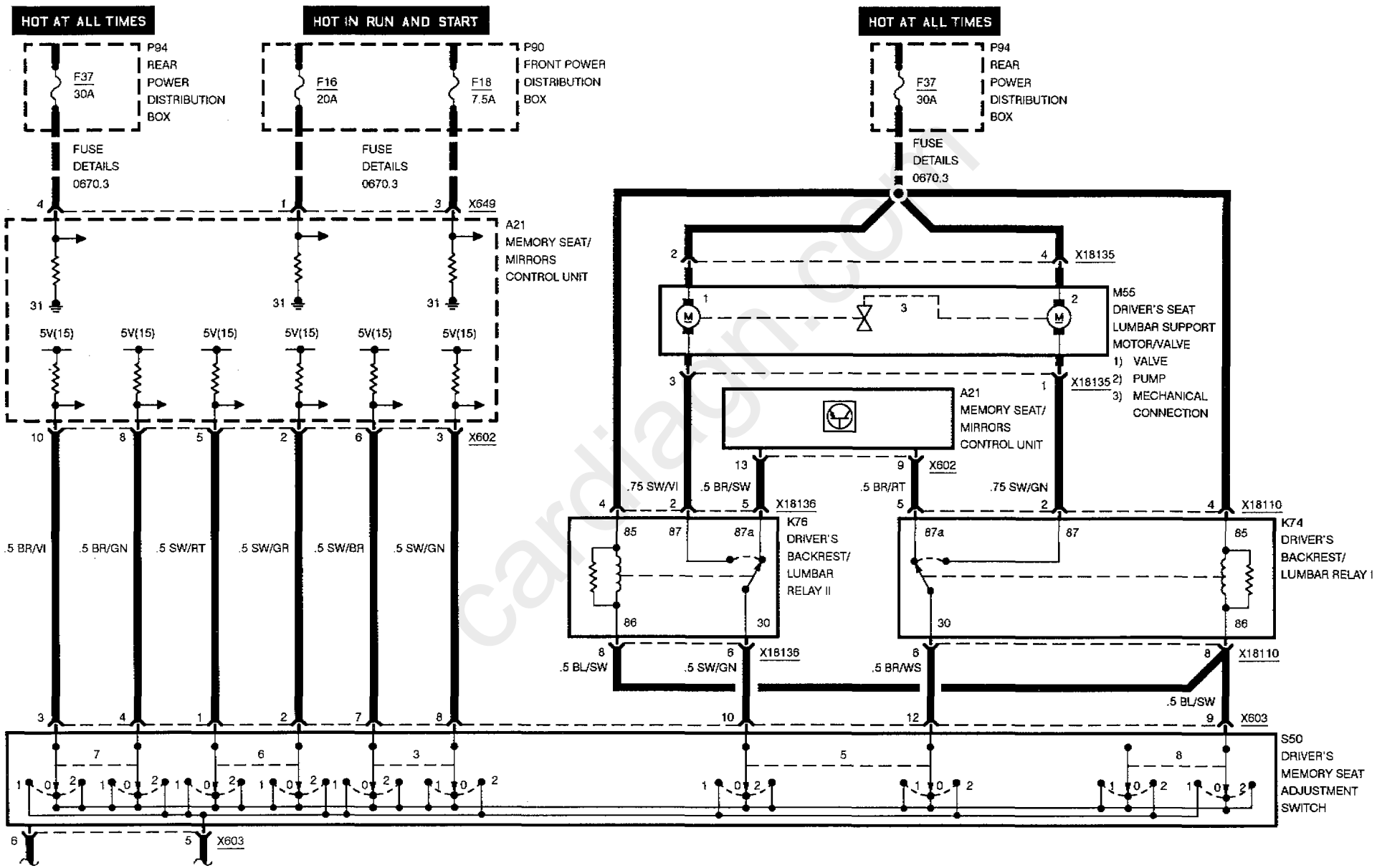

cardiagn.com

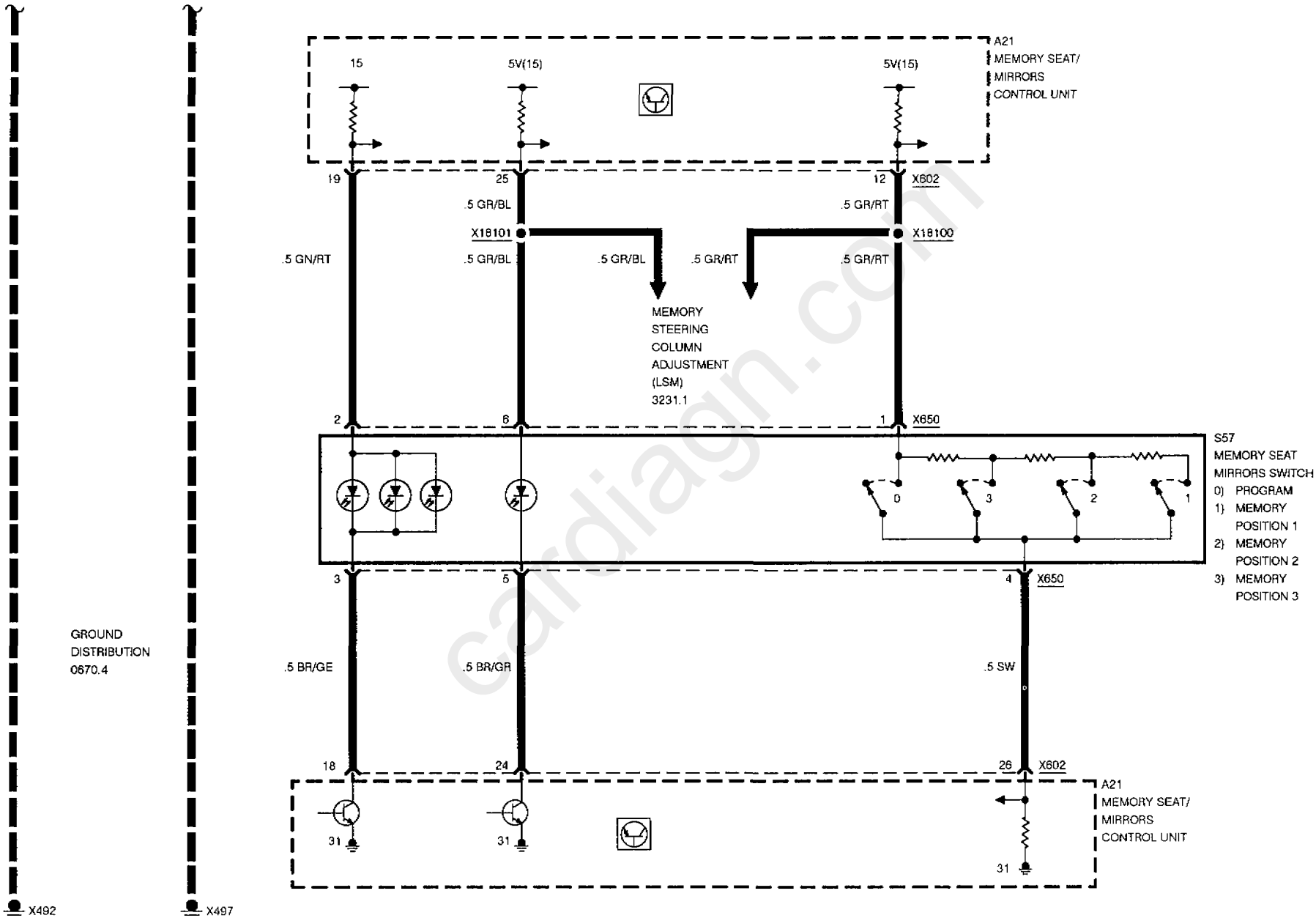

cardiagn.com

MEMORY SEATS/ MIRRORS (SM/SPM)

SEAT

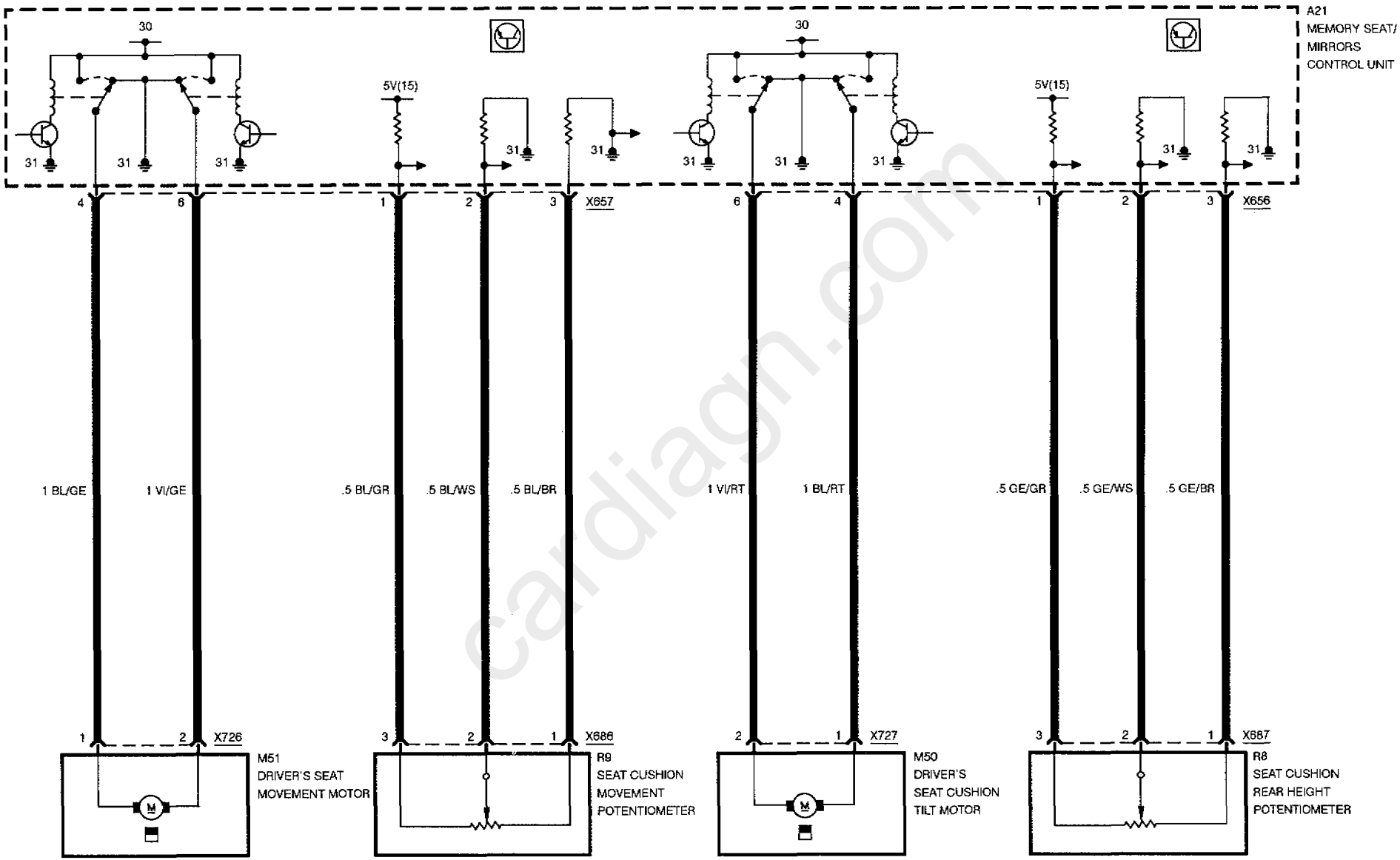

cardiagn.com

MEMORY SEATS/ MIRRORS (SM/SPM)

SEAT

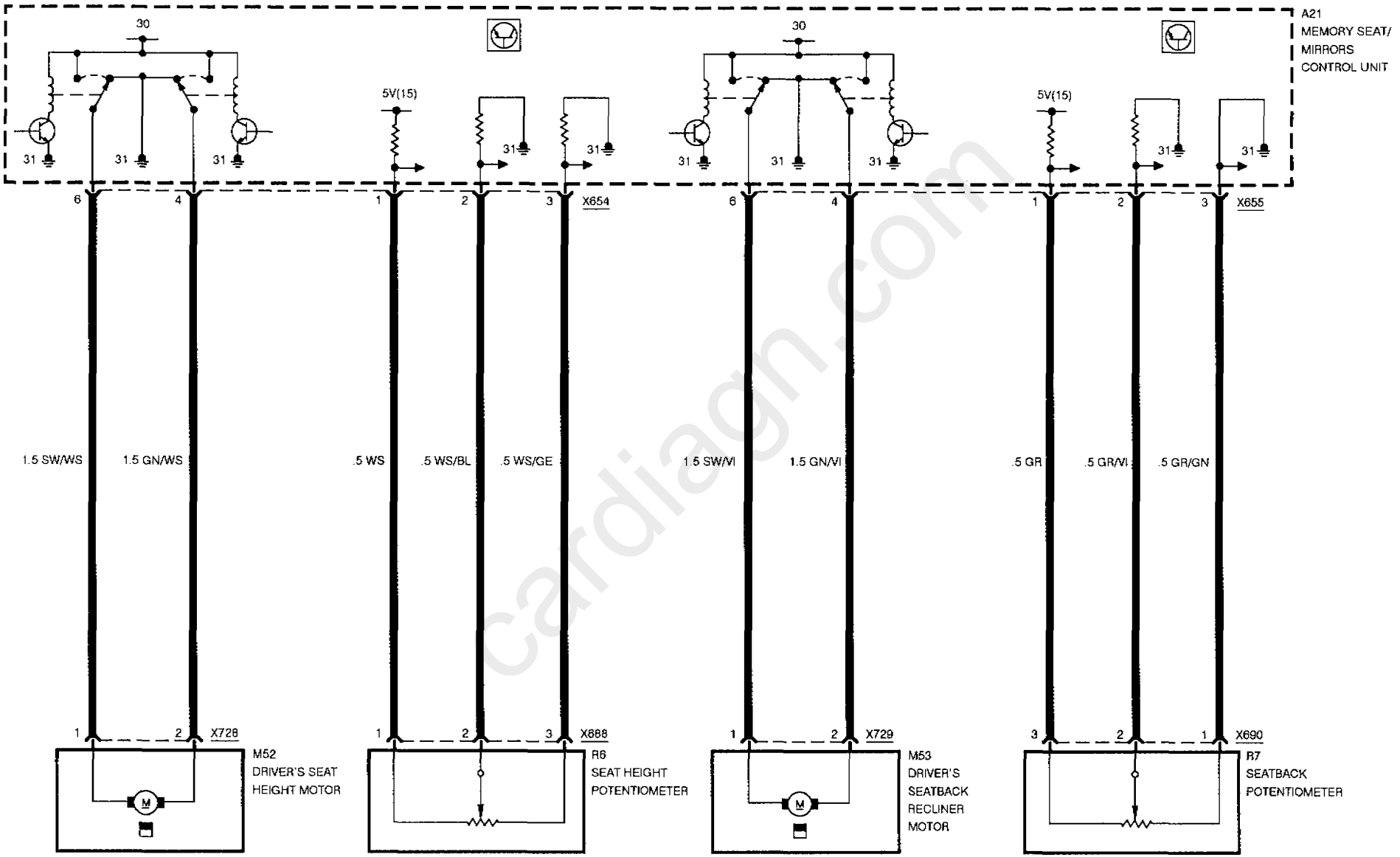

cardiagn.com

MEMORY SEATS/ MIRRORS (SM/SPM)

WITH SPORT SEAT

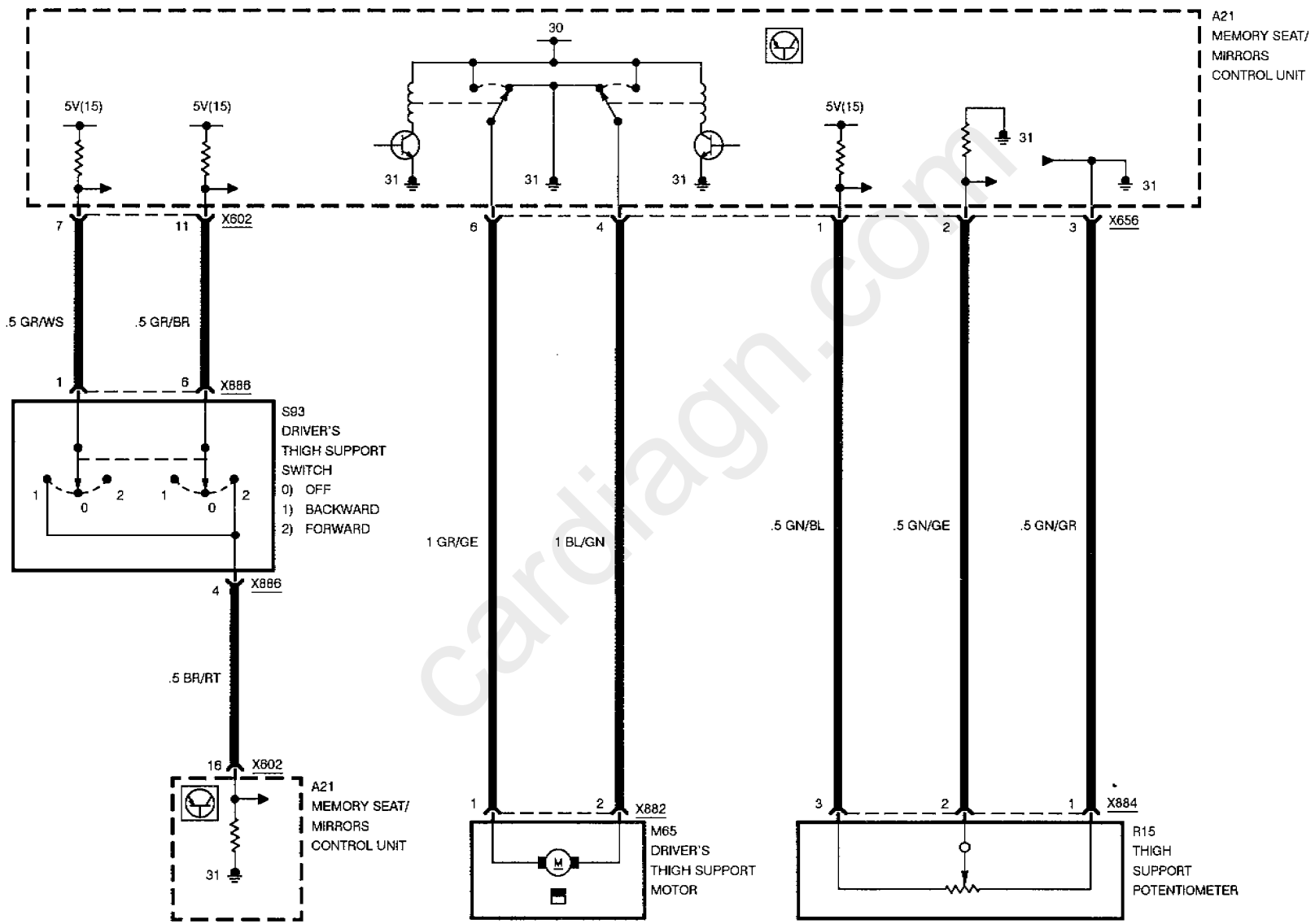

cardiagn.com

MEMORY SEATS/ MIRRORS (SM/SPM)

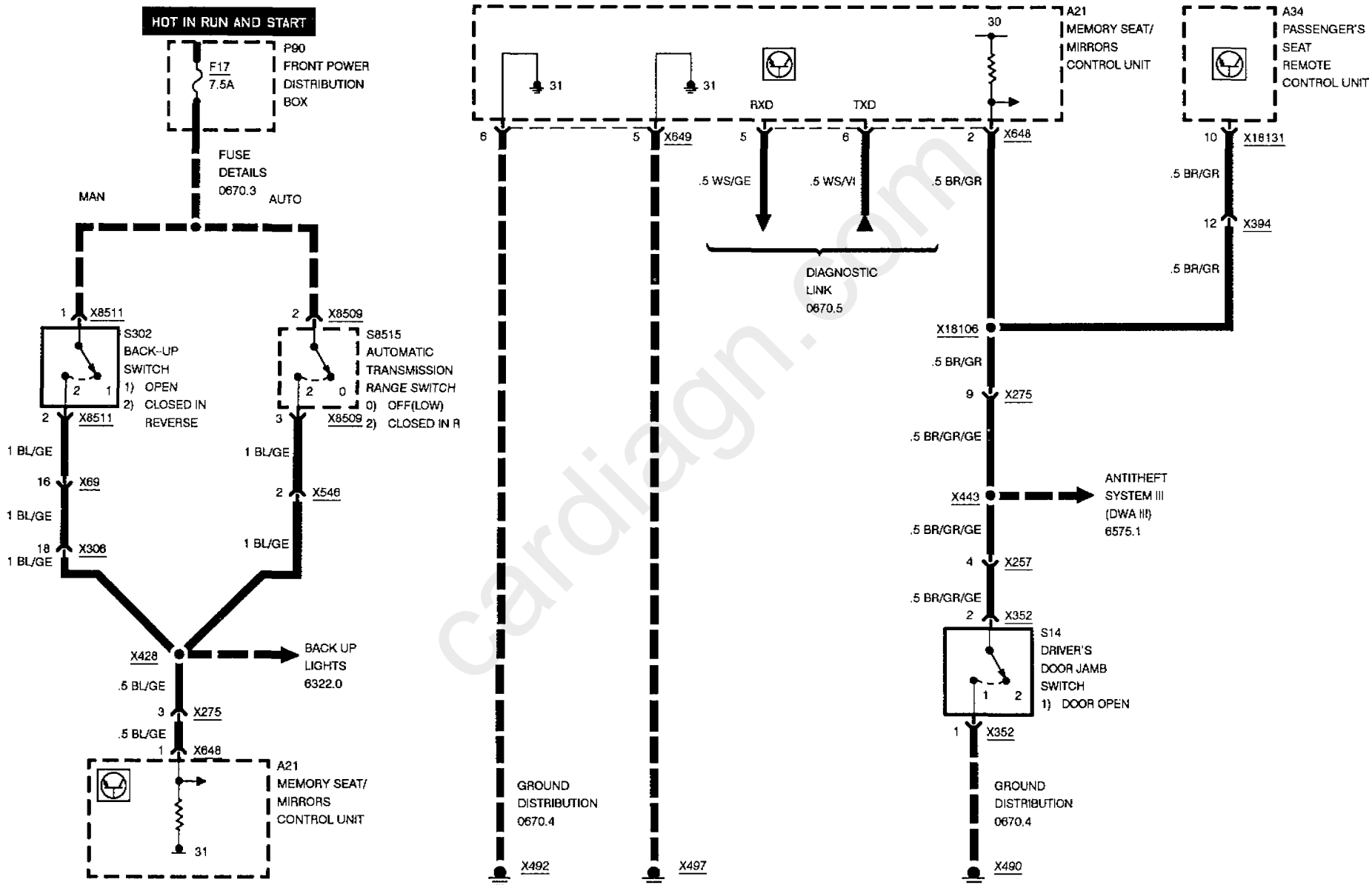

cardiagn.com

MEMORY SEATS/ MIRRORS (SM/SPM)

MIRROR

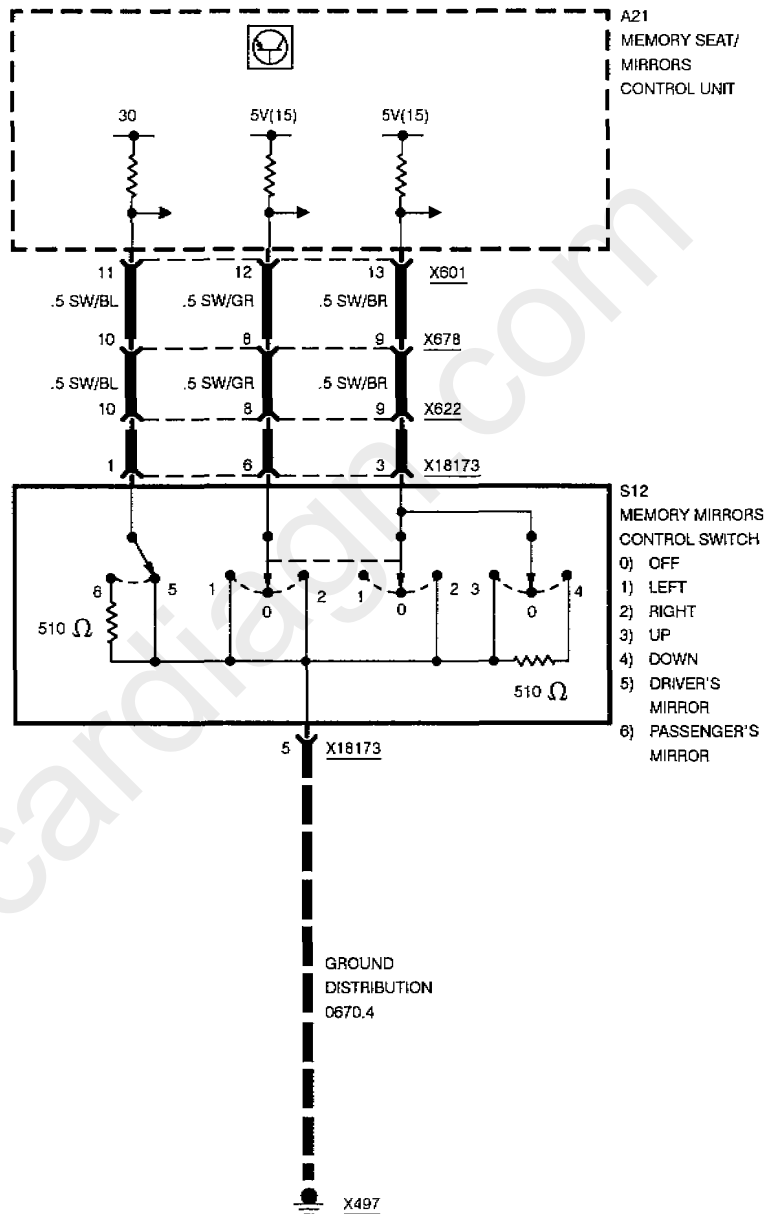

cardiagn.com

MEMORY SEATS/ MIRRORS (SM/SPM)

MIRROR

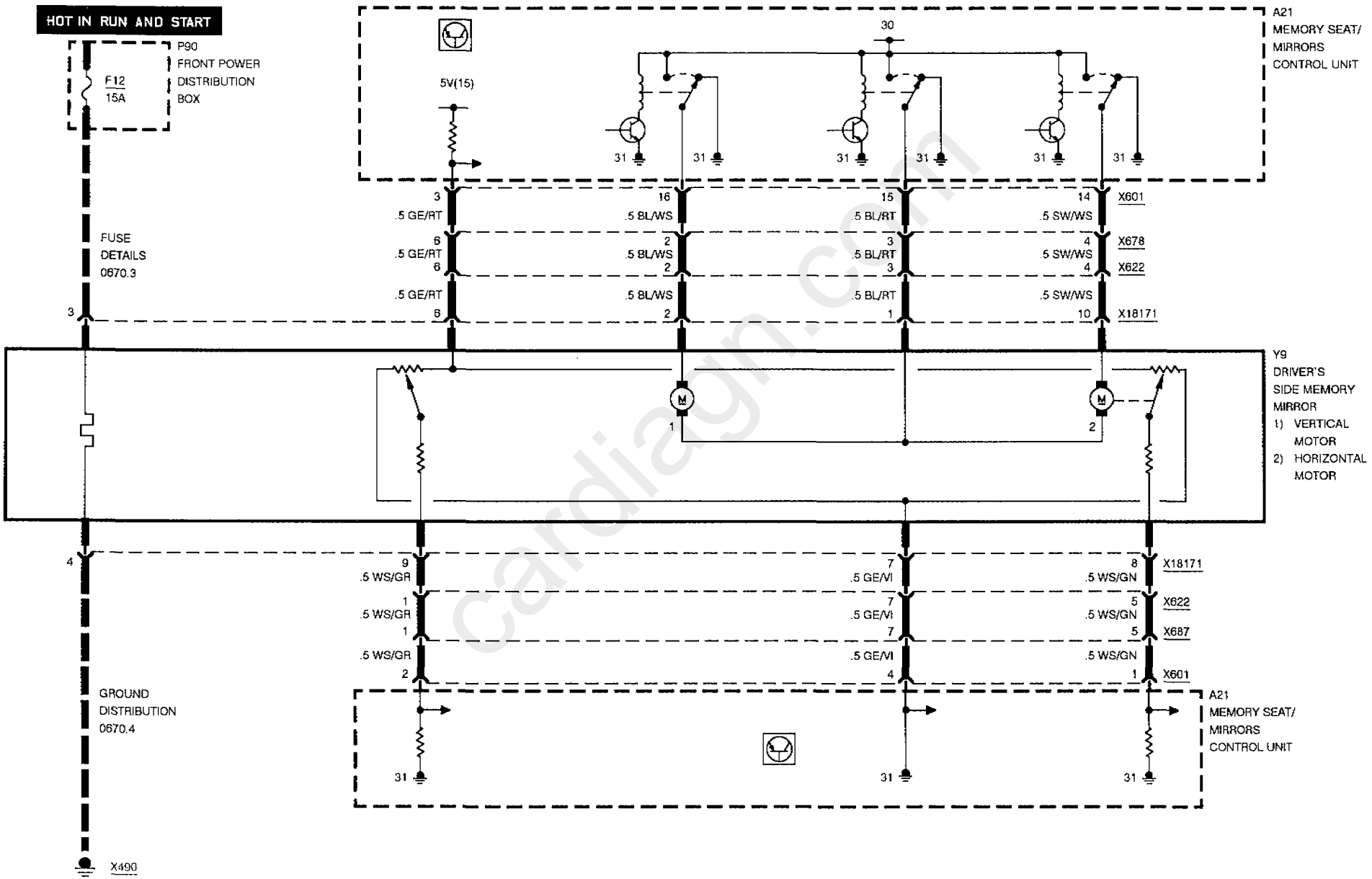

cardiagn.com

MEMORY SEATS/ MIRRORS (SM/SPM)

MIRROR

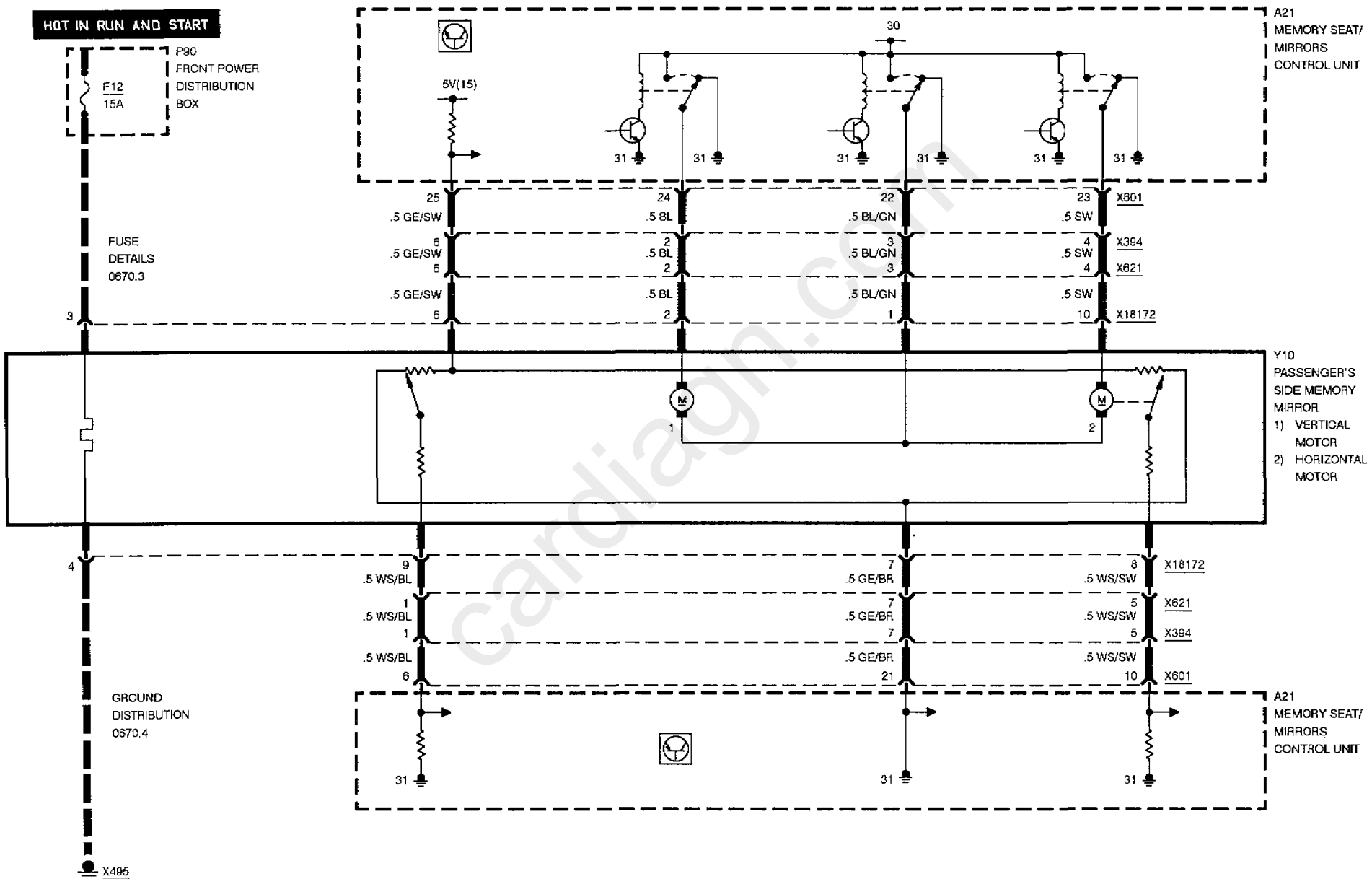

cardiagn.com

cardiagn.com

HEATED SEATS

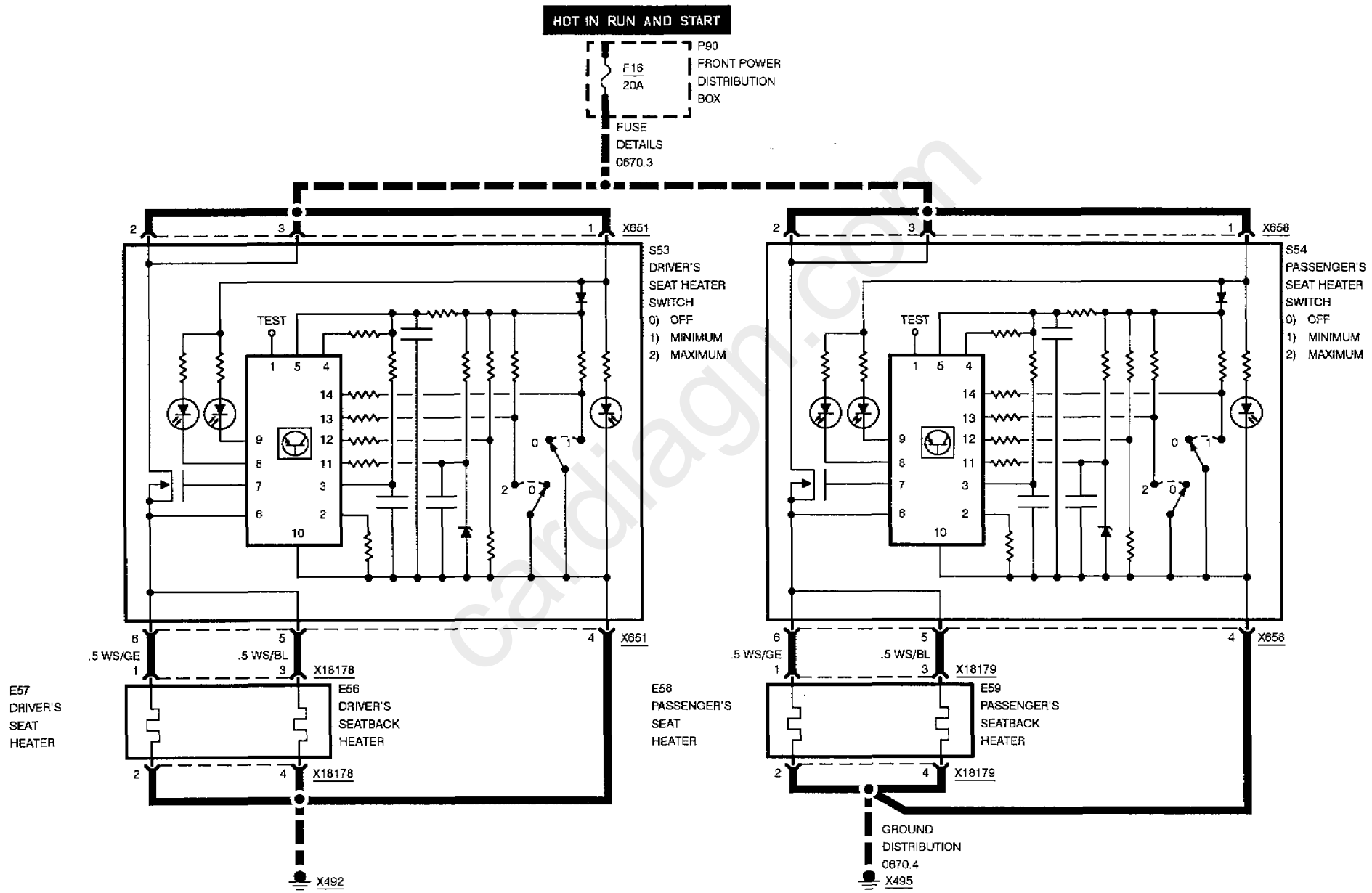

cardiagn.com

cardiagn.com

ZKE SUNROOF (SHD)

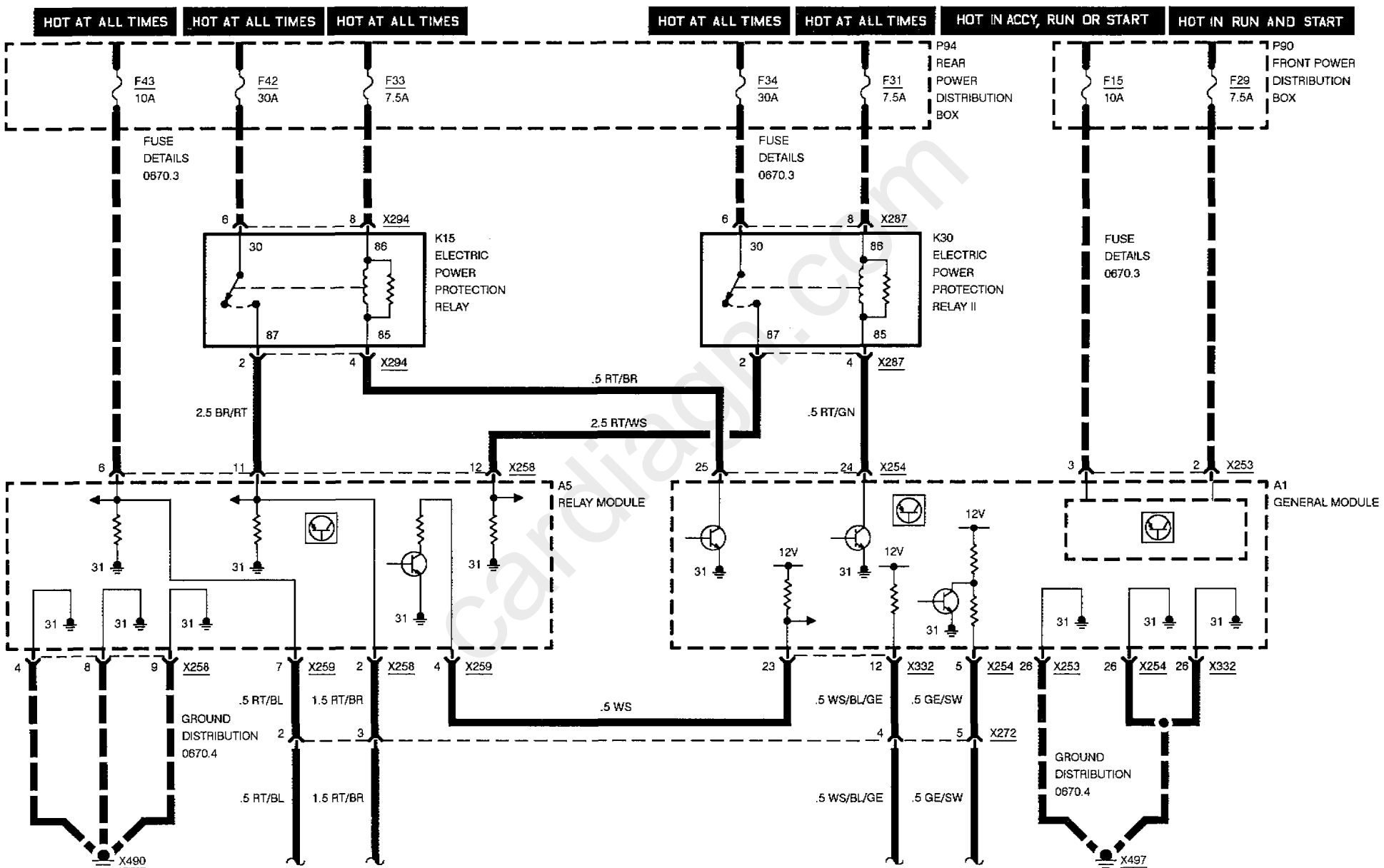

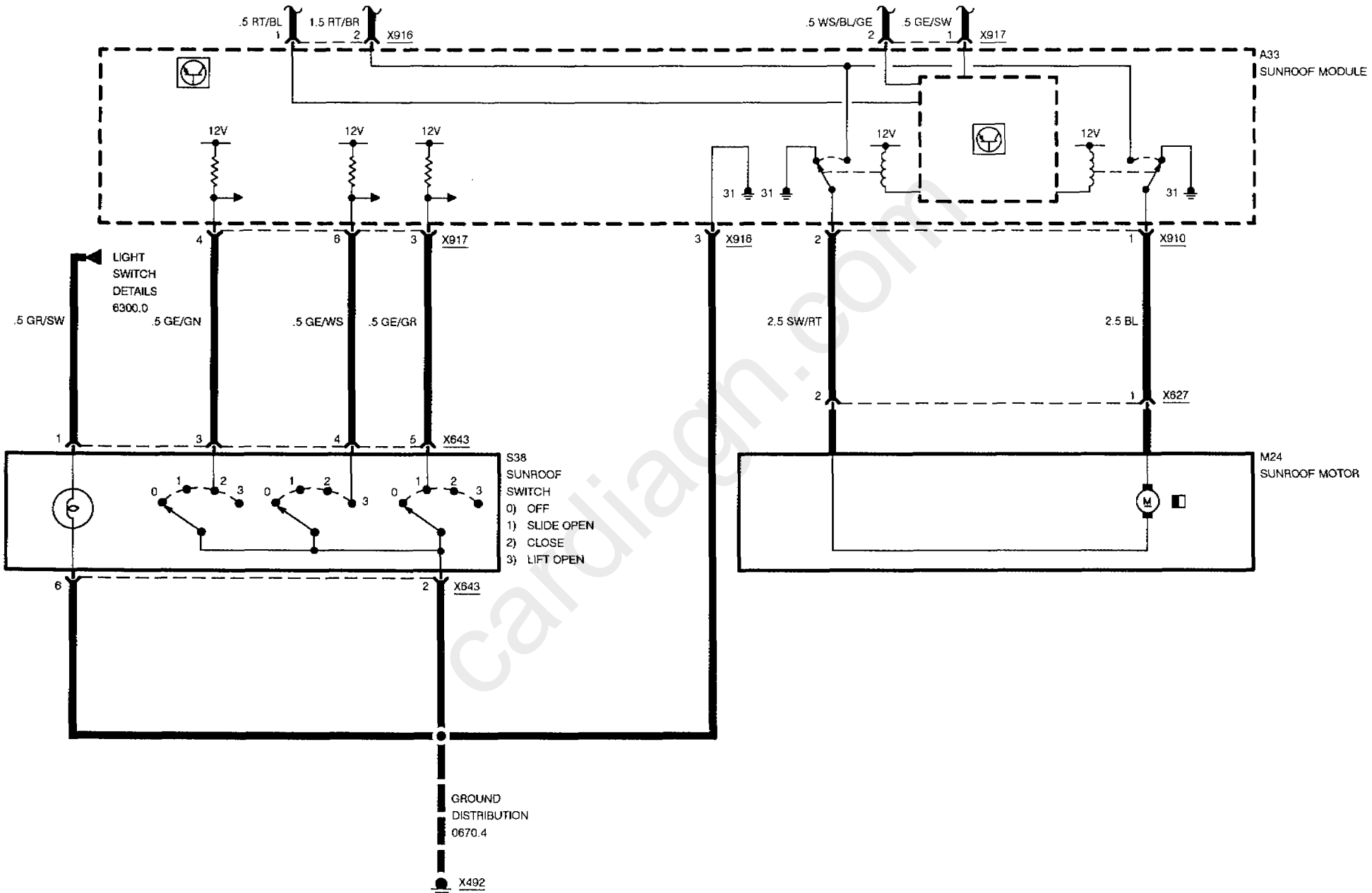

cardiagn.com

cardiagn.com

carditagn.com

CENTRAL BODY ELECTRONICS (ZKE II)

GENERAL MODULE

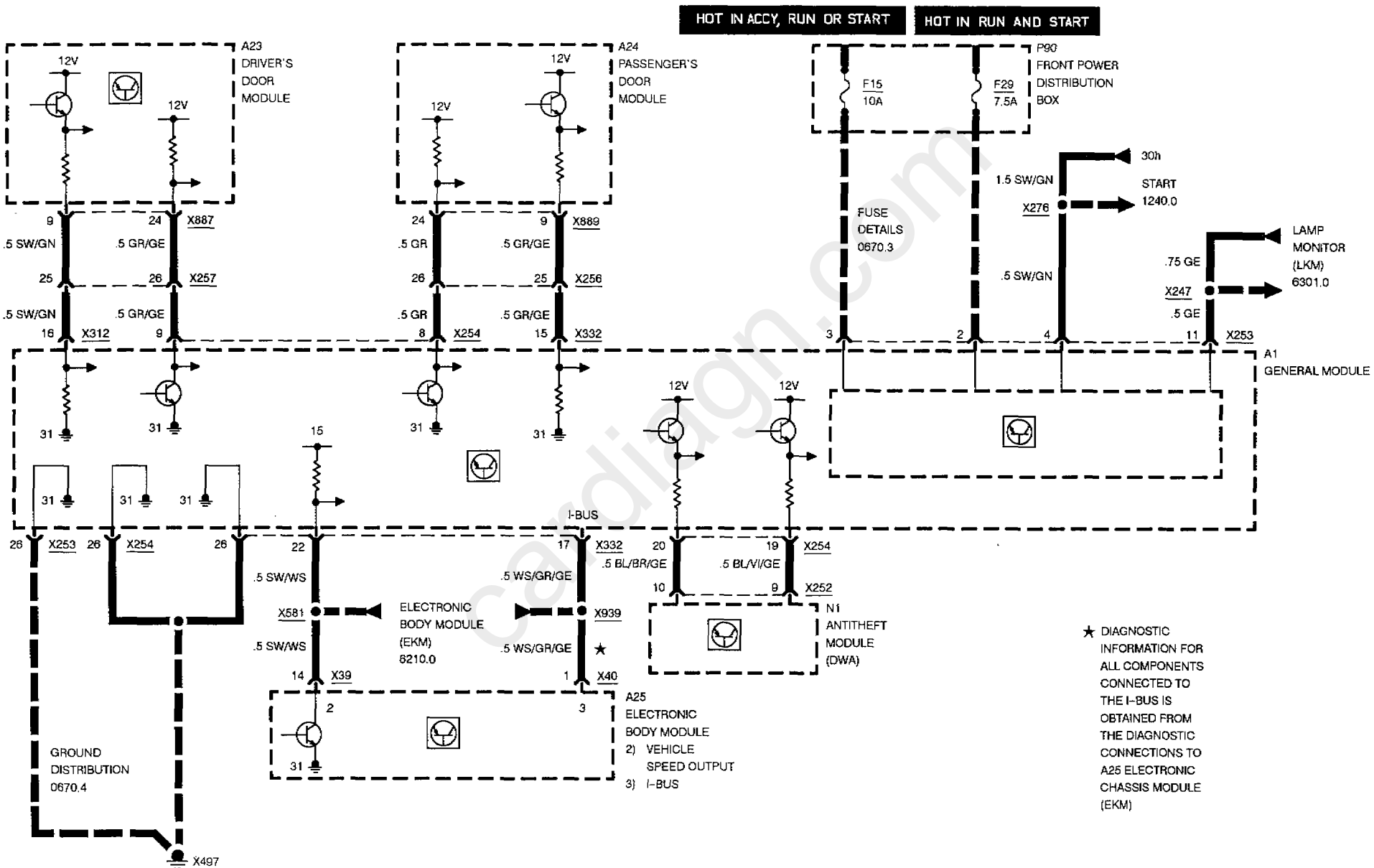

cardiagn.com

CENTRAL BODY ELECTRONICS (ZKE II)

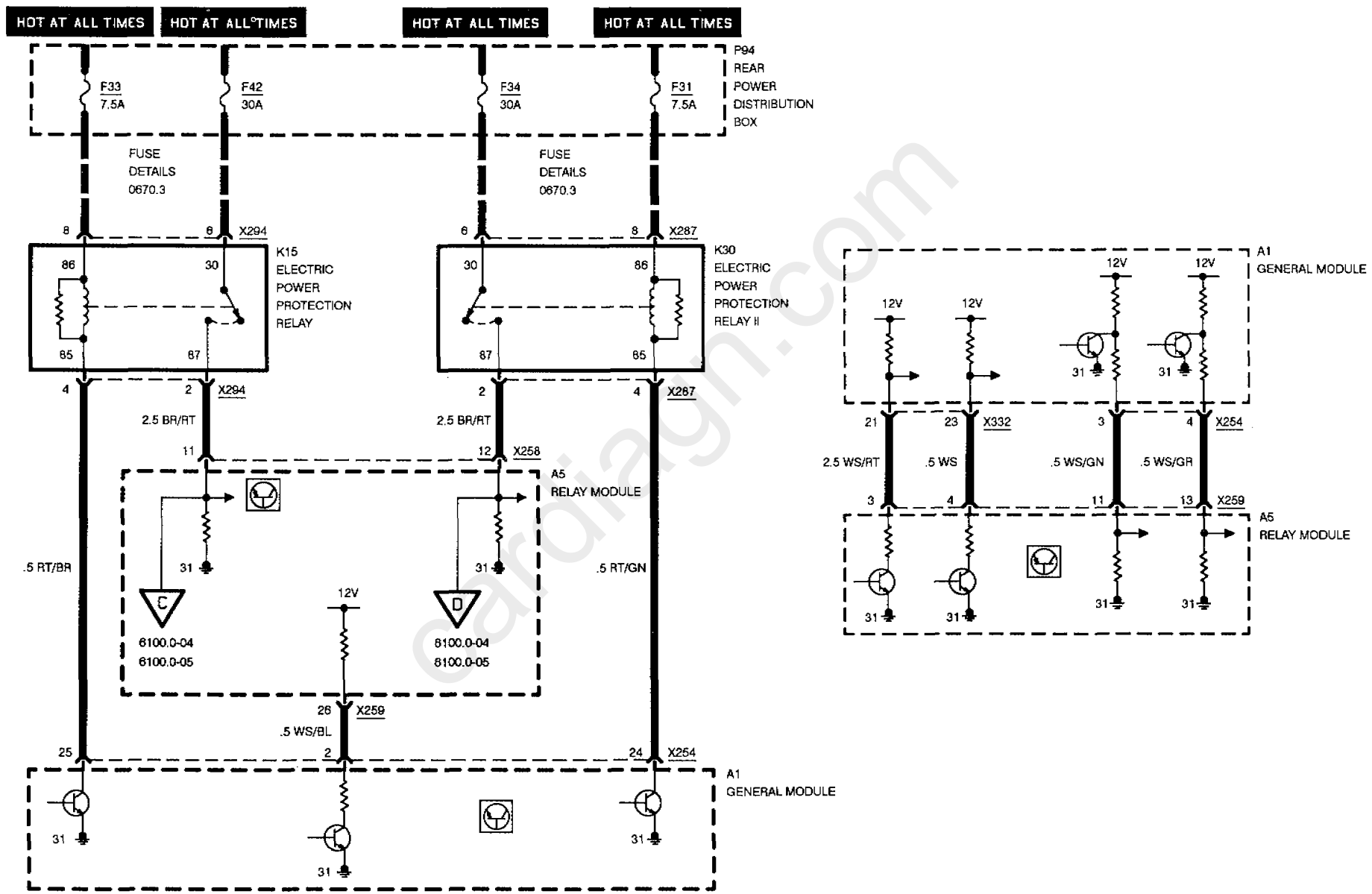

cardiagn.com

CENTRAL BODY ELECTRONICS (ZKE II)

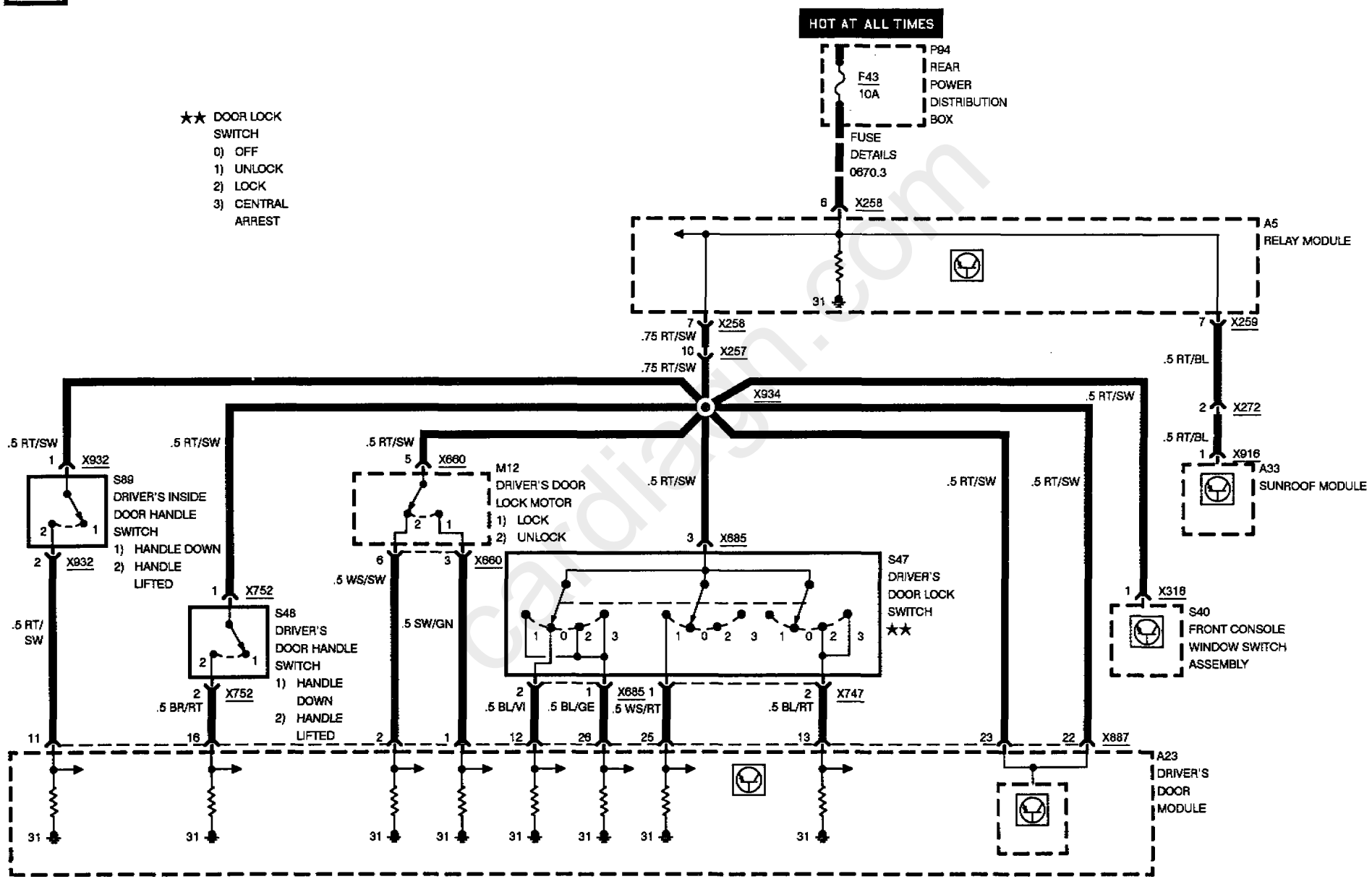

cardiagn.com

CENTRAL BODY ELECTRONICS (ZKE II)

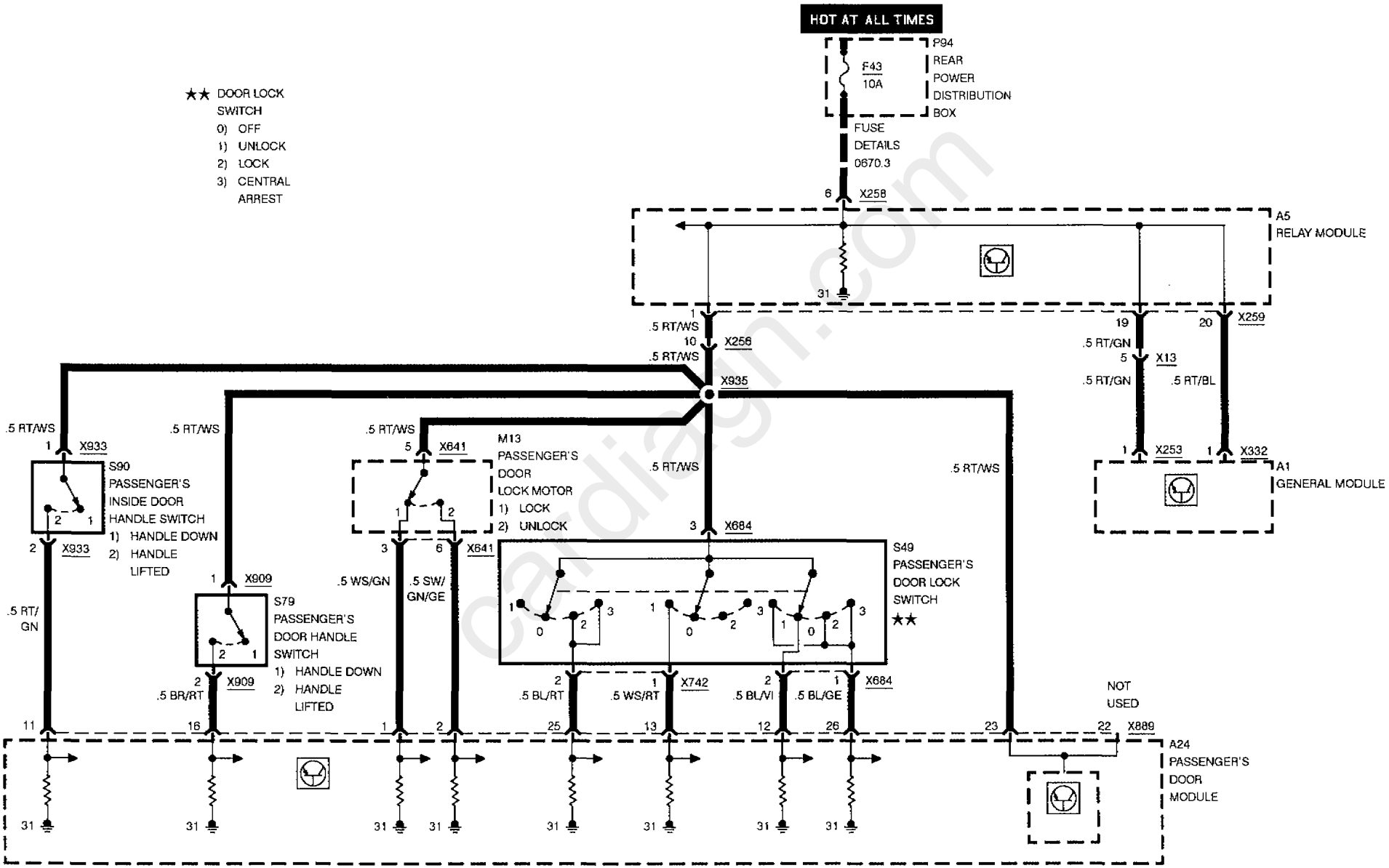

CENTRAL BODY ELECTRONICS (ZKE II)

RELAY MODULE

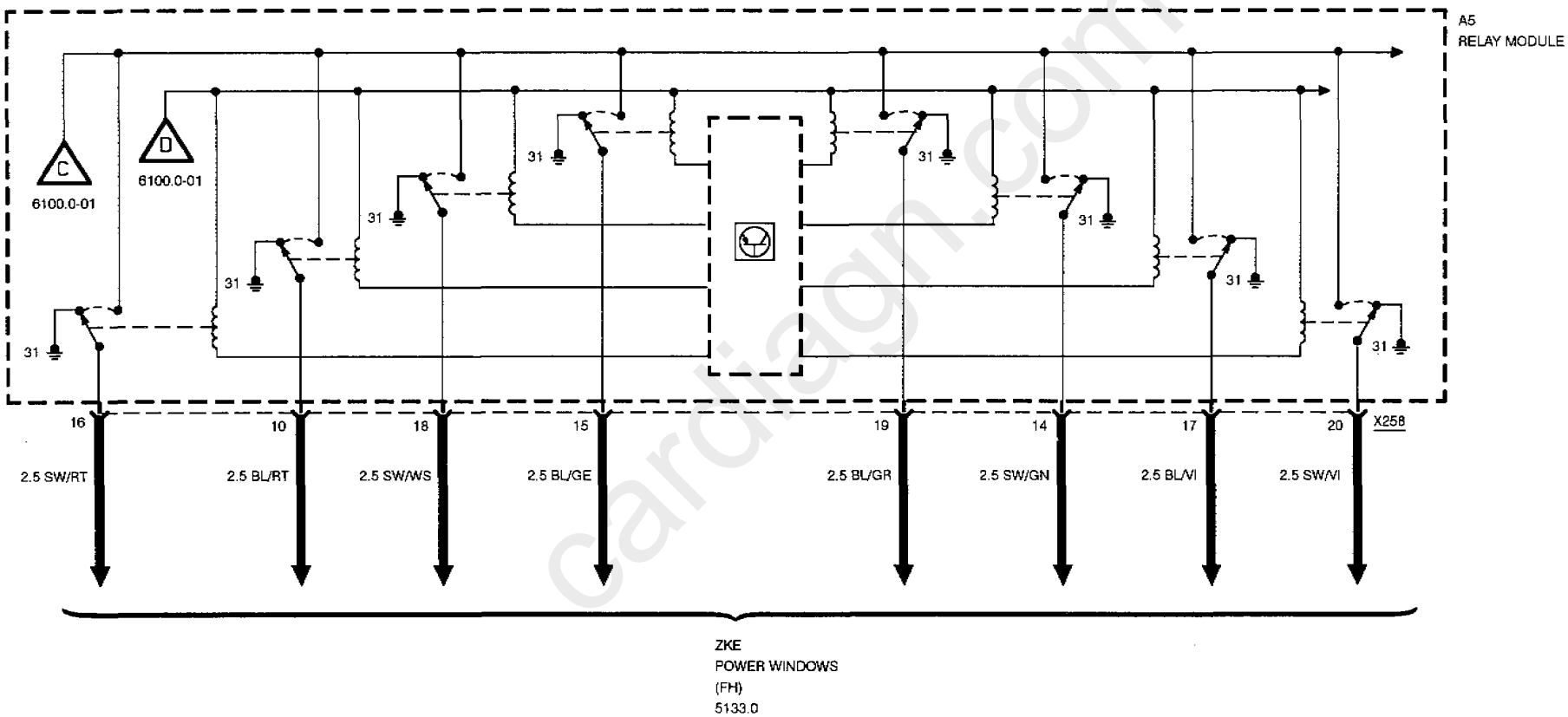

cardiagn.com

CENTRAL BODY ELECTRONICS (ZKE II)

RELAY MODULE

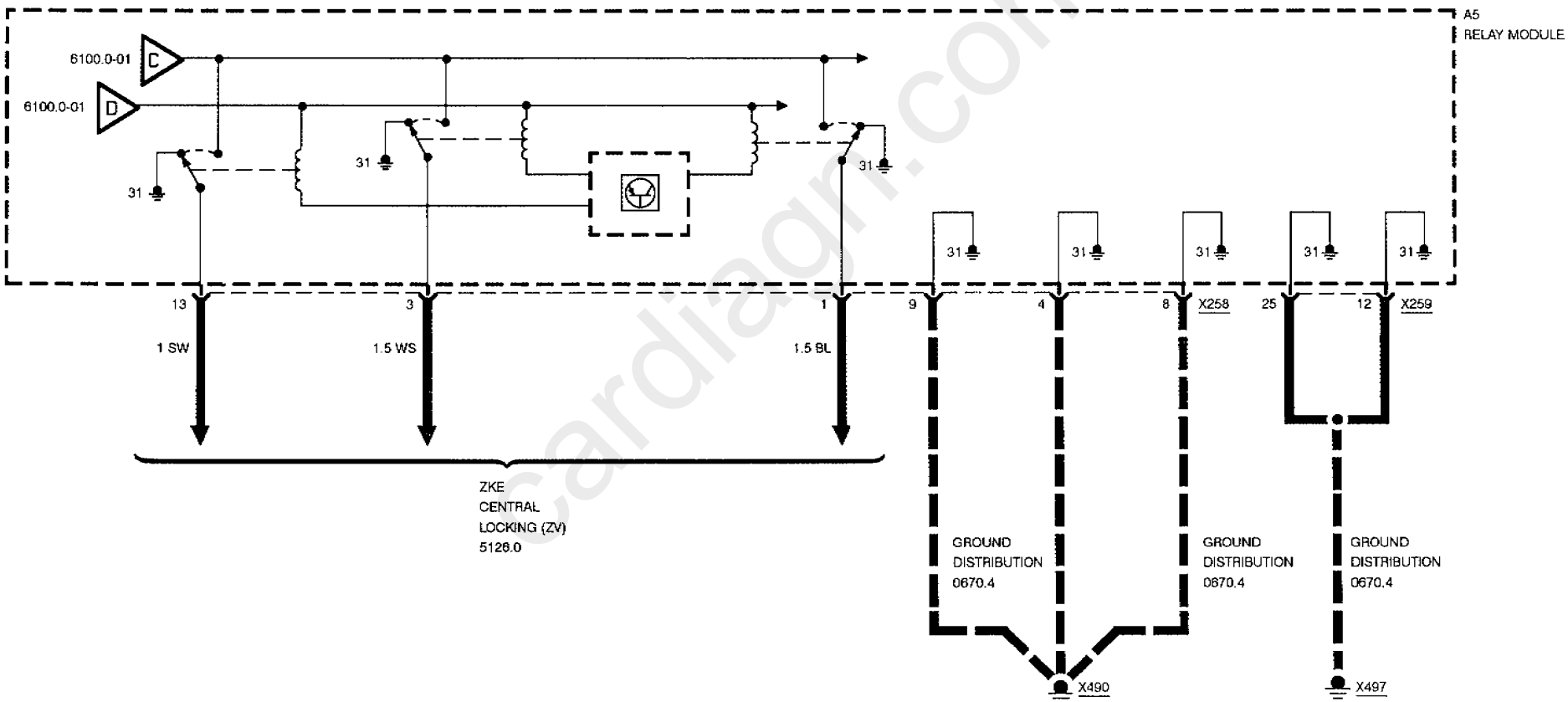

cardiagn.com

HORN

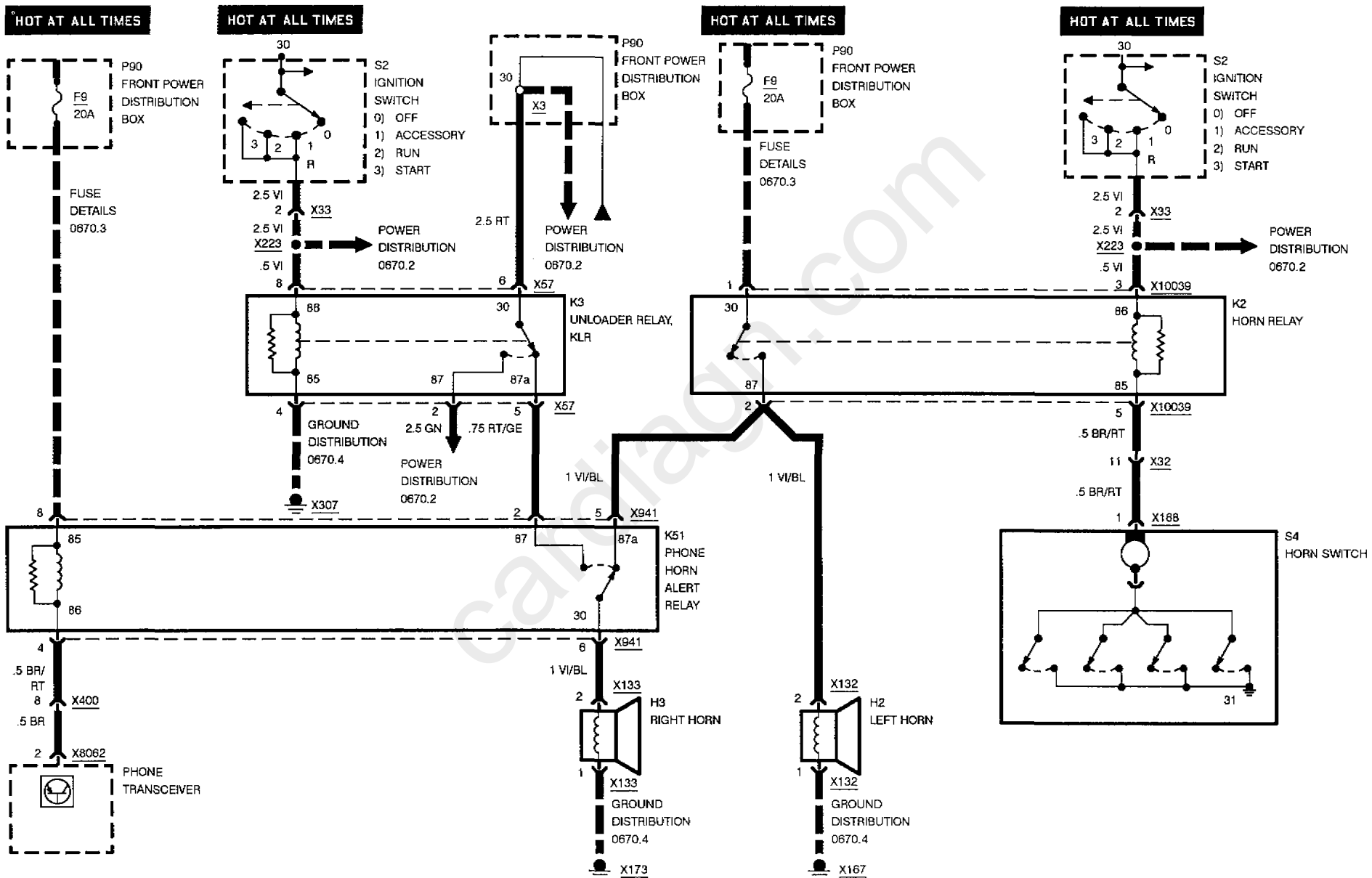

cardiagn.com

cardiagn.com

ZKE WIPER/WASHER CONTROL

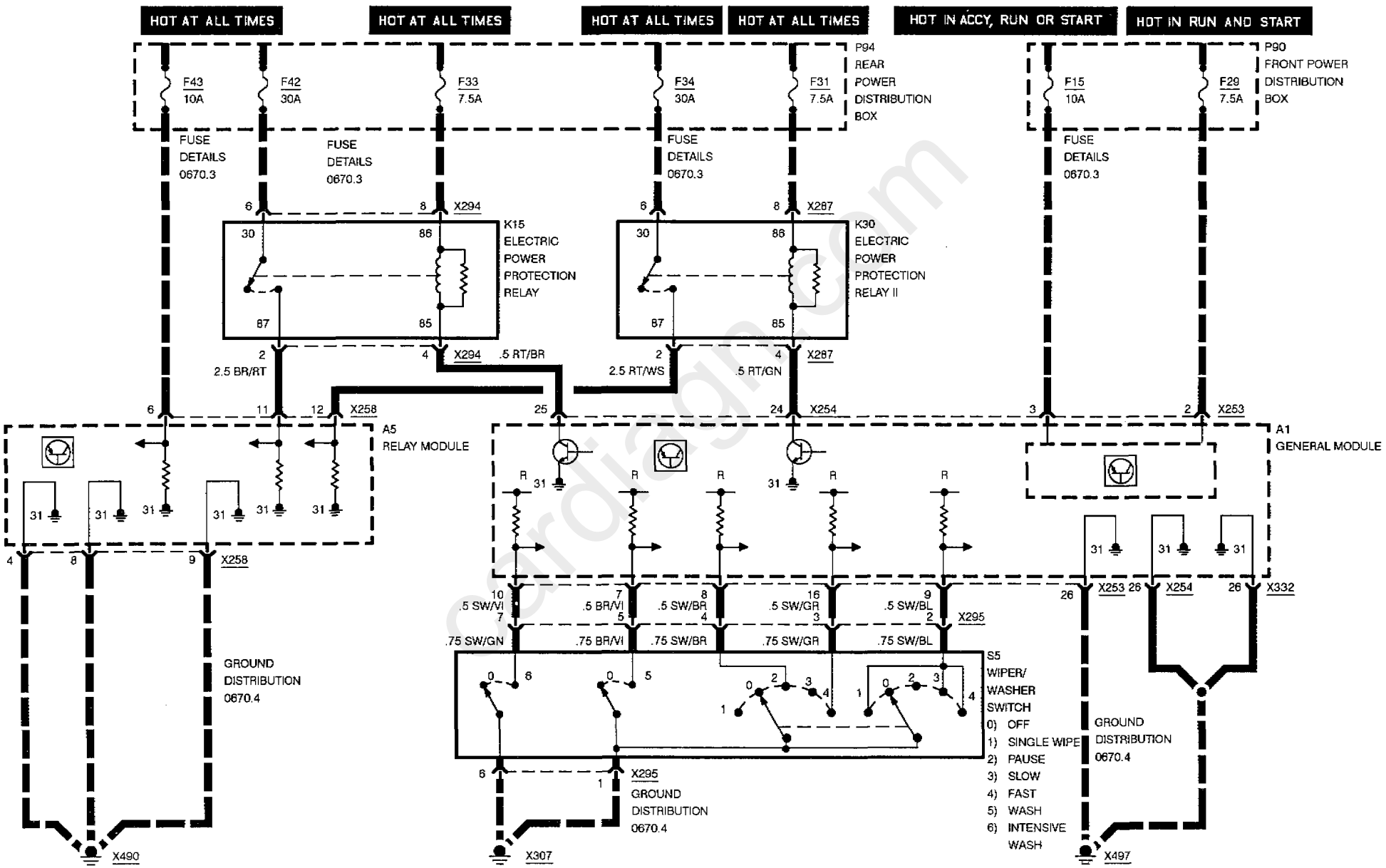

cardiagn.com

ZKE WIPER/WASHER CONTROL

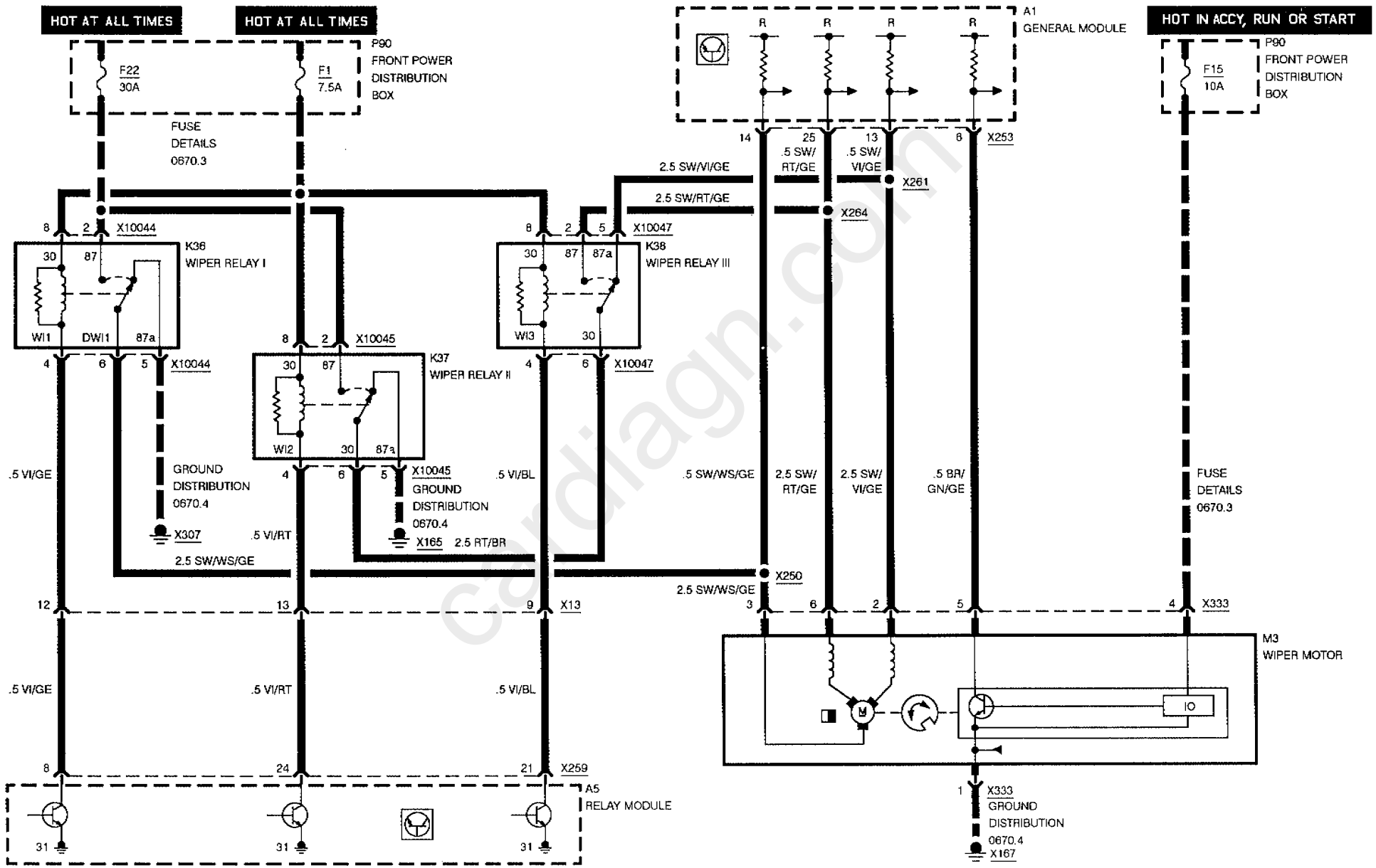

ZKE WIPER/WASHER CONTROL

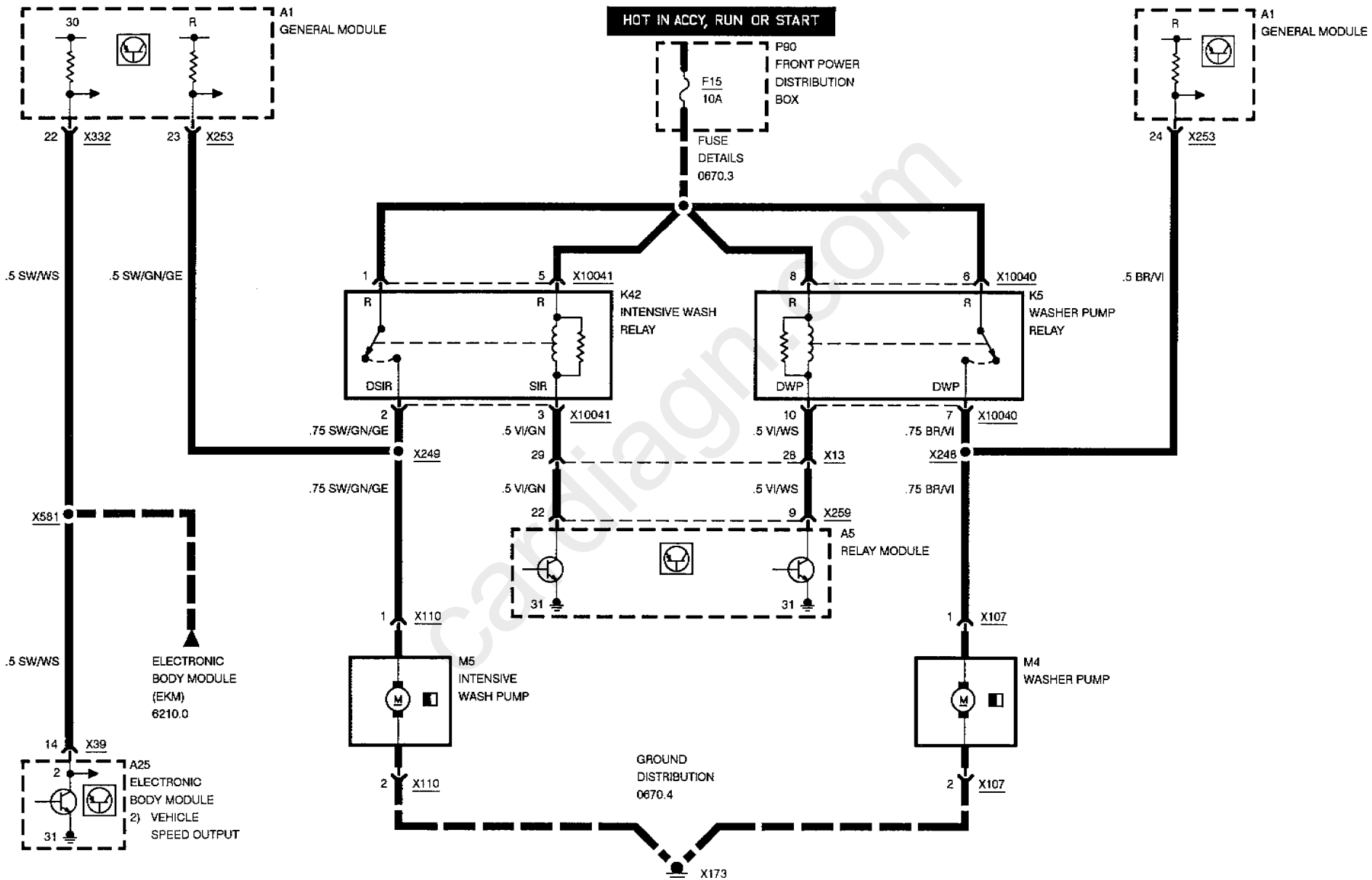

cardiagn.com

cardiagn.com

ZKE WINDSHIELD WIPER PRESSURE CONTROL (ADV)

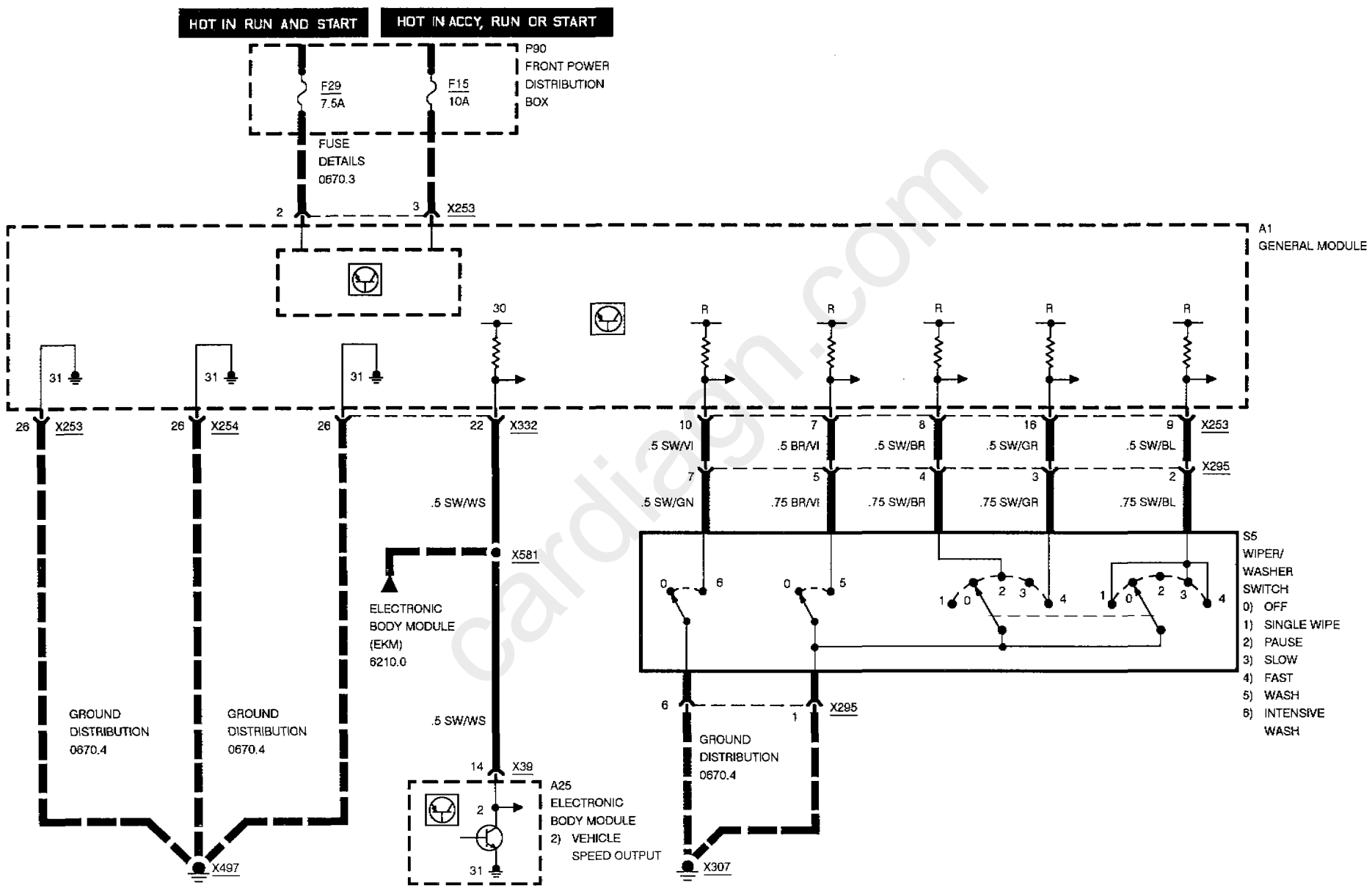

cardiagn.com

ZKE WINDSHIELD WIPER PRESSURE CONTROL (ADV)

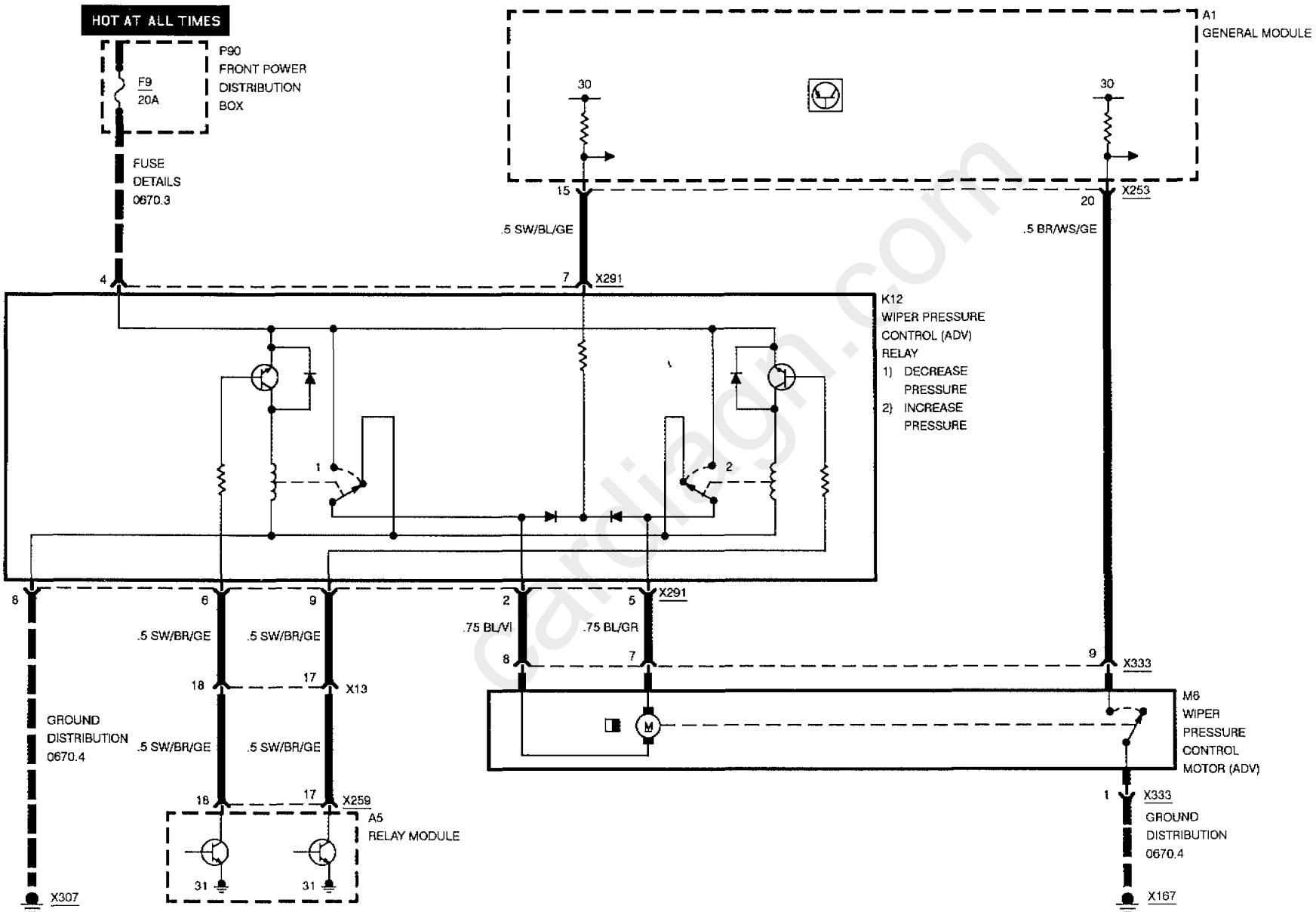

cardiagn.com

ZKE HEADLIGHT WASHER (SRA)

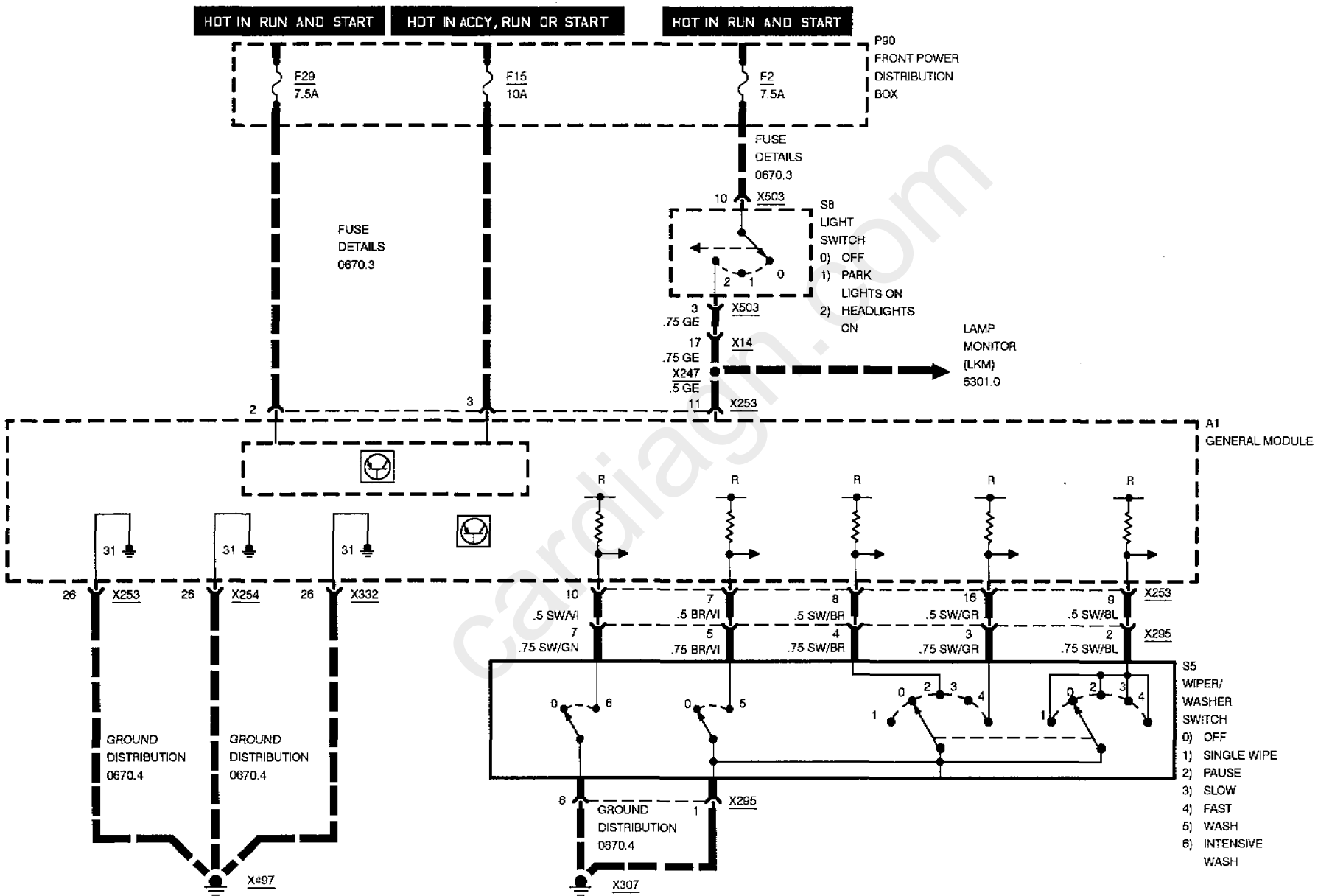

cardiagn.com

ZKE HEADLIGHT WASHER (SRA)

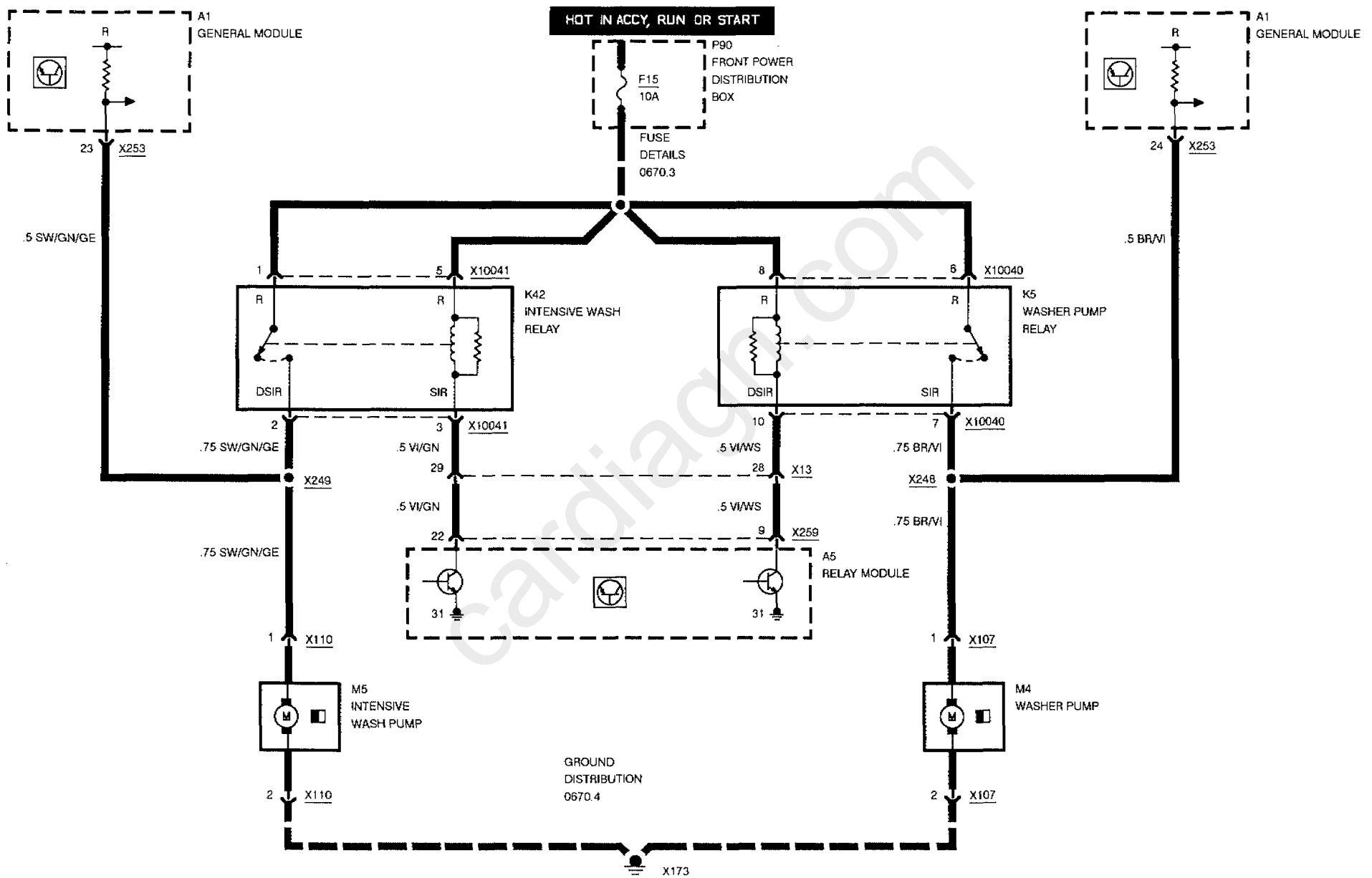

cardiagn.com

ZKE HEADLIGHT WASHER (SRA)

OUTPUT DETAILS

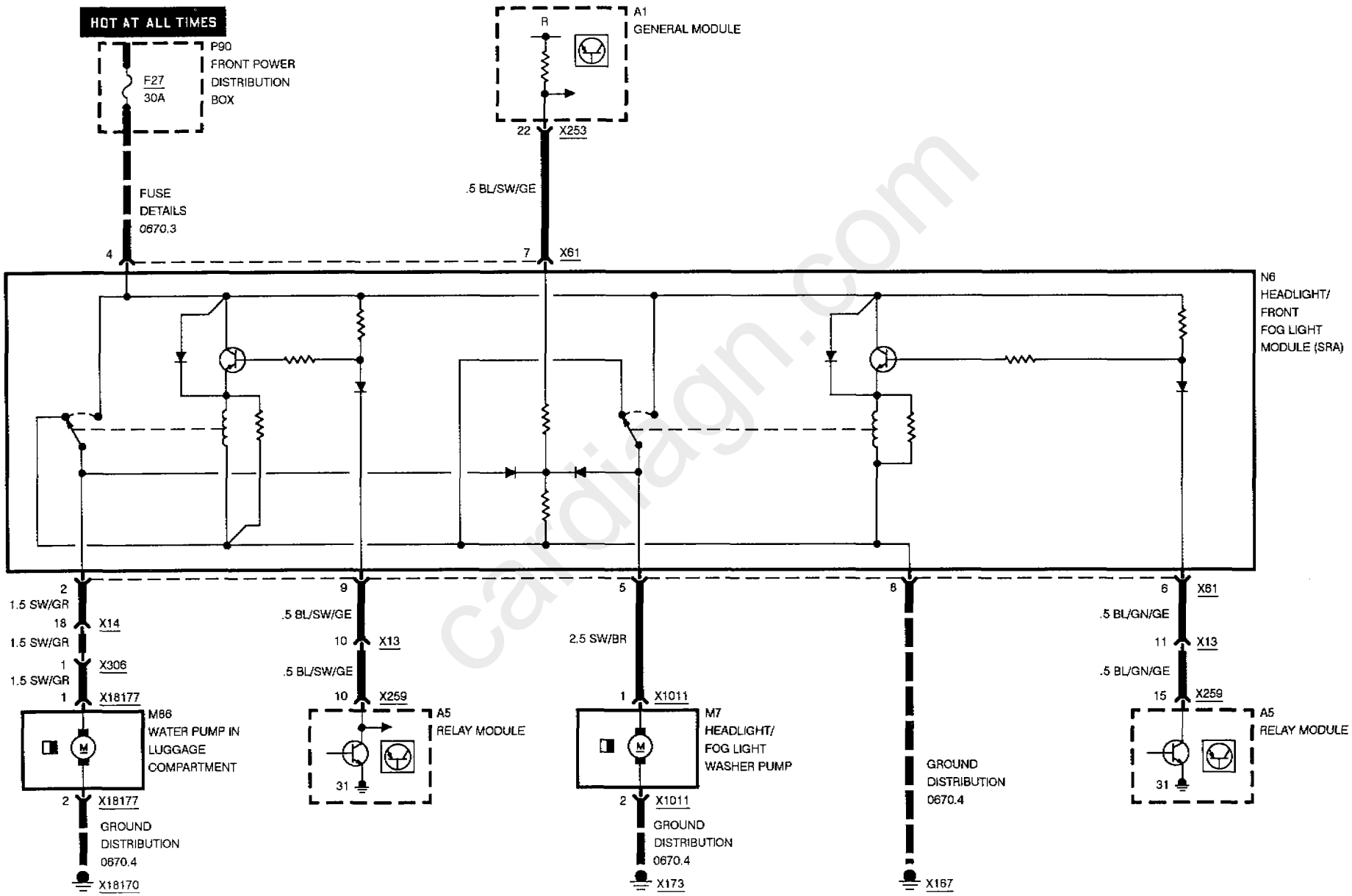

cardiagn.com

carditagn.com

WINDSHIELD WASHER JET HEATERS

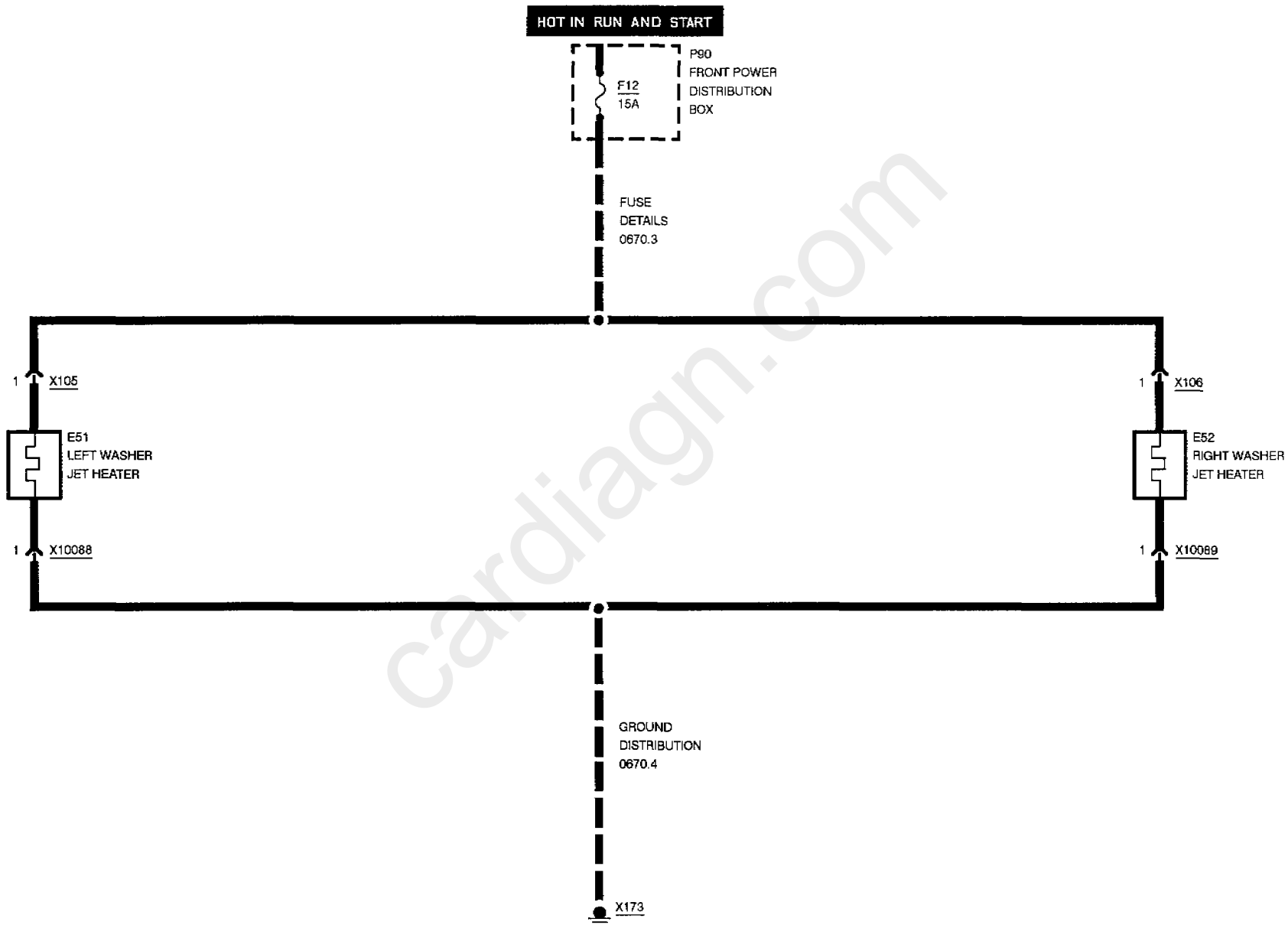

cardiagn.com

cardiagn.com

ELECTRONIC BODY MODULE (EKM)

INSTRUMENTATION BUS (I-BUS)

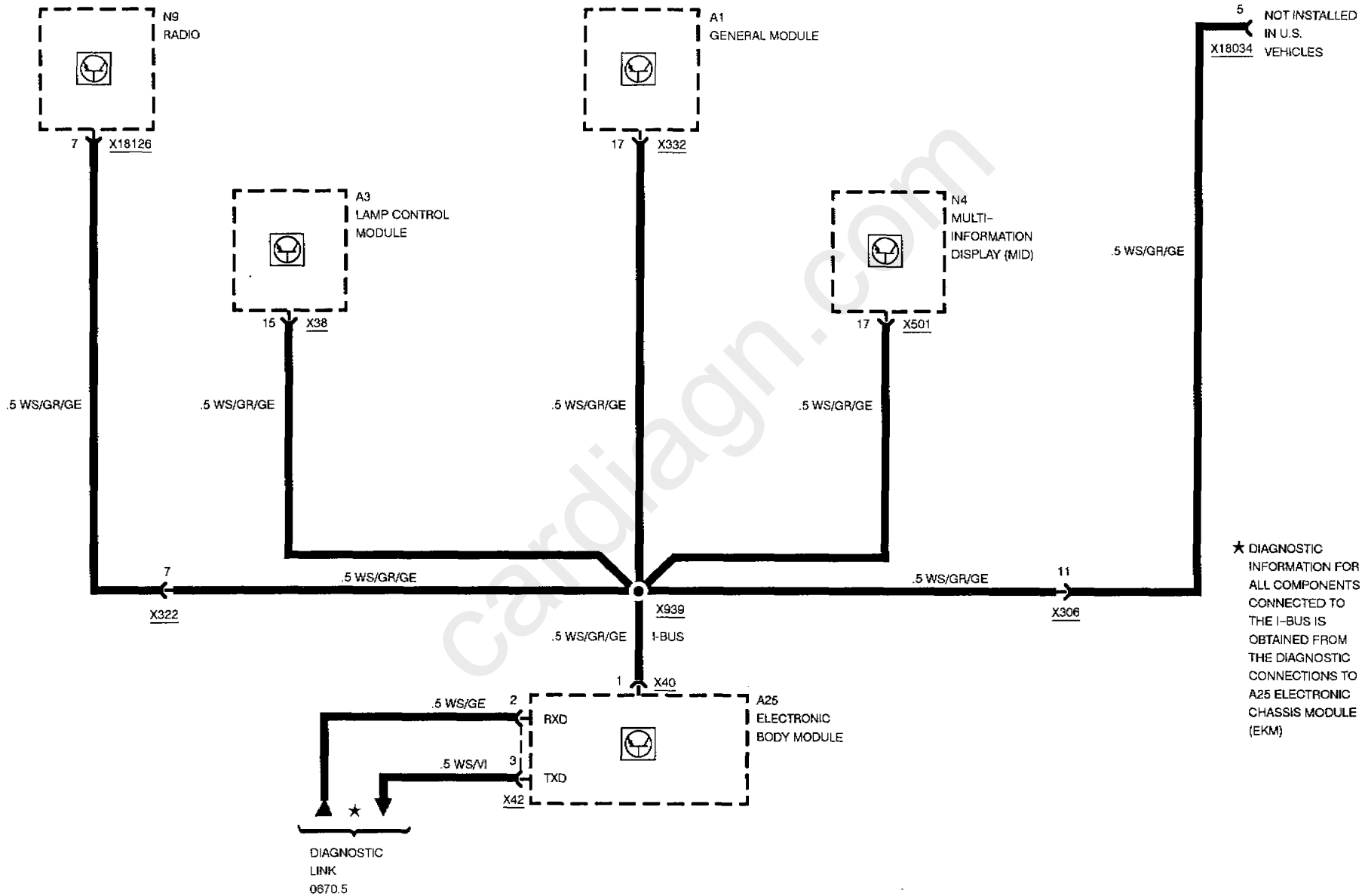

cardiagn.com

ELECTRONIC BODY MODULE (EKM)

POWER, GROUNDS, START INPUT, KOMBI-BUS, DIAGNOSTIC LINK

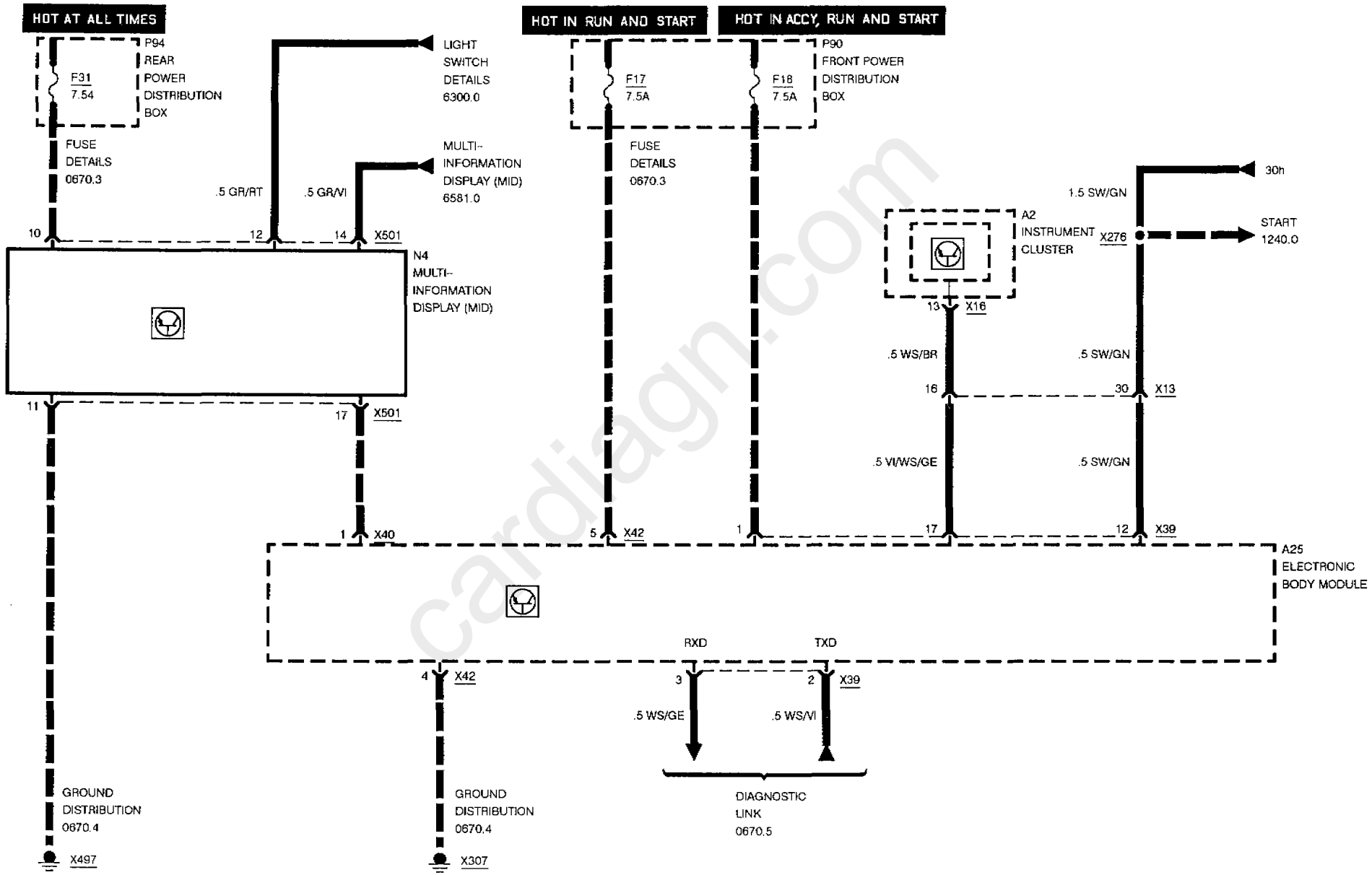

cardiagn.com

ELECTRONIC BODY MODULE (EKM)

SIGNAL-OUTPUT SPEEDOMETER

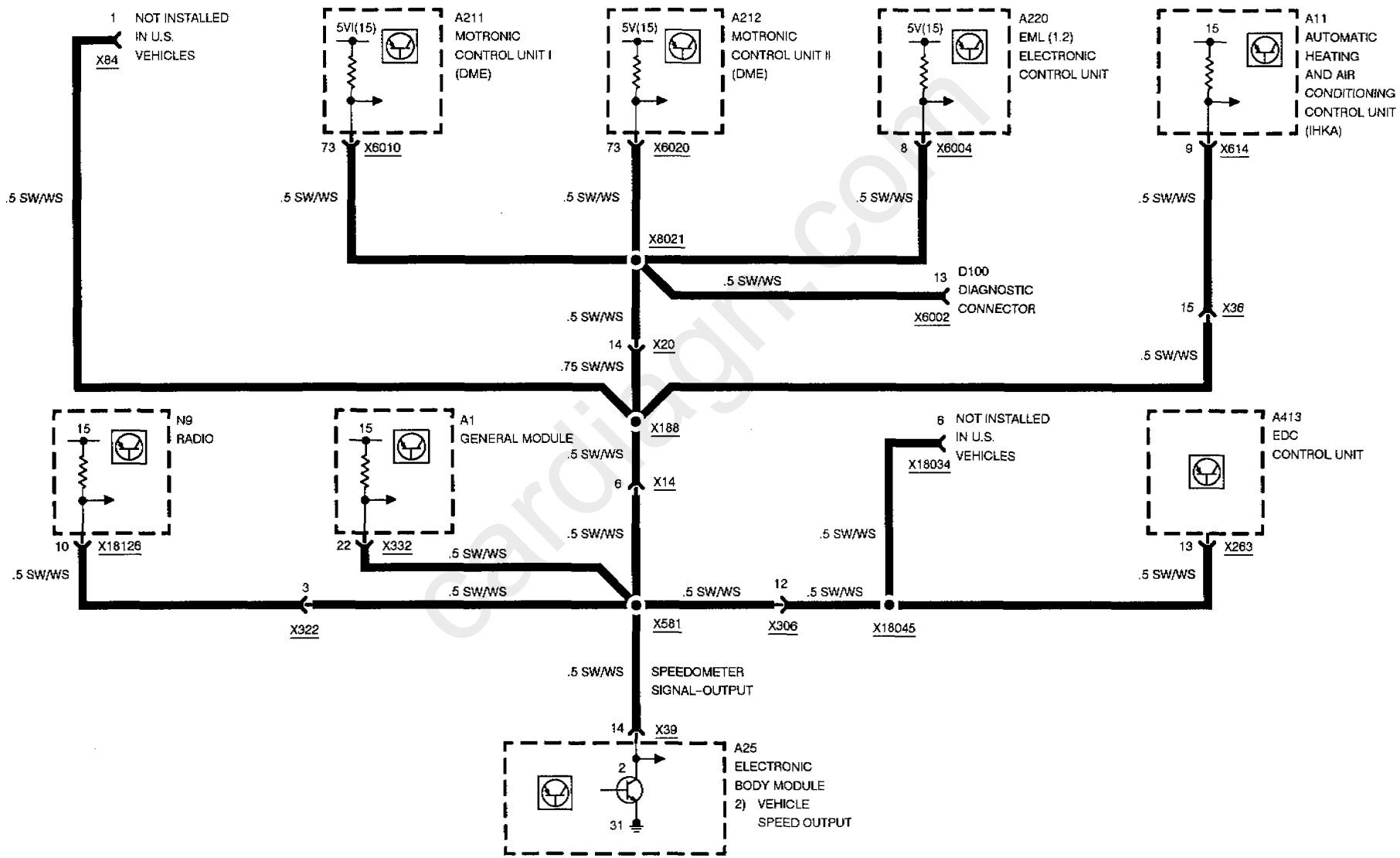

ELECTRONIC BODY MODULE (EKM)

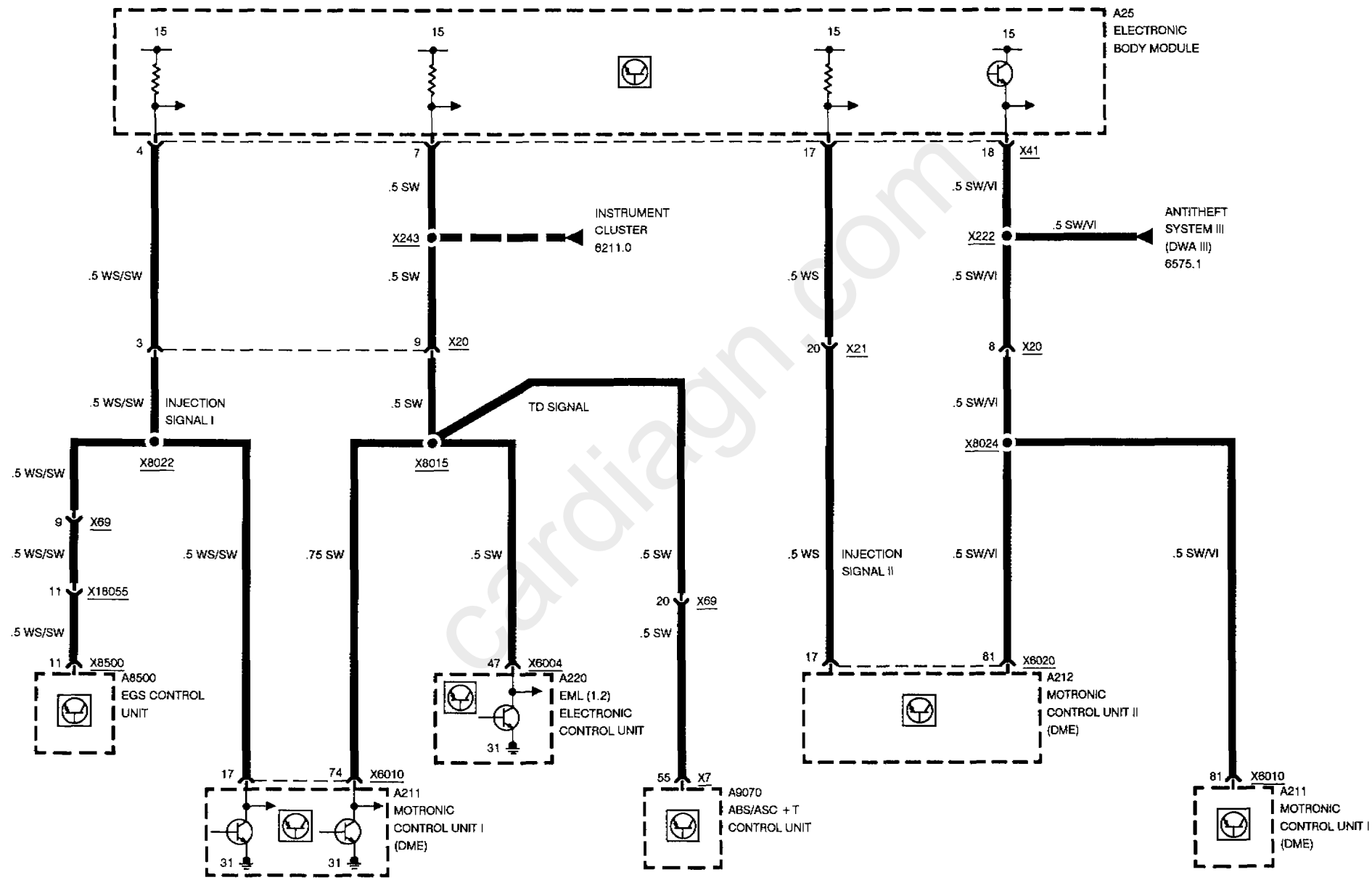

cardiagn.com

ELECTRONIC BODY MODULE (EKM)

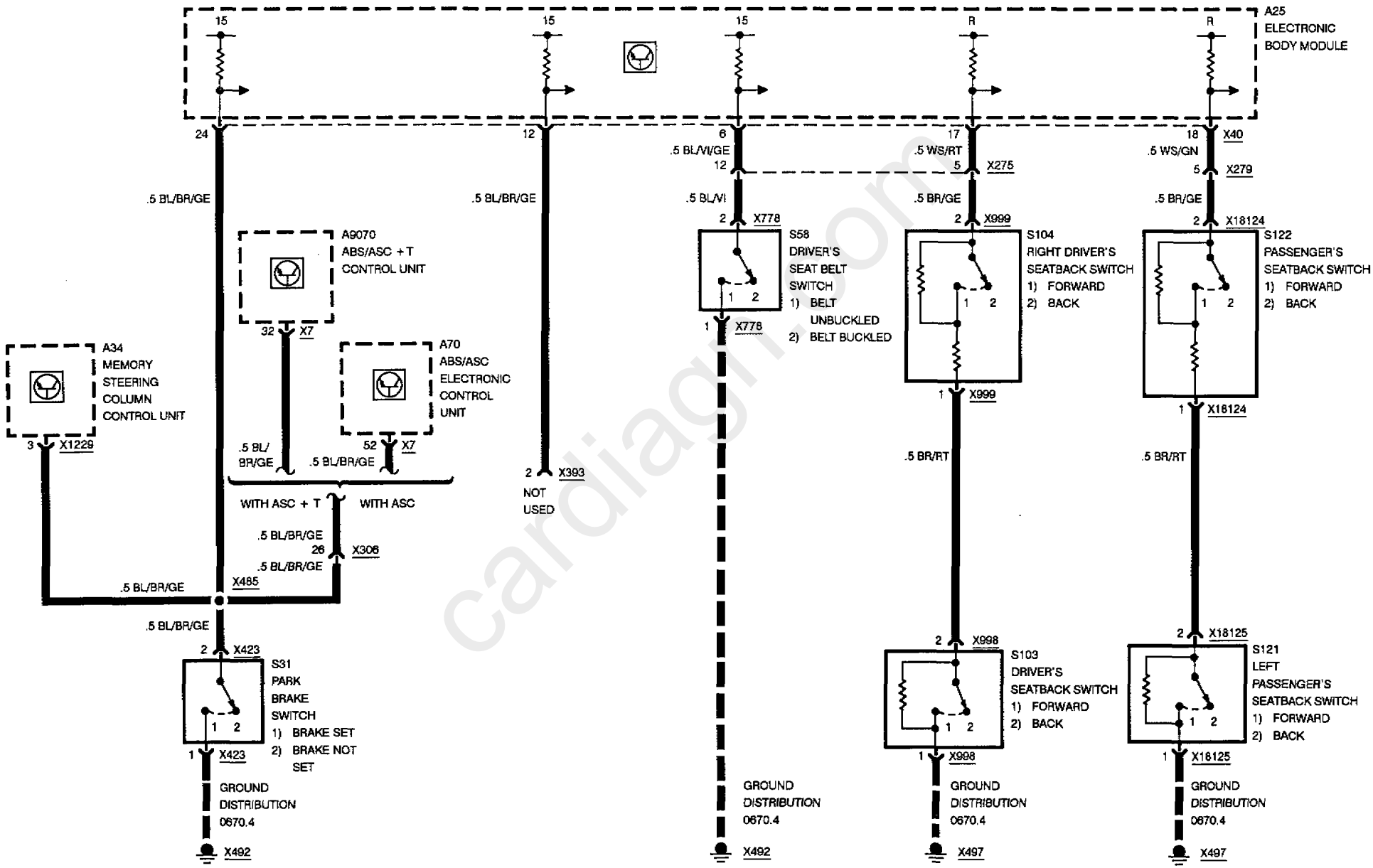

cardiagn.com

ELECTRONIC BODY MODULE (EKM)

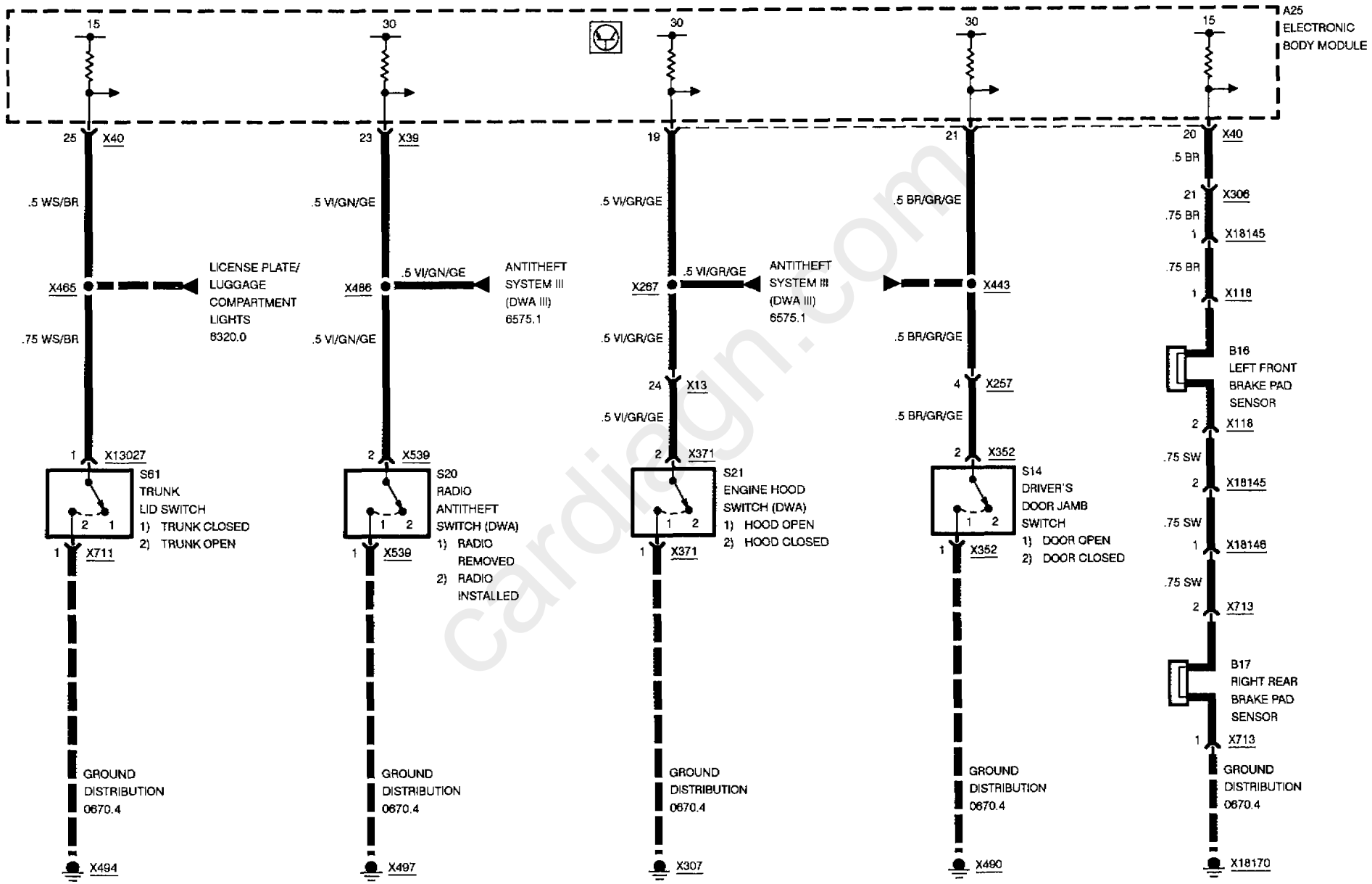

cardiagn.com

ELECTRONIC BODY MODULE (EKM)

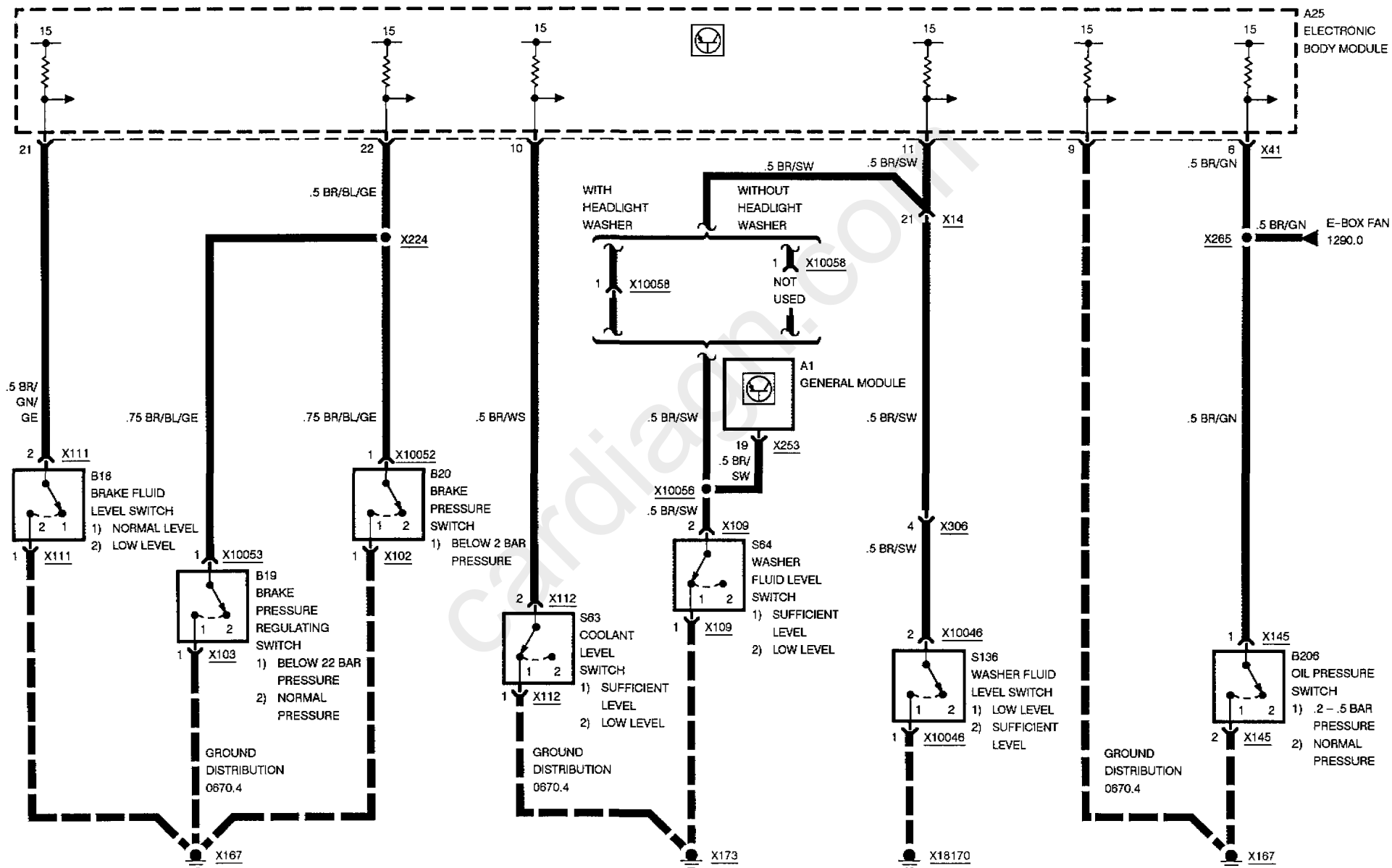

cardiagn.com

ELECTRONIC BODY MODULE (EKM)

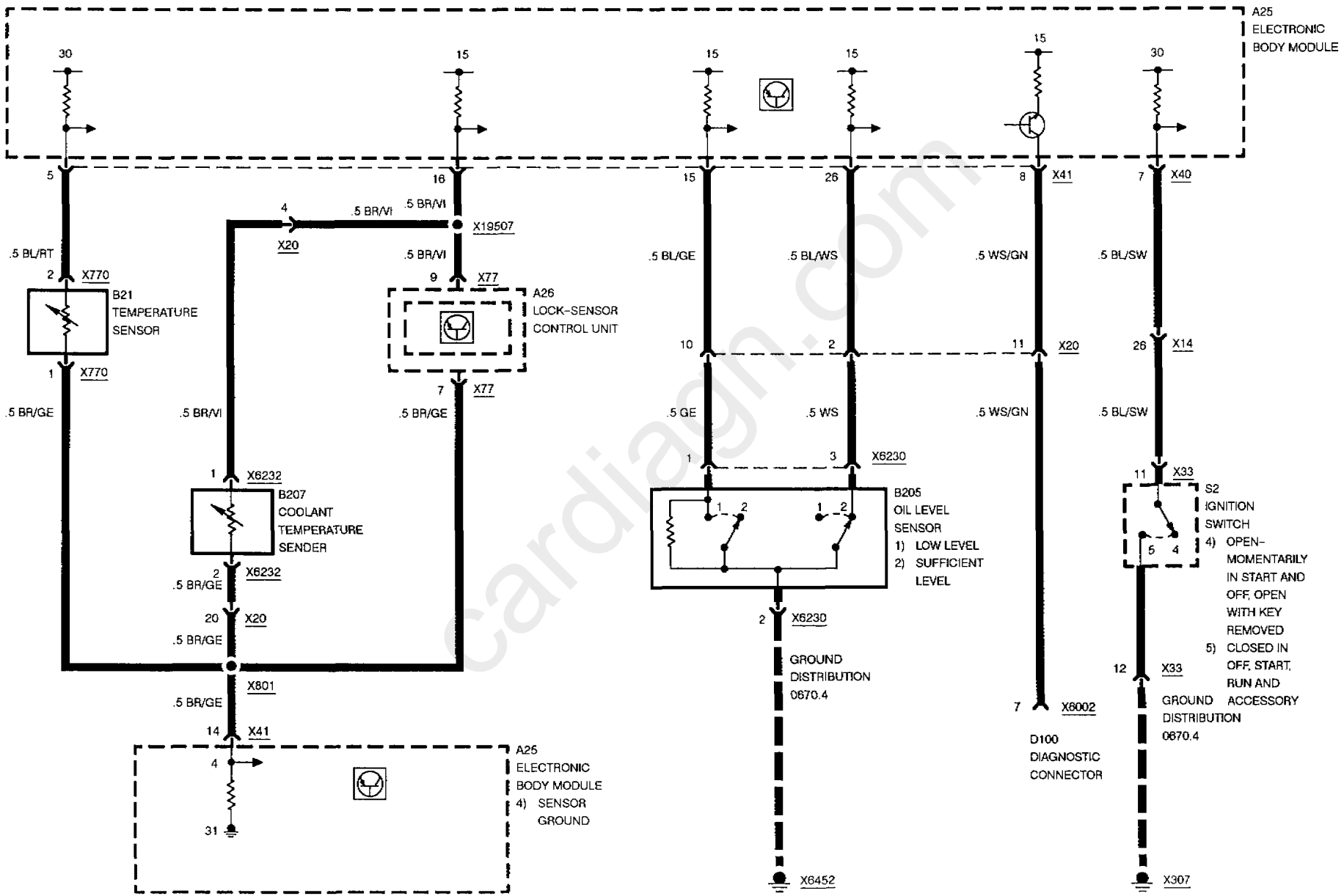

cardiagn.com

ELECTRONIC BODY MODULE (EKM)

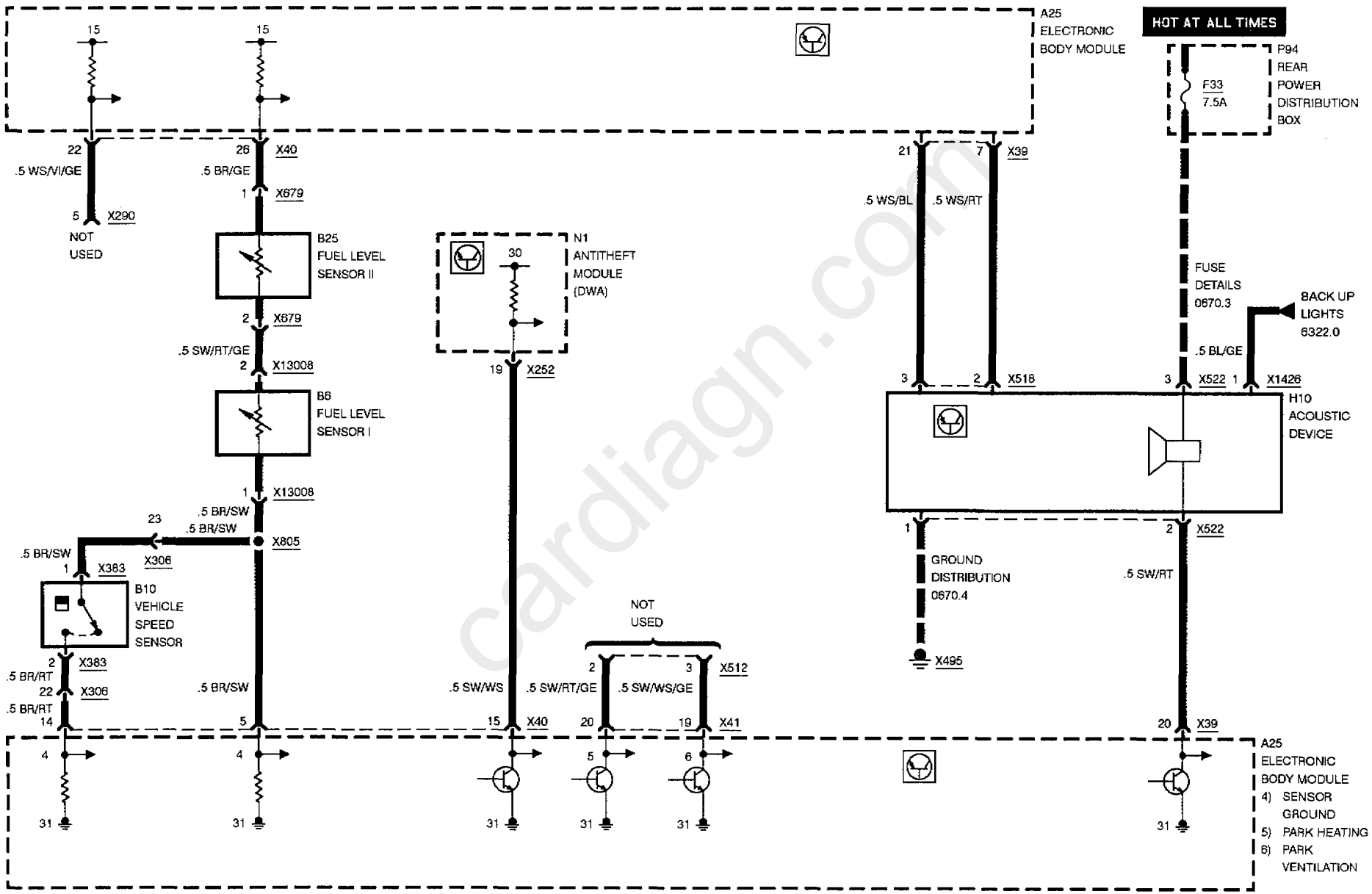

cardiagn.com

ELECTRONIC BODY MODULE (EKM)

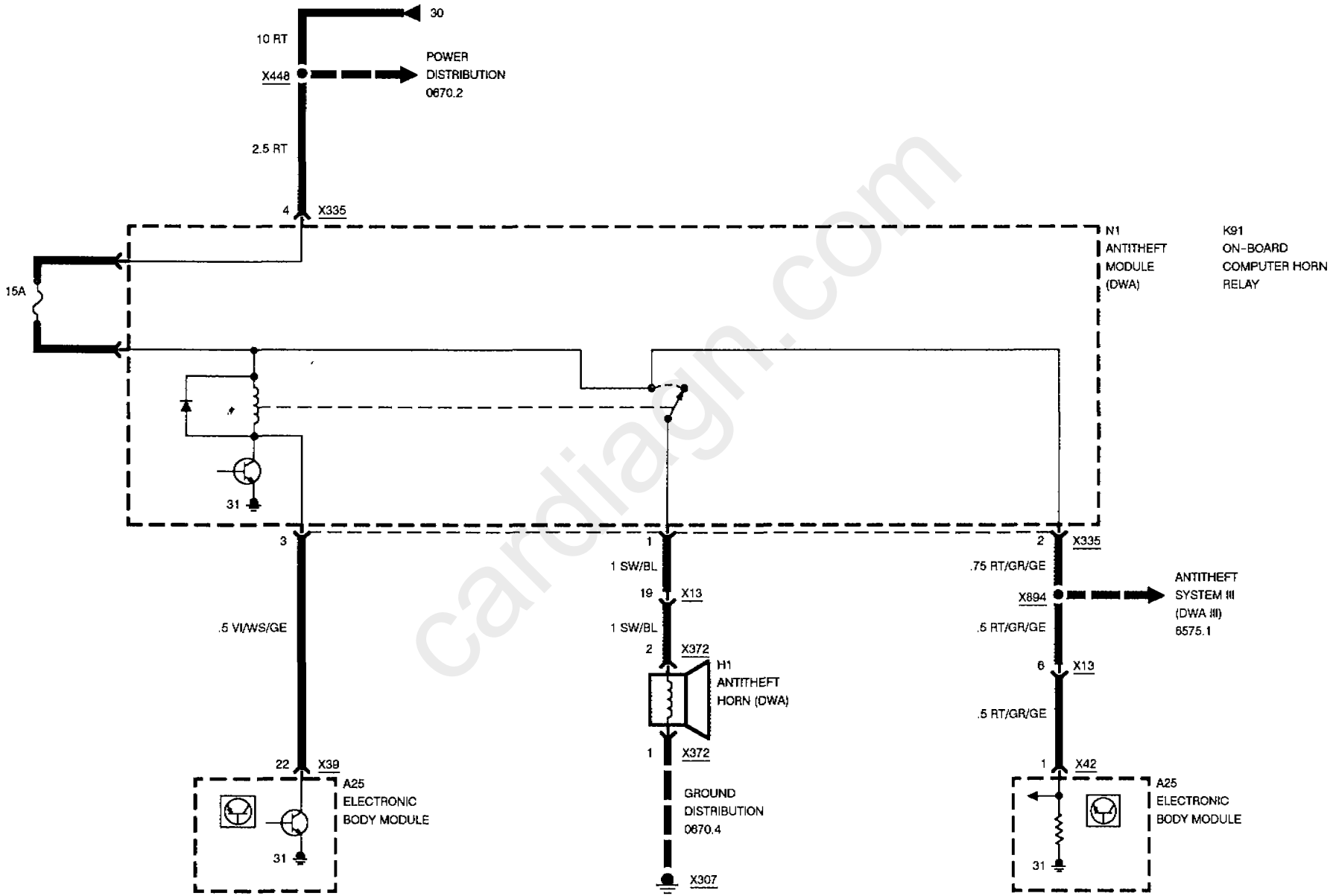

cardiagn.com

ELECTRONIC BODY MODULE (EKM)

	L1	L2	L3	L4
P	1	1	0	0
R	1	0	0	1
N	0	1	1	0
D	0	0	0	1
3	0	0	1	0
2	1	0	0	0
1	1	0	1	0

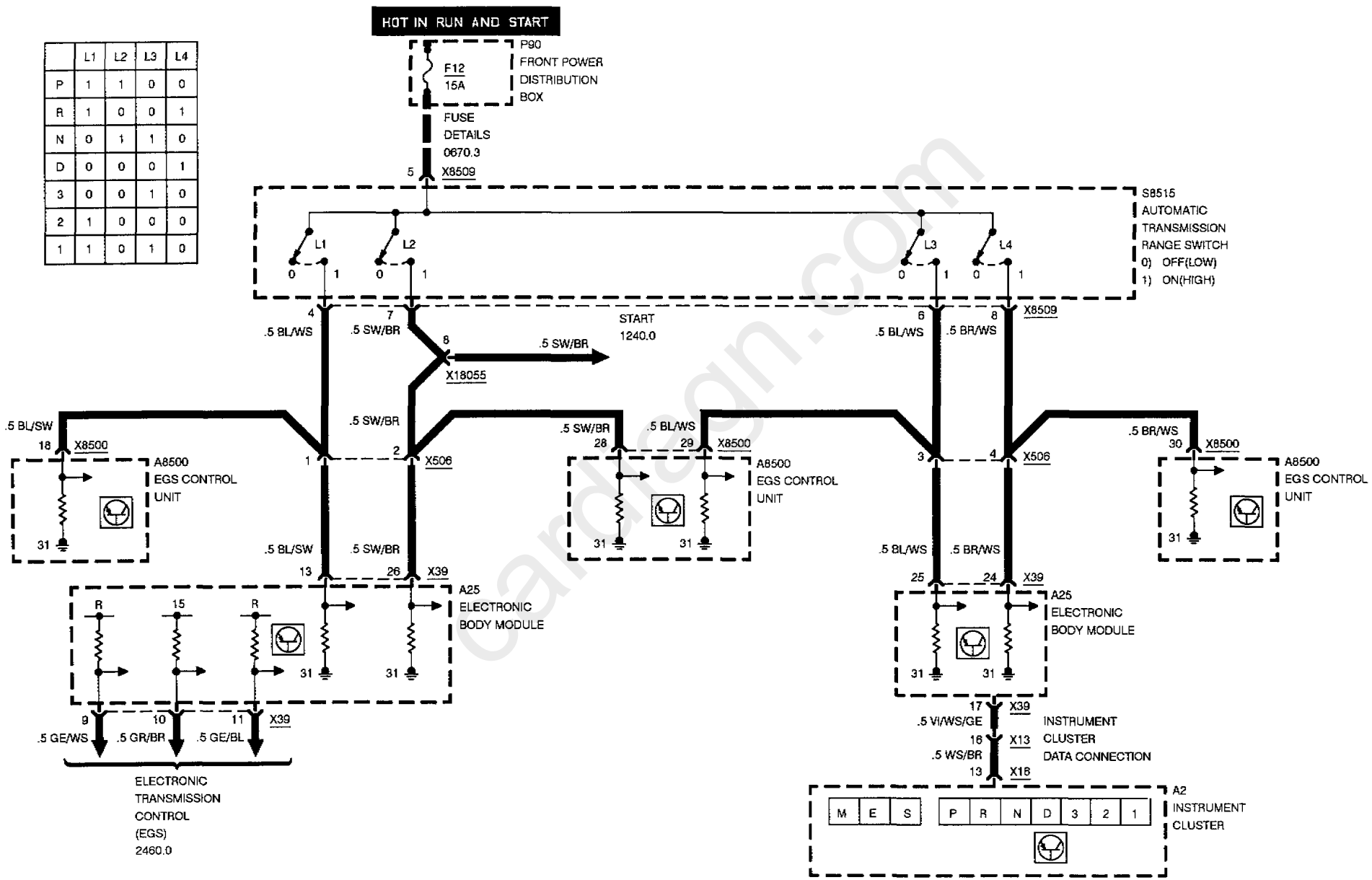

cardiagn.com

cardiagn.com

INSTRUMENT CLUSTER

INDICATORS

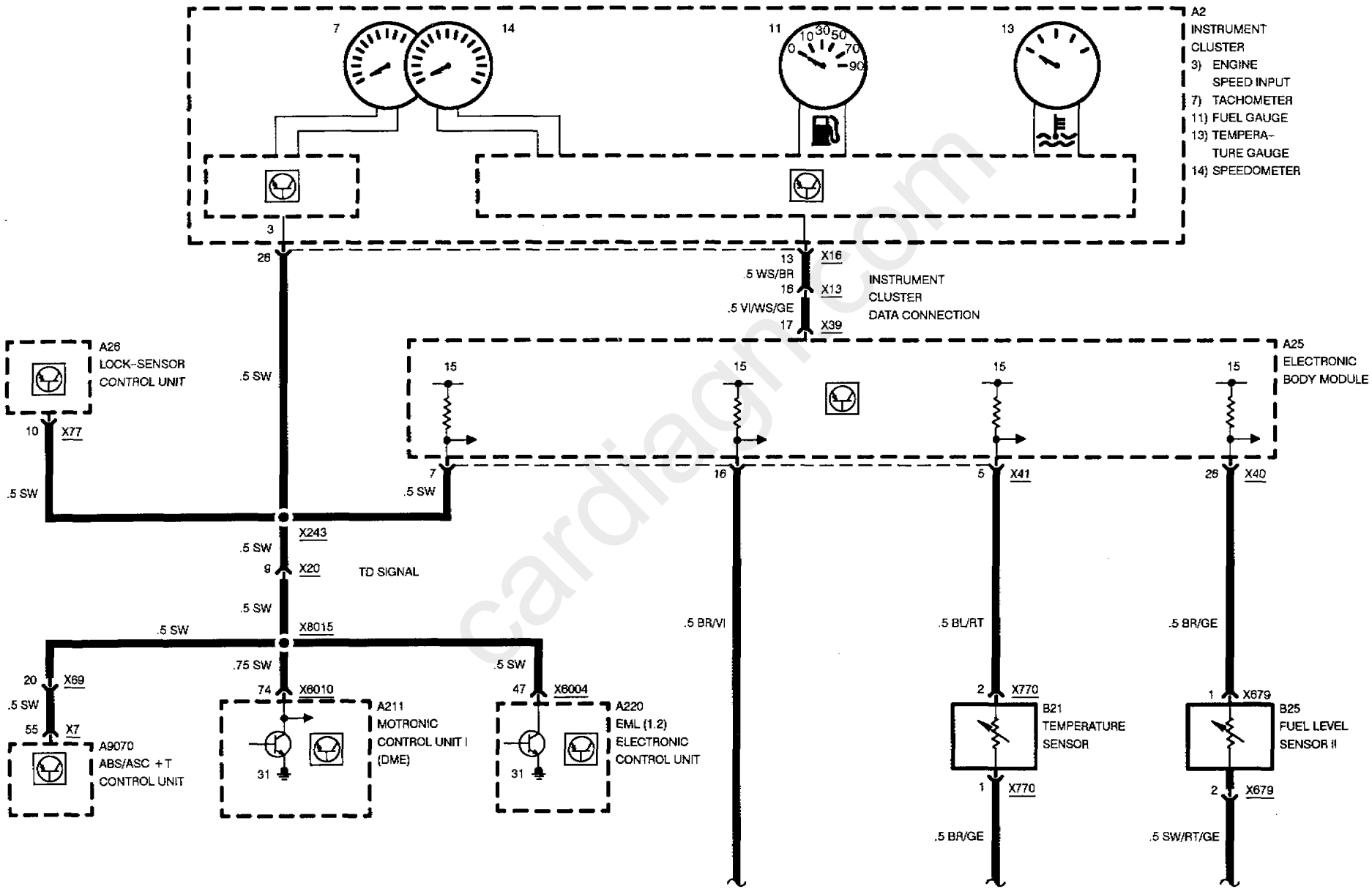

cardiagn.com

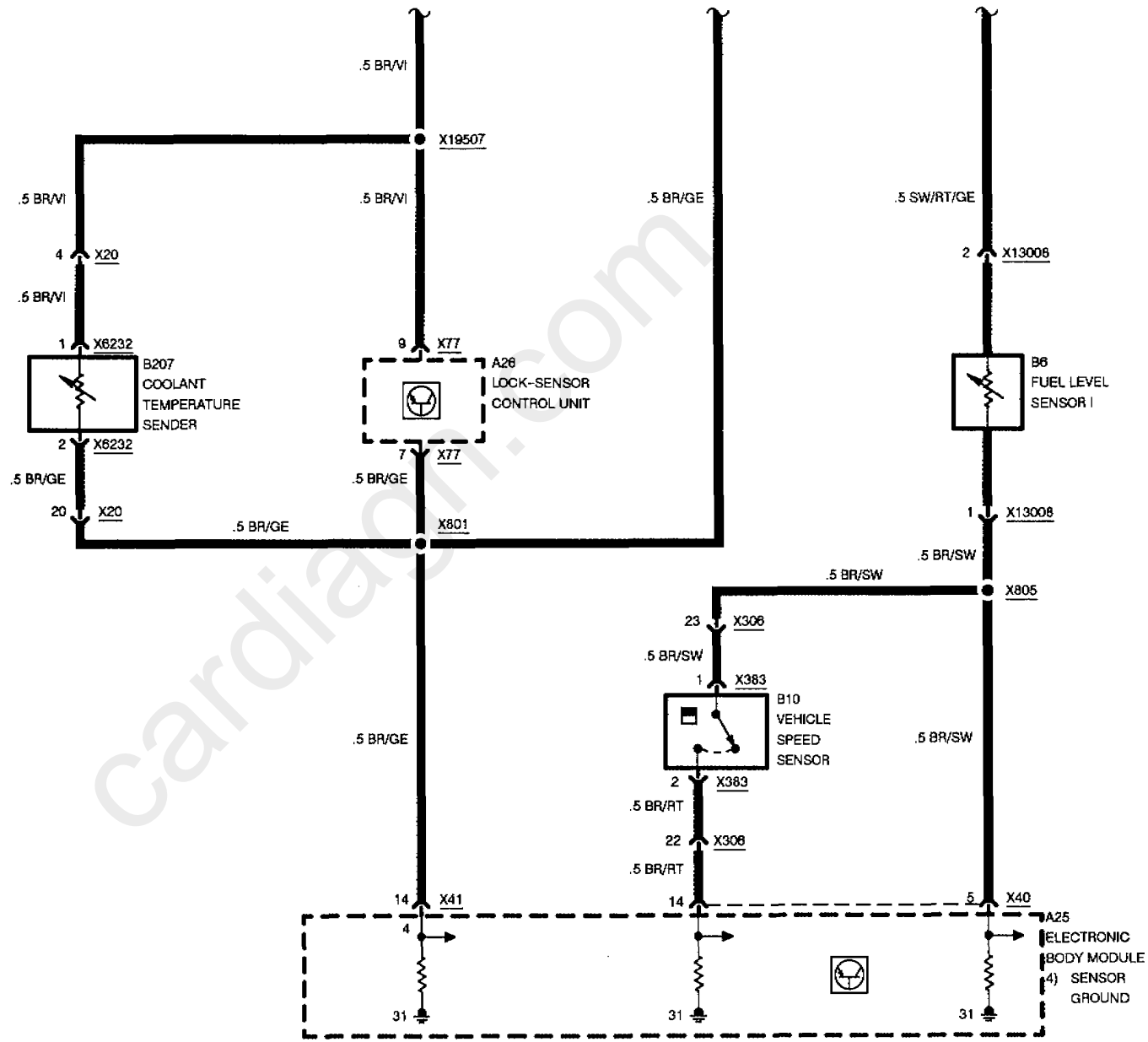

cardiagn.com

INSTRUMENT CLUSTER

INDICATORS

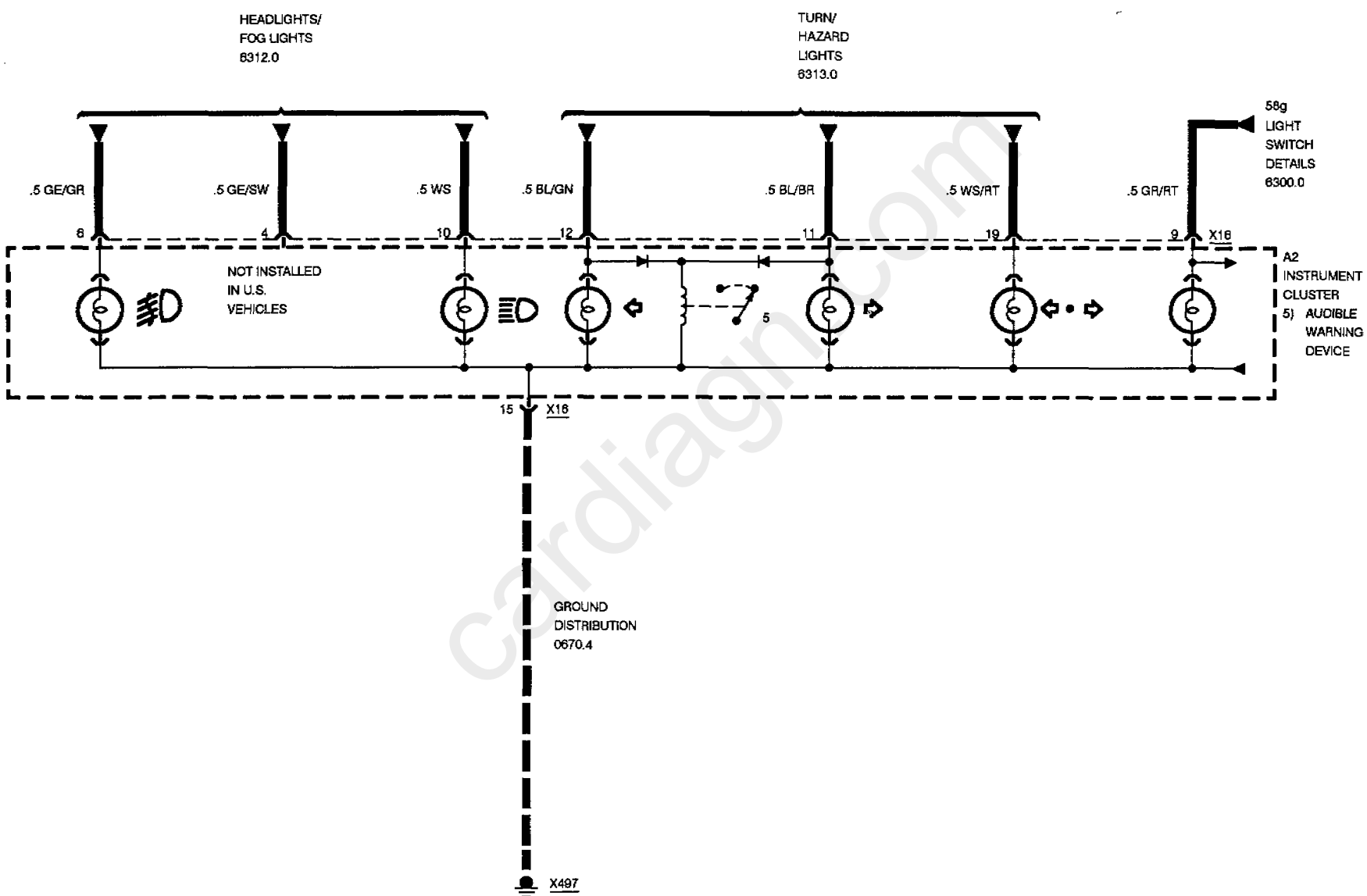

cardiagn.com

INSTRUMENT CLUSTER

INDICATORS

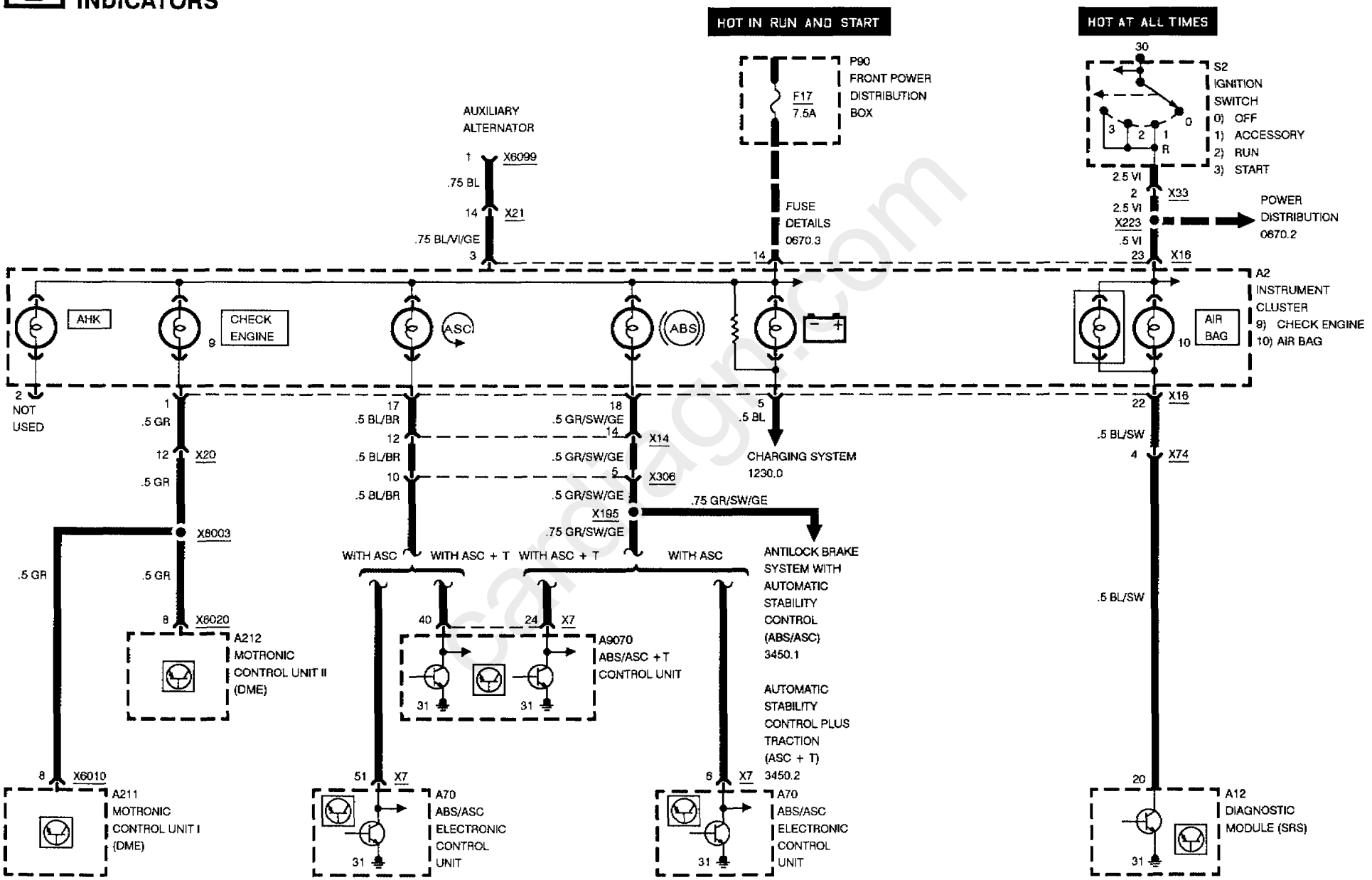

INSTRUMENT CLUSTER

INDICATORS

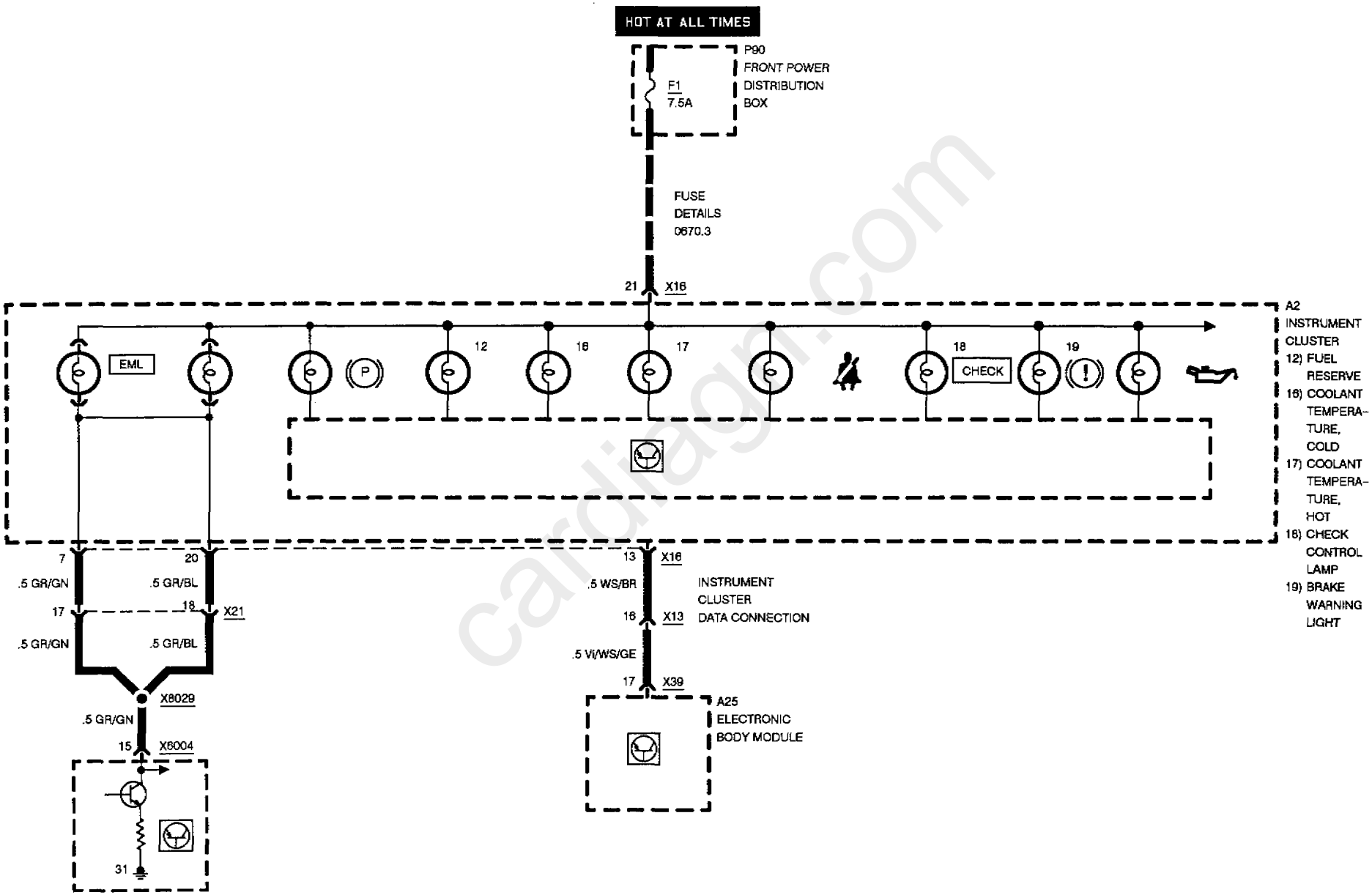

cardiagn.com

INSTRUMENT CLUSTER

INDICATOR LIGHTS, INPUTS

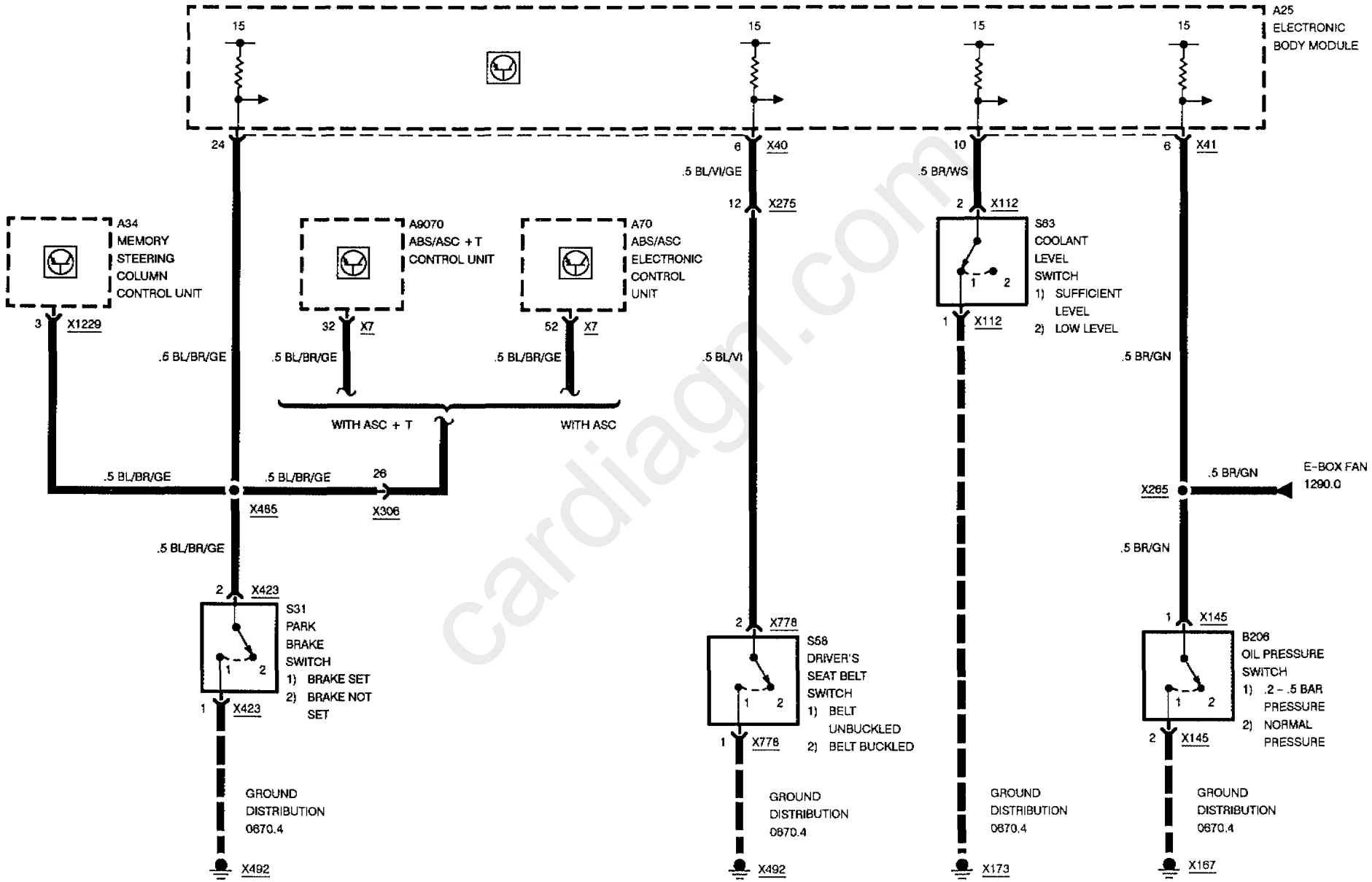

cardiagn.com

BMW 8

INSTRUMENT CLUSTER

GEAR SELECTOR

	L1	L2	L3	L4
P	1	1	0	0
R	1	0	0	1
N	0	1	1	0
D	0	0	0	1
3	0	0	1	0
2	1	0	0	0
1	1	0	1	0

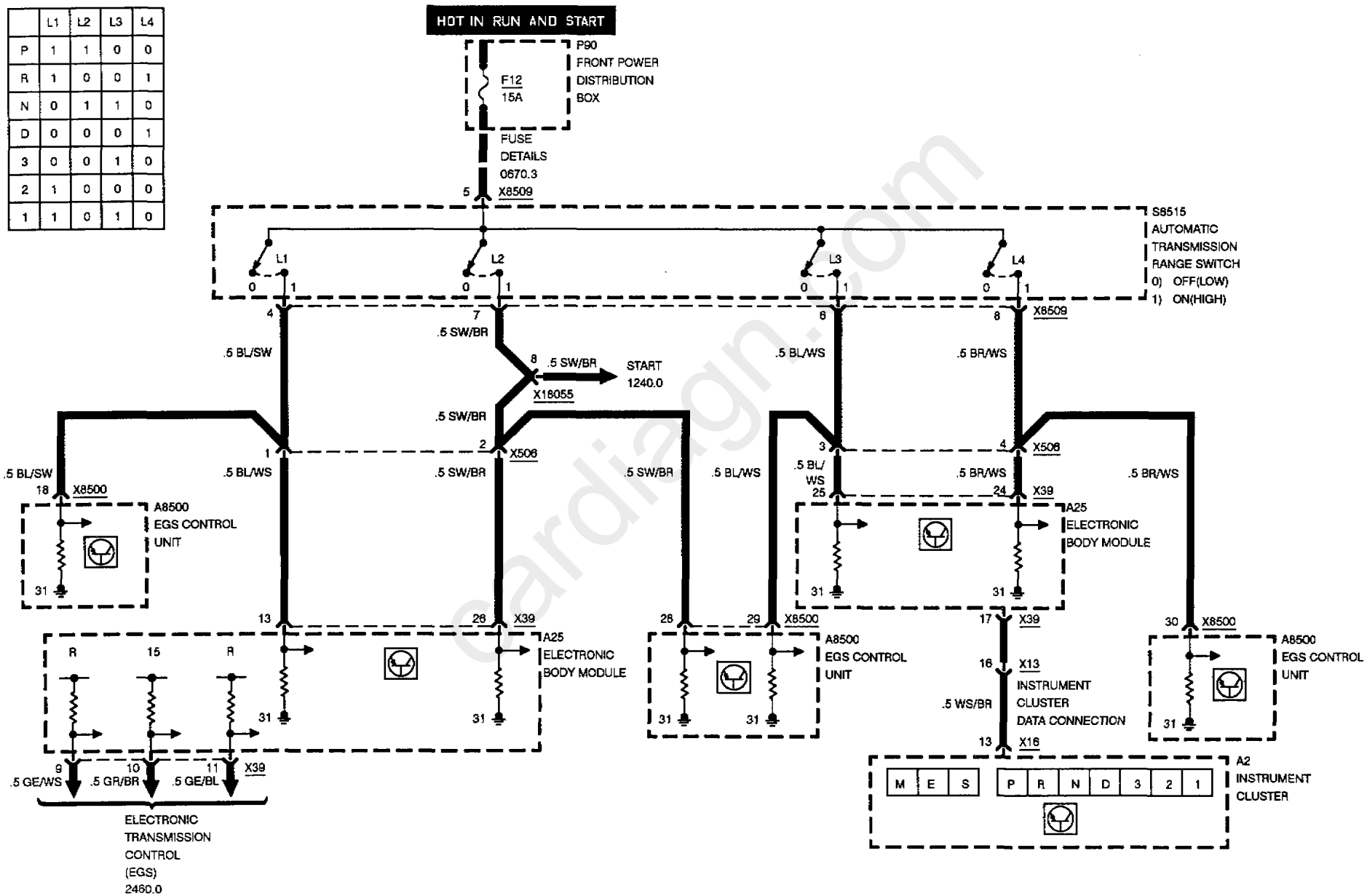

cardiagn.com

INSTRUMENT CLUSTER

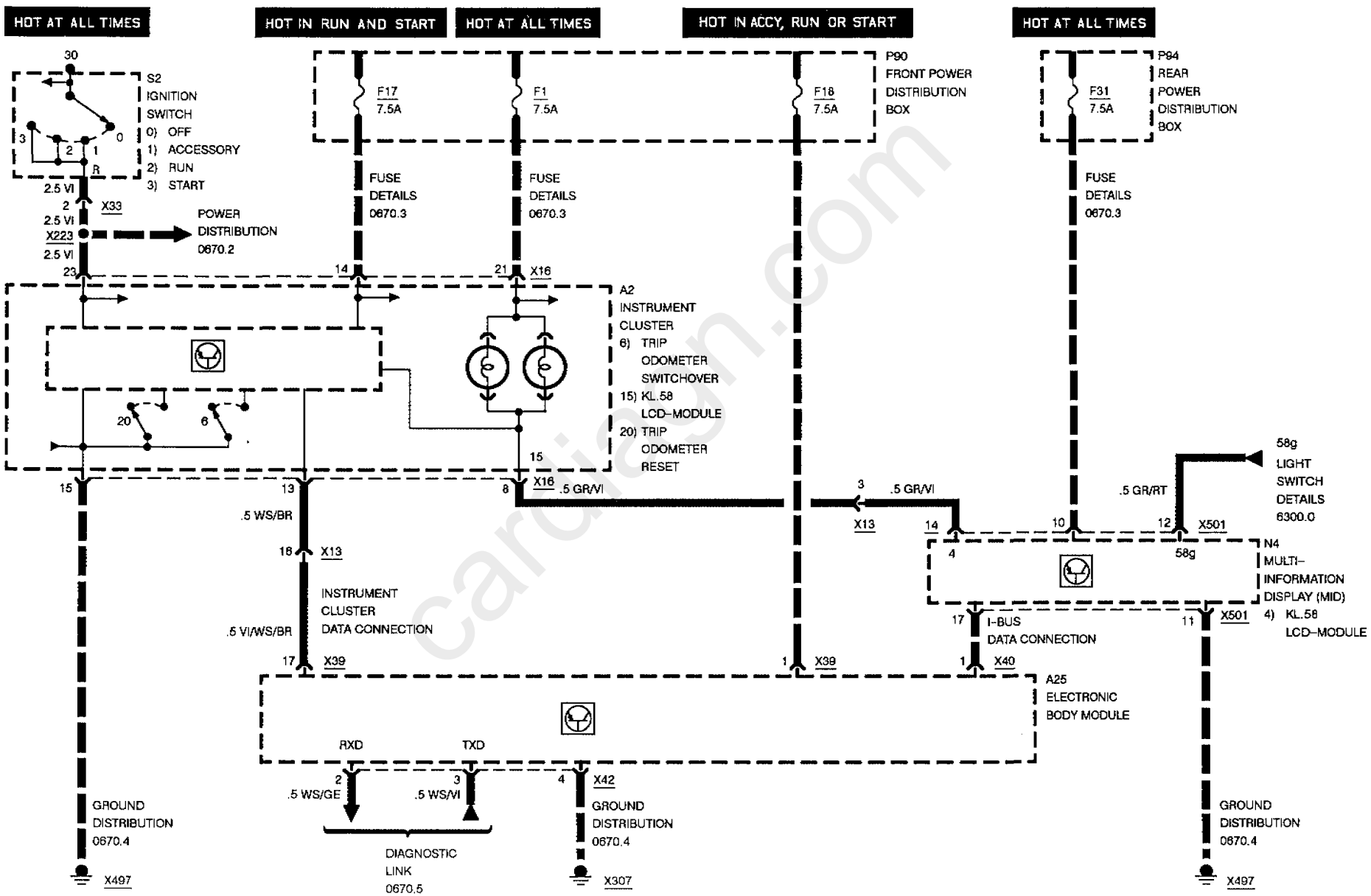

cardiagn.com

cardiagn.com

carditagn.com

LIGHT SWITCH DETAILS

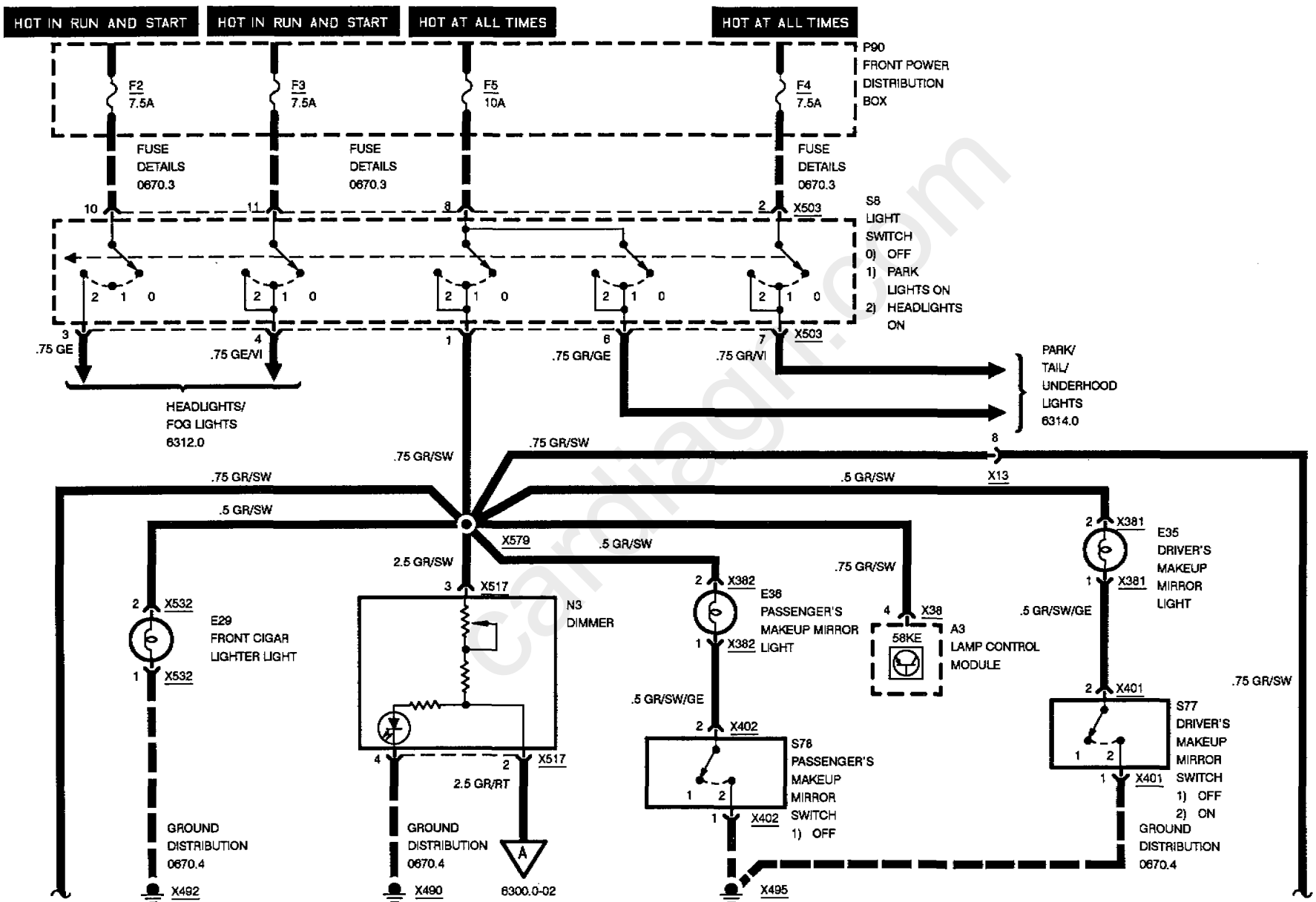

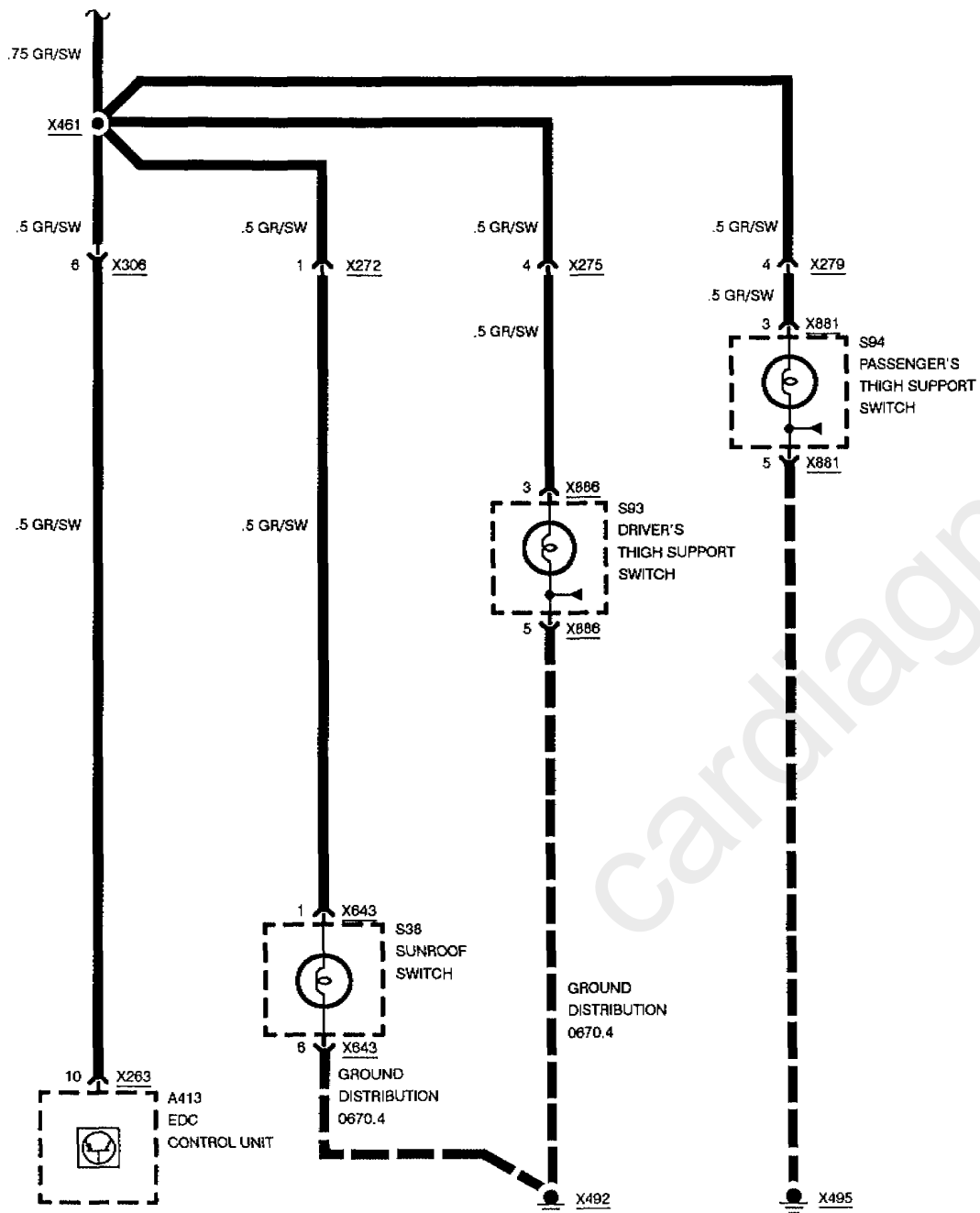

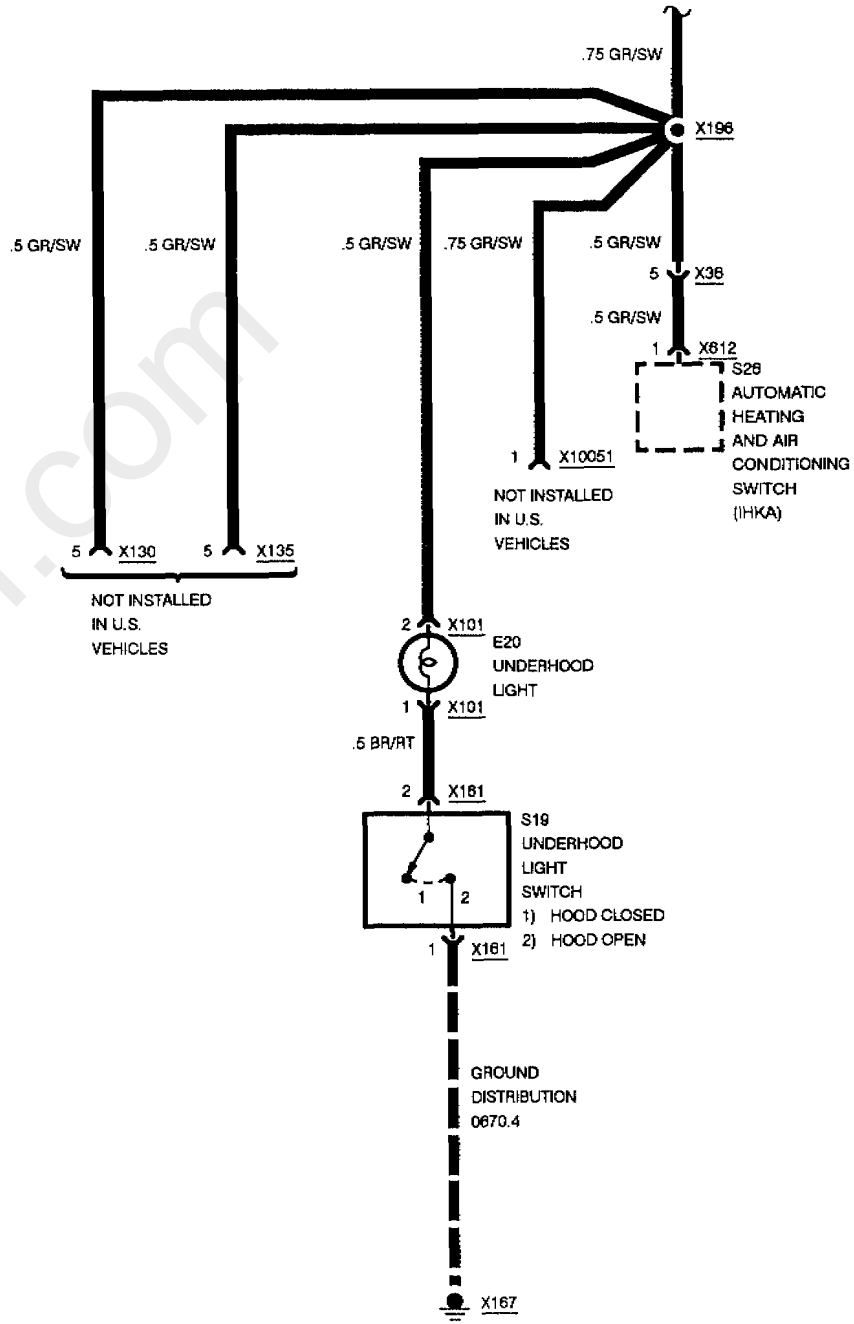

cardiagn.com

LIGHT SWITCH DETAILS

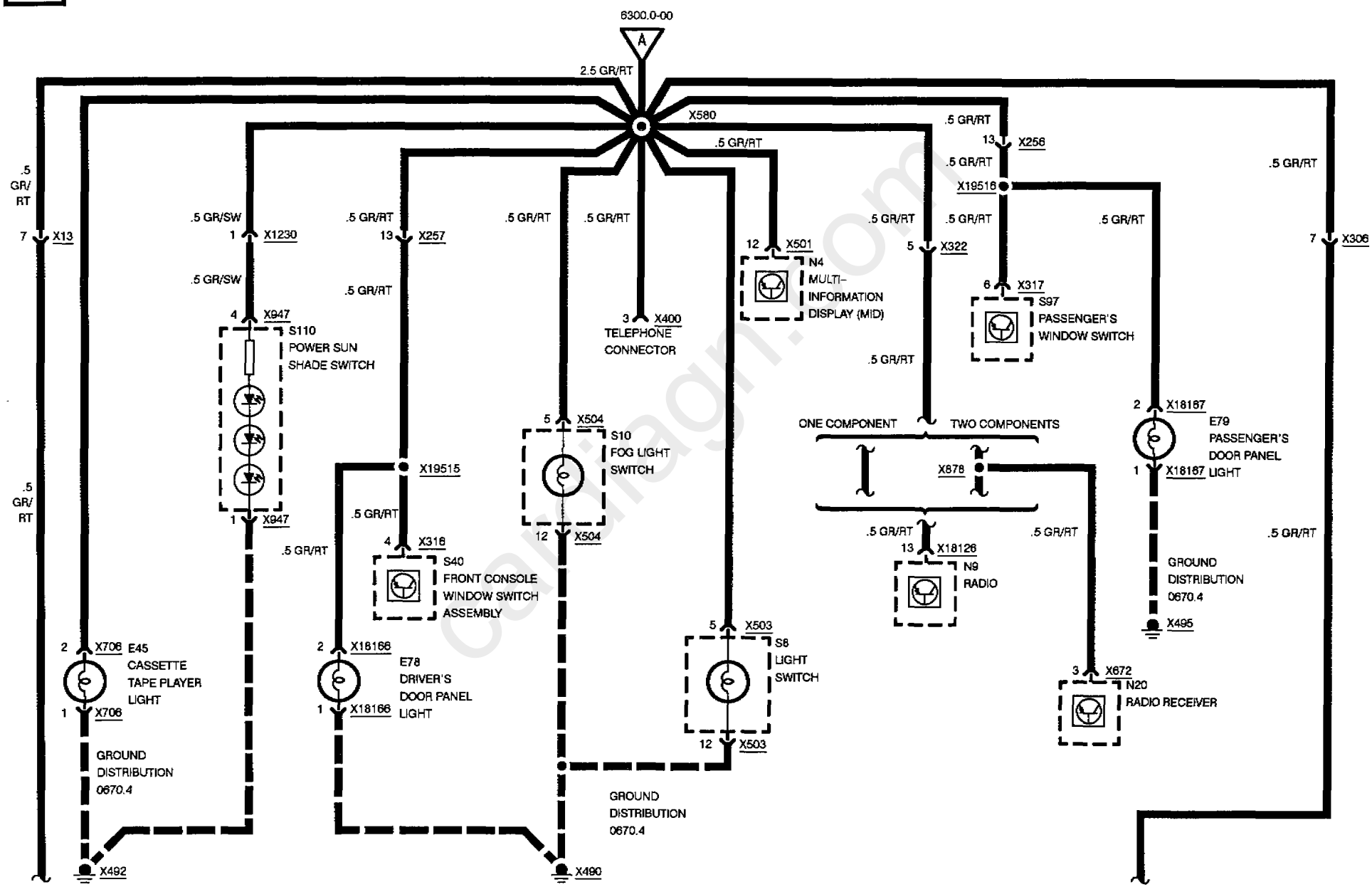

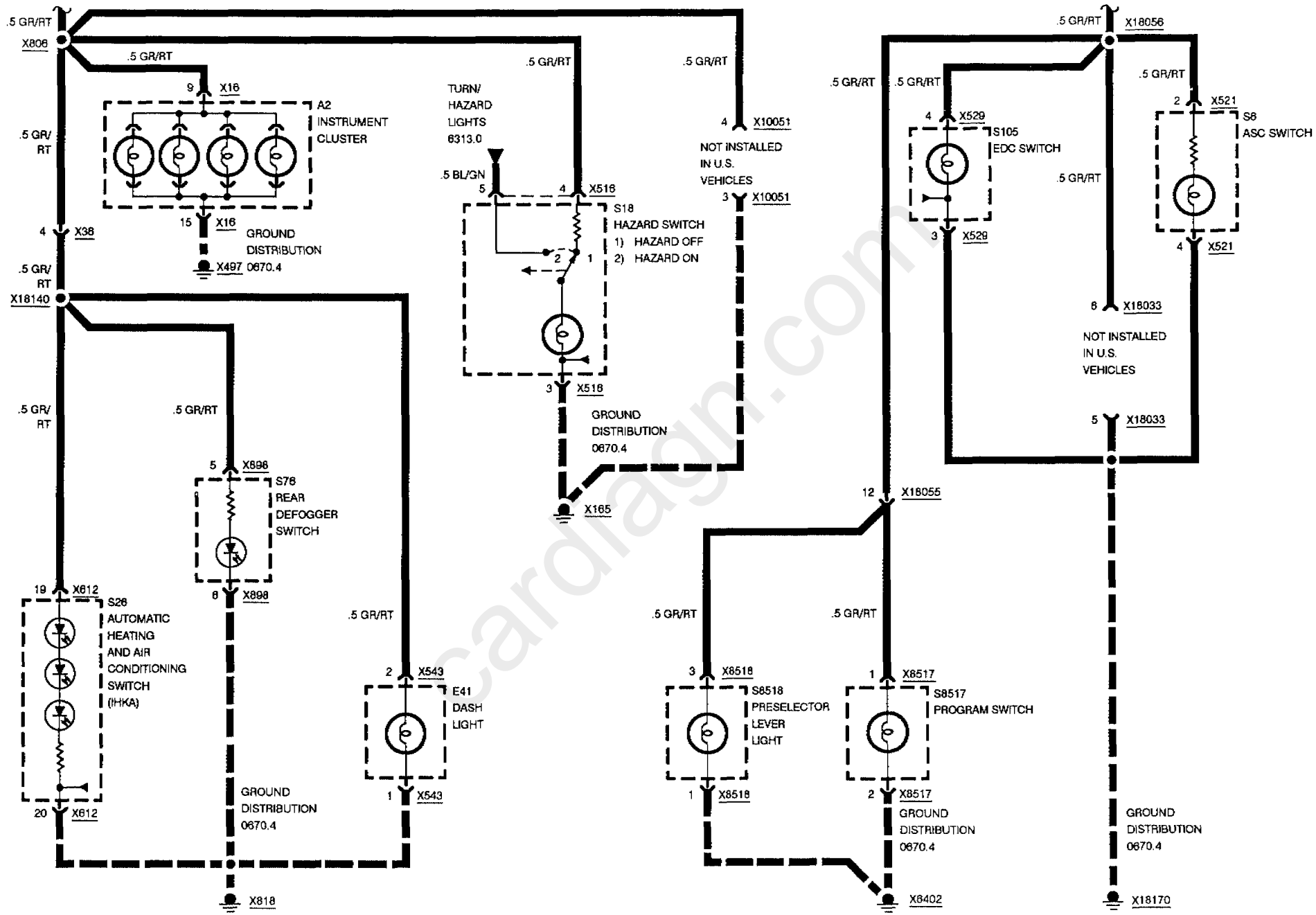

cardiagn.com

cardiagn.com

cardiagn.com

LAMP MONITOR (LKM)

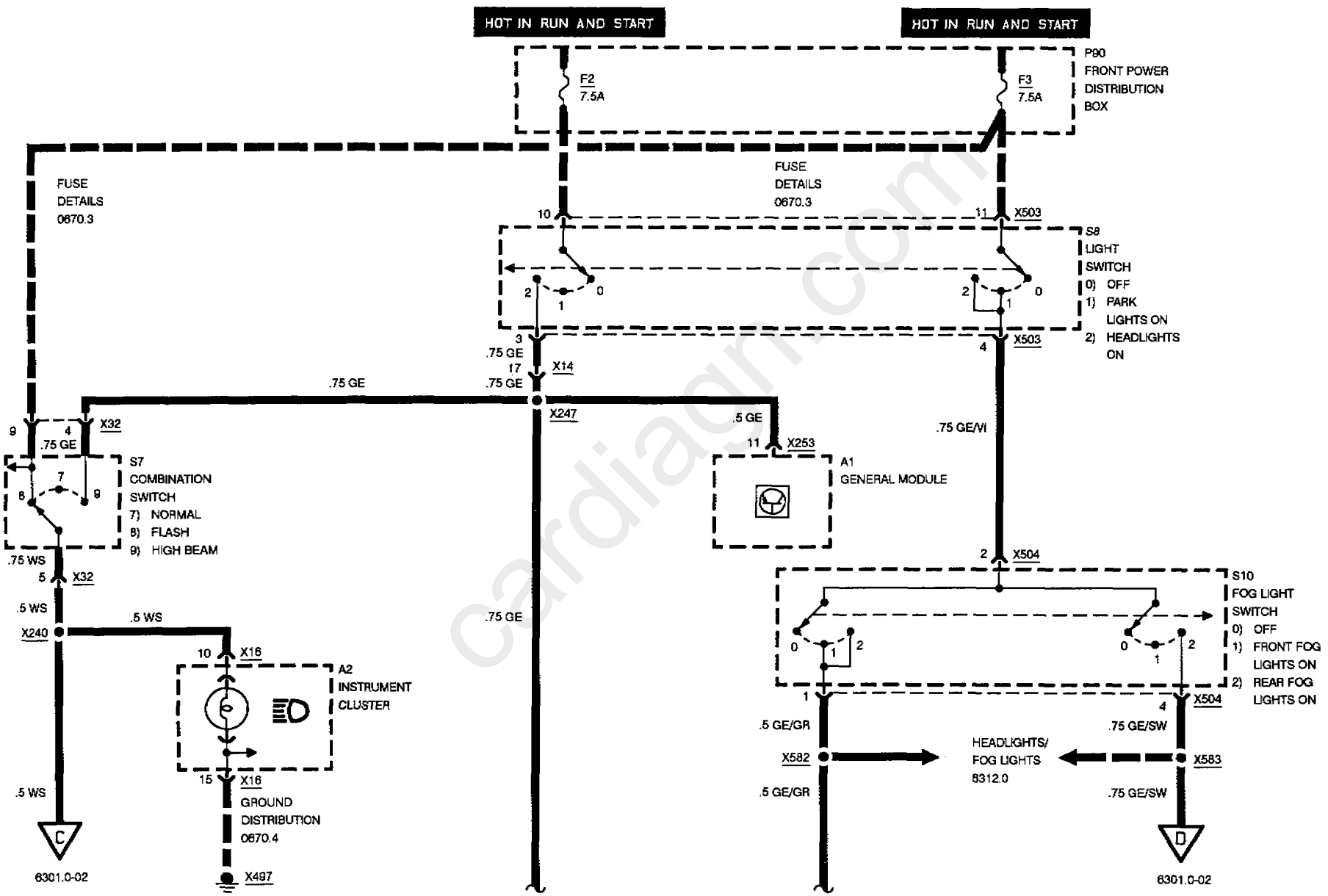

cardiagn.com

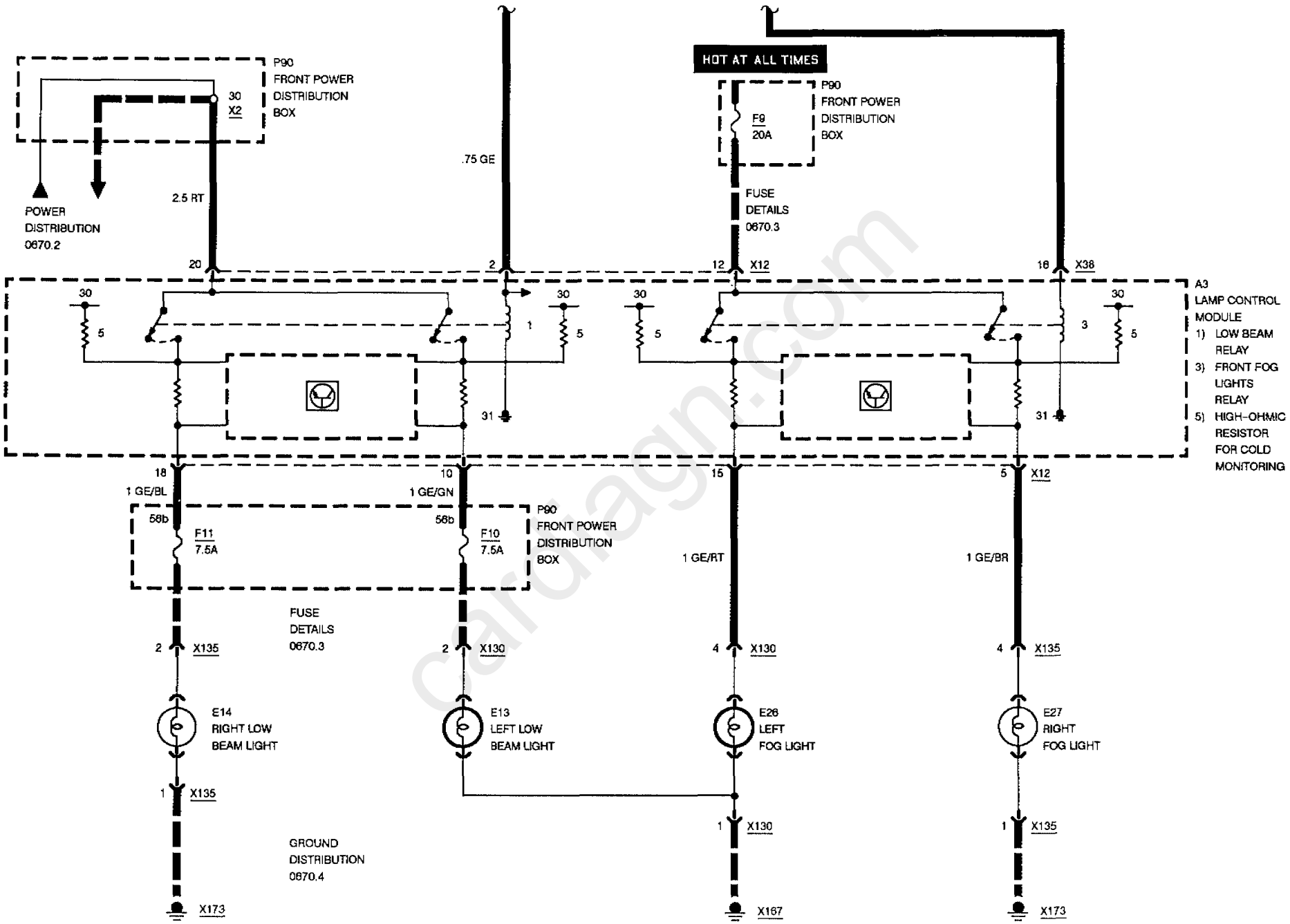

cardiagn.com

LAMP MONITOR (LKM)

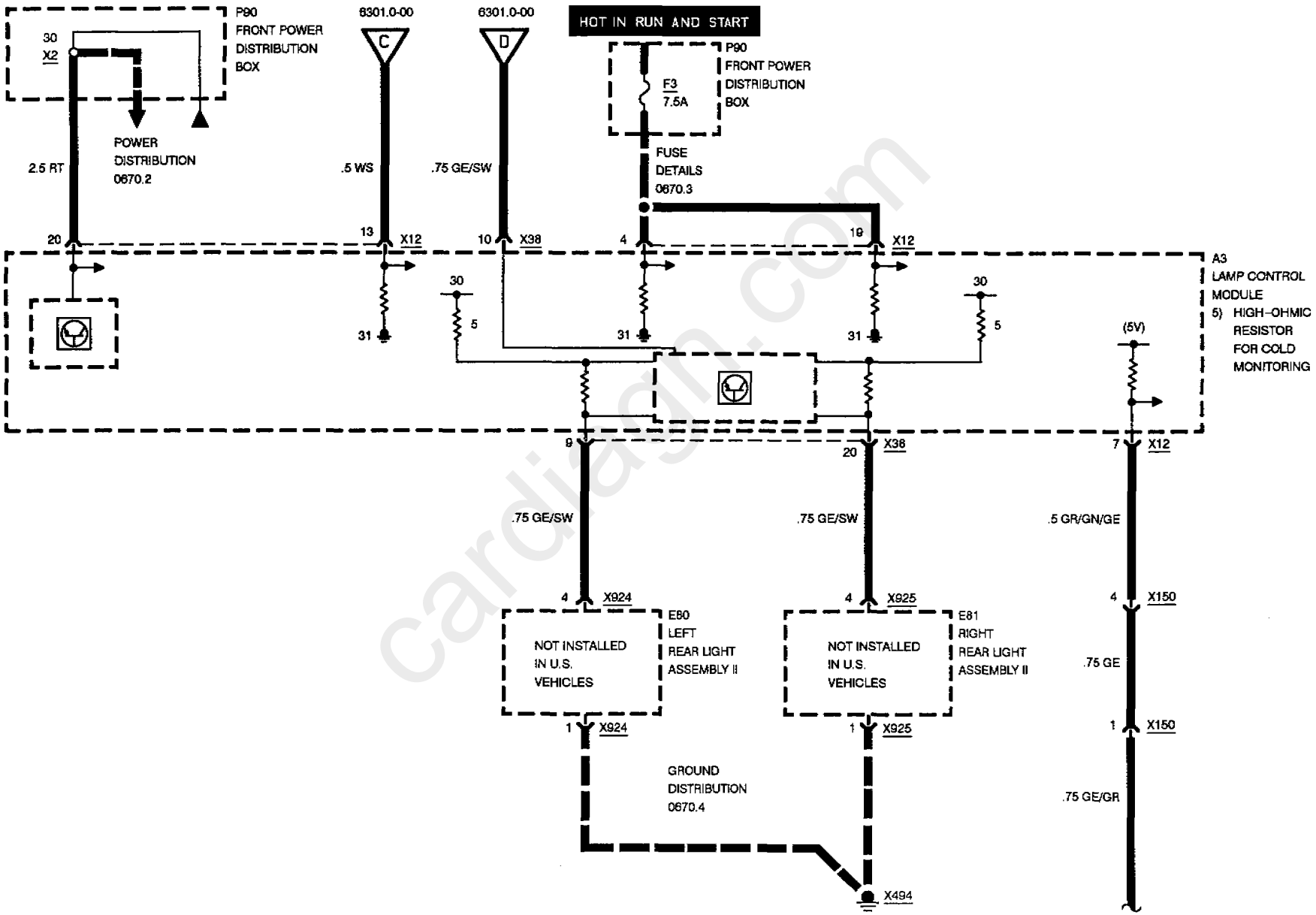

cardiagn.com

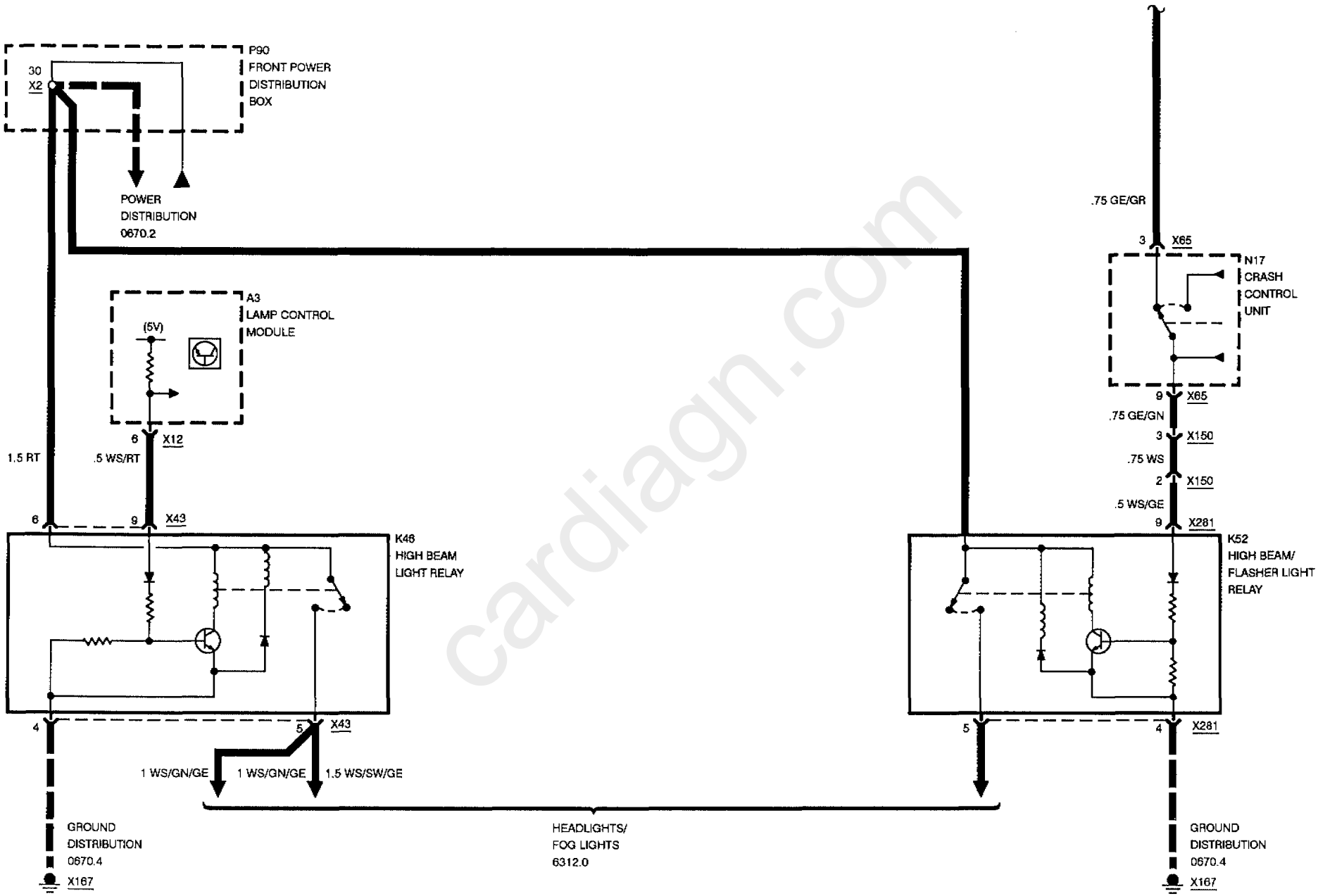

cardiagn.com

LAMP MONITOR (LKM)

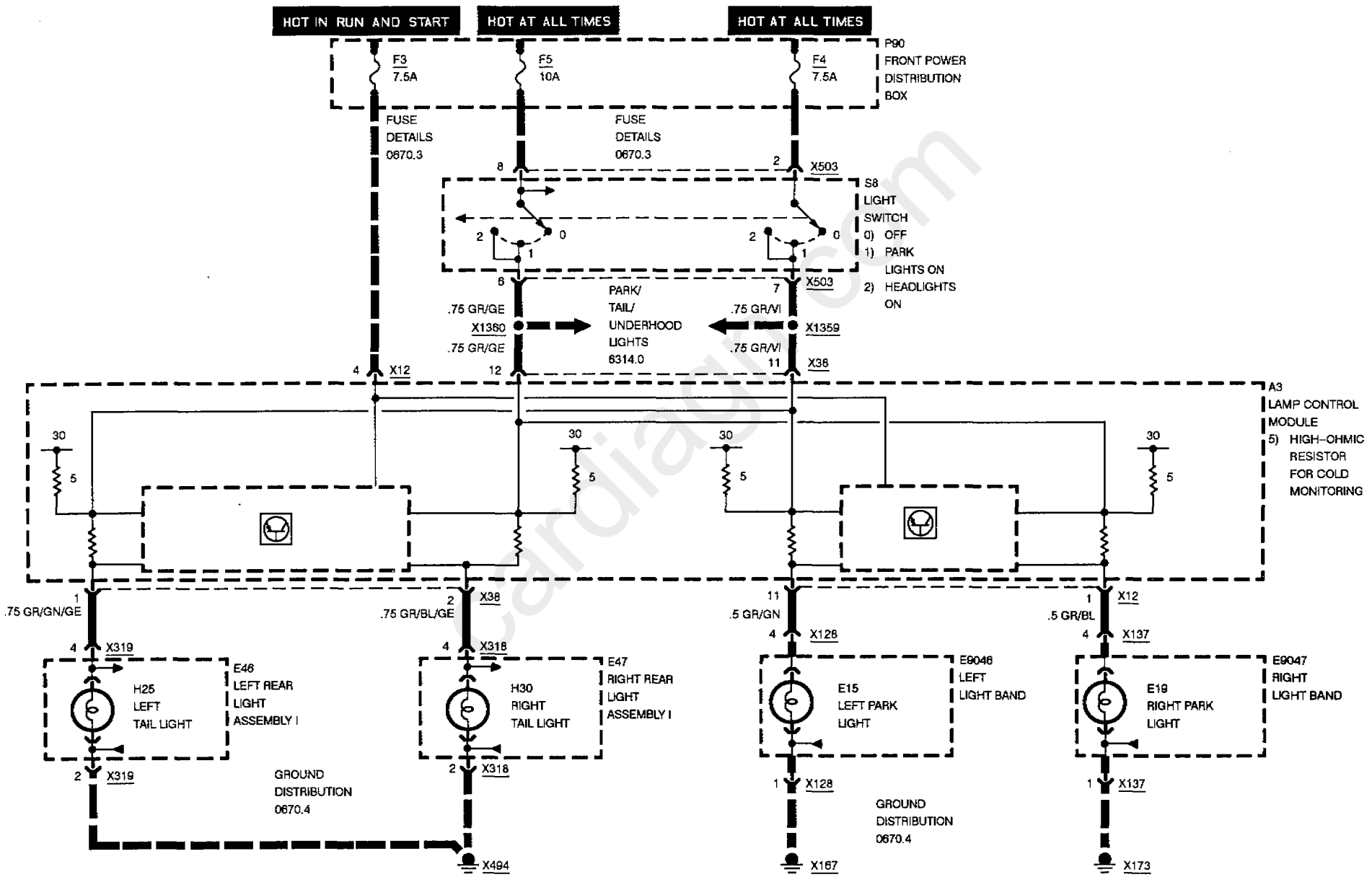

LAMP MONITOR (LKM)

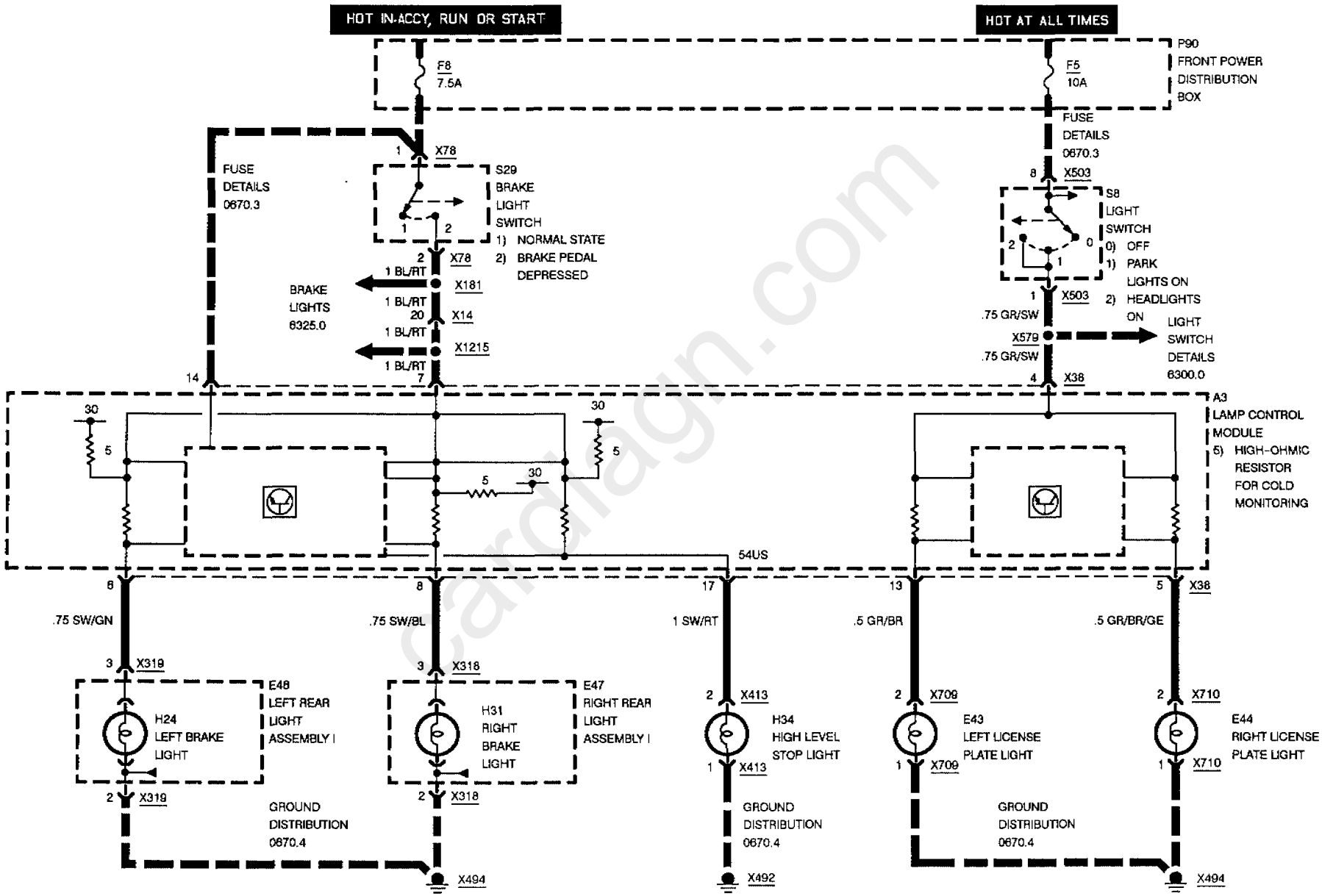

cardiagn.com

LAMP MONITOR (LKM)

CONCEALING HEADLIGHTS

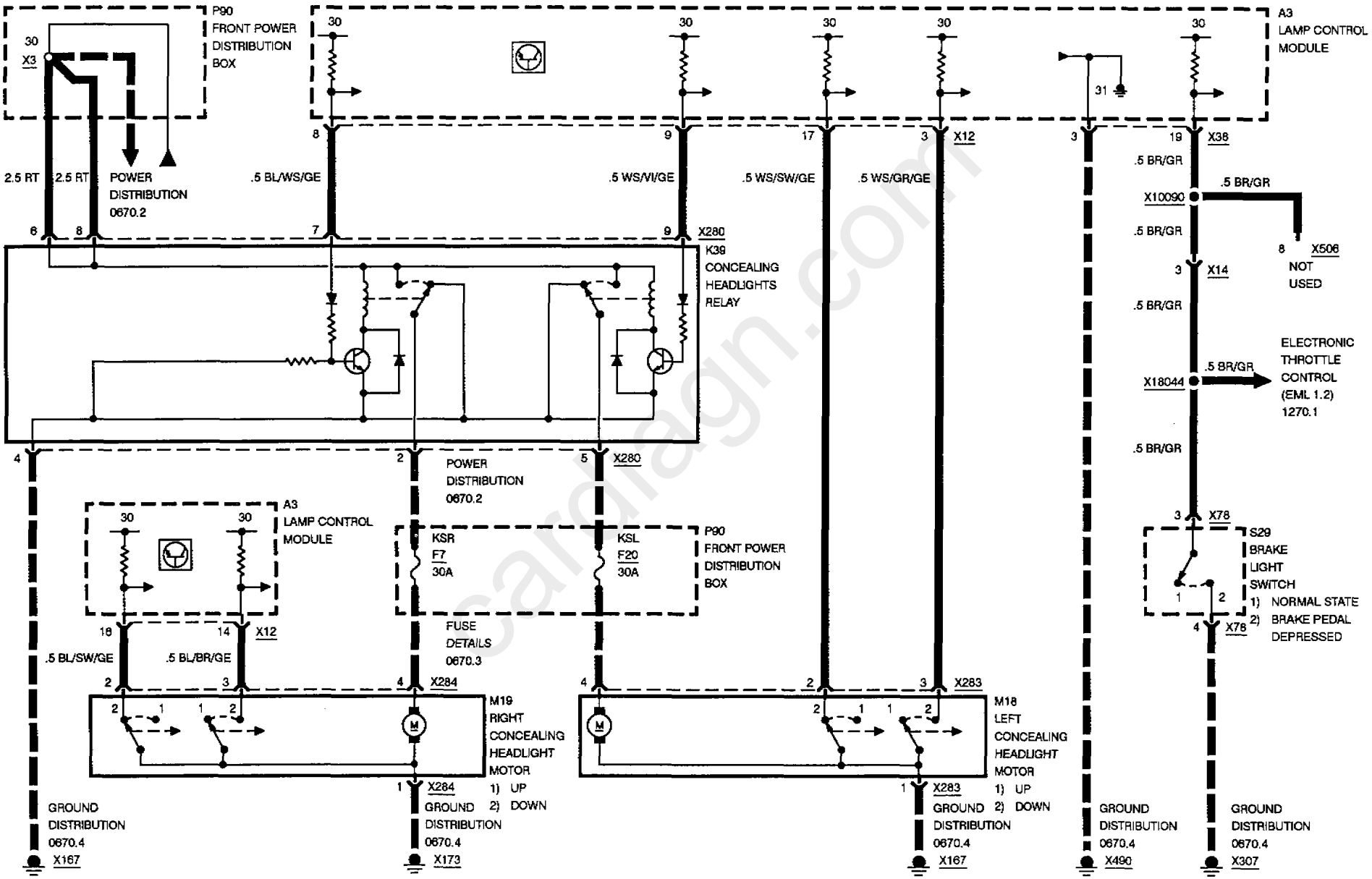

BMW 8

LAMP MONITOR (LKM)

INSTRUMENTATION BUS (I-BUS)

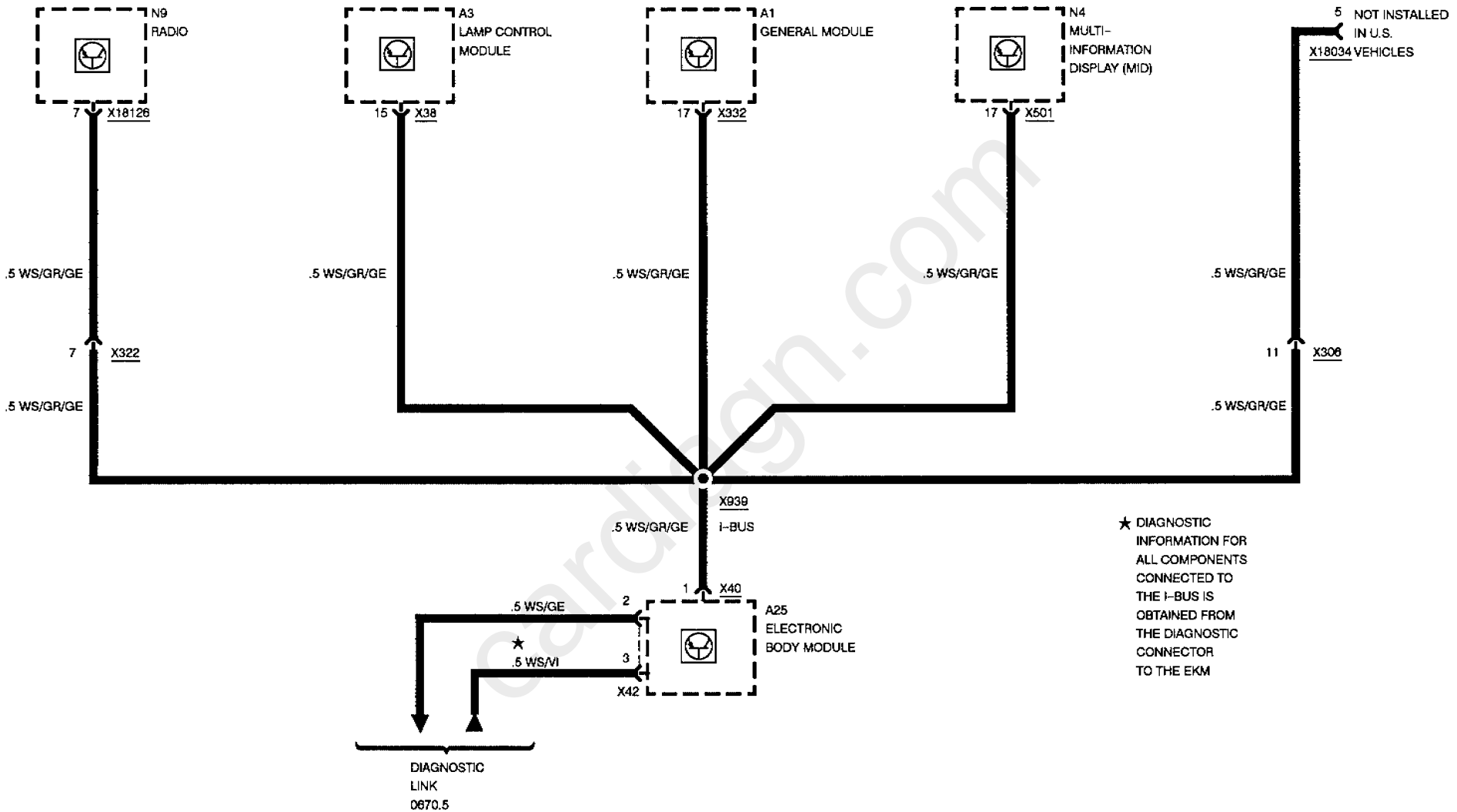

cardiagn.com

HEADLIGHTS/ FOG LIGHTS

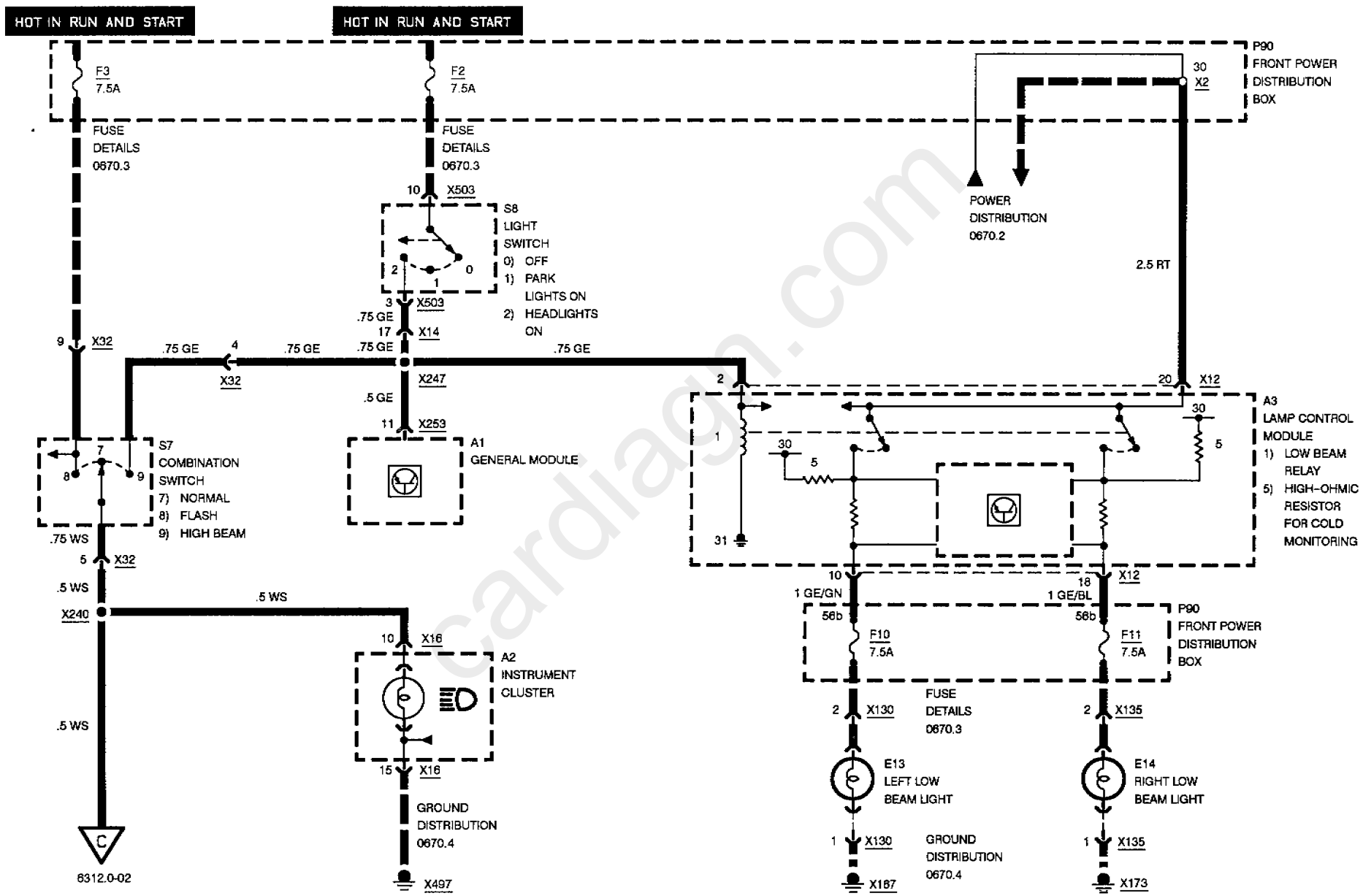

cardiagn.com

HEADLIGHTS/ FOG LIGHTS

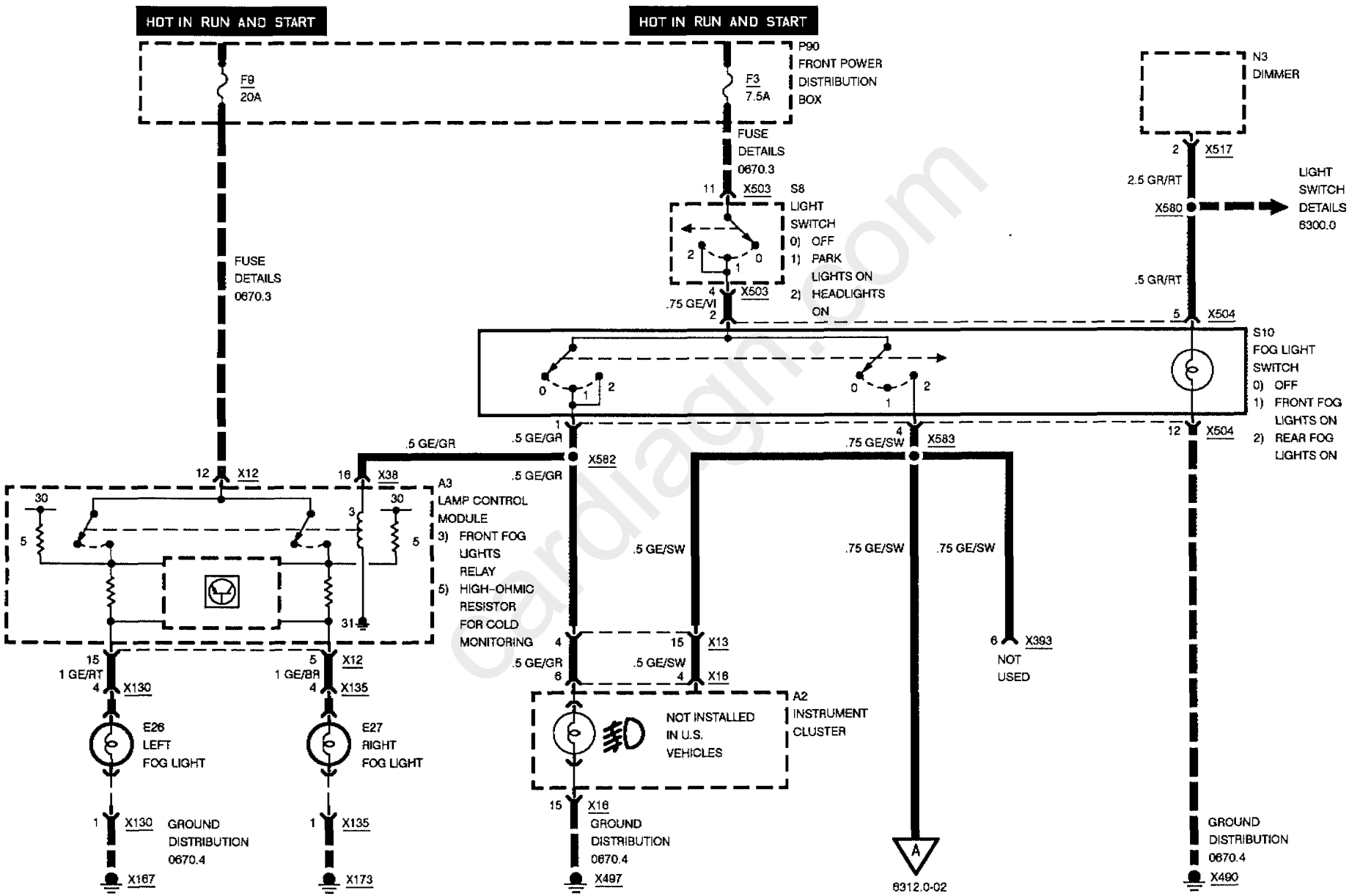

HEADLIGHTS/ FOG LIGHTS

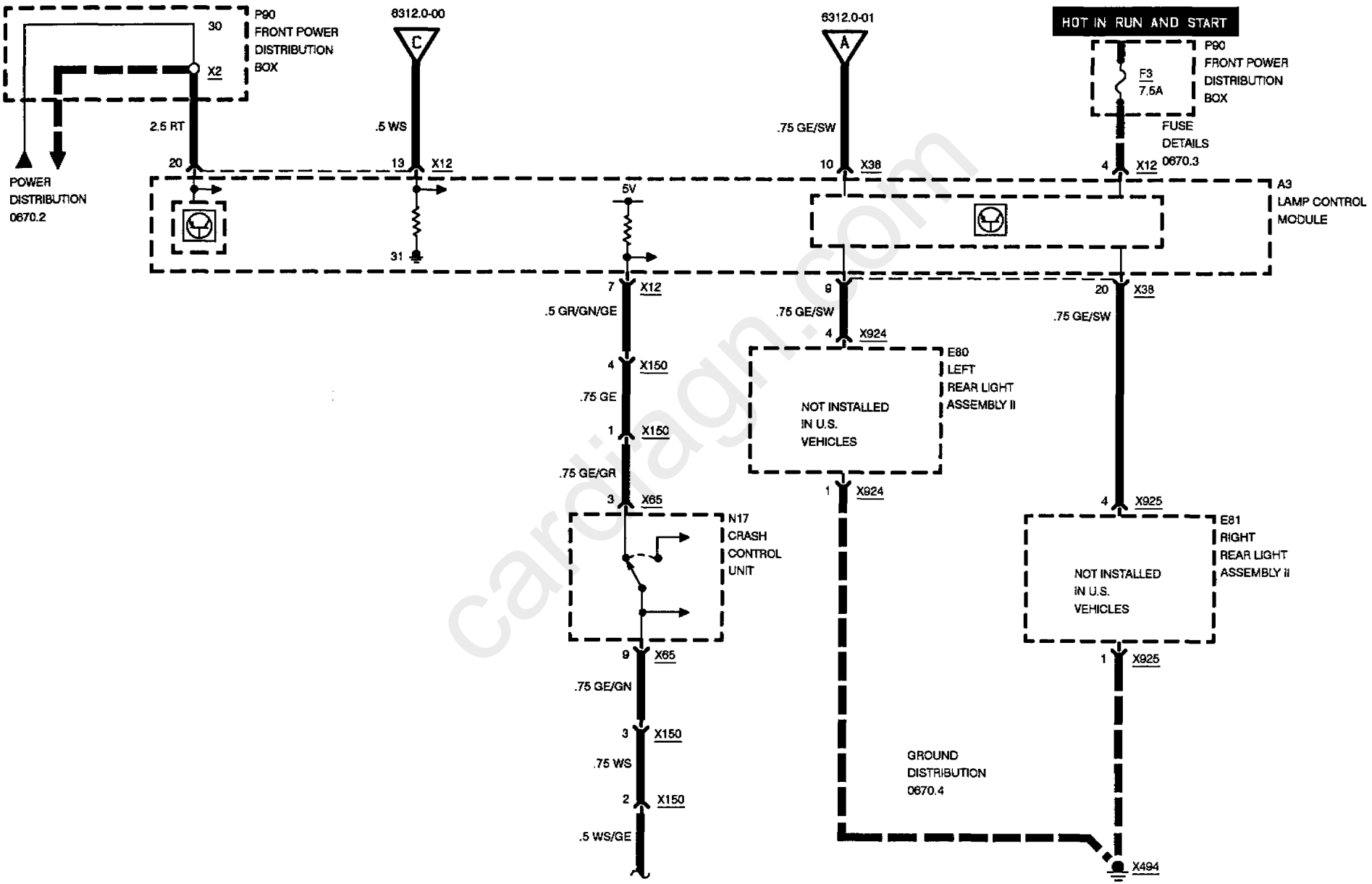

cardiagn.com

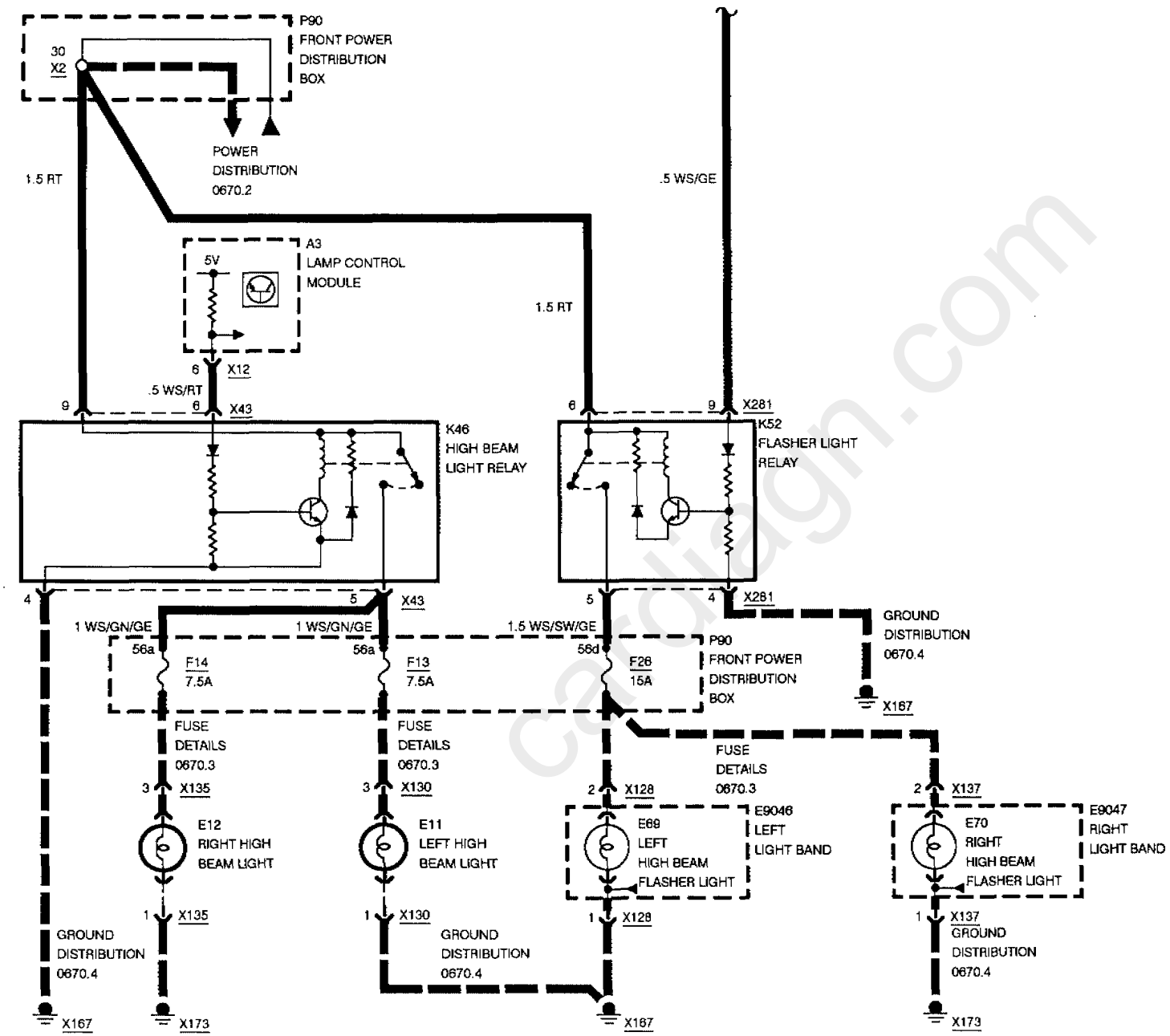

cardiagn.com

HEADLIGHTS/ FOG LIGHTS

CONCEALING HEADLIGHTS

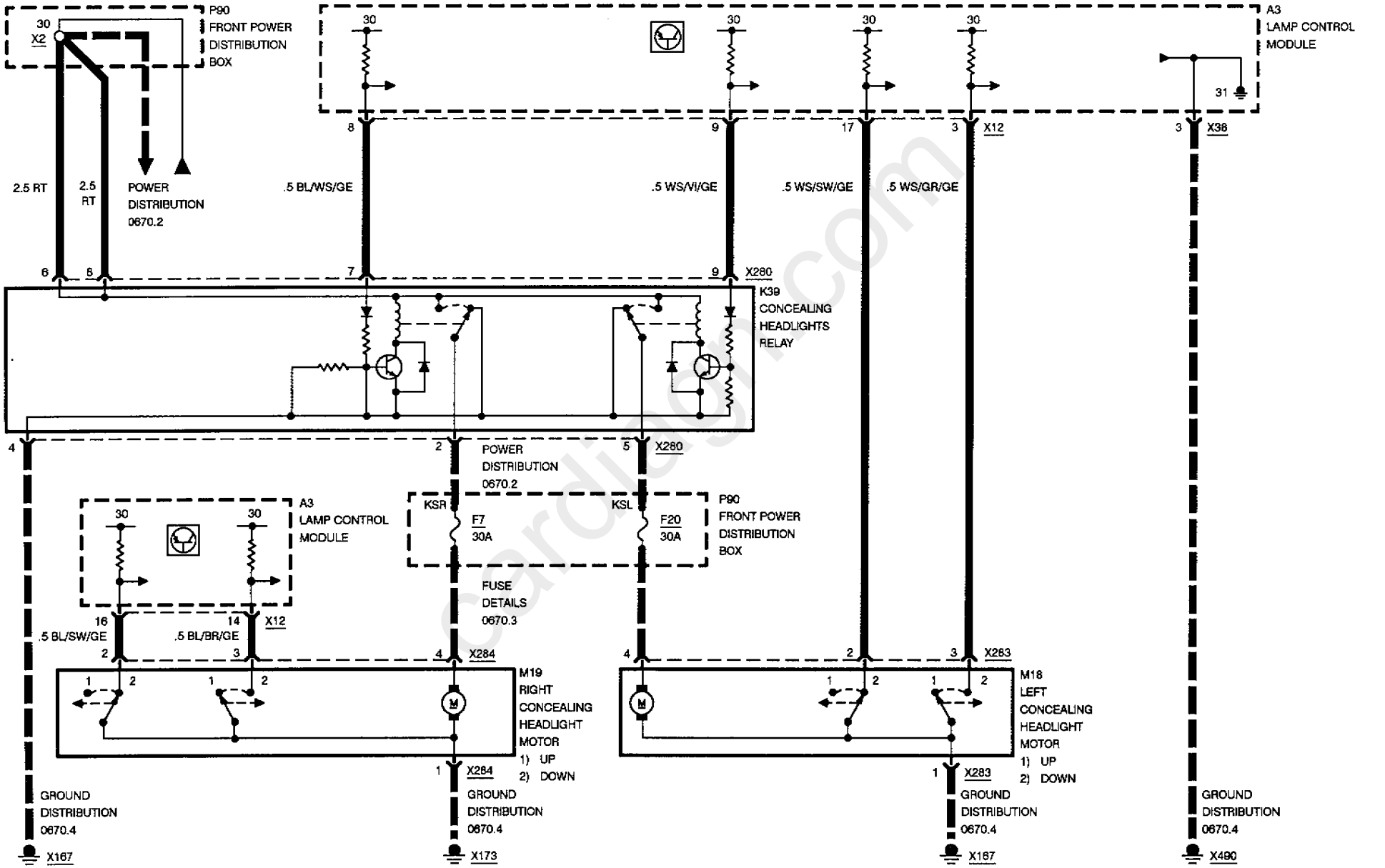

cardiagn.com

HEADLIGHTS/ FOG LIGHTS

HEADLIGHT BEAM ANGLE ADJUST

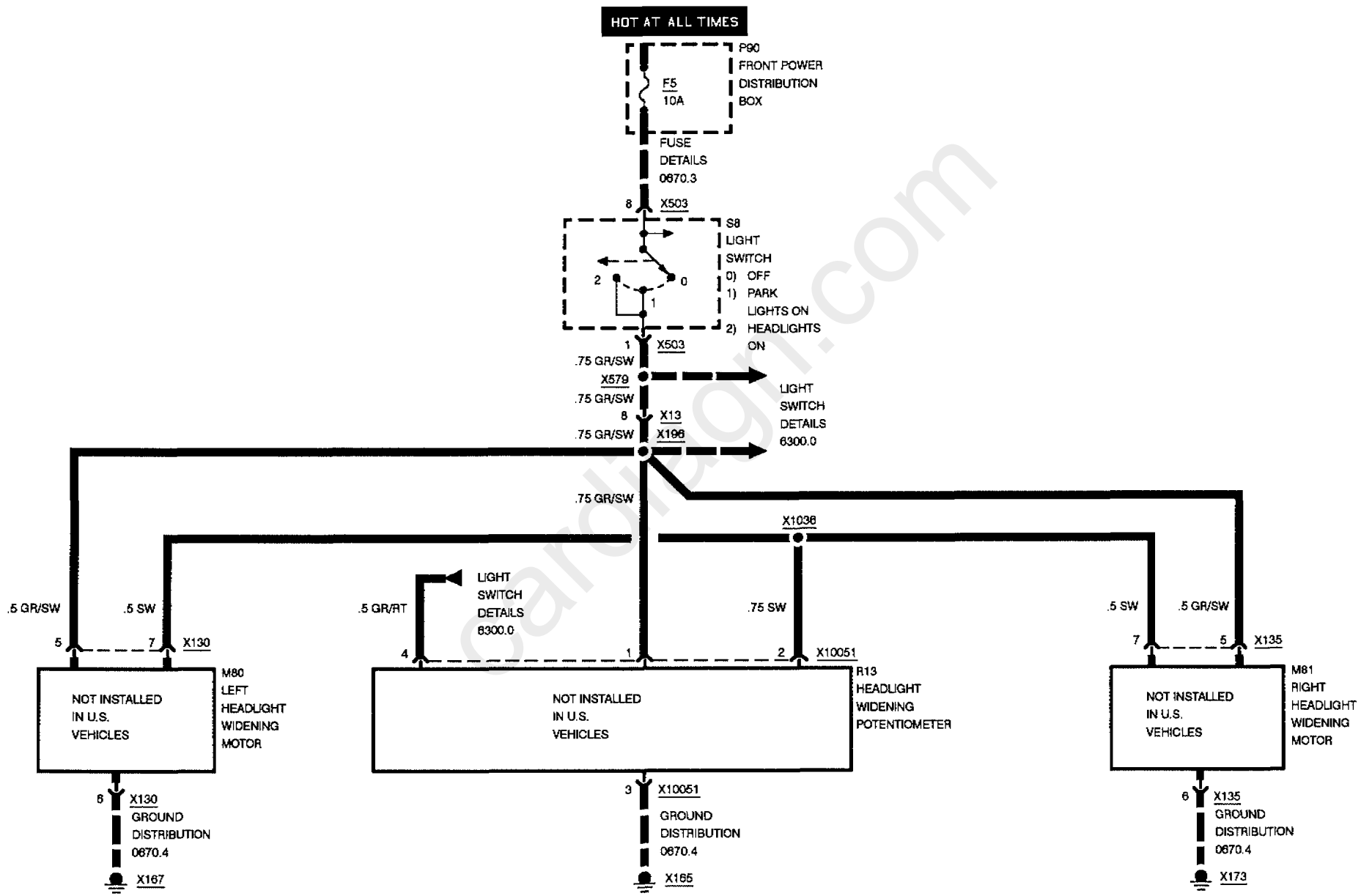

cardiagn.com

TURN/ HAZARD LIGHTS

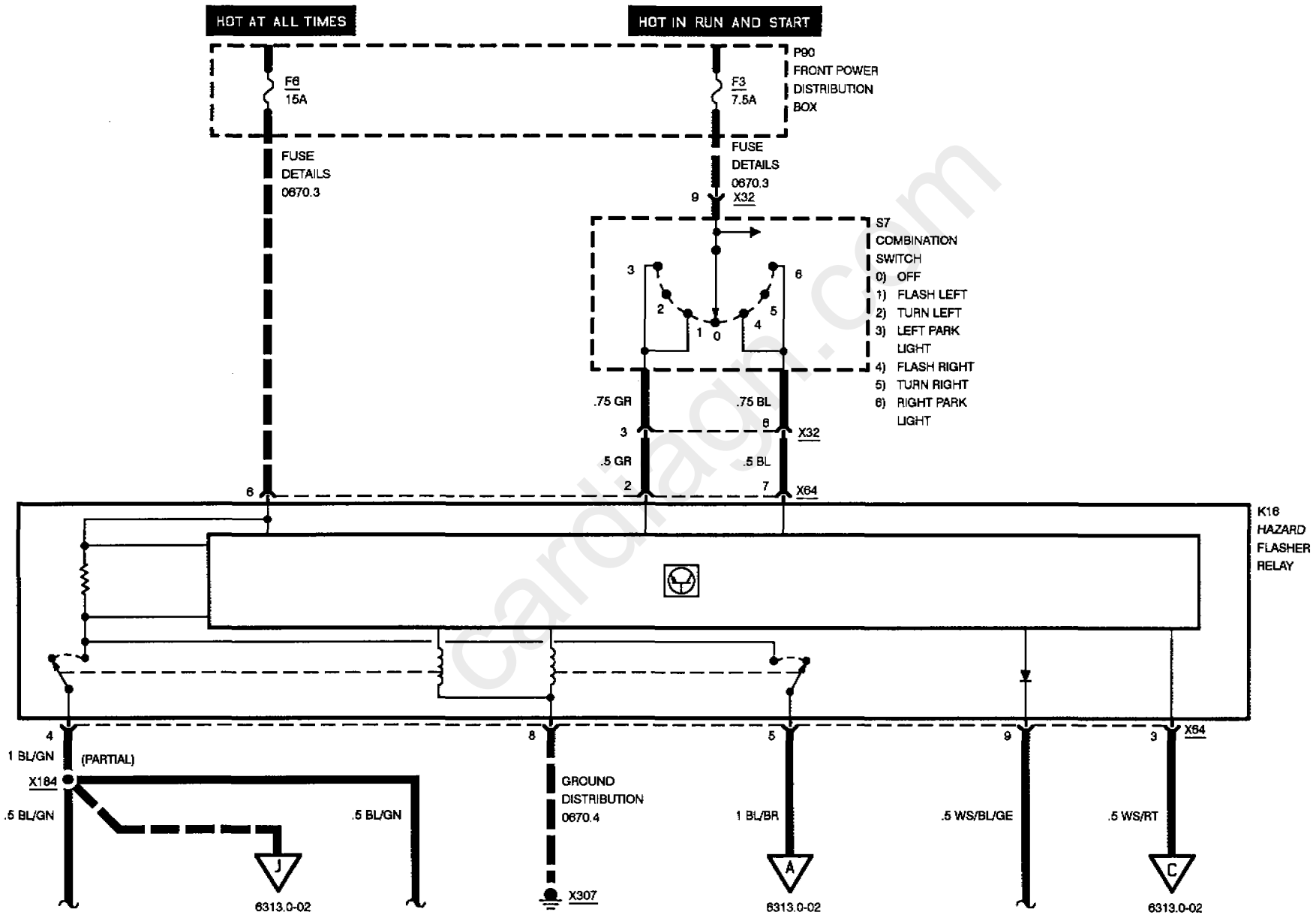

cardiagn.com

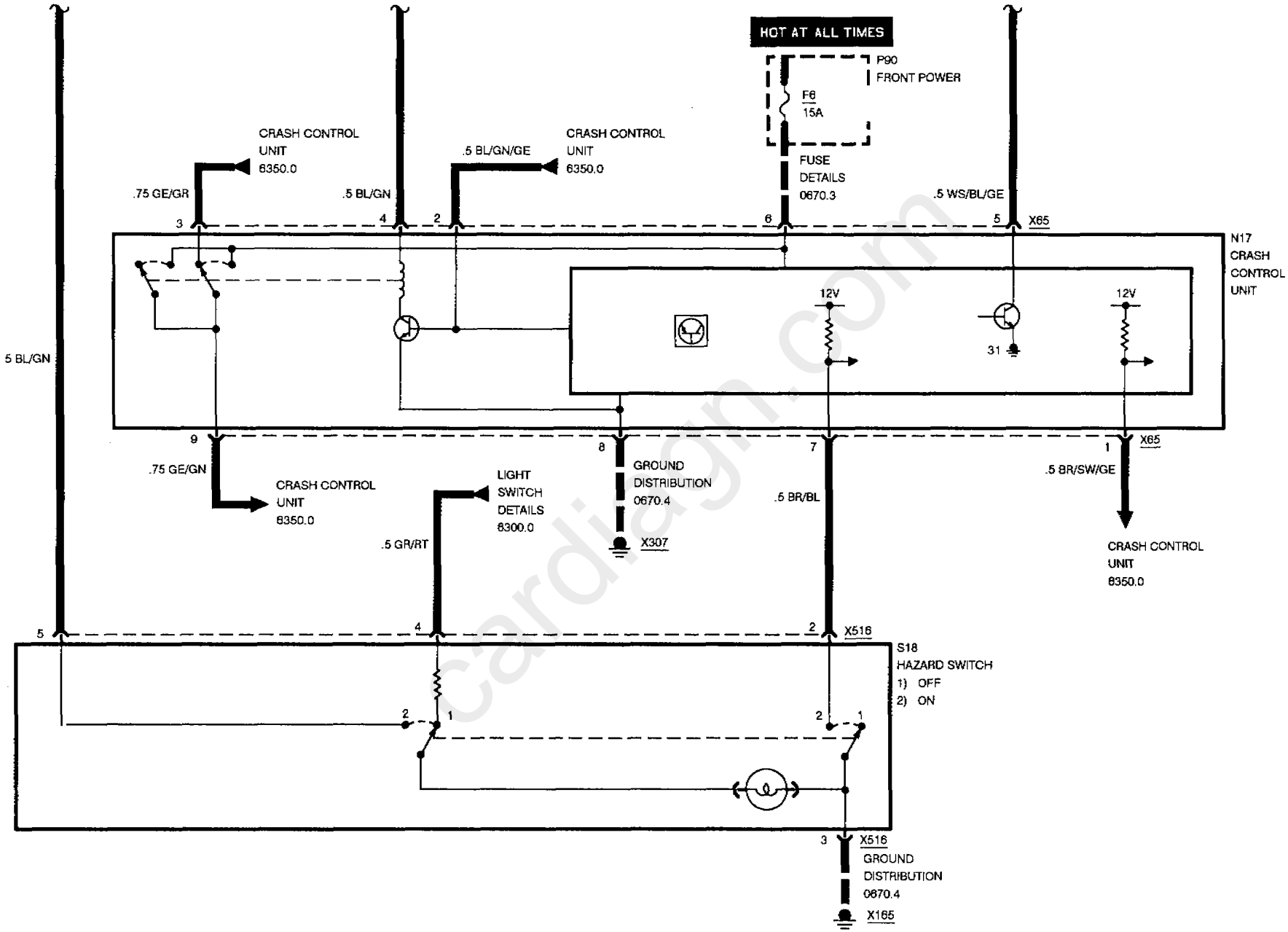

cardiagn.com

TURN/ HAZARD LIGHTS

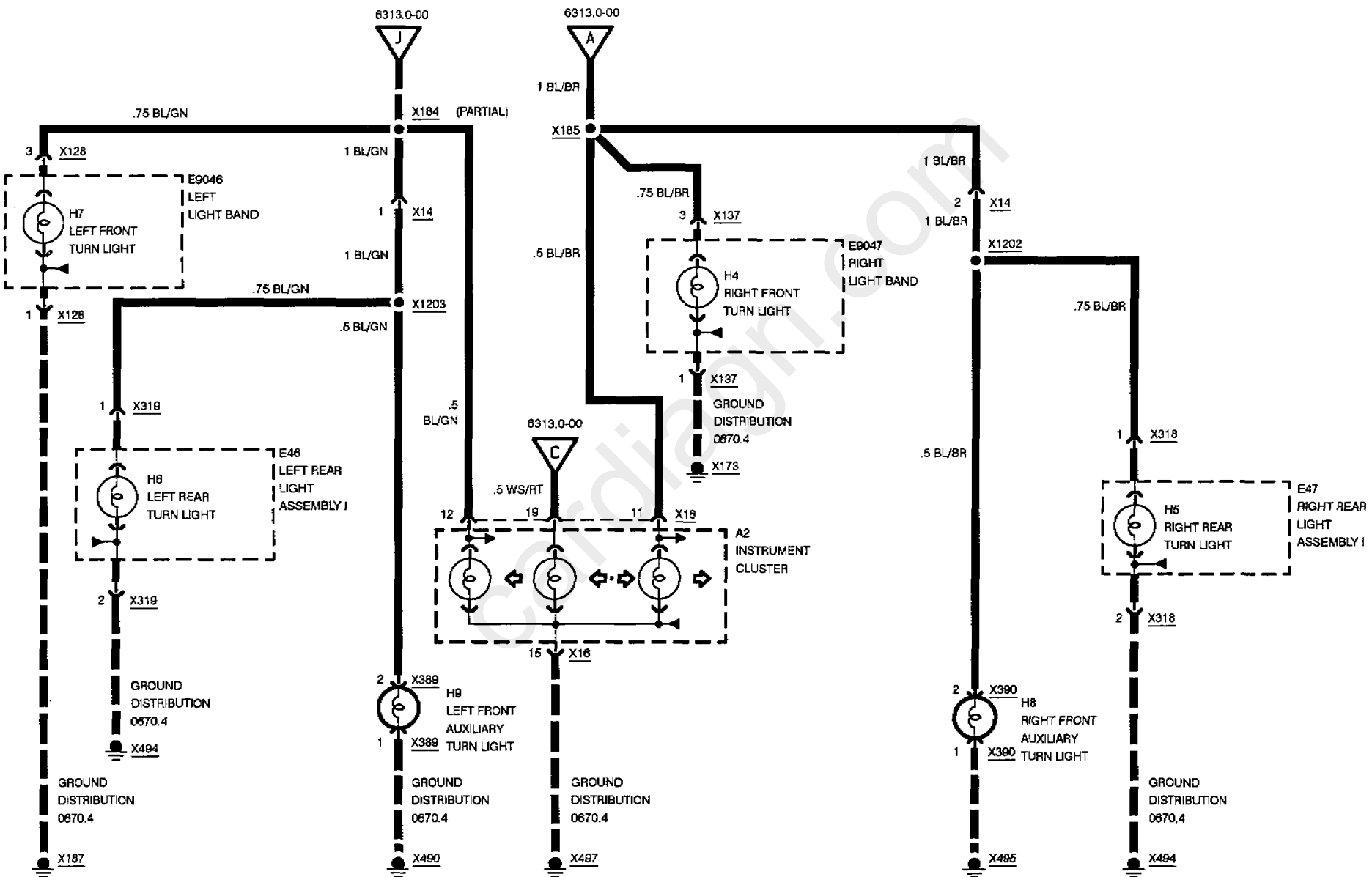

Cardiagn.com

cardiagn.com

PARK/ TAIL/ UNDERHOOD LIGHTS

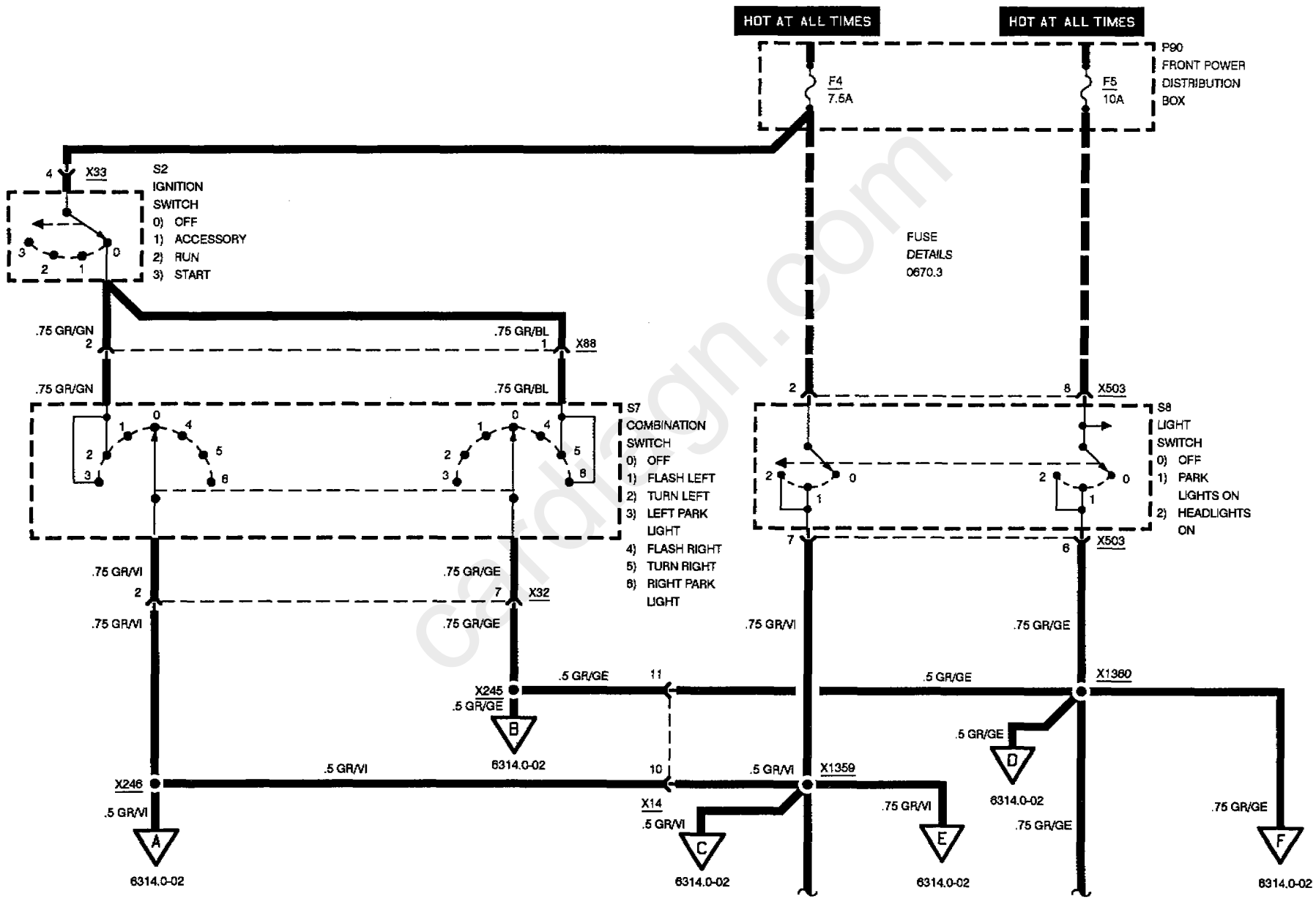

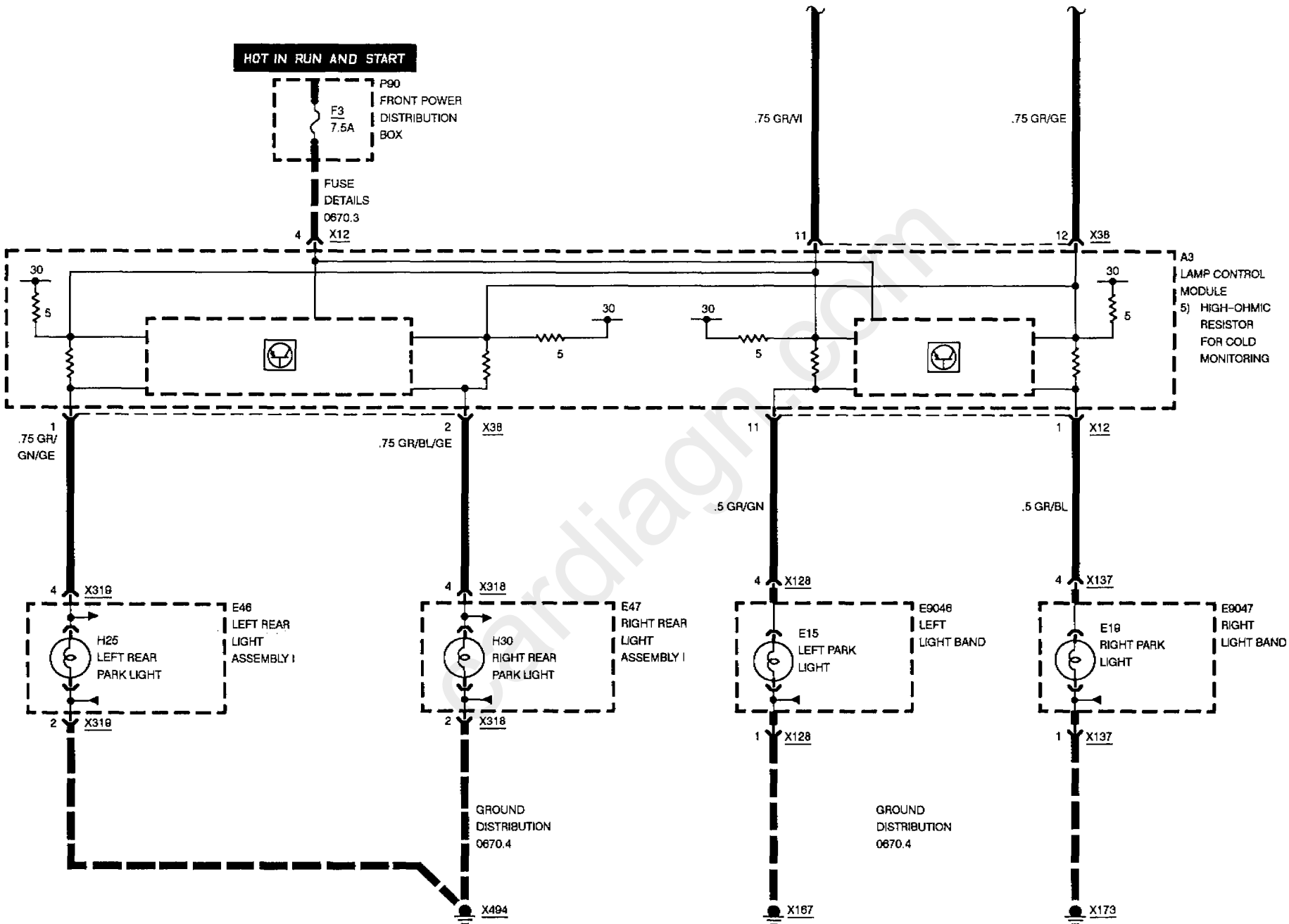

cardiagn.com

PARK/ TAIL/ UNDERHOOD LIGHTS

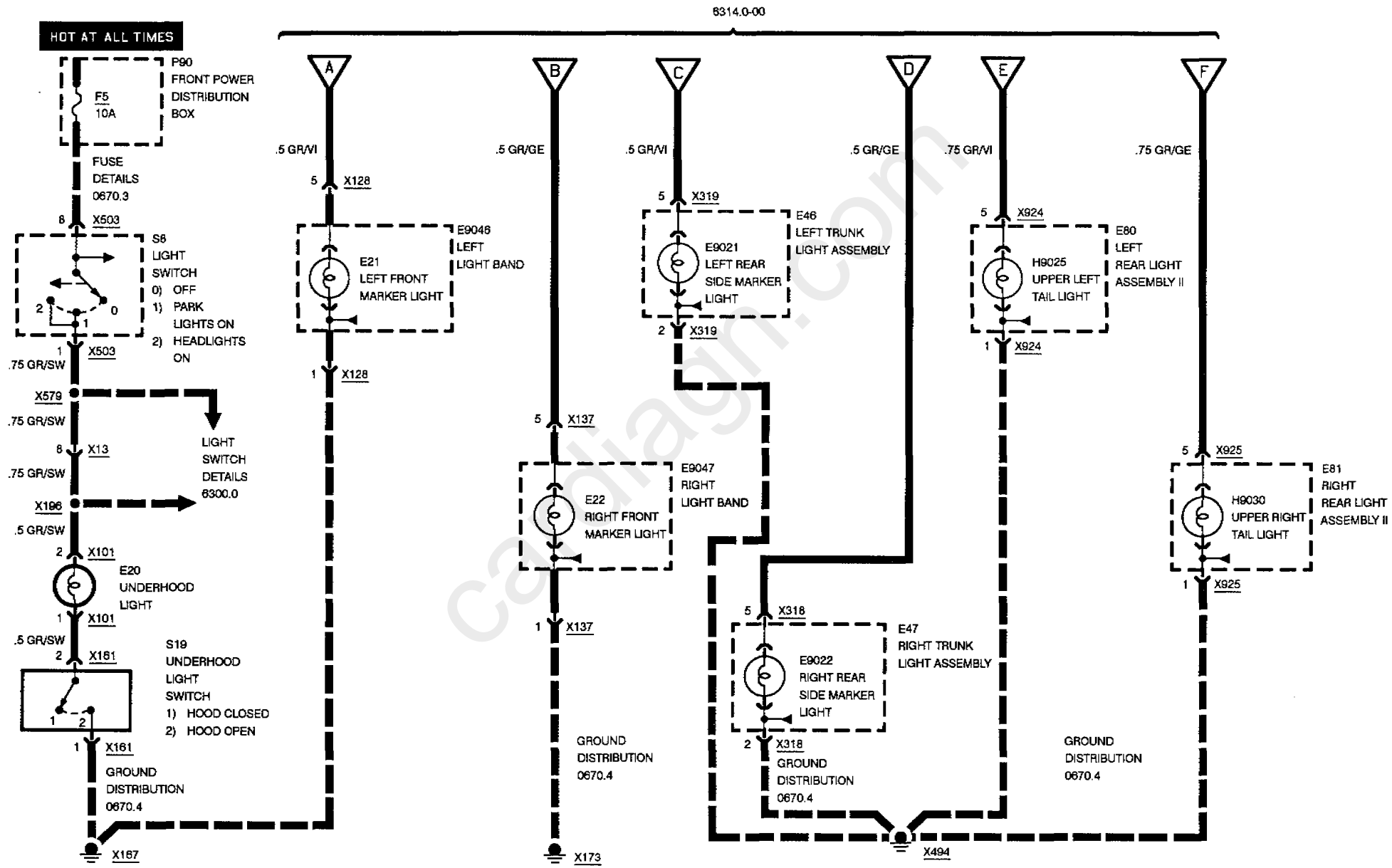

cardiagn.com

cardiagn.com

LICENSE PLATE/ LUGGAGE COMPARTMENT LIGHTS

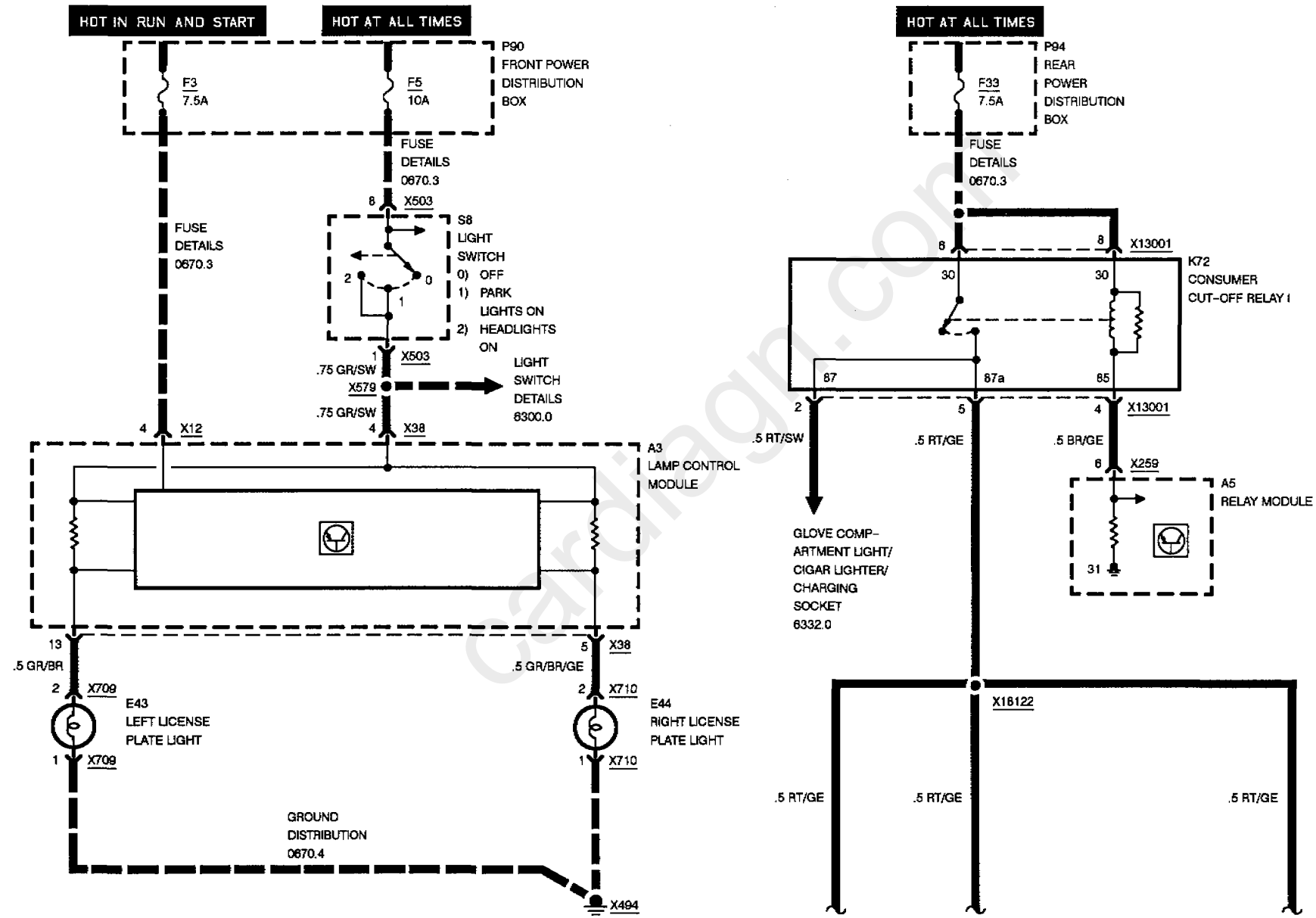

cardiagn.com

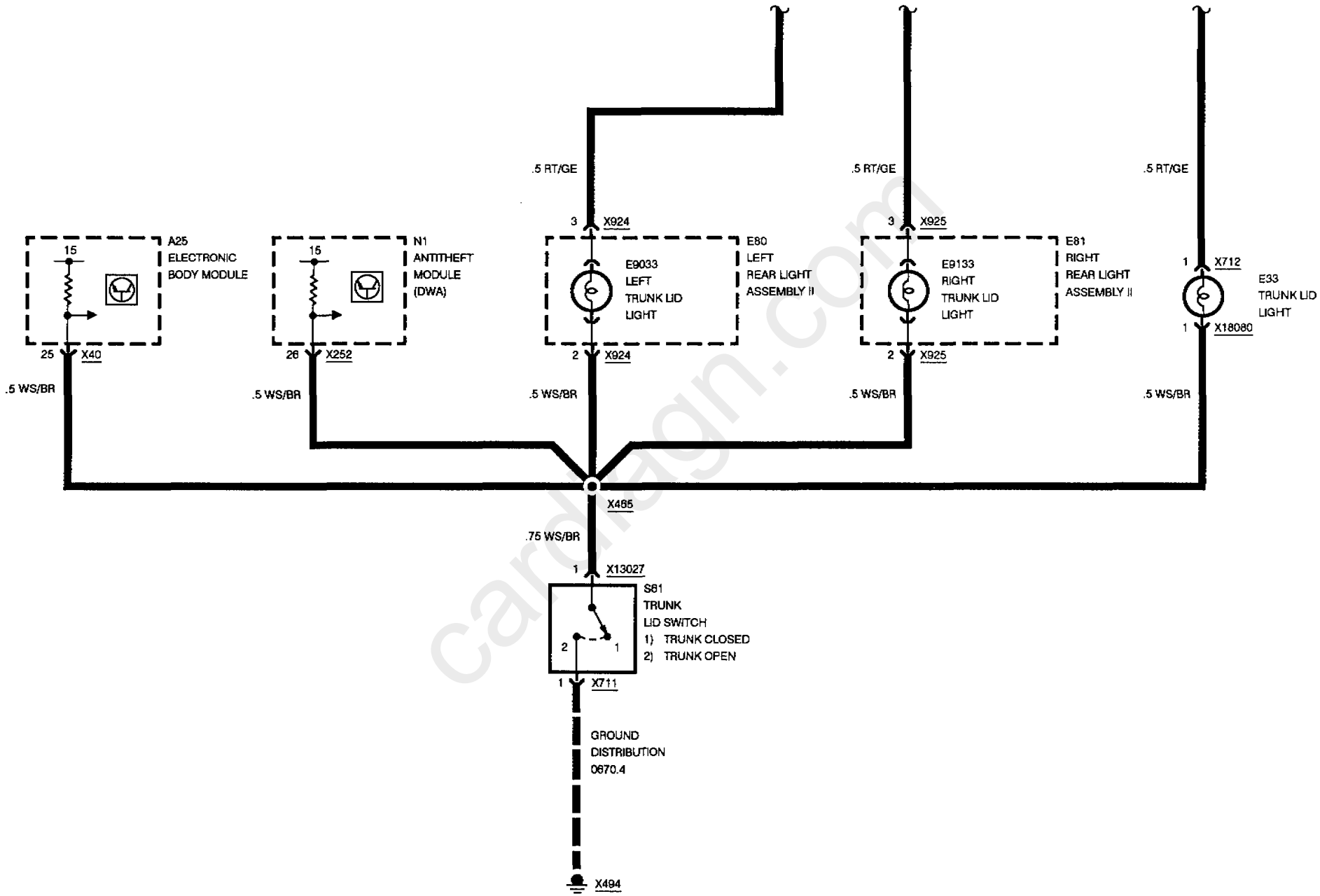

cardiagn.com

BACK UP LIGHTS

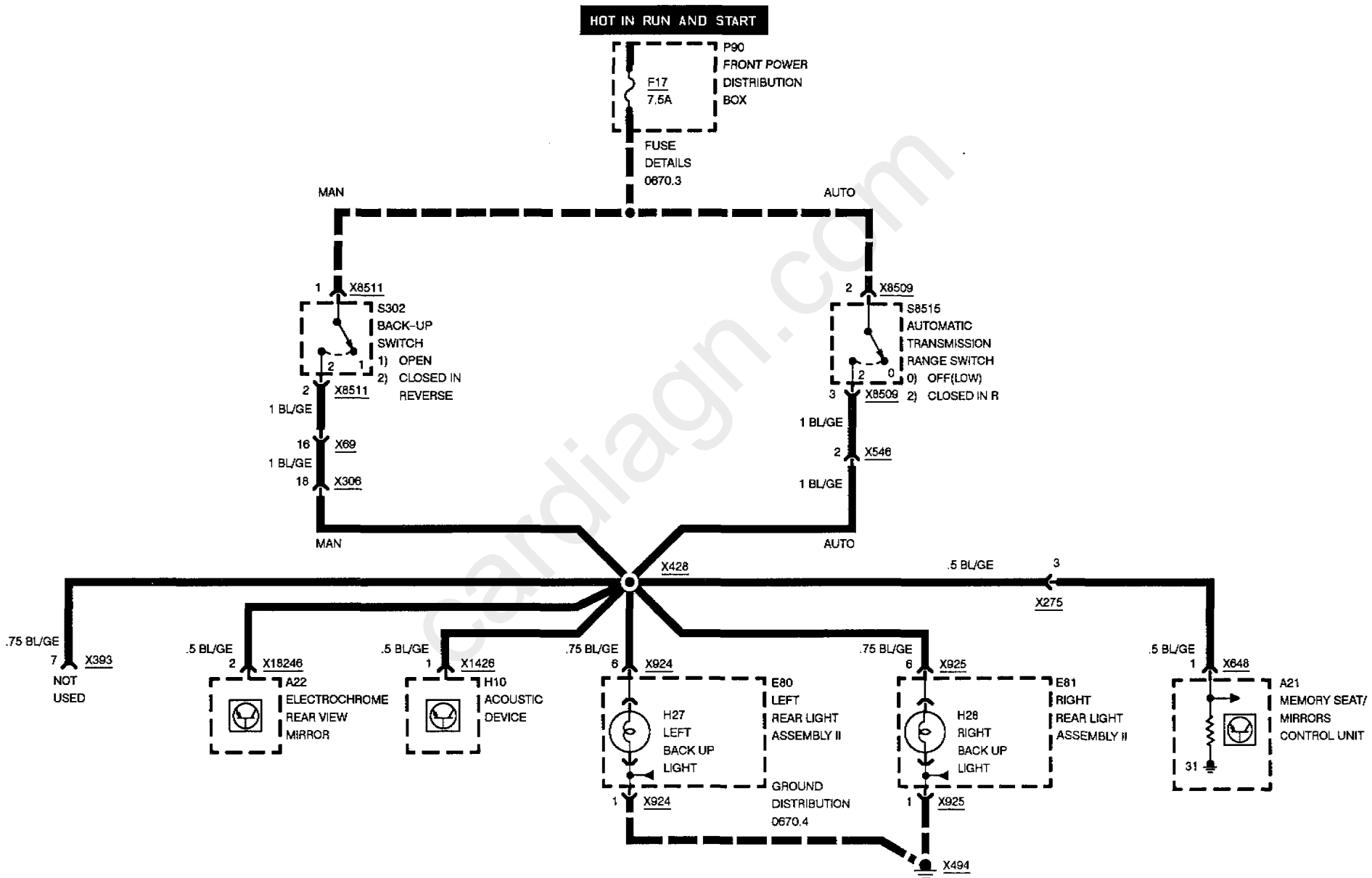

cardiagn.com

cardiagn.com

BRAKE LIGHTS

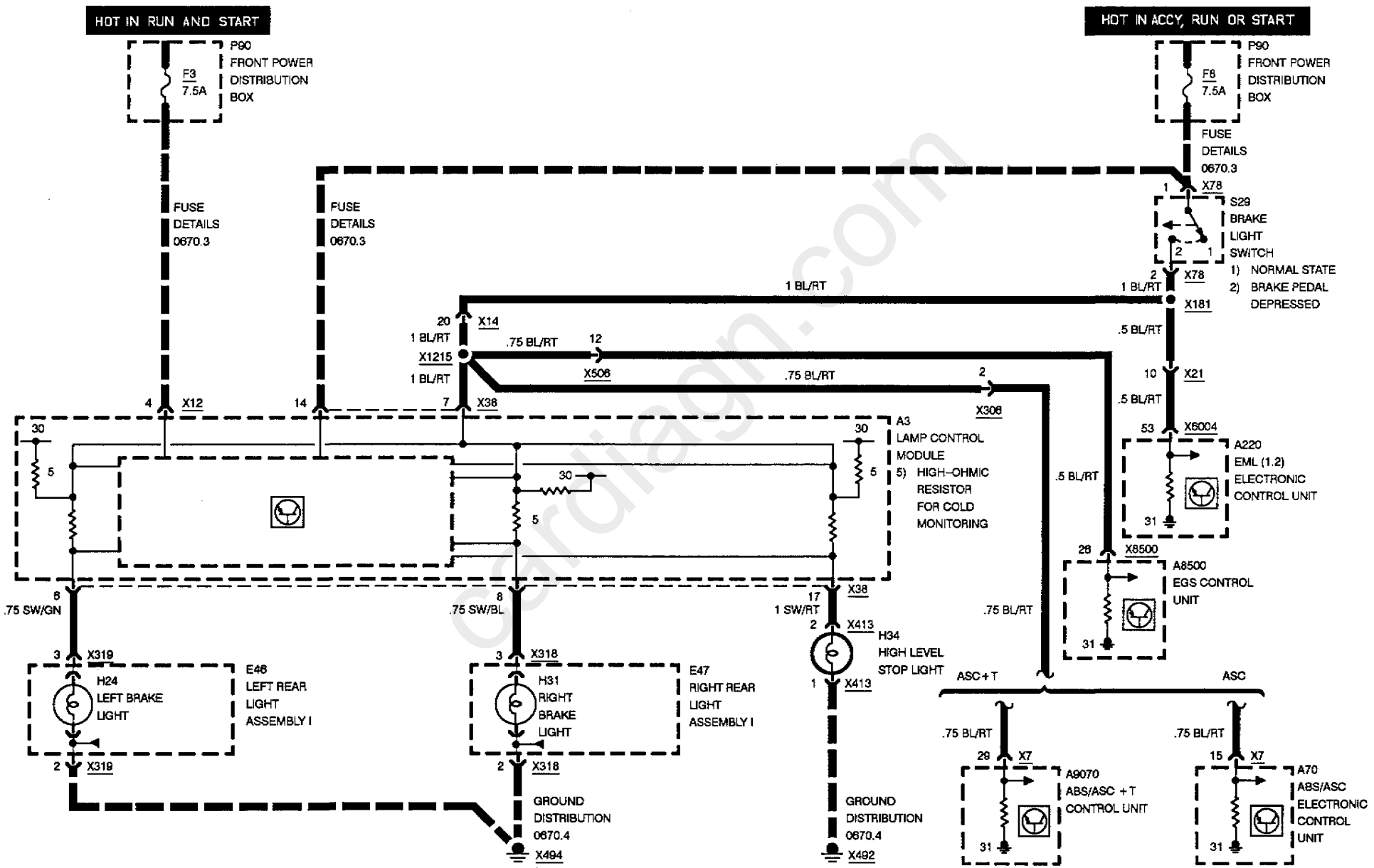

cardiagn.com

cardiagn.com

ZKE INTERIOR LIGHTS (IB)

(INPUTS)

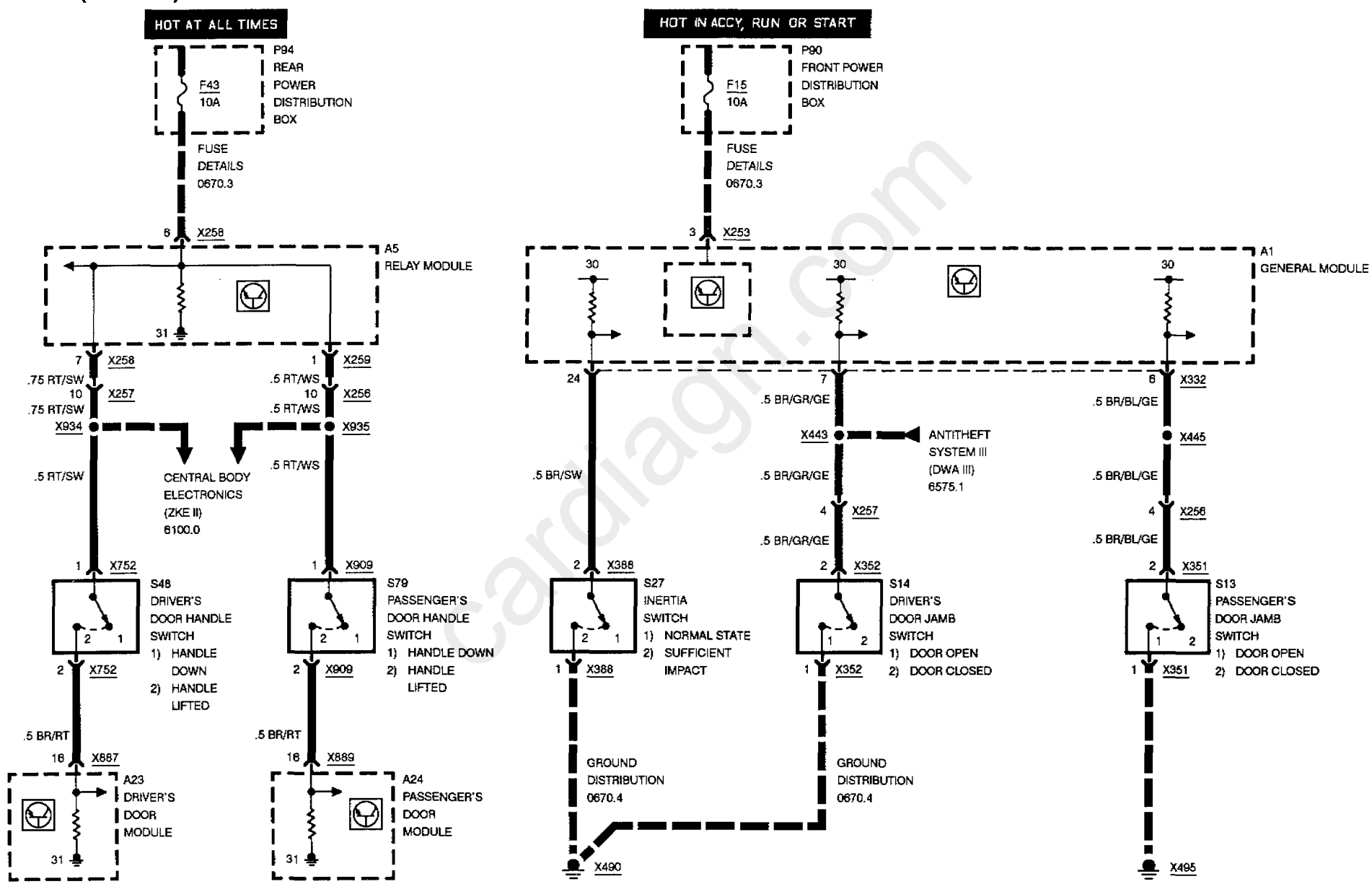

cardiagn.com

ZKE INTERIOR LIGHTS (IB)
(INPUTS)

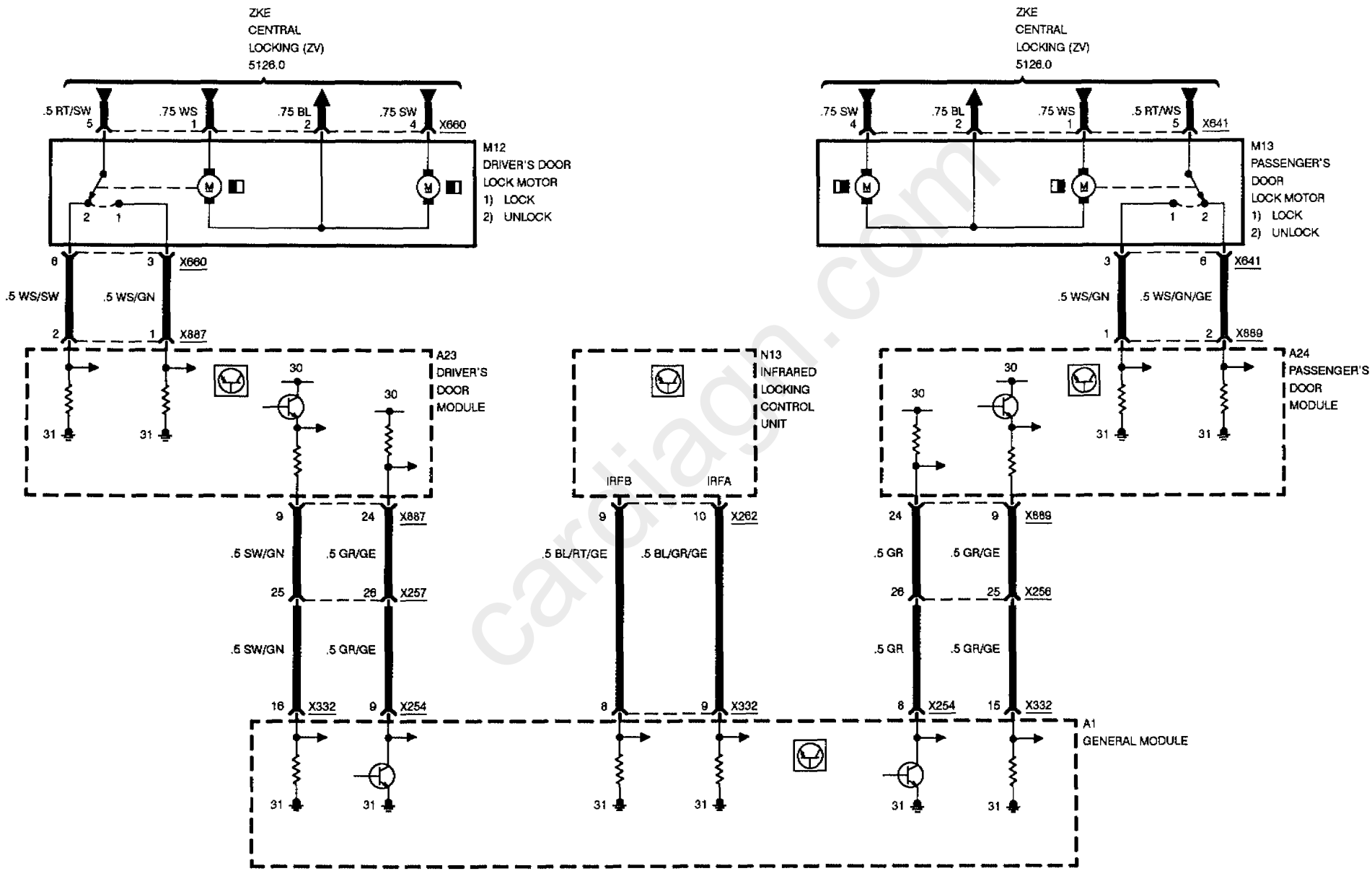

cardiagn.com

ZKE INTERIOR LIGHTS (IB)

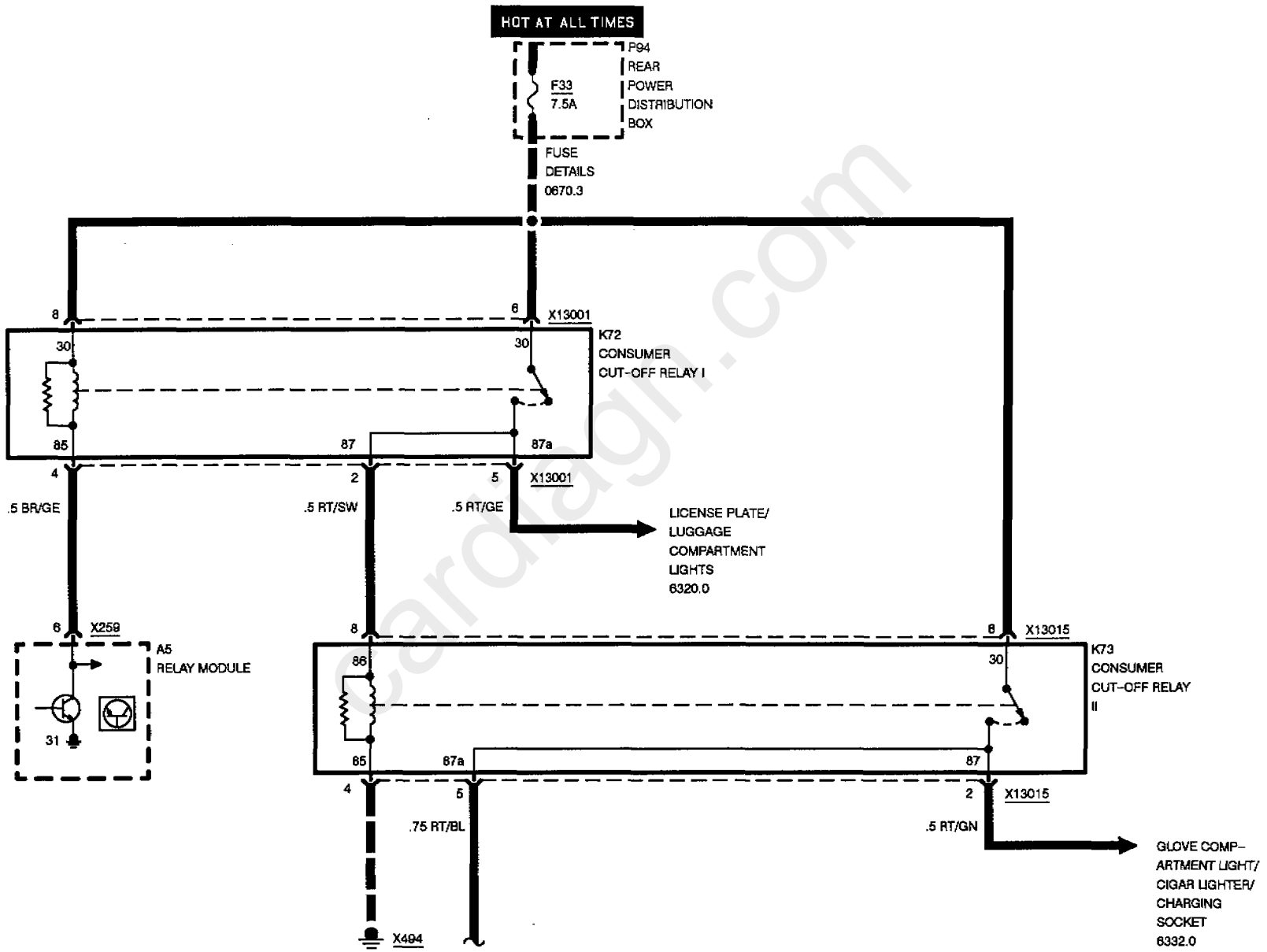

cardiagn.com

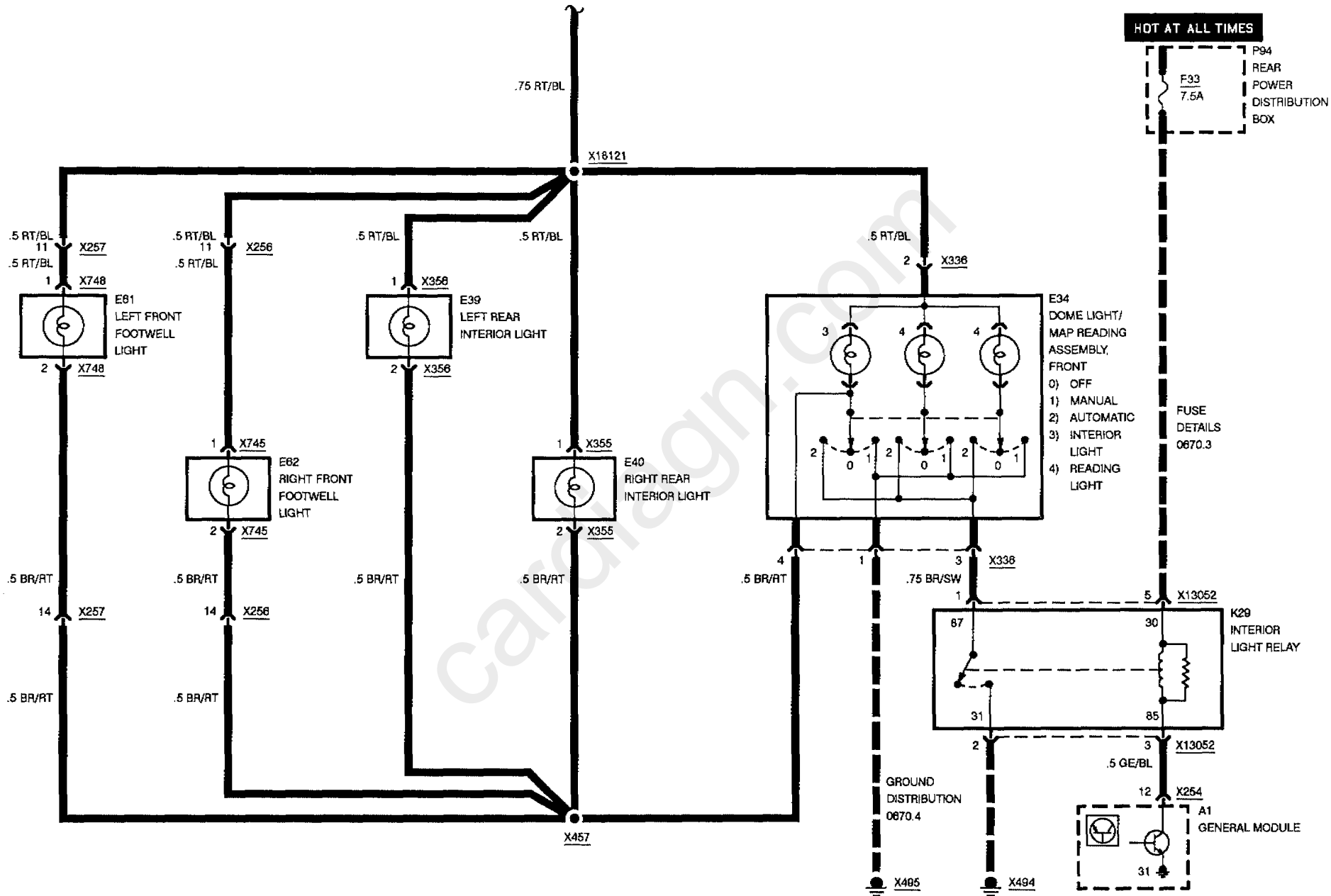
HOT AT ALL TIMES
P94
REAR
POWER
DISTRIBUTION
BOX
F33
7.5A
.75 RT/BL
X18121
.5 RT/BL
11
X257
.5 RT/BL
1
X748
E61
LEFT FRONT
FOOTWELL
LIGHT
2
X748
.5 RT/BL
11
X256
.5 RT/BL
1
X745
E62
RIGHT FRONT
FOOTWELL
LIGHT
2
X745
.5 RT/BL
1
X356
E39
LEFT REAR
INTERIOR LIGHT
2
X356
.5 RT/BL
.5 RT/BL
1
X355
E40
RIGHT REAR
INTERIOR LIGHT
2
X355
.5 RT/BL
2
X336
E34
DOME LIGHT/
MAP READING
ASSEMBLY,
FRONT
0) OFF
1) MANUAL
2) AUTOMATIC
3) INTERIOR
LIGHT
4) READING
LIGHT
FUSE
DETAILS
0670.3
.5 BR/RT
14
X257
.5 BR/RT
.5 BR/RT
14
X256
.5 BR/RT
.5 BR/RT
.5 BR/RT
.5 BR/RT
4
1
3
X336
.75 BR/SW
1
5
X13052
87
30
K29
INTERIOR
LIGHT RELAY
31
85
2
3
X13052
.5 GE/BL
12
X254
A1
GENERAL MODULE
31
GROUND
DISTRIBUTION
0670.4
X457
X495
X494

GLOVE COMPARTMENT LIGHT/ CIGAR LIGHTER/ CHARGING SOCKET

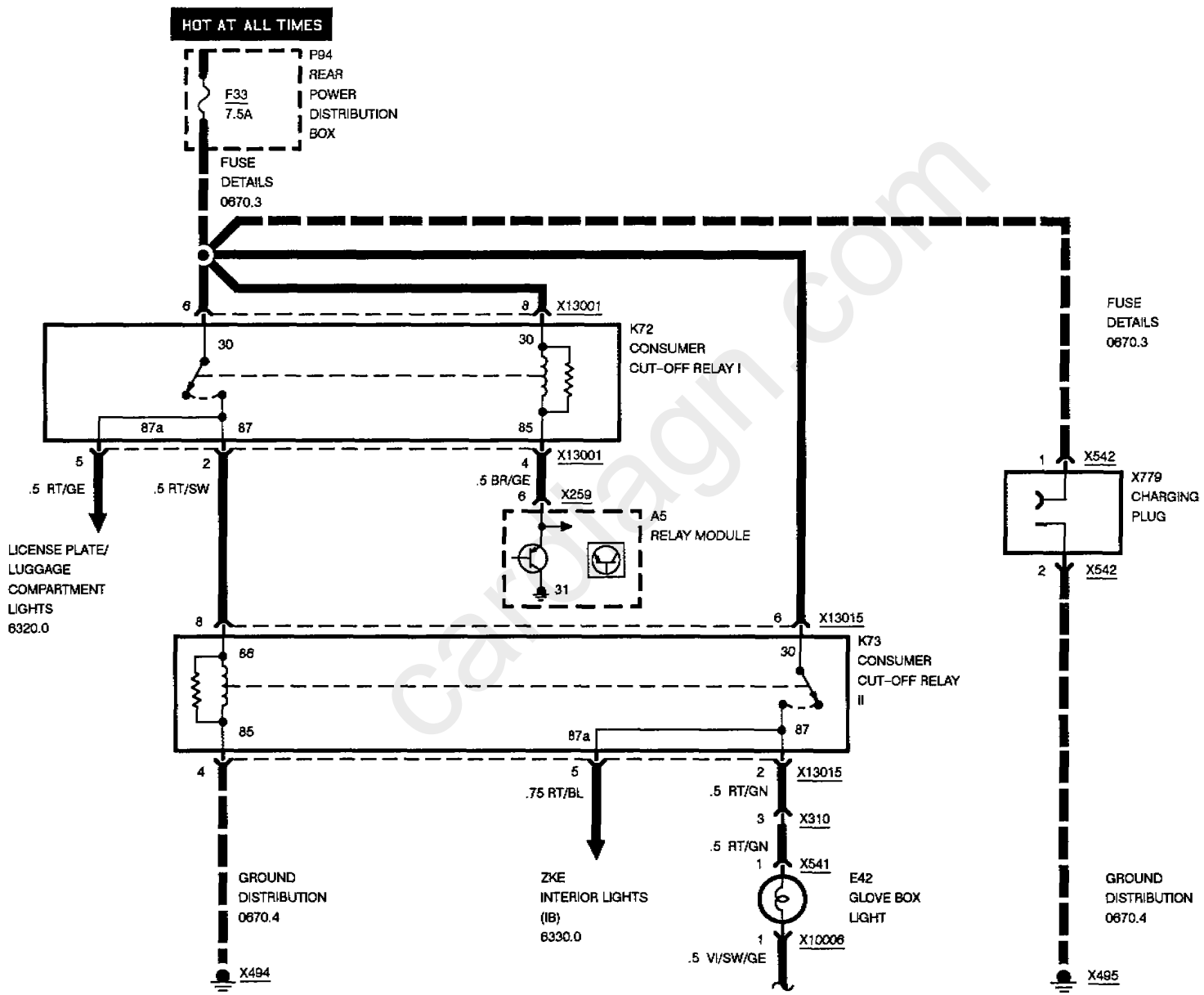

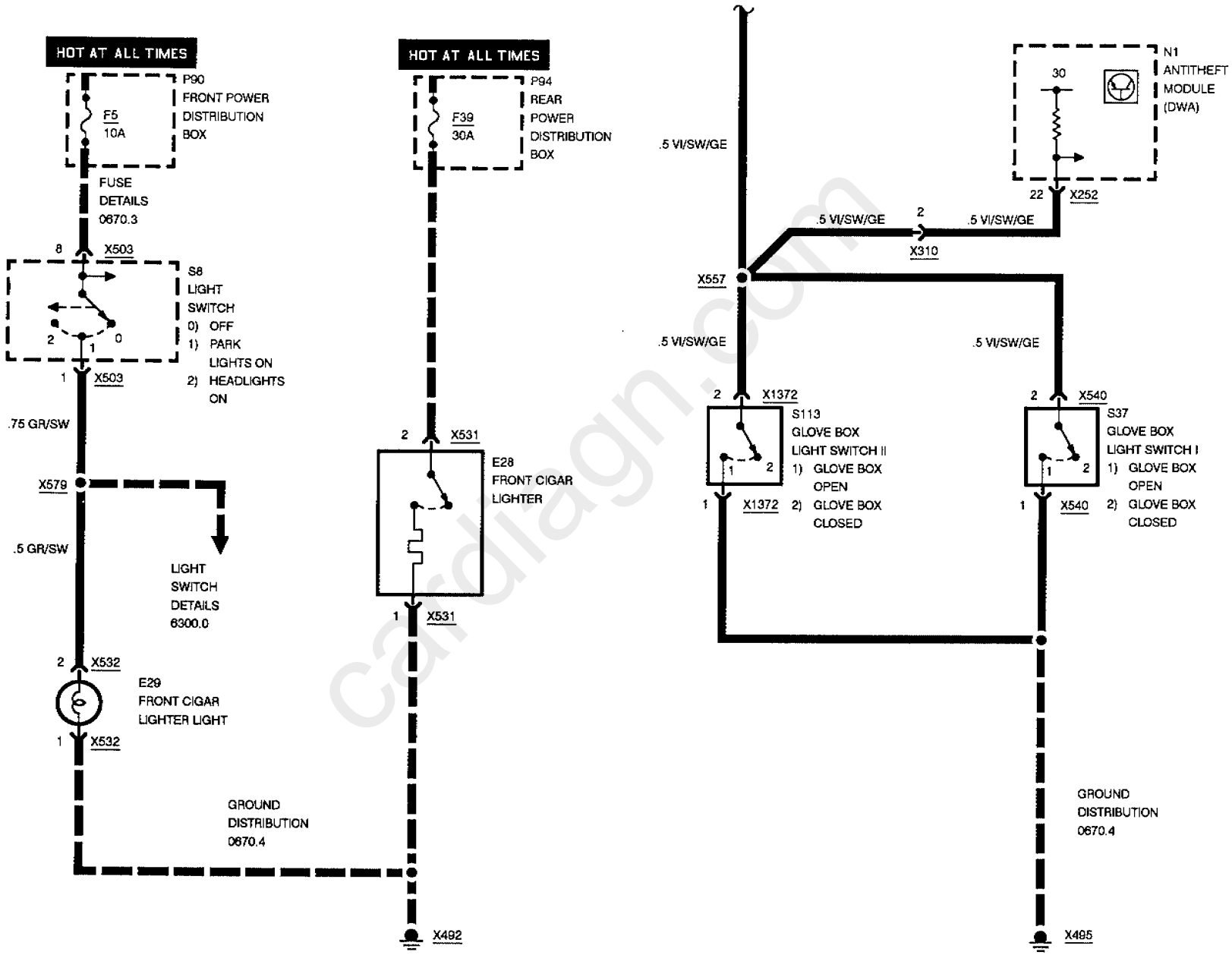

cardiagn.com

CRASH CONTROL UNIT

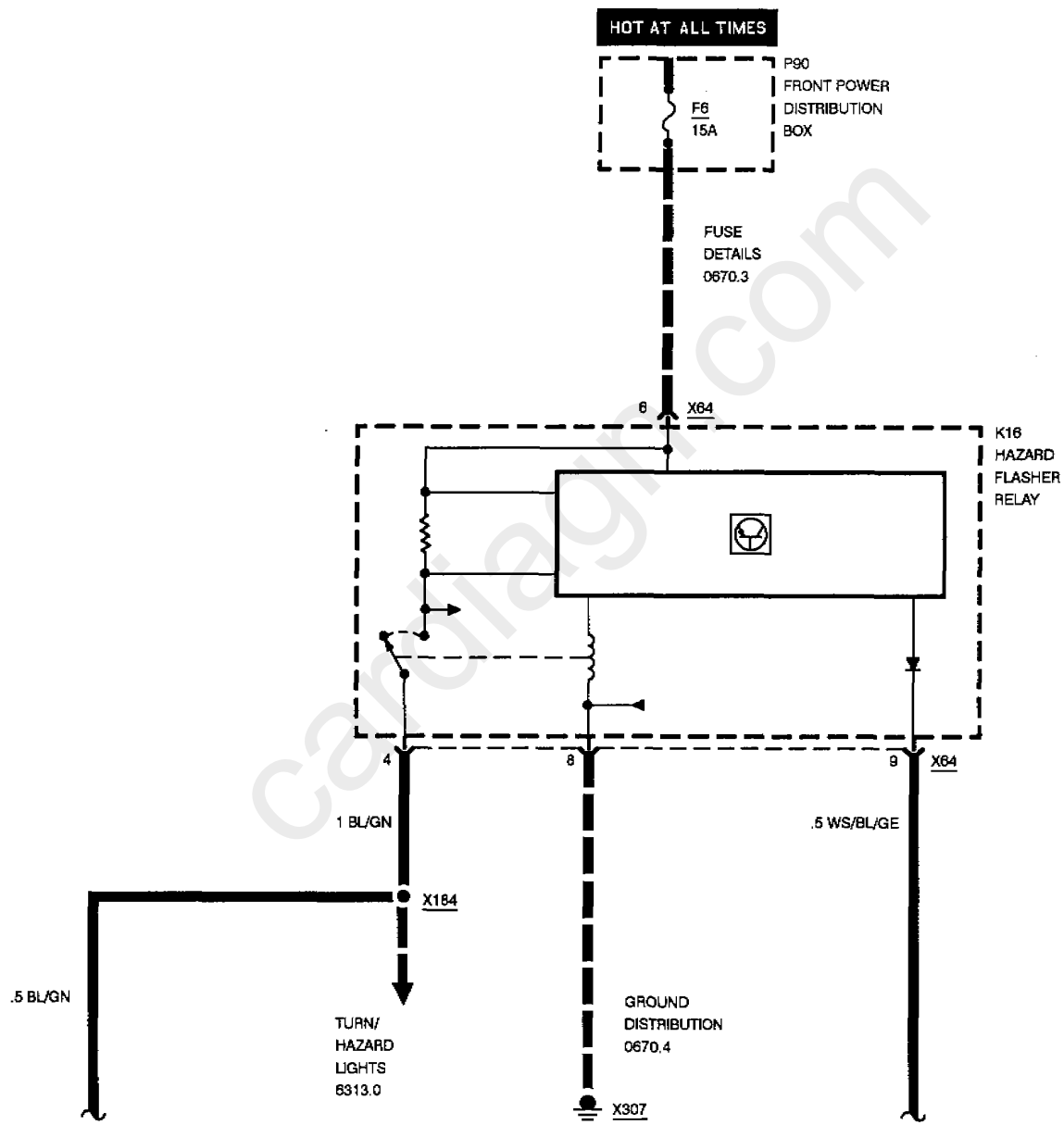

cardiagn.com

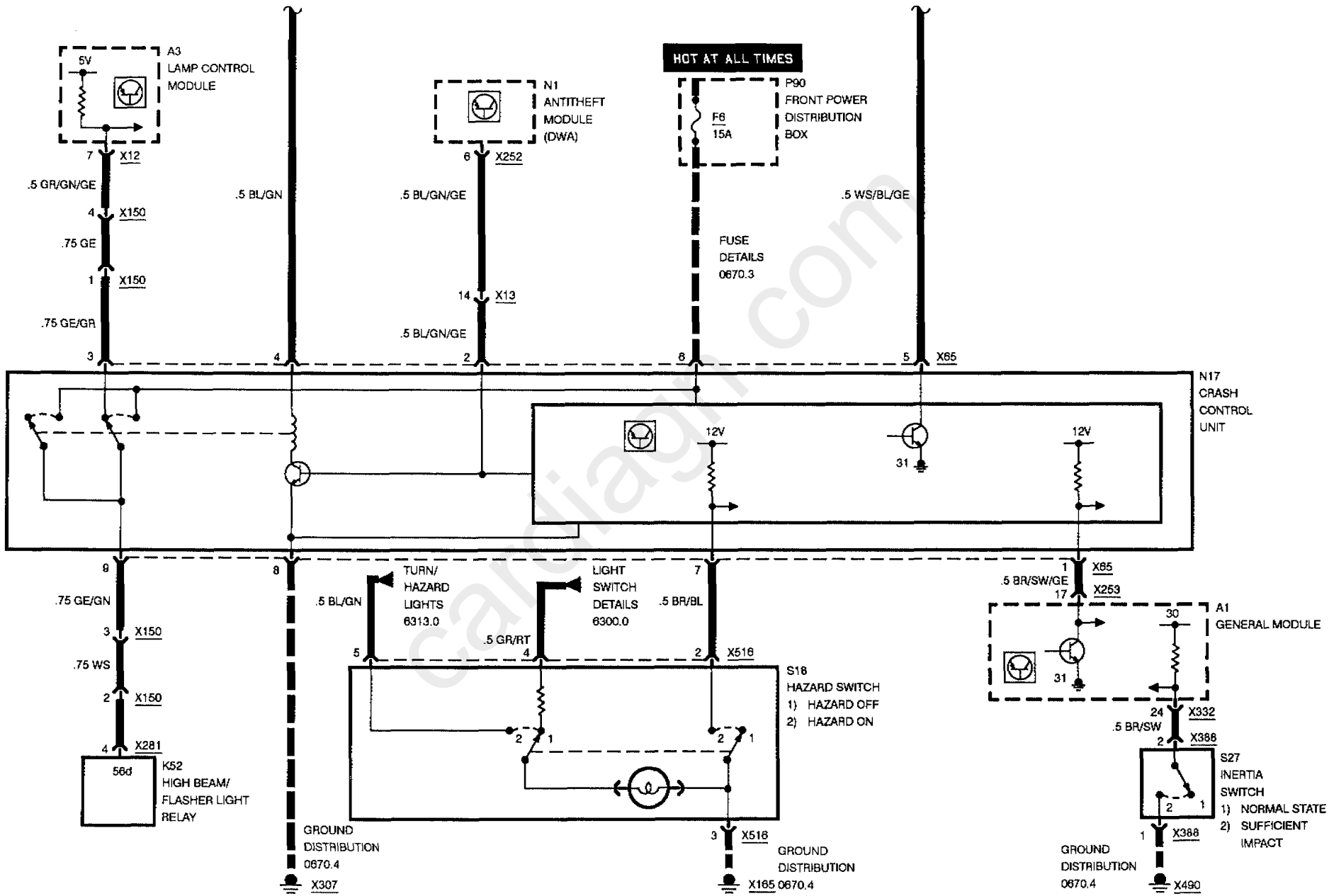
A3
LAMP CONTROL
MODULE
5V
7
X12
.5 GR/GN/GE
4
X150
.75 GE
1
X150
.75 GE/GR
3
.5 BL/GN
4
N1
ANTITHEFT
MODULE
(DWA)
6
X252
.5 BL/GN/GE
14
X13
.5 BL/GN/GE
2
HOT AT ALL TIMES
P90
FRONT POWER
DISTRIBUTION
BOX
F6
15A
FUSE
DETAILS
0670.3
6
.5 WS/BL/GE
5
X65
N17
CRASH
CONTROL
UNIT
12V
31
12V
9
.75 GE/GN
3
X150
.75 WS
2
X150
4
X281
56d
K52
HIGH BEAM/
FLASHER LIGHT
RELAY
8
GROUND
DISTRIBUTION
0670.4
X307
.5 BL/GN
TURN/
HAZARD
LIGHTS
6313.0
5
LIGHT
SWITCH
DETAILS
6300.0
.5 GR/RT
4
7
.5 BR/BL
2
X516
S18
HAZARD SWITCH
1) HAZARD OFF
2) HAZARD ON
3
X516
GROUND
DISTRIBUTION
X165 0670.4
1
X65
.5 BR/SW/GE
17
X253
A1
GENERAL MODULE
30
31
24
X332
.5 BR/SW
2
X388
S27
INERTIA
SWITCH
1) NORMAL STATE
2) SUFFICIENT
IMPACT
1
X388
GROUND
DISTRIBUTION
0670.4
X490

cardiagn.com

cardiagn.com

REAR WINDOW DEFOGGER/ ANTENNA

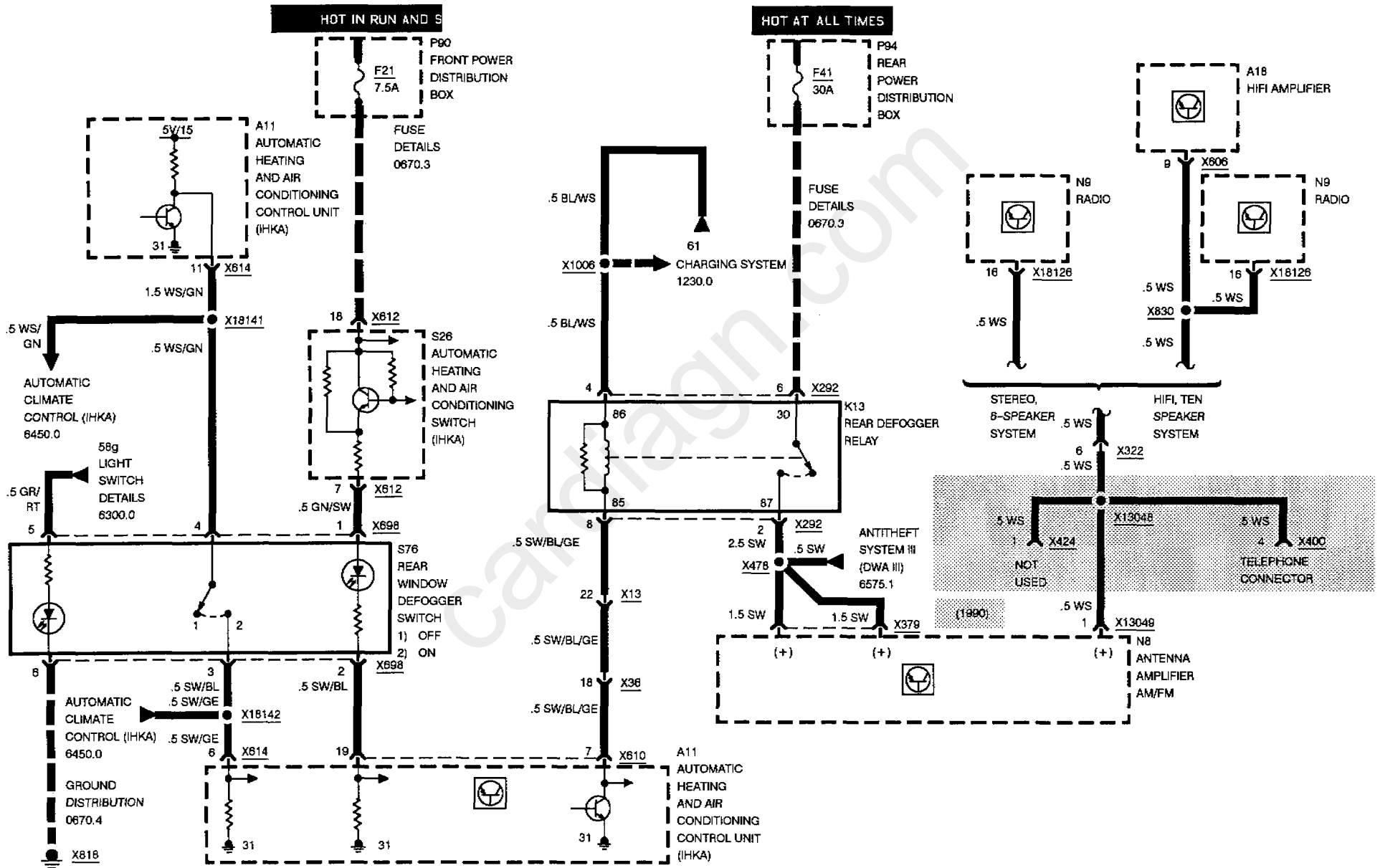

cardiagn.com

BMW 8

REAR WINDOW DEFOGGER/ ANTENNA

REAR WINDOW ANTENNA

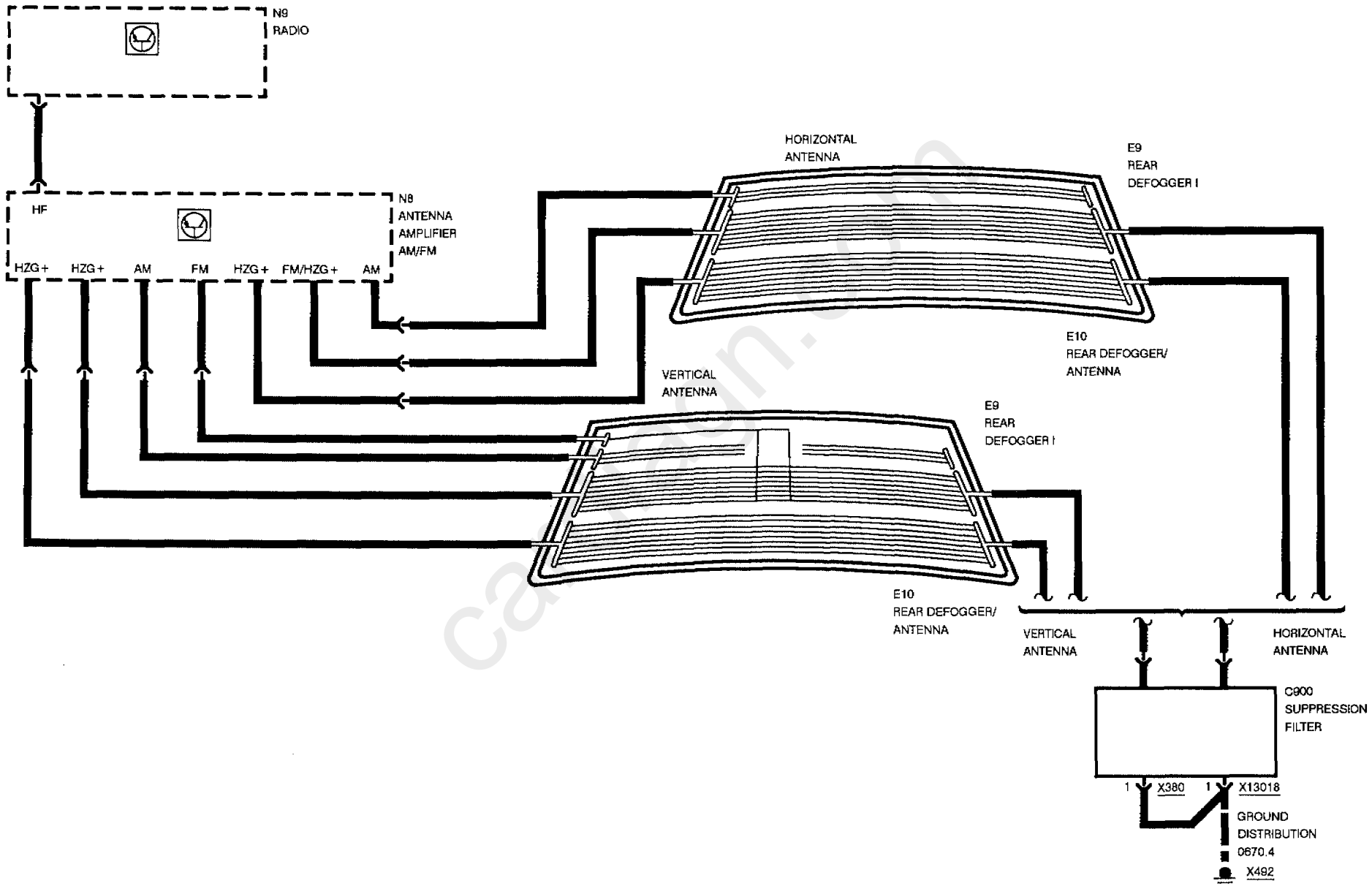

REAR WINDOW DEFOGGER/ ANTENNA

3-ANTENNA-DIVERSITY

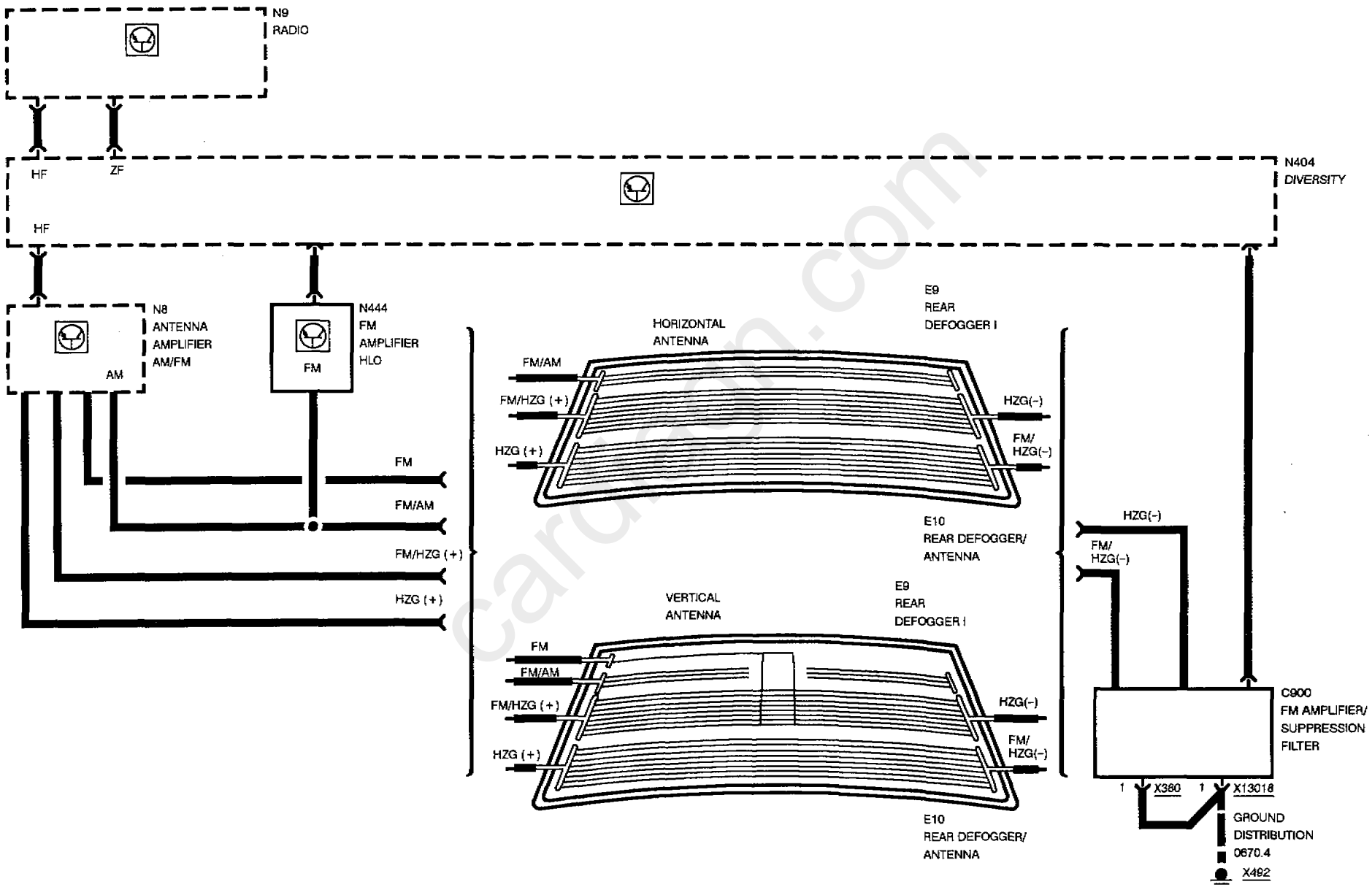

cardiagn.com

AUTOMATIC CLIMATE CONTROL (IHKA)

POWER

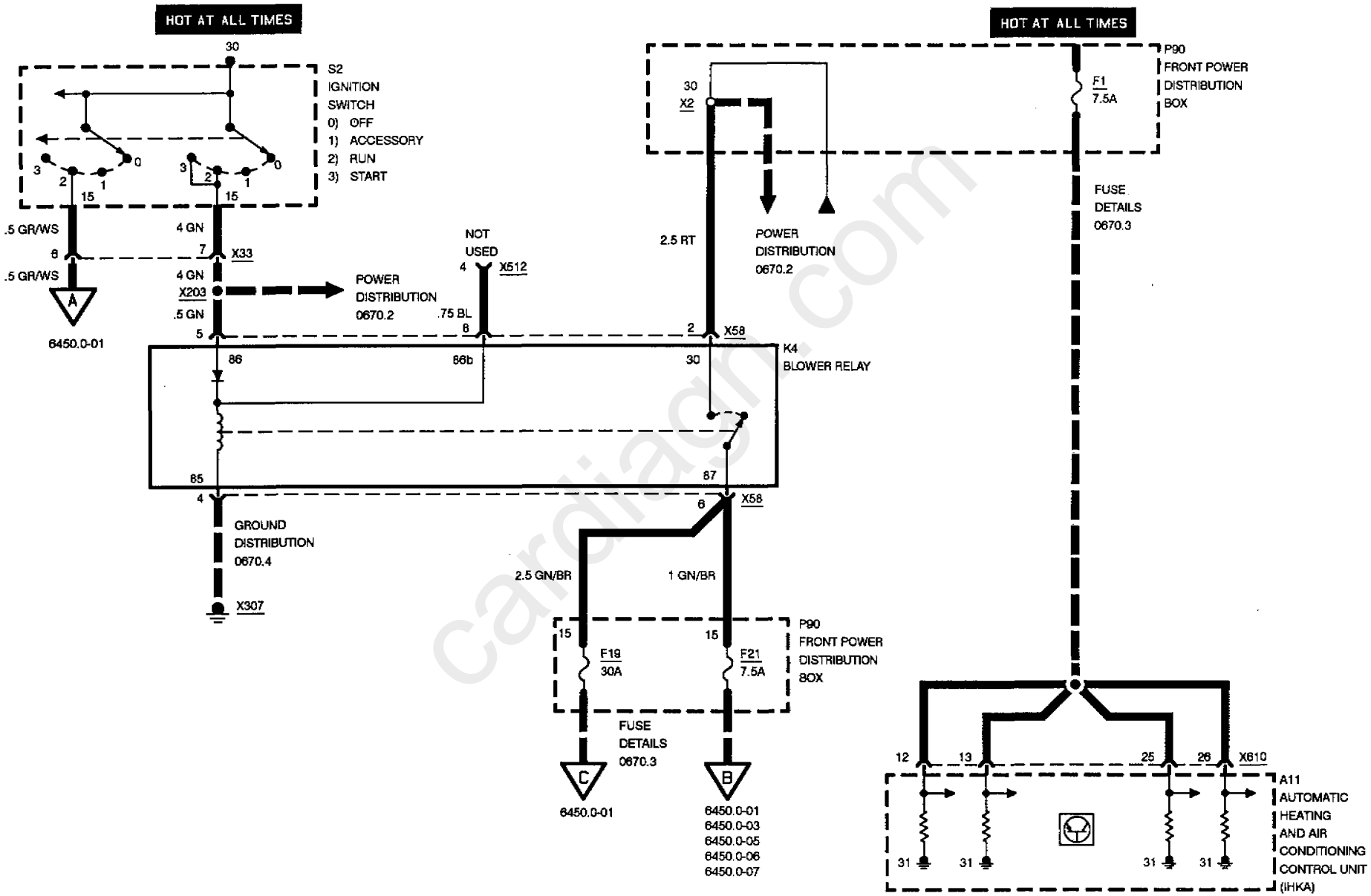

cardiagn.com

AUTOMATIC CLIMATE CONTROL (IHKA)

BLOWER CONTROLS

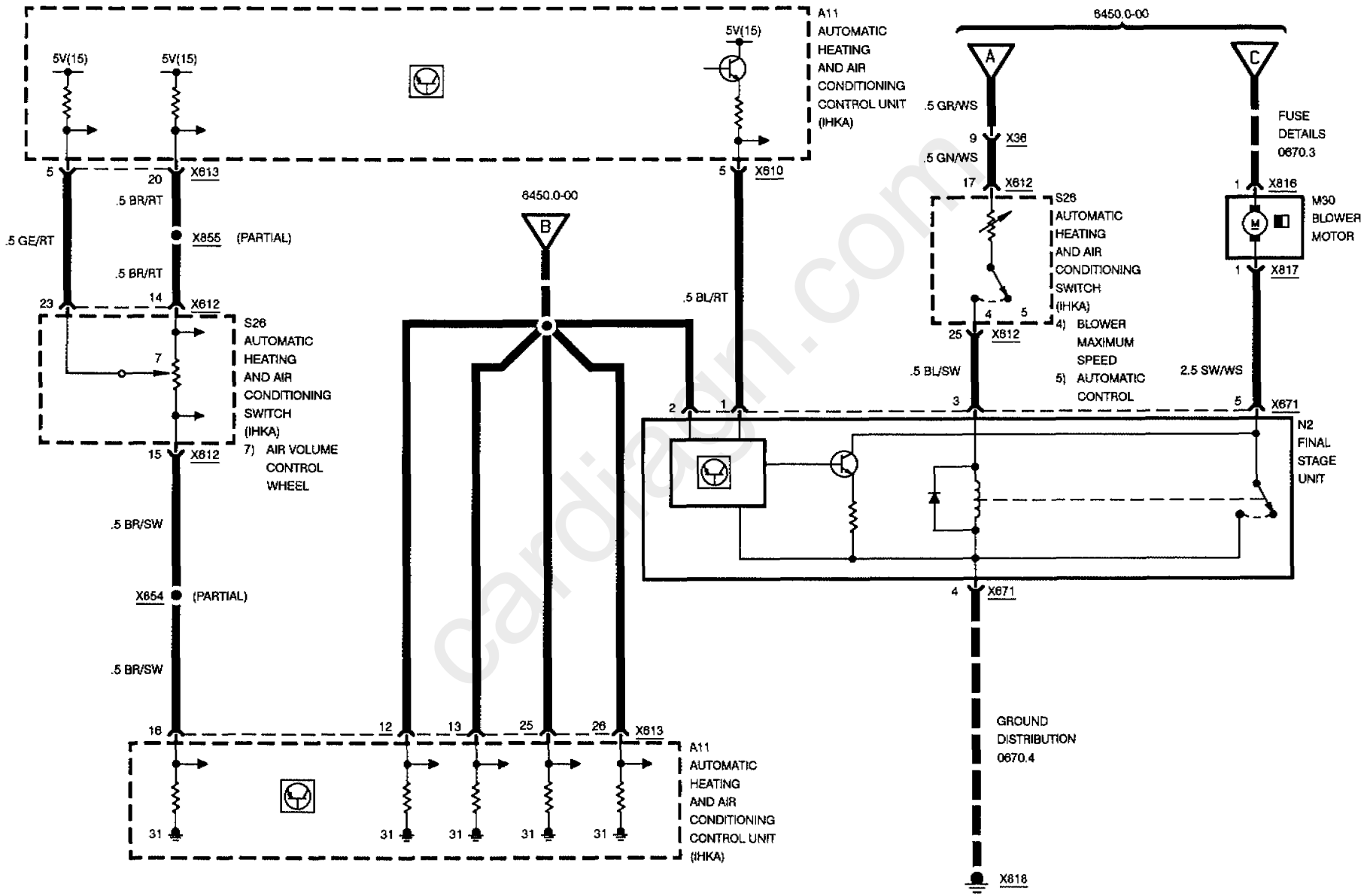

cardiagn.com

AUTOMATIC CLIMATE CONTROL (IHKA)

BLOWER CONTROLS

WATER VALVES

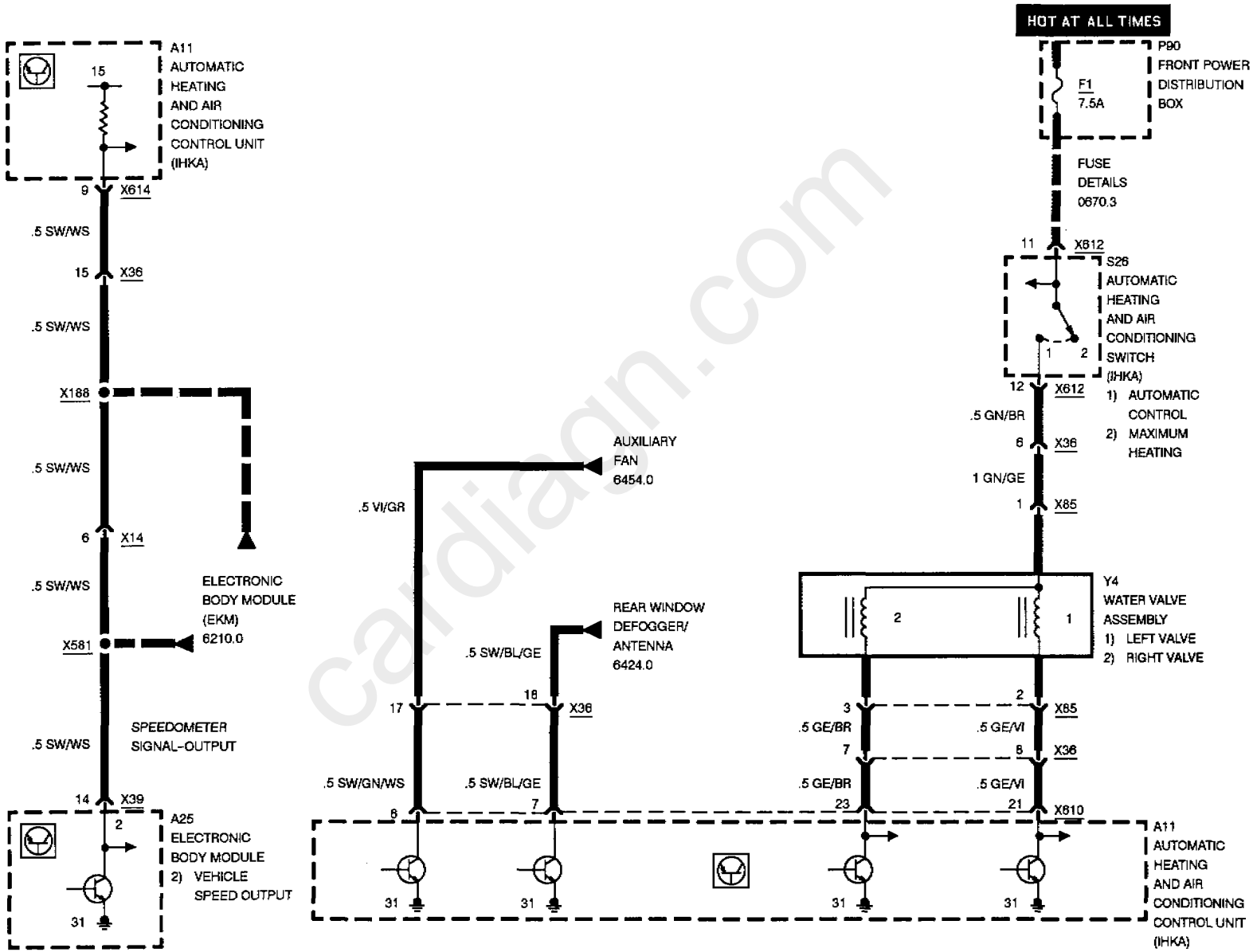

cardiagn.com

AUTOMATIC CLIMATE CONTROL (IHKA)

TEMPERATURE CONTROLS

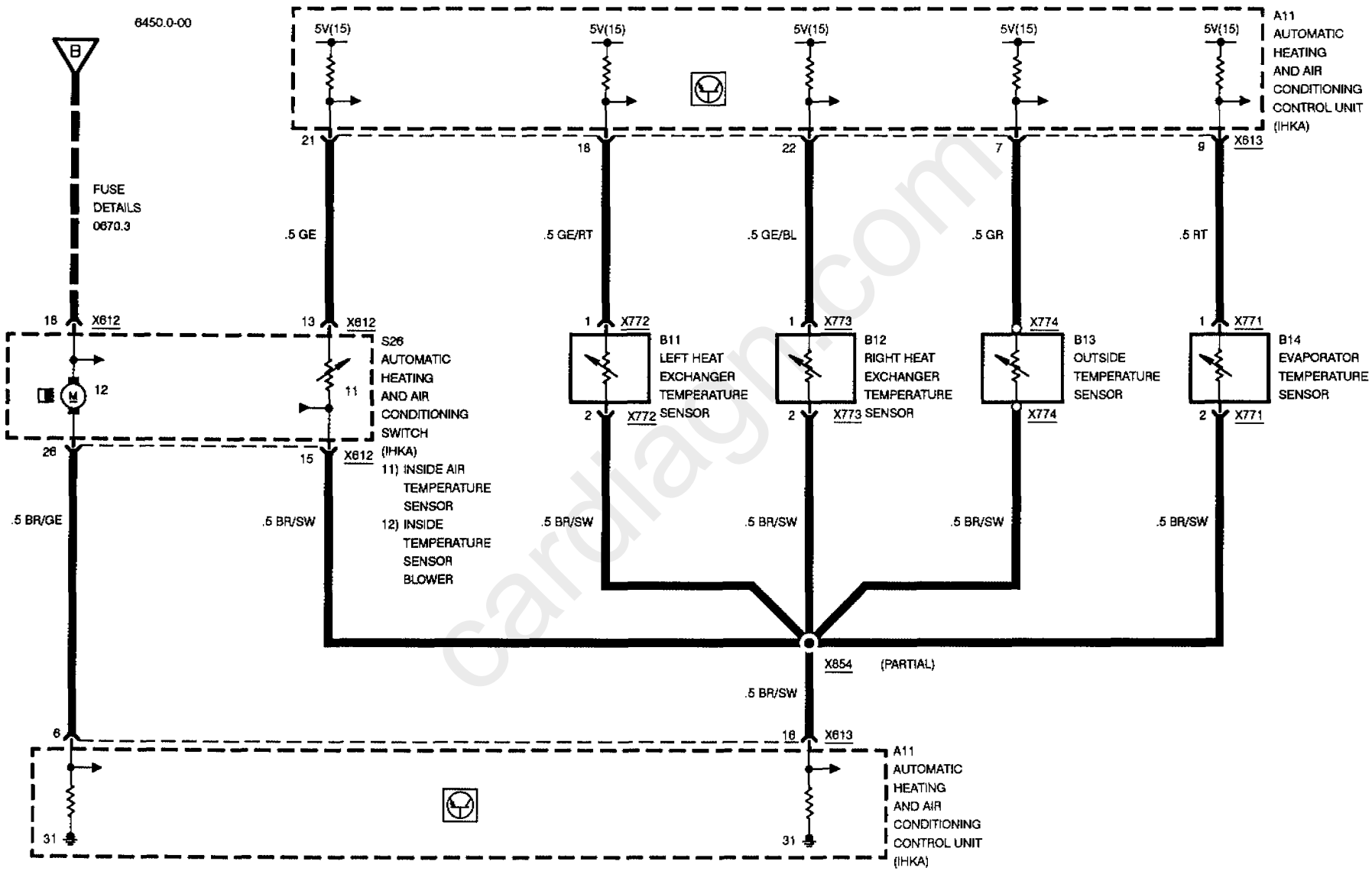

cardiagn.com

AUTOMATIC CLIMATE CONTROL (IHKA)

TEMPERATURE CONTROLS

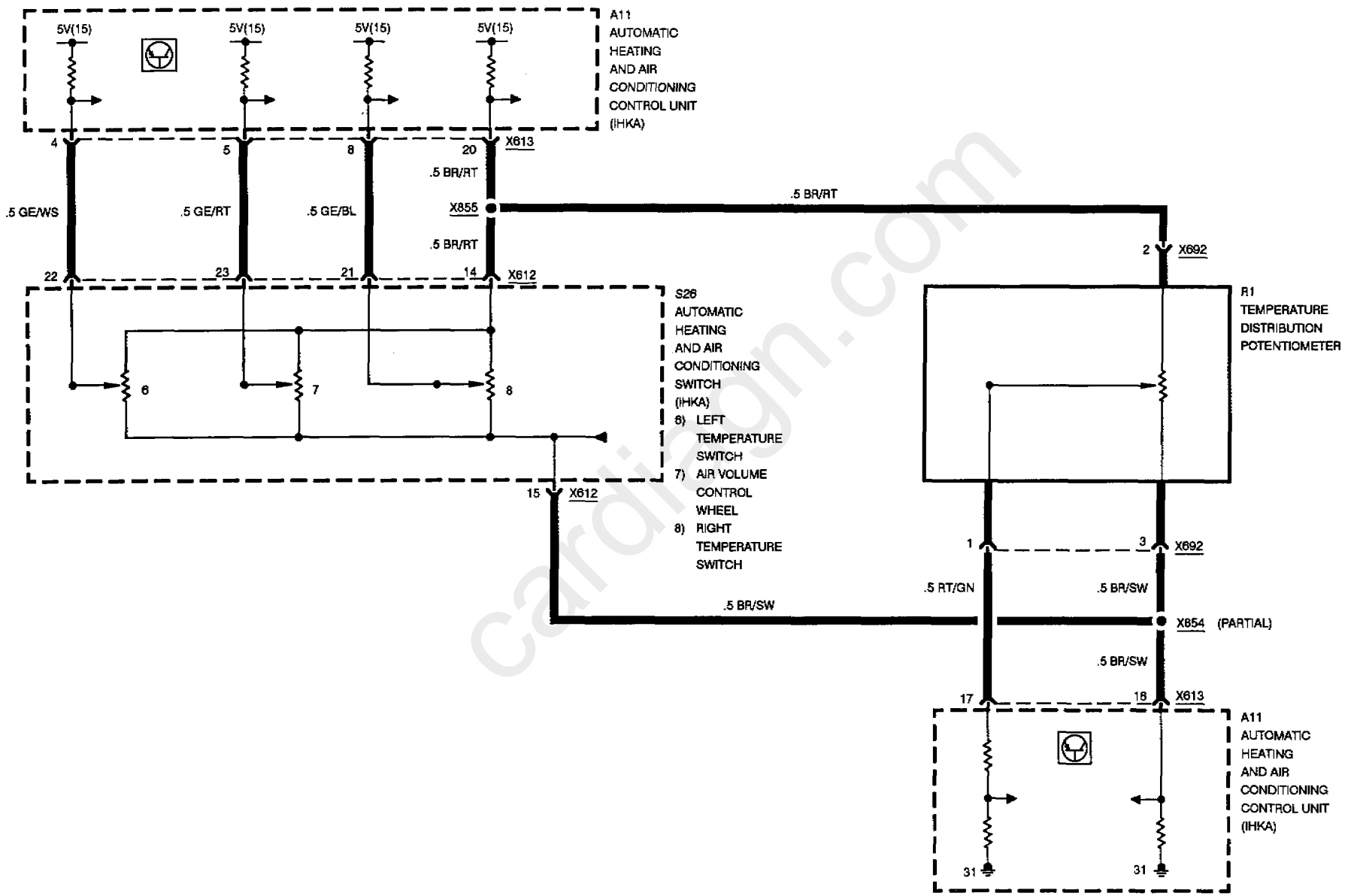

cardiagn.com

AUTOMATIC CLIMATE CONTROL (IHKA)

AIR DELIVERY

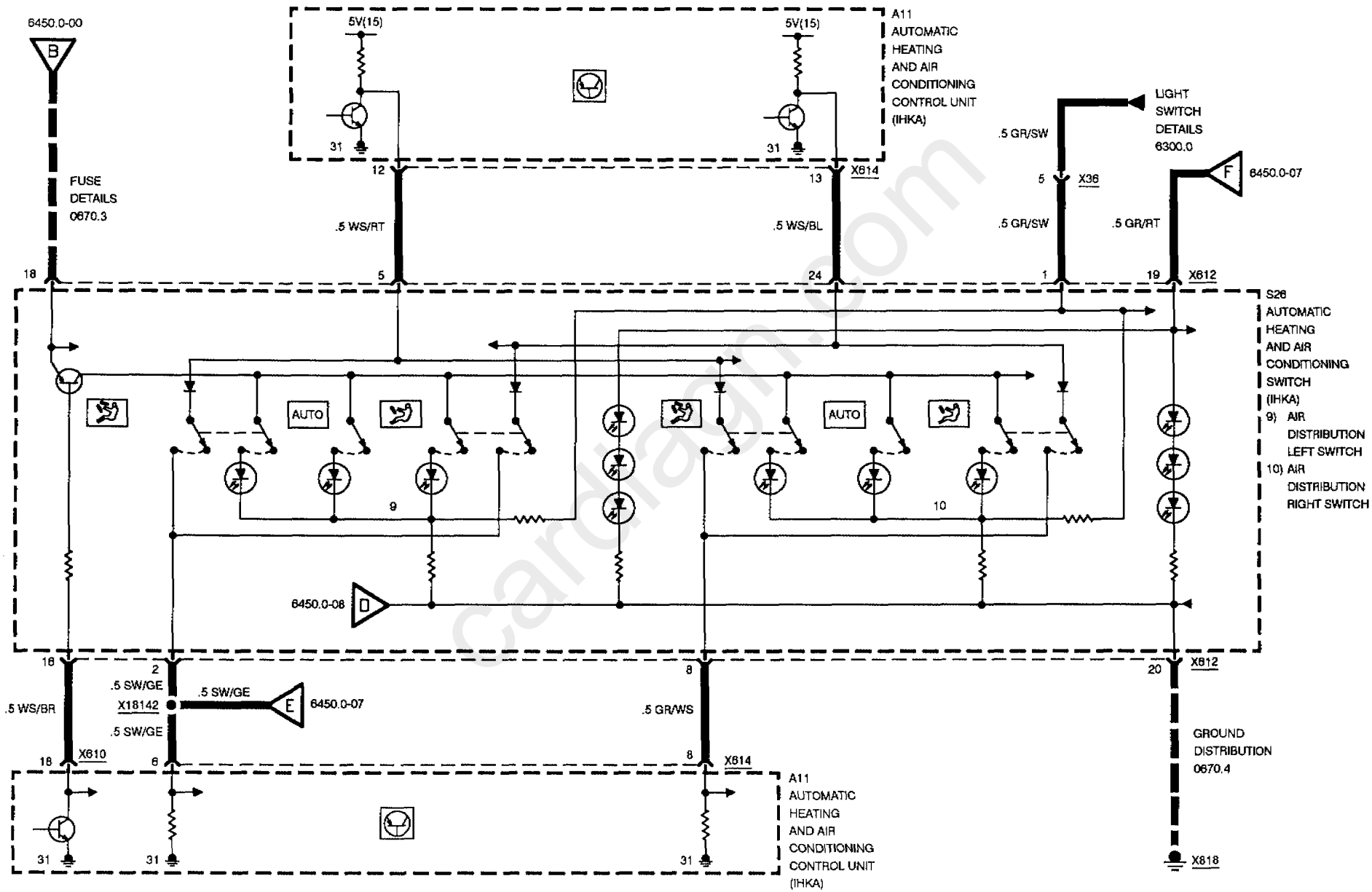

cardiagn.com

AUTOMATIC CLIMATE CONTROL (IHKA)

AIR DELIVERY

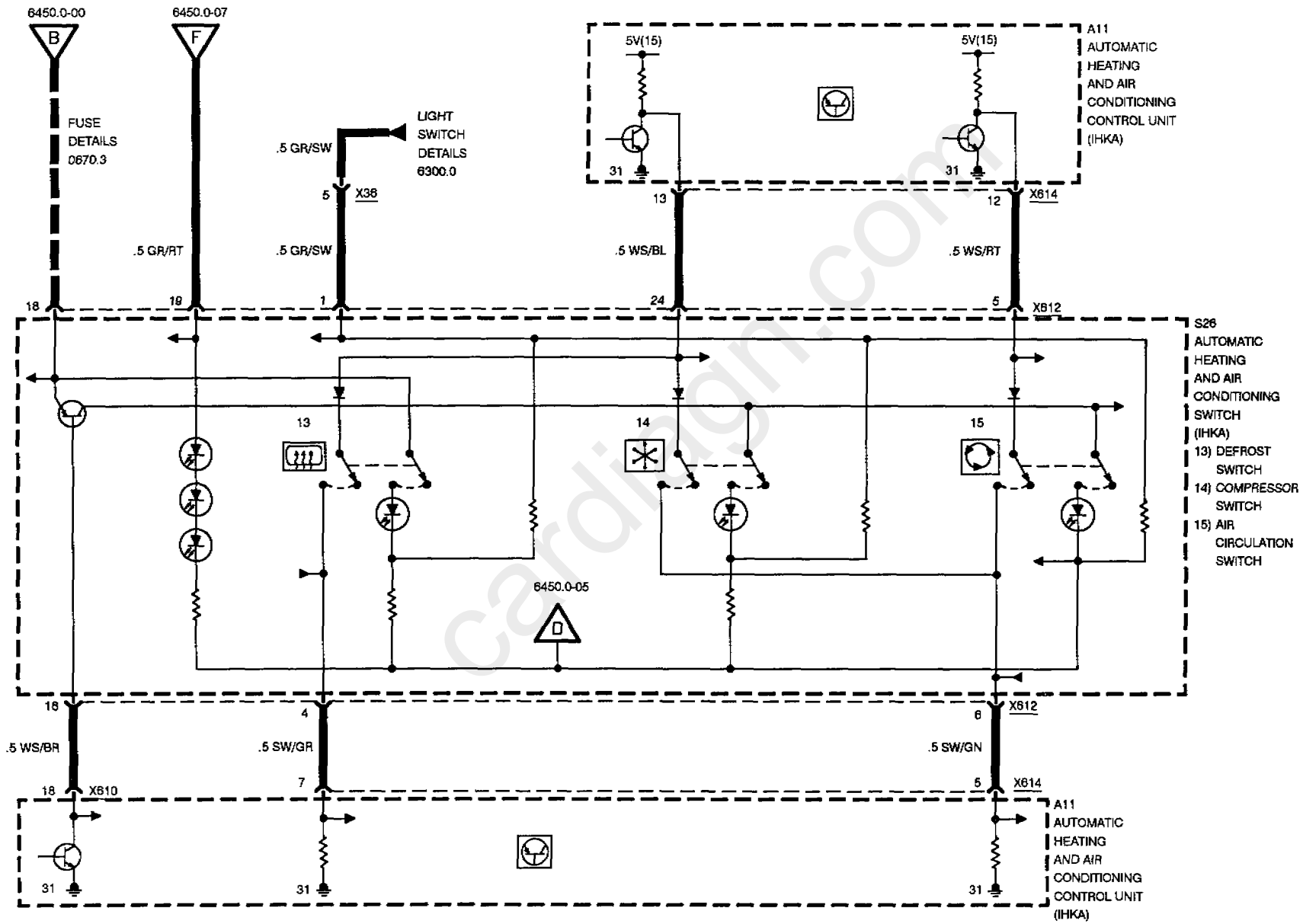

cardiagn.com

AUTOMATIC CLIMATE CONTROL (IHKA)

AIR DELIVERY

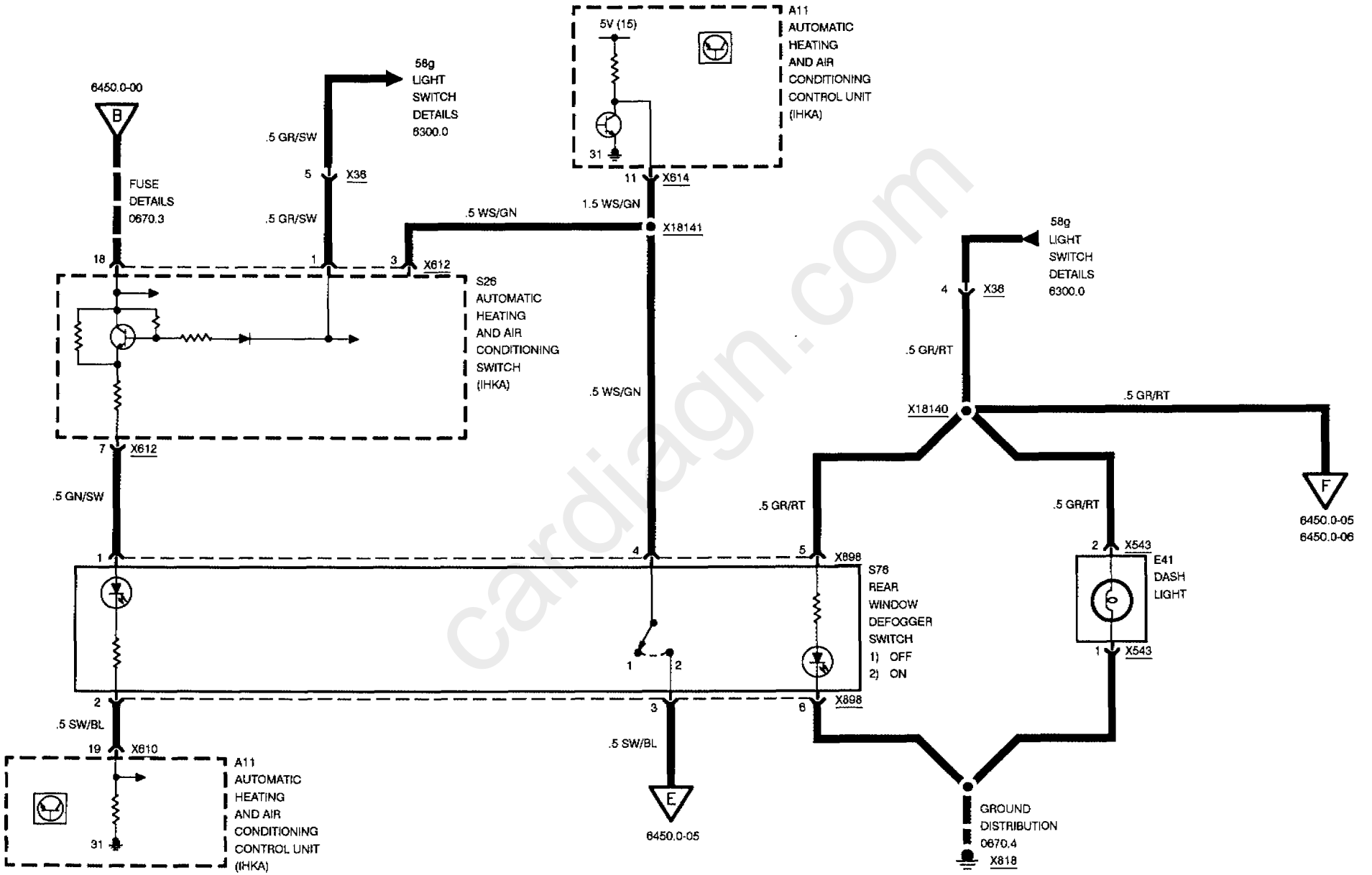

cardiagn.com

AUTOMATIC CLIMATE CONTROL (IHKA)

AIR DELIVERY

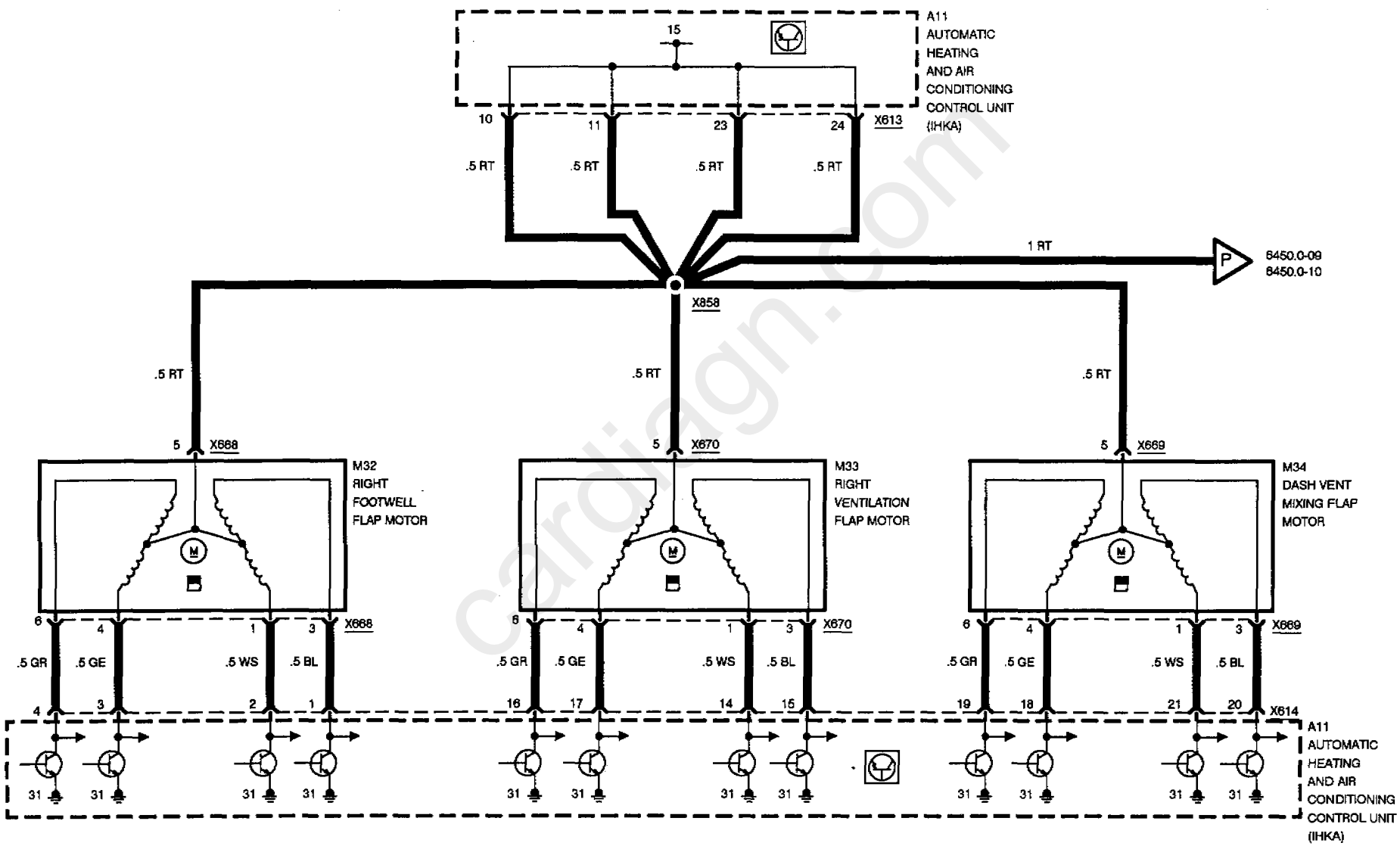

cardiagn.com

AUTOMATIC CLIMATE CONTROL (IHKA)

AIR DELIVERY

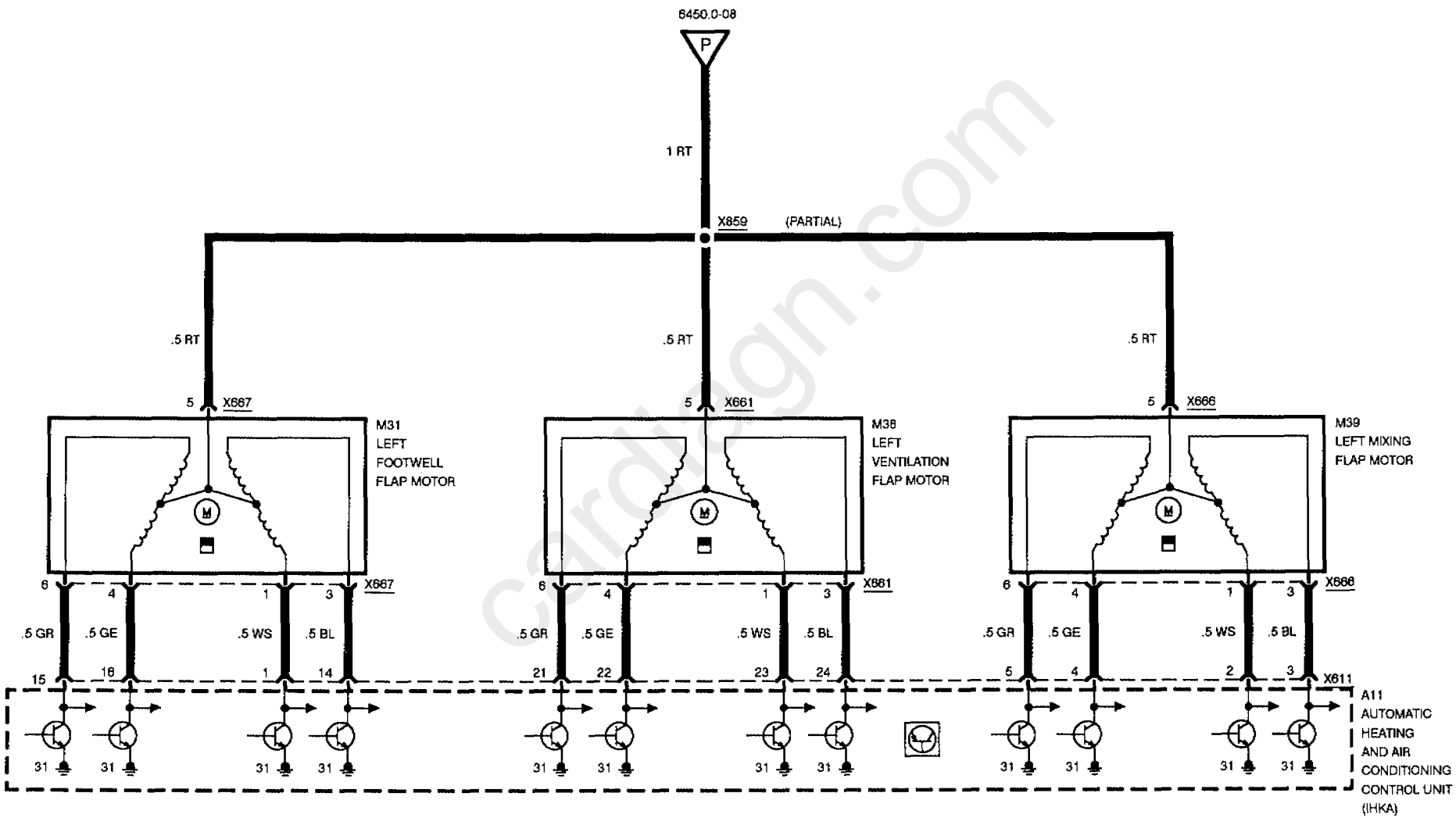

cardiagn.com

AUTOMATIC CLIMATE CONTROL (IHKA)

AIR DELIVERY

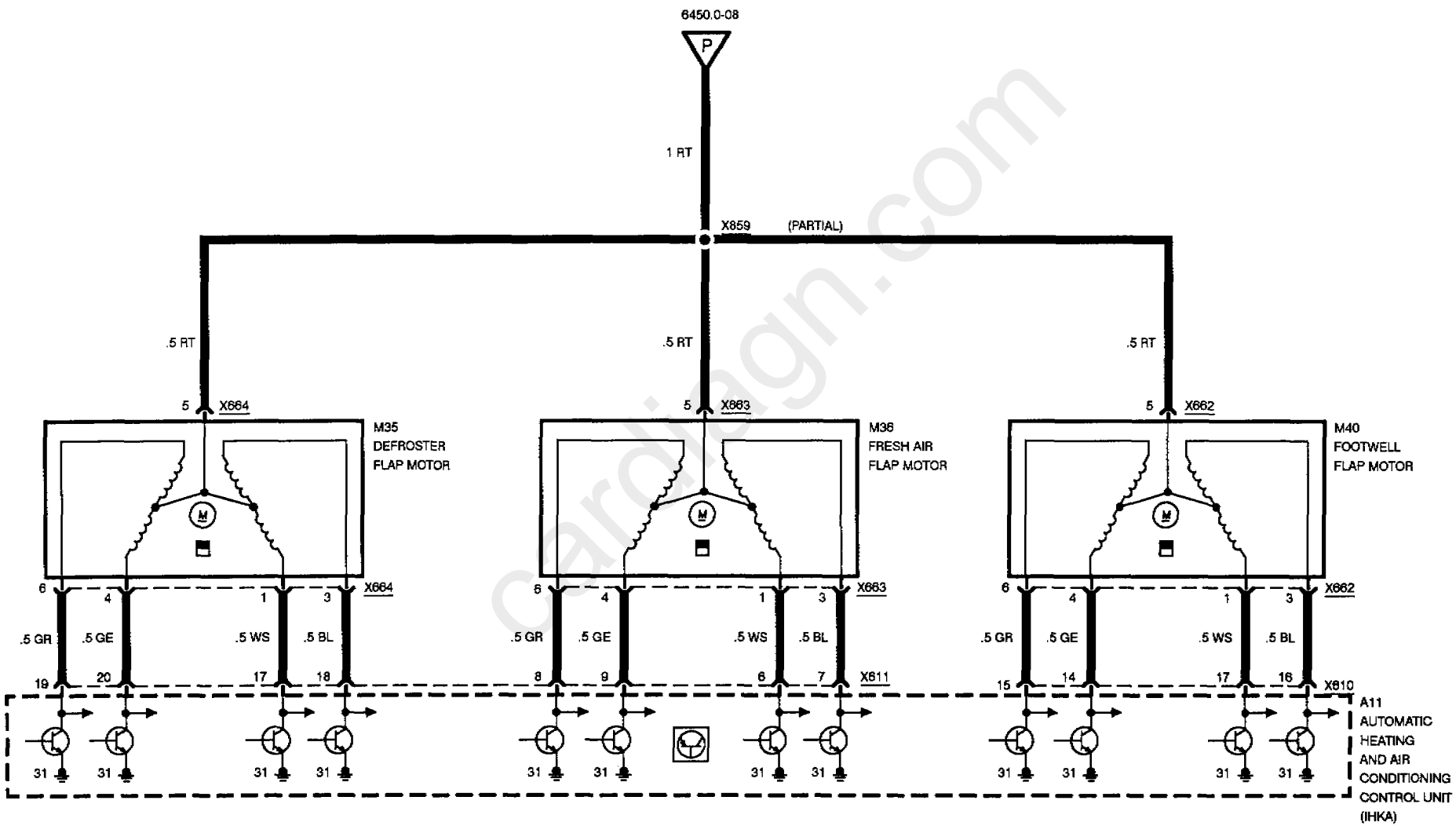

cardiagn.com

AUTOMATIC CLIMATE CONTROL (IHKA)

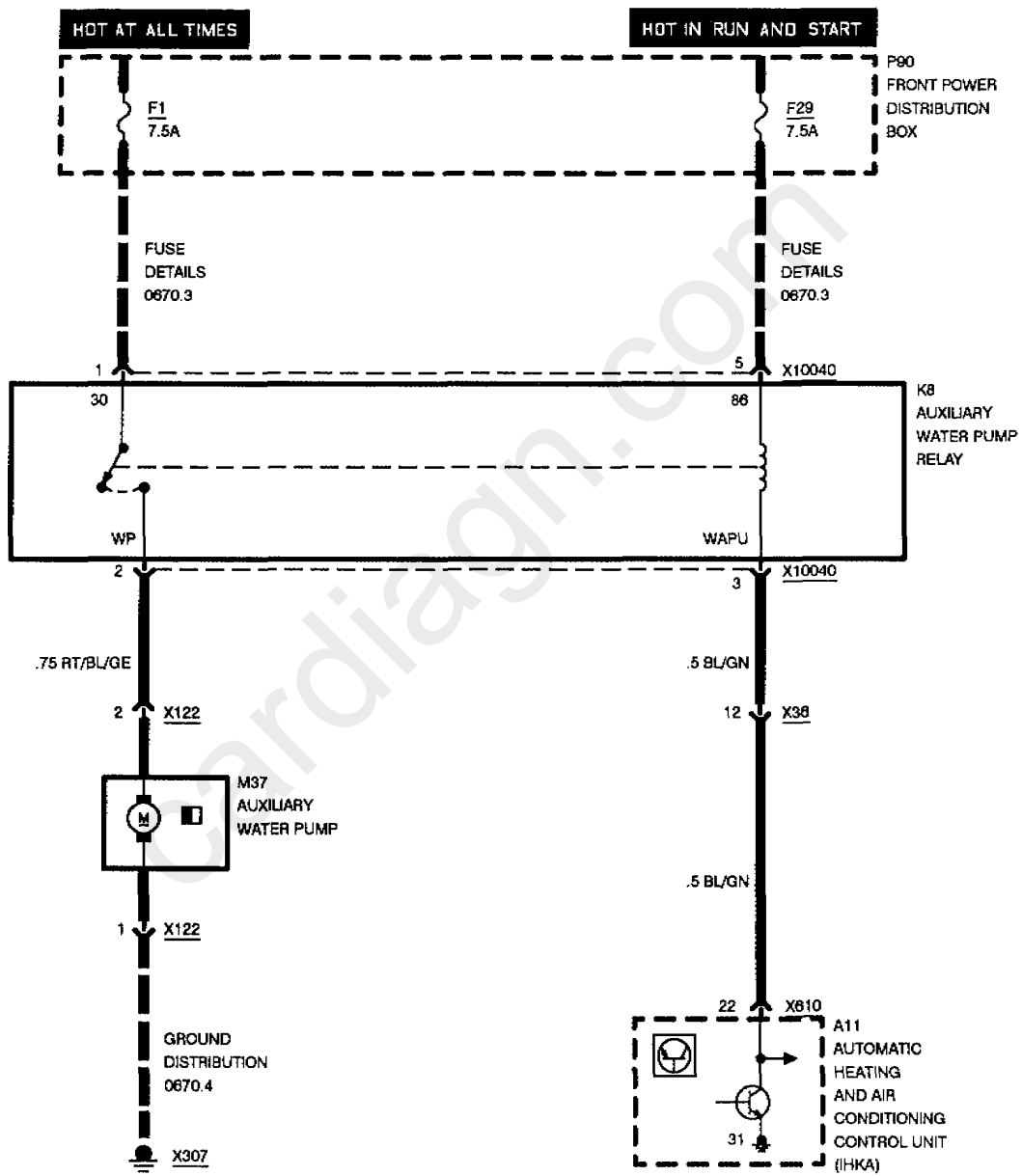

cardiagn.com

AUTOMATIC CLIMATE CONTROL (IHKA)

COMPRESSOR CONTROLS

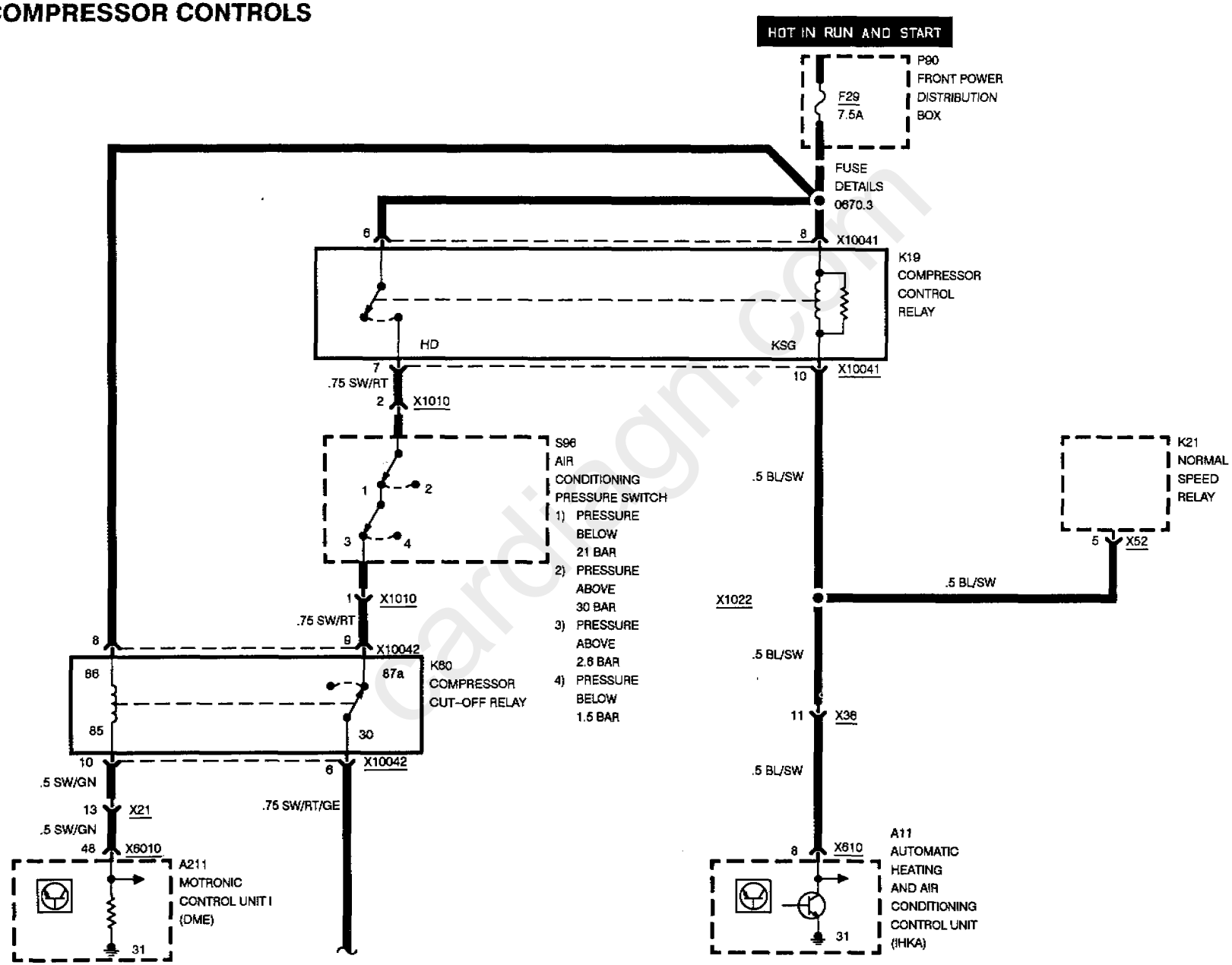

cardiagn.com

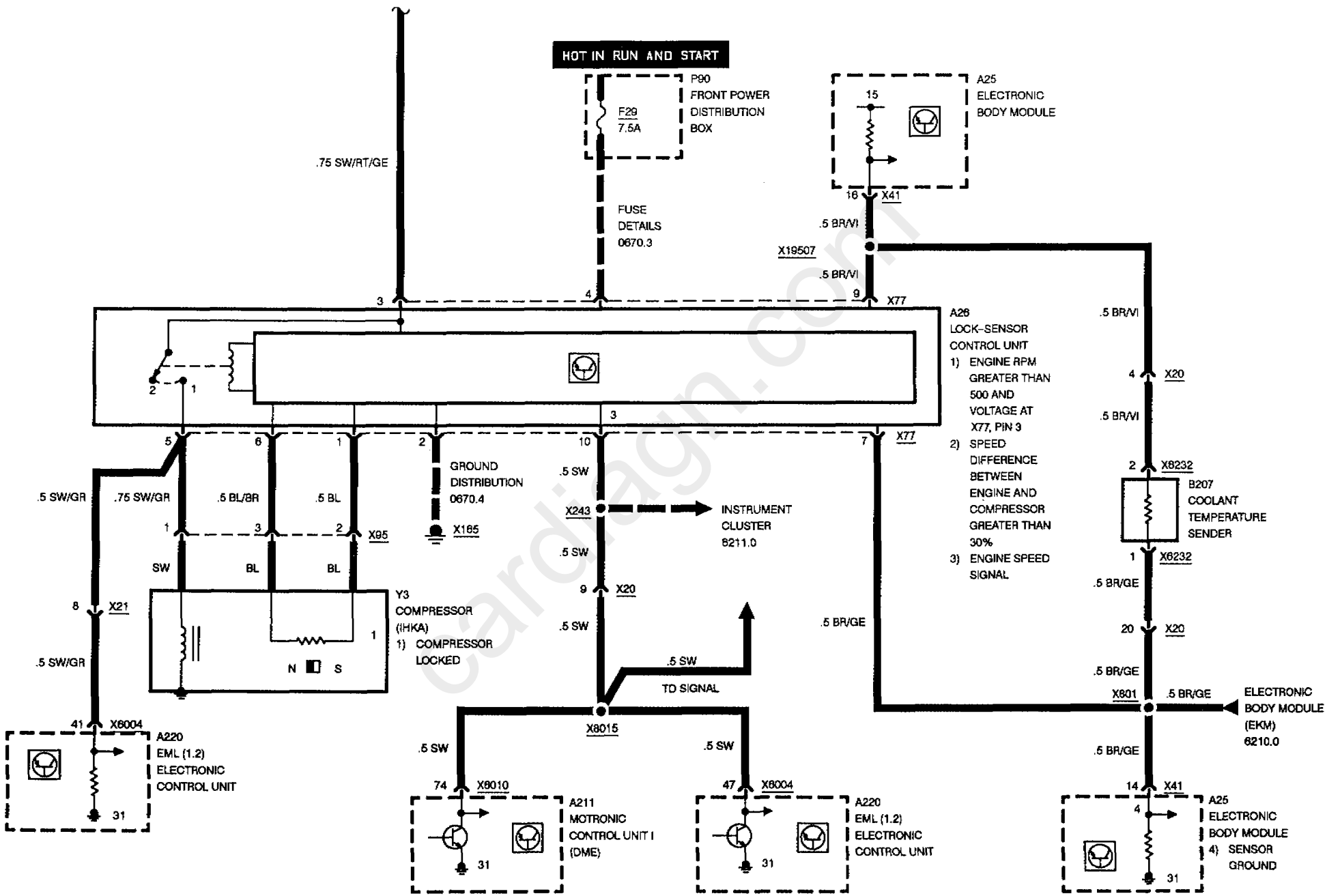

cardiagn.com

AUTOMATIC CLIMATE CONTROL (IHKA)

DIAGNOSTIC LINK AND STARTER INPUT

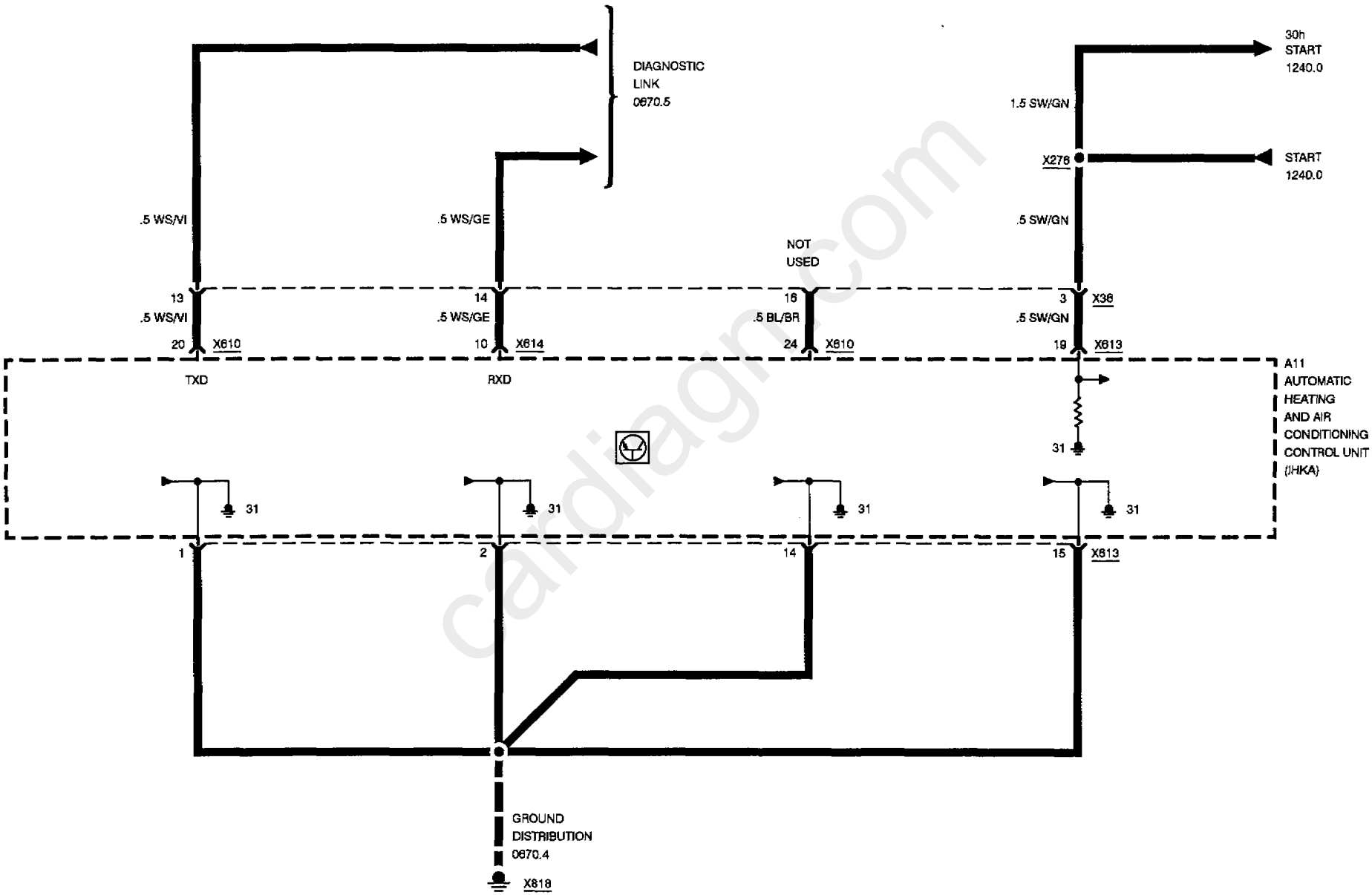

cardiagn.com

cardiagn.com

AUXILIARY FAN

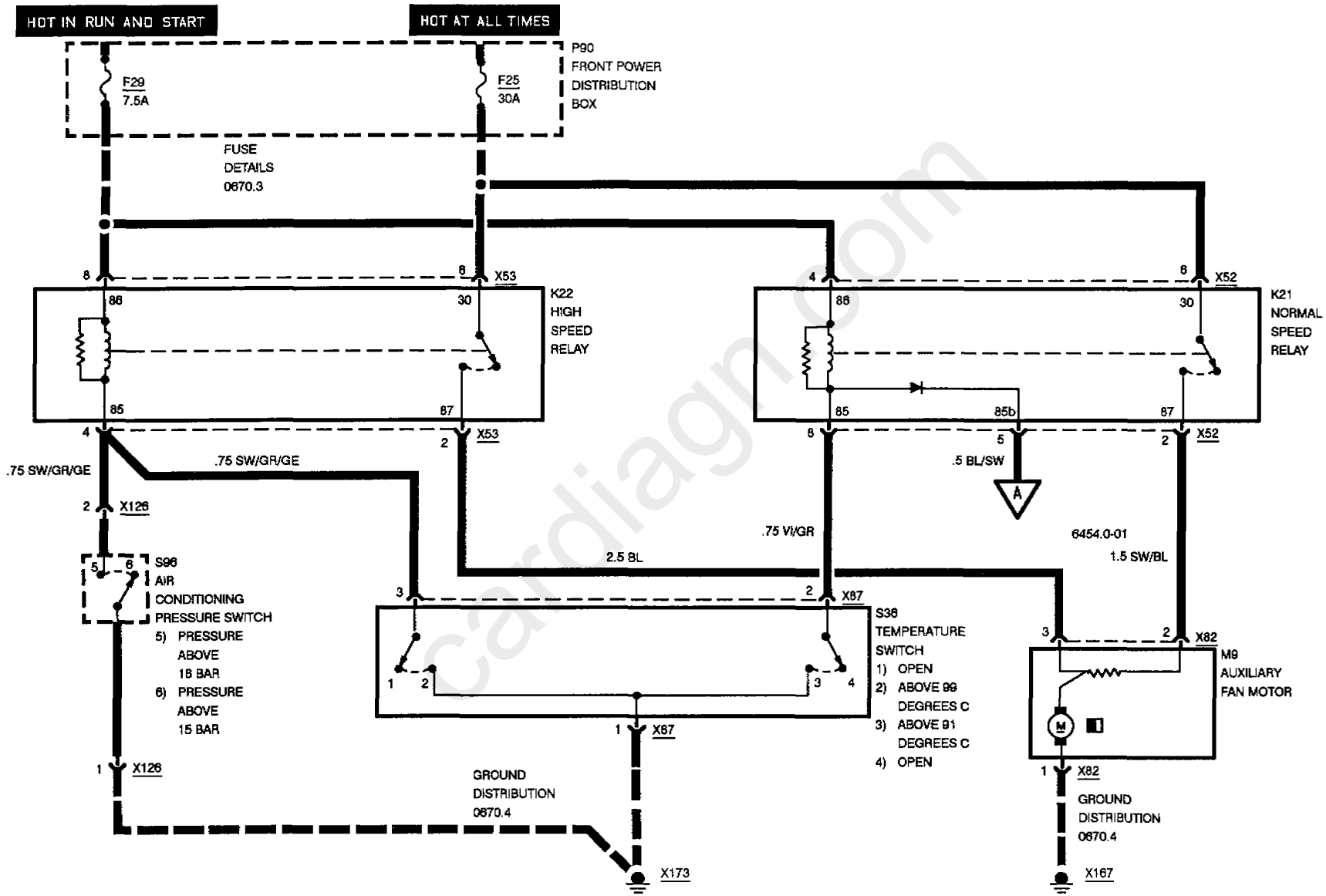

cardiagn.com

AUXILIARY FAN

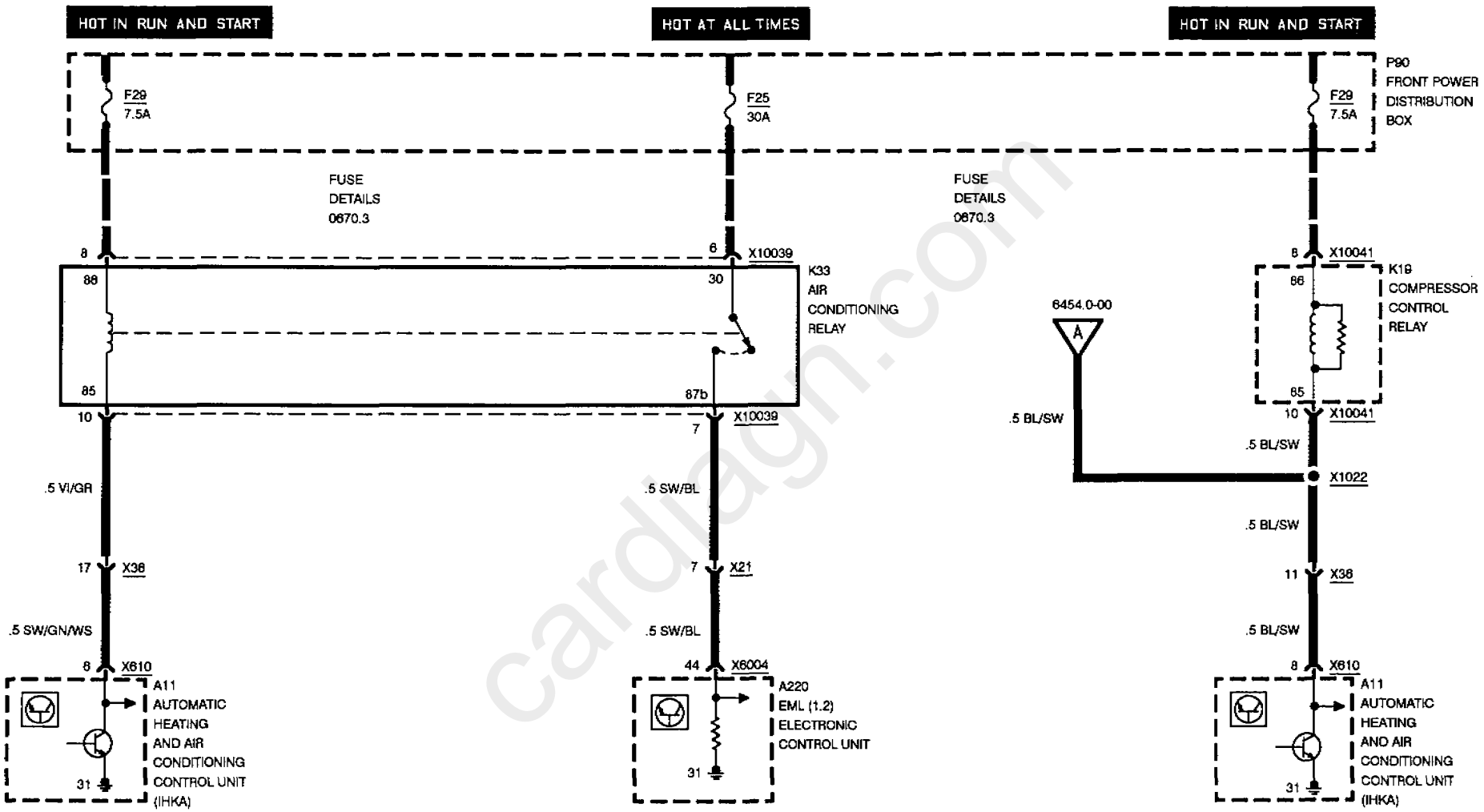

cardiagn.com

cardiagn.com

cardiagn.com

RADIO/ CD PLAYER (PROVISIONS)

HIFI, TEN SPEAKER SYSTEM

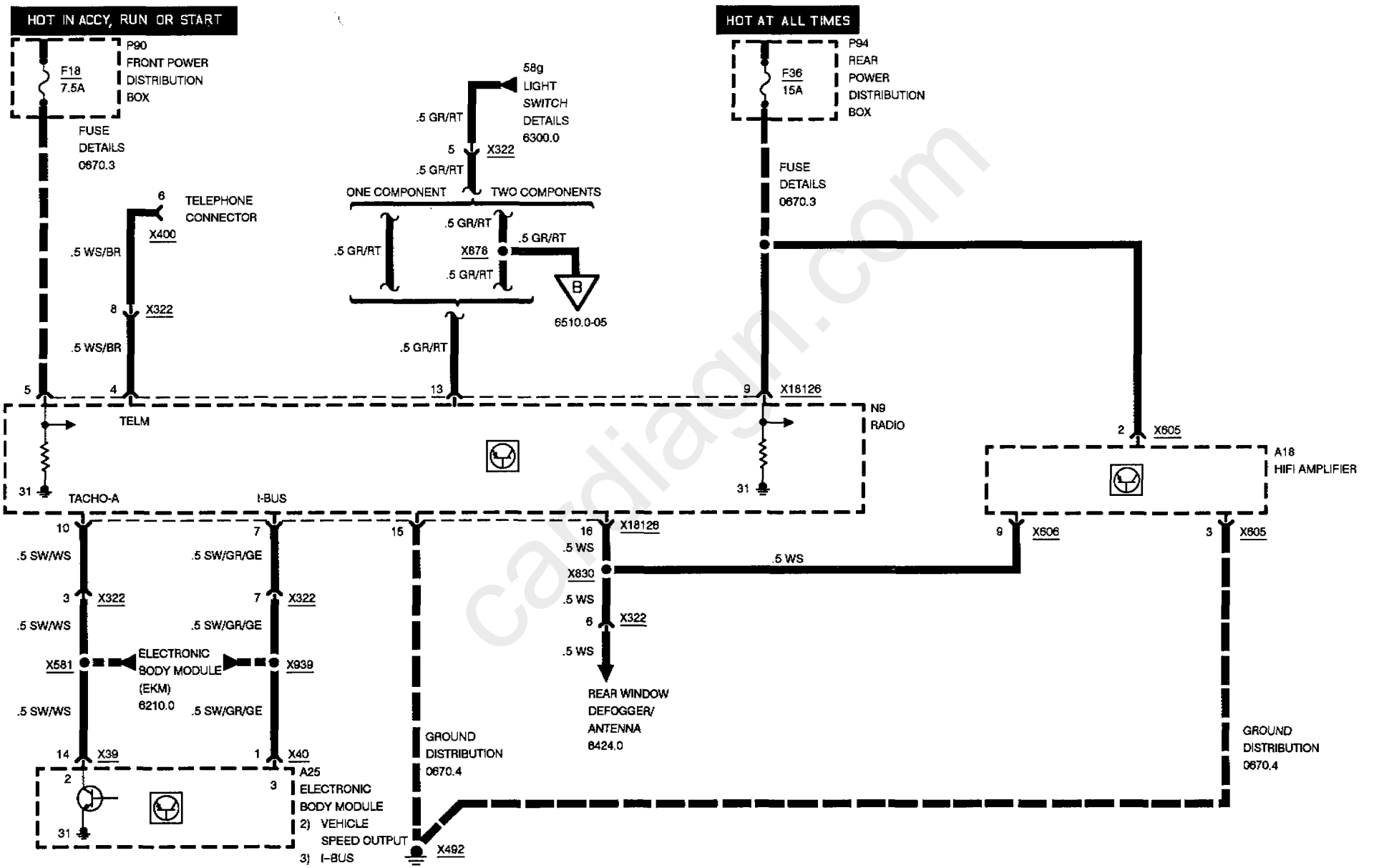

cardiagn.com

RADIO/ CD PLAYER (PROVISIONS)

HIFI, TEN SPEAKER SYSTEM

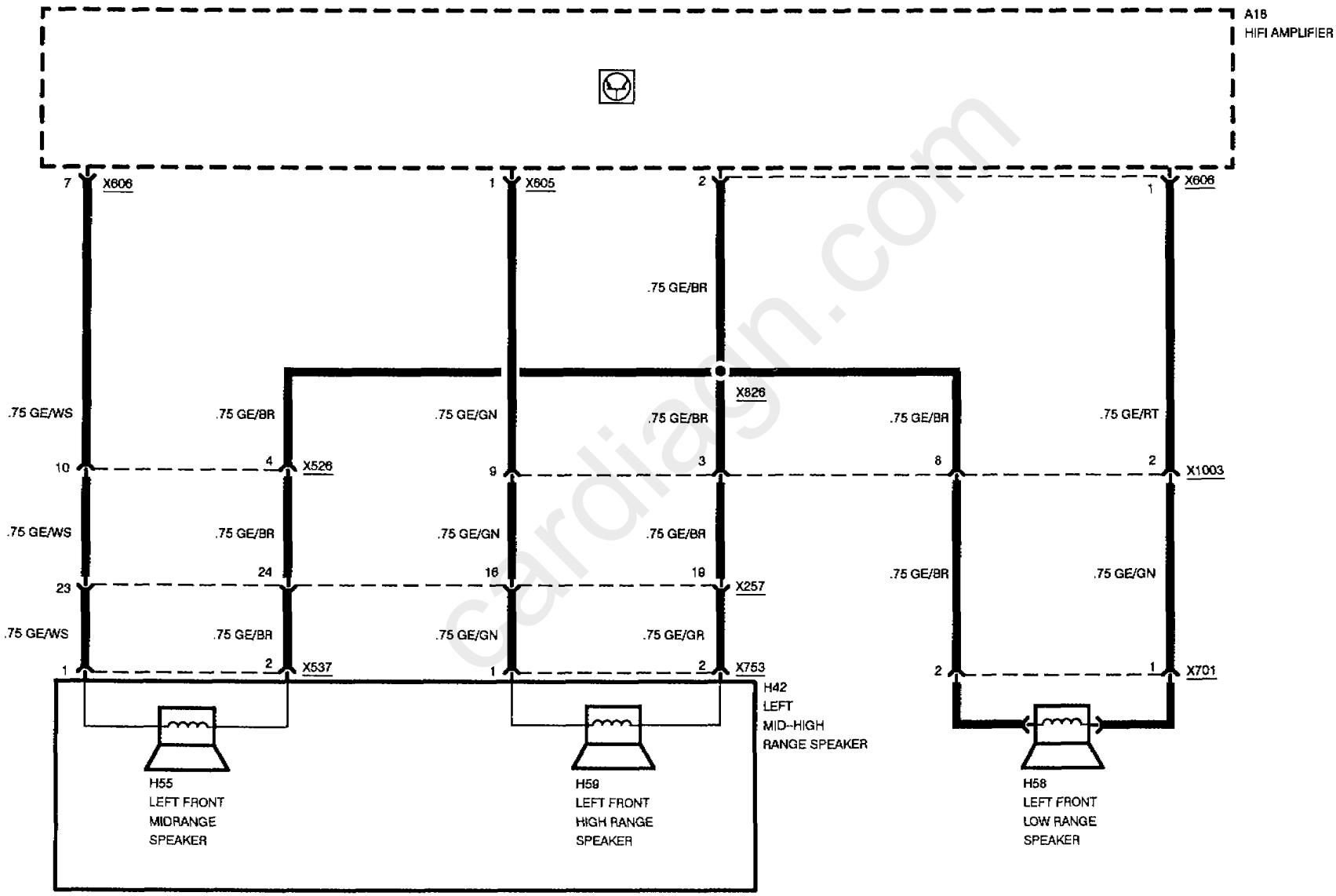

cardiagn.com

RADIO/ CD PLAYER (PROVISIONS)

HIFI, TEN SPEAKER SYSTEM

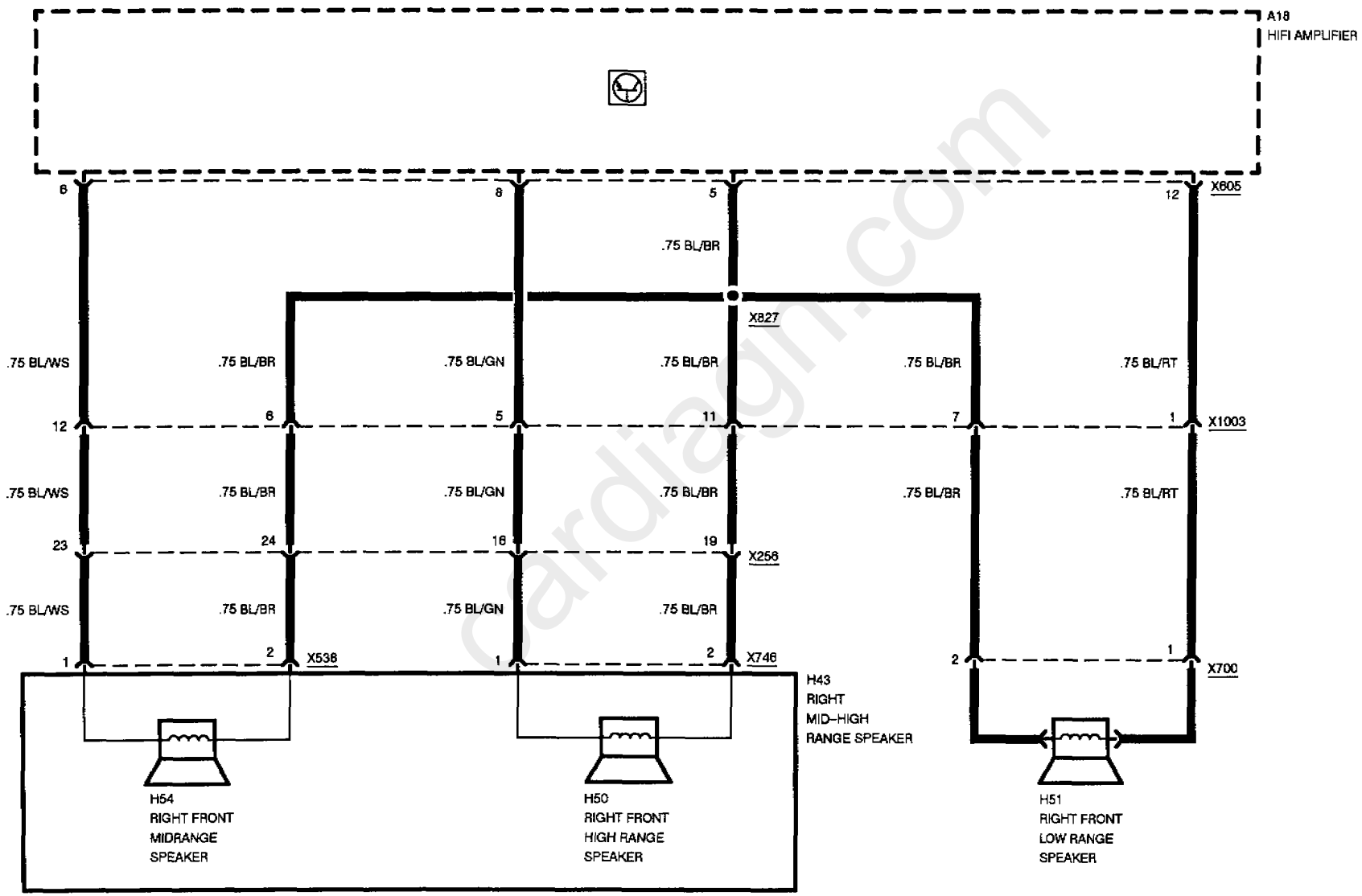

cardiagn.com

RADIO/ CD PLAYER (PROVISIONS)

HIFI, TEN SPEAKER SYSTEM

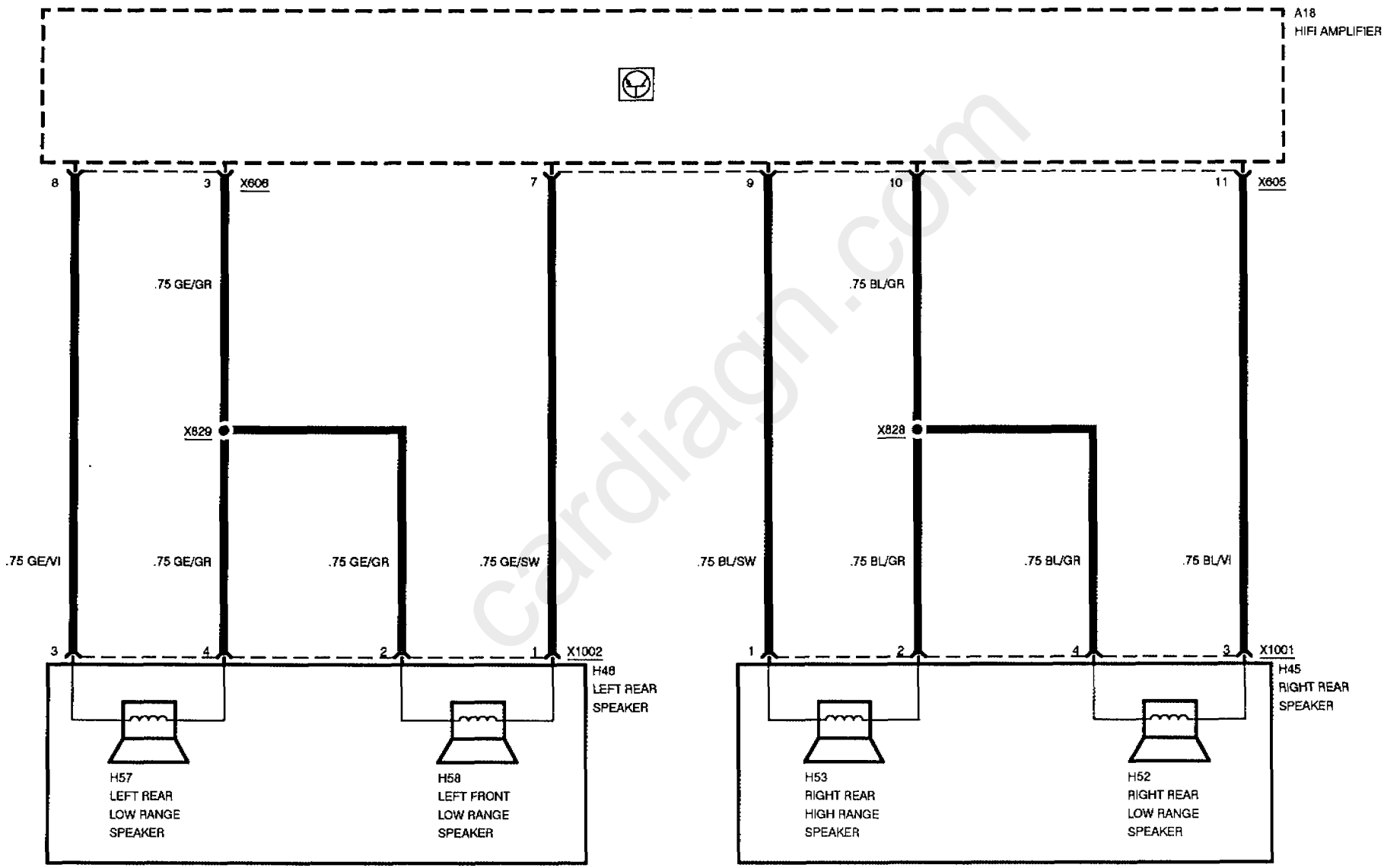

cardiagn.com

RADIO/ CD PLAYER (PROVISIONS)

HIFI, 10-SPEAKER SYSTEM (ONE COMPONENT)

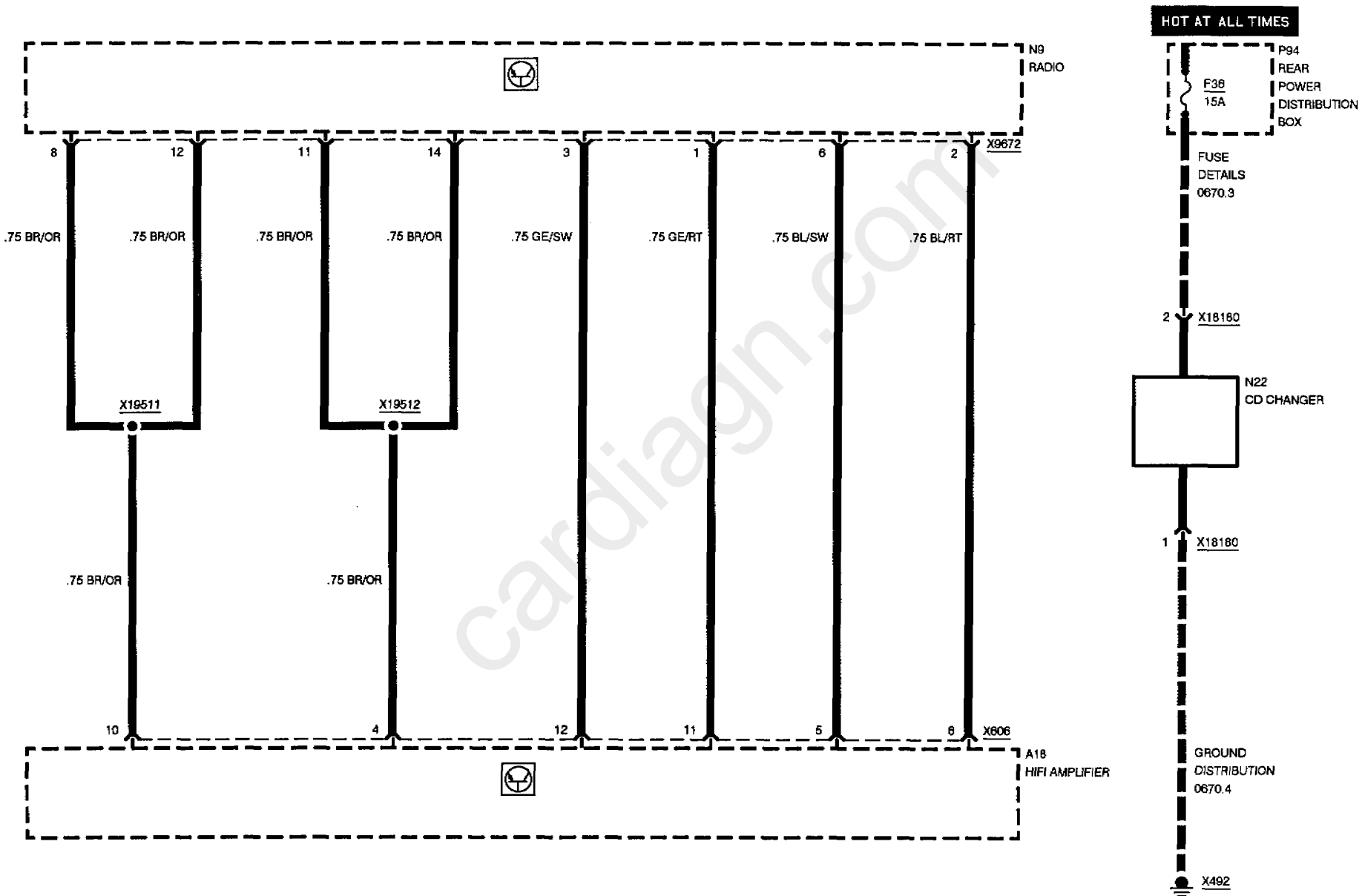

cardiagn.com

RADIO/ CD PLAYER (PROVISIONS)

HIFI, 10-SPEAKER SYSTEM (TWO COMPONENTS)

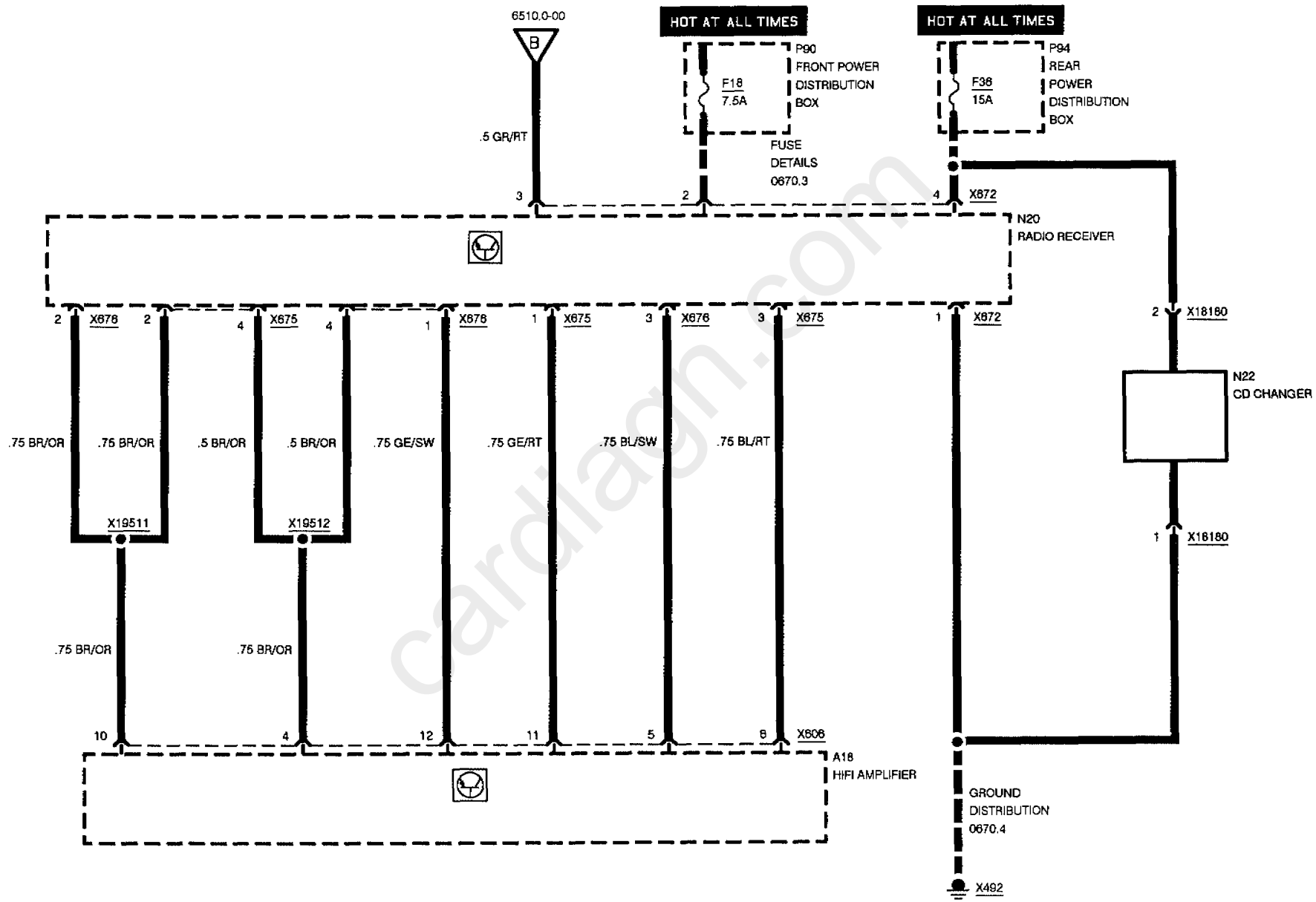

cardiagn.com

CELLULAR TELEPHONE (PROVISIONS)

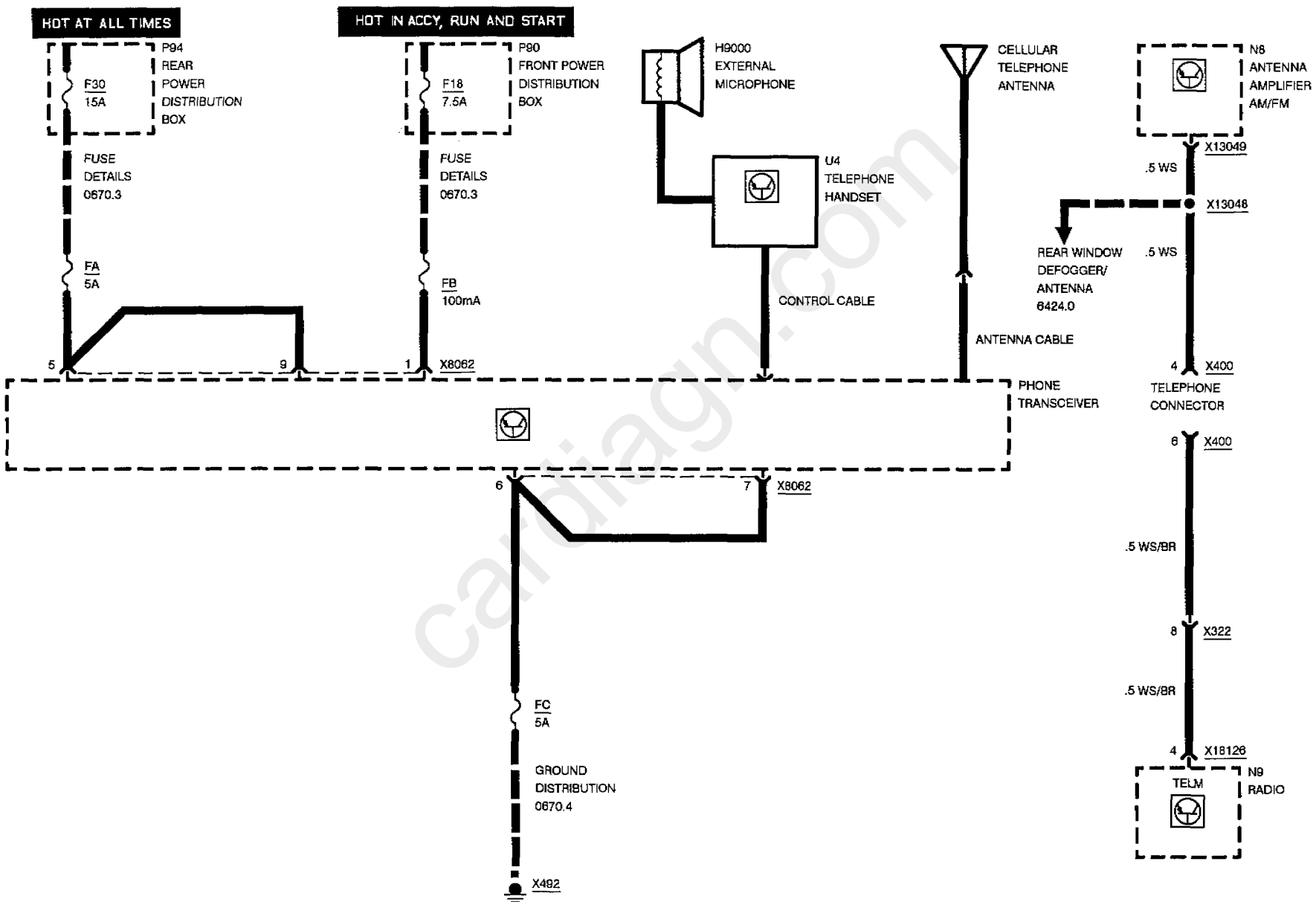

cardiagn.com

CELLULAR TELEPHONE (PROVISIONS)

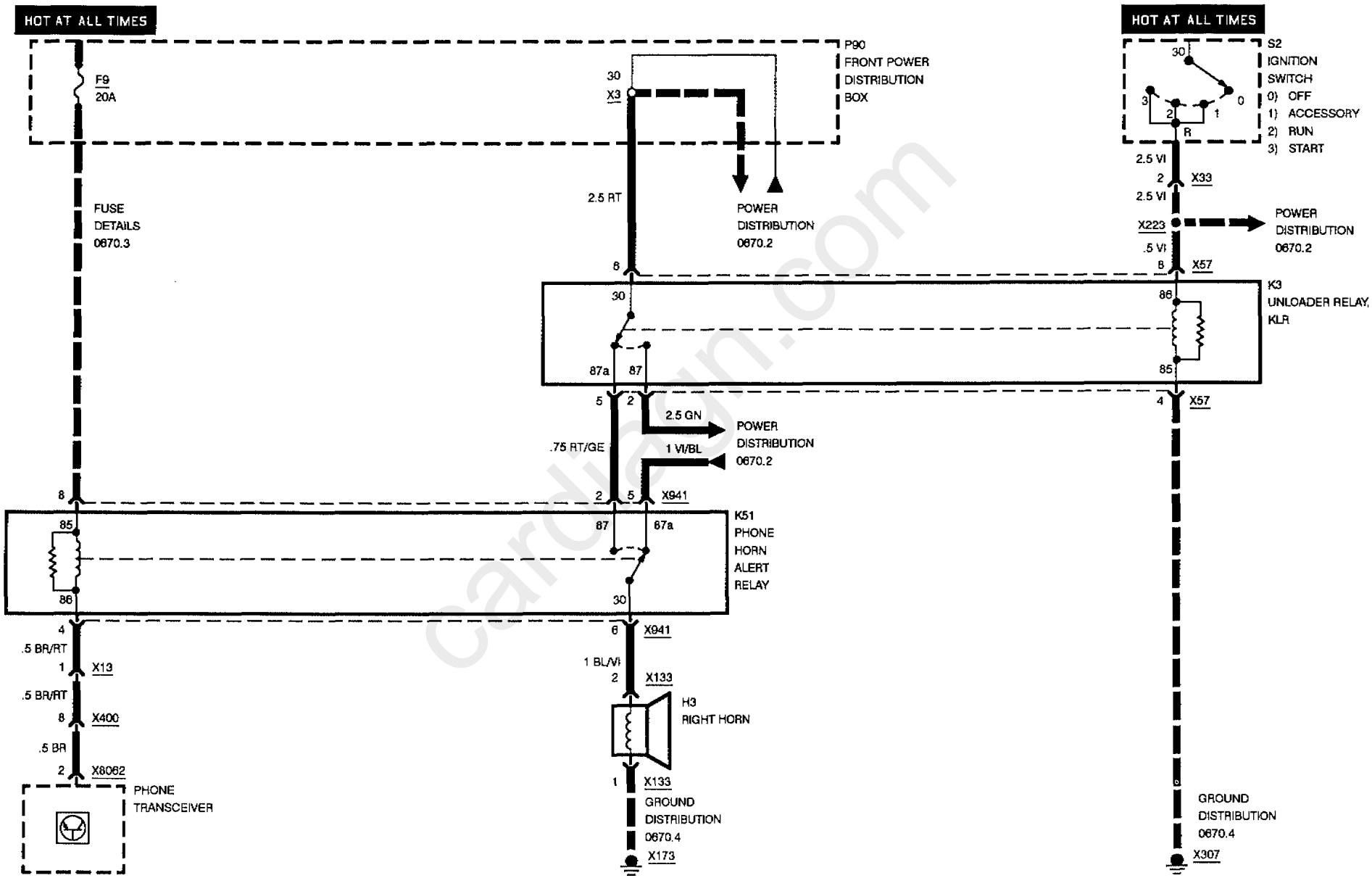

cardiagn.com

cardiagn.com

cardiagn.com

ANTITHEFT SYSTEM III (DWA III)

POWER, ENGINE RUNNING INPUT, TRUNK INPUT, ANTITHEFT HORN (DWA)

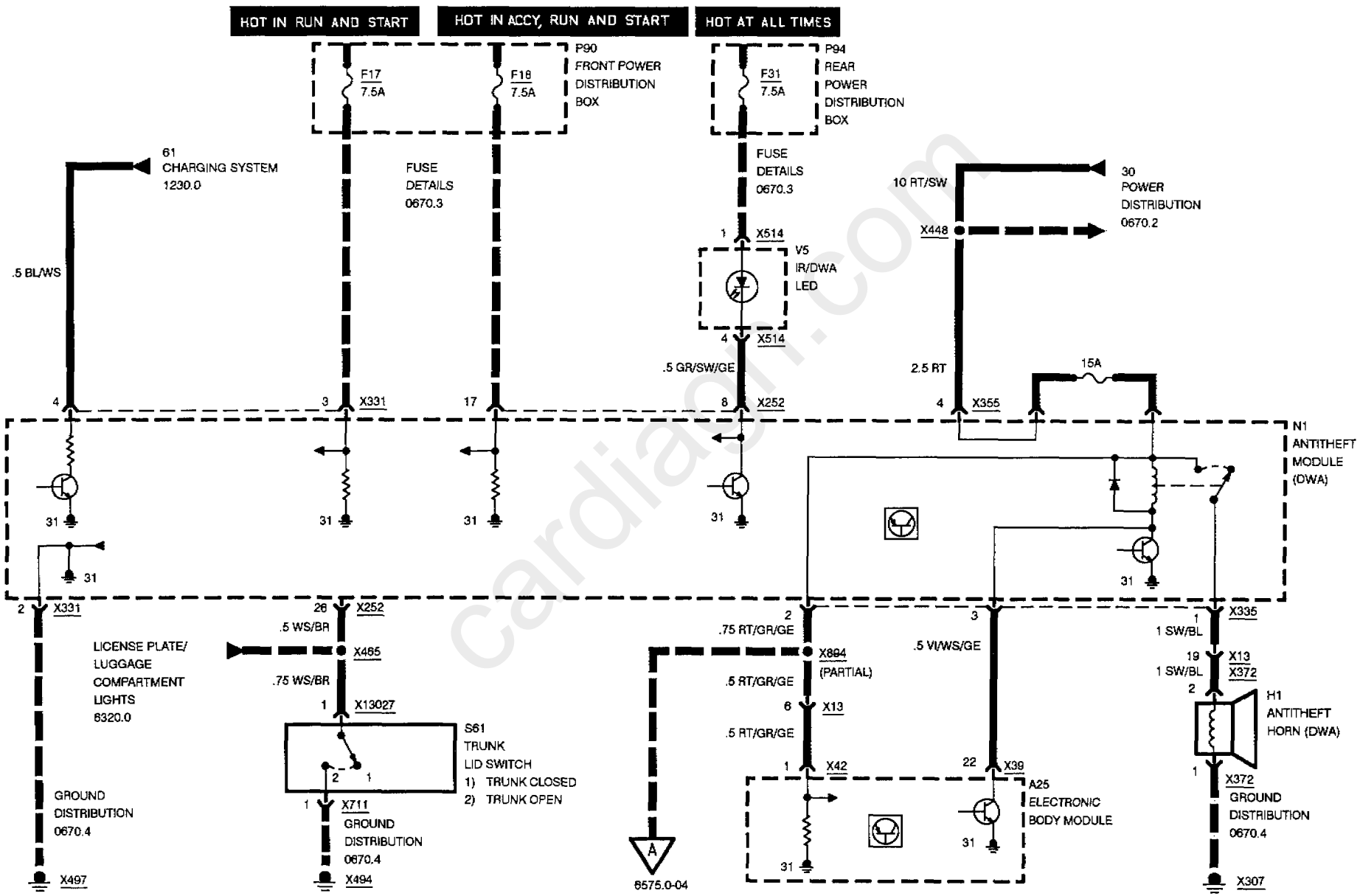

cardiagn.com

ANTITHEFT SYSTEM III (DWA III)

FRONT DOOR CONTACTS, CODING PLUG

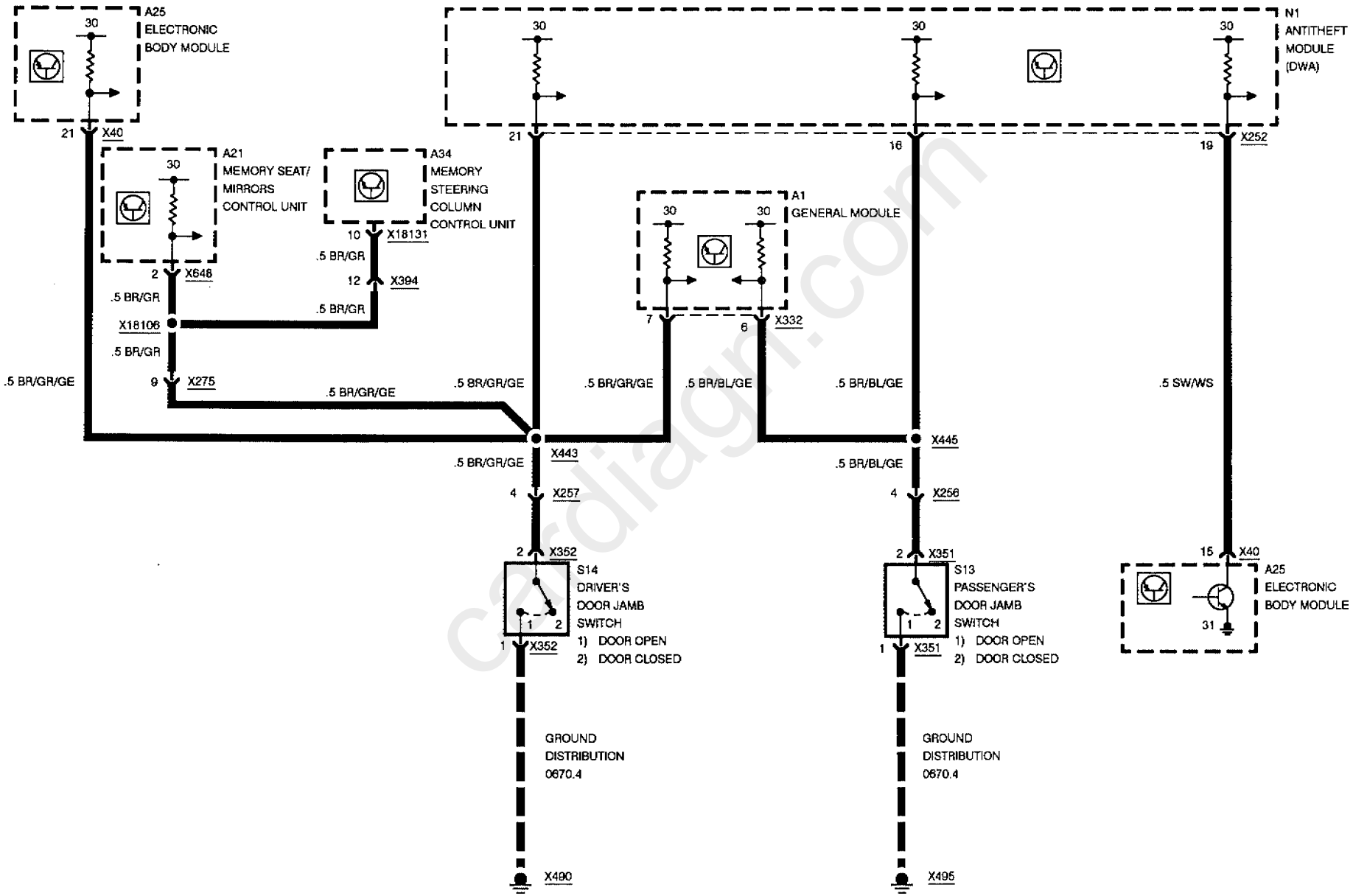

cardiagn.com

ANTITHEFT SYSTEM III (DWA III)

GLOVE BOX, RADIO, ENGINE HOOD INPUTS AND VISUAL ALARM

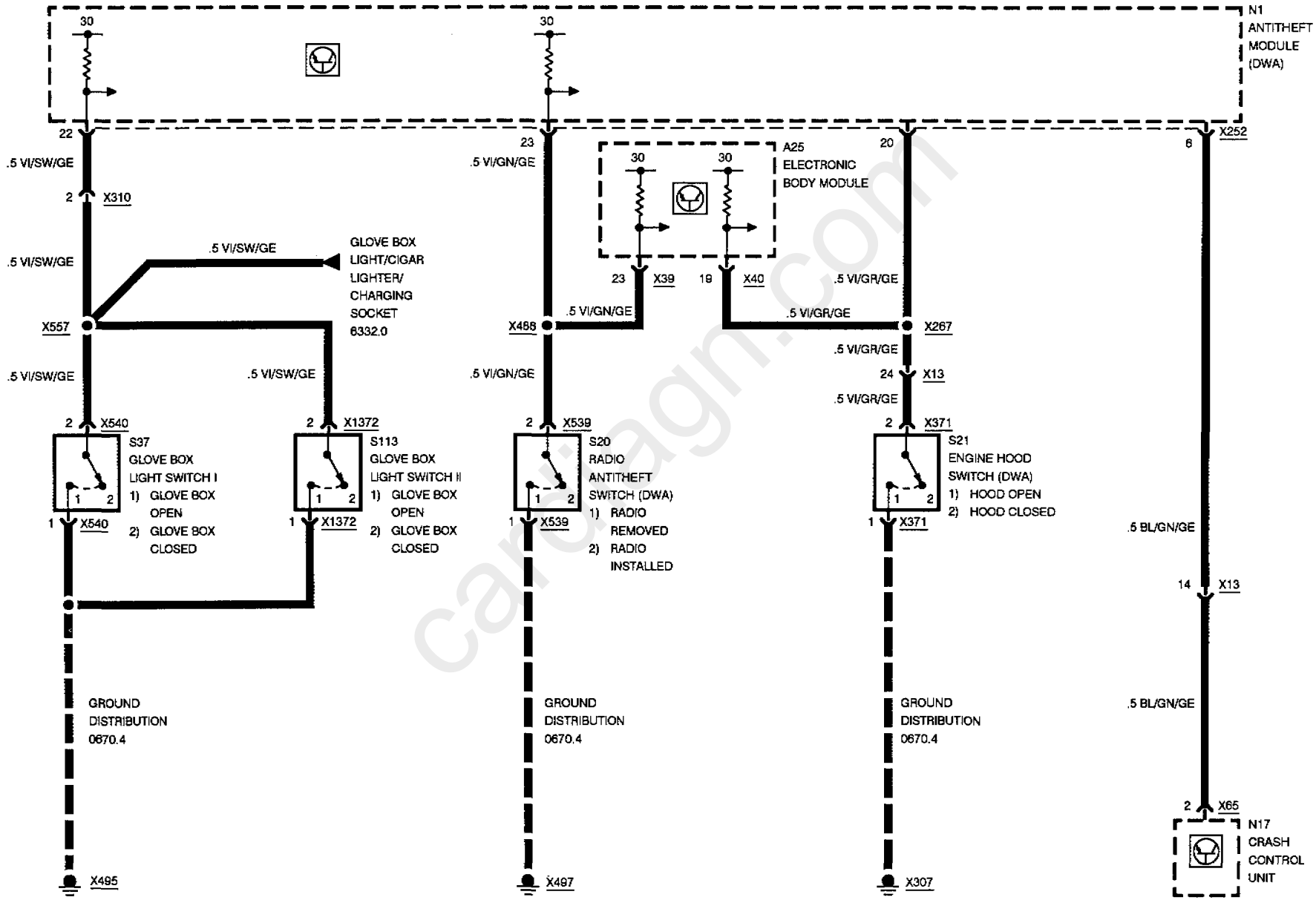

carmagn.com

ANTITHEFT SYSTEM III (DWA III)

DIAGNOSTIC LINK, DRIVE AWAY PROTECTION, QZV

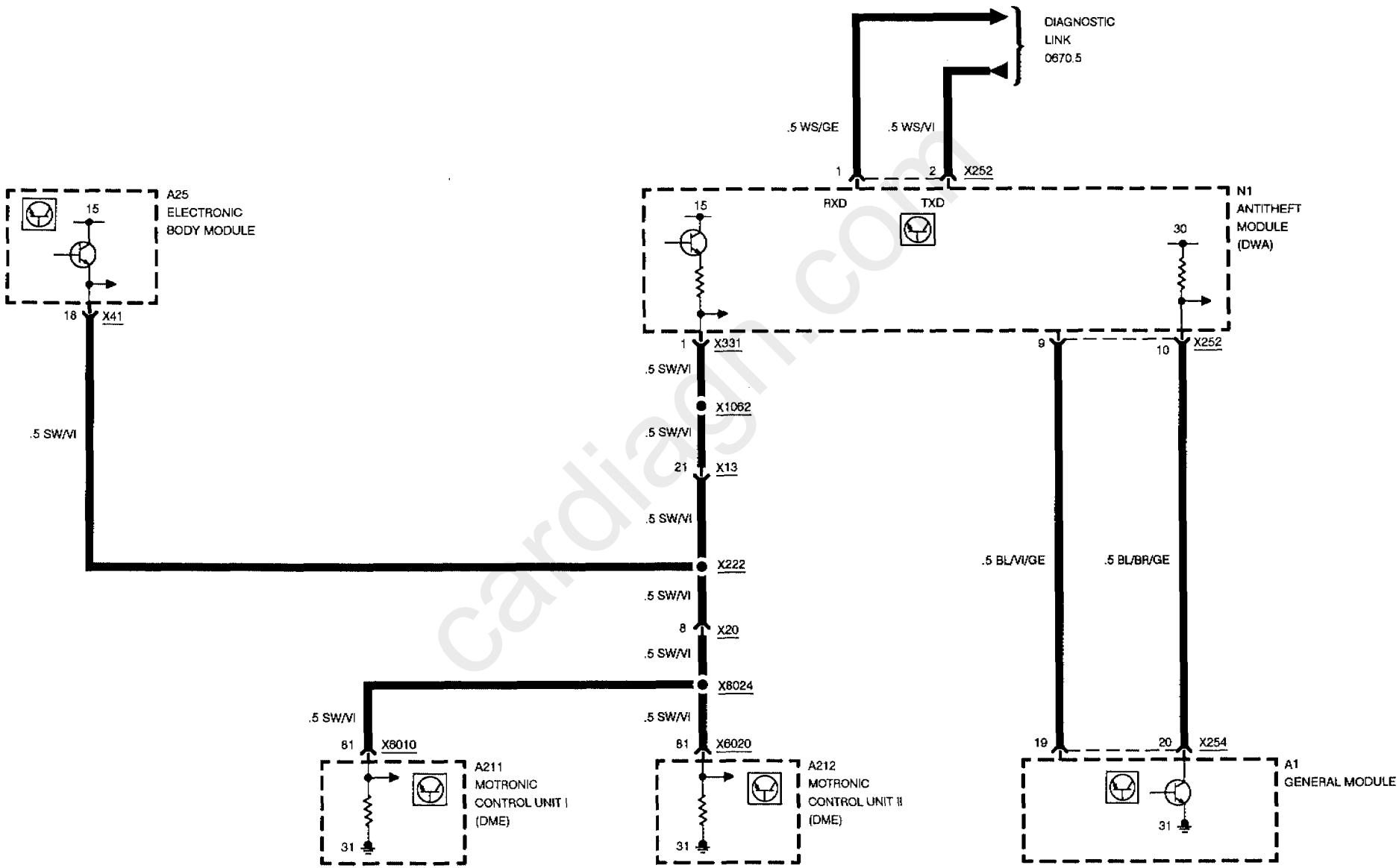

cardiagn.com

ANTITHEFT SYSTEM III (DWA III)

GRADIENT MONITOR AND DATA LINK

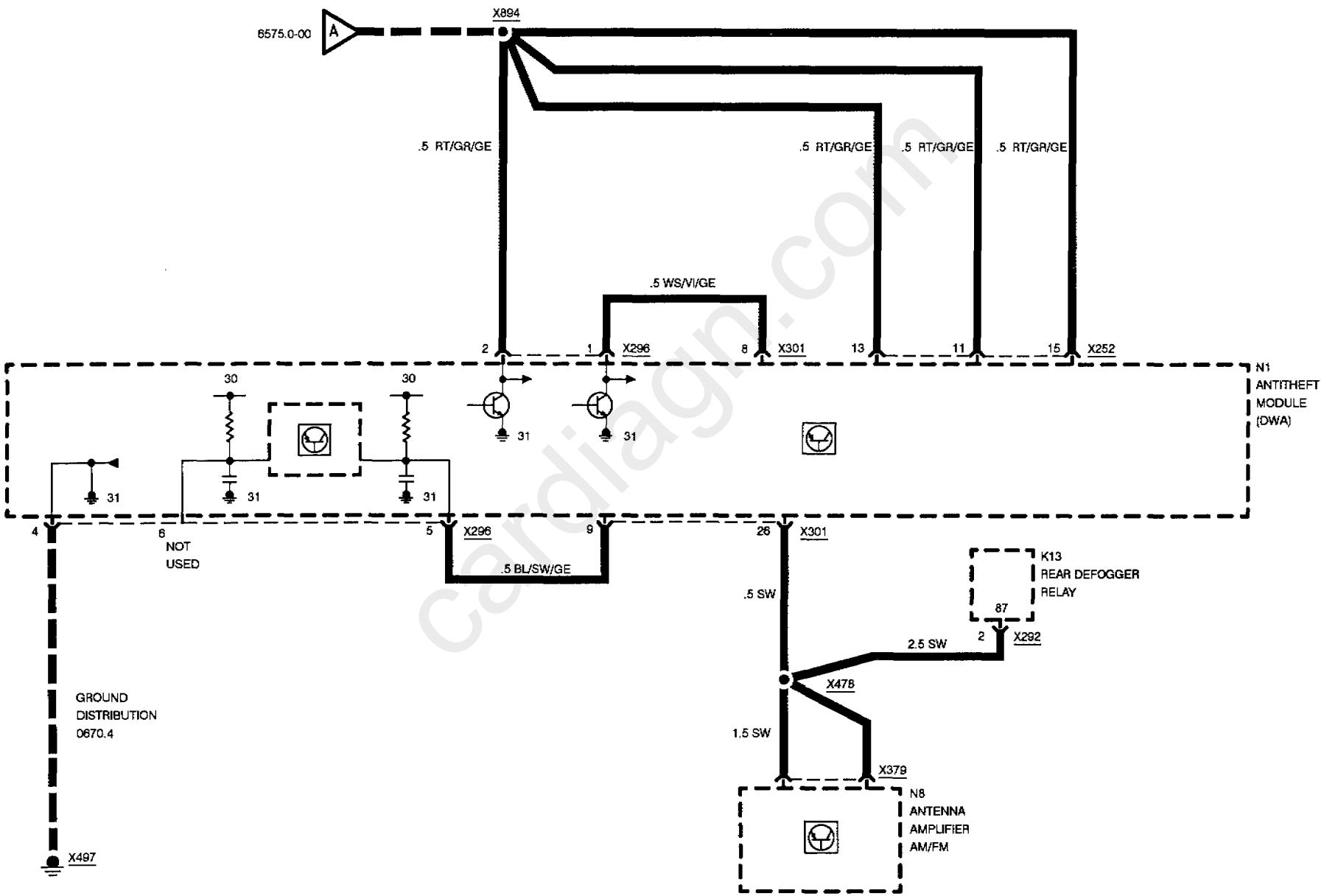

cardiagn.com

ANTITHEFT SYSTEM III (DWA III)

FRONT AND REAR WINDOW SWITCHES

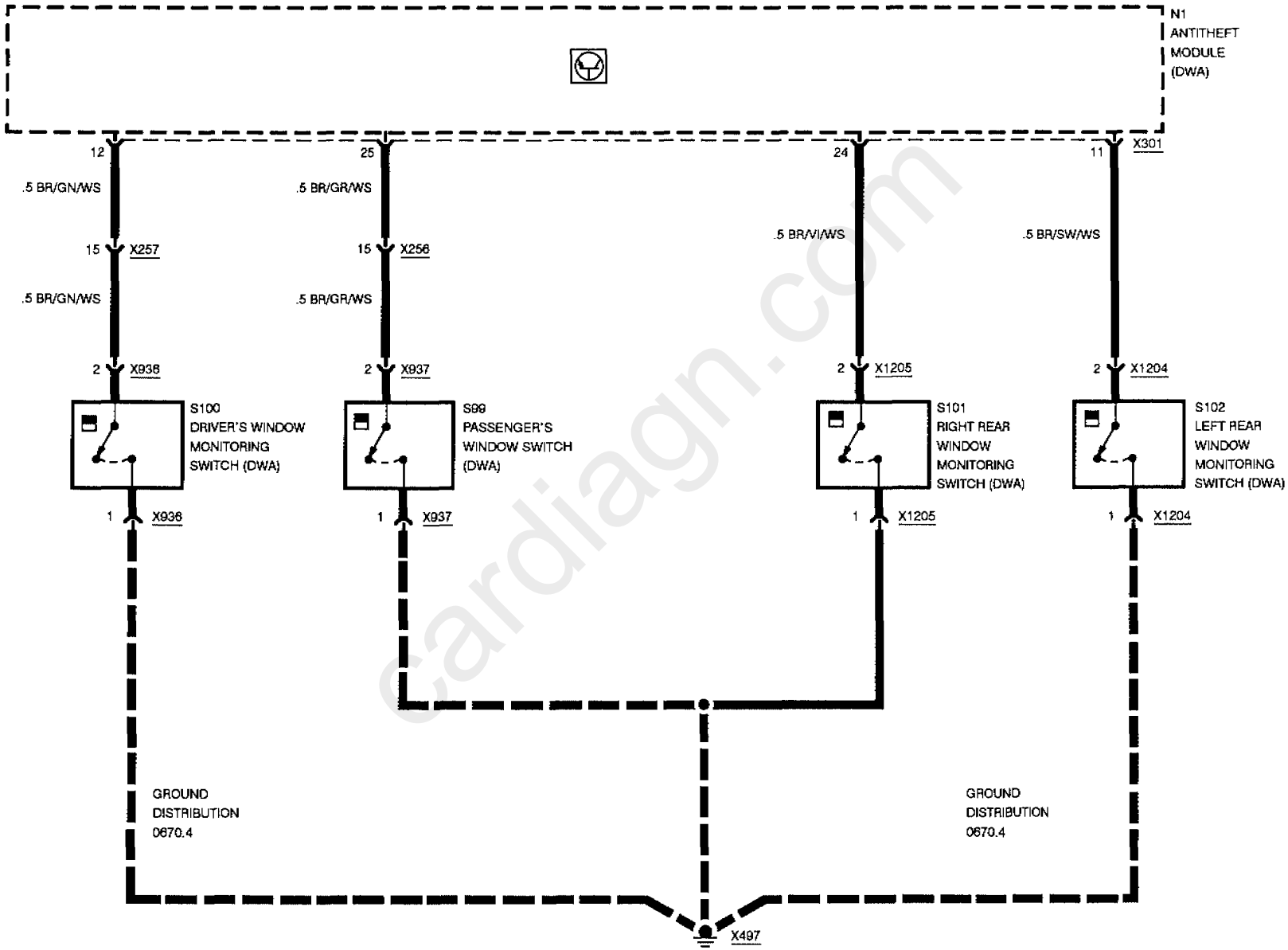

cardiagn.com

MULTI-INFORMATION DISPLAY (MID)

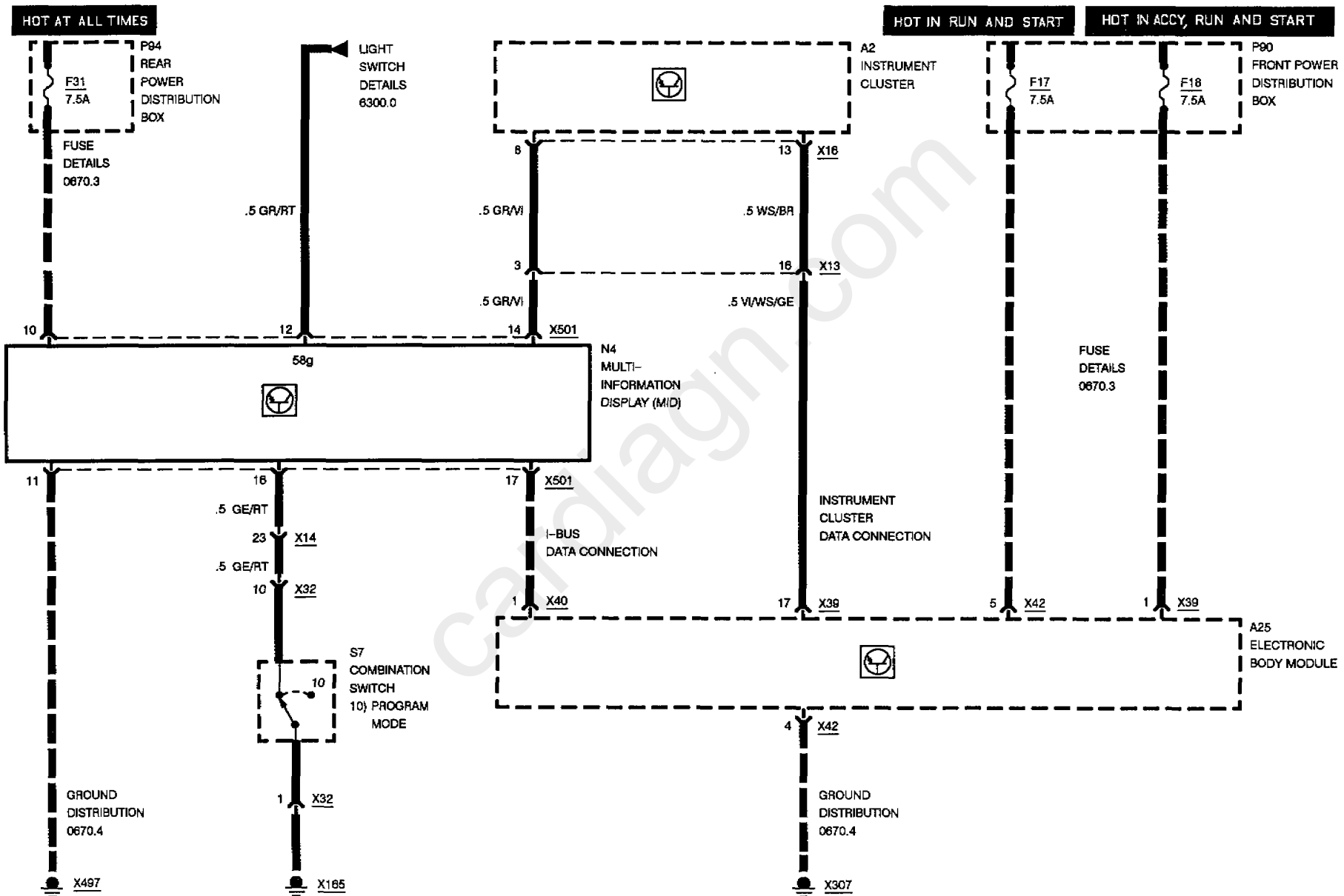

cardiagn.com

cardiagn.com

INFRARED LOCKING (IRS)

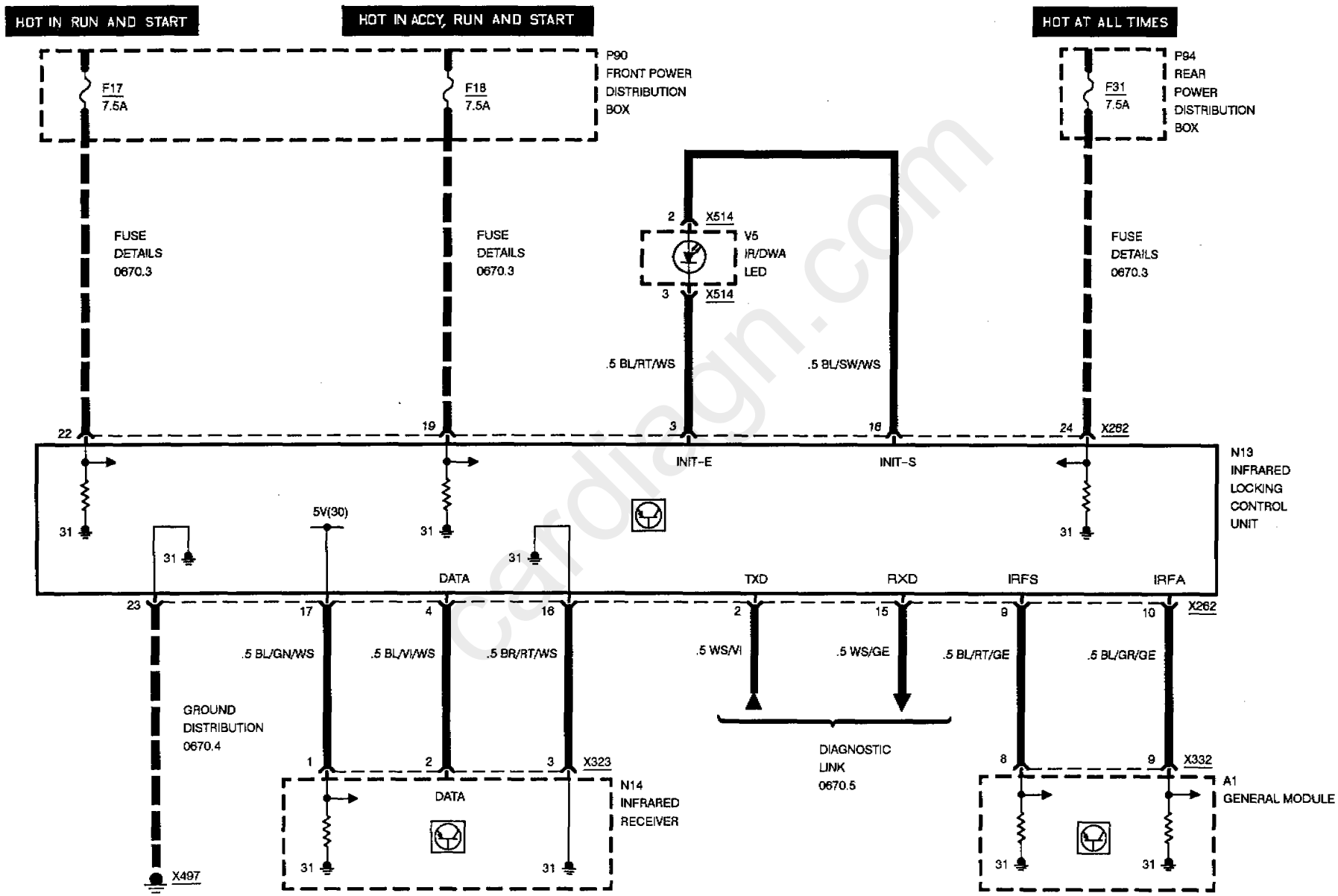

cardiagn.com

COMPONENT LOCATION CHART

ELECTRONIC CONTROL UNIT LOCATIONS

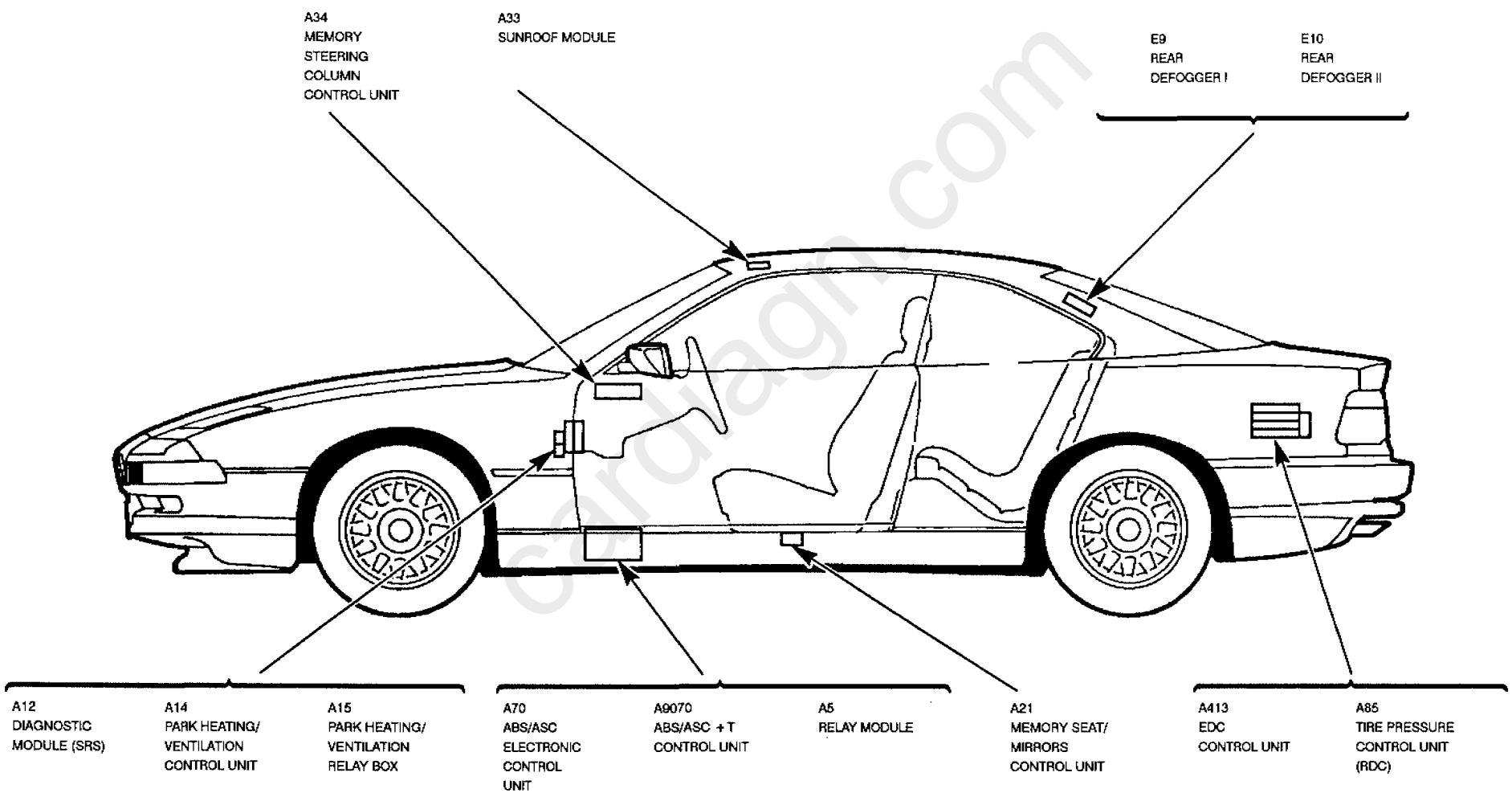

cardiagn.com

COMPONENT LOCATION CHART

ELECTRONIC CONTROL UNIT LOCATIONS

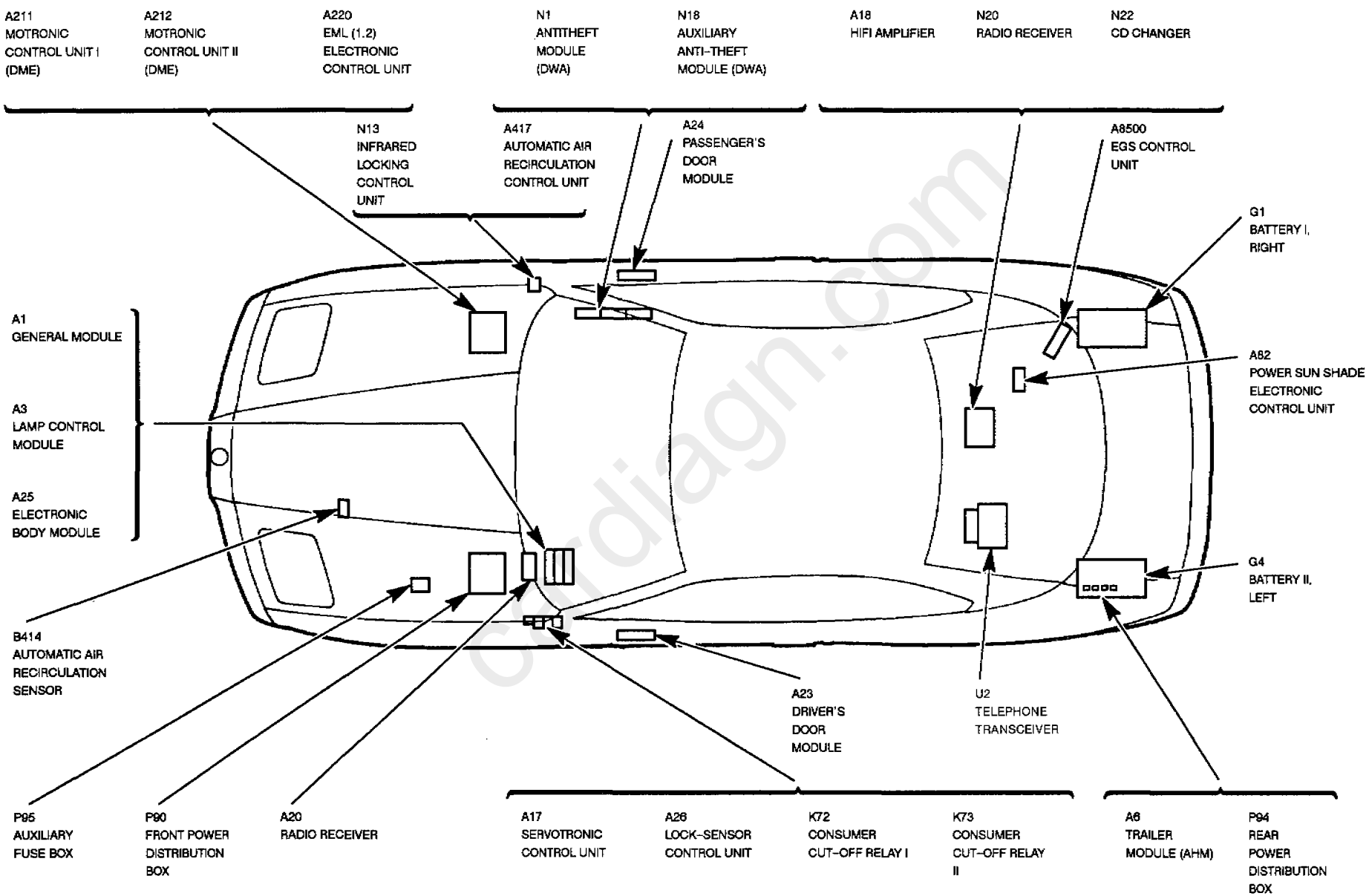

cardiagn.com

cardiagn.com

COMPONENT LOCATION CHART

COMPONENT			PAGE-FIGURE 7100.0	8500.0
A1	GENERAL MODULE	Below LH side of dash	12-2	
A3	LAMP CONTROL MODULE	Below LH side of dash	12-1	
A5	RELAY MODULE	Inside box on interior side of LH door sill	10-3	
A6	TRAILER MODULE (AHM)	In LH rear side of luggage compartment	26-2	
A11	AUTOM. HEATING AND AIR CONDITIONING CONTROL UNIT (IHKA)	Between front footwells, ahead of IHKA Plenum		
A12	DIAGNOSTIC MODULE (SRS)	Below RH side of dash	15-2	
A14	PARK HEATING/VENTILATION CONTROL UNIT	Below RH side of dash	15-2	
A15	PARK HEATING/VENTILATION RELAY BOX	Below RH side of dash	15-2	
A17	SERVOTRONIC CONTROL UNIT	Behind LH footwell speaker grill	11-3	
A18	HIFI AMPLIFIER	In LH rear side of luggage compartment	29-2	
A21	MEMORY SEAT/MIRRORS CONTROL UNIT	Underside of LH front seat	21-2	
A23	DRIVER'S DOOR MODULE	In lower LH front door	18-1	
A24	PASSENGER'S DOOR MODULE	In upper RH front door		
A25	ELECTRONIC BODY MODULE	Below LH side of dash	12-2	
A26	LOCK-SENSOR CONTROL UNIT	Behind LH footwell speaker grill	11-3	
A33	SUNROOF MODULE	Center of windshield header	17-1	
A70	ABS/ASC ELECTRONIC CONTROL UNIT	LH side of LH footwell	10-2	
A82	POWER SUN SHADE ELECTRONIC CONTROL UNIT	At back of rear window shelf	30-3	
A85	TIRE PRESSURE CONTROL UNIT (RDC)	In LH rear side of luggage compartment		

cardiagn.com

COMPONENT LOCATION CHART

COMPONENT			PAGE-FIGURE 7100.0	8500.0
A211	MOTRONIC CONTROL UNIT I (DME)	Rear RH side of engine compartment, in E-Box	00-1	
A212	MOTRONIC CONTROL UNIT II (DME)	Rear RH side of engine compartment, in E-Box	00-1	
A220	EML (1.2) ELECTRONIC CONTROL UNIT	Rear RH side of engine compartment, in E-Box	00-1	
A34	MEM. STEERING COLUMN CONTROL UNIT	Above multiinformation display		
A413	EDC CONTROL UNIT	In RH side of luggage compartment	27-3	
A417	AUTOM. AIR RECIRCULATION CONTROL UNIT	Behind RH footwell speaker grill	14-1	
A8500	EGS CONTROL UNIT	In RH rear side of luggage compartment	27-1	
A8500	EGS CONTROL UNIT	In RH rear side of luggage compartment	27-2	
A8500	EGS CONTROL UNIT	In RH rear side of luggage compartment	28-3	
A9070	ABS/ASC +T CONTROL UNIT	LH side of LH footwell	10-2	
B4	LEFT REAR SPEED SENSOR	Behind LH rear wheel	22-3	
B11	LEFT HEAT EXCHANGER TEMP. SENSOR	Below LH side of dash, LH side of IHKA Plenum	13-3	
B12	RIGHT HEAT EXCHANGER TEMP. SENSOR	LH side of RH footwell		
B14	EVAPORATOR TEMPERATURE SENSOR	RH side of LH footwell, LH side of IHKA Plenum		
B15	ELECTRO- HYDRAULIC CONVERTER (SERVOTRONIC)	Under LH front of car		
B16	LEFT FRONT BRAKE PAD SENSOR	On LH front wheel, above brake caliper	22-1	
B17	RIGHT REAR BRAKE PAD SENSOR	Behind RH rear wheel, on caliper		
B18	BRAKE FLUID LEVEL SWITCH	Rear LH side of engine compartment	05-2	
B19	BRAKE PRESSURE REGULATING SWITCH	Rear LH side of engine compartment	05-2	

cardiagn.com

COMPONENT LOCATION CHART

COMPONENT			PAGE-FIGURE 7100.0	8500.0
B20	BRAKE PRESSURE SWITCH	Rear LH side of engine compartment	05-2	
B25	FUEL LEVEL SENSOR II	Under LH rear seat	17-2	
B28	GRADIENT MONITOR (DWA)	In LH rear side of luggage compartment	26-2	
B40	STEERING ANGLE SENDER	LH footwell, under footrest		
B48	RIGHT REAR ACCELERATION SENSOR	In RH rear side of luggage compartment	27-1	
B49	LONGITUDINAL ACCELERATION SENSOR	In LH forward side of luggage compartment	25-3	
B6	FUEL LEVEL SENSOR I	Under RH rear seat		
B201	CYLINDER IDENTIFICATION SENSOR	Near distributor		
B206	OIL PRESSURE SWITCH	LH side of engine compartment	08-1	
B207	COOLANT TEMP. SENDER	On coolant inlet		
B209	WATER TEMP. SENSOR	On coolant inlet		
B210	TEMPERATURE SWITCH	Rear RH side of engine compartment, in E-Box		
B21	TEMPERATURE SENSOR	Front LH side of engine compartment		
B220	CYLINDER IDENTIFICATION SENSOR I	Front of engine compartment	09-1	
B221	CYLINDER IDENTIFICATION SENSOR II	Front of engine compartment	09-1	
B222	ENGINE SPEED SENSOR I	Front of engine compartment	09-1	
B223	ENGINE SPEED SENSOR II	Front of engine compartment	09-1	
B224	ENGINE INTAKE AIR TEMP. SENSOR I	On coolant inlet		
B225	ENGINE INTAKE AIR TEMP. SENSOR II	Rear of engine		
B226	AIR MASS METER I	Front LH side of engine compartment	05-3	

cardiagn.com

COMPONENT LOCATION CHART

COMPONENT			PAGE-FIGURE 7100.0 8500.0
B227	AIR MASS METER II	Front RH side of engine compartment	02-2
B228	WATER TEMPERATURE SENSOR (DME)	On coolant inlet	
B301	OXYGEN SENSOR I	On catalytic converter	
B302	OXYGEN SENSOR II	On catalytic converter	
B414	AUTOMATIC AIR RECIRCULATION SENSOR	Front LH side of engine compartment	
B900	JUMPER PLUG	In Front Power Distribution Box	02-3
C100	CONTACT RING	Top of steering column	
C900	SUPPRESSION FILTER	In upper RH C-pillar	20-3
C900	FM AMPLIFIER/SUPPRESSION FILTER	In upper RH C-pillar	
D100	DIAGNOSTIC CONNECTOR	Front RH side of engine compartment	02-2
E20	UNDERHOOD LIGHT	On underside of engine hood	09-3
E50	PARK HEATING UNIT	Rear RH side of engine compartment	01-1
E51	LEFT WASHER JET HEATER	On underside of engine hood	09-3
E52	RIGHT WASHER JET HEATER	On underside of engine hood	
E9047	RIGHT LIGHT BAND	RH front of vehicle	08-3
F0	FUSIBLE LINK (80 A)	In RH side of luggage compartment	27-2
F99	FUSIBLE LINK (50A)	In RH side of luggage compartment	27-2
G4	BATTERY II, LEFT	In LH rear side of luggage compartment	26-1
G4	BATTERY II, LEFT	In LH rear side of luggage compartment	26-2
G1	BATTERY I, RIGHT	In RH side of luggage compartment	

cardiagn.com

COMPONENT LOCATION CHART

COMPONENT

			PAGE-FIGURE 7100.0 8500.0
H1	ANTITHEFT HORN	Behind RH fresh air cowl	10-1
H10	ACOUSTIC DEVICE	Below RH side of dash	
K1	STARTER RELAY	In Front Power Distribution Box	02-3
K2	HORN RELAY	In Front Power Distribution Box	03-3
K3	UNLOADER RELAY, KLR	In Front Power Distribution Box	02-3
K4	BLOWER RELAY	In Front Power Distribution Box	02-3
K5	WASHER PUMP RELAY	In Front Power Distribution Box	03-3
K9	UNLOADER RELAY, KL15	In Front Power Distribution Box	03-2
K10	ABS RELAY	In Front Power Distribution Box	03-1
K12	WIPER PRESSURE CONTROL (ADV) RELAY	In Front Power Distribution Box	03-1
K13	REAR DEFOGGER RELAY	Rear power distribution box, In LH side of luggage compartment	25-1
K14	AUXILIARY BATTERY RELAY	In luggage compartment	
K15	ELECTRIC POWER PROTECTION RELAY	Rear power distribution box, In LH side of luggage compartment	25-2
K16	HAZARD FLASHER RELAY	In Front Power Distribution Box	03-2
K19	COMPRESSOR CONTROL RELAY	In Front Power Distribution Box	03-3
K21	NORMAL SPEED RELAY	In Front Power Distribution Box	03-2
K22	HIGH SPEED RELAY	In Front Power Distribution Box	03-1
K29	INTERIOR LIGHT RELAY	Behind LH footwell speaker grill	11-3
K30	ELECTRIC POWER PROTECTION RELAY II	Rear power distribution box, In LH side of luggage compartment	25-1
K31	CIGAR LIGHTER RELAY	Rear power distribution box, In LH side of luggage compartment	25-1

cardiagn.com

COMPONENT LOCATION CHART

COMPONENT

			PAGE-FIGURE 7100.0	8500.0
K33	AIR CONDITIONING RELAY	In Front Power Distribution Box	03-3	
K36	WIPER RELAY I	In Front Power Distribution Box	02-3	
K37	WIPER RELAY II	In Front Power Distribution Box	02-3	
K38	WIPER RELAY III	In Front Power Distribution Box	02-3	
K39	CONCEALING HEADLIGHTS RELAY	In Front Power Distribution Box	03-2	
K42	INTENSIVE WASH RELAY	In Front Power Distribution Box	03-3	
K46	HIGH BEAM LIGHT RELAY	In Front Power Distribution Box	03-1	
K51	JUMPER FOR HORN, TELEPHONE	In Front Power Distribution Box	03-1	
K59	PASSENGER SIDE REAR ENTRANCE ASSIST RELAY	Under RH front seat		
K60	COMPRESSOR CUT-OFF RELAY	In Front Power Distribution Box	03-3	
K61	UNLOADER RELAY, KL61	In Front Power Distribution Box	03-3	
K67	EDC RELAY	In RH side of luggage compartment	27-3	
K70	CENTRAL TRUNK LID MOTOR RELAY	Rear power distribution box, in LH side of luggage compartment	25-2	
K71	PASSENGER'S SEATBACK/LUMBAR RELAY I	Under RH front seat		
K72	CONSUMER CUT-OFF RELAY I	Rear power distribution box, in LH side of luggage compartment	25-2	
K73	CONSUMER CUT-OFF RELAY II	Rear power distribution box, in LH side of luggage compartment	25-1	
K74	DRIVER'S BACKREST/LUMBAR RELAY I	Under LH front seat		
K76	DRIVER'S BACKREST/LUMBAR RELAY II	Under LH front seat		
K77	PASSENGER'S BACKREST/LUMBAR RELAY II	Under RH front seat		

cardiagn.com

COMPONENT LOCATION CHART

COMPONENT			PAGE-FIGURE 7100.0 8500.0
K79	NORWAY FOGLIGHT RELAY	Rear power distribution box, In LH side of luggage compartment	25-1
K8	AUXILIARY WATER PUMP RELAY	In Front Power Distribution Box	
K91	ON-BOARD COMPUTER HORN RELAY	Inside box on interior side of RH door sill	
K210	FUEL PUMP RELAY I	Rear RH side of engine compartment, in E-Box	00-2
K211	FUEL PUMP RELAY II	Rear RH side of engine compartment, in E-Box	00-2
K212	MAIN RELAY I	Rear RH side of engine compartment, in E-Box	00-2
K213	MAIN RELAY II	Rear RH side of engine compartment, in E-Box	00-2
K214	OXYGEN SENSOR RELAY	Rear RH side of engine compartment, in E-Box	00-2
K52	HIGH BEAM/FLASHER LIGHT RELAY	In Front Power Distribution Box	
K9051	JUMPER FOR HORN TELEPHONE	In Front Power Distribution Box	
M3	WIPER MOTOR	Behind LH fresh air cowl	
M4	WASHER PUMP	RH side of engine compartment	01-2
M5	INTENSIVE WASH PUMP	Front RH side of engine compartment, near windshield washer reservoir	
M9	AUXILIARY FAN MOTOR	Behind front grille	
M12	DRIVER'S DOOR LOCK MOTOR	In lower LH front door	19-1
M13	PASSENGER'S DOOR LOCK MOTOR	In upper RH front door	
M16	GAS FILLER LOCK MOTOR	In RH rear side of luggage compartment	28-3
M24	SUNROOF MOTOR	Center of windshield header	17-1
M30	BLOWER MOTOR	Behind center of cowl, behind coolant expansion tank support panel	
M31	LEFT FOOTWELL FLAP MOTOR	Below LH side of dash, on LH side of IHKA Plenum	

cardiagn.com

COMPONENT LOCATION CHART

COMPONENT			PAGE-FIGURE 7100.0	8500.0
M32 . . .	RIGHT FOOTWELL FLAP MOTOR	LH side of RH footwell		
M33 . . .	RIGHT VENTILATION FLAP MOTOR	LH side of RH footwell		
M34 . . .	DASH VENT MIXING FLAP MOTOR	LH side of glove box	15-3	
M34 . . .	DASH VENT MIXING FLAP MOTOR	Center of dash, right of radio		
M35 . . .	DEFROSTER FLAP MOTOR	LH side of IHKA Plenum		
M36 . . .	FRESH AIR FLAP MOTOR	LH side of IHKA Plenum		
M38 . . .	LEFT VENTILATION FLAP MOTOR	Below LH side of dash		
M39 . . .	LEFT MIXING FLAP MOTOR	Center of dash, left of radio		
M40 . . .	FOOTWELL FLAP MOTOR	Below LH side of dash		
M41 . . .	REAR COMPARTMENT ACTUATOR MOTOR	Below LH side of dash, near brake pedal	13-1	
M74 . . .	POWER SUN SHADE MOTOR	At back of rear window shelf	30-3	
M201 . .	E-BOX FAN	In E-Box, under the control units		
M202 . .	THROTTLE POSITION MOTOR I (EML)	Front LH side of engine compartment	09-2	
M203 . .	THROTTLE POSITION MOTOR II (EML)	Front RH side of engine compartment		
M21 . . .	DRIVER'S POWER WINDOW MOTOR/ INCREMENT SENSOR	In lower LH front door		
M23 . . .	PASSENGER'S POWER WINDOW MOTOR/ INCREMENT SENSOR	In lower RH front door		
M37 . . .	AUXILIARY WATER PUMP	Rear LH side of engine compartment		
M55 . . .	DRIVER'S SEAT LUMBAR SUPPORT MOTOR/VALVE	In upper LH front seatback		

cardiagn.com

COMPONENT LOCATION CHART

COMPONENT

			PAGE-FIGURE 7100.0	8500.0
N1	ANTITHEFT MODULE (DWA)	Inside box on interior side of RH door sill	14-3	
N2	FINAL STAGE UNIT	LH side of RH footwell, ahead of IHKA Plenum		
N6	HEADLIGHT/FRT FOG LIGHT MODULE (SRA)	In Front Power Distribution Box	03-1	
N8	ANTENNA AMPLIFIER AM/FM	In upper LH C-pillar	20-2	
N13	INFRARED LOCKING CONTROL UNIT	Behind RH footwell speaker grill	14-1	
N14	INFRARED RECEIVER	Center of windshield header		
N17	CRASH CONTROL UNIT	In Front Power Distribution Box	03-2	
N18	AUXILIARY ANTI-THEFT MODULE (DWA)	Inside box on interior side of RH door sill	14-3	
N20	RADIO RECEIVER	In luggage compartment		
N22	CD CHANGER	In luggage compartment		
P90	FRONT POWER DISTRIBUTION BOX	Rear LH side of engine compartment	05-2	
P93	E-BOX	Rear RH side of engine compartment	00-3	
P94	REAR POWER DISTRIBUTION BOX	In LH forward side of luggage compartment	25-3	
P95	AUXILIARY FUSE BOX	LH side of engine compartment	04-2	
R10	PEDAL POSITION SENSOR	Below LH side of dash, near brake pedal	13-1	
R13	HEADLIGHT WIDENING POTENTIOMETER	Center console	16-1	
S6	ASC SWITCH	Center console	16-1	
S29	BRAKE LIGHT SWITCH	Below LH side of dash, on brake pedal	12-3	
S36	TEMPERATURE SWITCH	Front RH side of engine compartment	07-3	
S40	FRONT CONSOLE WINDOW SWITCH ASSEM.	LH front door, behind door panel	19-3	

cardiagn.com

COMPONENT LOCATION CHART

COMPONENT			PAGE-FIGURE 7100.0	8500.0
S63	COOLANT LEVEL SWITCH	Front RH side of engine compartment	07-3	
S64	WASHER FLUID LEVEL SWITCH	RH side of engine compartment	01-2	
S71	LEFT FRONT CRASH SENSOR	LH side of engine compartment	04-1	
S72	RIGHT FRONT CRASH SENSOR	Ahead of RH side shock tower		
S117	TRUNK LID LOCKING SWITCH	Underside of trunk lid	30-1	
S302	BACK-UP SWITCH	On RH side of transmission		
T201	IGNITION COIL I	Front RH side of engine compartment		
T202	IGNITION COIL II	LH side of engine compartment		
V5	IR/DWA LED	Center of dash		
X1.0	JUNCTION POST FOR P90 FRONT POWER DISTRIBUTION BOX	LH footwell, under footrest	11-2	
X7	CONNECTOR (55-PINS, NATURAL)	ABS/ASC ELECTRONIC CONTROL UNIT, A70	10-3	00-1
X7	CONNECTOR (55-PINS, NATURAL)	ABS/ASC +T CONTROL UNIT, A9070		00-1
X12	CONNECTOR (20-PINS, RED)	Below LH side of dash	12-1	14-1
X13	CONNECTOR (30-PINS, BLACK)	LH footwell, under footrest	10-2	00-4
X14	CONNECTOR (30-PINS, WHITE)	LH footwell, under footrest	10-2	00-4
X16	CONNECTOR (26-PINS, (---))	INSTRUMENT CLUSTER, A2		14-3
X20	CONNECTOR (20-PINS, BLACK)	Rear RH side of engine compartment	00-3	01-2
X21	CONNECTOR (20-PINS, BLACK)	Rear RH side of engine compartment	00-3	01-5
X25	CONNECTOR (4-PINS, BLACK)	RH side of engine compartment	01-2	15-1

cardiagn.com

COMPONENT LOCATION CHART

COMPONENT			PAGE-FIGURE 7100.0	8500.0
X31	CONNECTOR (12-PINS, BLACK)	ABS HYDRAULIC UNIT, Y1		01-6
X32	CONNECTOR (12-PINS, WHITE)	Below LH side of dash	13-2	02-1
X33	CONNECTOR (12-PINS, BLACK)	Below LH side of dash, LH side of steering column		02-1
X36	CONNECTOR (21-PINS, BLACK)	Below center console	16-3	01-3
X38	CONNECTOR (20-PINS, RED)	Below LH side of dash	12-1	14-1
X39	CONNECTOR (26-PINS, GREEN)	Below LH side of dash	12-2	14-3
X40	CONNECTOR (26-PINS, BROWN)	Below LH side of dash	12-2	14-3
X41	CONNECTOR (26-PINS, BLUE)	Below LH side of dash	12-2	14-3
X42	CONNECTOR (5-PINS, BLACK)	Below LH side of dash	12-2	02-4
X43	CONNECTOR (9-PINS, BLACK)	HIGH BEAM LIGHT RELAY, K46		02-3
X52	CONNECTOR (9-PINS, WHITE)	NORMAL SPEED RELAY, K21		02-3
X54	CONNECTOR (9-PINS, BLACK)	ABS RELAY, K10		02-3
X55	CONNECTOR (9-PINS, WHITE)	STARTER RELAY, K1		02-3
X55	CONNECTOR (9-PINS, WHITE)	JUMPER PLUG, B900		02-3
X57	CONNECTOR (9-PINS, BLACK)	UNLOADER RELAY, KLR, K3		02-3
X58	CONNECTOR (9-PINS, WHITE)	BLOWER RELAY, K4		02-3
X61	CONNECTOR (9-PINS, BLACK)	HEADLIGHT/FRONT FOG LIGHT MODULE (SRA), N6		02-3
X63	CONNECTOR (9-PINS, WHITE)	UNLOADER RELAY, KL15, K9		02-3
X64	CONNECTOR (9-PINS, BLACK)	HAZARD FLASHER RELAY, K16		02-3
X65	CONNECTOR (9-PINS, BROWN)	CRASH CONTROL UNIT, N17		02-3

cardiagn.com

COMPONENT LOCATION CHART

COMPONENT			PAGE-FIGURE 7100.0	8500.0
X69	CONNECTOR (20-PINS, BLACK)	Rear RH side of engine compartment	00-3	01-5
X72	CONNECTOR (8-PINS, WHITE)	Below LH side of dash	13-2	03-1
X73	CONNECTOR (8-PINS, WHITE)	Below LH side of dash, near brake pedal	13-1	03-1
X74	CONNECTOR (8-PINS, ORANGE)	Below RH side of dash	15-2	03-1
X75	CONNECTOR (6-PINS, ORANGE)	Below RH side of dash	15-2	04-1
X77	CONNECTOR (10-PINS, (---))	LOCK-SENSOR CONTROL UNIT, A26		14-2
X78	CONNECTOR (4-PINS, BLACK)	Below LH side of dash, on brake pedal	12-3	06-3
X81	CONNECTOR (3-PINS, ORANGE)	LEFT FRONT CRASH SENSOR, S71	04-1	04-4
X82	CONNECTOR (3-PINS, BLACK)	Front LH side of engine compartment	07-1	04-2
X83	CONNECTOR (3-PINS, YELLOW)	SERVOTRONIC CONTROL UNIT, A17		04-5
X84	CONNECTOR (3-PINS, YELLOW)	SERVOTRONIC CONTROL UNIT, A17		04-3
X85	CONNECTOR (3-PINS, BLACK)	Rear LH side of engine compartment	05-1	04-2
X87	CONNECTOR (3-PINS, BLACK)	Front RH side of engine compartment	07-3	04-2
X95	CONNECTOR (3-PINS, BLACK)	Front RH side of engine compartment	07-3	04-2
X105	CONNECTOR (2-PINS, BLACK)	LEFT WASHER JET HEATER, E51	09-3	
X107	CONNECTOR (2-PINS, BLUE)	RH side of engine compartment	01-2	
X109	CONNECTOR (2-PINS, BLACK)	RH side of engine compartment	01-2	
X110	CONNECTOR (2-PINS, BLUE)	RH side of engine compartment	01-3	
X112	CONNECTOR (2-PINS, BLACK)	Front RH side of engine compartment	07-3	
X113	CONNECTOR (2-PINS, WHITE)	RIGHT FRONT SPEED SENSOR, B1	23-3	

cardiagn.com

COMPONENT LOCATION CHART

COMPONENT			PAGE-FIGURE 7100.0	8500.0
X118	CONNECTOR (2-PINS, BLACK)	On LH front wheel, above brake caliper	22-1	
X119	CONNECTOR (2-PINS, BLACK)	Rear LH side of engine compartment	05-2	
X121	CONNECTOR (2-PINS, WHITE)	Below LH side of dash, on brake pedal	12-3	
X122	CONNECTOR (2-PINS, BLACK)	Rear LH side of engine compartment	05-1	
X128	CONNECTOR (7-PINS, BLACK)	Near LH headlight assembly	06-1	14-4
X130	CONNECTOR (7-PINS, BLACK)	LH side of engine compartment	04-2	14-4
X130	CONNECTOR (7-PINS, BLACK)	LH side of engine compartment	04-3	14-4
X135	CONNECTOR (7-PINS, BLACK)	RH side of engine compartment	01-3	14-4
X137	CONNECTOR (7-PINS, BLACK)	Near RH headlight assembly	06-2	14-4
X145	CONNECTOR (2-PINS, BLACK)	LH side of engine compartment	08-1	
X150	CONNECTOR (4-PINS, BLACK)	LH footwell, under footrest	11-2	06-5
X161	CONNECTOR (2-PINS, BLACK)	Near LH headlight assembly	08-2	
X165	GROUND	LH side of LH footwell, under footrest	11-3	
X167	GROUND	LH side of engine compartment	04-3	
X173	GROUND	RH side of engine compartment	02-1	
X252	CONNECTOR (26-PINS, BLACK)	ANTITHEFT MODULE (DWA), N1	14-3	14-3
X253	CONNECTOR (26-PINS, BLACK)	Below LH side of dash	12-1	14-3
X254	CONNECTOR (26-PINS, YELLOW)	Below LH side of dash	12-1	14-3
X256	CONNECTOR (26-PINS, BLACK)	Ahead of RH front door, in wire grommet		15-6
X257	CONNECTOR (26-PINS, BLACK)	Ahead of LH front door, in wire grommet		15-6

cardiagn.com

COMPONENT LOCATION CHART

COMPONENT			PAGE-FIGURE 7100.0	8500.0
X258	CONNECTOR (20-PINS, BLACK)	RELAY MODULE, A5	10-3	14-1
X259	CONNECTOR (26-PINS, BLACK)	RELAY MODULE, A5	10-3	14-3
X262	CONNECTOR (26-PINS, YELLOW)	INFRARED LOCKING CONTROL UNIT, N13	14-1	14-3
X263	CONNECTOR (26-PINS, BLACK)	EDC CONTROL UNIT, A413	27-3	14-3
X272	CONNECTOR (6-PINS, BLACK)	Left from LH rear seat, behind trim panel	24-3	04-1
X275	CONNECTOR (12-PINS, WHITE)	Under LH front seat	21-1	02-1
X275	CONNECTOR (12-PINS, WHITE)	Underside of LH front seat	21-3	02-1
X279	CONNECTOR (12-PINS, WHITE)	Under RH front seat		02-1
X280	CONNECTOR (9-PINS, BLACK)	CONCEALING HEADLIGHTS RELAY, K39		02-3
X281	CONNECTOR (9-PINS, BLACK)	HIGH BEAM/FLASHER LIGHT RELAY, K52z		02-3
X283	CONNECTOR (4-PINS, GRAY)	LH side of engine compartment	04-2	15-1
X283	CONNECTOR (4-PINS, GRAY)	LH side of engine compartment	04-3	15-1
X284	CONNECTOR (4-PINS, GRAY)	RH side of engine compartment	01-3	15-1
X287	CONNECTOR (9-PINS, BLACK)	ELECTRIC POWER PROTECTION RELAY II, K30		02-3
X290	CONNECTOR (9-PINS, BLACK)	THERMAL CONTROL RELAY (JAPAN), K20		02-3
X291	CONNECTOR (9-PINS, BLACK)	WIPER PRESSURE CONTROL (ADV) RELAY, K12		02-3
X292	CONNECTOR (9-PINS, BLACK)	REAR DEFOGGER RELAY, K13		02-3
X294	CONNECTOR (9-PINS, BLACK)	ELECTRIC POWER PROTECTION RELAY, K15		02-3
X295	CONNECTOR (8-PINS, BLACK)	Below LH side of dash	13-2	03-1
X301	CONNECTOR (26-PINS, WHITE)	ANTITHEFT MODULE (DWA), N1	14-3	14-3

cardiagn.com

COMPONENT LOCATION CHART

COMPONENT			PAGE-FIGURE 7100.0	8500.0
X306	CONNECTOR (30-PINS, BLUE)	LH footwell, under footrest	10-2	00-4
X307	GROUND	LH side of LH footwell, under footrest	11-3	
X312	CONNECTOR (6-PINS, BLACK)	GAS FILLER LOCK MOTOR, M16	28-3	08-3
X316	CONNECTOR (6-PINS, WHITE)	FRONT CONSOLE WINDOW SWITCH ASSEMBLY, S40	19-3	16-1
X317	CONNECTOR (6-PINS, WHITE)	PASSENGER'S WINDOW SWITCH, S97		16-1
X318	CONNECTOR (4-PINS, BLACK)	RIGHT TRUNK LIGHT ASSEMBLY, E47	28-2	06-3
X318	CONNECTOR (6-PINS, BLACK)	RIGHT REAR LIGHT ASSEMBLY I, E47z		17-2
X319	CONNECTOR (4-PINS, BLACK)	LEFT REAR LIGHT ASSEMBLY I, E46z	26-2	06-3
X319	CONNECTOR (6-PINS, BLACK)	LEFT REAR LIGHT ASSEMBLY I, E46z		17-2
X321	CONNECTOR (4-PINS, BLACK)	Below center console	16-3	06-5
X322	CONNECTOR (8-PINS, BLACK)	Below center console	16-3	03-1
X323	CONNECTOR (6-PINS, WHITE)	INFRARED RECEIVER, N14	17-1	06-1
X331	CONNECTOR (5-PINS, BLACK)	ANTITHEFT MODULE (DWA), N1	14-3	02-4
X332	CONNECTOR (26-PINS, WHITE)	Below LH side of dash	12-1	14-3
X333	CONNECTOR (12-PINS, BLACK)	Rear LH side of engine compartment	05-2	15-2
X335	CONNECTOR (4-PINS, GREEN)	ANTITHEFT MODULE (DWA), N1	14-3	02-6
X336	CONNECTOR (4-PINS, WHITE)	DOME LIGHT/MAP READING ASSEMBLY, FRONT, E34	17-1	06-5
X338	CONNECTOR (4-PINS, BLACK)	In LH rear side of luggage compartment	26-2	06-3
X338	CONNECTOR (6-PINS, BLACK)	In LH rear side of luggage compartment		17-2
X339	CONNECTOR (6-PINS, BLACK)	In RH rear side of luggage compartment		17-2

cardiagn.com

COMPONENT LOCATION CHART

COMPONENT			PAGE-FIGURE 7100.0	8500.0
X352	CONNECTOR (2-PINS, BLACK)	In lower LH front door	19-1	
X356	CONNECTOR (2-PINS, BLACK)	In upper LH C-pillar	20-2	
X360	CONNECTOR (3-PINS, BLACK)	AUTOMATIC INSIDE MIRROR, A22		15-4
X371	CONNECTOR (2-PINS, BLACK)	Near RH headlight assembly	06-3	
X372	CONNECTOR (2-PINS, WHITE)	ANTITHEFT HORN, H1	10-1	
X377	CONNECTOR (2-PINS, WHITE)	Under rear of car	24-2	
X379	CONNECTOR (1-PINS, BLACK)	ANTENNA AMPLIFIER AM/FM, N8	20-2	
X380	CONNECTOR (1-PINS, BLACK)	SUPPRESSION FILTER, C900	20-3	
X383	CONNECTOR (2-PINS, BLACK)	Under rear of car	24-2	
X392	CONNECTOR (1-PINS, BLUE)	Inside box on interior side of RH door sill	14-3	
X393	CONNECTOR (6-PINS, BLACK)	In LH rear side of luggage compartment	26-1	03-1
X394	CONNECTOR (12-PINS, BLACK)	Under LH front seat	21-1	02-1
X394	CONNECTOR (12-PINS, BLACK)	Underside of LH front seat	21-3	02-1
X395	CONNECTOR (1-PINS, YELLOW)	Inside box on interior side of RH door sill	14-3	
X400	CONNECTOR (8-PINS, BLACK)	In LH forward side of luggage compartment	25-3	03-1
X405	CONNECTOR (3-PINS, BLACK)	LEFT FRONT EDC VALVE, Y401z		04-4
X406	CONNECTOR (3-PINS, BLACK)	RIGHT FRONT EDC MOTOR, Y402	23-3	04-4
X407	CONNECTOR (3-PINS, BLACK)	LEFT REAR EDC VALVE, Y403z		04-4
X408	CONNECTOR (3-PINS, BLACK)	RIGHT REAR EDC VALVE, Y404z	24-2	04-4
X424	CONNECTOR (1-PINS, BROWN)	ANTENNA AMPLIFIER AM/FM, N8	20-2	

cardiagn.com

COMPONENT LOCATION CHART

COMPONENT			PAGE-FIGURE 7100.0	8500.0
X490	GROUND	Inside box on interior side of LH door sill	10-3	
X492	GROUND	LH side of LH footwell, under footrest	11-3	
X494	GROUND	In RH rear side of luggage compartment	28-2	
X495	GROUND	Interior side of RH door sill	14-2	
X497	GROUND	In LH rear side of luggage compartment	26-2	
X501	CONNECTOR (18-PINS, BLACK)	MULTI- INFORMATION DISPLAY (MID), N4z		15-5
X503	CONNECTOR (12-PINS, BLACK)	LIGHT SWITCH, S8		05-6
X504	CONNECTOR (12-PINS, BLACK)	FOG LIGHT SWITCH, S10		05-6
X506	CONNECTOR (12-PINS, WHITE)	Below center console	16-2	02-1
X509	CONNECTOR (9-PINS, WHITE)	RIGHT PARK LIGHT/LICENSE LIGHT RELAY, K25		02-3
X512	CONNECTOR (12-PINS, BLACK)	Behind glove box		02-1
X514	CONNECTOR (4-PINS, BLACK)	IR/DWA LED, V5		06-3
X516	CONNECTOR (5-PINS, BLACK)	HAZARD SWITCH, S18		06-2
X517	CONNECTOR (4-PINS, BLACK)	DIMMER, N3		06-3
X518	CONNECTOR (4-PINS, BLACK)	ACOUSTIC DEVICE, H10z	15-1	06-3
X521	CONNECTOR (6-PINS, BLUE)	ASC SWITCH, S6	16-1	16-1
X522	CONNECTOR (3-PINS, WHITE)	ACOUSTIC DEVICE, H10z	15-1	05-5
X523	CONNECTOR (6-PINS, BLACK)	DRIVER'S DAYLIGHT CODING DIODE, V4		09-2
X529	CONNECTOR (6-PINS, GREEN)	EDC SWITCH, S105		16-1
X537	CONNECTOR (2-PINS, BLACK)	LH front door, behind door panel	20-1	

cardiagn.com

COMPONENT LOCATION CHART

COMPONENT			PAGE-FIGURE 7100.0	8500.0
X539	CONNECTOR (2-PINS, BLACK)	Below center console	16-2	
X540	CONNECTOR (2-PINS, BLACK)	LH side of glove box	15-3	
X542	CONNECTOR (2-PINS, BLACK)	LH side of glove box	15-3	
X546	CONNECTOR (2-PINS, BLACK)	Below center console	16-2	
X601	CONNECTOR (26-PINS, BLACK)	MEMORY SEAT/MIRRORS CONTROL UNIT, A21	21-3	01-1
X602	CONNECTOR (26-PINS, BLACK)	MEMORY SEAT/MIRRORS CONTROL UNIT, A21	21-2	01-1
X603	CONNECTOR (12-PINS, BLACK)	DRIVER'S SEAT CONTROL SWITCH, S51		06-6
X603	CONNECTOR (12-PINS, BLACK)	DRIVER'S MEMORY SEAT ADJUSTMENT SWITCH, S50		06-6
X604	CONNECTOR (12-PINS, BLACK)	PASSENGER'S SEAT CONTROL SWITCH, S56		06-6
X605	CONNECTOR (12-PINS, BLACK)	HIFI AMPLIFIER, A18	29-2	02-1
X606	CONNECTOR (12-PINS, WHITE)	HIFI AMPLIFIER, A18	29-2	02-1
X607	CONNECTOR (12-PINS, BLACK)	PARK HEATING/VENTILATION RELAY BOX, A15		08-5
X608	CONNECTOR (12-PINS, BLACK)	PARK HEATING UNIT, E50		07-2
X609	CONNECTOR (15-PINS, BLACK)	TRAILER MODULE (AHM), A6		12-2
X610	CONNECTOR (26-PINS, WHITE)	AUTOMATIC HEATING AND AIR CONDITIONING CONTROL UNIT (IHKA), A11		01-1
X611	CONNECTOR (26-PINS, BLACK)	AUTOMATIC HEATING AND AIR CONDITIONING CONTROL UNIT (IHKA), A11		01-1
X612	CONNECTOR (26-PINS, BLUE)	AUTOMATIC HEATING AND AIR CONDITIONING SWITCH (IHKA), S26		14-3
X613	CONNECTOR (26-PINS, BLUE)	AUTOMATIC HEATING AND AIR CONDITIONING CONTROL UNIT (IHKA), A11		01-1
X614	CONNECTOR (26-PINS, YELLOW)	AUTOMATIC HEATING AND AIR CONDITIONING CONTROL UNIT (IHKA), A11		01-1
X621	CONNECTOR (10-PINS, BLACK)	Ahead of RH front door, in wire grommet		16-4

cardiagn.com

COMPONENT LOCATION CHART

COMPONENT			PAGE-FIGURE 7100.0	8500.0
X622	CONNECTOR (10-PINS, BLACK)	Ahead of LH front door, in wire grommet		16-3
X623	CONNECTOR (10-PINS, ORANGE)	In upper LH front door	18-3	16-2
X624	CONNECTOR (10-PINS, BLACK)	PASSENGER'S SIDE MIRROR, Y6		16-2
X625	CONNECTOR (6-PINS, WHITE)	MIRROR CONTROL SWITCH, S17	19-3	08-3
X629	CONNECTOR (8-PINS, NATURAL)	PARK HEATING/VENTILATION CONTROL UNIT, A14		07-3
X630	CONNECTOR (13-PINS, BLACK)	Rear of car		07-6
X638	CONNECTOR (3-PINS, BLACK)	Under RH rear seat	17-3	04-2
X641	CONNECTOR (6-PINS, BLACK)	PASSENGER'S DOOR LOCK MOTOR, M13		09-4
X642	CONNECTOR (6-PINS, BLACK)	PARK HEATING/VENTILATION CONTROL UNIT, A14		09-3
X643	CONNECTOR (6-PINS, BLUE)	SUNROOF SWITCH, S38	17-1	08-3
X648	CONNECTOR (6-PINS, BLACK)	MEMORY SEAT/MIRRORS CONTROL UNIT, A21	21-3	08-3
X649	CONNECTOR (6-PINS, WHITE)	MEMORY SEAT/MIRRORS CONTROL UNIT, A21	21-3	08-3
X650	CONNECTOR (6-PINS, BLACK)	MEMORY SEAT MIRRORS SWITCH, S57		16-1
X651	CONNECTOR (6-PINS, YELLOW)	DRIVER'S SEAT HEATER SWITCH, S53		16-1
X654	CONNECTOR (6-PINS, WHITE)	MEMORY SEAT/MIRRORS CONTROL UNIT, A21	21-2	08-3
X655	CONNECTOR (6-PINS, WHITE)	MEMORY SEAT/MIRRORS CONTROL UNIT, A21	21-2	08-3
X656	CONNECTOR (6-PINS, GREEN)	MEMORY SEAT/MIRRORS CONTROL UNIT, A21	21-2	08-3
X657	CONNECTOR (6-PINS, BROWN)	MEMORY SEAT/MIRRORS CONTROL UNIT, A21	21-2	08-3
X658	CONNECTOR (6-PINS, YELLOW)	PASSENGER'S SEAT HEATER SWITCH, S54		16-1
X660	CONNECTOR (6-PINS, BLACK)	DRIVER'S DOOR LOCK MOTOR, M12		09-4

cardiagn.com

COMPONENT LOCATION CHART

COMPONENT			PAGE-FIGURE 7100.0	8500.0
X661	CONNECTOR (6-PINS, GRAY)	LEFT VENTILATION FLAP MOTOR, M38		10-4
X662	CONNECTOR (6-PINS, GRAY)	FOOTWELL FLAP MOTOR, M40		10-4
X663	CONNECTOR (6-PINS, GRAY)	FRESH AIR FLAP MOTOR, M36		10-4
X664	CONNECTOR (6-PINS, GRAY)	DEFROSTER FLAP MOTOR, M35		10-4
X666	CONNECTOR (6-PINS, GRAY)	LEFT MIXING FLAP MOTOR, M39		10-4
X667	CONNECTOR (6-PINS, GRAY)	LEFT FOOTWELL FLAP MOTOR, M31		10-4
X668	CONNECTOR (6-PINS, GRAY)	RIGHT FOOTWELL FLAP MOTOR, M32		10-4
X669	CONNECTOR (6-PINS, GRAY)	DASH VENT MIXING FLAP MOTOR, M34		10-4
X670	CONNECTOR (6-PINS, GRAY)	RIGHT VENTILATION FLAP MOTOR, M33		10-4
X671	CONNECTOR (5-PINS, BLACK)	FINAL STAGE UNIT, N2		02-4
X672	CONNECTOR (4-PINS, BLACK)	RADIO RECEIVER, N20		10-5
X678	CONNECTOR (12-PINS, WHITE)	Under LH front seat	21-1	02-1
X678	CONNECTOR (12-PINS, WHITE)	Underside of LH front seat	21-3	02-1
X679	CONNECTOR (2-PINS, WHITE)	Under LH rear seat	17-2	
X682	CONNECTOR (3-PINS, BLACK)	AUTOMATIC HEATING AND AIR CONDITIONING SWITCH (IHKA), S26		16-5
X684	CONNECTOR (3-PINS, BLACK)	PASSENGER'S DOOR LOCK SWITCH, S49		04-2
X685	CONNECTOR (3-PINS, BLACK)	DRIVER'S DOOR LOCK SWITCH, S47	19-2	04-2
X686	CONNECTOR (3-PINS, BLUE)	SEAT CUSHION MOVEMENT POTENTIOMETER, R9	21-3	10-3
X690	CONNECTOR (3-PINS, BLUE)	SEATBACK POTENTIOMETER, R7	21-3	10-3
X692	CONNECTOR (3-PINS, BLACK)	TEMPERATURE DISTRIBUTION POTENTIOMETER, R1		03-3

cardiagn.com

COMPONENT LOCATION CHART

COMPONENT			PAGE-FIGURE 7100.0	8500.0
X695	CONNECTOR (3-PINS, BLACK)	In LH rear side of luggage compartment	29-1	00-0
X701	CONNECTOR (2-PINS, BLACK)	Behind LH footwell speaker grill	11-3	
X709	CONNECTOR (2-PINS, BLACK)	LEFT LICENSE PLATE LIGHT, E43	30-1	
X710	CONNECTOR (2-PINS, BLACK)	RIGHT LICENSE PLATE LIGHT, E44	30-1	
X714	CONNECTOR (4-PINS, BLACK)	Left from LH rear seat, behind trim panel	24-3	06-3
X715	CONNECTOR (2-PINS, BLACK)	Left from LH rear seat, behind trim panel	24-3	
X720	CONNECTOR (4-PINS, BLACK)	RIGHT REAR POWER WINDOW MOTOR, M22z		06-3
X744	CONNECTOR (6-PINS, BLACK)	PASSENGER'S POWER WINDOW MOTOR/INCREMENT SENSOR, M23z		09-4
X745	CONNECTOR (2-PINS, BLACK)	In upper RH C-pillar	20-3	
X747	CONNECTOR (2-PINS, YELLOW)	In upper LH front door	19-2	
X748	CONNECTOR (2-PINS, WHITE)	LEFT FRONT FOOTWELL LIGHT, E61	20-1	
X749	CONNECTOR (6-PINS, BLACK)	DRIVER'S POWER WINDOW MOTOR/INCREMENT SENSOR, M21z	18-2	09-4
X751	CONNECTOR (2-PINS, WHITE)	In upper LH front door	19-2	
X752	CONNECTOR (2-PINS, BLUE)	In upper LH front door	19-2	
X753	CONNECTOR (2-PINS, BLACK)	LH front door, behind door panel	20-1	
X770	CONNECTOR (2-PINS, YELLOW)	Front LH side of engine compartment	07-2	
X778	CONNECTOR (2-PINS, BLACK)	Underside of LH front seat	21-2	
X779	CHARGING PLUG	LH side of glove box		
X784	CONNECTOR (2-PINS, ORANGE)	Below RH side of dash	15-2	
X818	GROUND	Below LH side of dash	13-1	

cardiagn.com

COMPONENT LOCATION CHART

COMPONENT			PAGE-FIGURE 7100.0	8500.0
X820	GROUND	In LH rear side of luggage compartment	26-1	
X848	CONNECTOR (4-PINS, GREEN)	POWER SUN SHADE ELECTRONIC CONTROL UNIT, A82	30-3	
X881	CONNECTOR (6-PINS, WHITE)	PASSENGER'S THIGH SUPPORT SWITCH, S94		08-3
X886	CONNECTOR (6-PINS, WHITE)	DRIVER'S THIGH SUPPORT SWITCH, S93		08-3
X887	CONNECTOR (26-PINS, BLACK)	DRIVER'S DOOR MODULE, A23	18-1	14-3
X889	CONNECTOR (26-PINS, WHITE)	PASSENGER'S DOOR MODULE, A24		14-3
X898	CONNECTOR (6-PINS, BLACK)	REAR DEFOGGER SWITCH, S76		16-1
X910	B+ Junction Point	Rear LH side of engine compartment	05-1	
X911	STARTER JUMP POINT	Rear RH side of engine compartment	01-1	
X916	CONNECTOR (5-PINS, RED)	SUNROOF MODULE, A33	17-1	02-4
X917	CONNECTOR (6-PINS, RED)	SUNROOF MODULE, A33	17-1	06-1
X924	CONNECTOR (6-PINS, BLACK)	Underside of trunk lid, left		04-1
X925	CONNECTOR (6-PINS, BLACK)	RIGHT REAR LIGHT ASSEMLY II, E81	30-2	04-1
X932	CONNECTOR (2-PINS, BLUE)	In lower LH front door	19-1	
X936	CONNECTOR (2-PINS, WHITE)	In lower LH front door	18-1	
X936	CONNECTOR (2-PINS, WHITE)	LH front door, behind door panel	20-1	
X941	CONNECTOR (9-PINS, BLACK)	JUMPER FOR HORN, TELEPHONE, K51		02-3
X941	CONNECTOR (9-PINS, BLACK)	JUMPER FOR HORN TELEPHONE, K9051z		02-3
X945	CONNECTOR (10-PINS, BLACK)	EDC CONTROL UNIT, A413	27-3	14-2
X947	CONNECTOR (6-PINS, BLACK)	POWER SUN SHADE SWITCH, S110		16-1

cardiagn.com

COMPONENT LOCATION CHART

COMPONENT			PAGE-FIGURE 7100.0	8500.0
X949	CONNECTOR (5-PINS, BLACK)	POWER SUN SHADE ELECTRONIC CONTROL UNIT, A82	30-3	02-4
X955	GROUND	In LH rear side of luggage compartment	26-1	
X980	!!! ERROR CODE X980 NOT FOUND !!!	RH side of LH footwell, under carpet	11-1	
X1001	CONNECTOR (4-PINS, BLACK)	LEFT REAR SPEAKER, H46	28-1	06-3
X1002	CONNECTOR (4-PINS, BLACK)	In LH rear side of luggage compartment	26-3	06-3
X1003	CONNECTOR (12-PINS, BLACK)	Below center console	16-3	02-1
X1011	CONNECTOR (2-PINS, GRAY)	RH side of engine compartment	01-3	
X1021	CONNECTOR (9-PINS, BLACK)	UNLOADER RELAY, KL61, K61		02-3
X1086	CONNECTOR (9-PINS, BLACK)	NORWAY FOGLIGHT RELAY, K79		02-3
X1156	CONNECTOR (4-PINS, BLACK)			06-3
X1204	CONNECTOR (2-PINS, WHITE)	Left from LH rear seat, behind trim panel	24-3	
X1229	CONNECTOR (4-PINS, BLACK)	MEMORY STEERING COLUMN CONTROL UNIT, A34z		02-6
X1230	CONNECTOR (4-PINS, WHITE)	Left from LH rear seat, behind trim panel	24-3	06-3
X1376	CONNECTOR (9-PINS, BLACK)	CENTRAL LOCKING TRUNK LID MOTOR RELAY, K70		02-3
X1377	CONNECTOR (2-PINS, BLACK)	Underside of trunk lid	30-1	
X3210	CONNECTOR (26-PINS, BLUE)	AUTOMATIC AIR RECIRCULATION CONTROL UNIT, A417	14-1	01-1
X3211	CONNECTOR (4-PINS, BLACK)	Front LH side of engine compartment	07-1	13-4
X6002	CONNECTOR (20-PINS, BLACK)	Front RH side of engine compartment	02-2	11-5
X6004	CONNECTOR (55-PINS, BLACK)	EML (1.2) ELECTRONIC CONTROL UNIT, A220		00-1
X6010	CONNECTOR (88-PINS, BLACK)	MOTRONIC CONTROL UNIT I (DME), A211		14-5

cardiagn.com

COMPONENT LOCATION CHART

COMPONENT			PAGE-FIGURE 7100.0	8500.0
X6020	CONNECTOR (88-PINS, BLACK)	MOTRONIC CONTROL UNIT II (DME), A212		14-5
X6121	CONNECTOR (2-PINS, BLACK)	Front RH side of engine compartment	02-2	
X6122	CONNECTOR (2-PINS, WHITE)	Front RH side of engine compartment	02-2	
X6210	CONNECTOR (4-PINS, GRAY)	On catalytic converter	24-1	16-6
X6211	CONNECTOR (3-PINS, BLACK)	CYLINDER IDENTIFICATION SENSOR I, B220		03-5
X6212	CONNECTOR (3-PINS, BLACK)	ENGINE SPEED SENSOR I, B222		03-5
X6216	CONNECTOR (7-PINS, BLACK)	AIR MASS METER I, B226	05-3	13-2
X6220	CONNECTOR (4-PINS, GRAY)	On catalytic converter	24-1	16-6
X6221	CONNECTOR (3-PINS, BLACK)	CYLINDER IDENTIFICATION SENSOR II, B221		03-5
X6222	CONNECTOR (3-PINS, BLACK)	ENGINE SPEED SENSOR II, B223		03-5
X6226	CONNECTOR (7-PINS, BLACK)	AIR MASS METER II, B227		13-2
X6230	CONNECTOR (3-PINS, BLACK)	Under RH front of car	23-1	
X6230	CONNECTOR (3-PINS, BLACK)	OIL LEVEL SENSOR, B205		03-5
X6235	CONNECTOR (2-PINS, BLACK)	Rear RH side of engine compartment, in E-Box	00-1	
X6236	CONNECTOR (3-PINS, BLACK)	WATER TEMPERATURE SENSOR (DME), B228		03-5
X6303	CONNECTOR (9-PINS, YELLOW)	OXYGEN SENSOR RELAY, K214		02-3
X6310	CONNECTOR (9-PINS, WHITE)	MAIN RELAY I, K212		02-3
X6311	CONNECTOR (9-PINS, YELLOW)	FUEL PUMP RELAY I, K210		02-3
X6320	CONNECTOR (9-PINS, WHITE)	MAIN RELAY II, K213		02-3
X6321	CONNECTOR (9-PINS, YELLOW)	FUEL PUMP RELAY II, K211		02-3

cardiagn.com

COMPONENT			PAGE-FIGURE 7100.0	8500.0
X6360	CONNECTOR (8-PINS, BLACK)	THROTTLE POSITION MOTOR I (EML), M202	09-2	03-4
X6370	CONNECTOR (8-PINS, BLACK)	THROTTLE POSITION MOTOR II (EML), M203		03-4
X6400	B+ JUNCTION POINT	Rear RH side of engine compartment, in E-Box	00-2	
X6402	GROUND	In RH side of luggage compartment	27-2	
X6452	GROUND	Rear RH side of engine compartment, on E-box	00-3	
X6453	GROUND	Rear RH side of engine compartment, on E-box	00-3	
X6506	CONNECTOR (4-PINS, BLACK)	Rear RH side of engine compartment, in E-Box	00-1	06-3
X8500	CONNECTOR (35-PINS, NATURAL)	EGS CONTROL UNIT, A8500		00-3
X8505	CONNECTOR (8-PINS, BLACK)			11-1
X8509	CONNECTOR (8-PINS, BLACK)	Left-hand drive	ANK:	16-1
X8515	CONNECTOR (8-PINS, BLACK)	Right-hand drive	16-1	03-1
X8517	CONNECTOR (10-PINS, BLACK)	PROGRAM SWITCH, S8517	16-2	16-4
X9400	CONNECTOR (8-PINS, BLACK)	In LH forward side of luggage compartment		03-1
X9401	CONNECTOR (15-PINS, (---))	In LH forward side of luggage compartment		17-5
X9402	CONNECTOR (15-PINS, (---))	In LH forward side of luggage compartment		17-6
X9403	CONNECTOR (15-PINS, (---))	In LH forward side of luggage compartment		17-5
X10039	CONNECTOR (10-PINS, BLACK)	HORN RELAY, K2		15-3
X10039	CONNECTOR (10-PINS, BLACK)	AIR CONDITIONING RELAY, K33		15-3

cardiagn.com

COMPONENT LOCATION CHART

COMPONENT			PAGE-FIGURE 7100.0	PAGE-FIGURE 8500.0
X10040	CONNECTOR (10-PINS, BLACK)	AUXILIARY WATER PUMP RELAY, K8z		15-3
X10040	CONNECTOR (10-PINS, BLACK)	WASHER PUMP RELAY, K5		15-3
X10041	CONNECTOR (10-PINS, BLACK)	COMPRESSOR CONTROL RELAY, K19		15-3
X10041	CONNECTOR (10-PINS, BLACK)	INTENSIVE WASH RELAY, K42		15-3
X10042	CONNECTOR (10-PINS, BLACK)	COMPRESSOR CUT-OFF RELAY, K60		15-3
X10042	CONNECTOR (10-PINS, BLACK)	UNLOADER RELAY, KL61, K61		15-3
X10044	CONNECTOR (9-PINS, BLACK)	WIPER RELAY I, K36		02-3
X10045	CONNECTOR (9-PINS, BLACK)	WIPER RELAY II, K37		02-3
X10046	CONNECTOR (2-PINS, BLACK)	Water pump in luggage compartment	29-3	
X10047	CONNECTOR (9-PINS, BLACK)	WIPER RELAY III, K38		02-3
X10051	CONNECTOR (4-PINS, BLACK)	HEADLIGHT WIDENING POTENTIOMETER, R13	16-1	06-3
X10058	CONNECTOR (1-PINS, YELLOW)	LH footwell, under footrest	11-2	
X13001	CONNECTOR (9-PINS, BLACK)	CONSUMER CUT-OFF RELAY I, K72		02-3
X13008	CONNECTOR (2-PINS, WHITE)	Under RH rear seat	17-3	
X13015	CONNECTOR (9-PINS, BLACK)	CONSUMER CUT-OFF RELAY II, K73		02-3
X13017	CONNECTOR (1-PINS, BLACK)	ANTENNA AMPLIFIER AM/FM, N8	20-2	
X13018	CONNECTOR (1-PINS, BLACK)	SUPPRESSION FILTER, C900	20-3	
X13052	CONNECTOR (9-PINS, (---))	NORWAY FOGLIGHT RELAY, K79		15-3
X18024	CONNECTOR (6-PINS, BLACK)	PRESSURE SENSOR, Y16		09-4
X18025	CONNECTOR (4-PINS, BLACK)	PRESSURE SENSOR, Y16		13-4

cardiagn.com

COMPONENT LOCATION CHART

COMPONENT			PAGE-FIGURE 7100.0	8500.0
X18029	CONNECTOR (4-PINS, BLACK)	STEERING ANGLE SENDER, B40		06-3
X18031	CONNECTOR (3-PINS, BLACK)	RIGHT FRONT ACCELERATION SENSOR, B41	23-2	05-5
X18032	CONNECTOR (3-PINS, BLACK)	RH LOADING SENSOR, B42		17-4
X18033	CONNECTOR (6-PINS, YELLOW)	RDC SWITCH, S106		16-1
X18034	CONNECTOR (26-PINS, BLACK)	TIRE PRESSURE CONTROL UNIT (RDC), A85		01-1
X18036	CONNECTOR (2-PINS, GRAY)	Under rear of car	24-2	
X18036	CONNECTOR (2-PINS, GRAY)	Waterpump in luggage compartment	29-3	
X18038	CONNECTOR (2-PINS, BLACK)	Under rear of car	24-2	
X18041	CONNECTOR (2-PINS, BLACK)	RH front of wheel well below	23-3	
X18055	CONNECTOR (12-PINS, BLACK)	Below center console	16-2	02-1
X18066	CONNECTOR (3-PINS, BLACK)	RIGHT REAR ACCELERATION SENSOR, B48	27-1	07-5
X18067	CONNECTOR (3-PINS, BLACK)	LONGITUDINAL ACCELERATION SENSOR, B49	25-3	05-5
X18068	CONNECTOR (9-PINS, BLACK)	EDC RELAY, K67		02-3
X18093	CONNECTOR (6-PINS, BLACK)	STEERING COLUMN POSITION SWITCH, S119z		04-1
X18094	CONNECTOR (3-PINS, BLUE)	STEERING COLUMN ANGLE ADJUST POTENTIOMETER, R19z		10-3
X18095	CONNECTOR (3-PINS, BLUE)	STEERING COLUMN LENGTH ADJUST POTENTIOMETER, R18z		10-3
X18098	CONNECTOR (5-PINS, BLACK)	MEMORY STEERING COLUMN CONTROL UNIT, A34z		02-4
X18099	CONNECTOR (12-PINS, BLACK)	MEMORY STEERING COLUMN CONTROL UNIT, A34z		08-2
X18110	CONNECTOR (9-PINS, BLACK)	DRIVER'S BACKREST/LUMBAR RELAY I, K74		02-3

cardiagn.com

COMPONENT LOCATION CHART

COMPONENT			PAGE-FIGURE 7100.0	8500.0
X18111	CONNECTOR (9-PINS, BLACK)	PASSENGER'S SEATBACK/LUMBAR RELAY I, K71		02-3
X18126	CONNECTOR (17-PINS, RED)	Below center console	16-2	12-3
X18131	CONNECTOR (12-PINS, WHITE)	MEMORY STEERING COLUMN CONTROL UNIT, A34z		08-2
X18133	CONNECTOR (2-PINS, BLACK)	RH front of wheel well below	23-3	
X18135	CONNECTOR (4-PINS, WHITE)	DRIVER'S SEAT LUMBAR SUPPORT MOTOR, M55		06-5
X18136	CONNECTOR (9-PINS, BLACK)	DRIVER'S BACKREST/LUMBAR RELAY II, K76		02-3
X18137	CONNECTOR (9-PINS, BLACK)	PASSENGER'S BACKREST/LUMBAR RELAY II, K77		02-3
X18138	CONNECTOR (4-PINS, WHITE)	PASSENGER'S SEAT LUMBAR SUPPORT MOTOR, M56		06-5
X18145	CONNECTOR (2-PINS, BLACK)	Under rear of car	24-2	
X18146	CONNECTOR (2-PINS, YELLOW)	Under rear of car	24-2	
X18170	!!! ERROR CODE X18170 NOT FOUND !!!	Inside box on interior side of LH door sill	10-3	
X18171	CONNECTOR (10-PINS, BLACK)	In upper LH front door	18-3	16-2
X18171	CONNECTOR (10-PINS, BLACK)	DRIVER'S SIDE MEMORY MIRROR, Y9		16-2
X18172	CONNECTOR (10-PINS, BLACK)	PASSENGER'S SIDE MEMORY MIRROR, Y10		16-2
X18173	CONNECTOR (6-PINS, BLACK)	MEMORY MIRRORS CONTROL SWITCH, S12		16-1
X18177	CONNECTOR (2-PINS, GRAY)	Water pump in luggage compartment	29-3	
X18178	CONNECTOR (4-PINS, BLACK)			06-5
X18179	CONNECTOR (4-PINS, BLACK)			06-5
X18180	CONNECTOR (3-PINS, WHITE)	CD CHANGER, N22		03-3

cardiagn.com

COMPONENT LOCATION CHART

COMPONENT			PAGE-FIGURE 7100.0	8500.0
X18210	CONNECTOR (9-PINS, BLACK)	DRIVER'S SIDE REAR ENTRANCE ASSIST RELAY, K58		02-3
X18211	CONNECTOR (9-PINS, BLACK)	PASSENGER'S SIDE REAR ENTRANCE ASSIST RELAY, K59		02-3
X18246	CONNECTOR (3-PINS, YELLOW)	ELECTROCHROME REAR VIEW MIRROR, A22z		17-1
X18757	CONNECTOR (3-PINS, WHITE)			17-3
Y1	ABS HYDRAULIC UNIT	Front LH side of engine compartment	07-2	
Y3	COMPRESSOR (IHKA)	Front RH side of engine compartment	07-3	
Y4	WATER VALVE ASSEMBLY	Rear LH side of engine compartment	05-1	
Y7	PARK HEATING METERING PUMP	Under rear of car		
Y16	PRESSURE SENSOR	LH side of engine compartment		
Y221	EVAPORATIVE PURGE VALVE I	Front LH side of engine compartment		
Y222	FUEL AIR VALVE II	Front RH side of engine compartment		
Y402	RIGHT FRONT EDC VALVE	Behind LH front wheel		
Y403	LEFT REAR EDC VALVE	Behind LH rear wheel		

cardiagn.com

cardiagn.com

COMPONENT LOCATION VIEWS

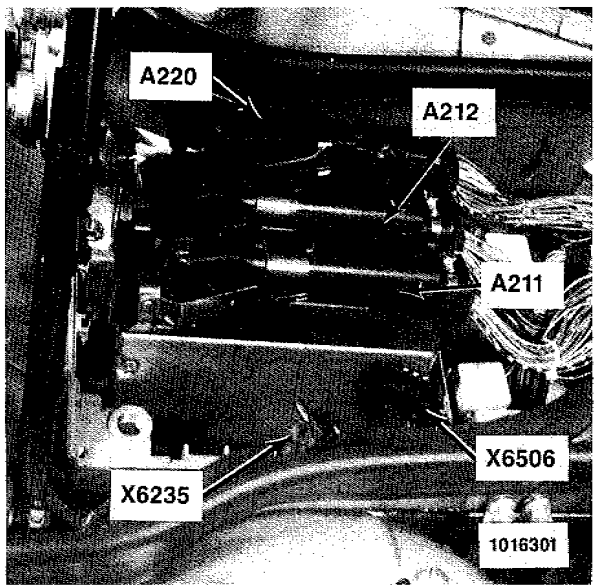

FIG. 1 - Rear RH side of engine compartment

A211	MOTRONIC CONTROL UNIT I (DME)
A212	MOTRONIC CONTROL UNIT II (DME)
A220	EML (1.2) ELECTRONIC CONTROL UNIT
X6235	CONNECTOR (2-PINS, BLACK)
X6506	CONNECTOR (4-PINS, BLACK)

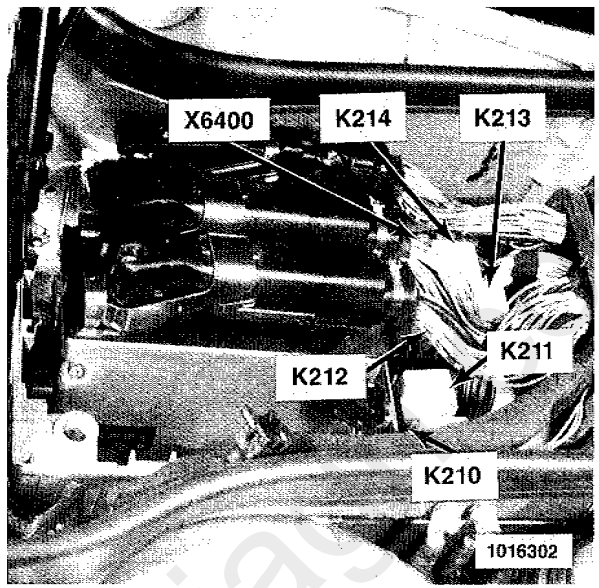

FIG. 2 - Rear RH side of engine compartment

K210	FUEL PUMP RELAY I
K211	FUEL PUMP RELAY II
K212	MAIN RELAY I
K213	MAIN RELAY II
K214	OXYGEN SENSOR RELAY
X6400	B+ JUNCTION POINT

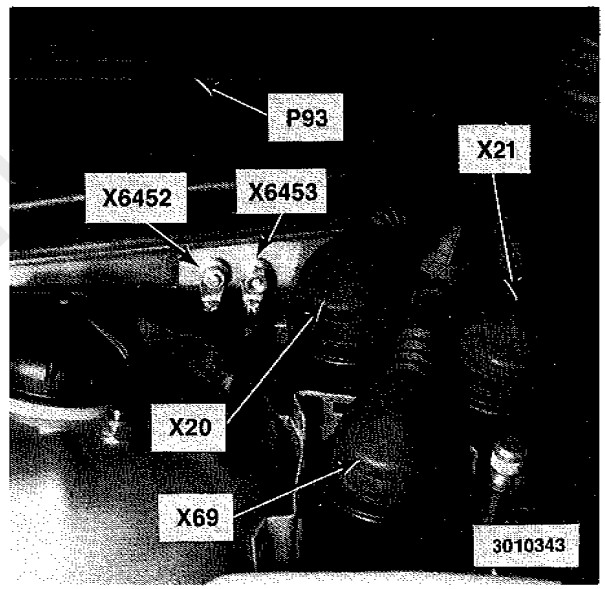

FIG. 3 - Rear RH side of engine compartment

P93	E-BOX
X20	CONNECTOR (20-PINS, BLACK)
X21	CONNECTOR (20-PINS, BLACK)
X69	CONNECTOR (20-PINS, BLACK)
X6452	GROUND
X6453	GROUND

cardiagn.com

COMPONENT LOCATION VIEWS

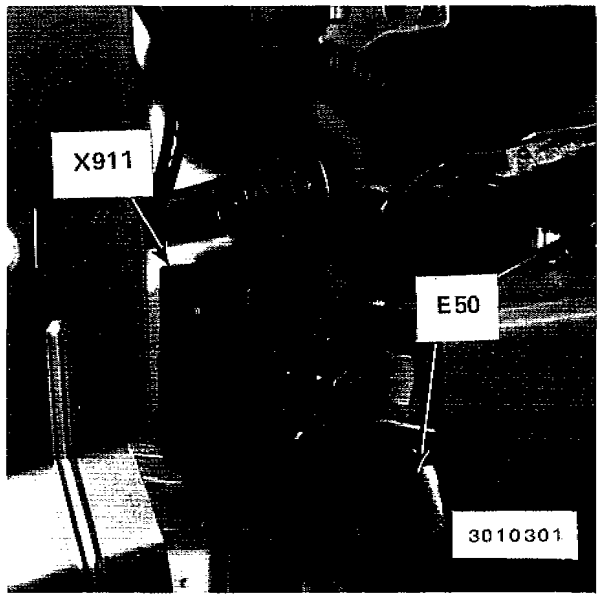

FIG. 1 - Rear RH side of engine compartment

E50 PARK HEATING UNIT
X911 STARTER JUMP POINT

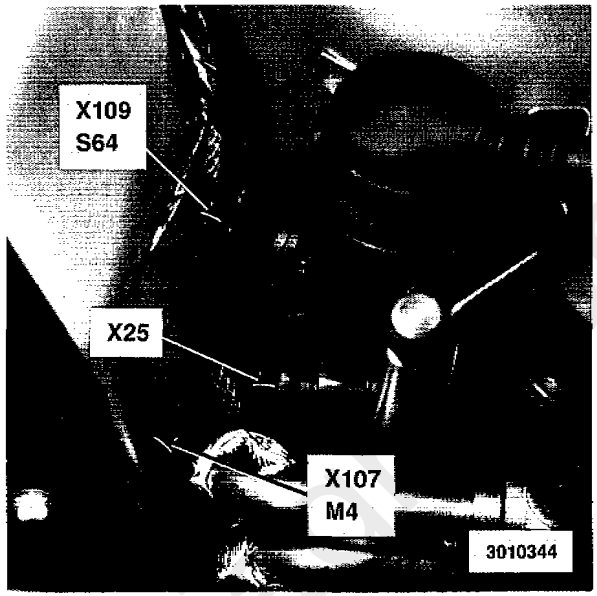

FIG. 2 - RH side of engine compartment

M4 WASHER PUMP
S64 WASHER FLUID LEVEL SWITCH
X25 CONNECTOR (4-PINS, BLACK)
X107 CONNECTOR (2-PINS, BLUE)
X109 CONNECTOR (2-PINS, BLACK)

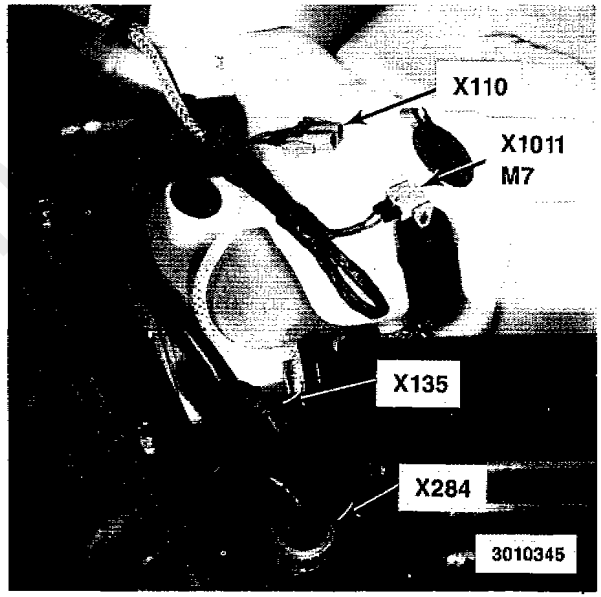

FIG. 3 - RH side of engine compartment

X110 CONNECTOR (2-PINS, BLUE)
X135 CONNECTOR (7-PINS, BLACK)
X284 CONNECTOR (4-PINS, GRAY)
X1011 CONNECTOR (2-PINS, GRAY)

COMPONENT LOCATION VIEWS

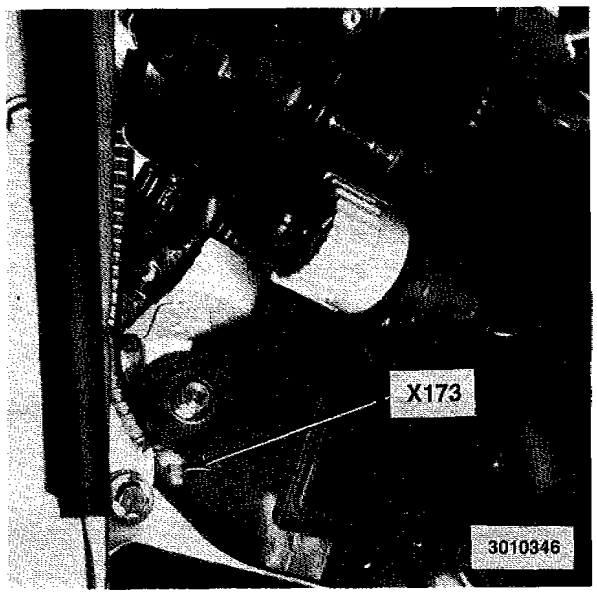

FIG. 1 - RH side of engine compartment

X173 GROUND

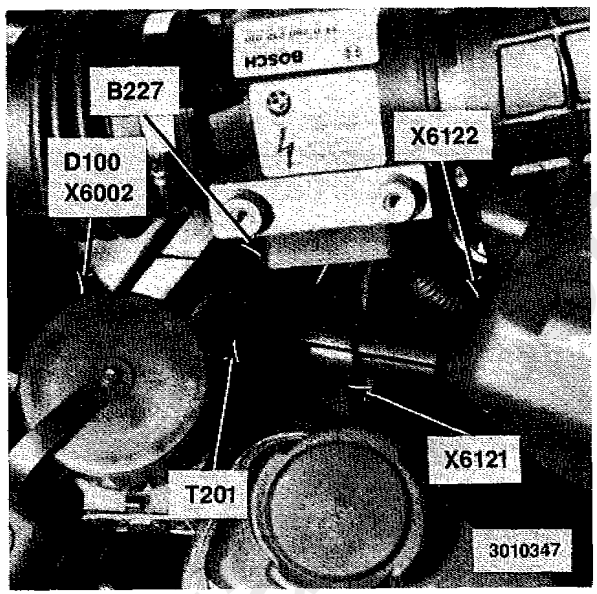

FIG. 2 - Front RH side of engine compartment

B227 AIR MASS METER II
D100 DIAGNOSTIC CONNECTOR
T201 IGNITION COIL I
X6002 CONNECTOR (20-PINS, BLACK)
X6121 CONNECTOR (2-PINS, BLACK)
X6122 CONNECTOR (2-PINS, WHITE)

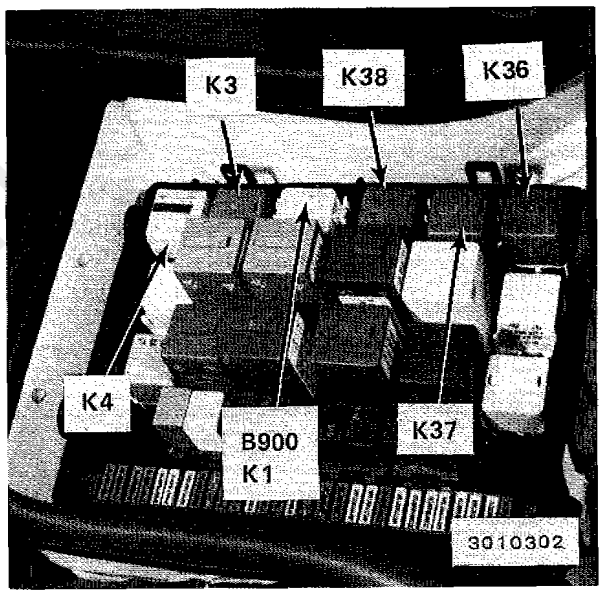

FIG. 3 - Front power distribution box, rear LH side of engine compartment

B900 JUMPER PLUG
K1 STARTER RELAY
K3 UNLOADER RELAY, KLR
K4 BLOWER RELAY
K36 WIPER RELAY I
K37 WIPER RELAY II
K38 WIPER RELAY III

COMPONENT LOCATION VIEWS

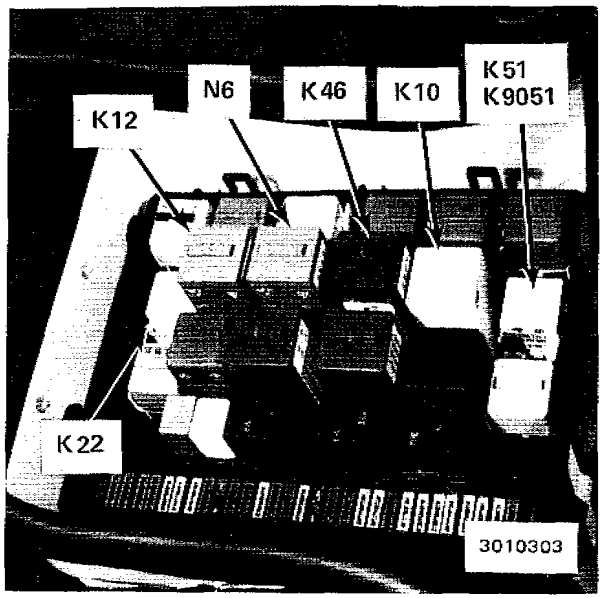

FIG. 1 - Front power distribution box, rear LH side of engine compartment

K46	HIGH BEAM LIGHT RELAY
K10	ABS RELAY
K12	WIPER PRESSURE CONTROL (ADV) RELAY
K22	HIGH SPEED RELAY
K51	JUMPER FOR HORN, TELEPHONE
K9051	JUMPER FOR HORN TELEPHONE
N6	HEADLIGHT/FRONT FOG LIGHT MODULE (SRA)

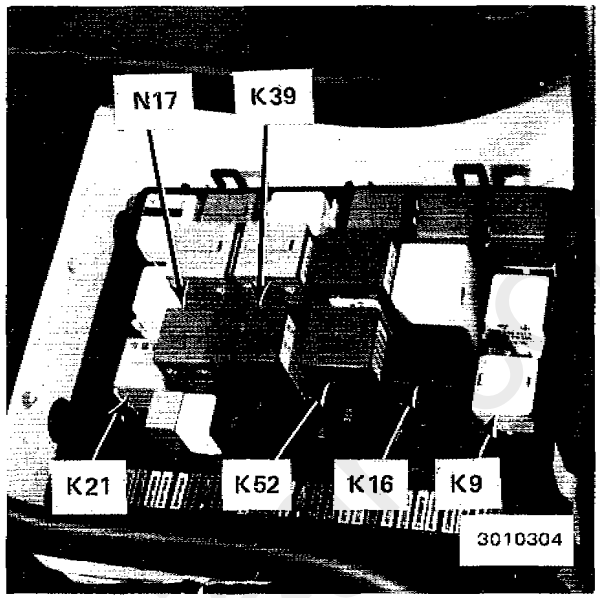

FIG. 2 - Front power distribution box, rear LH side of engine compartment

K9	UNLOADER RELAY, KL15
K16	HAZARD FLASHER RELAY
K21	NORMAL SPEED RELAY
K39	CONCEALING HEADLIGHTS RELAY
K52	HIGH BEAM/FLASHER LIGHT RELAY
N17	CRASH CONTROL UNIT

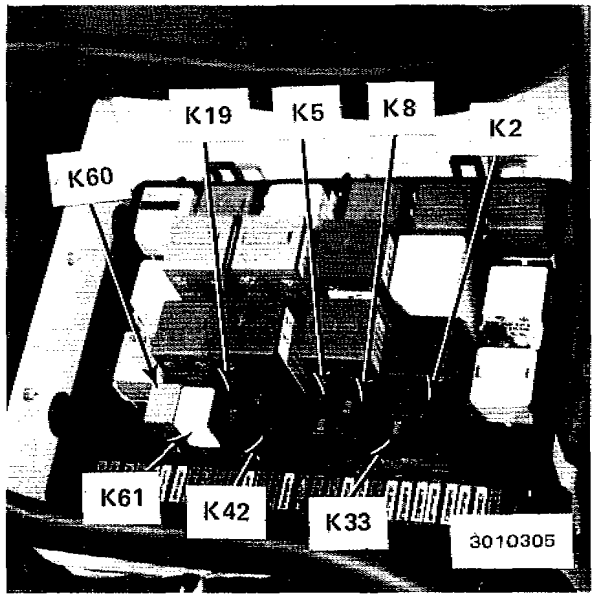

FIG. 3 - Front power distribution box, rear LH side of engine compartment

K2	HORN RELAY
K5	WASHER PUMP RELAY
K8	AUXILIARY WATER PUMP RELAY
K19	COMPRESSOR CONTROL RELAY
K33	AIR CONDITIONING RELAY
K42	INTENSIVE WASH RELAY
K60	COMPRESSOR CUT-OFF RELAY
K61	UNLOADER RELAY, KL61

COMPONENT LOCATION VIEWS

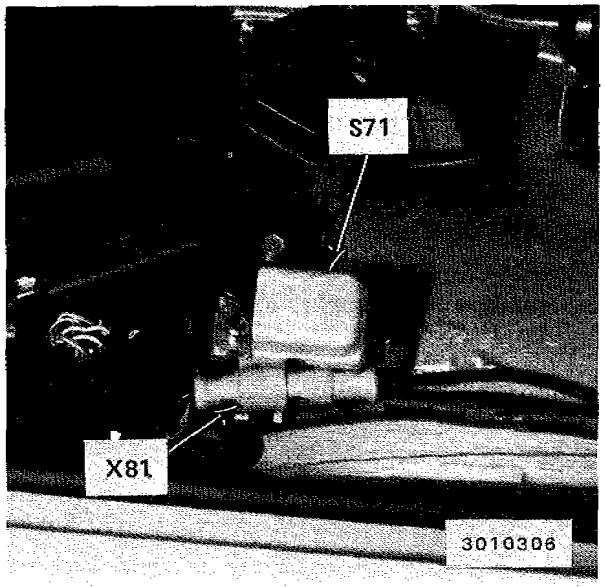

FIG. 1 - LH side of engine compartment

S71 LEFT FRONT CRASH SENSOR
X81 CONNECTOR (3-PINS, ORANGE)

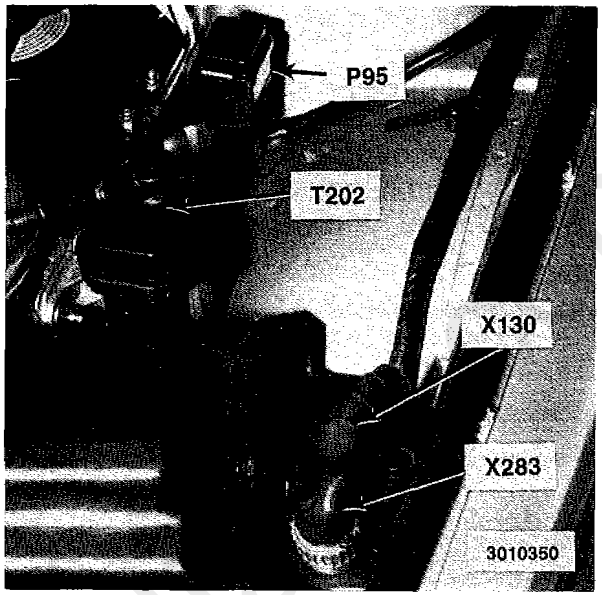

FIG. 2 - LH side of engine compartment

T202 IGNITION COIL II
P95 AUXILIARY FUSE BOX
X130 CONNECTOR (7-PINS, BLACK)
X283 CONNECTOR (4-PINS, GRAY)

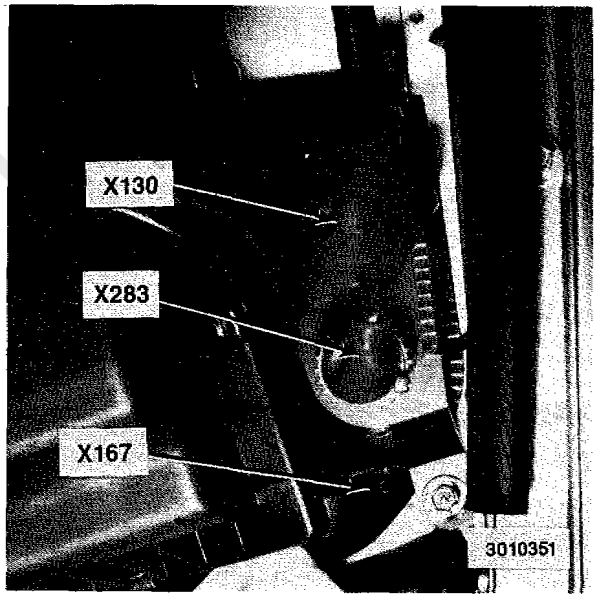

FIG. 3 - LH side of engine compartment

X130 CONNECTOR (7-PINS, BLACK)
X167 GROUND
X283 CONNECTOR (4-PINS, GRAY)

COMPONENT LOCATION VIEWS

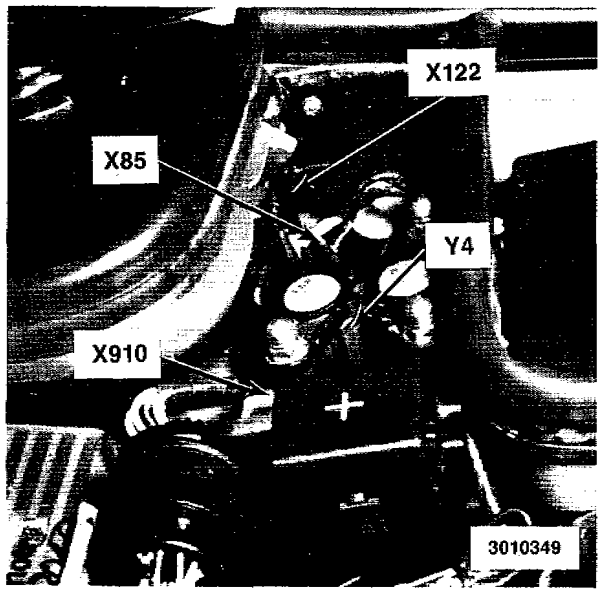

FIG. 1 - Rear LH side of engine compartment

Y4	WATER VALVE ASSEMBLY
X85	CONNECTOR (3-PINS, BLACK)
X122	CONNECTOR (2-PINS, BLACK)
X910	B+ Junction Point

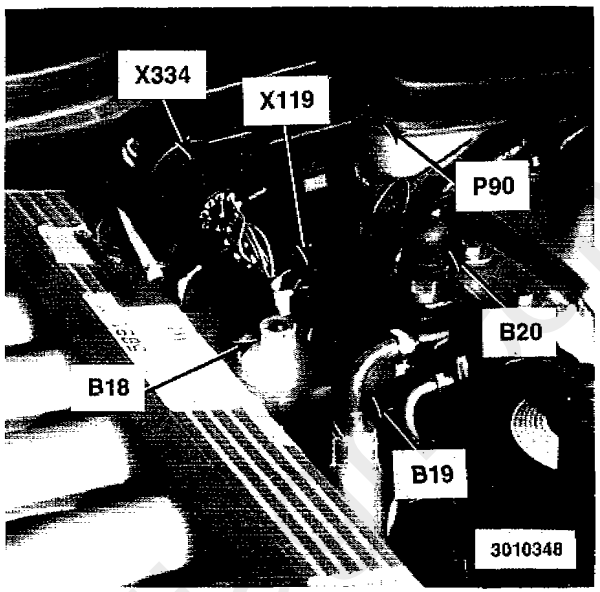

FIG. 2 - Rear LH side of engine compartment

B18	BRAKE FLUID LEVEL SWITCH
B19	BRAKE PRESSURE REGULATING SWITCH
B20	BRAKE PRESSURE SWITCH
P90	FRONT POWER DISTRIBUTION BOX
X119	CONNECTOR (2-PINS, BLACK)
X333	CONNECTOR (12-PINS, BLACK)

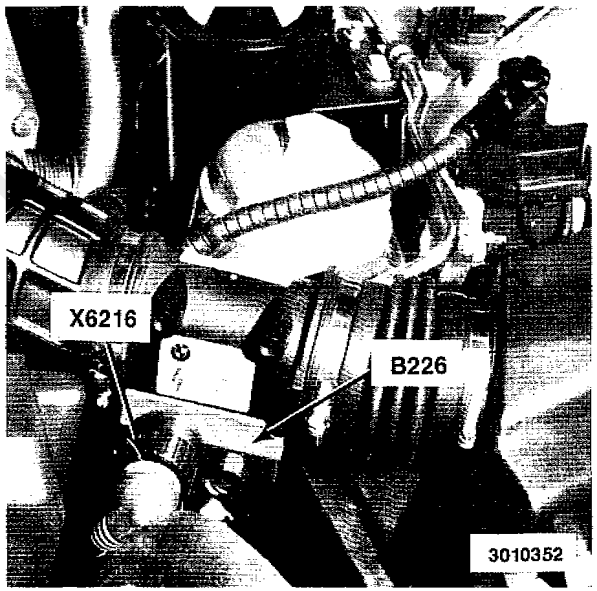

FIG. 3 - Front LH side of engine compartment

B226	AIR MASS METER I
X6216	CONNECTOR (7-PINS, BLACK)

COMPONENT LOCATION VIEWS

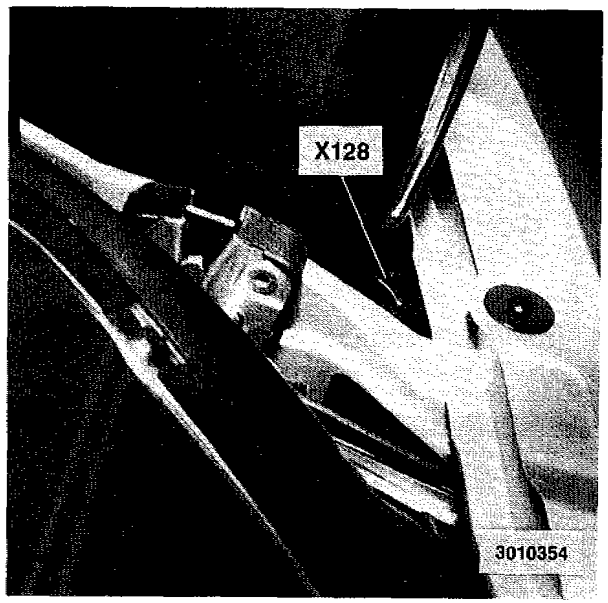

FIG. 1 - Near LH headlight assembly

X128 CONNECTOR (7-PINS, BLACK)

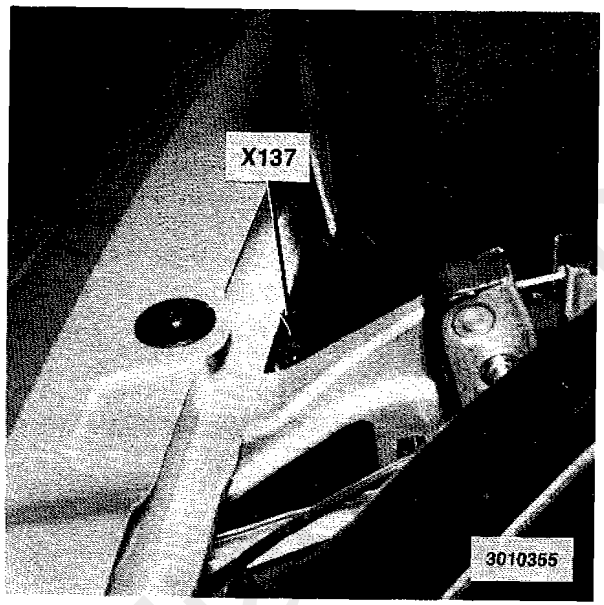

FIG. 2 - Near RH headlight assembly

X137 CONNECTOR (7-PINS, BLACK)

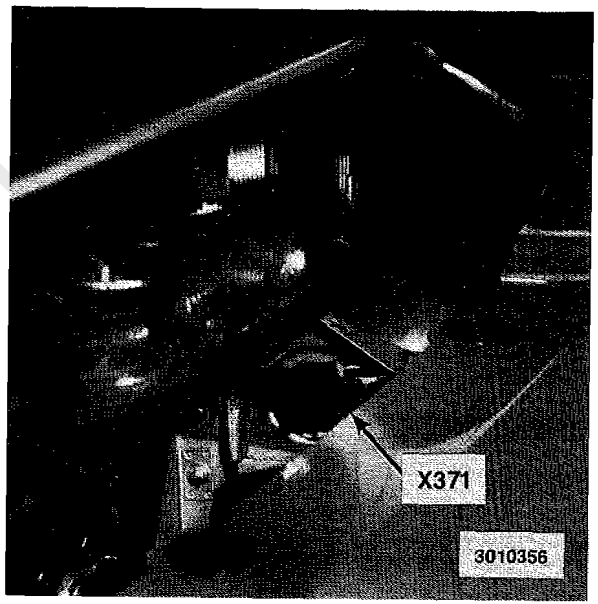

FIG. 3 - Near RH headlight assembly

X371 CONNECTOR (2-PINS, BLACK)

COMPONENT LOCATION VIEWS

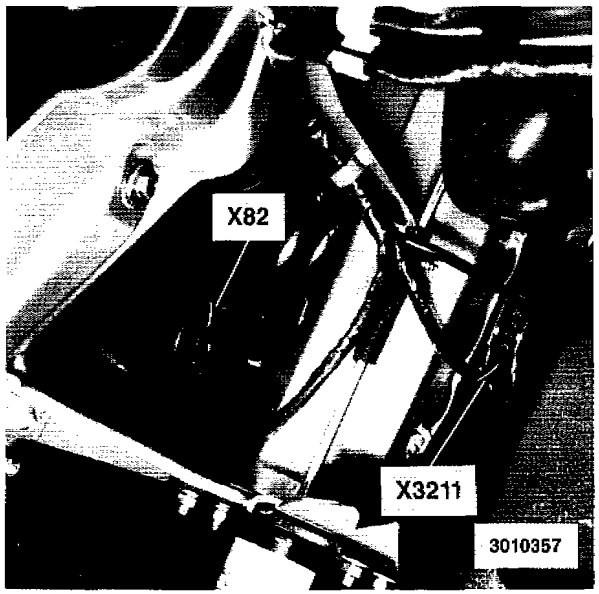

FIG. 1 - Front LH side of engine compartment, (headlights removed)

X82 CONNECTOR (3-PINS, BLACK)
X3211 CONNECTOR (4-PINS, BLACK)

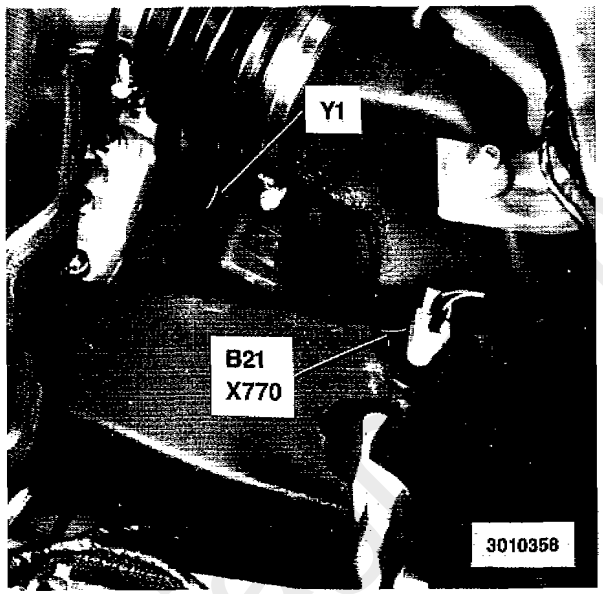

FIG. 2 - Front LH side of engine compartment, (headlights removed)

B21 TEMPERATURE SENSOR
X770 CONNECTOR (2-PINS, YELLOW)
Y1 ABS HYDRAULIC UNIT

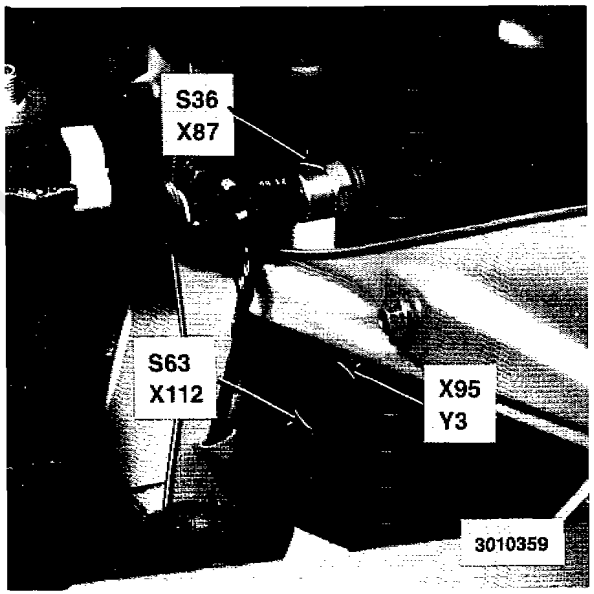

FIG. 3 - Front RH side of engine compartment, (headlights removed)

S36 TEMPERATURE SWITCH
S63 COOLANT LEVEL SWITCH
X87 CONNECTOR (3-PINS, BLACK)
X95 CONNECTOR (3-PINS, BLACK)
X112 CONNECTOR (2-PINS, BLACK)
Y3 COMPRESSOR (IHKA)

COMPONENT LOCATION VIEWS

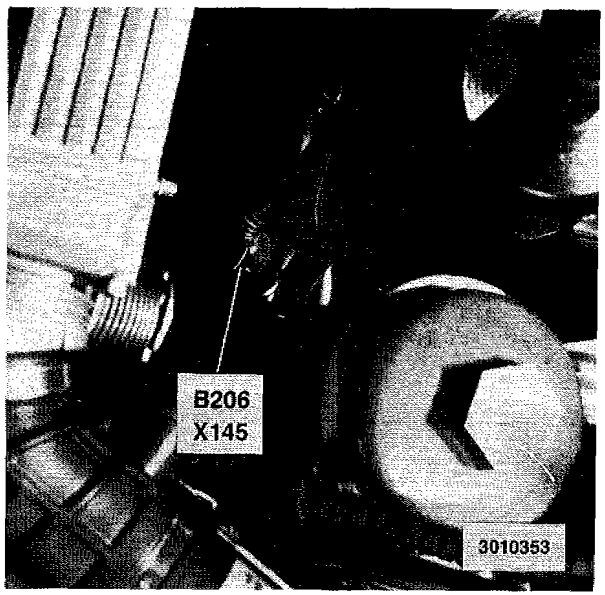

FIG. 1 - LH side of engine compartment

B206 OIL PRESSURE SWITCH
X145 CONNECTOR (2-PINS, BLACK)

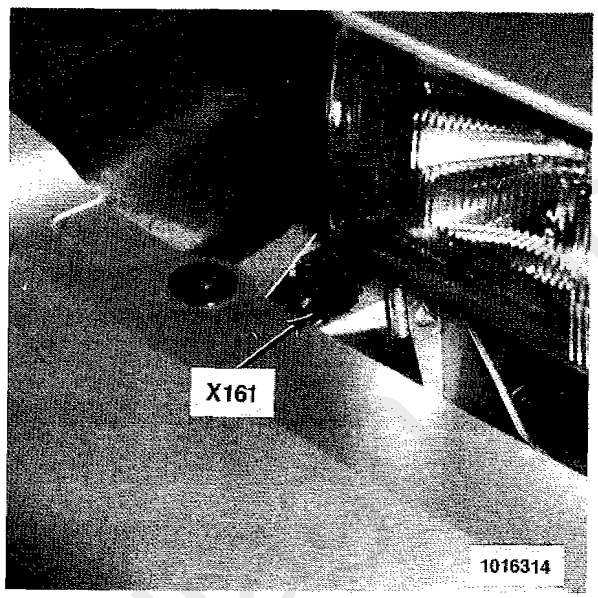

FIG. 2 - Near LH headlight assembly

X161 CONNECTOR (2-PINS, BLACK)

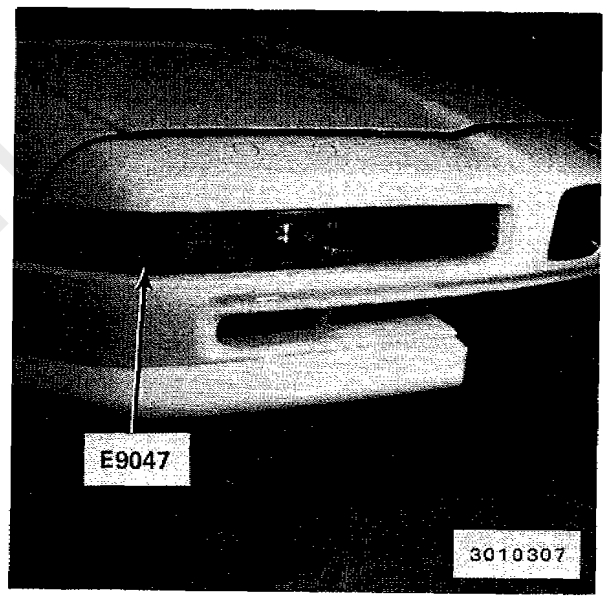

FIG. 3 - RH front of vehicle

E9047 RIGHT LIGHT BAND

cardiagn.com

COMPONENT LOCATION VIEWS

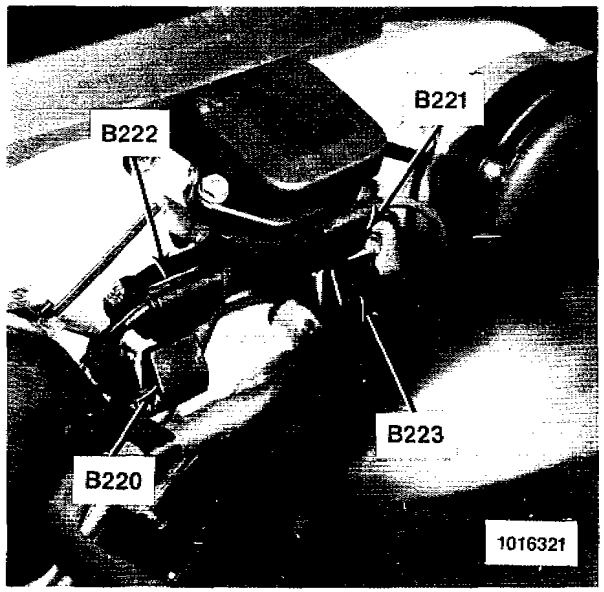

FIG. 1 - Front of engine compartment

B220 CYLINDER IDENTIFICATION SENSOR I
B221 CYLINDER IDENTIFICATION SENSOR II
B222 ENGINE SPEED SENSOR I
B223 ENGINE SPEED SENSOR II

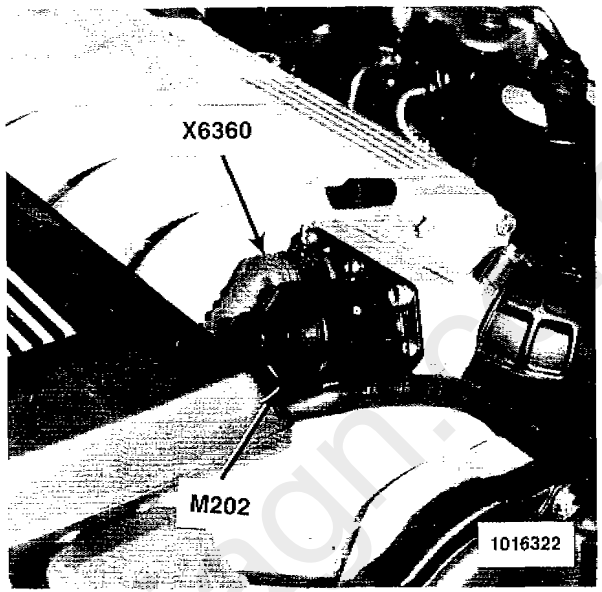

FIG. 2 - Front LH side of engine compartment

M202 THROTTLE POSITION MOTOR I (EML)
X6360 CONNECTOR (8-PINS, BLACK)

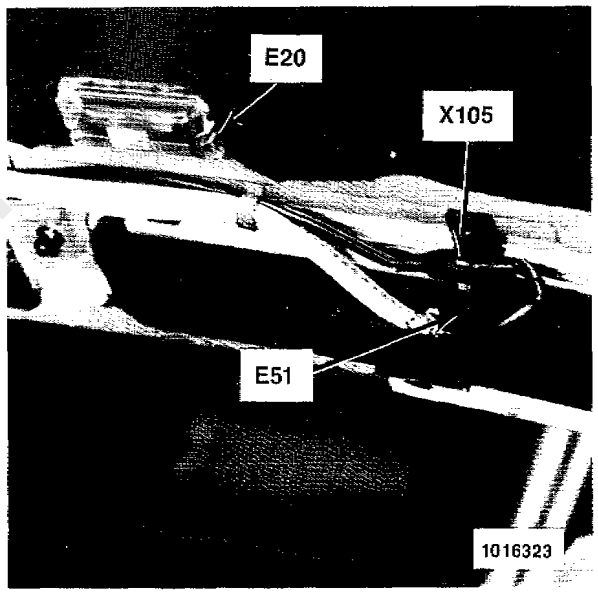

FIG. 3 - On underside of engine hood, left, (RH similar)

E20 UNDERHOOD LIGHT
E51 LEFT WASHER JET HEATER
X105 CONNECTOR (2-PINS, BLACK)

cardiagn.com

COMPONENT LOCATION VIEWS

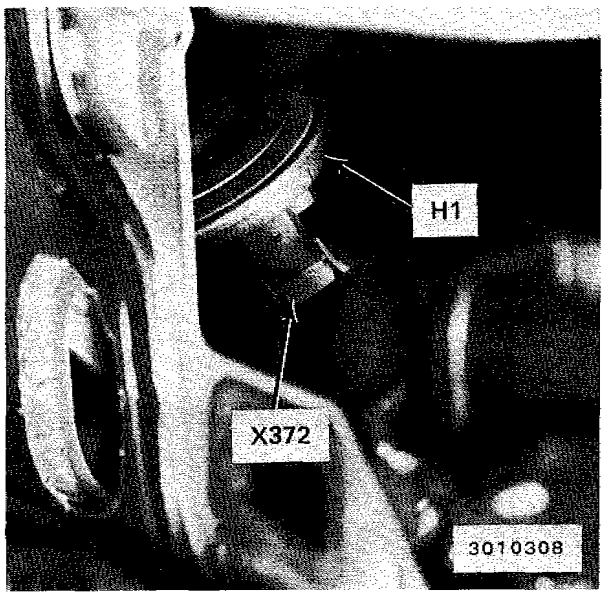

FIG. 1 - Behind RH fresh air cowl

H1	ANTITHEFT HORN
X372	CONNECTOR (2-PINS, WHITE)

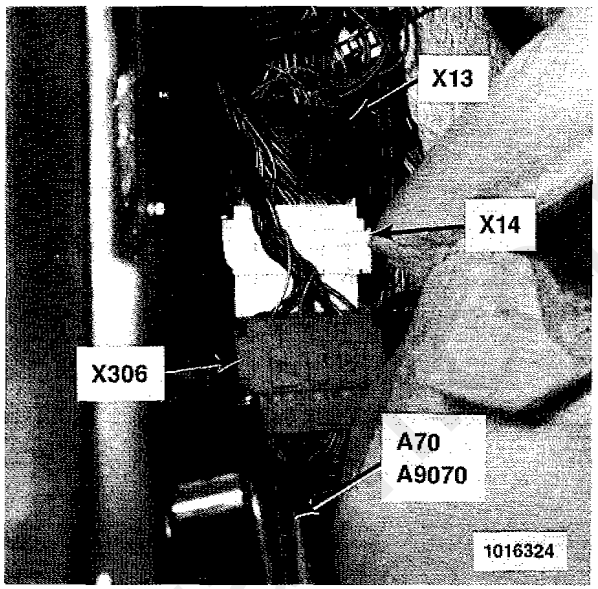

FIG. 2 - LH footwell, under footrest

A70	ABS/ASC ELECTRONIC CONTROL UNIT
A9070	ABS/ASC +T CONTROL UNIT
X13	CONNECTOR (30-PINS, BLACK)
X14	CONNECTOR (30-PINS, WHITE)
X306	CONNECTOR (30-PINS, BLUE)

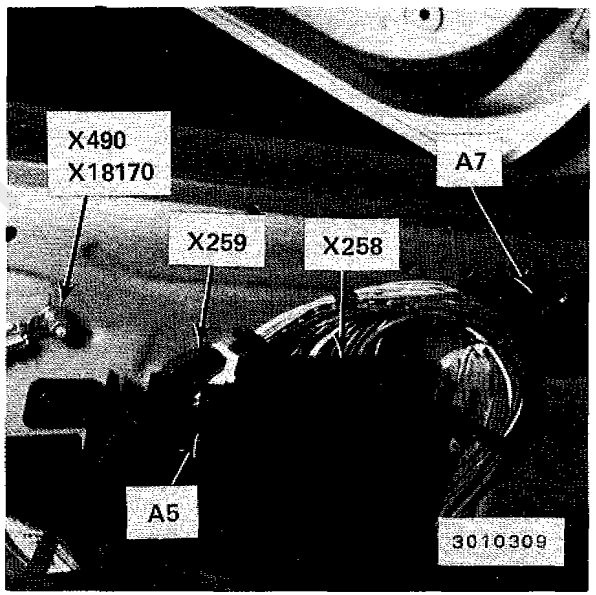

FIG. 3 - Inside box on interior side of LH door sill

A5	RELAY MODULE
X7	CONNECTOR (55-PINS, NATURAL)
X258	CONNECTOR (20-PINS, BLACK)
X259	CONNECTOR (26-PINS, BLACK)
X490	GROUND
X18170	GROUND

COMPONENT LOCATION VIEWS

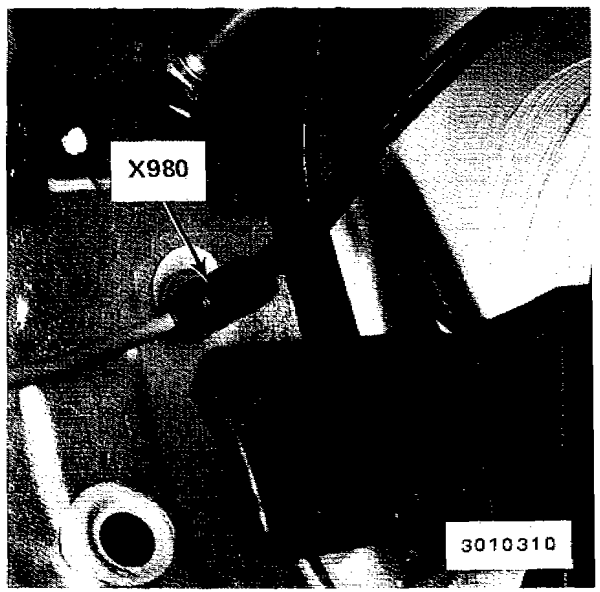

FIG. 1 - RH side of LH footwell, under carpet

X980 SPLICE

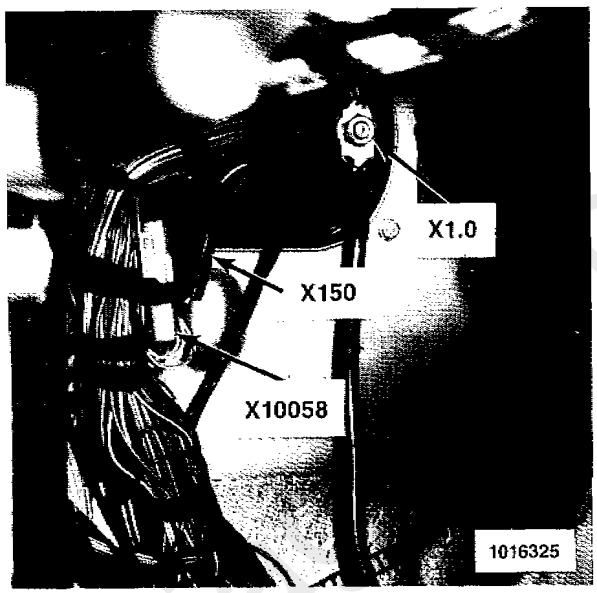

FIG. 2 - LH footwell, under footrest

X1.0 JUNCTION POST FOR P90 FRONT POWER DISTRIBUTION BOX
X150 CONNECTOR (4-PINS, BLACK)
X10058 CONNECTOR (1-PINS, YELLOW)

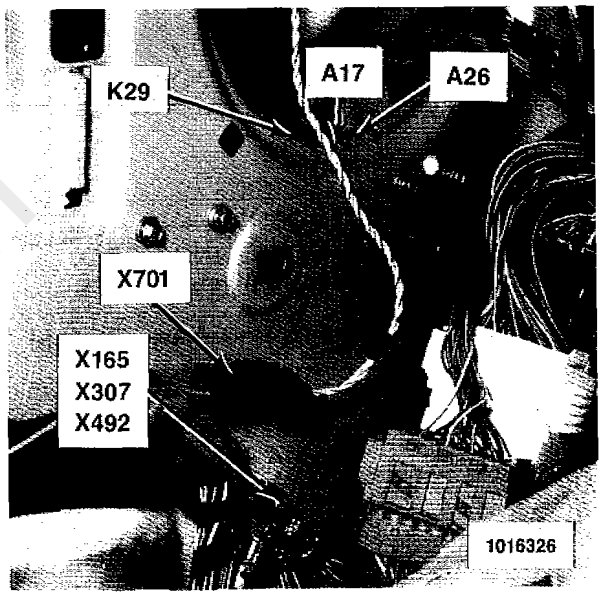

FIG. 3 - LH side of LH footwell

A17 SERVOTRONIC CONTROL UNIT
A26 LOCK-SENSOR CONTROL UNIT
K29 INTERIOR LIGHT RELAY
X165 GROUND
X307 GROUND
X492 GROUND
X701 CONNECTOR (2-PINS, BLACK)

cardiagn.com

COMPONENT LOCATION VIEWS

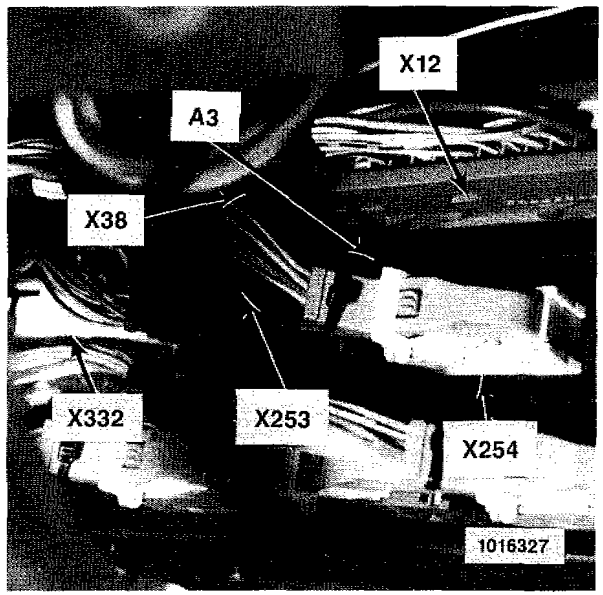

FIG. 1 - Below LH side of dash

A3	LAMP CONTROL MODULE
X12	CONNECTOR (20-PINS, RED)
X38	CONNECTOR (20-PINS, RED)
X253	CONNECTOR (26-PINS, BLACK)
X254	CONNECTOR (26-PINS, YELLOW)
X332	CONNECTOR (26-PINS, WHITE)

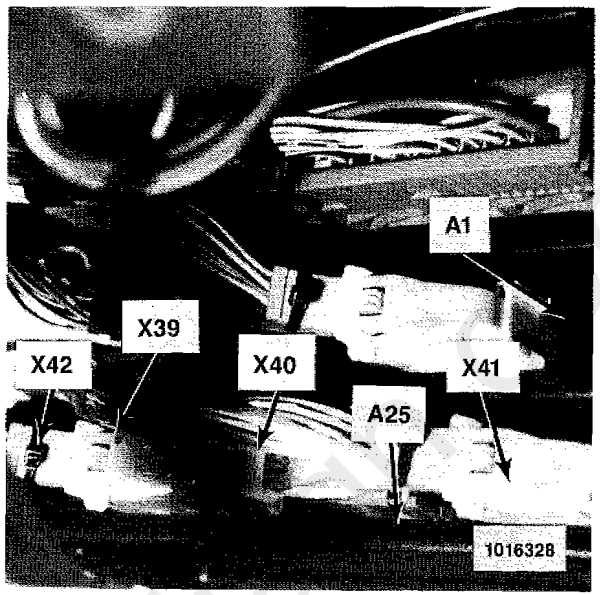

FIG. 2 - Below LH side of dash

A1	GENERAL MODULE
A25	ELECTRONIC BODY MODULE
X39	CONNECTOR (26-PINS, GREEN)
X40	CONNECTOR (26-PINS, BROWN)
X41	CONNECTOR (26-PINS, BLUE)
X42	CONNECTOR (5-PINS, BLACK)

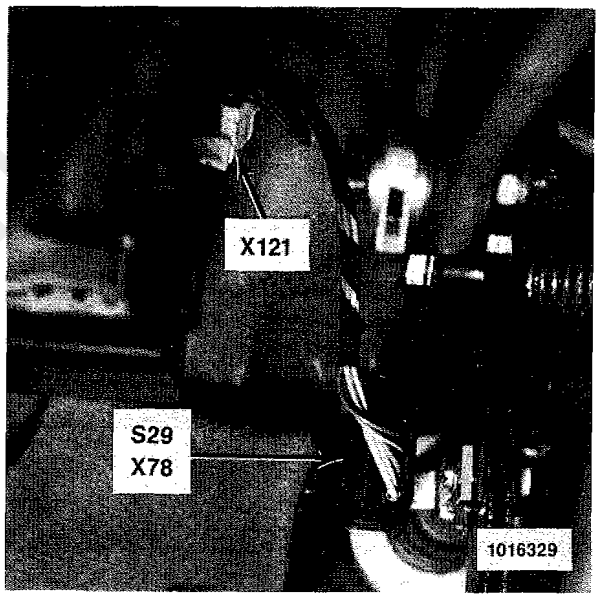

FIG. 3 - Below LH side of dash

S29	BRAKE LIGHT SWITCH
X78	CONNECTOR (4-PINS, BLACK)
X121	CONNECTOR (2-PINS, WHITE)

COMPONENT LOCATION VIEWS

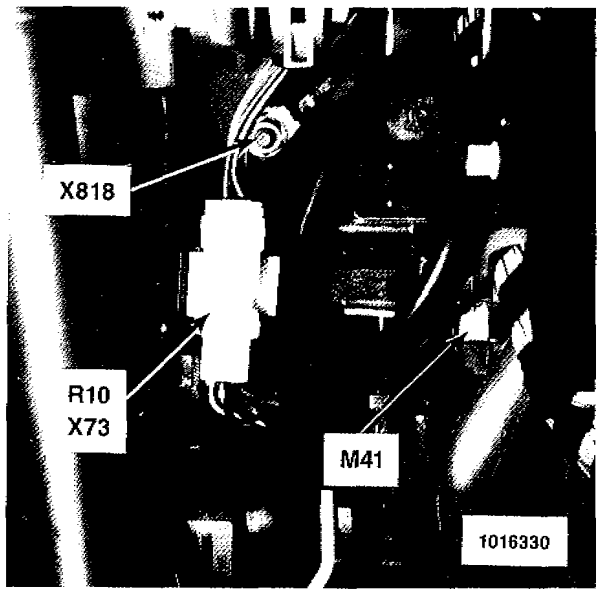

FIG. 1 - Below LH side of dash

M41	REAR COMPARTMENT ACTUATOR MOTOR
R10	PEDAL POSITION SENSOR
X73	CONNECTOR (8-PINS, WHITE)
X818	GROUND

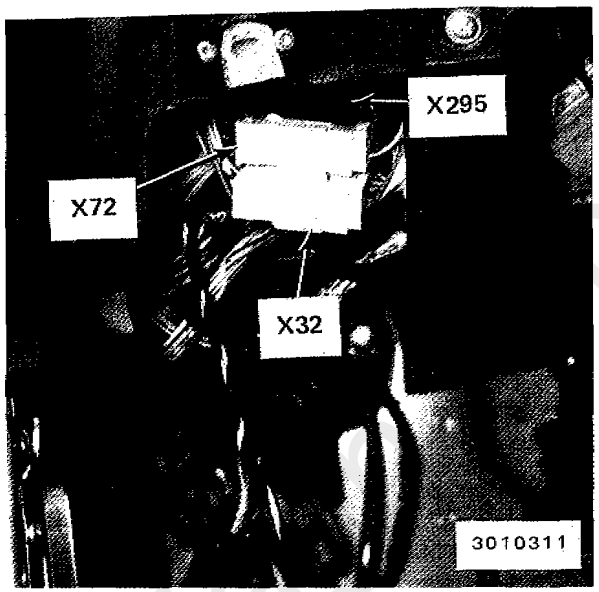

FIG. 2 - Below LH side of dash

X32	CONNECTOR (12-PINS, WHITE)
X72	CONNECTOR (8-PINS, WHITE)
X295	CONNECTOR (8-PINS, BLACK)

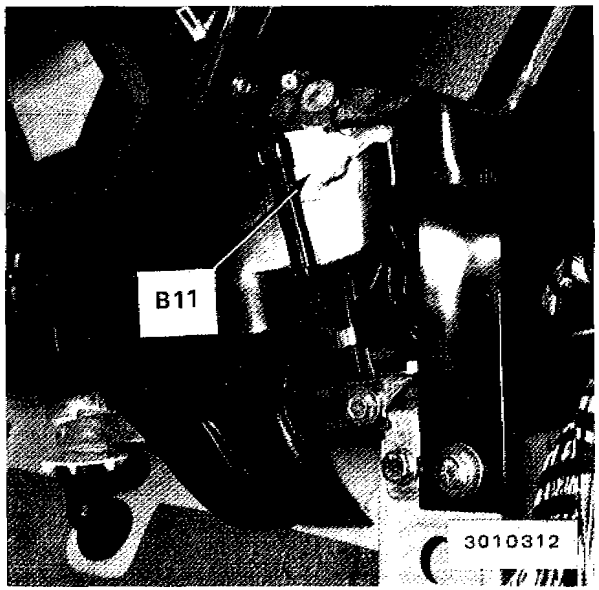

FIG. 3 - Below LH side of dash, LH side of IHKA Plenum

B11	LEFT HEAT EXCHANGER TEMPERATURE SENSOR

cardiagn.com

COMPONENT LOCATION VIEWS

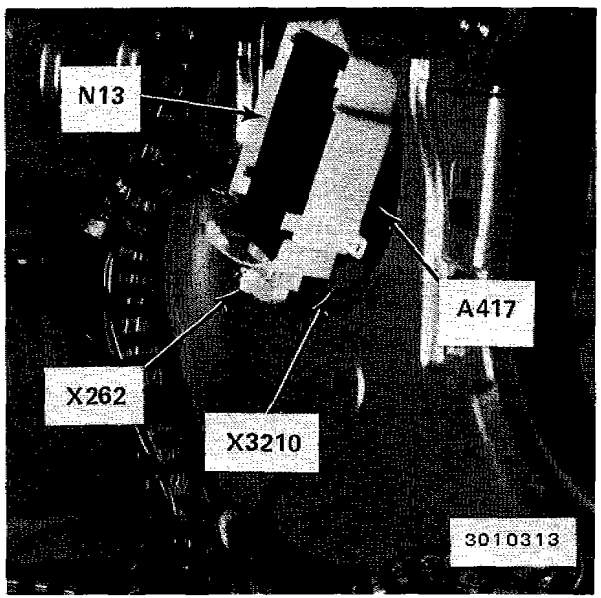

FIG. 1 - Behind RH footwell speaker grill

A417	AUTOMATIC AIR RECIRCULATION CONTROL UNIT
N13	INFRARED LOCKING CONTROL UNIT
X262	CONNECTOR (26-PINS, YELLOW)
X3210	CONNECTOR (26-PINS, BLUE)

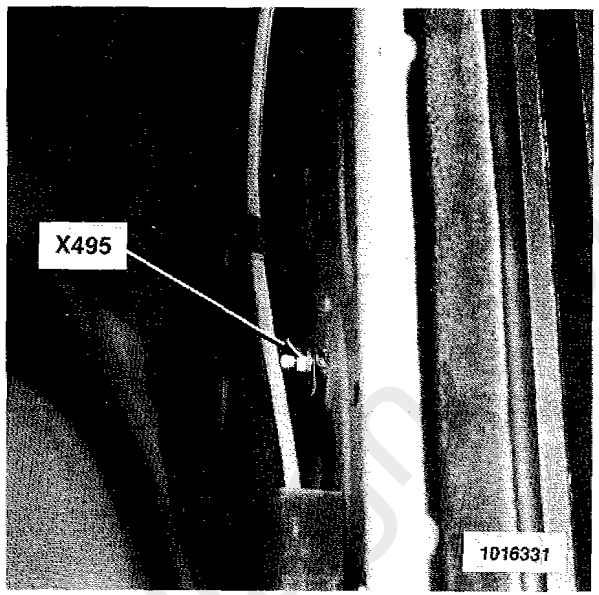

FIG. 2 - Interior side of RH door sill

X495	GROUND

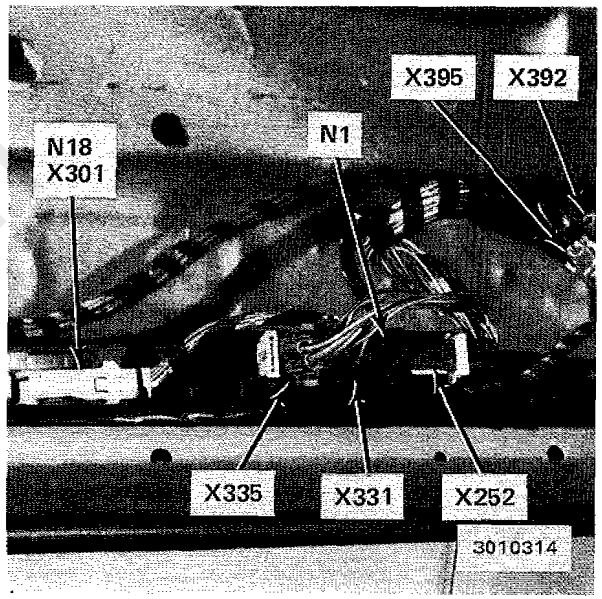

FIG. 3 - Interior side of RH door sill

X252	CONNECTOR (26-PINS, BLACK)
X301	CONNECTOR (26-PINS, WHITE)
X331	CONNECTOR (5-PINS, BLACK)
X335	CONNECTOR (4-PINS, GREEN)
X392	CONNECTOR (1-PINS, BLUE)
X395	CONNECTOR (1-PINS, YELLOW)
N1	ANTITHEFT MODULE (DWA)
N18	AUXILIARY ANTI-THEFT MODULE (DWA)

cardiagn.com

COMPONENT LOCATION VIEWS

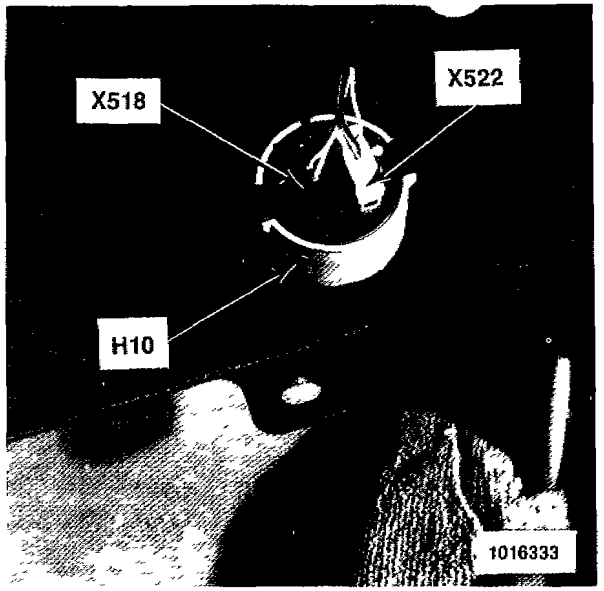

FIG 1 - Below RH side of dash

H10	ACOUSTIC DEVICE
X518	CONNECTOR (4-PINS, BLACK)
X522	CONNECTOR (3-PINS, WHITE)

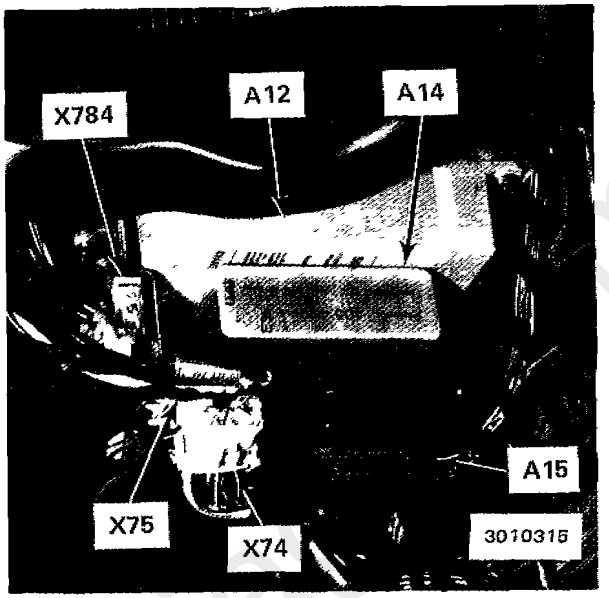

FIG 2 - Below RH side of dash, (glove box removed)

A12	DIAGNOSTIC MODULE (SRS)
A14	PARK HEATING/VENTILATION CONTROL UNIT
A15	PARK HEATING/VENTILATION RELAY BOX
X74	CONNECTOR (8-PINS, ORANGE)
X75	CONNECTOR (6-PINS, ORANGE)
X784	CONNECTOR (2-PINS, ORANGE)

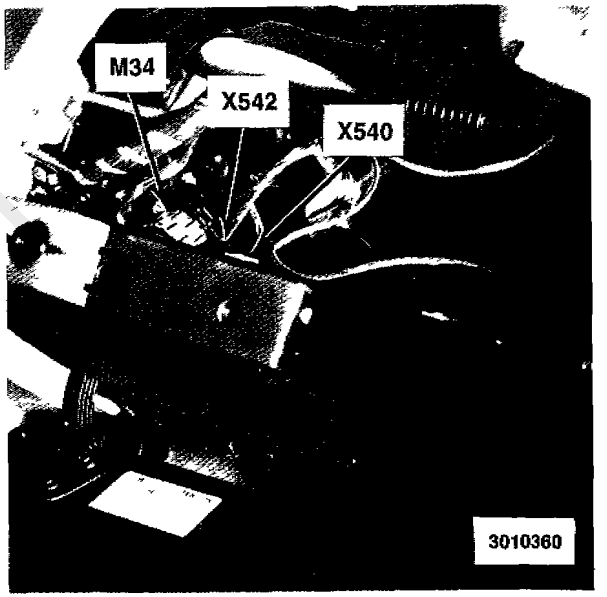

FIG. 3 - RH side of dash, (glove box removed)

M34	DASH VENT MIXING FLAP MOTOR
X540	CONNECTOR (2-PINS, BLACK)
X542	CONNECTOR (2-PINS, BLACK)

COMPONENT LOCATION VIEWS

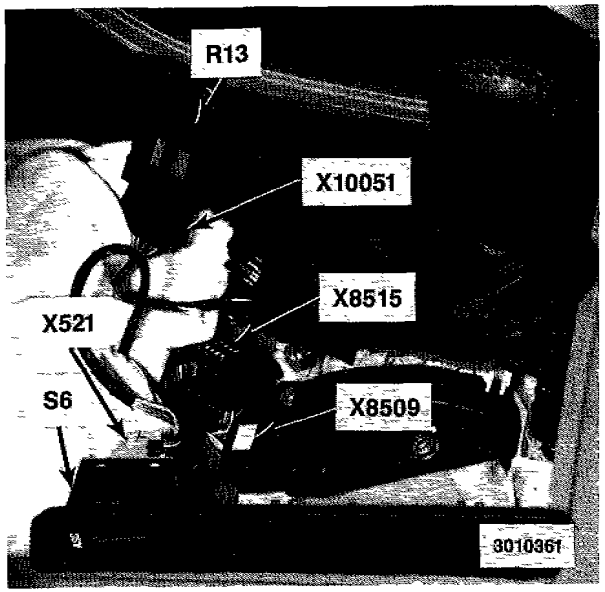

FIG 1 - Center console

R13	HEADLIGHT WIDENING POTENTIOMETER
S6	ASC SWITCH
X521	CONNECTOR (6-PINS, BLUE)
X8509	CONNECTOR (8-PINS, BLACK)
X8515	CONNECTOR (8-PINS, BLACK)
X10051	CONNECTOR (4-PINS, BLACK)

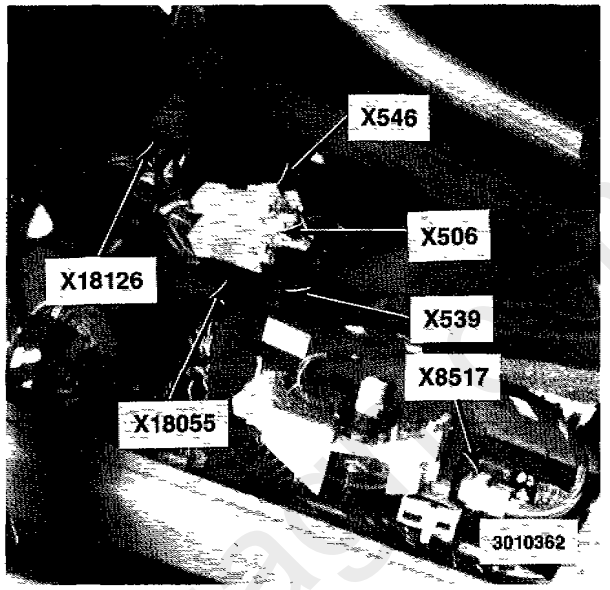

FIG 2 - Center console

X506	CONNECTOR (12-PINS, WHITE)
X539	CONNECTOR (2-PINS, BLACK)
X546	CONNECTOR (2-PINS, BLACK)
X8517	CONNECTOR (10-PINS, BLACK)
X18055	CONNECTOR (12-PINS, BLACK)
X18126	CONNECTOR (17-PINS, RED)

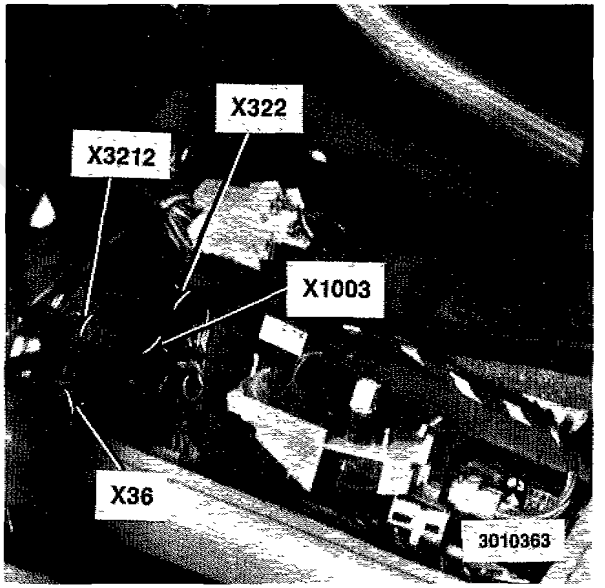

FIG 3 - Center console

X36	CONNECTOR (21-PINS, BLACK)
X321	CONNECTOR (4-PINS, BLACK)
X322	CONNECTOR (8-PINS, BLACK)
X1003	CONNECTOR (12-PINS, BLACK)

COMPONENT LOCATION VIEWS

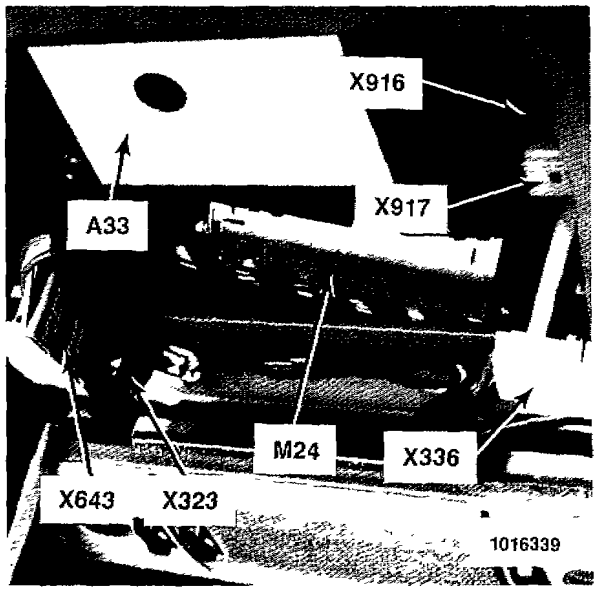

FIG 1 - Center of windshield header

A33	SUNROOF MODULE
M24	SUNROOF MOTOR
X323	CONNECTOR (6-PINS, WHITE)
X336	CONNECTOR (4-PINS, WHITE)
X643	CONNECTOR (6-PINS, BLUE)
X916	CONNECTOR (5-PINS, RED)
X917	CONNECTOR (6-PINS, RED)

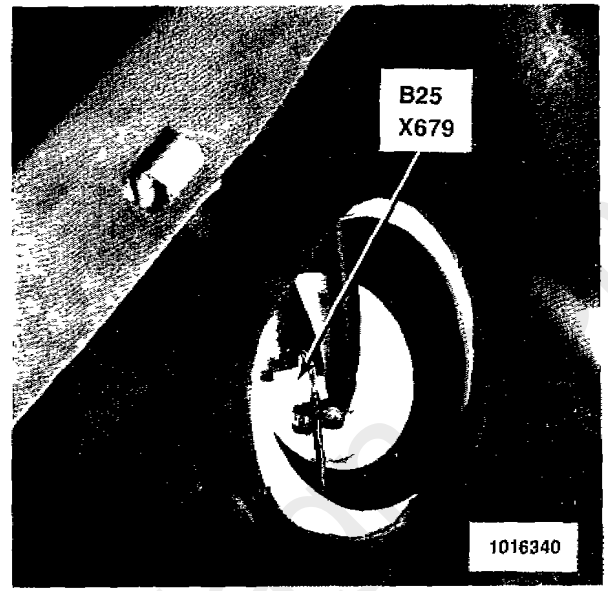

FIG 2 - Under LH rear seat

B25	FUEL LEVEL SENSOR II
X679	CONNECTOR (2-PINS, WHITE)

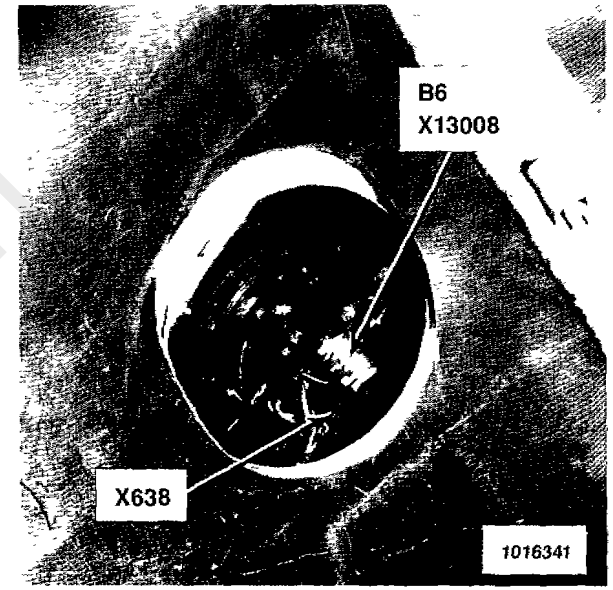

FIG 3 - Under RH rear seat

B6	FUEL LEVEL SENSOR I
X638	CONNECTOR (3-PINS, BLACK)
X13008	CONNECTOR (2-PINS, WHITE)

COMPONENT LOCATION VIEWS

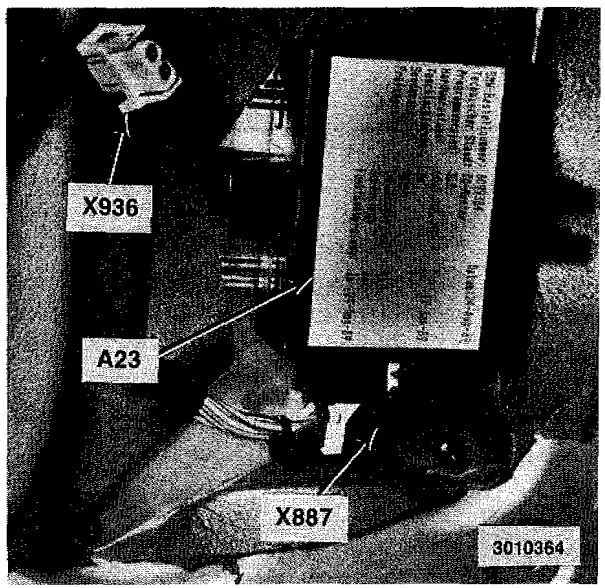

FIG. 1 - In lower LH front door, right, (RH similar)

A23 DRIVER'S DOOR MODULE
X887 CONNECTOR (26-PINS, BLACK)
X936 CONNECTOR (2-PINS, WHITE)

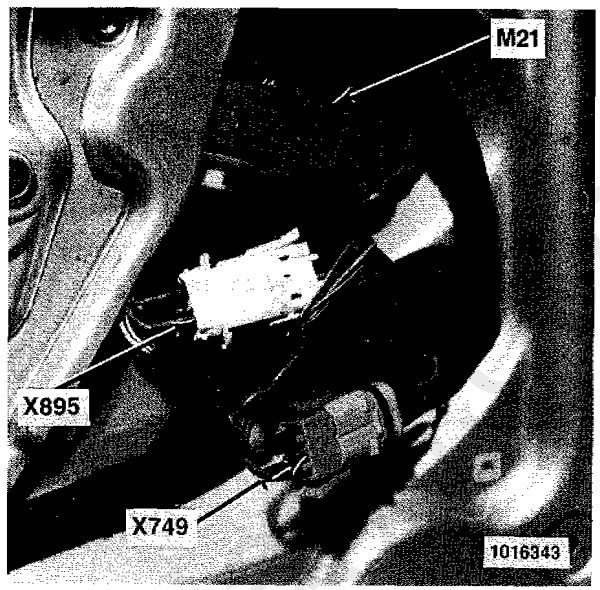

FIG. 2 - In lower LH front door, right, (RH similar)

M21 DRIVER'S POWER WINDOW MOTOR/INCREMENT SENSOR
X749 CONNECTOR (6-PINS, BLACK)

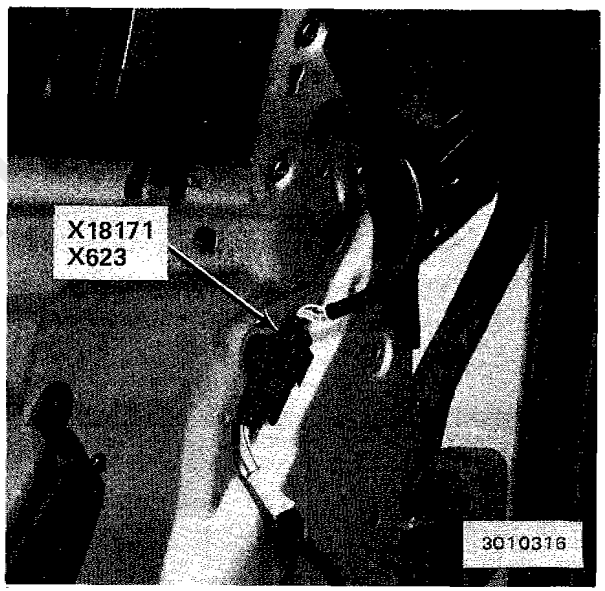

FIG. 3 - In upper LH front door, right, (RH similar)

X18171 CONNECTOR (10-PINS, BLACK)
X623 CONNECTOR (10-PINS, ORANGE)

COMPONENT LOCATION VIEWS

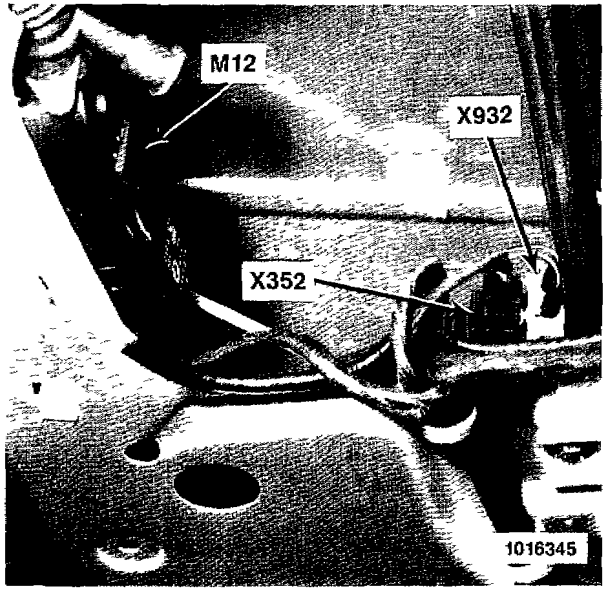

FIG. 1 - In lower LH front door, left, (RH similar)

M12	DRIVER'S DOOR LOCK MOTOR
X352	CONNECTOR (2-PINS, BLACK)
X932	CONNECTOR (2-PINS, BLUE)

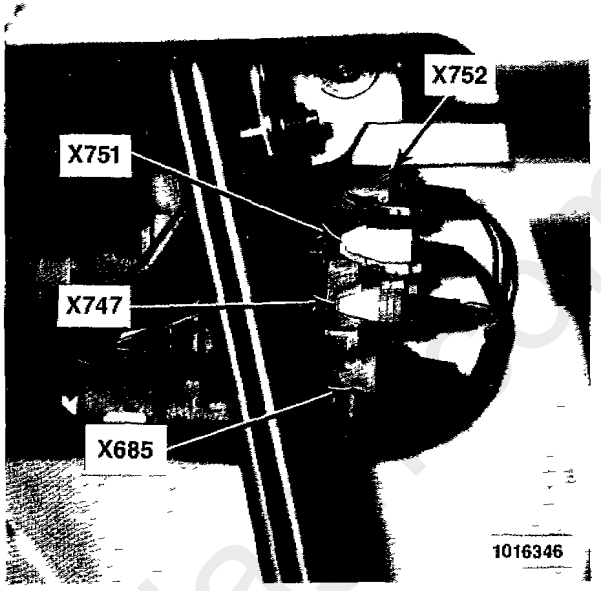

FIG 2 - In upper LH front door, left, (RH similar)

X685	CONNECTOR (3-PINS, BLACK)
X747	CONNECTOR (2-PINS, YELLOW)
X751	CONNECTOR (2-PINS, WHITE)
X752	CONNECTOR (2-PINS, BLUE)

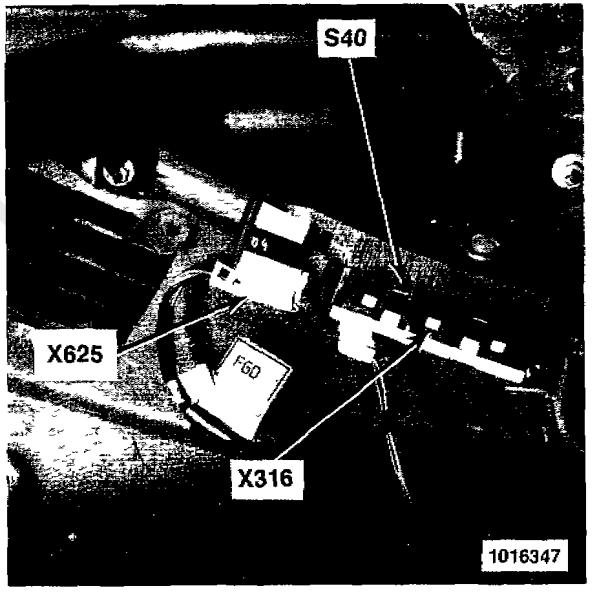

FIG 3 - LH front door, behind door panel, (RH similar)

S40	FRONT CONSOLE WINDOW SWITCH ASSEMBLY
X316	CONNECTOR (6-PINS, WHITE)
X625	CONNECTOR (6-PINS, WHITE)

COMPONENT LOCATION VIEWS

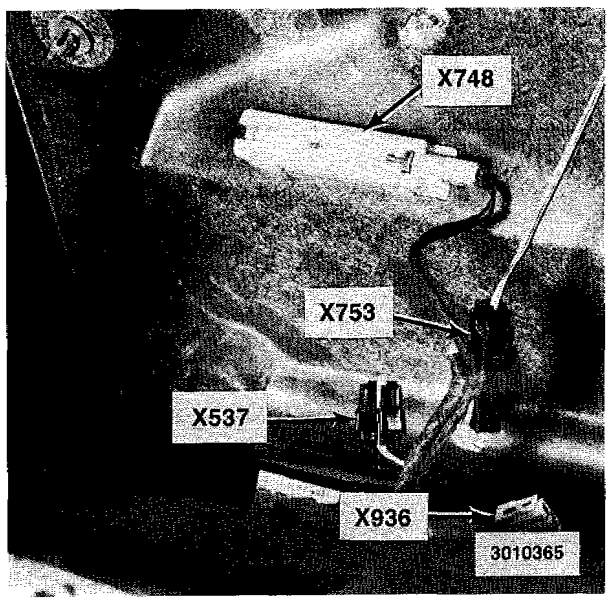

FIG. 1 - LH front door, behind door panel, (RH similar)

X537	CONNECTOR (2-PINS, BLACK)
X748	CONNECTOR (2-PINS, WHITE)
X753	CONNECTOR (2-PINS, BLACK)
X936	CONNECTOR (2-PINS, WHITE)

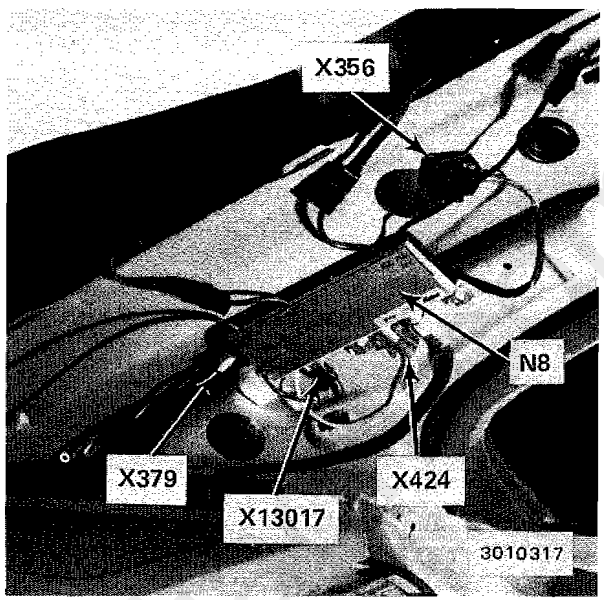

FIG. 2 - In upper LH C-pillar

N8	ANTENNA AMPLIFIER AM/FM
X356	CONNECTOR (2-PINS, BLACK)
X379	CONNECTOR (1-PINS, BLACK)
X424	CONNECTOR (1-PINS, BROWN)
X13017	CONNECTOR (1-PINS, BLACK)

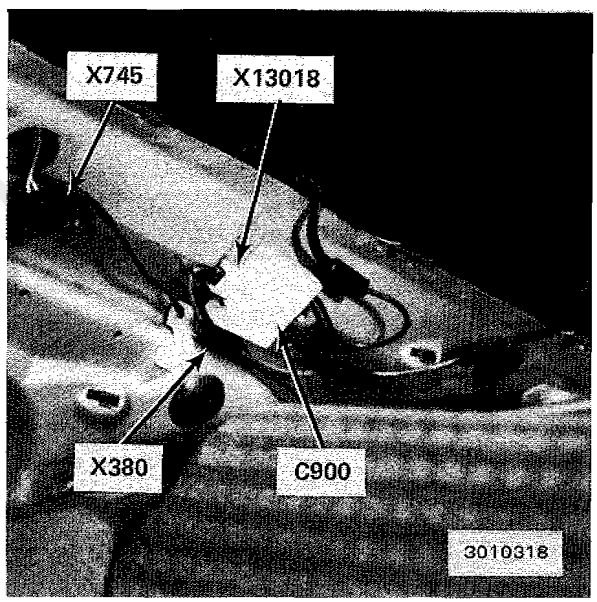

FIG. 3 - In upper RH C-pillar

C900	SUPPRESSION FILTER
C900	FM AMPLIFIER/SUPPRESSION FILTER
X380	CONNECTOR (1-PINS, BLACK)
X745	CONNECTOR (2-PINS, BLACK)
X13018	CONNECTOR (1-PINS, BLACK)

COMPONENT LOCATION VIEWS

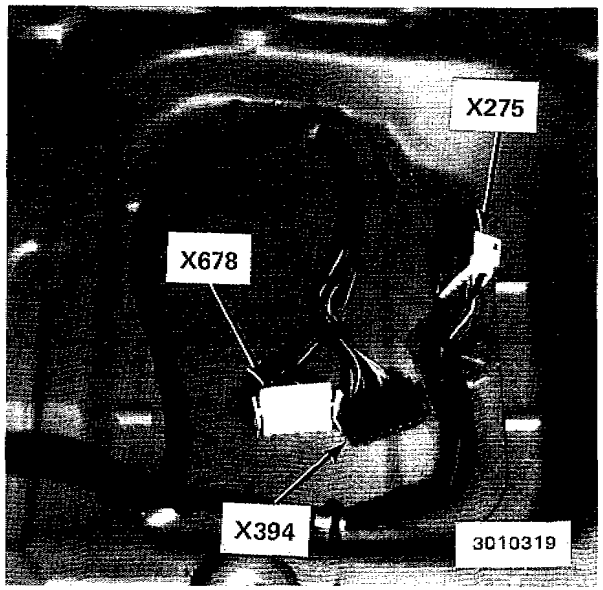

FIG. 1 - Under LH front seat, under carpet

X275	CONNECTOR (12-PINS, WHITE)
X394	CONNECTOR (12-PINS, BLACK)
X678	CONNECTOR (12-PINS, WHITE)

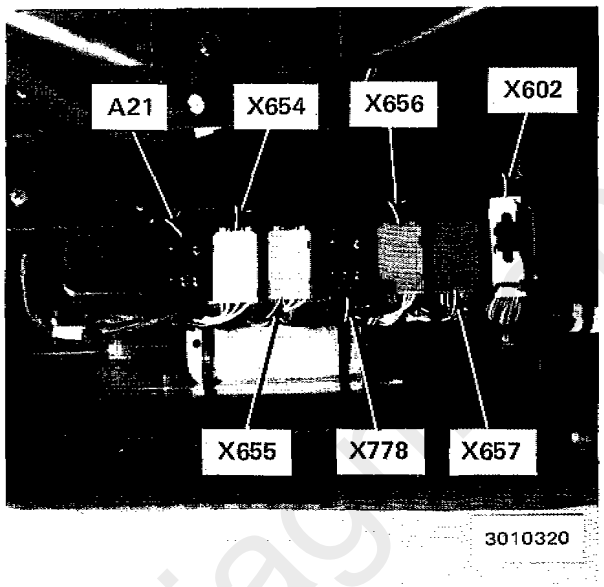

FIG. 2 - Underside of LH front seat

A21	MEMORY SEAT/MIRRORS CONTROL UNIT
X602	CONNECTOR (26-PINS, BLACK)
X654	CONNECTOR (6-PINS, WHITE)
X655	CONNECTOR (6-PINS, WHITE)
X656	CONNECTOR (6-PINS, GREEN)
X657	CONNECTOR (6-PINS, BROWN)
X778	CONNECTOR (2-PINS, BLACK)

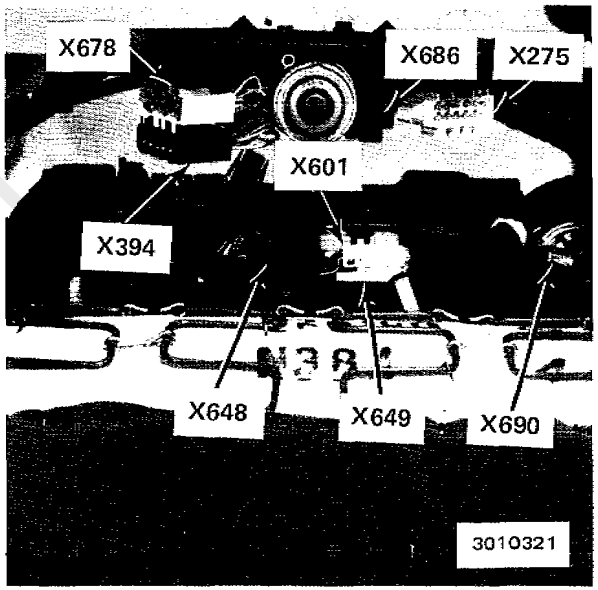

FIG. 3 - Underside of LH front seat

X275	CONNECTOR (12-PINS, WHITE)
X394	CONNECTOR (12-PINS, BLACK)
X601	CONNECTOR (26-PINS, BLACK)
X648	CONNECTOR (6-PINS, BLACK)
X649	CONNECTOR (6-PINS, WHITE)
X678	CONNECTOR (12-PINS, WHITE)
X686	CONNECTOR (3-PINS, BLUE)
X690	CONNECTOR (3-PINS, BLUE)

cardiagn.com

COMPONENT LOCATION VIEWS

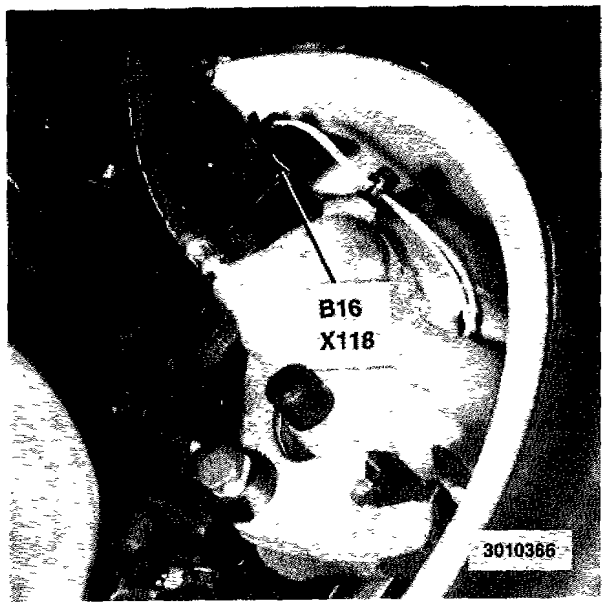

FIG 1 - Behind LH front wheel, RH rear wheel similar

B16 LEFT FRONT BRAKE PAD SENSOR

X118 CONNECTOR (2-PINS, BLACK)

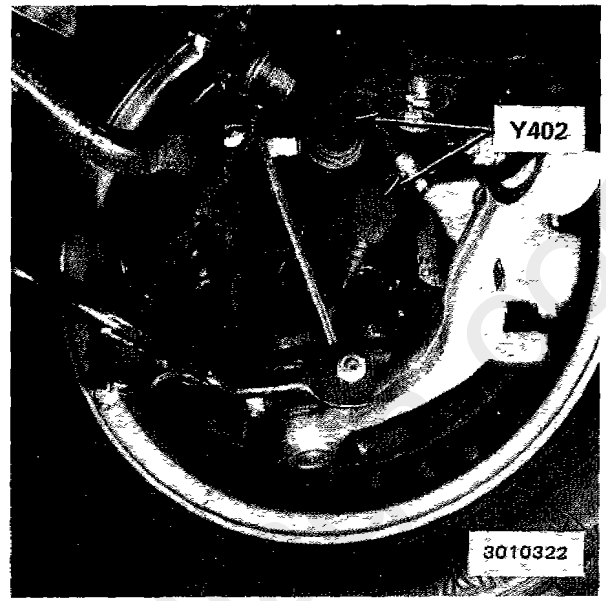

FIG 2 - Behind LH front wheel, (RH similar)

Y402 RIGHT FRONT EDC VALVE

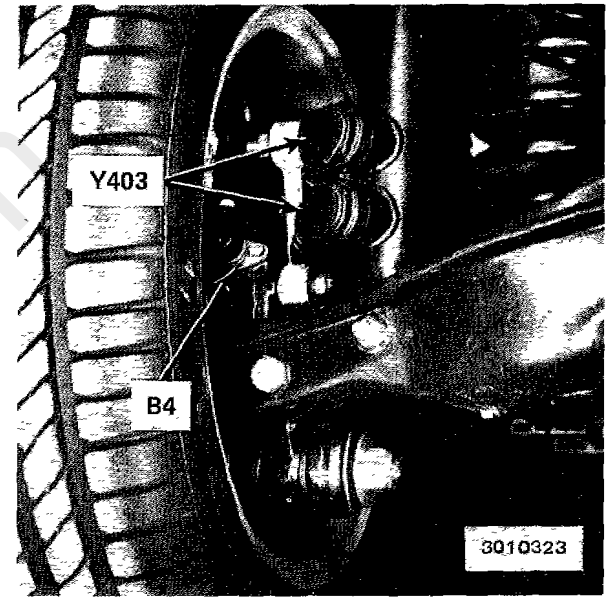

FIG 3 - Behind LH rear wheel, (RH similar)

B4 LEFT REAR SPEED SENSOR

Y403 LEFT REAR EDC VALVE

cardiagn.com

COMPONENT LOCATION VIEWS

FIG. 1 - Under RH front of car

X6230 CONNECTOR (3-PINS, BLACK)

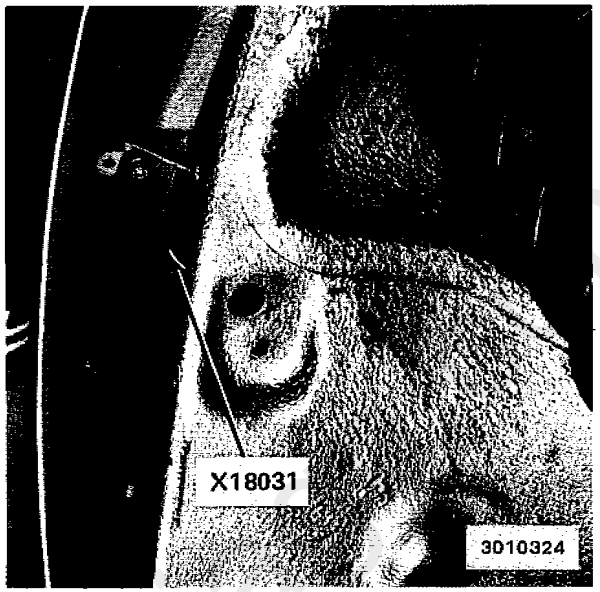

FIG. 2 - RH front of wheel well above

X18031 CONNECTOR (3-PINS, BLACK)

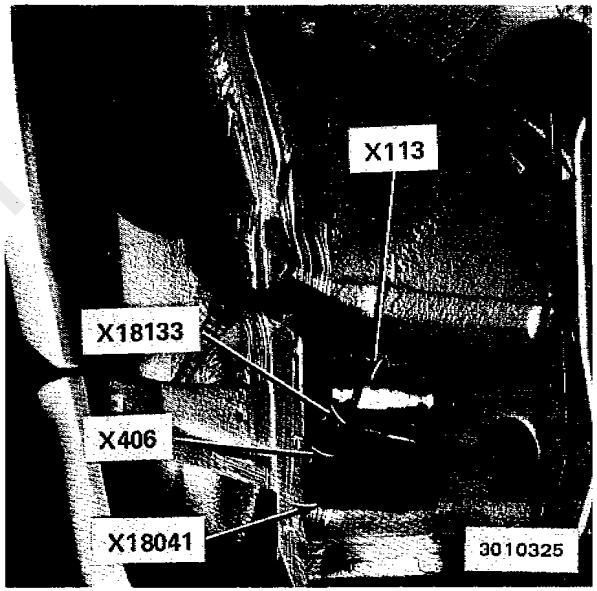

FIG. 3 - Below

X113 CONNECTOR (2-PINS, WHITE)
X406 CONNECTOR (3-PINS, BLACK)
X18041 CONNECTOR (2-PINS, BLACK)
X18133 CONNECTOR (2-PINS, BLACK)

cardiagn

COMPONENT LOCATION VIEWS

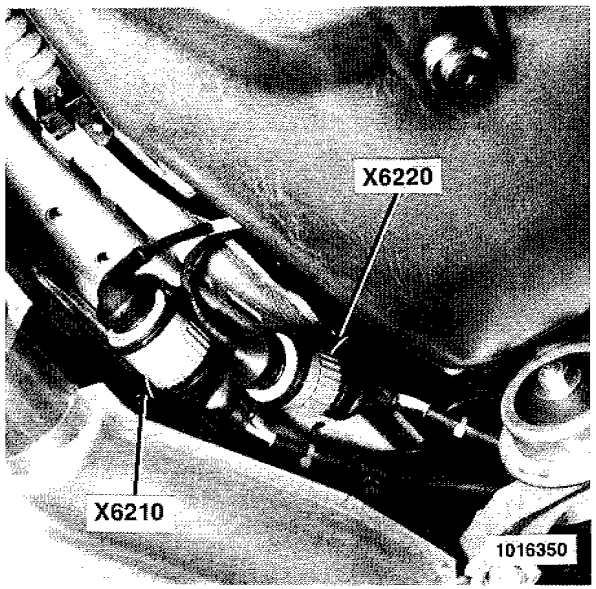

FIG. 1 - On catalytic converter

X6210	CONNECTOR (4-PINS, GRAY)
X6220	CONNECTOR (4-PINS, GRAY)

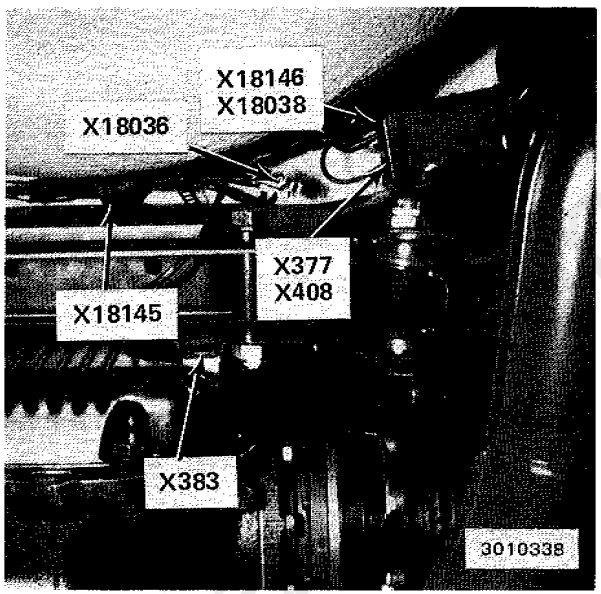

FIG. 2 - Under rear of car

X377	CONNECTOR (2-PINS, WHITE)
X383	CONNECTOR (2-PINS, BLACK)
X408	CONNECTOR (3-PINS, BLACK)
X18036	CONNECTOR (2-PINS, GRAY)
X18038	CONNECTOR (2-PINS, BLACK)
X18145	CONNECTOR (2-PINS, BLACK)
X18146	CONNECTOR (2-PINS, YELLOW)

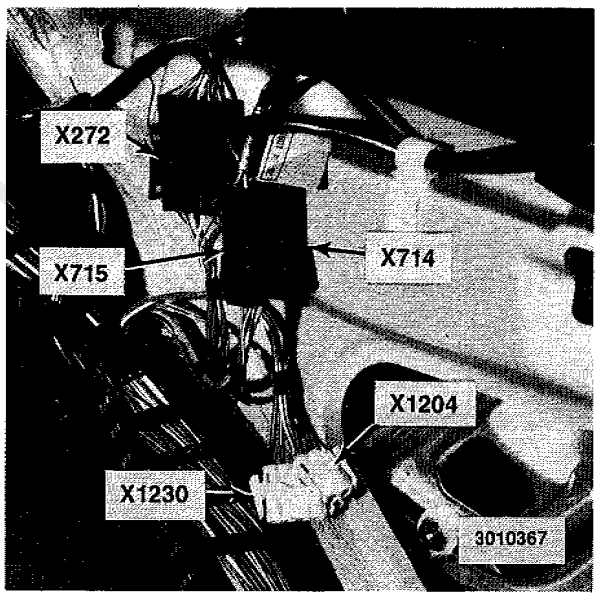

FIG. 3 - Left from LH rear seat, behind trim panel

X272	CONNECTOR (6-PINS, BLACK)
X714	CONNECTOR (4-PINS, BLACK)
X715	CONNECTOR (2-PINS, BLACK)
X1204	CONNECTOR (2-PINS, WHITE)
X1230	CONNECTOR (4-PINS, WHITE)

COMPONENT LOCATION VIEWS

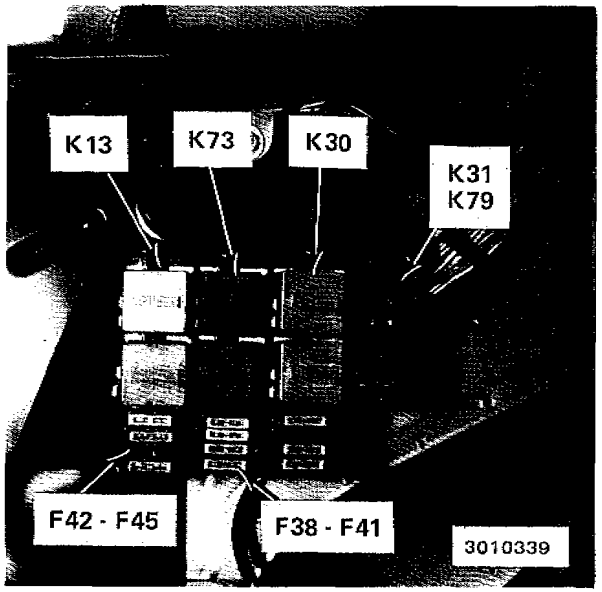

FIG. 1 - In LH side of luggage compartment

K13	REAR DEFOGGER RELAY
K30	ELECTRIC POWER PROTECTION RELAY II
K31	CIGAR LIGHTER RELAY
K73	CONSUMER CUT-OFF RELAY II
K79	NORWAY FOGLIGHT RELAY

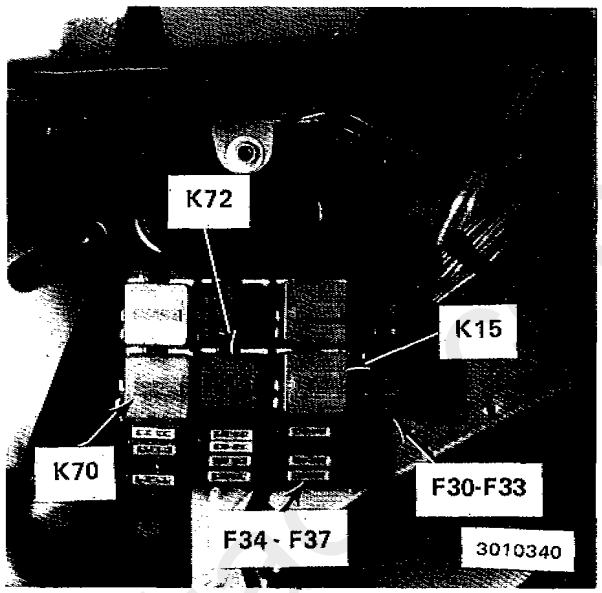

FIG. 2 - In LH side of luggage compartment

K15	ELECTRIC POWER PROTECTION RELAY
K70	CENTRAL LOCKING TRUNK LID MOTOR RELAY
K72	CONSUMER CUT-OFF RELAY I

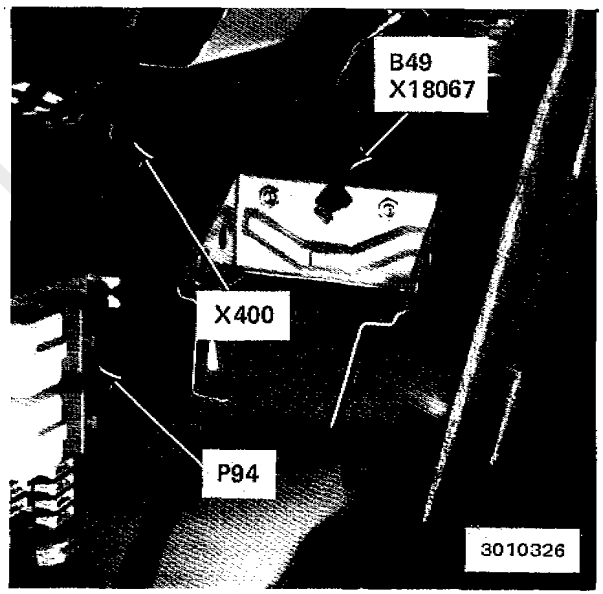

FIG. 3 - In LH forward side of luggage compartment

B49	LONGITUDINAL ACCELERATION SENSOR
P94	REAR POWER DISTRIBUTION BOX
X400	CONNECTOR (8-PINS, BLACK)
X18067	CONNECTOR (3-PINS, BLACK)

COMPONENT LOCATION VIEWS

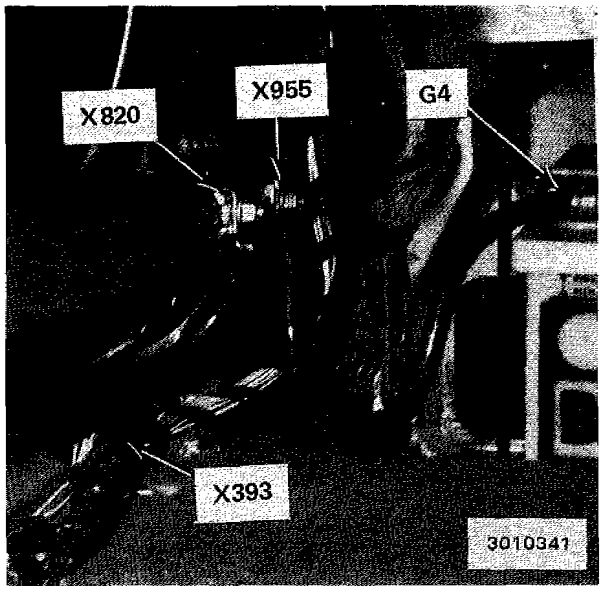

FIG. 1 - In LH rear side of luggage compartment

G4 BATTERY II, LEFT
X393 CONNECTOR (6-PINS, BLACK)
X820 GROUND
X955 GROUND

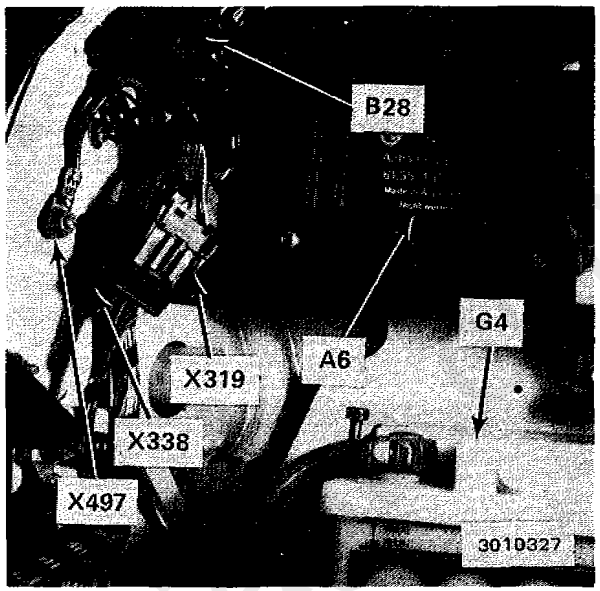

FIG. 2 - In LH rear side of luggage compartment

A6 TRAILER MODULE (AHM)
B28 GRADIENT MONITOR (DWA)
G4 BATTERY II, LEFT
X319 CONNECTOR (4-PINS, BLACK)
X338 CONNECTOR (4-PINS, BLACK)
X497 GROUND

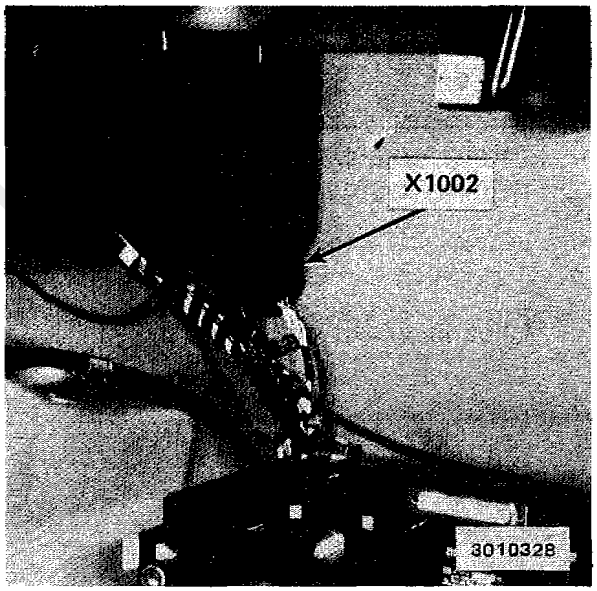

FIG. 3 - In LH rear side of luggage compartment

X1002 CONNECTOR (4-PINS, BLACK)

COMPONENT LOCATION VIEWS

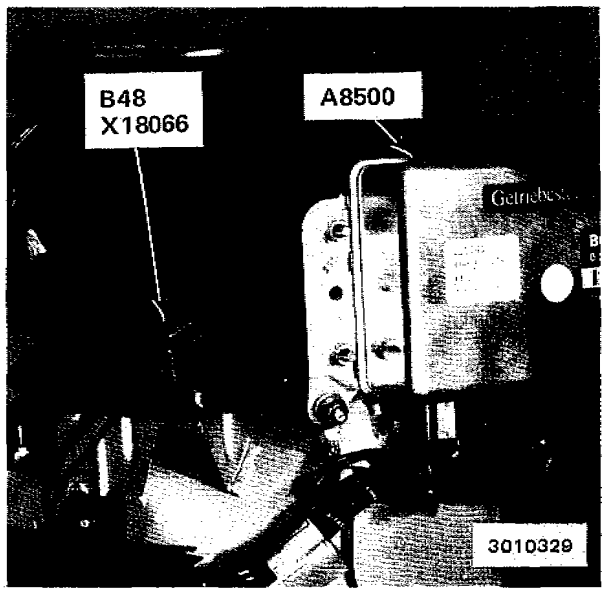

FIG. 1 - In RH rear side of luggage compartment

A8500	EGS CONTROL UNIT
B48	RIGHT REAR ACCELERATION SENSOR
X18066	CONNECTOR (3-PINS, BLACK)

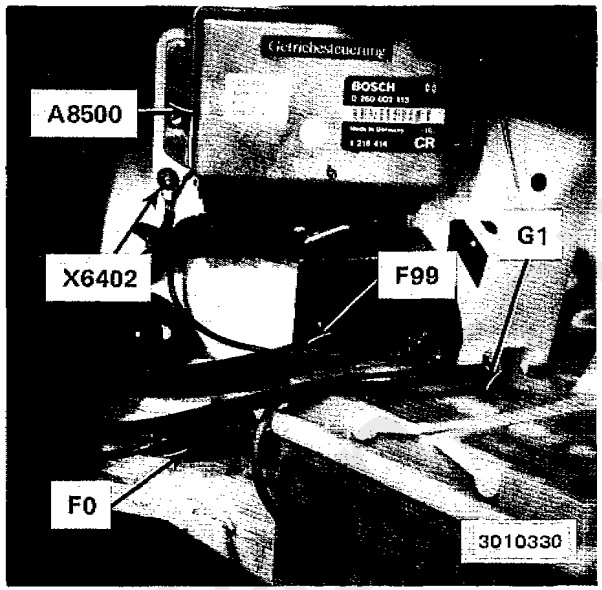

FIG. 2 - In RH side of luggage compartment

A8500	EGS CONTROL UNIT
F0	FUSIBLE LINK (80 A)
F99	FUSIBLE LINK (50A)
G1	BATTERY I, RIGHT
X6402	GROUND

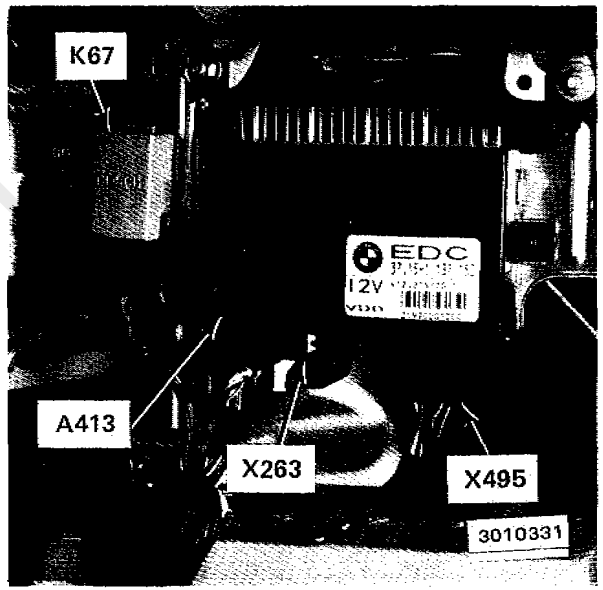

FIG. 3 - In RH side of luggage compartment

A413	EDC CONTROL UNIT
K67	EDC RELAY
X263	CONNECTOR (26-PINS, BLACK)
X945	CONNECTOR (10-PINS, BLACK)

COMPONENT LOCATION VIEWS

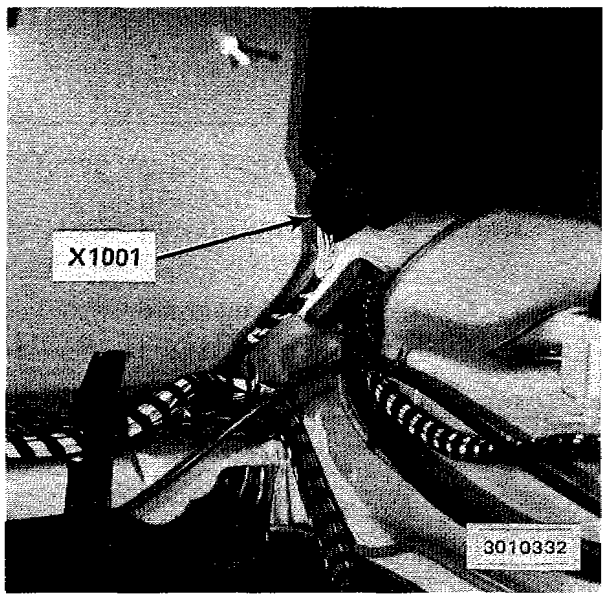

FIG. 1 - In RH rear side of luggage compartment

X1001 CONNECTOR (4-PINS, BLACK)

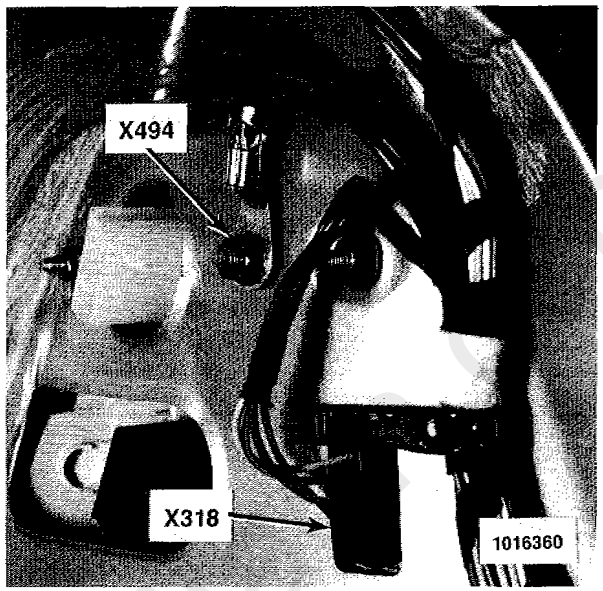

FIG. 2 - In RH rear side of luggage compartment

X318 CONNECTOR (4-PINS, BLACK)
X494 GROUND

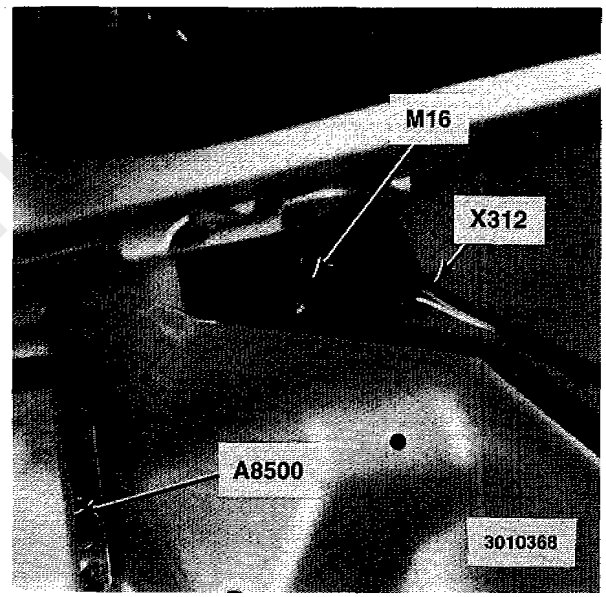

FIG. 3 - In RH rear side of luggage compartment

A8500 EGS CONTROL UNIT
M16 GAS FILLER LOCK MOTOR
X312 CONNECTOR (6-PINS, BLACK)

COMPONENT LOCATION VIEWS

FIG. 1 - In LH rear side of luggage compartment

X695 CONNECTOR (3-PINS, BLACK)

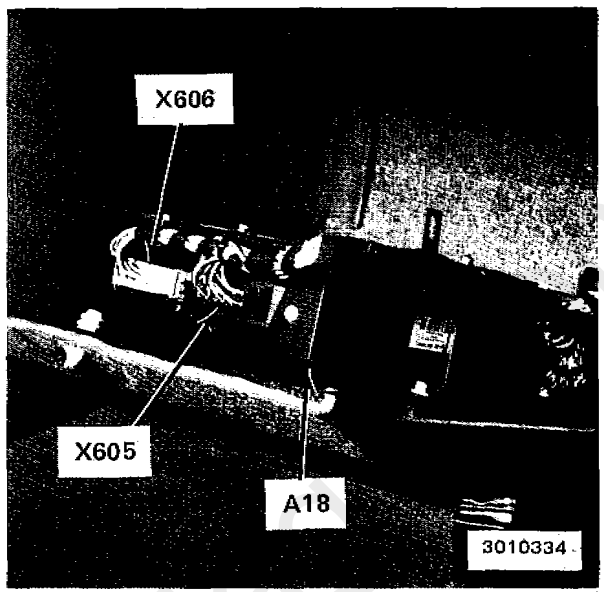

FIG. 2 - In LH rear side of luggage compartment

A18 HIFI AMPLIFIER
X605 CONNECTOR (12-PINS, BLACK)
X606 CONNECTOR (12-PINS, WHITE)

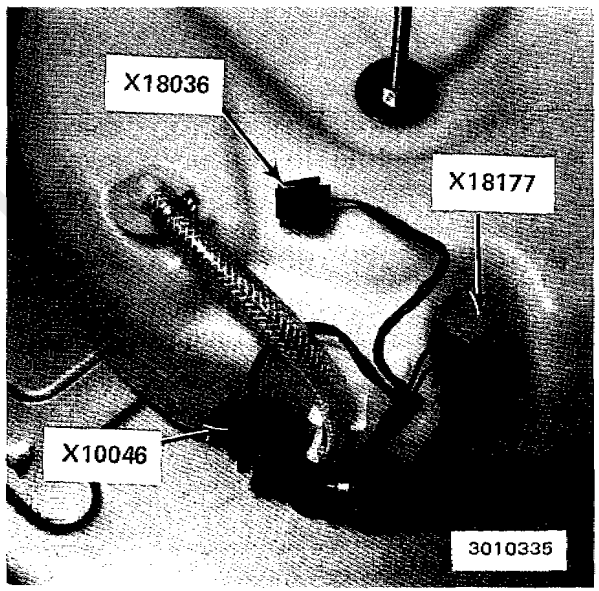

FIG. 3 - Water pump in luggage compartment

X10046 CONNECTOR (2-PINS, BLACK)
X18036 CONNECTOR (2-PINS, GRAY)
X18177 CONNECTOR (2-PINS, GRAY)

COMPONENT LOCATION VIEWS

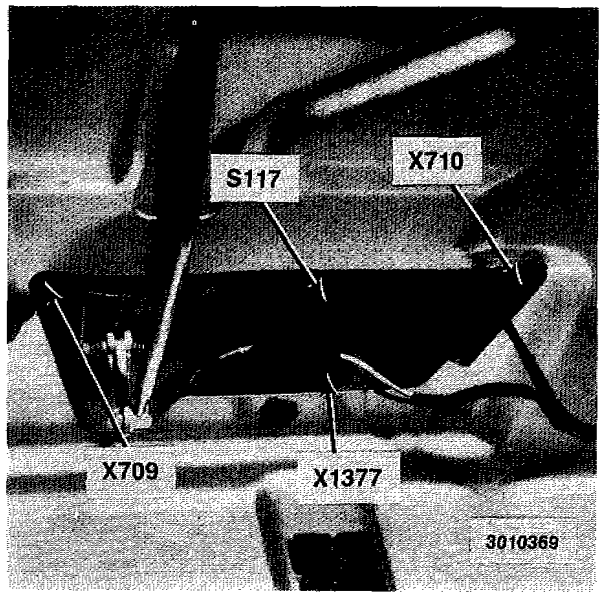

FIG. 1 - *Underside of trunk lid*

S117	TRUNK LID LOCKING SWITCH
X709	CONNECTOR (2-PINS, BLACK)
X710	CONNECTOR (2-PINS, BLACK)
X1377	CONNECTOR (2-PINS, BLACK)

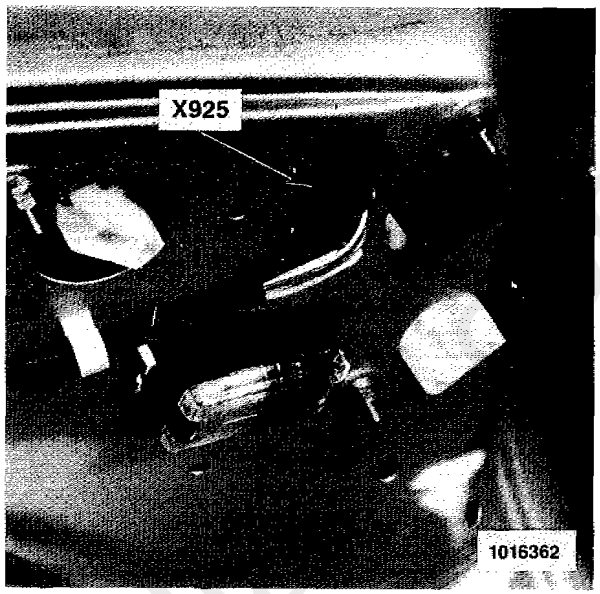

FIG. 2 - Underside of trunk lid, right, (LH similar)

X925	CONNECTOR (6-PINS, BLACK)

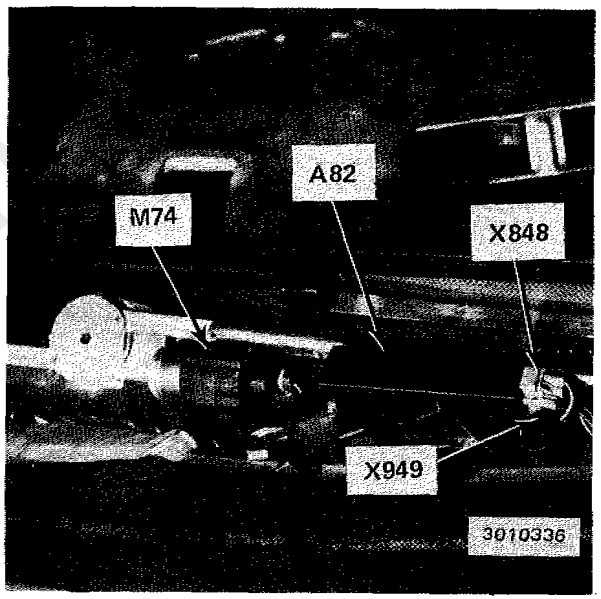

FIG. 3 - At back of rear window shelf under trim panel

A82	POWER SUN SHADE ELECTRONIC CONTROL UNIT
M74	POWER SUN SHADE MOTOR
X848	CONNECTOR (4-PINS, GREEN)
X949	CONNECTOR (5-PINS, BLACK)

cardiagn.com

BMW 8

SPLICE LOCATION VIEWS

SPLICE LOCATION INDEX

SPLICE INDEX E31-850i

SPLICE	HARNESS	PAGE NUMBER
X181-X190	FRONT	8000.0-02
X195	CHASSIS	8000.0-03
X196	FRONT	8000.0-02
X210	CHASSIS	8000.0-03
X212-X265	FRONT	8000.0-02
X267	REAR	8000.0-04
X276	FRONT	8000.0-02
X427-X486	REAR	8000.0-04
X557	GLOVE BOX LIGHTS	NOT SHOWN
X558-X704	REAR	8000.0-04
X801	FRONT	8000.0-02
X805	REAR	8000.0-04
X806	FRONT	8000.0-02
X823	TRAILER ADAPTER	NOT SHOWN
X824	REAR	8000.0-04
X826-X830	RADIO	NOT SHOWN
X840	DRIVER'S SEAT	NOT SHOWN
X844	PASSENGER'S SEAT	NOT SHOWN
X848-X851	DRIVER DOOR	NOT SHOWN
X852-X859	IHKA	NOT SHOWN
X878	RADIO	NOT SHOWN
X891-X892	PASSENGER'S DOOR	NOT SHOWN
X894	REAR	8000.0-04
X914	FRONT	8000.0-02
X926-X927	DRIVER DOOR	NOT SHOWN
X928-X929	PASSENGER'S DOOR	NOT SHOWN
X934	DRIVER DOOR	NOT SHOWN
X935	PASSENGER'S DOOR	NOT SHOWN
X939	REAR	8000.0-04
X943	SUNSHADE	NOT SHOWN
X960-X980	BATTERY	NOT SHOWN
X1006	REAR	8000.0-04
X1017-X1018	CHASSIS	8000.0-03
X1022-X1036	FRONT	8000.0-02
X1183-X1200	FRONT	8000.0-02
X1202-X1215	REAR	8000.0-04
X1351-X1357	CHASSIS	8000.0-03
X1359-X1378	REAR	8000.0-04
X1412	CHASSIS	8000.0-03
X6410-X8047	ENGINE	NOT SHOWN
X10014-X10056	FRONT	8000.0-02
X13000-X13048	REAR	8000.0-04
X18026-X18043	CHASSIS	8000.0-03
X18044	FRONT	8000.0-02
X18045-X18046	CHASSIS	8000.0-03
X18048	REAR	8000.0-04
X18056-X18087	CHASSIS	8000.0-03
X18091	DRIVER'S SEAT	NOT SHOWN
X18092	PASSENGER'S SEAT	NOT SHOWN
X18100-X18106	DRIVER'S SEAT	NOT SHOWN
X18108	PARK HEATING/VENTILATION	NOT SHOWN
X18121-X18122	REAR	8000.0-04
X18123	DRIVER DOOR	NOT SHOWN
X18140-X18142	IHKA	NOT SHOWN
X18174	RADIO	NOT SHOWN
X18175	DRIVER'S SEAT	NOT SHOWN

cardiagn.com

SPLICE LOCATION VIEWS

SPLICE LOCATION INDEX

SPLICE INDEX E31-850i

SPLICE	HARNESS	PAGE NUMBER
X18176	PASSENGER'S SEAT	NOT SHOWN
X18182	RADIO	NOT SHOWN
X18217	DRIVER DOOR	NOT SHOWN
X18247	DRIVER'S SEAT	NOT SHOWN
X18734-X18735	CHASSIS	8000.0-03
X18737	DRIVER'S SEAT	NOT SHOWN
X18738	PASSENGER'S SEAT	NOT SHOWN
X19507	FRONT	8000.0-02
X19511-X19512	RADIO	NOT SHOWN
X19515	DRIVER DOOR	NOT SHOWN
X19516	PASSENGER'S DOOR	NOT SHOWN

cardiagn.com

SPLICE LOCATION VIEWS

FRONT HARNESS

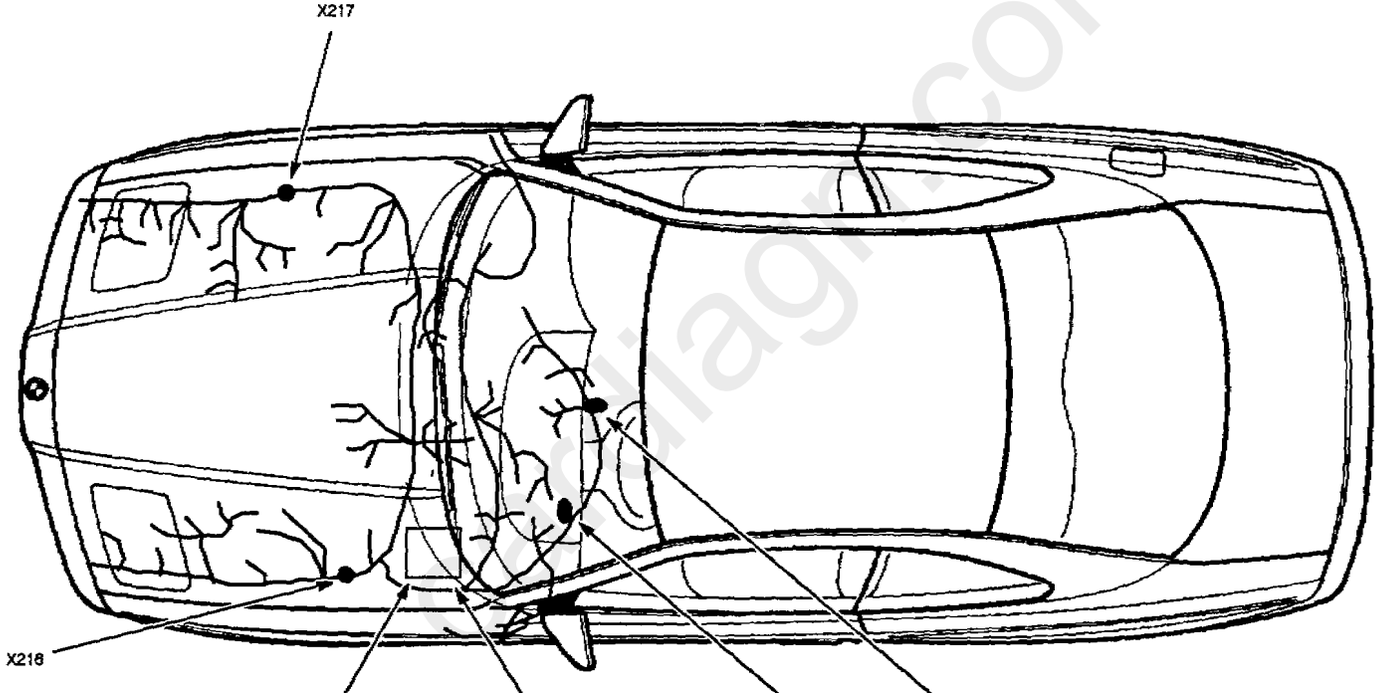

X184 ●	X212 ●	X261 ●
X185 ●	X224 ●	X264 ●
X186 ●	X245 ●	X265 ●
X201 ●	X246 ●	X801 ●
X203 ●	X248 ●	X1022 ●
X205 ●	X249 ●	X1200 ●
X208 ●	X250 ●	X10014 ●

X181 ●	X204 ●	X606 ●
X182 ●	X213 ●	X1023 ●
X183 ●	X222 ●	X1036 ●
X190 ●	X223 ●	X1183 ●
X196 ●	X226 ●	X10043 ●
X198 ●	X243 ●	X10056 ●
X200 ●	X276 ●	X19507 ●

X189	X240
X215	X247
X241	X914
X18044	

BMW 8

SPLICE LOCATION VIEWS

CHASSIS HARNESS

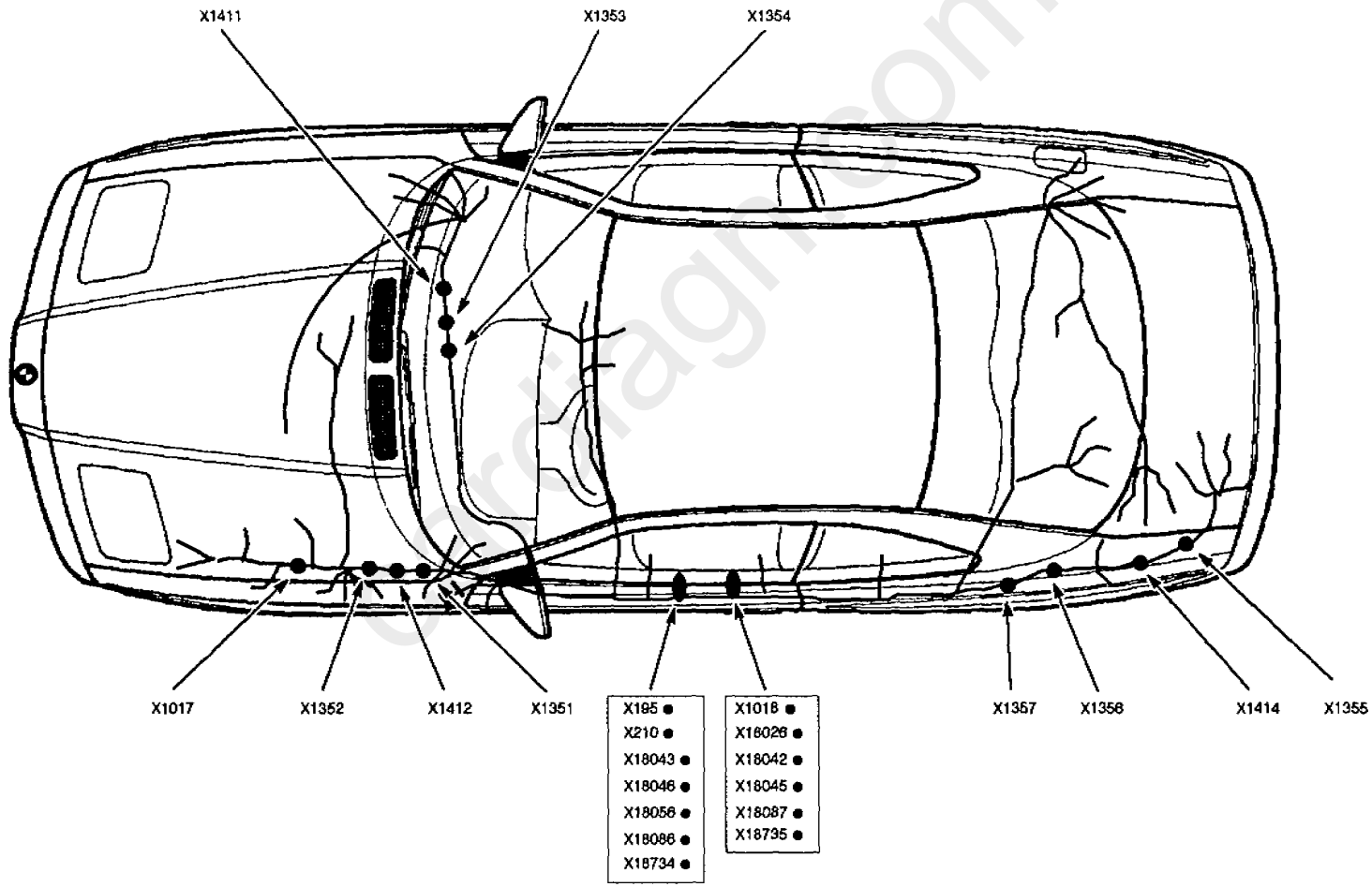

cardiagn.com

SPLICE LOCATION VIEWS

REAR HARNESS

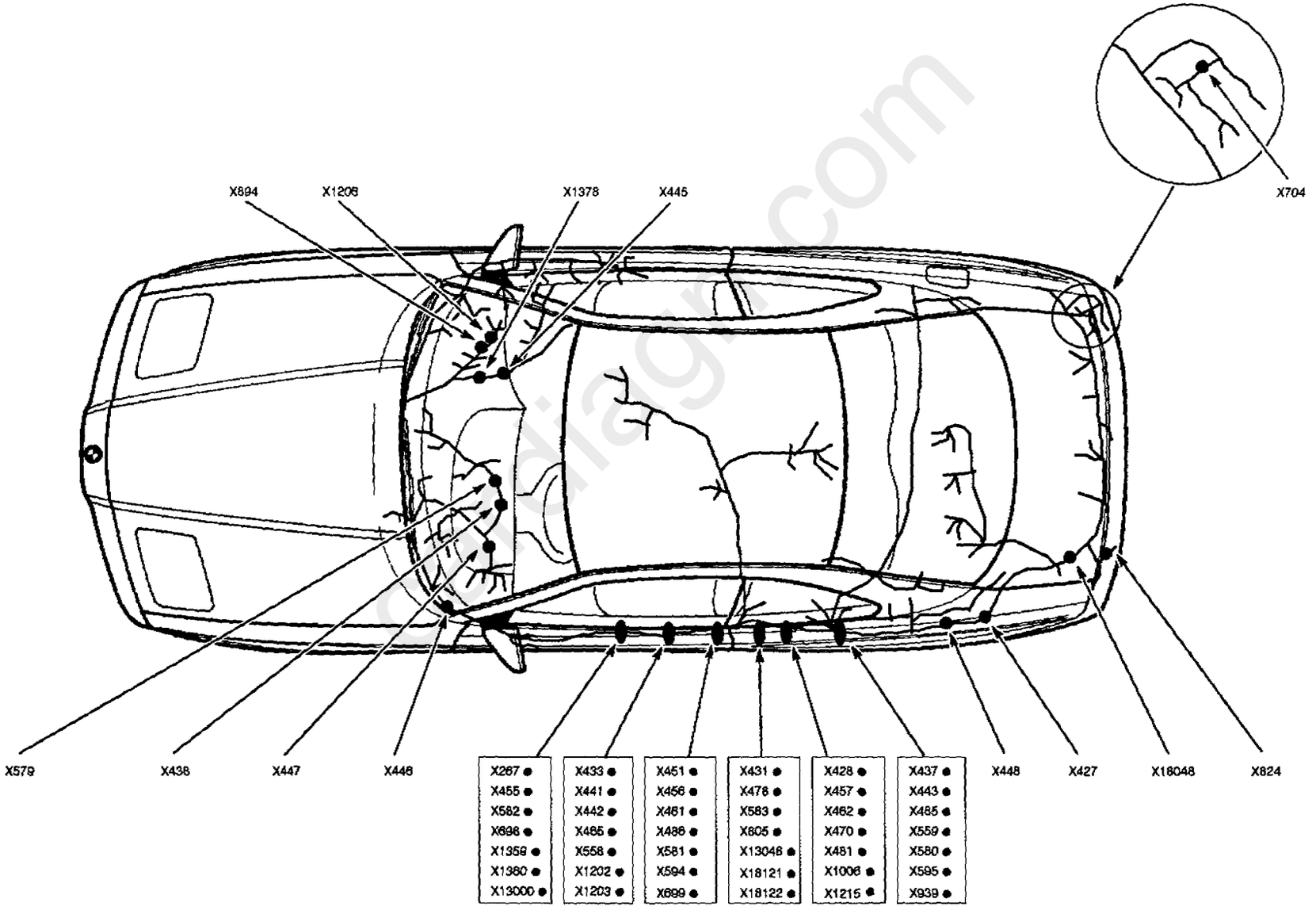

CONNECTOR VIEWS

cardiagn.com

CONNECTOR VIEWS

FIG. 1

B550001.00

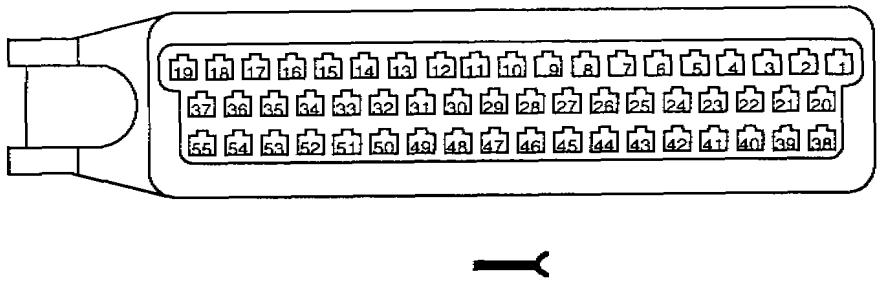

FIG. 2

B350001.00

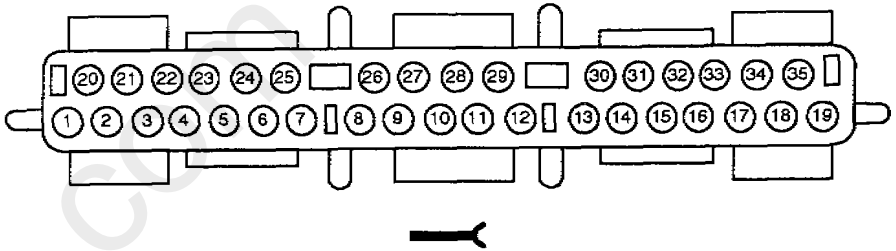

FIG. 3

B350002.00

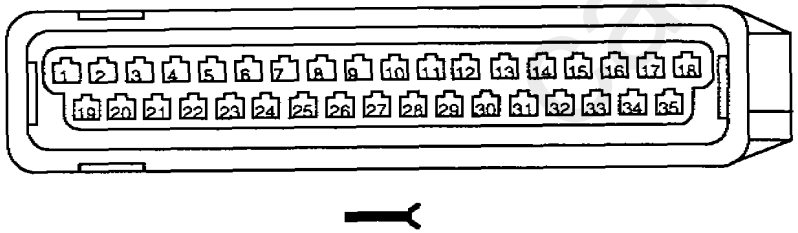

FIG. 4

B300001.00

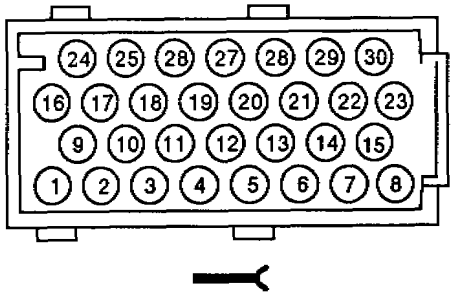

erdiagn.com

CONNECTOR VIEWS

FIG. 1

B260002.00

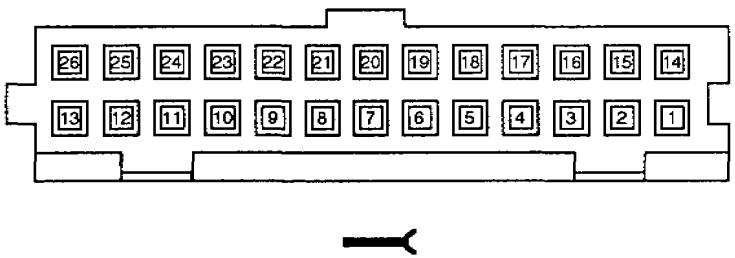

FIG. 2

B200002.00

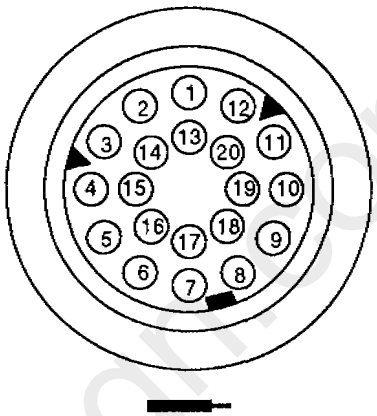

FIG. 3

B210001.00

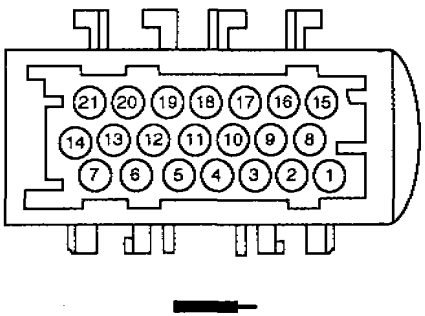

FIG. 4

B240001.00

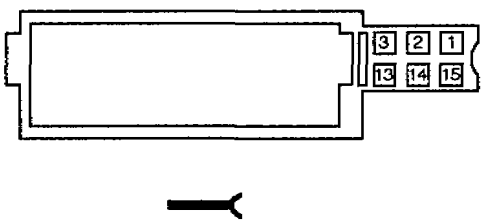

FIG. 5

B200004.00

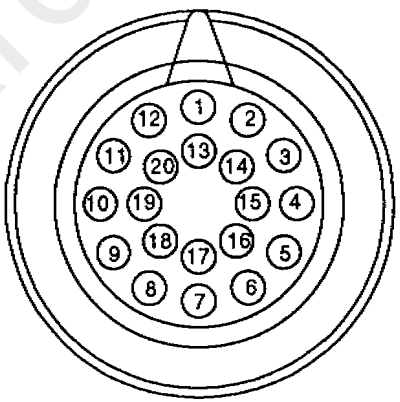

FIG. 6

B120013.00

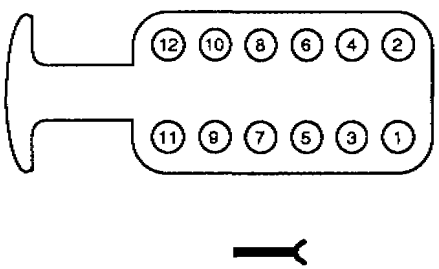

cardiagn.com

CONNECTOR VIEWS

FIG. 1

B120002.01

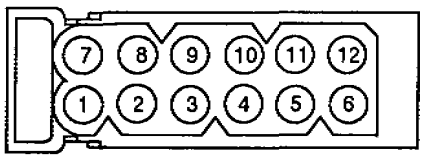

FIG. 2

B120003.00

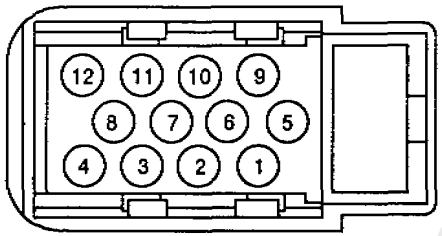

B100001.00

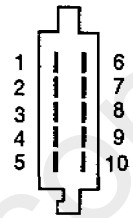

FIG. 3

B090001.00

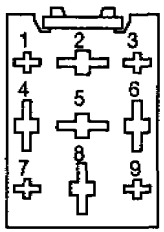

FIG. 4

B050005.00

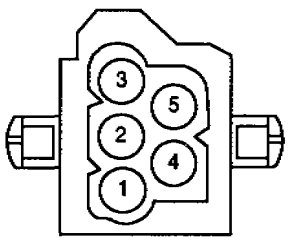

FIG. 5

B120007.00

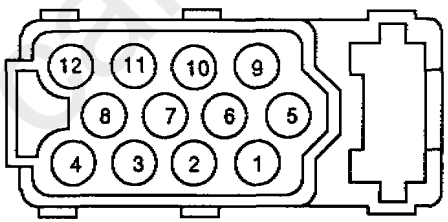

B100003.00

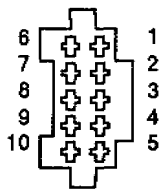

FIG. 6

B040003.00

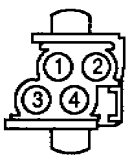

cardiagn.com

CONNECTOR VIEWS

FIG. 1

B080002.00

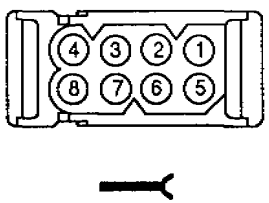

FIG. 2

B080004.00

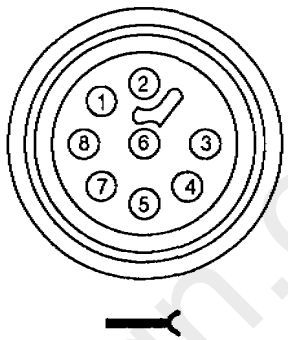

FIG. 3

B030001.00

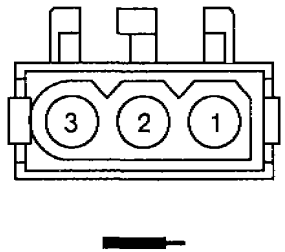

FIG. 4

B080003.00

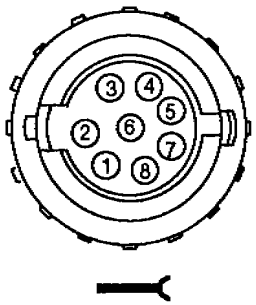

FIG. 5

B030015.00

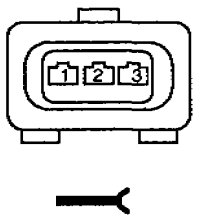

FIG. 6

B030014.00

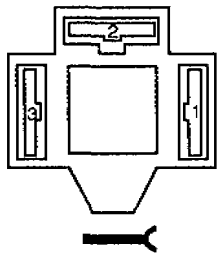

cardiagn.com

CONNECTOR VIEWS

FIG. 1

B060017.00

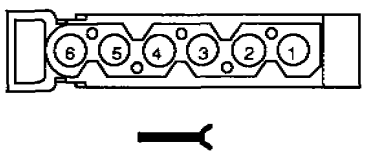

FIG. 2

B030004.00

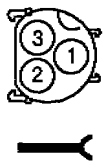

FIG. 3

B030013.00

FIG. 4

B030005.00

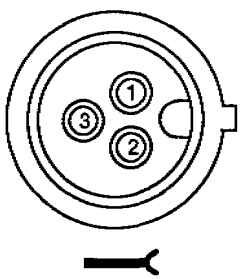

FIG. 5

B030012.00

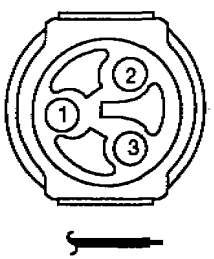

FIG. 6

B030006.00

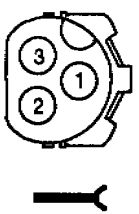

cardiagn.com

CONNECTOR VIEWS

FIG. 1

B060004.00

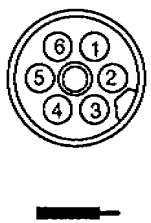

FIG. 2

B050005.00

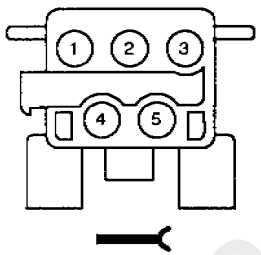

FIG. 3

B0300010.00

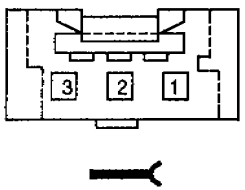

FIG. 4

B060002.00

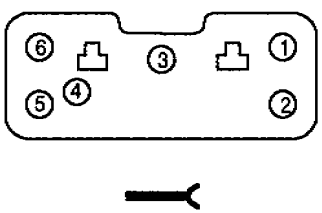

FIG. 5

B030003.04

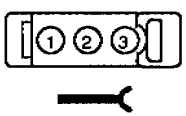

FIG. 6

B120006.00

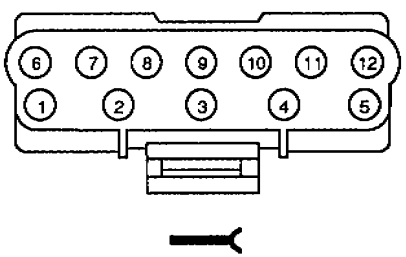

cardiagn.com

CONNECTOR VIEWS

FIG. 1

B060006.00

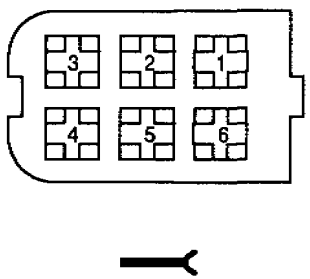

FIG. 2

B050003.00

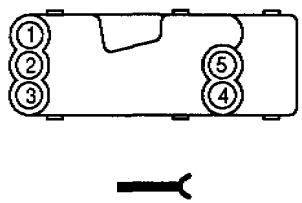

FIG. 3

B040004.00

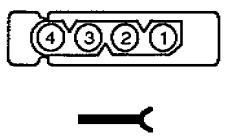

FIG. 4

B060020.00

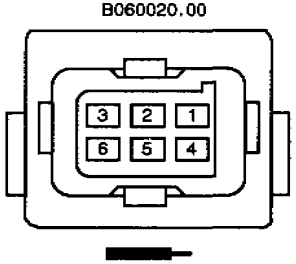

FIG. 5

B040002.00

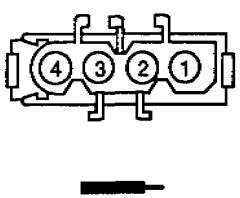

FIG. 6

B120008.00

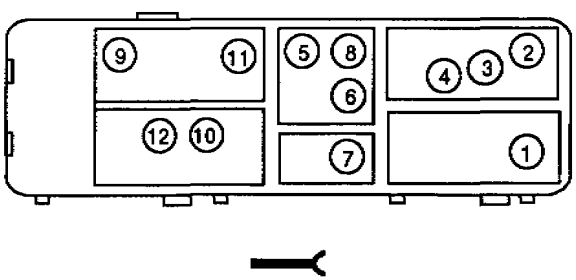

cardiagn.com

CONNECTOR VIEWS

FIG. 1

B100002.00

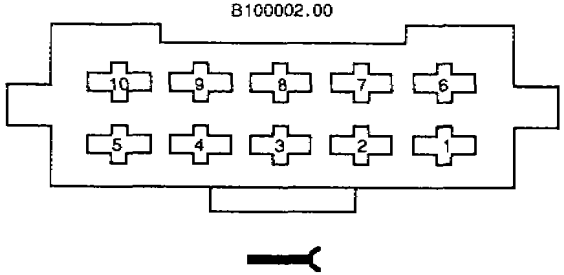

FIG. 2

B120009.00

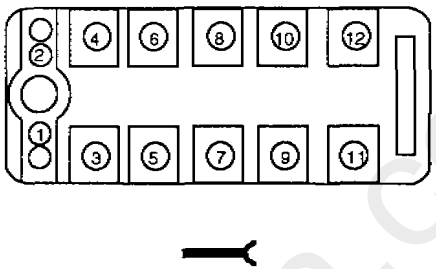

FIG. 3

B080006.00

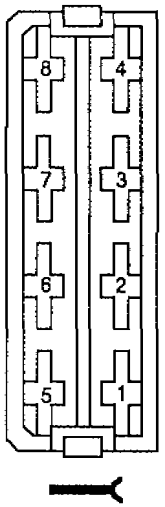

FIG. 4

B060013.00

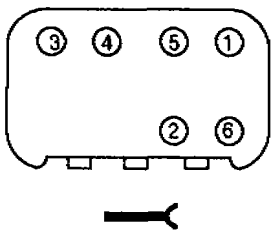

FIG. 5

B030009.00

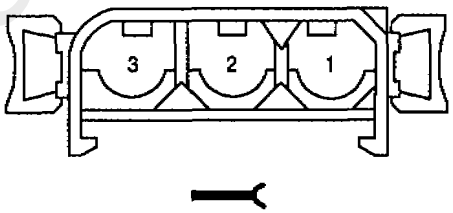

FIG. 6

B130002.00

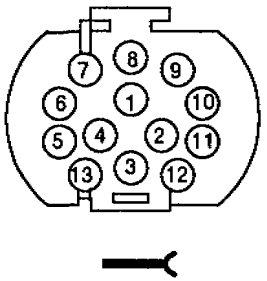

cardiagn.com

CONNECTOR VIEWS

FIG. 1

B210002.00

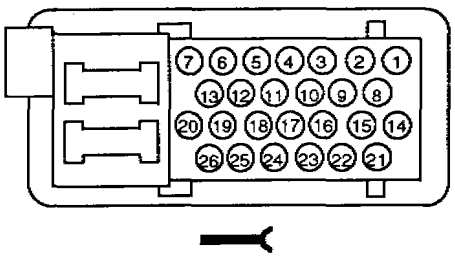

FIG. 2

B120011.00

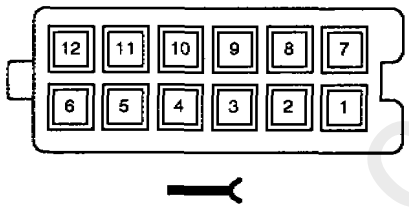

FIG. 3

B120011.00

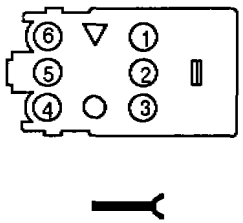

FIG. 4

B200001.00

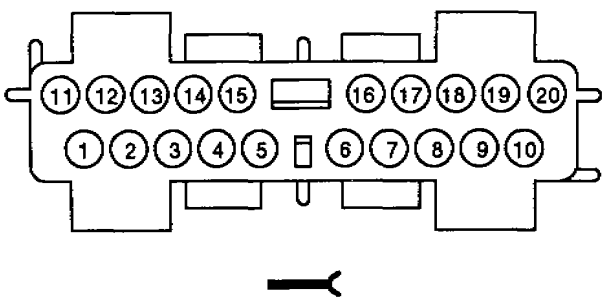

FIG. 5

B120005.00

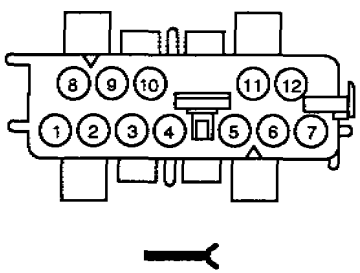

FIG. 6

B040010.00

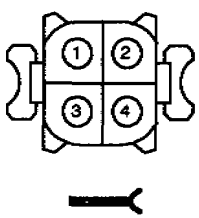

cardiagn.com

CONNECTOR VIEWS

FIG. 1

B060007.00

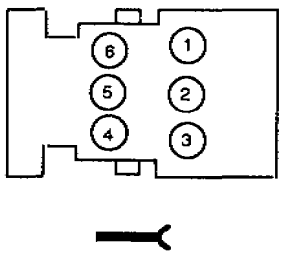

FIG. 2

B060023.00

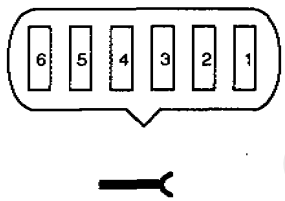

FIG. 3

B060016.00

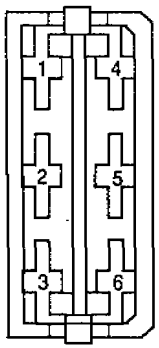

FIG. 4

B060009.00

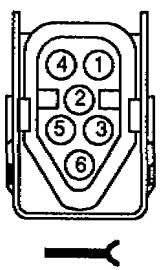

FIG. 5

B080010.00

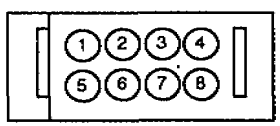

FIG. 6

B0400011.00

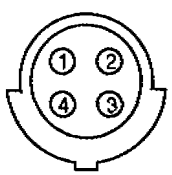

cardiagn.com

CONNECTOR VIEWS

FIG. 1

B080009.00

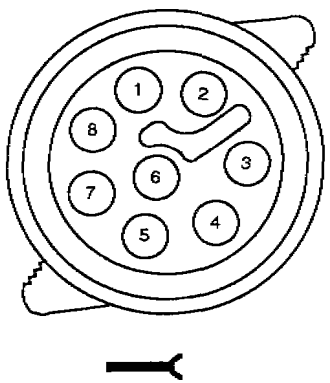

FIG. 2

B060011.00

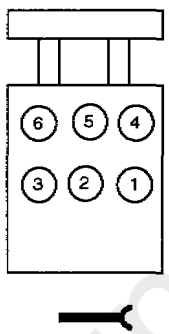

FIG. 3

B030016.00

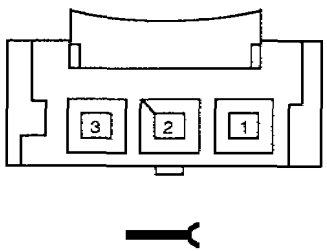

FIG. 4

B060010.01

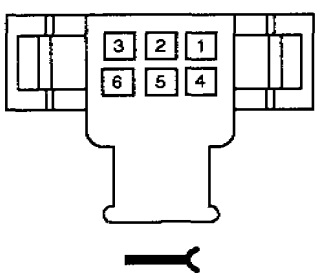

FIG. 5

B040013

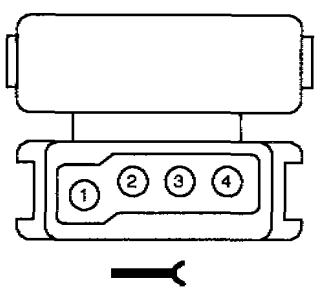

FIG. 6

B090002.00

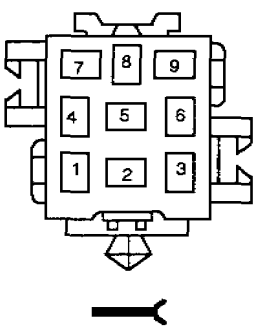

cardiagn.com

CONNECTOR VIEWS

FIG. 1

B080005.00

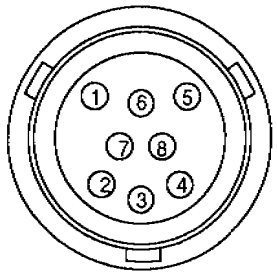

FIG. 2

B050006.00

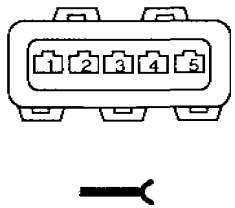

FIG. 3

B060014.00

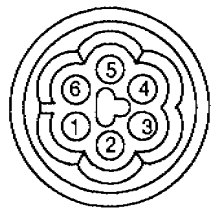

FIG. 4

B040006.00

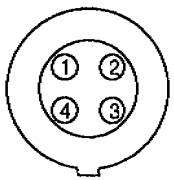

FIG. 5

B200003.00

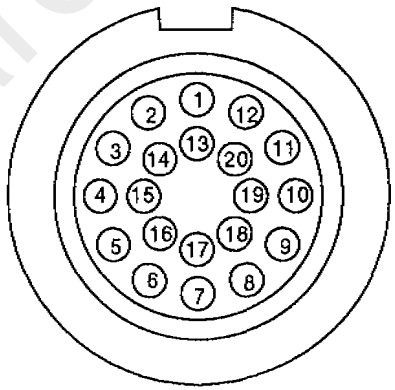

FIG. 6

B07000.00

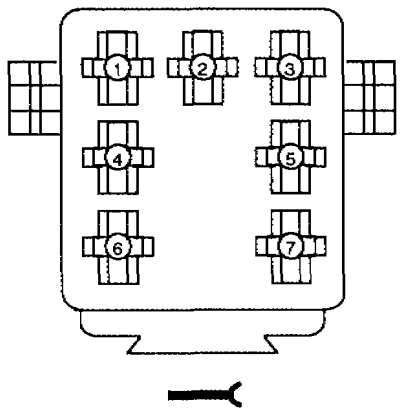

cardiagn.com

CONNECTOR VIEWS

FIG. 1

B170000.00

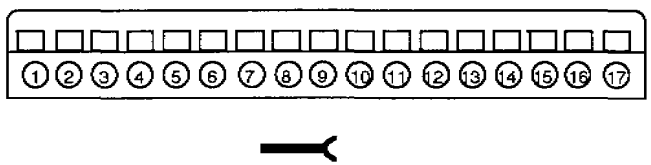

FIG. 2

B150003.00

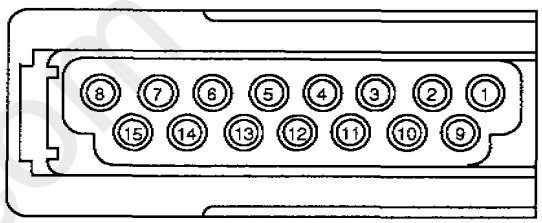

FIG. 3

B170001.00

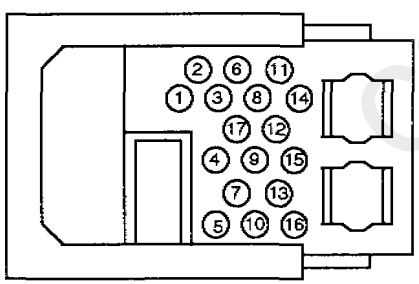

FIG. 4

B130004.00

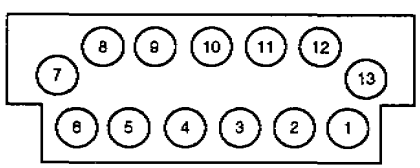

cardiagn.com

CONNECTOR VIEWS

FIG. 1

B070006.00

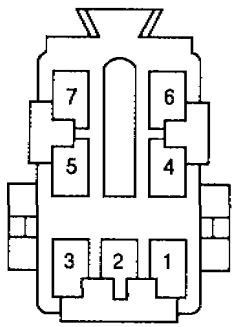

FIG. 2

B070005.00

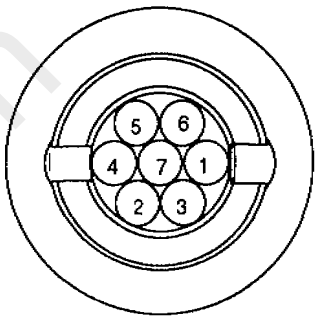

FIG. 3

B060034.00

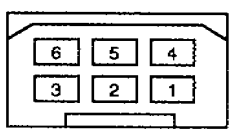

FIG. 4

B040015.00

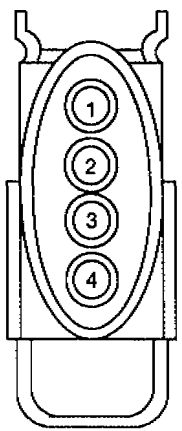

cardiagn.com

CONNECTOR VIEWS

FIG. 1

B200007.00

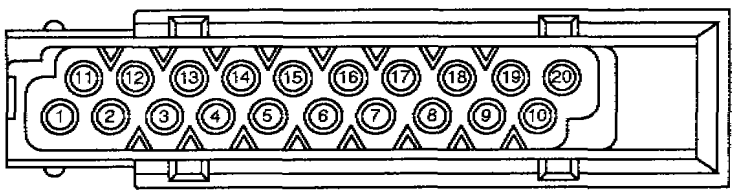

FIG. 2

B100007.00

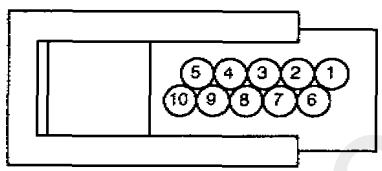

FIG. 3

B260005.00

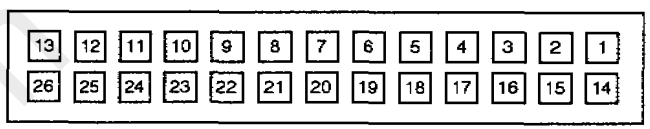

FIG. 4

B070007.00

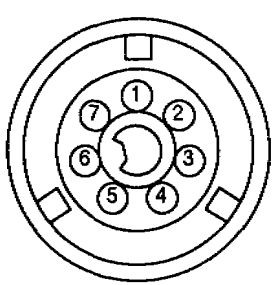

FIG. 5

B880001.00

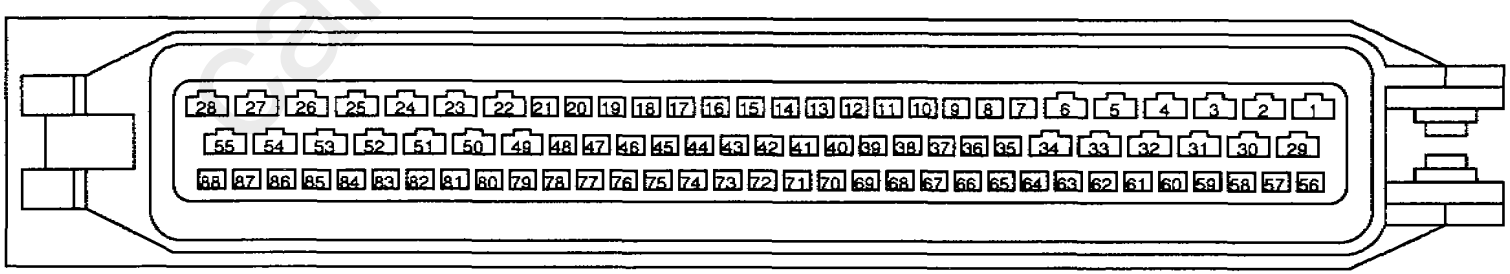

cardiagn.com

CONNECTOR VIEWS

FIG. 1

B040016.00

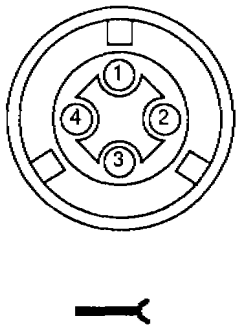

FIG. 2

B040015.00

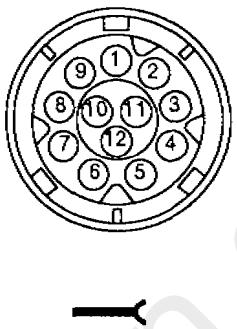

FIG. 3

B100004.00

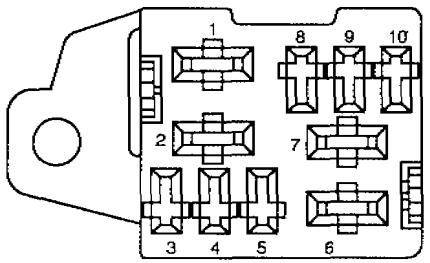

FIG. 4

B030022.00

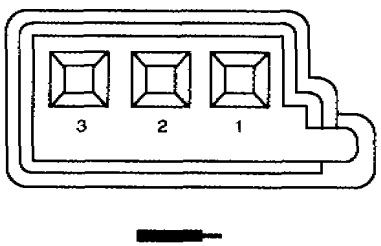

FIG. 5

B180000.00

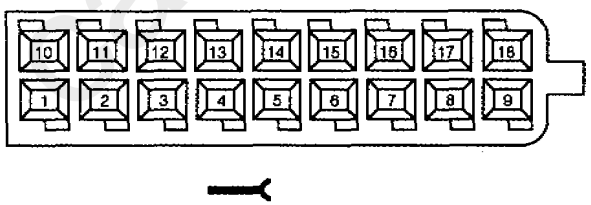

FIG. 6

B260006.00

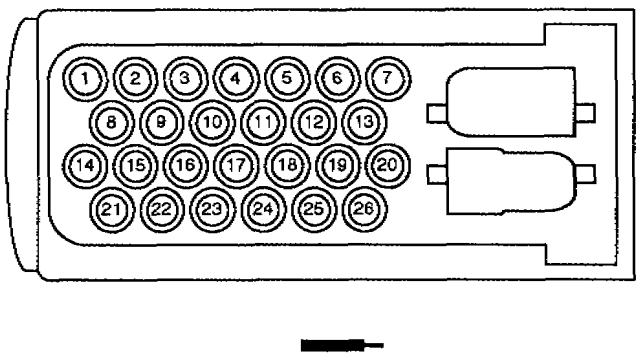

cardiagn.com

CONNECTOR VIEWS

FIG. 1

B060035.00

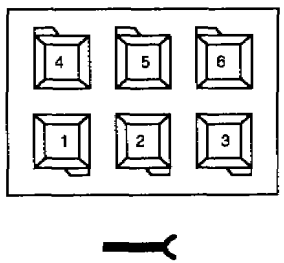

FIG. 2

B100009.00

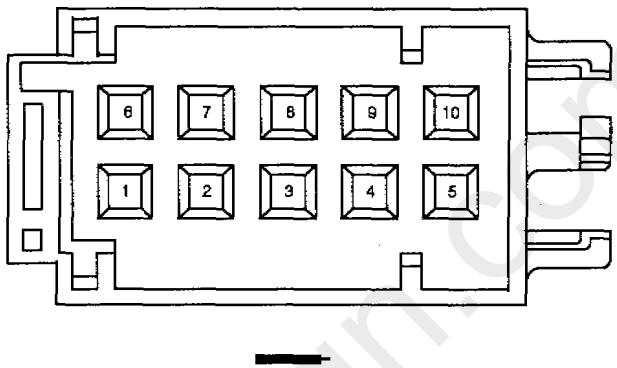

FIG. 3

B10010.00

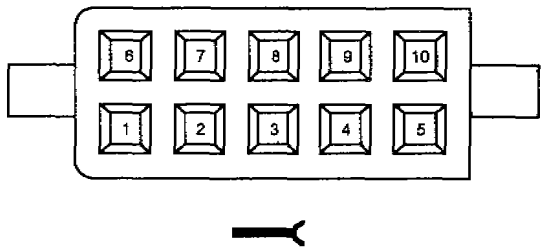

FIG. 4

B100008.00

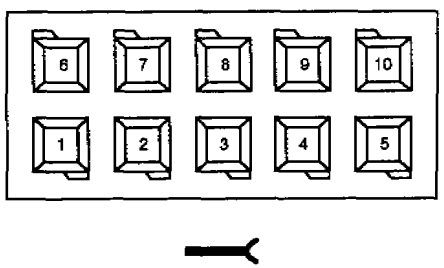

FIG. 5

B030024.0

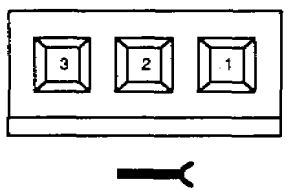

FIG. 6

B040017

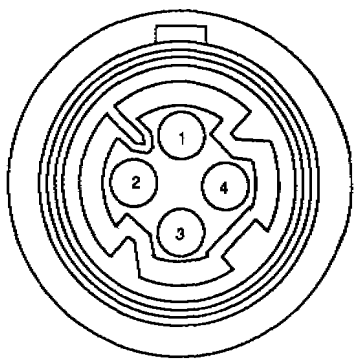

cardiagn.com

CONNECTOR VIEWS

FIG. 1

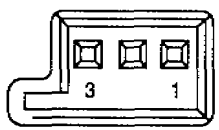

FIG. 2

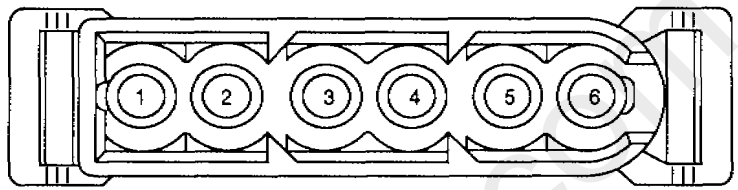

FIG. 3

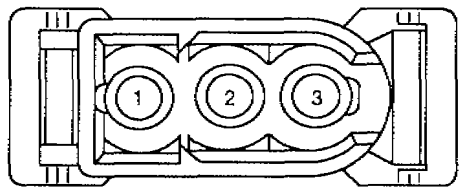

FIG. 4

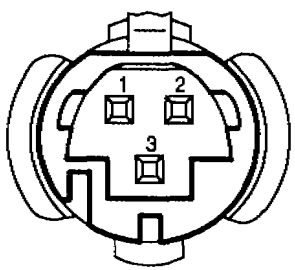

FIG. 5

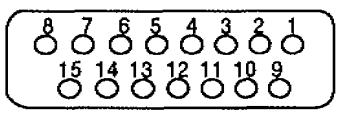

FIG. 6

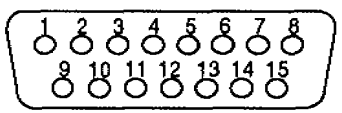

cardiagn.com

cardiagn.com