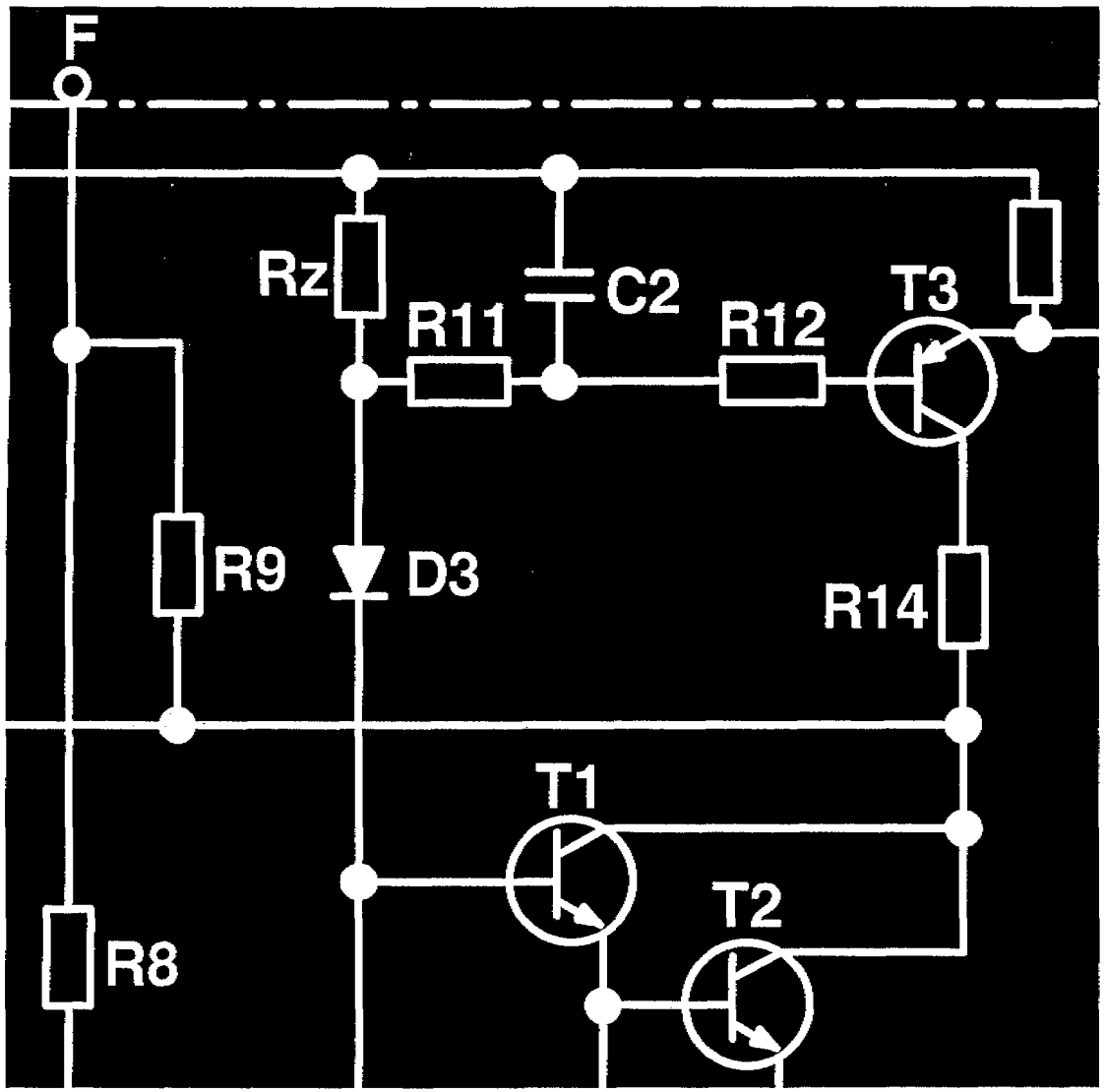

1993 BMW 318i, 318is, 325i, 325is (E36) Electrical Troubleshooting Manual

Vehicles Produced 09/92 to 08/93

PN 01 00 1 468 774

BMW NA

ELECTRICAL TROUBLESHOOTING MANUAL

3 SERIES – E36 (318i, 318is, 325i, 325is)

SCHEMATICS MODEL YEAR 1993

0100.0 INDEX
0110.0 INTRODUCTION
0140.0 SYMBOLS
0670.0 POWER DISTRIBUTION CHART
0670.1 FUSE CHART
0670.2 POWER DISTRIBUTION
0670.3 FUSE DETAILS
0670.4 GROUND DISTRIBUTION
0670.5 DATA LINK
1210.9 ENGINE CONTROL SYSTEM (DME M1.7, 4-CYLINDER M42)
1210.13 ENGINE CONTROL SYSTEM (DME M3.3.1, 6-CYLINDER M50)
1230.0 CHARGING SYSTEM
1240.0 START
2460.2 ELECTRONIC TRANSMISSION CONTROL (EGS A4S 310R)
3234.0 SUPPLEMENTAL RESTRAINT SYSTEM (AIRBAG)
3450.0 SLIP CONTROL (ABS)
5116.0 POWER MIRRORS
5126.2 CENTRAL LOCKING MODULE II (ZVM II)
5133.1 POWER WINDOWS (FH)
5200.0 POWER SEATS
5203.0 HEATED SEATS
5410.1 POWER SUN ROOF (SHD)
6133.0 HORN
6160.1 WIPER/WASHER MODULE (WWM)
6167.1 HEADLIGHT WASHER (SRA)
6169.0 WINDSHIELD WASHER JET HEATERS
6211.0 INSTRUMENT CLUSTER
6213.2 MULTI-FUNCTION CLOCK
6300.0 LIGHT SWITCH DETAILS
6312.0 HEADLIGHTS/FOG LIGHTS
6313.0 TURN/HAZARD LIGHTS
6314.0 PARK/TAIL/UNDERHOOD LIGHTS
6320.0 LICENSE PLATE/LUGGAGE COMPARTMENT LIGHTS
6322.0 BACK UP LIGHTS
6325.0 BRAKE LIGHTS
6330.3 INTERIOR LIGHTS
6332.1 GLOVE BOX LIGHT/CASSETTE BOX/ ASHTRAY LIGHT/CHARGING SOCKET/ CIGAR LIGHTER
6350.0 CRASH CONTROL MODULE
6412.5 PARK VENTILATION WITH IHKR
6424.0 REAR WINDOW DEFOGGER
6450.4 INTEGRATED CLIMATE REGULATION (IHKR E36)
6510.0 RADIO/CD PLAYER (PROVISIONS)
6510.1 RADIO/HIFI
6561.0 CELLULAR TELEPHONE (PROVISIONS)
6571.0 CRUISE CONTROL (TEMPOMAT)
6575.2 ANTI-THEFT SYSTEM (ALPINE)
6581.2 ON-BOARD COMPUTER (BC V)
7000.0 COMPONENT LOCATION CHART
7100.0 COMPONENT LOCATION VIEWS
8000.0 SPLICE LOCATION VIEWS
8500.0 CONNECTOR VIEWS

© BMW NA, Woodcliff Lake, NJ
NU-S, Printed in U.S.A.

PART NUMBER 01 00 1 468 774

INDEX

ABS HYDRAULIC UNIT, Y1 ..... 3450.0-01
ABS PEDAL TRAVEL SENSOR, S123 ..... 3450.0-01
ABS PUMP MOTOR RELAY, K75 ..... 3450.0-00
ABS RELAY, K10 ..... 3450.0-00
AIR BAG GAS GENERATOR I, PASSENGER'S, G6 ..... 3234.0-01
AIR BAG GENERATOR, DRIVER'S, G5 ..... 3234.0-00
AIR CONDITIONING COMPRESSOR, Y2 ..... 6450.4-05
ANTENNA AMPLIFIER AM/FM, N8 ..... 6424.0-00
ANTI-THEFT CONTROL MODULE (ALPINE), N12w 6575.2-00
ANTI-THEFT HORN (ALPINE), H1w 6575.2-01
ANTI-THEFT SYSTEM (ALPINE) 6575.2-00
AUTOMATIC CUT-OUT, F56 ..... 5133.1-01
AUTOMATIC TRANSMISSION RANGE SWITCH, S3 ..... 2460.2-03
AUXILIARY FAN MOTOR, M9 ..... 6450.4-06
AUXILIARY TURN LIGHT, LEFT FRONT, H9 ..... 6313.0-02
AUXILIARY TURN LIGHT, RIGHT FRONT, H8 ..... 6313.0-02
BACK UP LIGHTS 6322.0-00
BACK UP LIGHT, LEFT, H27 ..... 6322.0-00
BACK UP LIGHT, RIGHT, H28 ..... 6322.0-00
BATTERY, G1 ..... 0670.2-00
B+ JUMP START JUNCTION POINT, G6430 ..... 0670.2-00
BLOWER MOTOR, M30 ..... 6450.4-01
BLOWER RELAY, K4 ..... 6450.4-00
BLOWER RESISTORS, R11 ..... 6450.4-01
BLOWER SWITCH, S75 ..... 6450.4-01
BRAKE FLUID LEVEL SWITCH, B18 ..... 6211.0-00
BRAKE LIGHT, LEFT, H24 ..... 6325.0-00
BRAKE LIGHT, RIGHT, H31 ..... 6325.0-00
BRAKE LIGHT SWITCH, S29 ..... 6525.0-00
BRAKE LIGHT SWITCH, S30 ..... 6525.0-01
BRAKE LIGHTS 6325.0-00
BRAKE PAD SENSOR, LEFT FRONT, B16 ..... 6211.0-01
CAMSHAFT ACTUATOR, B6208 ..... 1210.13-01
CAMSHAFT POSITION SENSOR (CYLINDER IDENTIFICATION), B6204 ..... 1210.9-04
CAPACITOR, C1 ..... 6330.3-00
CASSETTE BOX LIGHT, E45y 6300.0-00
CD CHANGER, N22 ..... 6510.1-00
CELLULAR TELEPHONE (PROVISIONS) 6561.0-00
CENTRAL LOCKING MODULE, A30 ..... 5126.2-00
CENTRAL LOCKING MODULE II (ZVM II) 5126.2-00
CHARGING SYSTEM 1230.0-00
CHECK CONTROL MODULE, A4 ..... 6581.2-03
CHILD PROTECTION CONTROL (CONSOLE), S130 ..... 5133.1-03
CHIME MODULE, H10 ..... 6581.2-01
CLUTCH SWITCH, S32 ..... 6525.0-01
COMBINATION SWITCH, S7 ..... 6312.0-00
COMBINATION SWITCH, S7 ..... 6313.0-00
COMFORT RELAY, K78 ..... 5133.1-00
COMFORT RELAY, K78 ..... 5410.1-00
COMPONENT LOCATION CHART 7000.0-00
COMPONENT LOCATION VIEWS 7100.0-00
COMPRESSOR CONTROL RELAY, K19 ..... 6450.4-05
CONNECTOR VIEWS 8500.0-00
CONTACT RING, C100 ..... 3234.0-00
CRANKSHAFT POSITION/RPM SENSOR, B6203 ..... 1210.9-04
CRANKSHAFT POSITION/RPM SENSOR, B6203 ..... 1210.13-04
CRASH CONTROL MODULE, N17 ..... 6350.0-01
CRASH CONTROL MODULE 6350.0-00
CRUISE CONTROL ACTUATOR (TEMPOMAT), M25 ..... 6571.0-01
CRUISE CONTROL (TEMPOMAT) 6571.0-00
CRUISE CONTROL MODULE (TEMPOMAT), A8 ..... 6571.0-00
CRUISE CONTROL SWITCH, S28 ..... 6571.0-00
CYL. 1-2 KNOCK SENSOR, B6241 ..... 1210.9-05
CYL. 1-2 KNOCK SENSOR, B6241 ..... 1210.13-05
CYL. 1 FUEL INJECTION VALVE, Y6101 ..... 1210.9-01
CYL. 1 FUEL INJECTION VALVE, Y6101 ..... 1210.13-01
CYL. 1-6 FUEL PUMP RELAY, K6301 ..... 1210.13-02
CYL. 1 IGNITION COIL, T6151 ..... 1290.9-02
CYL. 1 IGNITION COIL, T6151 ..... 1290.13-03
CYL. 2 FUEL INJECTION VALVE, Y6102 ..... 1210.9-01
CYL. 2 FUEL INJECTION VALVE, Y6102 ..... 1210.13-01
CYL. 2 IGNITION COIL, T6152 ..... 1290.9-02
CYL. 2 IGNITION COIL, T6152 ..... 1290.13-03

INDEX

CYL. 3 FUEL INJECTION VALVE, Y6103 ..... 1210.9-01
CYL. 3 FUEL INJECTION VALVE, Y6103 ..... 1210.13-01
CYL. 3-4 KNOCK SENSOR, B6242 ..... 1210.9-05
CYL. 3-4 KNOCK SENSOR, B6242 ..... 1210.13-05
CYL. 3 IGNITION COIL, T6153 ..... 1290.9-02
CYL. 3 IGNITION COIL, T6153 ..... 1290.13-03
CYL. 4 FUEL INJECTION VALVE, Y6104 ..... 1210.9-01
CYL. 4 FUEL INJECTION VALVE, Y6104 ..... 1210.13-01
CYL. 4 IGNITION COIL, T6154 ..... 1290.9-02
CYL. 4 IGNITION COIL, T6154 ..... 1290.13-03
CYL. 5 FUEL INJECTION VALVE, Y6105 ..... 1210.13-01
CYL. 5 IGNITION COIL, T6155 ..... 1290.9-02
CYL. 5 IGNITION COIL, T6155 ..... 1290.13-03
CYL. 6 FUEL INJECTION VALVE, Y6106 ..... 1210.13-01
CYL. 6 IGNITION COIL, T6156 ..... 1290.9-02
CYL. 6 IGNITION COIL, T6156 ..... 1290.13-03
DASH VENT MIXING FLAP MOTOR, M34 ..... 6450.4-04
DATA LINK 0670.5-00
DATA LINK CONNECTOR, D100 ..... 0670.5-00
DAYTIME RUNNING LIGHTS CODING DIODE, V4 ..... 6314.0-02
DOOR HANDLE SWITCH, DRIVER'S, S48 ..... 5126.2-01
DOOR JAMB SWITCH, DRIVER'S, S14 ..... 5126.2-01
DOOR JAMB SWITCH, LEFT REAR, S16 ..... 5126.2-01
DOOR JAMB SWITCH, PASSENGER'S, S13 ..... 5126.2-01
DOOR JAMB SWITCH, REAR RIGHT, S15 ..... 5126.2-01
DOOR LOCK MOTOR, DRIVER'S, M12 ..... 5126.2-04
DOOR LOCK MOTOR, LEFT REAR, M15 ..... 5126.2-03
DOOR LOCK MOTOR, M13 ..... 5126.2-04
DOOR LOCK MOTOR, REAR, RIGHT, M14 ..... 5126.2-03
DOOR LOCK SWITCH, DRIVER'S, S47 ..... 5126.2-00
DOOR LOCK SWITCH, PASSENGER'S, S49 ..... 5126.2-00
ELECTRONIC TRANSMISSION CONTROL (EGS A4S 310R) 2460.2-00
ENGINE CONTROL MODULE (DME), A6000 ..... 1210.9-00
ENGINE CONTROL MODULE (DME), A6000 ..... 1210.13-00
ENGINE CONTROL MODULE RELAY, K6300 ..... 1210.9-00
ENGINE CONTROL MODULE RELAY, K6300 ..... 1210.13-00
ENGINE CONTROL SYSTEM (DME M1.7, 4-CYLINDER M42) ... 1210.9-00
ENGINE CONTROL SYSTEM (DME M3.3.1, 6-CYLINDER, M50) 1210.13-00
ENGINE COOLANT LEVEL SWITCH, S63 ..... 6581.2-03
ENGINE COOLANT TEMPERATURE SENSOR, B6232 ..... 6211.0-02
ENGINE COOLANT TEMPERATURE SENSOR, B6236 ..... 1210.9-05
ENGINE COOLANT TEMPERATURE SENSOR, B6236 ..... 1210.13-05
ENGINE HOOD SWITCH, S21w 6581.2-02
EVAPORATIVE EMISSION VALVE, Y6120 ..... 1210.9-01
EVAPORATIVE EMISSION VALVE, Y6120 ..... 1210.13-01
EVAPORATOR TEMPERATURE SENSOR, B14 ..... 6450.4-03
FOG LIGHT, LEFT, E26 ..... 6312.0-00
FOG LIGHT, LEFT REAR, H26 ..... 6312.0-04
FOG LIGHT, RIGHT, E27 ..... 6312.0-00
FOG LIGHT, RIGHT, REAR, H29 ..... 6312.0-04
FOG LIGHT SWITCH, S10 ..... 6312.0-00
FRESH AIR FLAP MOTOR, M36 ..... 6450.4-04
FRONT ASHTRAY LIGHT, E25 ..... 6332.1-00
FRONT CIGAR LIGHTER, E28 ..... 6332.1-00
FRONT CIGAR LIGHTER LIGHT, E29 ..... 6300.0-03
FRONT DOME LIGHT/MAP READING ASSEMBLY, E34 ..... 6330.3-00
FRONT FOG LIGHT RELAY, K47 ..... 6312.0-00
FRONT POWER DISTRIBUTION BOX, P90 ..... 0670.2-00
FUEL LEVEL SENSOR, B6 ..... 6211.0-04
FUEL PUMP, M2 ..... 1210.9-03
FUEL PUMP, M2 ..... 1210.13-02
FUEL PUMP RELAY, K6301w 1210.9-03
FUSE CHART 0670.1-00
FUSE DETAILS 0670.3-00
FUSIBLE LINK, F97 ..... 0670.2-01
GAS FILLER LOCK MOTOR, M16 ..... 5126.2-05
GENERATOR, G6509 ..... 1230.0-00
GLOVE BOX LIGHT, E42 ..... 6332.1-00
GLOVE BOX LIGHT/CASSETTE BOX/ASHTRAY LIGHT/ CHARGING SOCKET/CIGAR LIGHTER 6332.1-00
GLOVE BOX LIGHT SWITCH, S37 ..... 6332.1-00
GROUND DISTRIBUTION 0670.4-00
HALL EFFECT CAMSHAFT SENSOR, B6209 ..... 1210.13-05

HAZARD FLASHER RELAY, K16 ..... 6313.0-00
HAZARD SWITCH, S18 ..... 6313.0-01
HEADLIGHT/FOG LIGHT WASHER PUMP, M7 ..... 6167.1-00
HEADLIGHT/FOGLIGHT CLEANING MODULE (SRA), N6 ..... 6167.1-00
HEADLIGHT WASHER (SRA) 6167.1-00
HEADLIGHTS/FOG LIGHTS 6312.0-00
HEAT EXCHANGER TEMPERATURE SENSOR, LH, B11 ..... 6450.4-03
HEAT EXCHANGER TEMPERATURE SENSOR, RH, B12 ..... 6450.4-03
HEATED OXYGEN SENSOR, B6200 ..... 1210.9-04
HEATED OXYGEN SENSOR, B6200 ..... 1210.13-06
HEATED SEATS 5203.0-00
HIFI AMPLIFIER, A18 ..... 6510.1-00
HIGH BEAM LIGHT RELAY, K46 ..... 6312.0-01
HIGH BEAM LIGHT, LEFT, E11 ..... 6312.0-01
HIGH BEAM LIGHT, RIGHT , E12 ..... 6312.0-01
HIGH RANGE SPEAKER, LEFT REAR, H56 ..... 6510.1-01
HIGH RANGE SPEAKER, RIGHT FRONT, H50 ..... 6510.0-00
HIGH RANGE SPEAKER, RIGHT FRONT, H50 ..... 6510.1-02
HIGH RANGE SPEAKER, RIGHT REAR, H53 ..... 6510.1-02
HIGH LEVEL STOP LIGHT, H34 ..... 6325.0-00
HIGH RANGE SPEAKER, LEFT FRONT, H59 ..... 6510.1-01
HIGH SPEED RELAY, K22 ..... 6450.4-06
HORN 6133.0-00
HORN, LEFT, H2 ..... 6133.0-00
HORN RELAY, K2 ..... 6133.0-00
HORN, RIGHT, H3 ..... 6133.0-00
HORN SWITCH, S4 ..... 6133.0-00
HOT FILM AIR MASS METER, B6217 ..... 1210.13-05
IDLE SPEED CONTROL VALVE, Y6130 ..... 1210.9-01
IDLE SPEED CONTROL VALVE, Y6130 ..... 1210.13-01
IGNITION SWITCH, S2 ..... 0670.2-04
IHKR CONTROL PANEL, S134y 6450.4-02
IMPACT SENSOR, LEFT FRONT, S71 ..... 3234.0-00
IMPACT SENSOR, RIGHT FRONT, S72 ..... 3234.0-00
INDEX 0100.0-00
INERTIA SWITCH, S27 ..... 5126.2-00
INSTRUMENT CLUSTER, A2 ..... 6211.0-00
INSTRUMENT CLUSTER 6211.0-00
INTAKE AIR RESONANCE CHANGEOVER VALVE, Y6131 ..... 1210.9-01
INTAKE AIR TEMPERATURE SENSOR, B6205 ..... 1210.13-05
INTEGRATED CLIMATE REGULATION (IHKR E36) 6450.4-00
INTEGRATED CLIMATE REGULATION CONTROL MODULE, A87y 6450.4-00
INTENSIVE WASH PUMP, M5 ..... 6160.1-02
INTERIOR LIGHTS 6330.3-00
INTERIOR LIGHT, LEFT REAR, E39 ..... 6330.3-00
INTERIOR LIGHT, RIGHT REAR, E40 ..... 6330.3-00
INTRODUCTION 0110.0-00
JET HEATER THERMOSWITCH, S198 ..... 6169.0-00
KICK-DOWN SWITCH, S8507 ..... 2460.2-04
LICENSE PLATE LIGHT, LEFT, E43 ..... 6320.0-00
LICENSE PLATE LIGHT, RIGHT, E44 ..... 6320.0-00
LICENSE PLATE/LUGGAGE COMPARTMENT LIGHTS 6320.0-00
LIGHT SWITCH, S8 ..... 6300.0-00
LIGHT SWITCH DETAILS 6300.0-00
LOW BEAM LIGHT, LEFT, E13 ..... 6312.0-01
LOW BEAM LIGHT RELAY, K48 ..... 6312.0-01
LOW BEAM LIGHT, RIGHT, E14 ..... 6312.0-01
LOW RANGE SPEAKER, LEFT FRONT, H58 ..... 6510.0-00
LOW RANGE SPEAKER, LEFT FRONT, H58 ..... 6510.1-01
LOW RANGE SPEAKER, LEFT REAR, H57 ..... 6510.1-01
LOW RANGE SPEAKER, RIGHT REAR, H52 ..... 6510.1-02
LOW RANGE SPEAKER, RIGHT FRONT, H51 ..... 6510.0-00
LOW RANGE SPEAKER, RIGHT FRONT, H51 ..... 6510.1-02
MAKEUP MIRROR LIGHT, DRIVER'S, E35 ..... 6330.3-00
MAKEUP MIRROR LIGHT, PASSENGER'S, E36 ..... 6330.3-00
MAKEUP MIRROR SWITCH, DRIVER'S, S77 ..... 6330.3-00
MAKEUP MIRROR SWITCH, PASSENGER'S, S78 ..... 6330.3-00
MID-HIGH RANGE SPEAKER, LEFT, H42 ..... 6510.1-01
MID-HIGH RANGE SPEAKER, RIGHT, H43 ..... 6510.1-02
MIDRANGE SPEAKER, LEFT FRONT, H55 ..... 6510.1-01
MIDRANGE SPEAKER, RIGHT FRONT, H54 ..... 6510.1-02
MICROPHONE, B400 ..... 6561.0-00
MIRROR CONTROL SWITCH, S17 ..... 5116.0-00

INDEX

MIRROR, DRIVER'S SIDE, Y5 ..... 5116.0-01
MIXING ACTUATOR, R1 ..... 6450.4-03
MULTI-FUNCTION CLOCK, N10 ..... 6213.2-00
MULTI-FUNCTION CLOCK 6213.2-00
NORMAL SPEED RELAY, K21 ..... 6450.4-06
OIL PRESSURE SWITCH, B6231 ..... 6211.0-00
ON-BOARD COMPUTER, N4 ..... 6581.2-00
ON-BOARD COMPUTER (BC V) 6581.2-00
ON-BOARD COMPUTER HORN RELAY, K91 ..... 6581.2-02
ON-BOARD COMPUTER TEMPERATURE SENSOR, B21 ..... 6581.2-00
OUTSIDE TEMPERATURE SENSOR, B13 ..... 6450.4-03
OXYGEN SENSOR RELAY, K6303 ..... 1210.9-04
OXYGEN SENSOR RELAY, K6303 ..... 1210.13-02
PARK BRAKE SWITCH, S31 ..... 6211.0-00
PARK HEATING/VENTILATION RELAY BOX, A15 ..... 6412.5-01
PARK LIGHT/LICENSE PLATE LIGHT RELAY, RIGHT, K25 ..... 6300.0-01
PARK LIGHT/LICENSE PLATE LIGHT RELAY, RIGHT, K25 ..... 6314.0-02
PARK LIGHT, LEFT, E15 ..... 6314.0-01
PARK LIGHT, RIGHT, E19 ..... 6314.0-01
PARK LIGHT RELAY, LEFT, K26 ..... 6314.0-02
PARK/TAIL/UNDERHOOD LIGHTS 6314.0-00
PARK VENTILATION WITH IHKR 6412.5-00
POWER WINDOW MODULE, PASSENGER'S, A961 ..... 5133.1-06
POWER WINDOW MODULE, DRIVER'S SIDE, A61 ..... 5133.1-02
POWER WINDOW SWITCH, DRIVER'S, S126y 5133.1-02
POWER WINDOW SWITCH, PASSENGER'S, S127y 5133.1-01
POWER WINDOW SWITCH, REAR DOOR (CONSOLE) LH, S128y 5133.1-03
POWER WINDOW SWITCH, REAR DOOR (CONSOLE) RH, S129y 5133.1-03
POWER DISTRIBUTION 0670.2-00
POWER DISTRIBUTION CHART 0670.0-00
POWER MIRRORS 5116.0-00
POWER SEATS 5200.0-00
POWER SUN ROOF (SHD) 5410.0-00
POWER WINDOWS (FH) 5133.1-00
PRESSURE SWITCH, B9508 ..... 6450.4-06
PROGRAM SWITCH, S8503 ..... 2460.2-00
RADIO, N9 ..... 6510.1-00
RADIO/CD PLAYER (PROVISIONS) 6510.0-00
RADIO/HIFI 6510.1-00
RADIO MICROSWITCH, S20y 6581.2-02
REAR ASHTRAY LIGHT, E28y 6300.0-03
REAR BRAKE PAD SENSOR, B17 ..... 6211.0-01
REAR DEFOGGER/ANTENNA, E10 ..... 6424.0-01
REAR DEFOGGER I, E9 ..... 6424.0-01
REAR DEFOGGER RELAY, K13 ..... 6424.0-00
REAR FOG LIGHT SWITCH, S82 ..... 6312.0-04
REAR WINDOW DEFOGGER 6424.0-00
RECIRCULATION FLAP MOTOR, M40 ..... 6450.4-04
RESISTOR, R8554 ..... 1210.13-04
REVERSING LIGHT SWITCH, S8511 ..... 6322.0-00
SEATBACK HEATER, DRIVER'S, E56 ..... 5203.0-00
SEATBACK HEATER, PASSENGER'S, E59 ..... 5203.0-00
SEATBACK RECLINER MOTOR, DRIVER'S, M53 ..... 5200.0-00
SEATBACK RECLINER MOTOR, PASSENGER'S, M58 ..... 5200.0-01
SEAT BELT SWITCH, DRIVER'S, S58 ..... 6211.0-01
SEAT BELT SWITCH, PASSENGER'S, S59 ..... 3234.0-01
SEAT CONTROL SWITCH, DRIVER'S, S51 ..... 5200.0-00
SEAT CONTROL SWITCH, PASSENGER'S, S56 ..... 5200.0-01
SEAT CUSHION TILT MOTOR, DRIVER'S, M50 ..... 5200.0-00
SEAT CUSHION TILT MOTOR, PASSENGER'S, M61 ..... 5200.0-01
SEAT HEATER, DRIVER'S, E57 ..... 5203.0-00
SEAT HEATER, PASSENGER'S, E58 ..... 5203.0-00
SEAT HEATER SWITCH, DRIVER'S, S53 ..... 5203.0-00
SEAT HEATER SWITCH, PASSENGER'S, S54 ..... 5203.0-00
SEAT HEIGHT MOTOR, DRIVER'S, M52 ..... 5200.0-00
SEAT HEIGHT MOTOR, PASSENGER'S, M59 ..... 5200.0-01
SEAT LOAD ASSEMBLY, A113 ..... 3234.0-01
SEAT MOVEMENT MOTOR, DRIVER'S, M51 ..... 5200.0-00
SEAT MOVEMENT MOTOR, PASSENGER'S, M60 ..... 5200.0-01
SHIFT-LOCK, Y19 ..... 2460.2-04
SIDE MIRROR, PASSENGER'S, Y6 ..... 5116.0-01
SLIP CONTROL (ABS) 3450.0-00

SLIP CONTROL MODULE (ABS), A7 ..... 3450.0-00
SPEAKER, LEFT FRONT, H41 ..... 6561.0-00
SPEAKER, LEFT REAR, H46 ..... 6510.0-00
SPEAKER, LEFT REAR, H46 ..... 6510.1-01
SPEAKER, RIGHT REAR, H45 ..... 6510.0-00
SPEAKER, RIGHT REAR, H45 ..... 6510.1-02
SPEED SENSOR - ABS, LEFT FRONT, B2 ..... 3450.0-02
SPEED SENSOR - ABS, LEFT REAR, B4 ..... 3450.0-03
SPEED SENSOR - ABS, RIGHT FRONT, B1 ..... 3450.0-02
SPEED SENSOR - ABS, RIGHT REAR, B3 ..... 3450.0-02
SPLICE LOCATION VIEWS 8000.0-00
START 1240.0-00
STARTER, M6510 ..... 1240.0-01
STARTER RELAY, K1 ..... 1240.0-01
SUNROOF CONTROL ASSEMBLY, A56 ..... 5410.1-01
SUNROOF MOTOR, M24 ..... 5410.1-01
SUNROOF SWITCH, S38 ..... 5410.1-01
SUPPLEMENTAL RESTRAINT SYSTEM (AIR BAG) 3234.0-00
SUPPLEMENTAL RESTRAINT SYSTEM CONTROL MODULE, A12 ..... 3234.0-00
SUPPRESSION FILTER, C900 ..... 6424.0-01
SYMBOLS 0140.0-00
TAIL LIGHT, LEFT, H25 ..... 6314.0-01
TAIL LIGHT, LEFT, H37 ..... 6314.0-01
TAIL LIGHT, RIGHT, H30 ..... 6314.0-01
TAIL LIGHT, RIGHT, H39 ..... 6314.0-01
TELEPHONE HANDSET, U4 ..... 6561.0-00
TELEPHONE TRANSCEIVER, H38 ..... 6561.0-00
TEMPERATURE SWITCH, S36 ..... 6450.4-06
THROTTLE POSITION SENSOR, R6252 ..... 1210.9-05
THROTTLE POSITION SENSOR, R6252 ..... 1210.13-05
TRANSMISSION CONTROL MODULE (EGS), A8500 ..... 2460.2-00
TRANSMISSION POSITION INDICATOR LIGHT, E82 ..... 2460.2-03
TRANSMISSION VALVE UNIT, Y8505 ..... 2460.2-01
TRUNK LIGHT ASSEMBLY, LEFT, E46 ..... 6314.0-01
TRUNK COMPARTMENT LIGHT, E32 ..... 6320.0-00
TRUNK LIGHT ASSEMBLY, LEFT, E46 ..... 6322.0-00
TRUNK LIGHT ASSEMBLY, LEFT, E46 ..... 6325.0-01
TRUNK LIGHT ASSEMBLY, LEFT, E46 ..... 6581.2-04
TRUNK LIGHT ASSEMBLY, LEFT, E46 ..... 6312.0-04
TRUNK LIGHT ASSEMBLY, LEFT, E46 ..... 6313.0-02
TRUNK LIGHT ASSEMBLY, LEFT, E46 ..... 6581.2-05
TRUNK LIGHT ASSEMBLY, RIGHT, E47 ..... 6312.0-04
TRUNK LIGHT ASSEMBLY, RIGHT, E47 ..... 6313.0-02
TRUNK LIGHT ASSEMBLY, RIGHT, E47 ..... 6314.0-01
TRUNK LIGHT ASSEMBLY, RIGHT, E47 ..... 6322.0-00
TRUNK LIGHT ASSEMBLY, RIGHT, E47 ..... 6325.0-01
TRUNK LIGHT ASSEMBLY, RIGHT, E47 ..... 6581.2-04
TRUNK LIGHT ASSEMBLY, RIGHT, E47 ..... 6581.2-05
TRUNK LIGHT SWITCH, S61y 6575.2-00
TRUNK LOCK MOTOR, M17 ..... 5126.2-05
TURN/HAZARD LIGHTS 6313.0-00
TURN LIGHT, LEFT FRONT, H7 ..... 6313.0-02
TURN LIGHT, LEFT REAR, H6 ..... 6313.0-02
TURN LIGHT, RIGHT FRONT, H4 ..... 6313.0-02
TURN LIGHT, RIGHT REAR, H5 ..... 6313.0-02
TWIN RELAY MODULE, N21 ..... 6160.1-02
UNDERHOOD LIGHT, E20 ..... 6300.0-00
UNDERHOOD LIGHT SWITCH, S19 ..... 6300.0-00
UNLOADER RELAY, TERMINAL 15, K9 ..... 5203.0-00
VEHICLE SPEED SENSOR, B10 ..... 6211.0-04
VOLUME AIR FLOW SENSOR, B6233 ..... 1210.9-05
WASHER FLUID LEVEL SWITCH, S64 ..... 6581.2-03
WASHER JET HEATER, LEFT, E51 ..... 6169.0-00
WASHER JET HEATER, RIGHT, E52 ..... 6169.0-00
WASHER PUMP, M4 ..... 6160.1-00
WASHER PUMP, M4 ..... 6160.1-02
WINDOW MOTOR, PASSENGER'S, M23 ..... 5133.1-01
WINDOW MOTOR, RIGHT REAR, M22 ..... 5133.1-03
WINDOW MOTOR, LEFT REAR, M20 ..... 5133.1-03

INDEX

WINDOW SWITCH, LEFT REAR, S41 ..... 5133.1-03
WINDOW RETRACTION DOOR HANDLE
CONTACT SWITCH, PASSENGER'S, S180 ..... 5126.2-02
WINDOW RETRACTION DOOR HANDLE CONTACT
SWITCH, DRIVER'S, S179 ..... 5126.2-02
WINDOW SWITCH, RIGHT REAR, S42 ..... 5133.1-03
WINDSHIELD WASHER JET HEATERS 6169.0-00
WIPER MOTOR, M3 ..... 6160.1-00
WIPER MOTOR RELAY, K53 ..... 6160.1-01
WIPER RELAY, K11 ..... 6160.1-01
WIPER/WASHER MODULE, A51 ..... 6160.1-02
WIPER/WASHER MODULE (LOW II), A64 ..... 6160.1-00
WIPER/WASHER MODULE (WWM) 6160.1-00

Schematics

The schematics divide the entire vehicle electrical system into individual circuits. Interacting electrical components are shown on one common schematic.

Switches and other components are represented in such a way that their general layout and function are self-explicit. They are arranged on the sheet such that the current path can be followed from positive (top) to negative (bottom).

Important: The components and wires are not drawn to scale. For instance, a lead with a length of over 1m can be shown as a lead that is only a few cm long. To ensure clear arrangement , all connectors, lines branches and connected components from the fuses to the component and from the component to ground connection are not shown within the individual cells. If required, reference can be made to cells **0670.3 Fuse Details** and **0670.4 Ground Distribution** where all lines are illustrated with all plug connections, line branches and connected components.

All circuit symbols used are listed and explained in cell **0140.0 Symbols**.

In cell **7000.0 Component Location Chart** all important connectors, ground points and components are listed in tabular form. It provides a precise description of the component locations in the vehicle.

In cell **7100.0 Component Location Views** the location of connectors and components which are difficult to locate are shown in line arts or illustrations. In cell **8000.0 Splice Location Views** all splices are listed in numerical order and illustrations are provided to assist in locating splices on larger harnesses. In cell **8500.0 Connector Views** diagrams of connectors with more than 2 pins are illustrated.

Included in this ETM are foldout block diagrams. These are overviews of the entire system (EGS, ABS, AC, etc.) which helps understand the relationships between various components and control unit of the system being diagnosed.

Example

General conventions can be explained based on the following schematic example.

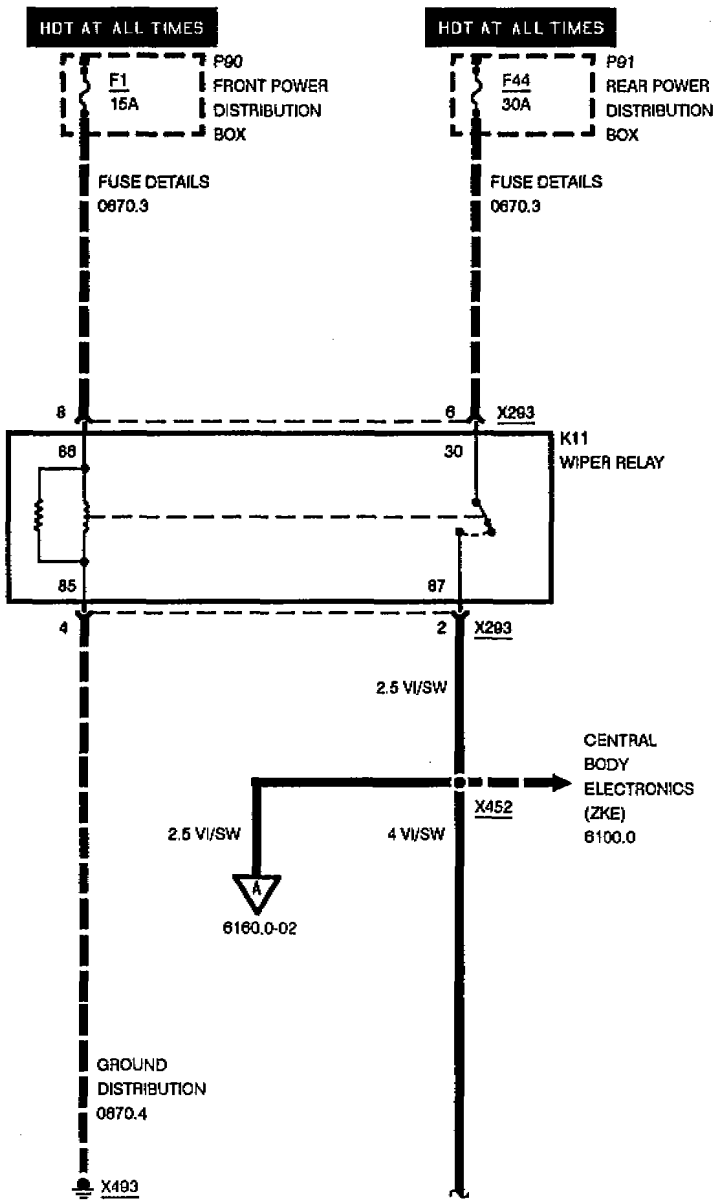

General Conventions

1. Switches and relays are always shown in rest position (e.g. K11).

2. A component shown in a dashed frame signifies that the component is illustrated only in part (e.g. P90 and P91).

3. A component shown in a completely drawn frame signifies that the component is illustrated in full (e.g. K11).

4. The dashed line between pin 8 and pin 6 of connector X293 indicates that both pins belong to connector X293.

5. The dashed line from fuse F1 to pin 8 of connector X293 shows the positive supply of relay K11. If required, refer to cell **0670.3 Fuse Details** at fuse F1 for the complete line progressing with plug connections, line branches, wire colors and cross sections.

6. The dashed line with an arrow at splice X452 indicates that several wires lead to splice X452. All lines leading to the connection are illustrated in cell **6100.0 Central Body Electronics (ZKE)**. An interrupted line with an arrow indicates that only this one wire leads to another circuit.

7. The dashed line from pin 4 of connector X293 to ground X493 shows the ground supply for relay K11. If required, refer to cell **0670.4 Ground Distribution** at ground X493 for the complete line progression with all plug connections, line branches, wire colors, and cross sections.

8. The interrupted line from splice X452 with an **A** in the open arrow is continued on page 6160.0-02.
Termination of wire 4 VI/SW from splice X452 with a wavy line indicates that the wire is continued on the opposite page.

SYMBOLS

BATTERY

FUSE DETAILS

FUSIBLE LINK

CIRCUIT BREAKER

THERMO SWITCH

SOLENOID

SOLENOID CONTROLLED VALVE
OR CLUTCH SOLENOID

HEATING ELEMENT

LOUDSPEAKER OR HORN

LIGHT

PERMANENT MAGNET MOTOR
ONE SPEED

PERMANENT MAGNET MOTOR
TWO SPEEDS

KNOCK SENSOR

VARIABLE RESISTANCE
SENSOR
VARIABLE CONTACT IS
MOVED BY AN EXTERNAL
FORCE

VARIABLE RESISTOR
RESISTANCE IS CHANGED
BY TEMPERATURE OR
PRESSURE

DIODE
CURRENT CAN FLOW ONLY
IN DIRECTION OF ARROW

ZENER DIODE
TO REGULATE VOLTAGE

LIGHT EMITTING DIODE

OXYGEN SENSOR

ANTENNA

CONTROL/POWER ELECTRONICS

HALL EFFECT SENSOR

RADIO

TRANSISTORIZED SWITCH
31

INDUCTIVE SENSOR
N
S

VEHICLE SPEED SENSOR
N
S

SYMBOLS

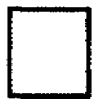
ENTIRE COMPONENT SHOWN

PART OF COMPONENT SHOWN

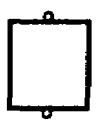
COMPONENT WITH SCREW TERMINALS

COMPONENT CASE ATTACHED DIRECTLY TO METAL PART OF CAR (GROUNDED)

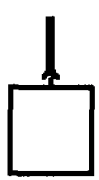
CONNECTOR ATTACHED TO COMPONENT

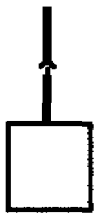
CONNECTOR ATTACHED TO COMPONENT LEAD (PIGTAIL)

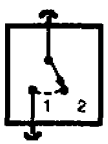

ONE POLE, TWO POSITION SWITCH

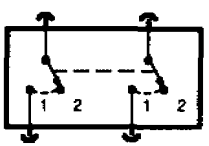

SWITCHES THAT MOVE TOGETHER

DASHED LINE SHOWS A MECHANICAL CONNECTION BETWEEN SWITCHES

WIRE COLOR	
BL	BLUE
BR	BROWN
GE	YELLOW
GN	GREEN
GR	GRAY
OR	ORANGE
RS	PINK
RT	RED
SW	BLACK
VI	VIOLET
WS	WHITE
TR	TRANSPARENT

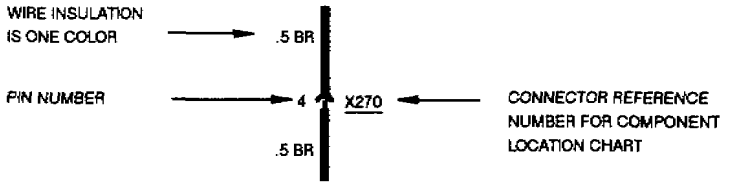

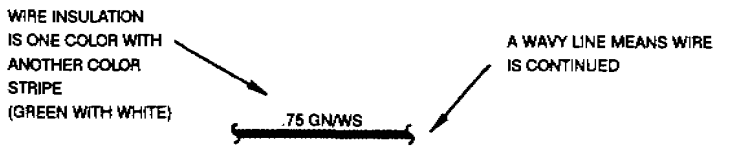

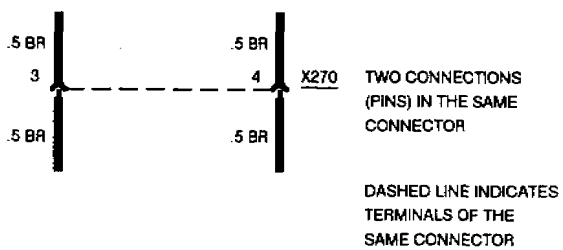

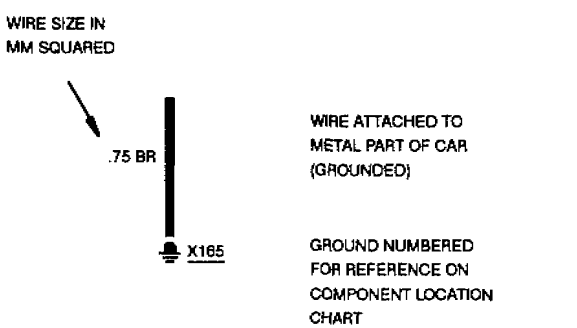

SYMBOLS

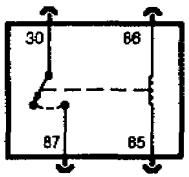

CONTACT RELAY

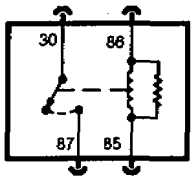

RELAY WITH RESISTOR ACROSS WINDING

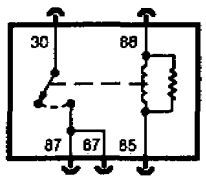

CONTACT RELAY WITH TWO OUTPUTS

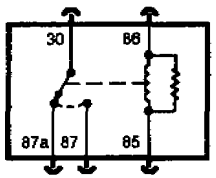

CHANGEOVER RELAY WITH TWO OUTPUTS

TERMINAL NUMBER	DESCRIPTION
30	RELAY INPUT
85	RELAY OUTPUT (WINDING)
86	RELAY INPUT (WINDING)
87	RELAY OUTPUT (ENERGIZED)
87a	RELAY OUTPUT (AT REST)

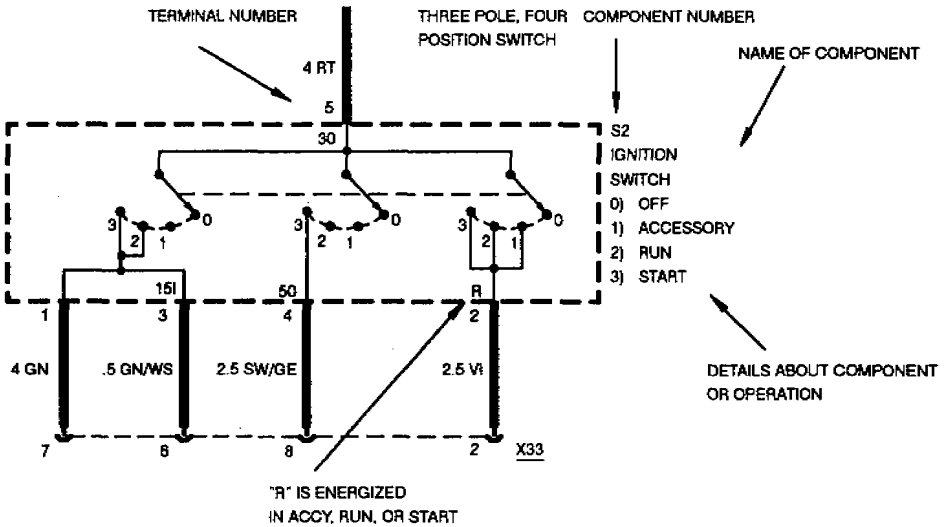

TERMINAL NUMBER	DESCRIPTION	TERMINAL NUMBER	DESCRIPTION
50	VOLTAGE: IGNITION SWITCH IN START	15I	VOLTAGE: IGNITION SWITCH IN RUN
30	VOLTAGE: SUPPLIED AT ALL TIMES	R	VOLTAGE: IGNITION SWITCH IN ACCESSORY, RUN OR START
15	VOLTAGE: IGNITION SWITCH IN RUN OR START	31	GROUND

INDICATES THAT FUSE 9 IS SUPPLIED WITH POWER AT ALL TIMES

POWER STATUS	DESCRIPTION
HOT AT ALL TIMES	VOLTAGE: SUPPLIED AT ALL TIMES
HOT IN RUN AND START	VOLTAGE: IGNITION SWITCH IN RUN OR START
HOT IN ACCY, RUN AND START	VOLTAGE: IGNITION SWITCH IN ACCESSORY, RUN OR START

SYMBOLS

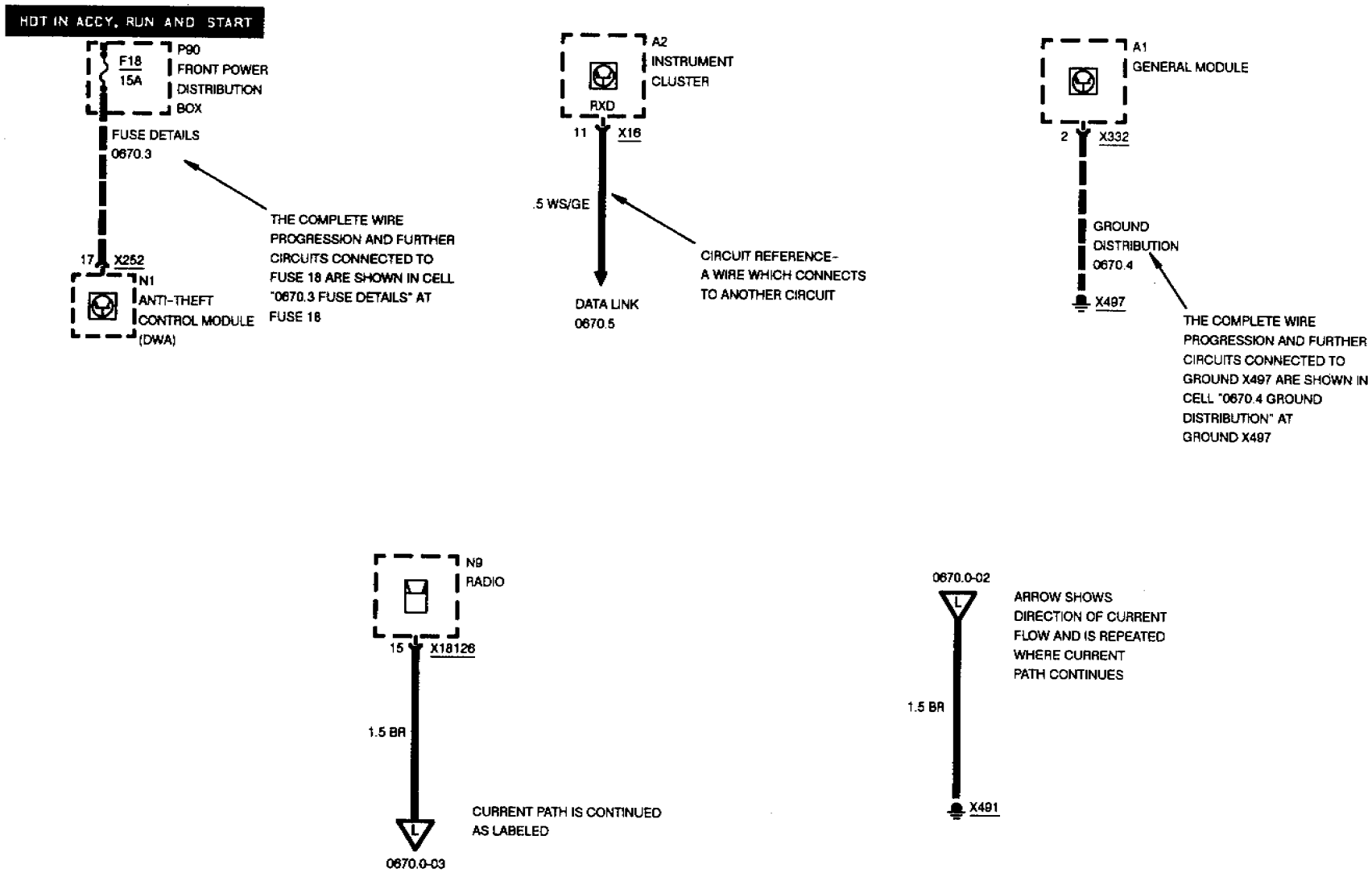
HOT IN ACCY, RUN AND START
F18
15A
P90
FRONT POWER
DISTRIBUTION
BOX
FUSE DETAILS
0670.3
THE COMPLETE WIRE PROGRESSION AND FURTHER CIRCUITS CONNECTED TO FUSE 18 ARE SHOWN IN CELL "0670.3 FUSE DETAILS" AT FUSE 18
17
X252
N1
ANTI-THEFT
CONTROL MODULE
(DWA)
A2
INSTRUMENT
CLUSTER
RXD
11
X16
.5 WS/GE
DATA LINK
0670.5
CIRCUIT REFERENCE-
A WIRE WHICH CONNECTS
TO ANOTHER CIRCUIT
A1
GENERAL MODULE
2
X332
GROUND
DISTRIBUTION
0670.4
X497
THE COMPLETE WIRE PROGRESSION AND FURTHER CIRCUITS CONNECTED TO GROUND X497 ARE SHOWN IN CELL "0670.4 GROUND DISTRIBUTION" AT GROUND X497
N9
RADIO
15
X18126
1.5 BR
L
0670.0-03
CURRENT PATH IS CONTINUED
AS LABELED
0670.0-02
L
ARROW SHOWS
DIRECTION OF CURRENT
FLOW AND IS REPEATED
WHERE CURRENT
PATH CONTINUES
1.5 BR
X491

SYMBOLS
BLOCK DIAGRAM

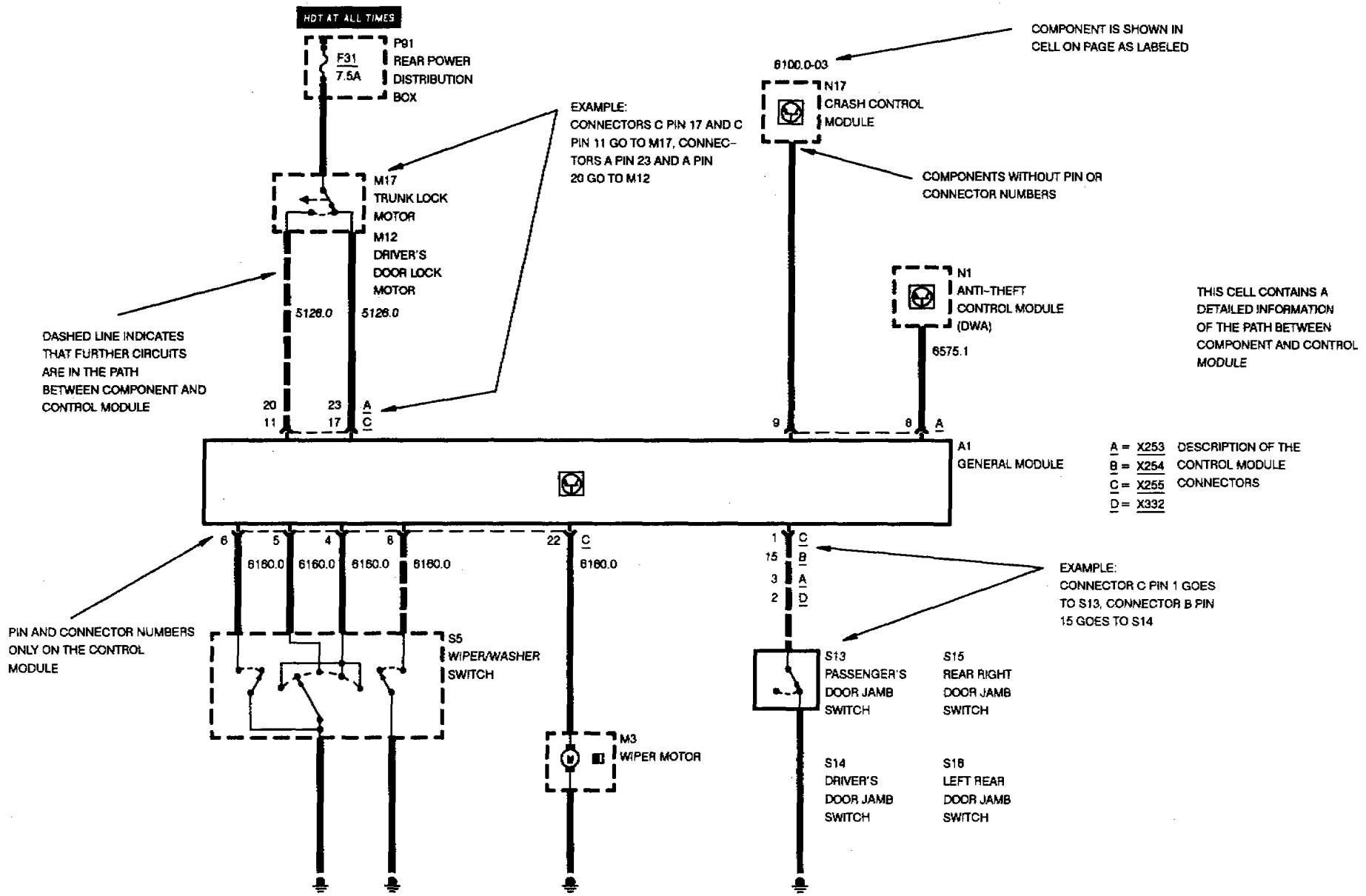

POWER DISTRIBUTION CHART

FRONT POWER DISTRIBUTION BOX

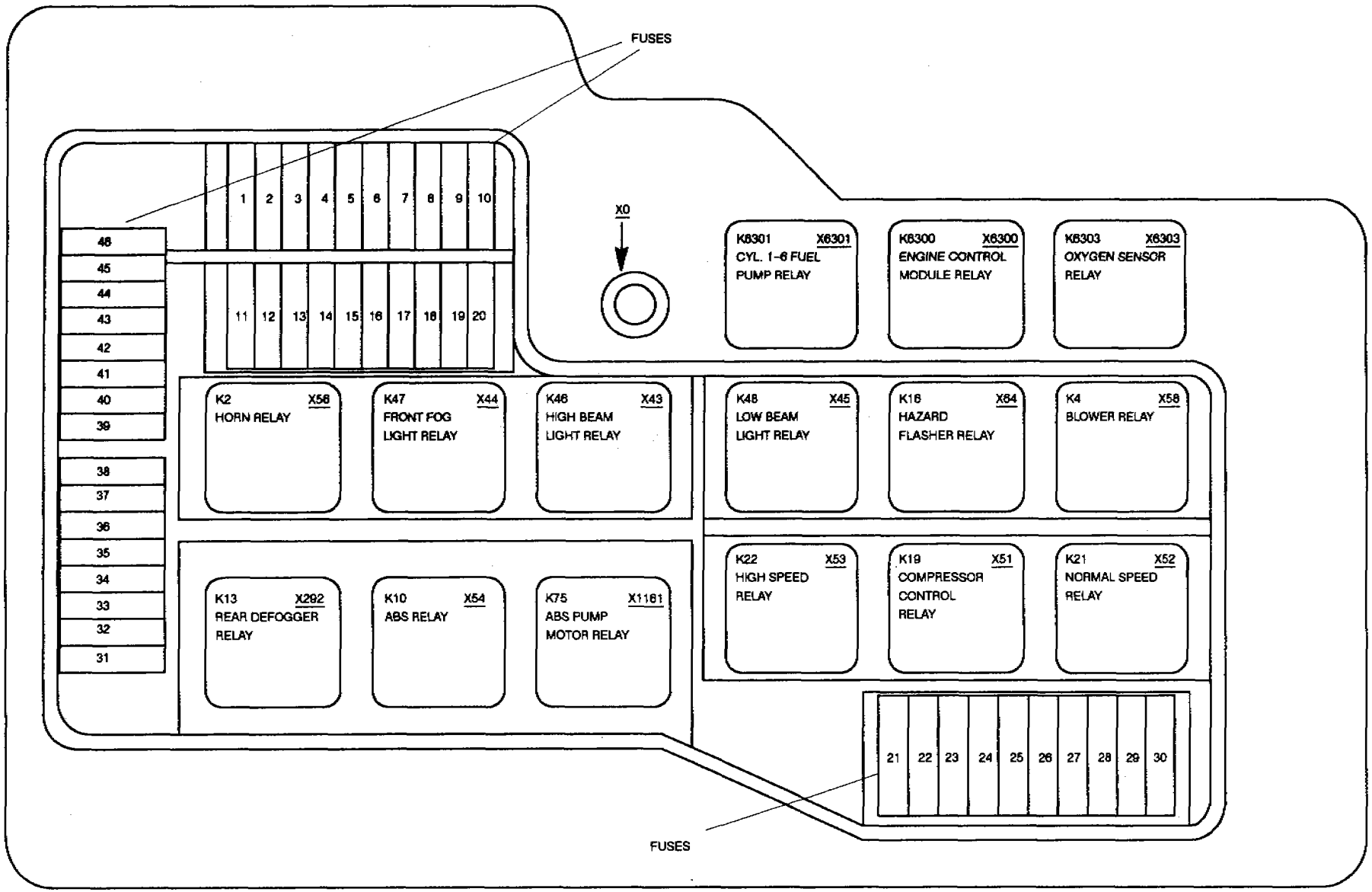

POWER DISTRIBUTION CHART

RELAY PANEL UNDER LH SIDE OF DASHBOARD

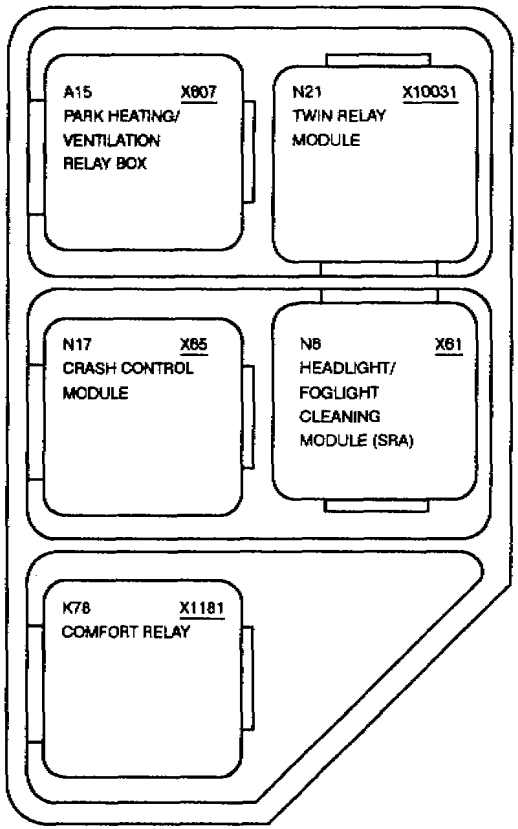

POWER DISTRIBUTION CHART

SPLICE PANEL UNDER LH SIDE OF DASHBOARD

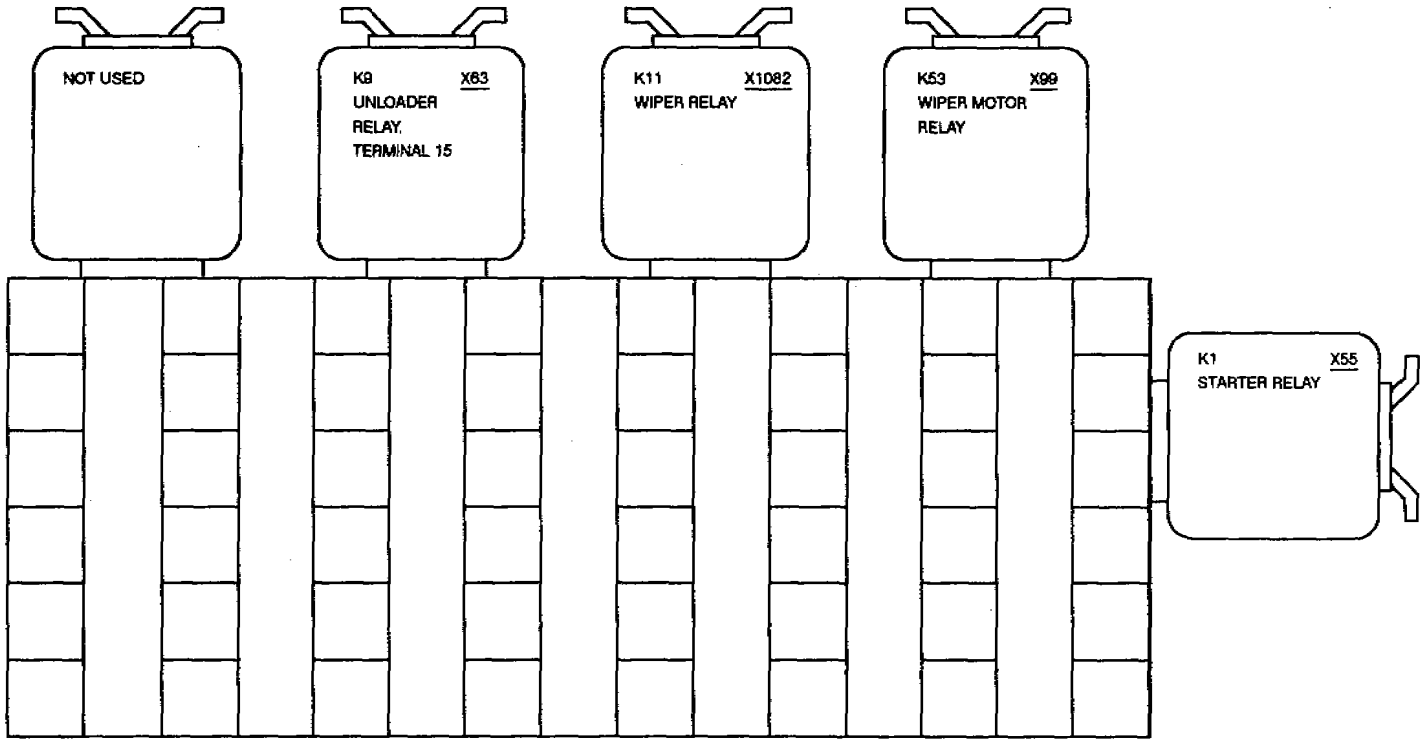

POWER DISTRIBUTION CHART

SPLICE PANEL UNDER RH SIDE OF DASHBOARD

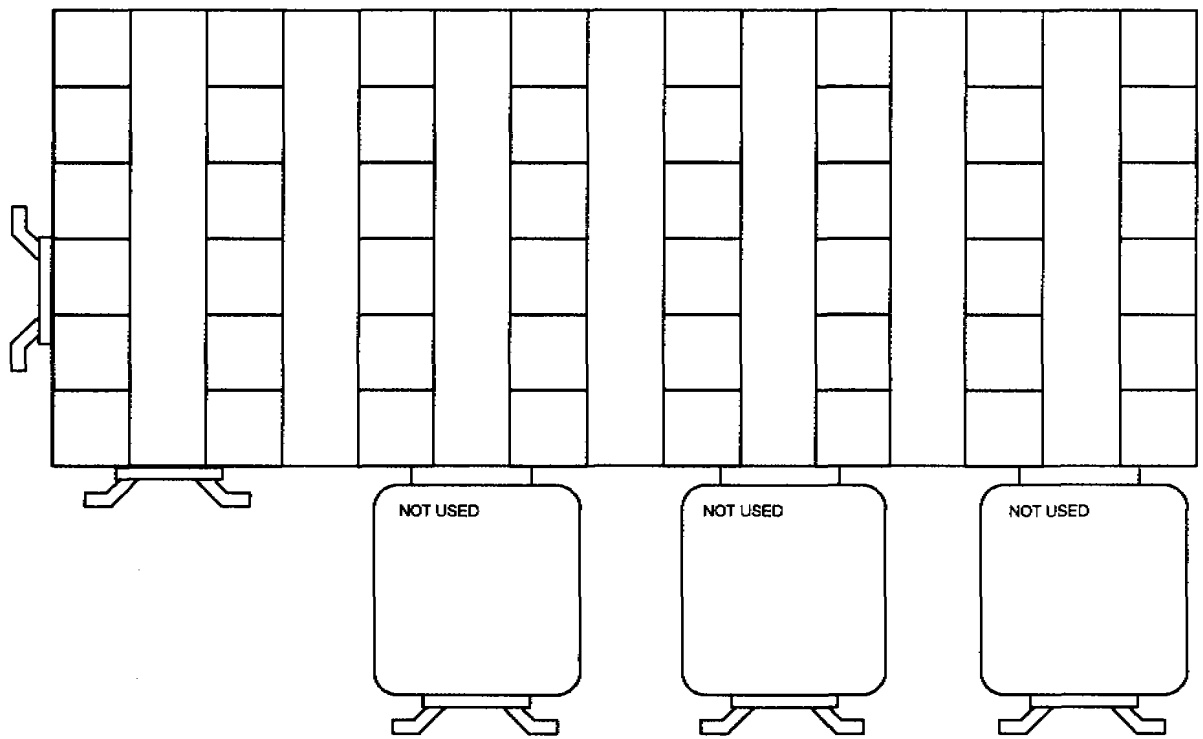

FUSE CHART

FUSES 1 TO 29

		FUSE NUMBER																												
		1	2	3	4	5	6	7	8	9	10	11	12	13	14	15	16	17	18	19	20	21	22	23	24	25	26	27	28	29
		30A		30A	15A	30A	20A	5A	15A	20A	30A	7.5A	7.5A		30A	5A	5A	10A	15A		30A	5A	5A	5A	10A	5A	10A	5A	5A	7.5A
1210.9	ENGINE CONTROL SYSTEM (DME M1.7, 4-CYLINDER M42)																●		●										●	
1210.13	ENGINE CONTROL SYSTEM (DME M3.3.1, 6-CYLINDER M50)																●		●										●	
1230.0	CHARGING SYSTEM																													
1240.0	START																												●	
2460.2	ELECTRONIC TRANSMISSION CONTROL (EGS A4S 310R)																										●		●	
3234.0	SUPPLEMENTAL RESTRAINT SYSTEM (AIR BAG)																													
3450.0	SLIP CONTROL (ABS)										●											●						●		
5116.0	POWER MIRRORS																								●					
5126.2	CENTRAL LOCKING MODULE II (ZVM II)							●																						
5133.1	POWER WINDOWS (FH)														●															
5200.0	POWER SEATS					●																								
5203.0	HEATED SEATS				●																			●						
5410.1	POWER SUN ROOF (SHD)	●																												
6133.0	HORN								●																					
6160.1	WIPER/WASHER MODULE (WWM)																													
6167.1	HEADLIGHT WASHER (SRA)			●																										
6169.0	WINDSHIELD WASHER JET HEATERS																								●					
6211.0	INSTRUMENT CLUSTER																							●				●		
6213.2	MULTI-FUNCTION CLOCK																							●				●		

FUSE CHART

FUSES 1 TO 29

		FUSE NUMBER																											
		1	2	3	4	5	6	7	8	9	10	11	12	13	14	15	16	17	18	19	20	21	22	23	24	25	26	27	28	29
		30A		30A	15A	30A	20A	5A	15A	20A	30A	7.5A	7.5A		30A	15A	5A	10A	15A		30A	5A	5A	5A	10A	5A	10A	5A	5A	7.5A
6300.0	LIGHT SWITCH DETAILS																						●			●				
6312.0	HEADLIGHTS/ FOG LIGHTS											●	●			●								●		●				●
6313.0	TURN/HAZARD LIGHTS																							●						
6314.0	PARK/TAIL LIGHTS																						●							
6320.0	LICENSE PLATE/ LUGGAGE COMPARTMENT LIGHTS																													
6322.0	BACK UP LIGHTS																										●			
6325.0	BRAKE LIGHTS																													
6330.3	INTERIOR LIGHTS																													
6332.1	GLOVE BOX LIGHT/CASSETTE BOX/ASHTRAY LIGHT/ CHARGING SOCKET/CIGAR LIGHTER																													
6350.0	CRASH CONTROL MODULE																													
6412.5	PARK VENTILATION WITH IHKR																				●									
6424.0	REAR WINDOW DEFOGGER						●																	●						
6450.4	INTEGRATED CLIMATE REGULATION (IHKR E36)																●				●			●						
6510.0	RADIO/ CD PLAYER (PROVISIONS)									●																				
6510.1	RADIO/HIFI									●																				
6561.0	CELLULAR TELEPHONE (PROVISIONS)																													
6571.0	CRUISE CONTROL (TEMPOMAT)																												●	
6575.2	ANTI-THEFT SYSTEM (ALPINE)								●																					
6581.2	ON-BOARD COMPUTER (BC V)											●	●											●				●		

FUSE CHART

FUSE 30 TO 46

		FUSE NUMBER																
		30	31	32	33	34	35	36	37	38	39	40	41	42	43	44	45	46
		7.5A	5A	30A	10A	15A	25A	30A	10A	30A	7.5A	30A	30A	7.5A	5A	15A	7.5A	15A
1210.9	ENGINE CONTROL SYSTEM (DME M1.7, 4-CYLINDER M42)																	
1210.13	ENGINE CONTROL SYSTEM (DME M3.3.1, 6-CYLINDER M50)																	
1230.0	CHARGING SYSTEM																	
1240.0	START																	
2460.2	ELECTRONIC TRANSMISSION CONTROL (EGS A4S 310R)																	●
3234.0	SUPPLEMENTAL RESTRAINT SYSTEM (AIR BAG)													●	●			
3450.0	SLIP CONTROL (ABS)									●								●
5116.0	POWER MIRRORS																	
5126.2	CENTRAL LOCKING MODULE II (ZVM II)						●								●			
5133.1	POWER WINDOWS (FH)				●													
5200.0	POWER SEATS											●						
5203.0	HEATED SEATS																	
5410.1	POWER SUN ROOF (SHD)																	
6133.0	HORN																	
6160.1	WIPER/WASHER MODULE (WWM)							●	●							●	●	
6167.1	HEADLIGHT WASHER (SRA)																	
6169.0	WINDSHIELD WASHER JET HEATERS																	
6211.0	INSTRUMENT CLUSTER		●															●
6213.2	MULTI-FUNCTION CLOCK		●														●	●

BMW 3

FUSE CHART

FUSE 30 TO 46

		FUSE NUMBER																
		30	31	32	33	34	35	36	37	38	39	40	41	42	43	44	45	46
		7.5A	5A	30A	10A	15A	25A	30A	10A	30A	7.5A	30A	30A		5A	15A	7.5A	15A
6300.0	LIGHT SWITCH DETAILS				●				●									
6312.0	HEADLIGHTS/ FOG LIGHTS	●																
6313.0	TURN/HAZARD LIGHTS					●												
6314.0	PARK/TAIL LIGHTS				●				●									
6320.0	LICENSE PLATE/ LUGGAGE COMPARTMENT LIGHTS				●				●									
6322.0	BACK UP LIGHTS																	
6325.0	BRAKE LIGHTS																	●
6330.3	INTERIOR LIGHTS				●										●			
6332.1	GLOVE BOX LIGHT/CASSETTE BOX/ASHTRAY LIGHT/ CHARGING SOCKET/CIGAR LIGHTER			●	●				●							●		
6350.0	CRASH CONTROL MODULE					●												
6412.5	PARK VENTILATION WITH IHKR																	
6424.0	REAR WINDOW DEFOGGER																	
6450.4	INTEGRATED CLIMATE REGULATION (IHKR E36)		●						●		●		●					
6510.0	RADIO/ CD PLAYER (PROVISIONS)															●		
6510.1	RADIO/HIFI															●		
6561.0	CELLULAR TELEPHONE (PROVISIONS)				●										●			
6571.0	CRUISE CONTROL (TEMPOMAT)																	●
6574.2	ANTI-THEFT SYSTEM (ALPINE)															●		
6581.2	ON-BOARD COMPUTER (BC V)		●		●				●								●	●

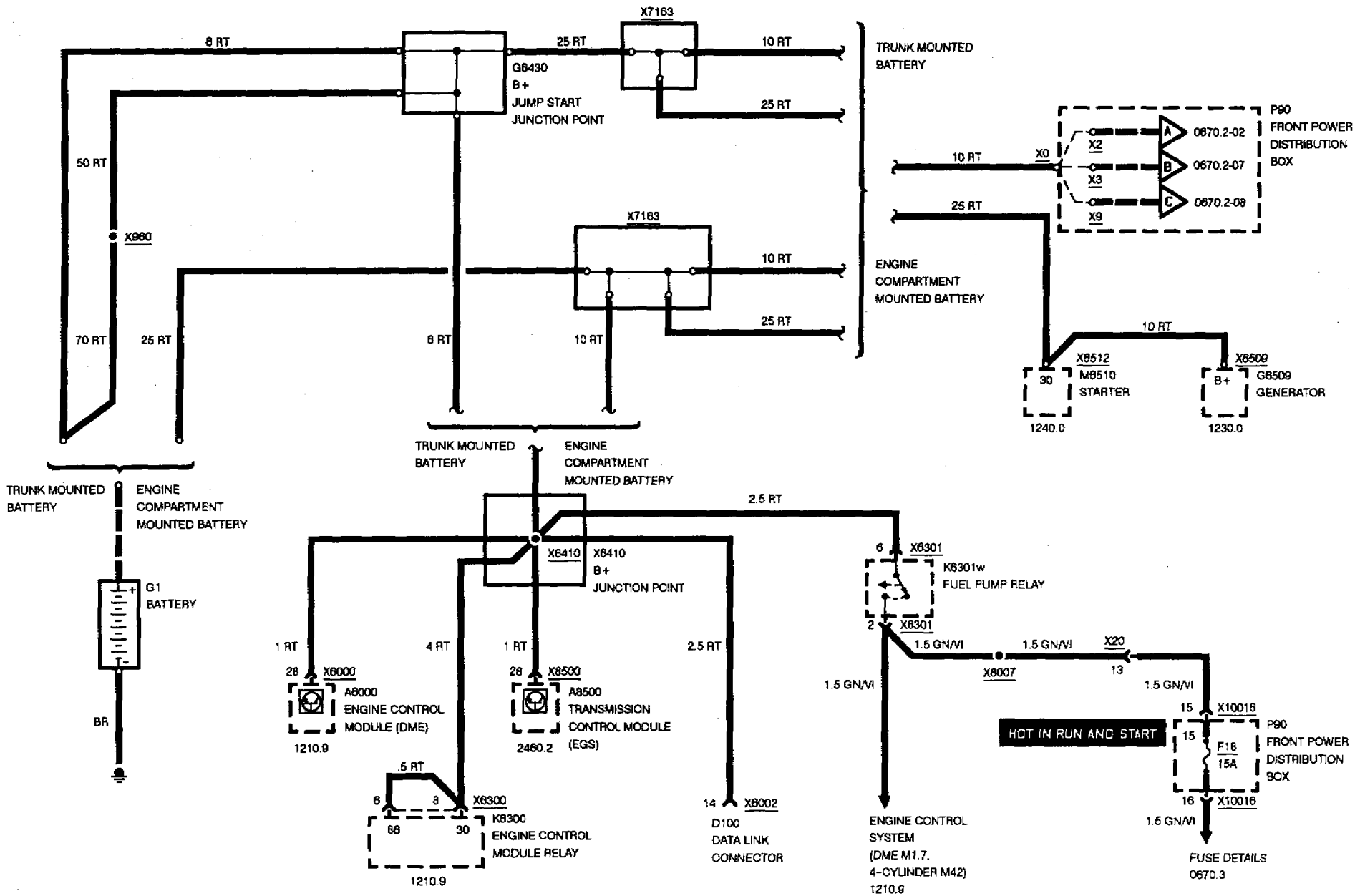
8 RT
25 RT
X7163
10 RT
25 RT
G6430
B+
JUMP START
JUNCTION POINT
TRUNK MOUNTED
BATTERY
50 RT
X960
70 RT
25 RT
8 RT
10 RT
X7163
10 RT
25 RT
ENGINE
COMPARTMENT
MOUNTED BATTERY
10 RT
X0
X2
X3
X9
A
B
C
0670.2-02
0670.2-07
0670.2-08
P90
FRONT POWER
DISTRIBUTION
BOX
25 RT
10 RT
X6512
30
M6510
STARTER
1240.0
X6509
B+
G6509
GENERATOR
1230.0
TRUNK MOUNTED
BATTERY
ENGINE
COMPARTMENT
MOUNTED BATTERY
TRUNK MOUNTED
BATTERY
ENGINE
COMPARTMENT
MOUNTED BATTERY
G1
BATTERY
BR
2.5 RT
X6410
X6410
B+
JUNCTION POINT
6
X6301
K6301w
FUEL PUMP RELAY
2
X6301
1 RT
4 RT
1 RT
2.5 RT
26
X6000
A6000
ENGINE CONTROL
MODULE (DME)
1210.9
28
X8500
A8500
TRANSMISSION
CONTROL MODULE
(EGS)
2460.2
.5 RT
6
8
X6300
86
30
K6300
ENGINE CONTROL
MODULE RELAY
1210.9
14
X6002
D100
DATA LINK
CONNECTOR
1.5 GN/VI
1.5 GN/VI
X20
X8007
13
1.5 GN/VI
1.5 GN/VI
15
X10016
HOT IN RUN AND START
15
F16
15A
P90
FRONT POWER
DISTRIBUTION
BOX
16
X10016
1.5 GN/VI
ENGINE CONTROL
SYSTEM
(DME M1.7.
4-CYLINDER M42)
1210.9
FUSE DETAILS
0670.3

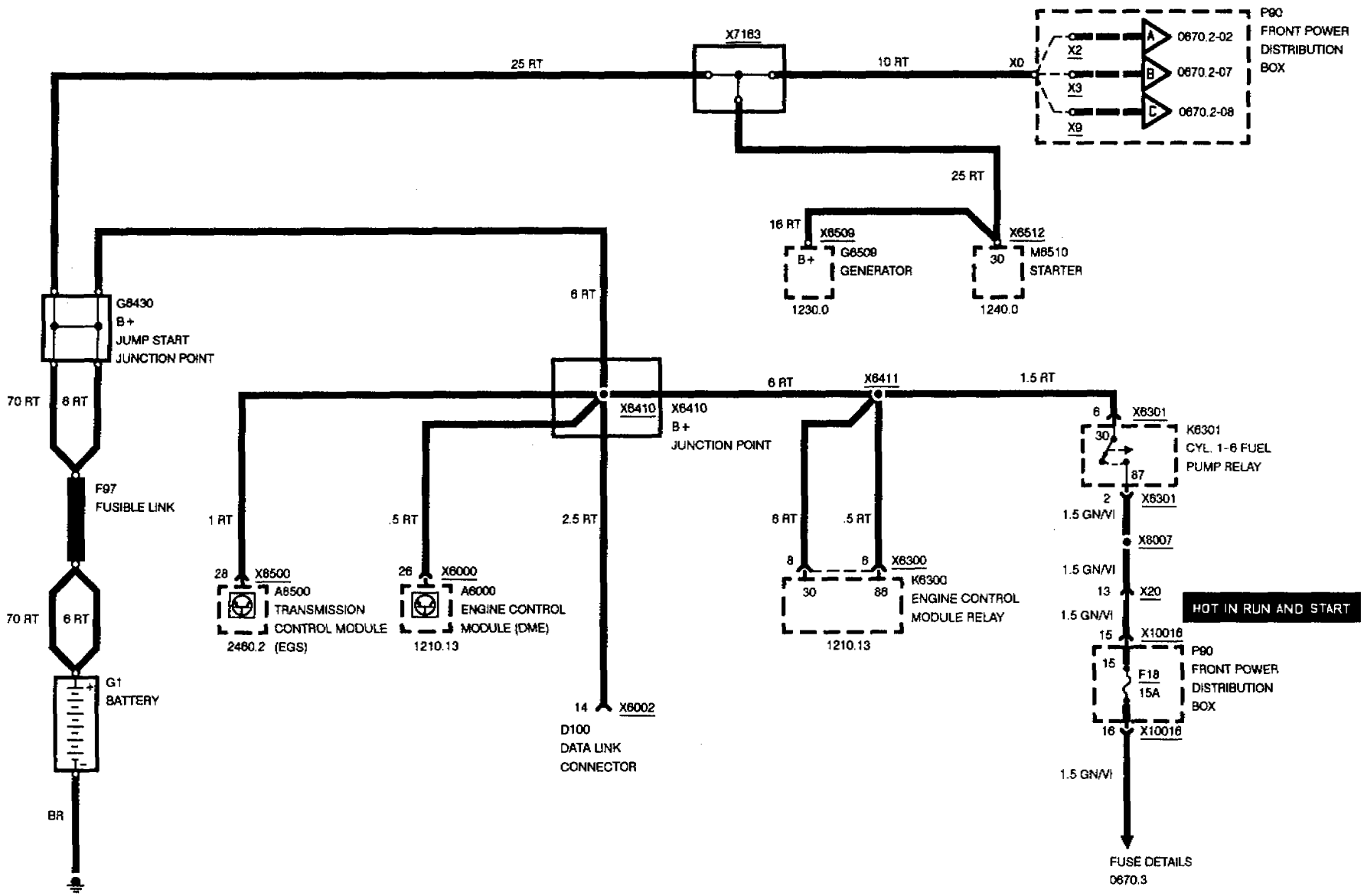
X7163
25 RT
10 RT
X0
X2
X3
X9
P90
FRONT POWER
DISTRIBUTION
BOX
0670.2-02
0670.2-07
0670.2-08
25 RT
16 RT
X6509
B+
G6509
GENERATOR
1230.0
X6512
30
M6510
STARTER
1240.0
G6430
B+
JUMP START
JUNCTION POINT
6 RT
70 RT
6 RT
F97
FUSIBLE LINK
70 RT
6 RT
G1
BATTERY
BR
X6410
X6410
B+
JUNCTION POINT
6 RT
X6411
1.5 RT
1 RT
.5 RT
2.5 RT
6 RT
.5 RT
28
X6500
A6500
TRANSMISSION
CONTROL MODULE
2460.2 (EGS)
26
X6000
A6000
ENGINE CONTROL
MODULE (DME)
1210.13
14
X6002
D100
DATA LINK
CONNECTOR
8
6
X6300
30
86
K6300
ENGINE CONTROL
MODULE RELAY
1210.13
6
X6301
30
87
K6301
CYL. 1-6 FUEL
PUMP RELAY
2
X6301
1.5 GN/VI
X8007
1.5 GN/VI
13
X20
1.5 GN/VI
HOT IN RUN AND START
15
X10016
15
F18
15A
P90
FRONT POWER
DISTRIBUTION
BOX
16
X10016
1.5 GN/VI
FUSE DETAILS
0670.3

POWER DISTRIBUTION

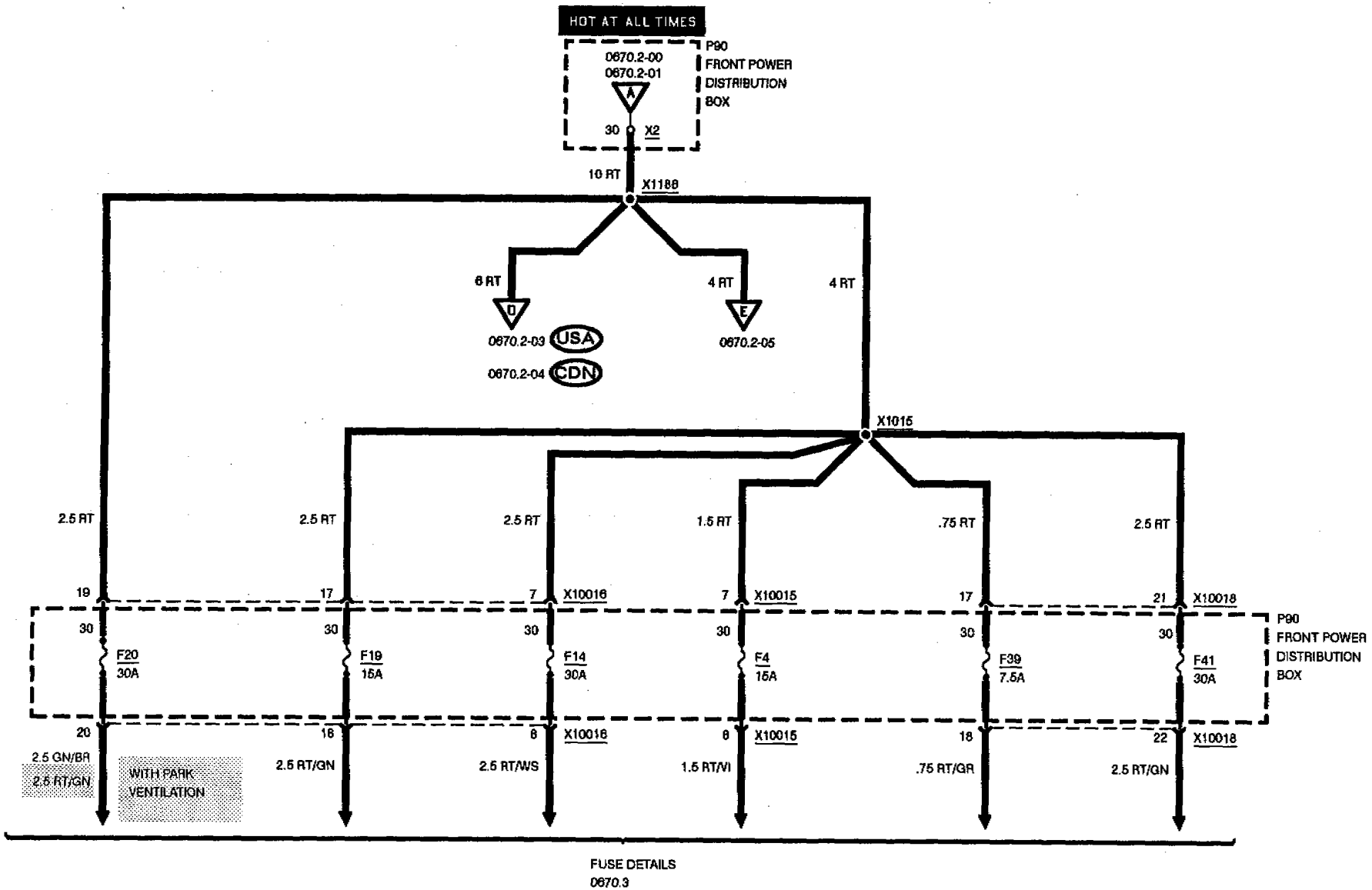

FUSE DETAILS
0670.3

POWER DISTRIBUTION

USA

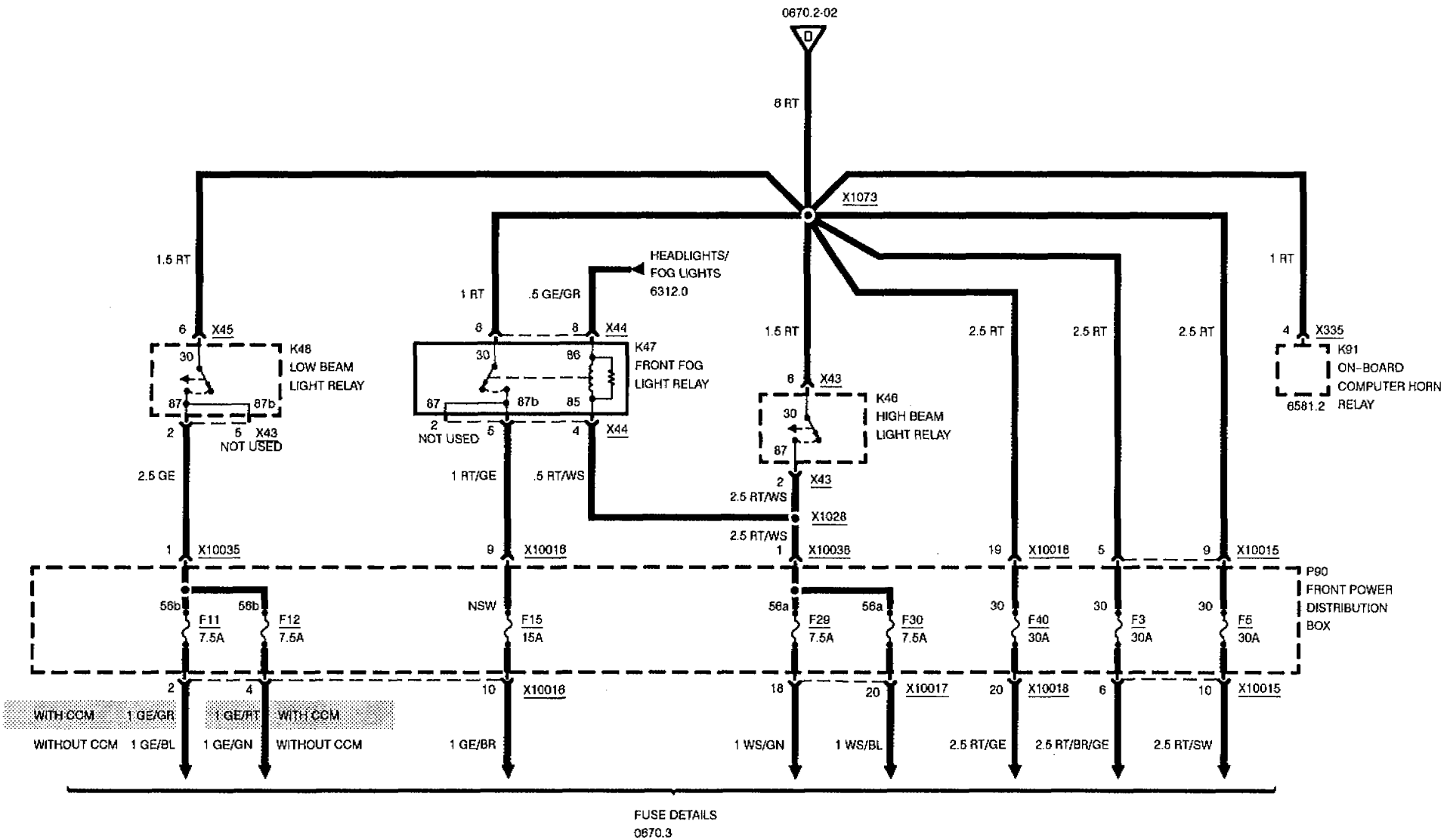

POWER DISTRIBUTION

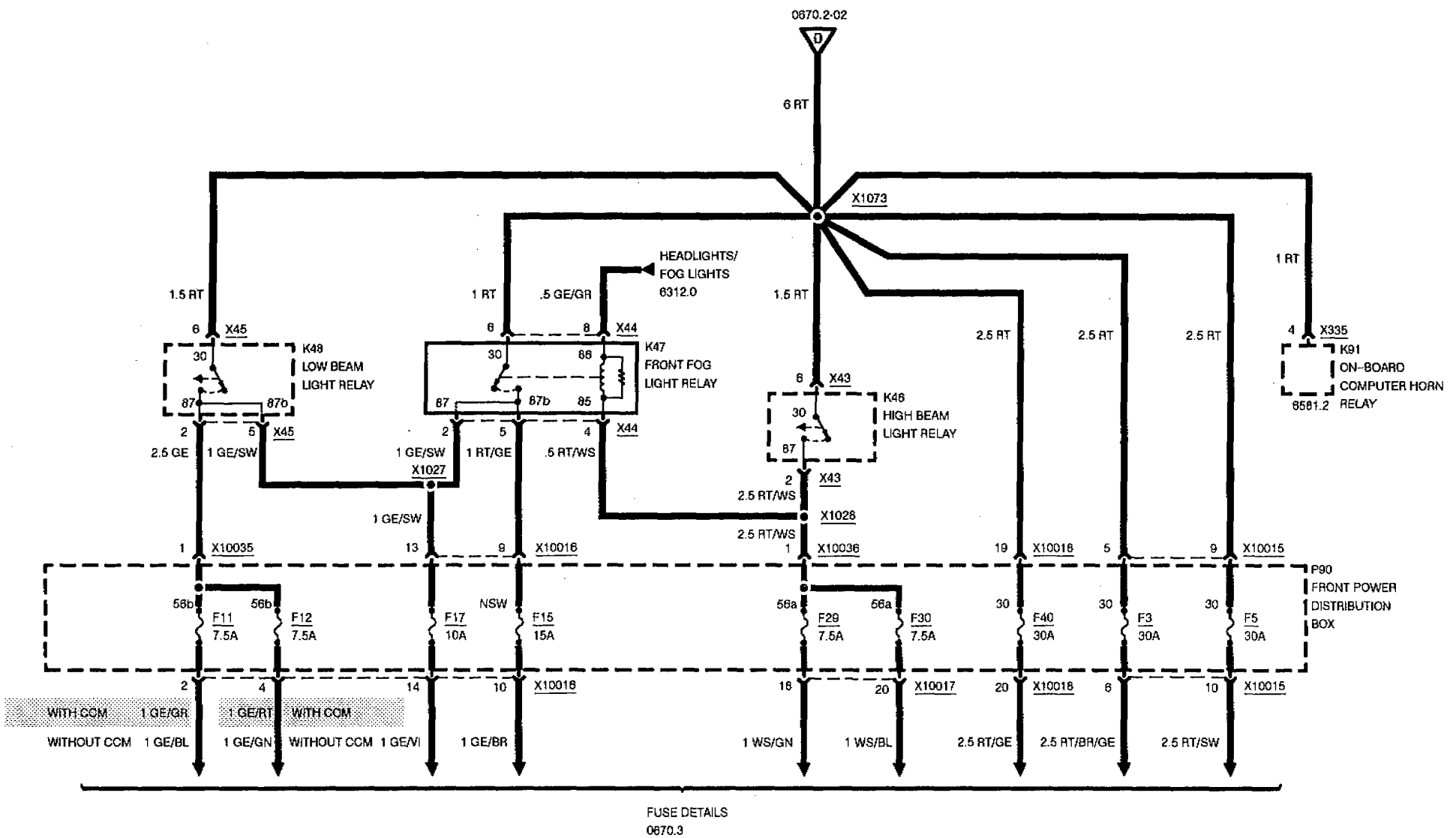

POWER DISTRIBUTION

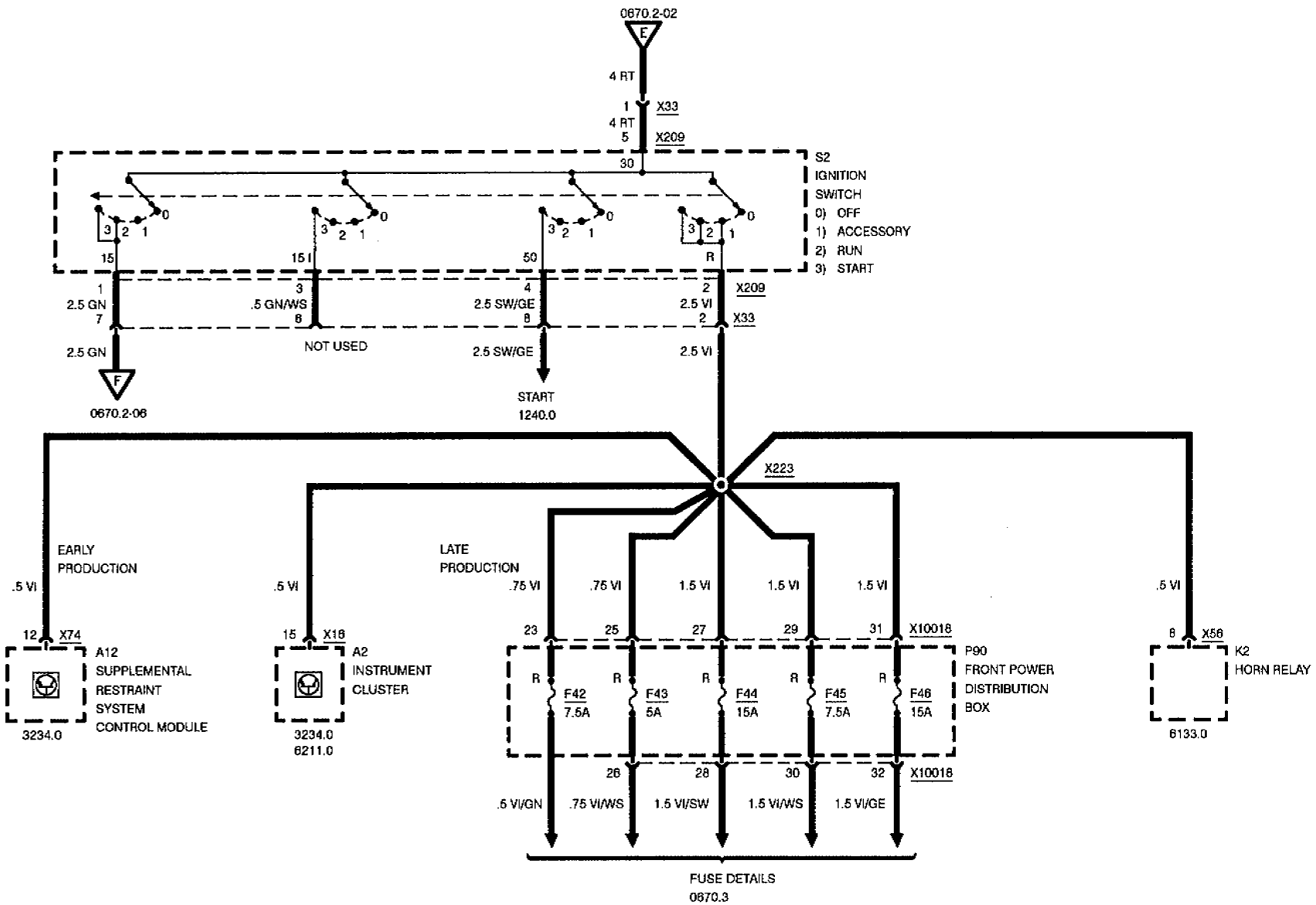

POWER DISTRIBUTION

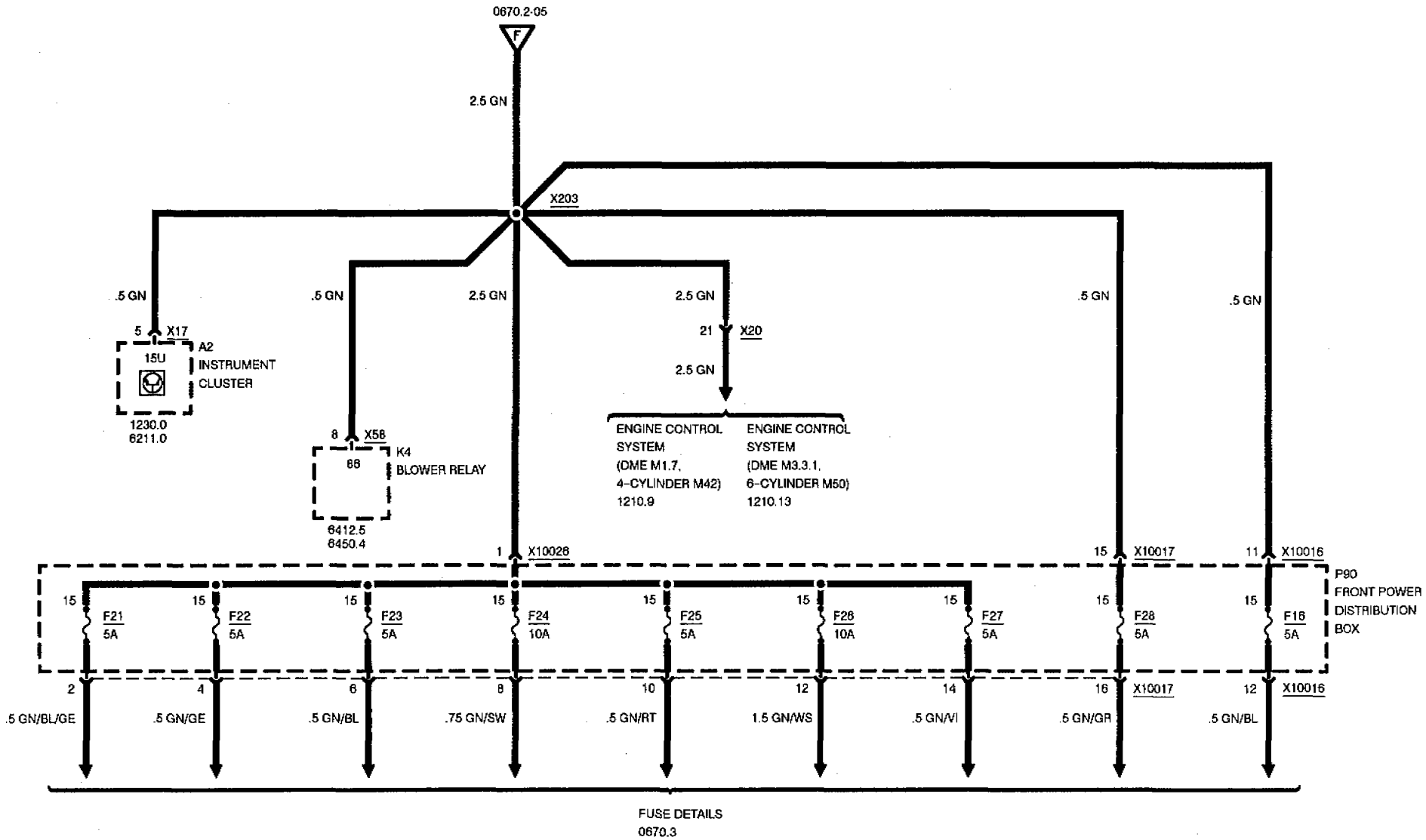

POWER DISTRIBUTION

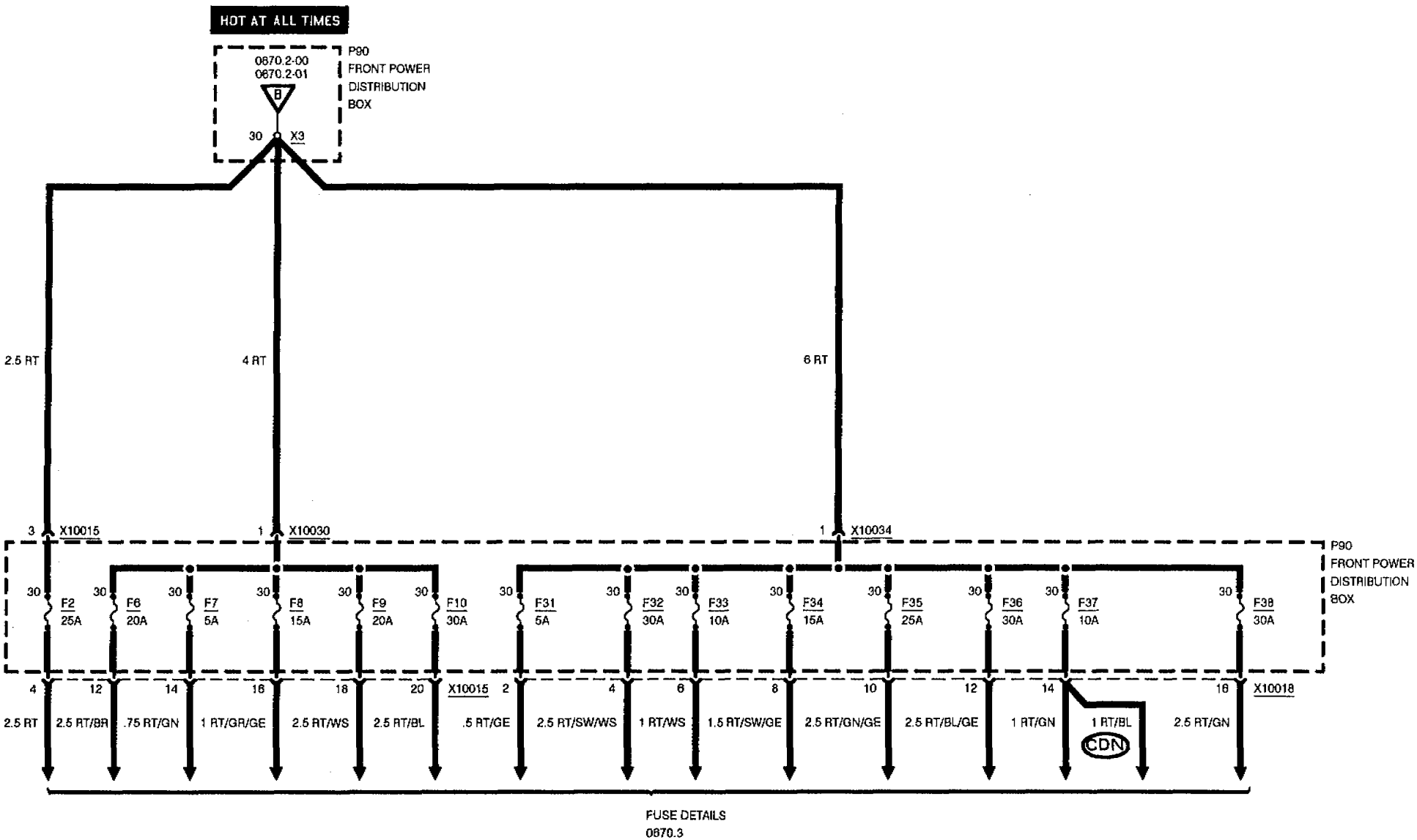

POWER DISTRIBUTION

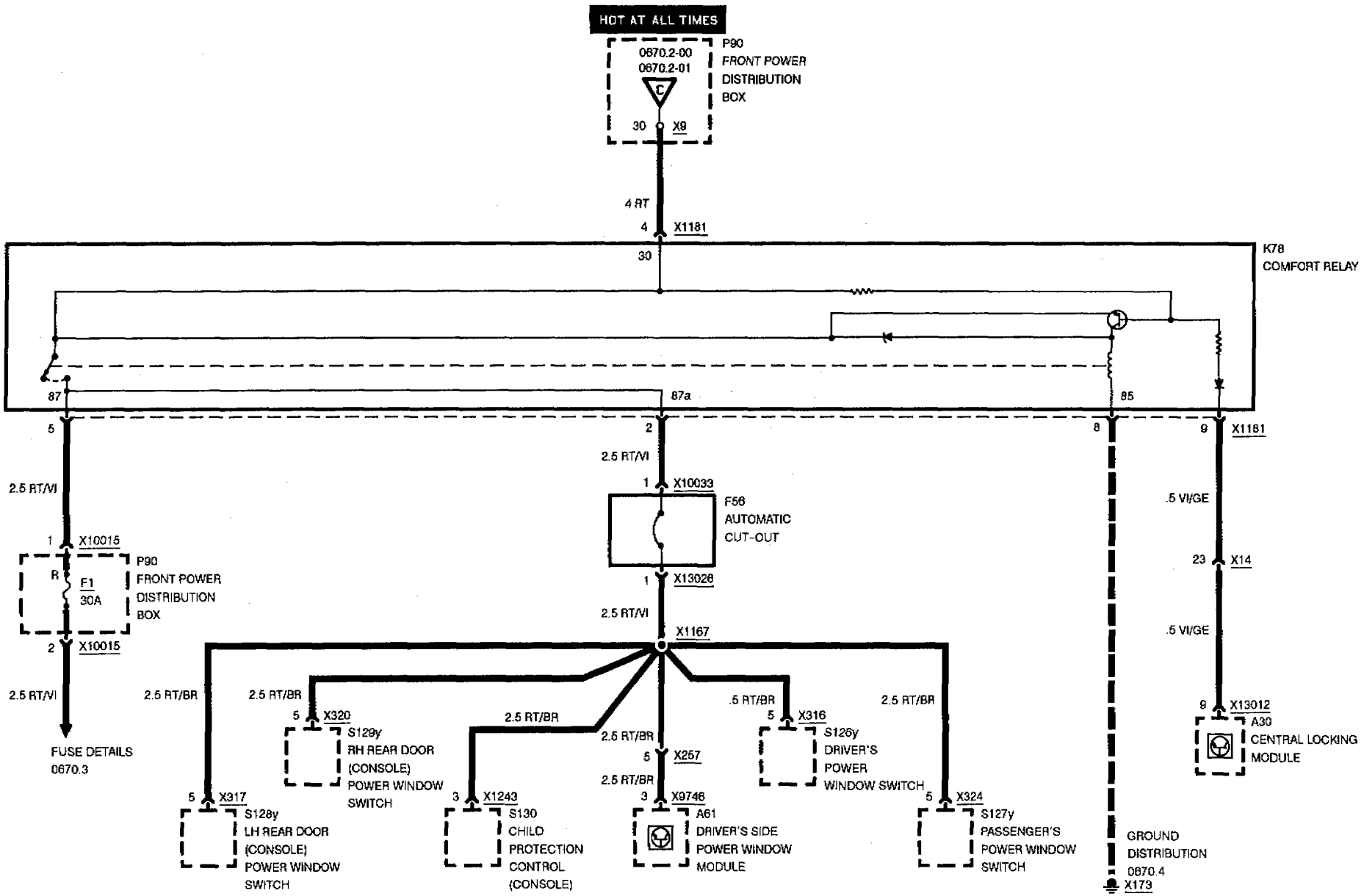

FUSE DETAILS

FUSES 1, 2, 3, 4, AND 5

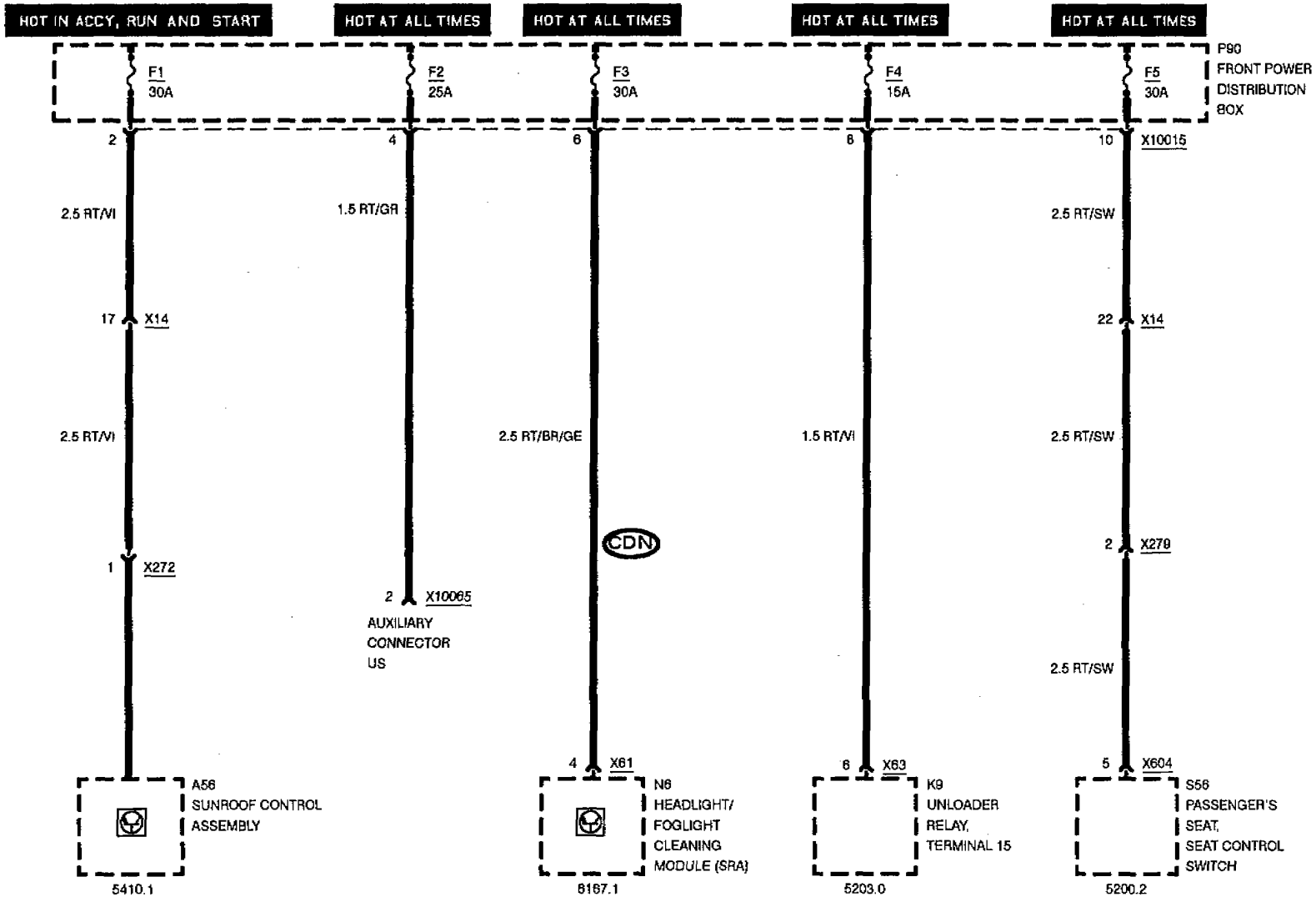

FUSE DETAILS

FUSES 6 AND 7

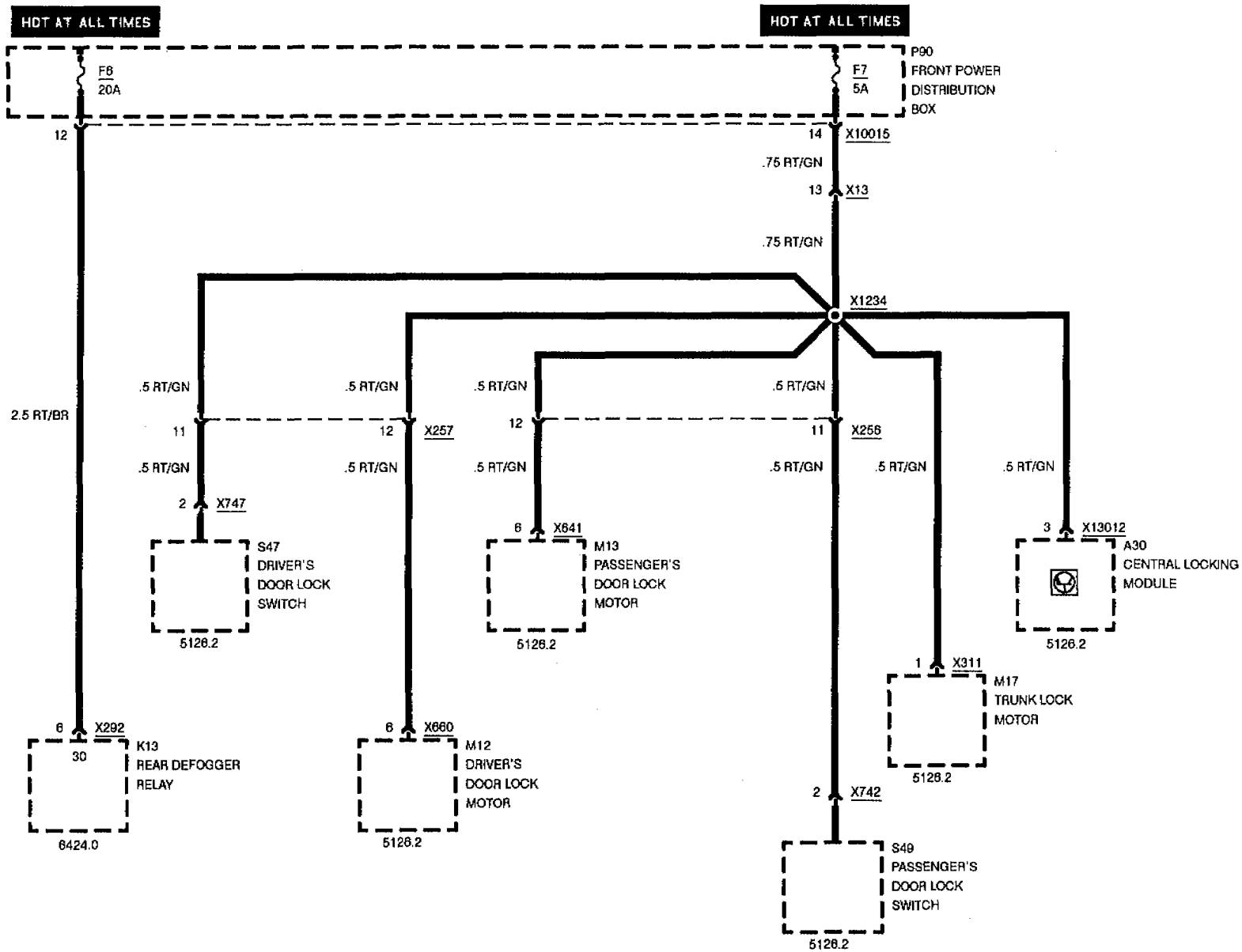

FUSE DETAILS

FUSES 8 AND 9

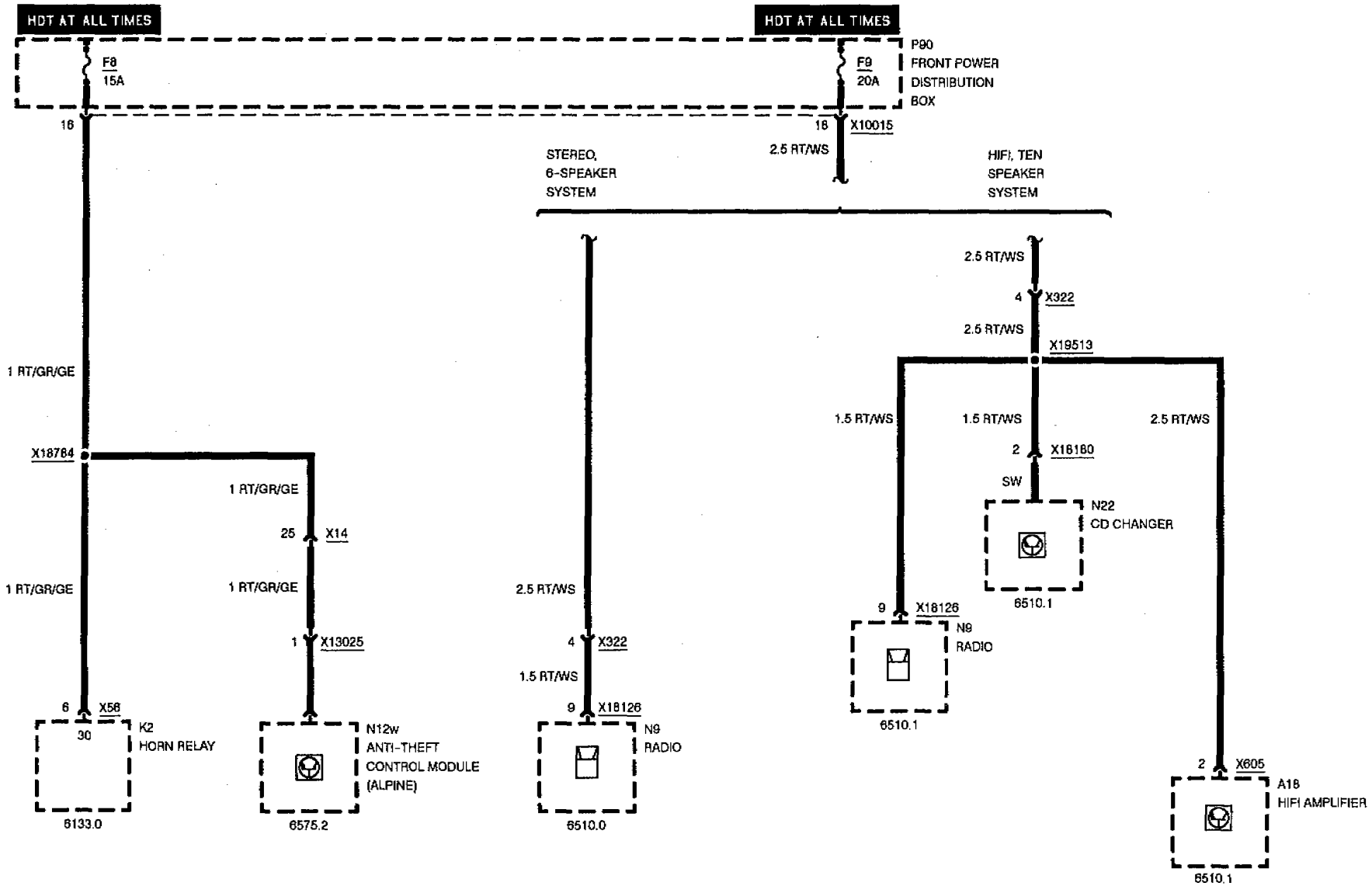

BMW 3

FUSE DETAILS

FUSES 10, 11, AND 12

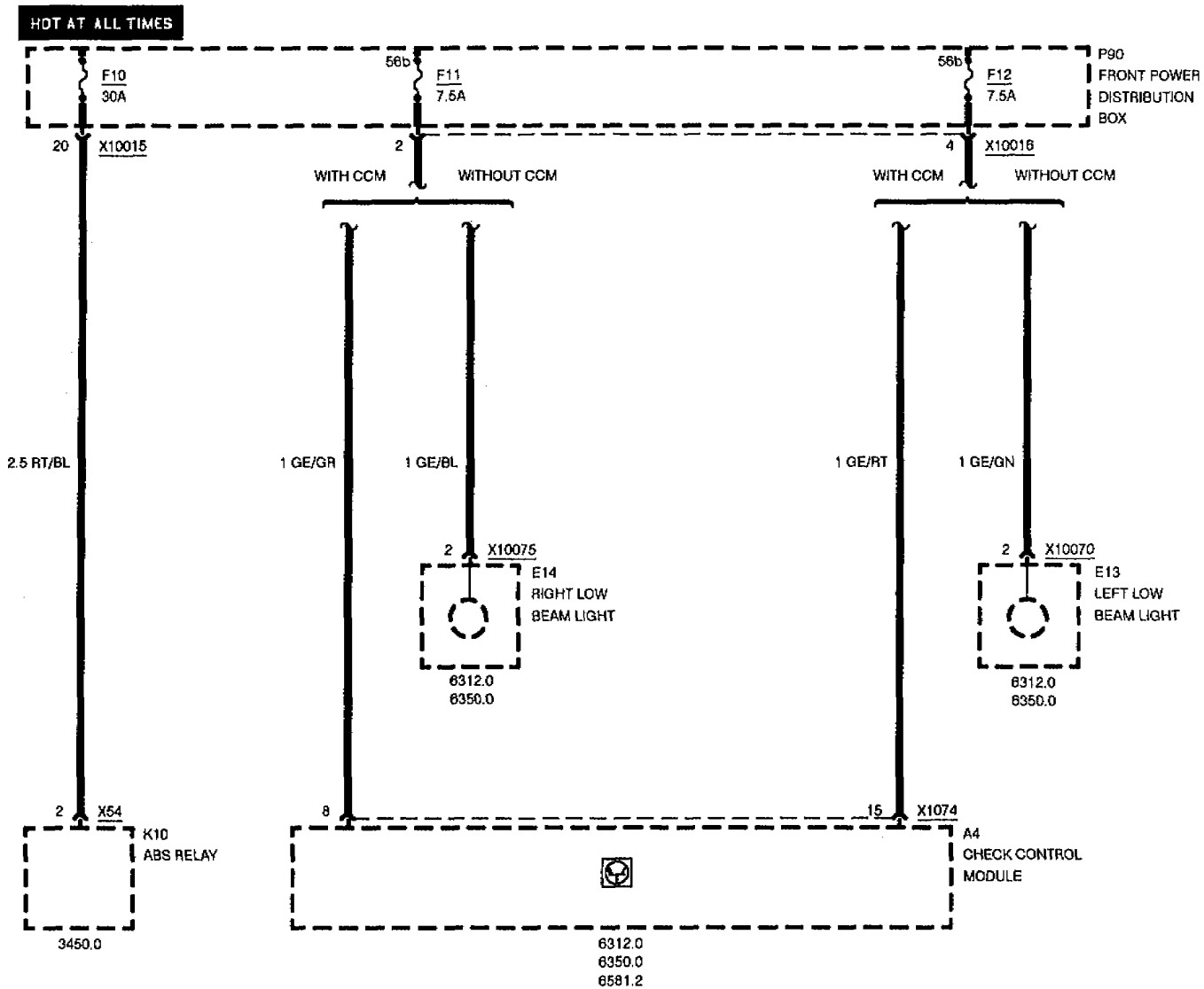

FUSE DETAILS

FUSES 14 AND 15

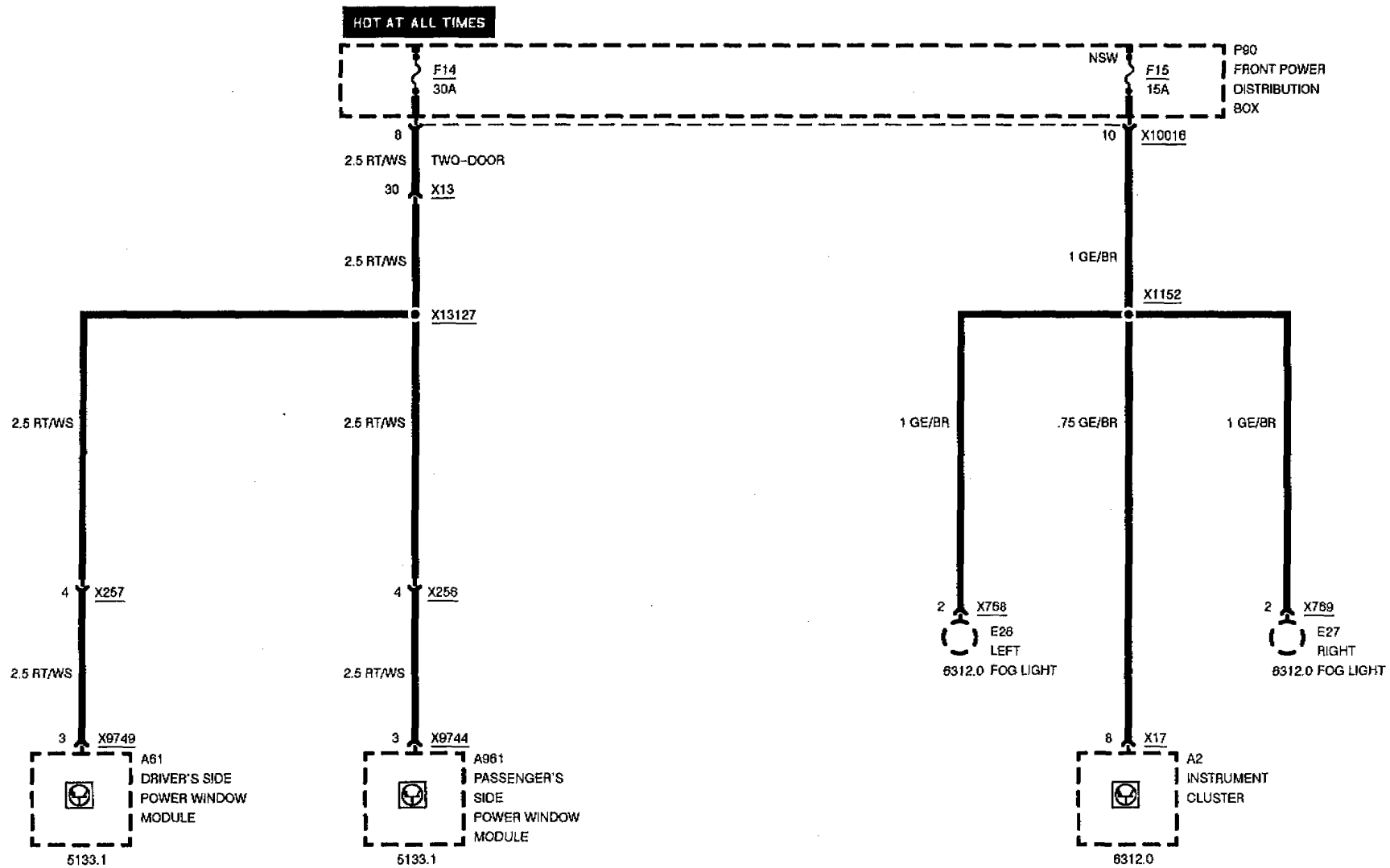

FUSE DETAILS

FUSES 16, 17, AND 18

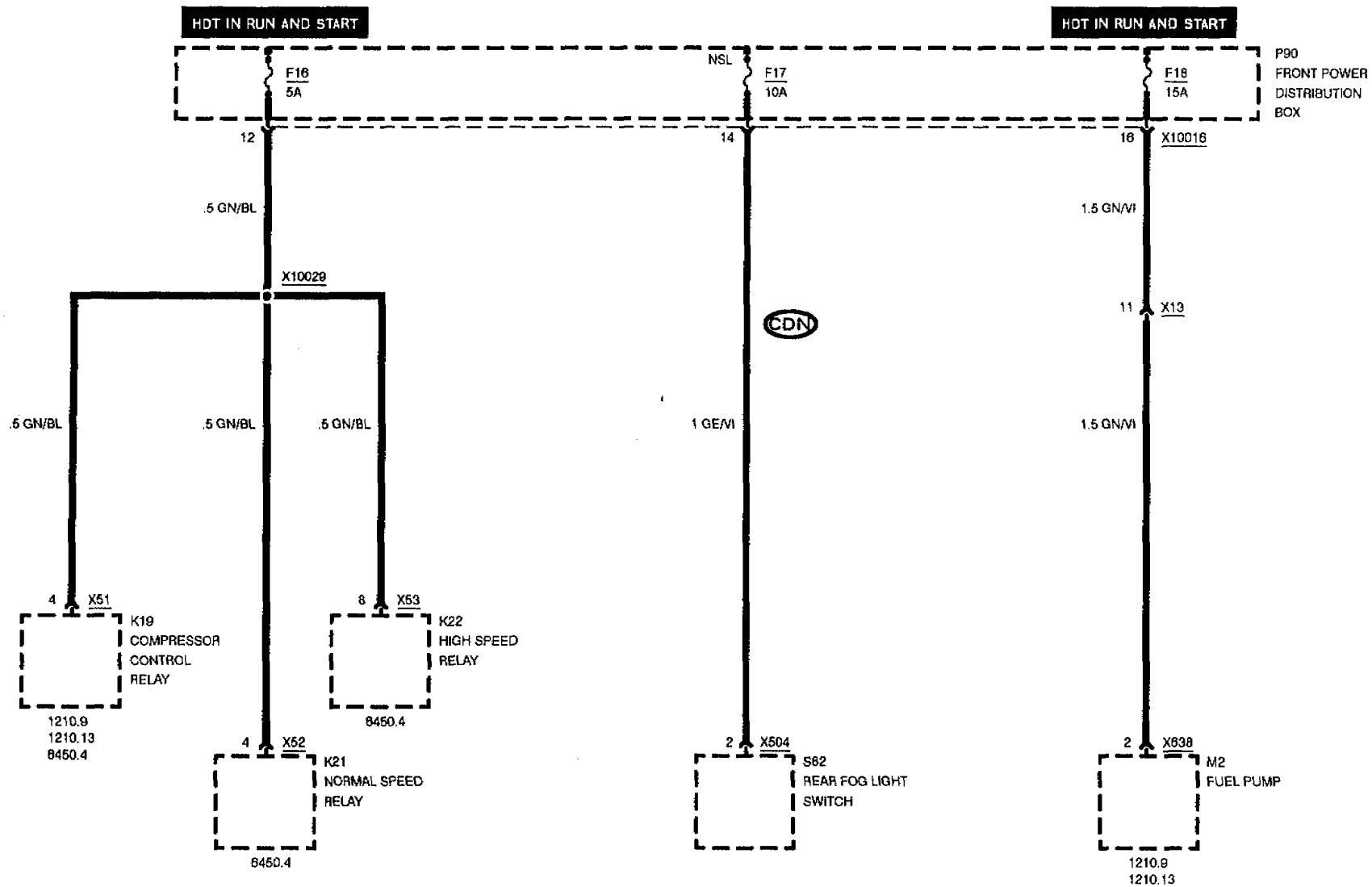

FUSE DETAILS

FUSES 20, 21, AND 22

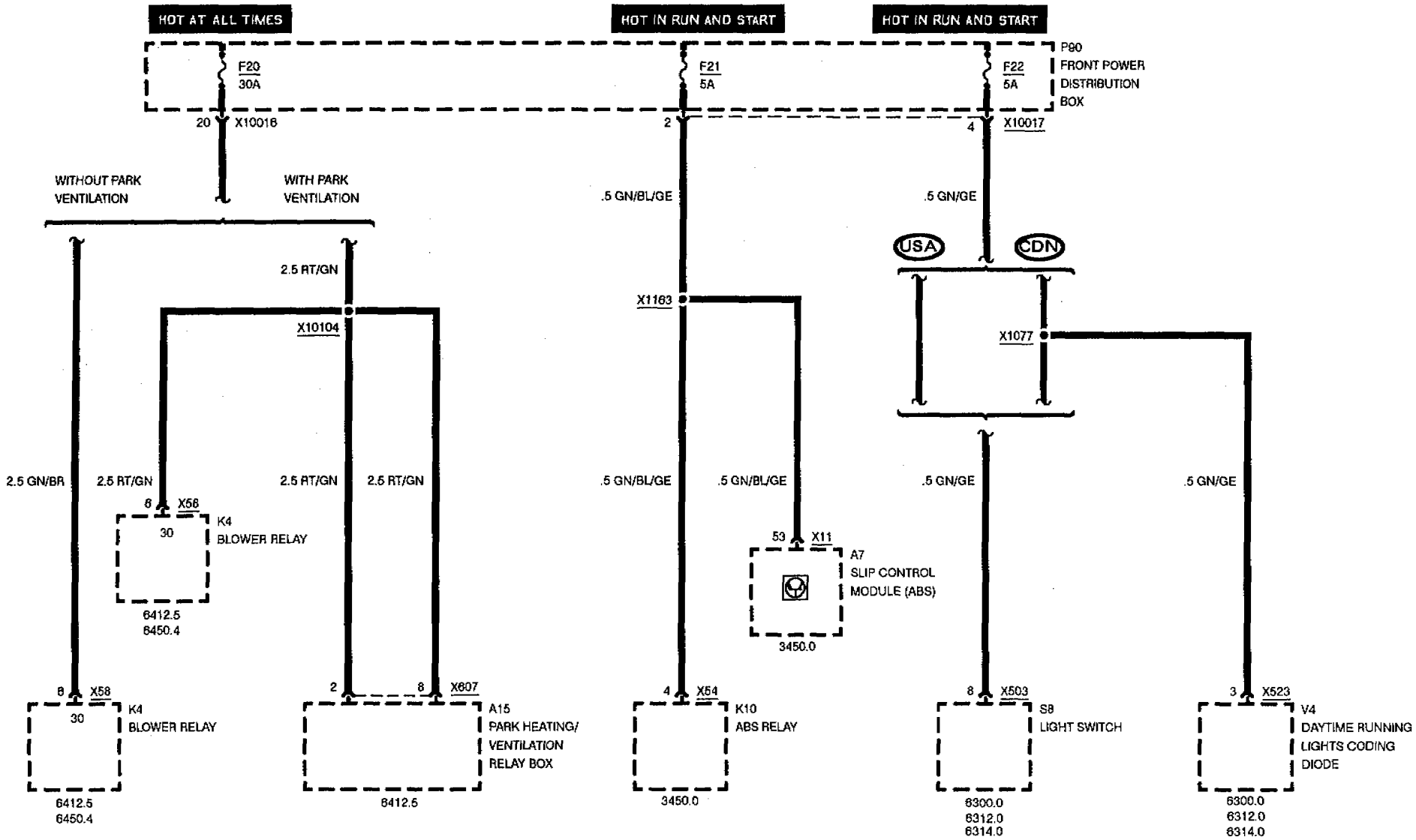

FUSE DETAILS

FUSE 23

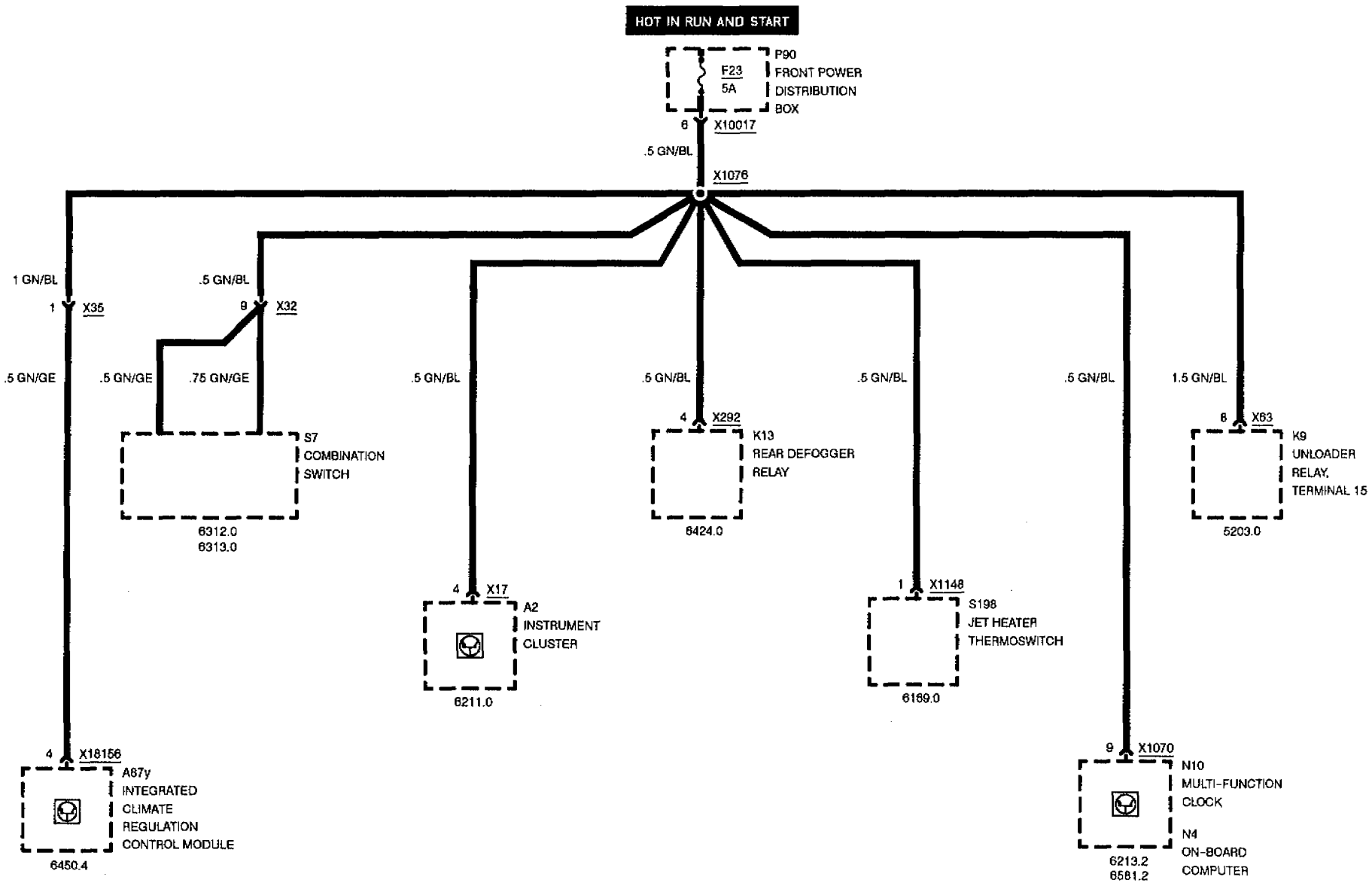

FUSE DETAILS

FUSES 24 AND 25

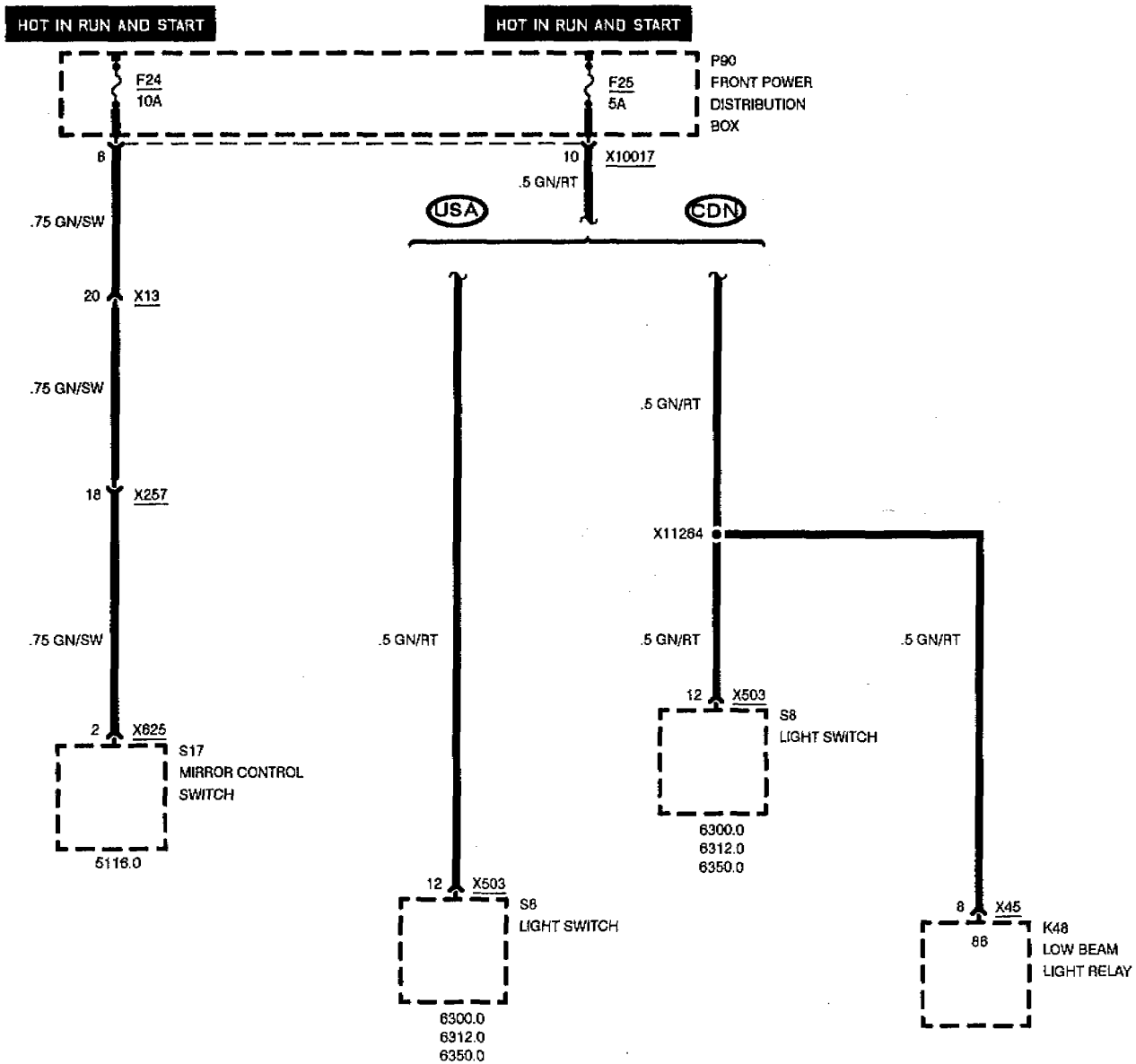

FUSE DETAILS

FUSES 26, 27, 28, 29, AND 30

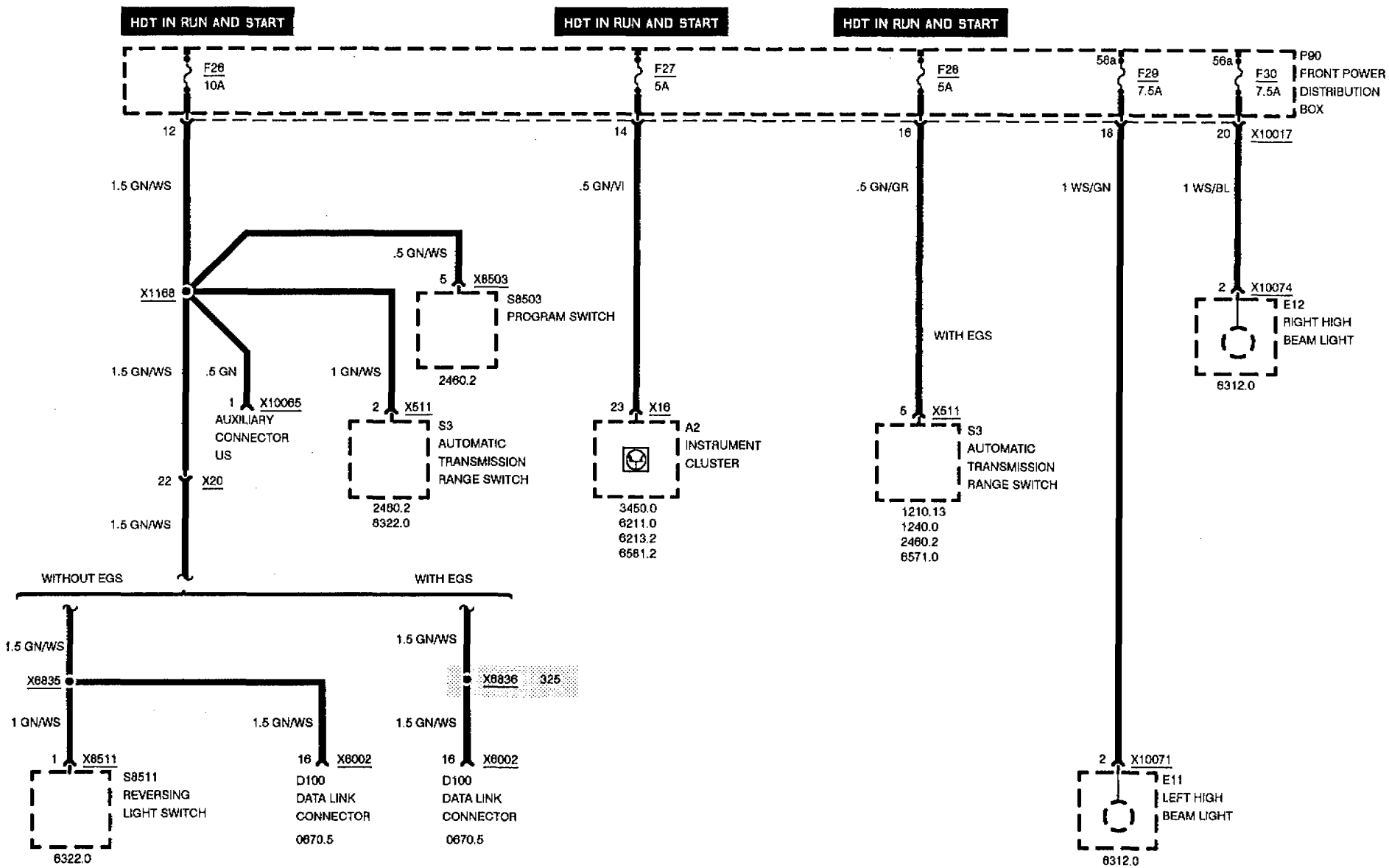

FUSE DETAILS

FUSE 31

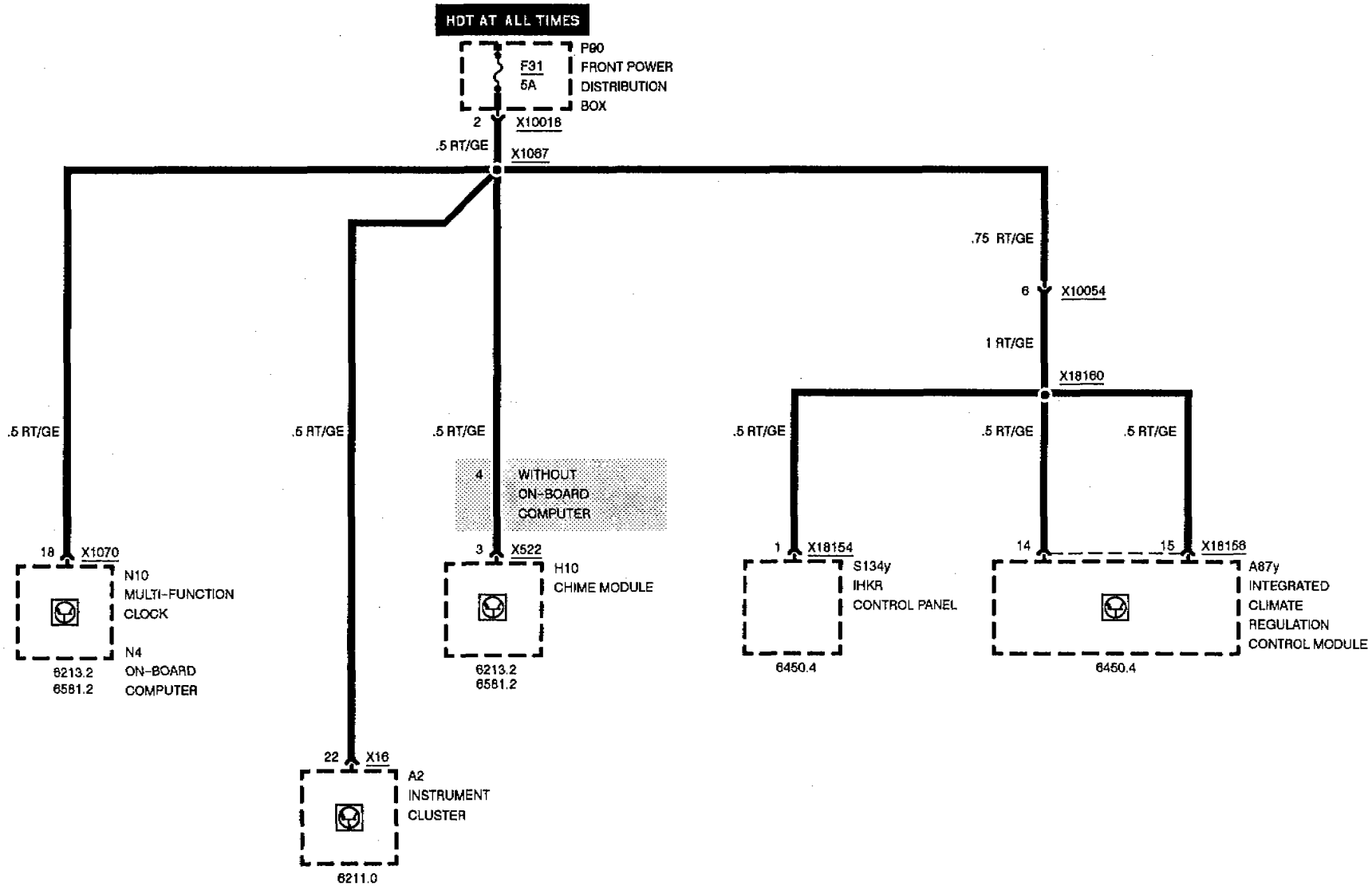

FUSE DETAILS

FUSES 32 AND 33

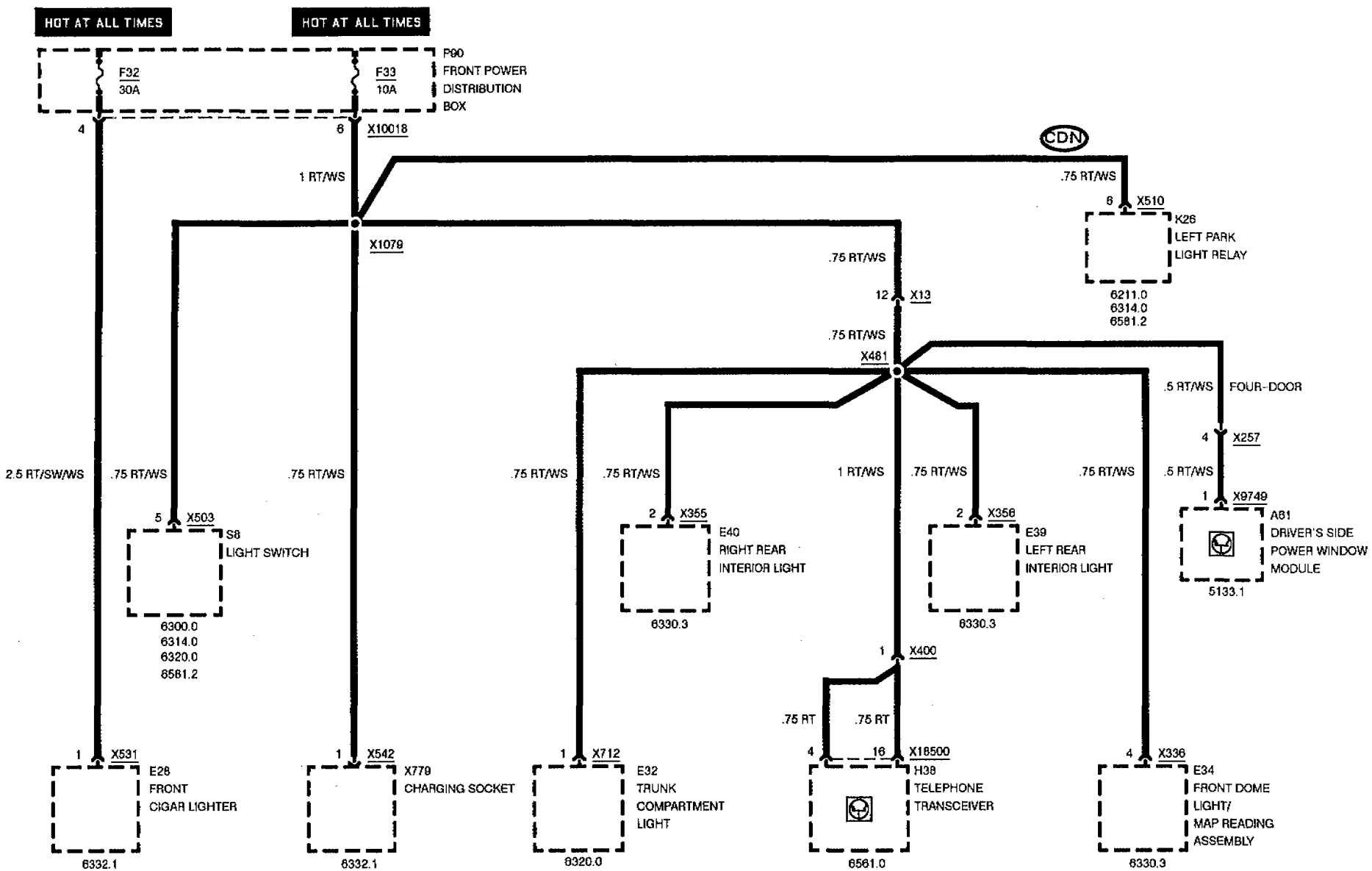

FUSE DETAILS

FUSES 34, 35, 36, 37, 38, AND 39

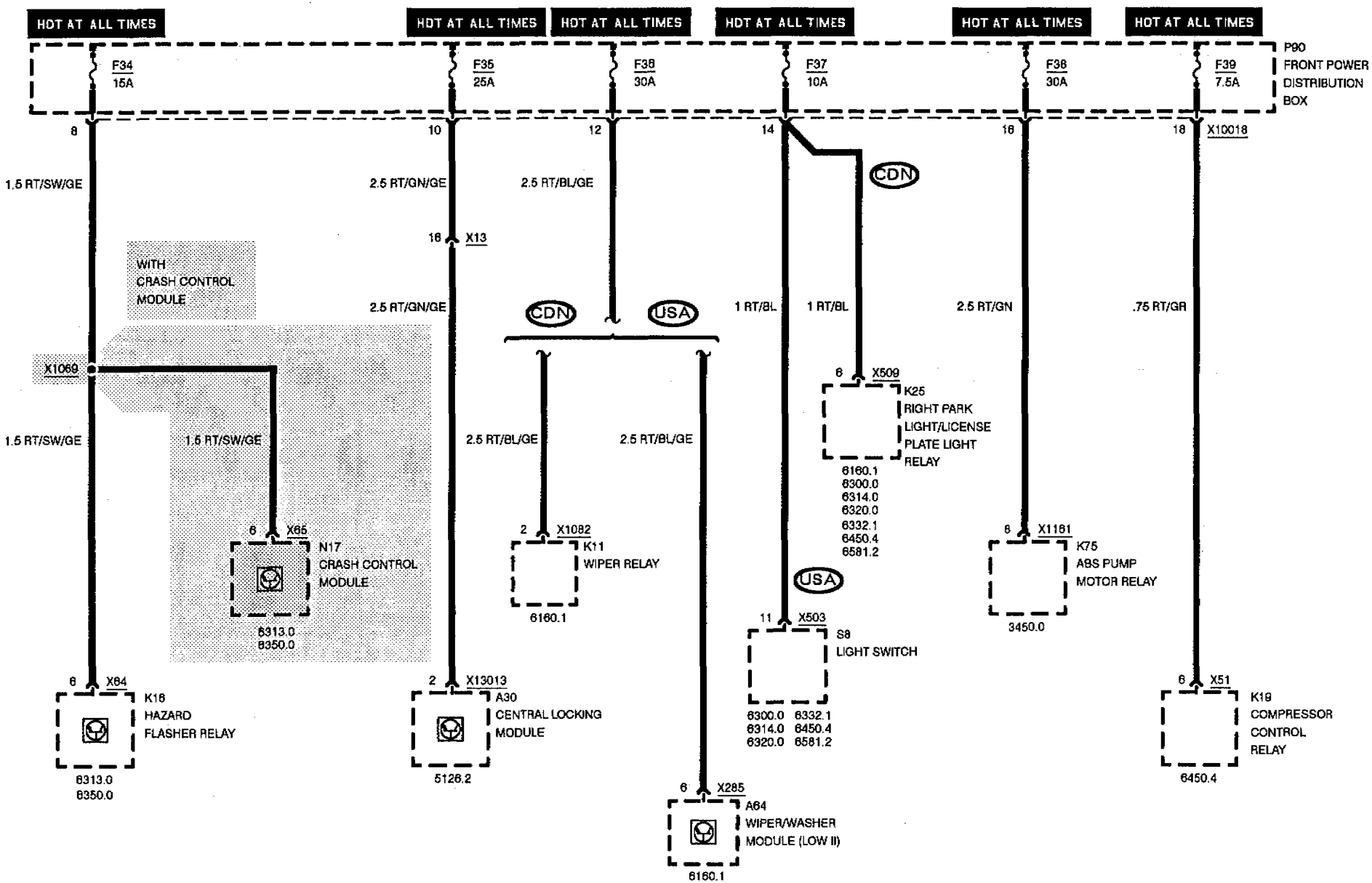

BMW 3

FUSE DETAILS

FUSES 40, 41, 42, AND 43

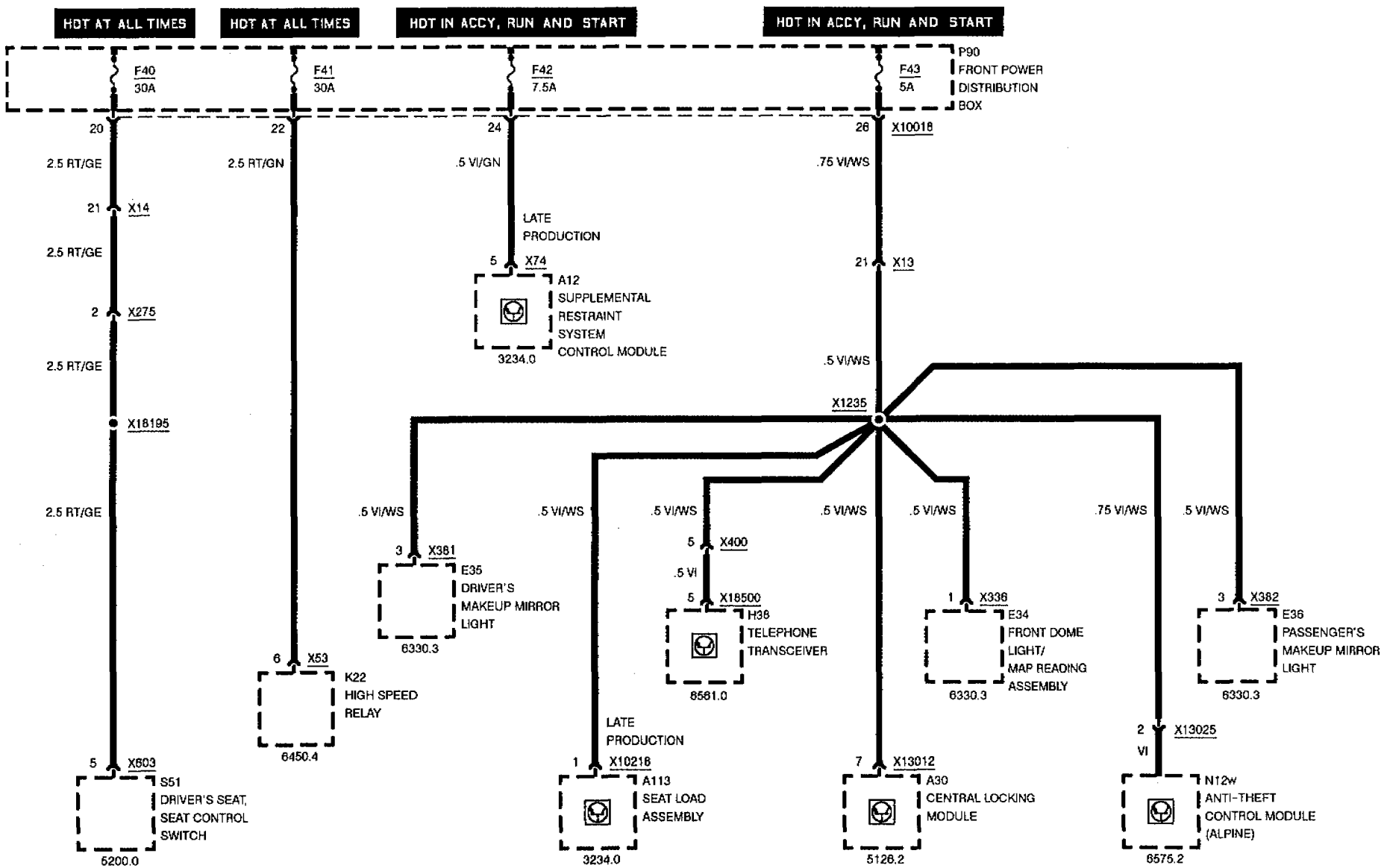

FUSE DETAILS

FUSE 44

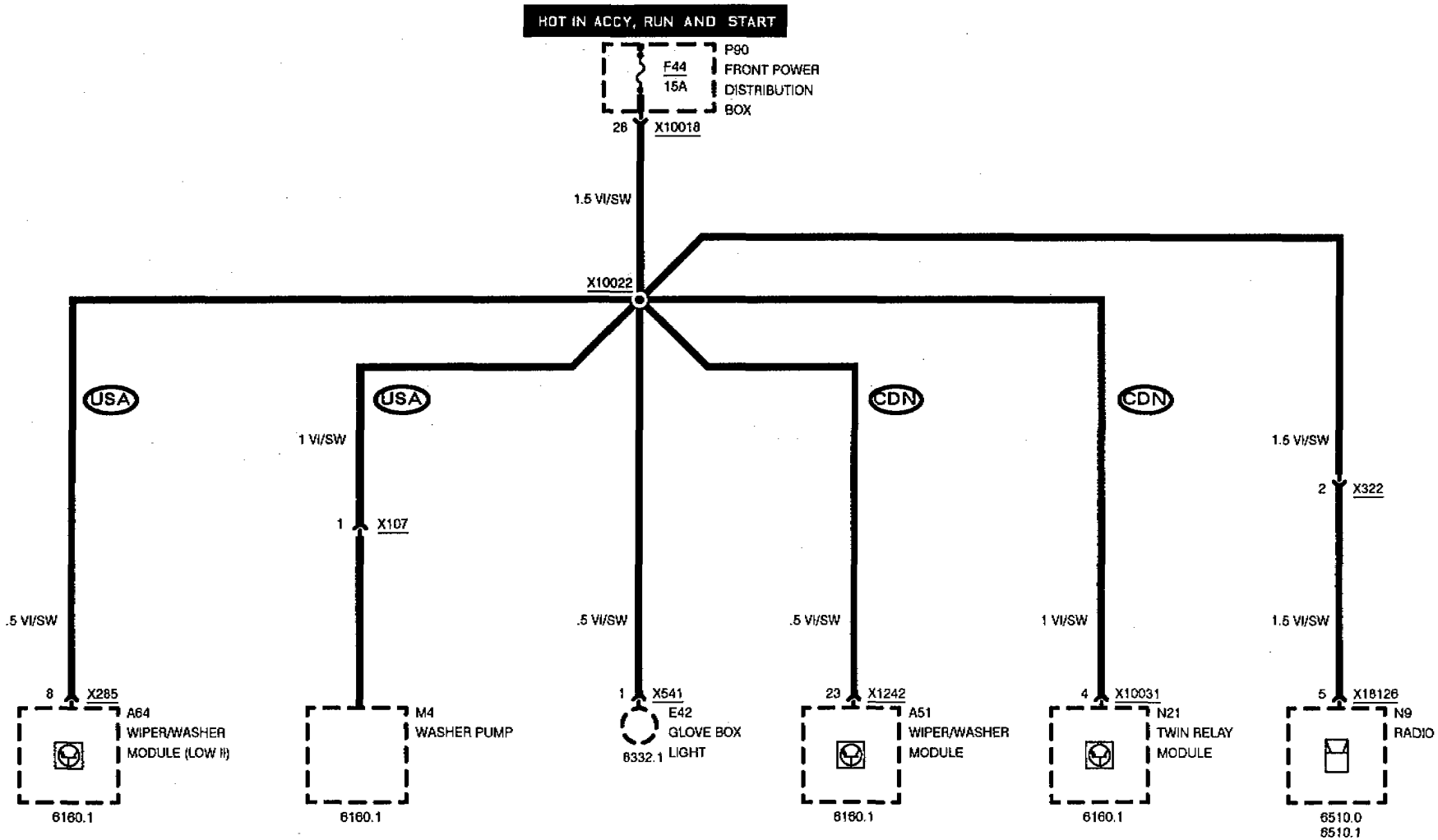

FUSE DETAILS

FUSE 45

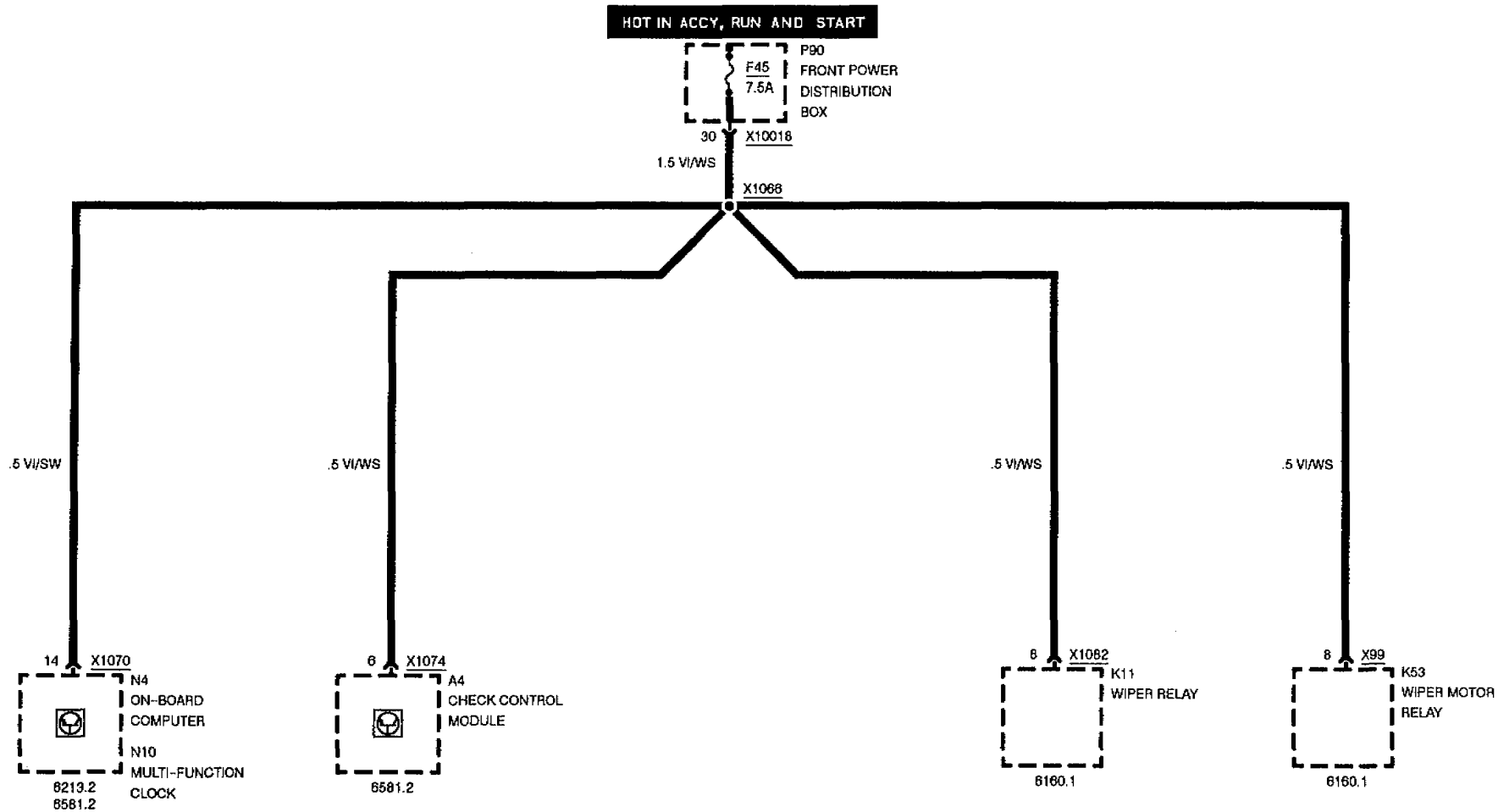

FUSE DETAILS

FUSE 46

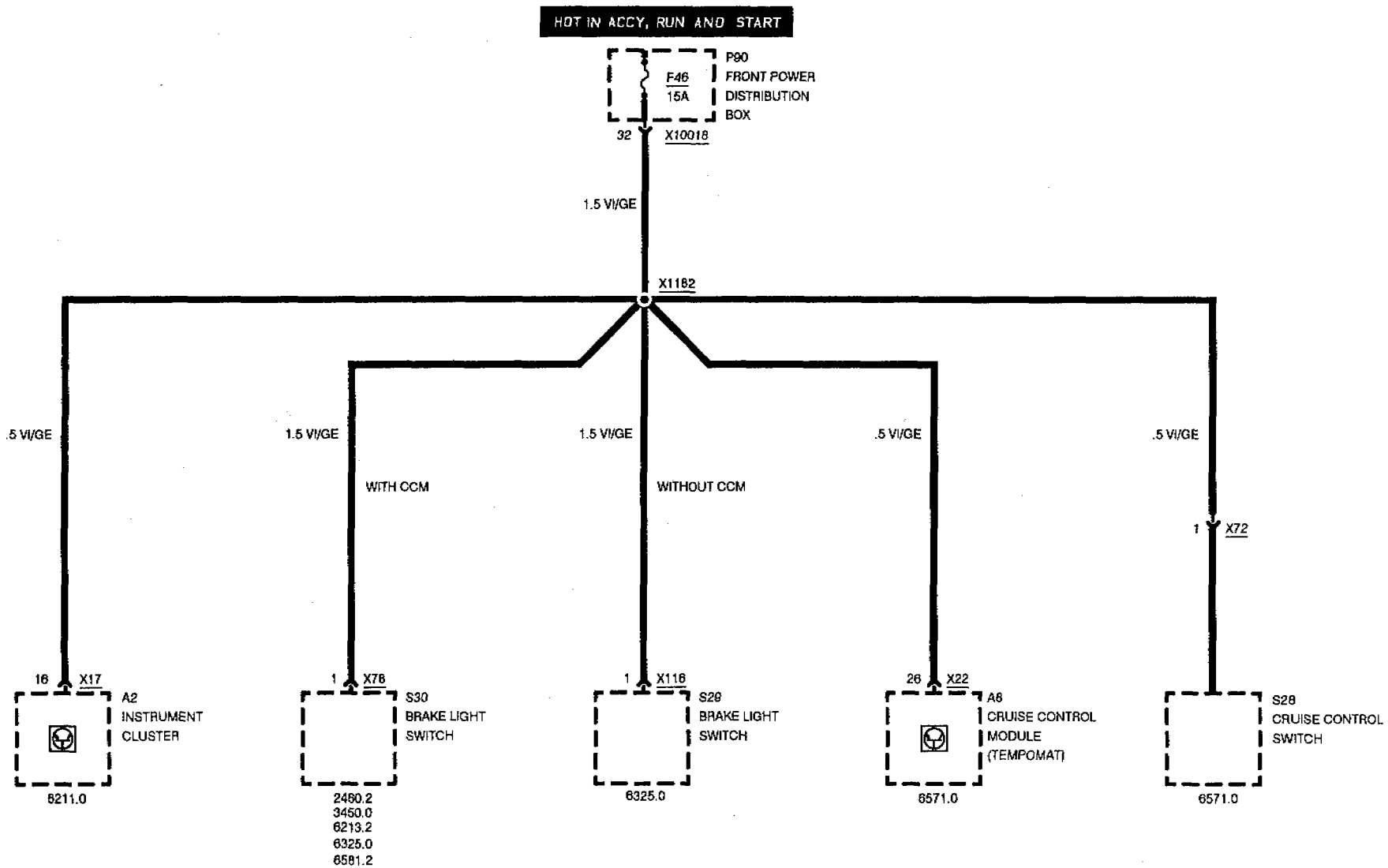

GROUND DISTRIBUTION

GROUND X165

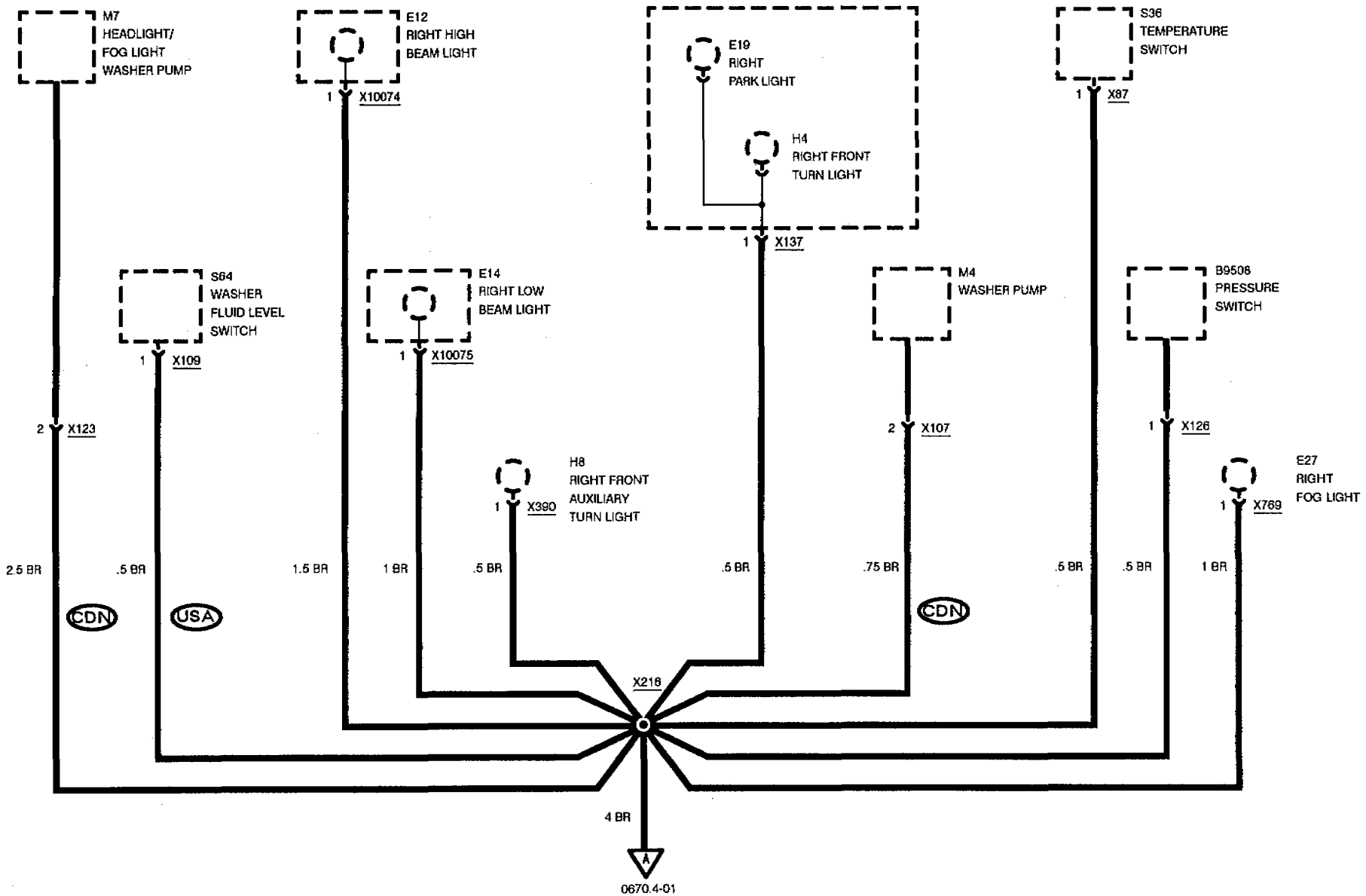

GROUND DISTRIBUTION

GROUND X165

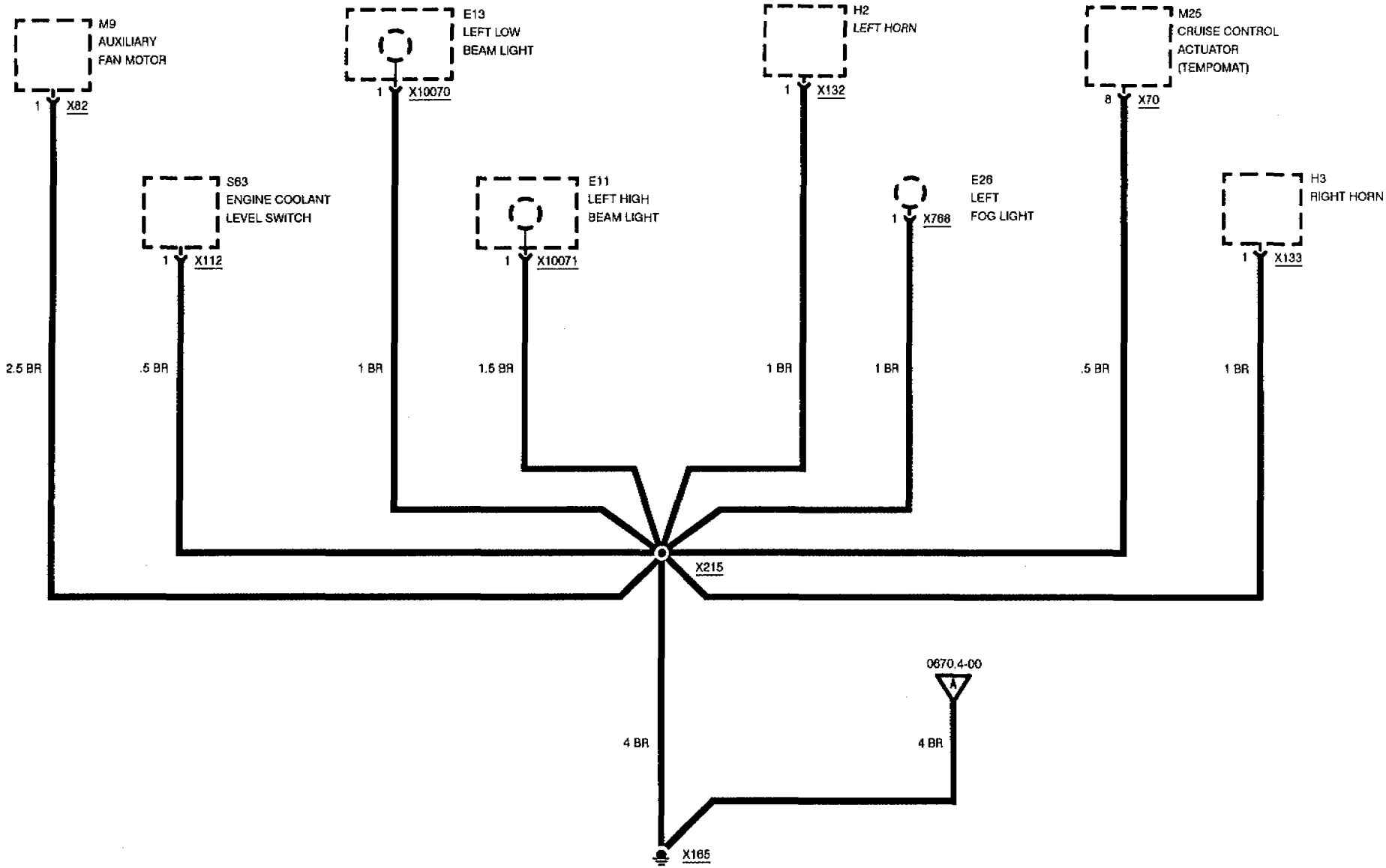

GROUND DISTRIBUTION

GROUND X173

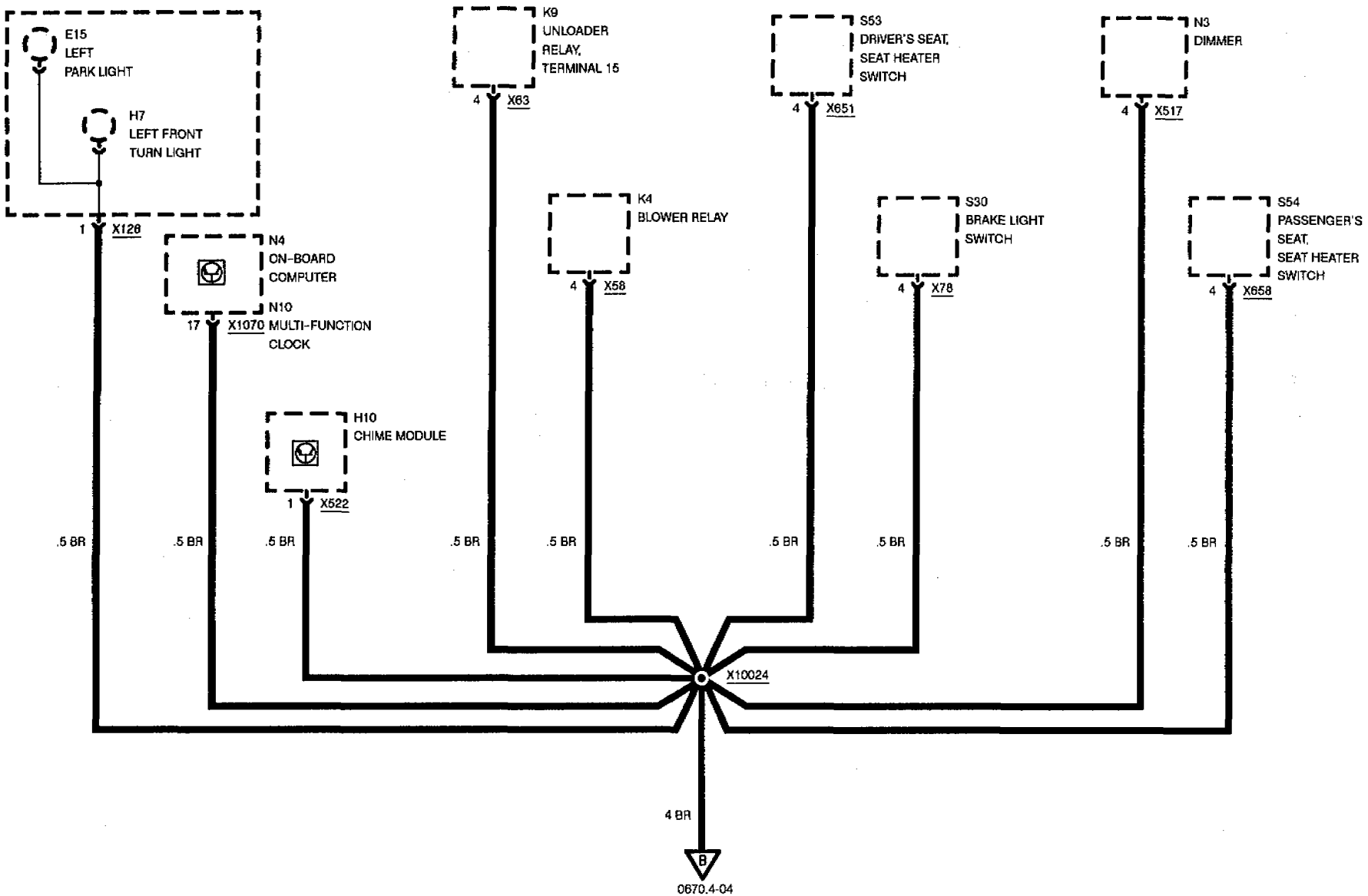

GROUND DISTRIBUTION

GROUND X173

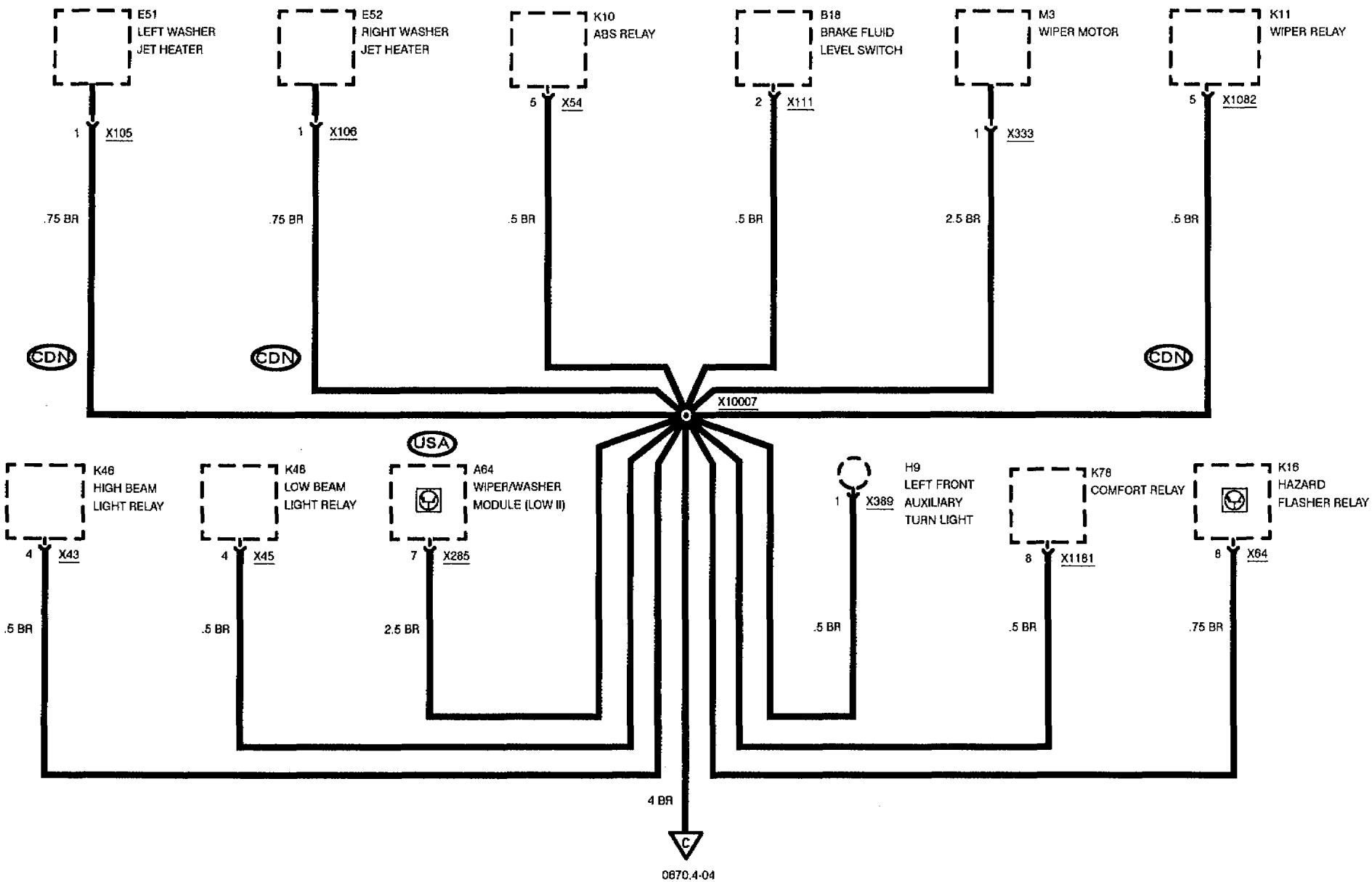

GROUND DISTRIBUTION

GROUND X173

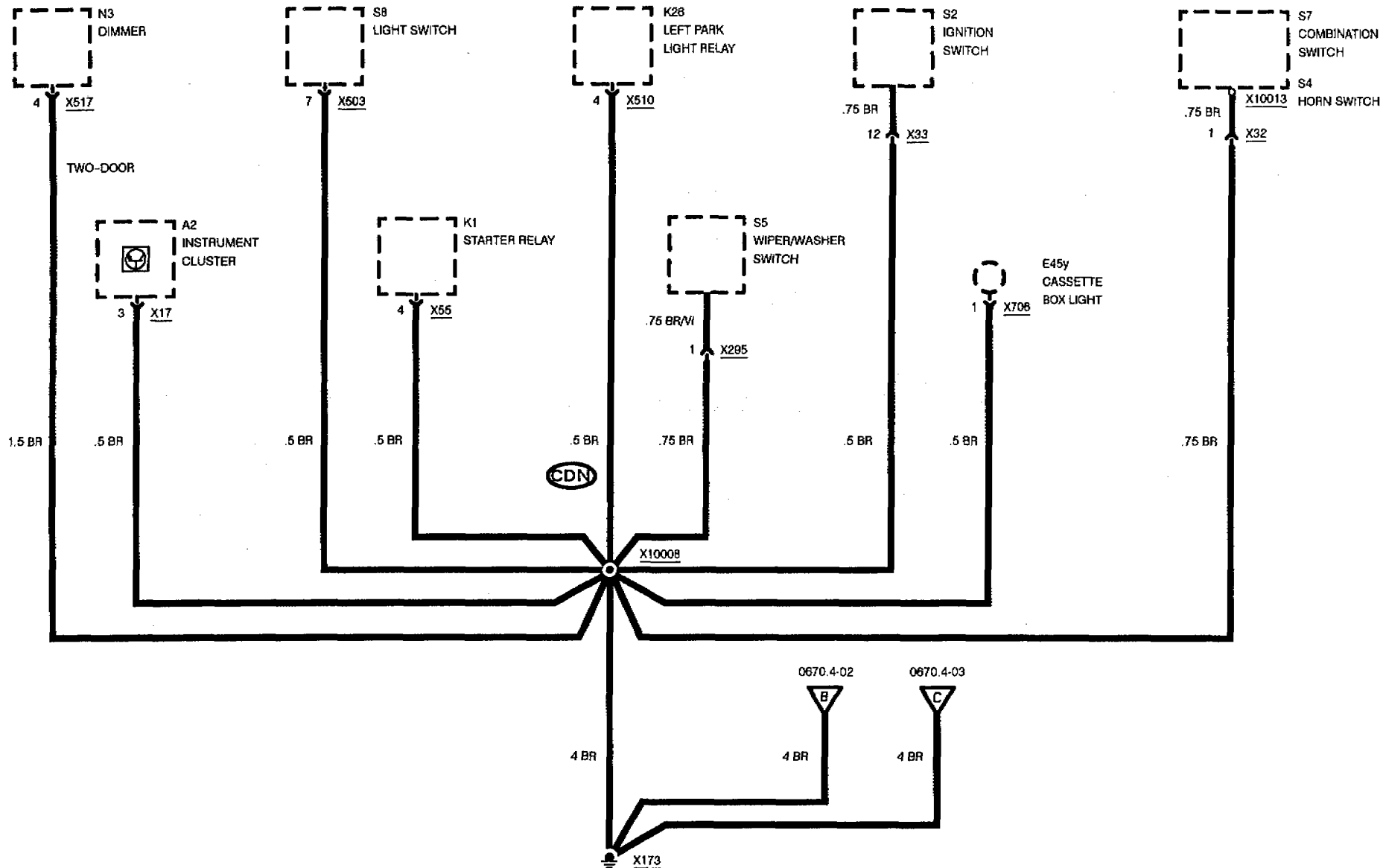

GROUND DISTRIBUTION

GROUNDS X494 AND X498

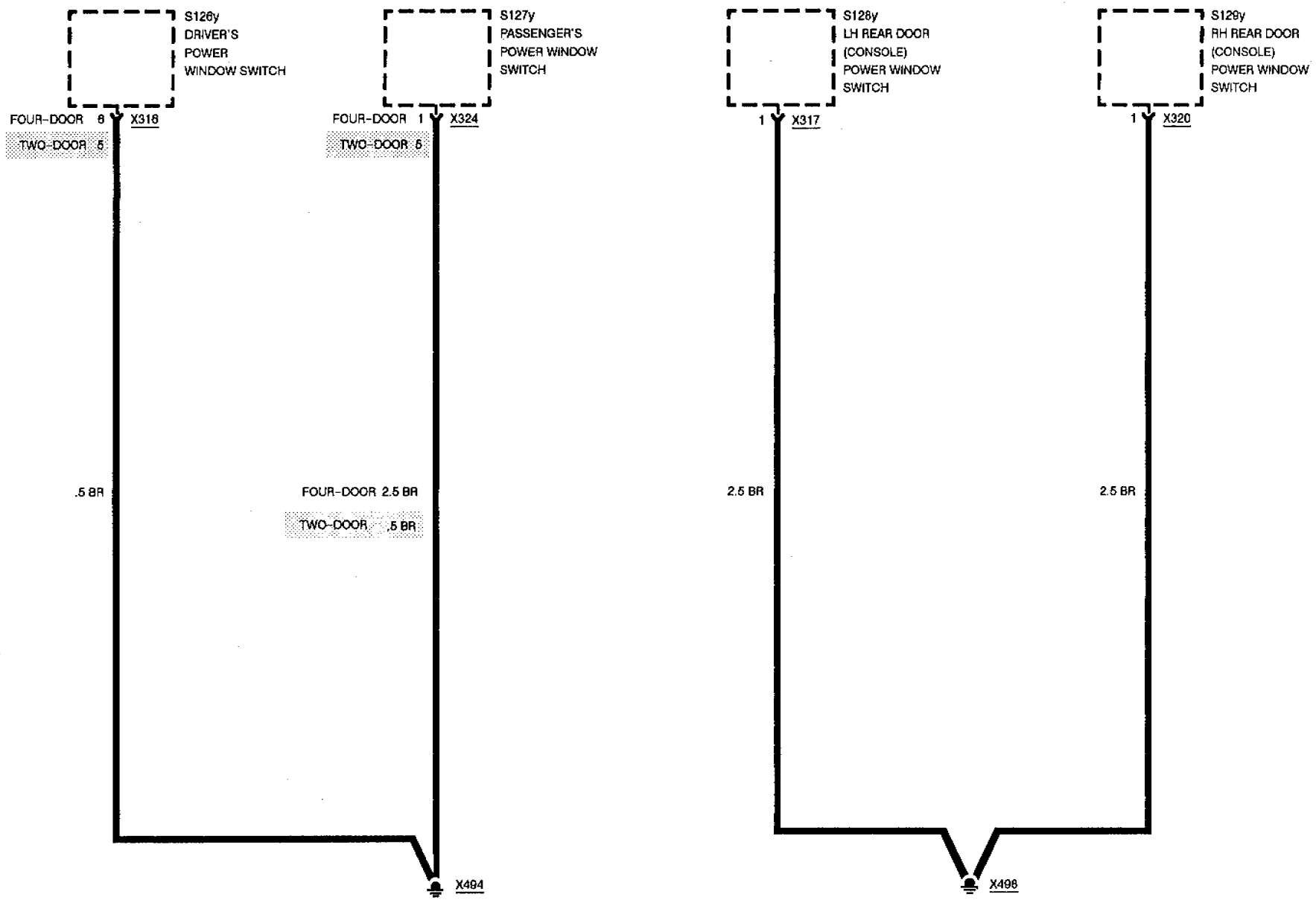

GROUND DISTRIBUTION

TWO-DOOR

GROUND X495

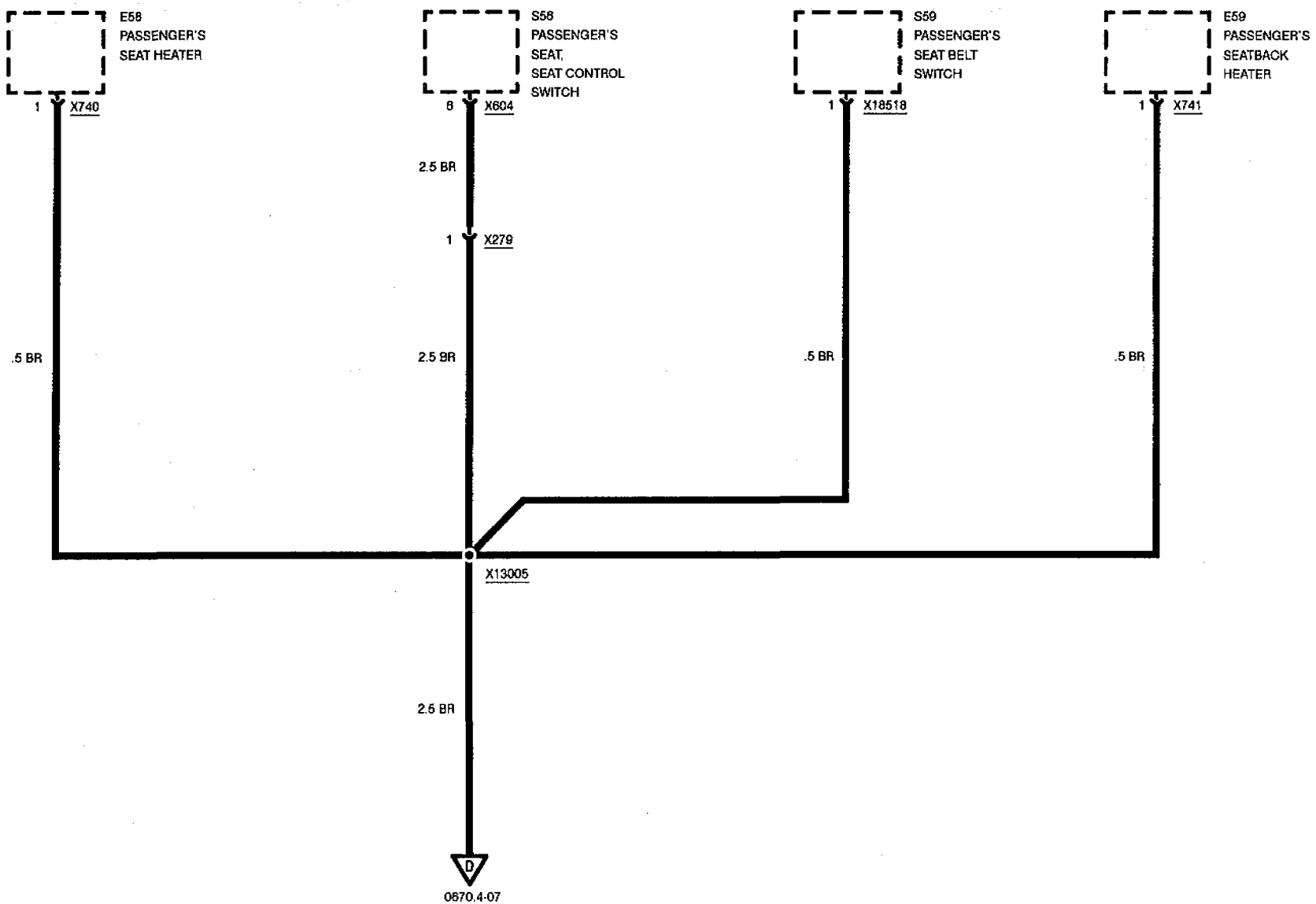

GROUND DISTRIBUTION

TWO-DOOR

GROUND X495

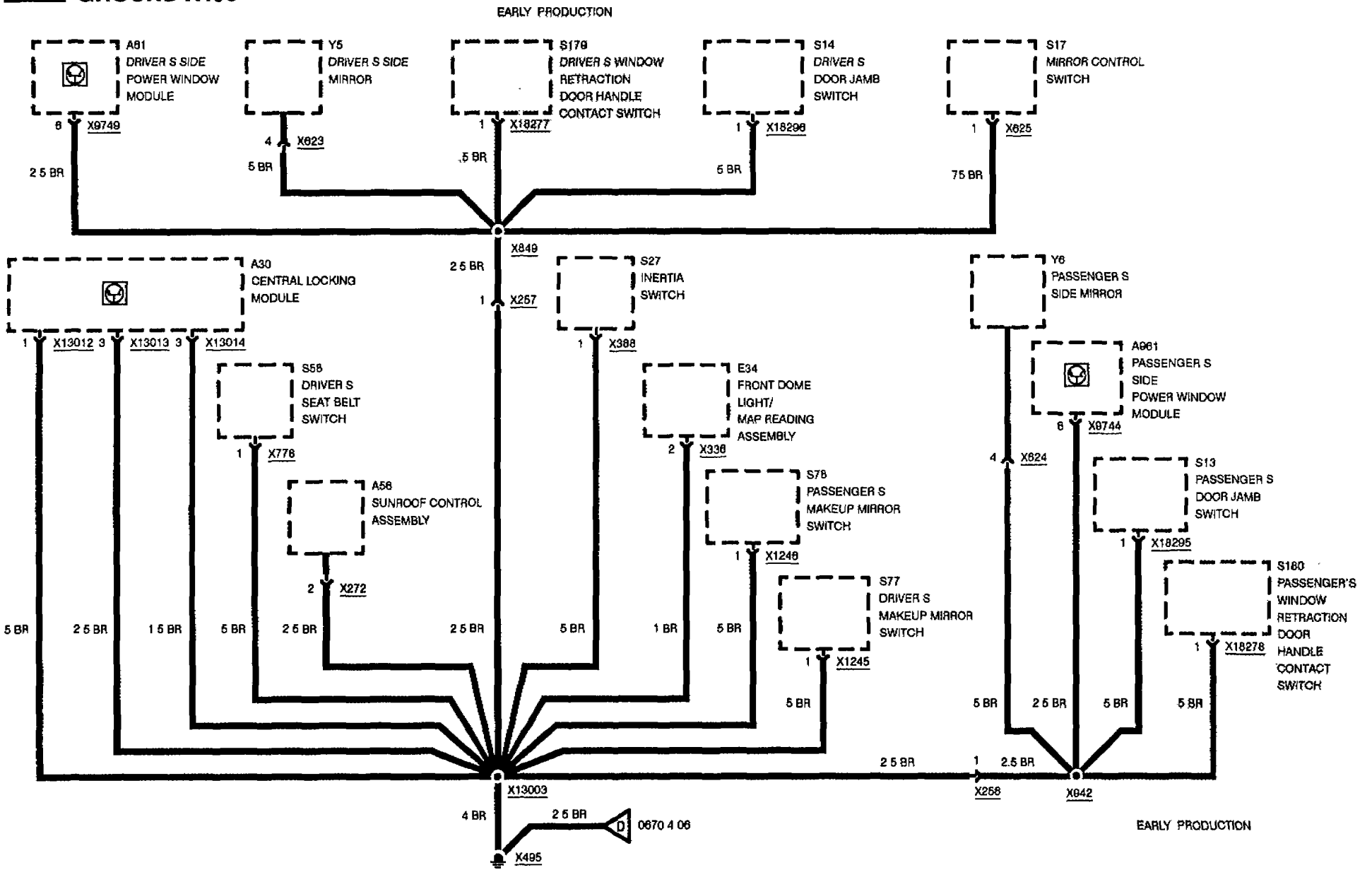

GROUND DISTRIBUTION

TWO-DOOR

GROUND X495

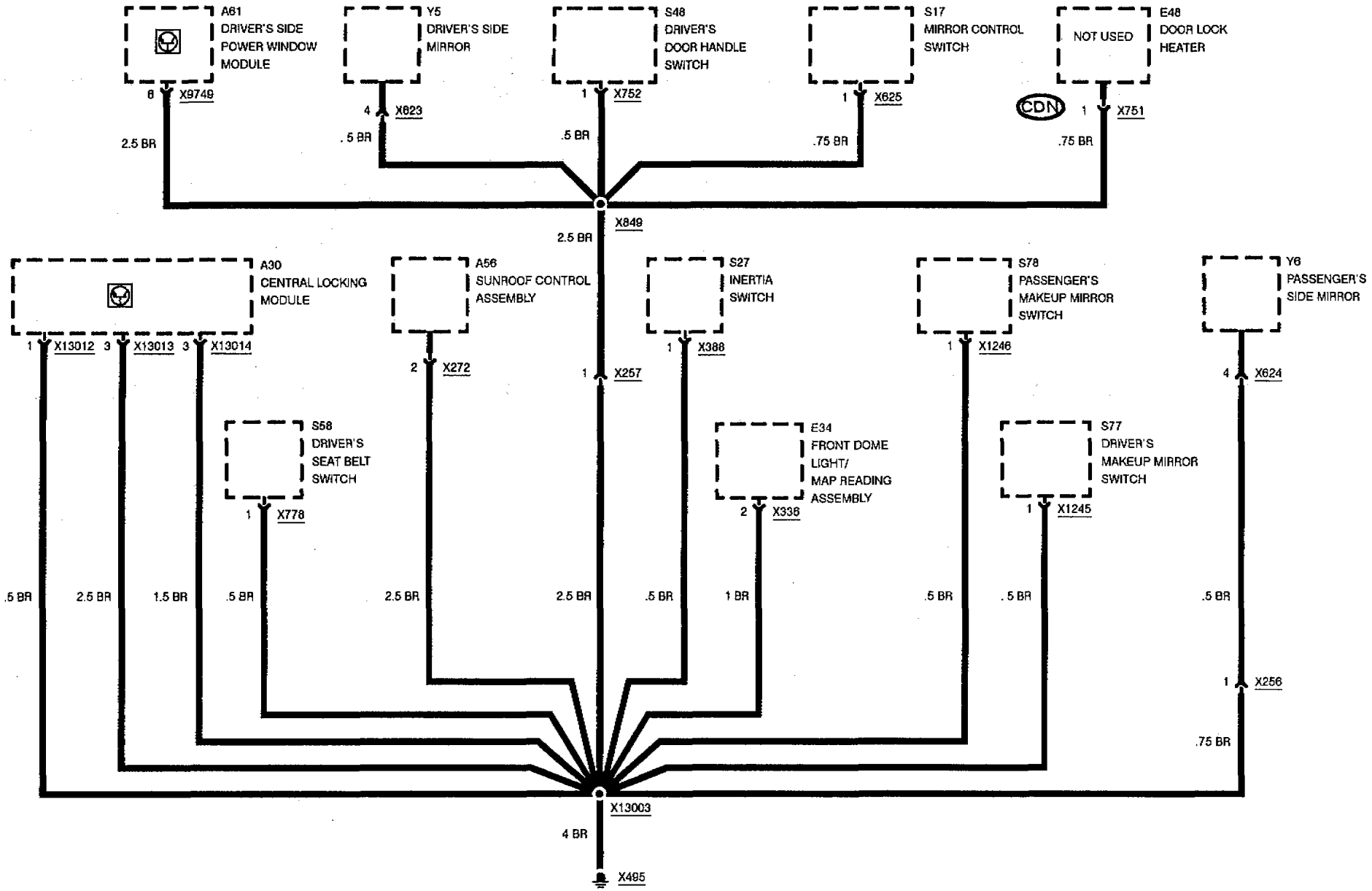

GROUND DISTRIBUTION

GROUNDS X1165 AND X1166

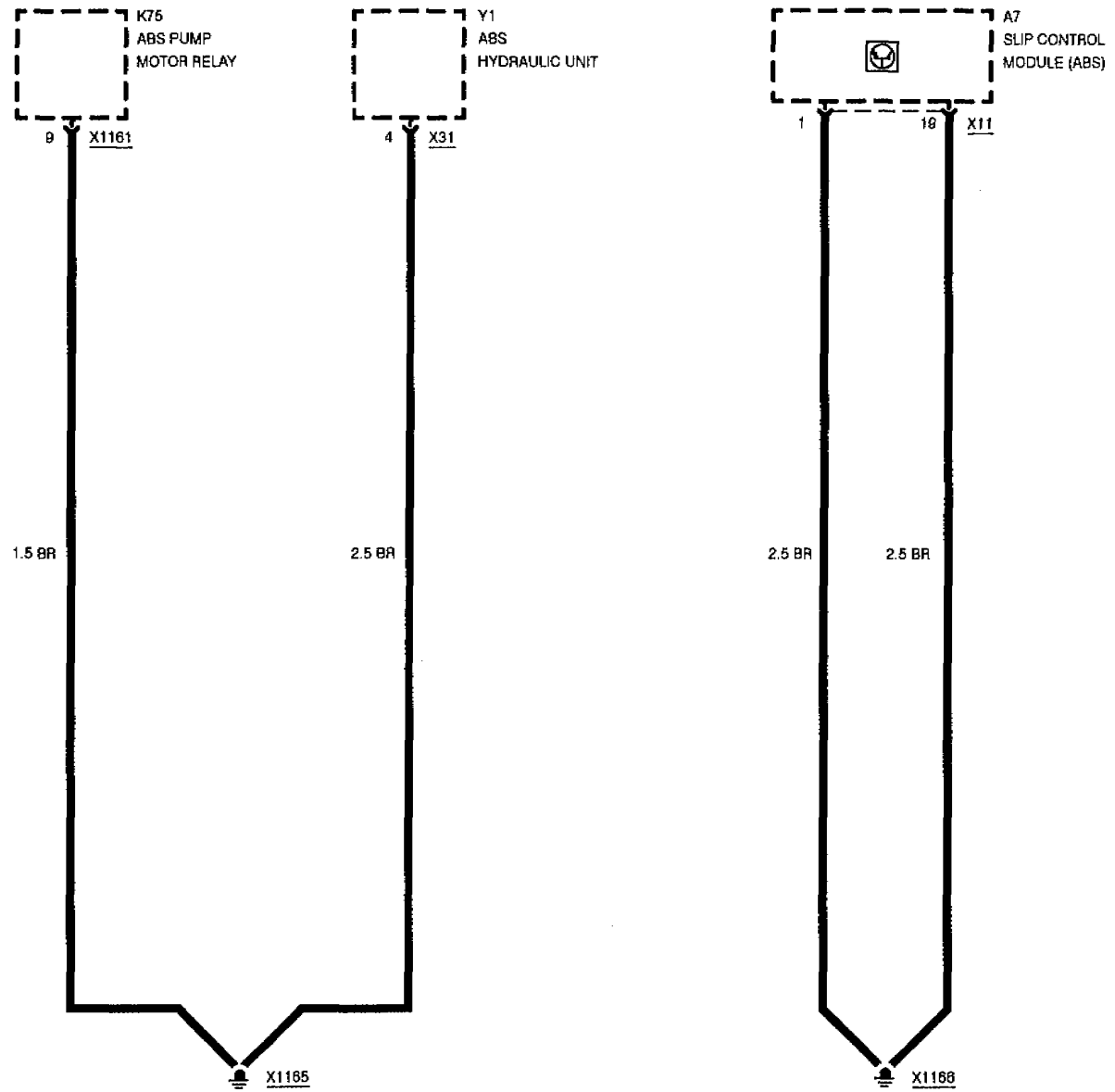

GROUND X6454

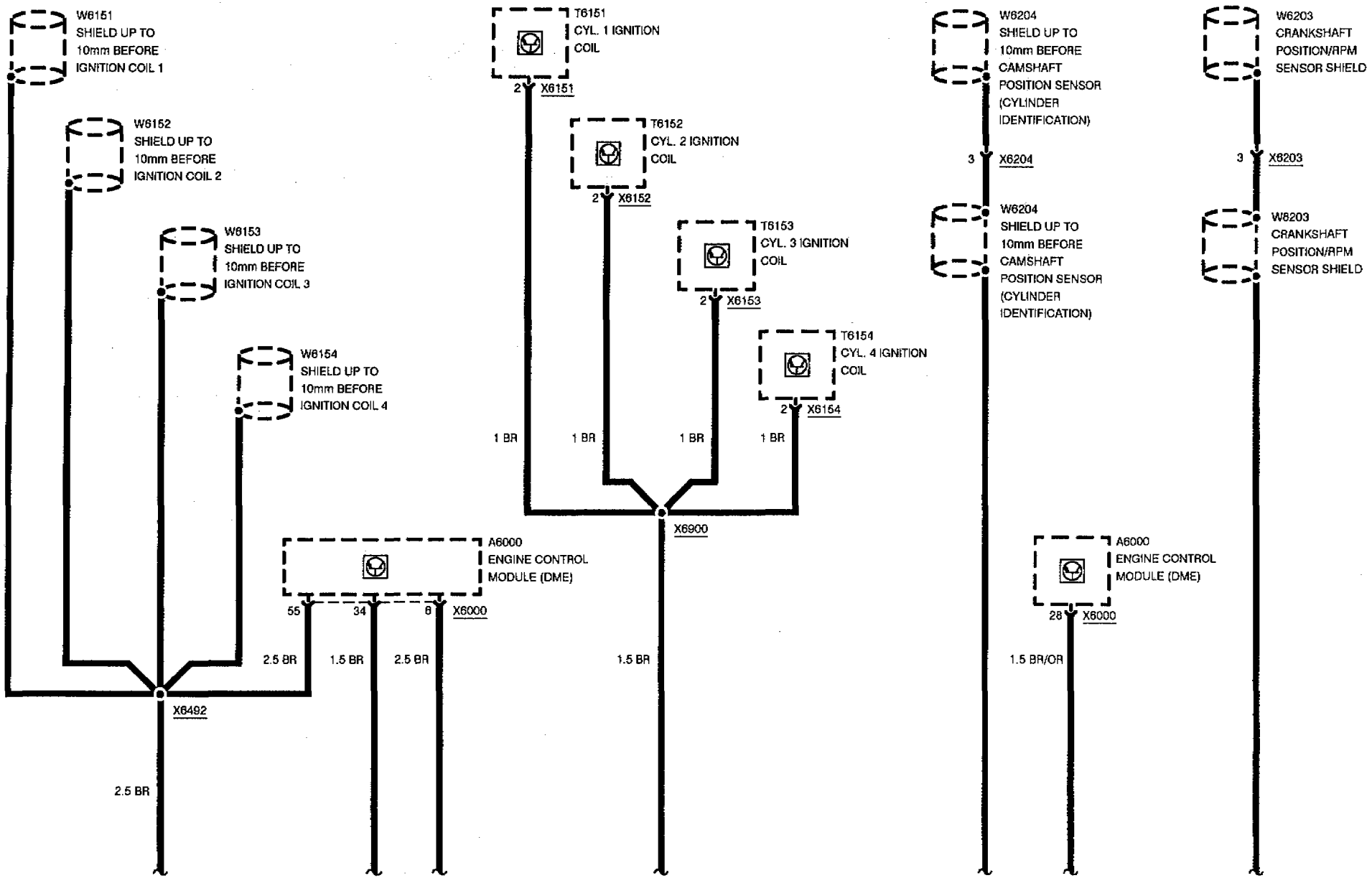

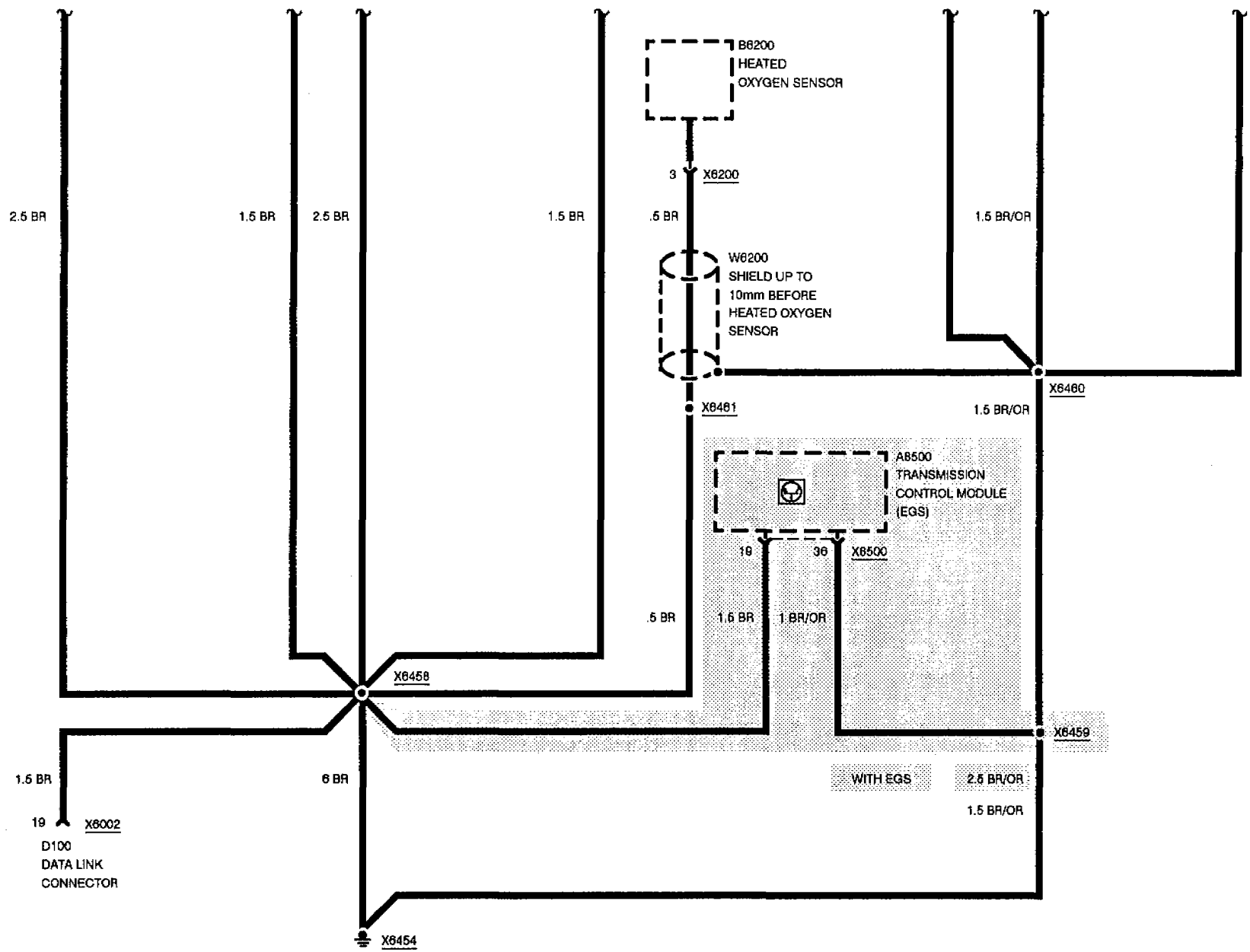
B6200
HEATED
OXYGEN SENSOR
3
X6200
2.5 BR
1.5 BR
2.5 BR
1.5 BR
.5 BR
1.5 BR/OR
W6200
SHIELD UP TO
10mm BEFORE
HEATED OXYGEN
SENSOR
X6460
X6461
1.5 BR/OR
A6500
TRANSMISSION
CONTROL MODULE
(EGS)
19
36
X6500
.5 BR
1.5 BR
1 BR/OR
X6458
X6459
1.5 BR
6 BR
WITH EGS
2.5 BR/OR
1.5 BR/OR
19
X6002
D100
DATA LINK
CONNECTOR
X6454

GROUND X6454

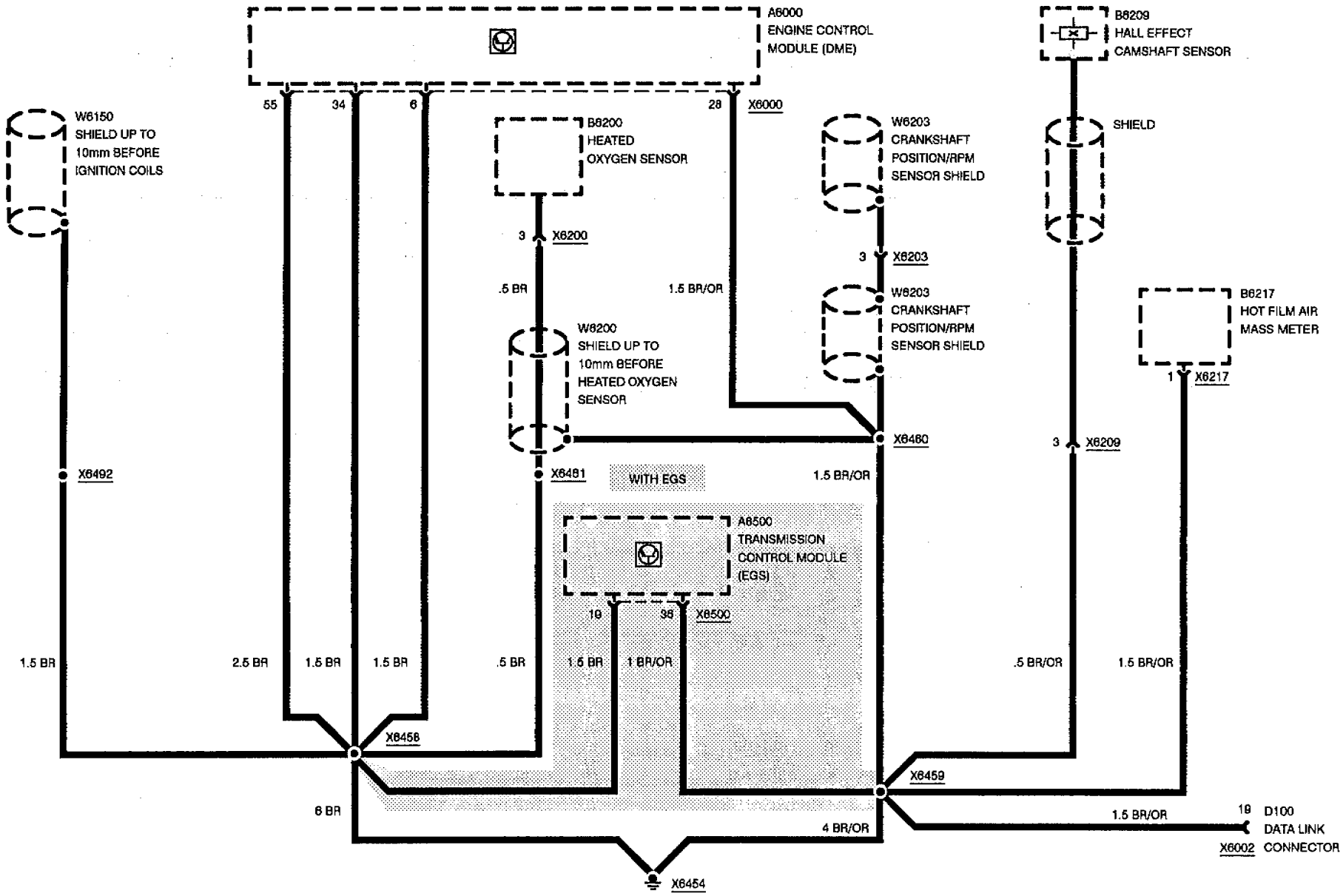

GROUND DISTRIBUTION

GROUND X6456

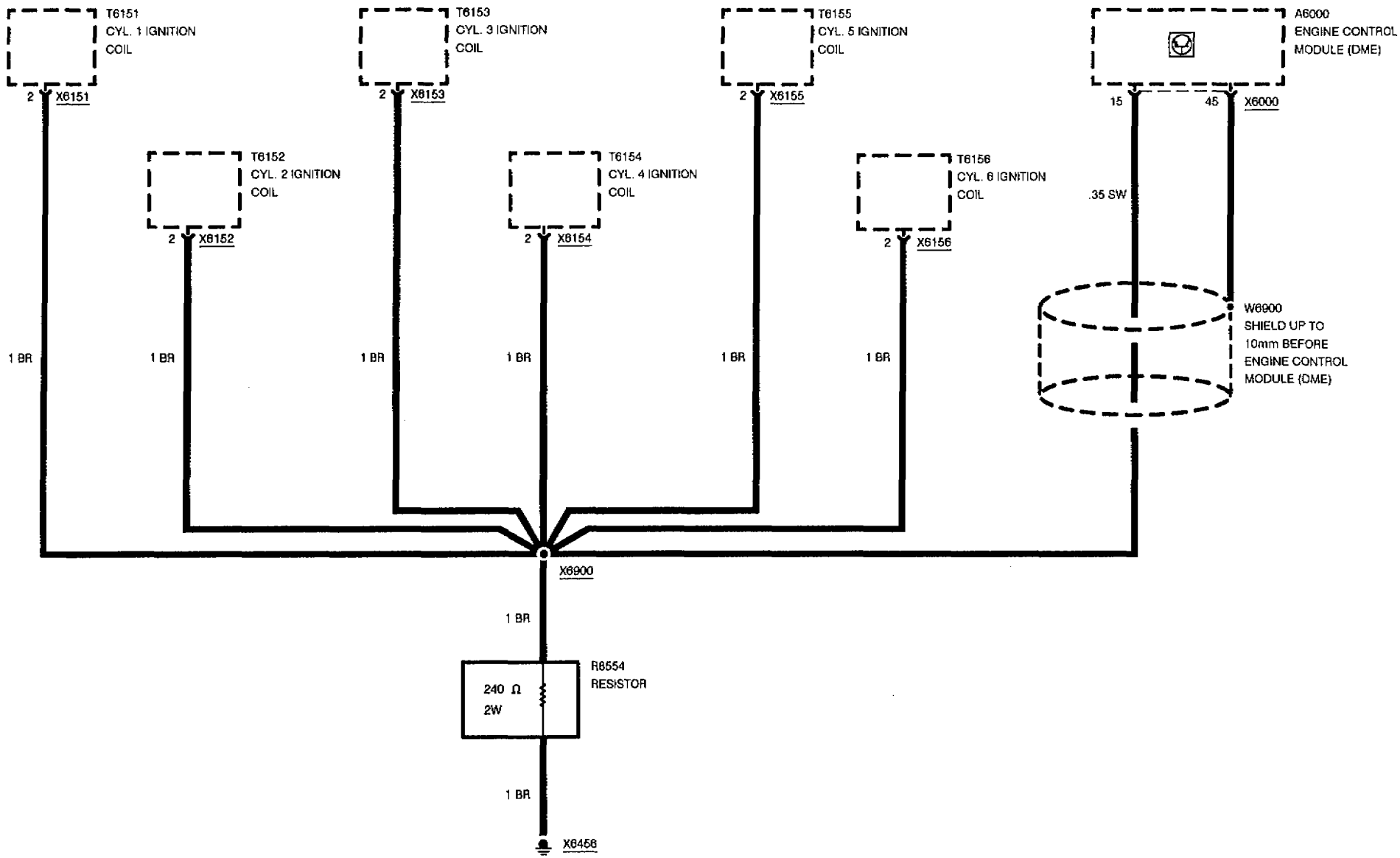

GROUND DISTRIBUTION

GROUND X10010

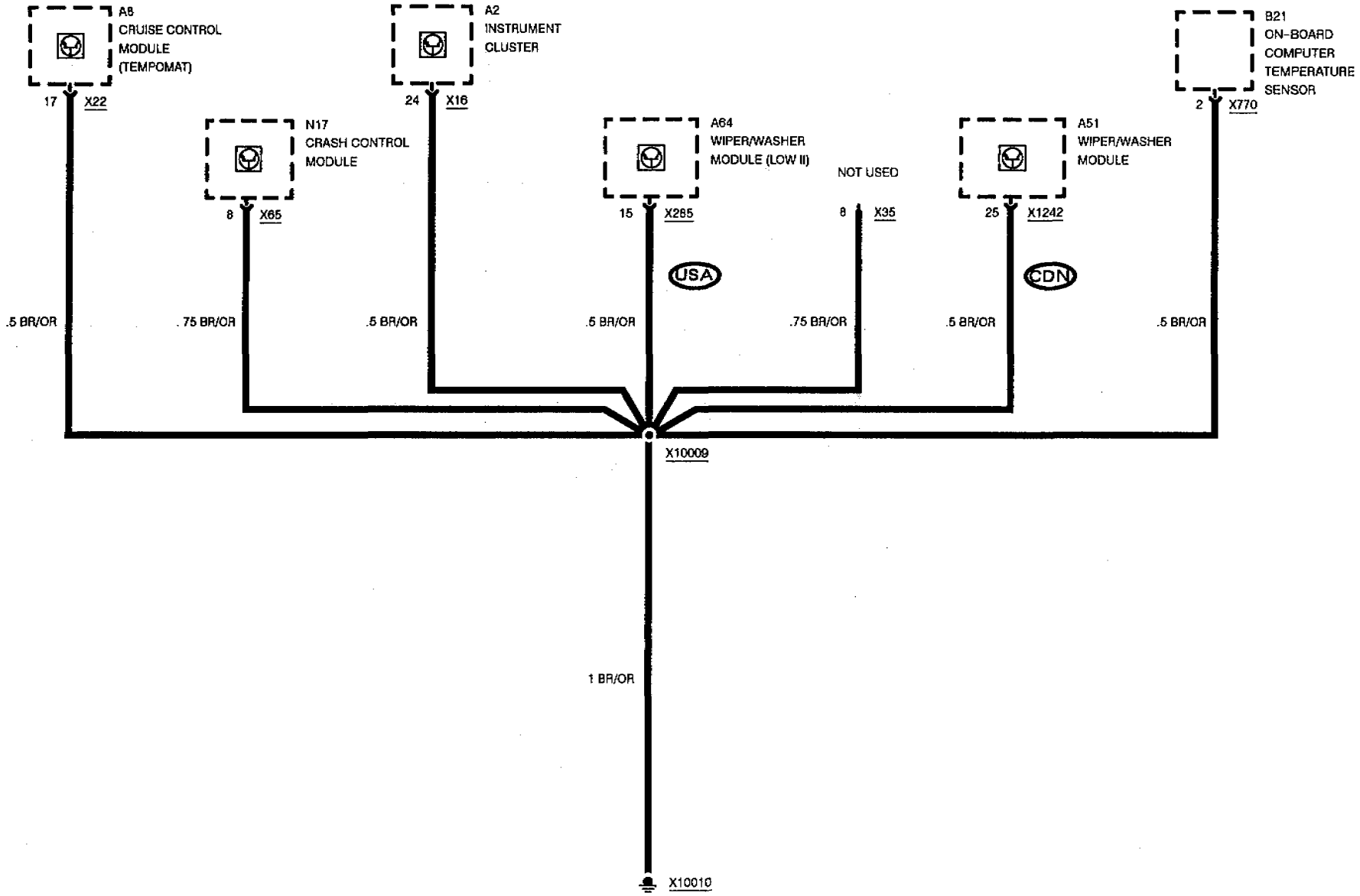

BMW 3

GROUND DISTRIBUTION

GROUND X10012

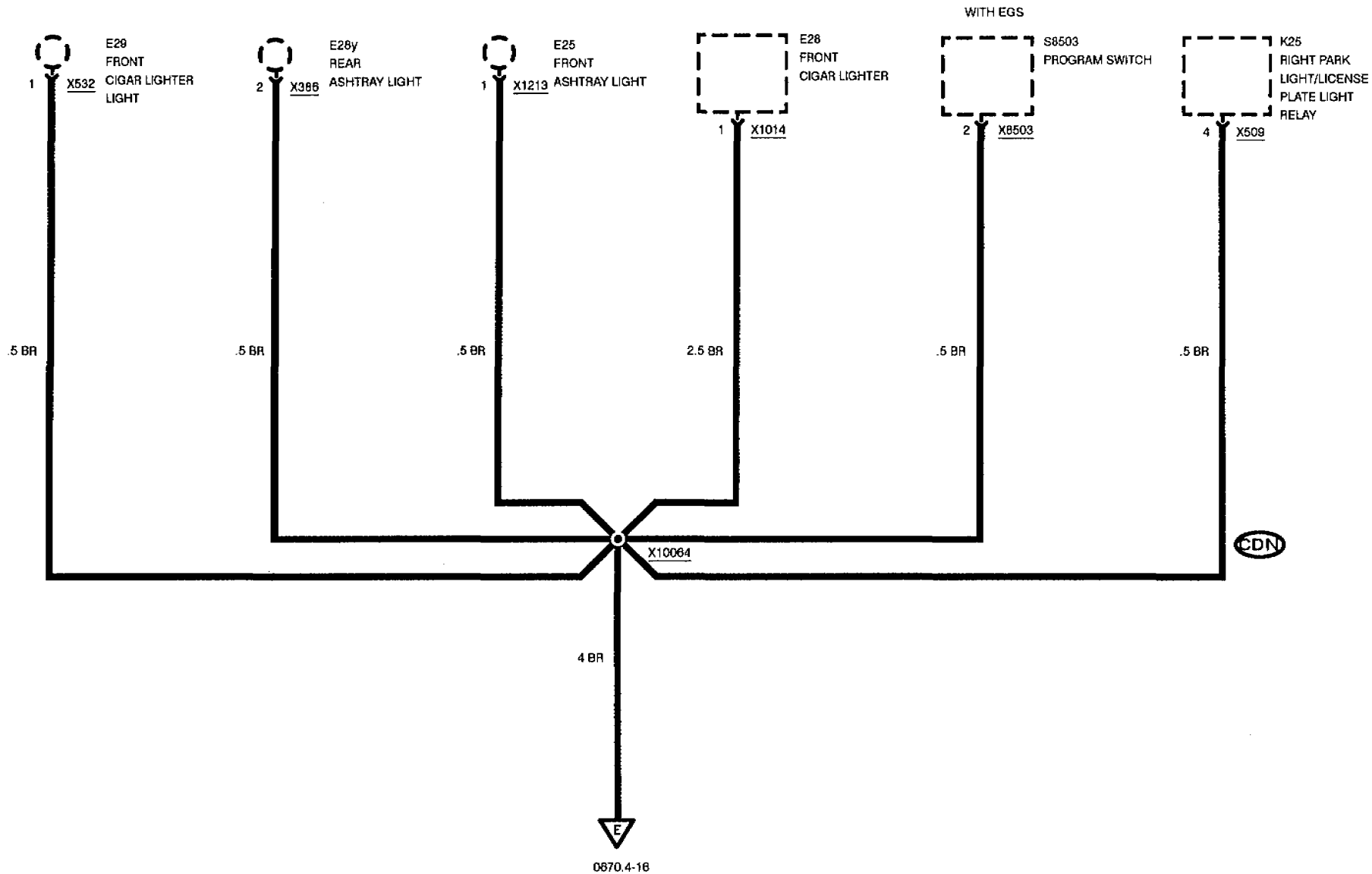

GROUND DISTRIBUTION

GROUND X10012

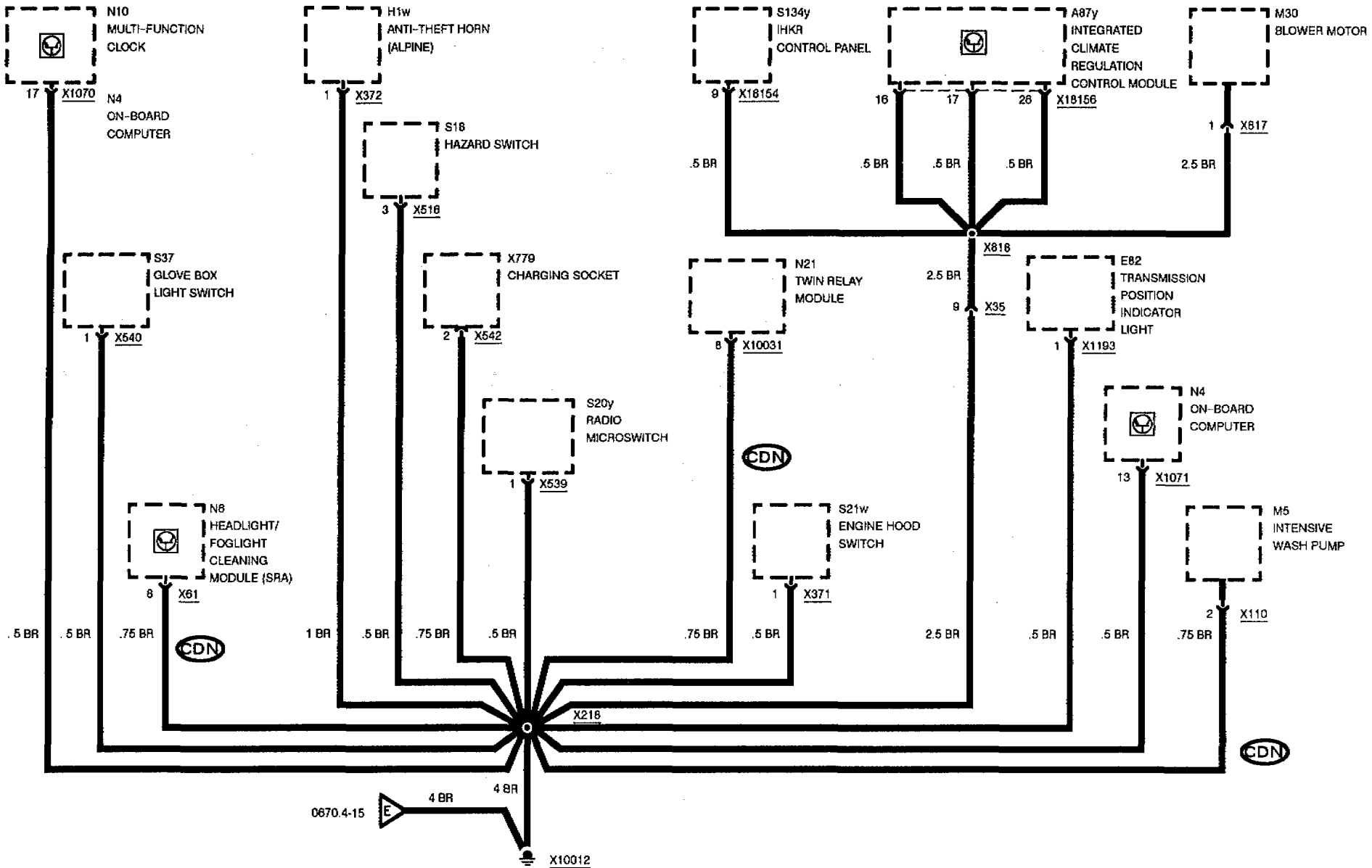

GROUND DISTRIBUTION

GROUND X13004

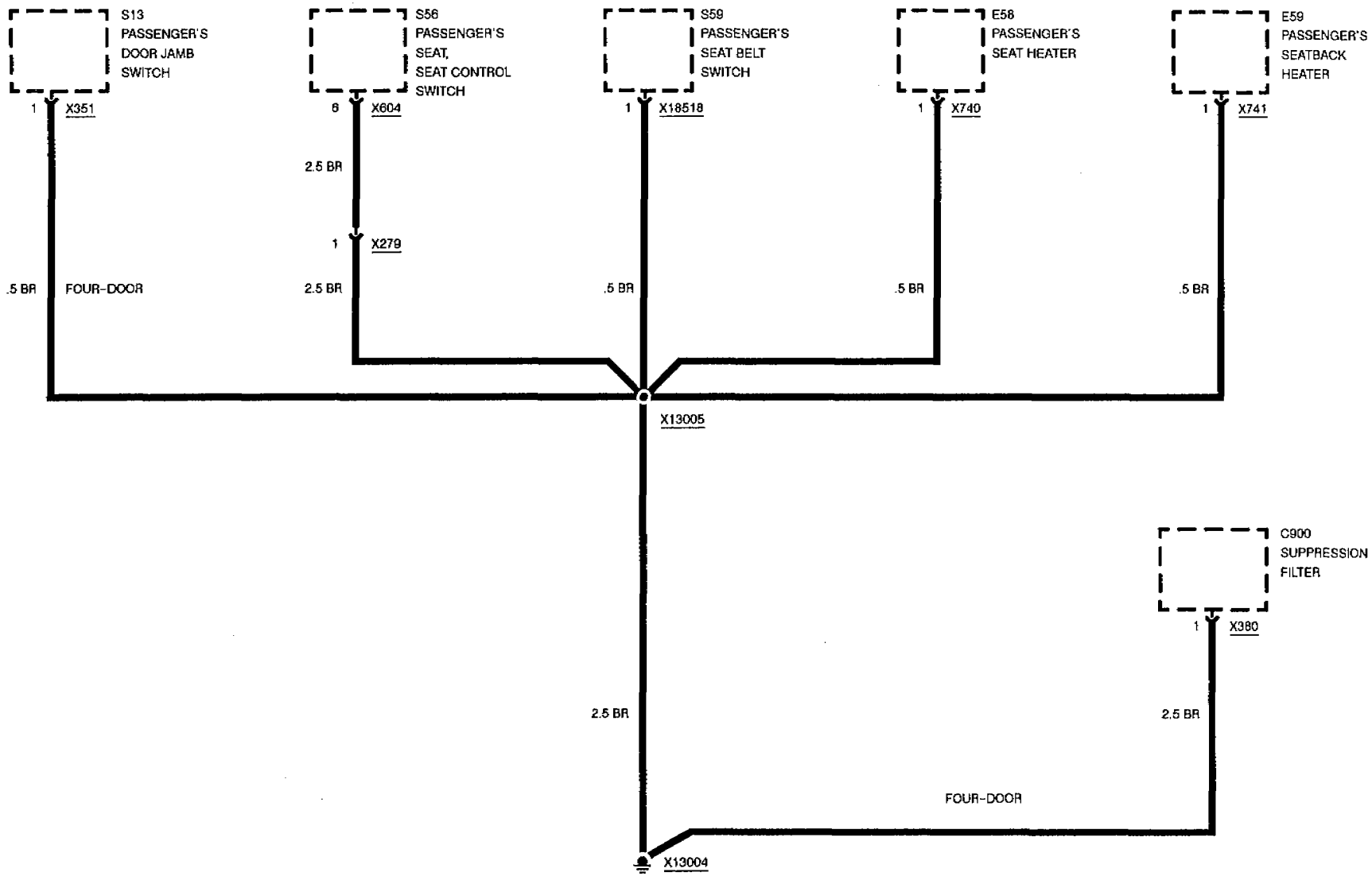

GROUND DISTRIBUTION

GROUND X13006

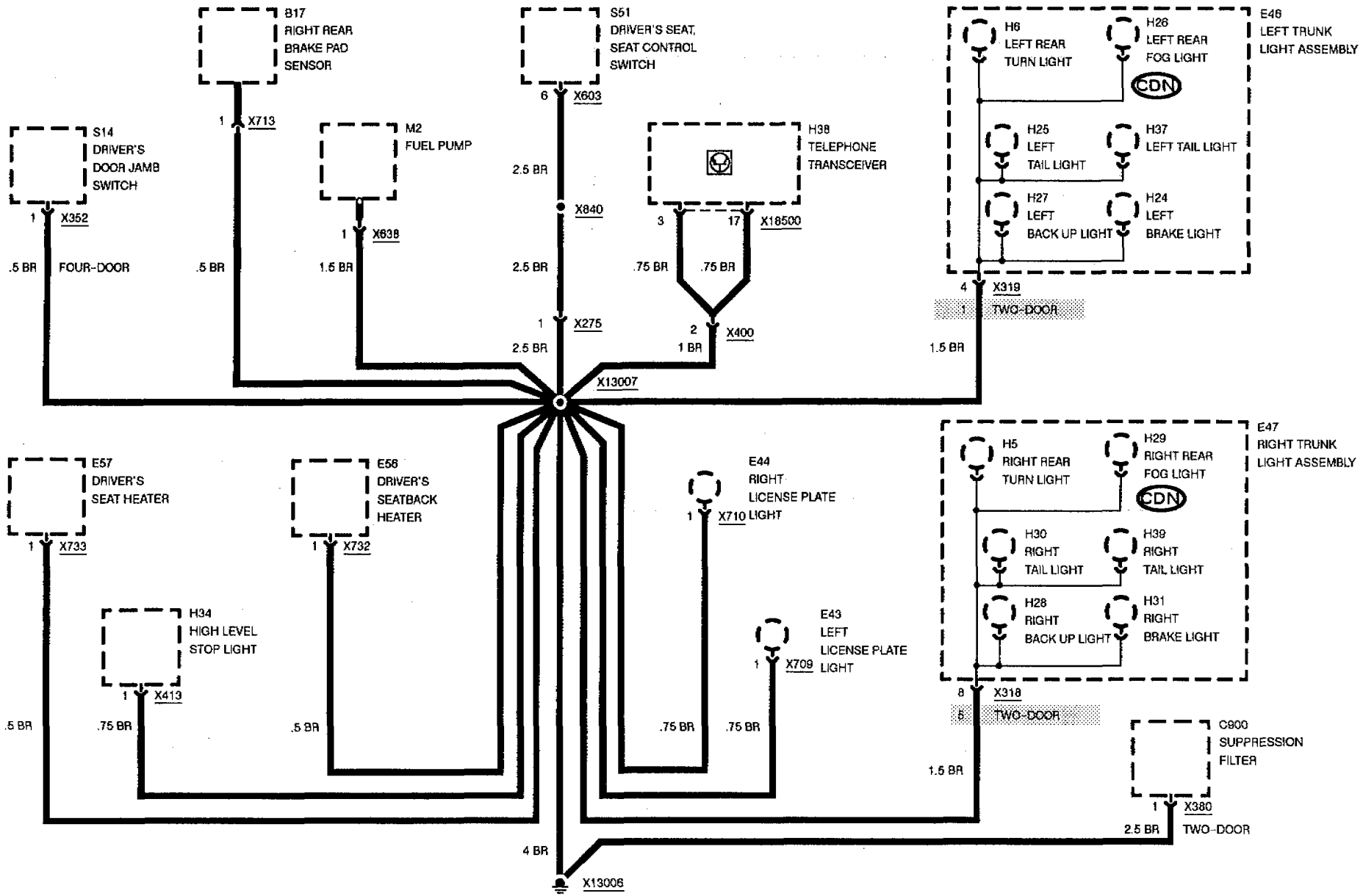

GROUND DISTRIBUTION

GROUNDS X13009, X13016, AND X18723

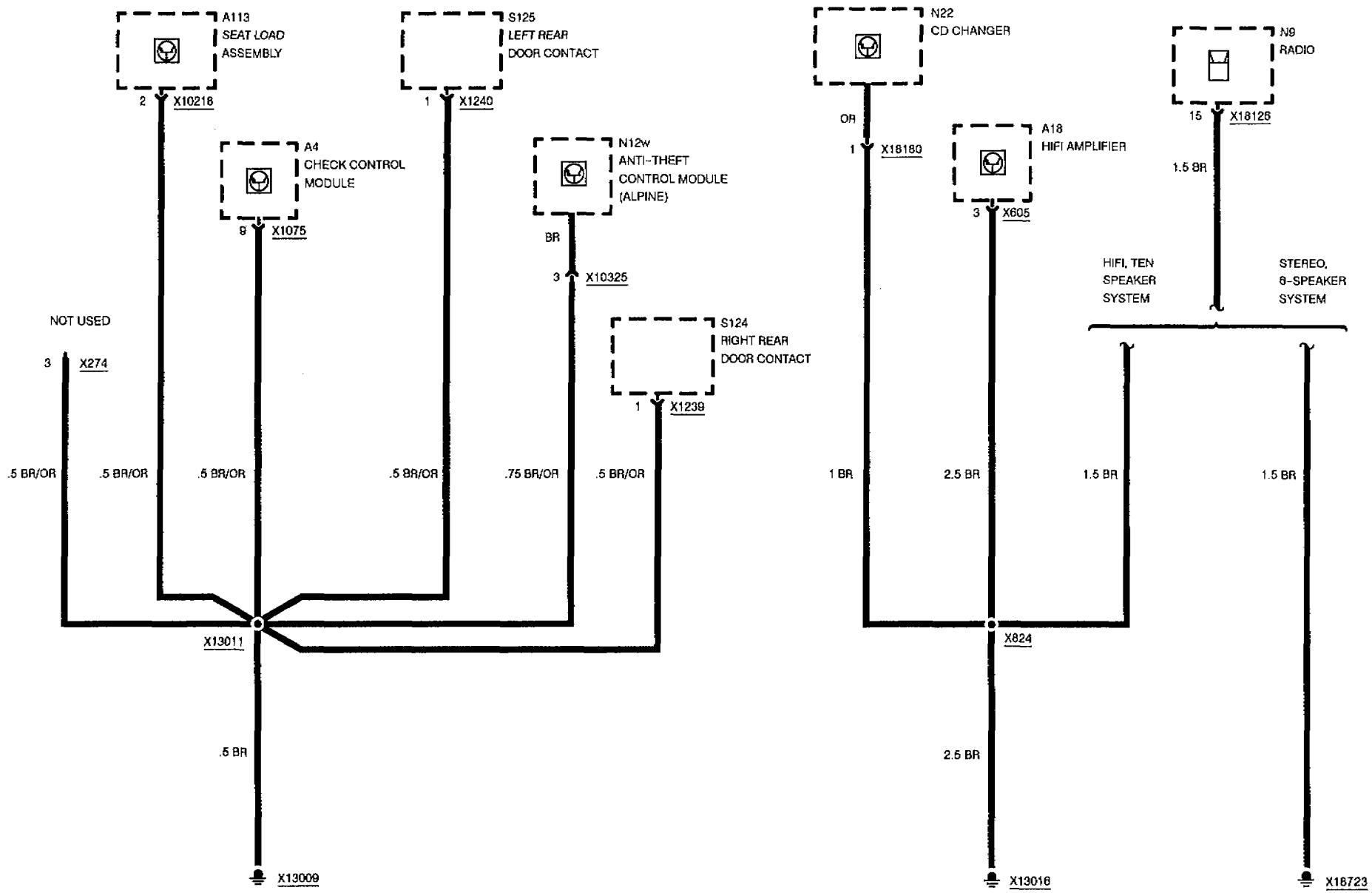

DATA LINK

BLOCK DIAGRAM

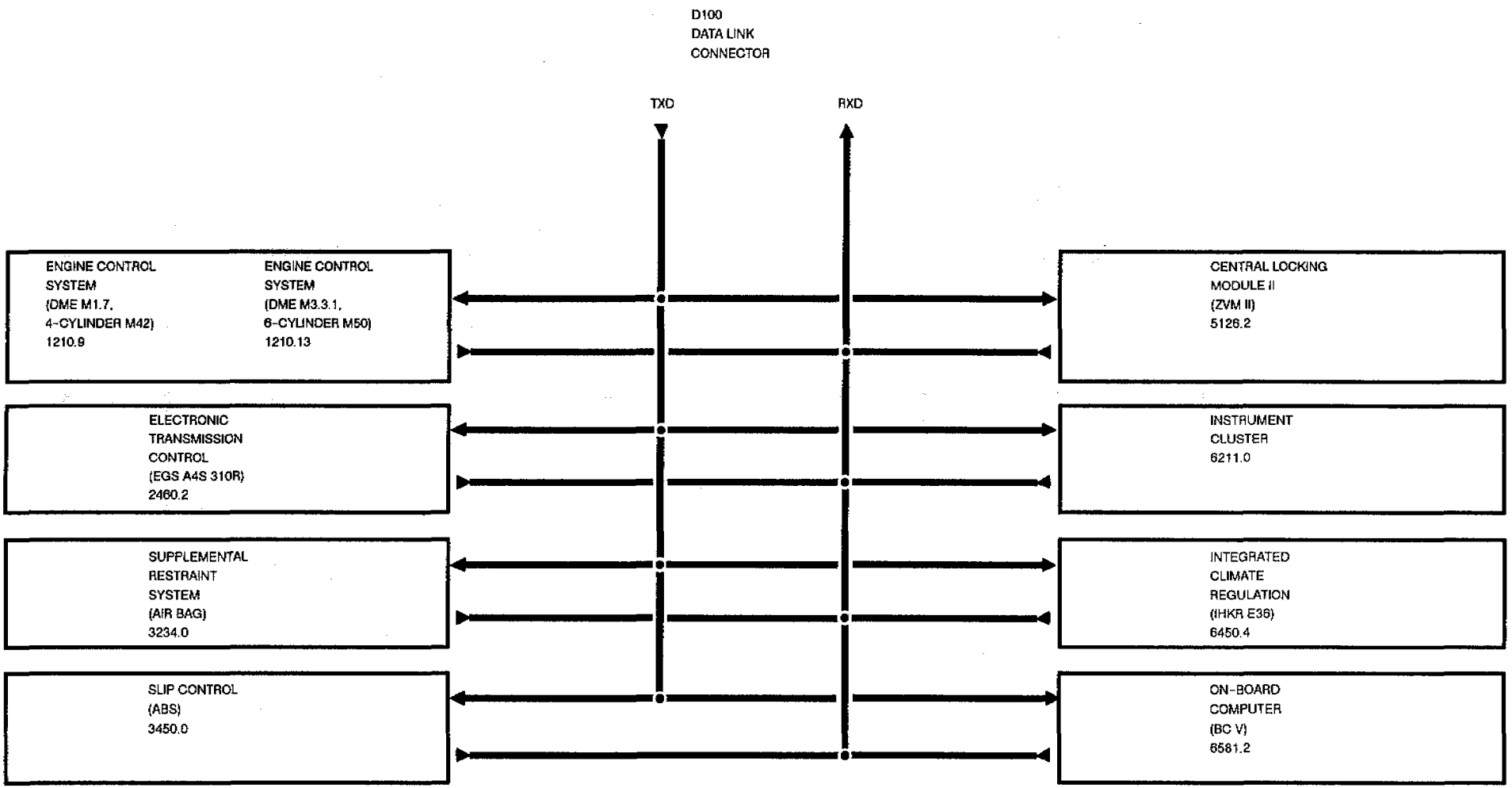

DATA LINK

TXD, PIN 20

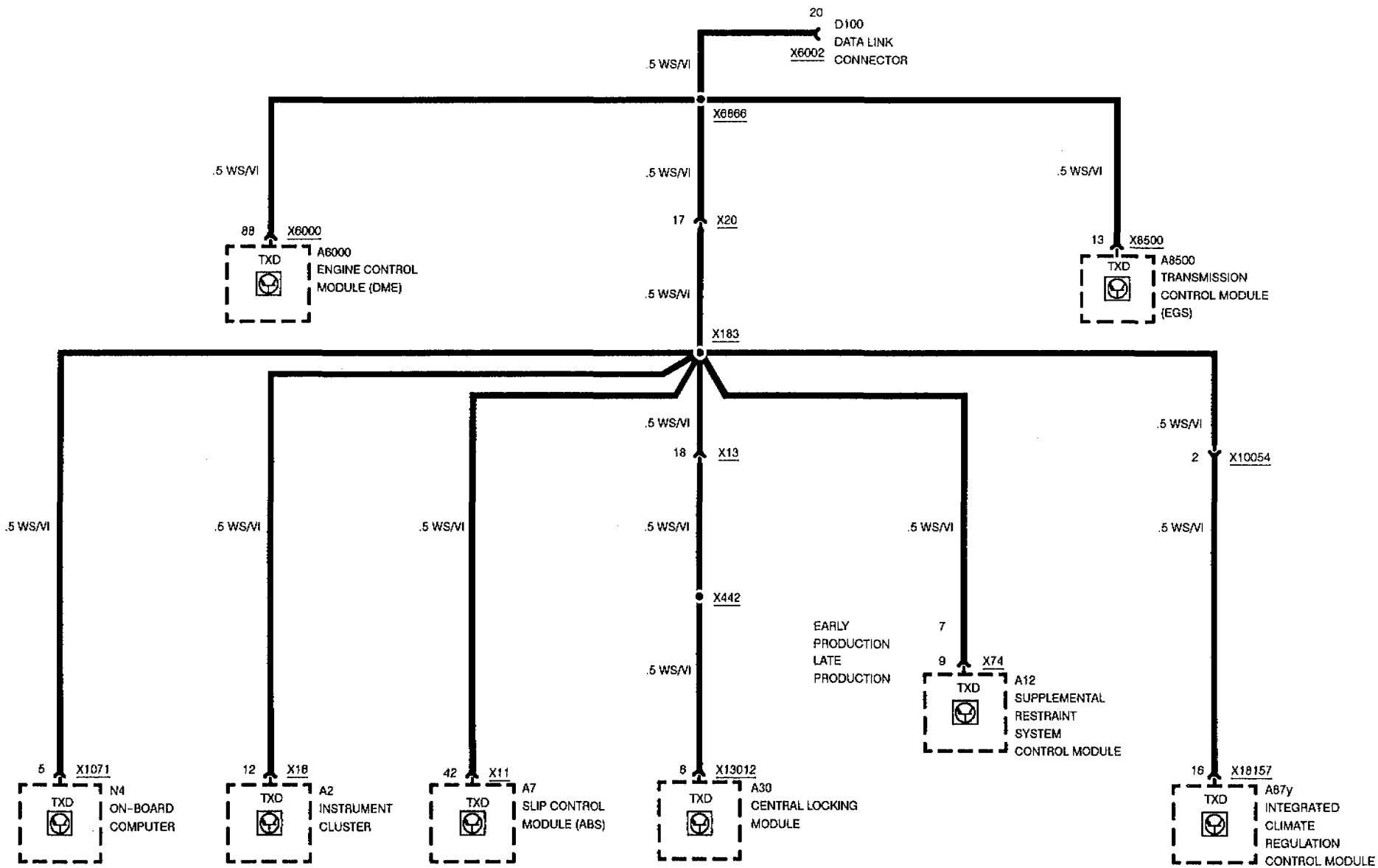

DATA LINK

RXD, PIN 15

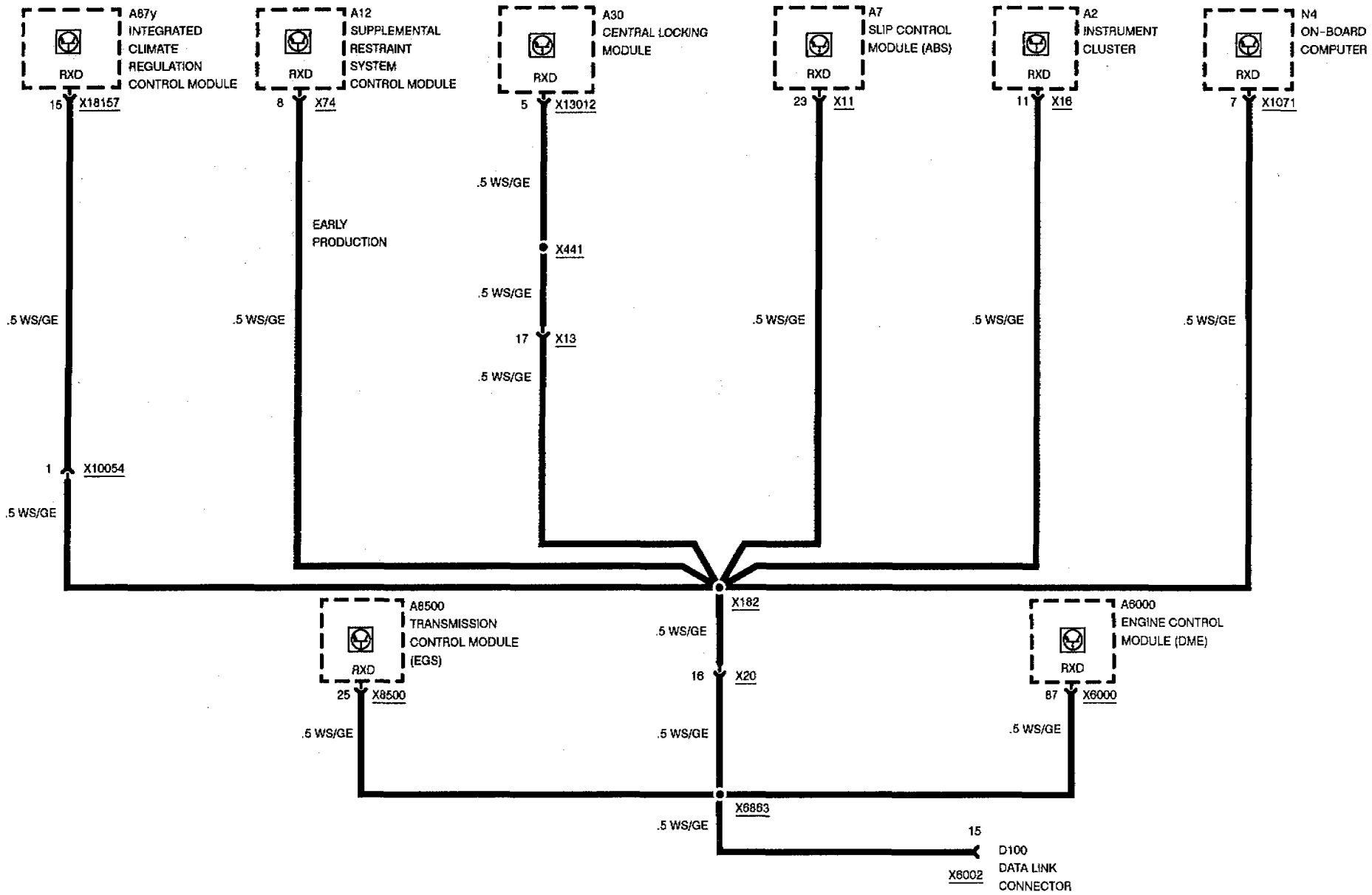

DATA LINK

DATA LINK PINS 1 AND 11

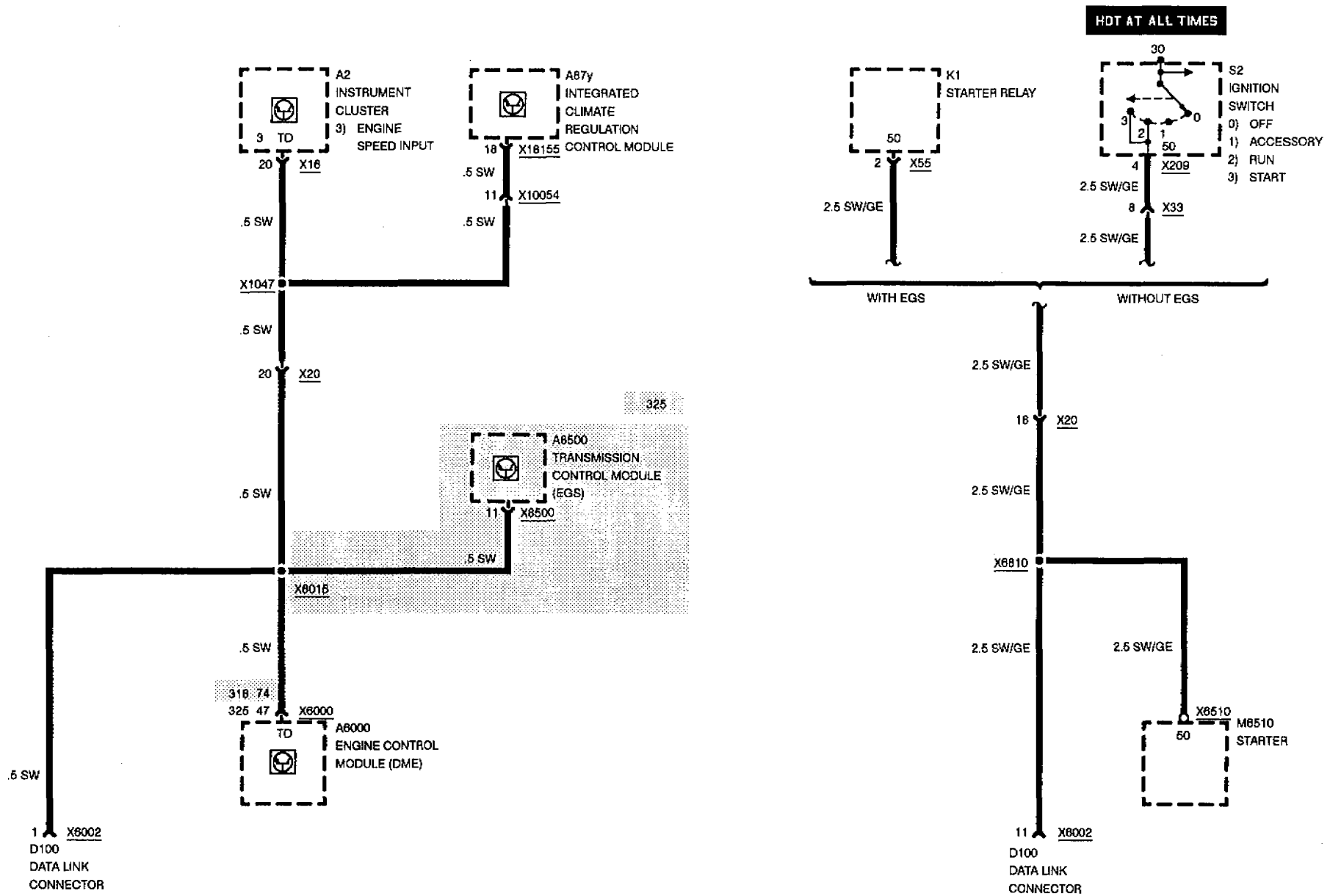

DATA LINK

DATA LINK PINS 12 AND 14

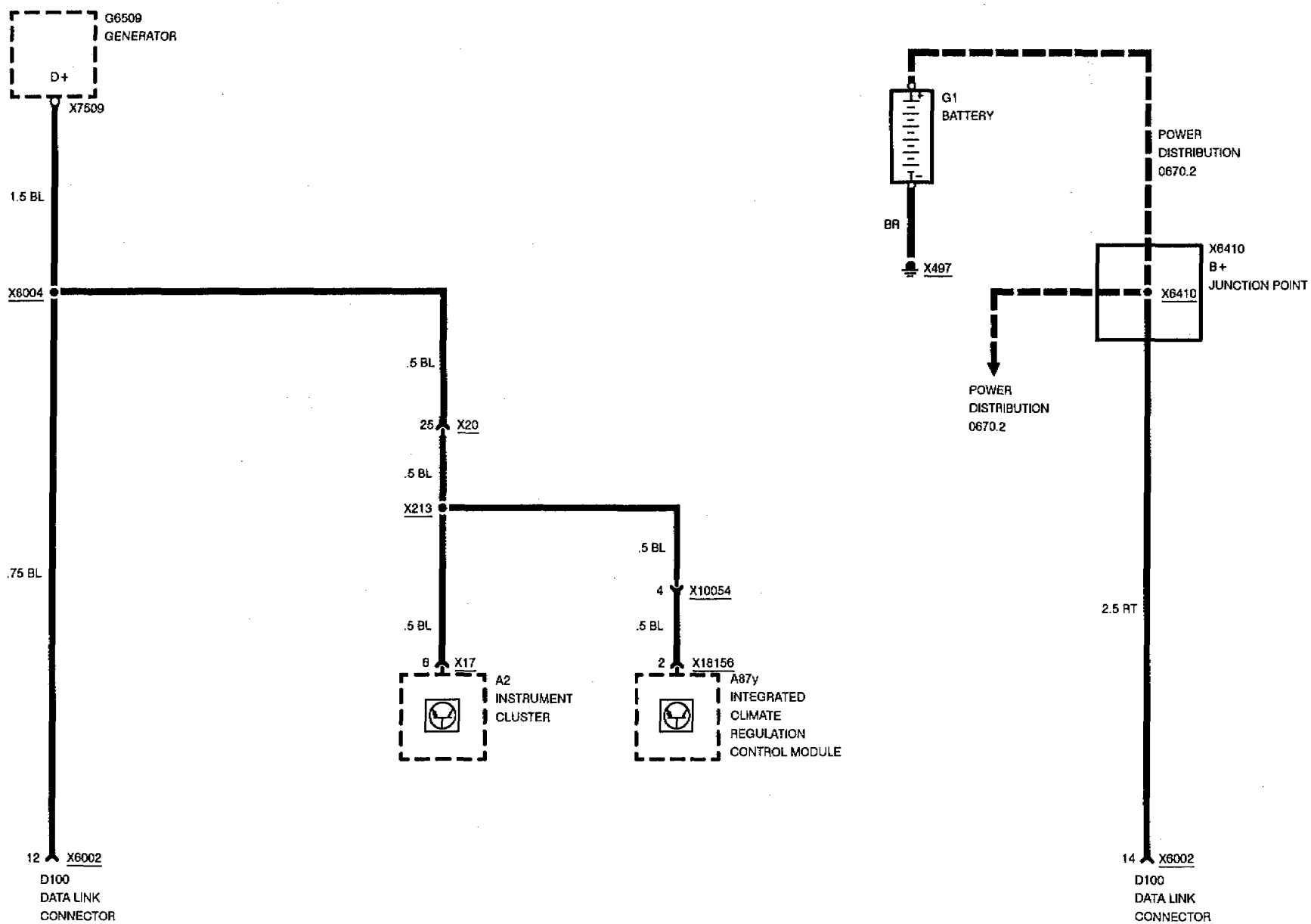

DATA LINK

DATA LINK PINS 7, 16, AND 18

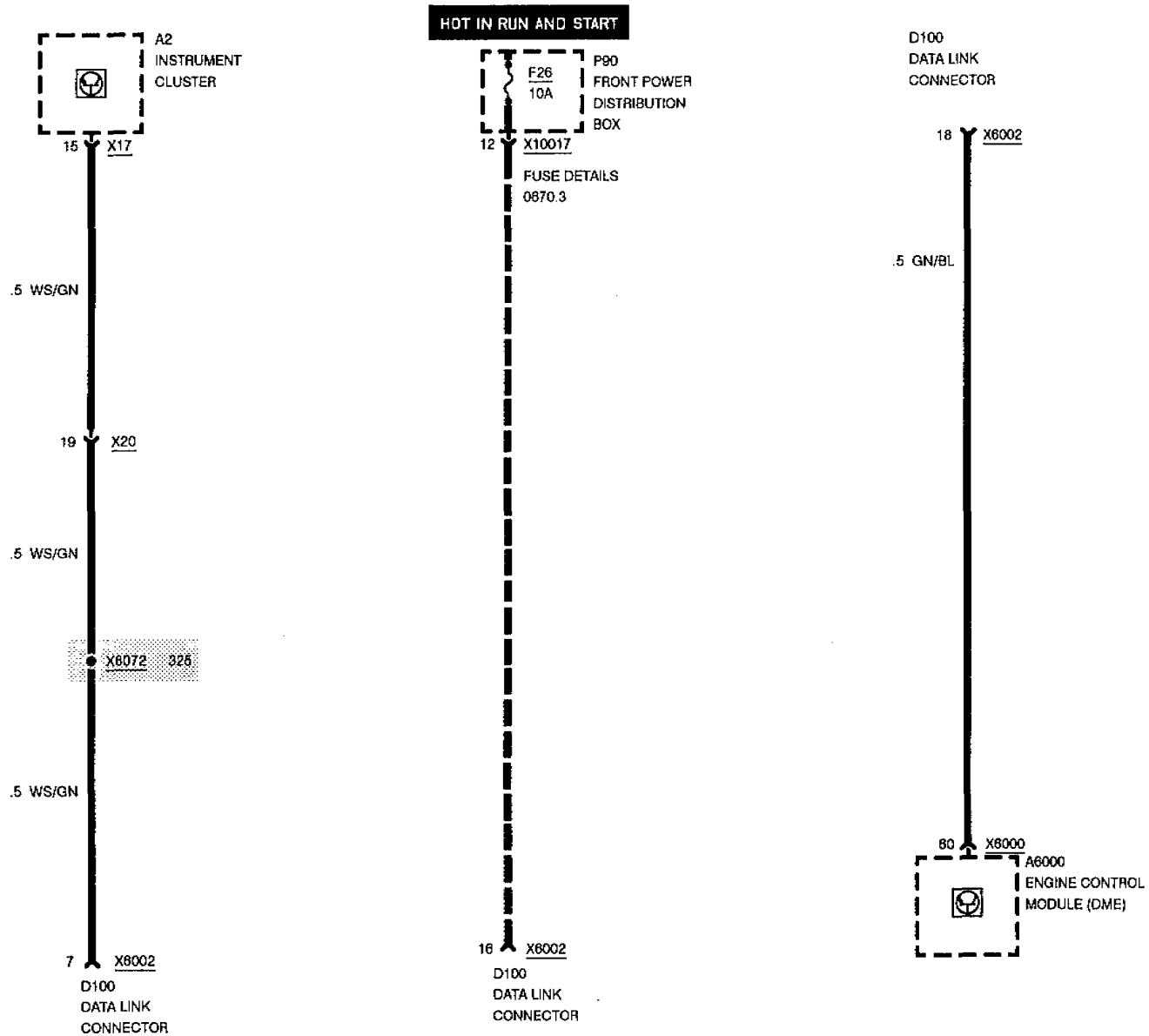

DATA LINK CONNECTOR PIN 19

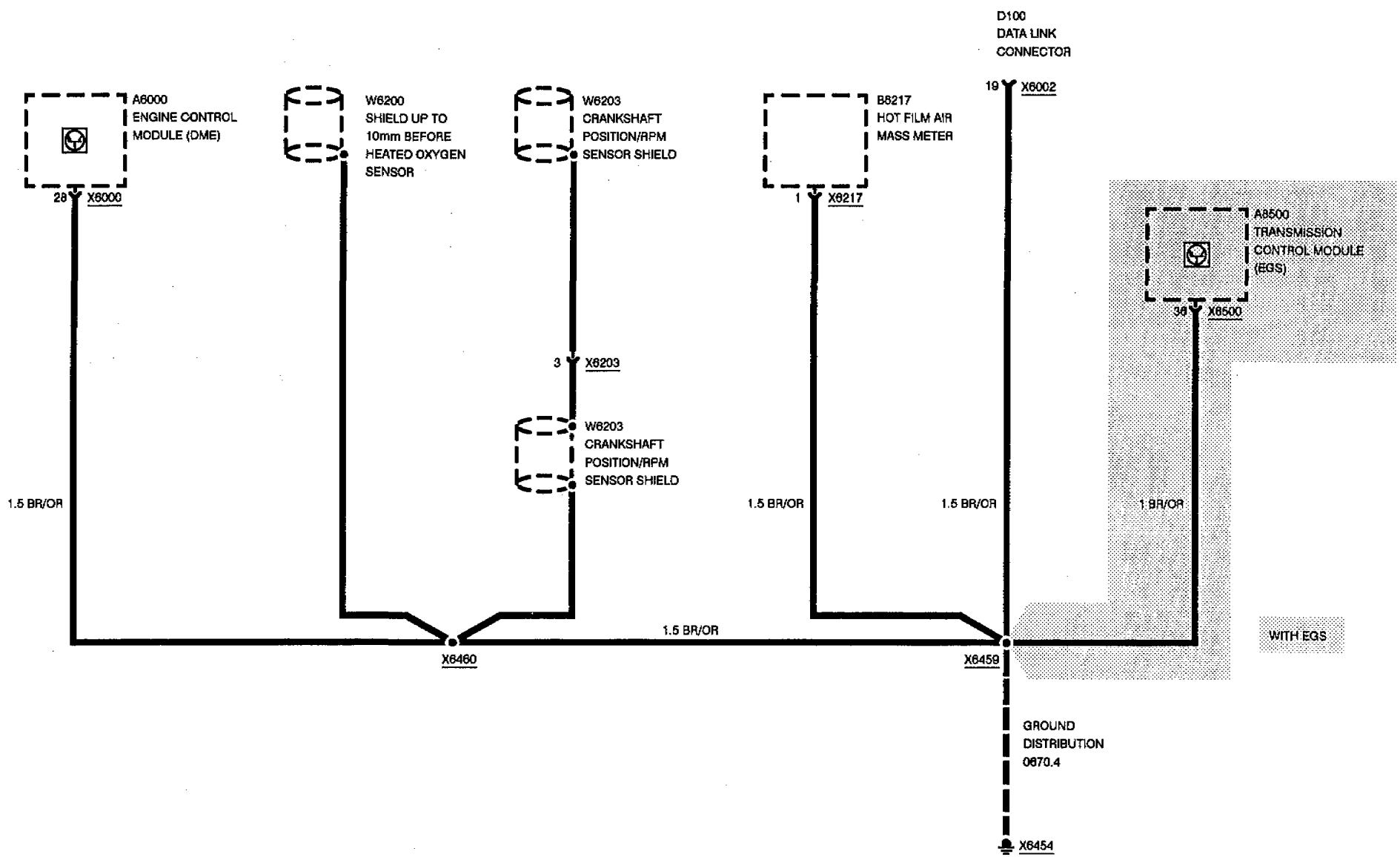

DATA LINK CONNECTOR PIN 19

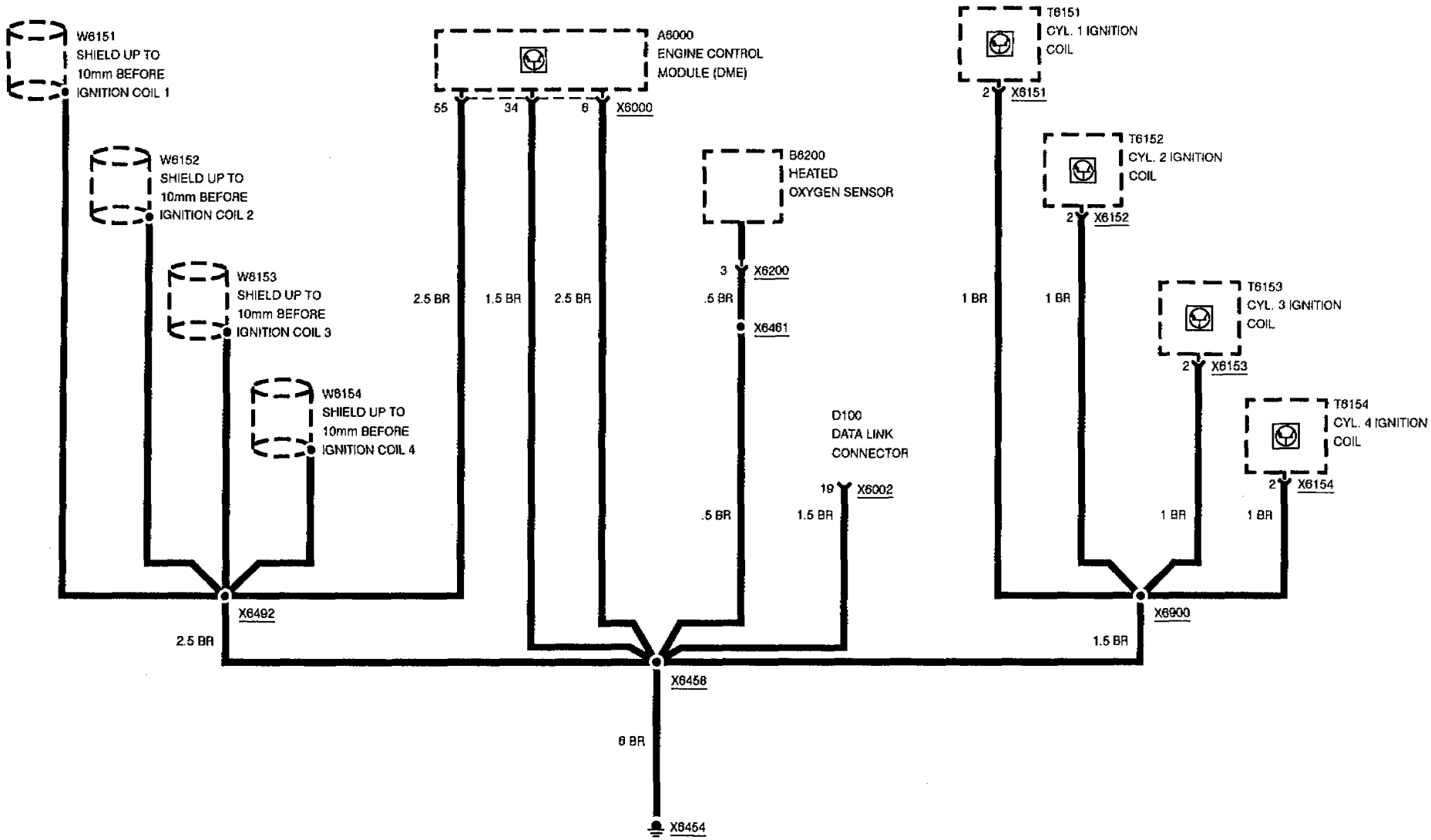

DATA LINK CONNECTOR (X6002)

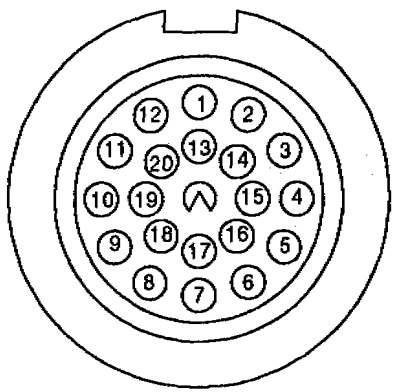

PIN NUMBER	TERMINAL NUMBER	TERMINAL DESCRIPTION	WIRE COLOR
1	–	MOTOR	SW
2	–	NOT OCCUPIED	
3	–	NOT OCCUPIED	
4	–	NOT OCCUPIED	
5	–	NOT OCCUPIED	
6	–	NOT OCCUPIED	
7	SI	SERVICE INTERVAL RESET	WS/GN
8	–	NOT OCCUPIED	
9	–	NOT OCCUPIED	
10	–	NOT OCCUPIED	
11	50	VOLTAGE: IGNITION SWITCH IN START	SW/GE
12	61(D+)	GENERATOR CHARGE INDICATOR	BL
13	–	NOT OCCUPIED	
14	30	VOLTAGE: HOT AT ALL TIMES	RT
15	RXD	DIAGNOSTIC DATA LINK	WS/GE
16	15S	VOLTAGE: IGNITION SWITCH IN RUN AND START	GN/WS
17	–	NOT OCCUPIED	
18	–	PROGRAM SELECT FOR ENGINE CONTROL MODULE (DME)	GN/BL
19	31	GROUND	BR
20	TXD	DIAGNOSTIC DATA LINK	WS/VI

12/93 — 1210 9a — 1993
12/93 — 1210 9a — 1993

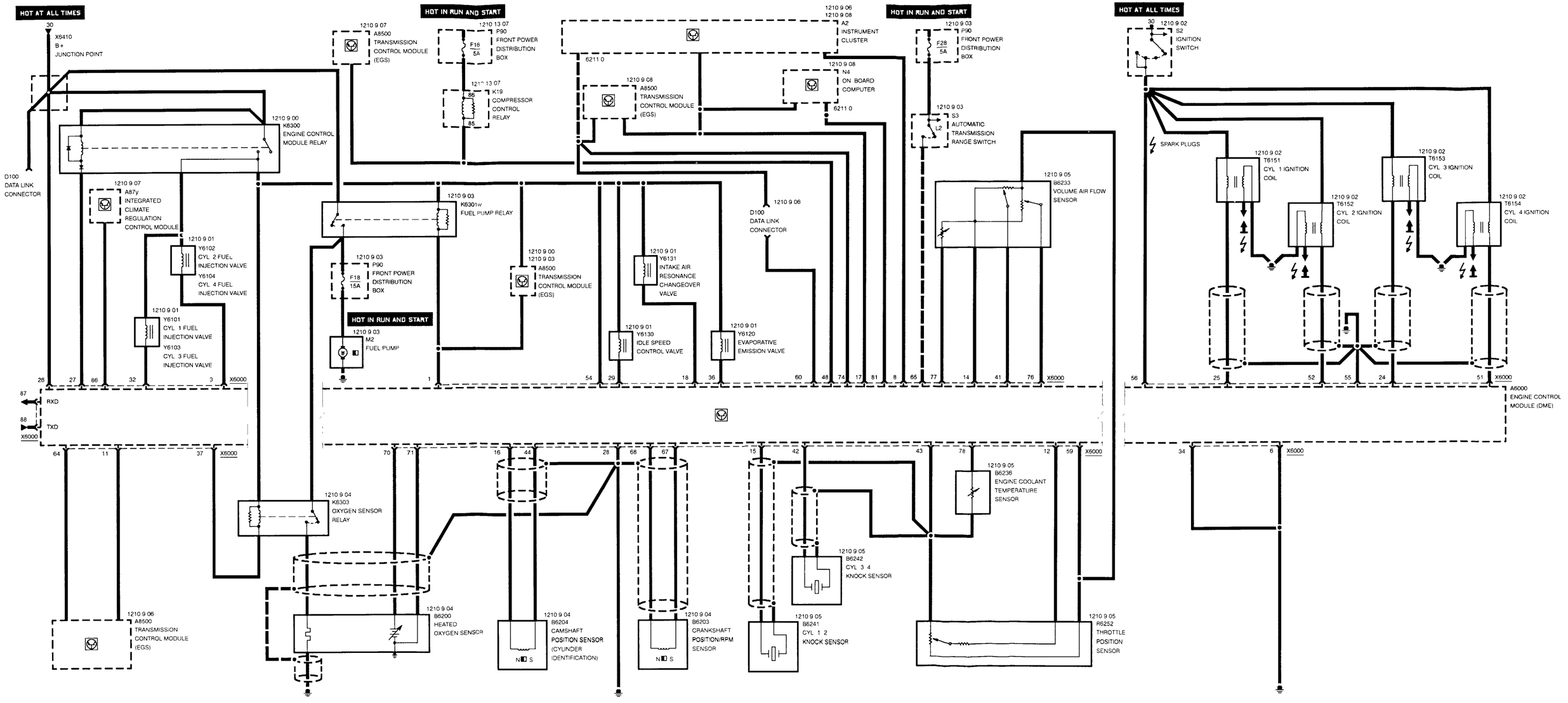

12/93 1210.9b 1993
12/93 1210.9b 1993

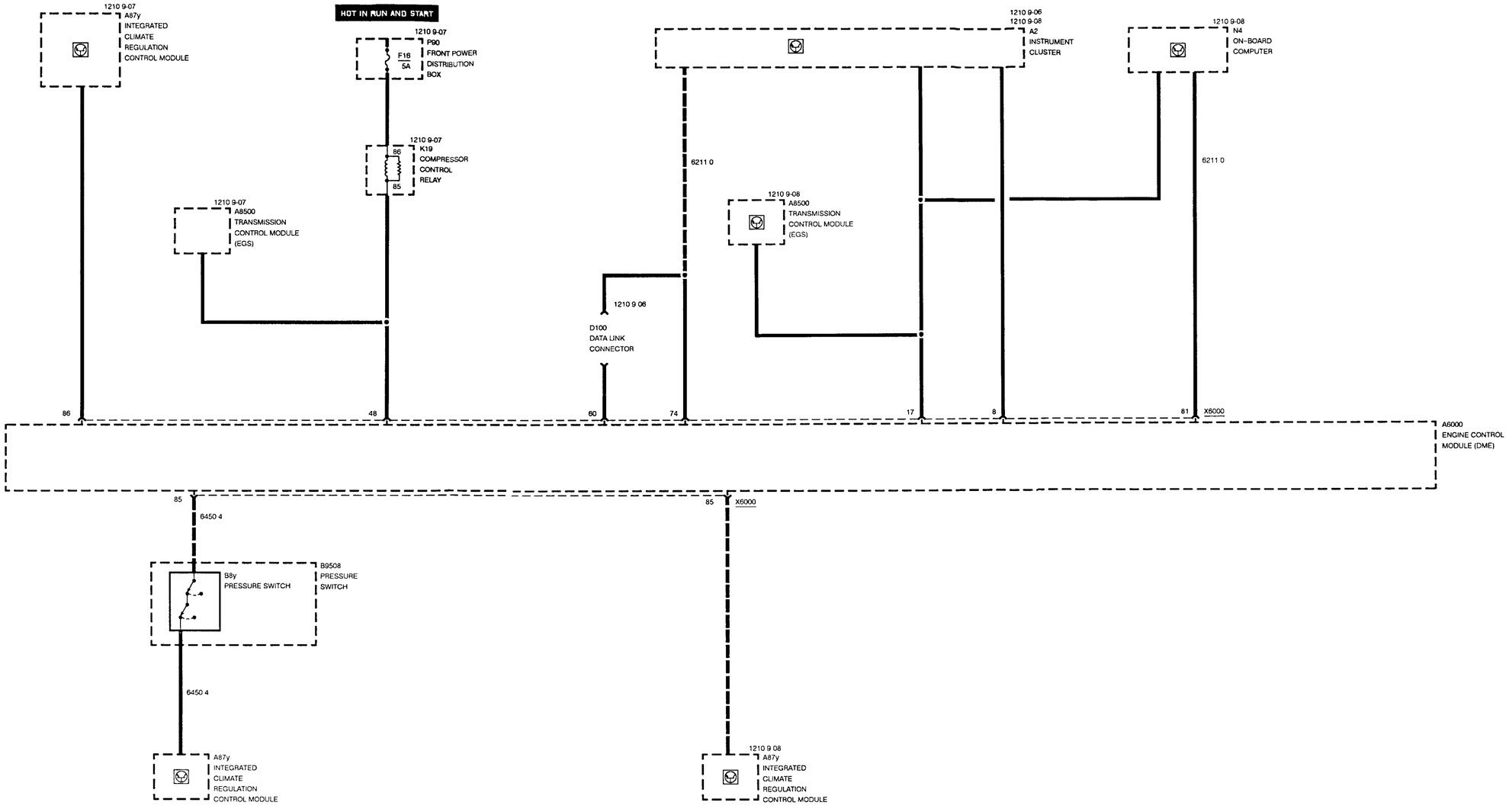

Pin Assignments

X6000

Pin	Type	Description/Function	Connection
1	A	Fuel pump relay control	Fuel pump relay, terminal 85
2		Not used	
3	A	Cyl. 2 and cyl. 4 fuel injection valve control	Cyl. 2 and cyl. 4 fuel injection valves
4		Not used	
5		Not used	
6	M	Ground, fuel injection valve output stages	Ground point
7		Not used	
8	A	"Check engine" indicator control	Instrument cluster
9		Not used	
10		Not used	
11	A	DKV potentiomenter signal	Transmission control module (EGS)
12	E	Throttle position	Throttle position sensor
13		Not used	
14	E	Volume air flow sensor	Volume air flow sensor
15	E	Cyl. 1-2 knock sensor	Cyl. 1-2 knock sensor
16	E	Camshaft position sensor (cylinder identification)	Camshaft position sensor (cylinder identification)
17	A	ti measurement signal (fuel consumption)	Instrument cluster
18	A	Intake air resonance changeover valve control	Intake air resonance changeover valve
19		Not used	
20		Not used	
21		Not used	
22		Not used	
23		Not used	
24	A	Cyl. 3 ignition coil control	Cyl. 3 ignition coil
25	A	Cyl. 1 ignition coil control	Cyl. 1 ignition coil
26	E	Battery voltage	B+ junction point
27	A	Engine control module relay control	Engine control module relay, terminal 85
28	M	Ground for electronics and shielding of sensors	Ground point
29	A	Idle speed control valve control	Idle speed control valve
30		Not used	
31		Not used	

E = Input, A = Output, M = Ground

Pin Assignments

Pin	Type	Description/Function	Connection
32	A	Cyl. 1 and cyl. 3 fuel injection valve control	Cyl. 1 and cyl. 3 fuel injection valves
33		Not used	
34	M	Ground, remaning output stages (except for ignition and fuel injection valves)	Ground point
35		Not used	
36	A	Evaporative emission valve control	Evaporative emission valve
37	A	Oxygen sensor heater control	Oxygen sensor relay, terminal 85
38		Not used	
39		Not used	
40		Not used	
41	E	Volume air flow sensor	Volume air flow sensor
42	E	Cyl. 3-4 knock sensor	Cyl. 3-4 knock sensor
43	M	Ground for sensors	Engine coolant temperature sensor, cyl. 1-2 knock sensor, cyl. 3-4 knock sensor, and throttle position sensor
44	E	Camshaft position sensor (cylinder identification)	Camshaft position sensor (cylinder identification)
45		Not used	
46		Not used	
47		Not used	
48	A	A/C compressor cut-out	Compressor control relay, terminal 85
49		Not used	
50		Not used	
51	A	Cyl. 4 ignition coil control	Cyl. 4 ignition coil
52	A	Cyl. 2 ignition coil control	Cyl. 2 ignition coil
53		Not used	
54	E	Battery voltage from engine control module relay	Engine control module relay, terminal 87a
55	M	Ground, ignition	Ground point
56	E	Ignition switch, terminal 15	Ignition switch, terminal 15
57		Not used	
58		Not used	
59	A	5V component supply	Throttle position sensor and volume air flow sensor
60	E	Programming voltage	Data link connector
61		Not used	
62		Not used	

E = Input, A = Output, M = Ground

Pin Assignments

Pin	Type	Description/Function	Connection
63		Not used	
64	E	Ignition timing intervention	Transmission control module (EGS)
65	E	Drive range P/N	Automatic transmission range switch
66		Not used	
67	E	Crankshaft position RPM sensor	Crankshaft position RPM sensor
68	A	Crankshaft position RPM sensor	Crankshaft position RPM sensor
69		Not used	
70	E	Oxygen sensor signal	Heated oxygen sensor
71	M	Oxygen sensor signal ground	Heated oxygen sensor
72		Not used	
73	E	Vehicle speed signal	Instrument cluster
74	A	Crankshaft RPM speed signal TD	Instrument cluster
75		Not used	
76	E	Volume air flow sensor	Volume air flow sensor
77	E	Volume air flow sensor	Volume air flow sensor
78	E	Engine coolant temperature	Engine coolant temperature sensor
79		Not used	
80		Not used	
81	E	Drive-away protection signal (code)	On-board computer
82		Not used	
83		Not used	
84		Not used	
85	E	A/C pressure	Pressure switch
86	E	A/C switch	Integrated climate regulation control module
87	A	RxD diagnosis data line	Data link connector
88	E/A	TxD diagnosis data line	Data link connector

E = Input, A = Output, M = Ground

ENGINE CONTROL SYSTEM (DME M1.7, 4-CYLINDER M42)

POWER, FUEL INJECTION VALVES

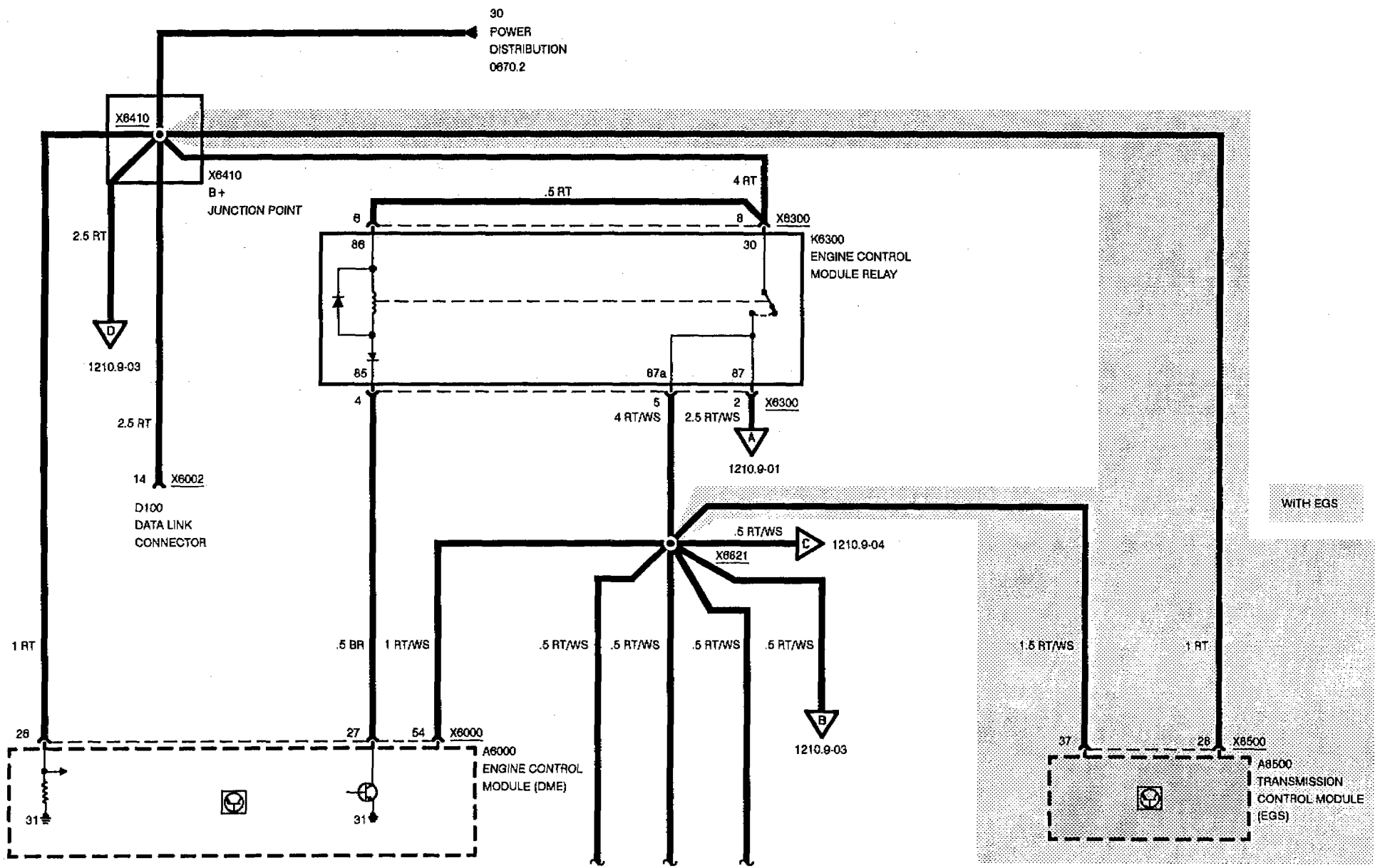

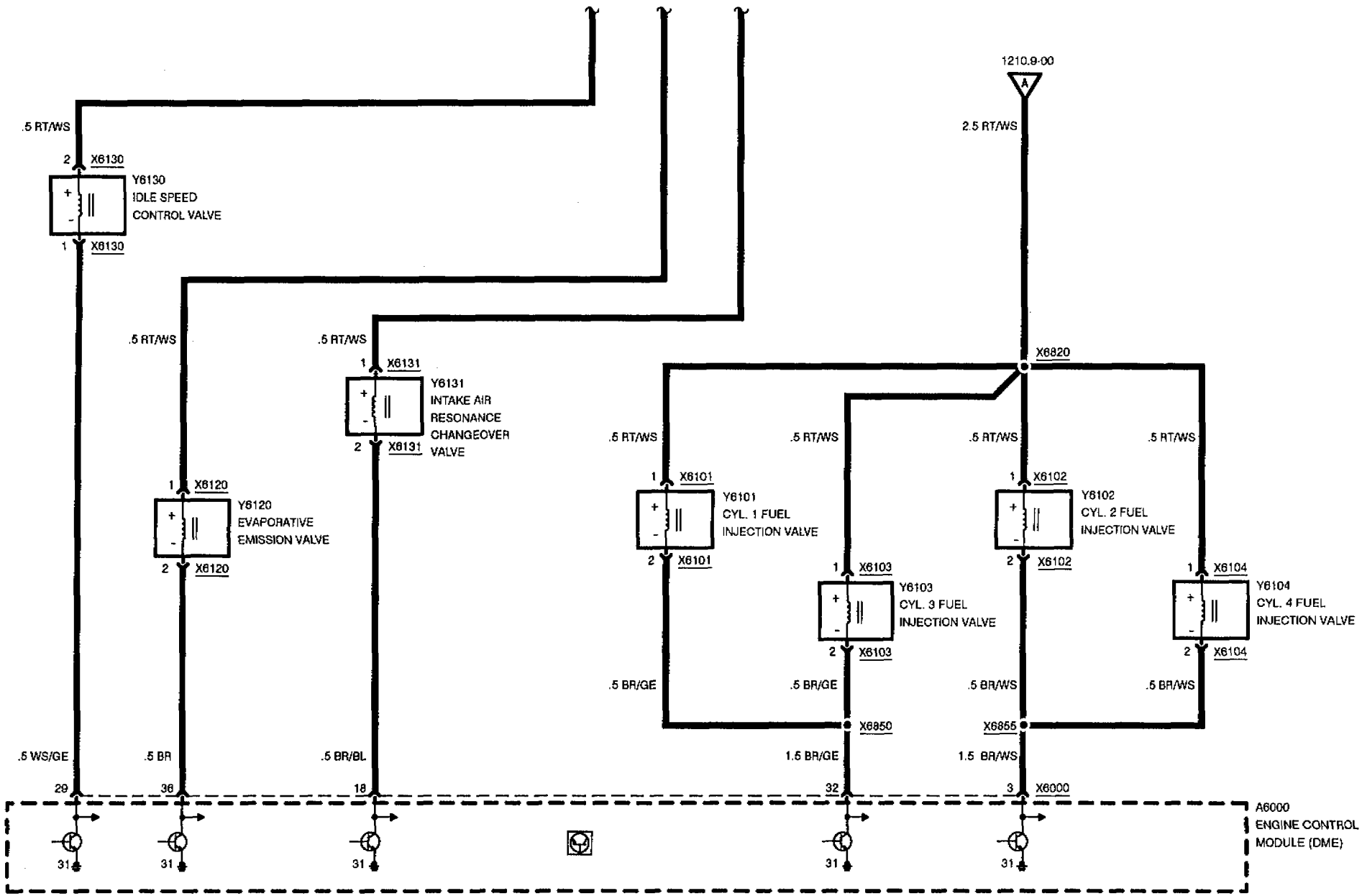
1210.9-00
A
2.5 RT/WS
.5 RT/WS
2 X6130
Y6130
IDLE SPEED
CONTROL VALVE
1 X6130
.5 RT/WS
.5 RT/WS
1 X6131
Y6131
INTAKE AIR
RESONANCE
CHANGEOVER
VALVE
2 X6131
X6820
.5 RT/WS
.5 RT/WS
.5 RT/WS
.5 RT/WS
1 X6120
Y6120
EVAPORATIVE
EMISSION VALVE
2 X6120
1 X6101
Y6101
CYL. 1 FUEL
INJECTION VALVE
2 X6101
1 X6103
Y6103
CYL. 3 FUEL
INJECTION VALVE
2 X6103
1 X6102
Y6102
CYL. 2 FUEL
INJECTION VALVE
2 X6102
1 X6104
Y6104
CYL. 4 FUEL
INJECTION VALVE
2 X6104
.5 BR/GE
.5 BR/GE
.5 BR/WS
.5 BR/WS
X6850
X6855
.5 WS/GE
.5 BR
.5 BR/BL
1.5 BR/GE
1.5 BR/WS
29
36
18
32
3 X6000
A6000
ENGINE CONTROL
MODULE (DME)
31
31
31
31
31

ENGINE CONTROL SYSTEM (DME M1.7, 4-CYLINDER M42)

IGNITION COILS

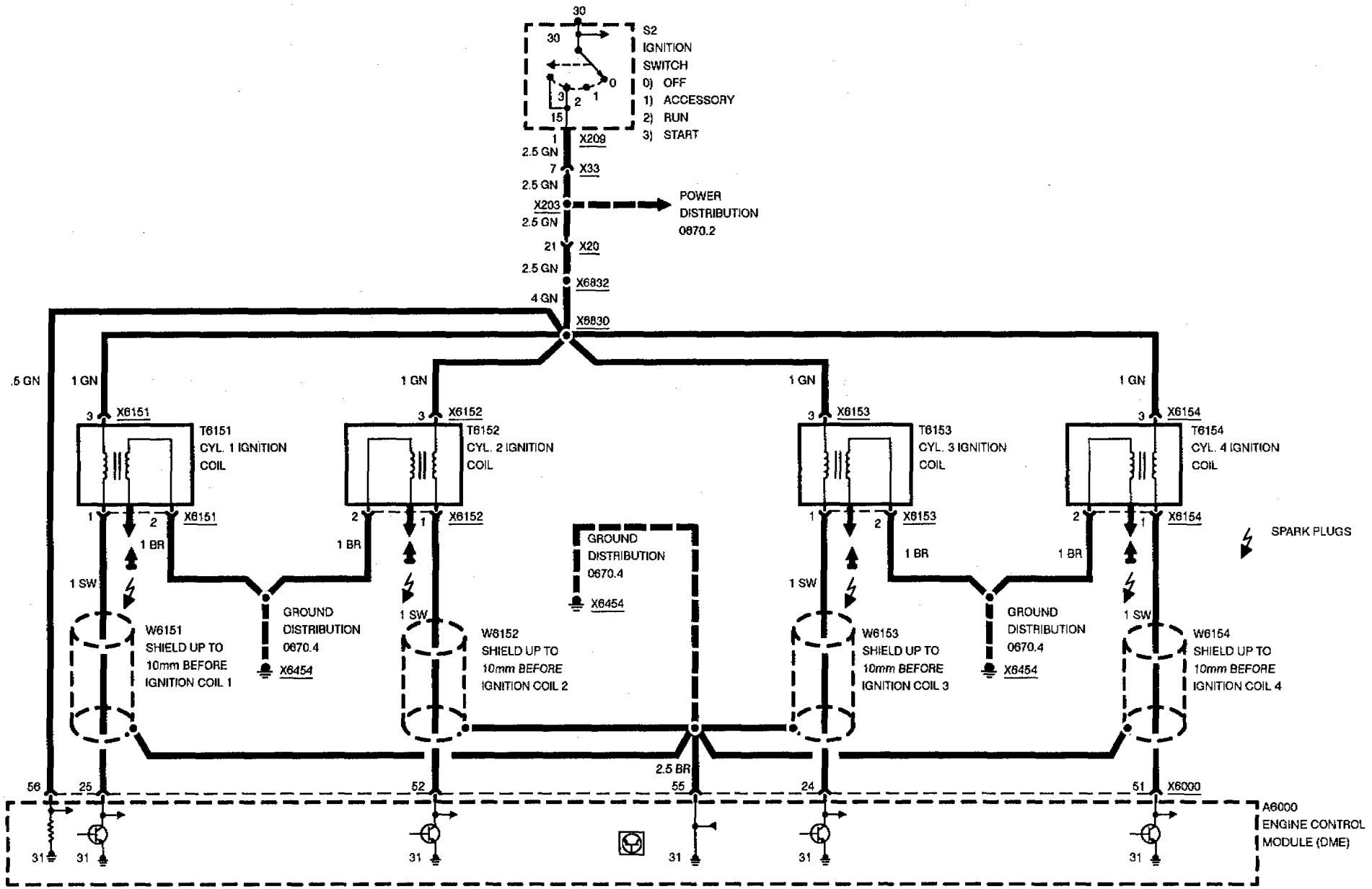

ENGINE CONTROL SYSTEM (DME M1.7, 4-CYLINDER M42)

FUEL PUMP

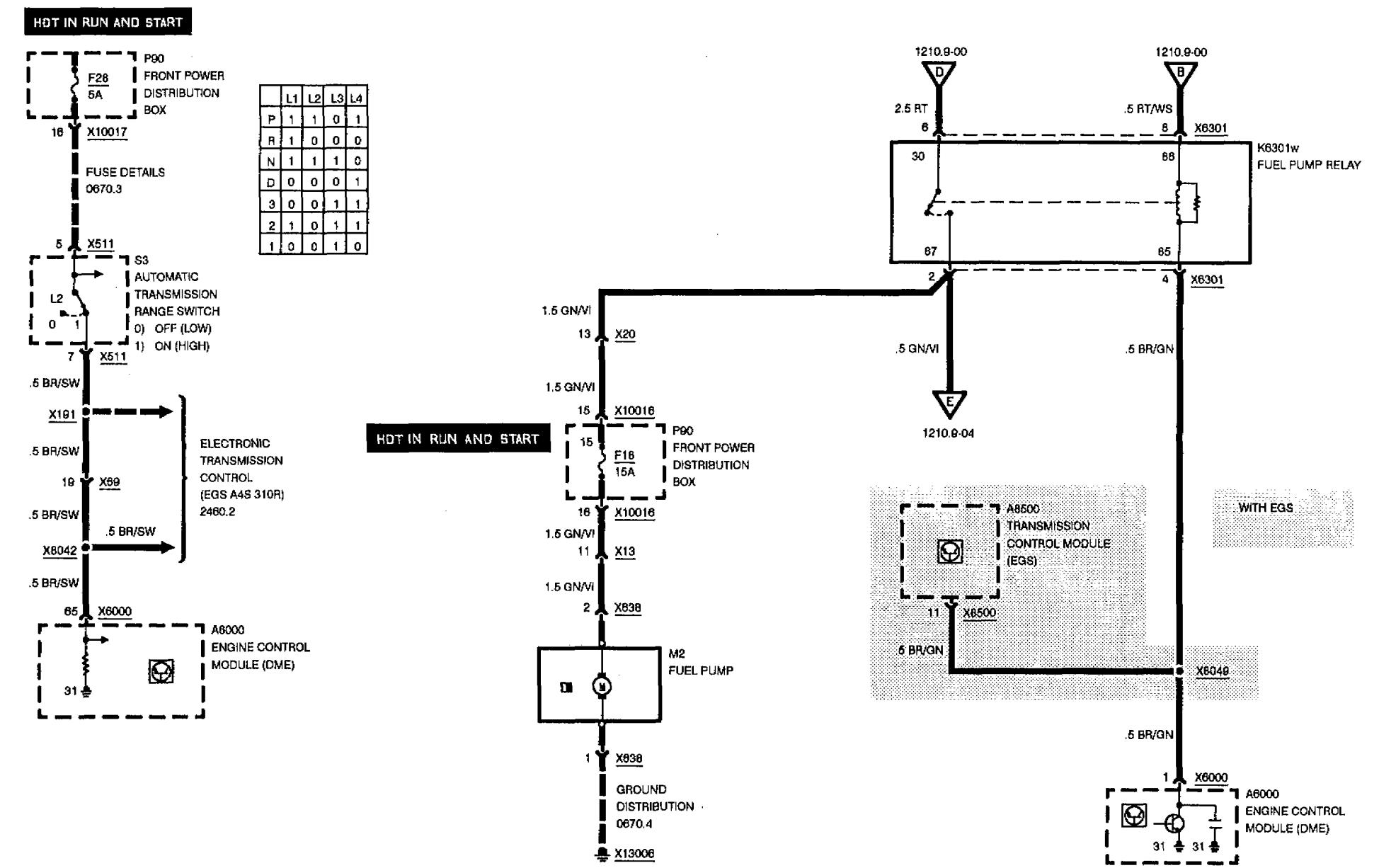

	L1	L2	L3	L4
P	1	1	0	1
R	1	0	0	0
N	1	1	1	0
D	0	0	0	1
3	0	0	1	1
2	1	0	1	1
1	0	0	1	0

ENGINE CONTROL SYSTEM (DME M1.7, 4-CYLINDER M42)

HEATED OXYGEN SENSOR, CRANKSHAFT SENSORS

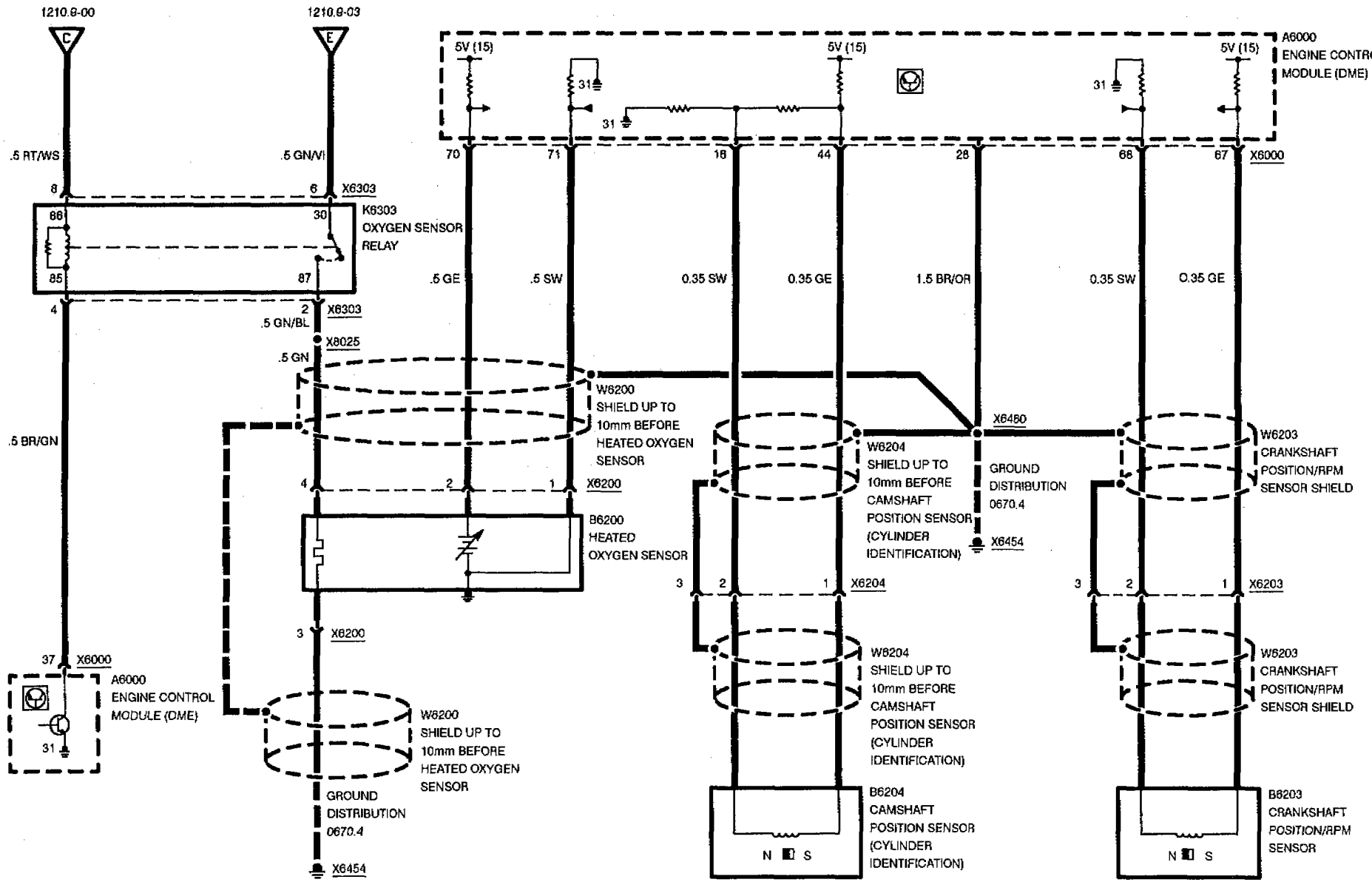

ENGINE CONTROL SYSTEM (DME M1.7, 4-CYLINDER M42)

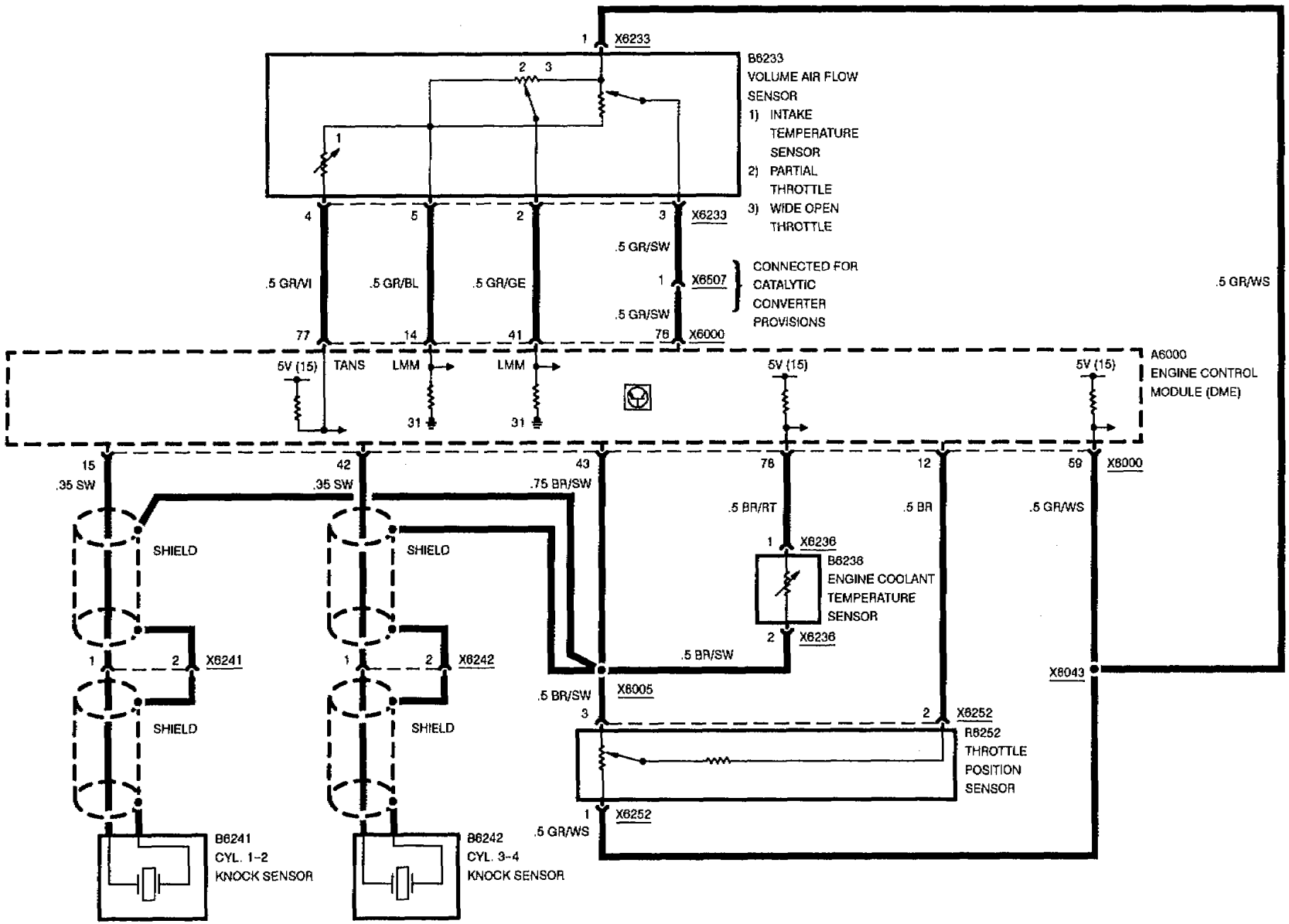

ENGINE CONTROL SYSTEM (DME M1.7, 4-CYLINDER M42)

DATA LINK

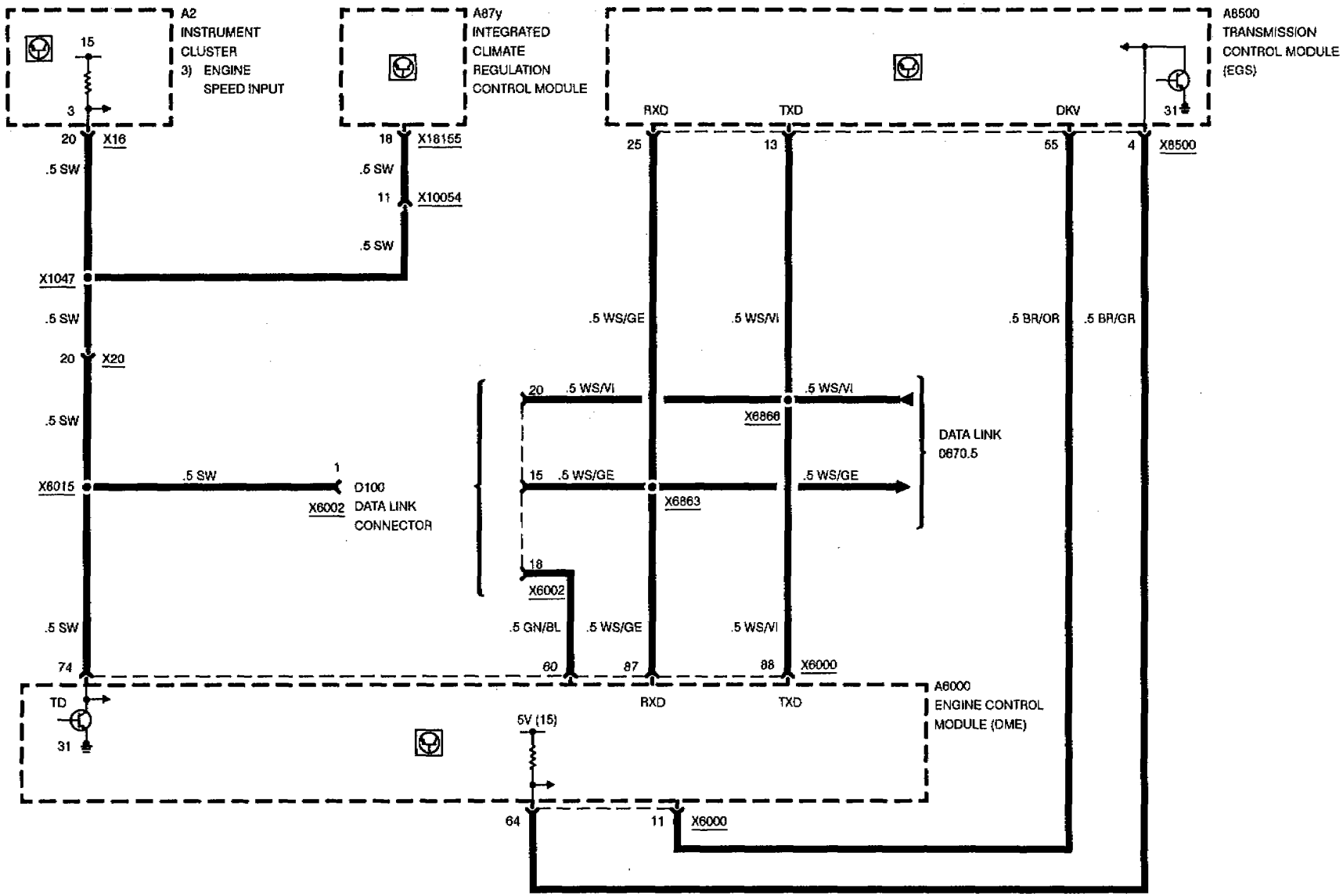

ENGINE CONTROL SYSTEM (DME M1.7, 4-CYLINDER M42)

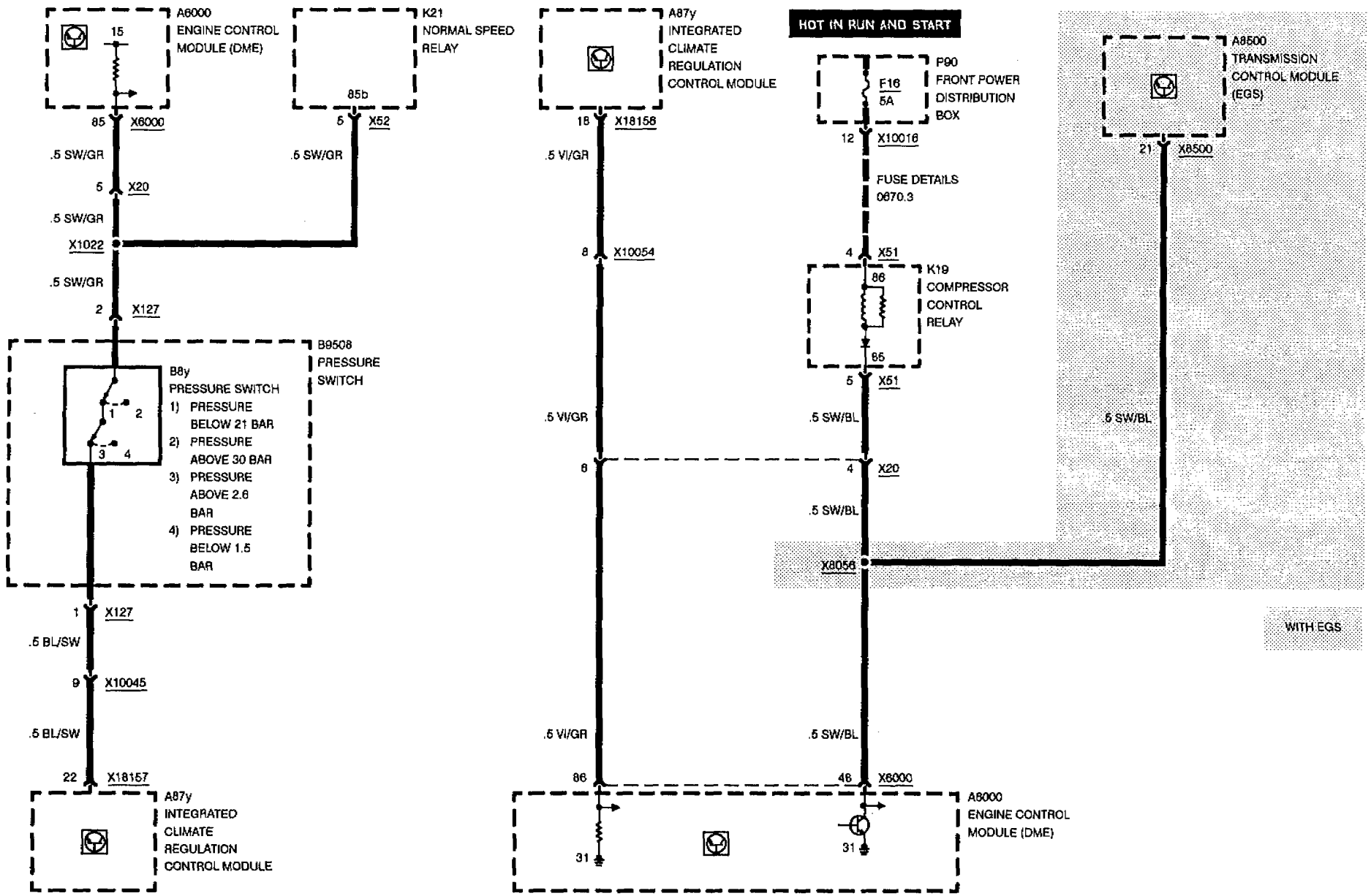

ENGINE CONTROL SYSTEM (DME M1.7, 4-CYLINDER M42)

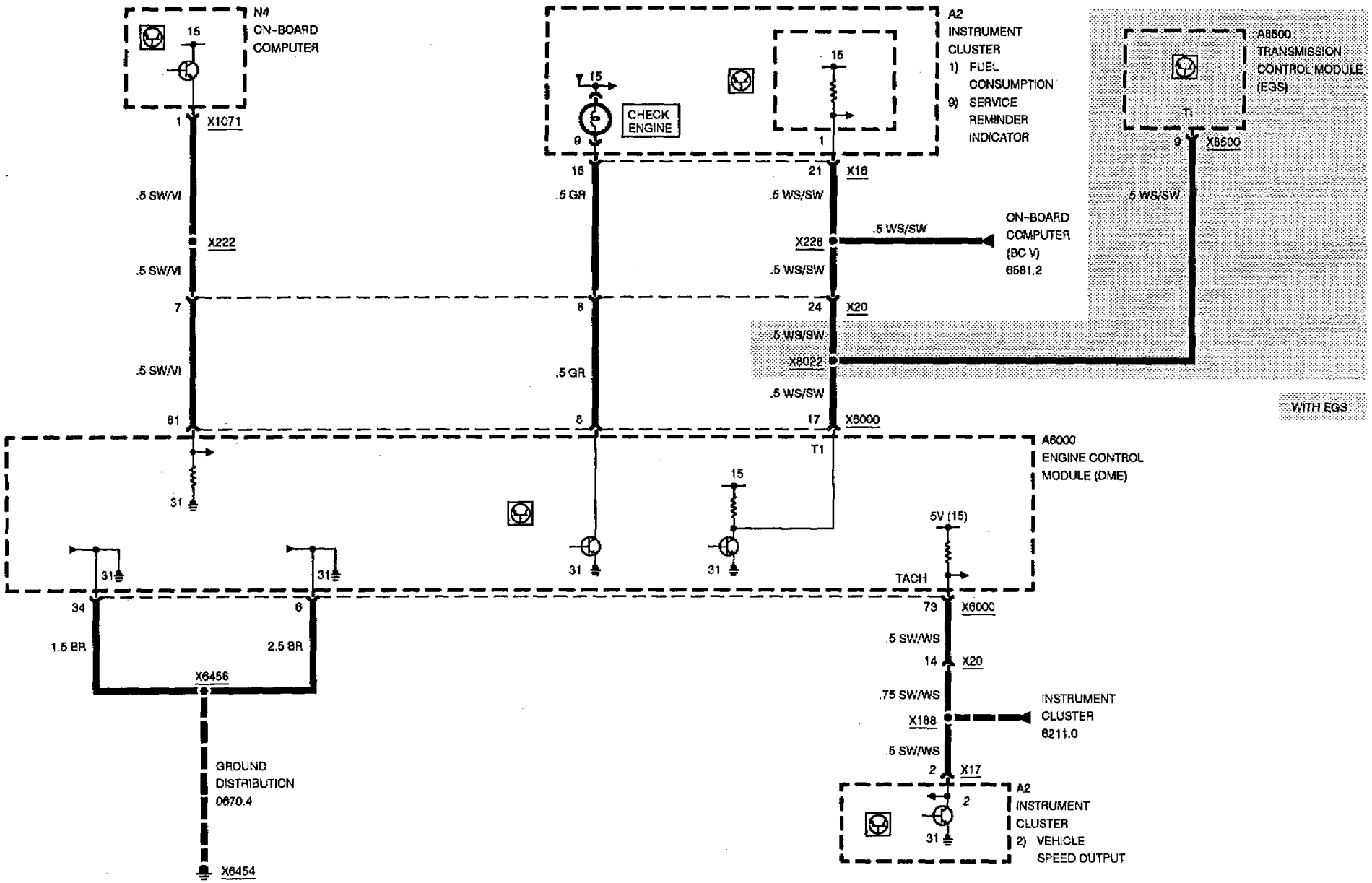

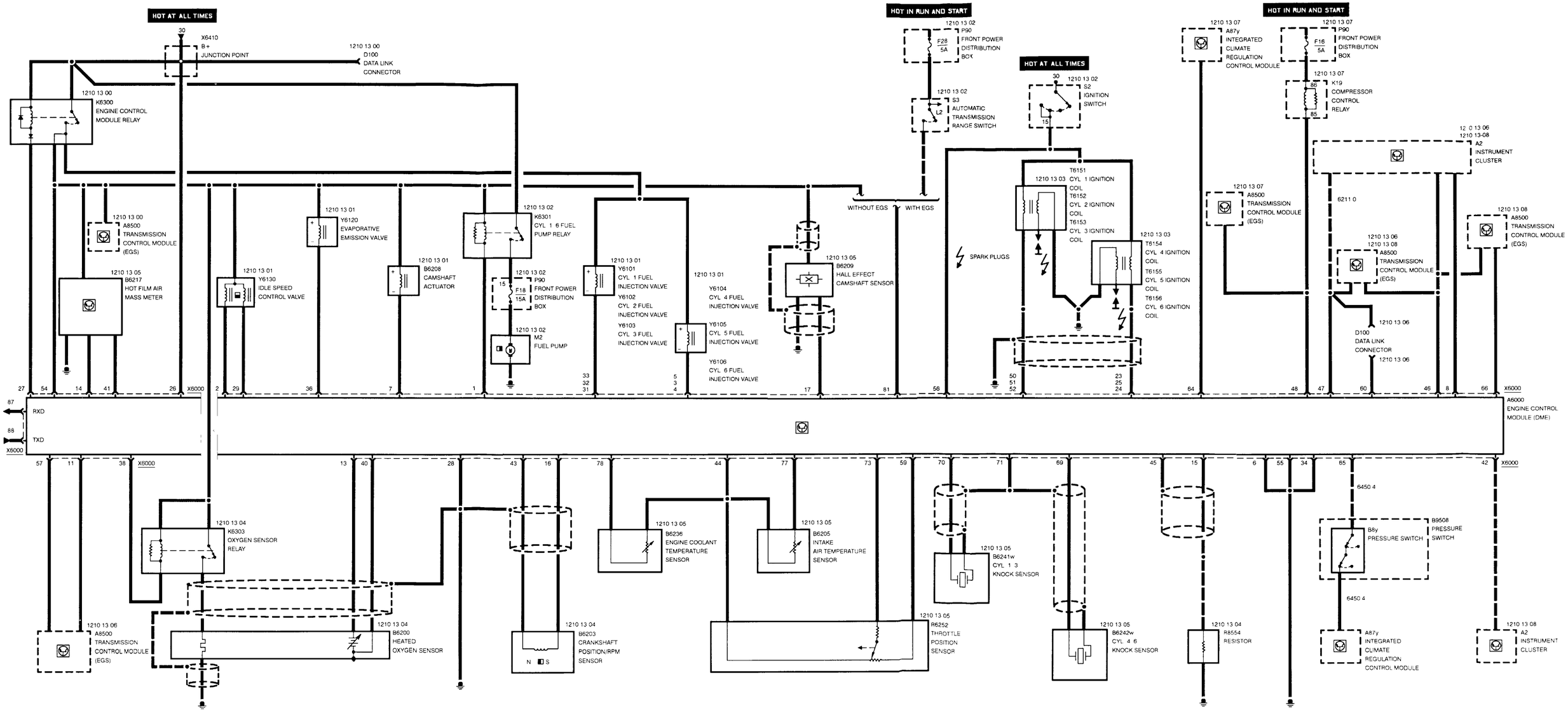
HOT AT ALL TIMES
30
X6410
B+
JUNCTION POINT
1210 13 00
D100
DATA LINK
CONNECTOR
1210 13 00
K6300
ENGINE CONTROL
MODULE RELAY
1210 13 00
A8500
TRANSMISSION
CONTROL MODULE
(EGS)
1210 13 05
B6217
HOT FILM AIR
MASS METER
1210 13 01
Y6130
IDLE SPEED
CONTROL VALVE
1210 13 01
Y6120
EVAPORATIVE
EMISSION VALVE
1210 13 01
B6208
CAMSHAFT
ACTUATOR
1210 13 02
K6301
CYL 1 6 FUEL
PUMP RELAY
1210 13 02
F18
15A
P90
FRONT POWER
DISTRIBUTION
BOX
1210 13 02
M2
FUEL PUMP
1210 13 01
Y6101
CYL 1 FUEL
INJECTION VALVE
Y6102
CYL 2 FUEL
INJECTION VALVE
Y6103
CYL 3 FUEL
INJECTION VALVE
1210 13 01
Y6104
CYL 4 FUEL
INJECTION VALVE
Y6105
CYL 5 FUEL
INJECTION VALVE
Y6106
CYL 6 FUEL
INJECTION VALVE
1210 13 05
B6209
HALL EFFECT
CAMSHAFT SENSOR
WITHOUT EGS
WITH EGS
HOT IN RUN AND START
1210 13 02
F28
5A
P90
FRONT POWER
DISTRIBUTION
BOX
1210 13 02
S3
AUTOMATIC
TRANSMISSION
RANGE SWITCH
HOT AT ALL TIMES
1210 13 02
S2
IGNITION
SWITCH
SPARK PLUGS
T6151
1210 13 03
CYL 1 IGNITION
COIL
T6152
CYL 2 IGNITION
COIL
T6153
CYL 3 IGNITION
COIL
1210 13 03
T6154
CYL 4 IGNITION
COIL
T6155
CYL 5 IGNITION
COIL
T6156
CYL 6 IGNITION
COIL
HOT IN RUN AND START
1210 13 07
A87y
INTEGRATED
CLIMATE
REGULATION
CONTROL MODULE
1210 13 07
P90
FRONT POWER
DISTRIBUTION
BOX
F16
5A
1210 13 07
K19
COMPRESSOR
CONTROL
RELAY
1210 13 07
A8500
TRANSMISSION
CONTROL MODULE
(EGS)
12 0 13 06
1210 13-08
A2
INSTRUMENT
CLUSTER
6211 0
1210 13 08
A8500
TRANSMISSION
CONTROL MODULE
(EGS)
1210 13 06
1210 13 08
A8500
TRANSMISSION
CONTROL MODULE
(EGS)
1210 13 06
D100
DATA LINK
CONNECTOR
1210 13 06
X6000
A6000
ENGINE CONTROL
MODULE (DME)
87
RXD
88
TXD
X6000
1210 13 04
K6303
OXYGEN SENSOR
RELAY
1210 13 06
A8500
TRANSMISSION
CONTROL MODULE
(EGS)
1210 13 04
B6200
HEATED
OXYGEN SENSOR
1210 13 04
B6203
CRANKSHAFT
POSITION/RPM
SENSOR
N S
1210 13 05
B6236
ENGINE COOLANT
TEMPERATURE
SENSOR
1210 13 05
B6205
INTAKE
AIR TEMPERATURE
SENSOR
1210 13 05
R6252
THROTTLE
POSITION
SENSOR
1210 13 05
B6241w
CYL 1 3
KNOCK SENSOR
1210 13 05
B6242w
CYL 4 6
KNOCK SENSOR
1210 13 04
R8554
RESISTOR
6450 4
B8y
PRESSURE SWITCH
B9508
PRESSURE
SWITCH
6450 4
A87y
INTEGRATED
CLIMATE
REGULATION
CONTROL MODULE
1210 13 08
A2
INSTRUMENT
CLUSTER

Pin Assignments

X6000

Pin	Type	Description/Function	Connection
1	A	Fuel pump relay control	Fuel pump relay, terminal 85
2	A	Idle speed control valve - close winding control	Idle speed control valve
3	A	Cyl 5 fuel injection valve control	Cyl 5 fuel injection valve
4	A	Cyl 6 fuel injection valve control	Cyl 6 fuel injection valve
5	A	Cyl 4 fuel injection valve control	Cyl 4 fuel injection valve
6	M	Ground, fuel injection valve output stages	Ground point
7	A	Camshaft actuator control	Camshaft actuator
8	A	"Check engine" indicator control	Instrument cluster
9		Not used	
10		Not used	
11	A	Throttle valve position	Transmission control module (EGS)
12		Not used	
13	E	Oxygen sensor signal	Heated oxygen sensor
14	A	Hot film air mass meter	Hot film air mass meter
15	M	Ground	Ground point
16	E	Crankshaft position/RPM sensor signal (+)	Crankshaft position/RPM sensor
17	E	Camshaft position sensor	Hall effect camshaft sensor
18		Not used	
19		Not used	
20		Not used	
21		Not used	
22		Not used	
23	A	Cyl 4 ignition coil control	Cyl 4 ignition coil
24	A	Cyl 6 ignition coil control	Cyl 6 ignition coil
25	A	Cyl 5 ignition coil control	Cyl 5 ignition coil
26	E	Battery voltage	B+ junction point
27	A	Engine control module relay control	Engine control module relay, terminal 85
28	M	Ground for electronics and shielding of sensors	Ground point
29	A	Idle speed control valve - opening winding control	Idle speed control valve
30		Not used	
31	A	Cyl 3 fuel injection valve control	Cyl 3 fuel injection valve

E = Input, A = Output, M = Ground

Pin Assignments

Pin	Type	Description/Function	Connection
32	A	Cyl. 2 fuel injection valve control	Cyl. 2 fuel injection valve
33	A	Cyl. 1 fuel injection valve control	Cyl. 1 fuel injection valve
34	M	Ground remaining output stages (except for ignition and fuel injection valves)	Ground point
35		Not used	
36	A	Evaporative emission valve control	Evaporative emission valve
37		Not used	
38	A	Oxygen sensor heater control	Oxygen sensor relay, terminal 85
39		Not used	
40	M	Oxygen sensor signal ground	Heated oxygen sensor
41	E	Hot wire air mass meter	Hot wire air mass meter
42	E	Vehicle speed signal	Instrument cluster
43	E	Crankshaft position/RPM sensor signal (-)	Crankshaft position/RPM sensor
44	M	Ground for sensors	Engine intake air temperature sensor, engine coolant temperature sensor, and throttle position sensor
45	M	Ground for shield	Shield
46	A	ti measurement signal (fuel consumption)	Instrument cluster
47	A	Crankshaft RPM speed signal TD	Instrument cluster
48	A	A/C compressor control	Compressor control relay, terminal 85
49		Not used	
50	A	Cyl. 1 ignition coil control	Cyl. 1 ignition coil
51	A	Cyl. 2 ignition coil control	Cyl. 2 ignition coil
52	A	Cyl. 3 ignition coil control	Cyl. 3 ignition coil
53		Not used	
54	E	Battery voltage from engine control module relay	Engine control module relay, terminal 87a
55	M	Ground, ignition	Ground point
56	E	Ignition switch, terminal 15	Ignition switch
57	E	Ignition timing intervention	Transmission control module (EGS)
58		Not used	
59	A	5V component supply	Throttle position sensor
60	E	Programming voltage	Data link connector
61		Not used	
62		Not used	
63		Not used	

E = Input, A = Output, M = Ground

Pin Assignments

Pin	Type	Description/Function	Connection
64	E	A/C switch	Integrated climate regulation control module
65	E	A/C pressure signal	Pressure switch
66	E	Drive-away protection signal (code)	On-board computer
67		Not used	
68		Not used	
69	E	Cyl. 4-6 knock sensor	Cyl. 4-6 knock sensor
70	E	Cyl. 1-3 knock sensor	Cyl. 1-3 knock sensor
71	M	Ground for knock sensors and shields	Cyl. 1-3 knock sensor, cyl. 4-6 knock sensor, and shields
72		Not used	
73	E	Throttle position	Throttle position sensor
74		Not used	
75		Not used	
76		Not used	
77	E	Engine intake air temperature	Engine intake air temperature sensor
78	E	Engine coolant temperature	Engine coolant temperature sensor
79		Not used	
80		Not used	
81	E	Drive range P/N	Automatic transmission range switch
82		Not used	
83		Not used	
84		Not used	
85		Not used	
86		Not used	
87	A	RxD diagnosis data line	Data link connector
88	E/A	TxD diagnosis data line	Data link connector

E = Input, A = Output, M = Ground

ENGINE CONTROL SYSTEM (DME M3.3.1, 6-CYLINDER M50)

POWER, FUEL INJECTION VALVES

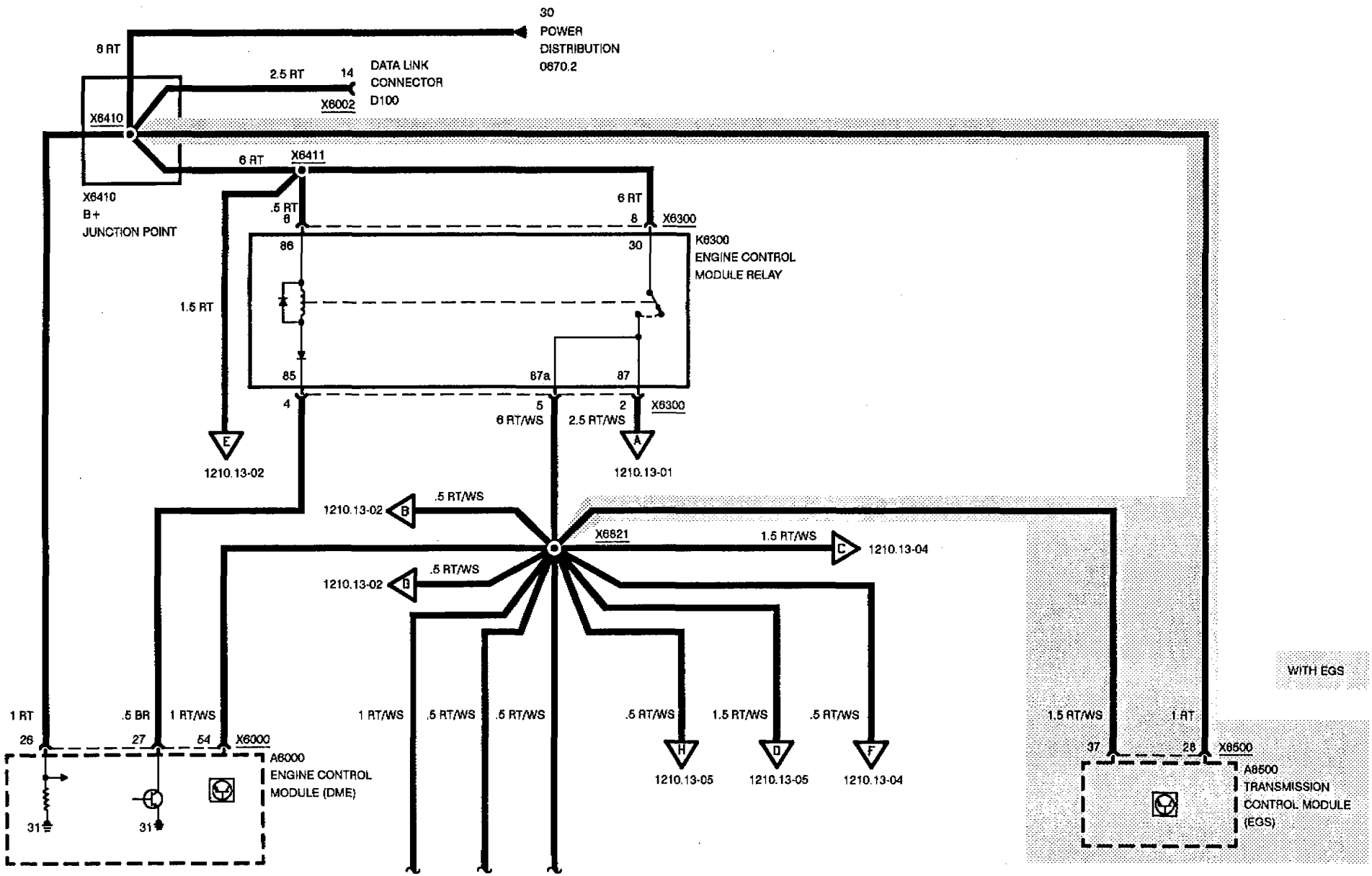

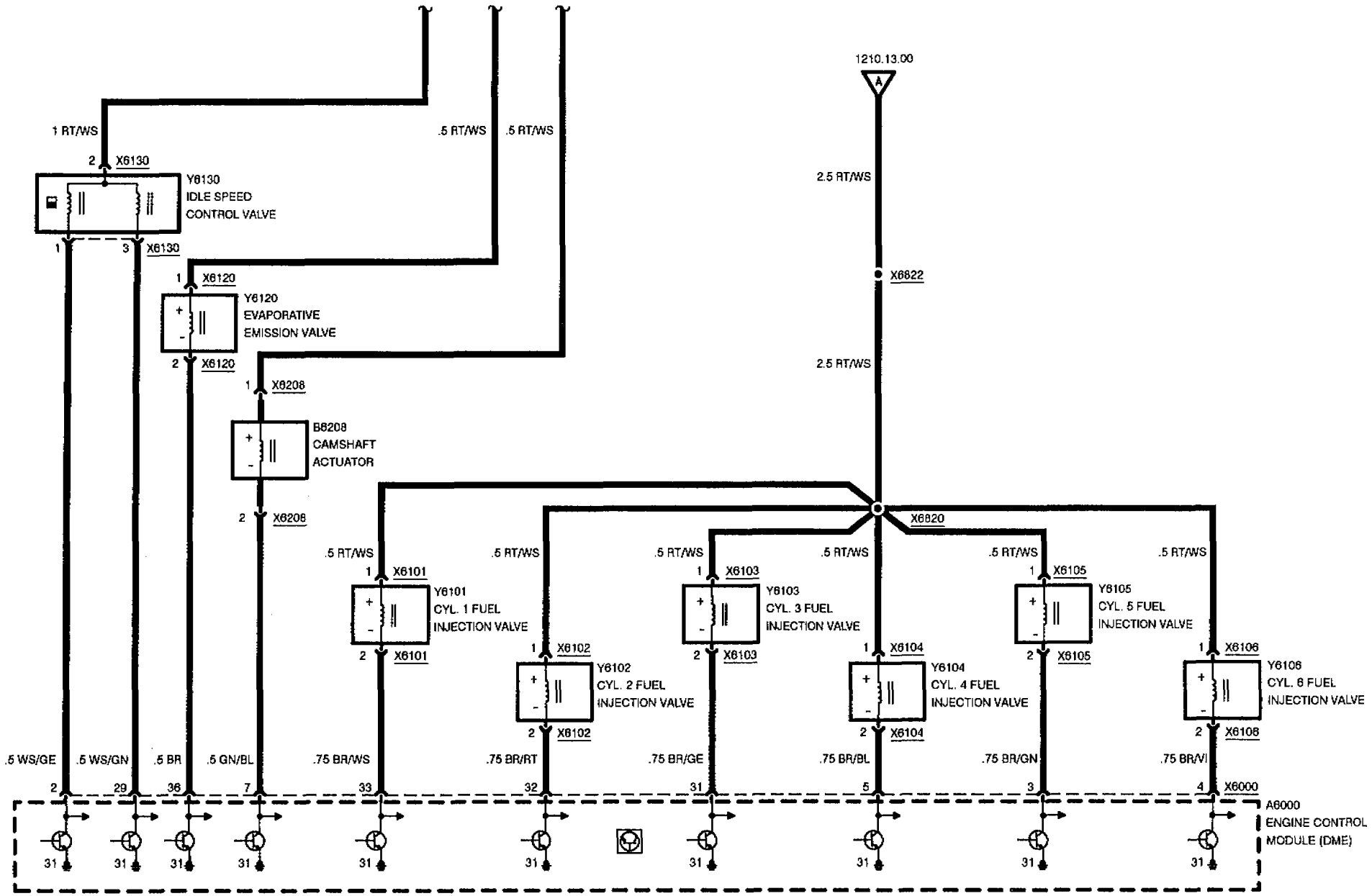
1210.13.00
A
1 RT/WS
.5 RT/WS
.5 RT/WS
2 X6130
Y6130
IDLE SPEED
CONTROL VALVE
1
3 X6130
1 X6120
Y6120
EVAPORATIVE
EMISSION VALVE
2 X6120
1 X6208
B6208
CAMSHAFT
ACTUATOR
2 X6208
2.5 RT/WS
X6822
2.5 RT/WS
X6820
.5 RT/WS
1 X6101
Y6101
CYL. 1 FUEL
INJECTION VALVE
2 X6101
1 X6102
Y6102
CYL. 2 FUEL
INJECTION VALVE
2 X6102
1 X6103
Y6103
CYL. 3 FUEL
INJECTION VALVE
2 X6103
1 X6104
Y6104
CYL. 4 FUEL
INJECTION VALVE
2 X6104
1 X6105
Y6105
CYL. 5 FUEL
INJECTION VALVE
2 X6105
1 X6106
Y6106
CYL. 6 FUEL
INJECTION VALVE
2 X6106
.5 WS/GE
.5 WS/GN
.5 BR
.5 GN/BL
.75 BR/WS
.75 BR/RT
.75 BR/GE
.75 BR/BL
.75 BR/GN
.75 BR/VI
2
29
36
7
33
32
31
5
3
4
X6000
A6000
ENGINE CONTROL
MODULE (DME)
31

ENGINE CONTROL SYSTEM (DME M3.3.1, 6-CYLINDER M50)

FUEL PUMP, IGNITION COILS

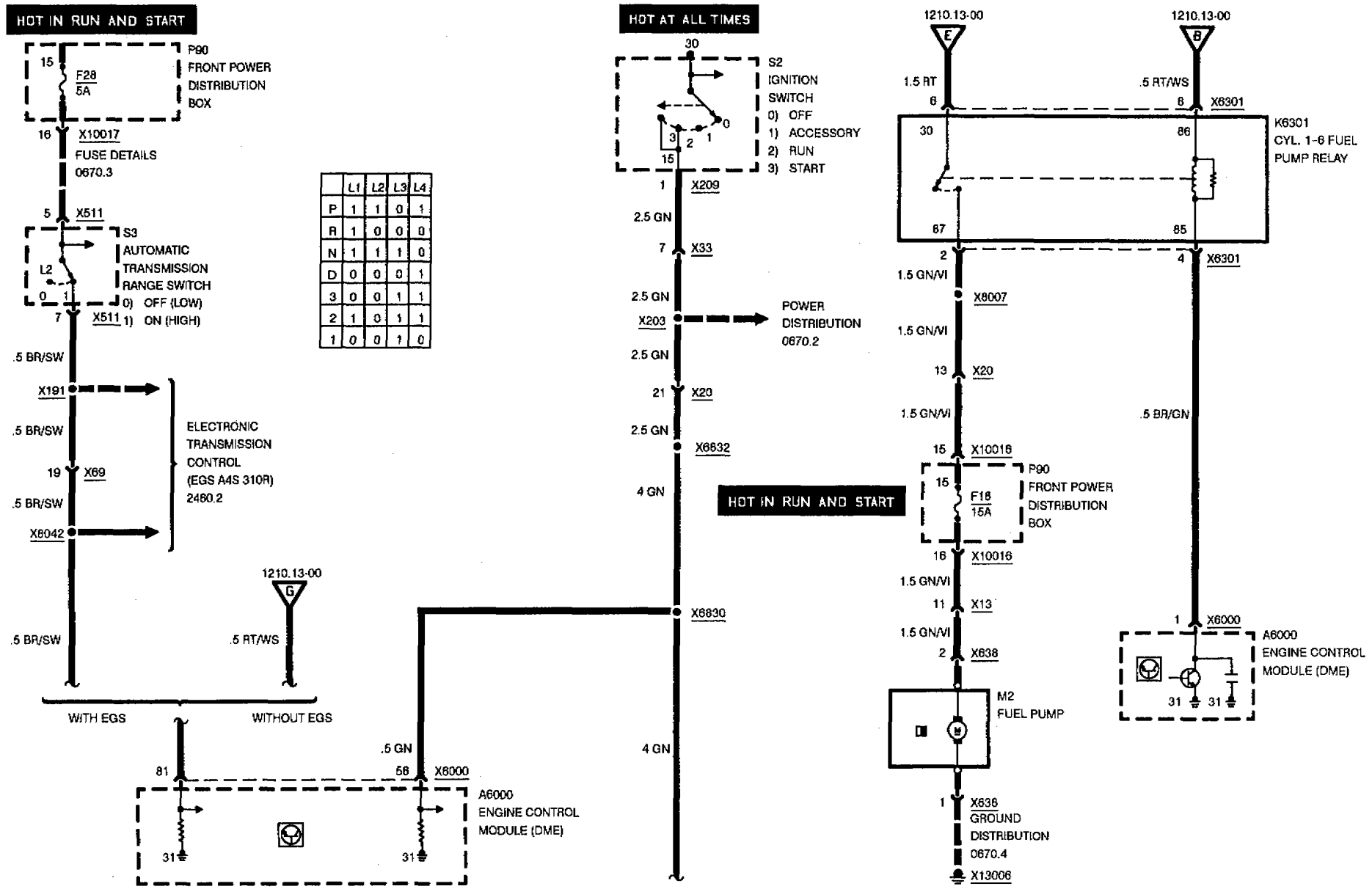

	L1	L2	L3	L4
P	1	1	0	1
R	1	0	0	0
N	1	1	1	0
D	0	0	0	1
3	0	0	1	1
2	1	0	1	1
1	0	0	1	0

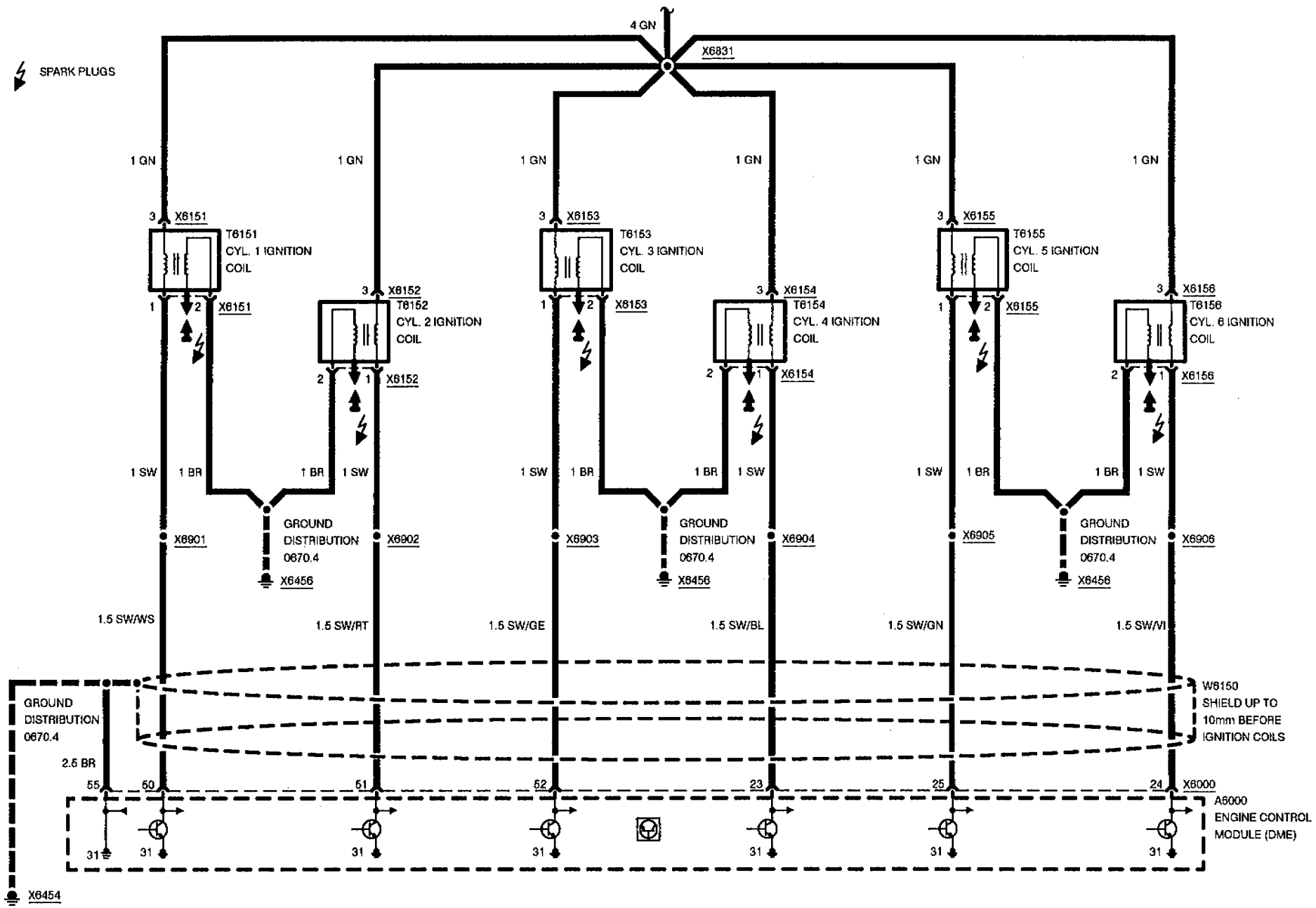
SPARK PLUGS
4 GN
X6831
1 GN
X6151
T6151
CYL. 1 IGNITION COIL
X6152
T6152
CYL. 2 IGNITION COIL
X6153
T6153
CYL. 3 IGNITION COIL
X6154
T6154
CYL. 4 IGNITION COIL
X6155
T6155
CYL. 5 IGNITION COIL
X6156
T6156
CYL. 6 IGNITION COIL
1 SW
1 BR
GROUND DISTRIBUTION 0670.4
X6456
X6901
X6902
X6903
X6904
X6905
X6906
1.5 SW/WS
1.5 SW/RT
1.5 SW/GE
1.5 SW/BL
1.5 SW/GN
1.5 SW/VI
W6150
SHIELD UP TO 10mm BEFORE IGNITION COILS
2.5 BR
X6000
A6000
ENGINE CONTROL MODULE (DME)
X6454

ENGINE CONTROL SYSTEM (DME M3.3.1, 6-CYLINDER M50)

HEATED OXYGEN SENSOR, CRANKSHAFT SENSORS

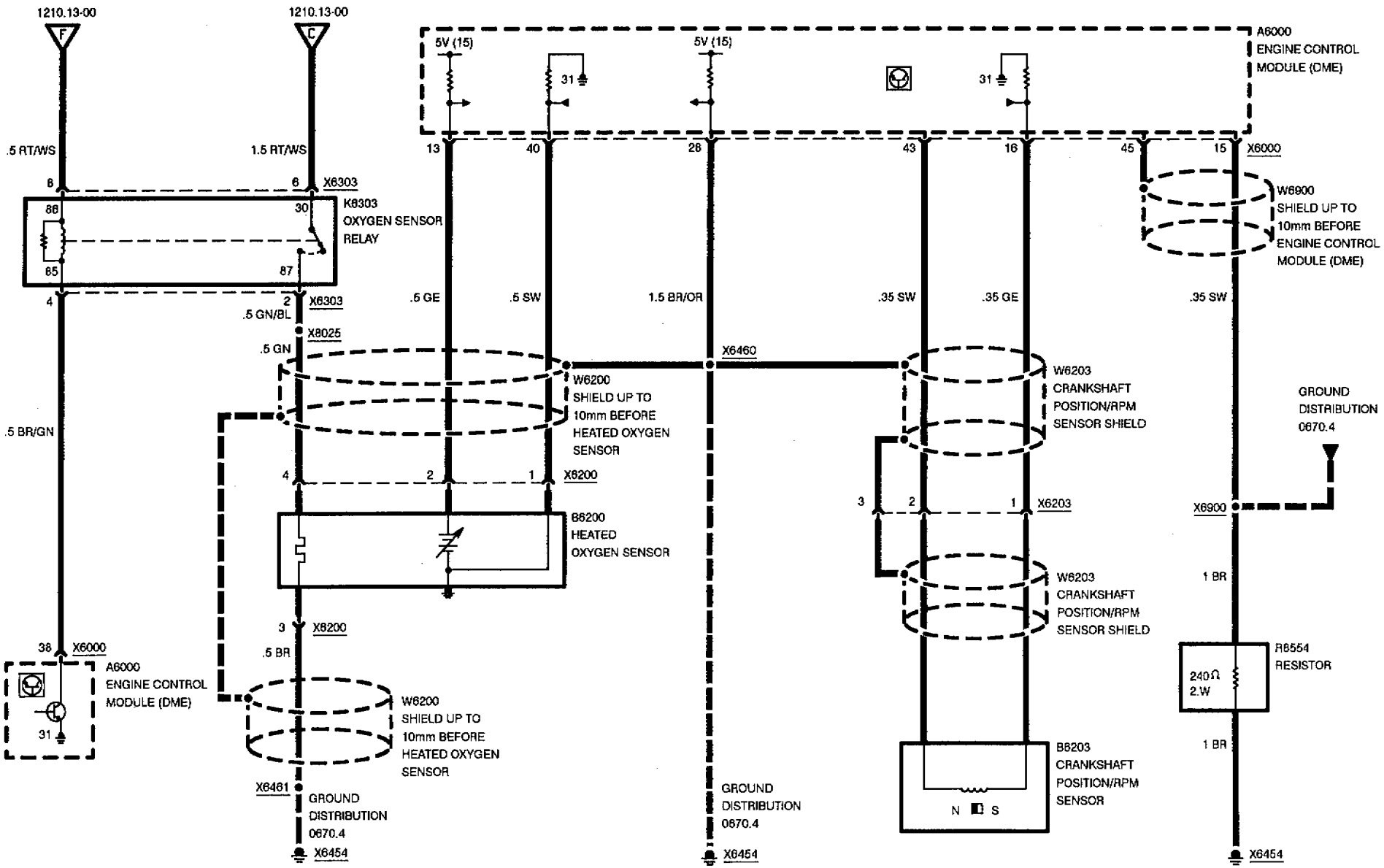

ENGINE CONTROL SYSTEM (DME M3.3.1, 6-CYLINDER M50)

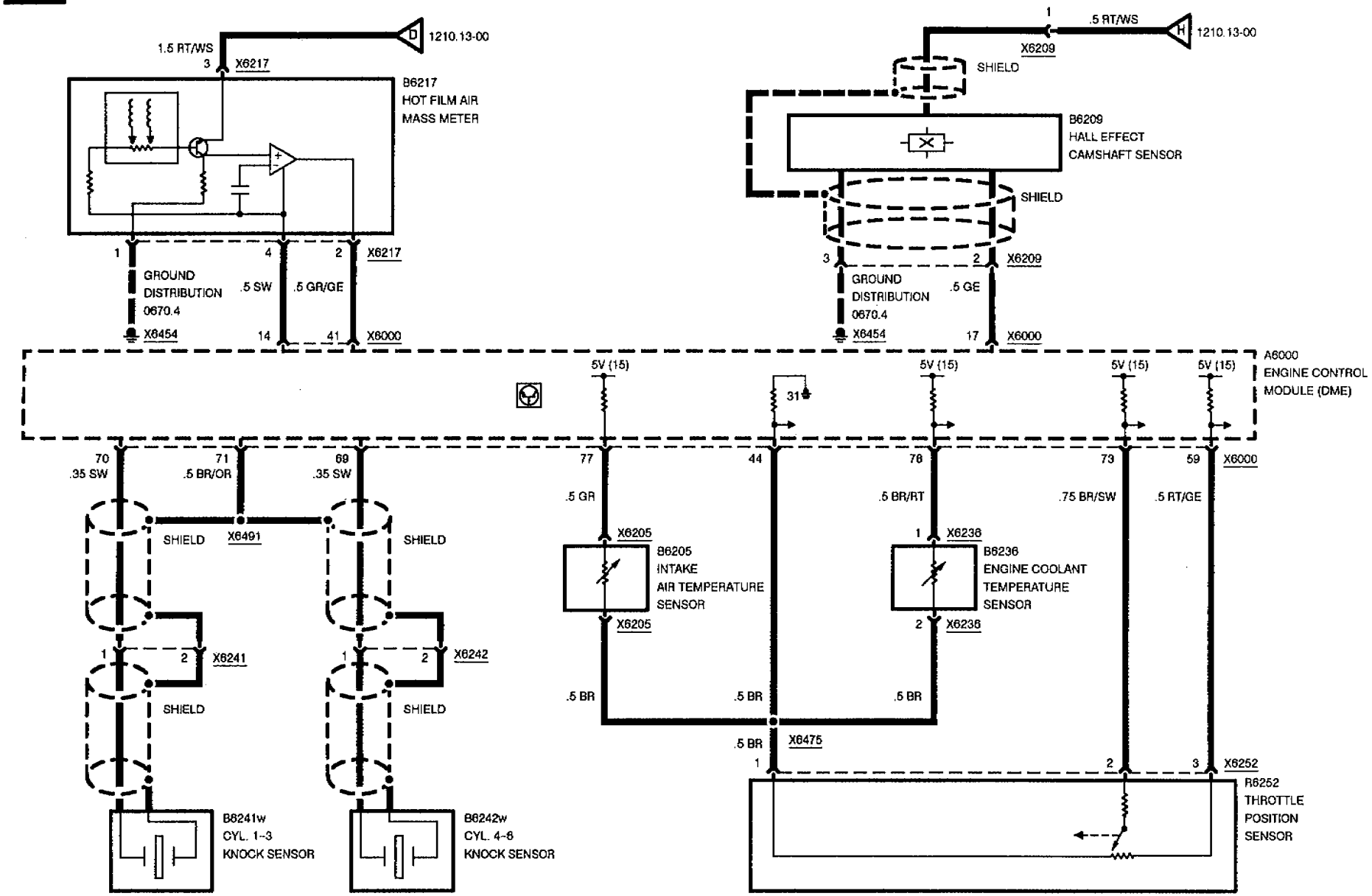

ENGINE CONTROL SYSTEM (DME M3.3.1, 6-CYLINDER M50)

DATA LINK

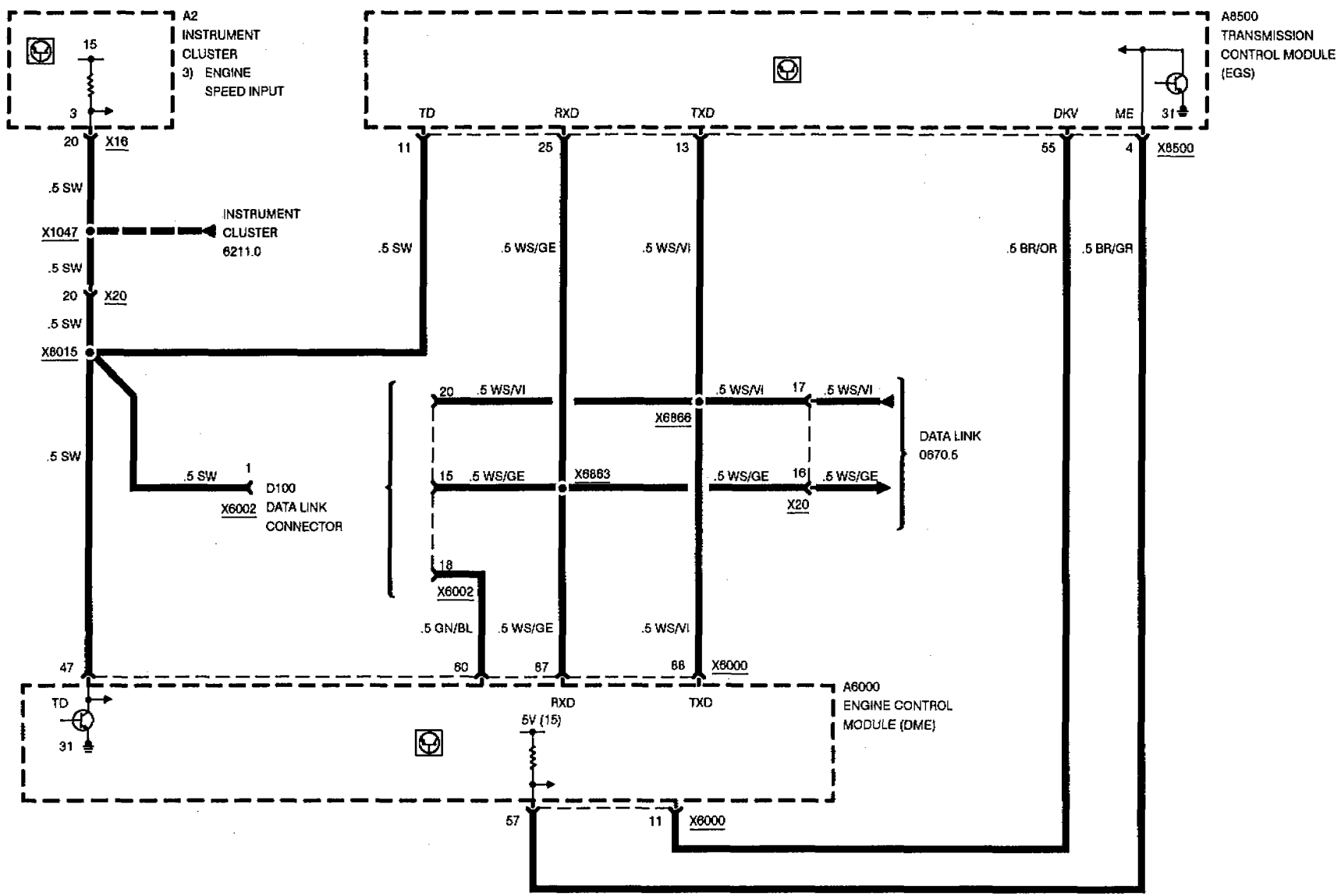

ENGINE CONTROL SYSTEM (DME M3.3.1, 6-CYLINDER M50)

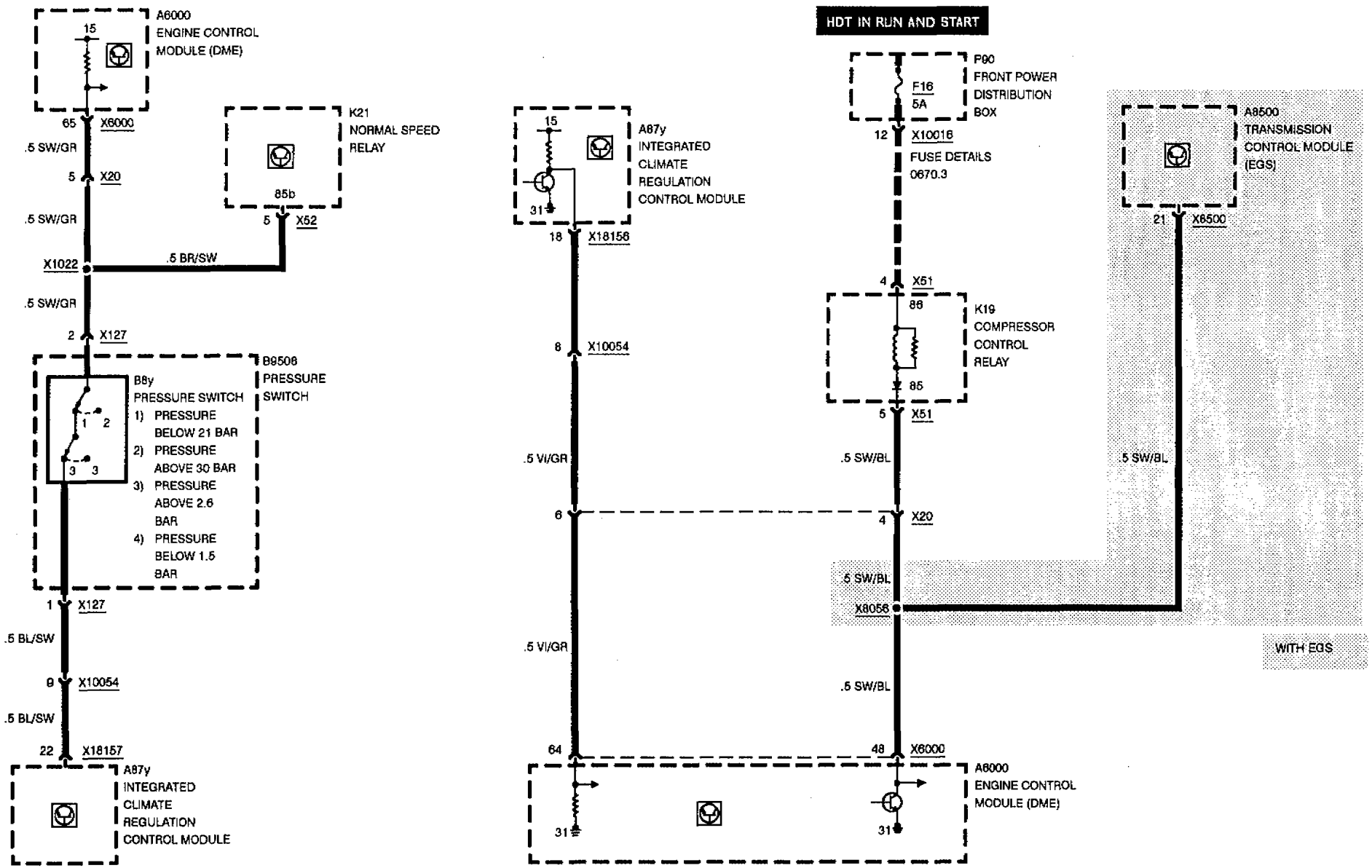

ENGINE CONTROL SYSTEM (DME M3.3.1, 6-CYLINDER M50)

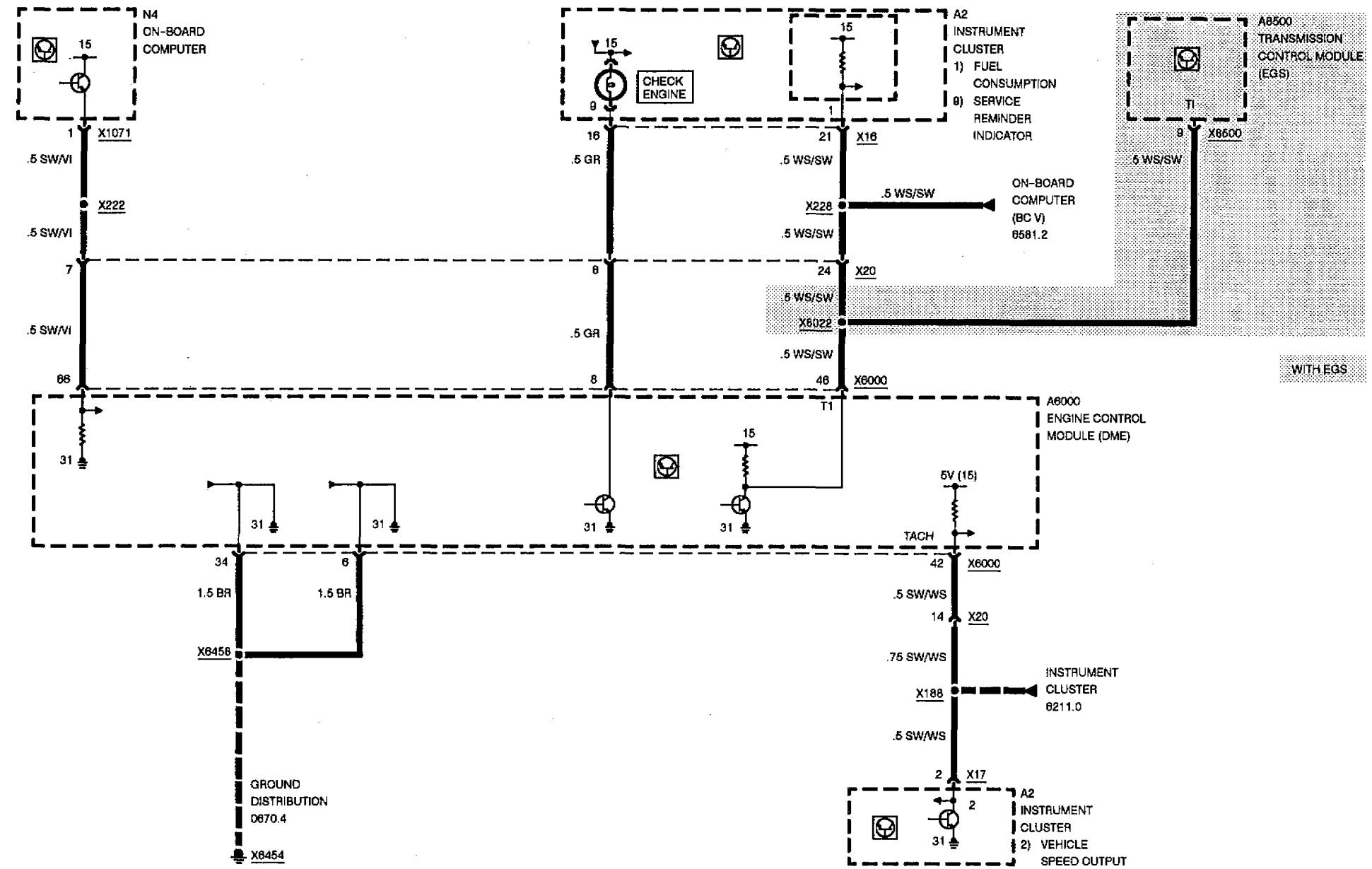

CHARGING SYSTEM

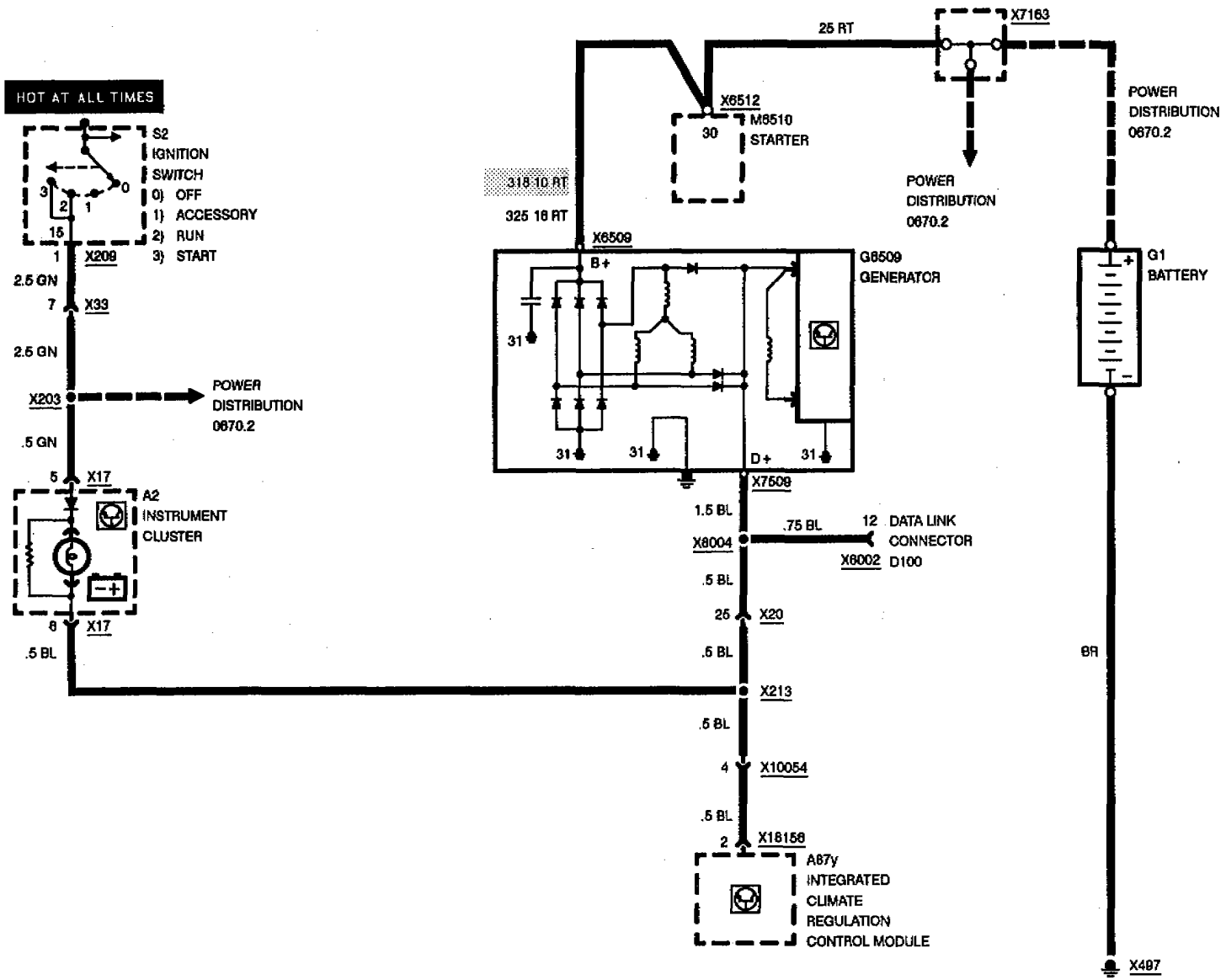

START

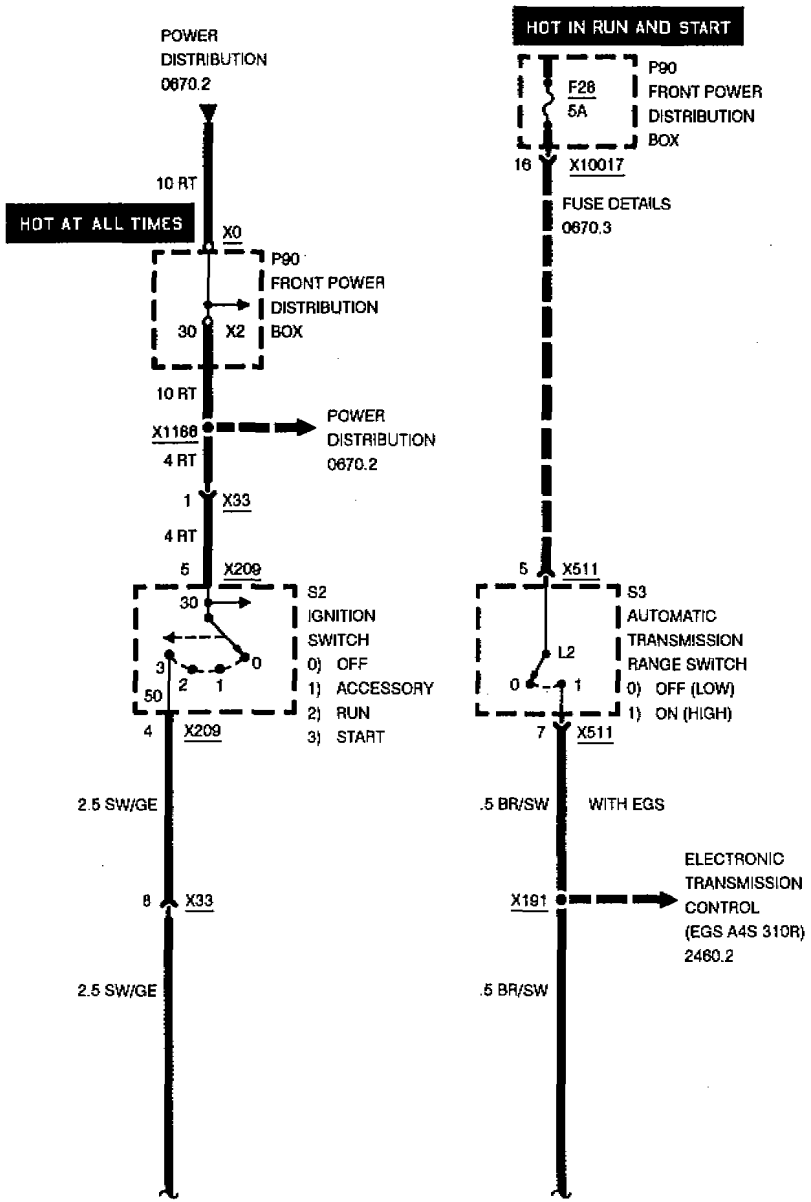

	L1	L2	L3	L4
P	1	1	0	1
R	1	0	0	0
N	1	1	1	0
D	0	0	0	1
3	0	0	1	1
2	1	0	1	1
1	0	0	1	0

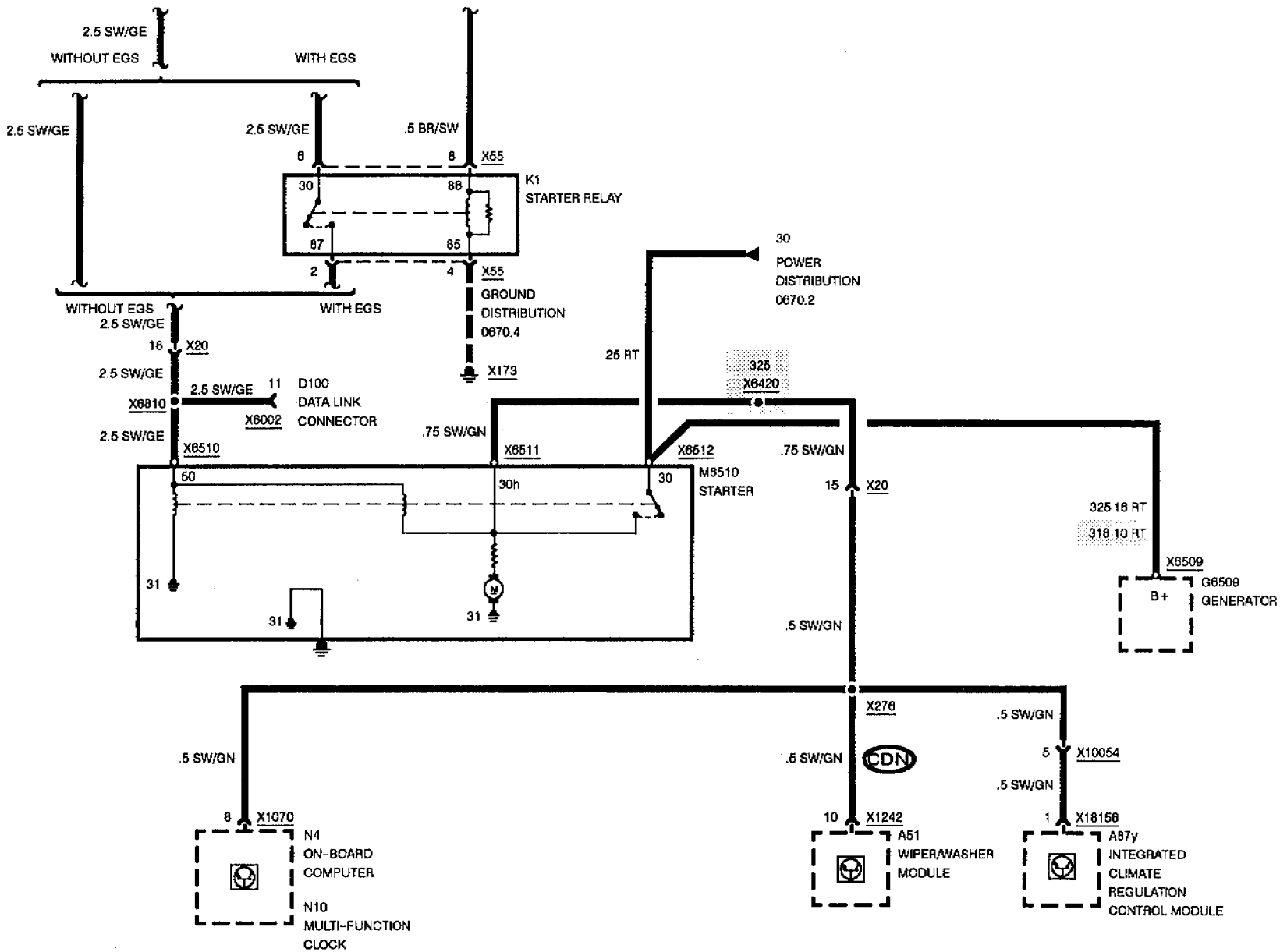
2.5 SW/GE
WITHOUT EGS
WITH EGS
2.5 SW/GE
2.5 SW/GE
.5 BR/SW
8
8
X55
30
86
K1
STARTER RELAY
87
85
2
4
X55
GROUND
DISTRIBUTION
0670.4
WITHOUT EGS
WITH EGS
2.5 SW/GE
18
X20
2.5 SW/GE
2.5 SW/GE
11
D100
DATA LINK
CONNECTOR
X6810
X6002
2.5 SW/GE
X6510
X173
30
POWER
DISTRIBUTION
0670.2
25 RT
325
X6420
.75 SW/GN
X6511
X6512
.75 SW/GN
50
30h
30
M6510
STARTER
15
X20
325 18 RT
318 10 RT
X6509
G6509
GENERATOR
B+
31
31
31
.5 SW/GN
X276
.5 SW/GN
.5 SW/GN
CDN
5
X10054
.5 SW/GN
.5 SW/GN
8
X1070
N4
ON-BOARD
COMPUTER
N10
MULTI-FUNCTION
CLOCK
10
X1242
A51
WIPER/WASHER
MODULE
1
X18158
A87y
INTEGRATED
CLIMATE
REGULATION
CONTROL MODULE

12/93 — 2460 2 — 1993
12/93 — 2460 2 — 1993

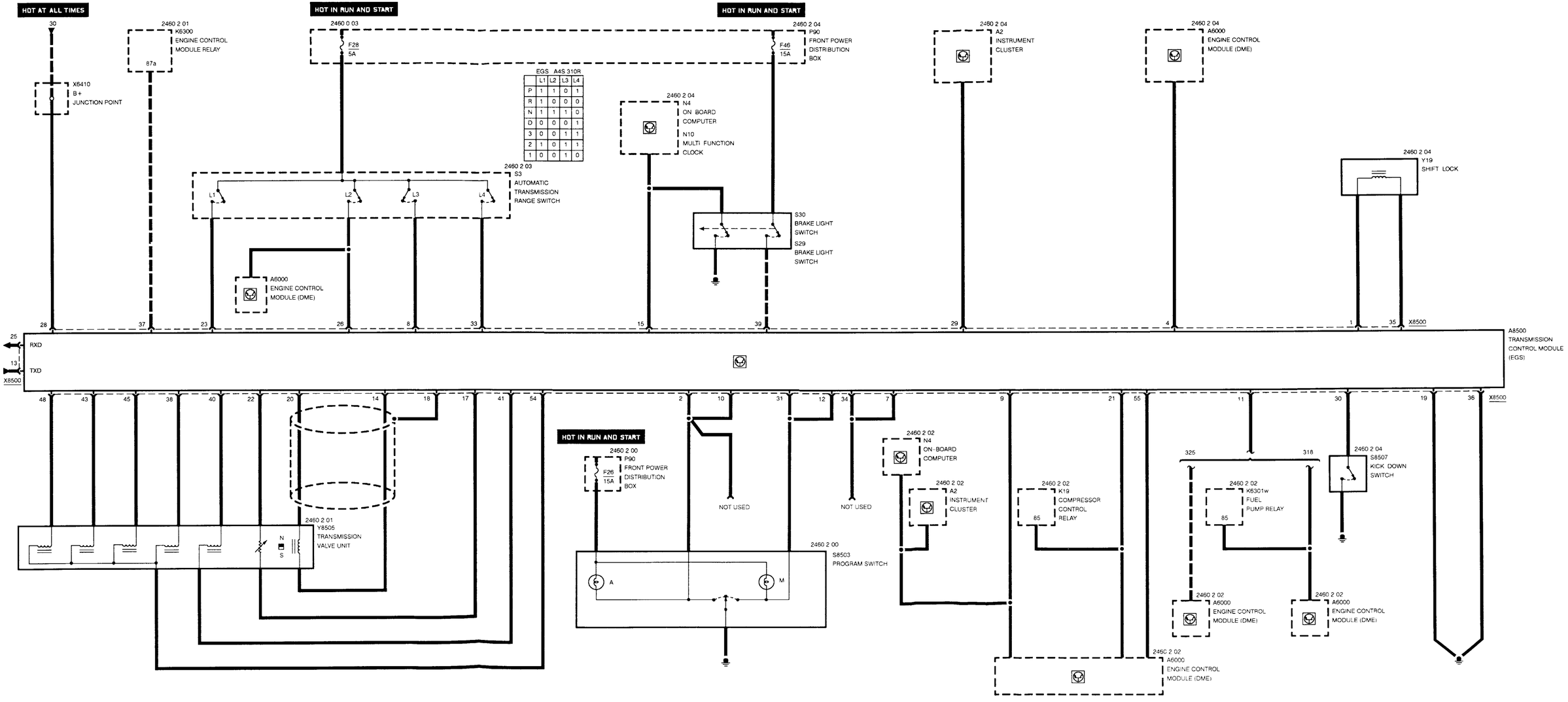

Pin Assignments

X8500

Pin	Type	Description/Function	Connection
1	A	Shift lock solenoid control	Shift lock
2	E	Automatic mode signal	Program switch
3		Not used	
4	A	Ignition timing intervention	Engine control module (DME)
5		Not used	
6		Not used	
7	A	S-program indication	Not used
8	E	Gear range signal L3	Automatic transmission range switch
9	E	Ti measurement signal (fuel consumption)	Engine control module (DME)
10	A	A-program indication	Program switch
11 (318)	E	Cyl. 1-6 fuel pump relay control	Engine control module (DME)
11 (325)	E	Crankshaft RPM speed signal TD	Engine control module (DME)
12	A	M-program indication	Program switch
13	E/A	TxD diagnostic data link	Data link connector
14	E	Output speed (-)	Transmission valve unit
15	E	Brake switch test signal	Brake light switch
16		Not used	
17	E	Oil temperature signal (analog ground)	Transmission valve unit
18	A	Shield for speed sensor	Transmission valve unit shield
19	M	Ground, power	Ground point
20	E	Output speed (+)	Transmission valve unit
21	E	A/C compressor ON signal	Engine control module (DME)
22	E	Oil temperature signal (+)	Transmission valve unit
23	E	Gear range signal L1	Automatic transmission range switch
24		Not used	
25	A	RxD diagnostic data link	Data link connector
26	E	Gear range signal L2	Automatic transmission range switch
27		Not used	
28	E	Battery voltage	B+ junction point
29	A	Fault indicator signal	Instrument cluster
30	E	Kick-down signal	Kick-down switch
31	E	Manual mode signal	Program switch
32		Not used	

E = Input, A = Output, M = Ground

Pin Assignments

Pin	Type	Description/Function	Connection
33	E	Gear range signal L4	Automatic transmission range switch
34	E	S-program button	Not used
35	A	Ground, shift lock solenoid	Shift lock
36	M	Ground, electronic	Ground point
37	E	Voltage supply	Engine control module relay, terminal 87a
38	A	Torque converter clutch solenoid valve control	Transmission valve unit
39	E	Brake pedal position	Brake light switch
40	A	Hydraulic pressure regulator control (+)	Transmission valve unit
41	A	Hydraulic pressure regulator control (-)	Transmission valve unit
42		Not used	
43	A	Solenoid valve 2 control (+)	Transmission valve unit
44		Not used	
45	A	Band solenoid control (+)	Transmission valve unit
46		Not used	
47		Not used	
48	A	Solenoid valve 1 control (+)	Transmission valve unit
49		Not used	
50		Not used	
51		Not used	
52		Not used	
53		Not used	
54	A	Solenoid valves ground control	Transmission valve unit
55	E	Throttle position signal	Engine control module (DME)

E = Input, A = Output, M = Ground

ELECTRONIC TRANSMISSION CONTROL (EGS A4S 310R)

POWER, PROGRAM SWITCH

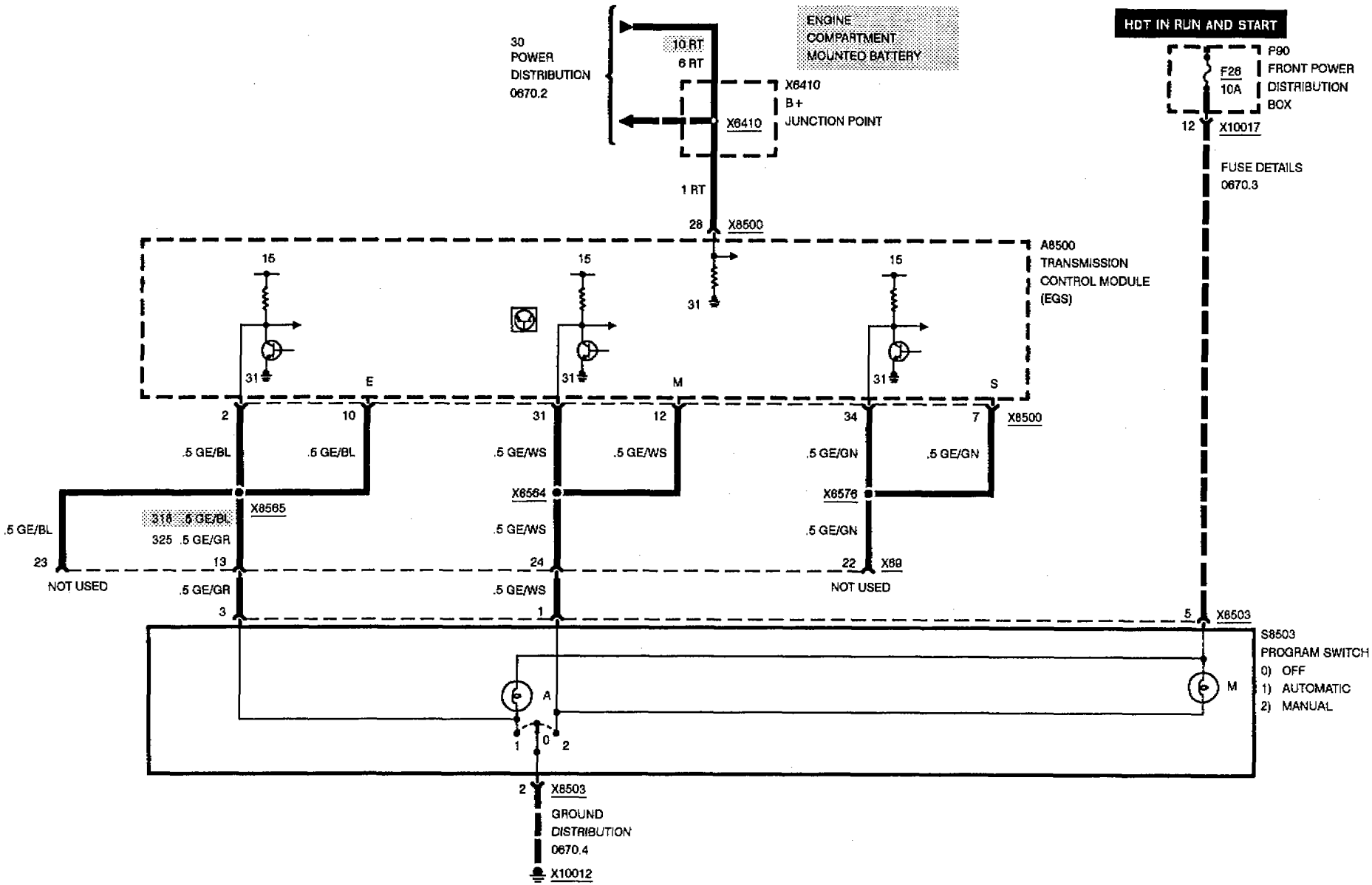

ELECTRONIC TRANSMISSION CONTROL (EGS A4S 310R)

GEAR VALVE UNIT

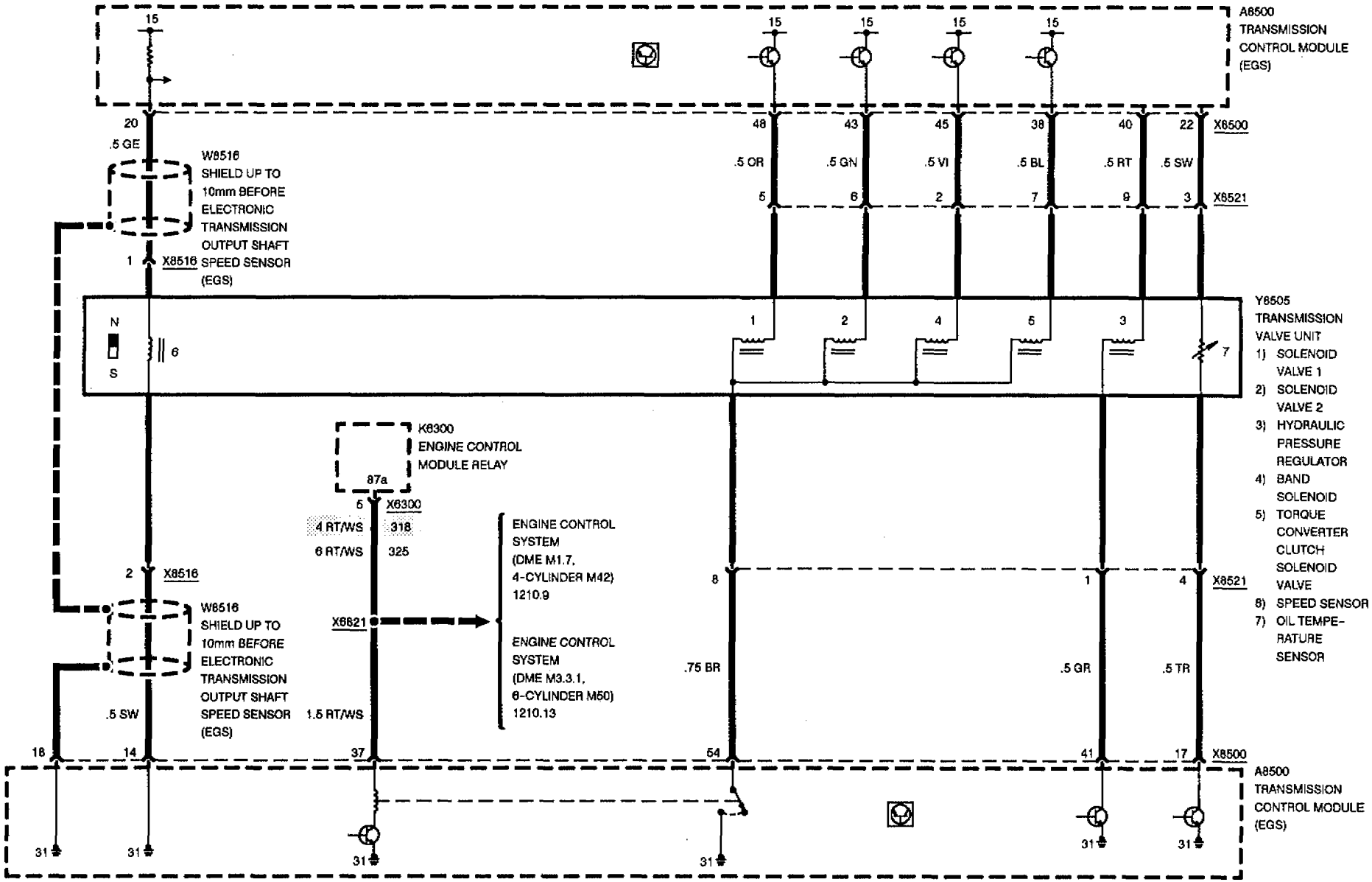

ELECTRONIC TRANSMISSION CONTROL (EGS A4S 310R)

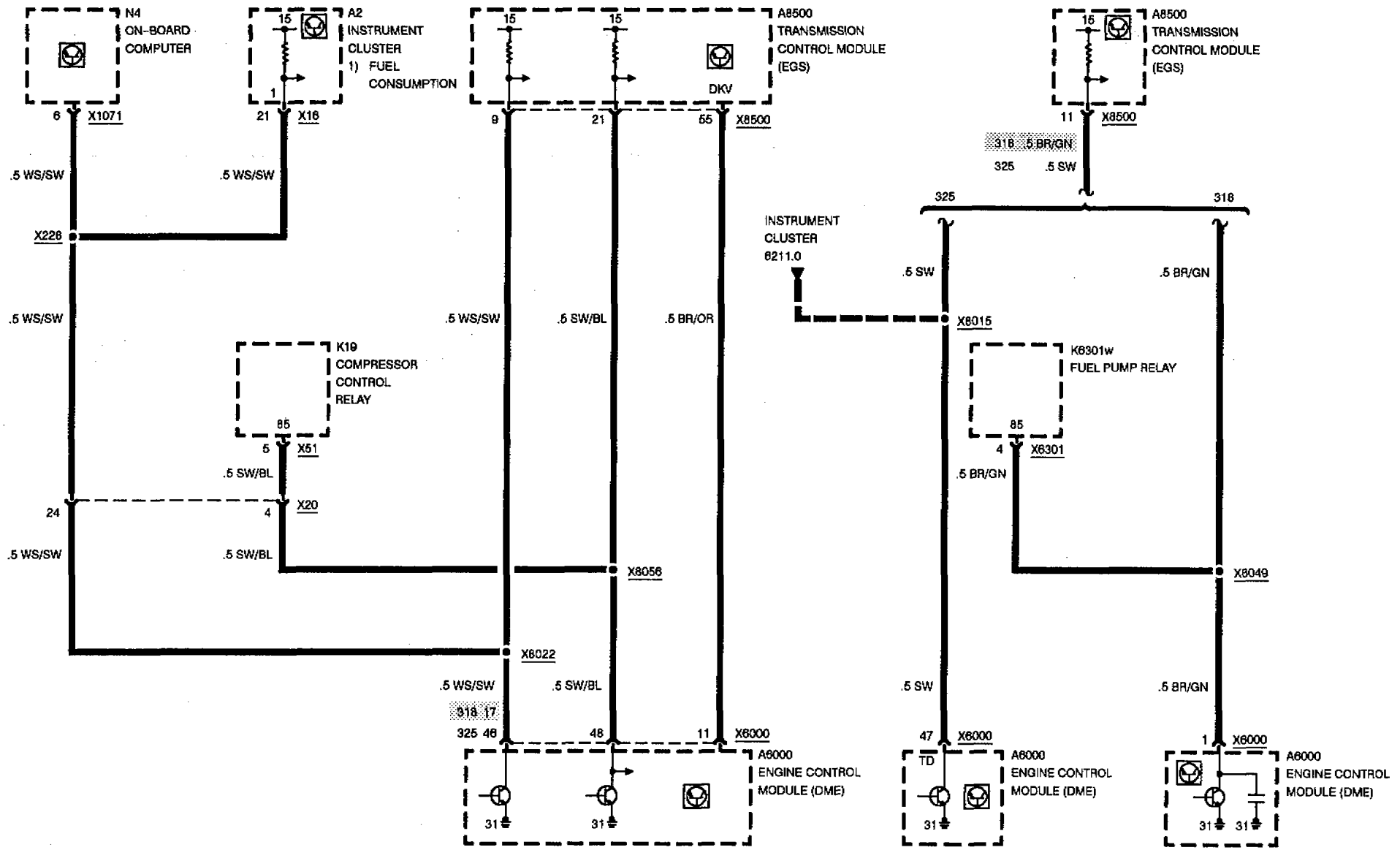

ELECTRONIC TRANSMISSION CONTROL (EGS A4S 310R)

GEAR SELECTOR SWITCH

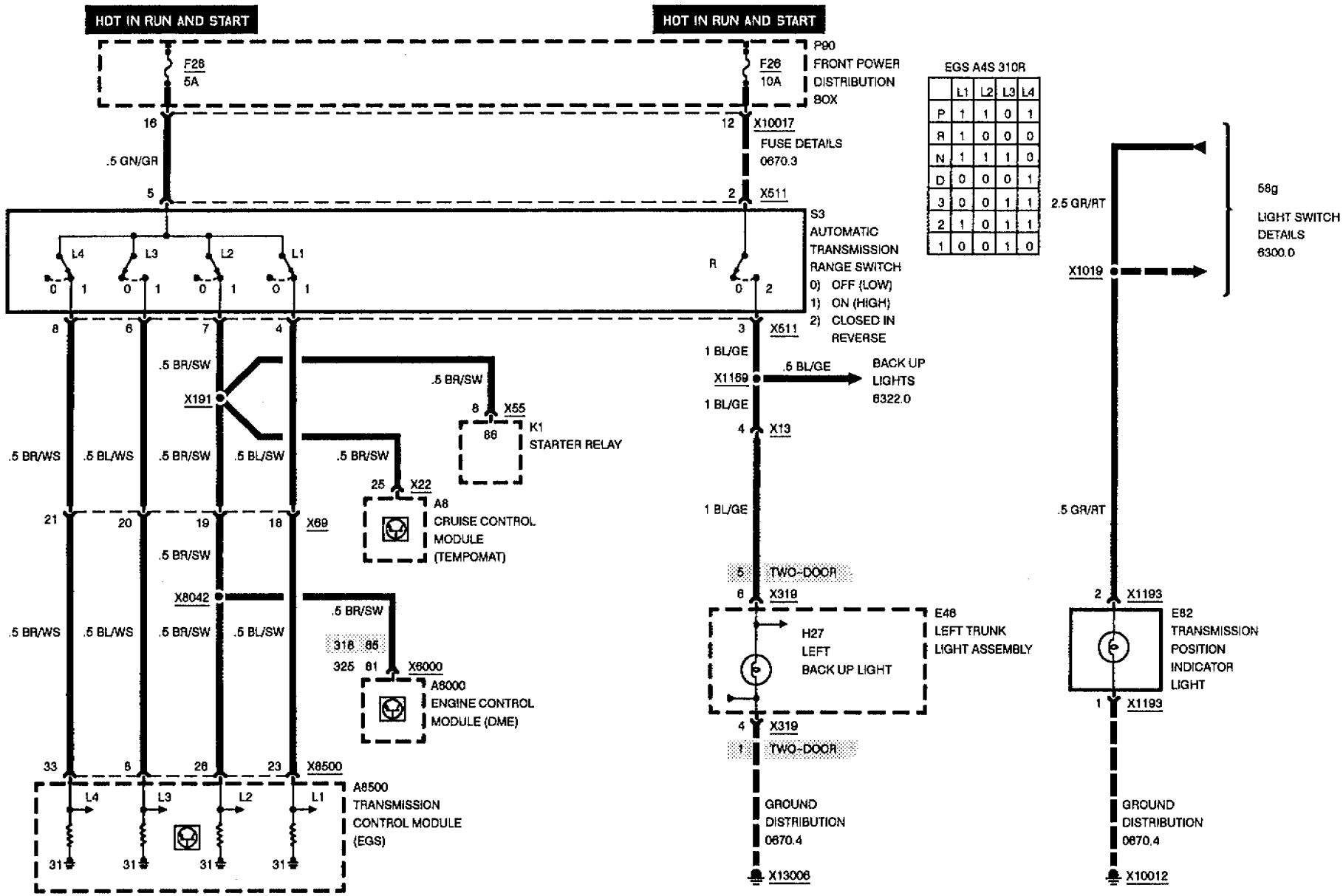

	L1	L2	L3	L4
P	1	1	0	1
R	1	0	0	0
N	1	1	1	0
D	0	0	0	1
3	0	0	1	1
2	1	0	1	1
1	0	0	1	0

ELECTRONIC TRANSMISSION CONTROL (EGS A4S 310R)

SHIFT LOCK, DATA LINK, KICK-DOWN SWITCH

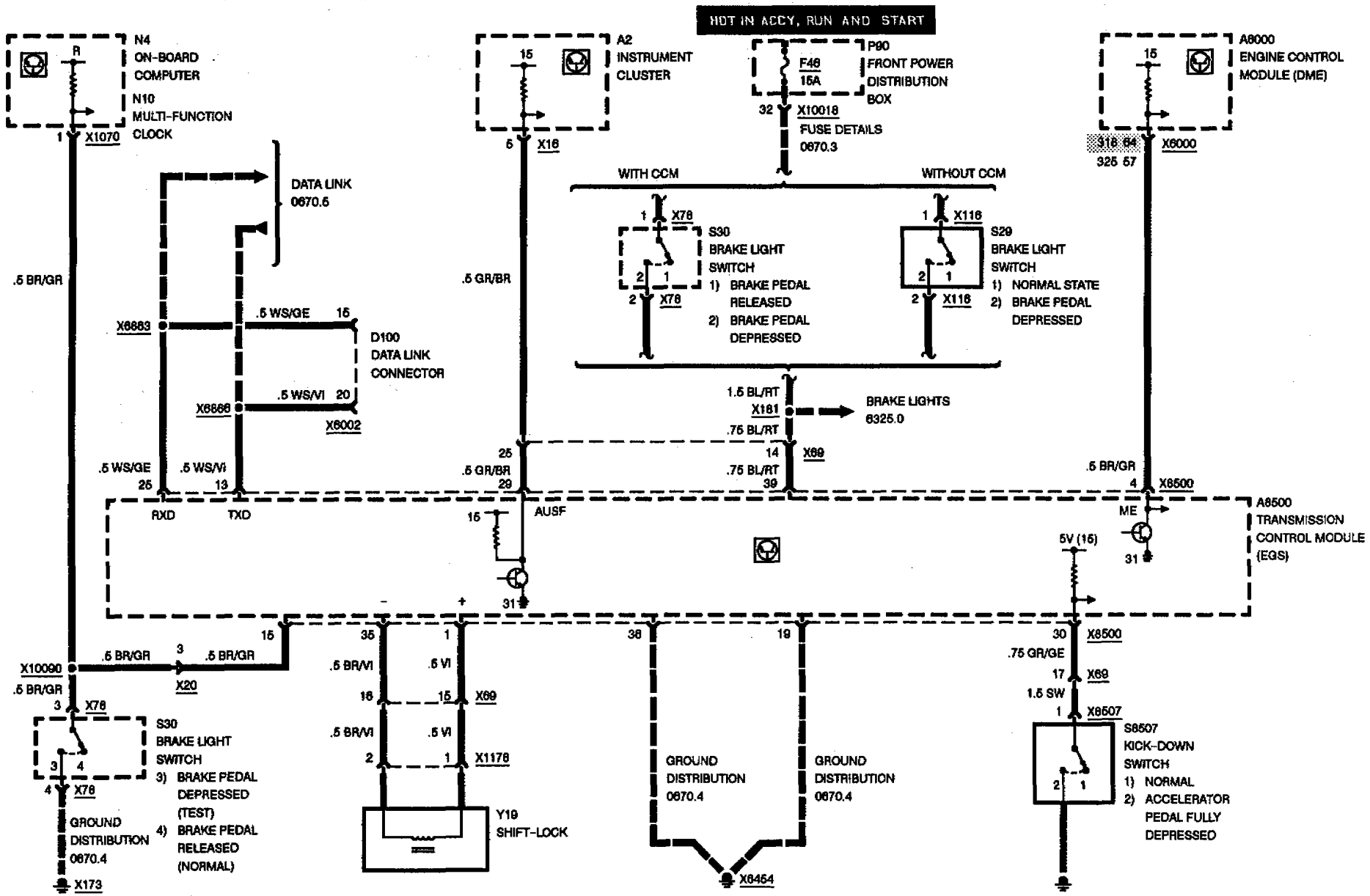

SUPPLEMENTAL RESTRAINT SYSTEM (AIR BAG)

EARLY PRODUCTION

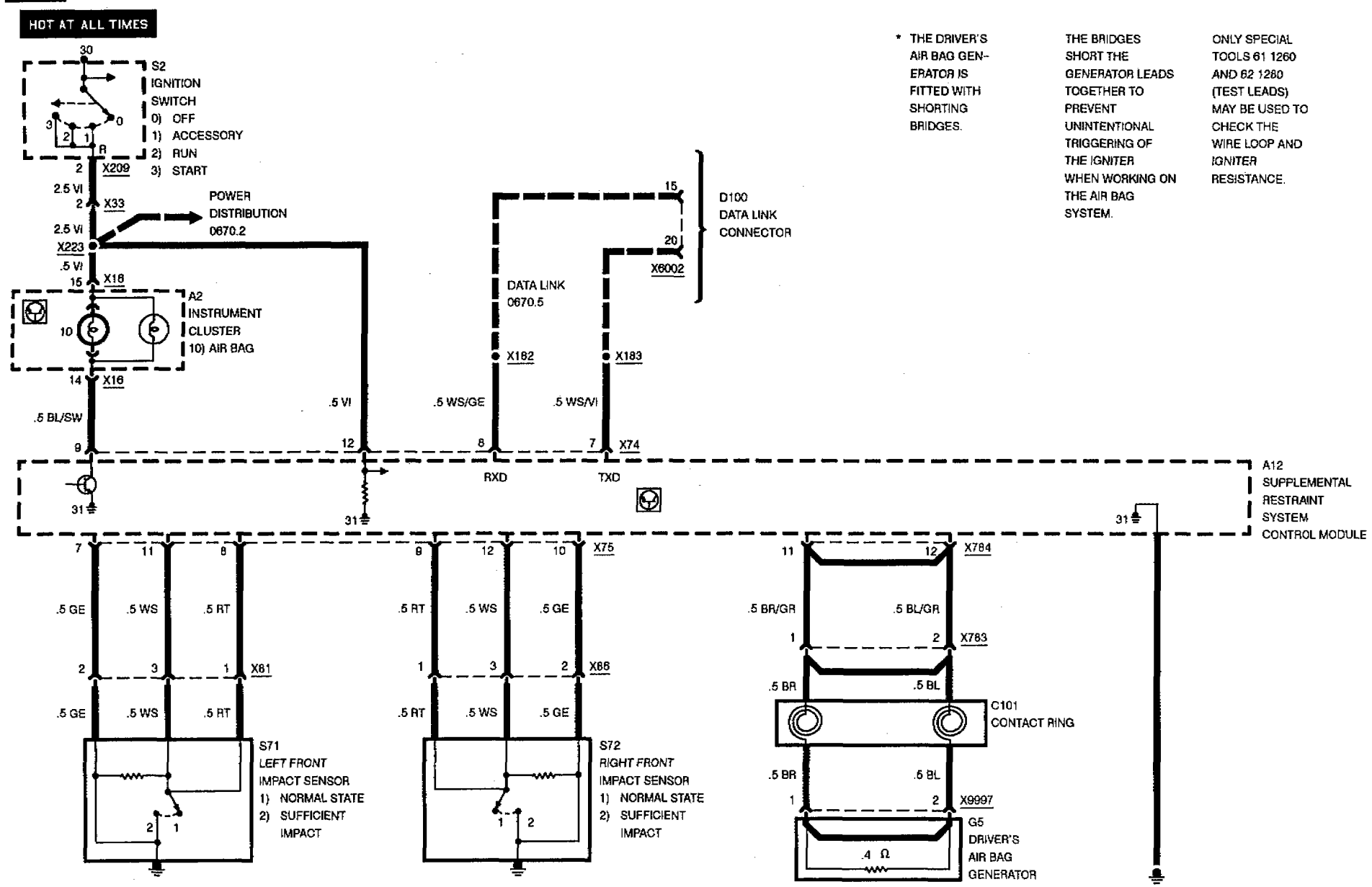

* THE DRIVER'S AIR BAG GENERATOR IS FITTED WITH SHORTING BRIDGES.

THE BRIDGES SHORT THE GENERATOR LEADS TOGETHER TO PREVENT UNINTENTIONAL TRIGGERING OF THE IGNITER WHEN WORKING ON THE AIR BAG SYSTEM.

ONLY SPECIAL TOOLS 61 1260 AND 62 1280 (TEST LEADS) MAY BE USED TO CHECK THE WIRE LOOP AND IGNITER RESISTANCE.

SUPPLEMENTAL RESTRAINT SYSTEM (AIR BAG)

LATE PRODUCTION

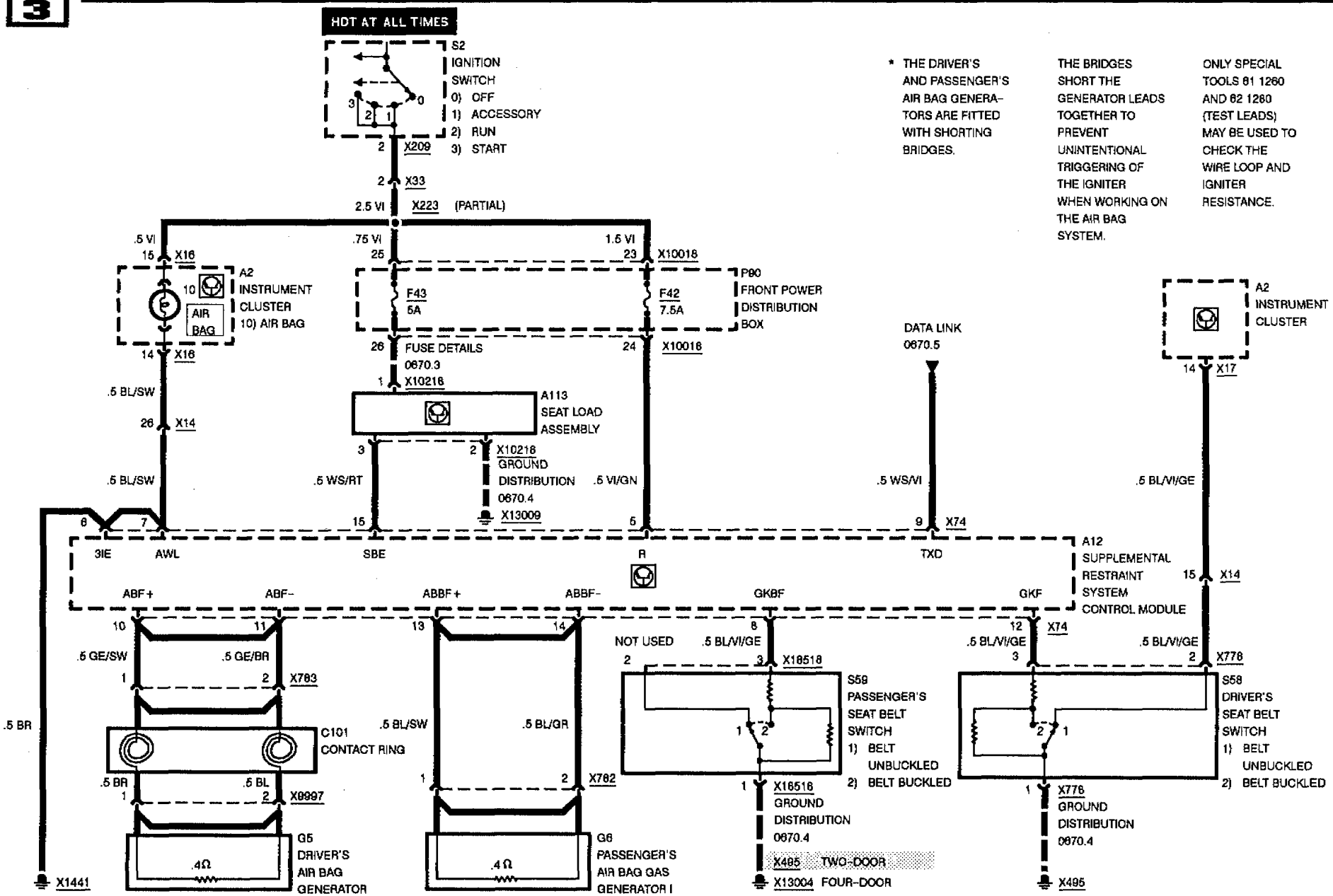

* THE DRIVER'S AND PASSENGER'S AIR BAG GENERATORS ARE FITTED WITH SHORTING BRIDGES.

THE BRIDGES SHORT THE GENERATOR LEADS TOGETHER TO PREVENT UNINTENTIONAL TRIGGERING OF THE IGNITER WHEN WORKING ON THE AIR BAG SYSTEM.

ONLY SPECIAL TOOLS 61 1260 AND 62 1260 (TEST LEADS) MAY BE USED TO CHECK THE WIRE LOOP AND IGNITER RESISTANCE.

12/93 3450.0 1993
12/93 3450 0 1993

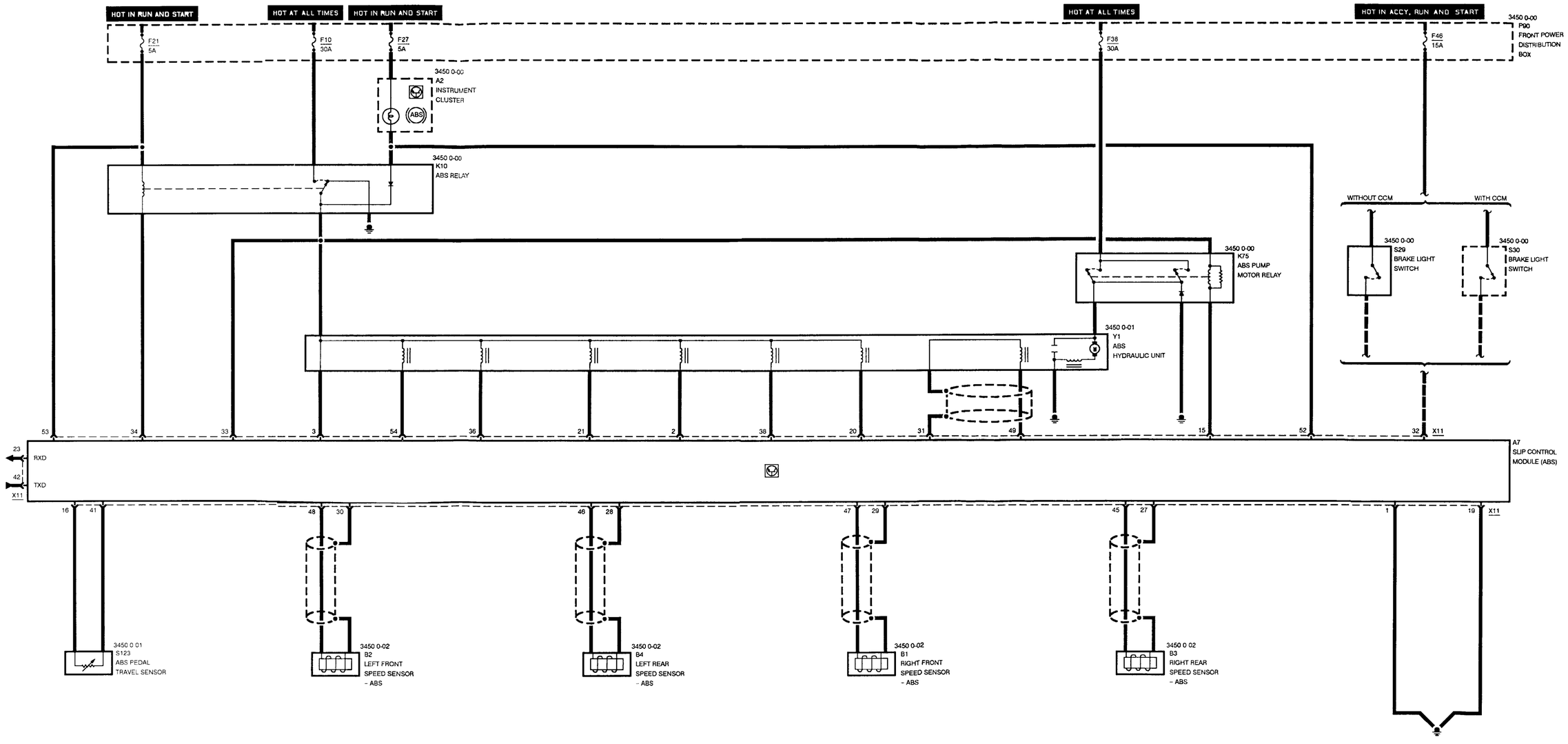

Pin Assignments

X11

Pin	Type	Description/Function	Connection
1	M	Ground, control module	Chassis ground
2	A	Left front outlet valve control	ABS hydraulic unit
3	E	Voltage monitoring, hydraulics	ABS hydraulic unit
4		Not used	
5		Not used	
6		Not used	
7		Not used	
8		Not used	
9		Not used	
10		Not used	
11		Not used	
12		Not used	
13		Not used	
14		Not used	
15	A	ABS pump motor relay control	ABS pump motor relay
16	E	ABS pedal travel sensor	ABS pedal travel sensor
17		Not used	
18		Not used	
19	M	Ground, control module	Chassis ground
20	A	Left front inlet valve control	ABS hydraulic unit
21	A	Right front outlet valve control	ABS hydraulic unit
22		Not used	
23	A	RxD diagnostic data link	Data link connector
24		Not used	
25		Not used	
26		Not used	
27	A	Speed sensor ground, RR	Right rear speed sensor - ABS
28	A	Speed sensor ground, RL	Left rear speed sensor - ABS
29	A	Speed sensor ground, FR	Right front speed sensor - ABS
30	A	Speed sensor ground, FL	Left front speed sensor - ABS
31	E	Pump motor sensor shield	ABS hydraulic unit
32	E	Brake pedal position	Brake light switch
33	E	Operating voltage	ABS relay

E = Input, A = Output, M = Ground

Pin Assignments

Pin	Type	Description/Function	Connection
34	A	ABS relay control	ABS relay
35		Not used	
36	A	Rear axle outlet valve control	ABS hydraulic unit
37		Not used	
38	A	Right front inlet valve control	ABS hydraulic unit
39		Not used	
40		Not used	
41	E	ABS pedal travel sensor	ABS pedal travel sensor
42	E/A	TxD diagnostic data link	Data link connector
43		Not used	
44		Not used	
45	E	Speed sensor signal RR	Right rear speed sensor - ABS
46	E	Speed sensor signal RL	Left rear speed sensor - ABS
47	E	Speed sensor signal FR	Right front speed sensor - ABS
48	E	Speed sensor signal FL	Left front speed sensor - ABS
49	E	Pump motor sensor signal	ABS hydraulic unit
50		Not used	
51		Not used	
52	A	ABS warning lamp control	Instrument cluster
53	E	Voltage supply, terminal 15	Front power distribution box, fuse 21
54	A	Rear axle inlet valve control	ABS hydraulic unit
55		Not used	

E = Input, A = Output, M = Ground

SLIP CONTROL (ABS)

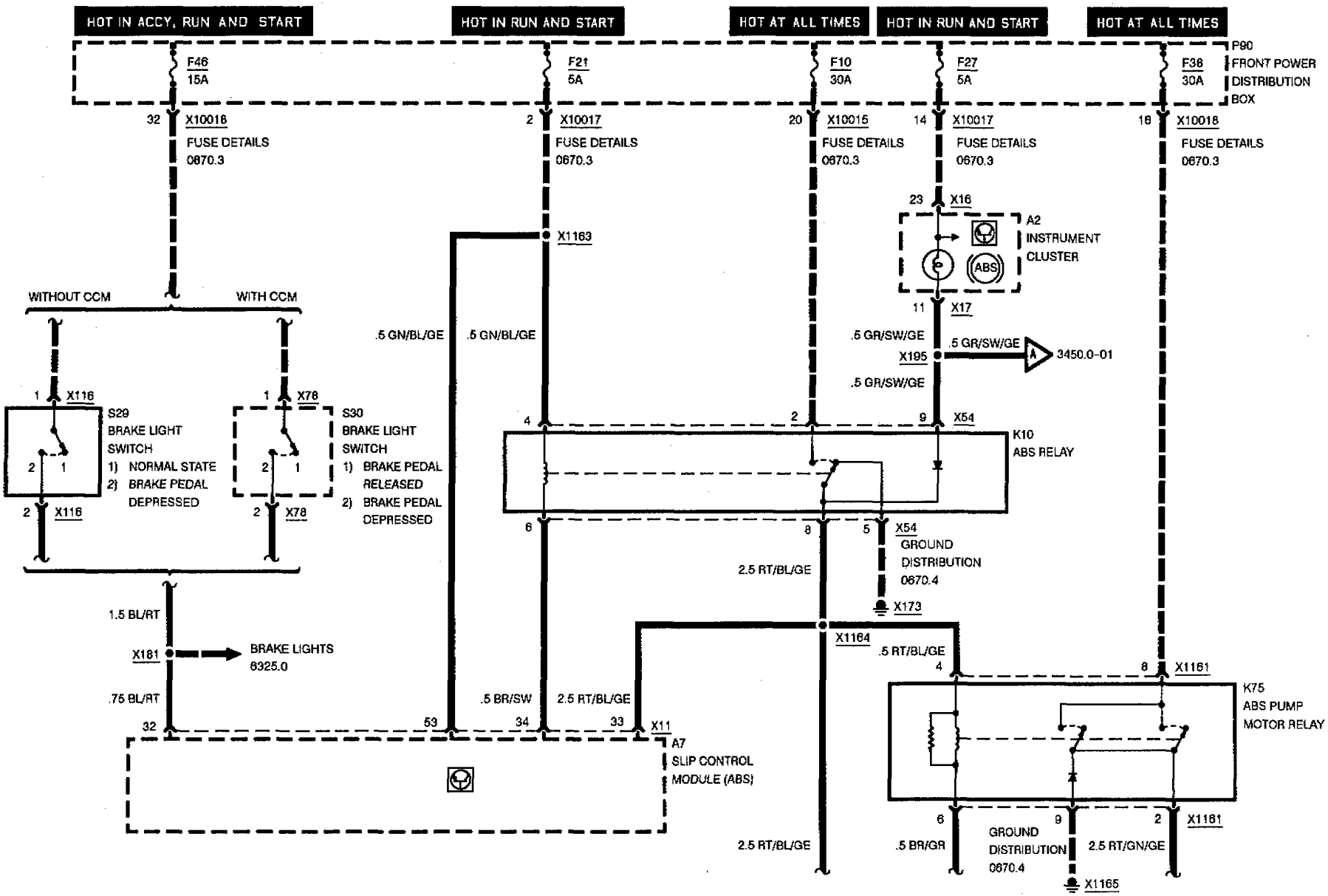

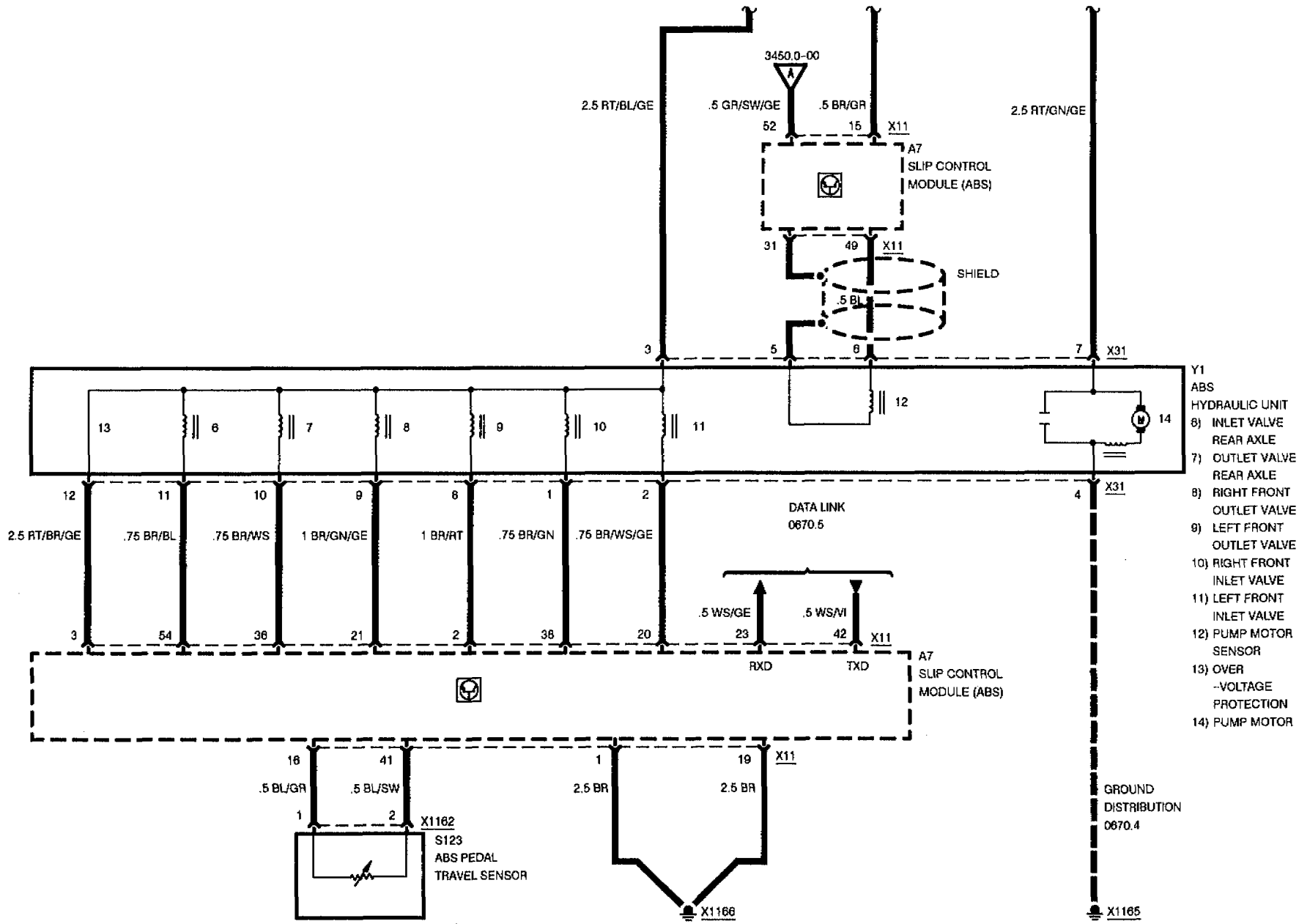
3450.0-00
2.5 RT/BL/GE
.5 GR/SW/GE
.5 BR/GR
2.5 RT/GN/GE
52
15
X11
A7
SLIP CONTROL
MODULE (ABS)
31
49
X11
SHIELD
.5 BL
3
5
6
7
X31
Y1
ABS
HYDRAULIC UNIT
8) INLET VALVE
REAR AXLE
7) OUTLET VALVE
REAR AXLE
8) RIGHT FRONT
OUTLET VALVE
9) LEFT FRONT
OUTLET VALVE
10) RIGHT FRONT
INLET VALVE
11) LEFT FRONT
INLET VALVE
12) PUMP MOTOR
SENSOR
13) OVER
-VOLTAGE
PROTECTION
14) PUMP MOTOR
13
6
7
8
9
10
11
12
14
12
11
10
9
8
1
2
4
X31
2.5 RT/BR/GE
.75 BR/BL
.75 BR/WS
1 BR/GN/GE
1 BR/RT
.75 BR/GN
.75 BR/WS/GE
DATA LINK
0670.5
.5 WS/GE
.5 WS/VI
3
54
36
21
2
38
20
23
42
X11
RXD
TXD
A7
SLIP CONTROL
MODULE (ABS)
16
41
1
19
X11
.5 BL/GR
.5 BL/SW
2.5 BR
2.5 BR
1
2
X1162
S123
ABS PEDAL
TRAVEL SENSOR
X1166
GROUND
DISTRIBUTION
0670.4
X1165

SLIP CONTROL (ABS)

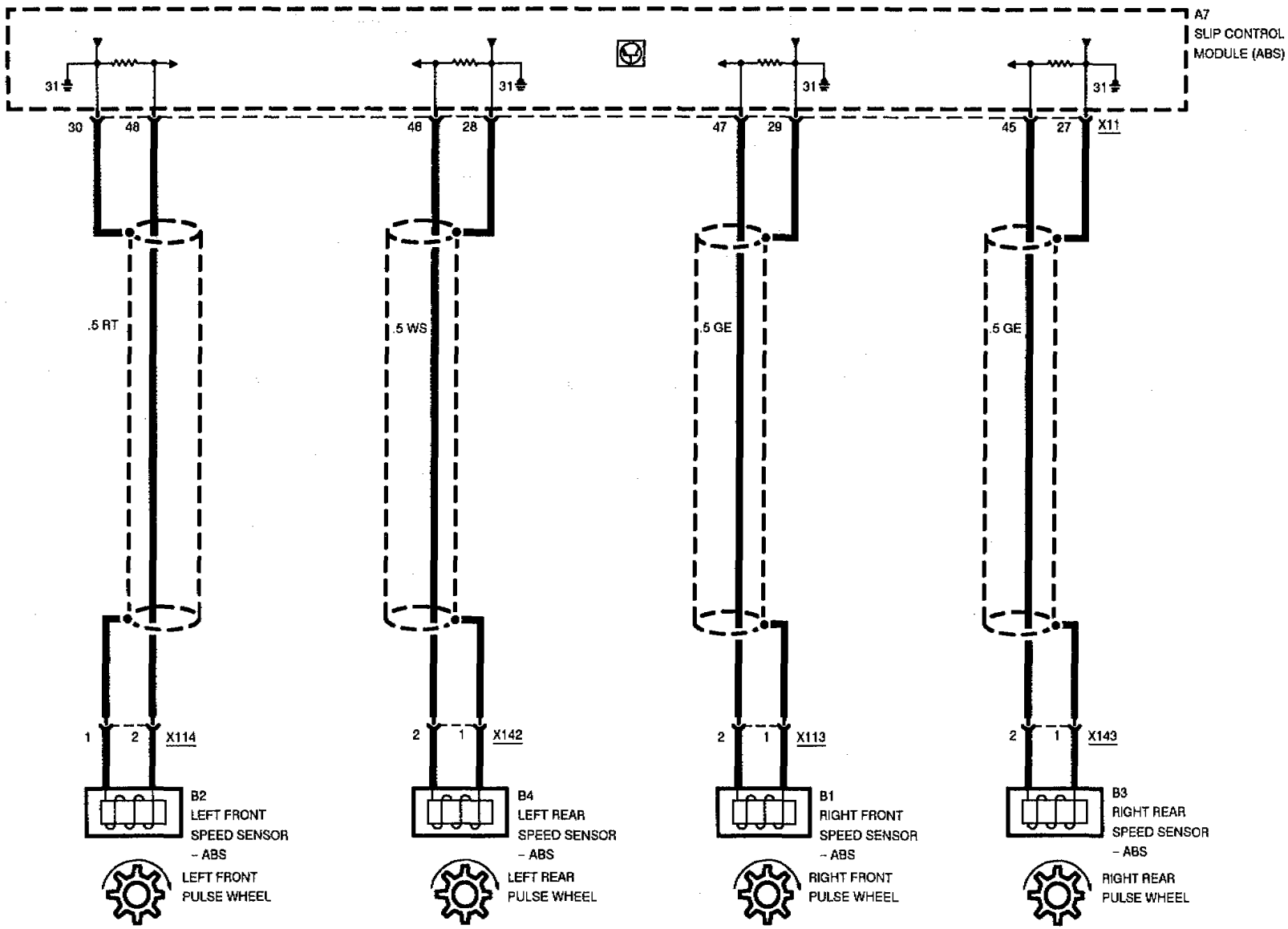

POWER MIRRORS

OUTSIDE MIRROR

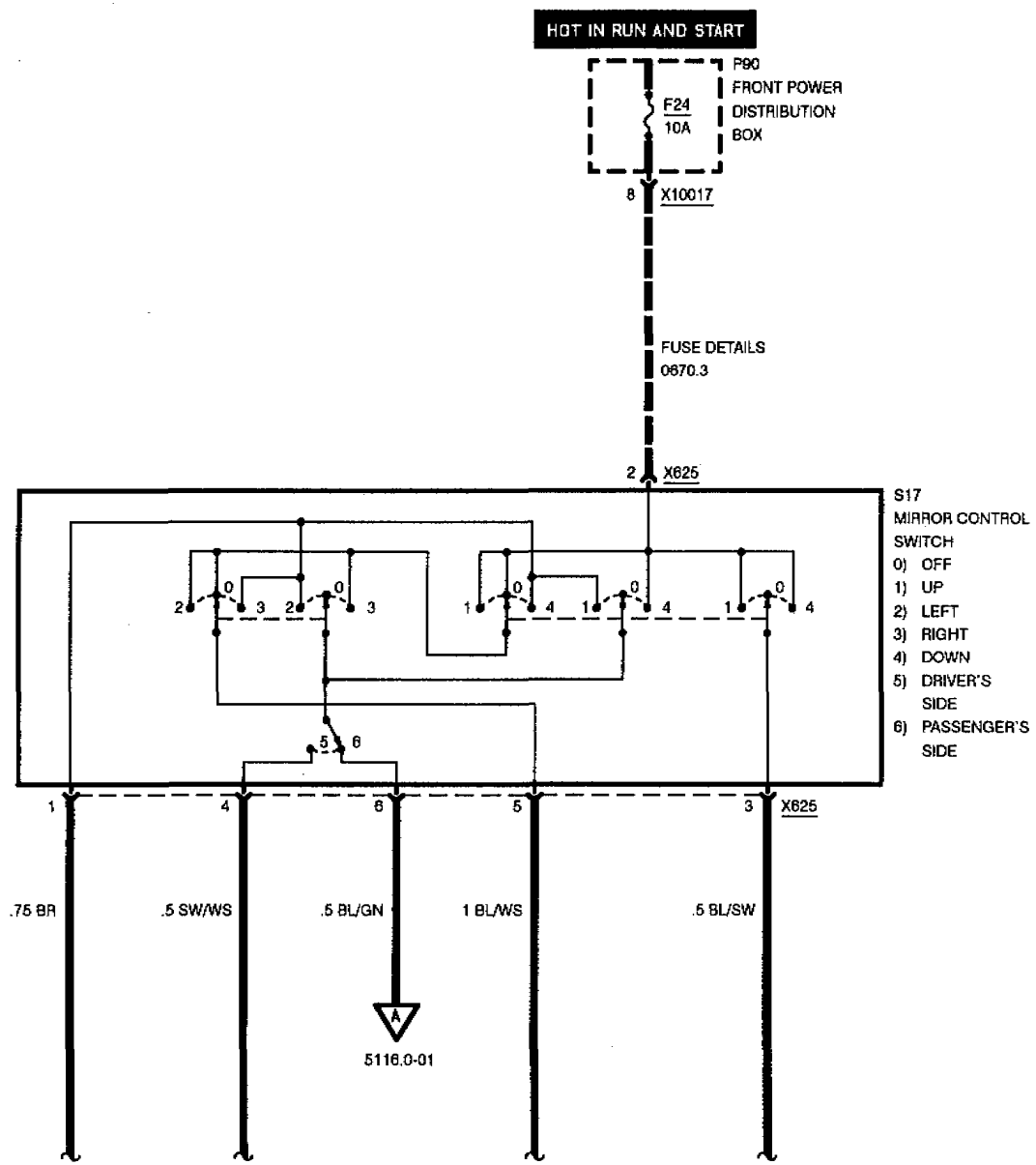

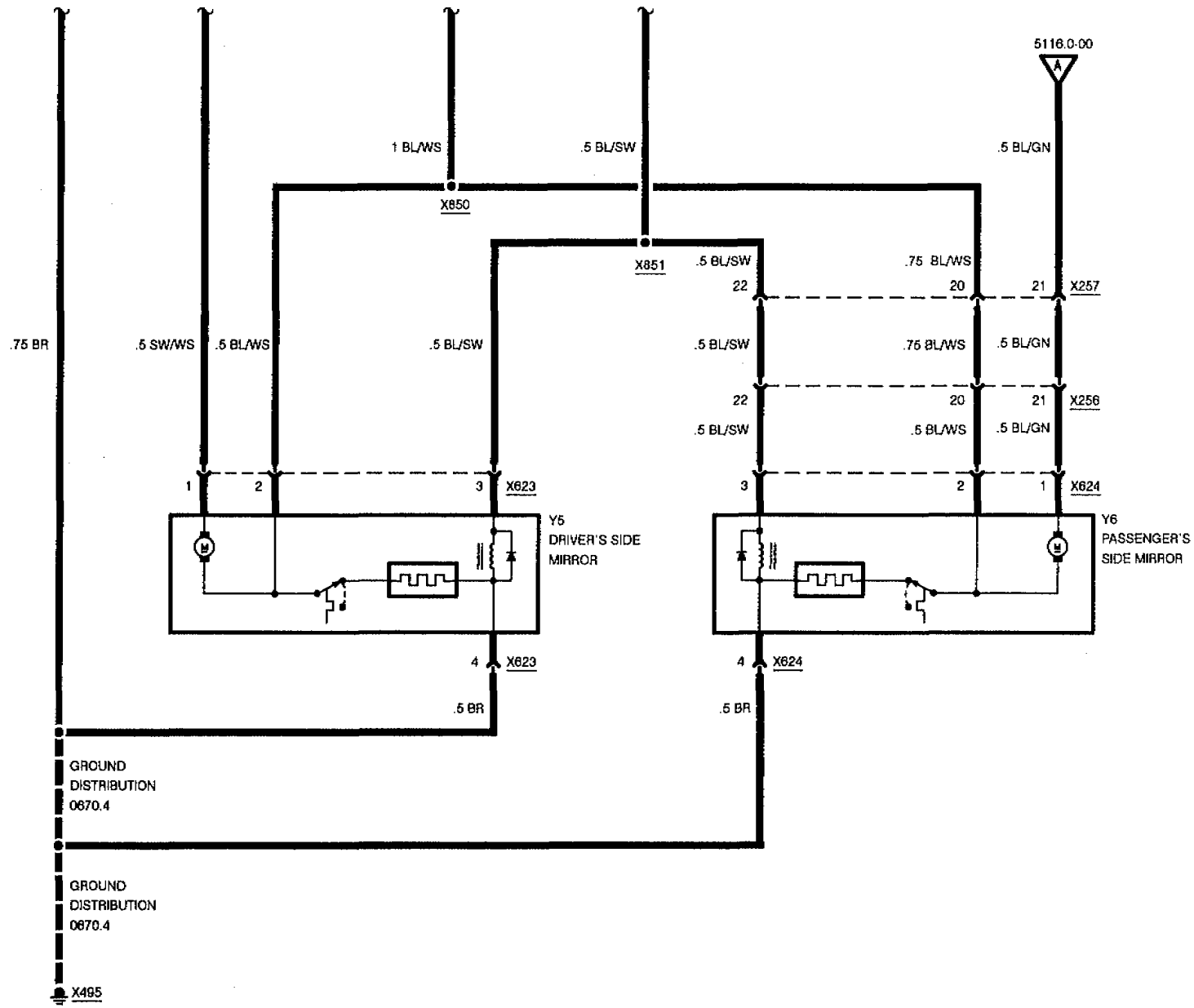
5116.0-00
A
1 BL/WS
.5 BL/SW
.5 BL/GN
X850
X851
.5 BL/SW
.75 BL/WS
22
20
21
X257
.75 BR
.5 SW/WS
.5 BL/WS
.5 BL/SW
.5 BL/SW
.75 BL/WS
.5 BL/GN
22
20
21
X256
.5 BL/SW
.5 BL/WS
.5 BL/GN
1
2
3
X623
3
2
1
X624
Y5
DRIVER'S SIDE
MIRROR
Y6
PASSENGER'S
SIDE MIRROR
4
X623
4
X624
.5 BR
.5 BR
GROUND
DISTRIBUTION
0670.4
GROUND
DISTRIBUTION
0670.4
X495

12/93 — 5126.2 — 1993
12/93 — 5126 2 — 1993

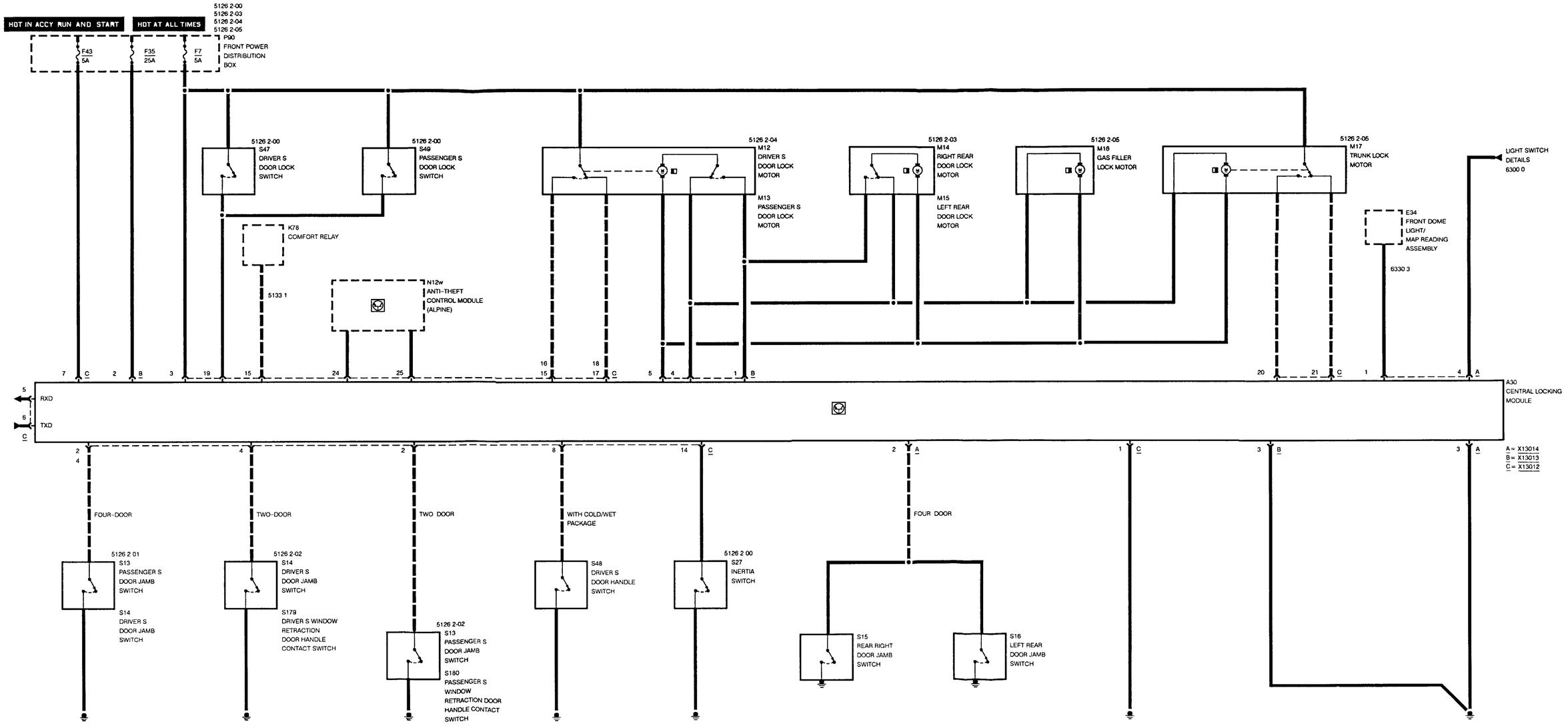

Pin Assignments

X13012

Pin	Type	Description/Function	Connection
1	M	Ground, electronics	Ground point
2	E	Passenger's door open	Passenger's door jamb switch
3	E	Voltage supply, terminal 30	Front power distribution box, fuse 7
4	E	Driver's door open	Driver's door jamb switch
5	A	RxD diagnostic data link	Data link connector
6	E/A	TxD diagnostic data link	Data link connector
7	E	Voltage supply, terminal R	Front power distribution box, fuse 43
8	E	Driver's door handle switch	Driver's door handle switch
9	A	Comfort relay control	Comfort relay
10		Not used	
11		Not used	
12		Not used	
13		Not used	
14	E	Crash signal	Inertia switch
15	E	Passenger's door lock motor locked	Passenger's door lock motor
16	E	Driver's door lock motor locked	Driver's door lock motor
17	E	Passenger's door lock motor unlocked	Passenger's door lock motor
18	E	Driver's door lock motor unlocked	Driver's door lock motor
19	E	Lock contact for arrest	Driver's and passenger's door lock switches
20	E	Trunk lock motor locked	Trunk lock motor
21	E	Trunk lock motor unlocked	Trunk lock motor
22		Not used	
23		Not used	
24	E	Interface to anti-theft module (Alpine)	Anti-theft module (Alpine)
25	E	Interface to anti-theft module (Alpine)	Anti-theft module (Alpine)
26		Not used	

E = Input, A = Output, M = Ground

Pin Assignments

X13013

Pin	Type	Description/Function	Connection
1	A	Arrest ZV motor drives	Left and right rear lock motors
2	E	Battery voltage for ZV motor drive	Front power distribution box, fuse 35
3	M	Ground for ZV motor drives	Ground point
4	A	Lock ZV motor drives	Left and right rear door lock motors
5	A	Unlock ZV motor drives	Left and right rear door lock motors

X13014

Pin	Type	Description/Function	Connection
1	A	Activation of interior lights	Front dome light/map reading assembly
2	E	Rear doors open	Left rear and right rear door jamb switches
3	M	Ground for interior lights	Ground point
4 CDN	E	Parking light detection	Right park light/license plate light relay
4 USA	E	Parking light detection	Light switch

E = Input, A = Output, M = Ground

CENTRAL LOCKING MODULE II (ZVM II)

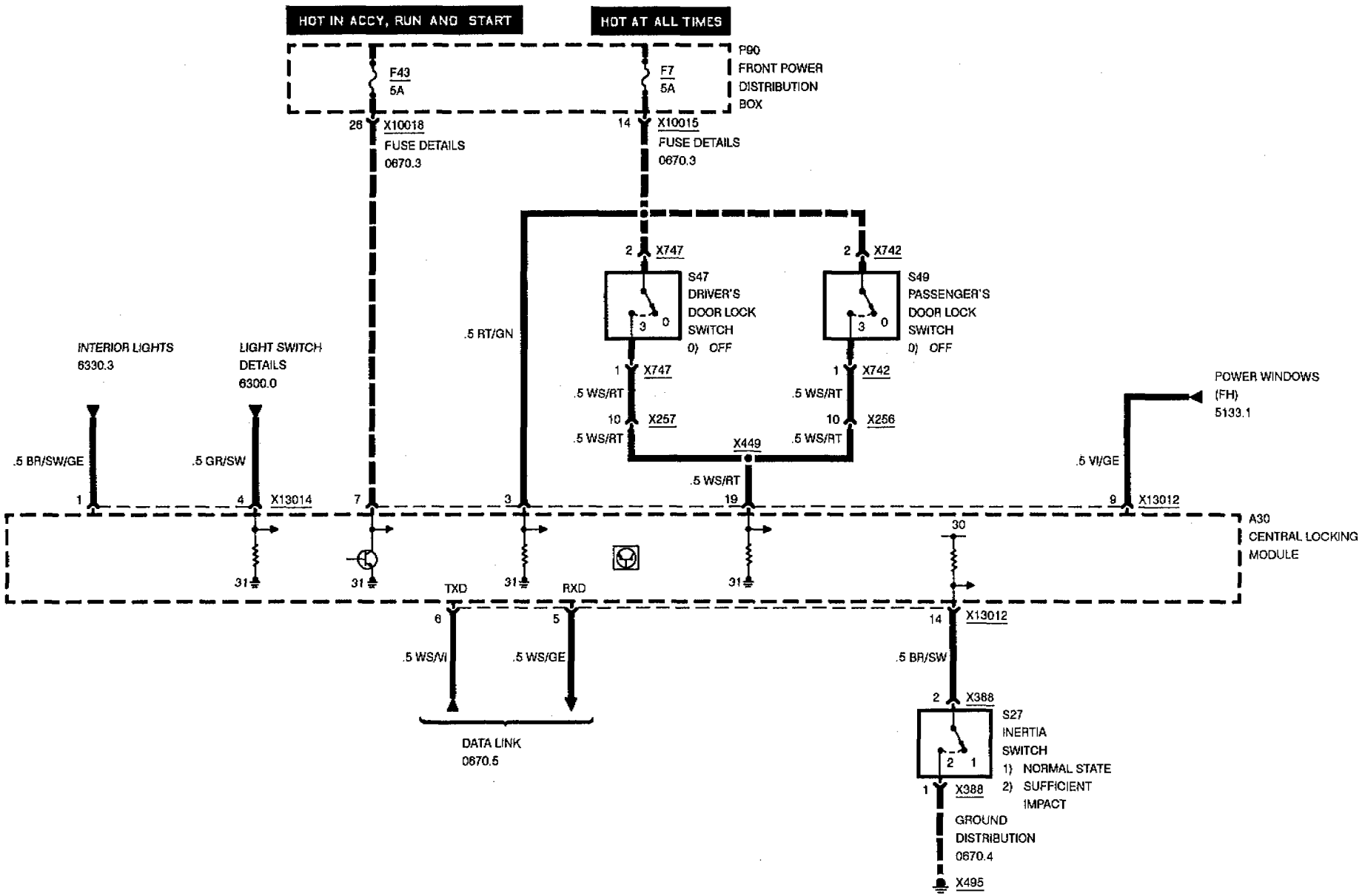

CENTRAL LOCKING MODULE II (ZVM II)

INPUTS - FOUR-DOOR

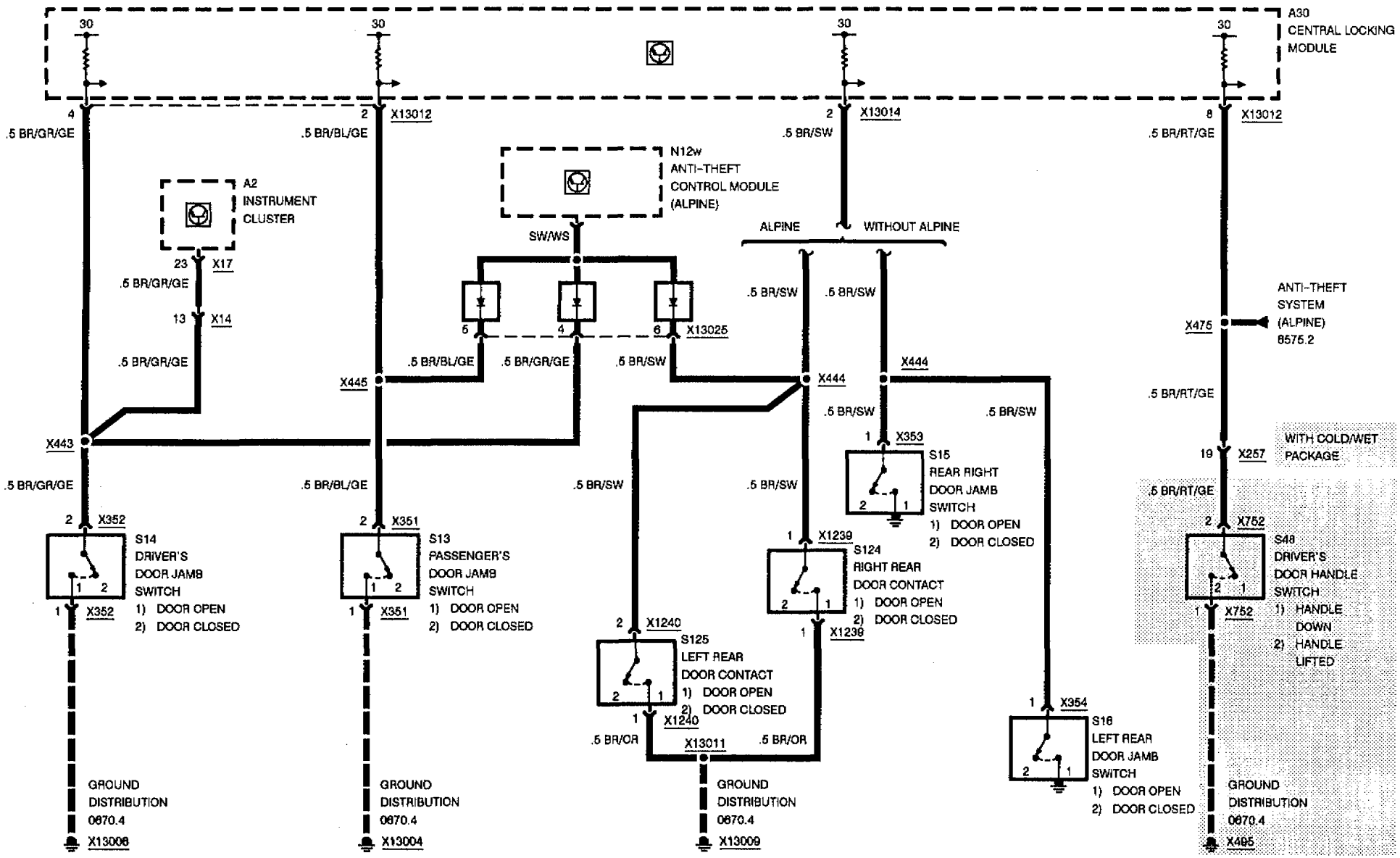

CENTRAL LOCKING MODULE II (ZVM II)

INPUTS - TWO-DOOR

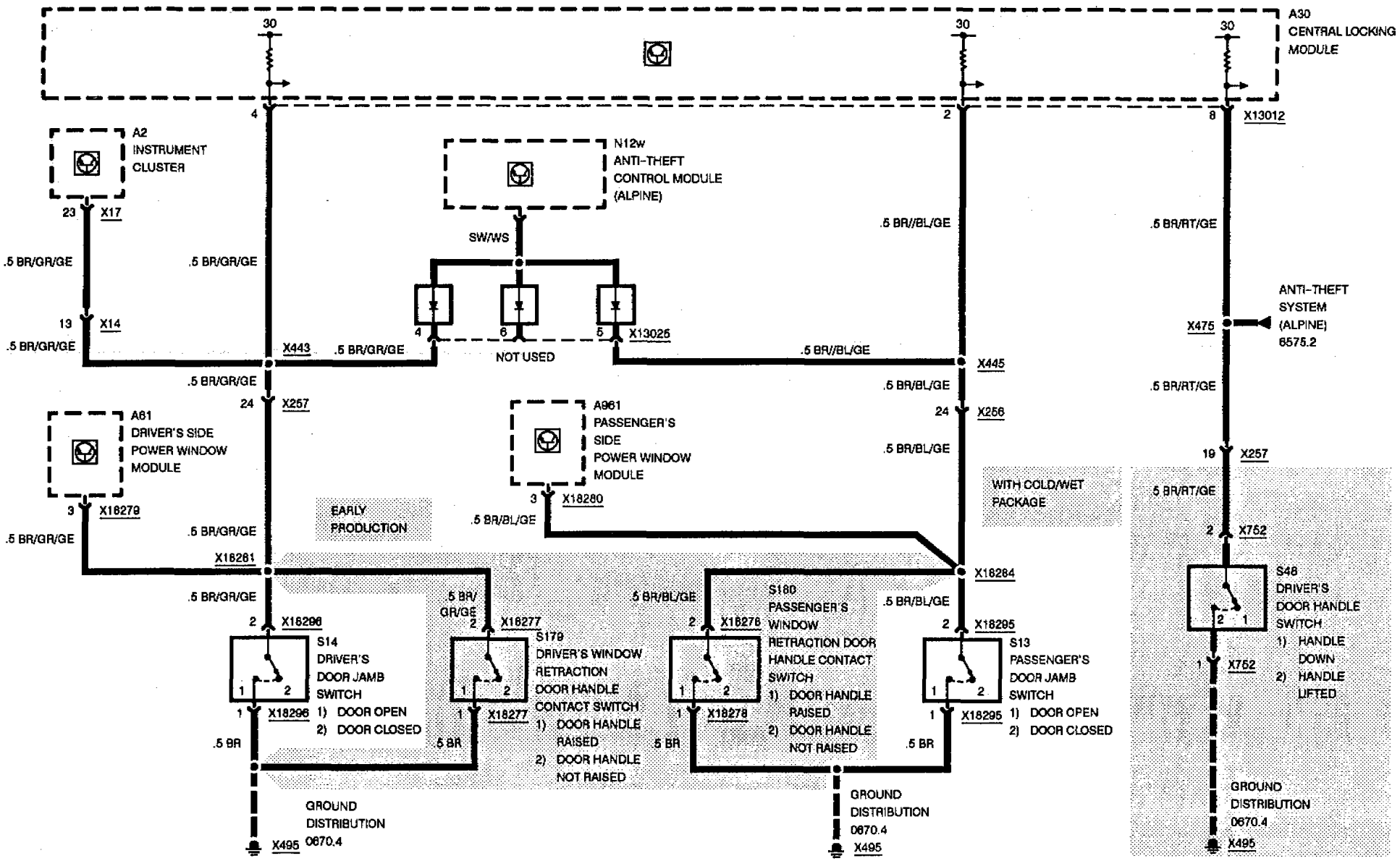

CENTRAL LOCKING MODULE II (ZVM II)

OUTPUT DETAILS

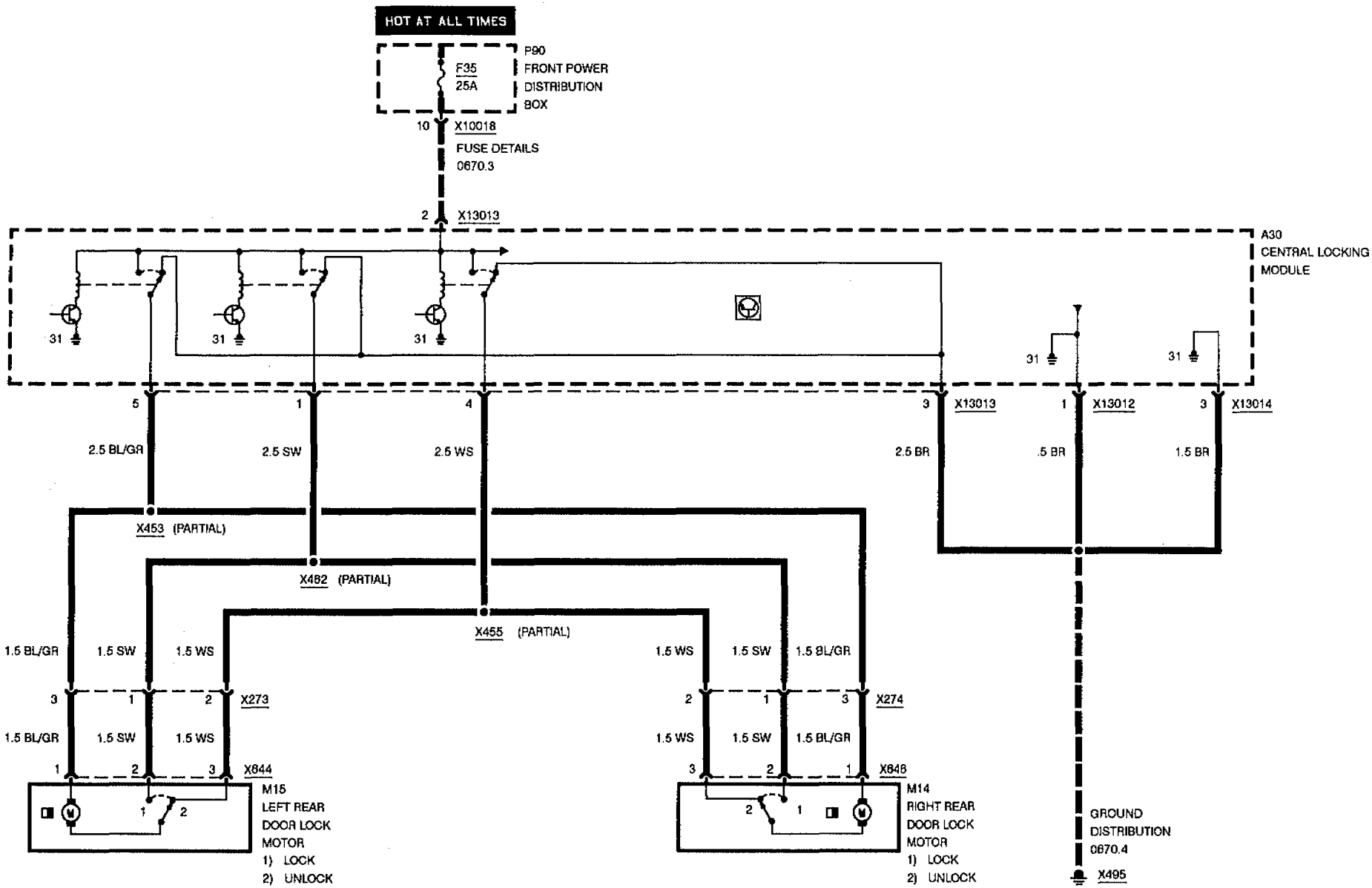

CENTRAL LOCKING MODULE II (ZVM II)

OUTPUT DETAILS

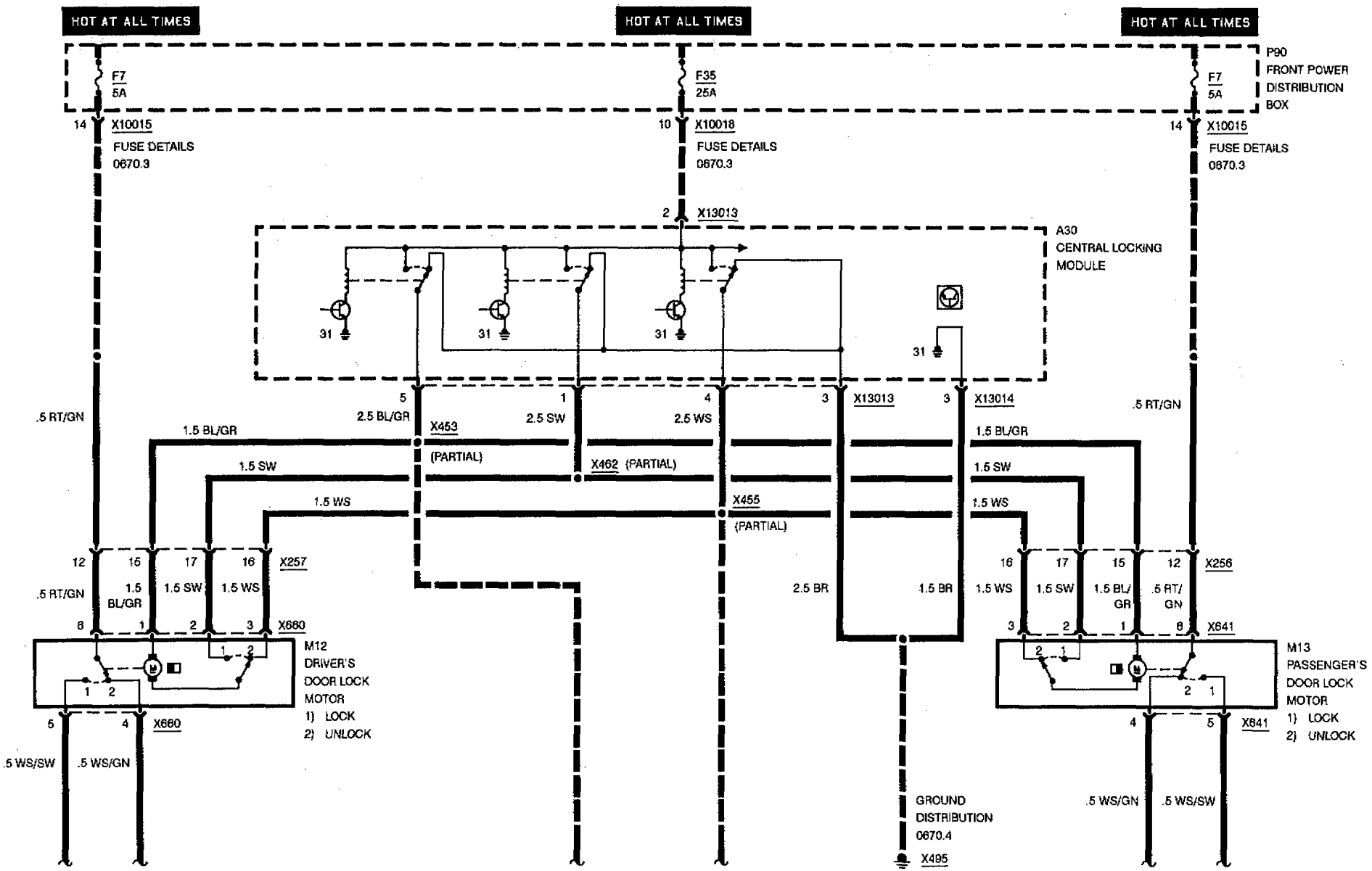

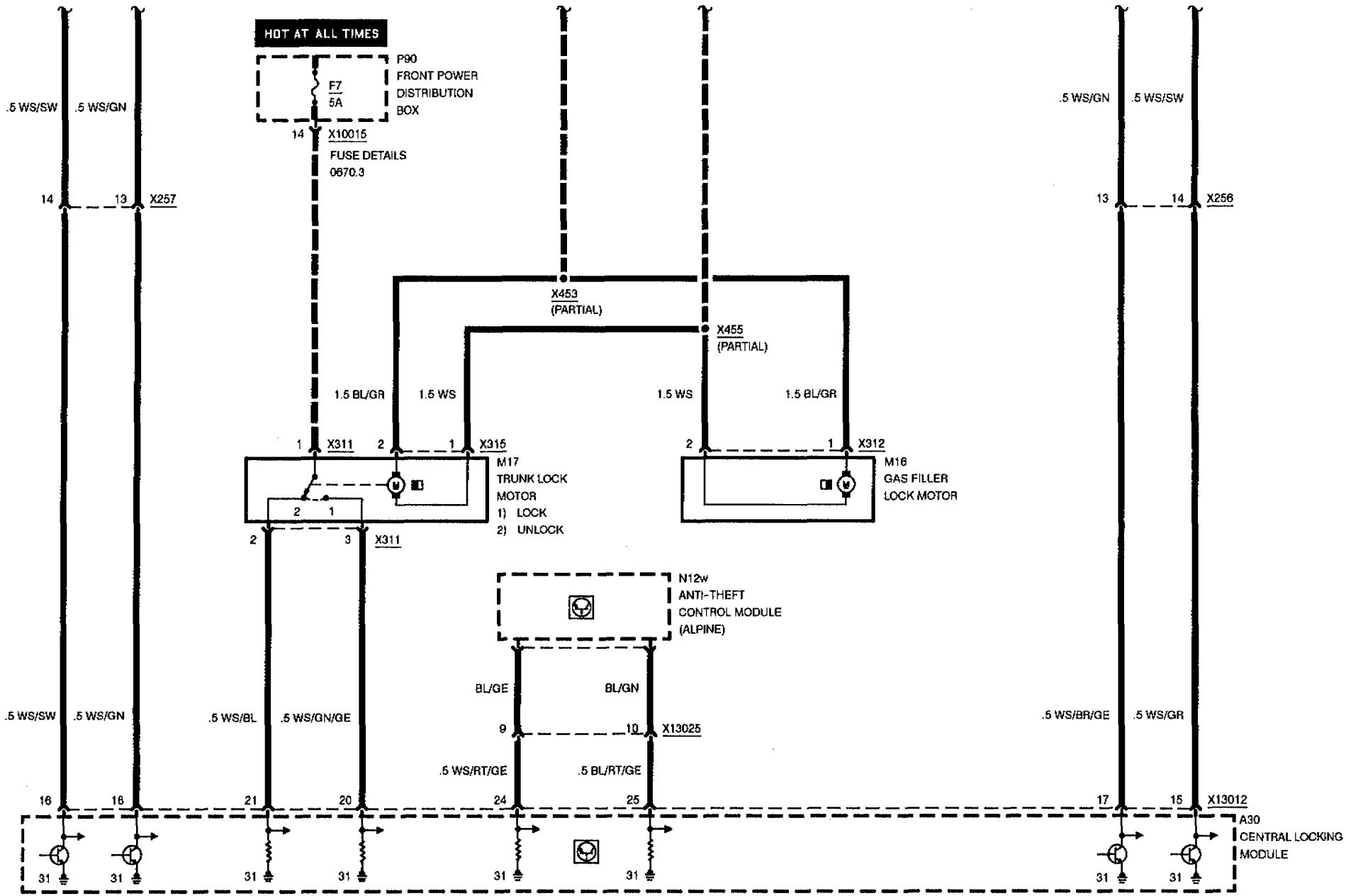
HOT AT ALL TIMES
P90
FRONT POWER
DISTRIBUTION
BOX
F7
5A
14
X10015
FUSE DETAILS
0670.3
.5 WS/SW
.5 WS/GN
14
13
X257
X453
(PARTIAL)
X455
(PARTIAL)
1.5 BL/GR
1.5 WS
1.5 WS
1.5 BL/GR
1
X311
2
1
X315
M17
TRUNK LOCK
MOTOR
1) LOCK
2) UNLOCK
2
1
2
1
X312
M16
GAS FILLER
LOCK MOTOR
2
3
X311
N12w
ANTI-THEFT
CONTROL MODULE
(ALPINE)
BL/GE
BL/GN
9
10
X13025
.5 WS/RT/GE
.5 BL/RT/GE
.5 WS/SW
.5 WS/GN
.5 WS/BL
.5 WS/GN/GE
.5 WS/GN
.5 WS/SW
.5 WS/BR/GE
.5 WS/GR
13
14
X256
16
16
21
20
24
25
17
15
X13012
A30
CENTRAL LOCKING
MODULE
31
31
31
31
31
31
31
31

POWER WINDOWS (FH)

FOUR-DOOR

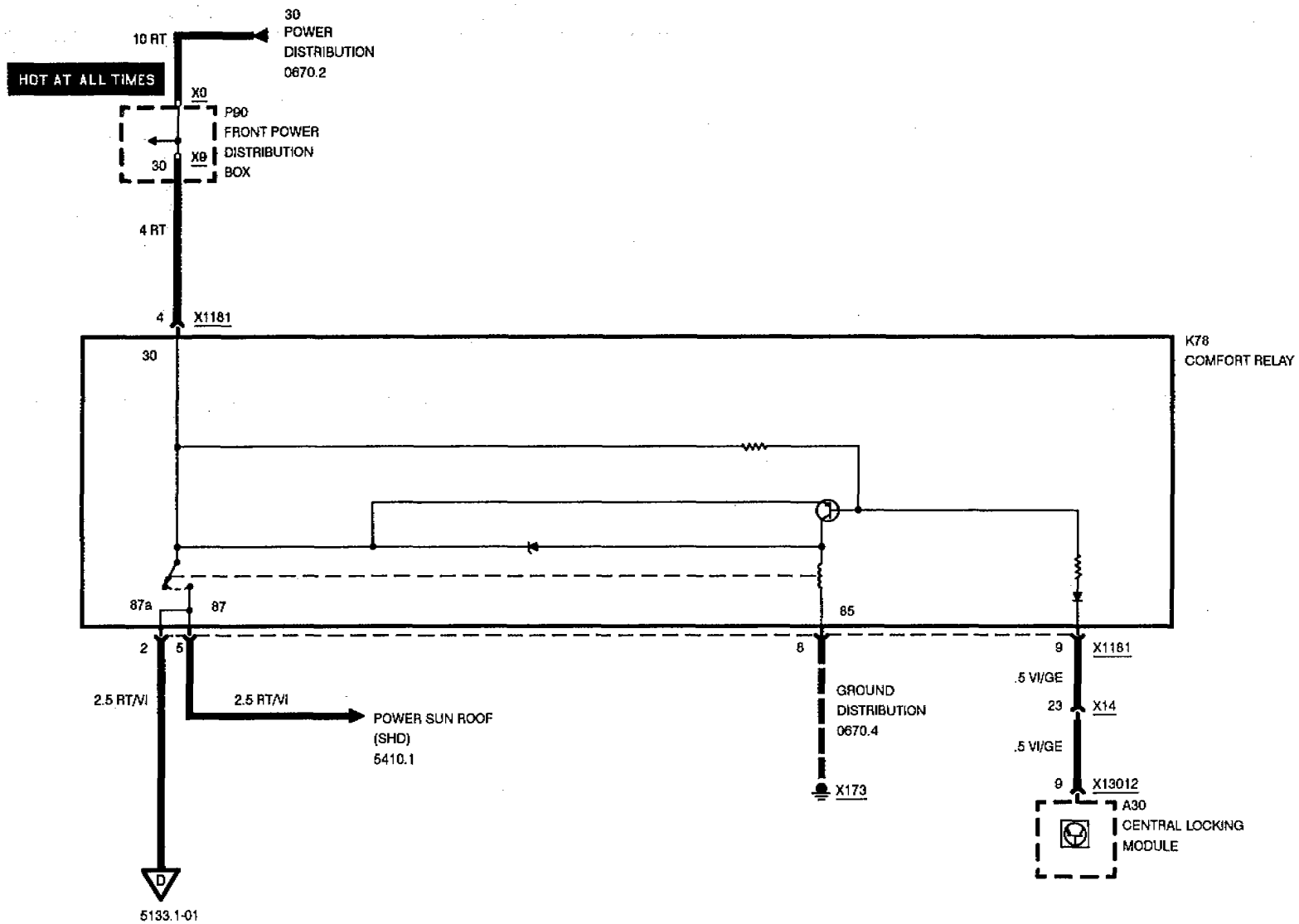

POWER WINDOWS (FH)

PASSENGER'S SIDE - FOUR DOOR

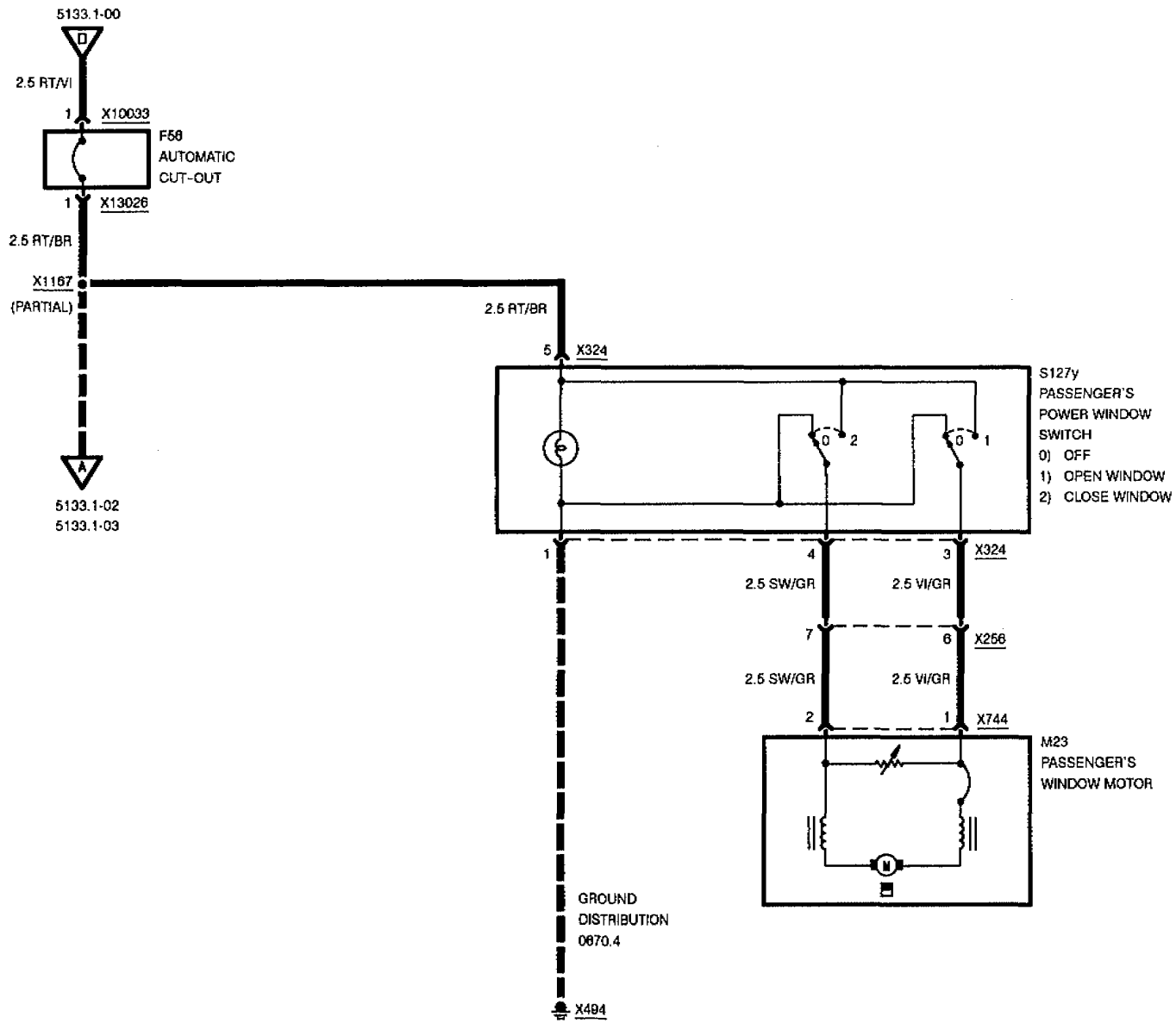

POWER WINDOWS (FH)

DRIVER'S SIDE - FOUR-DOOR

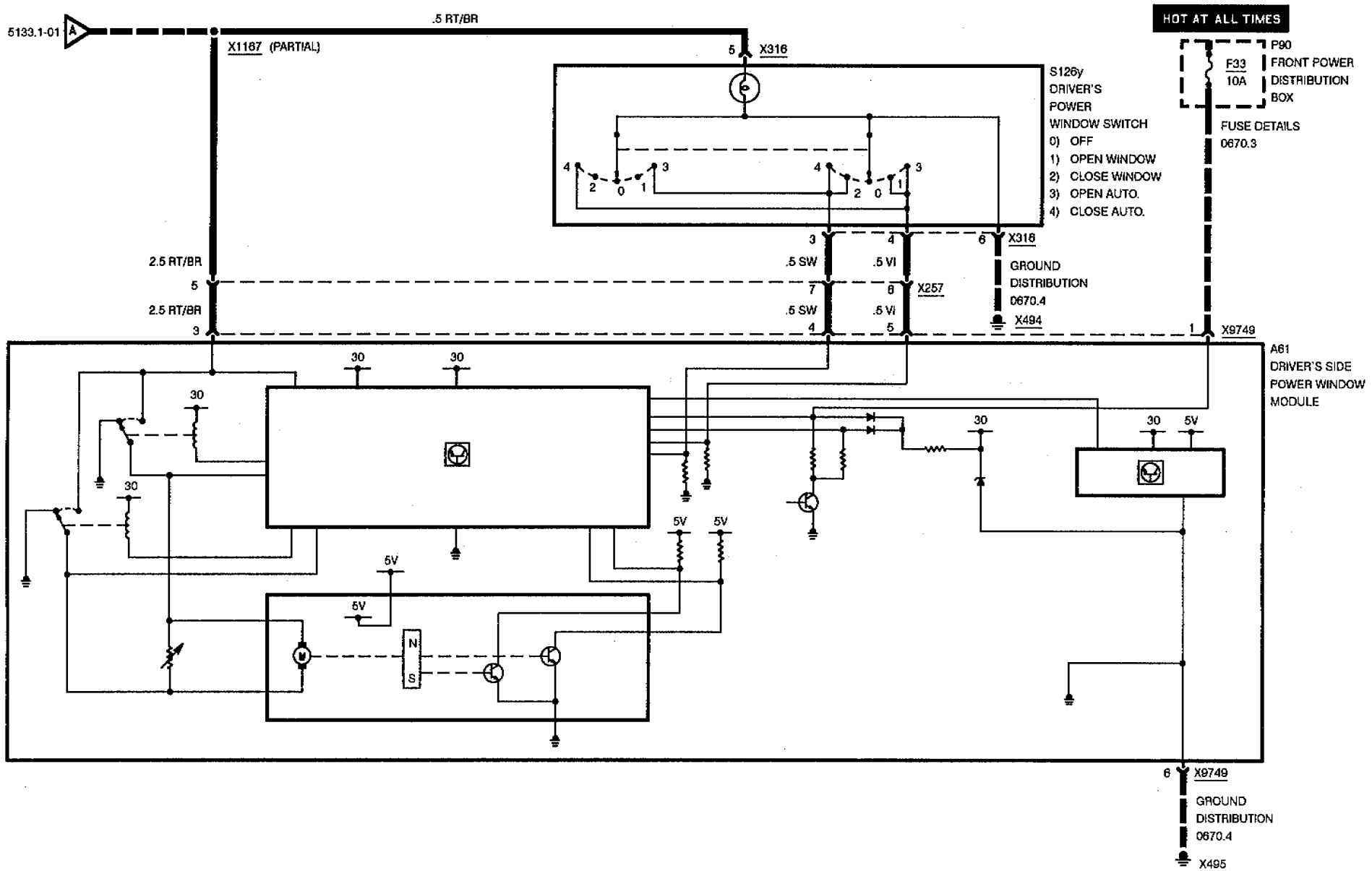

POWER WINDOWS (FH)

REAR WINDOWS - FOUR-DOOR

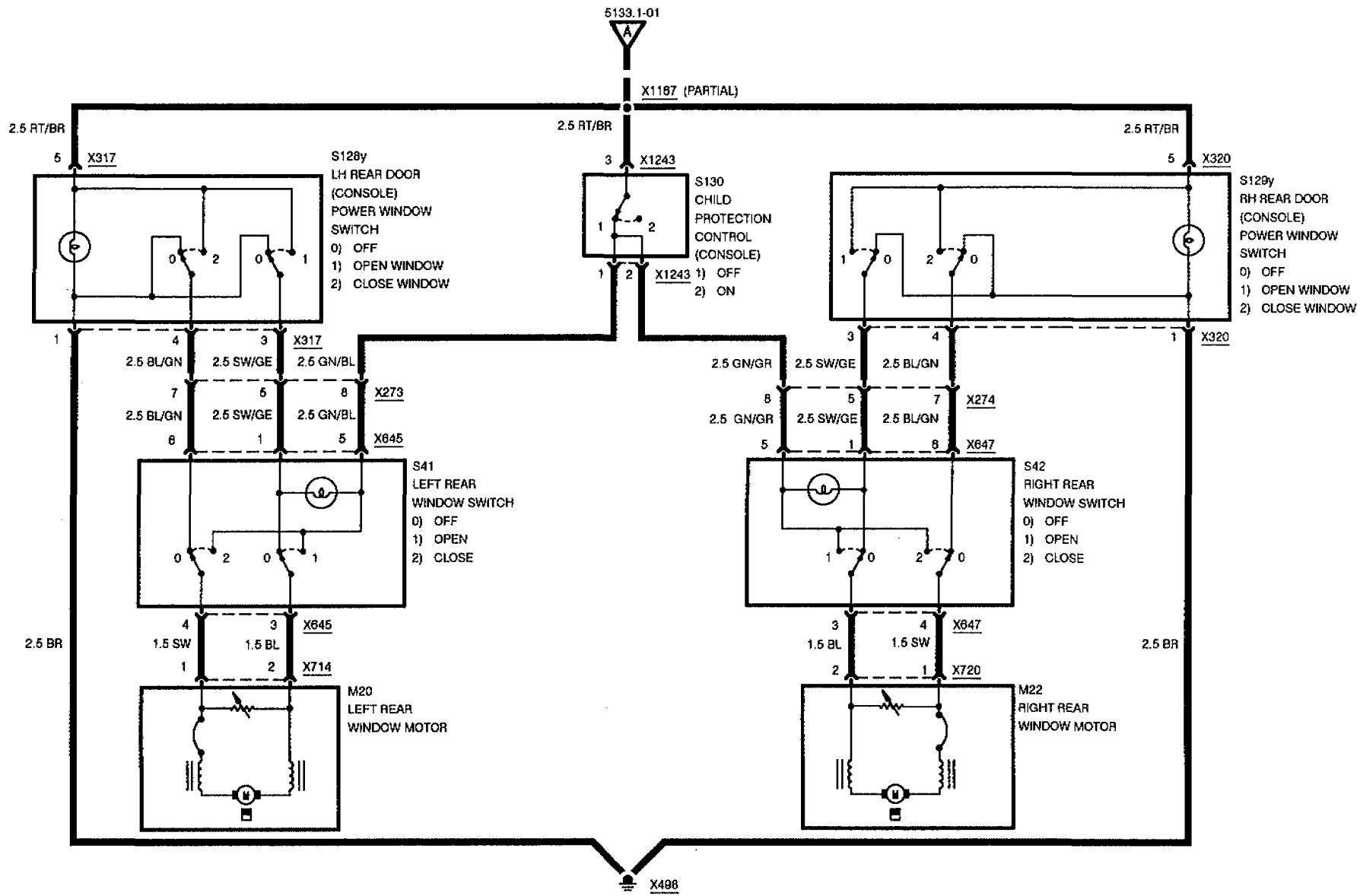

POWER WINDOWS (FH)

DRIVER'S SIDE - TWO-DOOR

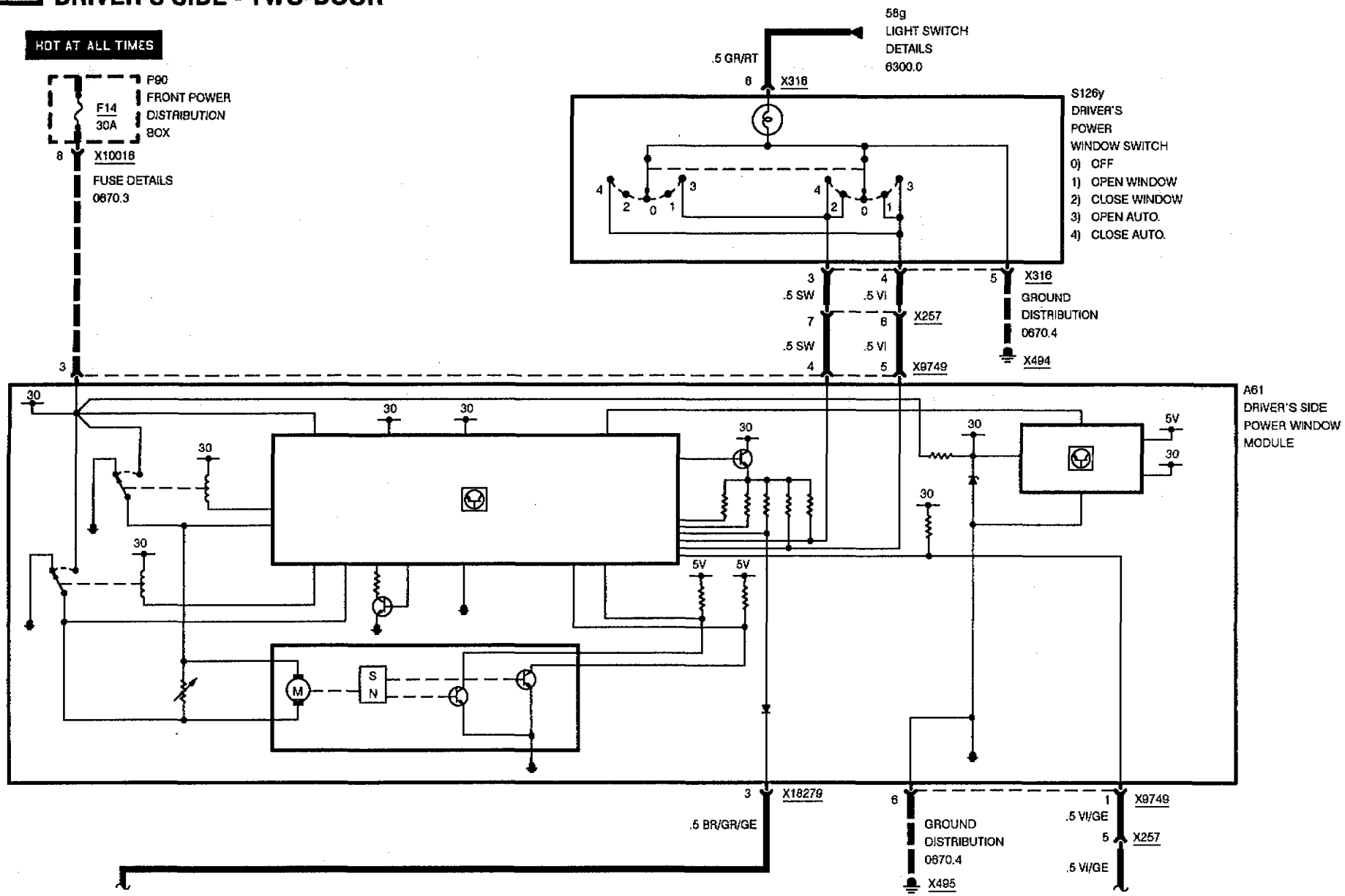

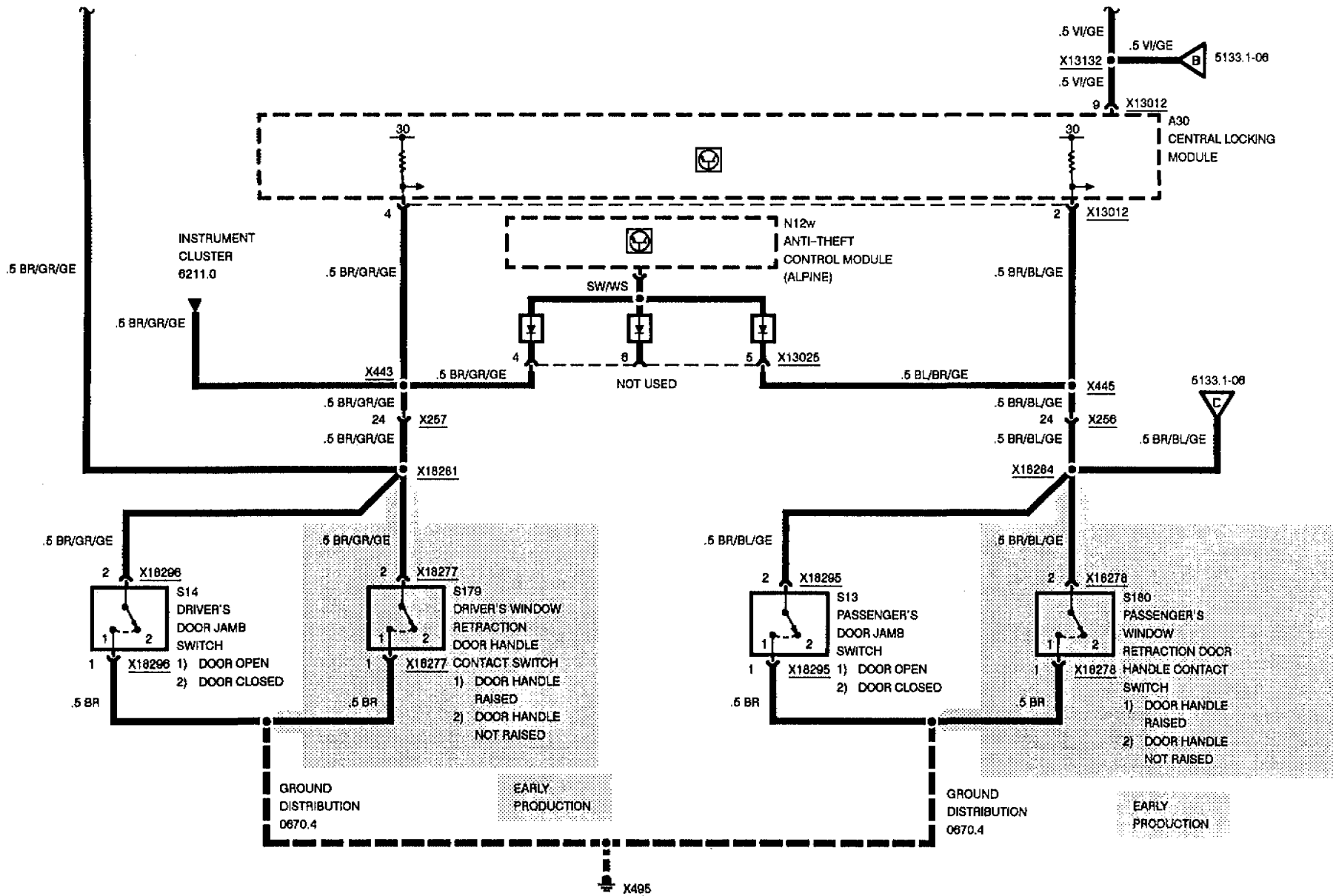
.5 VI/GE
.5 VI/GE
X13132
.5 VI/GE
5133.1-06
B
9
X13012
A30
CENTRAL LOCKING
MODULE
30
30
4
2
X13012
N12w
ANTI-THEFT
CONTROL MODULE
(ALPINE)
INSTRUMENT
CLUSTER
6211.0
.5 BR/GR/GE
.5 BR/GR/GE
.5 BR/GR/GE
.5 BR/BL/GE
SW/WS
4
8
5
X13025
NOT USED
X443
.5 BR/GR/GE
.5 BL/BR/GE
X445
5133.1-06
C
.5 BR/GR/GE
24
X257
.5 BR/GR/GE
.5 BR/BL/GE
24
X256
.5 BR/BL/GE
.5 BR/BL/GE
X18261
X18264
.5 BR/GR/GE
.5 BR/GR/GE
.5 BR/BL/GE
.5 BR/BL/GE
2
X18296
S14
DRIVER'S
DOOR JAMB
SWITCH
1
2
1
X18296
1) DOOR OPEN
2) DOOR CLOSED
.5 BR
2
X18277
S179
DRIVER'S WINDOW
RETRACTION
DOOR HANDLE
1
2
1
X18277
CONTACT SWITCH
1) DOOR HANDLE
RAISED
2) DOOR HANDLE
NOT RAISED
.5 BR
2
X18295
S13
PASSENGER'S
DOOR JAMB
SWITCH
1
2
1
X18295
1) DOOR OPEN
2) DOOR CLOSED
.5 BR
2
X18278
S180
PASSENGER'S
WINDOW
RETRACTION DOOR
HANDLE CONTACT
SWITCH
1
2
1
X18278
1) DOOR HANDLE
RAISED
2) DOOR HANDLE
NOT RAISED
.5 BR
GROUND
DISTRIBUTION
0670.4
EARLY
PRODUCTION
GROUND
DISTRIBUTION
0670.4
EARLY
PRODUCTION
X495

POWER WINDOWS (FH)

PASSENGER'S SIDE - TWO-DOOR

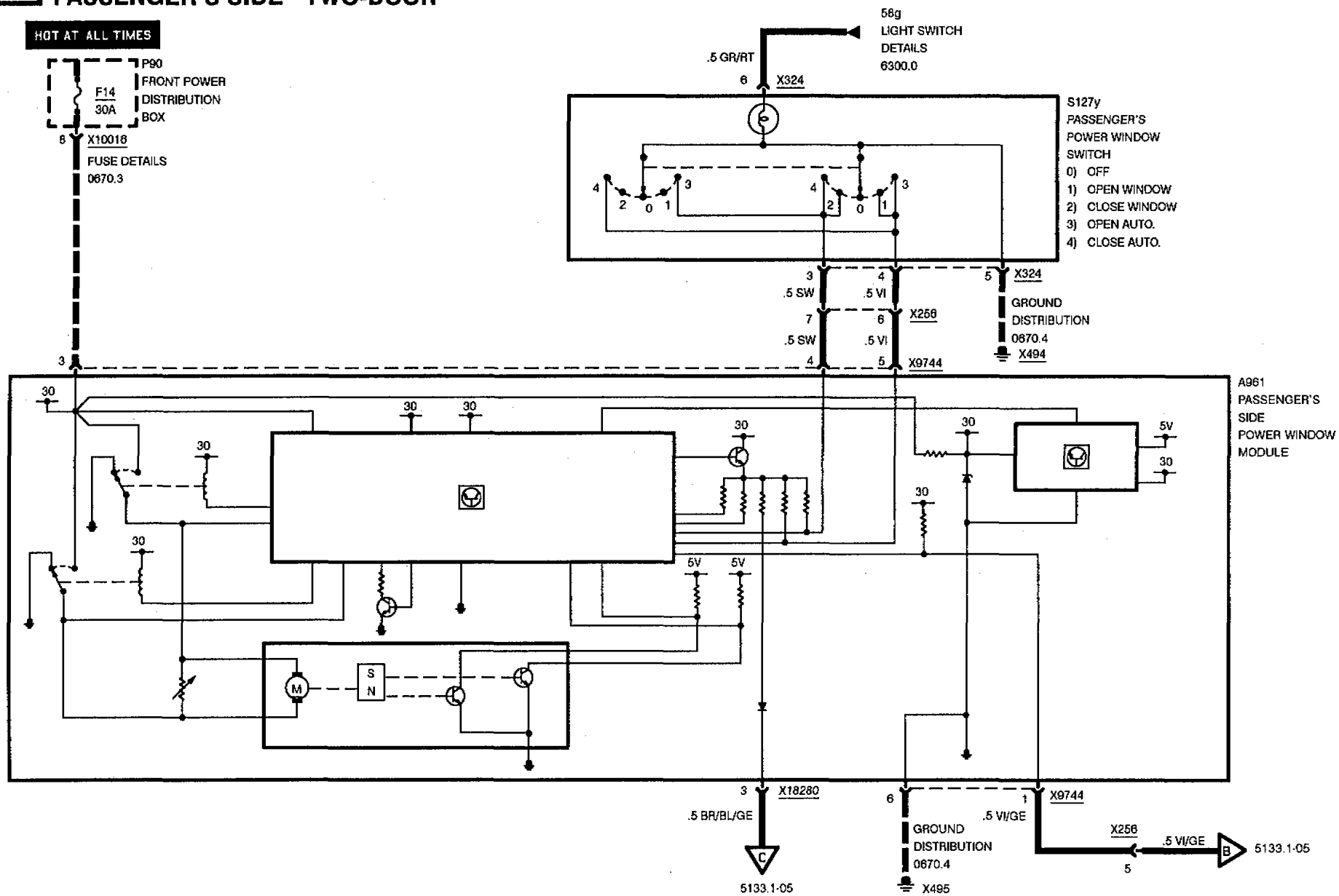

POWER SEATS

DRIVER'S SEAT

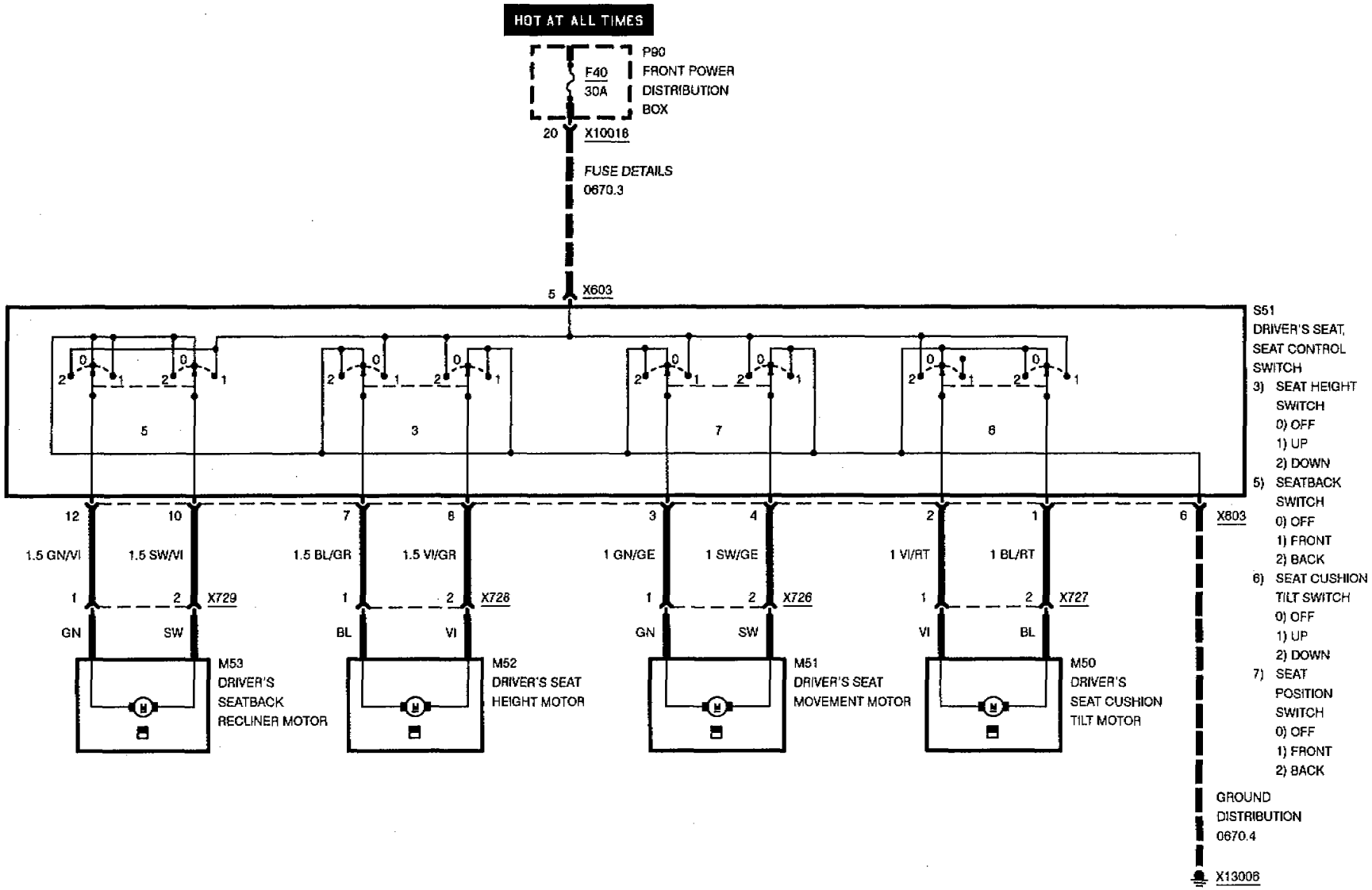

POWER SEATS

PASSENGER'S SEAT

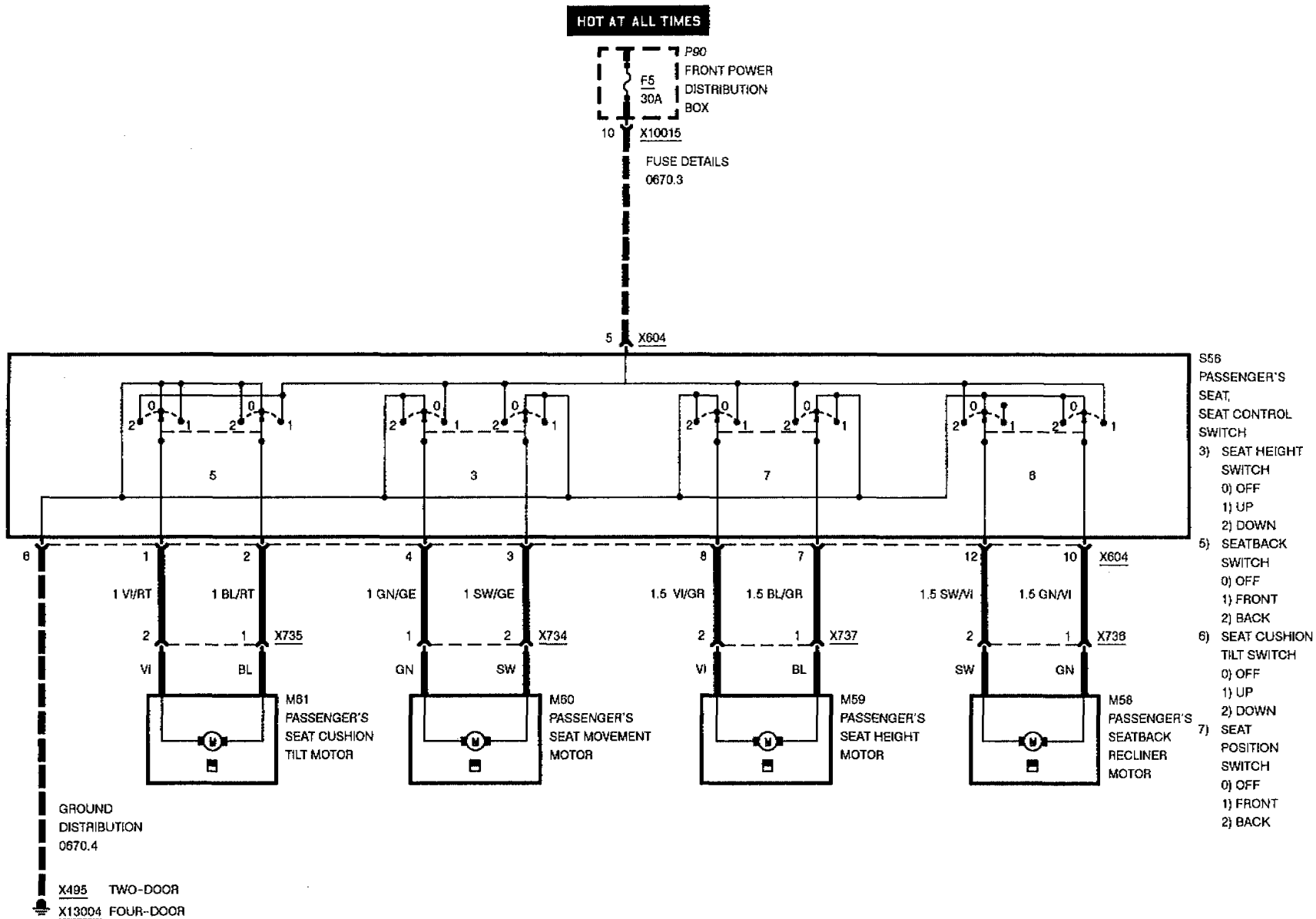

HEATED SEATS

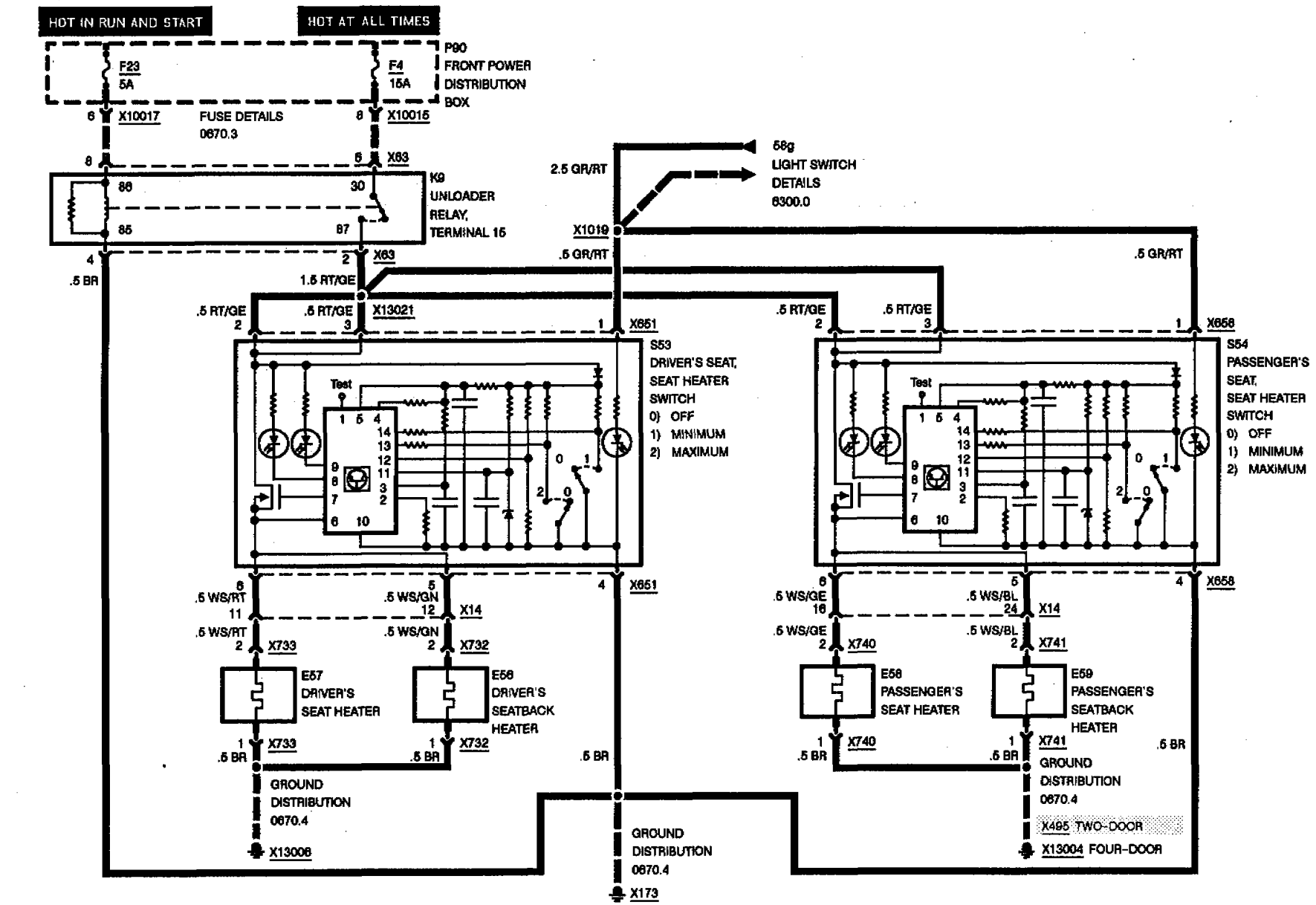

POWER SUN ROOF (SHD)

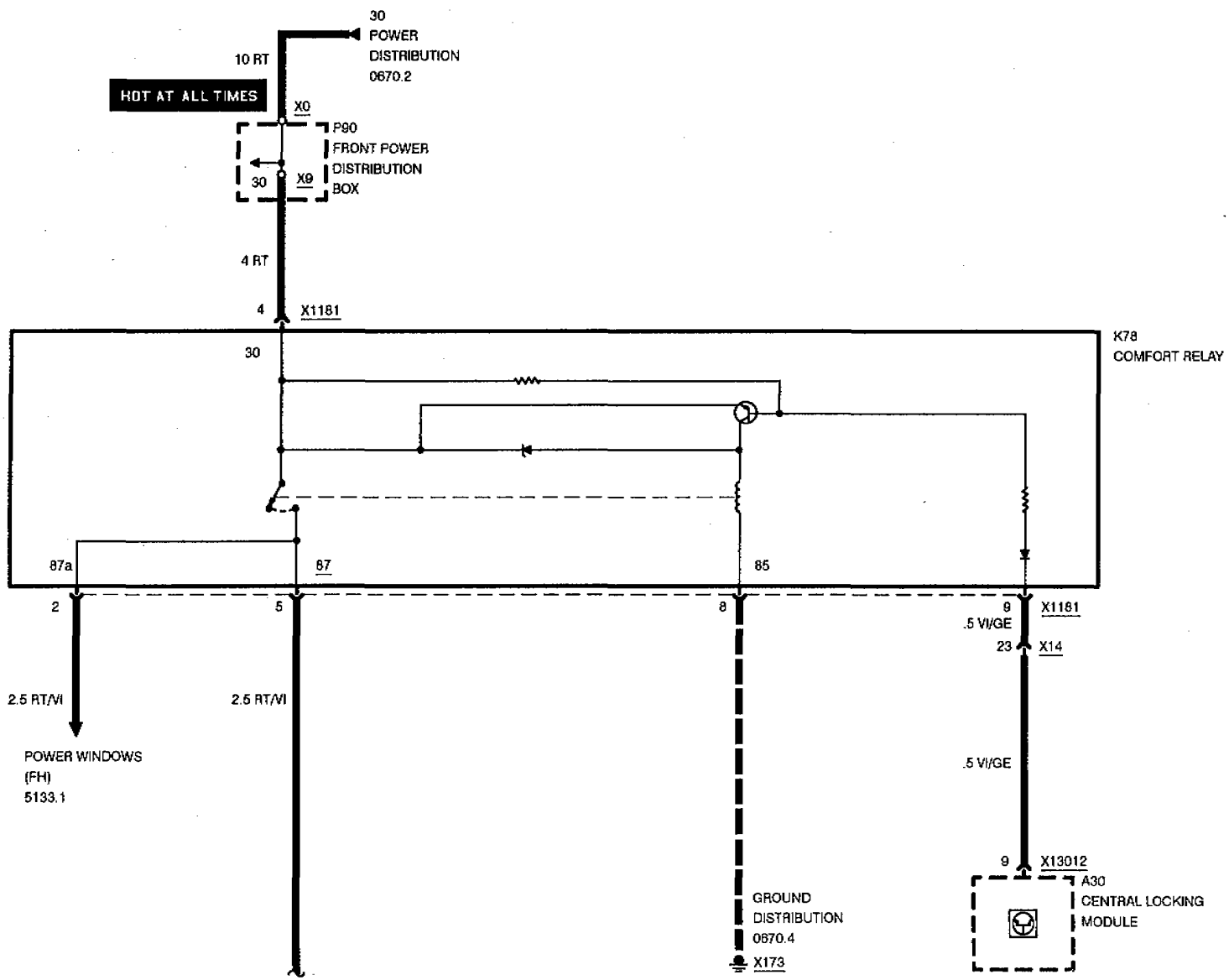

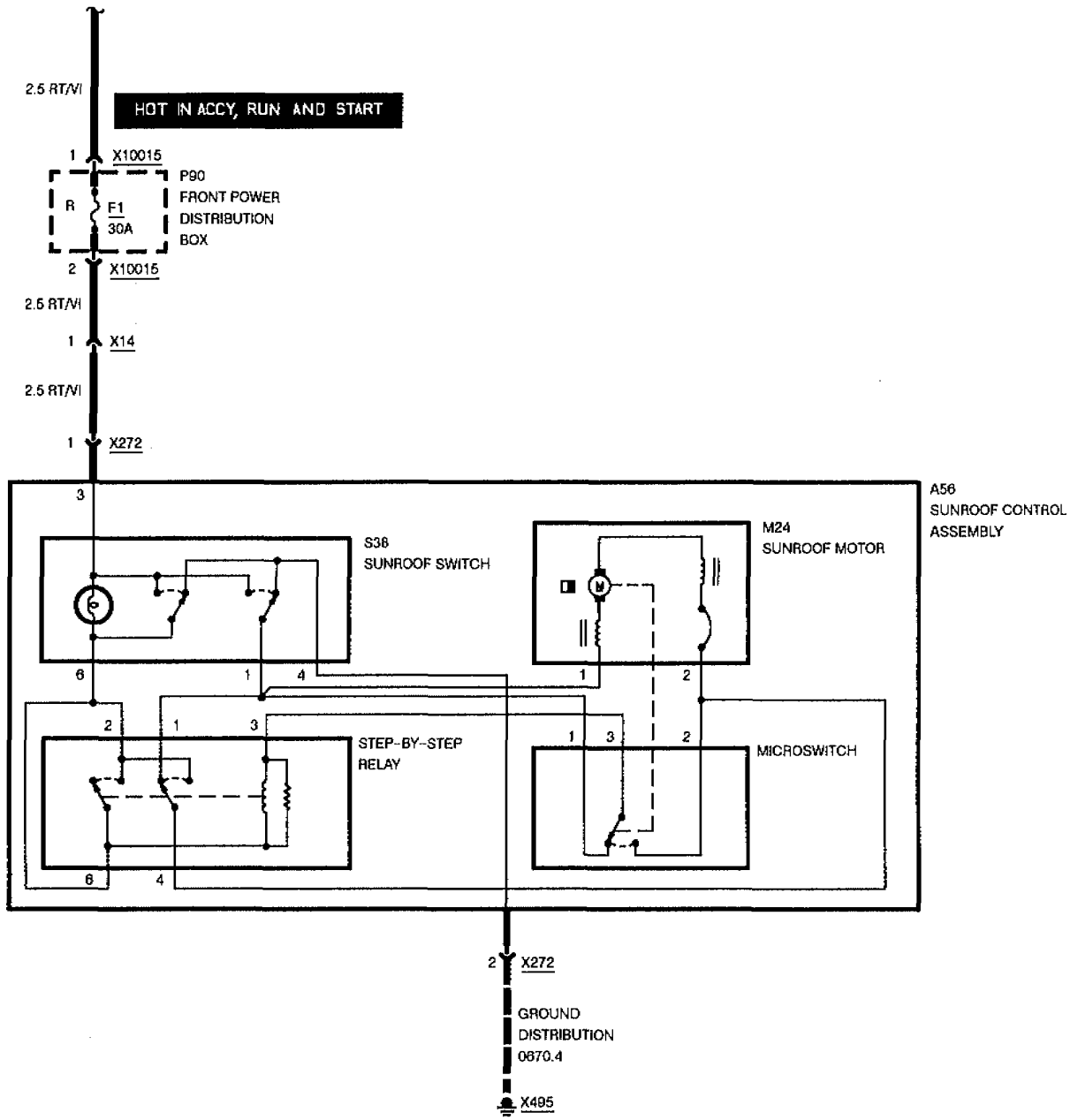
2.5 RT/VI
HOT IN ACCY, RUN AND START
1
X10015
P90
FRONT POWER
DISTRIBUTION
BOX
R
F1
30A
2
X10015
2.5 RT/VI
1
X14
2.5 RT/VI
1
X272
3
A56
SUNROOF CONTROL
ASSEMBLY
S36
SUNROOF SWITCH
M24
SUNROOF MOTOR
6
1
4
1
2
2
1
3
STEP-BY-STEP
RELAY
1
3
2
MICROSWITCH
6
4
2
X272
GROUND
DISTRIBUTION
0670.4
X495

HORN

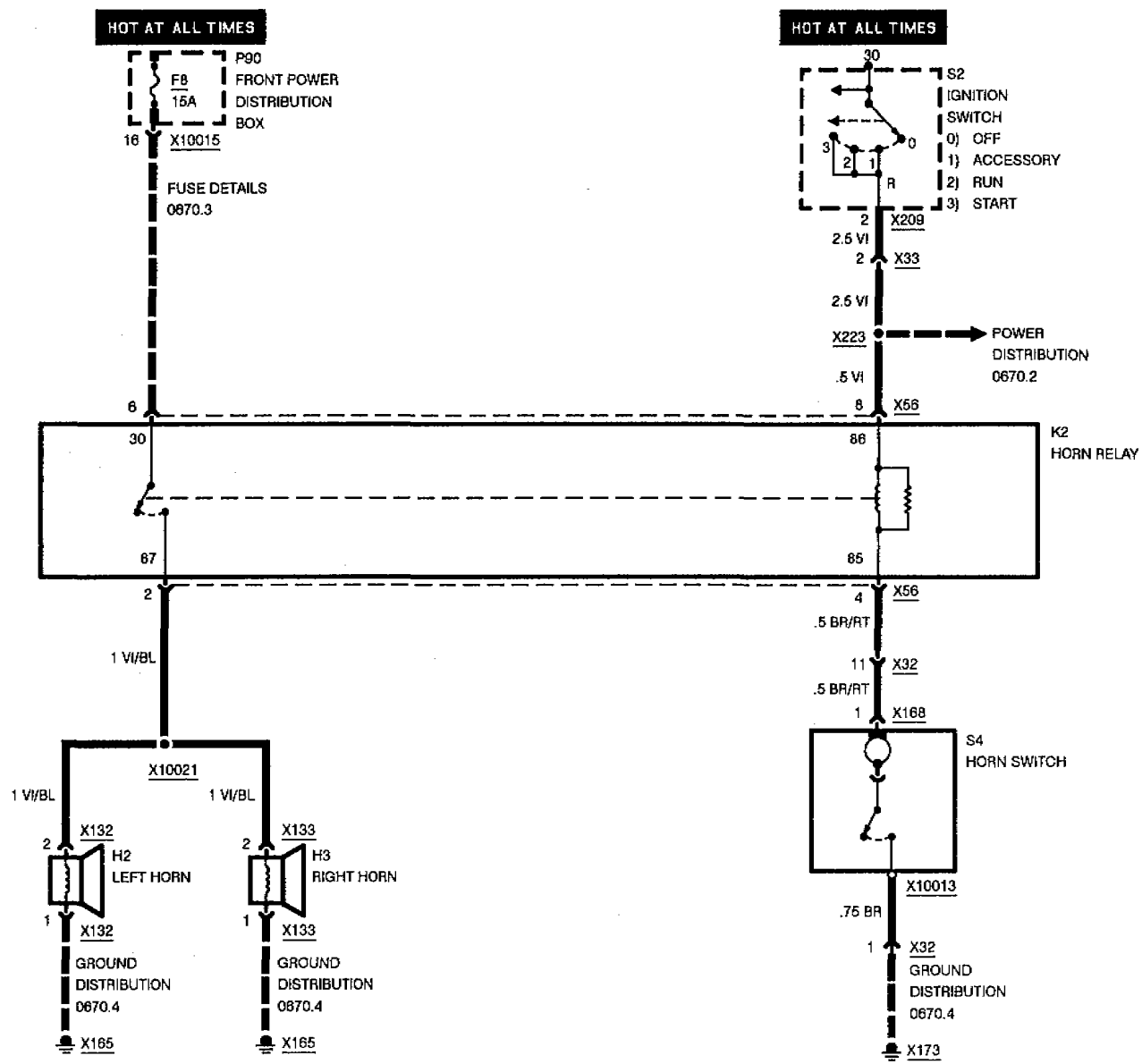
HOT AT ALL TIMES
F8
15A
P90
FRONT POWER
DISTRIBUTION
BOX
16
X10015
FUSE DETAILS
0670.3
HOT AT ALL TIMES
30
S2
IGNITION
SWITCH
0) OFF
1) ACCESSORY
2) RUN
3) START
3
2
1
0
R
2
X209
2.5 VI
2
X33
2.5 VI
X223
POWER
DISTRIBUTION
0670.2
.5 VI
6
8
X56
30
86
K2
HORN RELAY
87
85
2
4
X56
.5 BR/RT
1 VI/BL
11
X32
.5 BR/RT
1
X168
S4
HORN SWITCH
X10021
1 VI/BL
1 VI/BL
2
X132
H2
LEFT HORN
1
X132
GROUND
DISTRIBUTION
0670.4
X165
2
X133
H3
RIGHT HORN
1
X133
GROUND
DISTRIBUTION
0670.4
X165
X10013
.75 BR
1
X32
GROUND
DISTRIBUTION
0670.4
X173

WIPER/WASHER MODULE (WWM)

USA

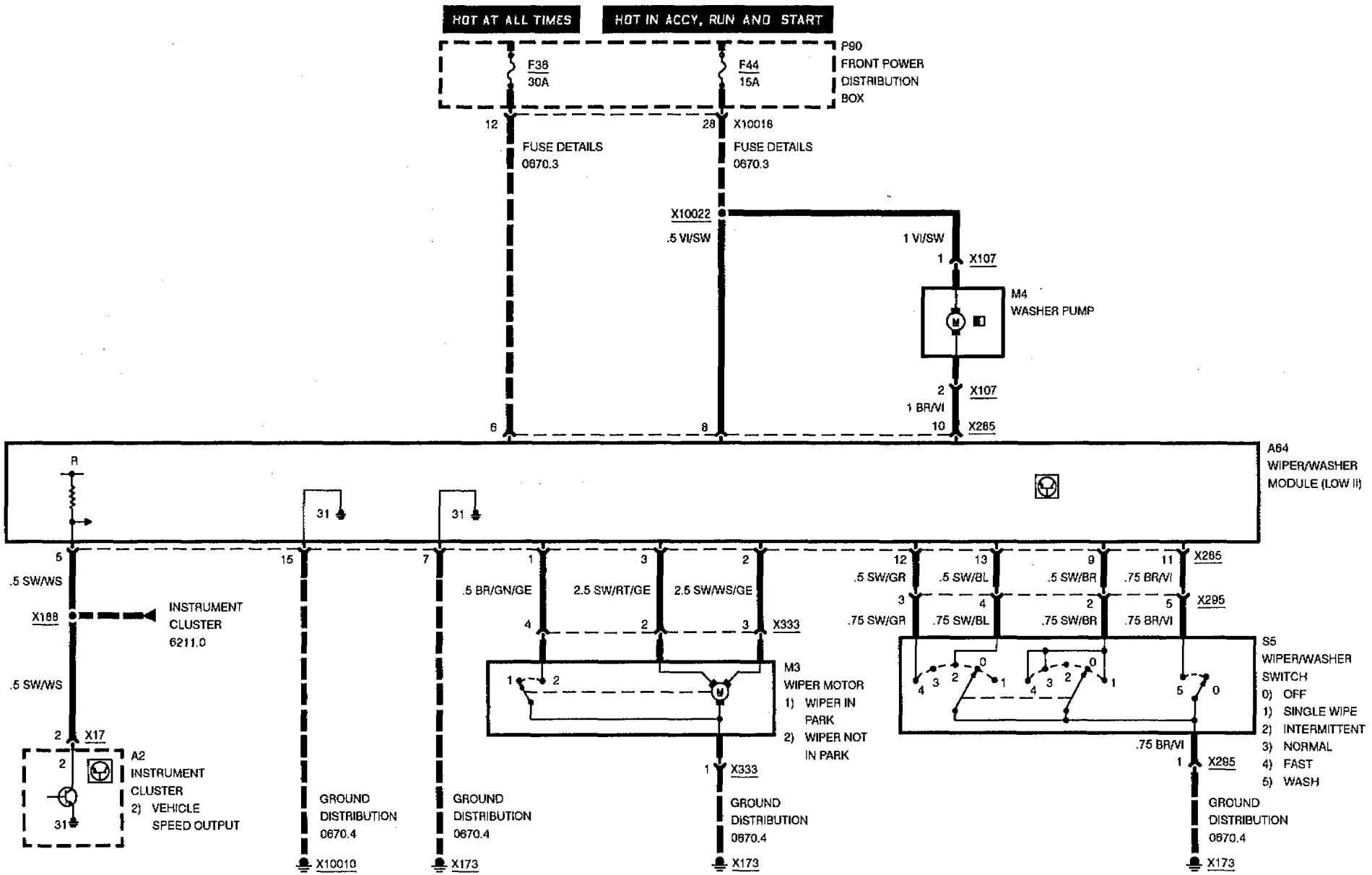

WIPER/WASHER MODULE (WWM)

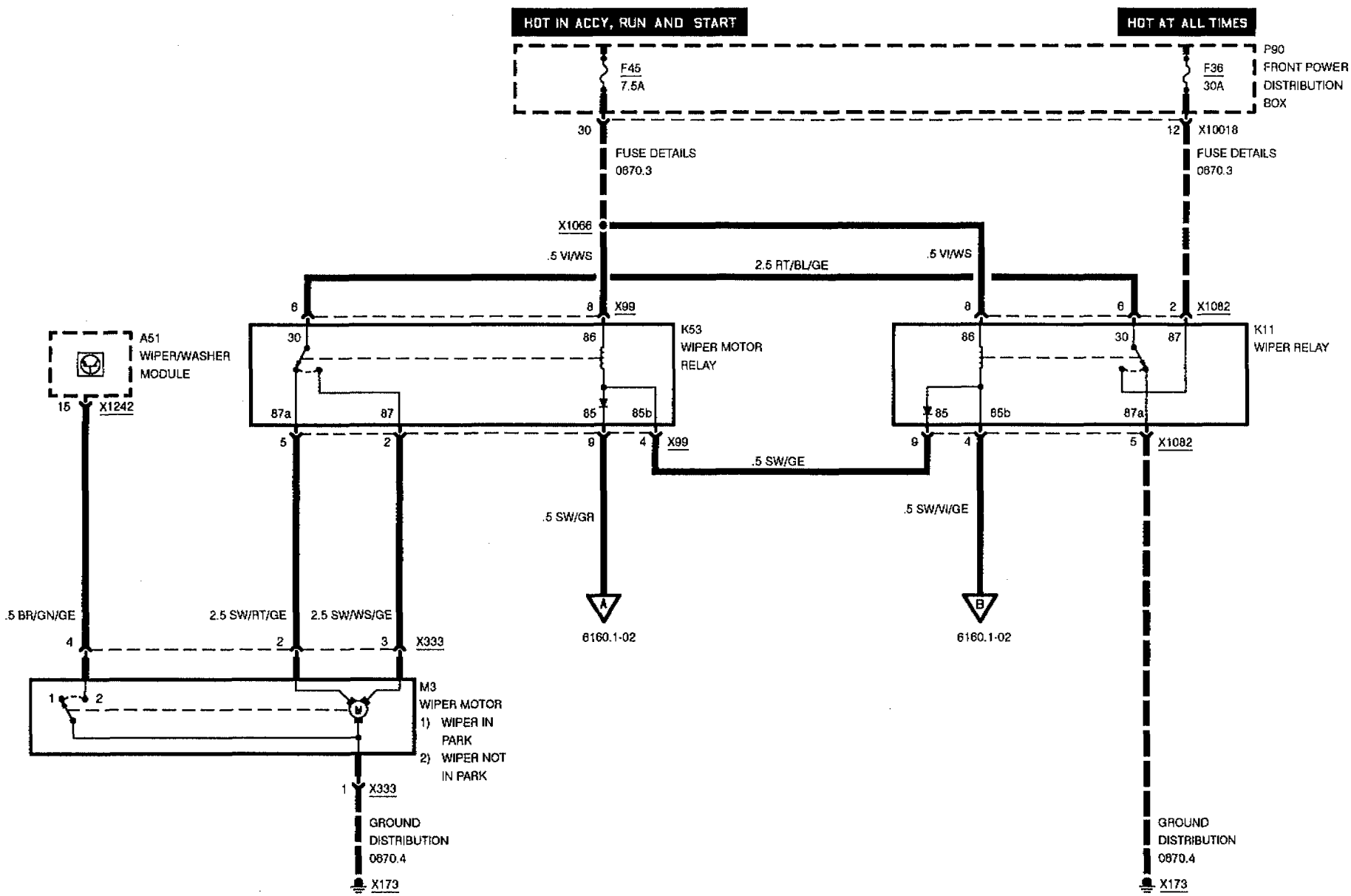

WIPER/WASHER MODULE (WWM)

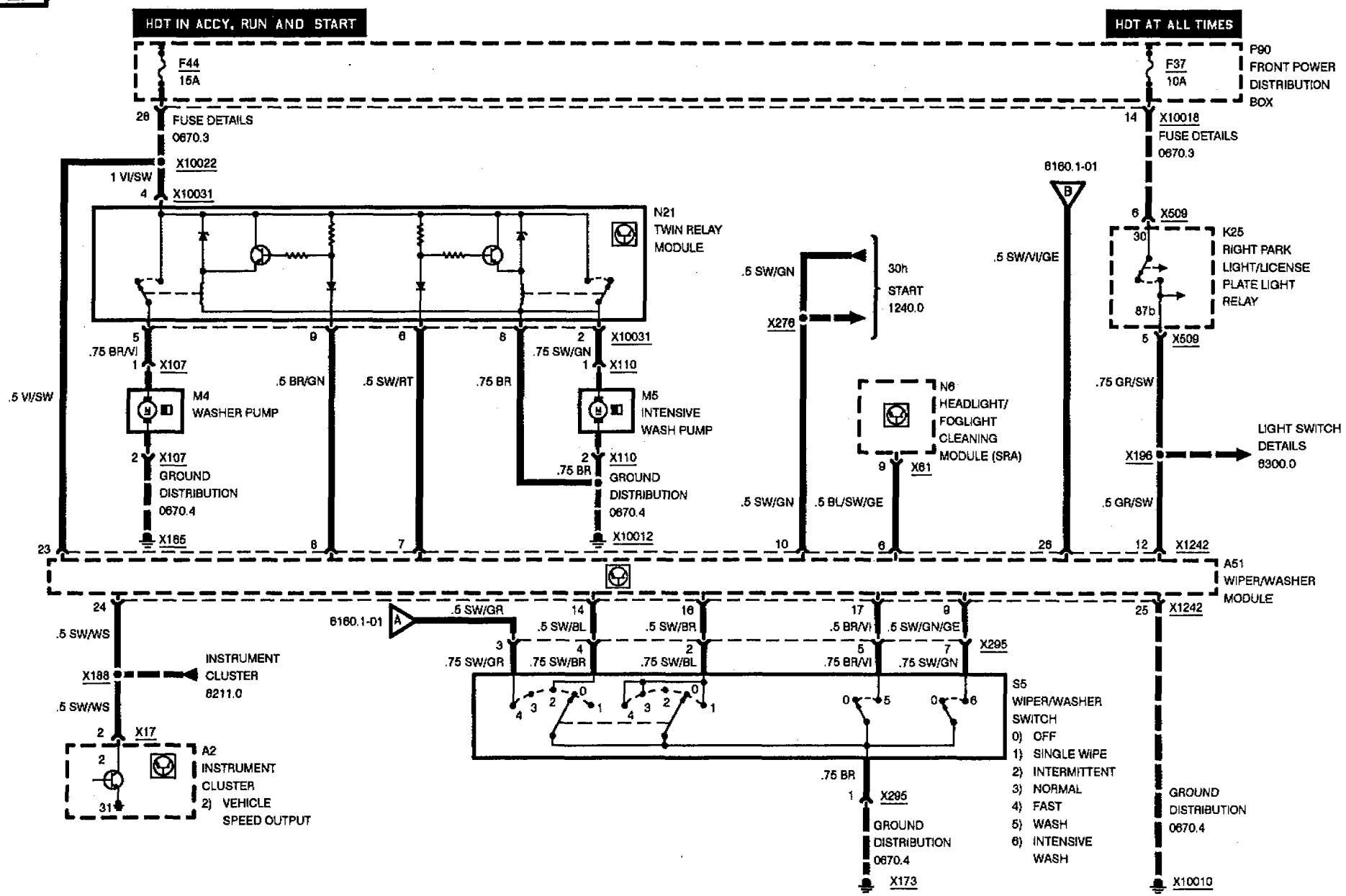

HEADLIGHT WASHER (SRA)

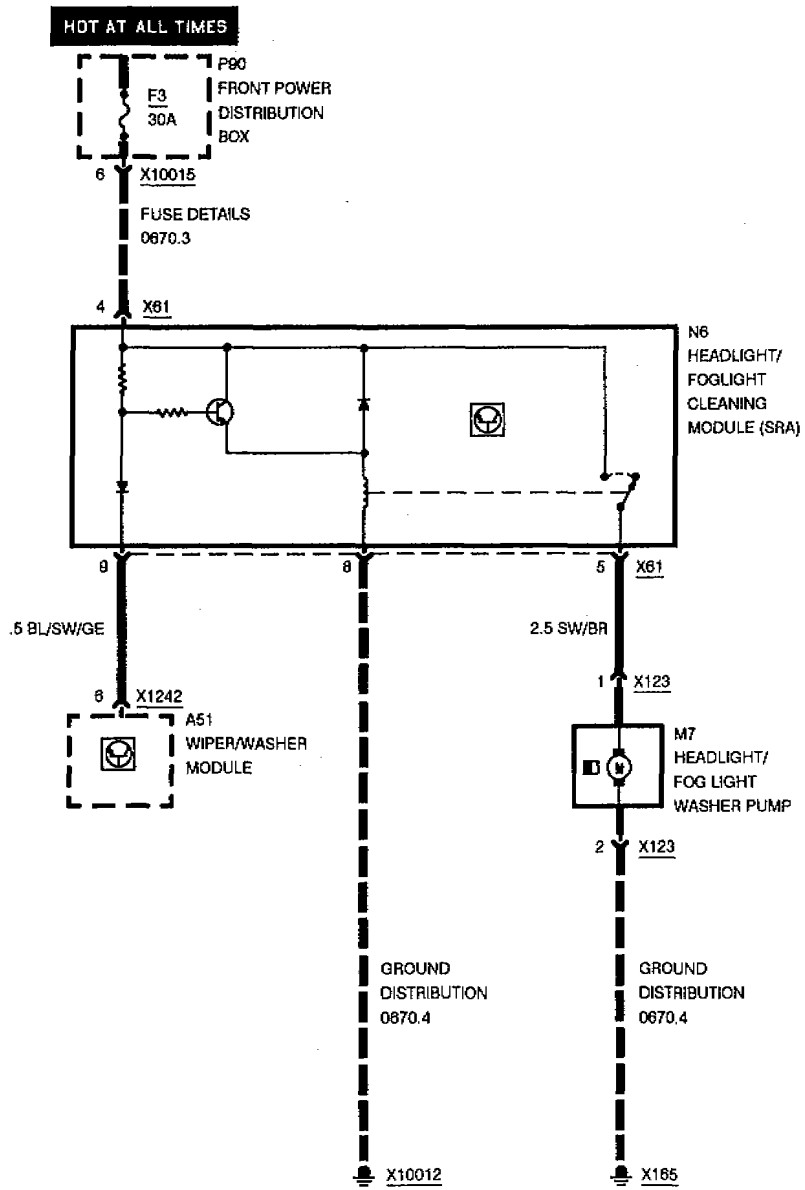

WINDSHIELD WASHER JET HEATERS

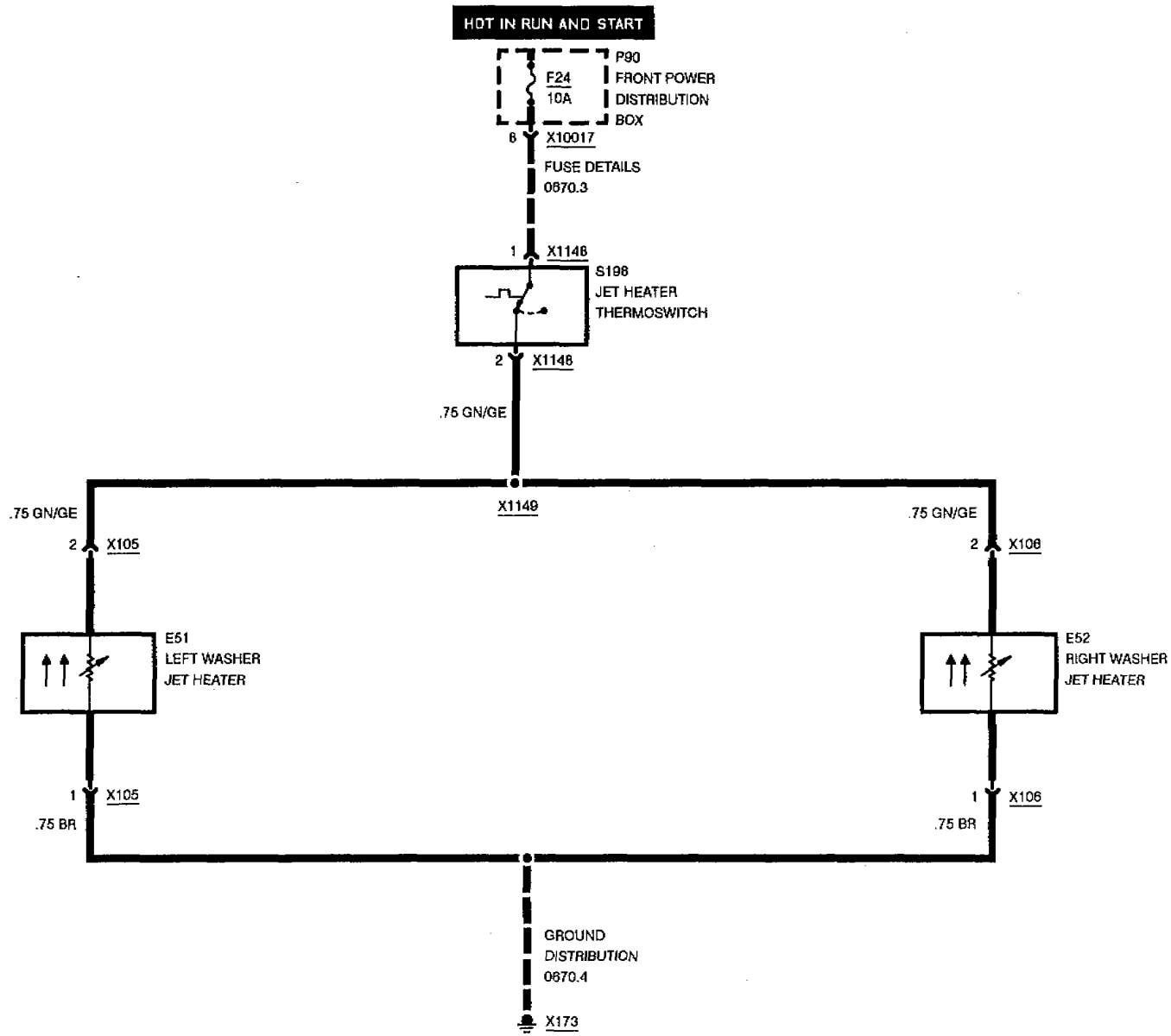

12/93 — 6211 0 — 1993
12/93 — 6211 0 — 1993

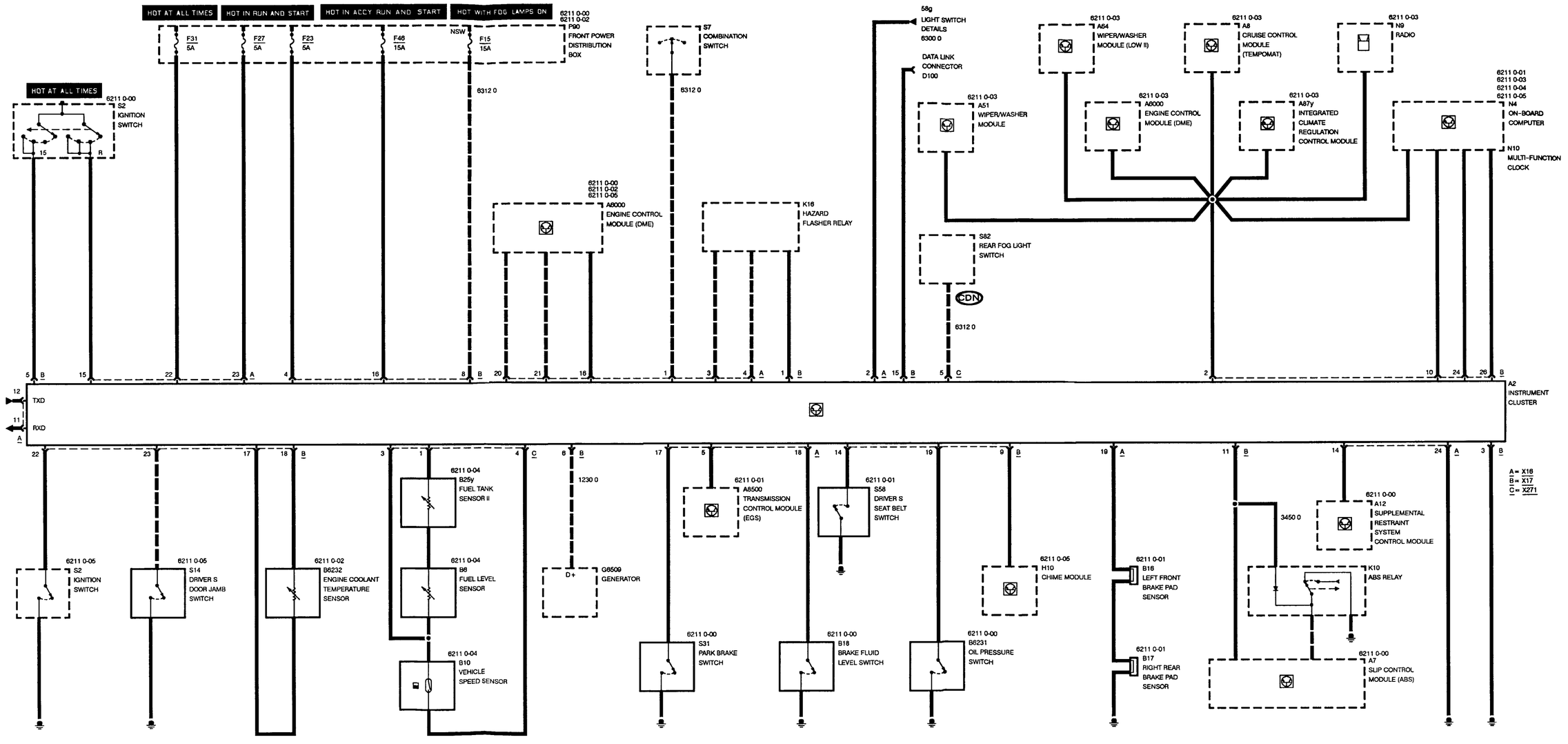

Pin Assignments

A = X16	26 Pins, white
B = X17	26 Pins, blue
C = X271	12 Pins, black

X16

Pin	Type	Description/Function	Connection
1	E	High beam indicator control	Combination switch
2	E	Terminal 58g, instument illumination power	Dimmer
3	E	Right turn signal indicator control	Hazard flasher relay
4	E	Left turn signal indicator control	Hazard flasher relay
5	E	Warning lamp for EGS fault (information signal transmission oil temperature)	Transmission control module (EGS)
6		Not used	
7		Not used	
8		Not used	
9		Not used	
10		Not used	
11	A	RxD diagnostic data link	Data link connector
12	E/A	TxD diagnostic data link	Data link connector
13		Not used	
14	E	Airbag warning lamp (SRS) control	Supplemental restraint system control module
15	E	Voltage supply, terminal R for airbag warning lamp (SRS)	Ignition switch, terminal R
16	E	"Check engine" indicator control	Engine control module (DME)
17	E	Park brake warning lamp control	Park brake switch
18	E	Brake fluid warning lamp control	Brake fluid level switch
19	E	Brake pad wear warning lamp control	Brake pad sensors
20	E	Crankshaft RPM speed signal TD	Engine control module (DME)
21	E	Fuel consumption signal + KVA	Engine control module (DME)
22	E	Voltage supply, terminal 30	Front power distribution box, fuse 31
23	E	Voltage supply, terminal 15 for indicator and warning lamps	Front power distribution box, fuse 27
24	M	Ground supply, terminal 31 for instrument cluster electronics	Ground point

E = Input, A = Output, M = Ground

Pin Assignments

Pin	Type	Description/Function	Connection
25		Not used	
26		Not used	

X17

Pin	Type	Description/Function	Connection
1	E	Trailer turn signal indicator control	Hazard flasher relay
2	A	Vehicle speed signal	Various control modules
3	M	Ground supply, terminal 31 for indicator and warning lamps	Ground point
4	E	Voltage supply, terminal 15 for instrument cluster electronics	Front power distribution box, fuse 23
5	E	Voltage supply, terminal 15 for battery charge indicator	Ignition switch, terminal 15
6	E	Ground supply, terminal 61 for battery charge indicator	Generator
7		Not used	
8	E	Fog light indicator control	Front power distribution box, fuse 15
9	A	Sound tone signal	Chime module
10	A	Information signal, fuel tank content	On-board computer
11	E	Slip control system warning lamp (ABS) control	Slip control module (ABS)
12		Not used	
13		Not used	
14	E	Seat belt warning lamp control	Driver's seat belt switch
15	E	SIA reset/service interval indicator reset	Data link connector
16	E	Voltage supply, terminal R	Front power distibution box, fuse 46
17	E	Coolant temperature sensor	Coolant temperature sensor
18	E	Coolant temperature sensor	Coolant temperature sensor
19	E	Oil pressure warning lamp control	Oil pressure switch
20		Not used	
21		Not used	
22	E	Ignition key warning/audible ignition key warning	Ignition switch
23	E	Driver's door open	Driver's door jamb switch
24	A	Dimmer signal/brightness information signal for connected control modules	On-board computer or multi-function clock

E = Input, A = Output, M = Ground

Pin Assignments

Pin	Type	Description/Function	Connection
25		Not used	
26	E	Central indicator lamp/check-control	On-board computer or multi-function clock

X271

Pin	Type	Description/Function	Connection
1	A	Fuel level sensor	Fuel tank sensors
2		Not used	
3	A	Ground supply for fuel tank sensors and vehicle speed sensor	Fuel tank sensors and vehicle speed sensor
4	E	Position signal tw	Vehicle speed sensor
5 CDN	E	Rear fog lights indicator control	Rear fog light switch
6		Not used	
7		Not used	
8		Not used	
9		Not used	
10		Not used	
11		Not used	
12		Not used	

E = Input, A = Output, M = Ground

INSTRUMENT CLUSTER

INDICATORS

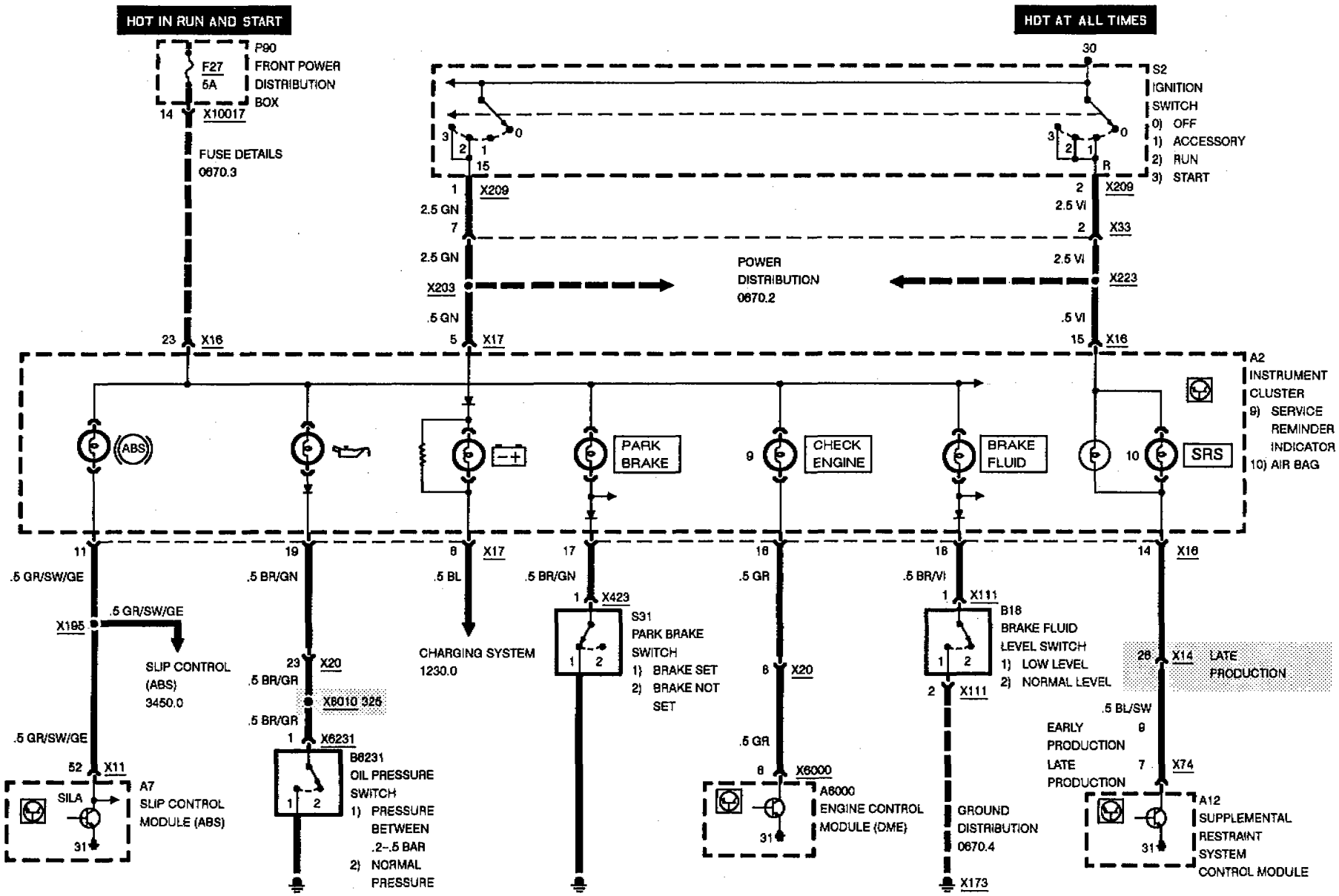

INSTRUMENT CLUSTER

INDICATORS

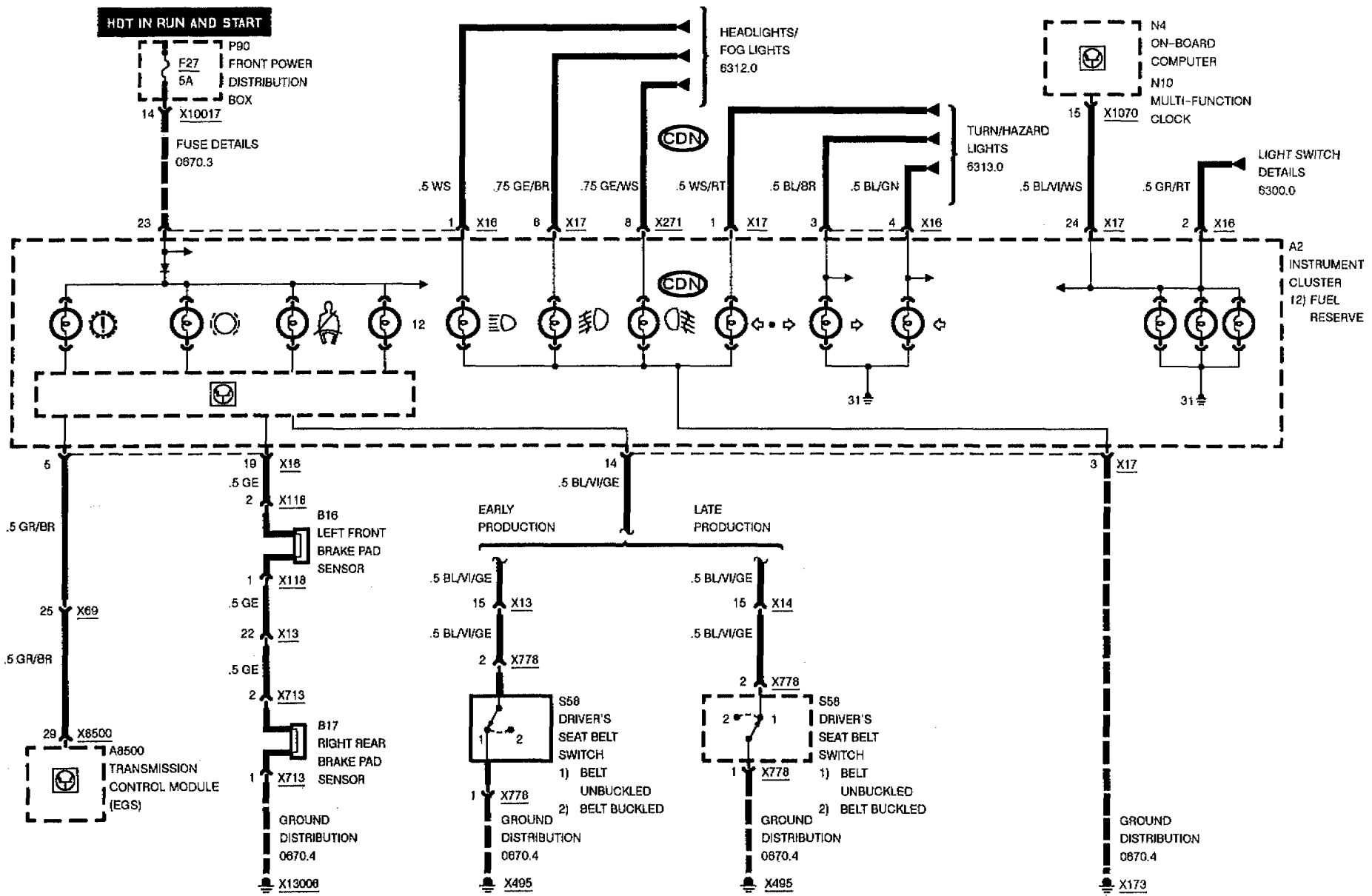

INSTRUMENT CLUSTER

INDICATORS

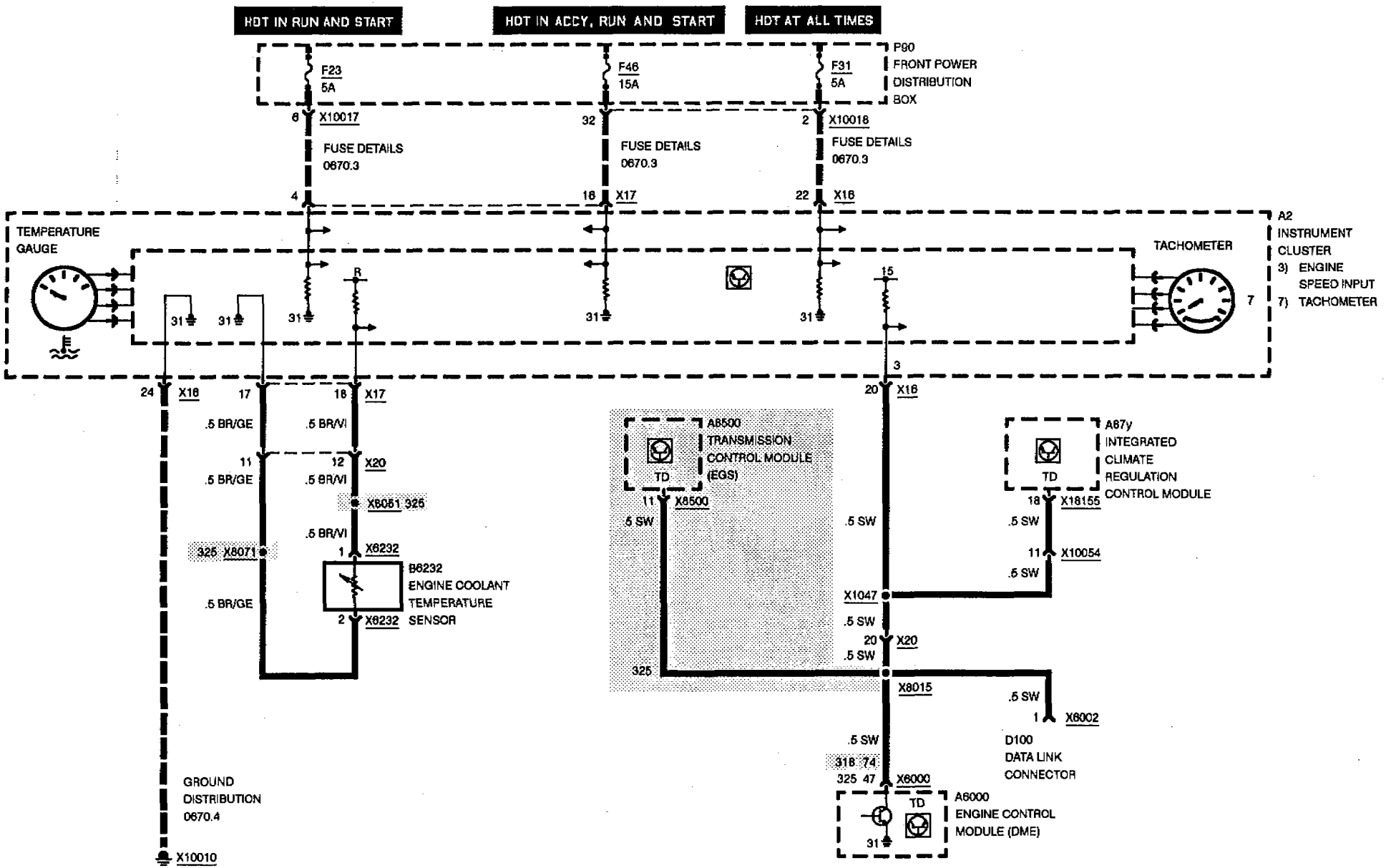

INSTRUMENT CLUSTER

SIGNAL-OUTPUT SPEEDOMETER

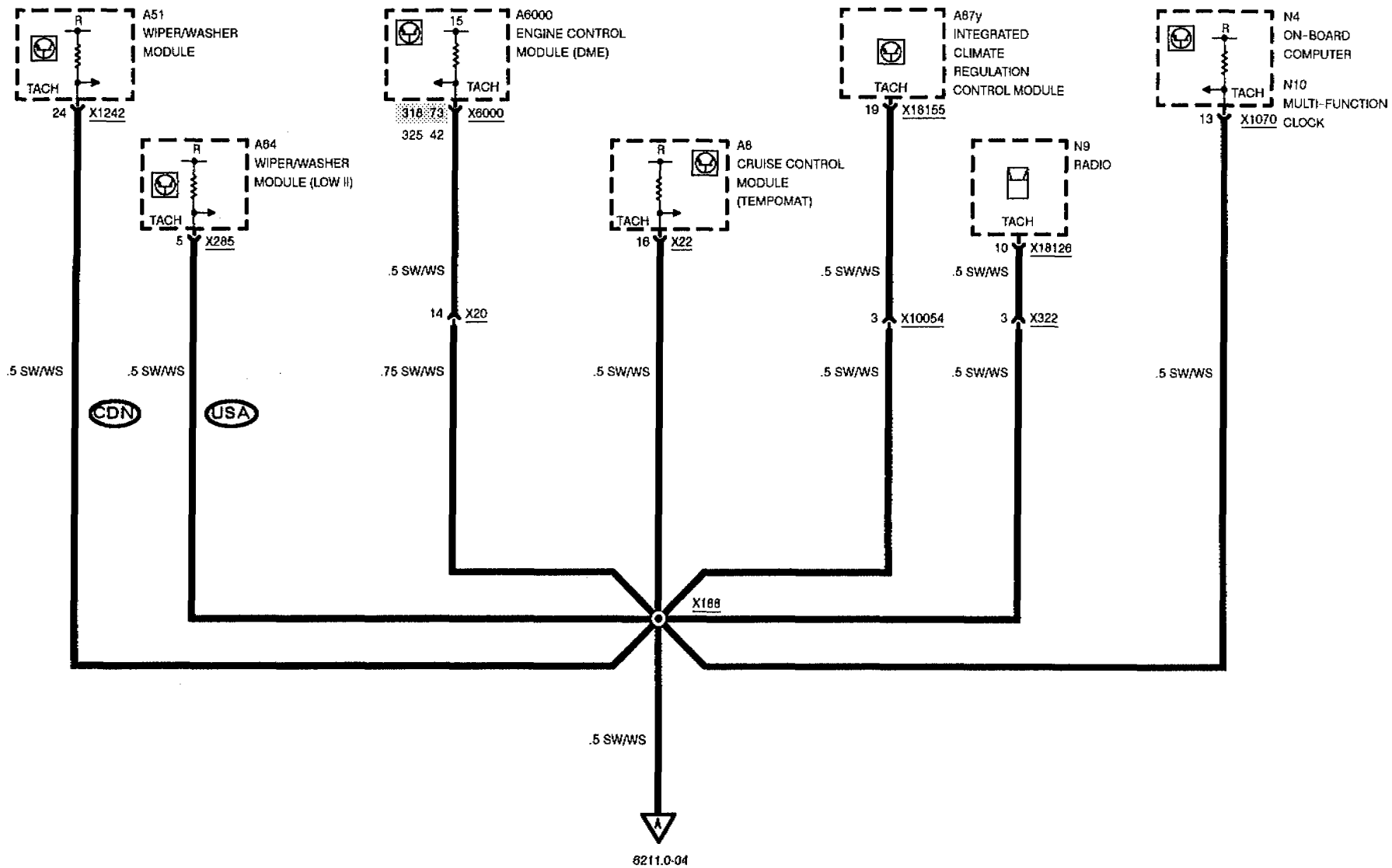

INSTRUMENT CLUSTER

INDICATORS

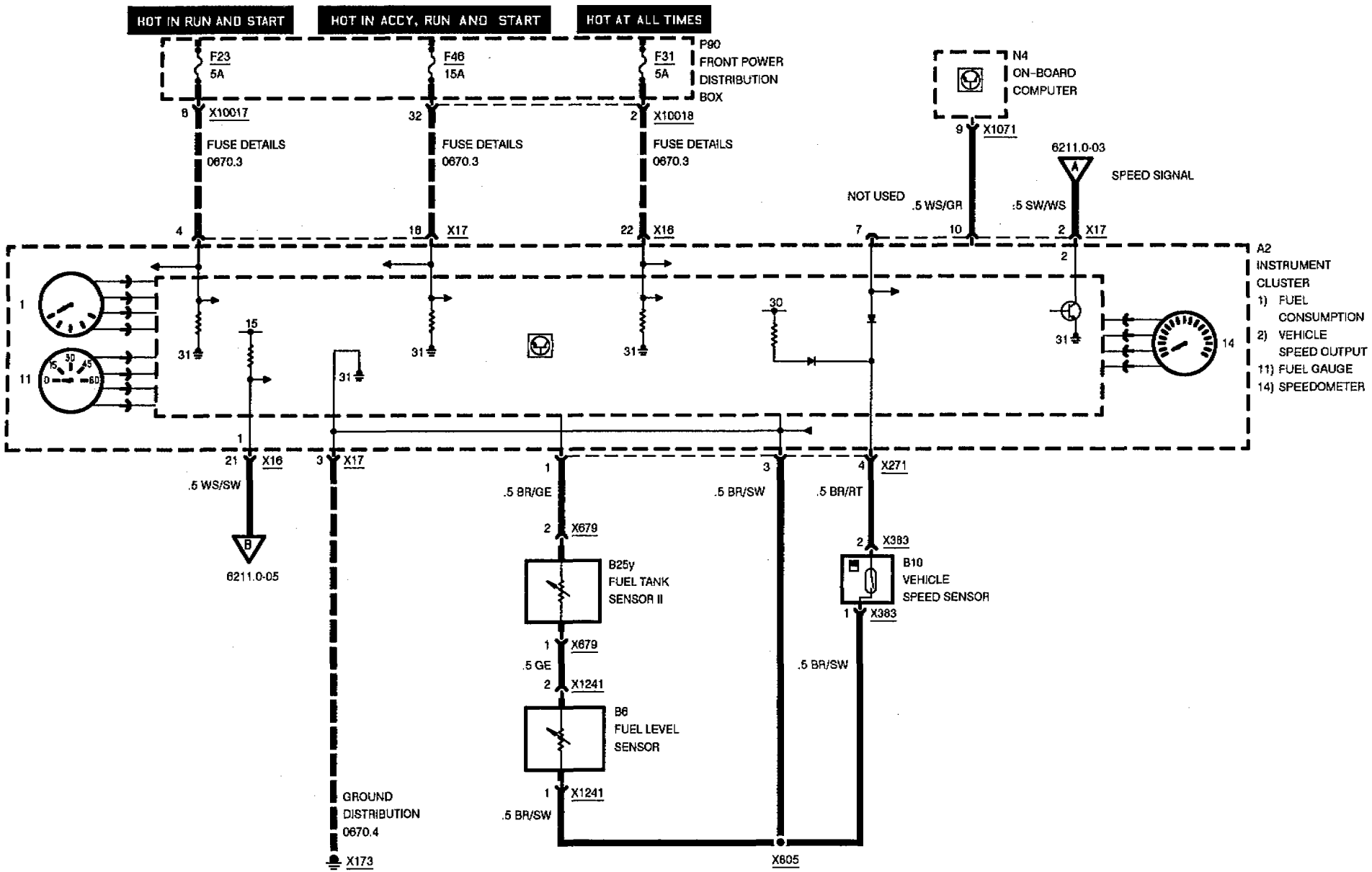

INSTRUMENT CLUSTER

INDICATORS

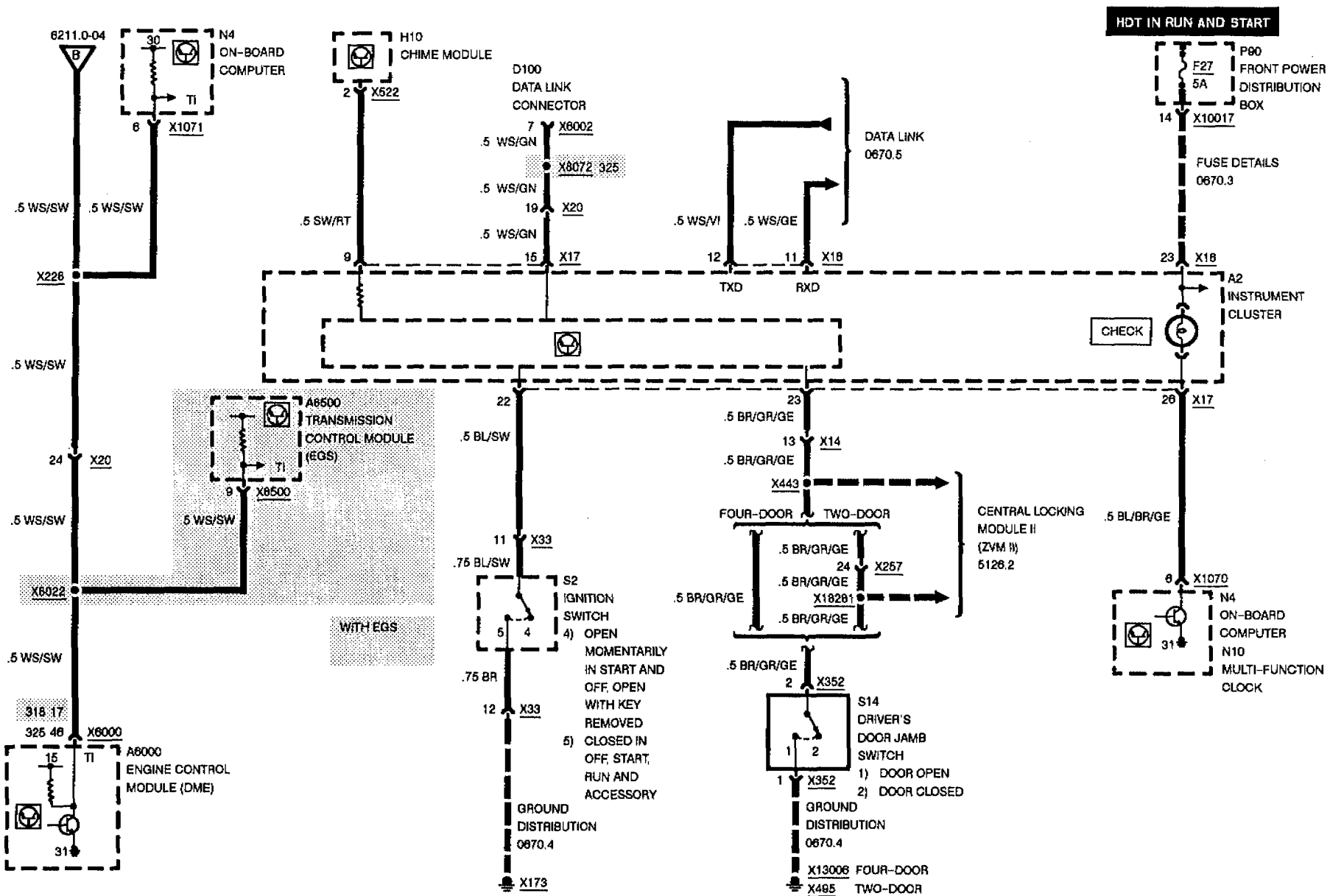

MULTI-FUNCTION CLOCK

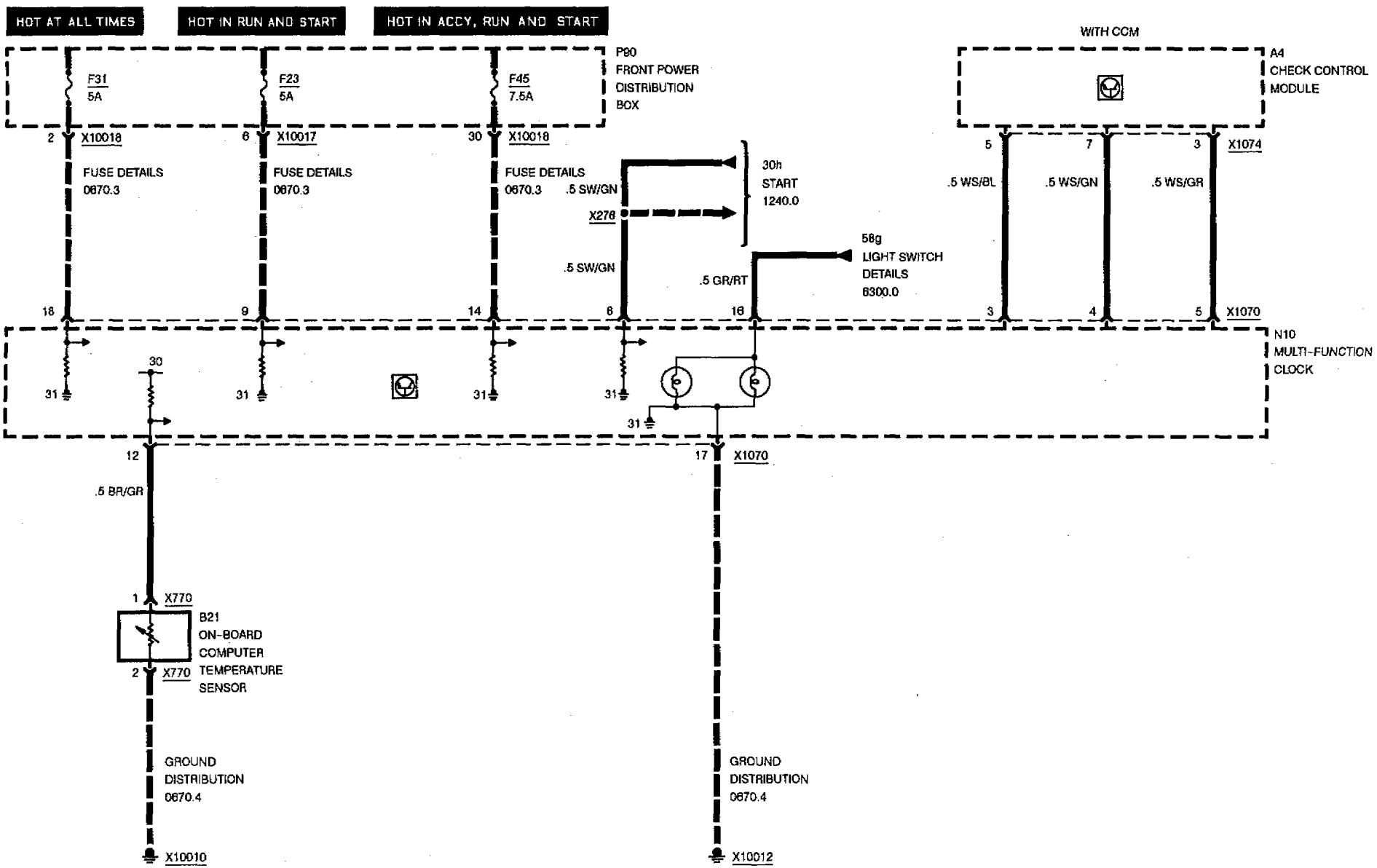

MULTI-FUNCTION CLOCK

CHIME, BRAKE LIGHT SWITCH

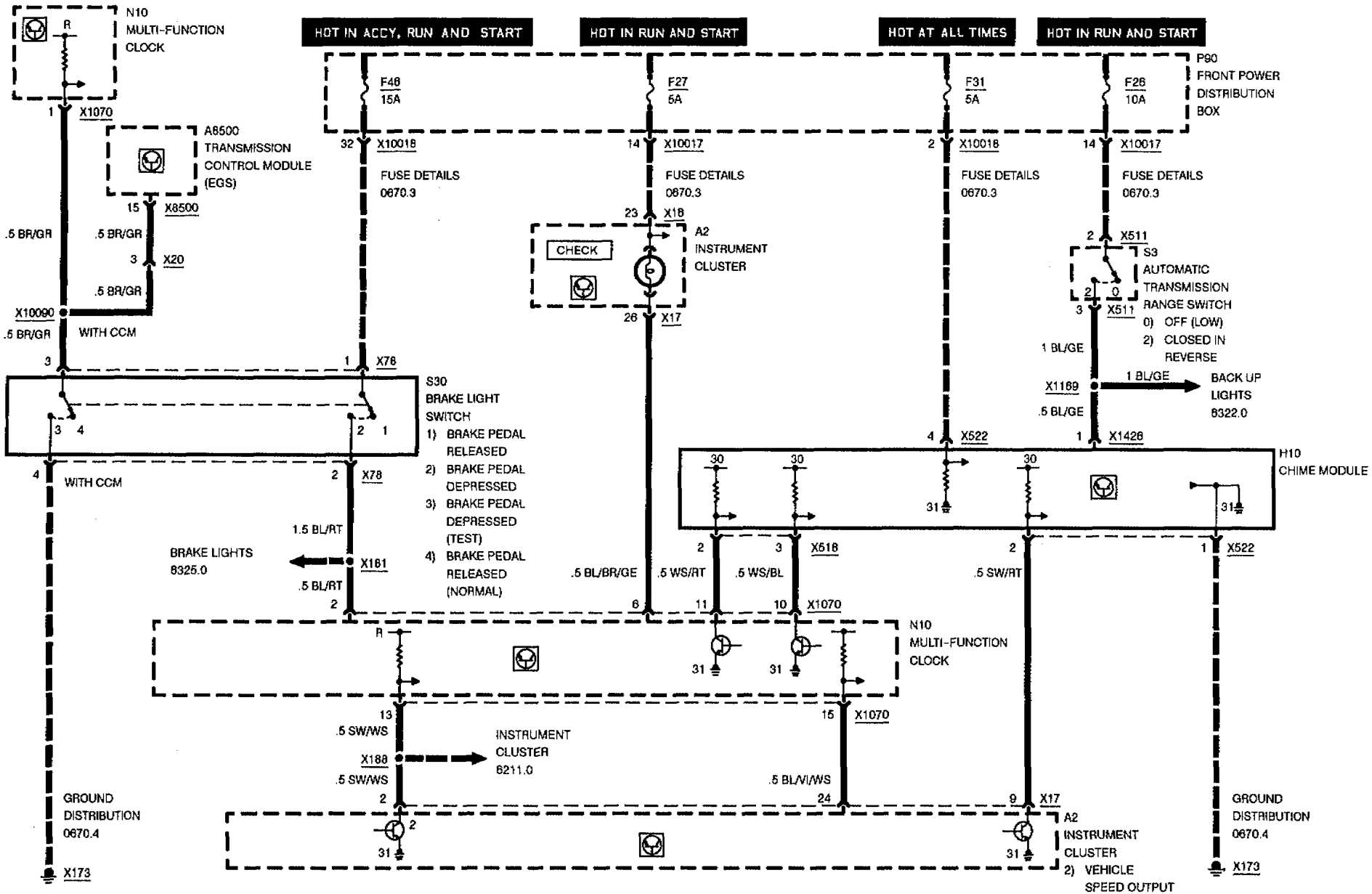

LIGHT SWITCH DETAILS

USA

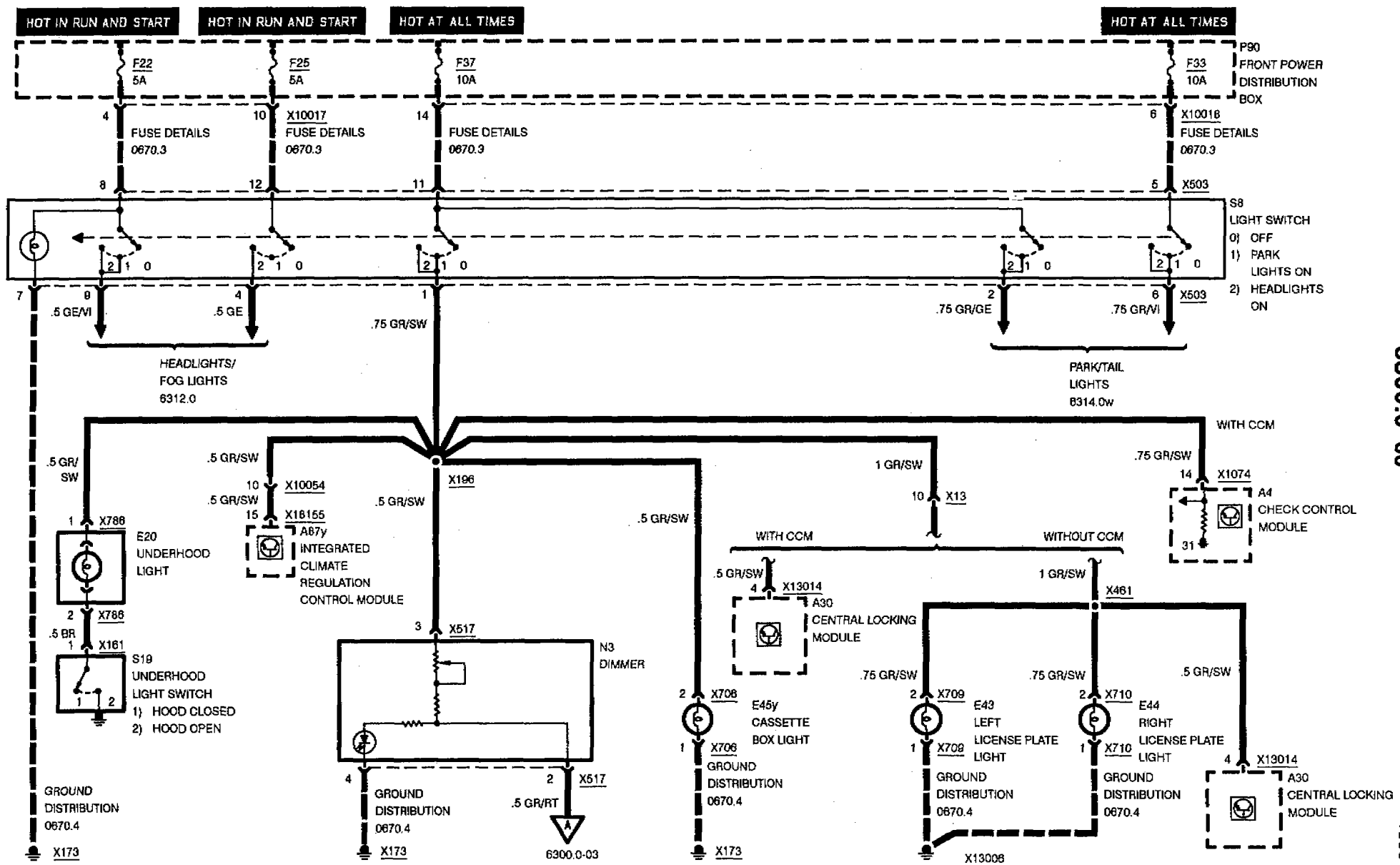

LIGHT SWITCH DETAILS

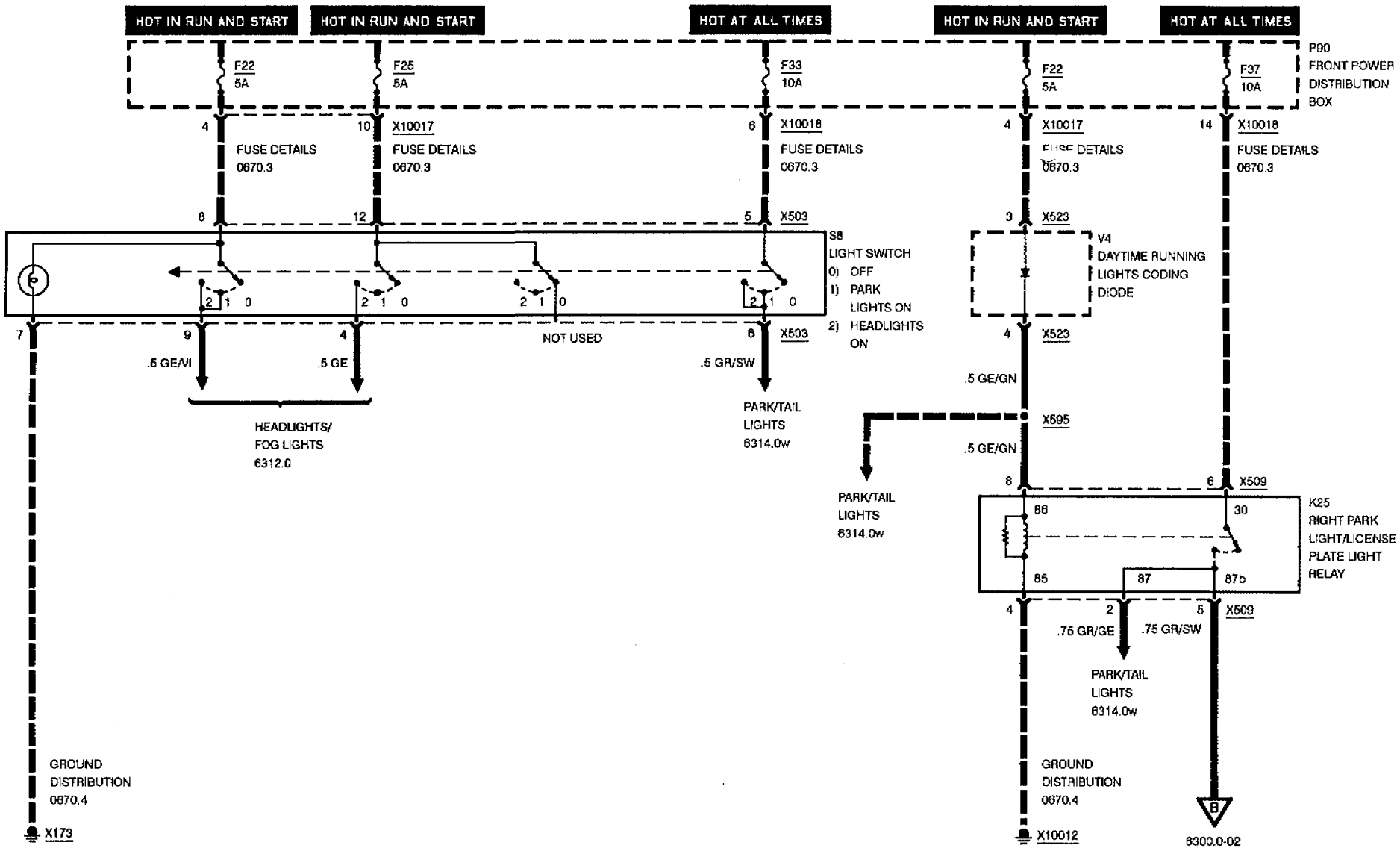

LIGHT SWITCH DETAILS

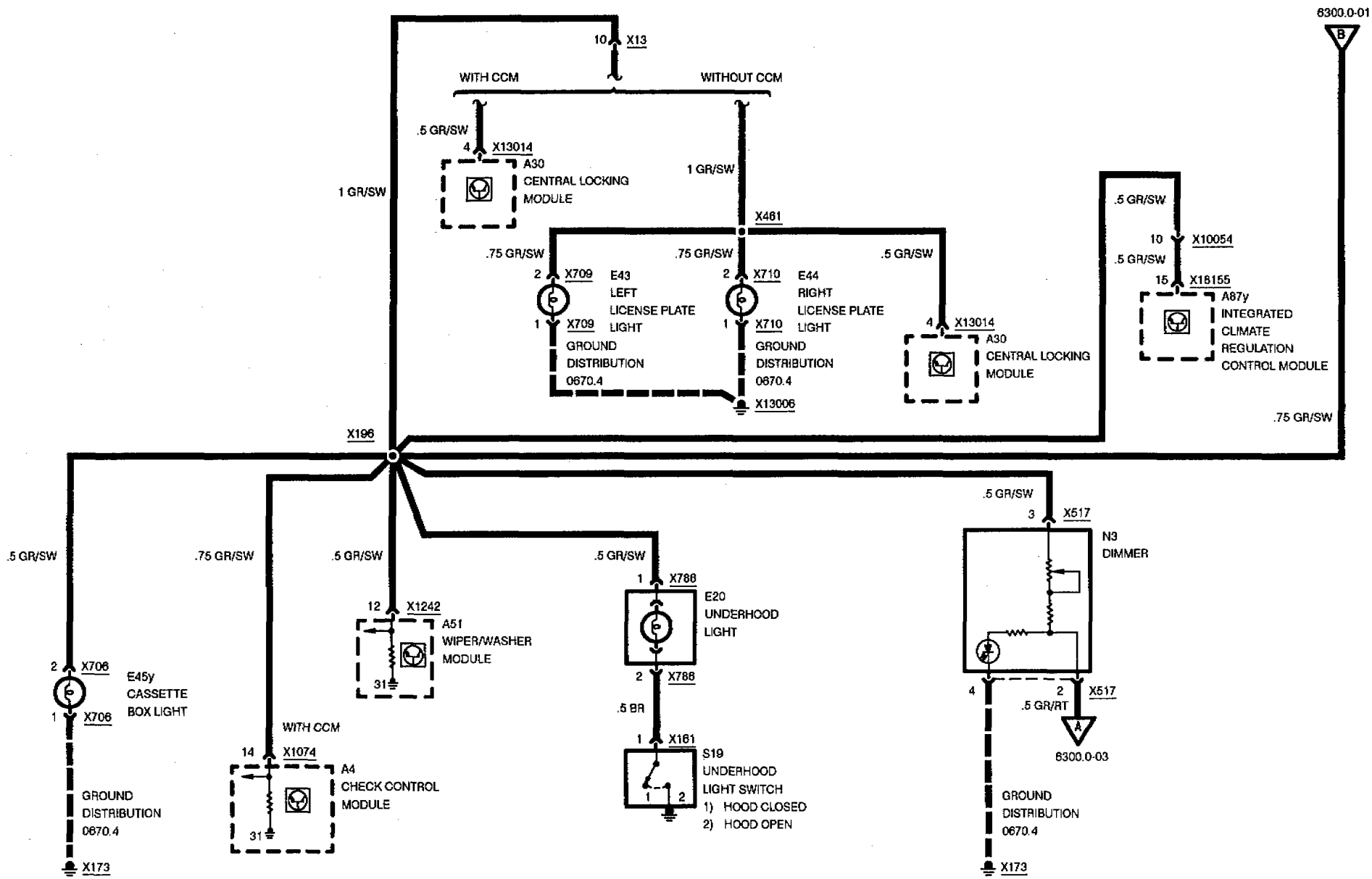

LIGHT SWITCH DETAILS

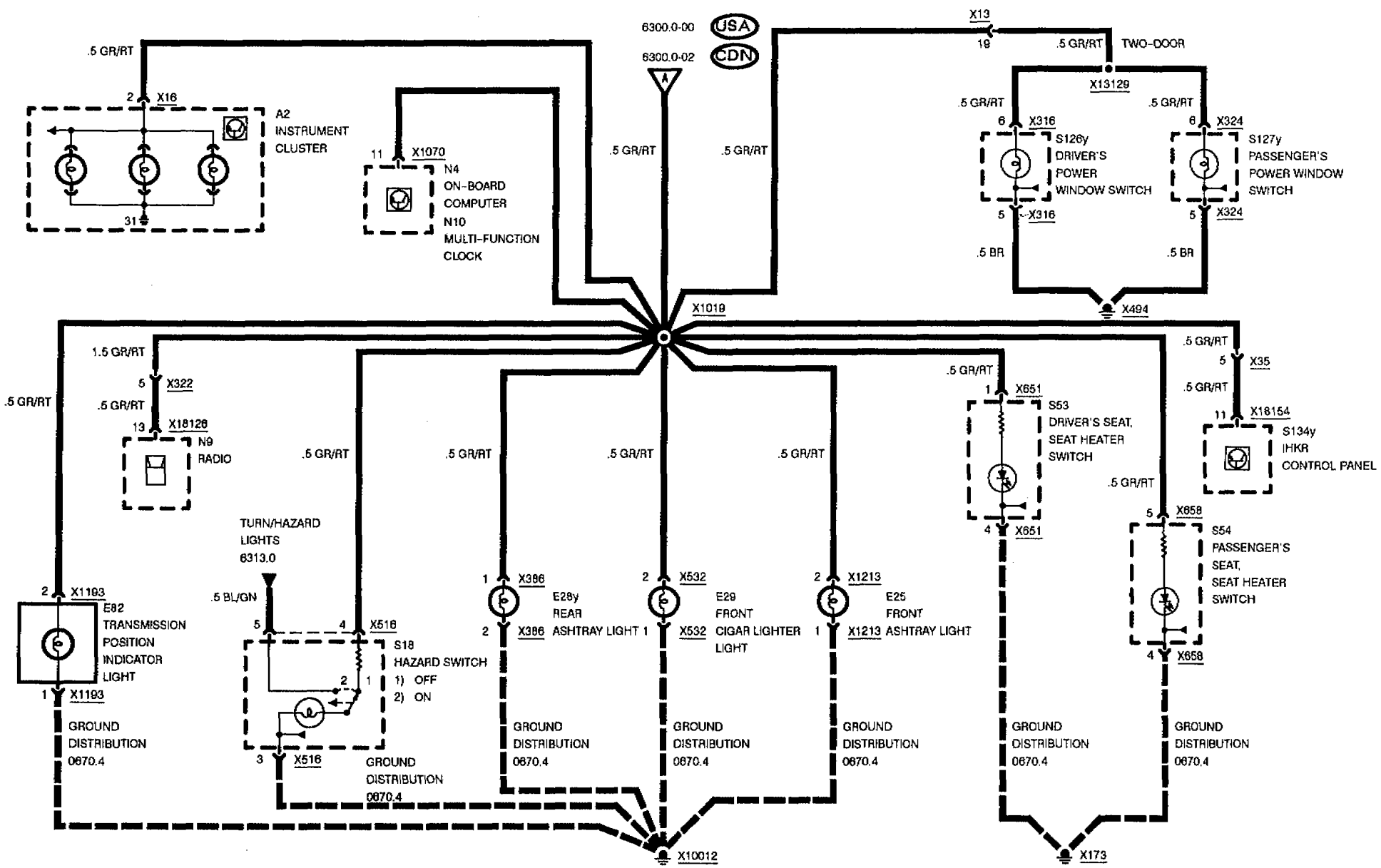

HEADLIGHTS/ FOG LIGHTS

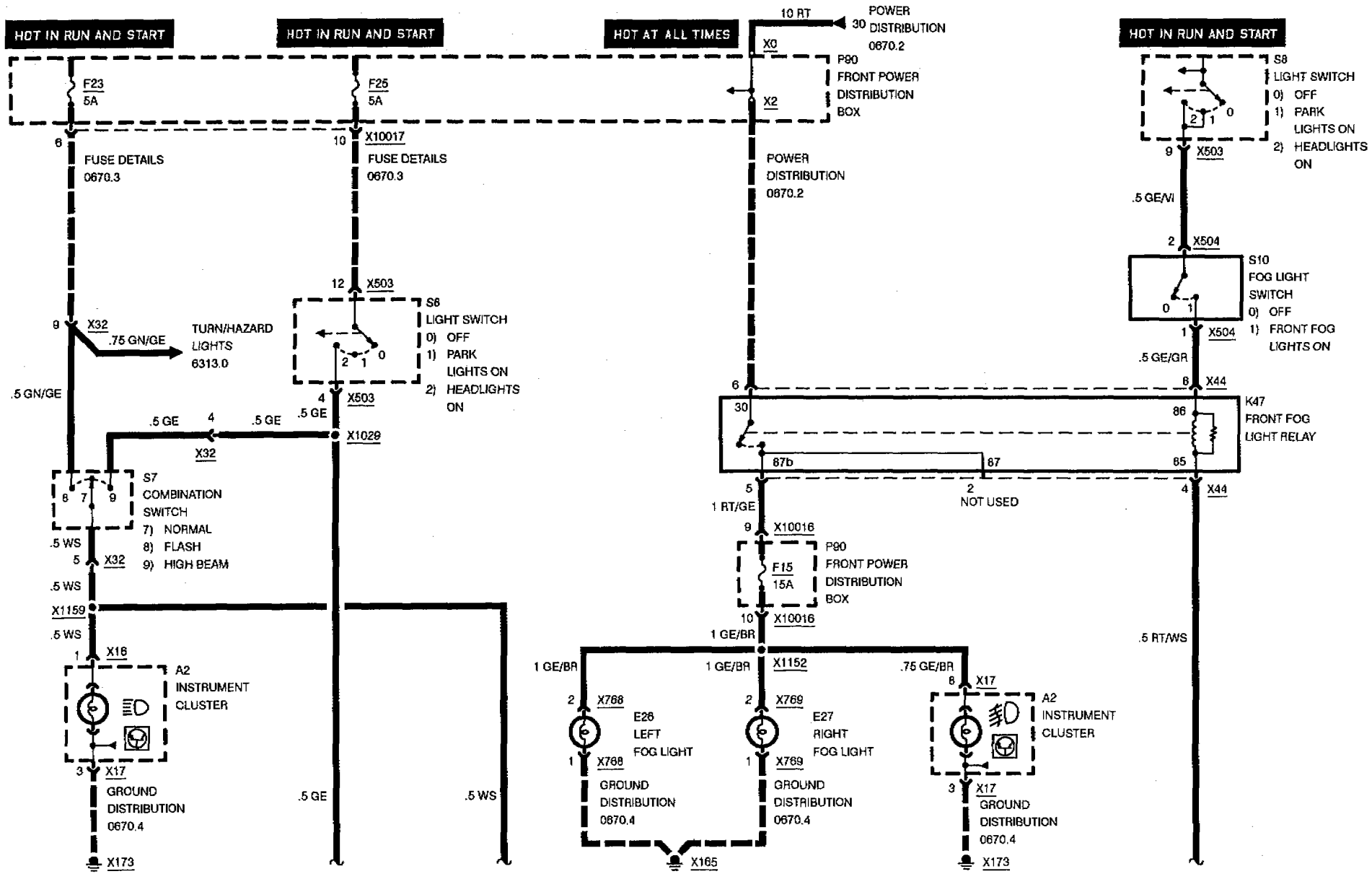

USA

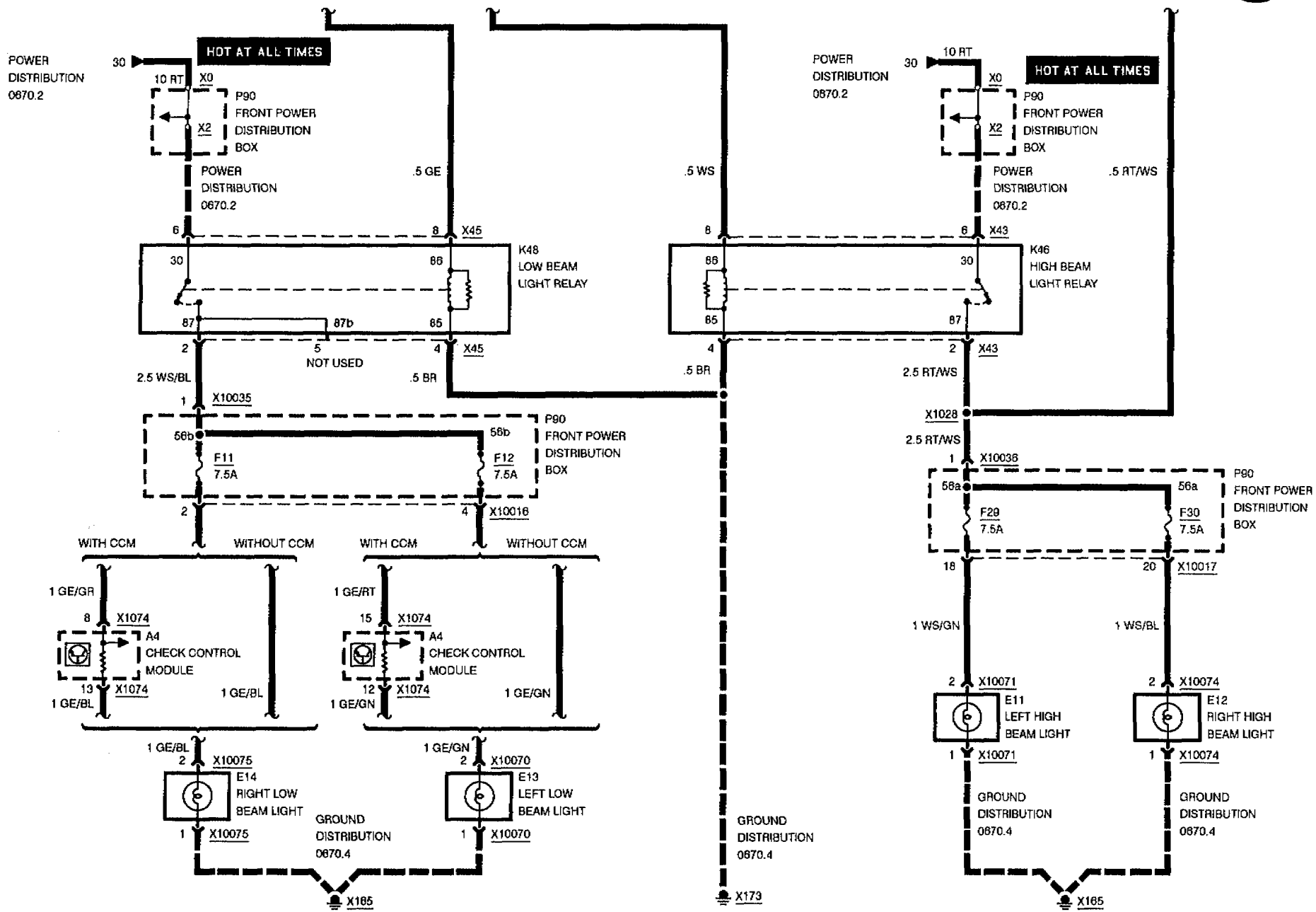
HOT AT ALL TIMES
POWER DISTRIBUTION 0670.2
30
10 RT
X0
P90 FRONT POWER DISTRIBUTION BOX
X2
.5 GE
6
8
X45
K48 LOW BEAM LIGHT RELAY
30
86
87
87b
85
2
5 NOT USED
4
X45
2.5 WS/BL
.5 BR
1
X10035
56b
F11 7.5A
F12 7.5A
2
4
X10016
WITH CCM
WITHOUT CCM
1 GE/GR
8
X1074
A4 CHECK CONTROL MODULE
13
X1074
1 GE/BL
1 GE/BL
1 GE/RT
15
X1074
12
X1074
1 GE/GN
1 GE/GN
2
X10075
E14 RIGHT LOW BEAM LIGHT
1
X10075
2
X10070
E13 LEFT LOW BEAM LIGHT
1
X10070
GROUND DISTRIBUTION 0670.4
X165
.5 WS
.5 BR
X173
10 RT
.5 RT/WS
X43
K46 HIGH BEAM LIGHT RELAY
2.5 RT/WS
X1028
X10036
56a
F29 7.5A
F30 7.5A
18
20
X10017
1 WS/GN
1 WS/BL
X10071
E11 LEFT HIGH BEAM LIGHT
X10074
E12 RIGHT HIGH BEAM LIGHT

HEADLIGHTS/ FOG LIGHTS

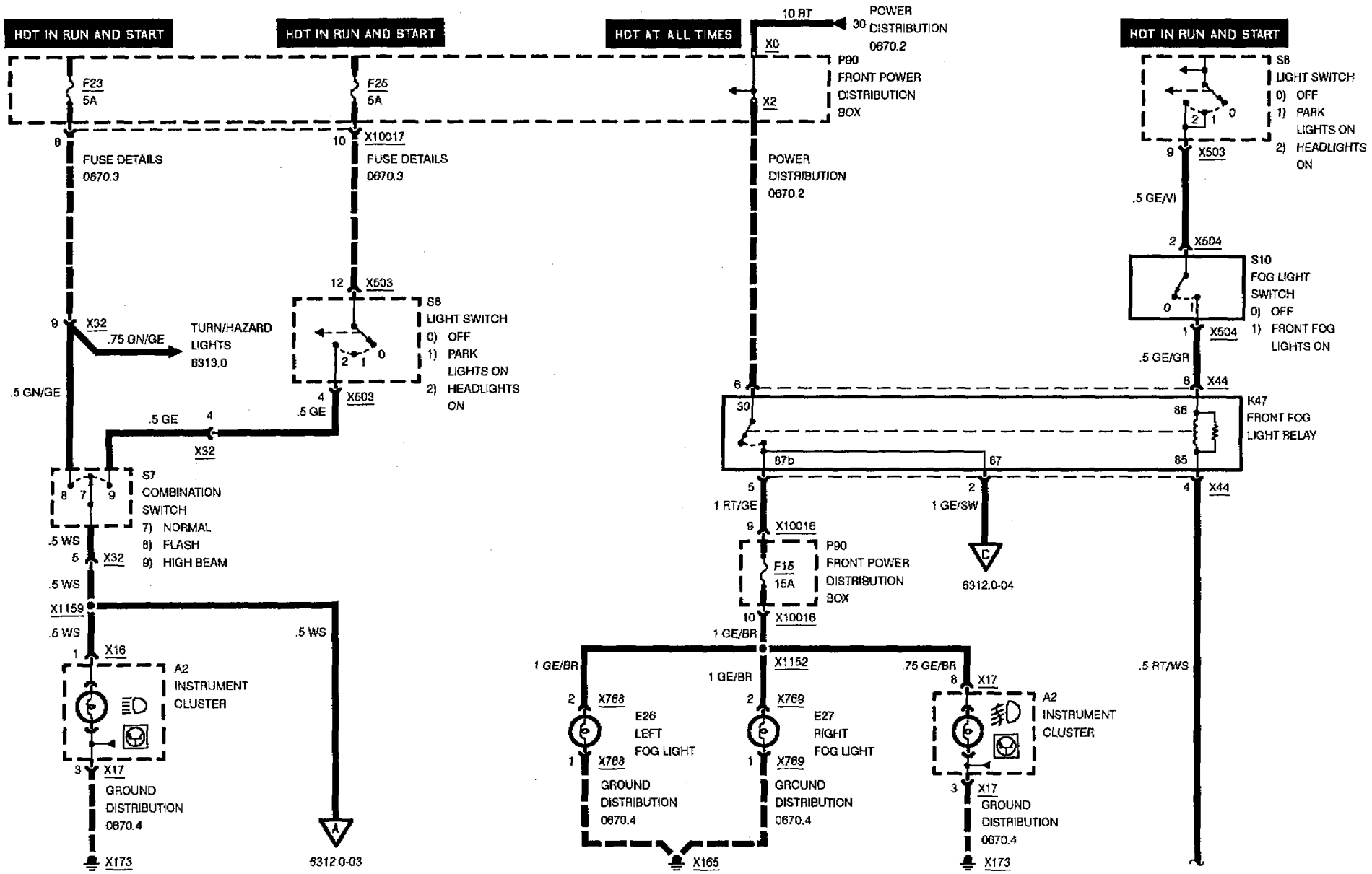

CDN

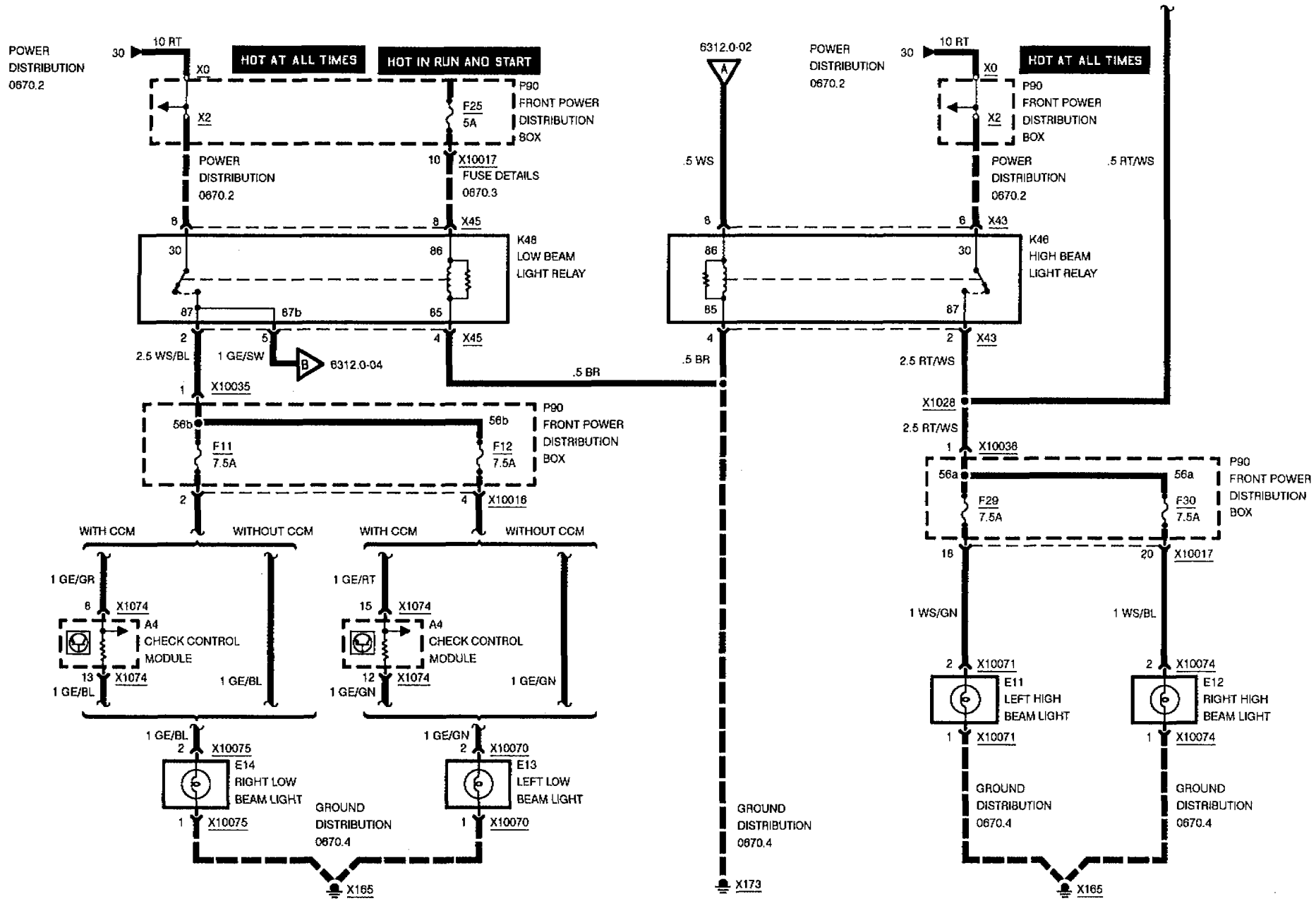
POWER DISTRIBUTION 0670.2
30
10 RT
X0
X2
HOT AT ALL TIMES
HOT IN RUN AND START
F25 5A
P90 FRONT POWER DISTRIBUTION BOX
POWER DISTRIBUTION 0670.2
10
X10017
FUSE DETAILS 0670.3
8
8
X45
K48 LOW BEAM LIGHT RELAY
30
86
87
87b
85
2
5
4
X45
2.5 WS/BL
1 GE/SW
6312.0-04
.5 BR
1
X10035
56b
56b
F11 7.5A
F12 7.5A
P90 FRONT POWER DISTRIBUTION BOX
2
4
X10016
WITH CCM
WITHOUT CCM
WITH CCM
WITHOUT CCM
1 GE/GR
8
X1074
A4 CHECK CONTROL MODULE
13
X1074
1 GE/BL
1 GE/BL
1 GE/RT
15
X1074
A4 CHECK CONTROL MODULE
12
X1074
1 GE/GN
1 GE/GN
1 GE/BL
2
X10075
E14 RIGHT LOW BEAM LIGHT
1
X10075
1 GE/GN
2
X10070
E13 LEFT LOW BEAM LIGHT
1
X10070
GROUND DISTRIBUTION 0670.4
X165
6312.0-02
A
.5 WS
8
86
85
4
.5 BR
GROUND DISTRIBUTION 0670.4
X173
POWER DISTRIBUTION 0670.2
30
10 RT
X0
X2
HOT AT ALL TIMES
P90 FRONT POWER DISTRIBUTION BOX
POWER DISTRIBUTION 0670.2
.5 RT/WS
6
X43
K46 HIGH BEAM LIGHT RELAY
30
87
2
X43
2.5 RT/WS
X1028
2.5 RT/WS
1
X10036
56a
56a
F29 7.5A
F30 7.5A
P90 FRONT POWER DISTRIBUTION BOX
18
20
X10017
1 WS/GN
1 WS/BL
2
X10071
E11 LEFT HIGH BEAM LIGHT
1
X10071
2
X10074
E12 RIGHT HIGH BEAM LIGHT
1
X10074
GROUND DISTRIBUTION 0670.4
GROUND DISTRIBUTION 0670.4
X165

HEADLIGHTS/ FOG LIGHTS

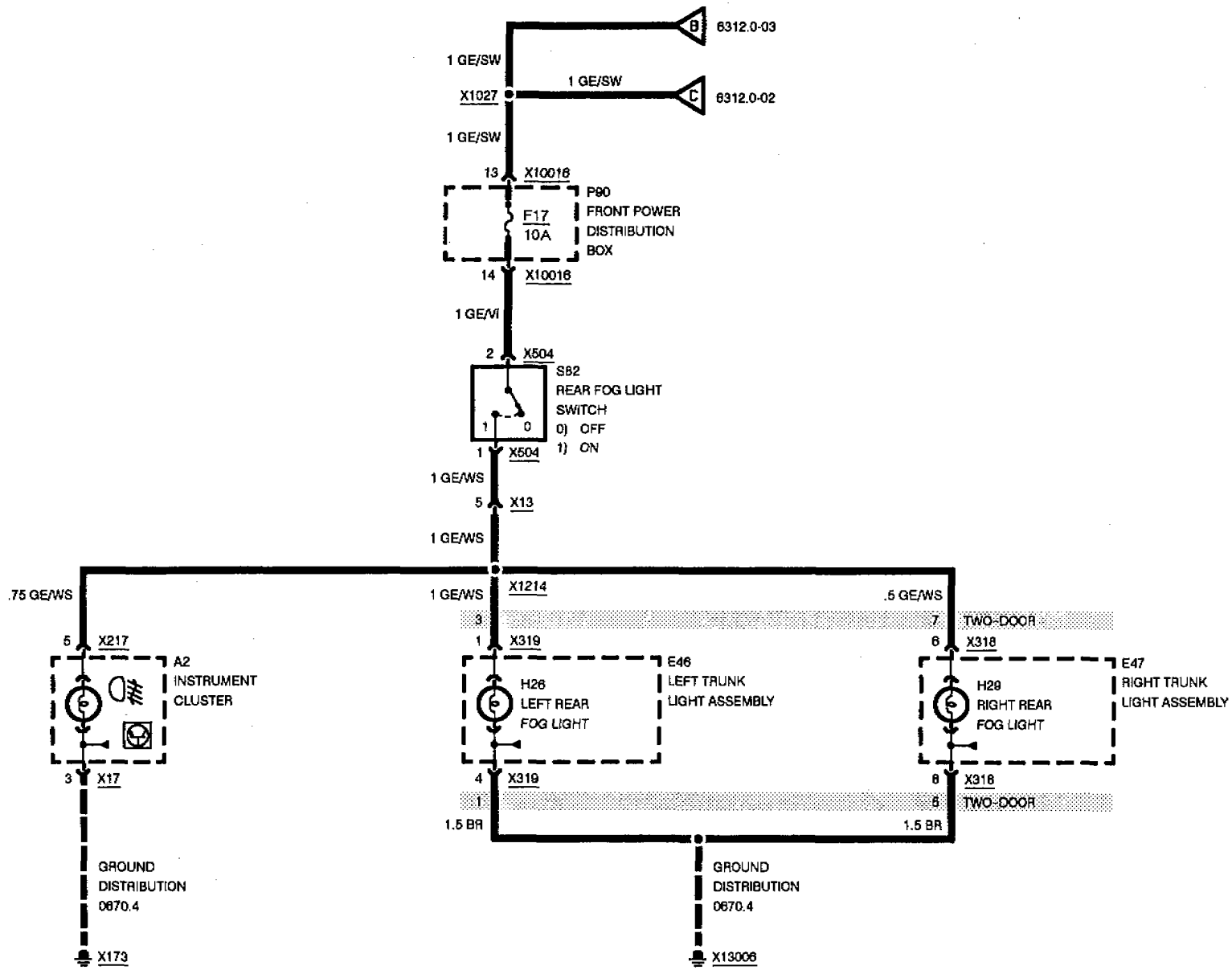

TURN/HAZARD LIGHTS

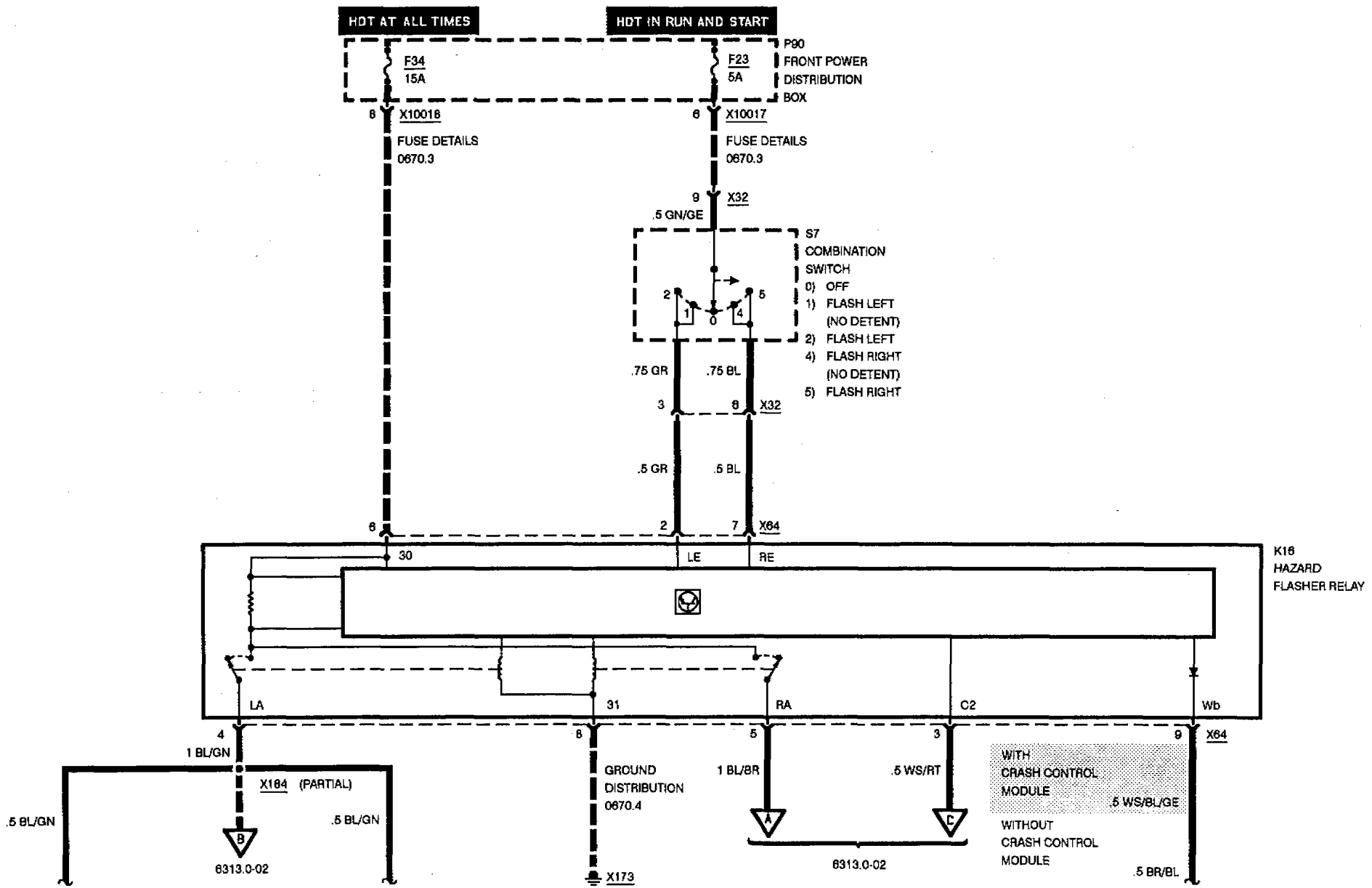

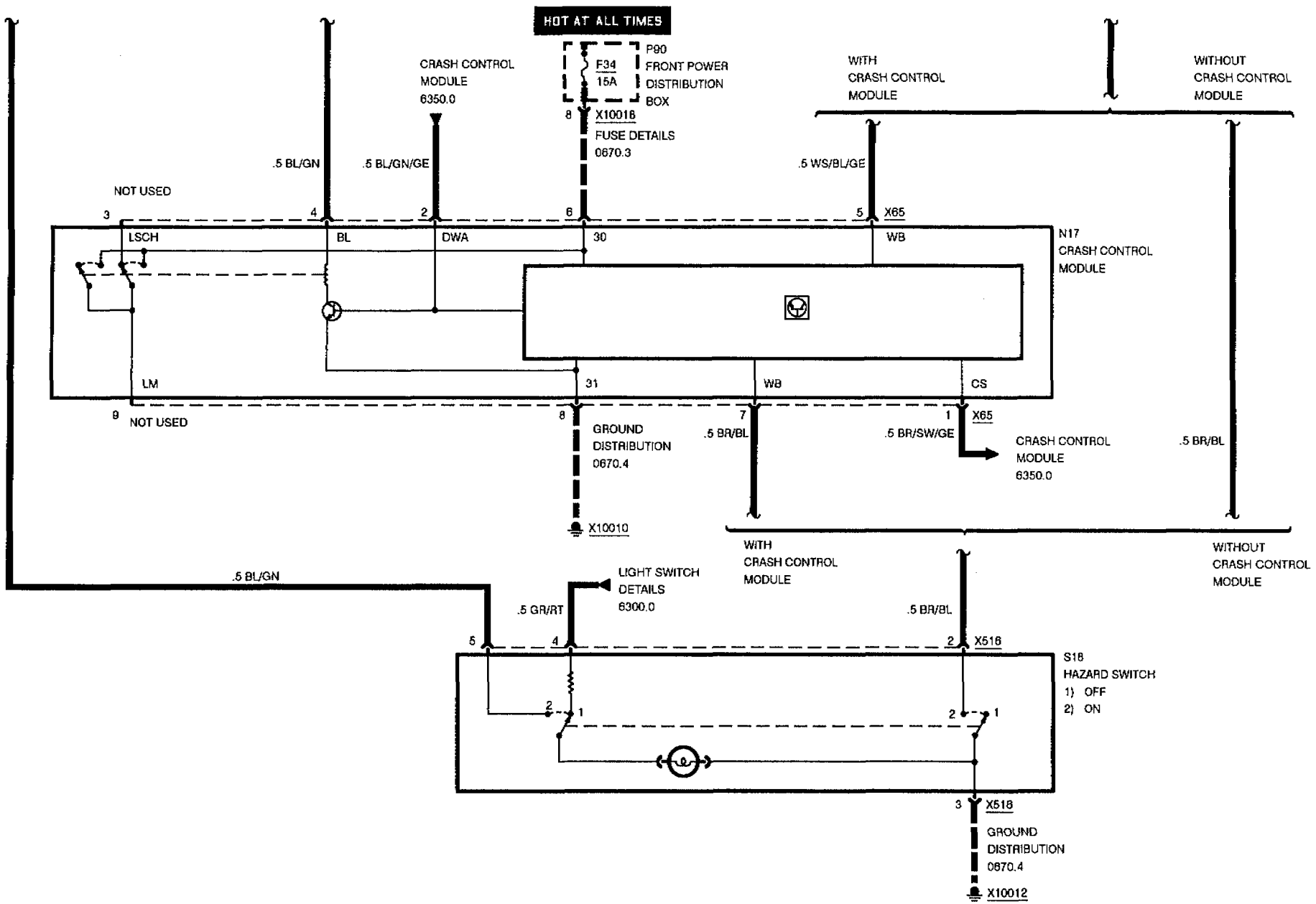
HOT AT ALL TIMES
CRASH CONTROL MODULE 6350.0
F34 15A
P90 FRONT POWER DISTRIBUTION BOX
8
X10018
FUSE DETAILS 0670.3
WITH CRASH CONTROL MODULE
WITHOUT CRASH CONTROL MODULE
.5 BL/GN
.5 BL/GN/GE
.5 WS/BL/GE
NOT USED
3
4
2
6
5
X65
LSCH
BL
DWA
30
WB
N17 CRASH CONTROL MODULE
LM
31
WB
CS
9
NOT USED
8
7
1
X65
GROUND DISTRIBUTION 0670.4
.5 BR/BL
.5 BR/SW/GE
CRASH CONTROL MODULE 6350.0
.5 BR/BL
X10010
WITH CRASH CONTROL MODULE
WITHOUT CRASH CONTROL MODULE
.5 BL/GN
LIGHT SWITCH DETAILS 6300.0
.5 GR/RT
.5 BR/BL
5
4
2
X516
S18 HAZARD SWITCH
1) OFF
2) ON
2
1
2
1
3
X518
GROUND DISTRIBUTION 0670.4
X10012

TURN/HAZARD LIGHTS

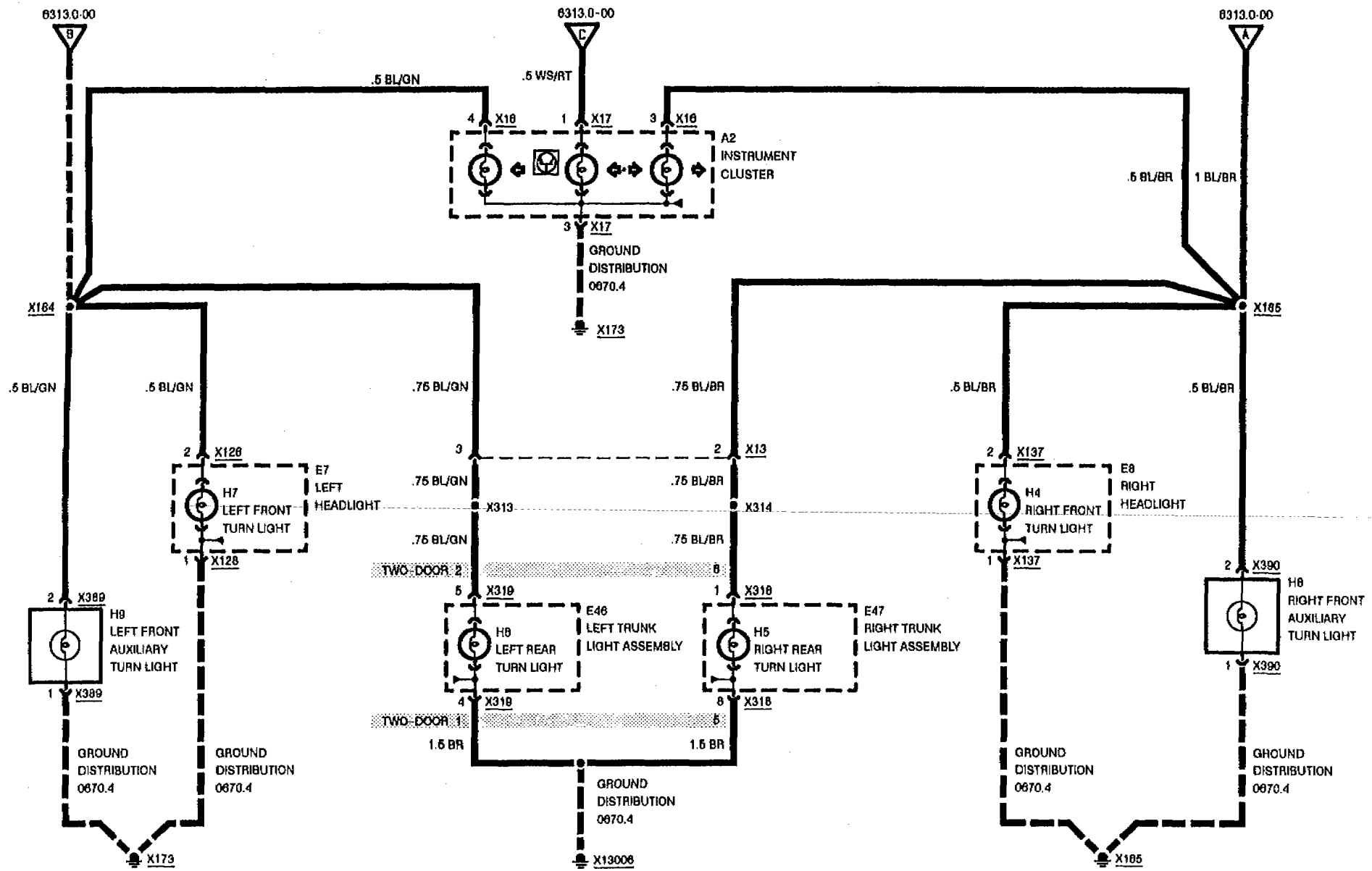

PARK/TAIL LIGHTS

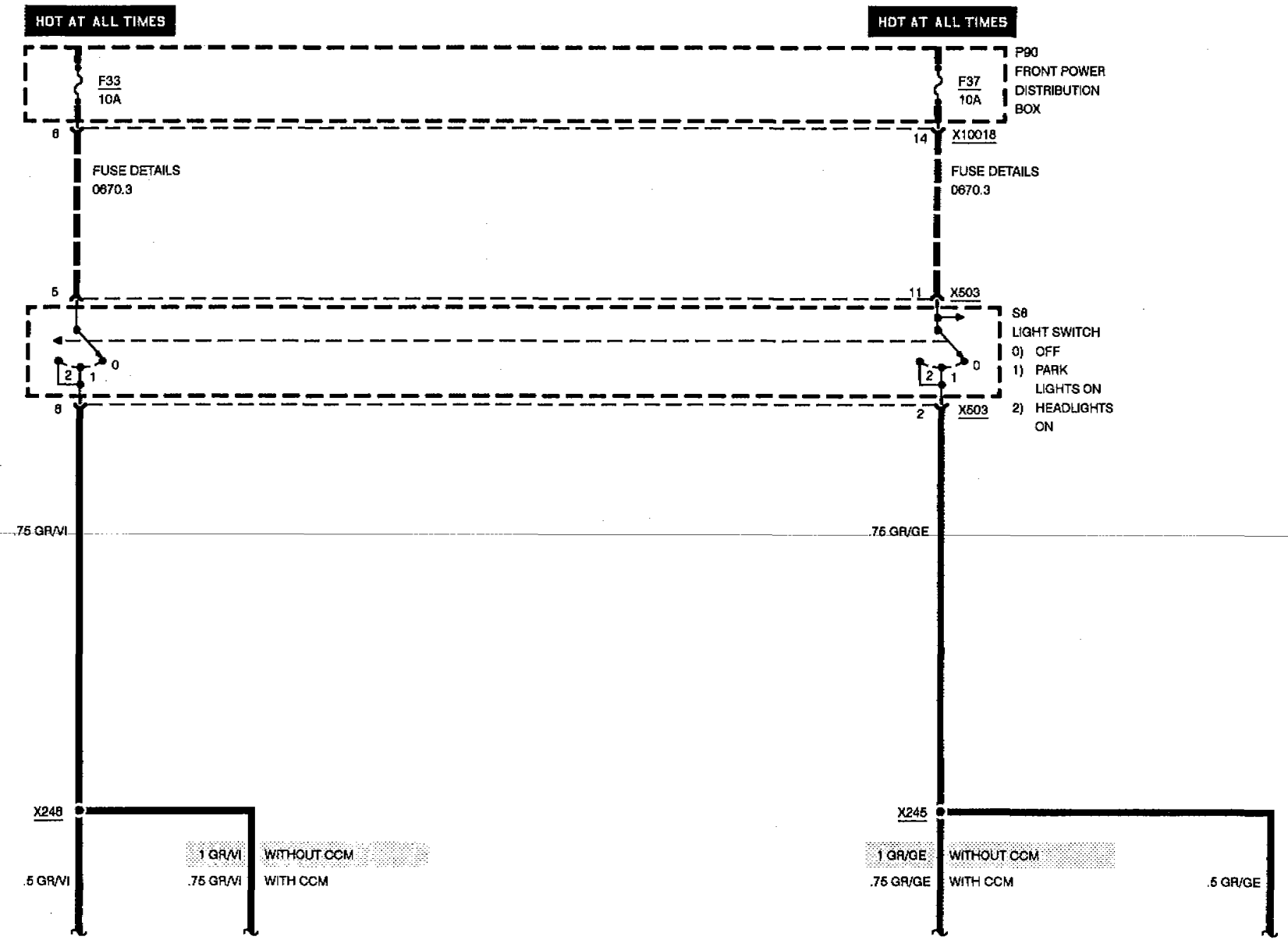

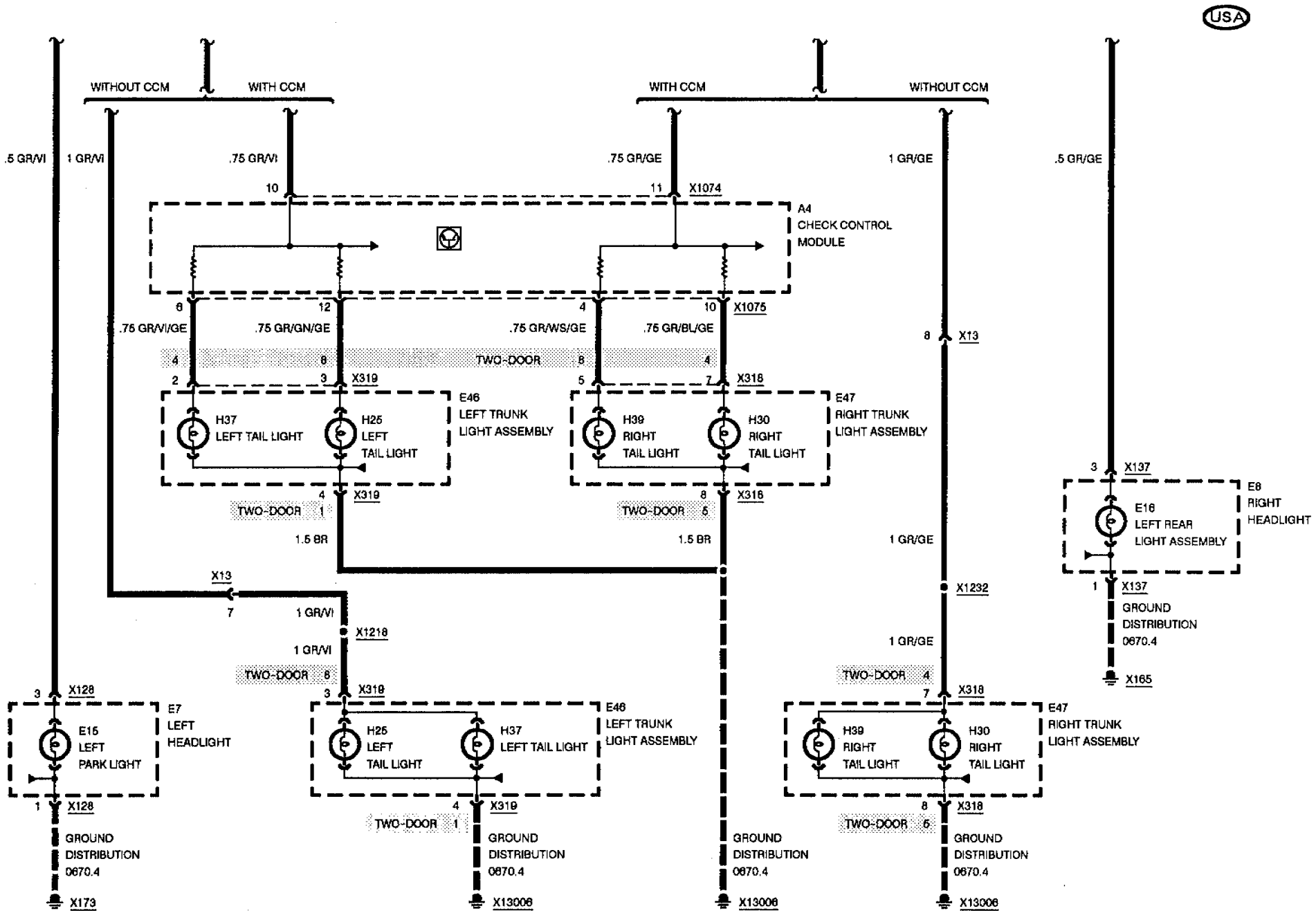
USA
WITHOUT CCM
WITH CCM
WITH CCM
WITHOUT CCM
.5 GR/VI
1 GR/VI
.75 GR/VI
.75 GR/GE
1 GR/GE
.5 GR/GE
10
11
X1074
A4
CHECK CONTROL
MODULE
6
12
4
10
X1075
.75 GR/VI/GE
.75 GR/GN/GE
.75 GR/WS/GE
.75 GR/BL/GE
8
X13
4
8
TWO-DOOR
8
4
2
3
X319
5
7
X318
E46
LEFT TRUNK
LIGHT ASSEMBLY
E47
RIGHT TRUNK
LIGHT ASSEMBLY
H37
LEFT TAIL LIGHT
H25
LEFT
TAIL LIGHT
H39
RIGHT
TAIL LIGHT
H30
RIGHT
TAIL LIGHT
4
X319
TWO-DOOR 1
8
X318
TWO-DOOR 5
1.5 BR
1.5 BR
1 GR/GE
3
X137
E8
RIGHT
HEADLIGHT
E16
LEFT REAR
LIGHT ASSEMBLY
1
X137
GROUND
DISTRIBUTION
0670.4
X165
X13
7
1 GR/VI
X1218
1 GR/VI
TWO-DOOR 8
X1232
1 GR/GE
TWO-DOOR 4
3
X128
E7
LEFT
HEADLIGHT
E15
LEFT
PARK LIGHT
3
X319
E46
LEFT TRUNK
LIGHT ASSEMBLY
H25
LEFT
TAIL LIGHT
H37
LEFT TAIL LIGHT
7
X318
E47
RIGHT TRUNK
LIGHT ASSEMBLY
H39
RIGHT
TAIL LIGHT
H30
RIGHT
TAIL LIGHT
1
X128
GROUND
DISTRIBUTION
0670.4
X173
4
X319
TWO-DOOR 1
GROUND
DISTRIBUTION
0670.4
X13006
GROUND
DISTRIBUTION
0670.4
X13006
8
X318
TWO-DOOR 5
GROUND
DISTRIBUTION
0670.4
X13006

PARK/TAIL LIGHTS

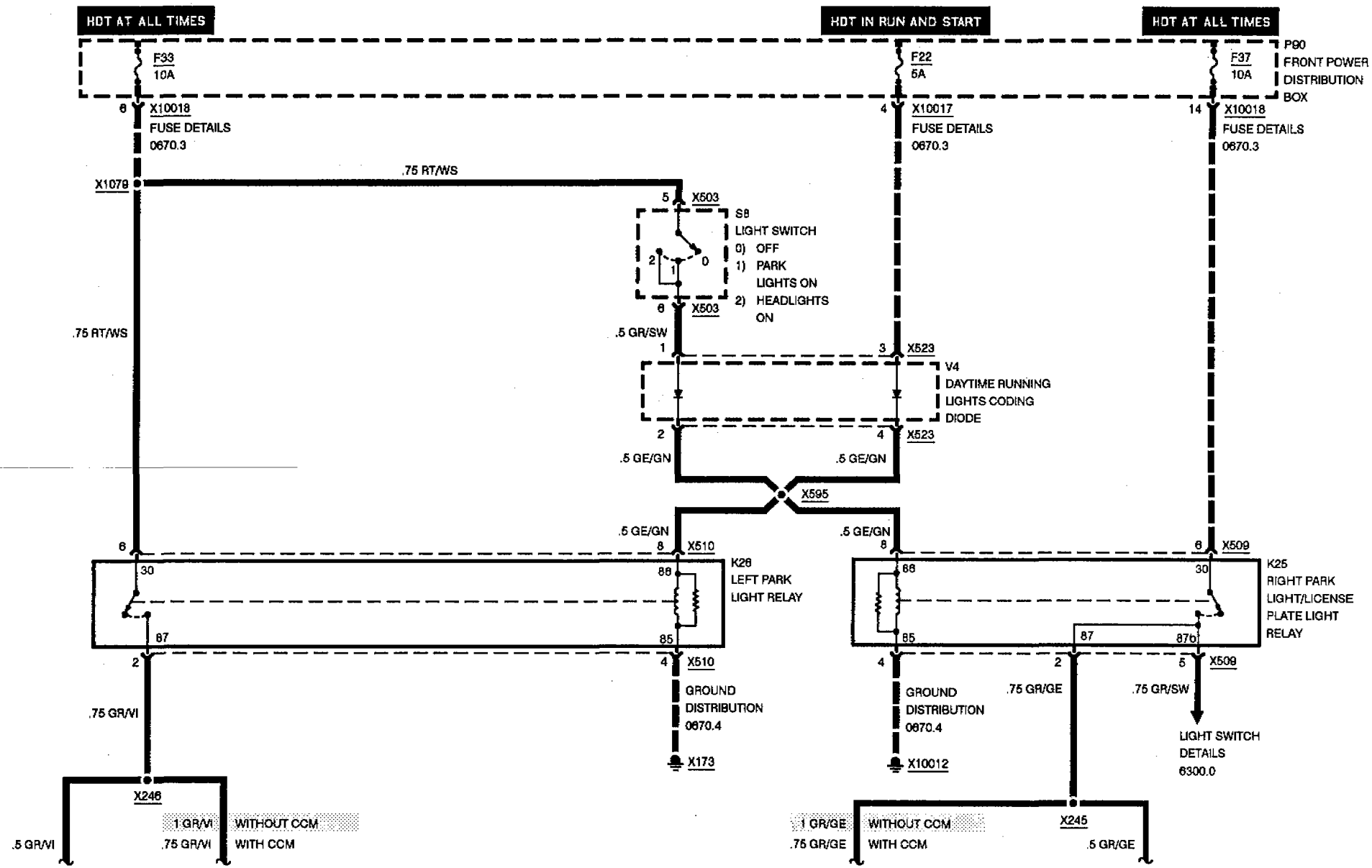

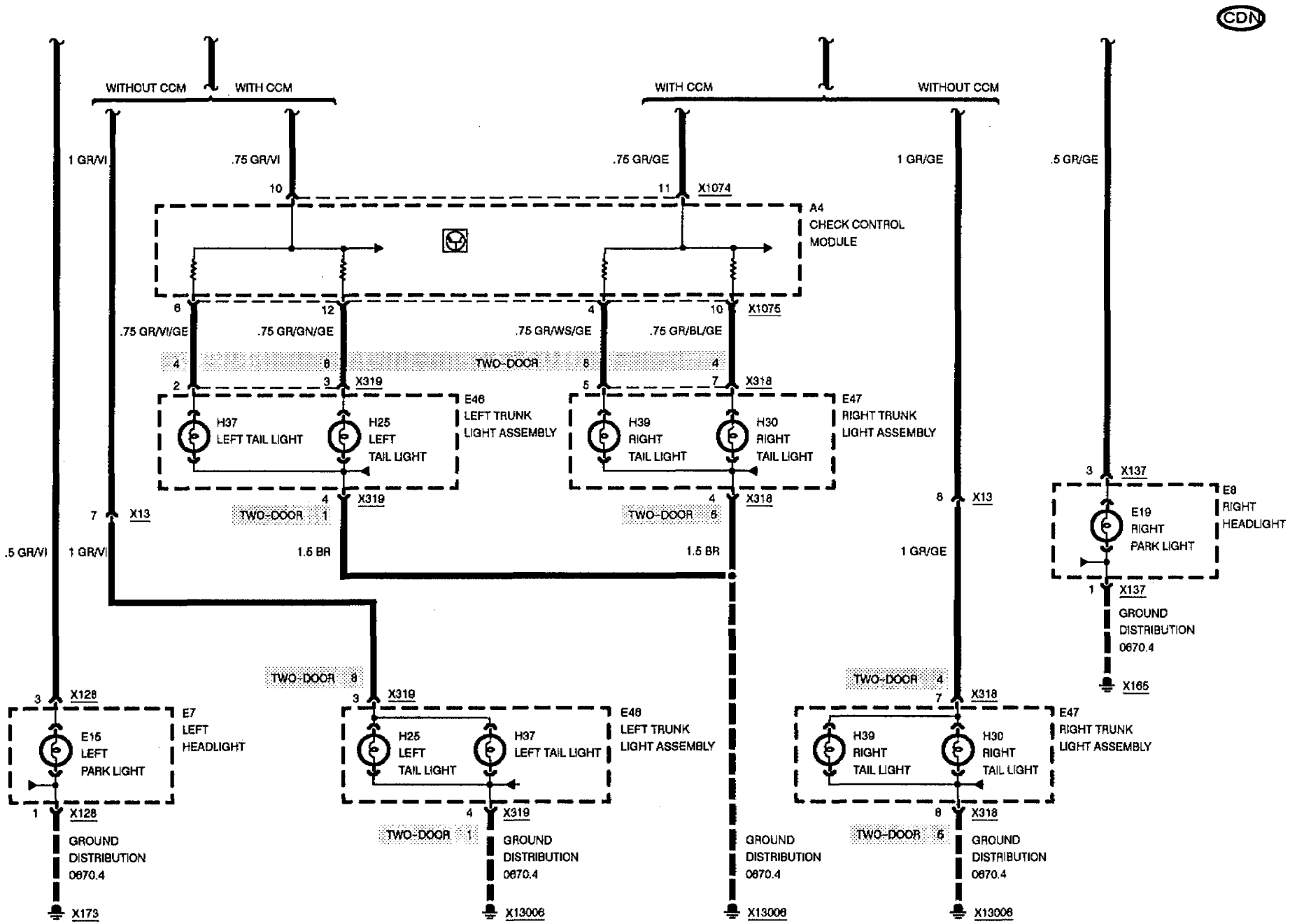
CDN
WITHOUT CCM
WITH CCM
WITH CCM
WITHOUT CCM
1 GR/VI
.75 GR/VI
.75 GR/GE
1 GR/GE
.5 GR/GE
10
11
X1074
A4
CHECK CONTROL
MODULE
6
12
4
10
X1075
.75 GR/VI/GE
.75 GR/GN/GE
.75 GR/WS/GE
.75 GR/BL/GE
4
8
TWO-DOOR
8
4
2
3
X319
5
7
X318
E46
LEFT TRUNK
LIGHT ASSEMBLY
H37
LEFT TAIL LIGHT
H25
LEFT
TAIL LIGHT
E47
RIGHT TRUNK
LIGHT ASSEMBLY
H39
RIGHT
TAIL LIGHT
H30
RIGHT
TAIL LIGHT
4
X319
4
X318
7
X13
TWO-DOOR 1
TWO-DOOR 5
8
X13
3
X137
E8
RIGHT
HEADLIGHT
E19
RIGHT
PARK LIGHT
.5 GR/VI
1 GR/VI
1.5 BR
1.5 BR
1 GR/GE
1
X137
GROUND
DISTRIBUTION
0670.4
X165
TWO-DOOR 8
TWO-DOOR 4
3
X128
3
X319
7
X318
E7
LEFT
HEADLIGHT
E15
LEFT
PARK LIGHT
E46
LEFT TRUNK
LIGHT ASSEMBLY
H25
LEFT
TAIL LIGHT
H37
LEFT TAIL LIGHT
E47
RIGHT TRUNK
LIGHT ASSEMBLY
H39
RIGHT
TAIL LIGHT
H30
RIGHT
TAIL LIGHT
1
X128
4
X319
8
X318
TWO-DOOR 1
TWO-DOOR 5
GROUND
DISTRIBUTION
0670.4
GROUND
DISTRIBUTION
0670.4
GROUND
DISTRIBUTION
0670.4
GROUND
DISTRIBUTION
0670.4
X173
X13006
X13006
X13006

LICENSE PLATE/ LUGGAGE COMPARTMENT LIGHTS

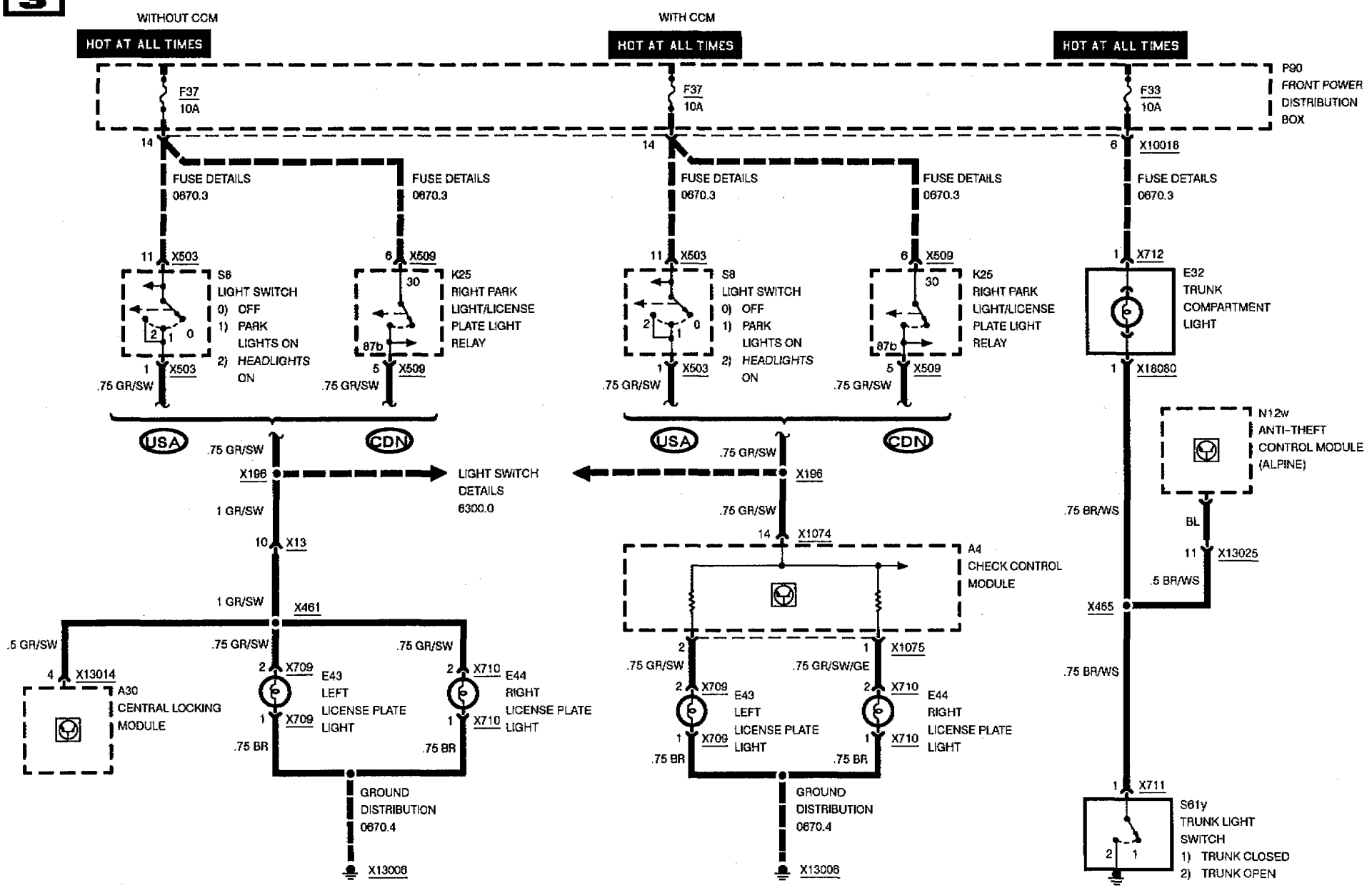

BACK UP LIGHTS

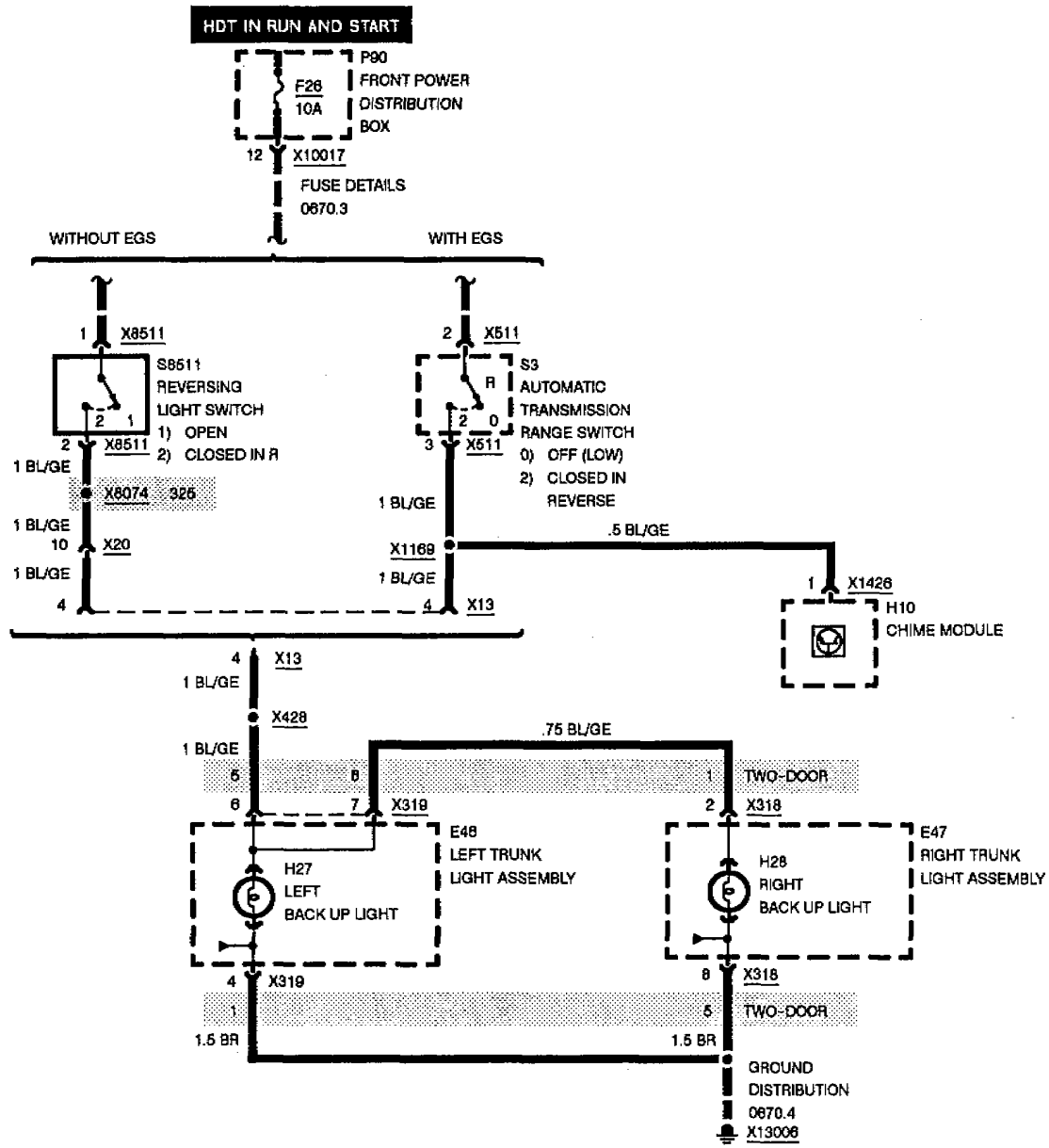

BRAKE LIGHTS
WITHOUT CCM

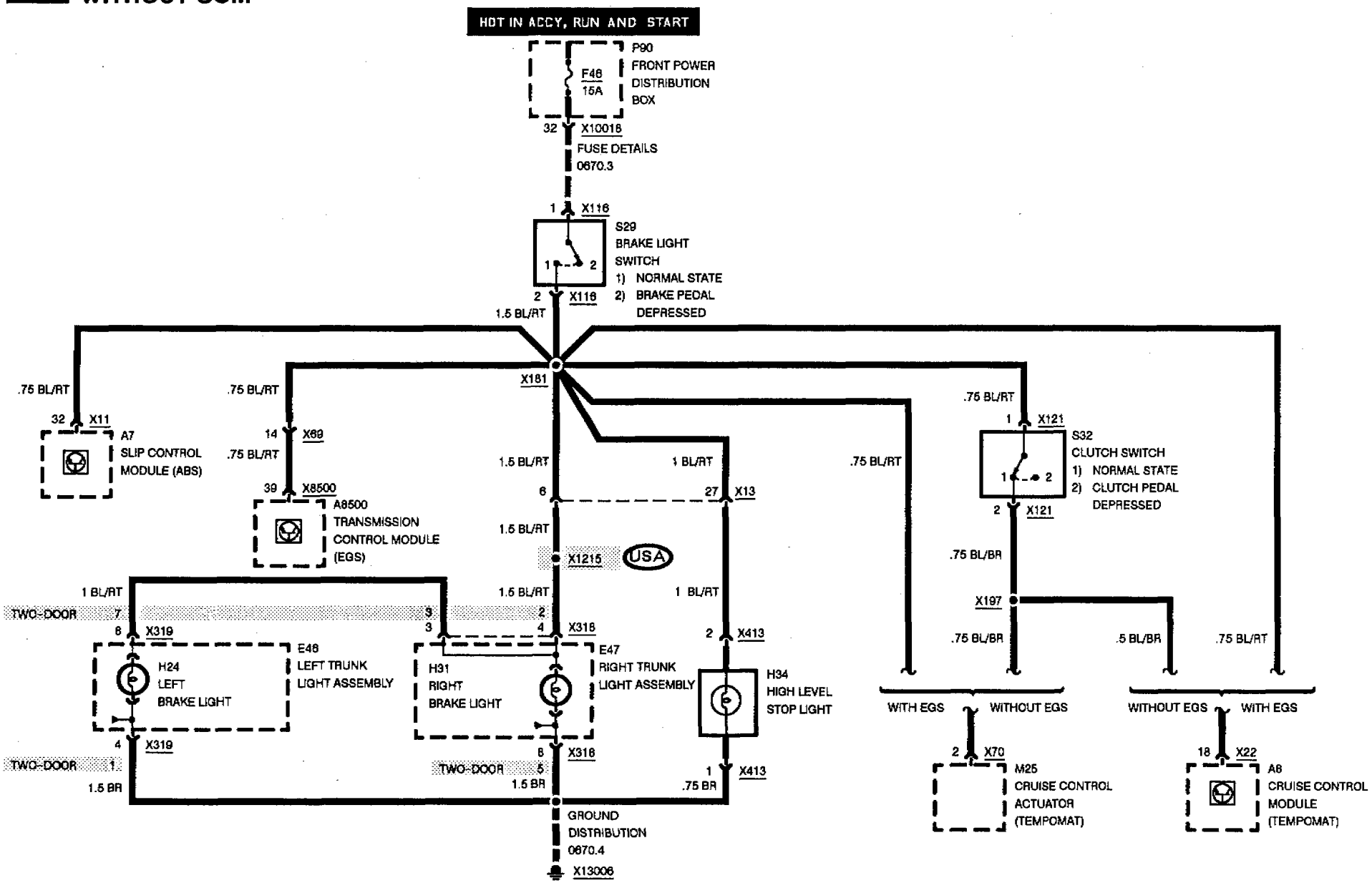

BRAKE LIGHTS
WITH CCM

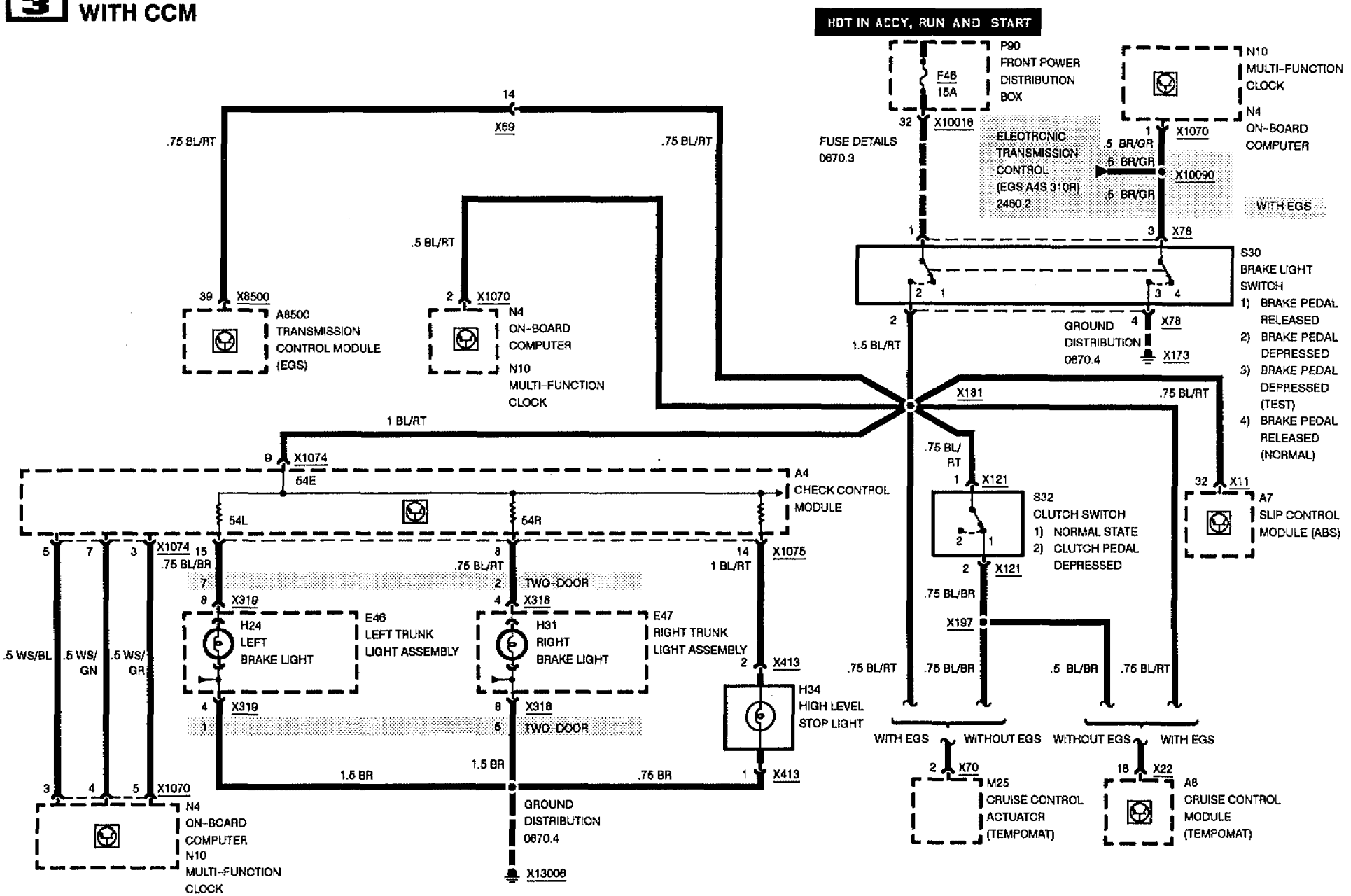

INTERIOR LIGHTS

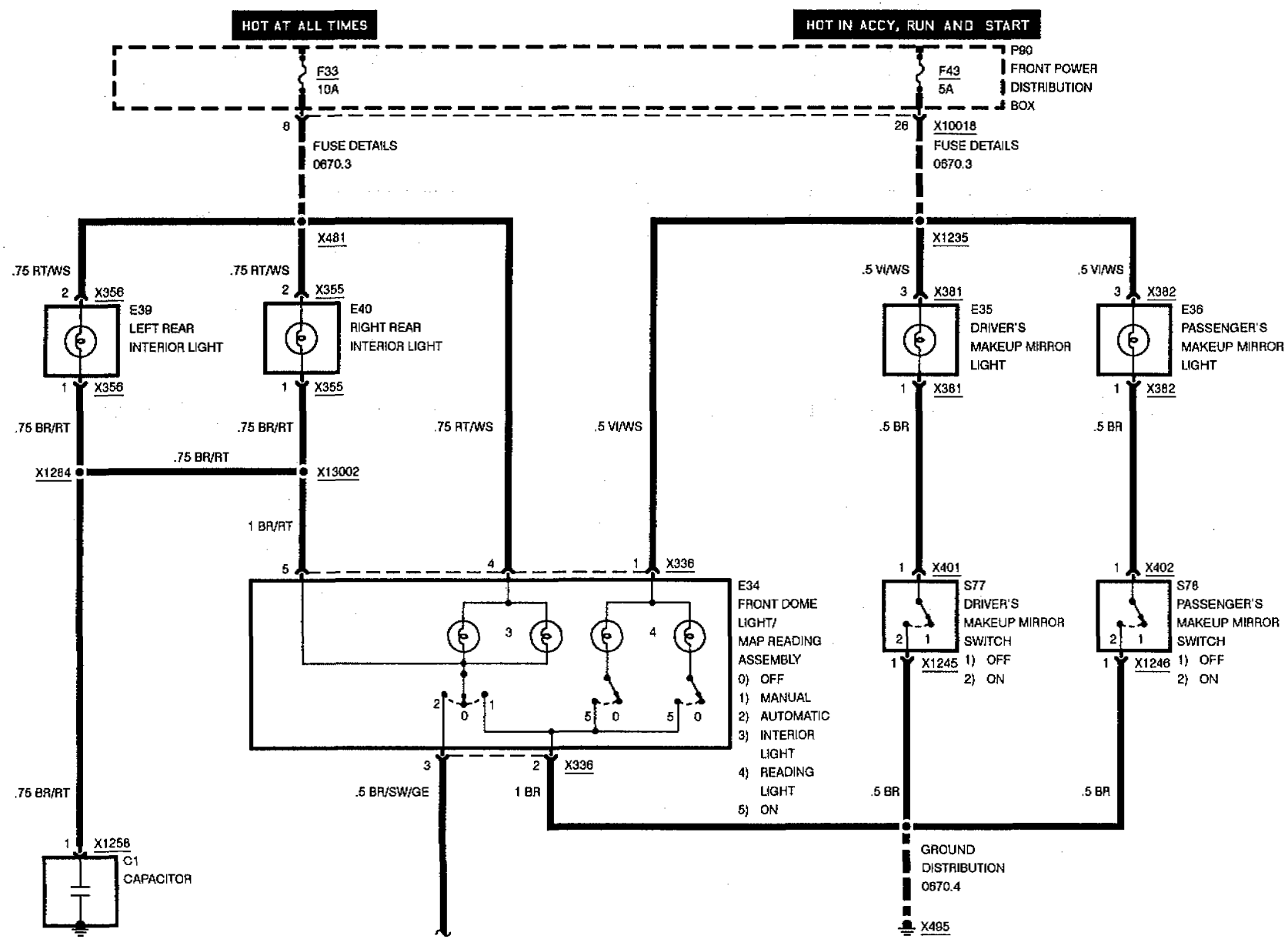

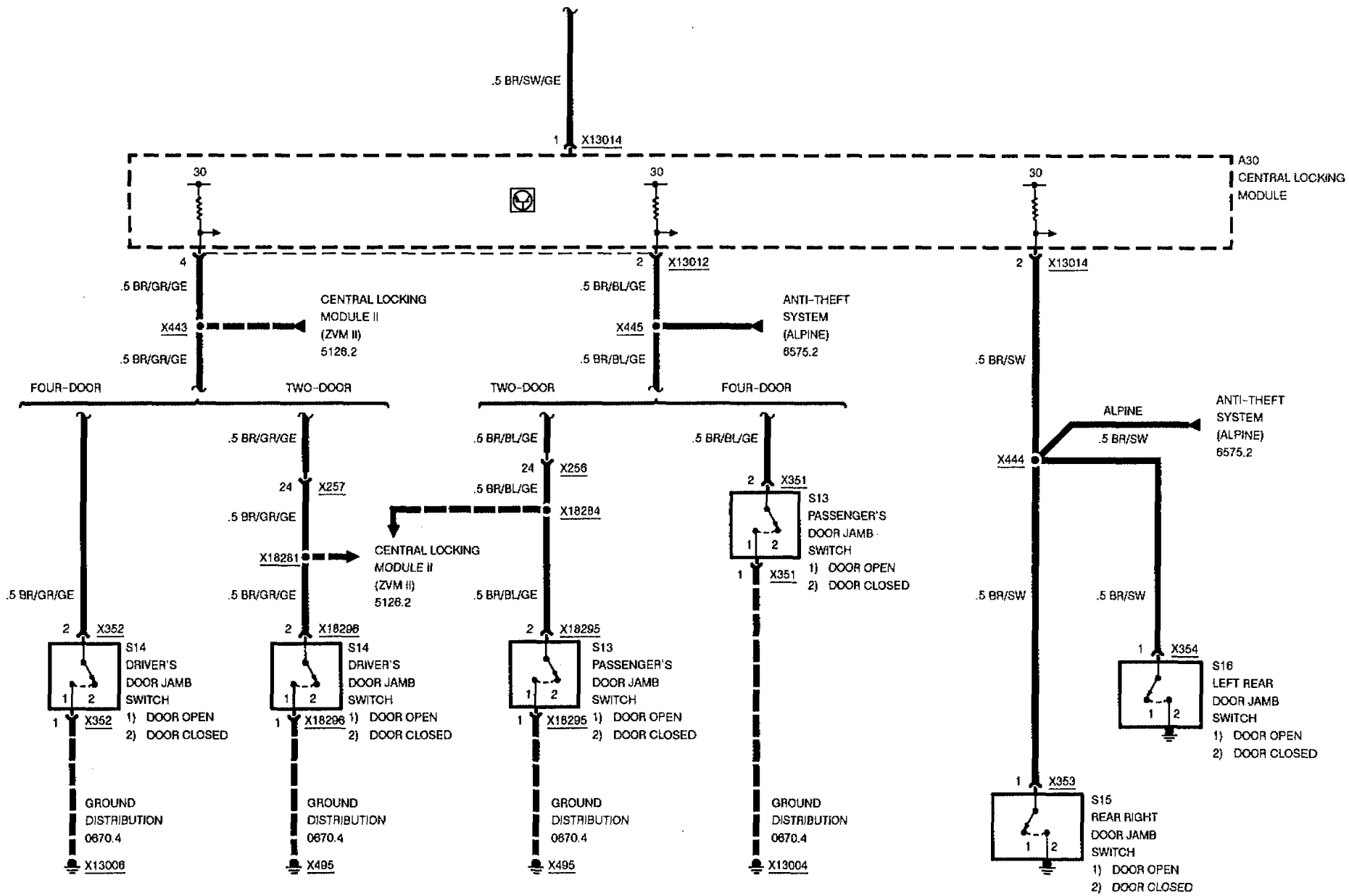
.5 BR/SW/GE
1 X13014
A30
CENTRAL LOCKING
MODULE
30
30
30
4
.5 BR/GR/GE
X443
.5 BR/GR/GE
CENTRAL LOCKING
MODULE II
(ZVM II)
5126.2
2 X13012
.5 BR/BL/GE
X445
.5 BR/BL/GE
ANTI-THEFT
SYSTEM
(ALPINE)
6575.2
2 X13014
.5 BR/SW
FOUR-DOOR
TWO-DOOR
TWO-DOOR
FOUR-DOOR
ALPINE
ANTI-THEFT
SYSTEM
(ALPINE)
6575.2
.5 BR/SW
X444
.5 BR/GR/GE
.5 BR/GR/GE
24 X257
.5 BR/GR/GE
X18281
CENTRAL LOCKING
MODULE II
(ZVM II)
5126.2
.5 BR/BL/GE
24 X256
.5 BR/BL/GE
X18284
.5 BR/BL/GE
2 X351
S13
PASSENGER'S
DOOR JAMB
SWITCH
1) DOOR OPEN
2) DOOR CLOSED
1 X351
.5 BR/GR/GE
.5 BR/GR/GE
.5 BR/BL/GE
.5 BR/SW
.5 BR/SW
2 X352
S14
DRIVER'S
DOOR JAMB
SWITCH
1) DOOR OPEN
2) DOOR CLOSED
1 X352
2 X18296
S14
DRIVER'S
DOOR JAMB
SWITCH
1) DOOR OPEN
2) DOOR CLOSED
1 X18296
2 X18295
S13
PASSENGER'S
DOOR JAMB
SWITCH
1) DOOR OPEN
2) DOOR CLOSED
1 X18295
1 X354
S16
LEFT REAR
DOOR JAMB
SWITCH
1) DOOR OPEN
2) DOOR CLOSED
1 X353
S15
REAR RIGHT
DOOR JAMB
SWITCH
1) DOOR OPEN
2) DOOR CLOSED
GROUND
DISTRIBUTION
0670.4
X13006
GROUND
DISTRIBUTION
0670.4
X495
GROUND
DISTRIBUTION
0670.4
X495
GROUND
DISTRIBUTION
0670.4
X13004

GLOVE BOX LIGHT/CASSETTE BOX/ASHTRAY LIGHT/CHARGING SOCKET/CIGAR LIGHTER

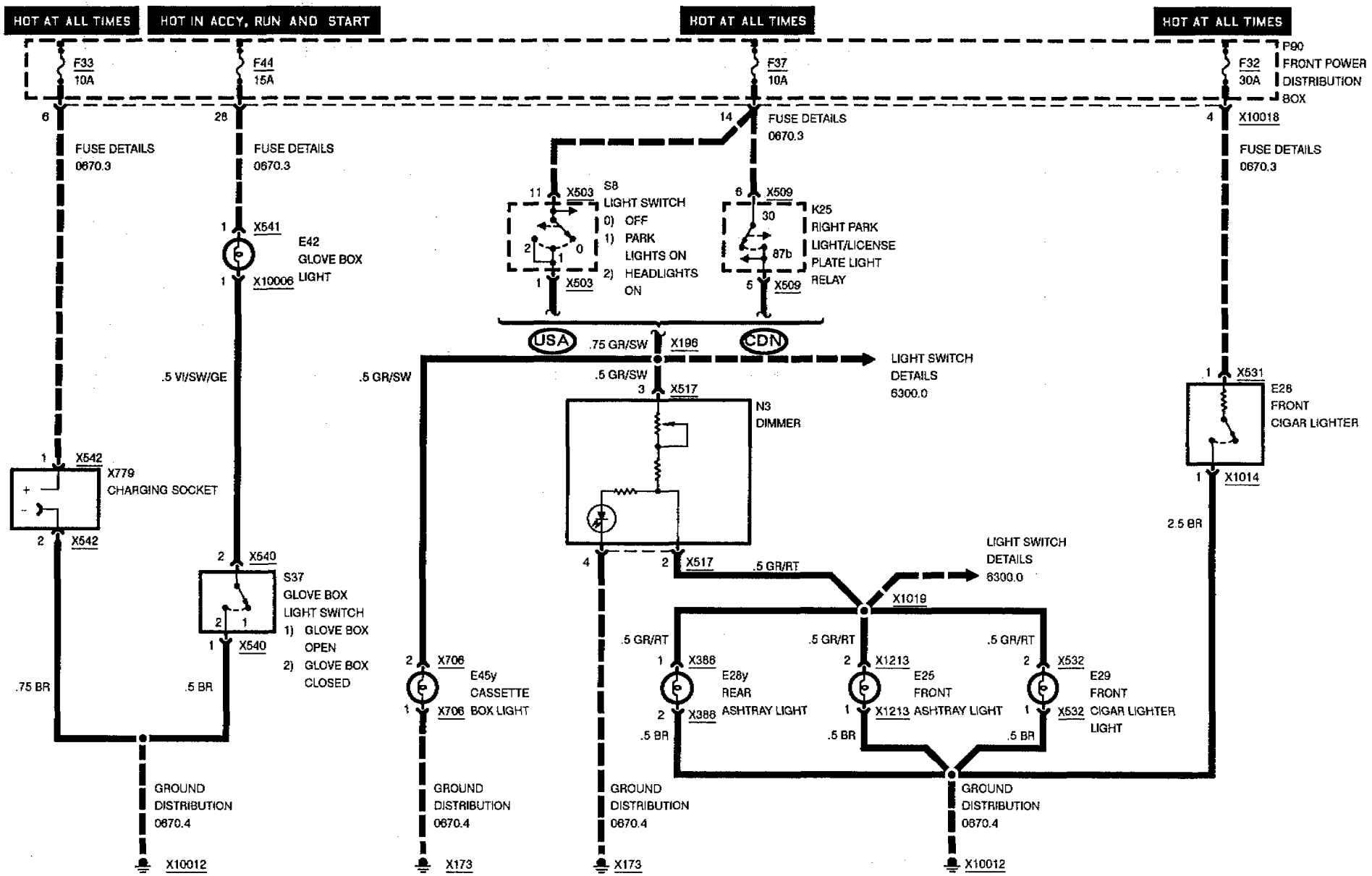

CRASH CONTROL MODULE

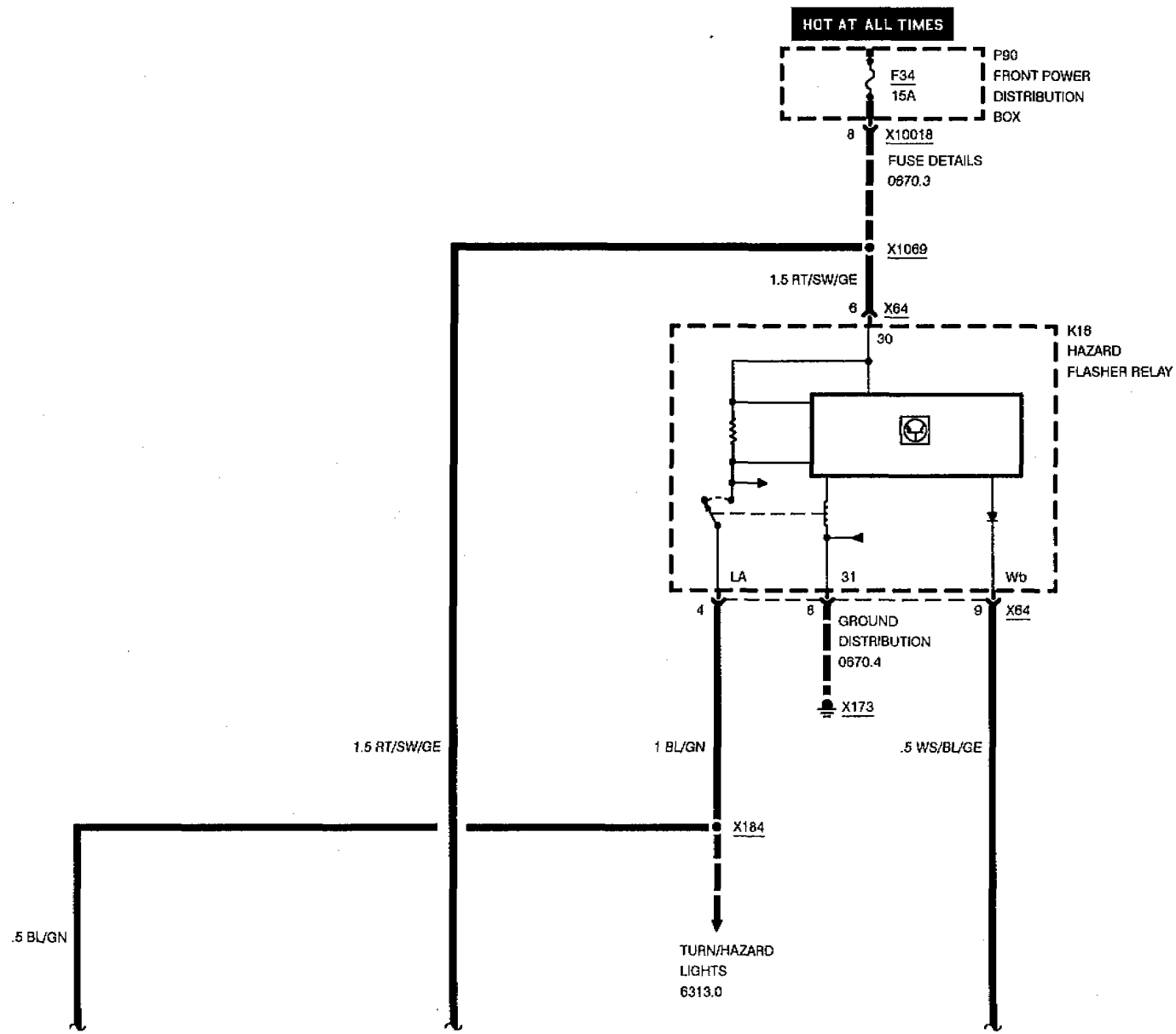

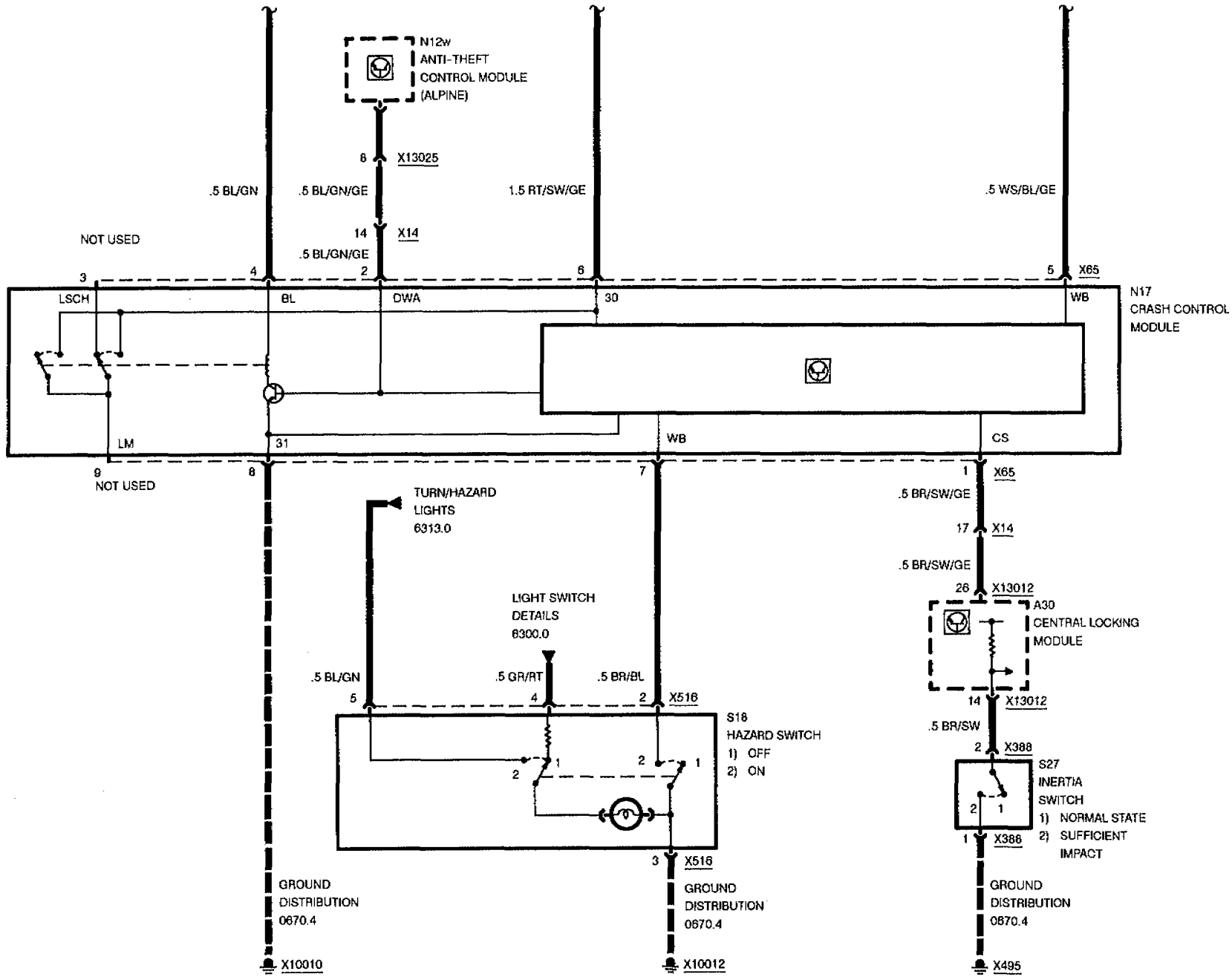
N12w
ANTI-THEFT
CONTROL MODULE
(ALPINE)
8
X13025
.5 BL/GN
.5 BL/GN/GE
1.5 RT/SW/GE
.5 WS/BL/GE
14
X14
NOT USED
.5 BL/GN/GE
3
4
2
6
5
X65
LSCH
BL
DWA
30
WB
N17
CRASH CONTROL
MODULE
LM
31
WB
CS
9
NOT USED
8
7
1
X65
TURN/HAZARD
LIGHTS
6313.0
.5 BR/SW/GE
17
X14
.5 BR/SW/GE
26
X13012
LIGHT SWITCH
DETAILS
6300.0
A30
CENTRAL LOCKING
MODULE
.5 BL/GN
.5 GR/RT
.5 BR/BL
5
4
2
X516
14
X13012
S18
HAZARD SWITCH
1) OFF
2) ON
.5 BR/SW
2
X388
S27
INERTIA
SWITCH
1) NORMAL STATE
2) SUFFICIENT
IMPACT
1
X388
3
X516
GROUND
DISTRIBUTION
0670.4
GROUND
DISTRIBUTION
0670.4
GROUND
DISTRIBUTION
0670.4
X10010
X10012
X495

PARK VENTILATION WITH IHKR

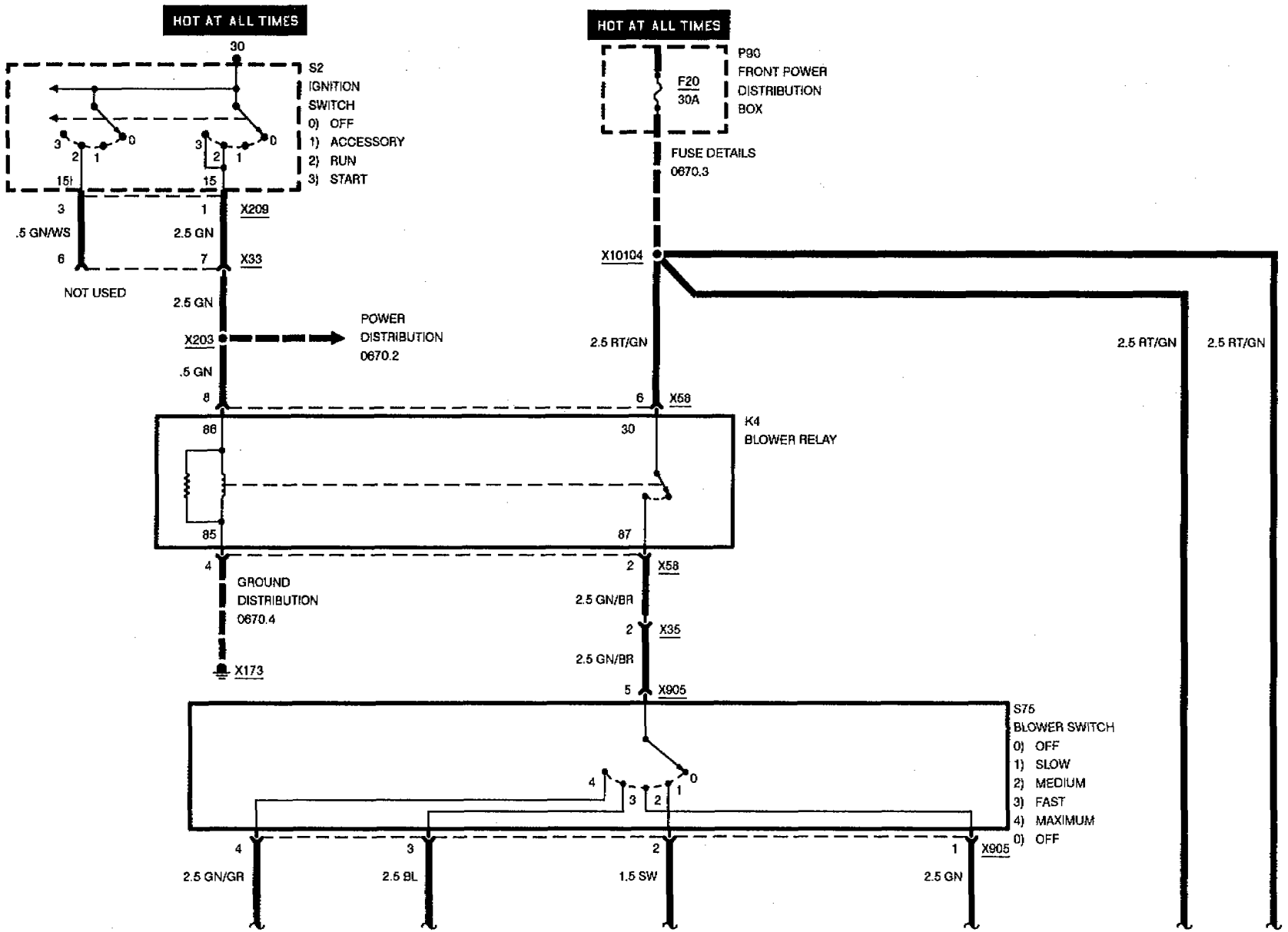

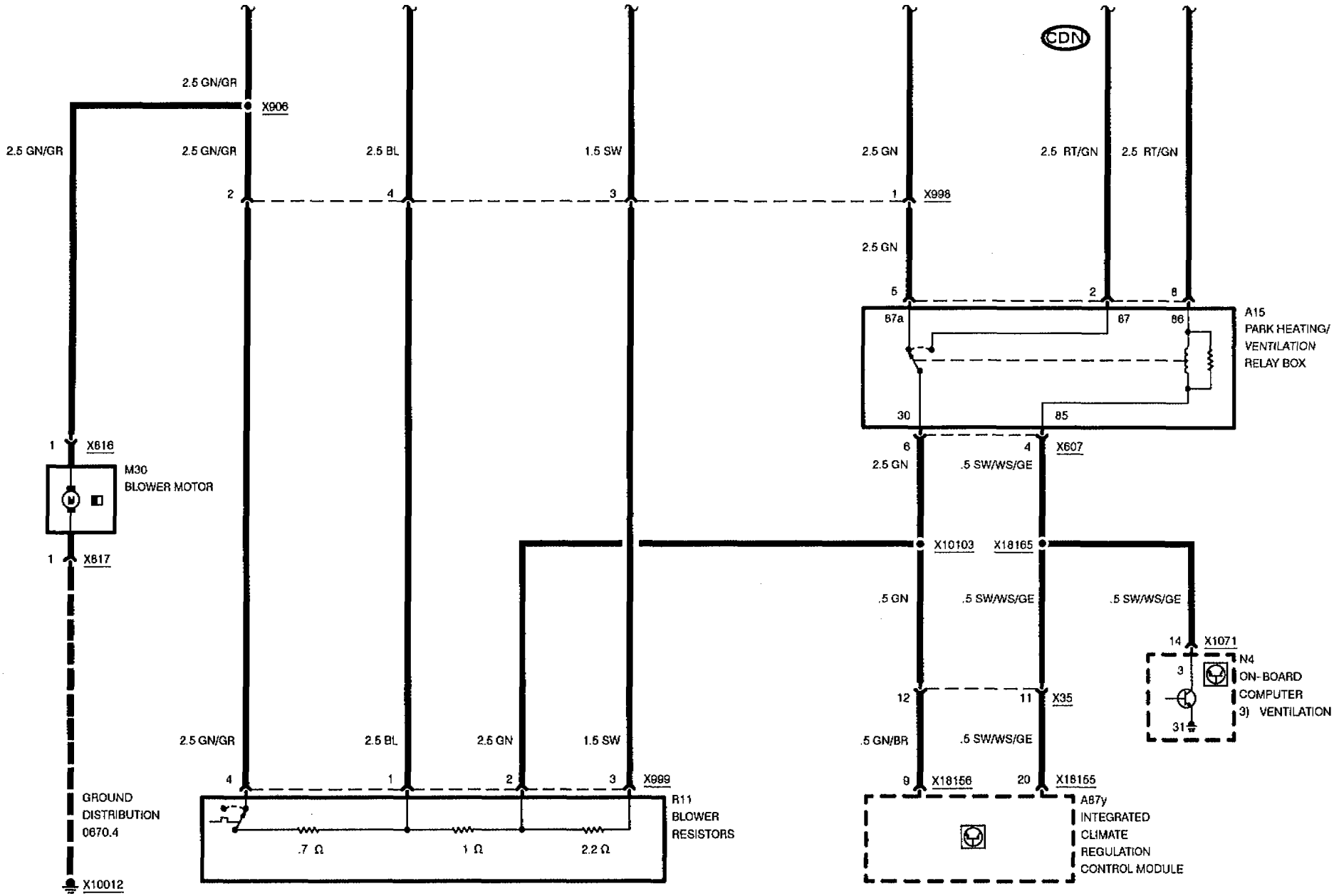
CDN
2.5 GN/GR
X906
2.5 GN/GR
2.5 GN/GR
2.5 BL
1.5 SW
2.5 GN
2.5 RT/GN
2.5 RT/GN
X998
2.5 GN
A15
PARK HEATING/
VENTILATION
RELAY BOX
87a
87
86
30
85
X616
M30
BLOWER MOTOR
X607
2.5 GN
.5 SW/WS/GE
X817
X10103
X18165
.5 GN
.5 SW/WS/GE
.5 SW/WS/GE
X1071
N4
ON-BOARD
COMPUTER
3) VENTILATION
X35
2.5 GN/GR
2.5 BL
2.5 GN
1.5 SW
.5 GN/BR
.5 SW/WS/GE
X999
X18156
X18155
GROUND
DISTRIBUTION
0670.4
R11
BLOWER
RESISTORS
.7 Ω
1 Ω
2.2 Ω
A87y
INTEGRATED
CLIMATE
REGULATION
CONTROL MODULE
X10012

REAR WINDOW DEFOGGER

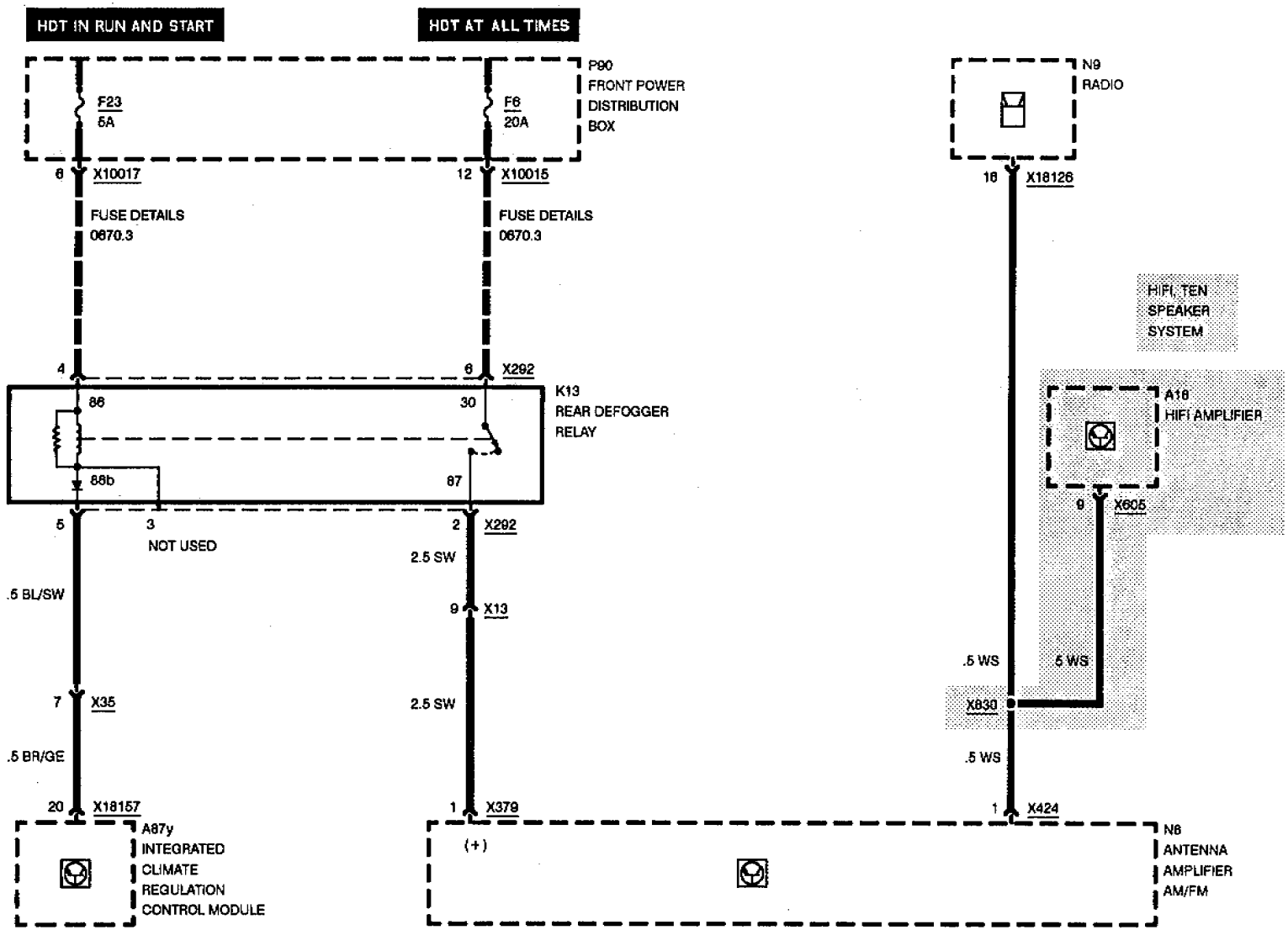

REAR WINDOW DEFOGGER

REAR WINDOW ANTENNA

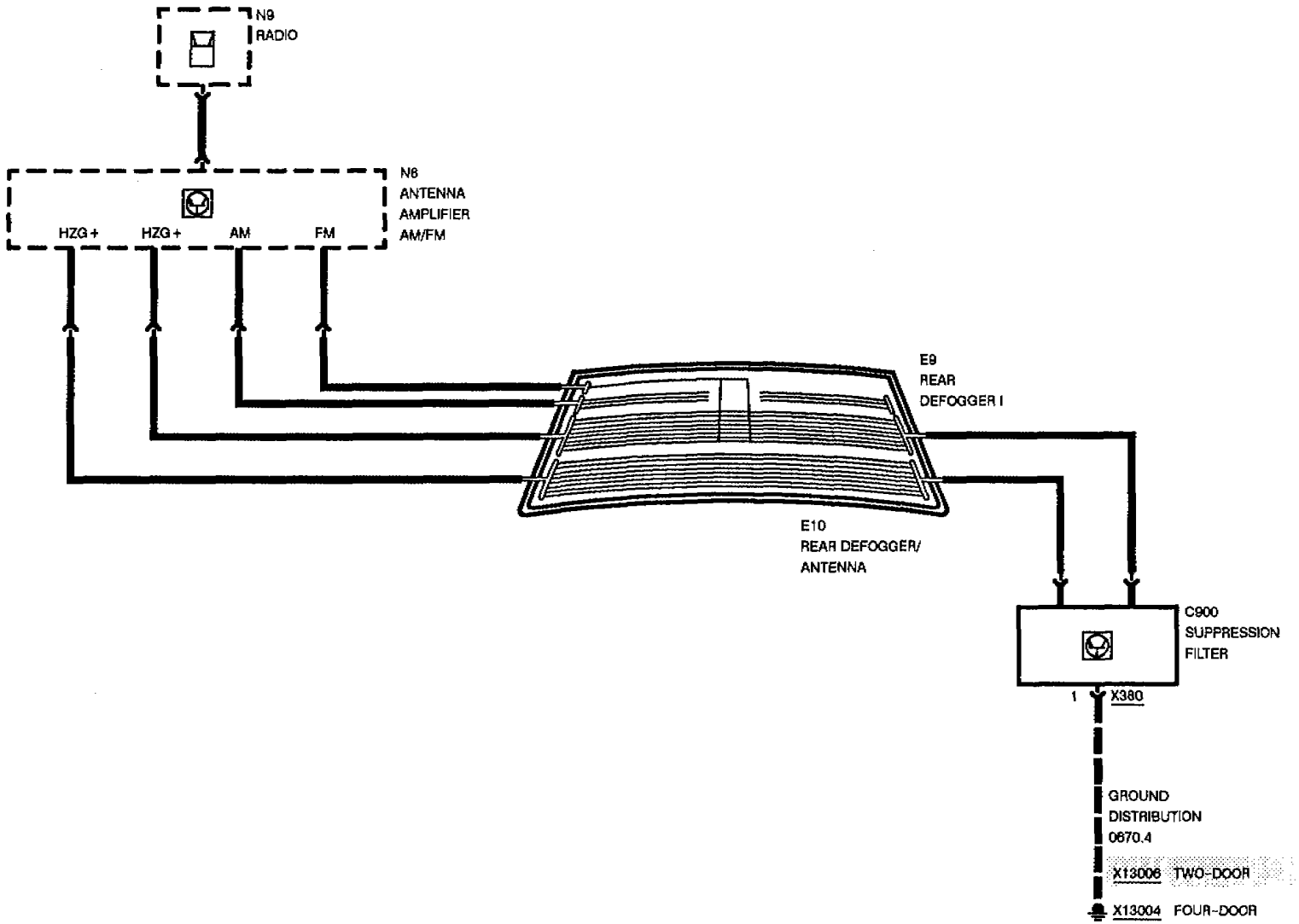

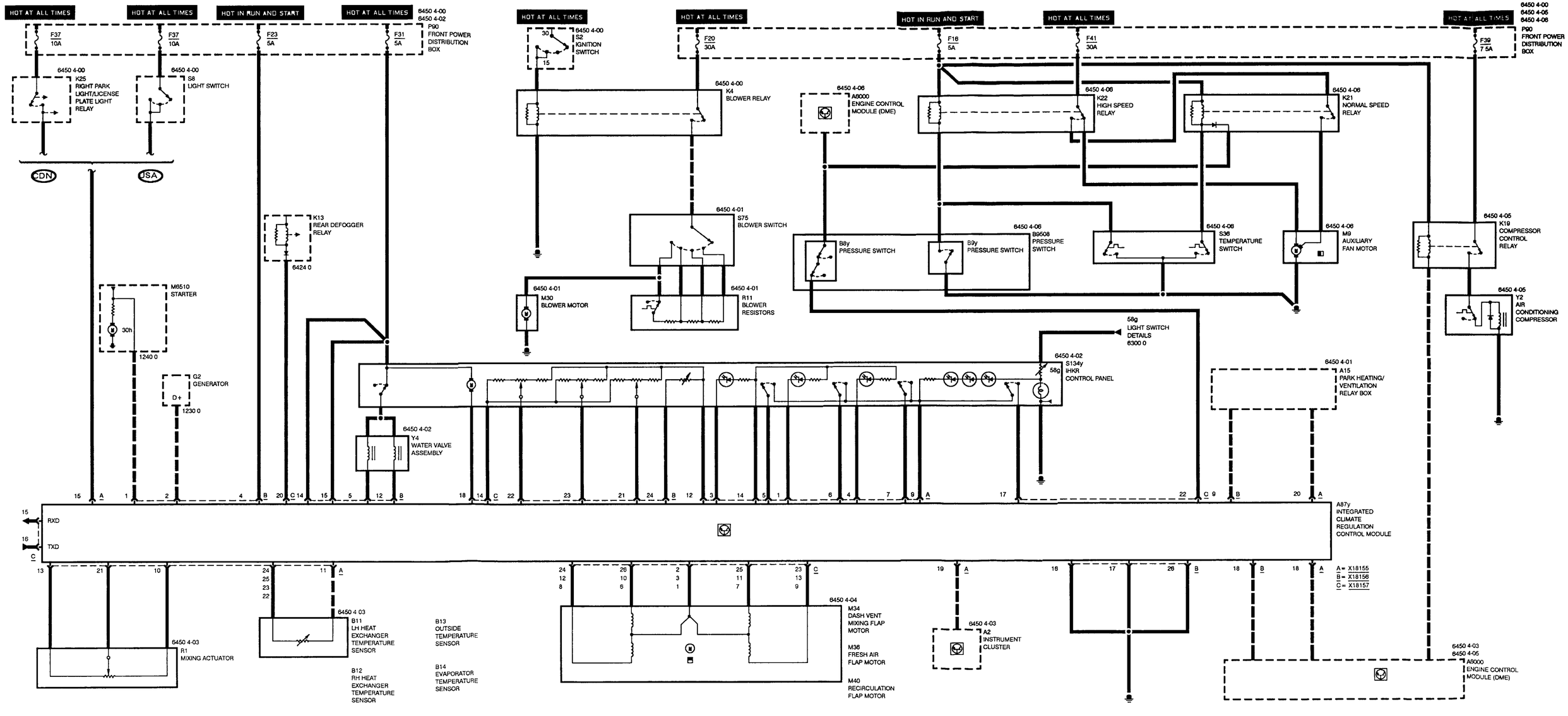
HOT AT ALL TIMES
HOT IN RUN AND START
F37 10A
F23 5A
F31 5A
6450 4-00
6450 4-02
P90 FRONT POWER DISTRIBUTION BOX
K25 RIGHT PARK LIGHT/LICENSE PLATE LIGHT RELAY
S8 LIGHT SWITCH
CDN
USA
K13 REAR DEFOGGER RELAY
6424 0
M6510 STARTER
30h
1240 0
G2 GENERATOR
D+
1230 0
6450 4-02
Y4 WATER VALVE ASSEMBLY
RXD
TXD
6450 4-03
R1 MIXING ACTUATOR
B11 LH HEAT EXCHANGER TEMPERATURE SENSOR
B12 RH HEAT EXCHANGER TEMPERATURE SENSOR
B13 OUTSIDE TEMPERATURE SENSOR
B14 EVAPORATOR TEMPERATURE SENSOR
F20 30A
F16 5A
F41 30A
F39 7.5A
S2 IGNITION SWITCH
K4 BLOWER RELAY
A6000 ENGINE CONTROL MODULE (DME)
K22 HIGH SPEED RELAY
K21 NORMAL SPEED RELAY
S75 BLOWER SWITCH
M30 BLOWER MOTOR
R11 BLOWER RESISTORS
B8y PRESSURE SWITCH
B9y PRESSURE SWITCH
B9508 PRESSURE SWITCH
S36 TEMPERATURE SWITCH
M9 AUXILIARY FAN MOTOR
K19 COMPRESSOR CONTROL RELAY
Y2 AIR CONDITIONING COMPRESSOR
58g LIGHT SWITCH DETAILS 6300 0
S134y IHKR CONTROL PANEL
A15 PARK HEATING/ VENTILATION RELAY BOX
A87y INTEGRATED CLIMATE REGULATION CONTROL MODULE
A= X18155
B= X18156
C= X18157
M34 DASH VENT MIXING FLAP MOTOR
M36 FRESH AIR FLAP MOTOR
M40 RECIRCULATION FLAP MOTOR
A2 INSTRUMENT CLUSTER
6450 4-03
6450 4-05
A6000 ENGINE CONTROL MODULE (DME)

Pin Assignments

A = X18155	26 Pins, white
B = X18156	26 Pins, black
C = X18157	26 Pins, blue

X18155

Pin	Type	Description/Function	Connection
1	A	Function light, air recirculation	IHKR control panel
2		Not used	
3	A	Function light, rear window defogger	IHKR control panel
4	A	Function light, air conditioning	IHKR control panel
5	E	Rear window defogger switch	IHKR control panel
6	E	Air circulation switch	IHKR control panel
7	E	Air conditioning switch	IHKR control panel
8		Not used	
9	A	Ground for rear window defogger switch, air recirculation switch, air conditioning switch, electric flaps switches, and function lights	IHKR control panel
10	A	Ground for mixing actuator	Mixing actuator
11	A	Ground for temperature sensors	Various temperature sensors
12	A	Ground for rotary switches and interior temperature sensor	IHKR control panel
13	A	Voltage supply for mixing actuator	Mixing actuator
14	E	Voltage supply for function lights	IHKR control panel
15 USA	E	Terminal 58K	Light switch
15 CDN	E	Terminal 58K	Right park light/license plate light relay, terminal 87
16		Not used	
17		Not used	
18	E	Crankshaft position/RPM signal TD	Engine control module (DME)
19	E	Vehicle speed	Instrument cluster
20	E	Independent ventilation	Park heating/ventilation relay box
21	E	Nominal mixing value	Mixing actuator
22	A/E	Evaporator temperature	Evaporator temperature sensor
23	A/E	Outside temperature	Outside temperature sensor
24	A/E	Heater temperature, left	Left heat exchanger temperature sensor

E = Input, A = Output, M = Ground

Pin Assignments

Pin	Type	Description/Function	Connection
25	A/E	Heater temperature, right	Right heat exchanger temperature sensor
26		Not used	

X18156

Pin	Type	Description/Function	Connection
1	E	Terminal 30h	Starter, terminal 30h
2	E	Terminal 61	Generator
3		Not used	
4	E	Voltage supply, terminal 15	Front power distribution box, fuse 23
5	A	Left water valve activation	Water valve assembly
6		Not used	
7		Not used	
8		Not used	
9	E	Terminal 15 (independent ventilation only)	Park heating/ventilation relay box
10		Not used	
11		Not used	
12	A	Right water valve activation	Water valve assembly
13		Not used	
14	E	Voltage supply, terminal 30	Front power distribution box, fuse 31
15	E	Voltage supply, terminal 30	Front power distribution box, fuse 31
16	M	Ground for load circuit	Ground point
17	M	Ground for load circuit	Ground point
18	A	Engine control module (DME) activation (anti-stall)	Engine control module (DME)
19		Not used	
20		Not used	
21	E	Nominal temperature valve, right	IHKR control panel
22	E	Nominal temperature valve, left	IHKR control panel
23	E	Nominal air flow valve	IHKR control panel
24	A/E	Interior temperature sensor	IHKR control panel
25		Not used	
26	M	Ground for electronics	Ground point

E = Input, A = Output, M = Ground

Pin Assignments

X18157

Pin	Type	Description/Function	Connection
1	A	Voltage supply for recirculation flap motor	Recirculation flap motor
2	A	Voltage supply for dash vent mixing flap motor	Dash vent mixing flap motor
3	A	Voltage supply for fresh air flap motor	Fresh air flap motor
4		Not used	
5		Not used	
6	A	Recirculation flap motor activation	Recirculation flap motor
7	A	Recirculation flap motor activation	Recirculation flap motor
8	A	Recirculation flap motor activation	Recirculation flap motor
9	A	Recirculation flap motor activation	Recirculation flap motor
10	A	Fresh air flap motor activation	Fresh air flap motor
11	A	Fresh air flap motor activation	Fresh air flap motor
12	A	Fresh air flap motor activation	Fresh air flap motor
13	A	Fresh air flap motor activation	Fresh air flap motor
14	A	Voltage supply for rotary switches	IHKR control panel
15	A	RxD diagnostic data line	Data link connector
16	E/A	TxD diagnostic data line	Data link connector
17	E	Ventilation flap switch	IHKR control panel
18	A	Interior sensor blower activation	IHKR control panel
19		Not used	
20	A	Rear window defogger activation	Rear defogger relay, terminal 86b
21		Not used	
22	A	Activate A/C compressor/auxiliary fan stage 1	Engine control module (DME) and normal speed relay, terminal 85b
23	A	Dash vent mixing flap motor activation	Dash vent mixing flap motor
24	A	Dash vent mixing flap motor activation	Dash vent mixing flap motor
25	A	Dash vent mixing flap motor activation	Dash vent mixing flap motor
26	A	Dash vent mixing flap motor activation	Dash vent mixing flap motor

E = Input, A = Output, M = Ground

INTEGRATED CLIMATE REGULATION (IHKR E36)

POWER, BLOWER CONTROLS

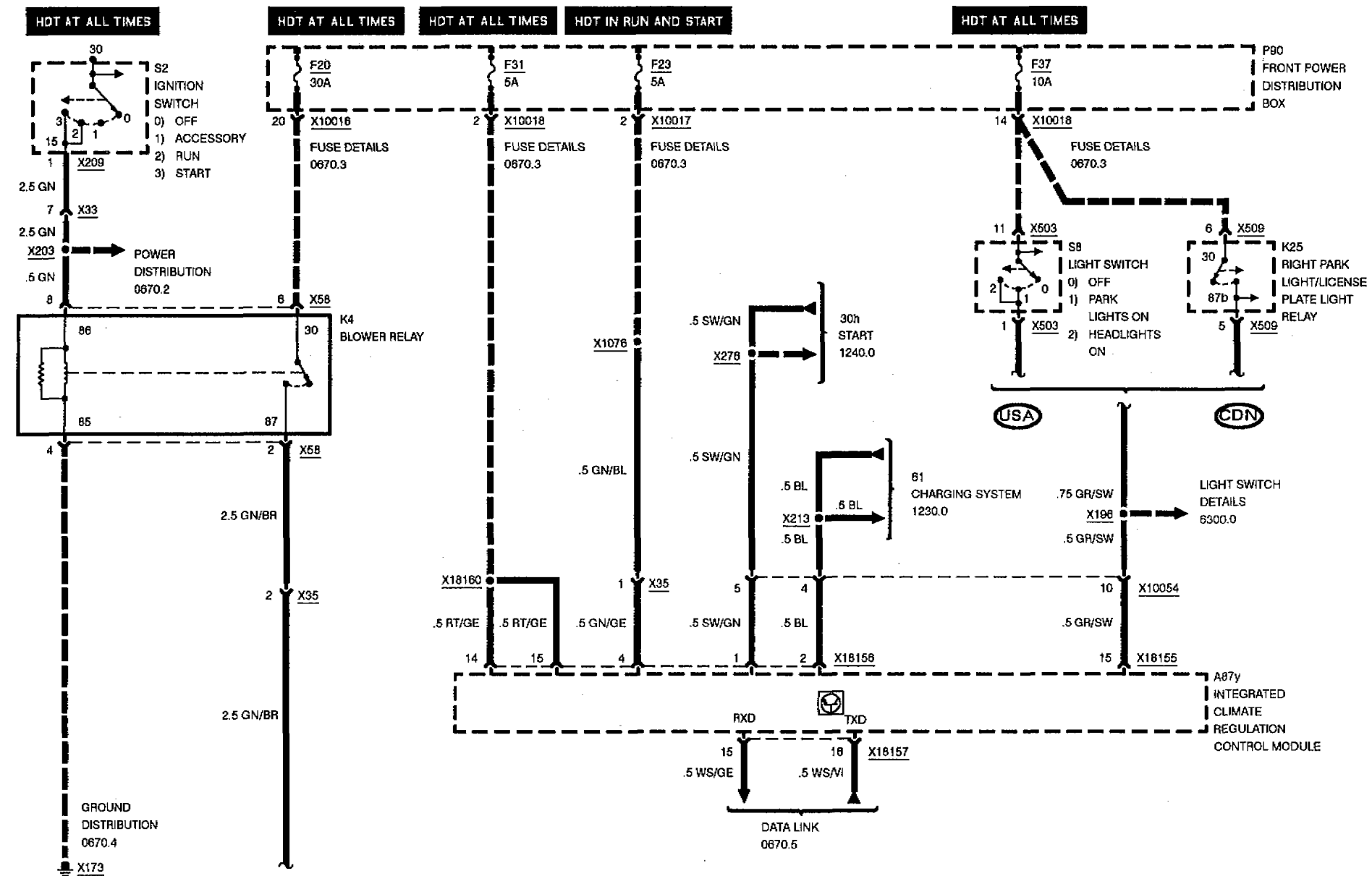

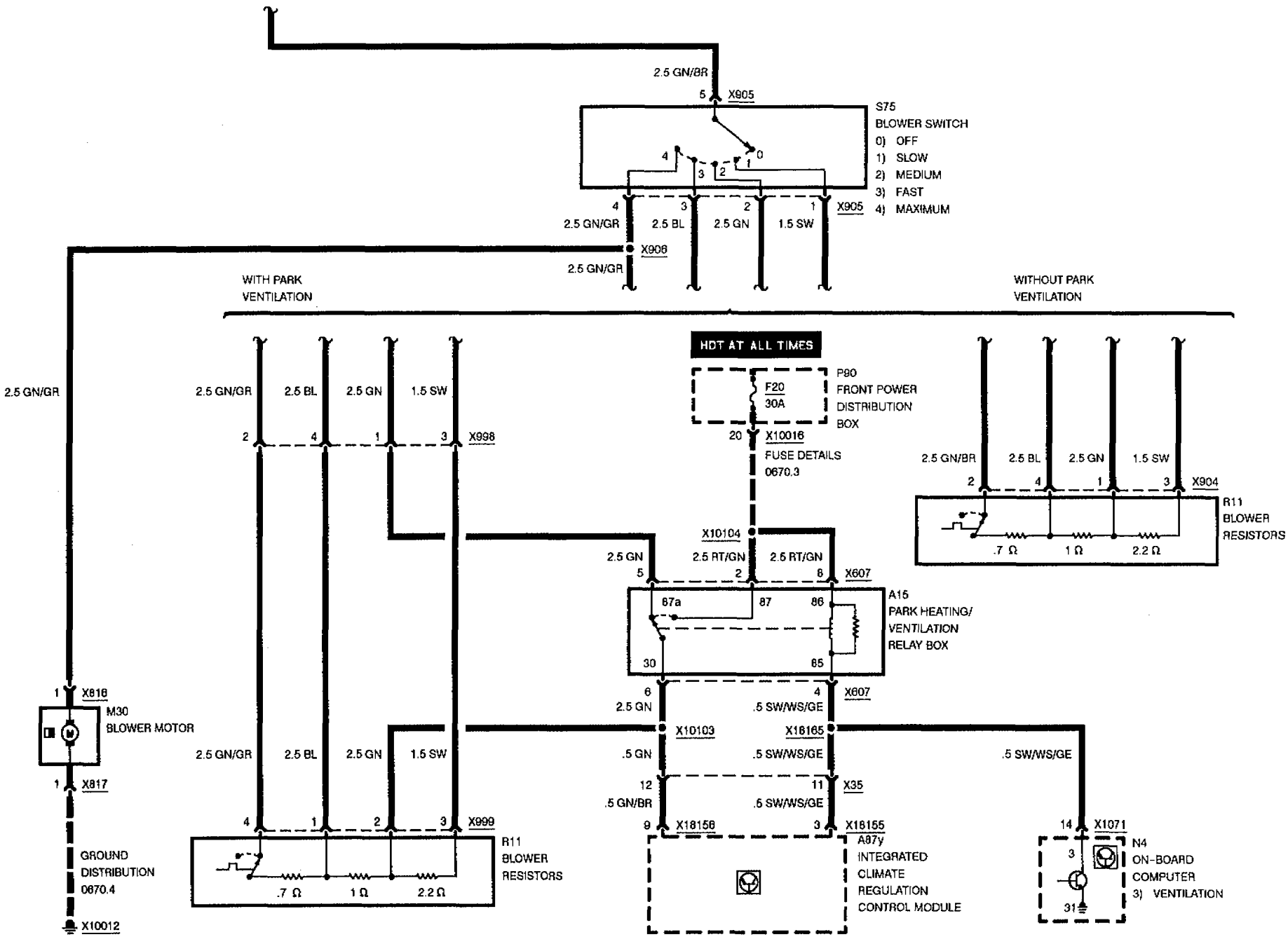
2.5 GN/BR
X905
S75
BLOWER SWITCH
0) OFF
1) SLOW
2) MEDIUM
3) FAST
4) MAXIMUM
2.5 GN/GR
2.5 BL
2.5 GN
1.5 SW
X906
WITH PARK VENTILATION
WITHOUT PARK VENTILATION
HOT AT ALL TIMES
P90
FRONT POWER DISTRIBUTION BOX
F20
30A
X10016
FUSE DETAILS 0670.3
X998
X904
R11
BLOWER RESISTORS
.7 Ω
1 Ω
2.2 Ω
X10104
2.5 RT/GN
X607
A15
PARK HEATING/ VENTILATION RELAY BOX
87a
87
86
30
85
.5 SW/WS/GE
X816
M30
BLOWER MOTOR
X817
X10103
X18165
.5 GN
.5 GN/BR
X35
X999
X18156
X18155
A87y
INTEGRATED CLIMATE REGULATION CONTROL MODULE
X1071
N4
ON-BOARD COMPUTER
3) VENTILATION
GROUND DISTRIBUTION 0670.4
X10012

INTEGRATED CLIMATE REGULATION (IHKR E36)

CONTROL MODULE, WATER VALVES

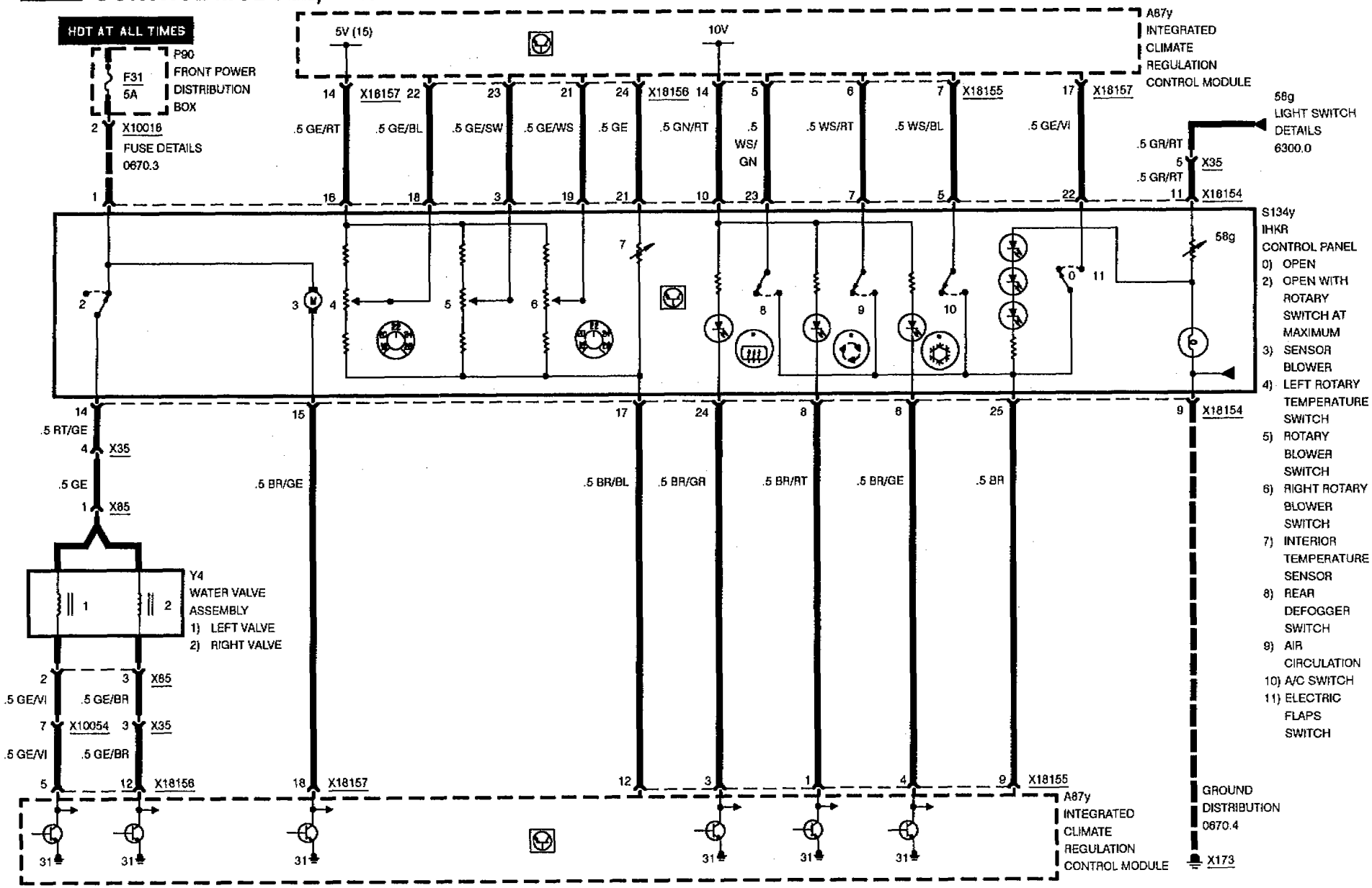

INTEGRATED CLIMATE REGULATION (IHKR E36)

TEMPERATURE CONTROL

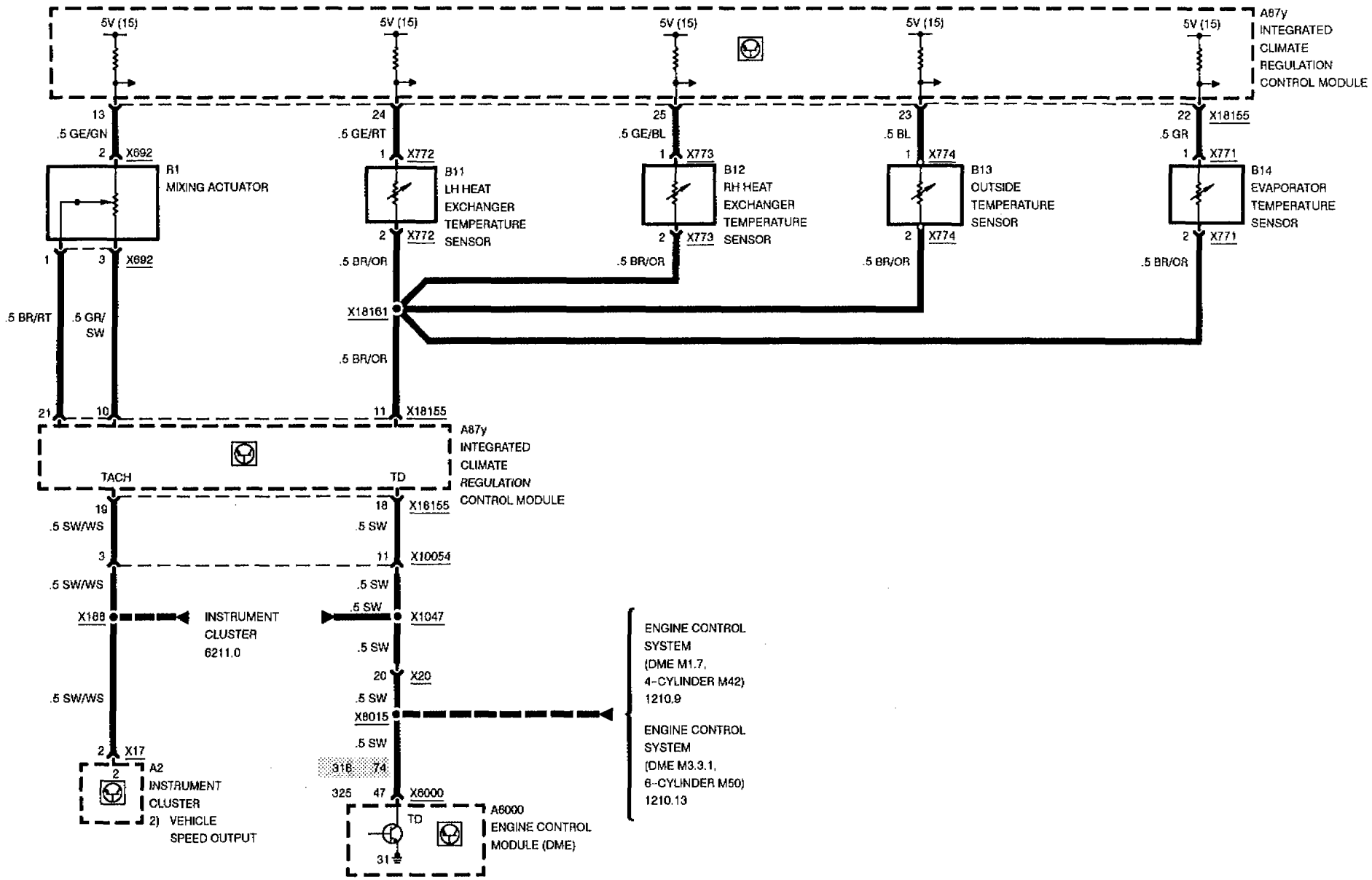

INTEGRATED CLIMATE REGULATION (IHKR E36)

AIR DELIVERY

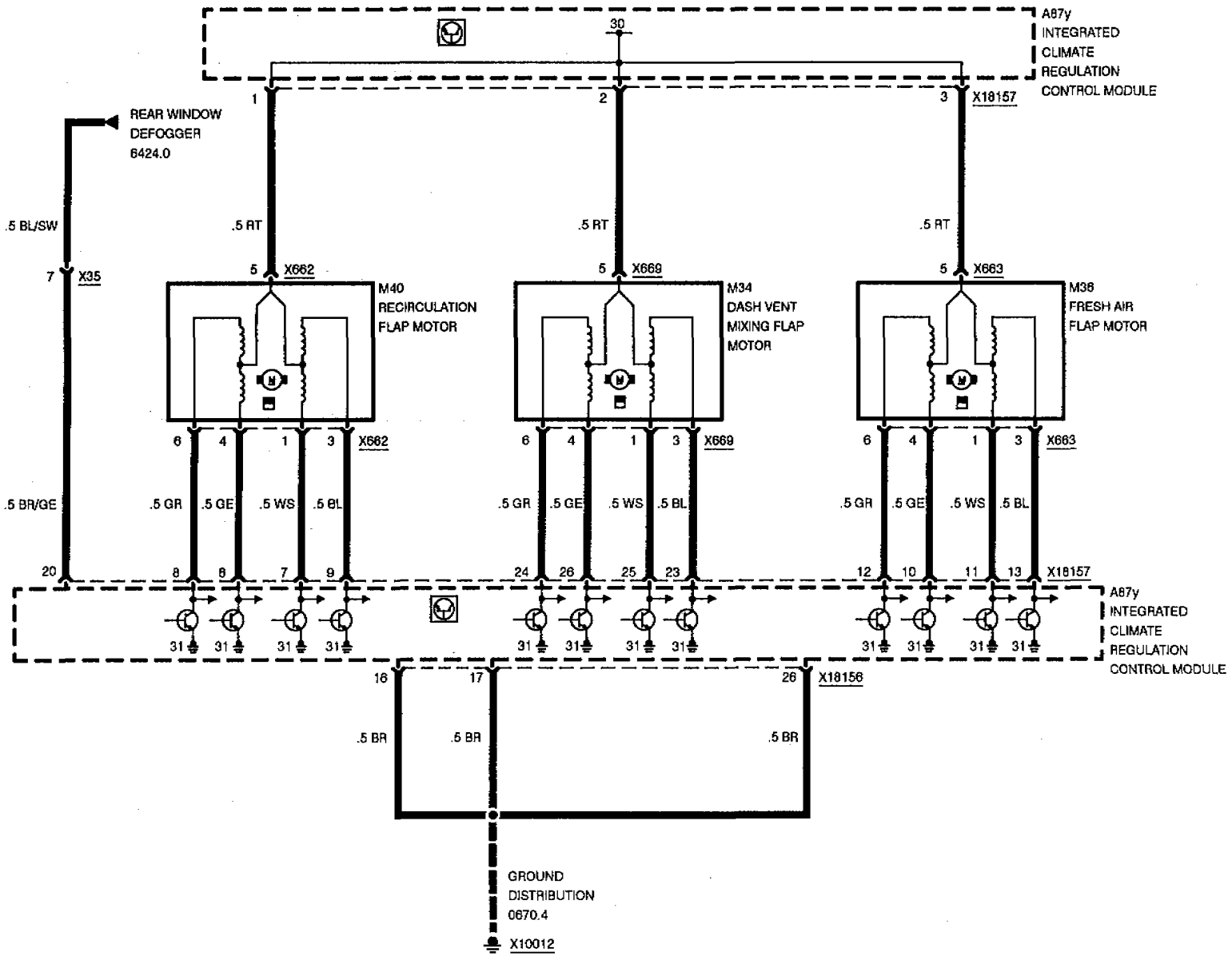

INTEGRATED CLIMATE REGULATION (IHKR E36)

COMPRESSOR CONTROLS

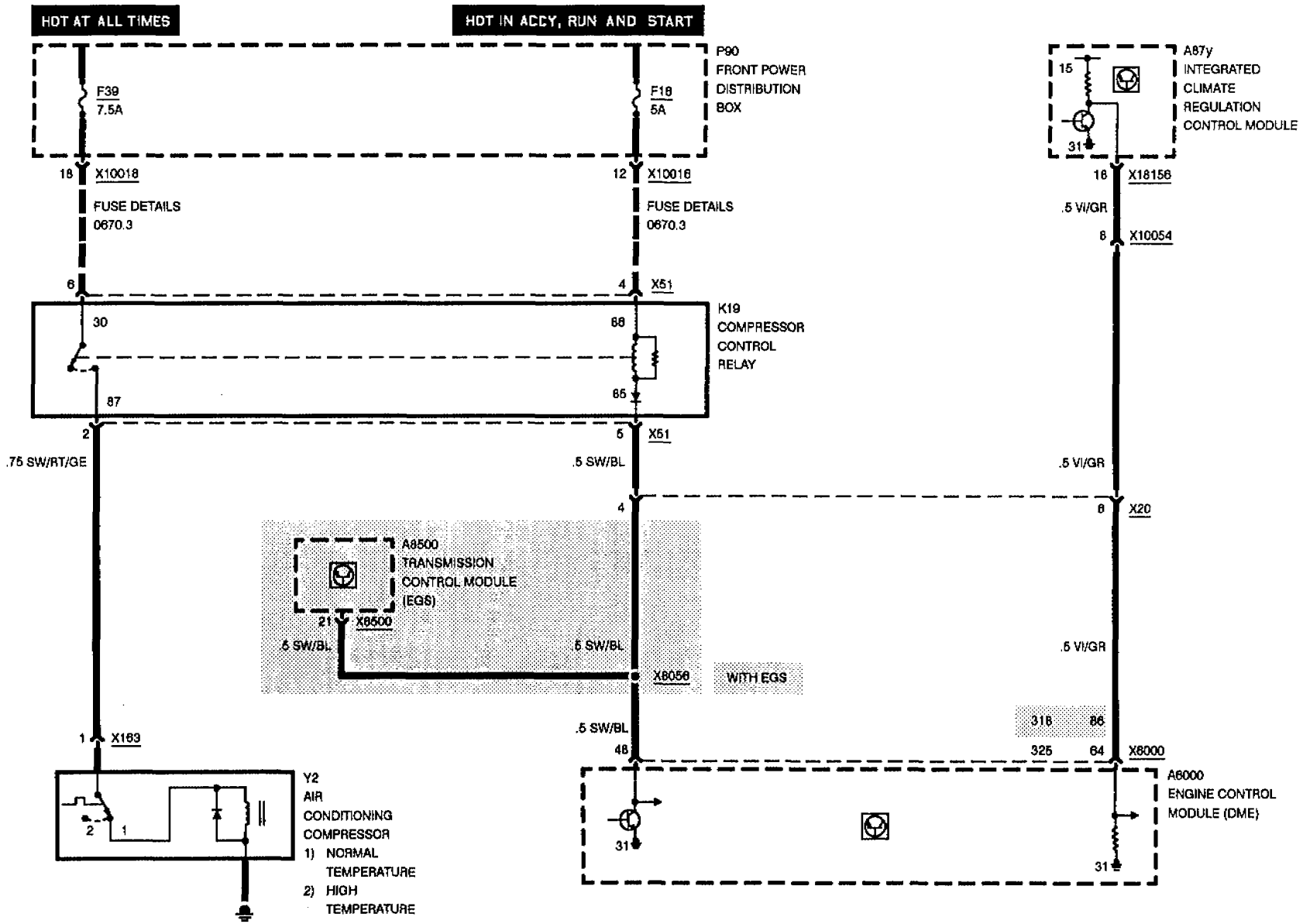

INTEGRATED CLIMATE REGULATION (IHKR E36)

AUXILIARY FAN

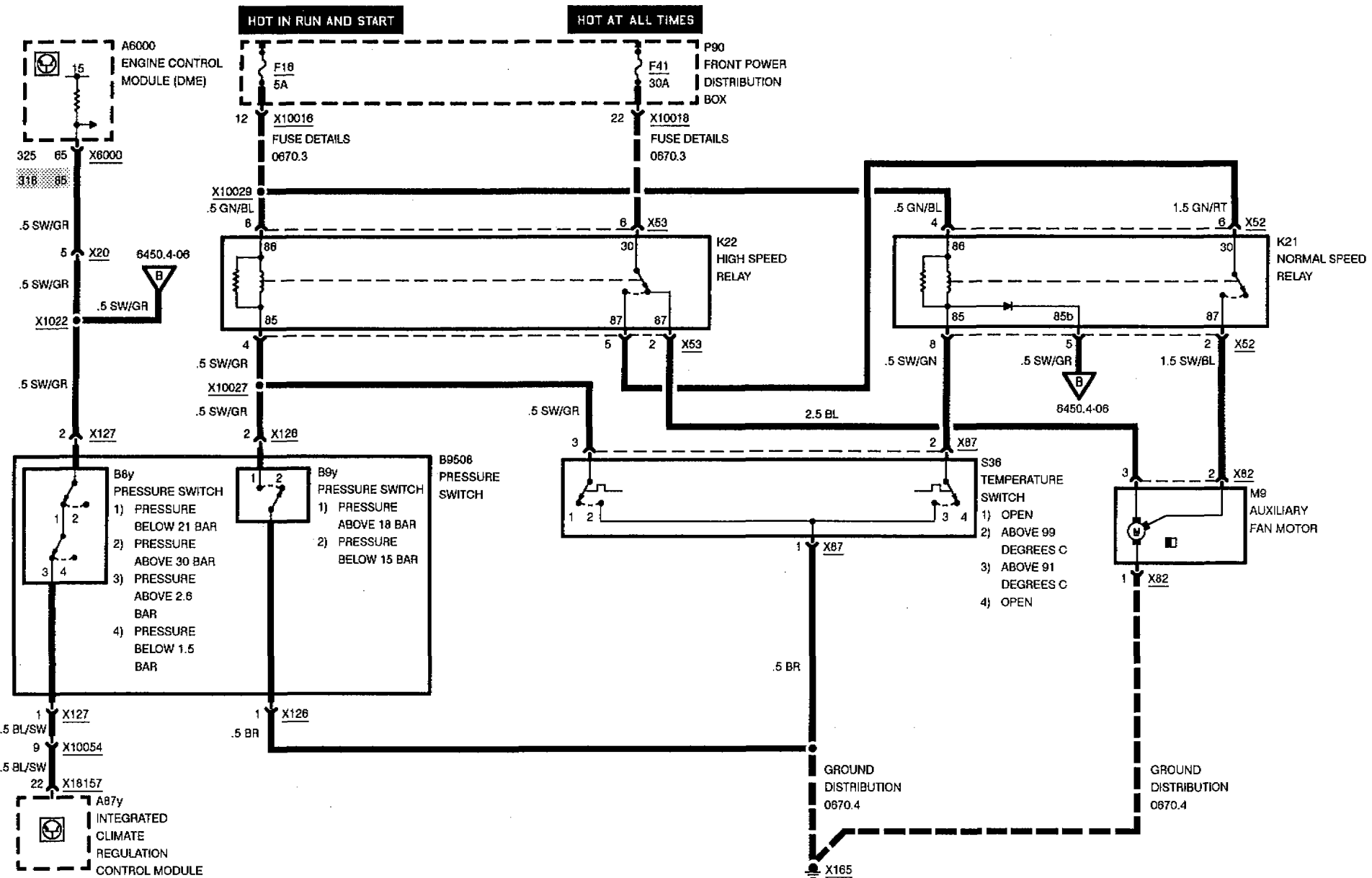

STEREO, 6-SPEAKER SYSTEM

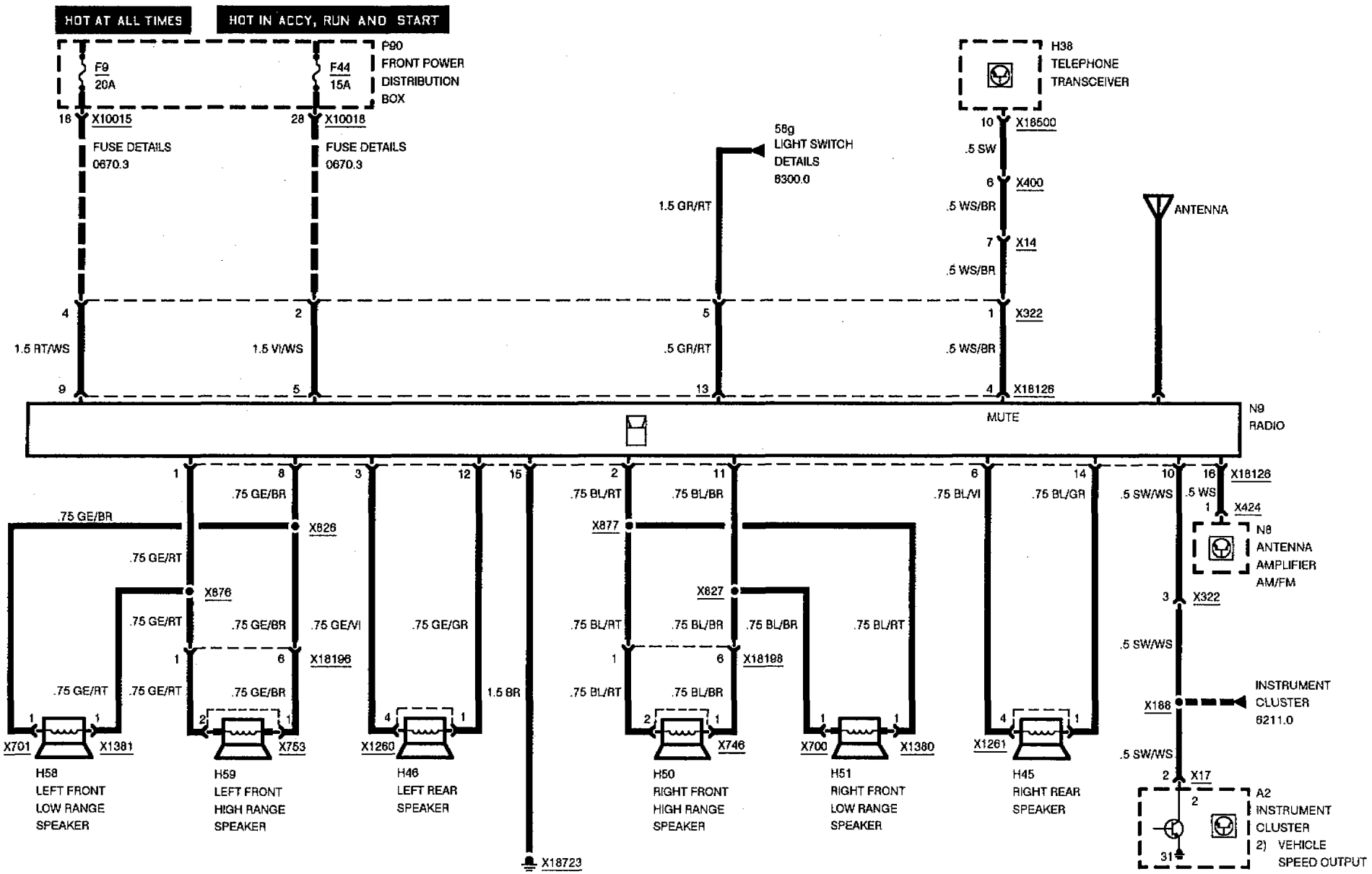

HIFI, 10-SPEAKER SYSTEM

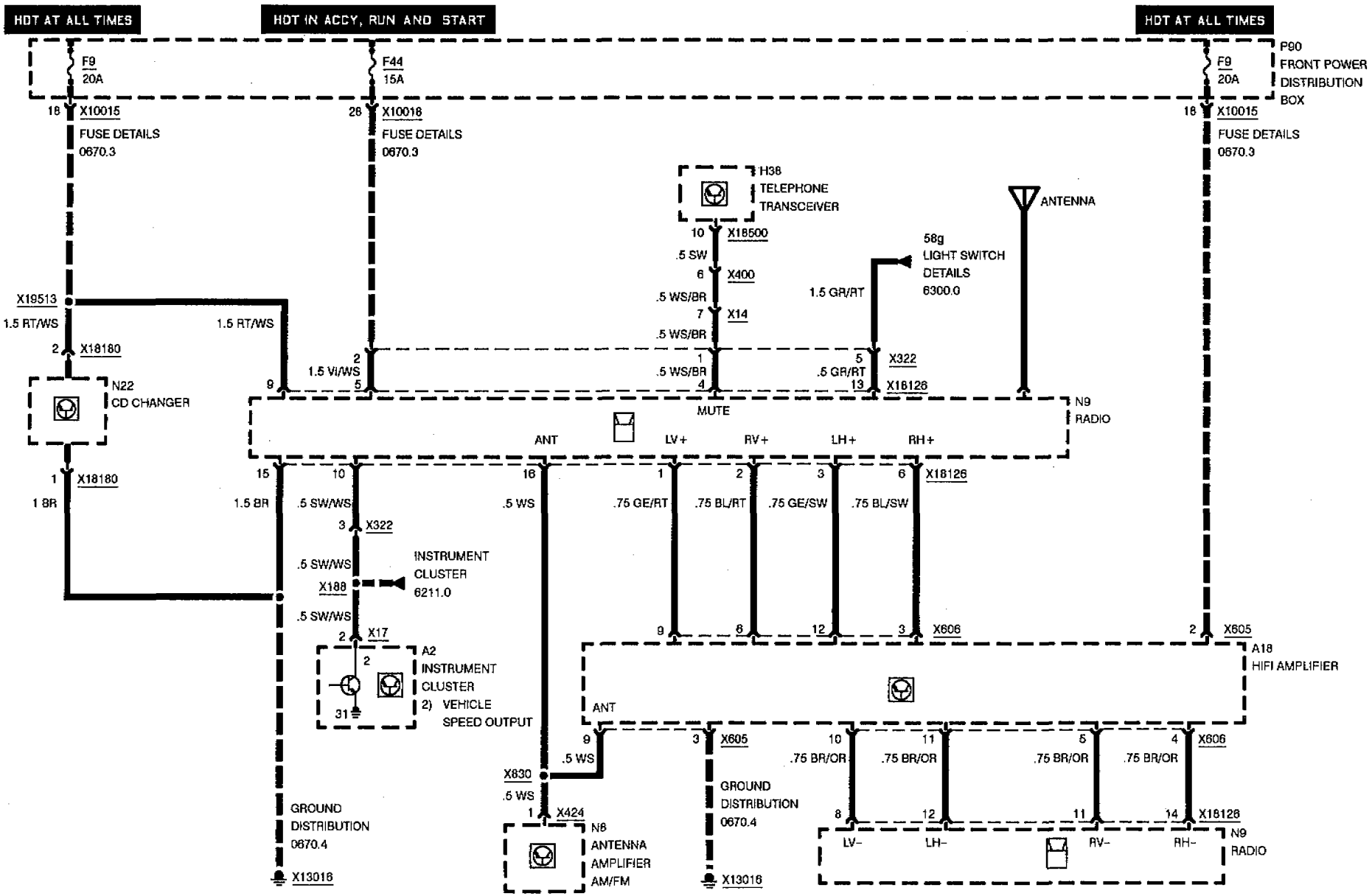

HIFI, 10-SPEAKER SYSTEM

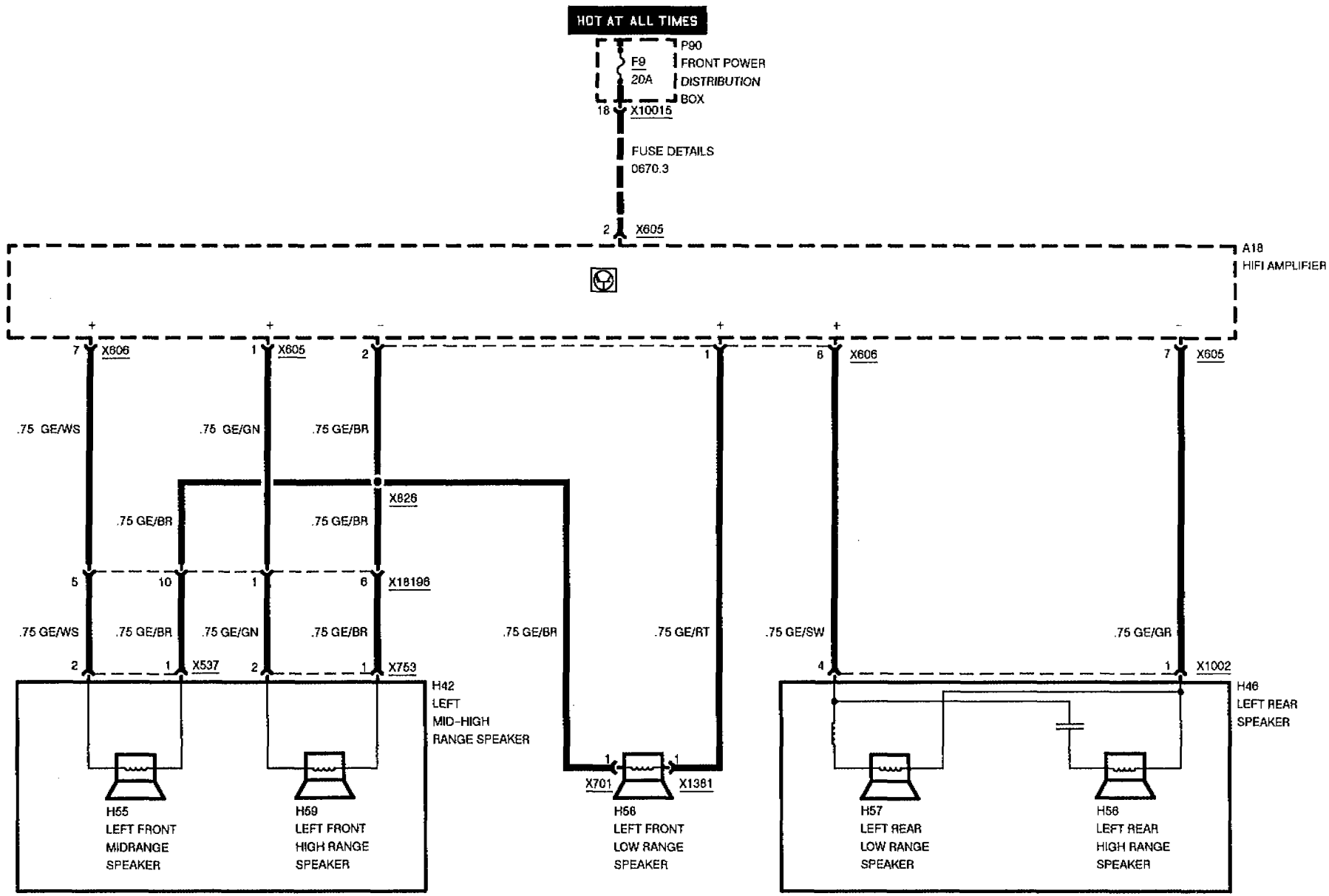

HIFI, 10-SPEAKER SYSTEM

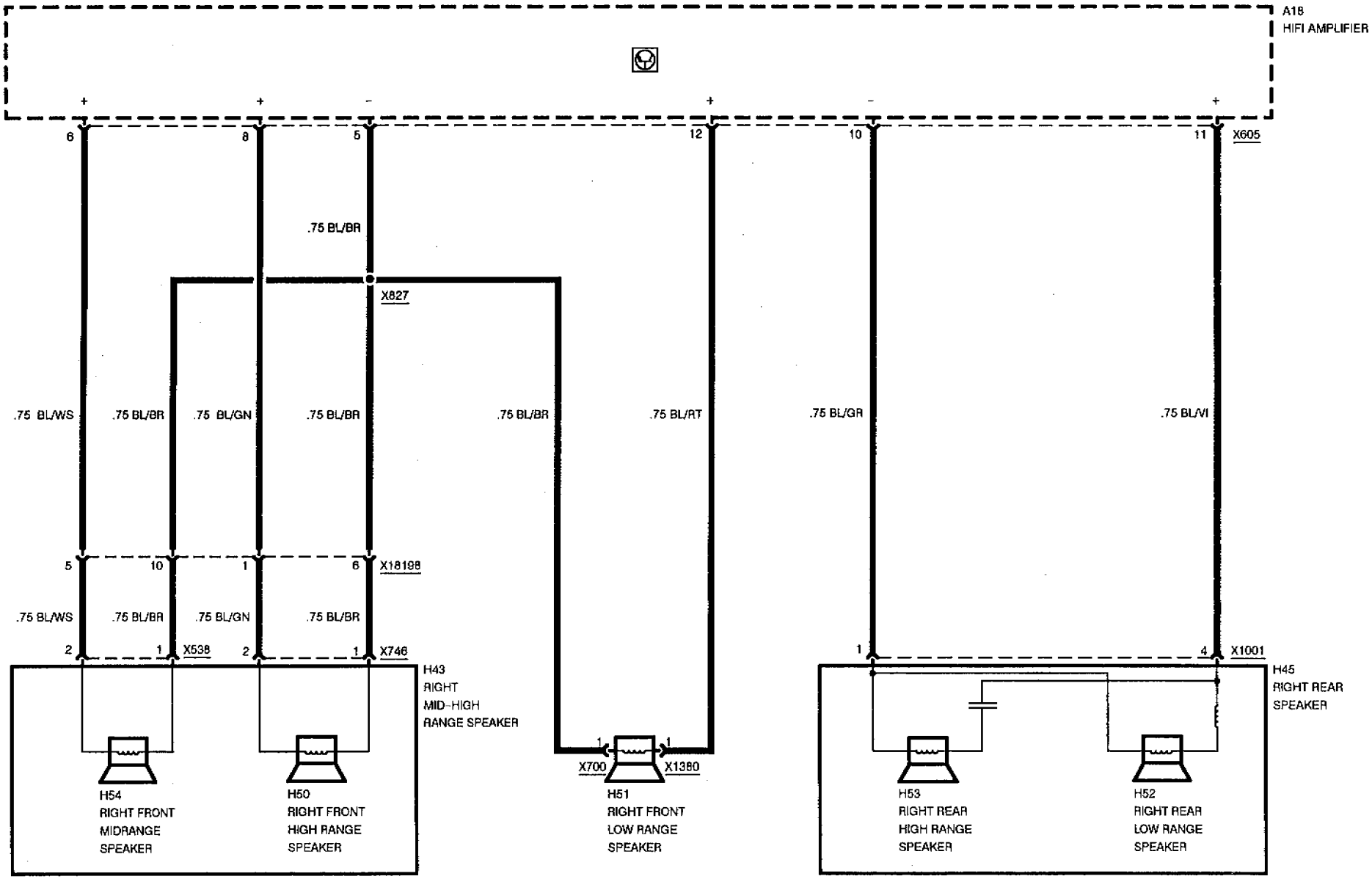

HIFI, 10-SPEAKER SYSTEM

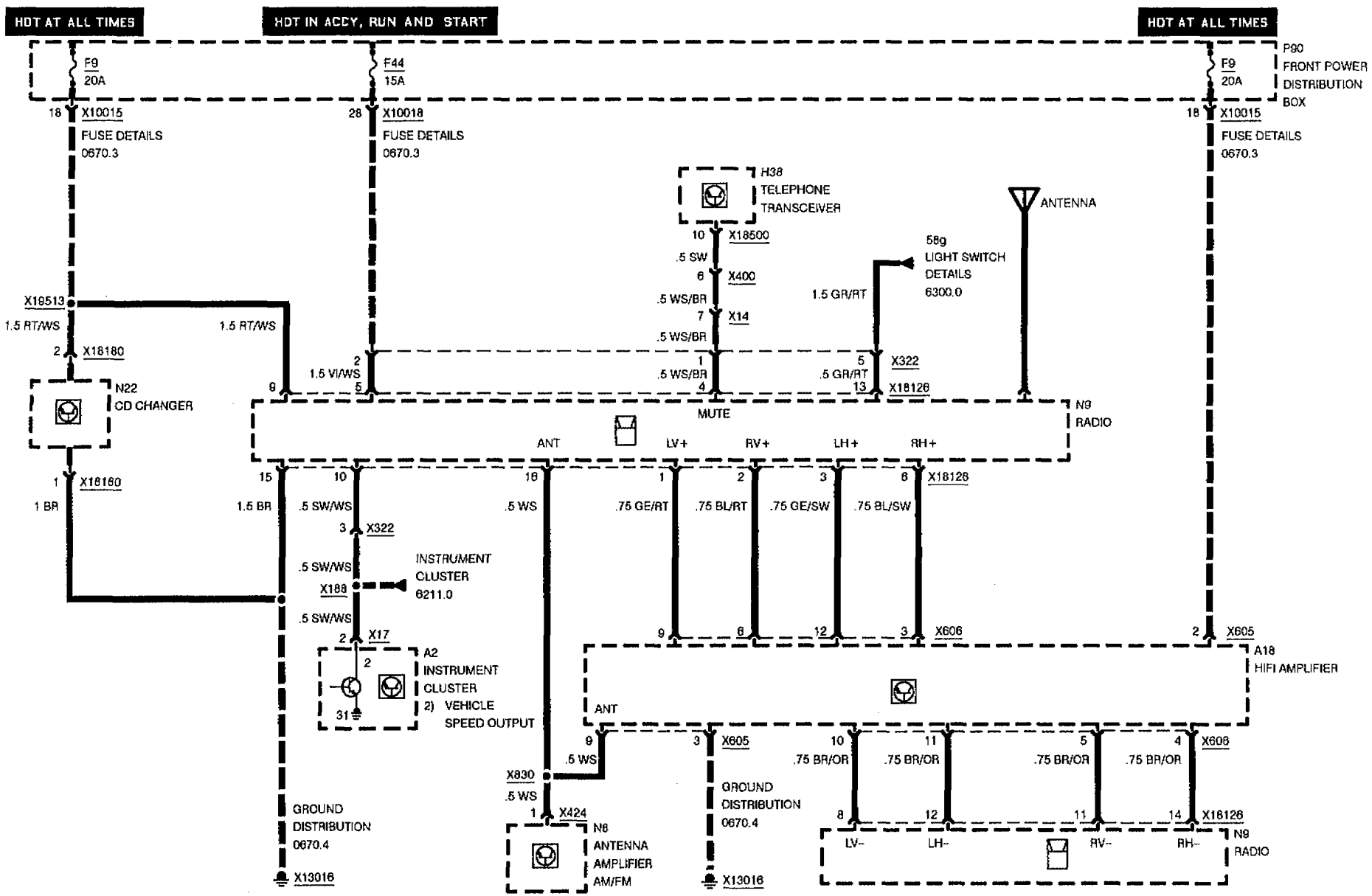

HIFI, 10-SPEAKER SYSTEM

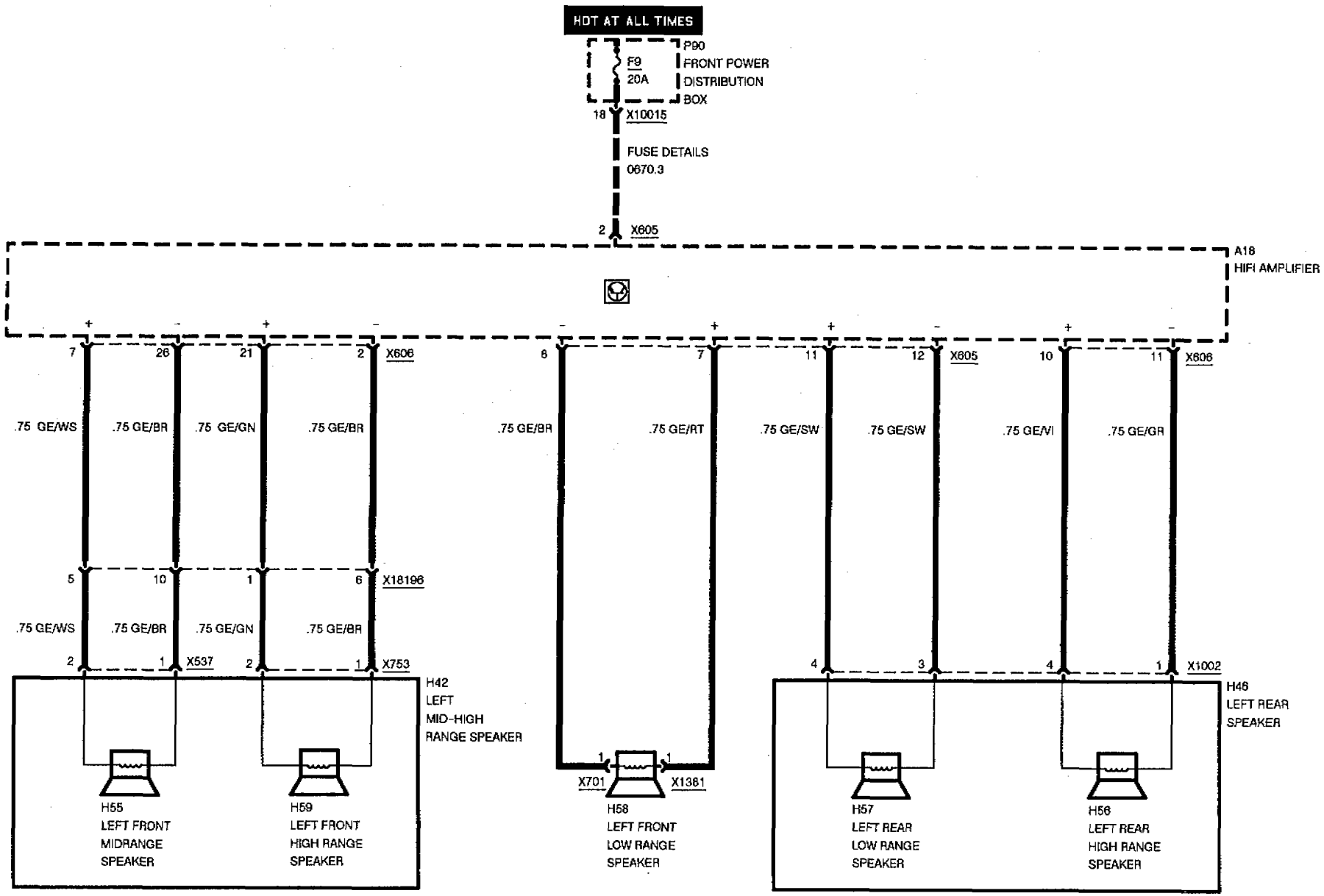

HIFI, 10-SPEAKER SYSTEM

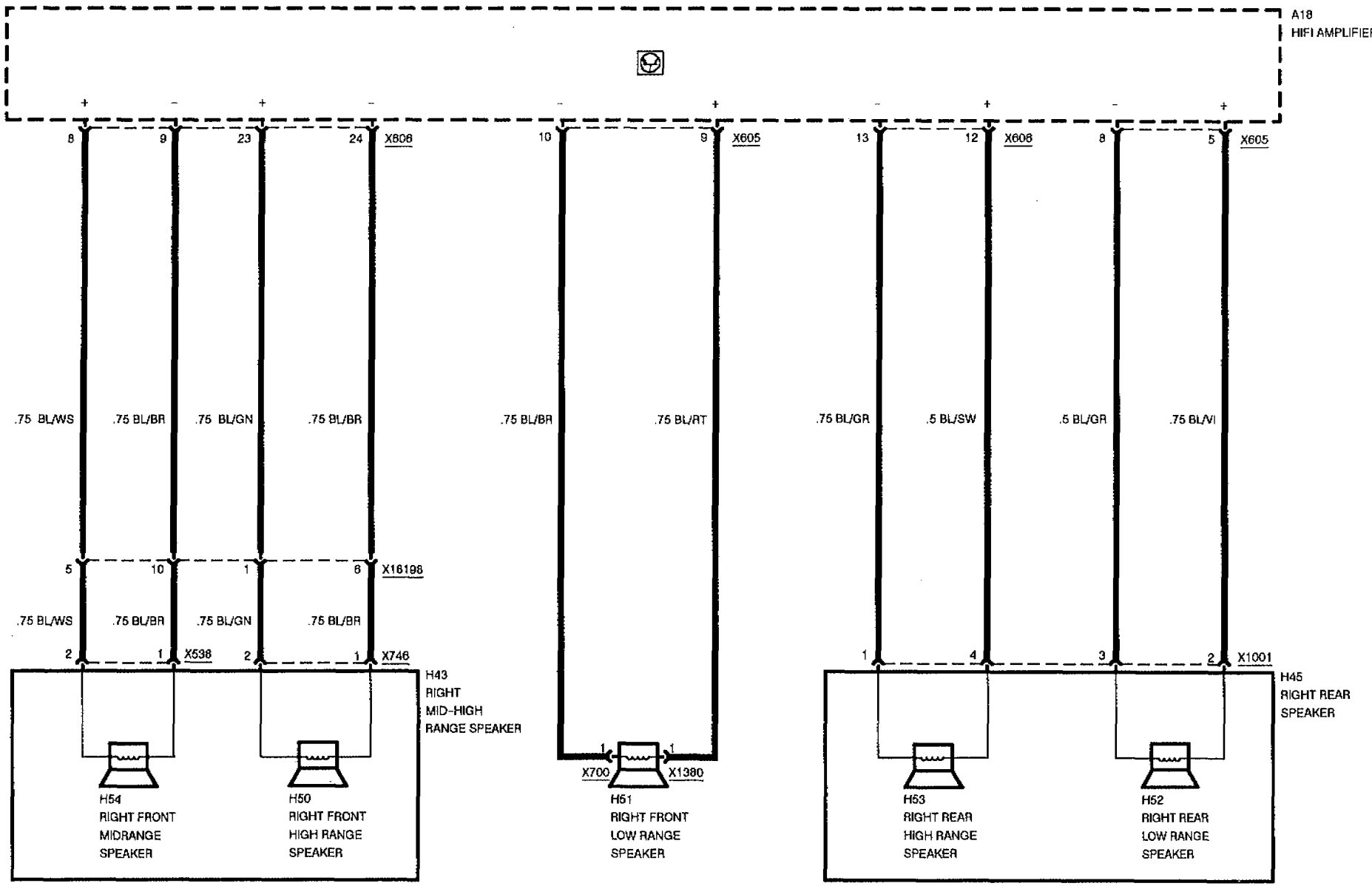

RADIO/HIFI

HIFI, 10-SPEAKER SYSTEM

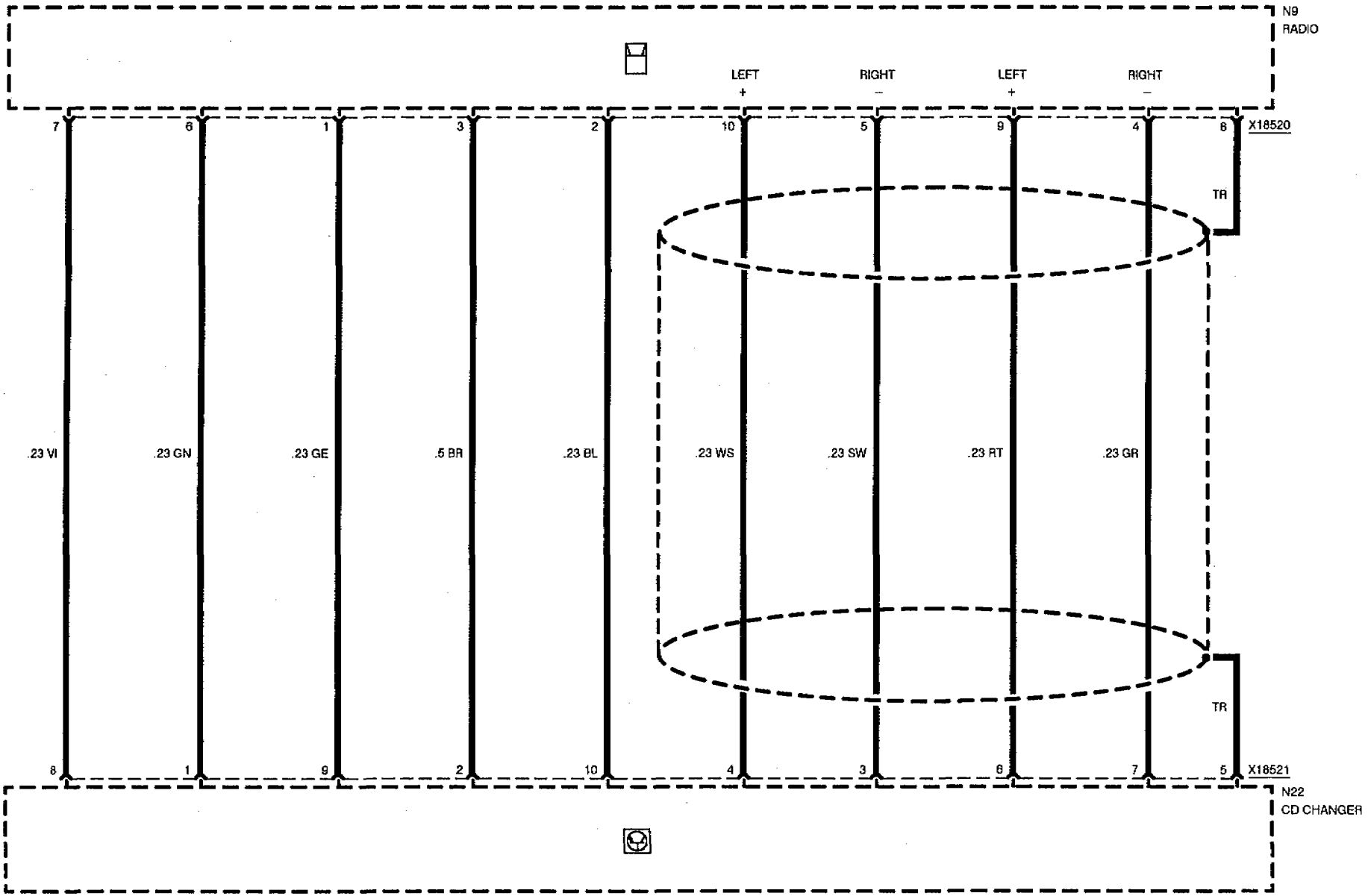

CELLULAR TELEPHONE (PROVISIONS)

AMPS SYSTEM

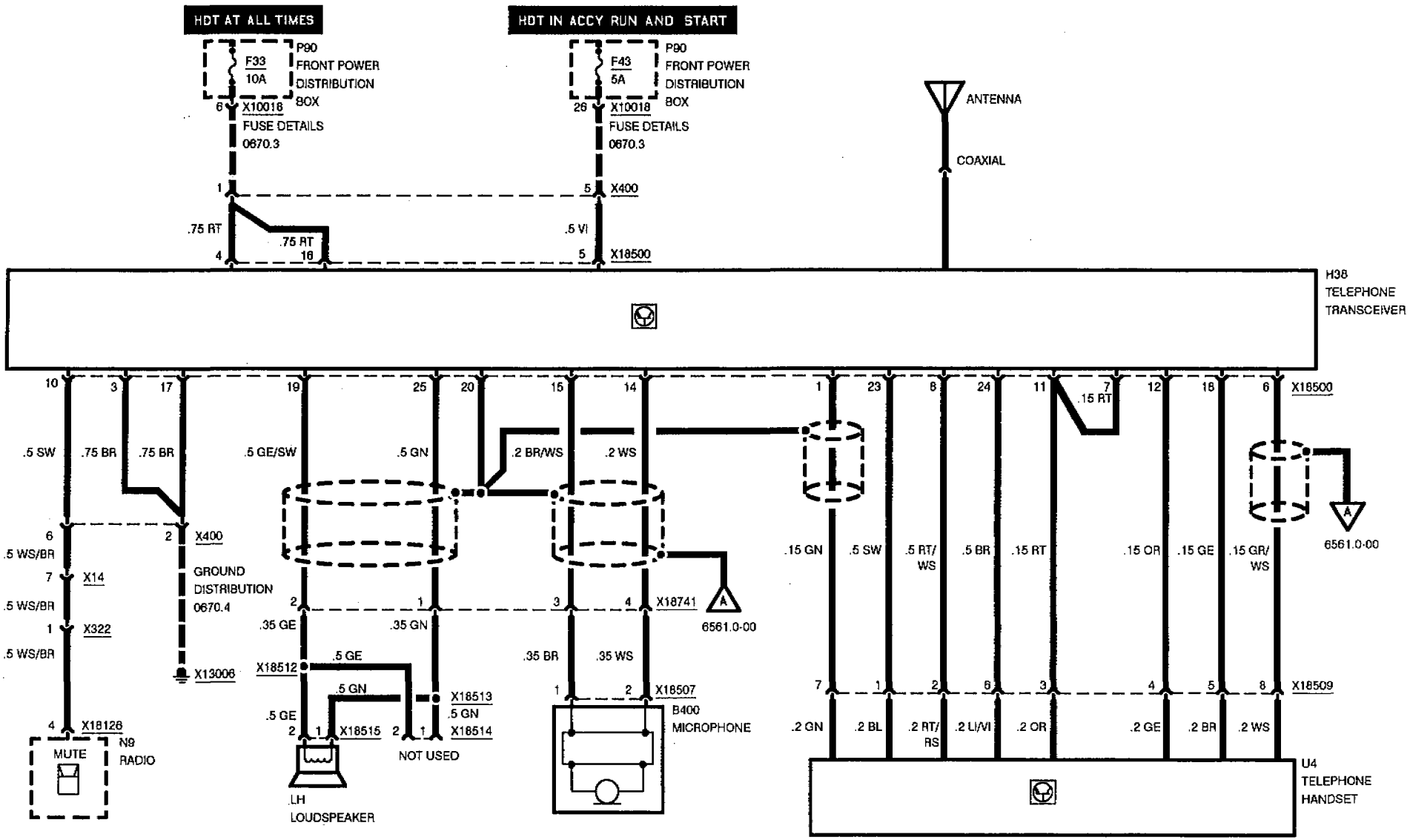

CRUISE CONTROL (TEMPOMAT)

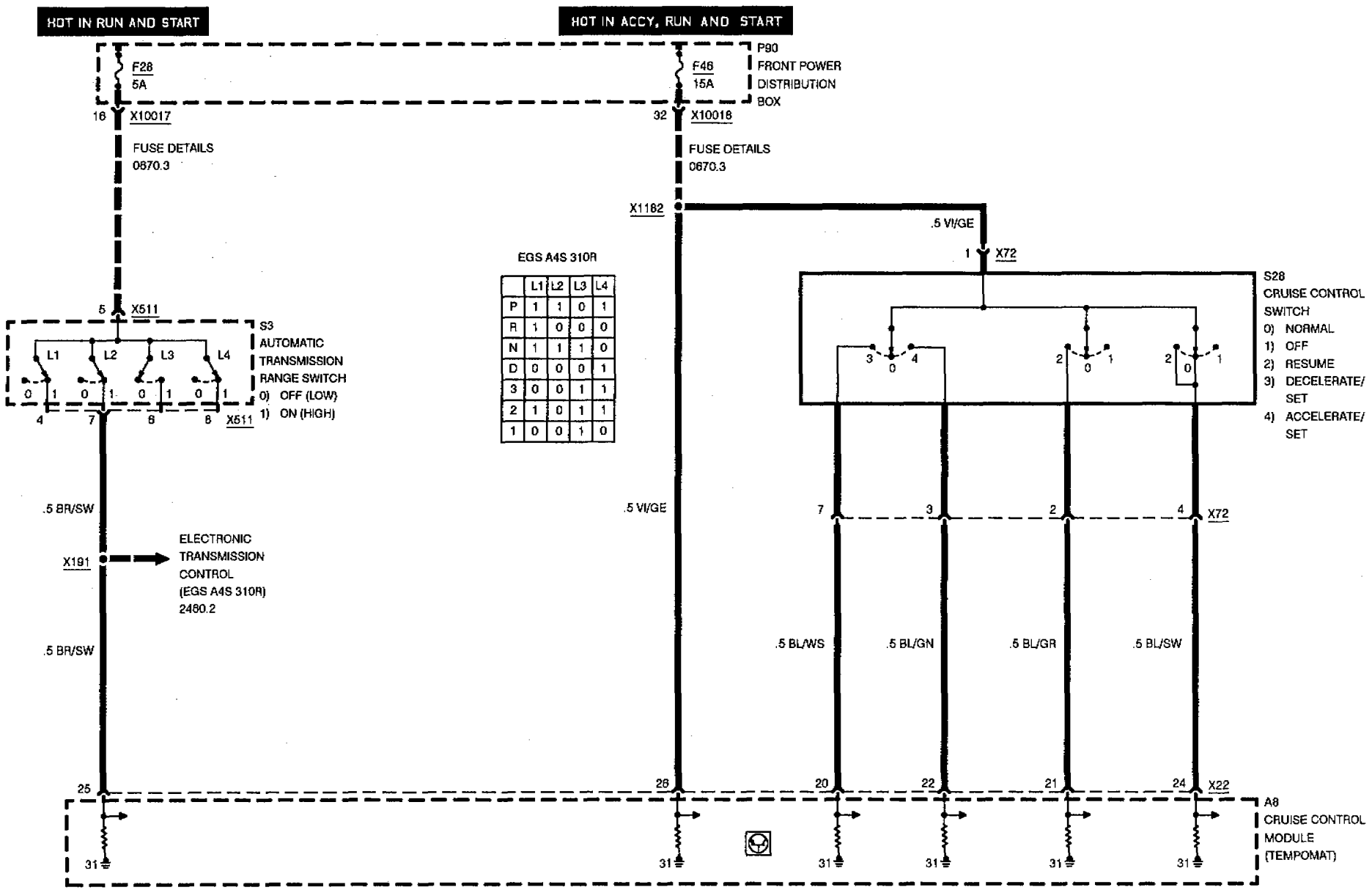

EGS A4S 310R

	L1	L2	L3	L4
P	1	1	0	1
R	1	0	0	0
N	1	1	1	0
D	0	0	0	1
3	0	0	1	1
2	1	0	1	1
1	0	0	1	0

CRUISE CONTROL (TEMPOMAT)

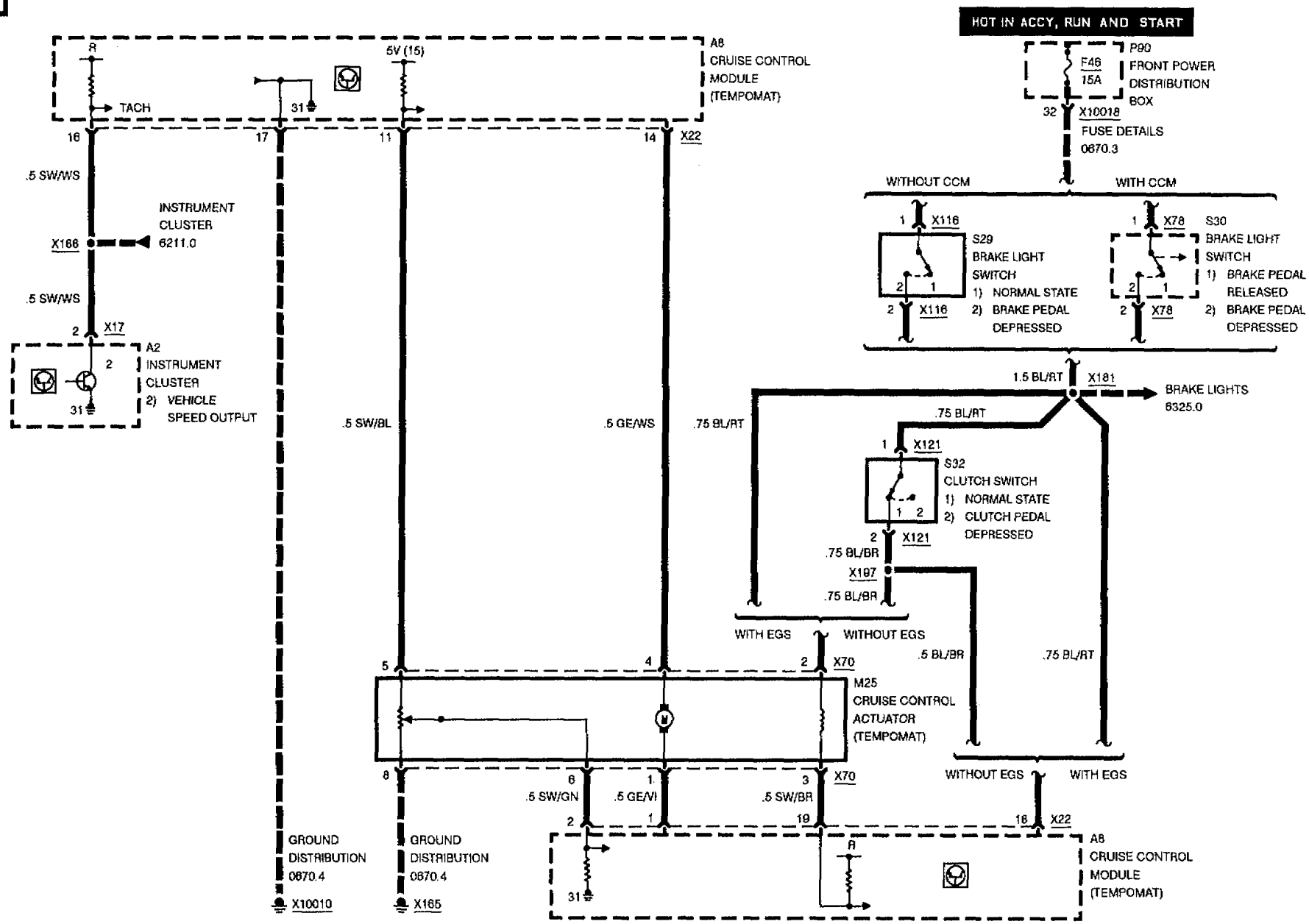

ANTI-THEFT SYSTEM (ALPINE)

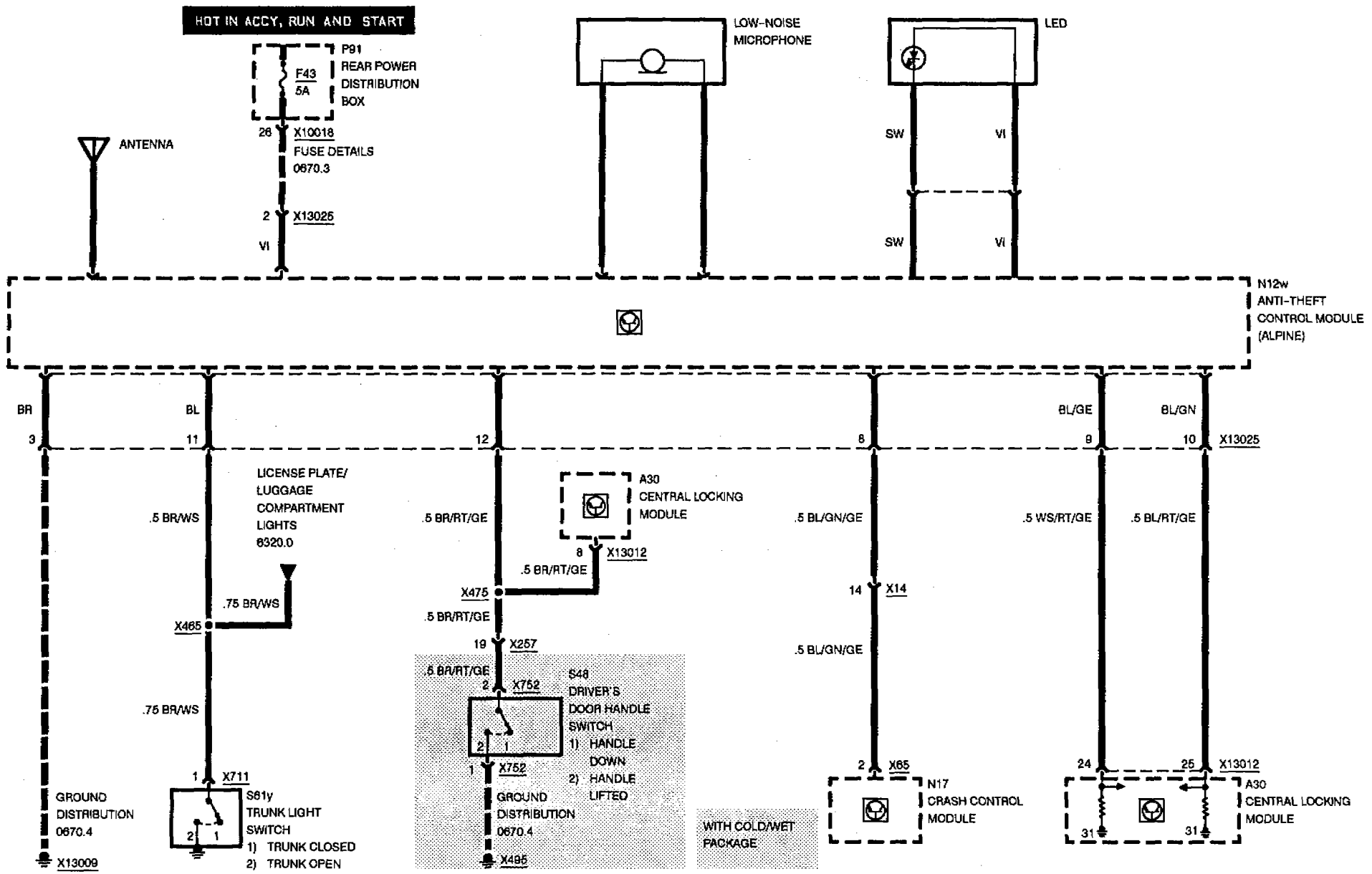

ANTI-THEFT SYSTEM (ALPINE)

FOUR-DOOR

FRONT AND REAR DOOR JAMB SWITCHES

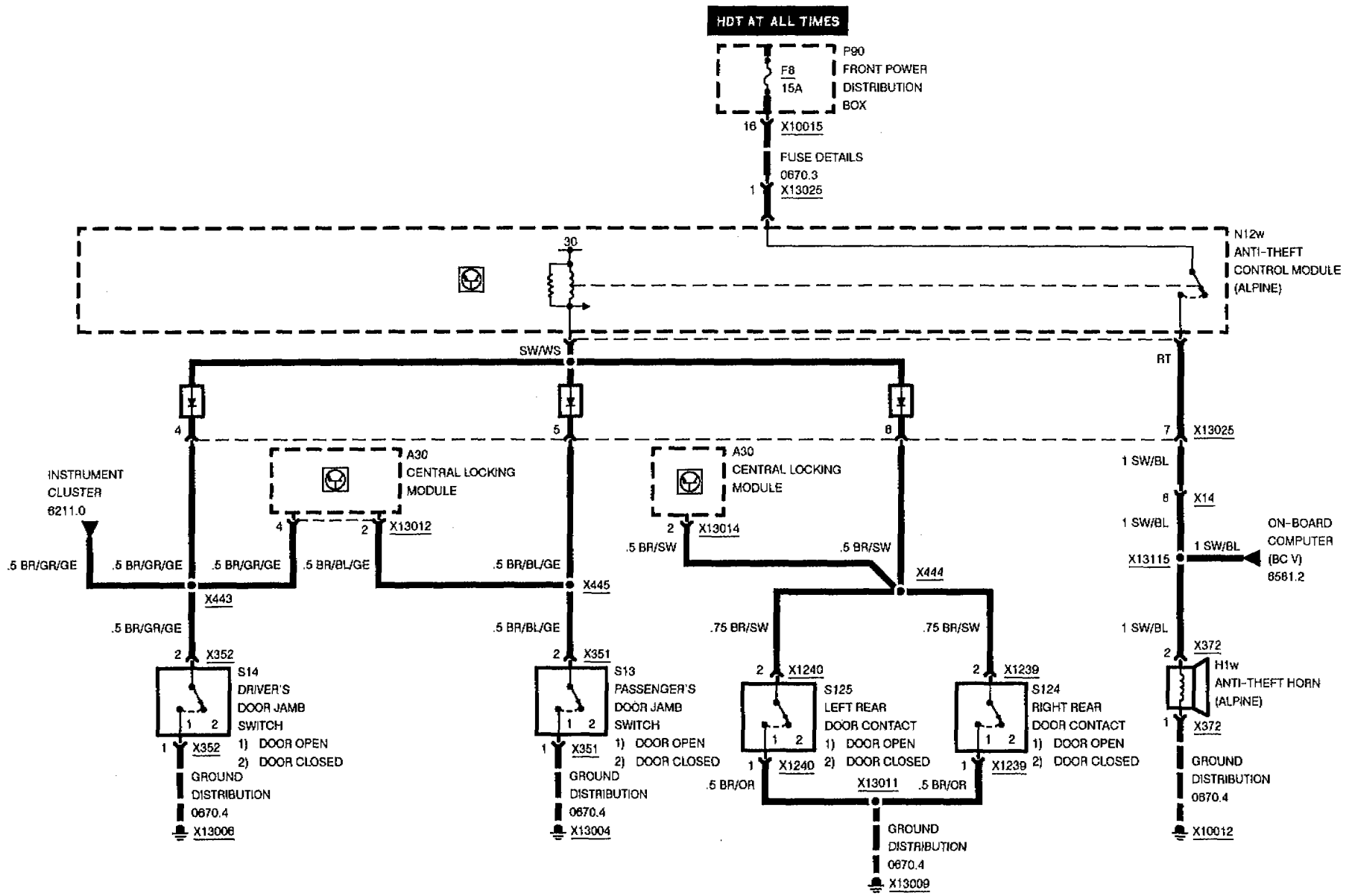

ANTI-THEFT SYSTEM (ALPINE)

TWO-DOOR

FRONT AND REAR DOOR JAMB SWITCHES

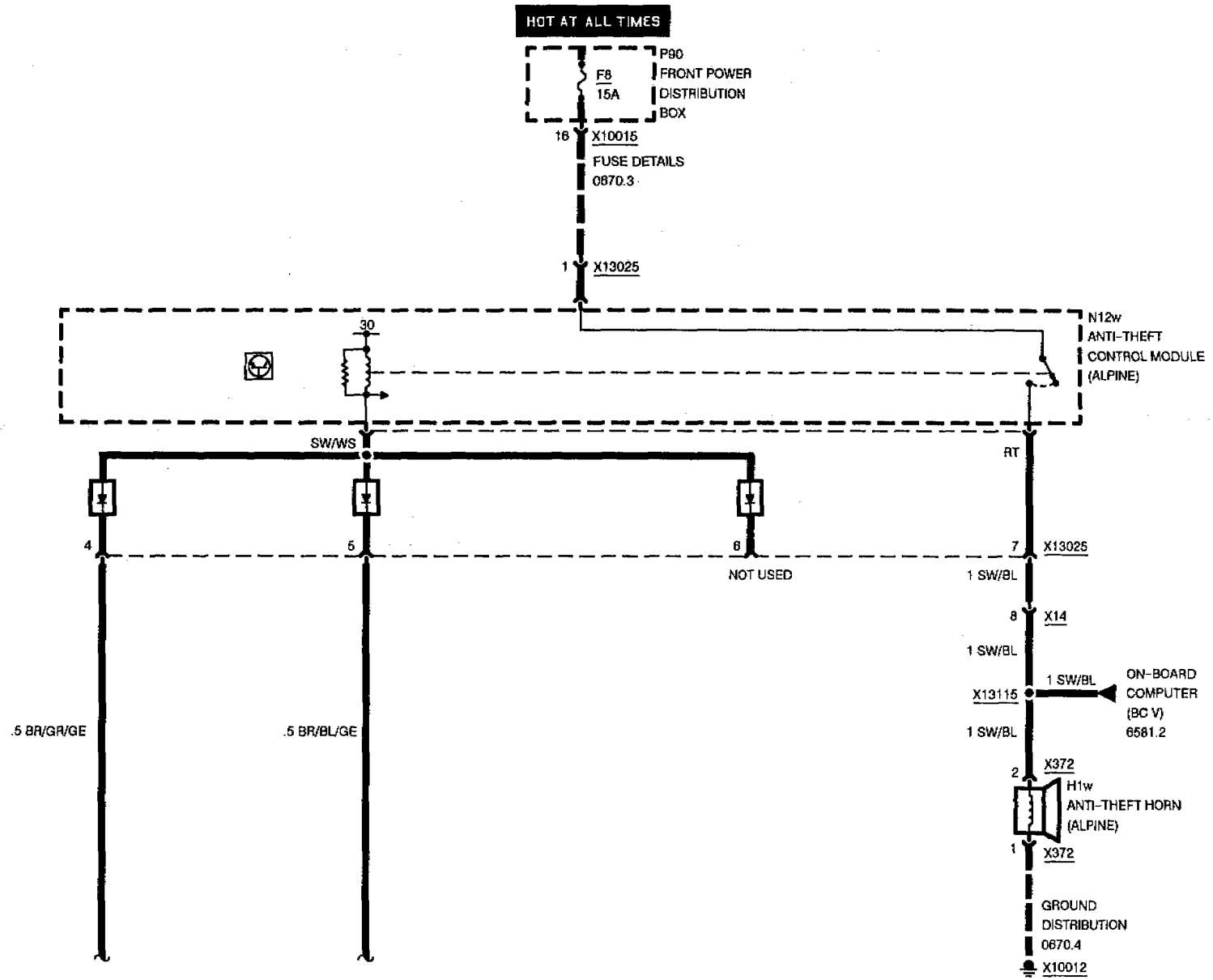

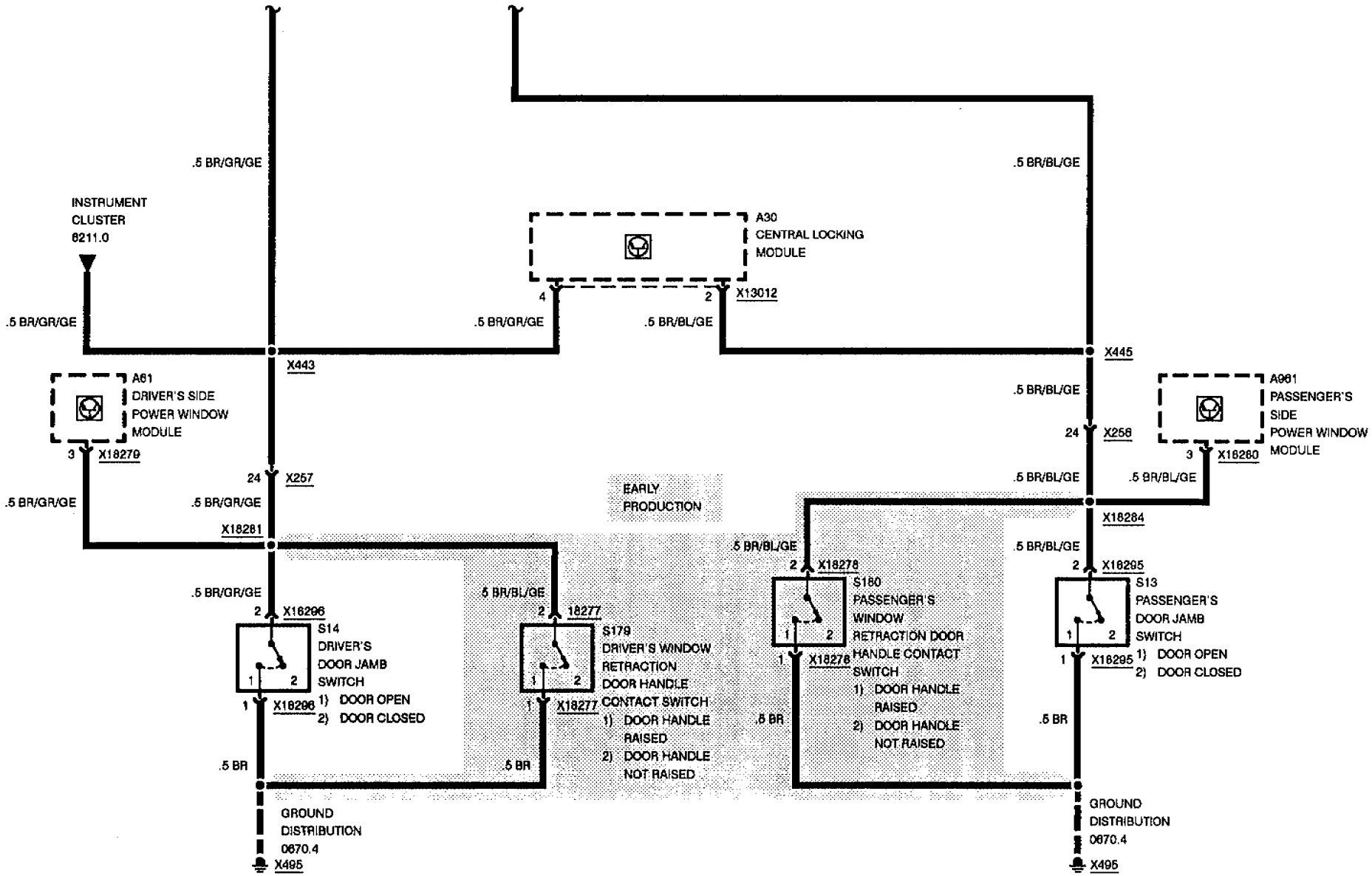
.5 BR/GR/GE
INSTRUMENT CLUSTER 6211.0
.5 BR/GR/GE
A30 CENTRAL LOCKING MODULE
4
2
X13012
.5 BR/GR/GE
.5 BR/BL/GE
.5 BR/BL/GE
X443
X445
A61 DRIVER'S SIDE POWER WINDOW MODULE
3
X18279
.5 BR/BL/GE
24
X256
A961 PASSENGER'S SIDE POWER WINDOW MODULE
3
X18260
24
X257
.5 BR/BL/GE
.5 BR/BL/GE
.5 BR/GR/GE
.5 BR/GR/GE
EARLY PRODUCTION
X18281
X18284
.5 BR/BL/GE
.5 BR/BL/GE
2
X18278
S180 PASSENGER'S WINDOW RETRACTION DOOR HANDLE CONTACT SWITCH
1) DOOR HANDLE RAISED
2) DOOR HANDLE NOT RAISED
1
X18278
2
X18295
S13 PASSENGER'S DOOR JAMB SWITCH
1) DOOR OPEN
2) DOOR CLOSED
1
X18295
.5 BR/GR/GE
2
X18296
S14 DRIVER'S DOOR JAMB SWITCH
1) DOOR OPEN
2) DOOR CLOSED
1
X18296
.5 BR/BL/GE
2
18277
S179 DRIVER'S WINDOW RETRACTION DOOR HANDLE CONTACT SWITCH
1) DOOR HANDLE RAISED
2) DOOR HANDLE NOT RAISED
1
X18277
.5 BR
.5 BR
.5 BR
.5 BR
GROUND DISTRIBUTION 0670.4
X495
GROUND DISTRIBUTION 0670.4
X495

ON-BOARD COMPUTER (BC V)

POWER

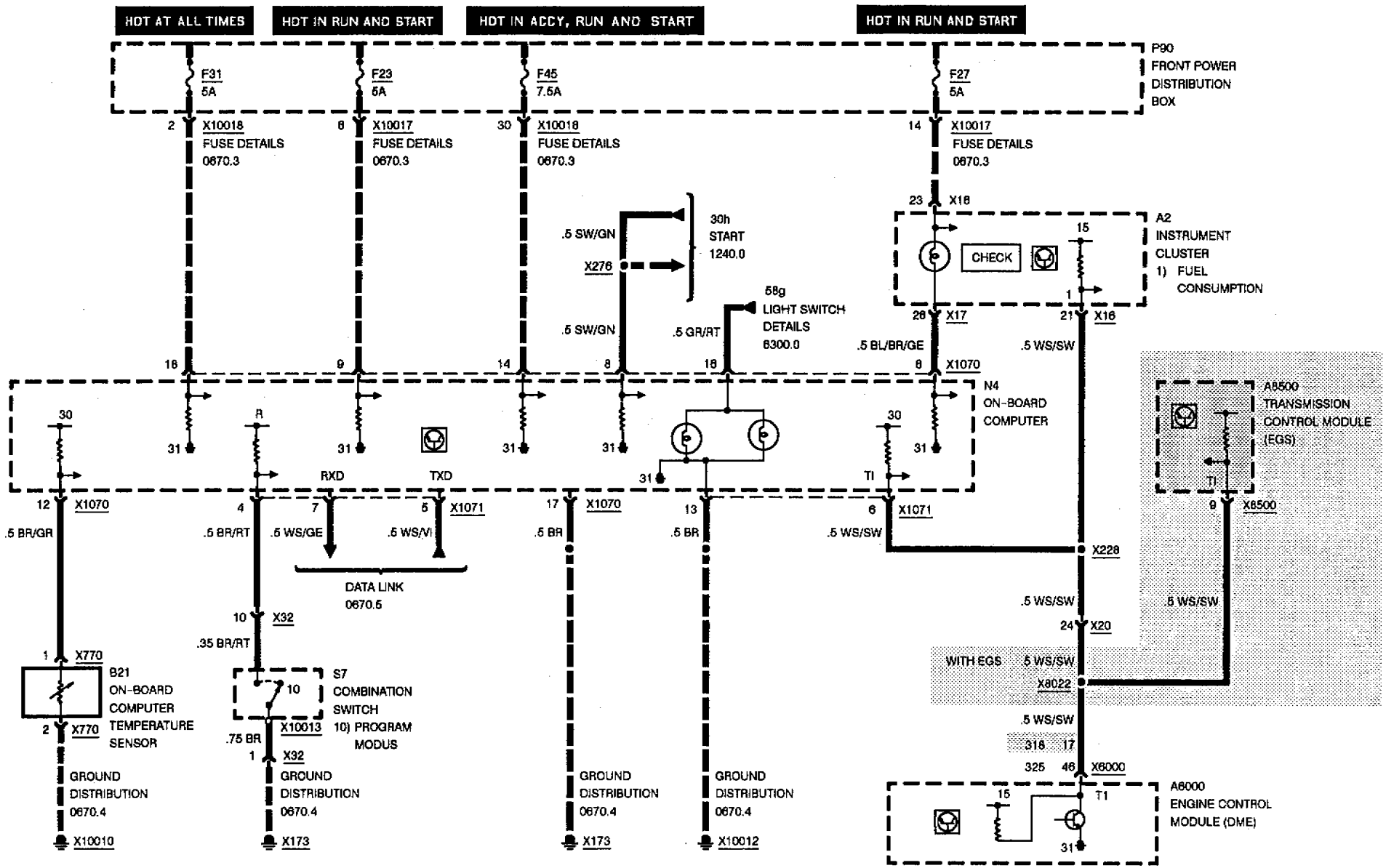

ON-BOARD COMPUTER (BC V)

CHIME, BRAKE LIGHT SWITCH

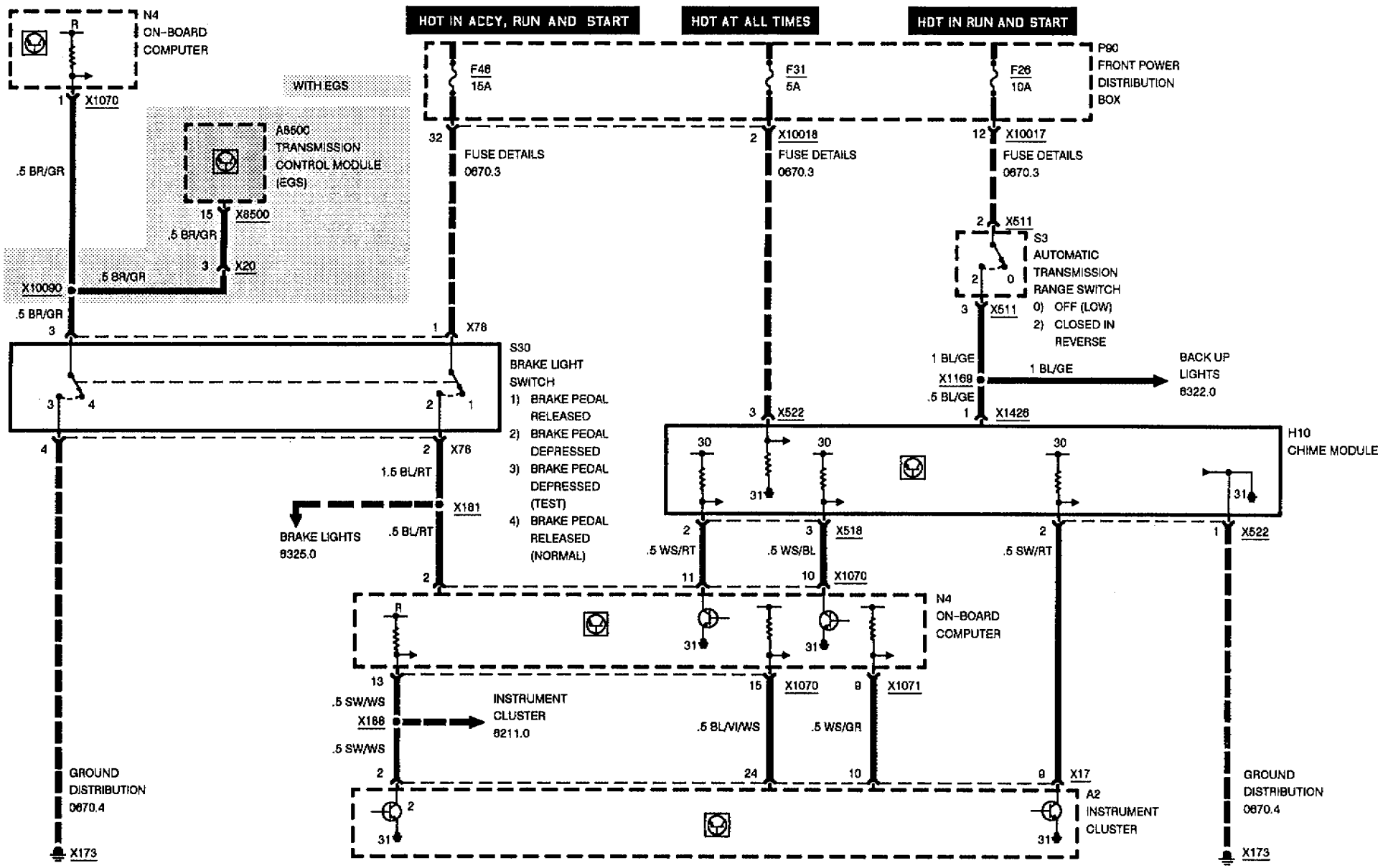

ON-BOARD COMPUTER (BC V)

ANTI-THEFT HORN, PARK VENTILATION

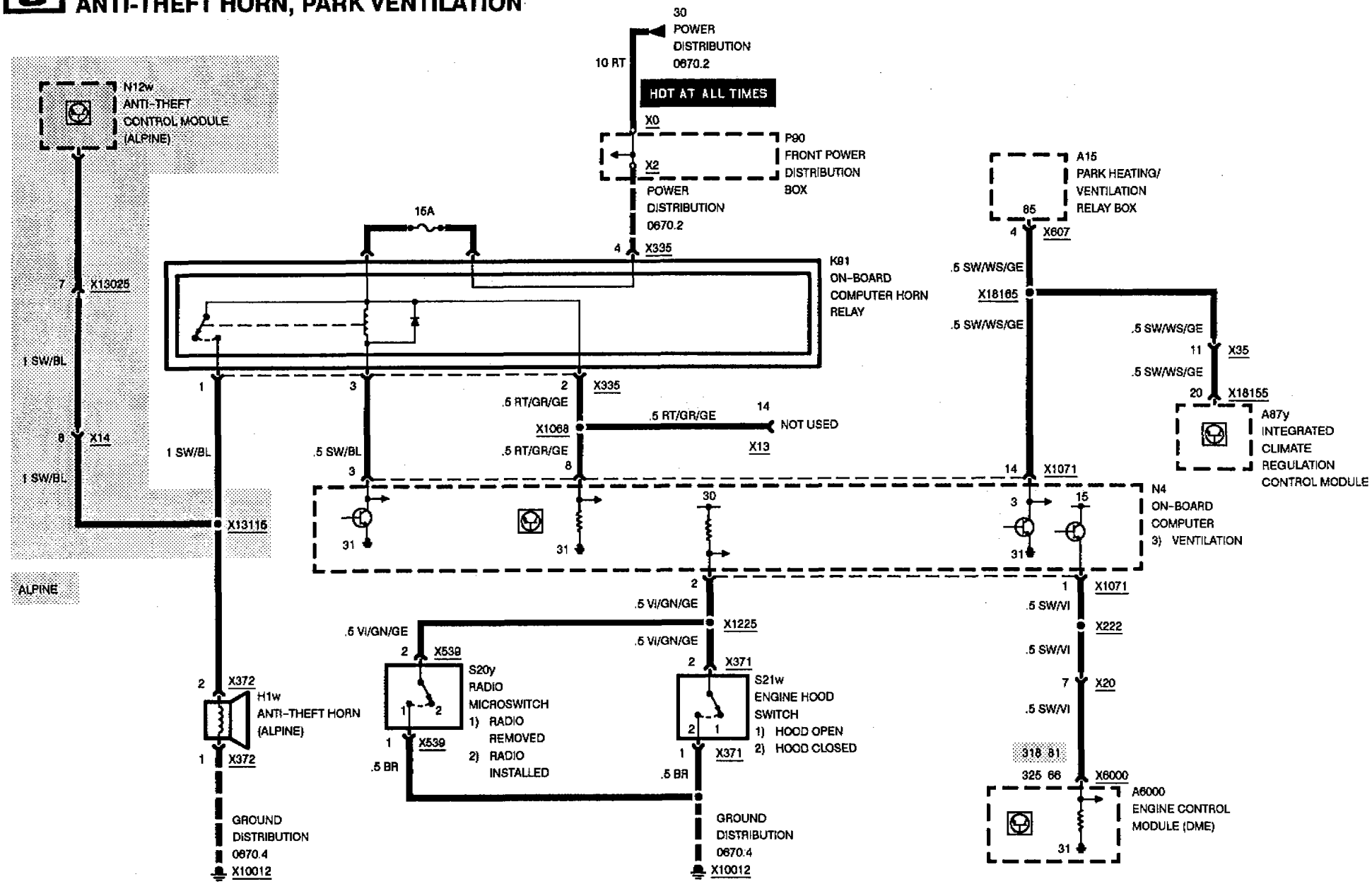

ON-BOARD COMPUTER (BC V)

CHECK CONTROL

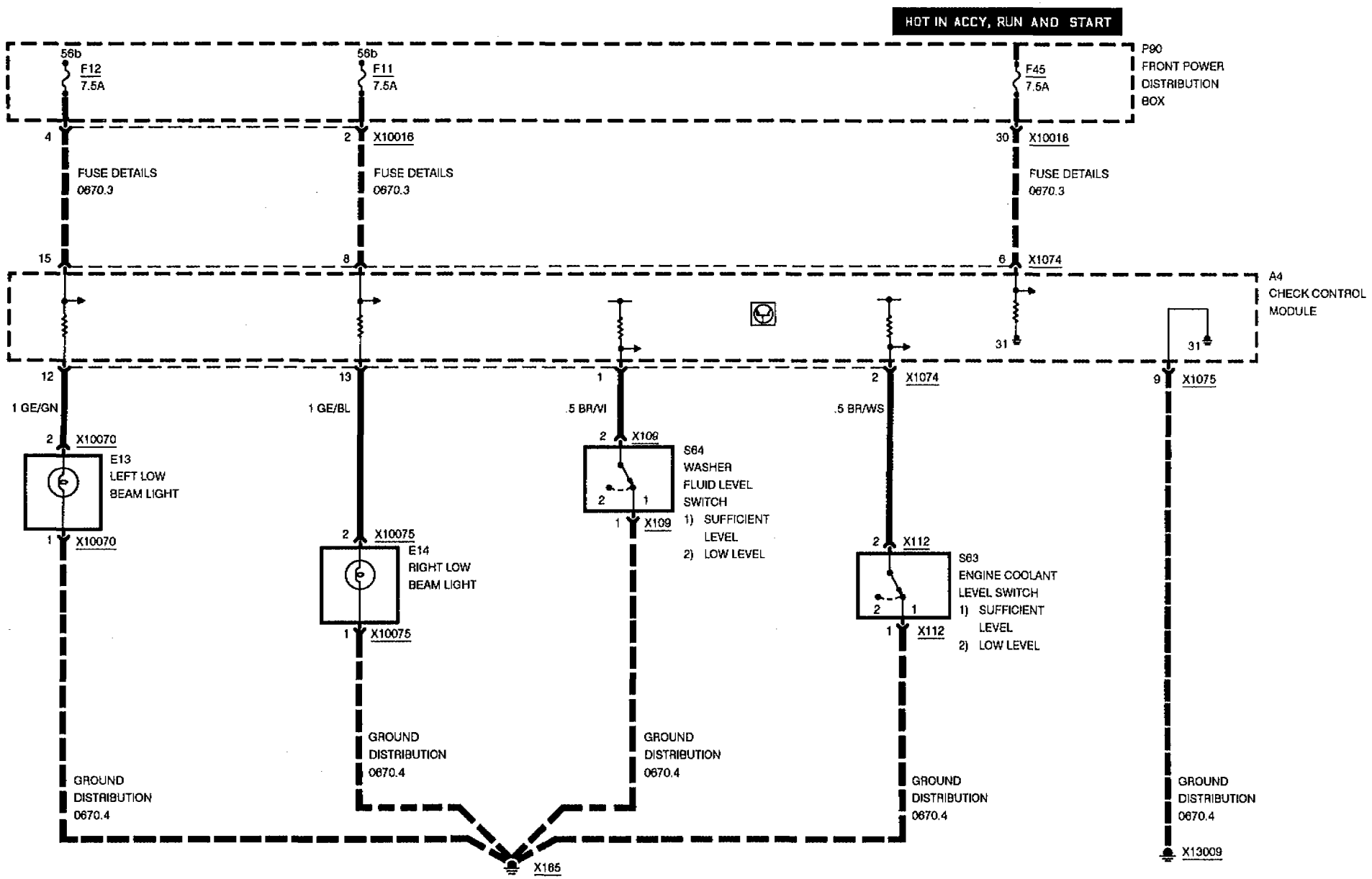

ON-BOARD COMPUTER (BC V)

CHECK CONTROL

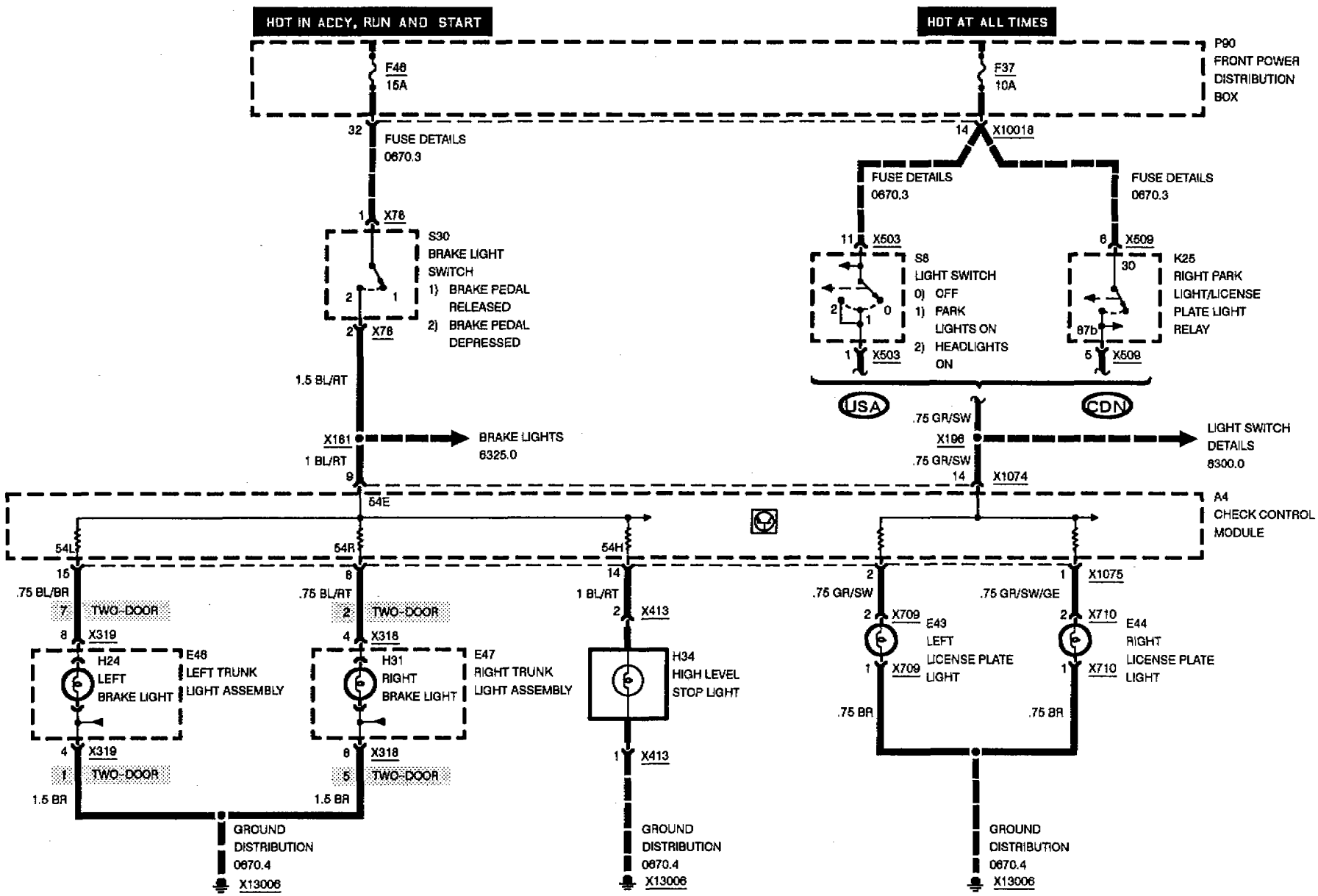

ON-BOARD COMPUTER (BC V)

CHECK CONTROL

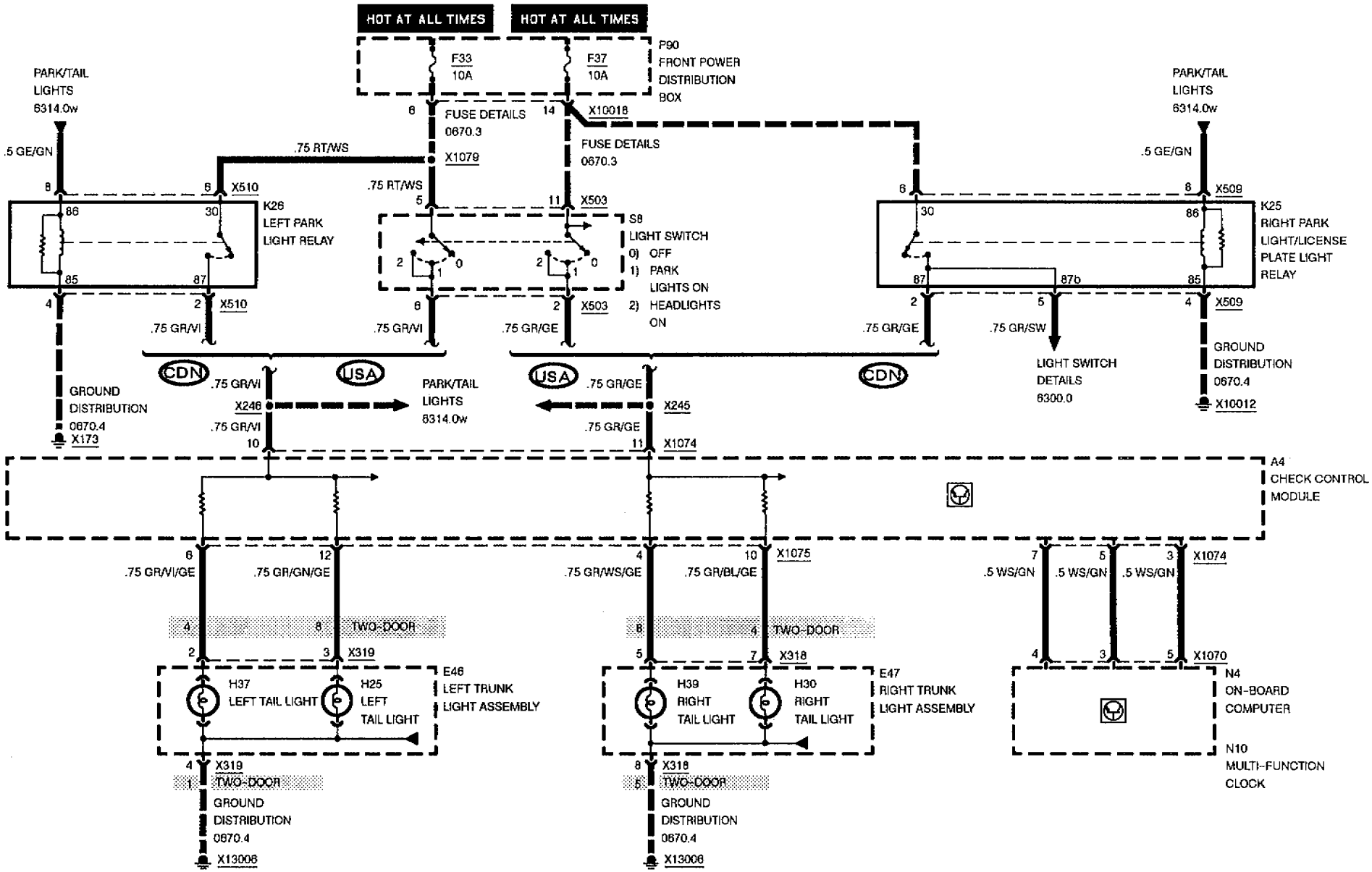

COMPONENT LOCATION CHART

COMPONENT			PAGE - FIGURE 7100.0 8500.0
A2	INSTRUMENT CLUSTER	LH side of dash	01-1
A4	CHECK CONTROL MODULE	Below LH side of dash	00-3
A7	SLIP CONTROL MODULE (ABS)	RH side of dash behind glove box	01-2
A8	CRUISE CONTROL MODULE (TEMPOMAT)	RH side of dash behind glove box	02-1
A12	SUPPLEMENTAL RESTRAINT SYSTEM CONTROL MODULE	Underside of rear seat LATE PRODUCTION	01-3
A12	SUPPLEMENTAL RESTRAINT SYSTEM CONTROL MODULE	RH side of dash behind glove box EARLY PRODUCTION	02-1
A15	PARK HEATING/VENTILATION RELAY BOX	Footwell, driver's side	03-3
A18	HIFI AMPLIFIER	In LH forward side of luggage compartment	04-1
A30	CENTRAL LOCKING MODULE	RH side of dash behind glove box	01-2
A35	ON-BOARD DISPLAY	Center of dash	
A51	WIPER/WASHER MODULE	LH side of LH footwell under footrest EARLY PRODUCTION	00-2
A51	WIPER/WASHER MODULE	RH side of dash behind glove box LATE PRODUCTION	
A56	SUNROOF CONTROL ASSEMBLY	Under roof center panel	02-2
A61	DRIVER'S SIDE POWER WINDOW MODULE	In lower LH front door behind trim panel	
A64	WIPER/WASHER MODULE (LOW II)	RH side of dash behind glove box	01-2
A87y	INTEGRATED CLIMATE REGULATION CONTROL MODULE	Center console above	02-3
A961	PASSENGER'S SIDE POWER WINDOW MODULE	In lower RH side of front door behind trim panel	

COMPONENT LOCATION CHART

COMPONENT			PAGE - FIGURE 7100.0	8500.0
A6000	ENGINE CONTROL MODULE (DME)	Rear RH side of engine compartment in E-Box behind trim panel	00-1	
A8500	TRANSMISSION CONTROL MODULE (EGS)	Rear RH side of engine compartment in E-Box behind trim panel	00-1	
B1	RIGHT FRONT SPEED SENSOR - ABS	On RH front wheel, above brake caliper	27-3	
B2	LEFT FRONT SPEED SENSOR - ABS	On LH front wheel, above brake caliper	27-3	
B3	RIGHT REAR SPEED SENSOR - ABS	On RH rear wheel, above brake caliper		
B4	LEFT REAR SPEED SENSOR - ABS	On LH rear wheel, above brake caliper		
B6	FUEL LEVEL SENSOR	Below LH side of rear seat	25-1	
B10	VEHICLE SPEED SENSOR	Under rear of car	29-3	
B11	LH HEAT EXCHANGER TEMPERATURE SENSOR	Center console	02-3	
B12	RH HEAT EXCHANGER TEMPERATURE SENSOR	Center console	02-3	
B13	OUTSIDE TEMPERATURE SENSOR	Rear of engine compartment behind RH fresh air cowl	15-3	
B14	EVAPORATOR TEMPERATURE SENSOR	RH side of LH footwell LH side of IHKR Plenum	20-2	
B16	LEFT FRONT BRAKE PAD SENSOR	On LH front wheel, above brake caliper	27-3	
B17	RIGHT REAR BRAKE PAD SENSOR	Behind RH rear wheel		
B18	BRAKE FLUID LEVEL SWITCH	Rear LH side of engine compartment near brake master cylinder top of brake fluid reservoir	10-3	
B21	ON-BOARD COMPUTER TEMPERATURE SENSOR	Front RH side of engine compartment		
B400	MICROPHONE	Center of dash		
B6200	HEATED OXYGEN SENSOR	Under center of car (325)	28-2	
B6200	HEATED OXYGEN SENSOR	Under center of car (318)	29-1	

COMPONENT LOCATION CHART

COMPONENT			PAGE - FIGURE 7100.0	8500.0
B6203	CRANKSHAFT POSITION/RPM SENSOR	Under RH front of car rear of radiator (325)	28-1	
B6203	CRANKSHAFT POSITION/RPM SENSOR	Under front of car (318)	28-3	
B6204	CAMSHAFT POSITION SENSOR (CYLINDER IDENTIFICATION)	RH front of engine below intake manifold rear of radiator (325)	12-1	
B6205	INTAKE AIR TEMPERATURE SENSOR	LH side of engine (near oil level stick) (325)	11-2	
B6208	CAMSHAFT ACTUATOR	Front of engine		
B6209	HALL EFFECT CAMSHAFT SENSOR	Front of engine		
B6217	HOT FILM AIR MASS METER	Top front of engine		
B6231	OIL PRESSURE SWITCH	RH front of engine below intake manifold (325)	12-1	
B6231	OIL PRESSURE SWITCH	LH side of engine compartment (near oil level stick) (318)	15-1	
B6232	ENGINE COOLANT TEMPERATURE SENSOR	RH front of engine below intake manifold (325)	08-2	
B6233	VOLUME AIR FLOW SENSOR	LH side of engine compartment right of LH side shock tower (318)	14-3	
B6236	ENGINE COOLANT TEMPERATURE SENSOR	RH front of engine below intake manifold (325)	12-1	
B6241	CYL. 1-2 KNOCK SENSOR	Top front of engine (318)		
B6242	CYL. 3-4 KNOCK SENSOR	Top front of engine (318)		
B9508	PRESSURE SWITCH	Front RH side of engine compartment near RH headlight assembly	15-2	
B6241w	CYL. 1-3 KNOCK SENSOR	Top front of engine (325)		
B6242w	CYL. 4-6 KNOCK SENSOR	Top front of engine (325)		
C1	CAPACITOR	In upper LH C-pillar		
C100	CONTACT RING	Top of steering column	19-2	

COMPONENT LOCATION CHART

COMPONENT			PAGE - FIGURE 7100.0 8500.0
C900	SUPPRESSION FILTER	In upper RH C-pillar	06-3
D100	DATA LINK CONNECTOR	Rear RH side of engine compartment front of battery	05-1
E7	LEFT HEADLIGHT	LH side of body rear end	
E8	RIGHT HEADLIGHT	RH side of body rear end	
E9	REAR DEFOGGER I	In upper RH C-pillar	06-3
E10	REAR DEFOGGER/ANTENNA	In rear window	
E11	LEFT HIGH BEAM LIGHT	Near LH headlight assembly	
E12	RIGHT HIGH BEAM LIGHT	Near RH headlight assembly	
E13	LEFT LOW BEAM LIGHT	Near LH headlight assembly	
E14	RIGHT LOW BEAM LIGHT	Near RH headlight assembly	
E15	LEFT PARK LIGHT	Front of vehicle	
E19	RIGHT PARK LIGHT	Front of vehicle	
E20	UNDERHOOD LIGHT	On underside of engine hood	
E25	FRONT ASHTRAY LIGHT	Center console	22-3
E26	LEFT FOG LIGHT	Under LH front bumper	09-1
E27	RIGHT FOG LIGHT	Under RH front bumper	09-1
E28	FRONT CIGAR LIGHTER	Near gearshift lever	
E29	FRONT CIGAR LIGHTER LIGHT	Center console	
E32	TRUNK COMPARTMENT LIGHT	Rear of luggage compartment	
E34	FRONT DOME LIGHT/MAP READING ASSEMBLY	Under roof center panel	02-2

COMPONENT LOCATION CHART

COMPONENT			PAGE - FIGURE 7100.0	8500.0
E35	DRIVER'S MAKEUP MIRROR LIGHT	Center of windshield header		
E36	PASSENGER'S MAKEUP MIRROR LIGHT	Center of windshield header		
E39	LEFT REAR INTERIOR LIGHT	In upper LH C-pillar	08-1	
E40	RIGHT REAR INTERIOR LIGHT	In upper RH C-pillar	06-3	
E42	GLOVE BOX LIGHT	LH side of glove box		
E43	LEFT LICENSE PLATE LIGHT	Underside of trunk lid, near license plate	27-1	
E44	RIGHT LICENSE PLATE LIGHT	Underside of trunk lid, near license plate	27-1	
E46	LEFT TRUNK LIGHT ASSEMBLY	In LH rear side of luggage compartment	26-2	
E47	RIGHT TRUNK LIGHT ASSEMBLY	In RH rear side of luggage compartment	03-2	
E48	DOOR LOCK HEATER	LH front door		
E51	LEFT WASHER JET HEATER	On underside of engine hood		
E52	RIGHT WASHER JET HEATER	On underside of engine hood		
E56	DRIVER'S SEATBACK HEATER	In upper LH front seatback		
E57	DRIVER'S SEAT HEATER	Under LH front seat		
E58	PASSENGER'S SEAT HEATER	Underside of RH front seat		
E59	PASSENGER'S SEATBACK HEATER	In upper RH front seatback		
E82	TRANSMISSION POSITION INDICATOR LIGHT	Center console		
E28y	REAR ASHTRAY LIGHT	Below center console	22-3	
E45y	CASSETTE BOX LIGHT	Center of dash		
F56	AUTOMATIC CUT-OUT	LH side of dash	20-1	

COMPONENT LOCATION CHART

COMPONENT			PAGE - FIGURE 7100.0	8500.0
G1	BATTERY	In RH rear side of luggage compartment (325)		
G1	BATTERY	Front RH side of engine compartment (318)		
G5	DRIVER'S AIR BAG GENERATOR	Behind steering wheel	19-2	
G6	PASSENGER'S AIR BAG GAS GENERATOR I	RH side of dash		
G6430	B+ JUMP START JUNCTION POINT	Rear RH side of engine compartment back of RH side shock tower	05-1	
G6509	GENERATOR	Front LH side of engine compartment	05-2	
H2	LEFT HORN	Front of engine compartment		
H3	RIGHT HORN	Front of engine compartment		
H4	RIGHT FRONT TURN LIGHT	Front of vehicle		
H5	RIGHT REAR TURN LIGHT	RH side of body rear end		
H6	LEFT REAR TURN LIGHT	LH side of body rear end		
H7	LEFT FRONT TURN LIGHT	Front of vehicle		
H8	RIGHT FRONT AUXILIARY TURN LIGHT	Front of vehicle		
H9	LEFT FRONT AUXILIARY TURN LIGHT	Front of vehicle		
H10	CHIME MODULE	Below LH side of dash		
H1w	ANTI-THEFT HORN (ALPINE)	Rear RH side of engine compartment back of RH side shock tower	13-3	
H24	LEFT BRAKE LIGHT	LH side of body rear end		
H25	LEFT TAIL LIGHT	LH side of body rear end		
H34	HIGH LEVEL STOP LIGHT	At back of rear window shelf		
H38	TELEPHONE TRANSCEIVER	In LH forward side of luggage compartment	04-1	

COMPONENT LOCATION CHART

COMPONENT			PAGE - FIGURE 7100.0	8500.0
H41	LEFT FRONT SPEAKER	In lower LH A-pillar		
H42	LEFT MID-HIGH RANGE SPEAKER	In upper LH front door		
H43	RIGHT MID-HIGH RANGE SPEAKER	In upper RH front door		
H45	RIGHT REAR SPEAKER	Under rear window shelf		
H46	LEFT REAR SPEAKER	Under rear window shelf		
H50	RIGHT FRONT HIGH RANGE SPEAKER	In upper RH front door		
H51	RIGHT FRONT LOW RANGE SPEAKER	In lower RH A-pillar		
H52	RIGHT REAR LOW RANGE SPEAKER	Under rear window shelf		
H53	RIGHT REAR HIGH RANGE SPEAKER	Under rear window shelf		
H54	RIGHT FRONT MIDRANGE SPEAKER	In upper RH front door		
H55	LEFT FRONT MIDRANGE SPEAKER	In upper LH front door		
H56	LEFT REAR HIGH RANGE SPEAKER	Under rear window shelf		
H57	LEFT REAR LOW RANGE SPEAKER	Under rear window shelf		
H58	LEFT FRONT LOW RANGE SPEAKER	In lower LH A-pillar		
H59	LEFT FRONT HIGH RANGE SPEAKER	In upper LH front door		
K1	STARTER RELAY	Below LH side of dash	19-1	
K2	HORN RELAY	Rear LH side of engine compartment in Power Distribution Box	10-1	
K4	BLOWER RELAY	Rear LH side of engine compartment in Power Distribution Box	10-1	
K9	UNLOADER RELAY, TERMINAL 15	Below LH side of dash	19-1	
K10	ABS RELAY	Rear LH side of engine compartment in Power Distribution Box	09-3	

COMPONENT LOCATION CHART

COMPONENT			PAGE – FIGURE 7100.0	8500.0
K11	WIPER RELAY	Below LH side of dash	19-1	
K13	REAR DEFOGGER RELAY	Rear LH side of engine compartment in Power Distribution Box	09-3	
K16	HAZARD FLASHER RELAY	Rear LH side of engine compartment in Power Distribution Box	10-1	
K19	COMPRESSOR CONTROL RELAY	Rear LH side of engine compartment in Power Distribution Box	09-3	
K21	NORMAL SPEED RELAY	Rear LH side of engine compartment in Power Distribution Box	10-2	
K22	HIGH SPEED RELAY	Rear LH side of engine compartment in Power Distribution Box	10-2	
K25	RIGHT PARK LIGHT/LICENSE PLATE LIGHT RELAY	RH side of dash behind glove box		
K26	LEFT PARK LIGHT RELAY	RH side of dash behind glove box		
K46	HIGH BEAM LIGHT RELAY	Rear LH side of engine compartment in Power Distribution Box	10-1	
K47	FRONT FOG LIGHT RELAY	Rear LH side of engine compartment in Power Distribution Box	10-1	
K48	LOW BEAM LIGHT RELAY	Rear LH side of engine compartment in Power Distribution Box	10-1	
K53	WIPER MOTOR RELAY	Below LH side of dash	19-1	
K75	ABS PUMP MOTOR RELAY	Rear LH side of engine compartment in Power Distribution Box	09-3	
K78	COMFORT RELAY	Below LH side of dash		
K91	ON-BOARD COMPUTER HORN RELAY	RH side of dash behind glove box		
K6300	ENGINE CONTROL MODULE RELAY	Rear LH side of engine compartment in Power Distribution Box	09-3	
K6301	CYL. 1-6 FUEL PUMP RELAY	Rear LH side of engine compartment in Power Distribution Box (325)	09-3	
K6303	OXYGEN SENSOR RELAY	in Front Power Distribution Box		
K6301w	FUEL PUMP RELAY	Rear LH side of engine compartment in Front Power Distribution Box (318)		

COMPONENT LOCATION CHART

COMPONENT			PAGE – FIGURE 7100.0	8500.0
M2	FUEL PUMP	Below RH side of rear seat	24-3	
M3	WIPER MOTOR	Rear of engine compartment below center of cowl	14-1	
M4	WASHER PUMP	Front RH side of engine compartment on washer fluid reservoir	12-2	
M5	INTENSIVE WASH PUMP	Front RH side of engine compartment		
M7	HEADLIGHT/FOG LIGHT WASHER PUMP	Front RH side of engine compartment on washer fluid reservoir	12-3	
M9	AUXILIARY FAN MOTOR	Behind front grille behind trim panel		
M12	DRIVER'S DOOR LOCK MOTOR	In lower LH front door behind trim panel		
M13	PASSENGER'S DOOR LOCK MOTOR	In lower RH side of front door behind trim panel		
M14	RIGHT REAR DOOR LOCK MOTOR	In lower RH rear door behind trim panel		
M15	LEFT REAR DOOR LOCK MOTOR	In lower LH rear door behind trim panel		
M16	GAS FILLER LOCK MOTOR	In RH rear side of luggage compartment	03-2	
M17	TRUNK LOCK MOTOR	Rear side of luggage compartment		
M20	LEFT REAR WINDOW MOTOR	In lower LH rear door behind trim panel		
M22	RIGHT REAR WINDOW MOTOR	In lower RH rear door behind door panel		
M23	PASSENGER'S WINDOW MOTOR	RH front door behind door panel	17-2	
M24	SUNROOF MOTOR	Center of windshield header		
M25	CRUISE CONTROL ACTUATOR (TEMPOMAT)	Front LH side of engine compartment	09-2	
M30	BLOWER MOTOR	Rear of engine compartment behind RH fresh air cowl	15-3	
M34	DASH VENT MIXING FLAP MOTOR	Below LH side of dash RH side of steering column	20-3	
M36	FRESH AIR FLAP MOTOR	Below RH side of dash center console right	23-1	

COMPONENT LOCATION CHART

COMPONENT			PAGE - FIGURE 7100.0	8500.0
M40	RECIRCULATION FLAP MOTOR	Below LH side of dash RH side of steering column	20-3	
M50	DRIVER'S SEAT CUSHION TILT MOTOR	Under LH front seat		
M51	DRIVER'S SEAT MOVEMENT MOTOR	Under LH front seat		
M52	DRIVER'S SEAT HEIGHT MOTOR	Under LH front seat		
M53	DRIVER'S SEATBACK RECLINER MOTOR	Under LH front seat		
M58	PASSENGER'S SEATBACK RECLINER MOTOR	Under RH front seat		
M59	PASSENGER'S SEAT HEIGHT MOTOR	Under RH front seat		
M60	PASSENGER'S SEAT MOVEMENT MOTOR	Under RH front seat		
M61	PASSENGER'S SEAT CUSHION TILT MOTOR	Under RH front seat		
M55z	DRIVER'S SEAT LUMBAR SUPPORT MOTOR/VALVE	Under LH front seat		
M6510	STARTER	Rear LH side of engine compartment		
N3	DIMMER	LH side of dash top of steering column	03-3	
N4	ON-BOARD COMPUTER	Center console	03-1	
N6	HEADLIGHT/FOGLIGHT CLEANING MODULE (SRA)	Footwell, driver's side	03-3	
N8	ANTENNA AMPLIFIER AM/FM	In upper LH C-pillar	08-1	
N9	RADIO	Center console		
N10	MULTI-FUNCTION CLOCK	Center console		
N17	CRASH CONTROL MODULE	Footwell, driver's side	03-3	
N21	TWIN RELAY MODULE	Footwell, driver's side	03-3	

COMPONENT LOCATION CHART

COMPONENT			PAGE - FIGURE 7100.0 8500.0
N22	CD CHANGER	In RH side of luggage compartment	03-2
N12w	ANTI-THEFT CONTROL MODULE (ALPINE)	RH side of dash behind glove box	02-1
P90	FRONT POWER DISTRIBUTION BOX	Rear LH side of engine compartment	05-3
R1	MIXING ACTUATOR	Center console	21-2
R11	BLOWER RESISTORS	Behind center of dashboard LH side of IHKR Plenum	23-2
R6252	THROTTLE POSITION SENSOR	LH side of engine (near oil level stick) (325)	11-2
R6252	THROTTLE POSITION SENSOR	LH side of engine (318)	14-2
S2	IGNITION SWITCH	LH side of dash top of steering column	19-3
S3	AUTOMATIC TRANSMISSION RANGE SWITCH	Center console near gearshift lever	22-2
S4	HORN SWITCH	Top of steering column	19-2
S5	WIPER/WASHER SWITCH	LH side of dash RH side of steering column above	
S7	COMBINATION SWITCH	LH side of steering column	20-1
S8	LIGHT SWITCH	LH side of dash	
S10	FOG LIGHT SWITCH	LH side of dash	
S13	PASSENGER'S DOOR JAMB SWITCH	Rear RH door pillar (with ZVM)	25-2
S14	DRIVER'S DOOR JAMB SWITCH	LH rear door jamb (with ZVM)	25-2
S15	REAR RIGHT DOOR JAMB SWITCH	In lower RH C-pillar	25-2
S16	LEFT REAR DOOR JAMB SWITCH	In lower LH C-pillar	25-2
S17	MIRROR CONTROL SWITCH	In upper LH front door	
S18	HAZARD SWITCH	Center console near gearshift lever	22-2

COMPONENT LOCATION CHART

COMPONENT			PAGE - FIGURE 7100.0	8500.0
S19	UNDERHOOD LIGHT SWITCH	Near RH headlight assembly		
S27	INERTIA SWITCH	In lower RH A-pillar		
S28	CRUISE CONTROL SWITCH	LH side of dash RH side of steering column above		19-3
S29	BRAKE LIGHT SWITCH	LH footwell on brake pedal support bracket behind LH footwell trim		18-2
S30	BRAKE LIGHT SWITCH	LH footwell on brake pedal support bracket behind LH footwell trim		18-3
S31	PARK BRAKE SWITCH	Center console on rear of park brake lever		22-3
S32	CLUTCH SWITCH	LH footwell on clutch pedal support bracket behind LH footwell trim		18-2
S36	TEMPERATURE SWITCH	Front RH side of engine compartment RH top of radiator		15-2
S37	GLOVE BOX LIGHT SWITCH	RH side of dash behind glove box right		23-3
S41	LEFT REAR WINDOW SWITCH	In lower LH rear door behind trim panel		
S42	RIGHT REAR WINDOW SWITCH	In lower RH rear door behind trim panel		
S47	DRIVER'S DOOR LOCK SWITCH	LH front door in door at key lock assembly		16-3
S48	DRIVER'S DOOR HANDLE SWITCH	LH front door in door at key lock assembly		16-3
S49	PASSENGER'S DOOR LOCK SWITCH	RH front door in door at key lock assembly		
S51	DRIVER'S SEAT, SEAT CONTROL SWITCH	LH side of driver's seat		
S53	DRIVER'S SEAT, SEAT HEATER SWITCH	Center console near gearshift lever		21-3
S54	PASSENGER'S SEAT, SEAT HEATER SWITCH	Center console near gearshift lever		03-1
S56	PASSENGER'S SEAT, SEAT CONTROL SWITCH	Under RH front seat		
S58	DRIVER'S SEAT BELT SWITCH	In LH front seat belt buckle		
S63	ENGINE COOLANT LEVEL SWITCH	Front RH side of engine compartment		

COMPONENT LOCATION CHART

COMPONENT			PAGE - FIGURE 7100.0	8500.0
S64	WASHER FLUID LEVEL SWITCH	Front RH side of engine compartment on washer fluid reservoir		12-2
S71	LEFT FRONT IMPACT SENSOR	LH side of engine compartment EARLY PRODUCTION		
S72	RIGHT FRONT IMPACT SENSOR	Front RH side of engine compartment EARLY PRODUCTION		12-3
S75	BLOWER SWITCH	Center of dash under the control modules		
S77	DRIVER'S MAKEUP MIRROR SWITCH	Above LH sun visor		
S78	PASSENGER'S MAKEUP MIRROR SWITCH	Above RH sun visor		
S82	REAR FOG LIGHT SWITCH	LH side of dash		
S123	ABS PEDAL TRAVEL SENSOR	Rear LH side of engine compartment near brake fluid reservoir		10-3
S130	CHILD PROTECTION CONTROL (CONSOLE)	Center console		
S179	DRIVER'S WINDOW RETRACTION DOOR HANDLE CONTACT SWITCH	LH front door in door at key lock assembly		
S180	PASSENGER'S WINDOW RETRACTION DOOR HANDLE CONTACT SWITCH	RH front door in door at key lock assembly		
S198	JET HEATER THERMOSWITCH	Front LH side of engine compartment		
S20y	RADIO MICROSWITCH	Center of dash		
S21w	ENGINE HOOD SWITCH	Rear RH side of engine compartment back of RH side shock tower		13-3
S61y	TRUNK LIGHT SWITCH	Underside of trunk lid left		26-3
S126y	DRIVER'S POWER WINDOW SWITCH	Center console near gearshift lever		22-1
S127y	PASSENGER'S POWER WINDOW SWITCH	Center console near gearshift lever		22-1

COMPONENT LOCATION CHART

COMPONENT			PAGE - FIGURE 7100.0	8500.0
S128y	LH REAR DOOR (CONSOLE) POWER WINDOW SWITCH	Center console		
S129y	RH REAR DOOR (CONSOLE) POWER WINDOW SWITCH	Center console		
S134y	IHKR CONTROL PANEL	Center of dash		
S8503	PROGRAM SWITCH	Center console		
S8507	KICK-DOWN SWITCH	LH footwell		
S8511	REVERSING LIGHT SWITCH	Under front of car LH side of transmission		
T6151	CYL. 1 IGNITION COIL	Top RH side of engine (325)		13-1
T6152	CYL. 2 IGNITION COIL	Top RH side of engine (325)		13-1
T6153	CYL. 3 IGNITION COIL	Top RH side of engine (325)		13-1
T6154	CYL. 4 IGNITION COIL	Top RH side of engine (325)		13-1
T6155	CYL. 5 IGNITION COIL	Top RH side of engine (325)		13-1
T6156	CYL. 6 IGNITION COIL	Top RH side of engine (325)		13-1
U4	TELEPHONE HANDSET	Below front of console		
V4	DAYTIME RUNNING LIGHTS CODING DIODE	LH side of dash		
X0	B+ JUNCTION POINT	Rear LH side of engine compartment		05-3
X2	BATTERY B+ START POINT	Rear LH side of engine compartment		05-3
X3	B+ JUNCTION POINT	Rear LH side of engine compartment		05-3
X9	B+ JUNCTION POINT	Rear LH side of engine compartment		05-3

COMPONENT LOCATION CHART

COMPONENT			PAGE - FIGURE 7100.0	8500.0
X11	CONNECTOR (55-PINS, BLACK)	Behind glove box RH side of dash	01-2	00-1
X13	CONNECTOR (30-PINS, BLACK)	LH side of LH footwell under footrest	00-2	00-4
X14	CONNECTOR (30-PINS, WHITE)	Behind LH footwell trim left	00-2	00-4
X16	CONNECTOR (26-PINS, WHITE)	LH side of dash rear of A2 instrument cluster	01-1	00-2
X17	CONNECTOR (26-PINS, BLUE)	LH side of dash rear of A2 instrument cluster	01-1	00-2
X20	CONNECTOR (25-PINS, BLACK)	Rear LH side of engine compartment	10-3	06-2
X22	CONNECTOR (26-PINS, BLUE)	RH side of dash behind glove box	02-1	00-2
X31	CONNECTOR (12-PINS, BLACK)	Rear LH side of engine compartment back of LH side shock tower	11-1	02-2
X32	CONNECTOR (12-PINS, WHITE)	LH footwell underside of steering column	18-1	09-1
X33	CONNECTOR (12-PINS, BLACK)	LH footwell underside of steering column behind LH footwell trim	18-3	03-5
X35	CONNECTOR (12-PINS, WHITE)	Below LH side of dash RH side of steering column		02-2
X43	CONNECTOR (9-PINS, BLACK)	Power Distribution Box rear LH side of engine compartment		04-6
X44	CONNECTOR (9-PINS, BLACK)	Power Distribution Box rear LH side of engine compartment		04-6
X45	CONNECTOR (9-PINS, BLACK)	Power Distribution Box rear LH side of engine compartment		04-6
X51	CONNECTOR (9-PINS, BLACK)	Power Distribution Box rear LH side of engine compartment		04-6
X52	CONNECTOR (9-PINS, BLACK)	Power Distribution Box rear LH side of engine compartment		04-6
X53	CONNECTOR (9-PINS, BLACK)	Power Distribution Box rear LH side of engine compartment		04-6
X54	CONNECTOR (9-PINS, BLACK)	Power Distribution Box rear LH side of engine compartment		04-6
X55	CONNECTOR (9-PINS, BLACK)	Below LH side of dash		04-6
X56	CONNECTOR (9-PINS, BLACK)	Power Distribution Box rear LH side of engine compartment		04-6

COMPONENT LOCATION CHART

COMPONENT			PAGE - FIGURE 7100.0	8500.0
X58	CONNECTOR (9-PINS, BLACK)	Power Distribution Box rear LH side of engine compartment		04-6
X61	CONNECTOR (9-PINS, BLACK)	Below LH side of dash		04-6
X63	CONNECTOR (9-PINS, BLACK)	Below LH side of dash		04-6
X64	CONNECTOR (9-PINS, BLACK)	Power Distribution Box rear LH side of engine compartment		04-6
X65	CONNECTOR (9-PINS, BLACK)	Below LH side of dash		04-6
X69	CONNECTOR (25-PINS, BLACK)	Rear LH side of engine compartment	10-3	06-3
X70	CONNECTOR (8-PINS, BLACK)	Front LH side of engine compartment	09-2	02-4
X72	CONNECTOR (8-PINS, WHITE)	LH footwell underside of steering column behind LH footwell trim	18-3	04-5
X74	CONNECTOR (30-PINS, ORANGE)	Underside of rear seat LATE PRODUCTION	01-3	02-5
X74	CONNECTOR (12-PINS, WHITE)	RH side of dash behind glove box EARLY PRODUCTION	02-1	01-3
X75	CONNECTOR (12-PINS, BLUE)	RH side of dash behind glove box EARLY PRODUCTION		01-3
X78	CONNECTOR (4-PINS, BLACK)	LH footwell on brake pedal support bracket behind LH footwell trim	18-3	04-3
X81	CONNECTOR (3-PINS, ORANGE)	LH side of engine compartment		03-4
X82	CONNECTOR (3-PINS, BLACK)	Front of engine compartment on auxiliary fan		08-2
X86	CONNECTOR (3-PINS, ORANGE)	Front RH side of engine compartment on washer fluid reservoir	12-3	03-4
X87	CONNECTOR (3-PINS, BLACK)	Front RH side of engine compartment RH top of radiator	15-2	08-2
X99	CONNECTOR (9-PINS, BLACK)	Below LH side of dash WIPER MOTOR RELAY, K53		04-6
X105	CONNECTOR (2-PINS, GRAY)	On underside of engine hood		
X106	CONNECTOR (2-PINS, GRAY)	On underside of engine hood		
X107	CONNECTOR (2-PINS, GRAY)	Front RH side of engine compartment on washer fluid reservoir	12-2	

COMPONENT			PAGE - FIGURE 7100.0	8500.0
X109	CONNECTOR (2-PINS, BLACK)	Front RH side of engine compartment on washer fluid reservoir	12-2	
X110	CONNECTOR (2-PINS, GRAY)	Rear RH side of engine compartment back of RH side shock tower	13-3	
X111	CONNECTOR (2-PINS, BLACK)	Rear LH side of engine compartment near brake master cylinder top of brake fluid reservoir	10-3	
X112	CONNECTOR (2-PINS, BLACK)	Front RH side of engine compartment RH top of radiator		
X113	CONNECTOR (2-PINS, GRAY)	Above RH front wheel well behind RH front wheel	27-2	
X114	CONNECTOR (2-PINS, GRAY)	Above LH front wheel well behind LH front wheel	27-2	
X116	CONNECTOR (2-PINS, BLACK)	LH footwell on clutch pedal support bracket behind LH footwell trim	18-2	
X118	CONNECTOR (2-PINS, BLACK)	Above LH front wheel well behind LH front wheel	27-2	
X121	CONNECTOR (2-PINS, WHITE)	LH footwell underside of steering column	18-2	
X123	CONNECTOR (2-PINS, GRAY)	Front RH side of engine compartment on washer fluid reservoir	12-3	
X128	CONNECTOR (2-PINS, BLACK)	Front RH side of engine compartment		
X132	CONNECTOR (2-PINS, BLACK)	Front of engine compartment		
X133	CONNECTOR (2-PINS, BLACK)	Front of engine compartment		
X137	CONNECTOR (2-PINS, BLACK)	Front LH side of engine compartment		
X142	CONNECTOR (3-PINS, GRAY)	Under rear of car LH side of on differential	29-2	03-2
X143	CONNECTOR (3-PINS, GRAY)	Under rear of car LH side of on differential	29-3	03-2
X161	CONNECTOR (1-PINS, WHITE)	Near RH headlight assembly		
X163	CONNECTOR (3-PINS, BLACK)	Front RH side of engine compartment on washer fluid reservoir near RH headlight assembly	12-2	03-2

COMPONENT LOCATION CHART

COMPONENT			PAGE - FIGURE 7100.0	8500.0
X165	GROUND	Front LH side of engine compartment	06-1	
X173	GROUND	Below LH side of dash	07-3	
X256	CONNECTOR (26-PINS, BLACK)	Ahead of RH front door in lower RH A-pillar	17-2	05-1
X257	CONNECTOR (26-PINS, BLACK)	Ahead of LH front door in lower LH A-pillar	16-2	05-1
X271	CONNECTOR (12-PINS, BLACK)	LH side of dash rear of A2 instrument cluster	01-1	01-3
X272	CONNECTOR (2-PINS, BLACK)	Under roof center panel	21-1	
X273	CONNECTOR (12-PINS, BLACK)	In lower LH B-pillar	25-3	01-2
X274	CONNECTOR (12-PINS, BLACK)	In lower RH B-pillar	25-3	01-2
X275	CONNECTOR (4-PINS, WHITE)	Under LH front seat under carpet	26-1	04-3
X279	CONNECTOR (4-PINS, WHITE)	Under RH front seat	24-2	04-3
X285	CONNECTOR (15-PINS, BLUE)	Behind glove box RH side of dash	01-2	00-3
X292	CONNECTOR (9-PINS, BLACK)	Power Distribution Box rear LH side of engine compartment		04-6
X295	CONNECTOR (8-PINS, BLACK)	LH footwell underside of steering column behind LH footwell trim	18-3	04-5
X304	CONNECTOR (9-PINS, BLACK)	Below LH side of dash		04-6
X311	CONNECTOR (3-PINS, BLACK)	Underside of trunk lid left	26-3	05-6
X312	CONNECTOR (2-PINS, BLACK)	In RH rear side of luggage compartment behind RH rear light assembly	03-2	
X315	CONNECTOR (2-PINS, BLACK)	Underside of trunk lid left	26-3	
X316	CONNECTOR (6-PINS, WHITE)	Center console near gearshift lever	22-1	09-2
X317	CONNECTOR (6-PINS, WHITE)	Center console near gearshift lever	22-2	09-2
X318	CONNECTOR (8-PINS, BLACK)	In RH rear side of luggage compartment behind RH rear light assembly	03-2	02-1

COMPONENT LOCATION CHART

COMPONENT			PAGE – FIGURE 7100.0	8500.0
X319	CONNECTOR (8-PINS, BLACK)	In LH rear side of luggage compartment behind LH rear light assembly	26-2	02-1
X320	CONNECTOR (6-PINS, WHITE)	Center console near gearshift lever	22-2	09-2
X322	CONNECTOR (6-PINS, BLACK)	LH footwell	18-1	07-4
X324	CONNECTOR (6-PINS, WHITE)	Center console near gearshift lever	22-1	09-2
X333	CONNECTOR (4-PINS, BLACK)	Rear of engine compartment below center of cowl	14-1	09-3
X335	CONNECTOR (4-PINS, BLACK)	RH side of dash behind glove box		01-6
X336	CONNECTOR (6-PINS, WHITE)	Under roof center panel	02-2	10-6
X353	CONNECTOR (2-PINS, BLACK)	In lower RH C-pillar		
X354	CONNECTOR (2-PINS, BLACK)	In lower LH C-pillar		
X355	CONNECTOR (2-PINS, BLACK)	In upper RH C-pillar	06-3	
X356	CONNECTOR (2-PINS, BLACK)	In upper LH C-pillar	08-1	
X371	CONNECTOR (2-PINS, BLACK)	Rear RH side of engine compartment back of RH side shock tower	13-3	
X372	CONNECTOR (2-PINS, GRAY)	Rear RH side of engine compartment back of RH side shock tower	13-3	
X379	CONNECTOR (1-PINS, NATURAL)	In upper LH C-pillar	08-1	
X380	CONNECTOR (1-PINS, NATURAL)	In upper RH C-pillar	06-3	
X381	CONNECTOR (3-PINS, BLACK)	Under roof center panel	21-1	01-1
X382	CONNECTOR (3-PINS, BLACK)	Above RH sun visor	02-2	01-1
X383	CONNECTOR (2-PINS, BLACK)	Under rear of car LH side of on differential	29-3	
X386	CONNECTOR (1-PINS, BLACK)	Center console REAR ASHTRAY LIGHT, E28y		
X388	CONNECTOR (2-PINS, BLACK)	In lower RH A-pillar		

COMPONENT LOCATION CHART

COMPONENT			PAGE - FIGURE 7100.0	8500.0
X389	CONNECTOR (2-PINS, GRAY)	Rear LH side of engine compartment		
X390	CONNECTOR (2-PINS, BLACK)	RH side of dash behind glove box	24-1	
X401	CONNECTOR (1-PINS, BLACK)	Above LH sun visor	21-1	
X402	CONNECTOR (1-PINS, BLACK)	Above RH sun visor	02-2	
X413	CONNECTOR (2-PINS, BLACK)	At back of rear window shelf		
X423	CONNECTOR (1-PINS, NATURAL)	Below center console on rear of park brake lever		
X424	CONNECTOR (1-PINS, BROWN)	In upper LH C-pillar	08-1	
X494	GROUND	Center console	07-2	
X495	GROUND	Behind RH footwell trim	07-1	
X498	GROUND	Center console	07-2	
X503	CONNECTOR (12-PINS, WHITE)	Below LH side of dash		02-2
X504	CONNECTOR (4-PINS, WHITE)	Center console		03-6
X509	CONNECTOR (9-PINS, BLACK)	RH side of dash behind glove box		04-6
X510	CONNECTOR (9-PINS, BLACK)	RH side of dash behind glove box		04-6
X511	CONNECTOR (8-PINS, BLACK)	Center console near gearshift lever	22-2	02-1
X516	CONNECTOR (5-PINS, BLACK)	Center console near gearshift lever	22-2	04-2
X517	CONNECTOR (4-PINS, BLACK)	Below LH side of dash		04-3
X518	CONNECTOR (4-PINS, BLACK)	LH footwell	18-1	04-3
X522	CONNECTOR (3-PINS, WHITE)	LH footwell	18-1	05-6
X523	CONNECTOR (3-PINS, NATURAL)	LH side of dash		05-6

COMPONENT			PAGE – FIGURE 7100.0	8500.0
X531	CONNECTOR (1-PINS, BLACK)	Center console near gearshift lever	21-3	
X532	CONNECTOR (2-PINS, BLACK)	Center console near gearshift lever	21-3	
X537	CONNECTOR (2-PINS, BLACK)	In upper LH front door behind door panel	16-1	
X538	CONNECTOR (2-PINS, BLACK)	RH front door behind door panel	17-2	
X539	CONNECTOR (2-PINS, BLACK)	Center console		
X540	CONNECTOR (2-PINS, BLACK)	RH side of dash behind glove box right	23-3	
X541	CONNECTOR (1-PINS, WHITE)	RH side of dash behind glove box above	23-3	
X542	CONNECTOR (2-PINS, BLACK)	RH side of dash behind glove box left	23-3	
X603	CONNECTOR (6-PINS, (---))	Center console		06-1
X604	CONNECTOR (6-PINS, (---))	Center console		06-1
X605	CONNECTOR (12-PINS, BLACK)	In LH forward side of luggage compartment	04-1	03-1
X606	CONNECTOR (12-PINS, WHITE)	In LH forward side of luggage compartment EARLY PRODUCTION	04-1	03-1
X606	CONNECTOR (26-PINS, BLACK)	In LH forward side of luggage compartment LATE PRODUCTION		00-2
X607	CONNECTOR (9-PINS, BLACK)	Below LH side of dash		04-6
X623	CONNECTOR (4-PINS, BLACK)	In upper LH front door behind door panel	16-1	09-6
X624	CONNECTOR (4-PINS, BLACK)	In upper RH front door behind door panel	17-2	09-6
X625	CONNECTOR (6-PINS, WHITE)	LH front door	16-1	06-1
X638	CONNECTOR (2-PINS, BLACK)	Below RH side of rear seat	24-3	
X641	CONNECTOR (6-PINS, BLACK)	RH front door behind door panel	17-3	10-3
X644	CONNECTOR (6-PINS, BLACK)	In lower LH rear door		07-3

COMPONENT LOCATION CHART

COMPONENT			PAGE - FIGURE 7100.0	8500.0
X645	CONNECTOR (6-PINS, BLUE)	In lower LH rear door		10-4
X646	CONNECTOR (6-PINS, BLACK)	In lower RH rear door behind trim panel		07-3
X647	CONNECTOR (6-PINS, BLUE)	In lower RH rear door behind trim panel		10-4
X651	CONNECTOR (6-PINS, YELLOW)	Center console near gearshift lever	21-3	06-4
X658	CONNECTOR (6-PINS, YELLOW)	Center console near gearshift lever	03-1	06-4
X660	CONNECTOR (6-PINS, BLACK)	LH front door in door at key lock assembly	16-3	07-3
X662	CONNECTOR (6-PINS, GRAY)	Below RH side of dash center console right	23-1	05-5
X663	CONNECTOR (6-PINS, GRAY)	Below RH side of dash		05-5
X669	CONNECTOR (6-PINS, GRAY)	Below LH side of dash RH side of steering column	20-3	05-5
X679	CONNECTOR (2-PINS, WHITE)	Below RH side of rear seat	24-3	
X692	CONNECTOR (3-PINS, BLACK)	Center console	21-2	02-3
X700	CONNECTOR (1-PINS, NATURAL)	Behind RH footwell speaker grille		
X701	CONNECTOR (1-PINS, NATURAL)	Behind LH footwell kickpanel		
X706	CONNECTOR (2-PINS, BLACK)	Center console	22-3	
X709	CONNECTOR (2-PINS, BLACK)	Underside of trunk lid, near license plate	27-1	
X710	CONNECTOR (2-PINS, BLACK)	Underside of trunk lid, near license plate	27-1	
X711	CONNECTOR (1-PINS, NATURAL)	Underside of trunk lid left	26-3	
X712	CONNECTOR (1-PINS, NATURAL)	Underside of trunk lid left		
X713	CONNECTOR (2-PINS, BLACK)	Under rear of car LH side of on differential	29-3	
X714	CONNECTOR (2-PINS, GRAY)	In lower LH rear door behind trim panel		

COMPONENT LOCATION CHART

COMPONENT			PAGE - FIGURE 7100.0	8500.0
X720	CONNECTOR (2-PINS, GRAY)	In lower RH rear door behind trim panel		
X726	CONNECTOR (2-PINS, (---))	Under LH front seat		
X727	CONNECTOR (2-PINS, (---))	Under LH front seat		
X728	CONNECTOR (2-PINS, (---))	Under LH front seat		
X729	CONNECTOR (2-PINS, (---))	Under LH front seat		
X732	CONNECTOR (4-PINS, BLACK)	Under LH front seat under carpet	26-1	04-3
X733	CONNECTOR (4-PINS, BLACK)	Under LH front seat under carpet	26-1	04-3
X734	CONNECTOR (2-PINS, (---))	Under RH front seat		
X735	CONNECTOR (2-PINS, (---))	Under RH front seat		
X736	CONNECTOR (2-PINS, (---))	Under RH front seat		
X737	CONNECTOR (2-PINS, (---))	Under RH front seat		
X740	CONNECTOR (4-PINS, BLACK)	Under RH front seat	24-2	04-3
X741	CONNECTOR (4-PINS, BLACK)	Under RH front seat	24-2	04-3
X742	CONNECTOR (2-PINS, YELLOW)	RH front door in door at key lock assembly		
X744	CONNECTOR (2-PINS, GRAY)	RH front door behind door panel	17-2	
X746	CONNECTOR (2-PINS, BLACK)	RH front door behind door panel	17-2	
X747	CONNECTOR (2-PINS, YELLOW)	LH front door in door at key lock assembly	17-1	
X751	CONNECTOR (2-PINS, WHITE)	LH front door in door at key lock assembly	17-1	
X752	CONNECTOR (2-PINS, GRAY)	LH front door in door at key lock assembly	17-1	
X753	CONNECTOR (2-PINS, BLACK)	LH front door	16-1	

COMPONENT LOCATION CHART

COMPONENT			PAGE - FIGURE 7100.0	8500.0
X768	CONNECTOR (2-PINS, WHITE)	In the engine compartment near LH headlight assembly	09-1	
X769	CONNECTOR (2-PINS, WHITE)	In the engine compartment near RH headlight assembly	09-1	
X770	CONNECTOR (2-PINS, YELLOW)	In the engine compartment near LH headlight assembly	06-1	
X771	CONNECTOR (2-PINS, BLACK)	RH side of LH footwell LH side of IHKR Plenum	20-2	
X772	CONNECTOR (2-PINS, WHITE)	Center console	02-3	
X773	CONNECTOR (2-PINS, WHITE)	Center console	02-3	
X774	CONNECTOR (1-PINS, GRAY)	Rear of engine compartment behind RH fresh air cowl		
X778	CONNECTOR (2-PINS, BLACK)	In LH front seat belt buckle		
X779	CHARGING SOCKET	RH side of dash behind glove box left	23-3	
X783	CONNECTOR (2-PINS, ORANGE)	Underside of steering column		
X784	CONNECTOR (12-PINS, BLUE)	RH side of dash behind glove box		01-3
X786	CONNECTOR (2-PINS, BLACK)	UNDERHOOD LIGHT, E20		
X816	CONNECTOR (2-PINS, BLACK)	Rear of engine compartment behind RH fresh air cowl		
X817	CONNECTOR (1-PINS, BLACK)	Rear of engine compartment behind RH fresh air cowl		
X904	CONNECTOR (4-PINS, BLACK)	Behind center of dashboard LH side of IHKR Plenum	23-2	04-3
X905	CONNECTOR (5-PINS, BLACK)	Behind center of dashboard		08-3
X998	CONNECTOR (4-PINS, BLACK)	Below center console		03-6
X999	CONNECTOR (4-PINS, BLACK)	Behind center of dashboard RH side of IHKR Plenum		04-3
X1001	CONNECTOR (4-PINS, BLACK)	RIGHT REAR SPEAKER, H45		04-3

COMPONENT LOCATION CHART

COMPONENT			PAGE - FIGURE 7100.0	8500.0
X1002	CONNECTOR (4-PINS, (---))	LEFT REAR SPEAKER, H46		04-3
X1014	CONNECTOR (1-PINS, BLACK)	Center console near gearshift lever	21-3	
X1070	CONNECTOR (18-PINS, BLACK)	Center console	21-2	01-5
X1071	CONNECTOR (18-PINS, WHITE)	Center console	21-2	01-5
X1074	CONNECTOR (15-PINS, WHITE)	Below LH side of dash	00-3	00-3
X1075	CONNECTOR (15-PINS, BLACK)	Below LH side of dash	00-3	00-3
X1082	CONNECTOR (9-PINS, BLACK)	Below LH side of dash		04-6
X1161	CONNECTOR (9-PINS, BLACK)	Rear LH side of engine compartment		04-6
X1162	CONNECTOR (2-PINS, BLACK)	Rear LH side of engine compartment near brake fluid reservoir	10-3	
X1165	GROUND	Below LH side of dash	07-3	
X1166	GROUND	Behind RH footwell trim	07-1	
X1178	CONNECTOR (2-PINS, WHITE)	Center console LH side of gearshift selector		
X1181	CONNECTOR (9-PINS, BLACK)	Below LH side of dash		04-6
X1193	CONNECTOR (2-PINS, BLACK)	Center console RH side of gearshift selector		
X1213	CONNECTOR (2-PINS, BLACK)	Center console	22-3	
X1241	CONNECTOR (2-PINS, WHITE)	Below LH side of rear seat	25-1	
X1242	CONNECTOR (26-PINS, BLACK)	LH side of LH footwell under footrest	00-2	00-2
X1243	CONNECTOR (6-PINS, BLACK)	Center console near gearshift lever	22-1	09-2
X1245	CONNECTOR (1-PINS, BLACK)	Above LH sun visor	21-1	
X1246	CONNECTOR (1-PINS, BLACK)	Above RH sun visor	02-2	

COMPONENT LOCATION CHART

COMPONENT			PAGE - FIGURE 7100.0	8500.0
X1260	CONNECTOR (2-PINS, (---))	LEFT REAR SPEAKER, H46		
X1261	CONNECTOR (2-PINS, (---))	RIGHT REAR SPEAKER, H45		
X1285	CONNECTOR (1-PINS, (---))	In upper LH C-pillar CAPACITOR, C1		
X1380	CONNECTOR (1-PINS, NATURAL)	Behind RH footwell speaker grille		
X1381	CONNECTOR (1-PINS, NATURAL)	Behind LH footwell kickpanel		
X1426	CONNECTOR (9-PINS, BROWN)	Rear RH side of engine compartment in E-Box		04-6
X6000	CONNECTOR (88-PINS, BLACK)	Rear RH side of engine compartment in E-Box	00-1	08-1
X6002	CONNECTOR (20-PINS, BLACK)	Rear RH side of engine compartment back of RH side shock tower	05-1	05-4
X6101	CONNECTOR (2-PINS, BLACK)	Top center of engine (318)		
X6101	CONNECTOR (2-PINS, BLACK)	Top center of engine (325)		
X6102	CONNECTOR (2-PINS, BLACK)	Top center of engine (318)		
X6102	CONNECTOR (2-PINS, BLACK)	Top center of engine (325)		
X6103	CONNECTOR (2-PINS, BLACK)	Top center of engine (318)		
X6103	CONNECTOR (2-PINS, BLACK)	Top center of engine (325)		
X6104	CONNECTOR (2-PINS, BLACK)	Top center of engine (318)		
X6104	CONNECTOR (2-PINS, BLACK)	Top center of engine (325)		
X6105	CONNECTOR (2-PINS, BLACK)	Top center of engine (325)		
X6106	CONNECTOR (2-PINS, BLACK)	Top center of engine (325)		
X6120	CONNECTOR (2-PINS, BLACK)	LH side of engine compartment right of LH side shock tower (325)	11-3	
X6120	CONNECTOR (2-PINS, BLACK)	LH side of engine compartment right of LH side shock tower (318)	14-3	

COMPONENT			PAGE – FIGURE 7100.0	8500.0
X6130	CONNECTOR (2-PINS, BLACK)	RH front of engine below intake manifold (325)	08-2	
X6130	CONNECTOR (2-PINS, BLACK)	LH side of engine compartment (near oil level stick) (318)	15-1	
X6131	CONNECTOR (2-PINS, BLACK)	Rear LH side of engine compartment		
X6151	CONNECTOR (3-PINS, GRAY)	Top RH side of engine		09-5
X6152	CONNECTOR (3-PINS, GRAY)	Top RH side of engine		09-5
X6153	CONNECTOR (3-PINS, GRAY)	Top RH side of engine		09-5
X6154	CONNECTOR (3-PINS, GRAY)	Top RH side of engine		09-5
X6155	CONNECTOR (3-PINS, GRAY)	Top RH side of engine		09-5
X6156	CONNECTOR (3-PINS, GRAY)	Top RH side of engine		09-5
X6200	CONNECTOR (4-PINS, BLACK)	Under center of car (325)	28-2	04-4
X6200	CONNECTOR (4-PINS, BLACK)	Under front of car on RH side of transmission (318)	29-1	04-4
X6203	CONNECTOR (3-PINS, BLACK)	Front of engine below intake manifold	05-2	09-4
X6204	CONNECTOR (3-PINS, BLACK)	Front of engine below intake manifold	05-2	09-4
X6205	CONNECTOR (2-PINS, BLACK)	LH side of engine (near oil level stick) (325)	11-2	
X6208	CONNECTOR (2-PINS, BLACK)	Front of engine CAMSHAFT ACTUATOR, B6208		
X6209	CONNECTOR (3-PINS, BLACK)	Front of engine HALL EFFECT CAMSHAFT SENSOR, B6209		09-4
X6217	CONNECTOR (4-PINS, BLACK)	Top front of engine		
X6231	CONNECTOR (2-PINS, BLACK)	RH front of engine below intake manifold (near oil level stick) (325)	12-1	
X6231	CONNECTOR (2-PINS, BLACK)	LH side of engine compartment (near oil level stick) (318)	15-1	
X6232	CONNECTOR (2-PINS, BLACK)	RH front of engine below intake manifold (325)	08-2	

COMPONENT LOCATION CHART

COMPONENT			PAGE - FIGURE 7100.0	8500.0
X6233	CONNECTOR (7-PINS, BLACK)	LH side of engine compartment right of LH side shock tower (318)	14-3	05-3
X6236	CONNECTOR (2-PINS, BLACK)	RH front of engine below intake manifold (325)	12-1	
X6241	CONNECTOR (2-PINS, BLACK)	LH side of engine		
X6242	CONNECTOR (2-PINS, BLACK)	LH side of engine		
X6252	CONNECTOR (2-PINS, BLACK)	LH side of engine (near oil level stick) (325)	11-2	
X6252	CONNECTOR (3-PINS, BLACK)	LH side of engine (318)	14-2	09-4
X6300	CONNECTOR (9-PINS, BLACK)	Rear LH side of engine compartment		04-6
X6301	CONNECTOR (9-PINS, BLACK)	Rear LH side of engine compartment		04-6
X6303	CONNECTOR (9-PINS, BLACK)	Rear LH side of engine compartment		
X6454	GROUND	Rear RH side of engine compartment	06-2	
X6456	GROUND	RH front of engine (325)	08-2	
X6509	CABLE SOCKET ALTERNATOR B+	Front LH side of engine compartment below	05-2	
X6510	CABLE SOCKET STARTER TERMINAL 50	Rear LH side of engine compartment below intake manifold		
X6511	CABLE SOCKET ALTERNATOR TERMINAL 30h	Rear LH side of engine compartment below intake manifold		
X6512	CABLE SOCKET STARTER TERMINAL 30h	Rear LH side of engine compartment below intake manifold		
X7509	CABLE SOCKET ALTERNATOR TERMINAL D+	Front LH side of engine compartment below		
X8500	CONNECTOR (55-PINS, BLACK)	Rear RH side of engine compartment in E-Box	00-1	00-1
X8503	CONNECTOR (10-PINS, WHITE)	Center console RH side of gearshift selector	22-1	03-3
X8507	CONNECTOR (1-PINS, BLACK)	Below LH side of dash		
X8511	CONNECTOR (1-PINS, BLACK)	Under front of car LH side of transmission		

COMPONENT			PAGE - FIGURE 7100.0	8500.0
X8516	CONNECTOR (2-PINS, BLACK)	Under center of car above		
X8521	CONNECTOR (9-PINS, BLACK)	Under center of car above		10-1
X8524	CONNECTOR (1-PINS, BLACK)	Under front of car LH side of transmission		
X9744	CONNECTOR (6-PINS, BLACK)	In lower RH side of front door behind trim panel		10-3
X9749	CONNECTOR (6-PINS, BLACK)	In lower LH front door behind trim panel		10-3
X9997	CONNECTOR (2-PINS, ORANGE)	Behind steering wheel	19-2	
X10010	GROUND	Behind RH footwell trim	07-1	
X10012	GROUND	Behind RH footwell trim	07-1	
X10013	CONNECTOR (1-PINS, (---))	Top of steering column		
X10015	CONNECTOR (20-PINS, BLACK)	Power Distribution Box rear LH side of engine compartment FRONT POWER DISTRIBUTION BOX, P90		
X10016	CONNECTOR (20-PINS, BLACK)	Power Distribution Box rear LH side of engine compartment FRONT POWER DISTRIBUTION BOX, P90		
X10017	CONNECTOR (20-PINS, BLACK)	Power Distribution Box rear LH side of engine compartment FRONT POWER DISTRIBUTION BOX, P90		
X10018	CONNECTOR (32-PINS, BLACK)	Power Distribution Box rear LH side of engine compartment FRONT POWER DISTRIBUTION BOX, P90		
X10026	CONNECTOR (6-PINS, BLACK)	Power Distribution Box rear LH side of engine compartment FRONT POWER DISTRIBUTION BOX, P90		

COMPONENT LOCATION CHART

COMPONENT			PAGE - FIGURE 7100.0	8500.0
X10030	CONNECTOR (5-PINS, BLACK)	Power Distribution Box rear LH side of engine compartment FRONT POWER DISTRIBUTION BOX, P90		
X10031	CONNECTOR (9-PINS, BLACK)	Below LH side of dash		04-6
X10033	CONNECTOR (1-PINS, BLACK)	LH side of dash	20-1	
X10034	CONNECTOR (2-PINS, (---))	Power Distribution Box rear LH side of engine compartment		
X10035	CONNECTOR (2-PINS, (---))	Power Distribution Box rear LH side of engine compartment		
X10036	CONNECTOR (2-PINS, BLACK)	Power Distribution Box rear LH side of engine compartment FRONT POWER DISTRIBUTION BOX, P90		
X10054	CONNECTOR (12-PINS, BLACK)	Below LH side of dash RH side of steering column	20-3	03-5
X10065	CONNECTOR (2-PINS, WHITE)	LH side of LH footwell under footrest		
X10070	CONNECTOR (2-PINS, GRAY)	Near LH headlight assembly		
X10071	CONNECTOR (2-PINS, BLACK)	Near LH headlight assembly		
X10074	CONNECTOR (2-PINS, BLACK)	Near LH headlight assembly		
X10075	CONNECTOR (2-PINS, GRAY)	Near RH headlight assembly		
X13004	GROUND	In upper RH rear seatback	06-3	
X13006	GROUND	In upper LH rear seatback	08-1	
X13009	GROUND	Behind RH footwell trim	07-1	
X13012	CONNECTOR (26-PINS, WHITE)	Behind glove box RH side of dash	24-1	00-2
X13013	CONNECTOR (5-PINS, BLACK)	Behind glove box RH side of dash	01-2	01-4
X13014	CONNECTOR (4-PINS, BLACK)	Behind glove box RH side of dash	24-1	01-6

COMPONENT LOCATION CHART

COMPONENT			PAGE - FIGURE 7100.0	8500.0
X13016	GROUND	Below LH side of dash	07-3	
X13025	CONNECTOR (12-PINS, BLACK)	RH side of dash behind glove box	02-1	03-5
X13026	CONNECTOR (1-PINS, BLACK)	LH side of dash	20-1	
X18080	CONNECTOR (1-PINS, (---))	In luggage compartment		
X18126	CONNECTOR (17-PINS, BLACK)	Center console behind radio		02-6
X18154	CONNECTOR (26-PINS, BLUE)	Center console		00-2
X18155	CONNECTOR (26-PINS, WHITE)	Center console	21-2	00-2
X18156	CONNECTOR (26-PINS, BLACK)	Center console	21-2	00-2
X18157	CONNECTOR (26-PINS, BLUE)	Center console	02-3	00-2
X18180	CONNECTOR (3-PINS, WHITE)	In RH side of luggage compartment	03-2	10-5
X18196	CONNECTOR (10-PINS, BLACK)	LEFT FRONT HIGH RANGE SPEAKER, H59		
X18198	CONNECTOR (10-PINS, BLACK)	RIGHT FRONT HIGH RANGE SPEAKER, H50		
X18277	CONNECTOR (2-PINS, BLACK)	LH front door in door at key lock assembly		
X18278	CONNECTOR (2-PINS, BLACK)	RH front door in door at key lock assembly		
X18279	CONNECTOR (3-PINS, BLACK)	In lower LH front door behind trim panel		
X18280	CONNECTOR (3-PINS, BLACK)	In lower RH side of front door behind trim panel		
X18295	CONNECTOR (2-PINS, YELLOW)	In lower RH B-pillar behind trim panel		
X18296	CONNECTOR (2-PINS, YELLOW)	In lower LH B-pillar behind trim panel		
X18500	CONNECTOR (25-PINS, (---))	In LH forward side of luggage compartment	04-1	07-2
X18507	CONNECTOR (2-PINS, (---))	Center console		

COMPONENT LOCATION CHART

COMPONENT			PAGE - FIGURE 7100.0	8500.0
X18509	CONNECTOR (8-PINS, (---))	Center console		
X18515	CONNECTOR (2-PINS, (---))	Center console		
X18520	CONNECTOR (10-PINS, (---))	Center console RADIO, N9		03-3
X18521	CONNECTOR (10-PINS, (---))	In LH forward side of luggage compartment CD CHANGER, N22		07-1
X18723	GROUND	Below LH side of dash		
X18741	CONNECTOR (4-PINS, (---))	Center of dash MICROPHONE, B400		09-6
Y1	ABS HYDRAULIC UNIT	Rear LH side of engine compartment back of LH side shock tower	11-1	
Y2	AIR CONDITIONING COMPRESSOR	Front of engine		
Y5	DRIVER'S SIDE MIRROR	In upper LH front door		
Y6	PASSENGER'S SIDE MIRROR	In upper RH front door		
Y19	SHIFT-LOCK	Center console RH side of gearshift selector		
Y6101	CYL. 1 FUEL INJECTION VALVE	Top center of engine (325)	13-2	
Y6101	CYL. 1 FUEL INJECTION VALVE	Top center of engine (318)		
Y6102	CYL. 2 FUEL INJECTION VALVE	Top center of engine (325)	13-2	
Y6102	CYL. 2 FUEL INJECTION VALVE	Top center of engine (318)		
Y6103	CYL. 3 FUEL INJECTION VALVE	Top center of engine (325)	13-2	
Y6103	CYL. 3 FUEL INJECTION VALVE	Top center of engine (318)		
Y6104	CYL. 4 FUEL INJECTION VALVE	Top center of engine (325)	13-2	
Y6104	CYL. 4 FUEL INJECTION VALVE	Top center of engine (318)		
Y6105	CYL. 5 FUEL INJECTION VALVE	Top center of engine (325)	13-2	

COMPONENT LOCATION CHART

COMPONENT			PAGE – FIGURE 7100.0	8500.0
Y6106	CYL. 6 FUEL INJECTION VALVE	Top center of engine (325)	13-2	
Y6120	EVAPORATIVE EMISSION VALVE	Front LH side of engine compartment right of LH side shock tower (325)	11-3	
Y6120	EVAPORATIVE EMISSION VALVE	LH side of engine compartment right of LH side shock tower (318)	14-3	
Y6130	IDLE SPEED CONTROL VALVE	RH front of engine below intake manifold (325)	08-2	
Y6130	IDLE SPEED CONTROL VALVE	LH side of engine compartment (near oil level stick) (318)	15-1	
Y6131	INTAKE AIR RESONANCE CHANGEOVER VALVE	Rear LH side of engine compartment		

COMPONENT LOCATION VIEWS

ELECTRICAL CONTROL MODULE LOCATIONS

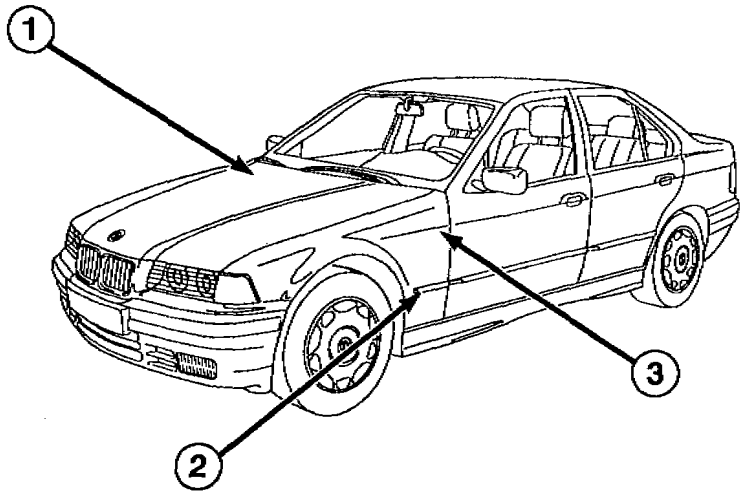

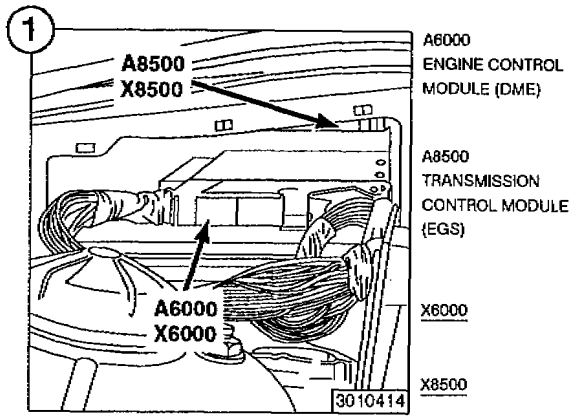

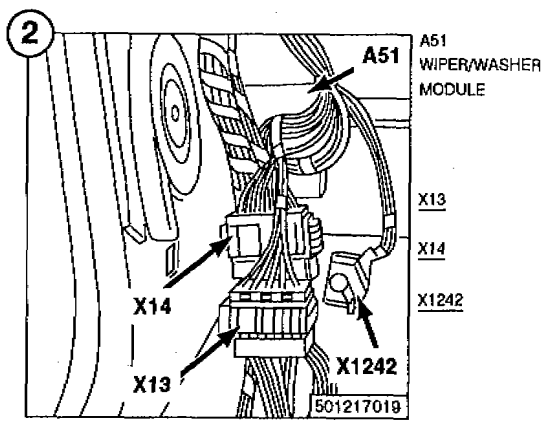

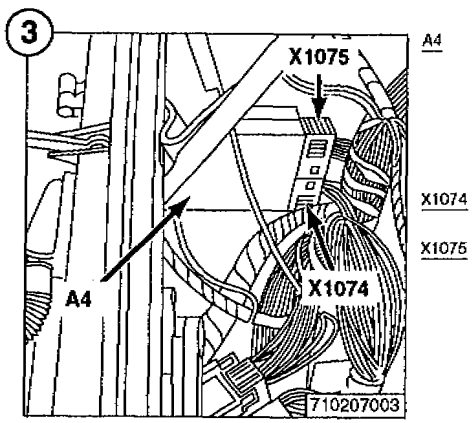

COMPONENT LOCATION VIEWS

ELECTRICAL CONTROL MODULE LOCATIONS

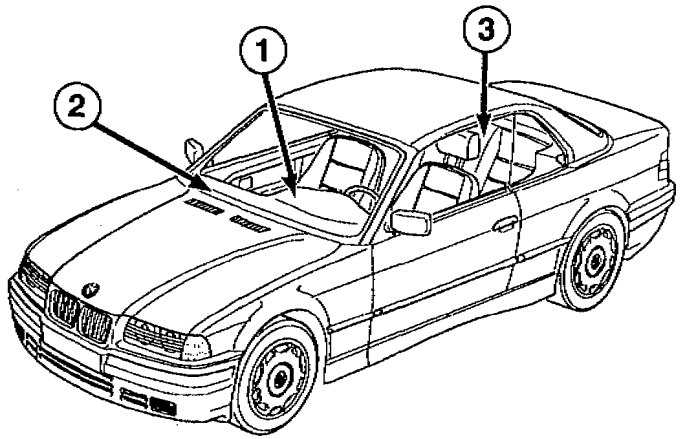

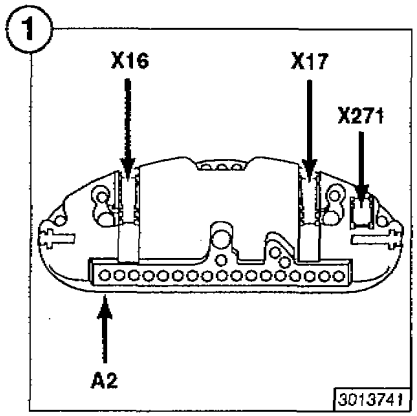

A2
INSTRUMENT
CLUSTER

X16
X17
X271

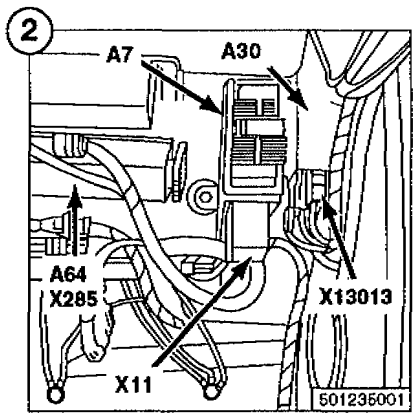

A7
SLIP CONTROL
MODULE (ABS)

A30
CENTRAL LOCKING
MODULE

A64
WIPER/WASHER
MODULE (LOW II)

X11
X285
X13013

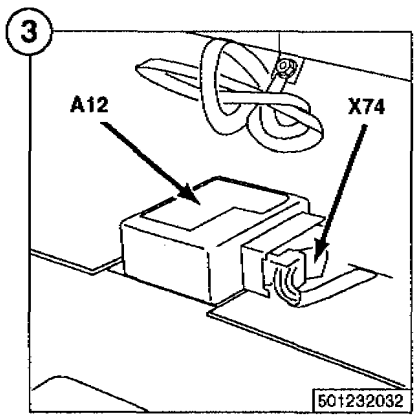

A12
SUPPLEMENTAL
RESTRAINT
SYSTEM
CONTROL MODULE

X74

COMPONENT LOCATION VIEWS

ELECTRICAL CONTROL MODULE LOCATIONS

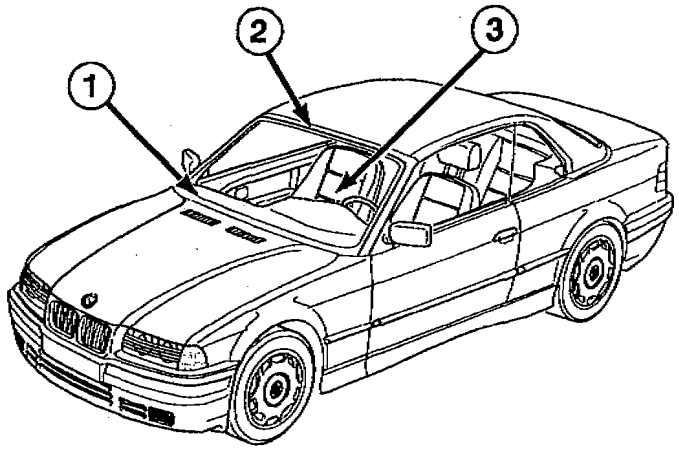

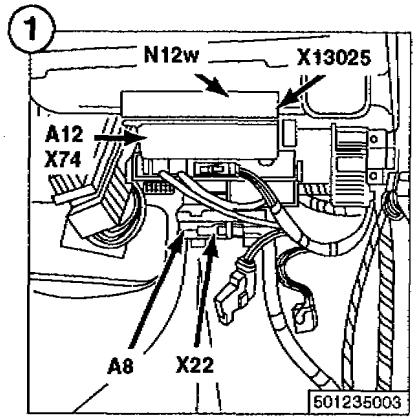

A8 CRUISE CONTROL MODULE (TEMPOMAT) — X22, X74, X13025

A12 SUPPLEMENTAL RESTRAINT SYSTEM CONTROL MODULE

N12w ANTI-THEFT CONTROL MODULE (ALPINE)

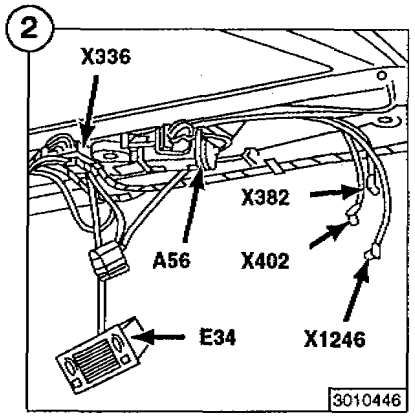

A56 SUNROOF CONTROL ASSEMBLY

E34 FRONT DOME LIGHT/ MAP READING ASSEMBLY

X336

X382

X402

X1246

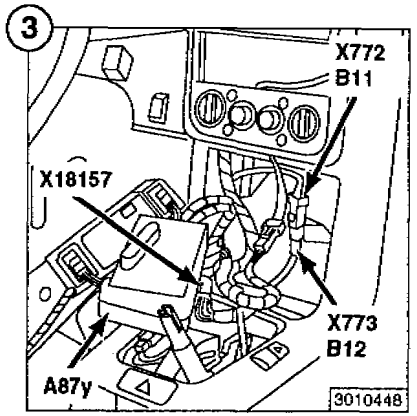

A87y INTEGRATED CLIMATE REGULATION CONTROL MODULE — X772, X773, X18157

B11 LH HEAT EXCHANGER TEMPERATURE SENSOR

B12 RH HEAT EXCHANGER TEMPERATURE SENSOR

COMPONENT LOCATION VIEWS

ELECTRICAL CONTROL MODULE LOCATIONS

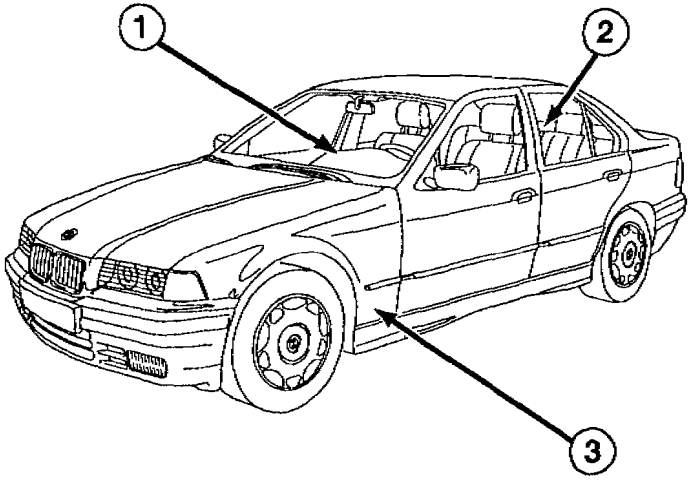

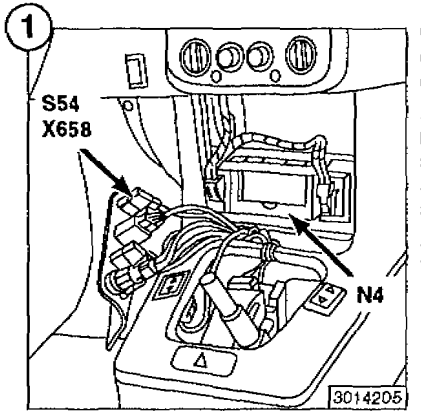

N4
ON-BOARD
COMPUTER

S54
PASSENGER S
SEAT
SEAT HEATER
SWITCH

X658

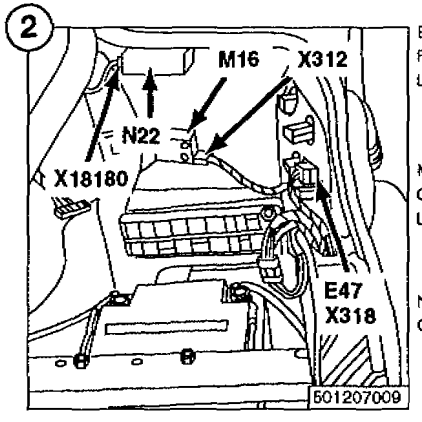

E47
RIGHT TRUNK
LIGHT ASSEMBLY

X312

X318

X18180

M16
GAS FILLER
LOCK MOTOR

N22
CD CHANGER

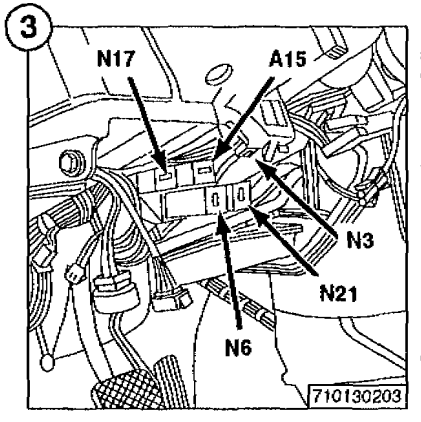

A15
PARK HEATING/
VENTILATION
RELAY BOX

N17
CRASH CONTROL
MODULE

N3
DIMMER

N21
TWIN RELAY
MODULE

N6
HEADLIGHT/
FOGLIGHT
CLEANING
MODULE (SRA)

COMPONENT LOCATION VIEWS

ELECTRICAL CONTROL MODULE LOCATIONS

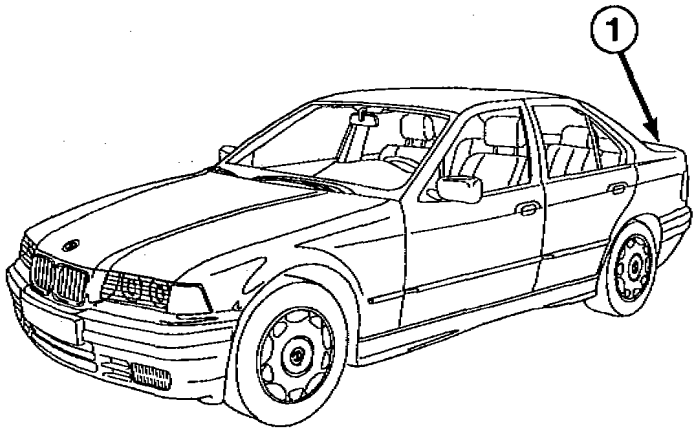

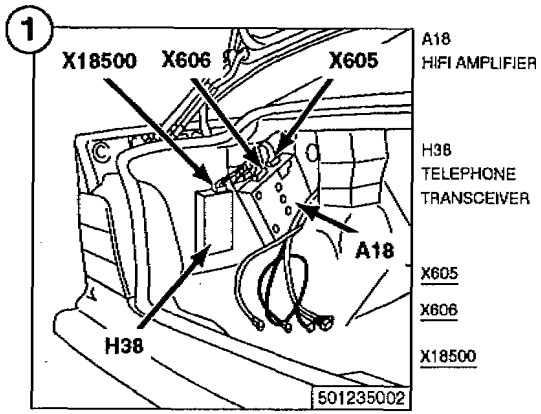

COMPONENT LOCATION VIEWS

B(+)

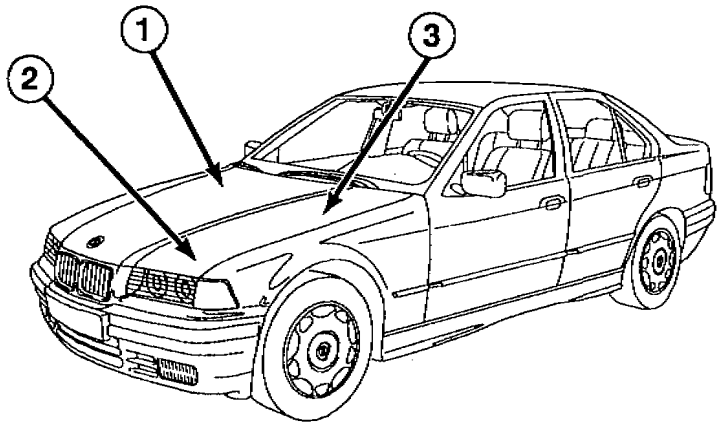

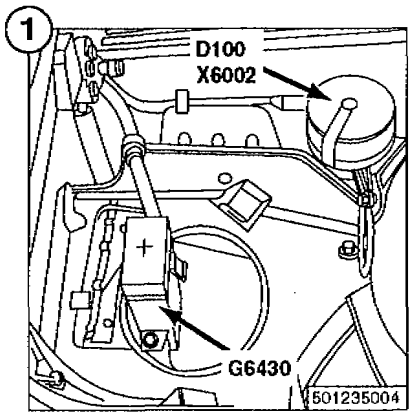

D100
DATA LINK
CONNECTOR

G6430
B+
JUMP START
JUNCTION POINT

X6002

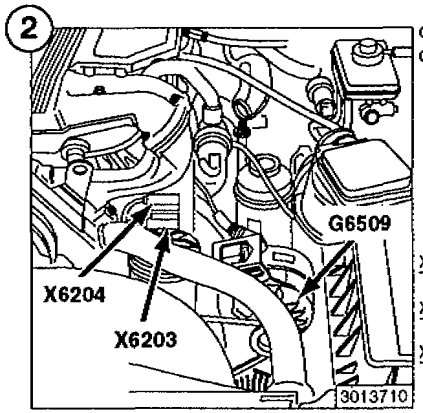

G6509
GENERATOR

X6203

X6204

X6509

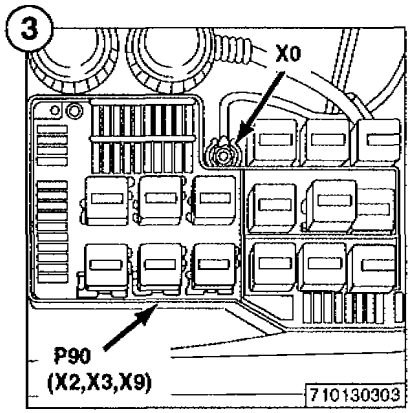

P90
FRONT POWER
DISTRIBUTION
BOX

X3
B+
JUNCTION POINT

X0
B+
JUNCTION POINT

X9
B+
JUNCTION POINT

X2
BATTERY
B+ START POINT

COMPONENT LOCATION VIEWS

B(–)

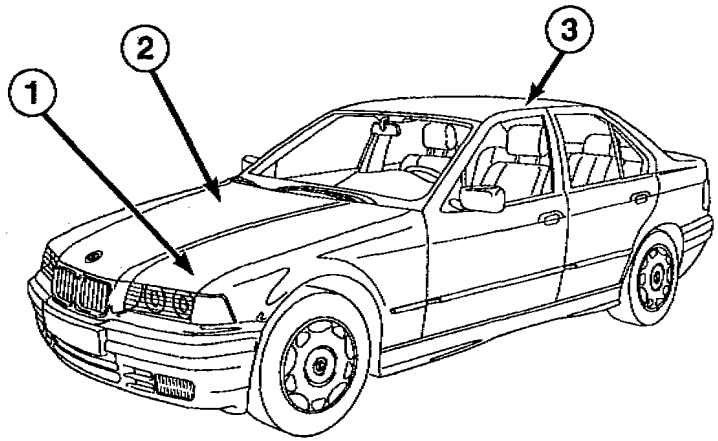

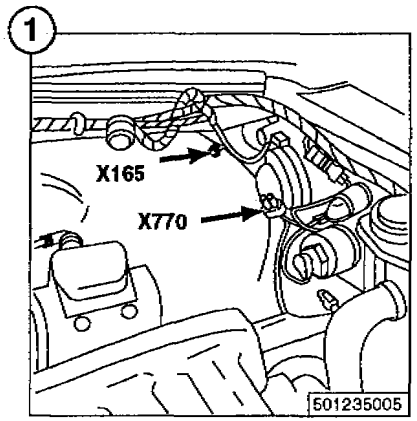

X165
GROUND

X770

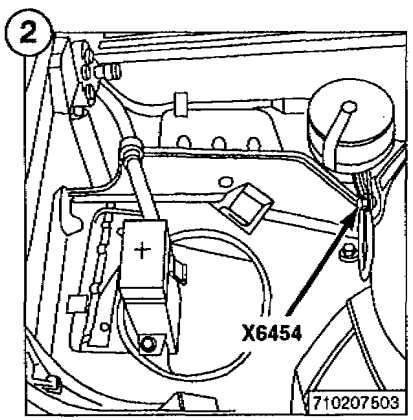

X6454
GROUND

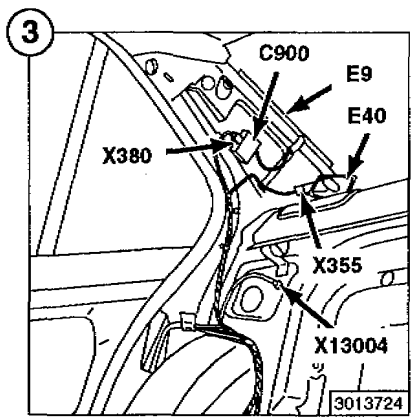

C900
SUPPRESSION
FILTER

E9
REAR
DEFOGGER I

E40
RIGHT REAR
INTERIOR LIGHT

X355

X380

X13004
GROUND

COMPONENT LOCATION VIEWS

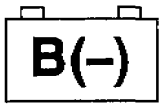

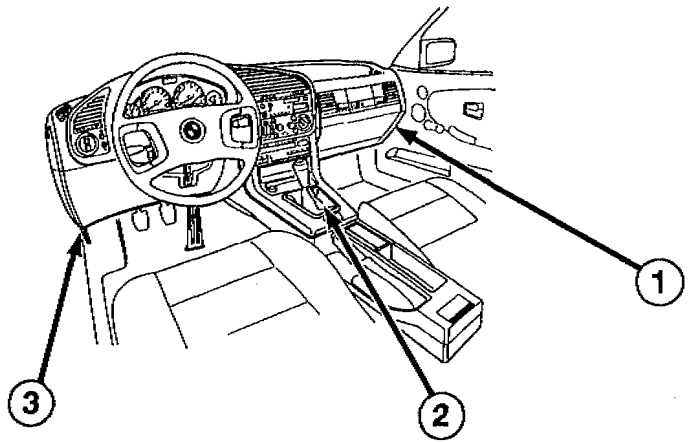

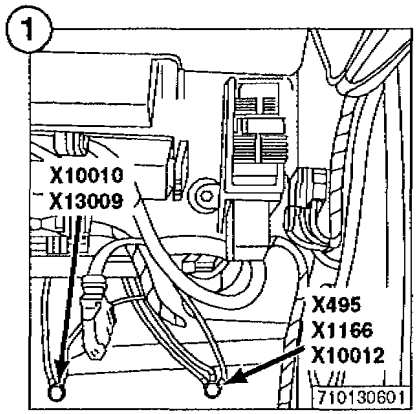

X495 GROUND

X1166 GROUND

X10010 GROUND

X13009 GROUND

X10012 GROUND

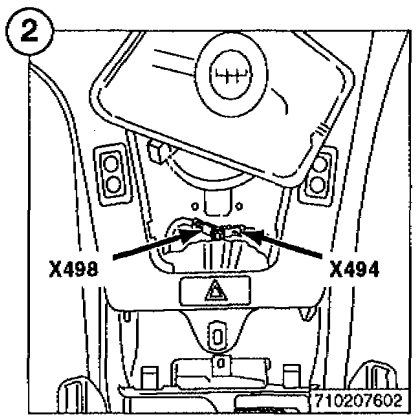

X494 GROUND

X498 GROUND

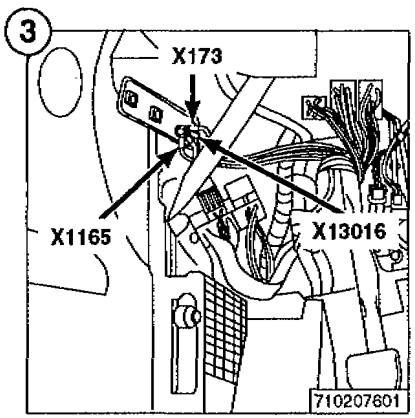

X173 GROUND

X1165 GROUND

X13016 GROUND

COMPONENT LOCATION VIEWS

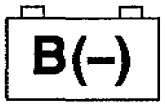

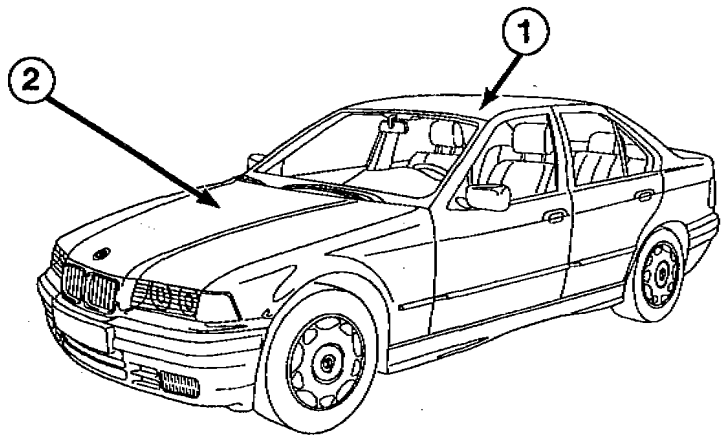

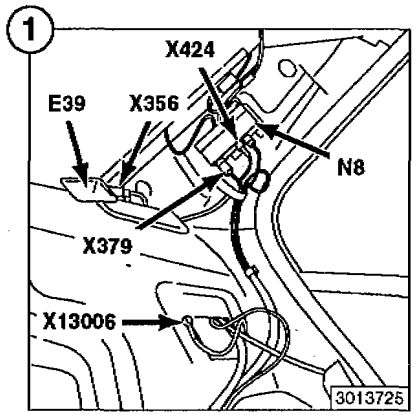

E39
LEFT REAR
INTERIOR LIGHT

X13006
GROUND

N8
ANTENNA
AMPLIFIER
AM/FM

X356

X379

X424

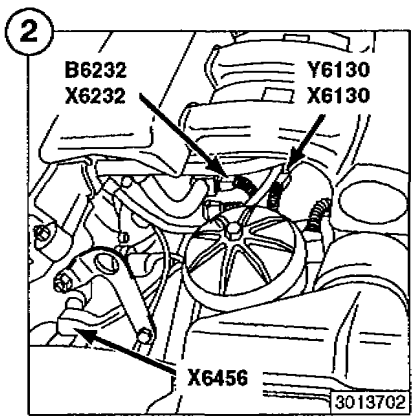

B6232
ENGINE COOLANT
TEMPERATURE
SENSOR

Y6130
IDLE SPEED
CONTROL VALVE

X6130

X6232

X6456
GROUND

COMPONENT LOCATION VIEWS

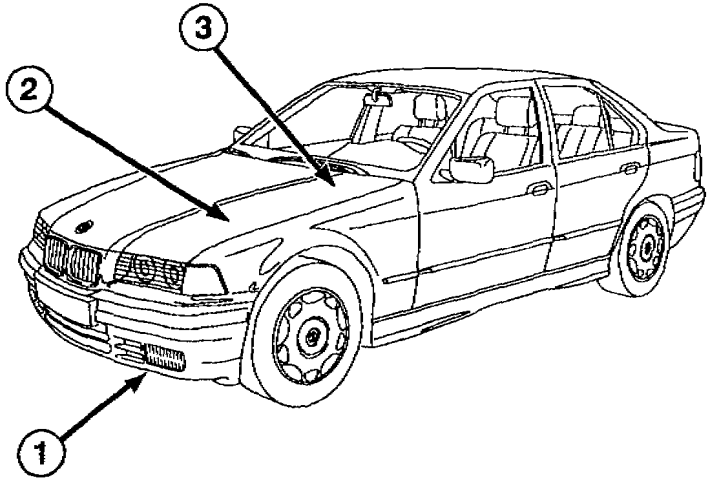

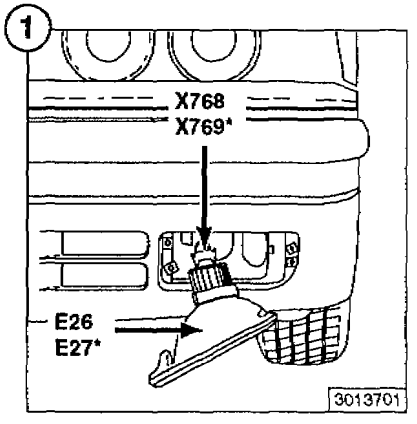

E26
LEFT
FOG LIGHT

E27
RIGHT
FOG LIGHT

X768

X769

* RH SIMILAR

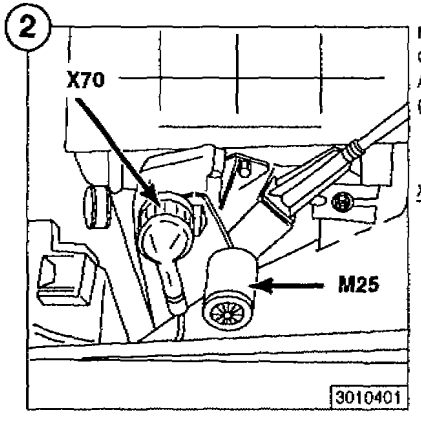

M25
CRUISE CONTROL
ACTUATOR
(TEMPOMAT)

X70

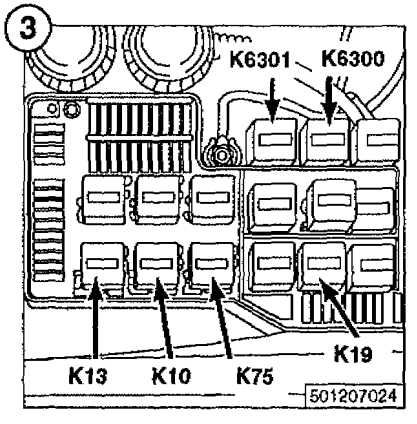

K10
ABS RELAY

K75
ABS PUMP
MOTOR RELAY

K13
REAR DEFOGGER
RELAY

K6300
ENGINE CONTROL
MODULE RELAY

K19
COMPRESSOR
CONTROL
RELAY

K6301
CYL 1-6 FUEL
PUMP RELAY

COMPONENT LOCATION VIEWS

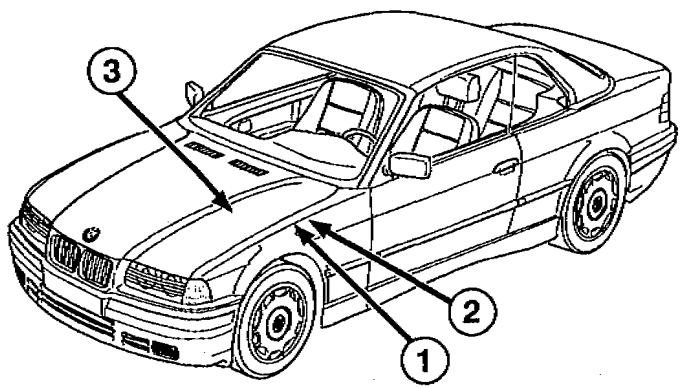

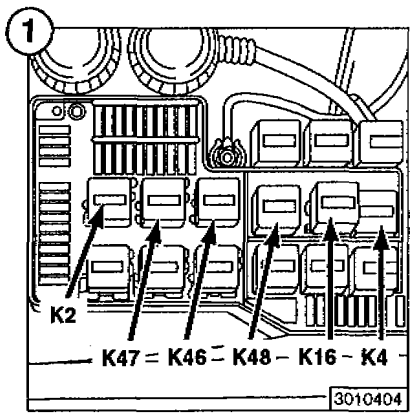

K2
HORN RELAY

K46
HIGH BEAM
LIGHT RELAY

K4
BLOWER RELAY

K47
FRONT FOG
LIGHT RELAY

K16
HAZARD
FLASHER RELAY

K48
LOW BEAM
LIGHT RELAY

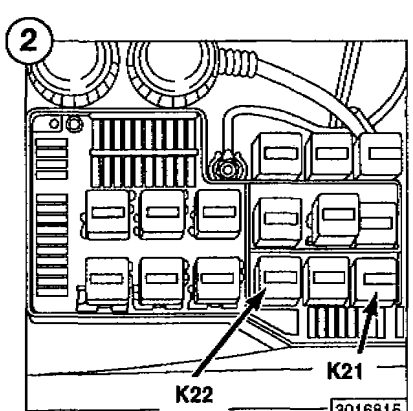

K21
NORMAL SPEED
RELAY

K22
HIGH SPEED
RELAY

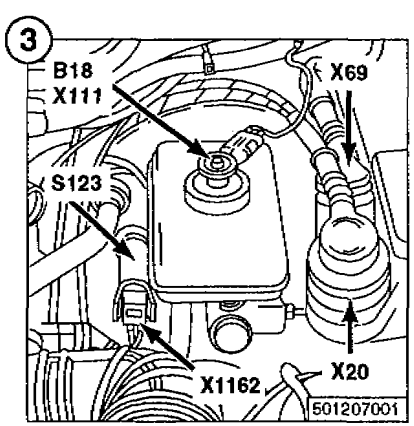

B18
BRAKE FLUID
LEVEL SWITCH

S123
ABS PEDAL
TRAVEL SENSOR

X20

X69

X111

X1162

COMPONENT LOCATION VIEWS

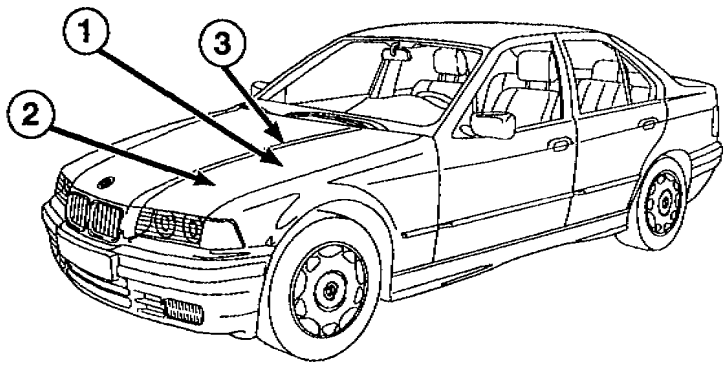

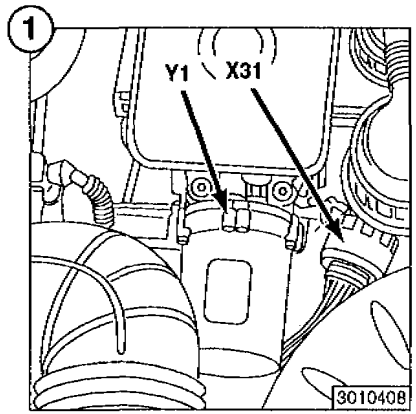

X31

Y1
ABS
HYDRAULIC UNIT

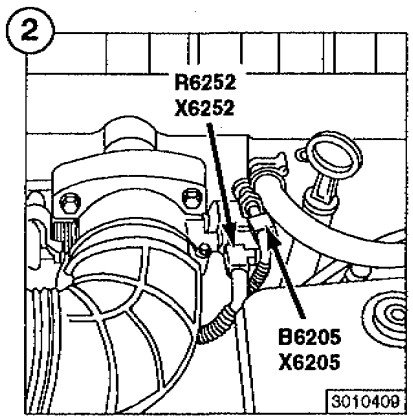

B6205
INTAKE
AIR TEMPERATURE
SENSOR

R6252
THROTTLE
POSITION
SENSOR

X6205

X6252

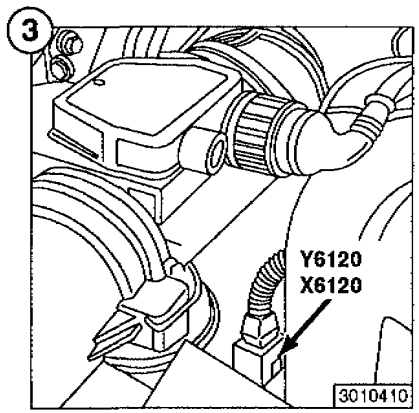

X6120

Y6120
EVAPORATIVE
EMISSION VALVE

COMPONENT LOCATION VIEWS

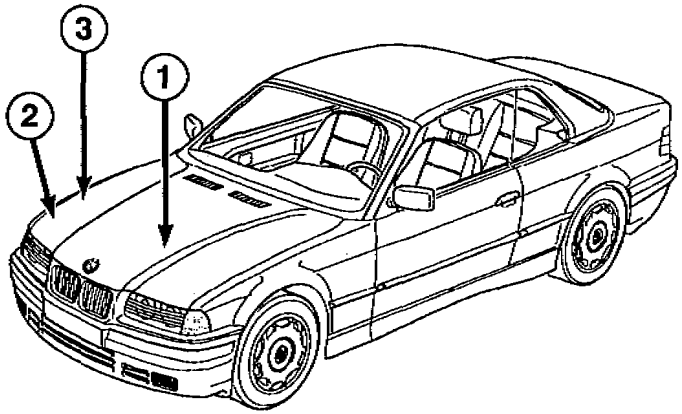

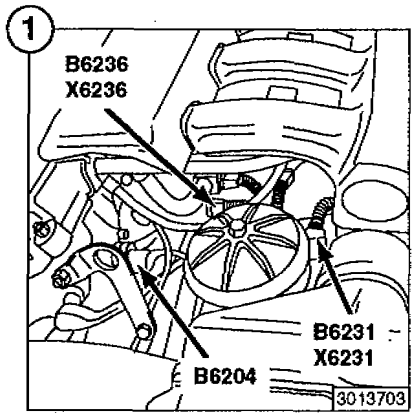

B6204 CAMSHAFT POSITION SENSOR (CYLINDER IDENTIFICATION) — X6231, X6236

B6231 OIL PRESSURE SWITCH

B6236 ENGINE COOLANT TEMPERATURE SENSOR

325

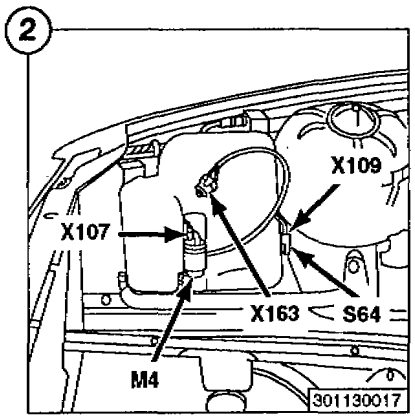

M4 WASHER PUMP

S64 WASHER FLUID LEVEL SWITCH

X107, X109, X163

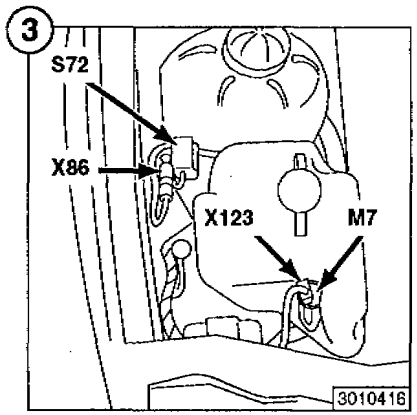

M7 HEADLIGHT/ FOG LIGHT WASHER PUMP

S72 RIGHT FRONT IMPACT SENSOR

X86, X123

* EARLY PRODUCTION

COMPONENT LOCATION VIEWS

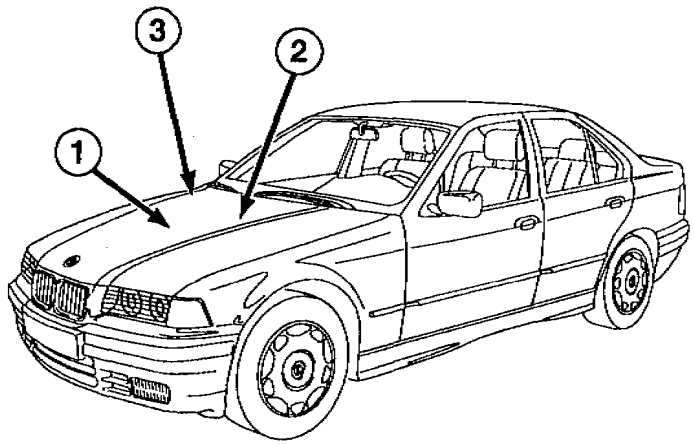

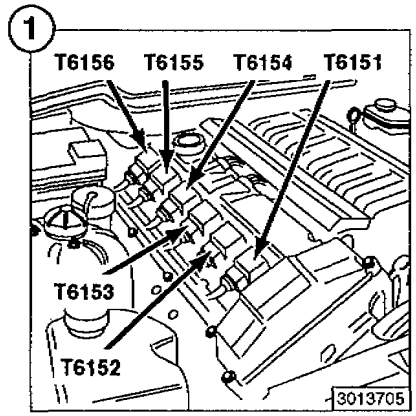

T6151 CYL. 1 IGNITION COIL

T6154 CYL. 4 IGNITION COIL

T6152 CYL. 2 IGNITION COIL

T6155 CYL. 5 IGNITION COIL

T6153 CYL. 3 IGNITION COIL

T6156 CYL. 6 IGNITION COIL

325

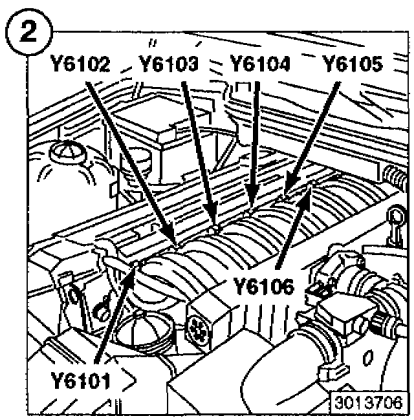

Y6101 CYL. 1 FUEL INJECTION VALVE

Y6104 CYL. 4 FUEL INJECTION VALVE

Y6102 CYL. 2 FUEL INJECTION VALVE

Y6105 CYL. 5 FUEL INJECTION VALVE

Y6103 CYL. 3 FUEL INJECTION VALVE

Y6106 CYL. 6 FUEL INJECTION VALVE

325

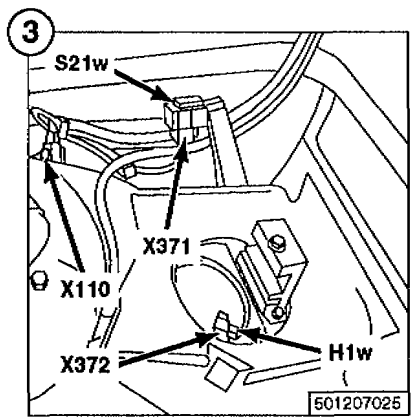

H1w ANTI-THEFT HORN (ALPINE)

S21w ENGINE HOOD SWITCH

X110
X371
X372

COMPONENT LOCATION VIEWS

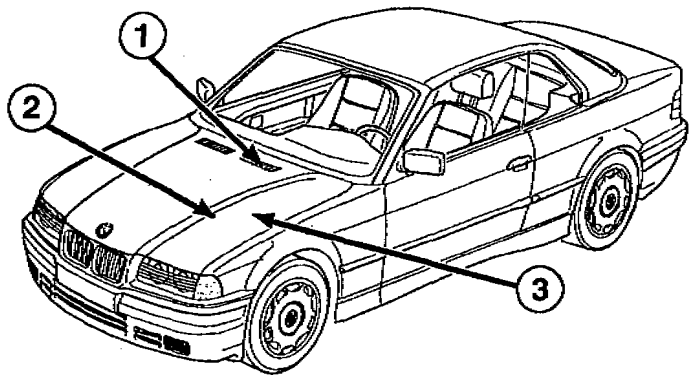

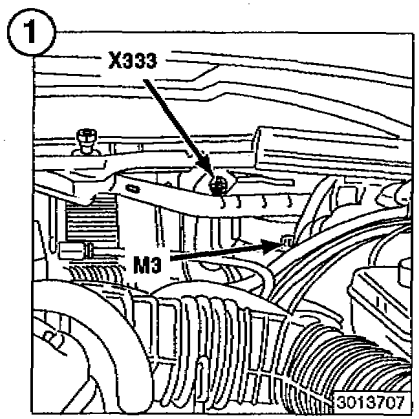

M3
WIPER MOTOR

X333

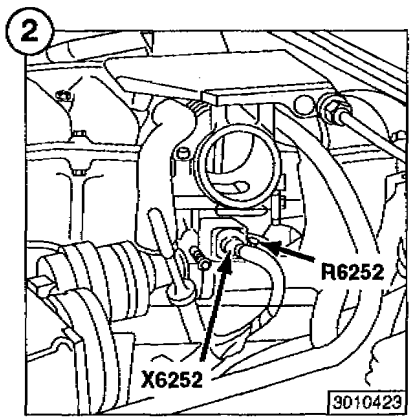

R6252
THROTTLE
POSITION
SENSOR

X6252

318

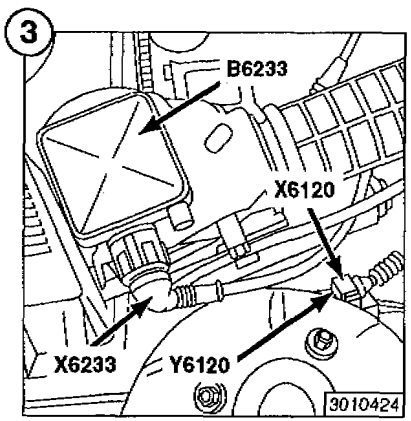

B6233
VOLUME AIR FLOW
SENSOR

X6120

X6233

Y6120
EVAPORATIVE
EMISSION VALVE

318

COMPONENT LOCATION VIEWS

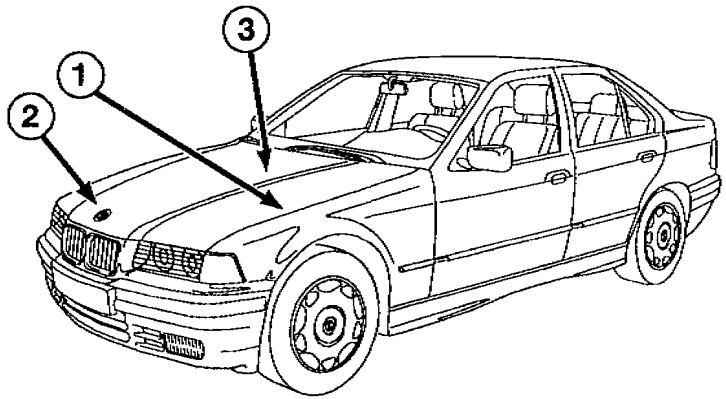

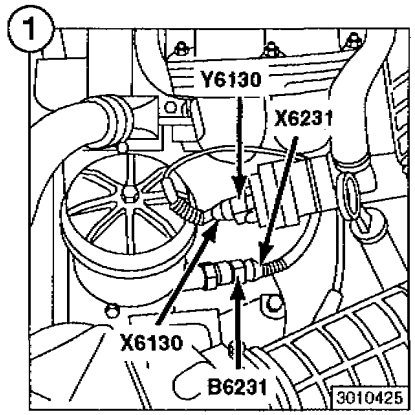

B6231
OIL PRESSURE
SWITCH

X6130

X6231

Y6130
IDLE SPEED
CONTROL VALVE

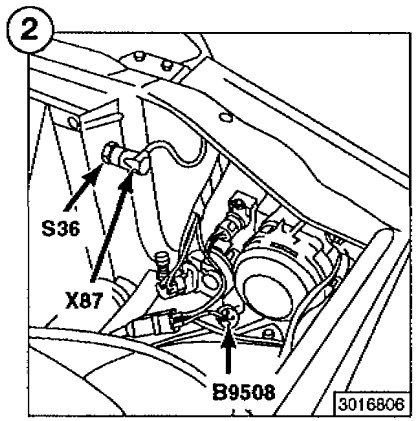

B9508
PRESSURE
SWITCH

S36
TEMPERATURE
SWITCH

X87

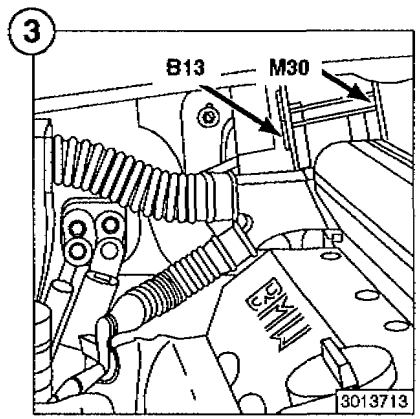

B13
OUTSIDE
TEMPERATURE
SENSOR

M30
BLOWER MOTOR

COMPONENT LOCATION VIEWS

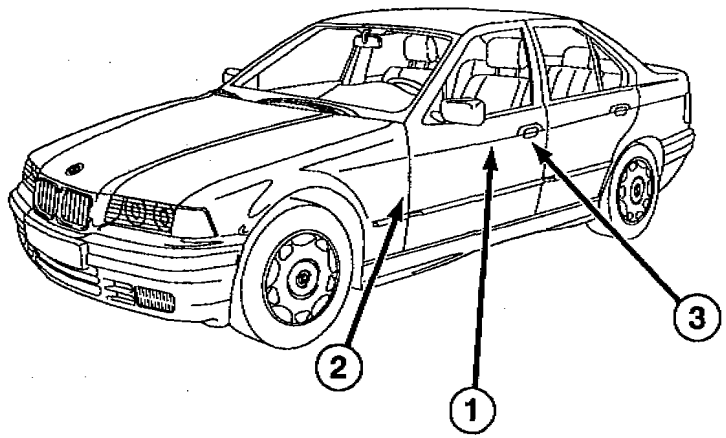

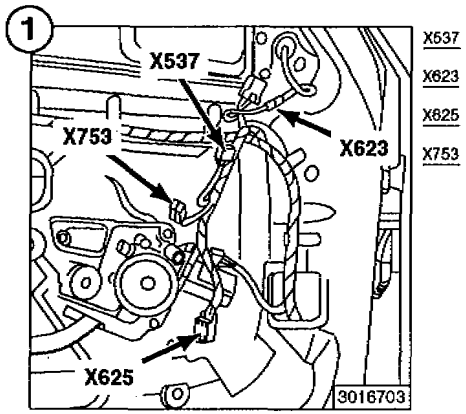

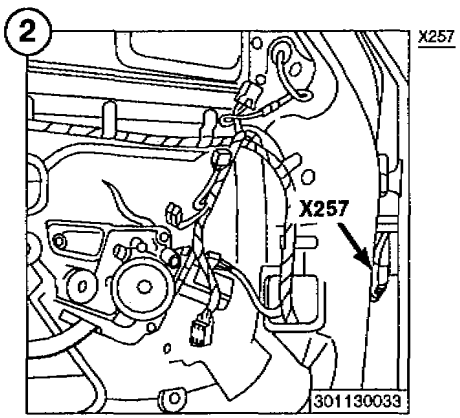

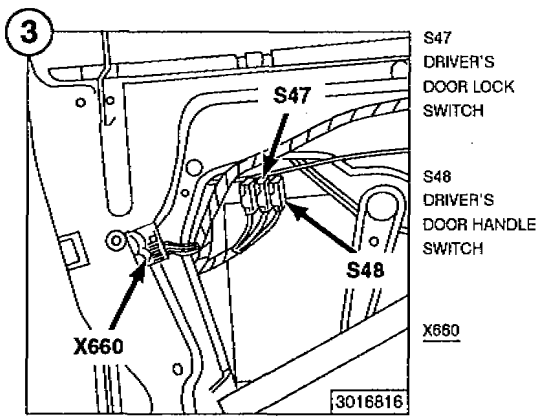

COMPONENT LOCATION VIEWS

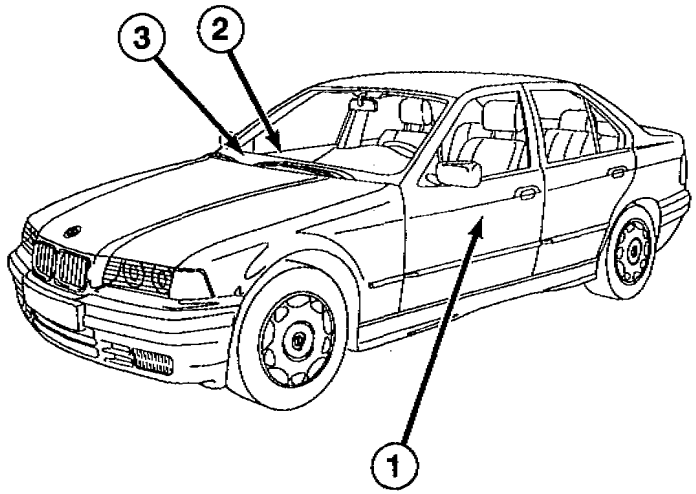

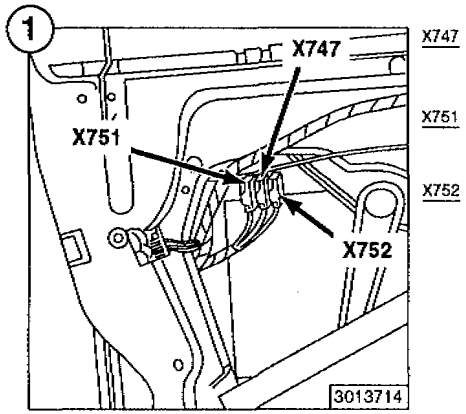

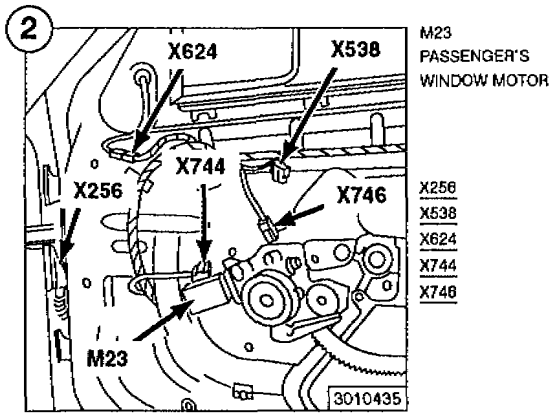

M23
PASSENGER'S
WINDOW MOTOR

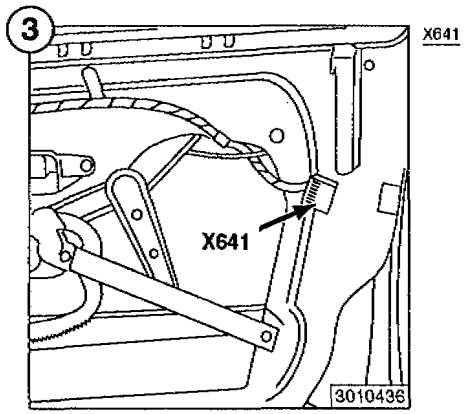

COMPONENT LOCATION VIEWS

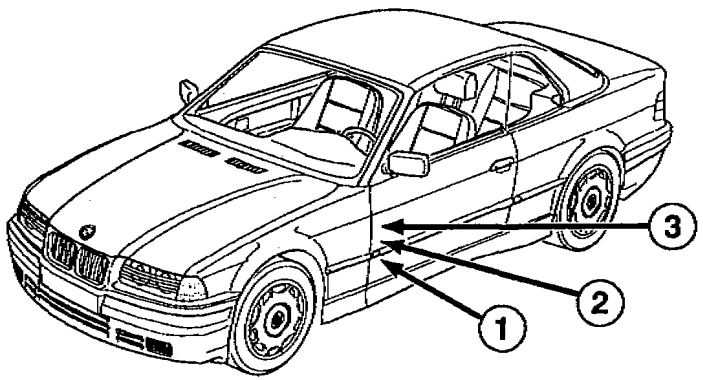

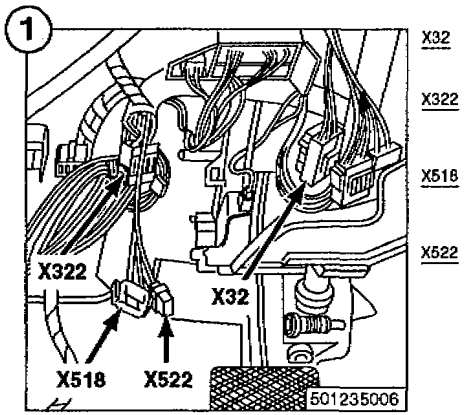

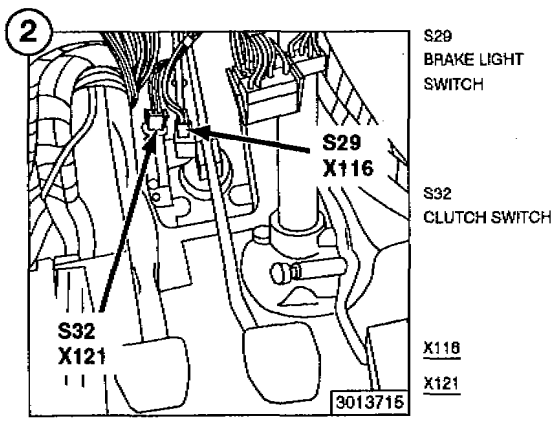

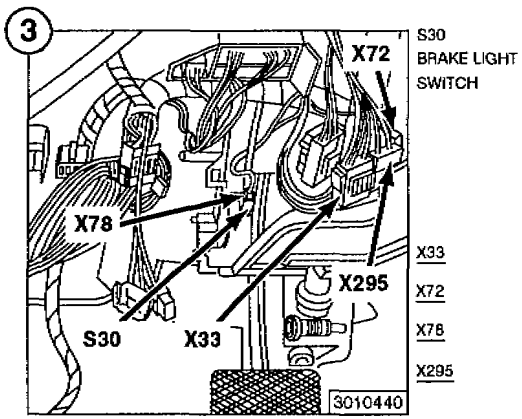

COMPONENT LOCATION VIEWS

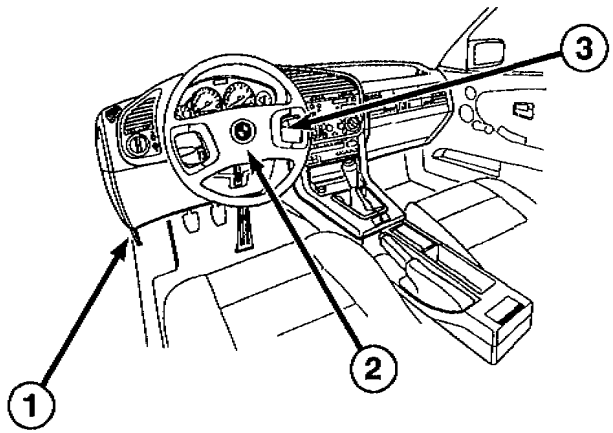

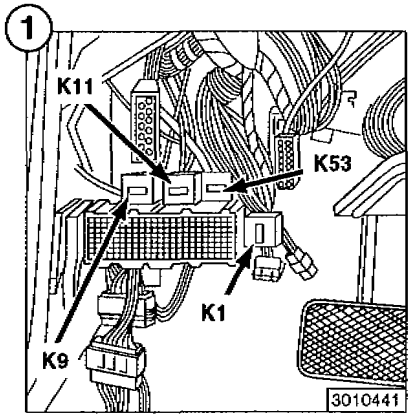

K1
STARTER RELAY

K53
WIPER MOTOR
RELAY

K9
UNLOADER
RELAY,
TERMINAL 15

K11
WIPER RELAY

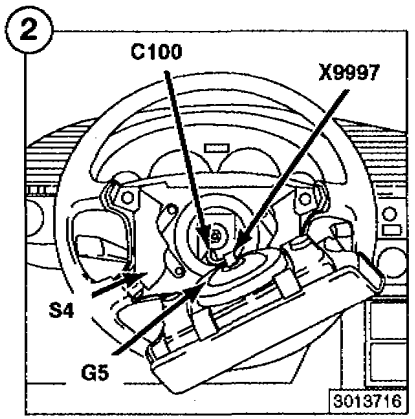

C100
CONTACT RING

G5
DRIVER'S
AIR BAG
GENERATOR

S4
HORN SWITCH

X9997

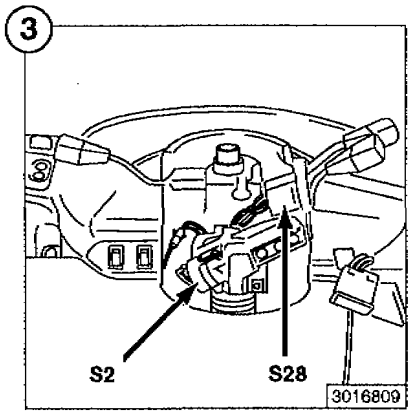

S2
IGNITION
SWITCH

S28
CRUISE CONTROL
SWITCH

COMPONENT LOCATION VIEWS

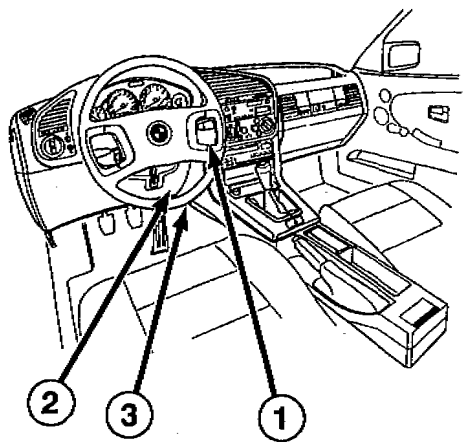

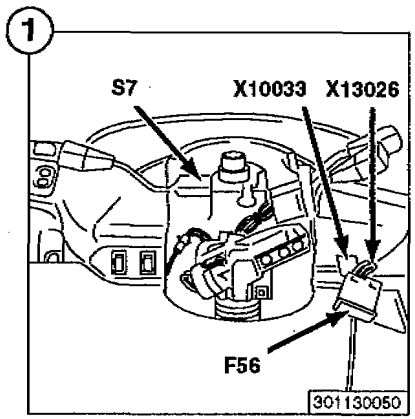

F56
AUTOMATIC
CUT-OUT

S7
COMBINATION
SWITCH

X10033

X13026

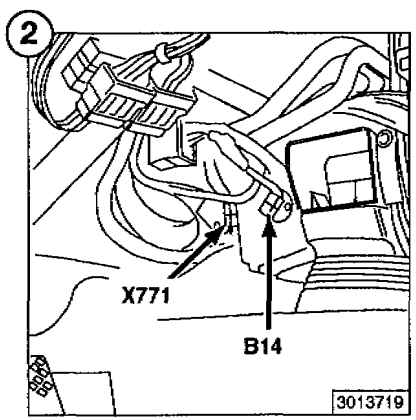

B14
EVAPORATOR
TEMPERATURE
SENSOR

X771

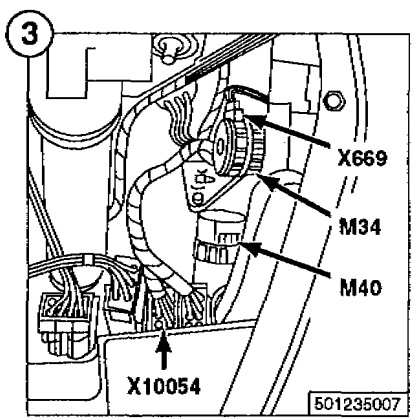

M34
DASH VENT
MIXING FLAP
MOTOR

M40
RECIRCULATION
FLAP MOTOR

X669

X10054

COMPONENT LOCATION VIEWS

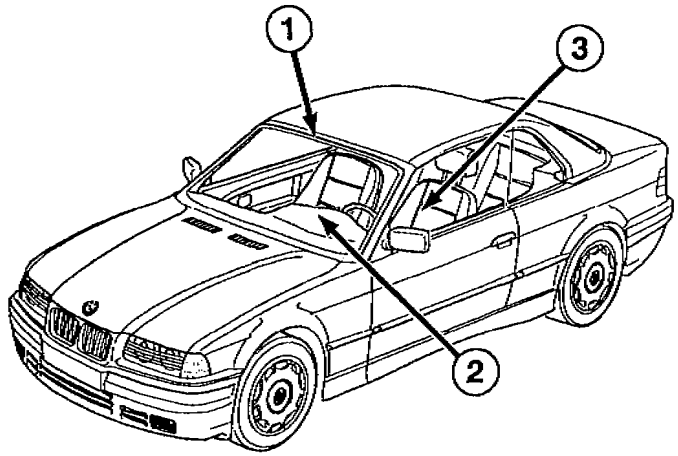

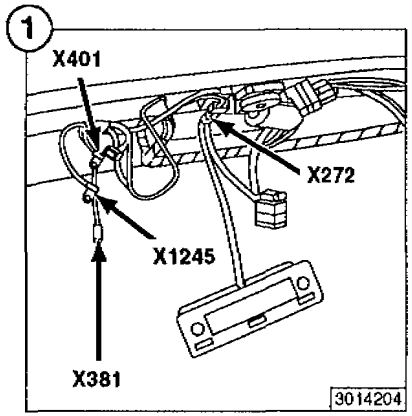

X272
X381
X401
X1245

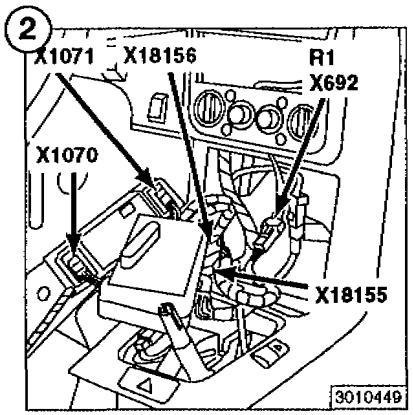

R1
MIXING ACTUATOR

X692
X1070
X1071
X18155
X18156

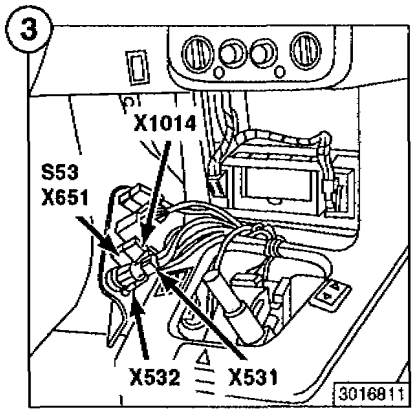

S53
DRIVER'S SEAT, SEAT HEATER SWITCH

X531
X532
X651
X1014

COMPONENT LOCATION VIEWS

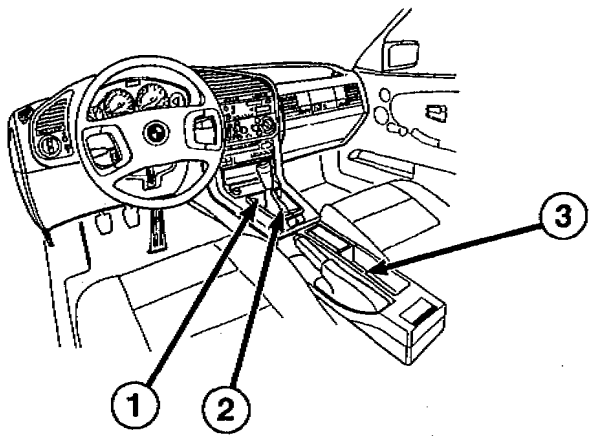

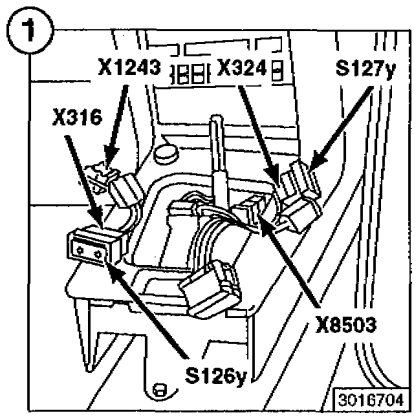

S126y
DRIVER'S
POWER
WINDOW SWITCH

S127y
PASSENGER'S
POWER WINDOW
SWITCH

X316
X324
X1243
X8503

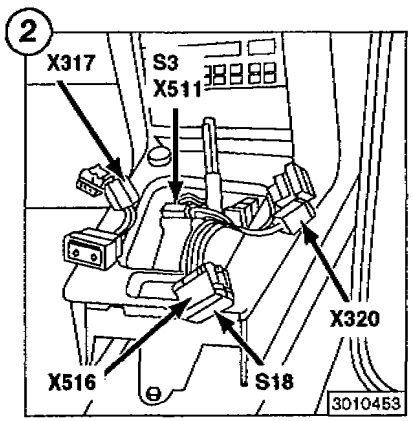

S3
AUTOMATIC
TRANSMISSION
RANGE SWITCH

S18
HAZARD SWITCH

X317
X320
X511
X516

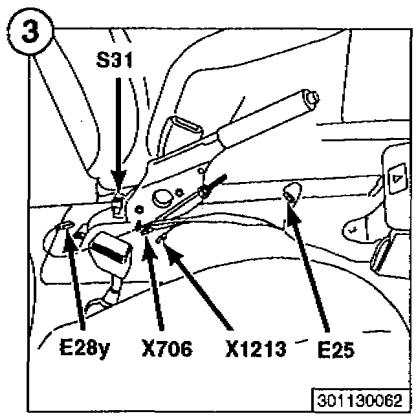

E25
FRONT
ASHTRAY LIGHT

E28y
REAR
ASHTRAY LIGHT

S31
PARK BRAKE
SWITCH

X706
X1213

COMPONENT LOCATION VIEWS

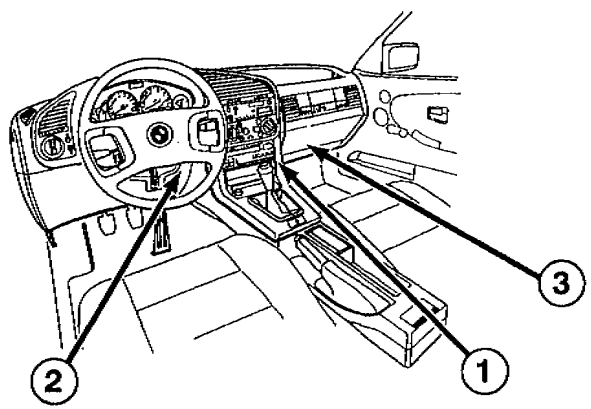

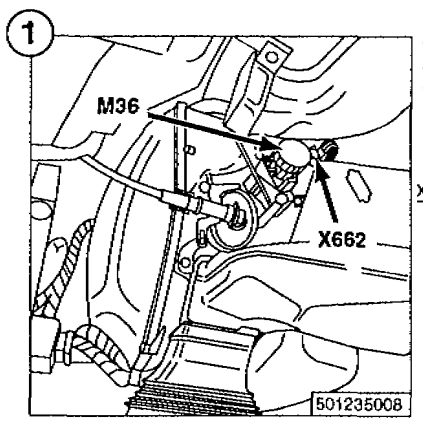

M36
FRESH AIR
FLAP MOTOR

X662

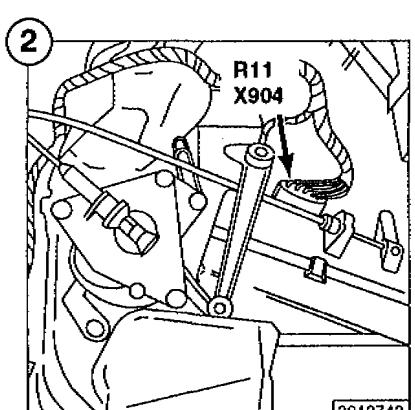

R11
BLOWER
RESISTORS

X904

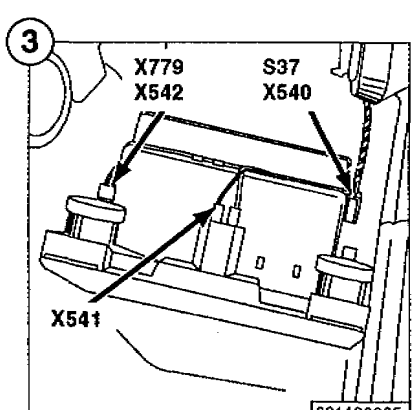

S37
GLOVE BOX
LIGHT SWITCH

X540

X541

X542

X779
CHARGING SOCKET

COMPONENT LOCATION VIEWS

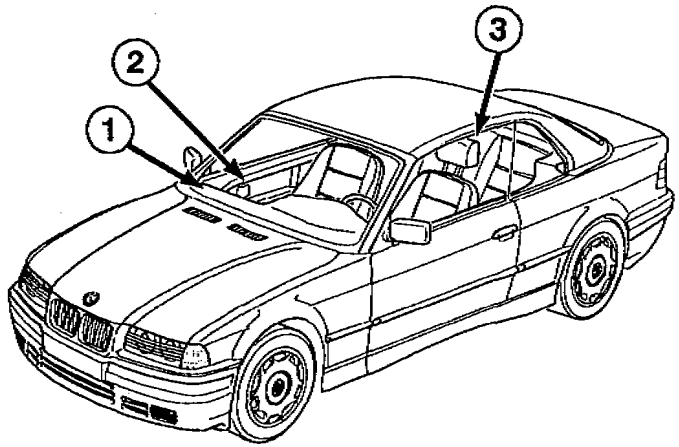

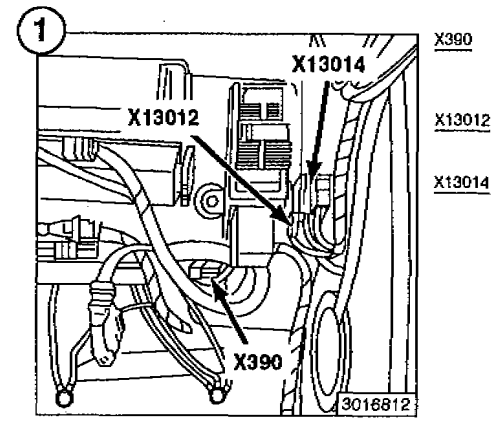

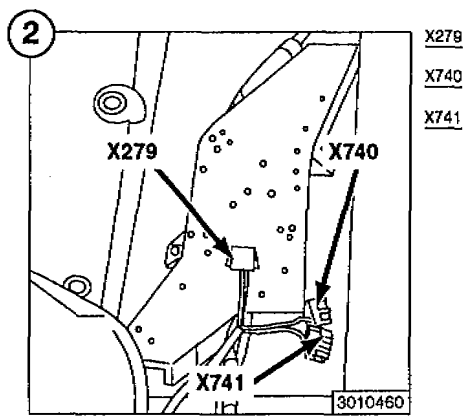

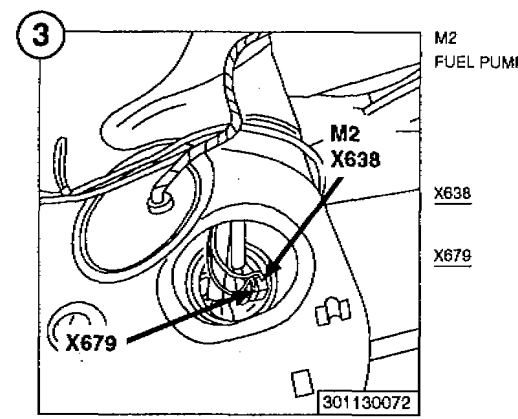

COMPONENT LOCATION VIEWS

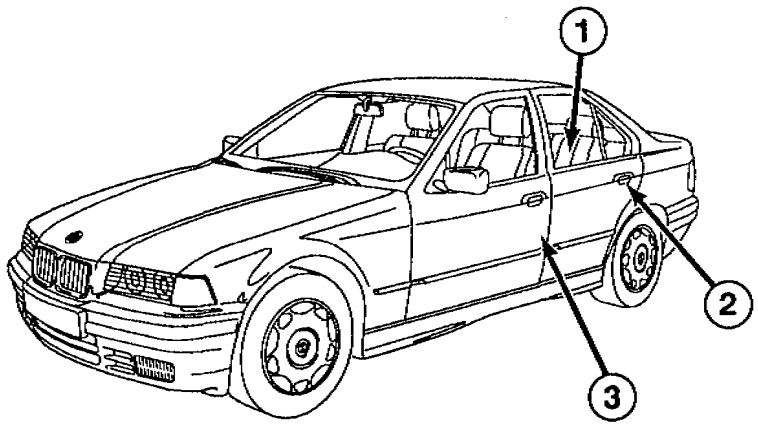

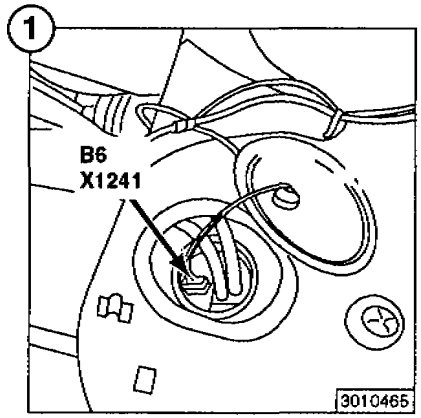

B6
FUEL LEVEL
SENSOR

X1241

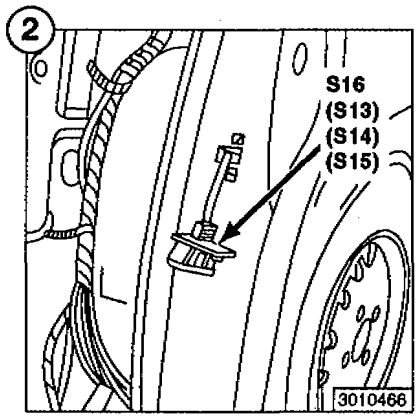

S13
PASSENGER'S
DOOR JAMB
SWITCH

S16
LEFT REAR
DOOR JAMB
SWITCH

S14
DRIVER'S
DOOR JAMB
SWITCH

S15
REAR RIGHT
DOOR JAMB
SWITCH

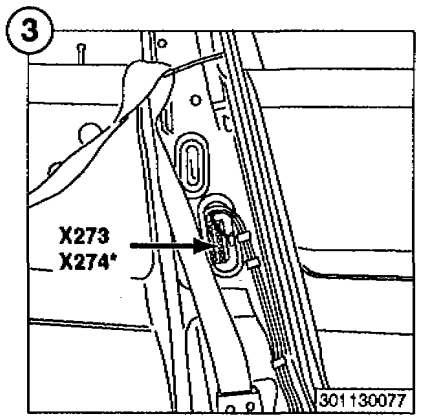

X273

X274

* RH SIMILAR

COMPONENT LOCATION VIEWS

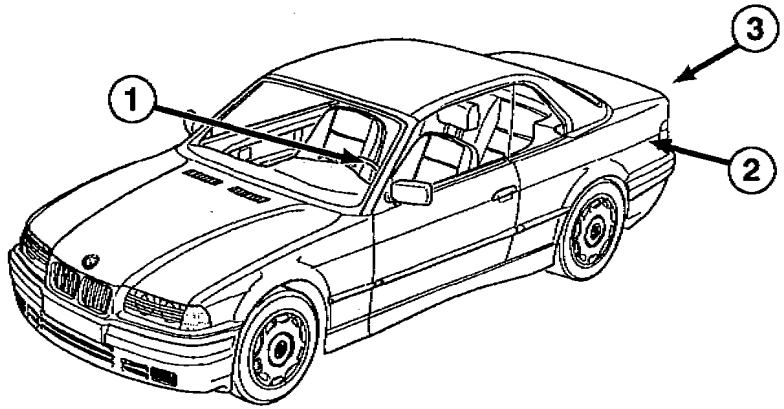

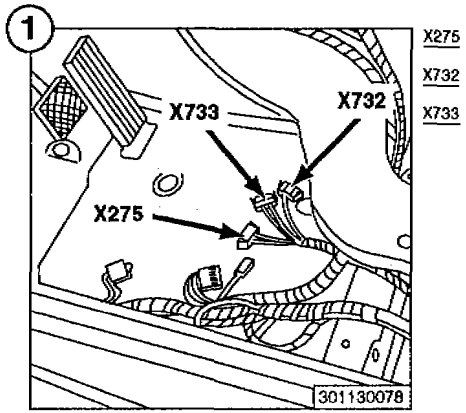

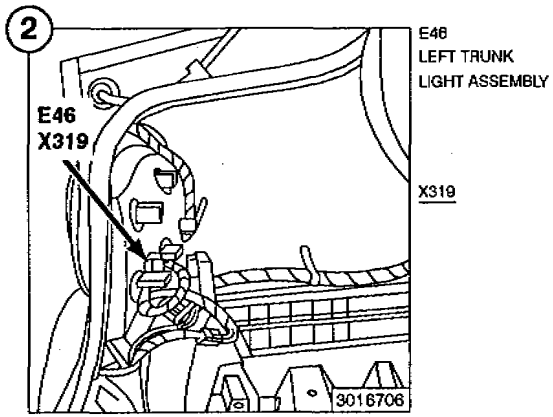

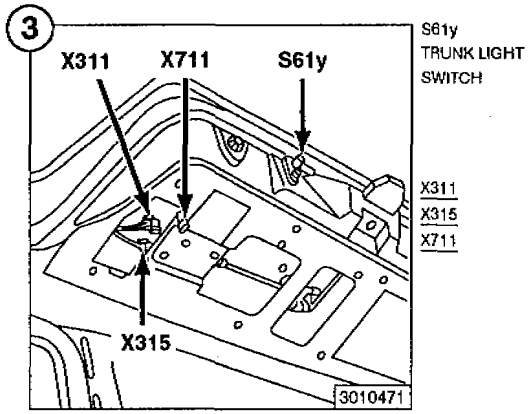

COMPONENT LOCATION VIEWS

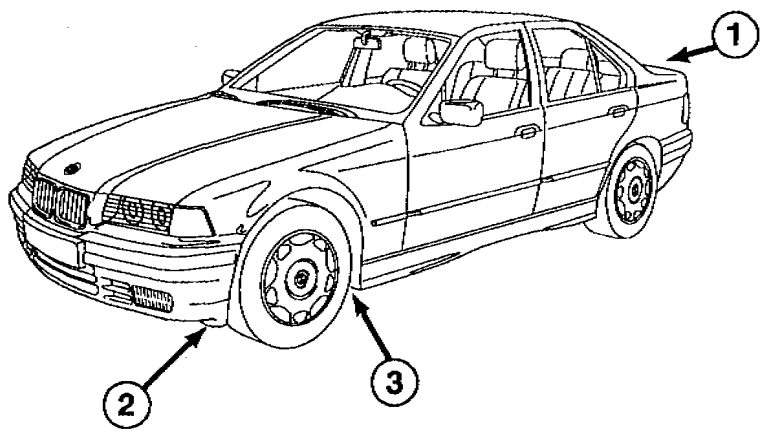

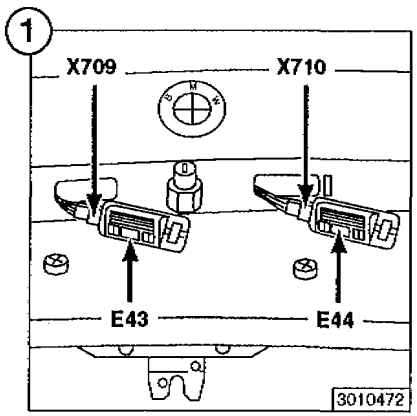

E43
LEFT
LICENSE PLATE
LIGHT

E44
RIGHT
LICENSE PLATE
LIGHT

X709
X710

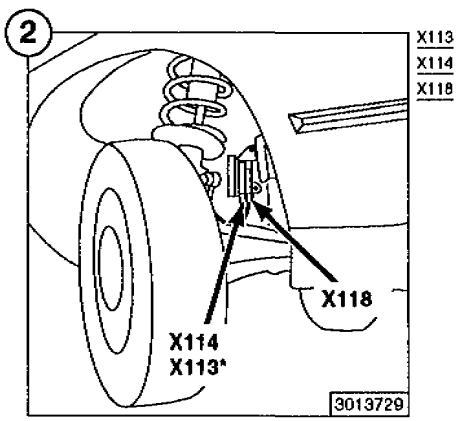

X113
X114
X118

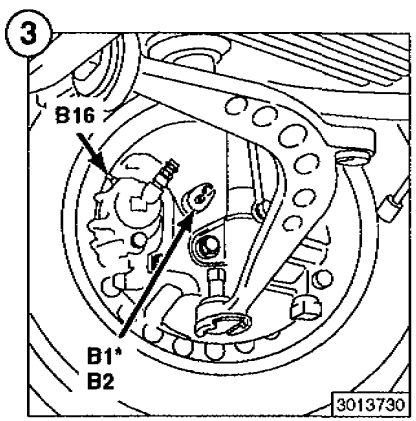

B1
RIGHT FRONT
SPEED SENSOR
- ABS

B2
LEFT FRONT
SPEED SENSOR
- ABS

B16
LEFT FRONT
BRAKE PAD
SENSOR

* RH SIMILAR

COMPONENT LOCATION VIEWS

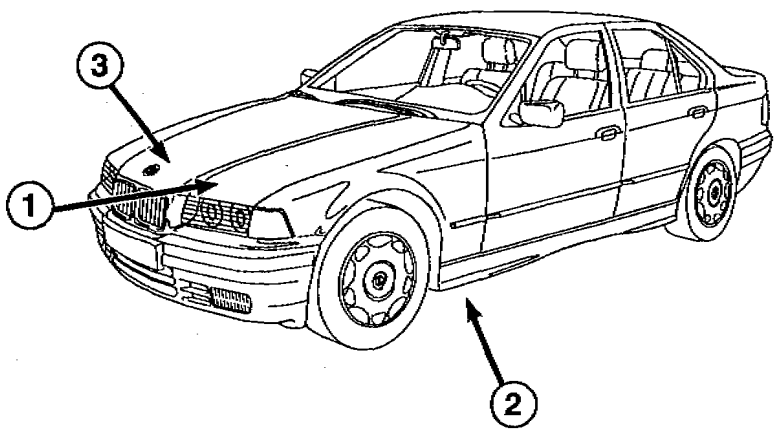

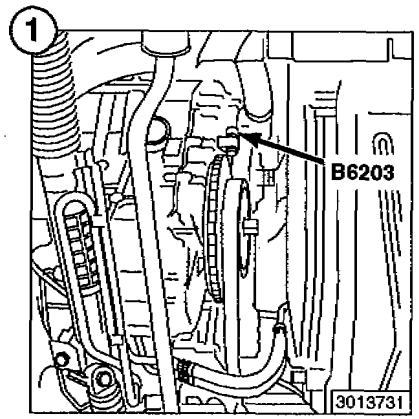

B6203
CRANKSHAFT
POSITION/RPM
SENSOR

325

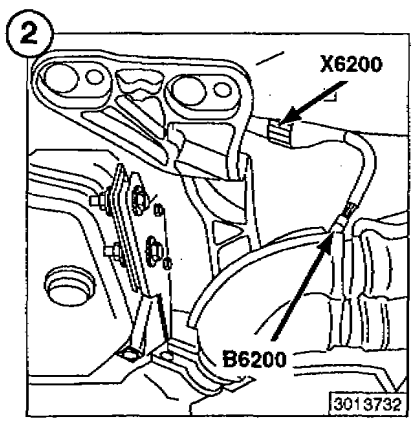

B6200
HEATED
OXYGEN SENSOR

X6200

325

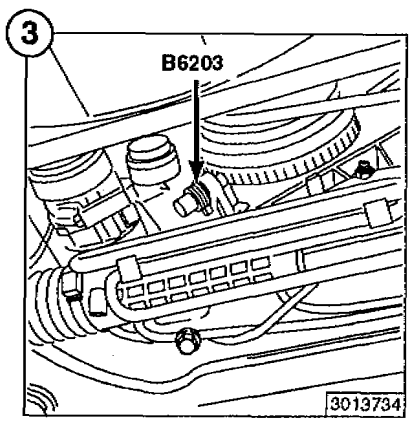

B6203
CRANKSHAFT
POSITION/RPM
SENSOR

318

COMPONENT LOCATION VIEWS

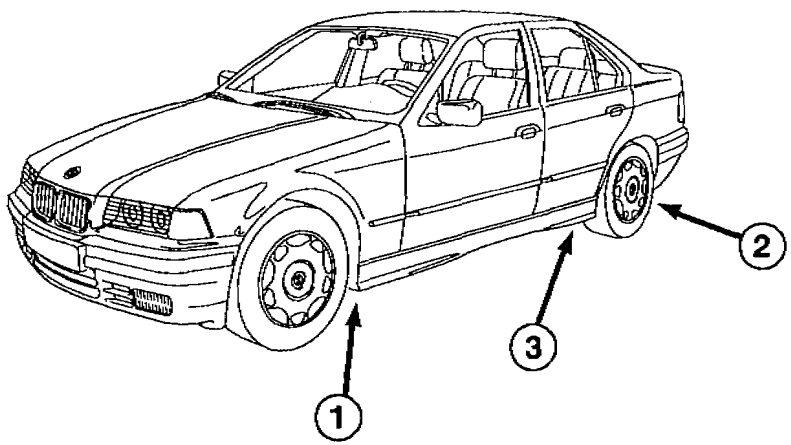

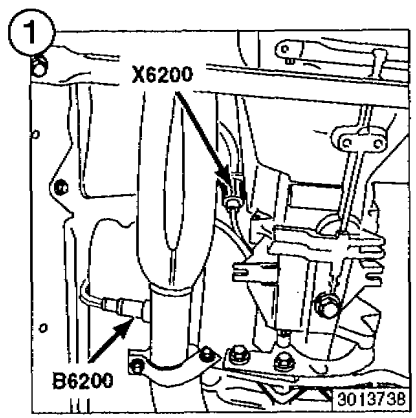

B6200
HEATED
OXYGEN SENSOR

X6200

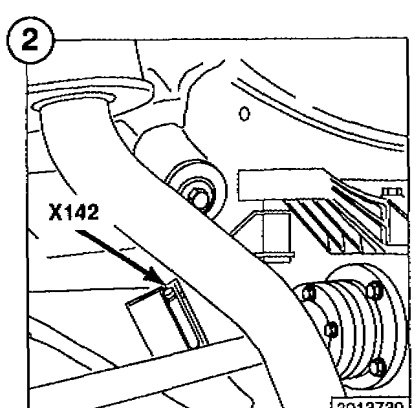

X142

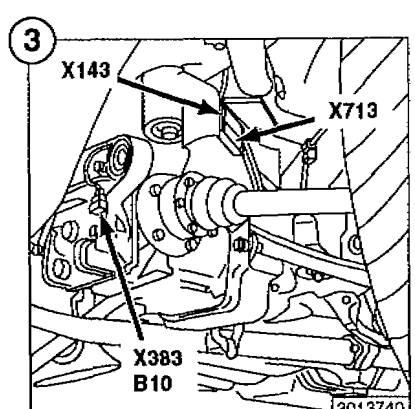

B10
VEHICLE
SPEED SENSOR

X143
X383
X713

SPLICE LOCATION VIEWS

SPLICE LOCATION INDEX

INDEX

SPLICE	HARNESS	PAGE NUMBER
X181-X276	FRONT	8000.0-01
X313-X314	REAR	8000.0-02
X428-X481	REAR	8000.0-02
X530-X595	FRONT	8000.0-01
X805	REAR	8000.0-02
X824-X830	RADIO	NOT SHOWN
X849-X851	DRIVER'S DOOR	NOT SHOWN
X876-X878	RADIO	NOT SHOWN
X906	IHKR	NOT SHOWN
X942	PASSENGER'S DOOR	NOT SHOWN
X1015-X1168	FRONT	8000.0-01
X1167	REAR	8000.0-02
X1169-X1192	FRONT	8000.0-01
X1212-X1218	REAR	8000.0-02
X1225-X1233	FRONT	8000.0-01
X1226-X1238	REAR	8000.0-02
X1382-X1383	RADIO	NOT SHOWN
X1387-X1396	REAR	8000.0-02
X6410	ENGINE	NOT SHOWN
X6411-X6420	M50 ENGINE	NOT SHOWN
X6458-X6463	ENGINE	NOT SHOWN
X6475	M50 ENGINE	NOT SHOWN
X6492-X6810	ENGINE	NOT SHOWN
X6820	M50 ENGINE	NOT SHOWN
X6821-X6822	ENGINE	NOT SHOWN
X6830-X6832	ENGINE	NOT SHOWN
X6835-X6855	ENGINE	NOT SHOWN
X6860	M50 ENGINE	NOT SHOWN
X6863-X6866	ENGINE	NOT SHOWN
X6900-X6906	ENGINE	NOT SHOWN
X7163	ENGINE	NOT SHOWN
X8004	ENGINE	NOT SHOWN
X8005	M42 ENGINE	NOT SHOWN
X8007-X8010	ENGINE	NOT SHOWN
X8015	ENGINE	NOT SHOWN
X8021	M50 ENGINE	NOT SHOWN
X8022	ENGINE	NOT SHOWN
X8025	M42 ENGINE	NOT SHOWN
X8042	ENGINE	NOT SHOWN
X8043-X8049	M42 ENGINE	NOT SHOWN
X8051	ENGINE	NOT SHOWN
X8056	ENGINE	NOT SHOWN
X8071-X8565	ENGINE	NOT SHOWN
X8576	M42 ENGINE	NOT SHOWN
X10007-X10100	FRONT	8000.0-01
X13002-X13011	REAR	8000.0-02
X13021-X13132	FRONT	8000.0-01
X18160-X18161	IHKR	NOT SHOWN
X18165	FRONT	8000.0-01
X18251	DRIVER'S DOOR	NOT SHOWN
X18252	PASSENGER'S DOOR	NOT SHOWN
X18253	DRIVER'S DOOR	NOT SHOWN
X18254-X18284	PASSENGER'S DOOR	NOT SHOWN
X19513-X19514	RADIO	NOT SHOWN

SPLICE LOCATION VIEWS

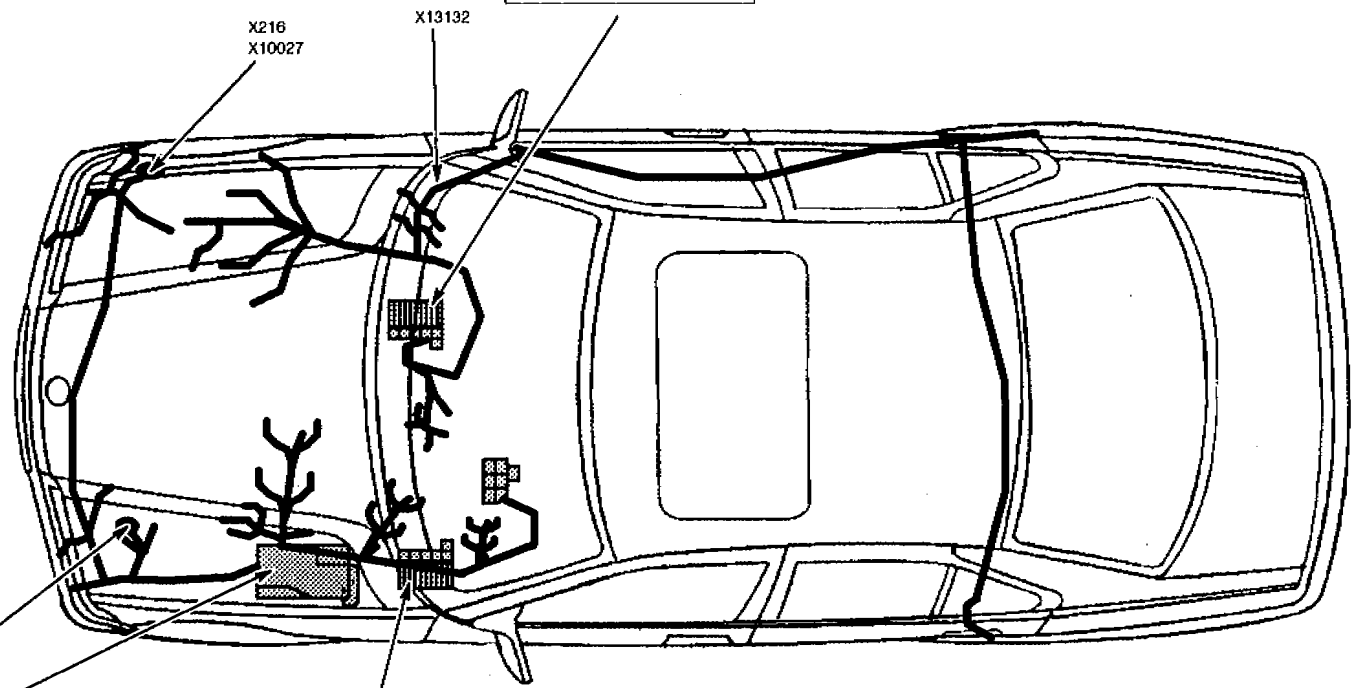

SPLICE PANEL	
X195 ●	X1164 ●
X216 ●	X10009 ●
X222 ●	X10064 ●
X557 ●	X13115 ●
X1163 ●	

SPLICE PANEL				
X184 ●	X245 ●	X1027 ●	X1152 ●	X10007 ●
X185 ●	X246 ●	X1028 ●	X1168 ●	X10020 ●
X186 ●	X276 ●	X1036 ●	X1172 ●	X10021 ●
X187 ●	X530 ●	X1068 ●	X1177 ●	X10022 ●
X203 ●	X595 ●	X1073 ●	X1186 ●	X10055 ●
X223 ●	X1015 ●	X1076 ●	X1192 ●	X10100 ●
X238 ●	X1022 ●	X1077 ●	X1233 ●	

SPLICE PANEL				
X181 ●	X213 ●	X1067 ●	X1182 ●	X10061 ●
X182 ●	X228 ●	X1069 ●	X1225 ●	X13021 ●
X183 ●	X1019 ●	X1079 ●	X10008 ●	X18165 ●
X188 ●	X1029 ●	X1080 ●	X10011 ●	
X191 ●	X1047 ●	X1085 ●	X10024 ●	
X196 ●	X1065 ●	X1169 ●	X10028 ●	
X197 ●	X1066 ●	X1179 ●	X10029 ●	

SPLICE LOCATION VIEWS

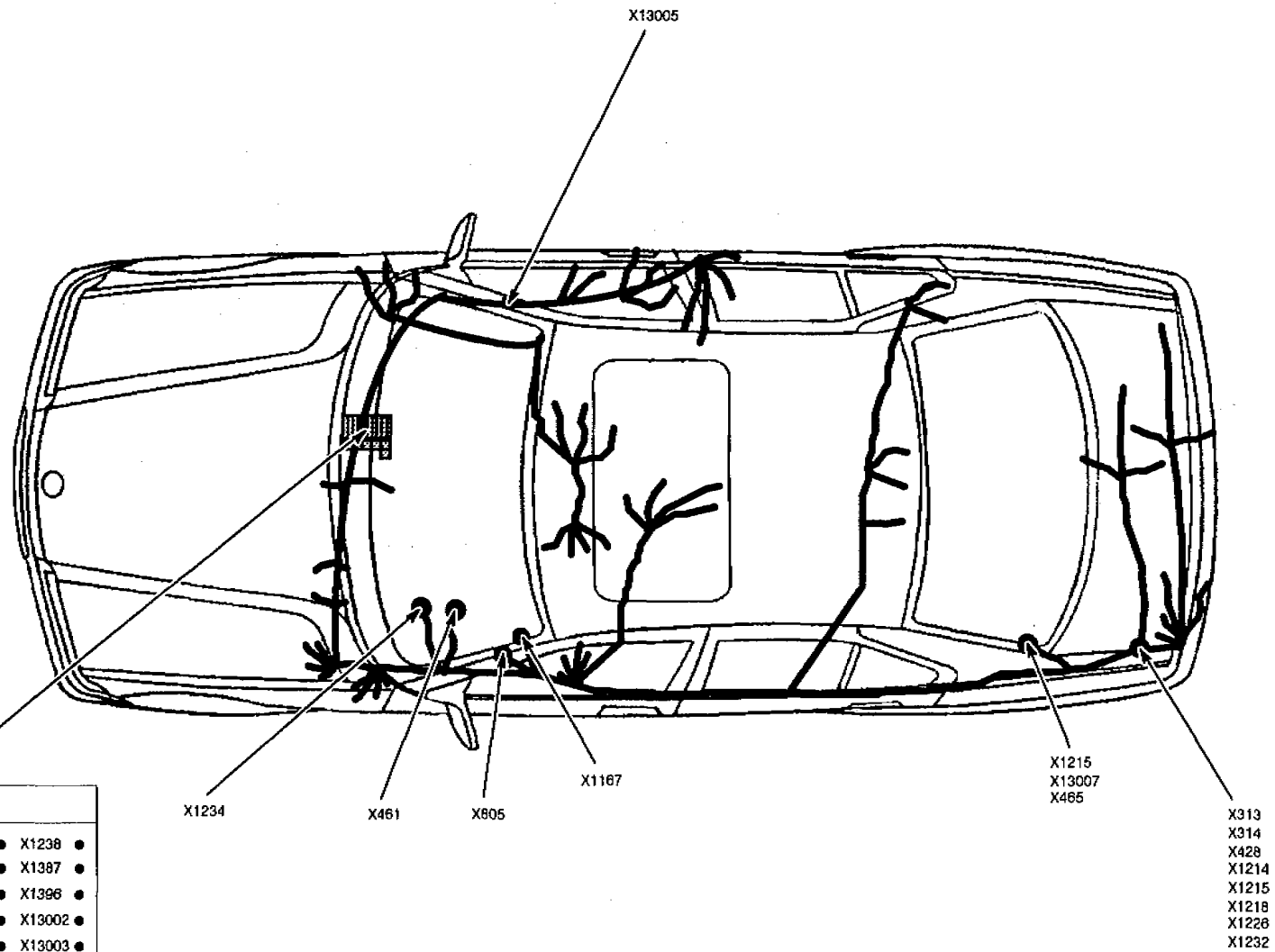

SPLICE PANEL			
X441 ●	X450 ●	X462 ●	X1238 ●
X442 ●	X453 ●	X475 ●	X1387 ●
X443 ●	X454 ●	X481 ●	X1396 ●
X444 ●	X455 ●	X1212 ●	X13002 ●
X445 ●	X456 ●	X1235 ●	X13003 ●
X449 ●	X460 ●	X1236 ●	X13010 ●
		X1237 ●	X13011 ●

CONNECTOR VIEWS

FIG. 1

B550001.00

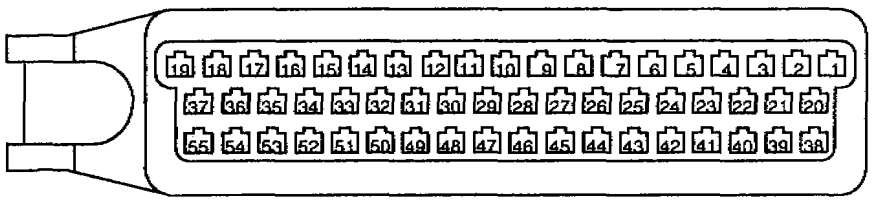

FIG. 2

B260005.00

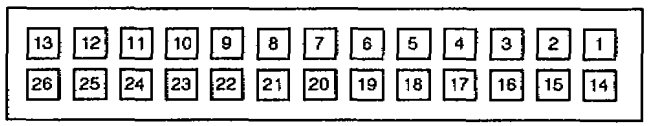

FIG. 3

B150003.00

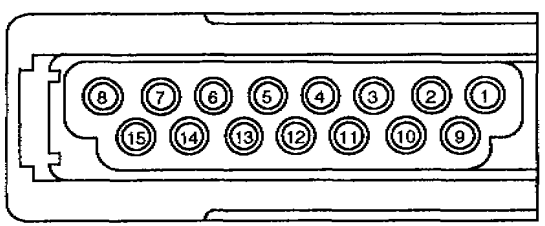

FIG. 4

B300001.00

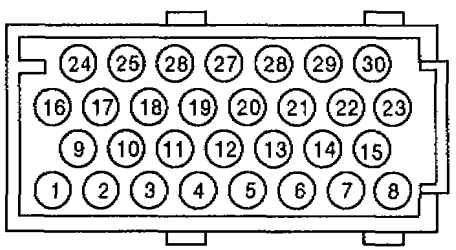

CONNECTOR VIEWS

FIG. 1

B030024

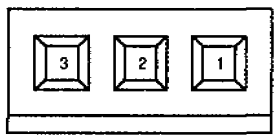

FIG. 2

B120003.00

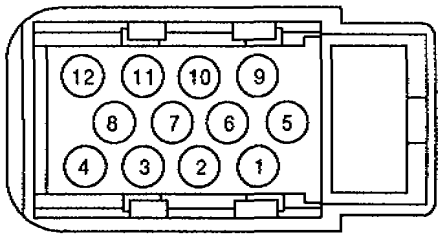

FIG. 3

B120001.00

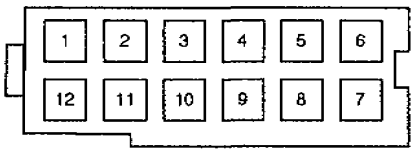

FIG. 4

B050005.00

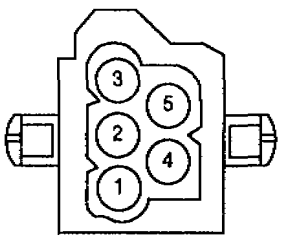

FIG. 5

B180000.00

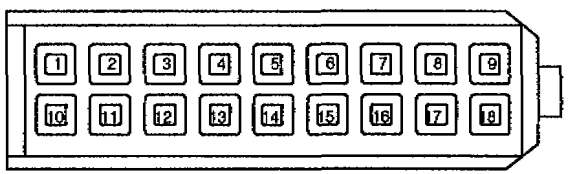

FIG. 6

B040003.00

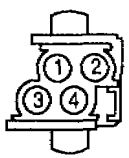

CONNECTOR VIEWS

FIG. 1

B080002.00

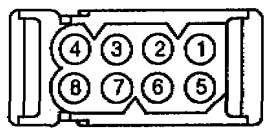

FIG. 2

B120015

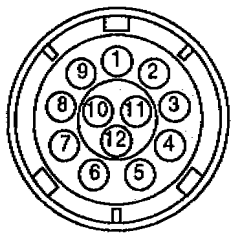

FIG. 3

B030001.00

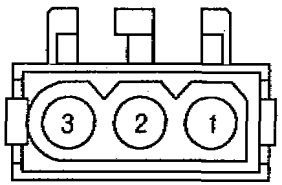

FIG. 4

B080003.00

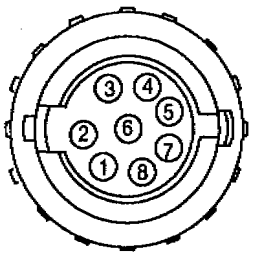

FIG. 5

B300003.00

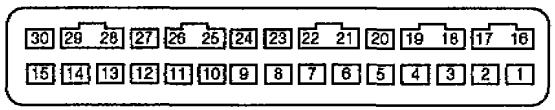

FIG. 6

B170001.00

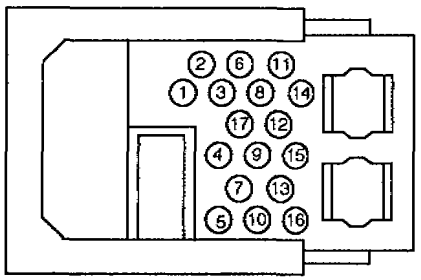

CONNECTOR VIEWS

FIG. 1

B120002.02

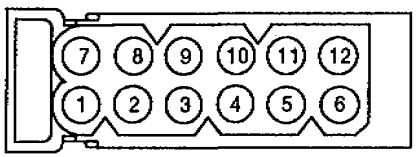

FIG. 2

B030004.00

FIG. 3

B100008.00

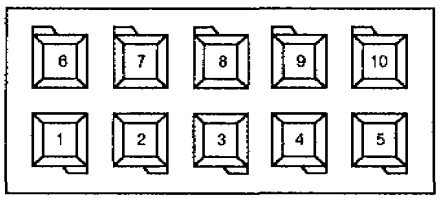

FIG. 4

B030005.00

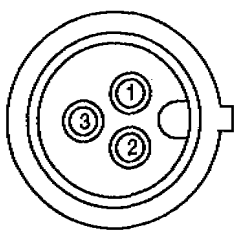

FIG. 5

B120004.01

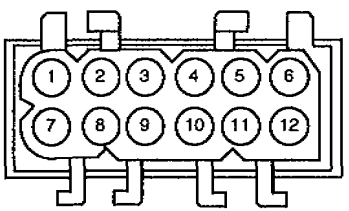

FIG. 6

B040002.00

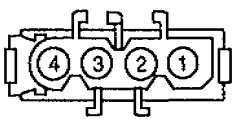

CONNECTOR VIEWS

FIG. 1

B060006.00

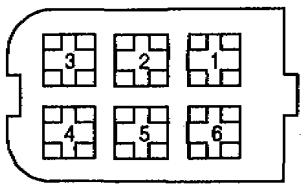

FIG. 2

B050003.00

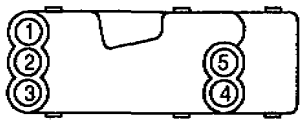

FIG. 3

B040004.00

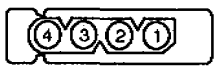

FIG. 4

B040018

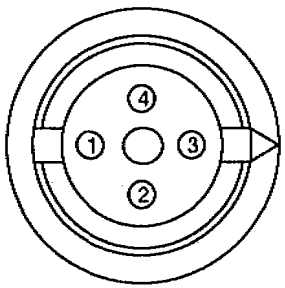

FIG. 5

B080001.00

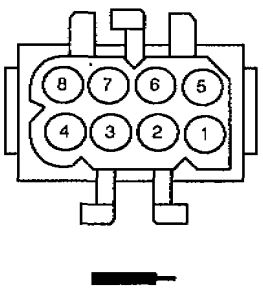

FIG. 6

B090002.00

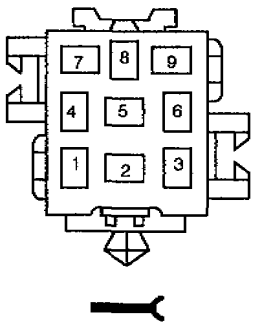

CONNECTOR VIEWS

FIG. 1

B210002.00

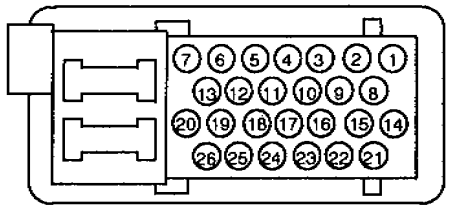

FIG. 2

B060001.02

FIG. 3

B070005.01

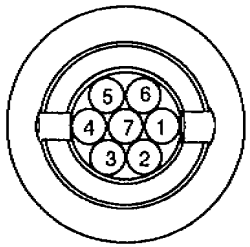

FIG. 4

B200003.00

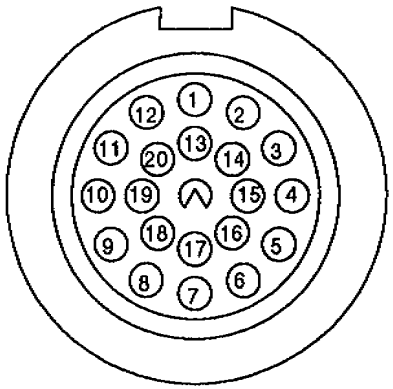

FIG. 5

B060010.01

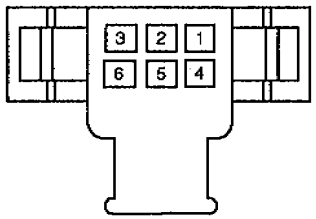

FIG. 6

B030003.02

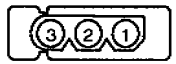

CONNECTOR VIEWS

FIG. 1

B060008.00

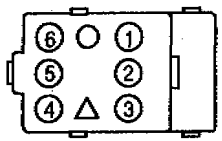

FIG. 2

B250001.00

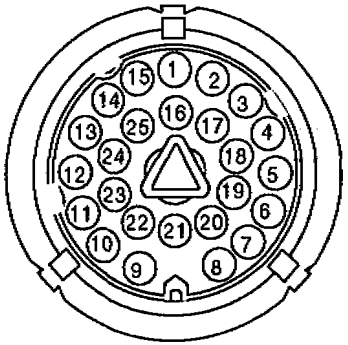

FIG. 3

B250001.01

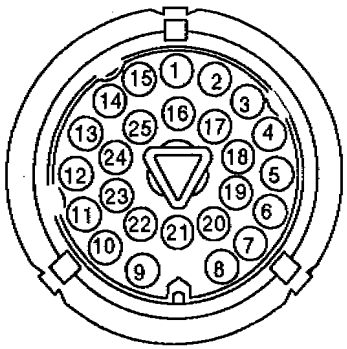

FIG. 4

B060019.02

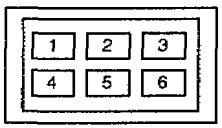

CONNECTOR VIEWS

FIG. 1

B100013.00

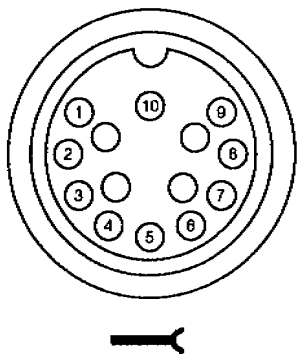

FIG. 2

B250003.00

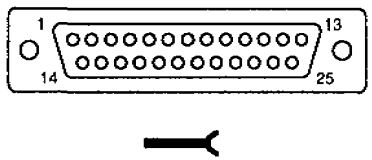

FIG. 3

B060037.00

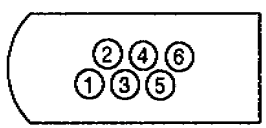

FIG. 4

B060038.00

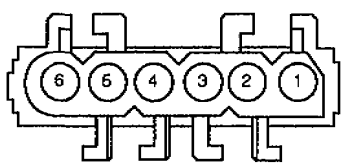

CONNECTOR VIEWS

FIG. 1

B880001.00

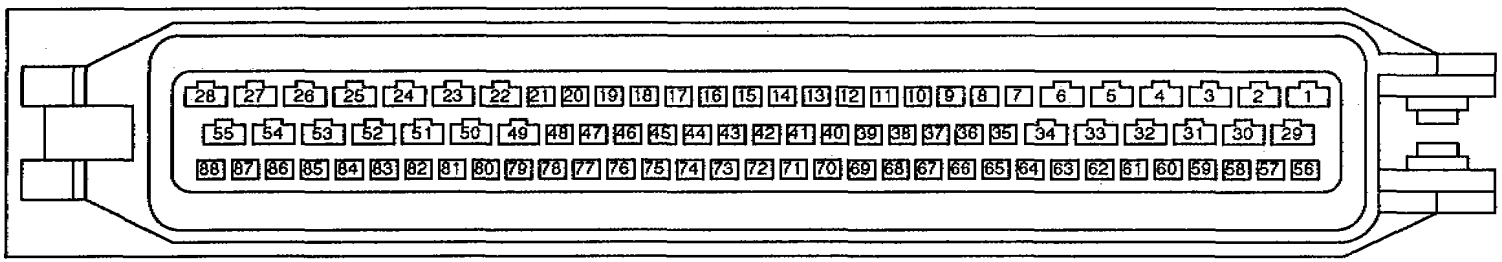

FIG. 2

B030006.00

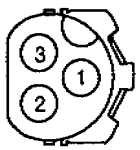

FIG. 3

B050002.00

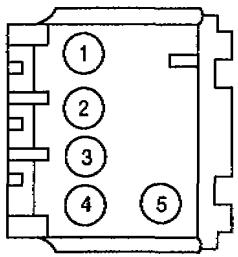

CONNECTOR VIEWS

FIG. 1

B120004.05

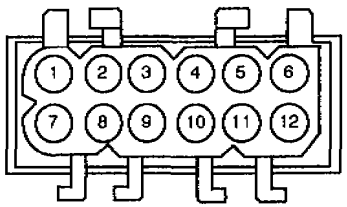

FIG. 2

B060012.00

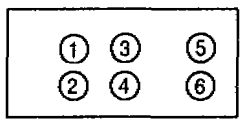

FIG. 3

B040023.00

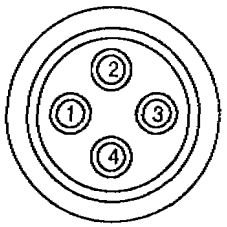

FIG. 4

B030038.00

FIG. 5

B030015.12

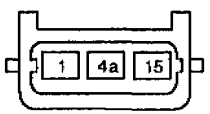

FIG. 6

B040020.00

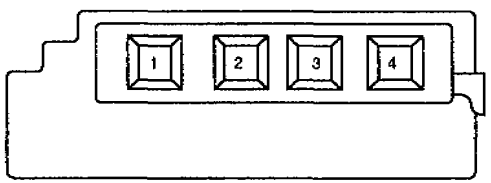

CONNECTOR VIEWS

FIG. 1

B090006.01

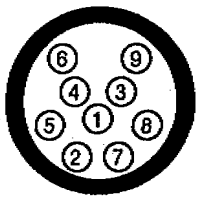

FIG. 2

B030025.00

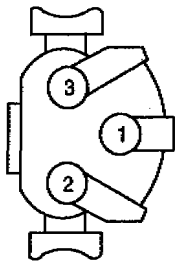

FIG. 3

B060037.01

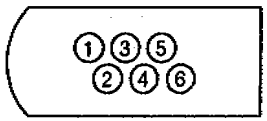

FIG. 4

B060036.00

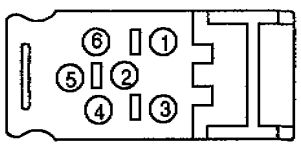

FIG. 5

B030001.00

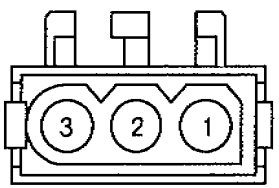

FIG. 6
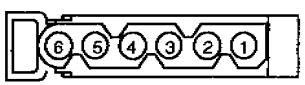
B060001.00