Quick index

- If a service reminder indicator or warning buzzer comes on 55
- If your vehicle will not start 105
- If your engine stalls while driving 108
- If your vehicle overheats 108
- If you have a flat tire 109
- If your vehicle needs to be towed 116
- Tips for driving during break-in period 89
- How to start the engine 99
- General maintenance 126
- Complete index 165

Gas station information

Fuel type:

UNLEADED gasoline, Research Octane Number 91 (Octane Rating 87) or higher

See page 89 for detailed information.

Fuel tank capacity:

45 L (11.9 gal., 9.9 Imp. gal.)

Engine oil:

API SH, "Energy-Conserving II" multigrade engine oil or ILSAC multigrade engine oil is recommended.

Use SAE 10W-30 if normal temperatures are above -18°C (0°F).

See page 138 for detailed information.

Tire information: See pages 141 through 145.

Tire pressure: See page 160.

Publication No. OM16497U
Part No. 01999-16497
Printed in Japan 08-9811-03 I

ターセル(北米U)

Part 1
OPERATION OF INSTRUMENTS AND CONTROLS—

Chapter 1-1
Overview of instruments and controls

- Instrument panel overview
- Instrument cluster overview
- Indicator symbols on the instrument panel

Instrument panel overview

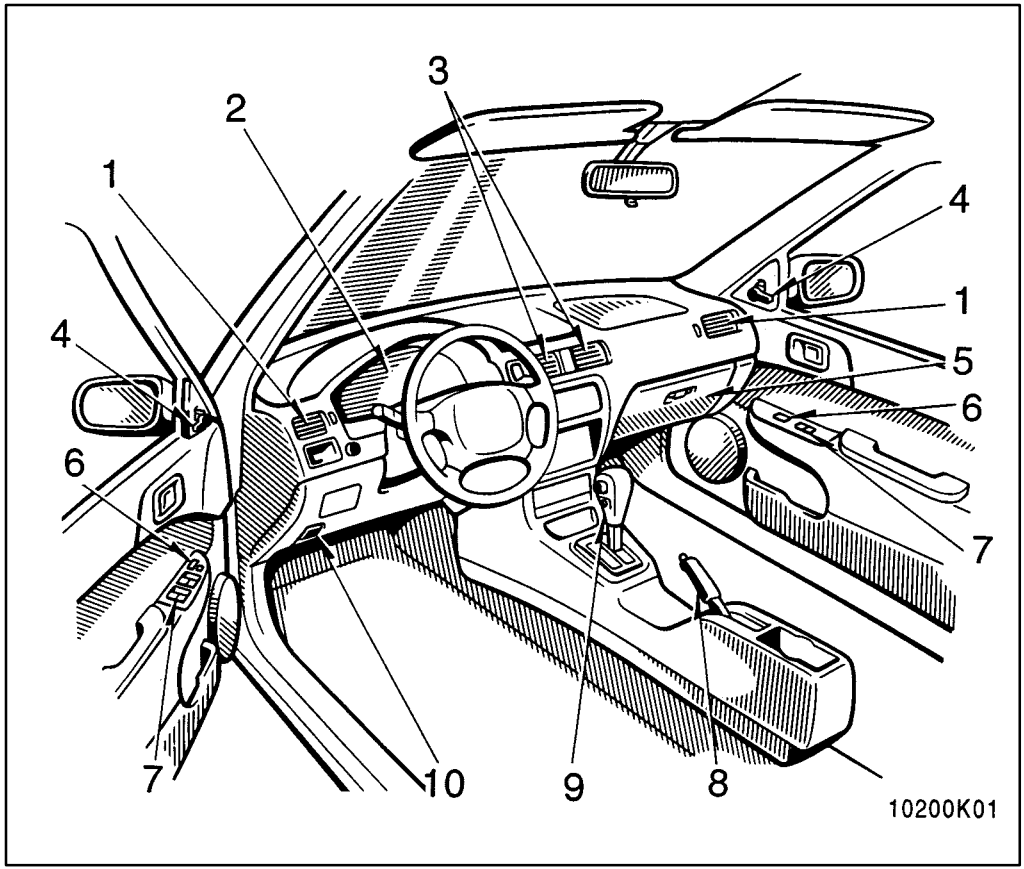

1. Side vent
2. Instrument cluster
3. Center vents
4. Rear view mirror remote control lever
5. Glovebox
6. Power door lock switch
7. Power window switches
8. Parking brake lever
9. Automatic transmission selector lever or manual transmission gear shift lever
10. Hood lock release lever

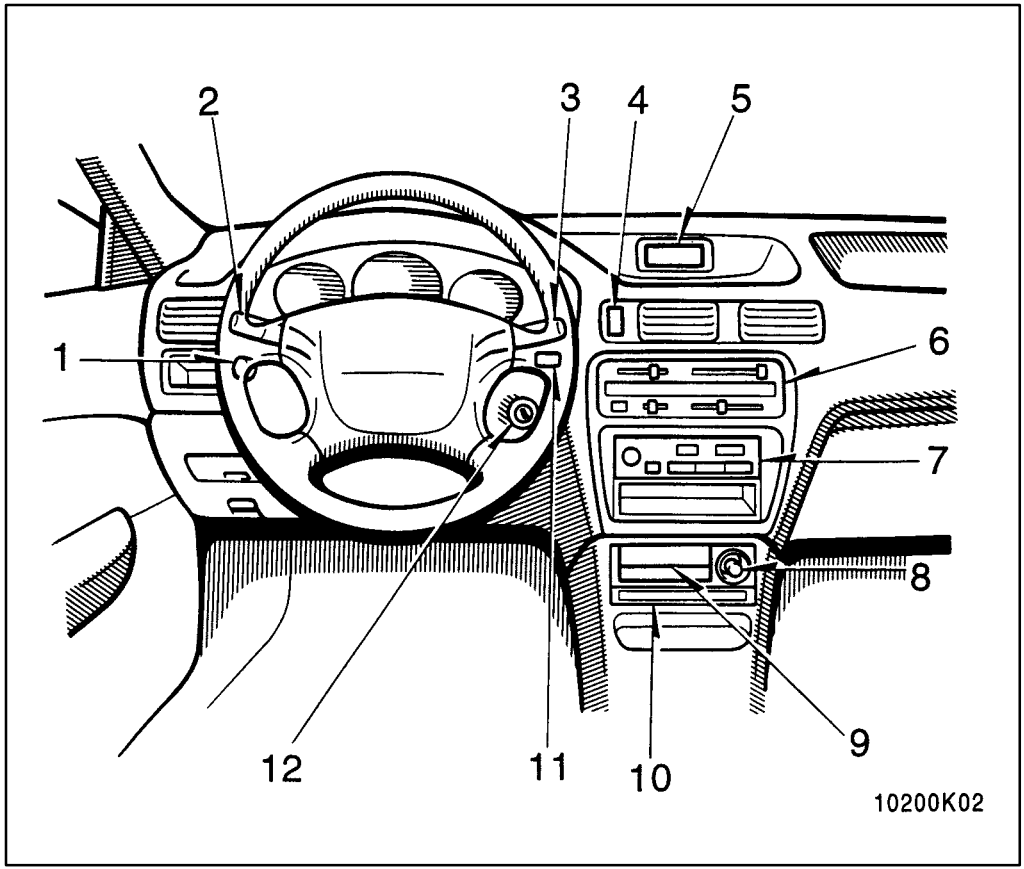

1. Instrument panel light control knob
2. Headlight and turn signal switch
3. Wiper and washer switches
4. Emergency flasher switch
5. Clock
6. Air conditioning controls
7. Car audio
8. Cigarette lighter
9. Ashtray
10. Cup holder
11. Rear window defogger switch
12. Ignition switch

Instrument cluster overview

▶With tachometer

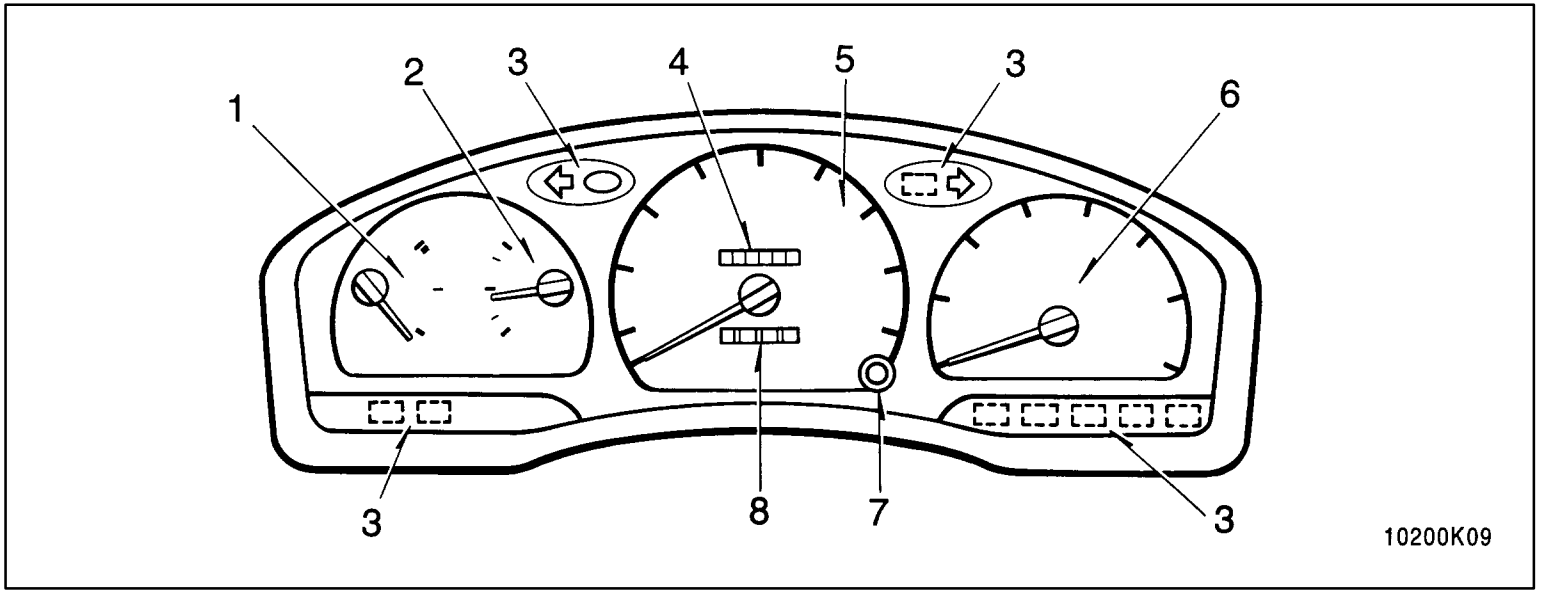

1. Engine coolant temperature gauge
2. Fuel gauge
3. Service reminder indicators or indicator lights
4. Odometer
5. Speedometer
6. Tachometer
7. Trip meter reset knob
8. Trip meter

▶**Without tachometer**

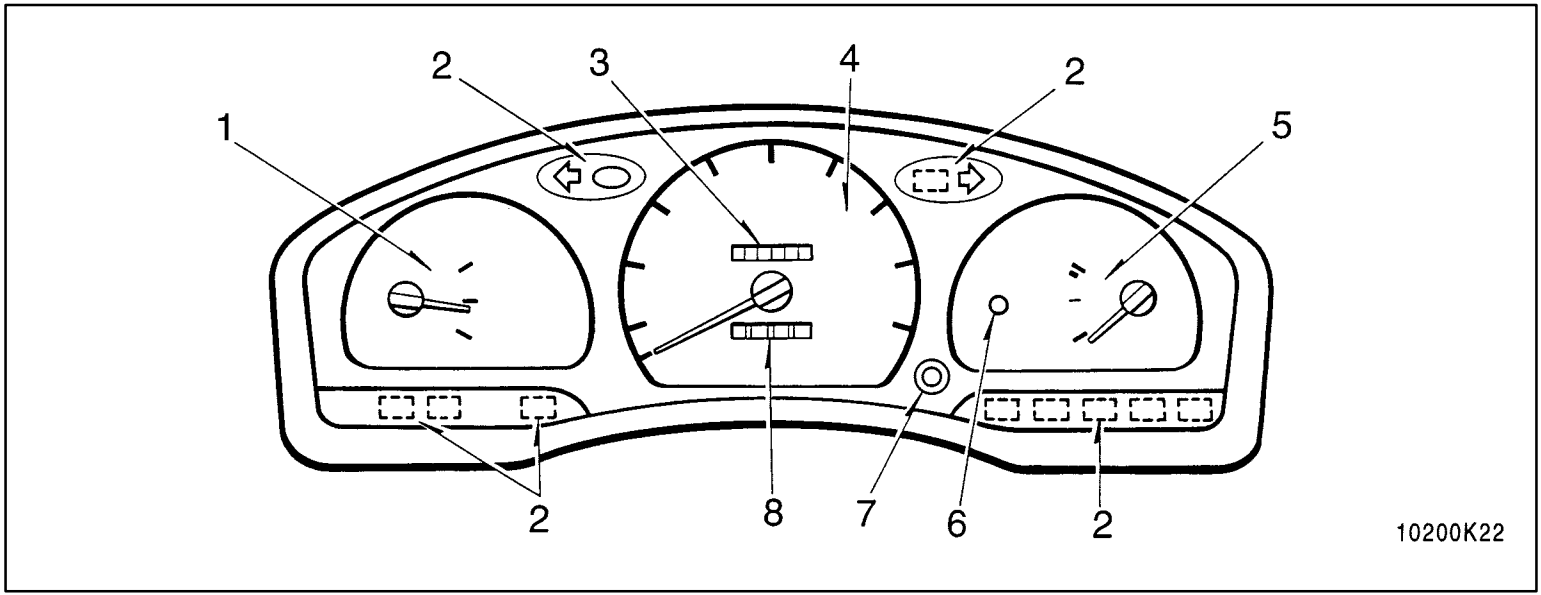

1. Fuel gauge
2. Service reminder indicators or indicator lights
3. Odometer
4. Speedometer
5. Engine coolant temperature gauge
6. Theft deterrent system indicator light
7. Trip meter reset knob
8. Trip meter

Indicator symbols on the instrument panel

BRAKE (type A) (type B)	Brake system warning light*
	Seat belt reminder light*
	Discharge warning light*
	Low oil pressure warning light*
CHECK	Malfunction indicator lamp*
ABS (type A) (ABS) (type B)	Anti-lock brake system warning light*

	Open door warning light*
	SRS airbag warning light*
	Turn signal indicator lights
	Headlight high beam indicator light
O/D OFF	Overdrive-of f indicator light

The indicators marked with * are service reminder indicators. For details, see “Service reminder indicators and warning buzzer” in Chapter 1-5.

Part 1

OPERATION OF INSTRUMENTS AND CONTROLS—

Chapter 1-2

Keys and Doors

- Keys
- Side doors
- Power windows
- Trunk lid
- Hood
- Theft deterrent system
- Fuel tank cap

Keys

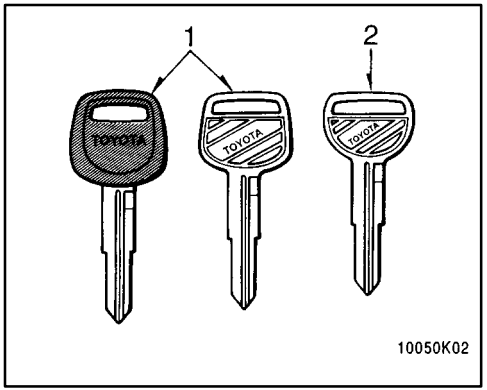

Type A

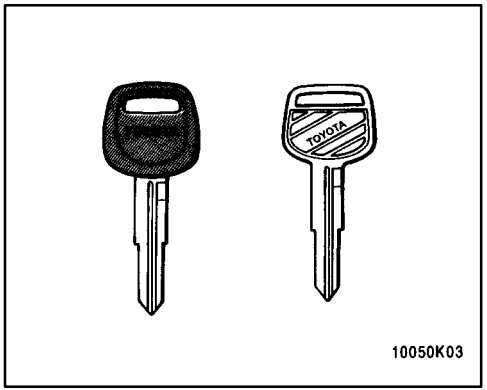

Type B

KEY PLATE

Type A—

Your vehicle is supplied with two kinds of key.

1. Master key—This key works in every lock.
2. Subkey—This key will not work in the trunk.

To protect things locked in the trunk when you have your vehicle parked, leave the subkey with the attendant.

Since the doors and trunk lid can be locked without a key, you should always carry a spare master key in case you accidentally lock your keys inside the vehicle.

Type B—

This key works in every lock.

Since the doors and trunk lid can be locked without a key, you should always carry a spare key in case you accidentally lock your key inside the vehicle.

Side doors

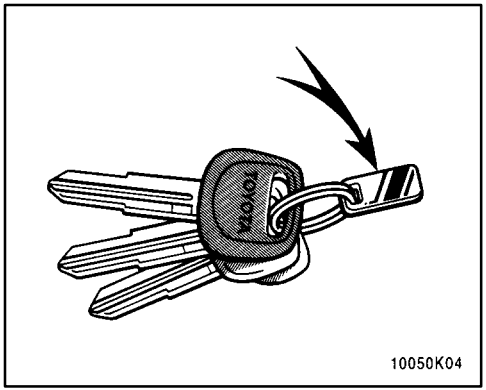

KEY NUMBER PLATE

Your key number is shown on the plate. Keep the plate in a safe place such as your wallet, not in the vehicle.

If you should lose your keys or if you need additional keys, duplicates can be made by a Toyota dealer using the key number.

You should also put a copy of the key number with your important papers.

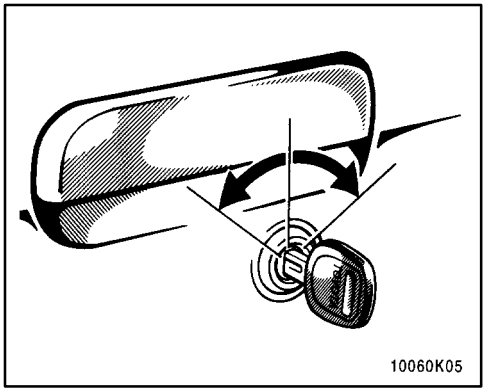

LOCKING AND UNLOCKING WITH KEY

Insert the key into the keyhole and turn it.

To lock: Turn the key forward.

To unlock: Turn the key backward.

Vehicles with power door lock system—All the doors lock and unlock simultaneously with either front door. In the driver's door lock, turning the key once will unlock the driver's door and twice in succession will unlock all the doors simultaneously.

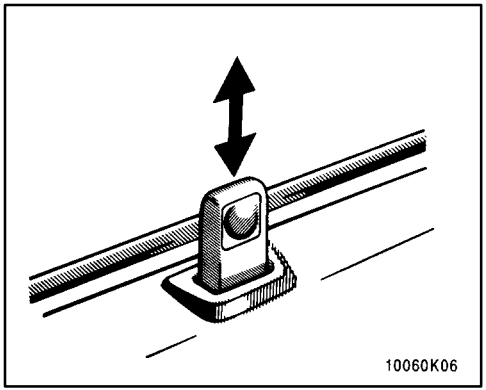

LOCKING AND UNLOCKING WITH INSIDE LOCK BUTTON

Move the lock button.

To lock: Push the button downward.

To unlock: Pull the button upward.

Closing the door with the lock button pushed in will also lock the door. Be careful not to lock your keys in the vehicle.

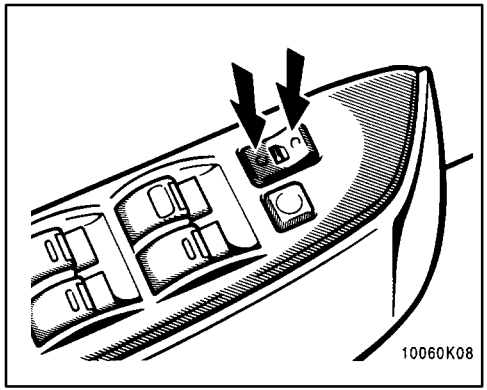

Driver's side

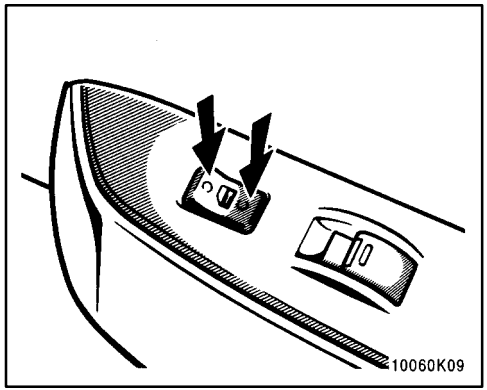

Passenger's side

LOCKING AND UNLOCKING WITH POWER DOOR LOCK SWITCH

Push the switch.

To lock: Push the switch on the front side.

To unlock: Push the switch on the rear side.

All the doors lock or unlock simultaneously.

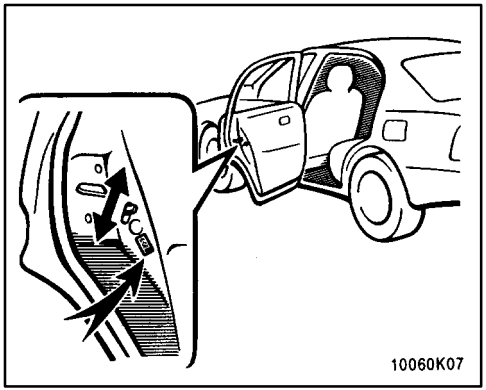

REAR DOOR CHILD-PROTECTORS

Move the lock lever to the "LOCK" position as shown on the label.

This feature allows you to lock a rear door so it can be opened from the outside only, not from inside. We recommend using this feature whenever small children are in the vehicle.

CAUTION

Before driving, be sure that the doors are closed and locked, especially when small children are in the vehicle. Along with the proper use of seat belts, locking the doors helps prevent the driver and passengers from being thrown out from the vehicle during an accident. It also helps prevent the doors from being opened unintentionally.

Power windows

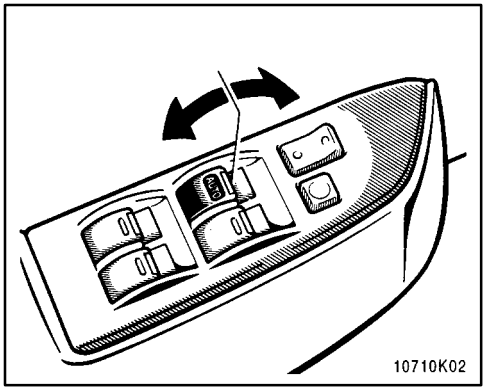

The windows can be operated with the switch on each door.

The ignition key must be in the “ON” position.

OPERATING THE DRIVER’S WINDOW

Use the switch on the driver’s door.

Normal operation: The window moves as long as you hold the switch.

To open: Lightly push down the switch.

To close: Pull up the switch.

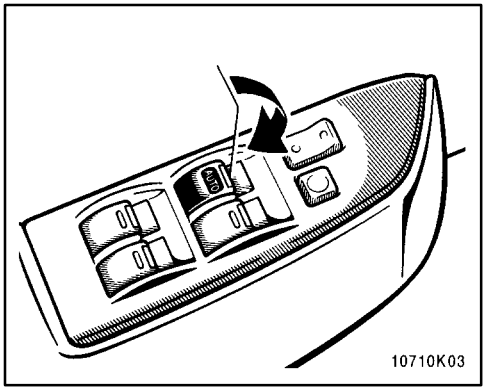

Automatic operation (to open only):

Push the switch completely down and then release it. The window will fully open. To stop the window partway, lightly pull the switch up and then release it.

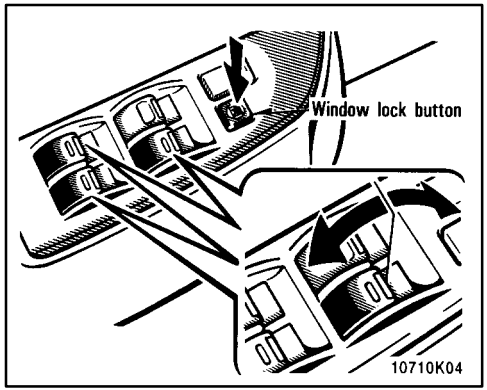

OPERATING THE PASSENGERS' WINDOWS

Use the switch on each passengers' door or the switches on the driver's door that control each passengers' window.

The window moves as long as you hold the switch.

To open: Push down the switch.

To close: Pull up the switch.

If you push in the window lock button on the driver's door, the passengers' windows cannot be operated.

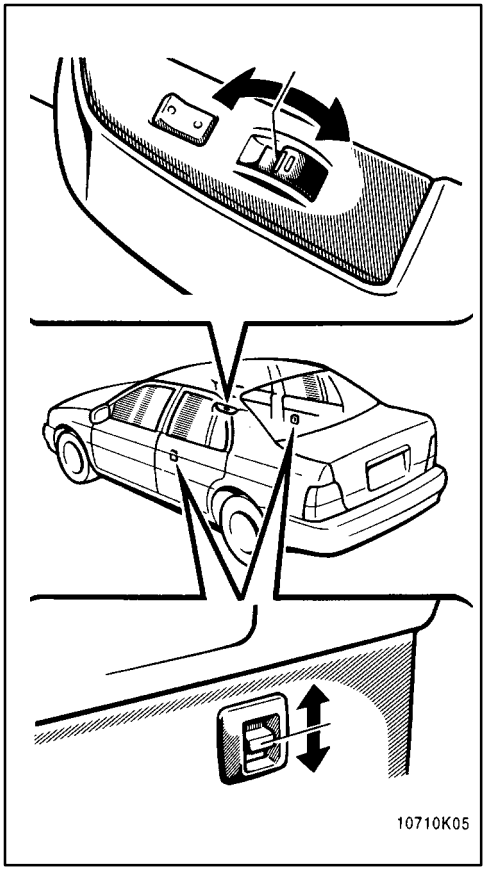

⚠ CAUTION

To avoid serious personal injury, you must do the following.

- **Always make sure the head, hands and other parts of the body of all occupants are kept completely inside the vehicle before you close the power windows. If someone's neck, head or hands gets caught in a closing window, it could result in a serious injury. When anyone closes the power windows, be sure that they operate the windows safely.**
- **When small children are in the vehicle, never let them use the power window switches without supervision. Use the window lock button to prevent them from making unexpected use of the switches.**
- **Never leave small children alone in the vehicle, especially with the ignition key still inserted. They could use the power window switches and get trapped in a window. Unattended children can become involved in serious accidents.**

Trunk lid—

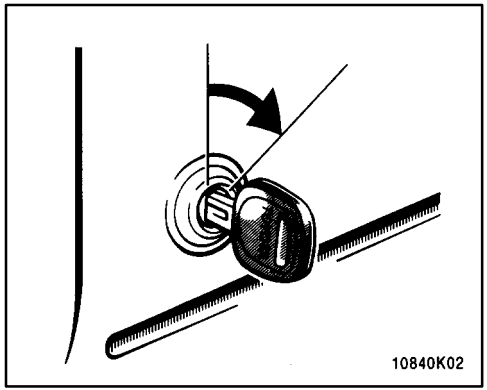

To open the trunk lid from the outside, insert the master key and turn it clockwise.

See “Luggage stowage precautions” in Part 2 for precautions to observe in loading luggage.

To close the trunk lid, lower it and press down on it. After closing the trunk lid, try pulling it up to make sure it is securely closed.

CAUTION

Keep the trunk lid closed while driving. This not only keeps the luggage from being thrown out but also prevents exhaust gases from entering the vehicle.

—Lock release lever

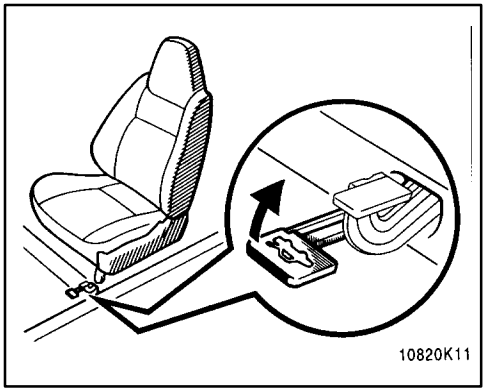

To open the trunk lid from the driver’s seat, pull up on the lock release lever.

—Luggage security system

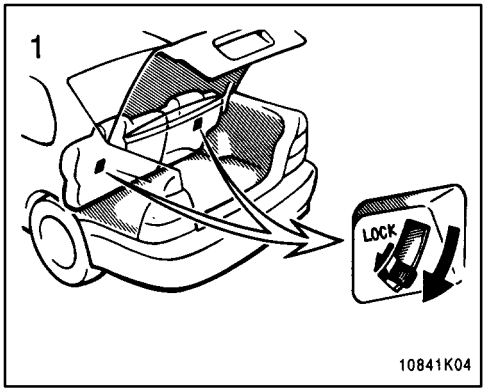

This system deactivates the lock release lever so that things locked in the trunk can be protected.

1. Push down the security lock levers to lock the rear seatbacks.

After locking the rear seatbacks, try folding them down to make sure they are securely locked—otherwise, someone could get into the trunk by folding down a rear seat.

Hood

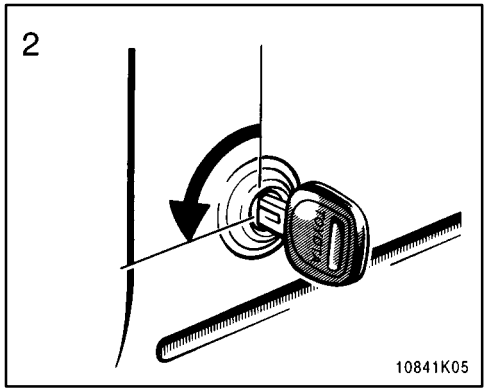

2. After closing the trunk lid, insert the master key and turn it counterclockwise to deactivate the lock release lever.

After closing the trunk lid, try pulling it up to make sure it is securely closed.

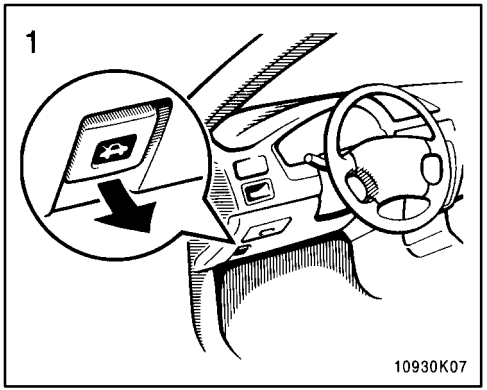

To open the hood, do the following.

1. Pull the hood lock release lever. The hood will spring up slightly.

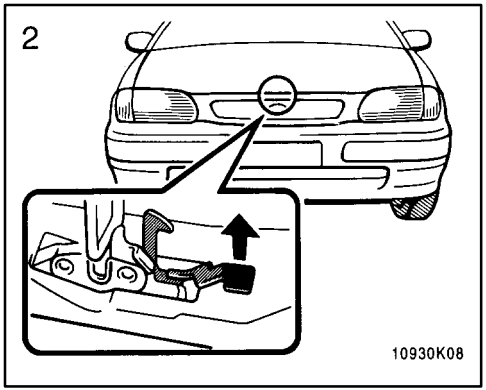

2. In front of the vehicle, pull up on the auxiliary catch lever and lift the hood.

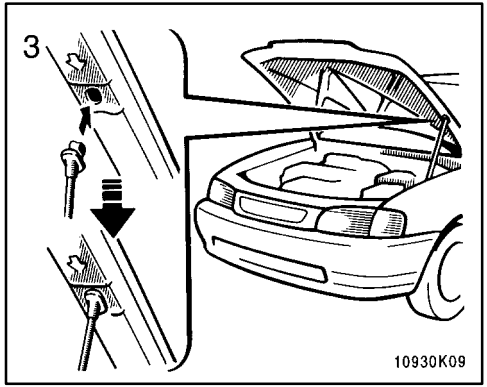

3. Hold the hood open by inserting the support rod into the slot.

Before closing the hood, check to see that you have not forgotten any tools, rags, etc. and return the support rod to its clip—this prevents rattles. Then lower the hood and make sure it locks into place. If necessary, press down gently on the front edge to lock it.

CAUTION

After inserting the support rod into the slot, make sure the rod supports the hood securely.

Theft deterrent system (for Puerto Rico)

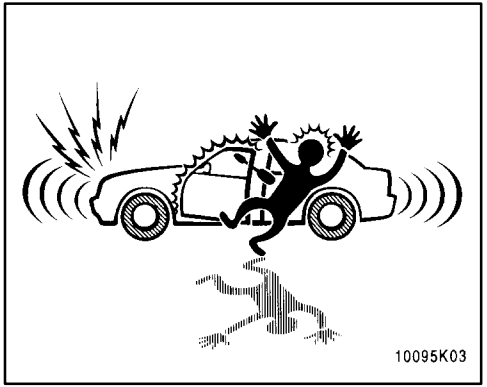

To deter the vehicle theft, the system is designed to give an alarm and keep the engine from being started if any of the doors, trunk or hood is forcibly unlocked or the battery terminal is disconnected and then reconnected when the vehicle is locked.

The alarm blows the horn intermittently and flashes the headlights, tail lights, and other exterior lights. The engine cannot be started because the starter circuit will be cut.

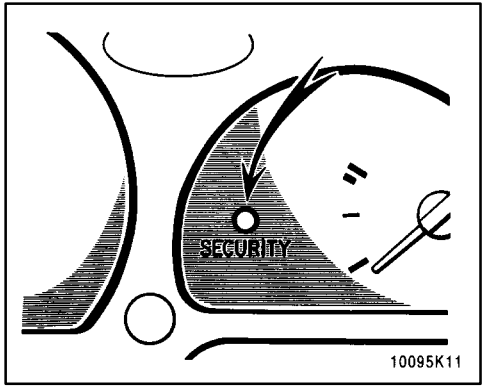

SETTING THE SYSTEM

1. Turn the ignition key to the “LOCK” position and remove it.
2. Have all passengers get out of the vehicle.
3. Close and lock all the side doors, trunk and hood.

The indicator light will come on when all the doors, trunk and hood are closed and locked.

As all the doors are locked, the system will give you a preparation time of 30 seconds before the setting, during which the doors, trunk and hood may be opened to prepare for the setting.

Be careful not to use the key when opening either front door. This will cancel the system.

4. After making sure the indicator light starts flashing, you may leave the vehicle.

The system will automatically be set after the preparation time passes. The indicator light will flash to show the system is set. If any of the doors, trunk or hood is open at that time, the setting is interrupted until it is closed and locked.

Never leave anyone in the vehicle when you set the system, because unlocking from the inside will activate the system.

WHEN THE SYSTEM IS SET

Activating the system

The system will give the alarm and cut the starter circuit under the following conditions:

- If any of the doors, trunk or hood is unlocked without using the key
- If the battery terminal is disconnected and then reconnected

After one minute, the alarm will automatically stop with the starter circuit cut kept on.

Reactivating the alarm

Once set, the system automatically resets the alarm each time all the doors, trunk and hood are closed after the alarm stops.

The alarm will be activated again under the following conditions:

- If any of the doors, trunk or hood is opened
- If the battery terminal is disconnected and then reconnected

Stopping the alarm

Turn the ignition key from the “LOCK” to “ACC” position. The alarm will be stopped with the starter circuit cut kept on. Stopping the alarm in this manner will keep the alarm from being reactivated when any of the doors, trunk or hood is opened.

Interrupting the setting

With the system set, the trunk can be opened with the key without activating or cancelling the system. While it is open, the doors and hood may be opened in addition. However, when the battery terminal is disconnected and then reconnected, the system is activated.

To resume the setting, close and lock all the doors, trunk and hood. The trunk must be closed with the key removed.

CANCELLING THE SYSTEM

Unlock either front door with the key. This cancels the system completely and the starter circuit cut will be cancelled at once.

INDICATOR LIGHT

The indicator light gives the following three indications.

FLASHING—The system is set. You need the key to open the doors, trunk and hood.

ON—The system will automatically be set when the time comes. The doors, trunk and hood may be opened without a key.

OFF—The system is inactive. You may open any door, trunk and hood.

TESTING THE SYSTEM

1. Open all the windows.
2. Set the system as described above. The front doors should be locked with the key. Be sure to wait until the indicator light starts flashing.
3. Unlock one of the doors from the inside. The system should activate the alarm.
4. Cancel the system by unlocking either front door with the key.
5. Repeat this operation for the other doors, trunk and hood. When testing on the hood, also check that the system is activated when the battery terminal is disconnected and then reconnected.

If the system does not work properly, have it checked by your Toyota dealer.

Fuel tank cap

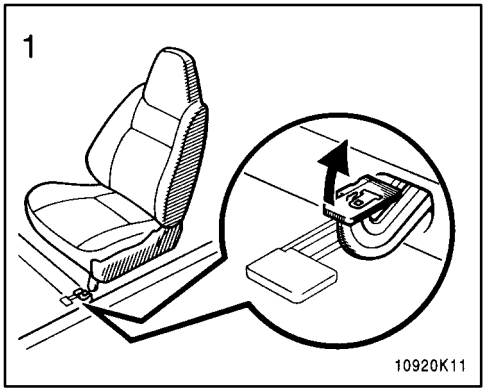

Lever type

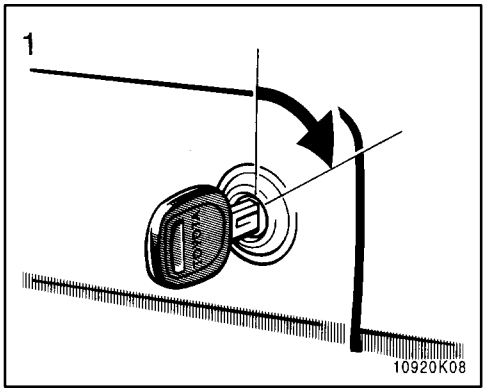

Key type

1. To open the fuel filler door, do this.

Lever type—Pull up the lever.

Key type—Turn the key clockwise in the fuel filler door.

CAUTION

- **Do not smoke, cause sparks or allow open flames when refuelling. The fumes are flammable.**
- **When opening the cap, do not remove the cap quickly. In hot weather, fuel under pressure could cause injury by spraying out of the filler neck if the cap is suddenly removed.**

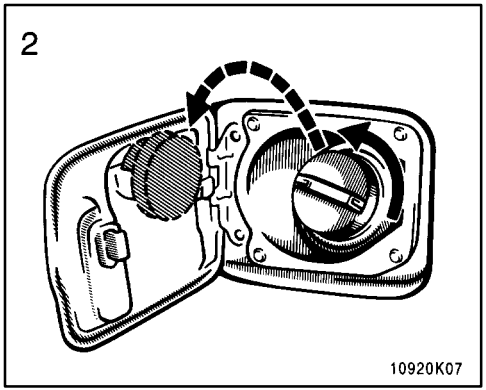

2. To remove the fuel tank cap, turn the cap slowly counterclockwise, then pause slightly before removing it. After removing the cap, hang it on the cap hanger.

It is not unusual to hear a slight swoosh when the cap is opened. When installing, turn the cap clockwise till you hear a click.

CAUTION

- **Make sure the cap is tightened securely to prevent fuel spillage in case of an accident.**
- **Use only a genuine Toyota fuel tank cap for replacement. It has a built-in check valve to reduce fuel tank vacuum.**

Part 1

OPERATION OF INSTRUMENTS AND CONTROLS—

Chapter 1-3

Seats, Seat belts and Mirrors

- Seats
- Front seats
- Fold-down rear seat
- Seat belts
- SRS airbags
- Child restraint
- Outside rear view mirrors
- Anti-glare inside rear view mirror

Seats

While the vehicle is being driven, all vehicle occupants should have the seatback upright, sit well back in the seat and properly wear the seat belts provided.

CAUTION

- **Do not drive with the vehicle occupants not properly seated, such as sitting on top of a folded-down seatback, or in the luggage compartment. Persons not properly seated and restrained by seat belts can be severely injured in the event of emergency braking or a collision.**
- **During driving, do not let passengers stand up or move around between seats. Balance can be unsteady and severe injuries can occur in the event of emergency braking or a collision.**

Front seats—
—Seat adjustment precautions

Adjust the driver's seat so that the foot pedals, steering wheel and instrument panel controls are within easy reach of the driver.

CAUTION

- **Adjustments should not be made while the vehicle is moving, as the seat may unexpectedly move and cause the driver to lose control of the vehicle.**
- **When adjusting the seat, be careful not to hit the seat against a passenger or luggage.**
- **After adjusting the seat position, try sliding it forward and backward to make sure it is locked in position.**
- **After adjusting the seatback, exert body pressure to make sure it is locked in position.**
- **Do not put objects under the seats as they may interfere with the seat-lock mechanism or unexpectedly push up the seat position adjusting lever; the seat may suddenly move, causing the driver to lose control of the vehicle.**
- **While adjusting the seat, do not put your hands under the seat or near the moving parts. You may jam your hands or fingers.**

—Adjusting front seats

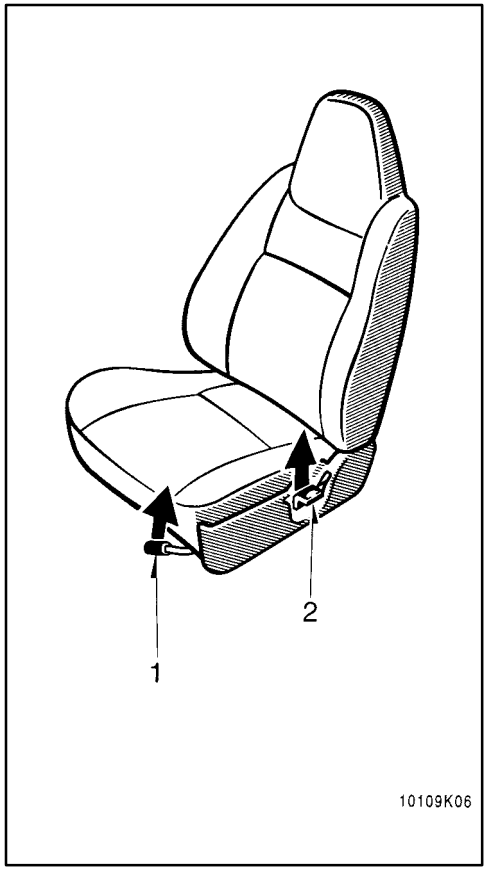

1. SEAT POSITION ADJUSTING LEVER

Pull the lever up. Then slide the seat to the desired position with slight body pressure and release the lever.

2. SEATBACK ANGLE ADJUSTING LEVER

Lean forward and pull the lever up. Then lean back to the desired angle and release the lever.

CAUTION

To reduce the risk of sliding under the lap belt during a collision, avoid reclining the seatback any more than needed. The seat belts provide maximum protection when the driver and the passenger are sitting up straight and well back in the seats. If you are reclined, the lap belt may slide past your hips and apply restraint forces directly to the abdomen. Therefore, in the event of a frontal collision, the risk of personal injury may increase with increasing recline of the seatback.

—Moving passenger's seat for rear seat entry (2-door models)

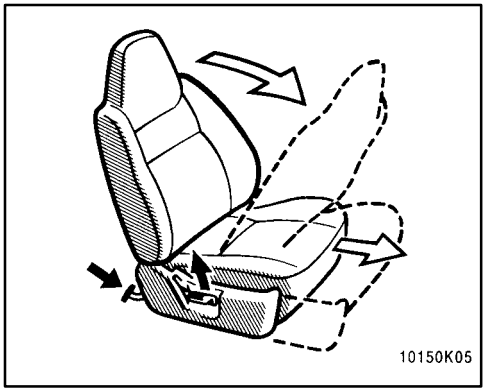

For easy access to the rear seat, do this.

1. Lift the seatback angle adjusting lever or press the pedal behind the seatback.

The seat will slide forward slightly.

2. Move the seat to the front-most position.

After passengers are in, lift up the seatback and return the seat until it locks.

CAUTION

- **After putting back the seat, try pushing the seat forward and rearward to make sure it is secured in place.**
- **Never allow anyone to rest their foot on the release pedal while the vehicle is moving.**

—Tilting passenger's seatback for rear seat entry (2-door models)

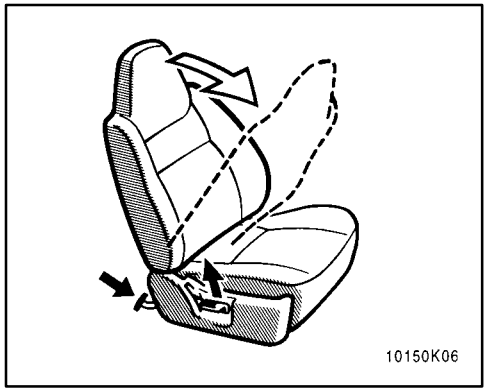

For easy access to the rear seat, do this.

Lift the seatback angle adjusting lever or press the pedal behind the seatback.

The seatback will tilt forward.

After passengers are in, lift up the seatback until it locks.

CAUTION

- **After putting back the seatback, try pushing the seatback forward and rearward to make sure it is secured in place.**
- **Never allow anyone to rest their foot on the pedal while the vehicle is moving.**

Fold-down rear seat

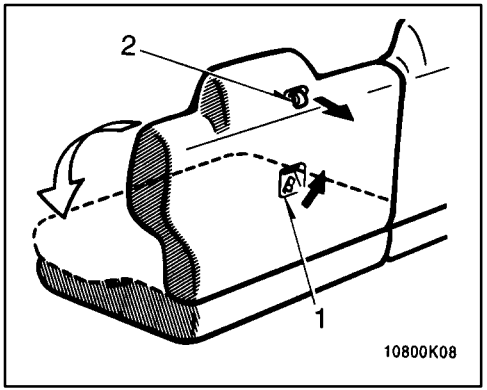

1. Pull up the seatback security lock lever 1 to the unlock position.
2. Pull out the lock release strap 2.
3. Fold down the seatback.

Each seatback may be folded separately.

This will enlarge the trunk room as far as the front seatbacks. See "Luggage stowage precautions" in Part 2 for precautions to observe in loading luggage.

CAUTION

When returning the seatback to the upright position:

- **Make sure the seat belts are not twisted or caught in the seatback and are arranged in their proper position for ready use.**
- **Make sure the seatback is securely locked by pushing forward and rearward on the top of the seatback.**

Seat belts—
—Seat belt precautions

Toyota recommends that the driver and passengers in the vehicle be properly restrained at all times with the seat belts provided. Failure to do so could increase the chance of injury and/or the severity of injury in accidents.

Baby or small child. Use a child restraint system which fits your vehicle. See “Child restraint” for details.

Child. If a child is too large for a child restraint system, the child should sit in the rear seat and must be restrained using the vehicle’s seat belt. According to accident statistics, the child is safer when properly restrained in the rear seat than in the front seat. Do not allow the child to stand up or kneel on either rear or front seats. If the shoulder belt falls across the child’s neck or face, move the child to the center position and use the center lap belt.

Pregnant woman. Toyota recommends the use of a seat belt. Ask your doctor for specific recommendations. The lap belt should be worn securely and as low as possible over the hips and not on the waist.

Injured person. Toyota recommends the use of a seat belt. Depending on the injury, first check with your doctor for specific recommendations.

CAUTION

Persons should ride in their seats properly wearing their seat belts whenever the vehicle is moving. Otherwise, they are much more likely to suffer serious bodily injury in the event of sudden braking or a collision.

When using the seat belts, observe the following:

- **Use the belt for only one person at a time. Do not use a single belt for two or more people—even children.**
- **Avoid reclining the seatbacks too much. The seat belts provide maximum protection when the seatbacks are in the upright position. (See the seat adjustment instructions.)**
- **Be careful not to damage the belt webbing or hardware. Take care that they do not get caught or pinched in the seat or side doors.**
- **Inspect the belt system periodically. Check for cuts, fraying and loose parts. Damaged parts should be replaced. Do not disassemble or modify the system.**
- **Keep the belts clean and dry. If they need cleaning, use a mild soap solution or lukewarm water. Never use bleach, dye, or abrasive cleaners—they may severely weaken the belts.**
- **Replace the belt assembly (including bolts) if it has been used in a severe impact. The entire assembly should be replaced even if damage is not obvious.**

—Front seat belts and rear outside seat belts

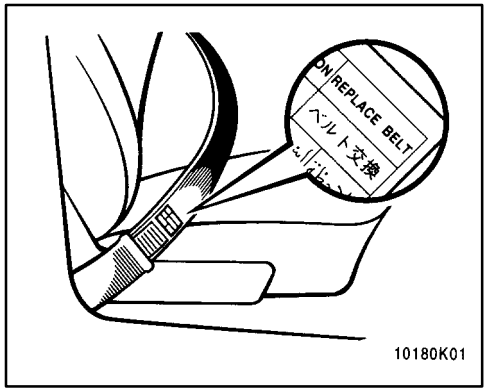

- **Front passenger's seat only—Replace the belt if the warning label under the sleeve can be seen. The warning label, "REPLACE BELT", will appear if the belt receives a severe impact or other force.**

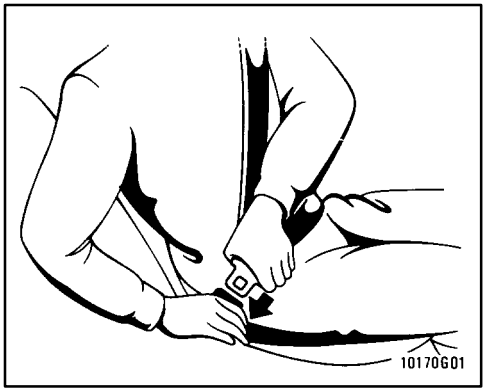

Adjust the seat as needed (front seats only) and sit up straight and well back in the seat. To fasten your belt, pull it out of the retractor and insert the tab into the buckle.

You will hear a click when the tab locks into the buckle.

The seat belt length automatically adjusts to your size and the seat position.

The retractor will lock the belt during a sudden stop or on impact. It also may lock if you lean forward too quickly. A slow, easy motion will allow the belt to extend, and you can move around freely.

If the seat belt cannot be pulled out of the retractor, firmly pull the belt and release it. You will then be able to smoothly pull the belt out of the retractor.

When a passenger's shoulder belt is completely extended and is then retracted even slightly, the belt is locked in that position and cannot be extended. This feature is used to hold the child restraint system securely. (For details, see "Child restraint" in this chapter.) To free the belt again, fully retract the belt and then pull the belt out once more.

CAUTION

- **After inserting the tab, make sure the tab and buckle are locked and that the belt is not twisted.**
- **Do not insert coins, clips, etc. in the buckle as this may prevent you from properly latching the tab and buckle.**
- **If the seat belt does not function normally, immediately contact your Toyota dealer.**

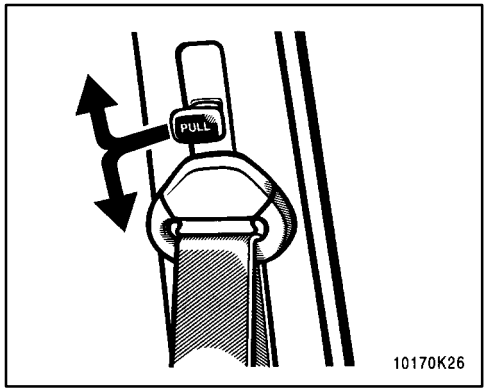

Seat belts with an adjustable shoulder anchor—

Adjust the shoulder anchor position to your size.

To adjust the anchor position, pull the knob out and slide it up or down. Release the knob and make sure the anchor is locked in position.

CAUTION

Always make sure the shoulder belt is positioned across the center of your shoulder. The belt should be kept away from your neck, but not falling off your shoulder. Failure to do so could reduce the amount of protection in an accident and increase the chance of injury.

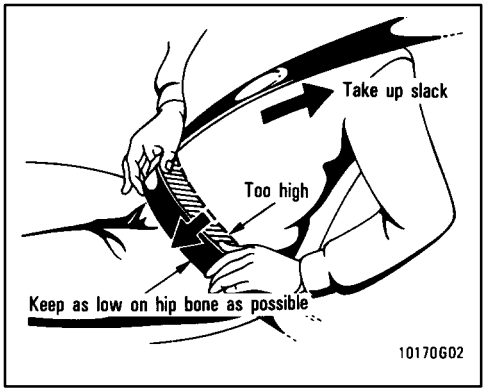

Adjust the position of the lap and shoulder belts.

Position the lap belt as low as possible on your hips—not on your waist, then adjust it to a snug fit by pulling the shoulder portion upward through the latch plate.

CAUTION

- **High-positioned lap belts and loose-fitting belts both could increase the chance of injury due to sliding under the lap belt during an accident. Keep the lap belt as low on your hip bone as possible.**
- **For your safety, do not place the shoulder belt under your arm.**

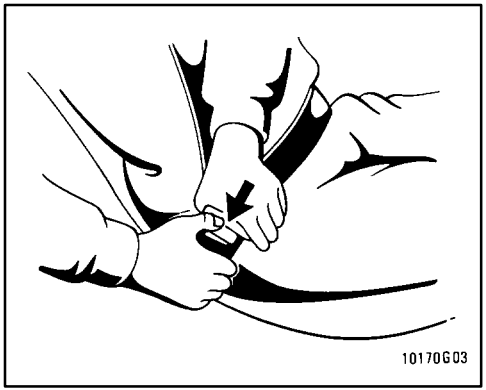

To release the belt, press the buckle-release button and allow the belt to retract.

If the belt does not retract smoothly, pull it out and check for kinks or twists. Then make sure it remains untwisted as it retracts.

—Rear center seat belt

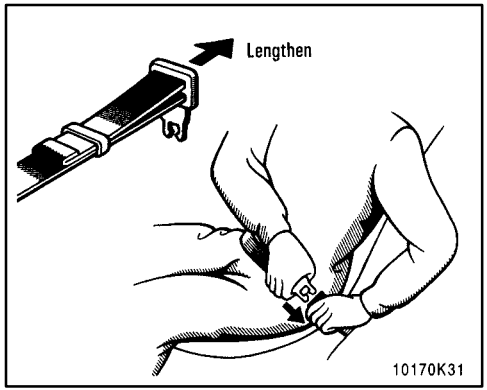

Sit up straight and well back in the seat. To fasten your belt, insert the tab into the buckle.

You will hear a click when the tab locks into the buckle.

If the belt is not long enough for you, hold the tab at a right angle to the belt and pull on the tab.

CAUTION

- **After inserting the tab, make sure the tab and buckle are locked and that the belt is not twisted.**
- **Do not insert coins, clips, etc. in the buckle as this may prevent you from properly latching the tab and buckle.**

- **If the seat belt does not function normally, immediately contact your Toyota dealer.**

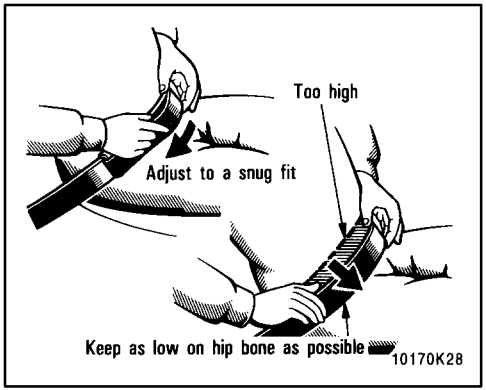

Remove excess length of the belt and adjust the belt position.

To shorten the belt, pull the free end of the belt.

Position the lap belt as low as possible on your hips—not on your waist, then adjust it to a snug fit.

CAUTION

High-positioned and loose-fitting lap belts could increase the chance of injury due to sliding under the lap belt during an accident.

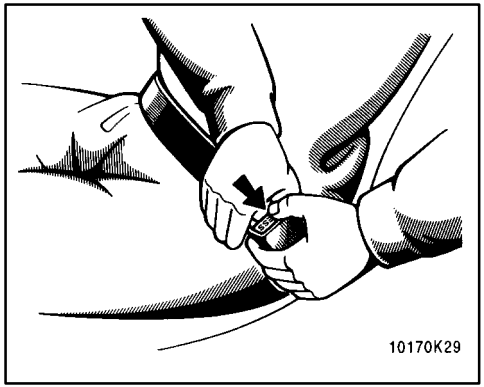

To release the belt, press the buckle-release button.

—Seat belt extender

If your seat belt cannot be fastened securely because it is not long enough, a personalized seat belt extender is available from your Toyota dealer free of charge.

Please contact your local Toyota dealer so that the dealer can order the proper required length for the extender. Bring the heaviest coat you expect to wear for proper measurement and selection of length. Additional ordering information is available at your Toyota dealer.

CAUTION

When using the seat belt extender, observe the following. Failure to follow these instructions could result in less effectiveness of the seat belt restraint system in case of vehicle accident, increasing the chance of personal injury.

- **Never use the seat belt extender if you can fasten the seat belt without it.**
- **Remember that the extender provided for you may not be safe when used on a different vehicle, or for another person or at a different seating position than the one originally intended for.**

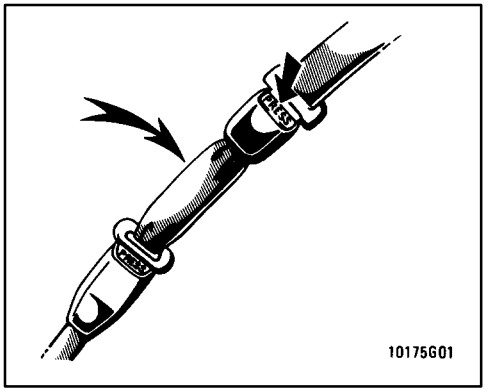

To connect the extender to the seat belt, insert the tab into the seat belt buckle so that the "PRESS" signs on the buckle-release buttons of the extender and the seat belt are both facing outward as shown.

You will hear a click when the tab locks into the buckle.

When releasing the seat belt, press on the buckle-release button on the extender, not on the seat belt. This helps prevent damage to the vehicle interior and extender itself.

When not in use, remove the extender and store in the vehicle for future use.

SRS airbags (for U.S.A.)

CAUTION

- **After inserting the tab, make sure the tab and buckle are locked and that the seat belt extender is not twisted.**
- **Do not insert coins, clips, etc. in the buckle as this may prevent you from properly latching the tab and buckle.**
- **If the seat belt does not function normally, immediately contact your Toyota dealer.**

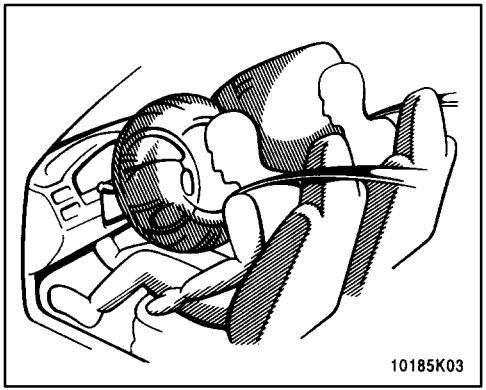

The SRS (Supplemental Restraint System) airbags are designed to provide further protection to the driver and front passenger when added to the primary protection provided by the seat belts.

In response to a severe frontal impact, the SRS airbags work together with the seat belts to prevent or reduce injury by inflating, in order to decrease the likelihood of the driver's or front passenger's head or chest directly hitting the steering wheel or dashboard. The passenger airbag is activated even with no passenger in the front seat.

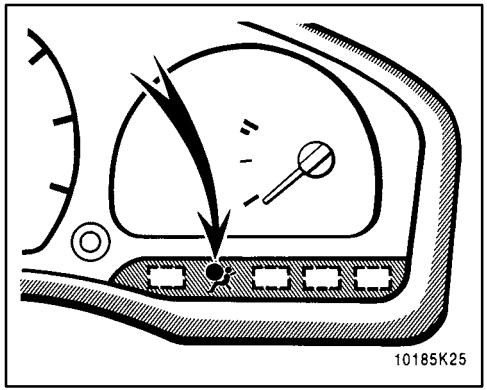

This indicator comes on when the ignition key is turned to the "ACC" or "ON" position. It goes off after about 6 seconds. This means the SRS airbags are operating properly.

The SRS airbag warning light system monitors the airbag sensor assembly, inflators, warning light, interconnecting wiring and power sources.

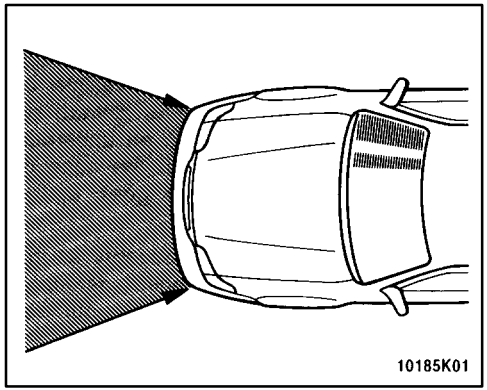

The SRS airbag system is designed to activate in response to a severe frontal impact within the shaded area between the arrows in the illustration.

The SRS airbags will deploy if the severity of the impact is above the designed threshold level, comparable to an approximate 20 km/h (14 mph) collision when impacting straight into a fixed barrier that does not move or deform.

If the severity of the impact is below the above threshold level, the SRS airbags may not deploy.

However, this threshold velocity will be considerably higher if the vehicle strikes an object, such as a parked vehicle or sign pole, which can move or deform on impact, or if it is involved in an underride collision (a collision in which the nose of the vehicle “underrides”, or goes under, the bed of a truck.)

It is possible with collision severity at the marginal level of airbag sensor detection and activation that only one of your vehicle’s two airbags will deploy.

For your safety, be sure to always wear your seat belts.

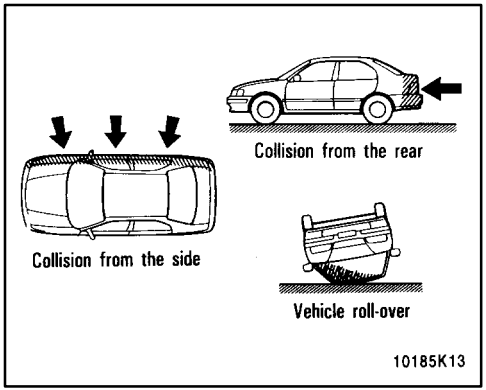

The SRS airbags are not designed to inflate if the vehicle is subjected to a side or rear impact, if it rolls over, or if it is involved in a low-speed frontal collision.

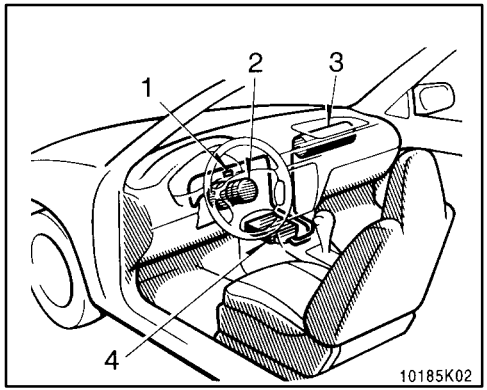

The SRS airbag system mainly consists of the following components and their locations are shown in the illustration.

1. SRS airbag warning light
2. Steering wheel pad (airbag and inflator)
3. Passenger airbag module (airbag and inflator)
4. Airbag sensor assembly

The airbag sensor assembly consists of a safing sensor and airbag sensor.

In a severe frontal impact, sensors detect deceleration and the system triggers the airbag inflators. Then a chemical reaction in the inflators momentarily fills the airbags with non- toxic nitrogen gas to help restrain the forward motion of the occupants.

When the airbags inflate, they produce a fairly loud noise and release some smoke along with the nitrogen gas. This is not harmful and does not indicate a fire. Be sure to wash off any residue as soon as possible to prevent minor skin irritation.

Deployment of the airbags happen in a fraction of a second, so the airbags must inflate with considerable force. While the system is designed to reduce serious injuries, it may also cause minor burns or abrasions and swellings.

Parts of the airbag module (steering wheel hub, dashboard) may be hot for several minutes, but the airbags themselves will not be hot. The airbags are designed to inflate only once.

A crash severe enough to inflate the airbags may break the windshield as the vehicle buckles. In vehicles with a passenger airbag the windshield may also be damaged by absorbing some of the force of the inflating airbag.

CAUTION

- **The SRS airbag system is designed only as a supplement to the primary protection of the seat belt systems of the driver and front passenger. The front seat occupants are particularly susceptible to injury if they do not wear their seat belts; when sudden braking or a collision occurs, they may be thrown forward. To obtain further protection in an accident, the driver and all passengers in the vehicle should always wear their seat belts when driving. For instructions and precautions concerning the seat belt system, see “Seat belts” in this chapter.**
- **A baby or small child who is too small to use a seat belt should be properly secured in a rear seat using a child restraint system.**

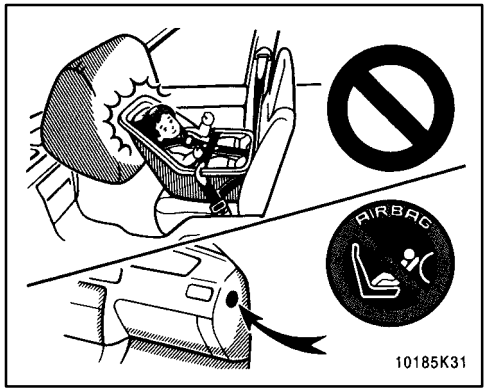

- **Do not use a rear-facing child restraint system in the front seat because the force of the rapid inflation of the passenger airbag may cause severe injury to the child. Vehicles with a passenger airbag display a caution label on the passenger side instrument panel as shown above to remind you not to install a rear-facing child restraint system on the front seat.**

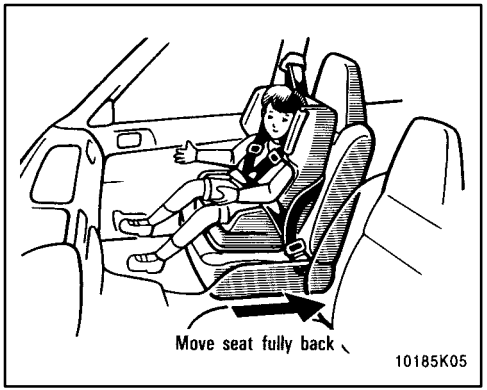

- **When using a forward-facing child restraint system in the front seat, the seat must be moved as far back as possible. For instructions concerning the installation of a child restraint system, see "Child restraint" in this chapter.**

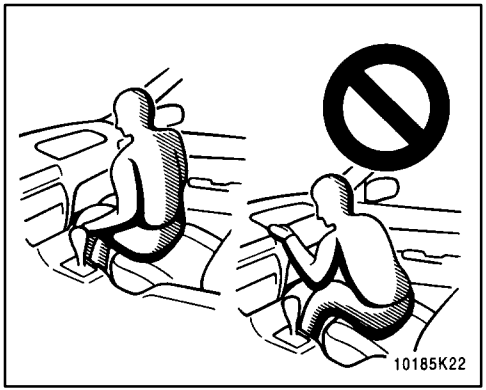

- **Do not sit on the edge of the seat or lean over the dashboard when the vehicle is in use. The airbags inflate with considerable speed and force; you may be severely injured. Sit up straight and well back in the seat, and always use your seat belt.**

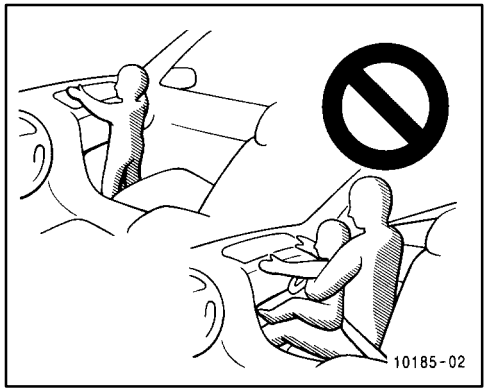

- **Do not allow a child to stand up, or to kneel on the front passenger seat. The airbag inflates with considerable speed and force; the child may be severely injured.**
- **Do not hold a child on your lap or in your arms. Use a child restraint system in the rear seat. For instructions concerning the installation of a child restraint system, see "Child restraint" in this chapter.**

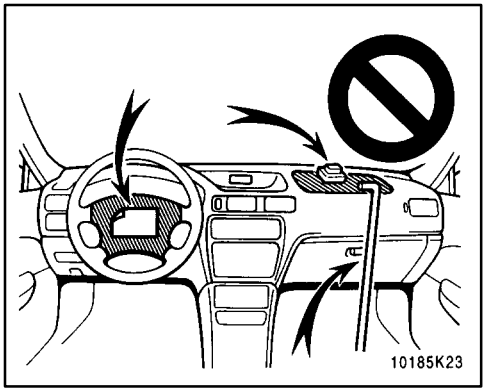

- **Do not put objects on or in front of the dashboard or steering wheel pad that houses the airbag system. They might restrict inflation or cause personal injury as they are projected rearward.**
- **Do not modify, remove or open any component or wiring, such as the steering wheel, column cover, front passenger airbag cover, front passenger airbag, airbag sensor assembly. Doing any of these may cause sudden SRS airbag inflation or disable the system, which could result in personal injury.**

Failure to follow these instructions can result in severe injuries.

NOTICE

Do not perform any of the following changes without consulting your Toyota dealer. Such changes can interfere with proper operation of the SRS airbag system in some cases.

- ◆***Installation of electronic items such as a mobile two-way radio, cassette tape player or compact disc player***
- ◆***Modification of the suspension system***
- ◆***Modification of the front end structure***
- ◆***Attachment of a grille guard (bull bar, kangaroo bar, etc.), snowplow, winches or any other equipment to the front end***
- ◆***Repairs made on or near the console, steering column, steering wheel or dashboard near the front passenger airbag***

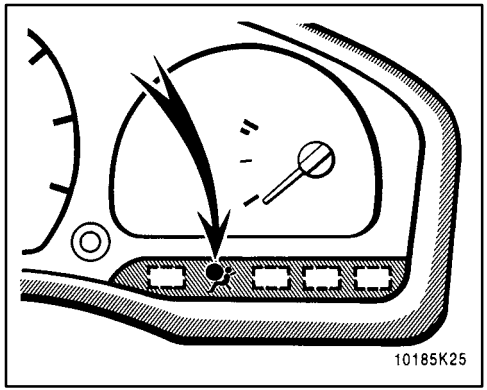

This SRS airbag system has a service reminder indicator to inform the driver of operating problems. If either of the following conditions occurs, this indicates a malfunction of the airbags. Contact your Toyota dealer as soon as possible to service the vehicle.

- The light does not come on when the ignition key is turned to the “ACC” or “ON” position, or remains on.
- The light comes on while driving.

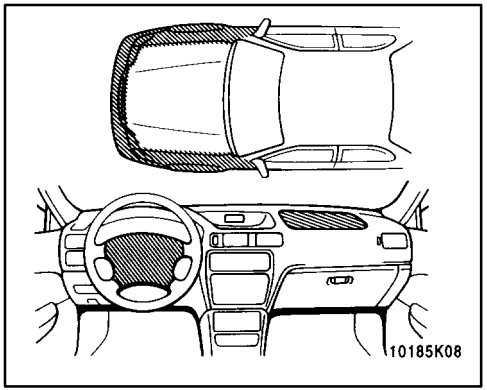

In the following cases, contact your Toyota dealer as soon as possible:

- The SRS airbags have been inflated.
- The front part of the vehicle (shaded in the illustration) was involved in an accident not of the extent to cause the SRS airbags to inflate.
- The pad section of the steering wheel or front passenger airbag cover (shaded in the illustration) is scratched, cracked, or otherwise damaged.

SRS airbag (for Canada)

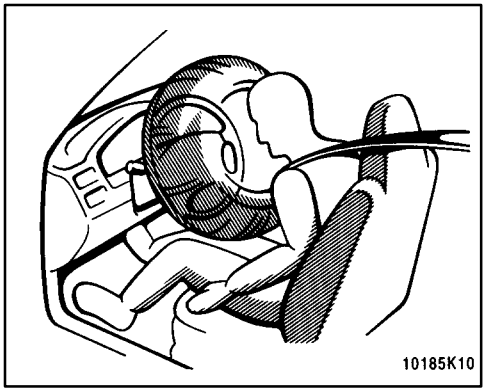

The SRS (Supplemental Restraint System) airbag is designed to provide further protection to the driver when added to the primary protection provided by the seat belt.

In response to a severe frontal impact, the SRS airbag works together with the seat belt to prevent or reduce injury by inflating, in order to decrease the likelihood of the driver’s head or chest directly hitting the steering wheel.

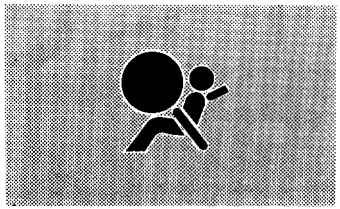

This indicator comes on when the ignition key is turned to the “ACC” or “ON” position. It goes off after about 6 seconds. This means the SRS airbag is operating properly.

The SRS airbag warning light system monitors the airbag sensor assembly, inflator, warning light, interconnecting wiring and power sources.

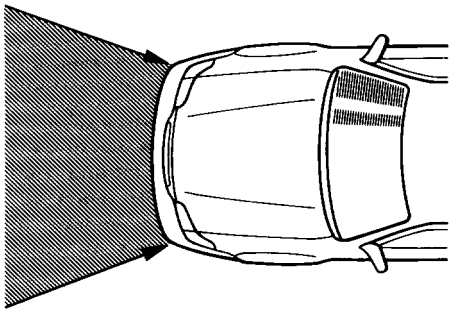

The SRS airbag system is designed to activate in response to a severe frontal impact within the shaded area between the arrows in the illustration.

The SRS airbag will deploy if the severity of the impact is above the designed threshold level, comparable to an approximate 20 km/h (14 mph) collision when impacting straight into a fixed barrier that does not move or deform.

If the severity of the impact is below the above threshold level, the SRS airbag may not deploy.

However, this threshold velocity will be considerably higher if the vehicle strikes an object, such as a parked vehicle or sign pole, which can move or deform on impact, or if it is involved in an underride collision (e.g. a collision in which the nose of the vehicle “underrides”, or goes under, the bed of a truck).

For the safety of all occupants, be sure to always wear seat belts.

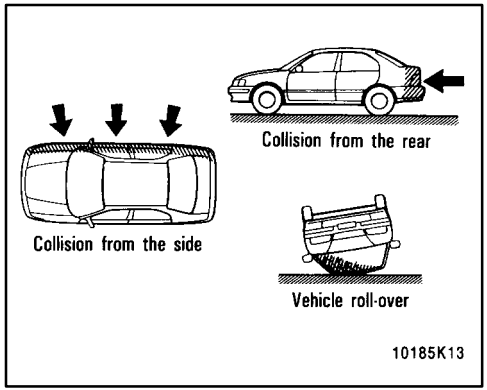

The SRS airbag is not designed to inflate if the vehicle is subjected to a side or rear impact, if it rolls over, or if it is involved in a low- speed frontal collision.

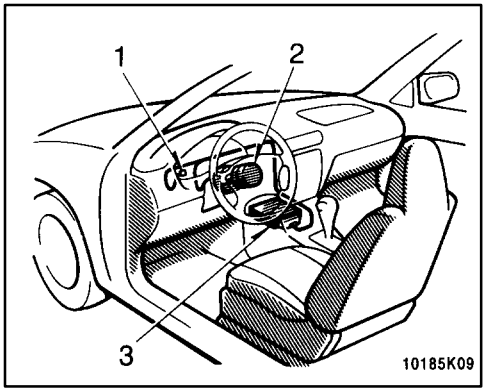

The SRS airbag system mainly consists of the following components and their locations are shown in the illustration.

1. SRS airbag warning light
2. Steering wheel pad (airbag and inflator)
3. Airbag sensor assembly

The airbag sensor assembly consists of a safing sensor and airbag sensor.

In a severe frontal impact, the sensor detects deceleration and the system triggers the airbag inflator. Then a chemical reaction in the inflator momentarily fills the airbag with non-toxic nitrogen gas to help restrain the forward motion of the driver.

When the airbag inflates, it produces a fairly loud noise and releases some smoke along with the nitrogen gas. This is not harmful and does not indicate a fire. Be sure to wash off any residue as soon as possible to prevent minor skin irritation.

Deployment of the airbag happens in a fraction of a second, so the airbag must inflate with considerable force. While the system is designed to reduce serious injuries, it may also cause minor burns or abrasions and swellings.

The steering wheel hub may be hot for several minutes, but the airbag itself will not be hot. The airbag is designed to inflate only once.

CAUTION

The SRS airbag system is designed only as a supplement to the primary protection of the seat belt system of the driver. The driver is particularly susceptible to injury if he/she does not wear his/her seat belt; when sudden braking or a collision occurs, he/she may be thrown forward. To obtain further protection in an accident, the driver and all passengers in the vehicle should always wear their seat belts when driving. For instructions and precautions concerning the seat belt system, see "Seat belts" in this chapter.

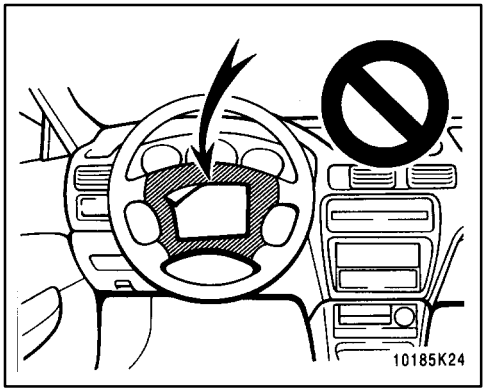

CAUTION

- **Do not put objects on the steering wheel pad. They might restrict inflation or cause personal injury as they are projected rearward.**
- **Do not modify, remove or open any component or wiring, such as the steering wheel, column cover, airbag sensor assembly. Doing any of these may cause sudden SRS airbag inflation or disable the system, which could result in personal injury.**

Failure to follow these instructions can result in severe injuries.

NOTICE

Do not perform any of the following changes without consulting your Toyota dealer. Such changes can interfere with proper operation of the SRS airbag system in some cases.

- ***Installation of electronic items such as a mobile two-way radio, cassette tape player or compact disc player***
- ***Modification of the suspension system***
- ***Modification of the front end structure***
- ***Attachment of a grille guard (bull bar, kangaroo bar, etc.), snowplow, winches or any other equipment to the front end***
- ***Repairs made on or near the front console, steering column or steering wheel***

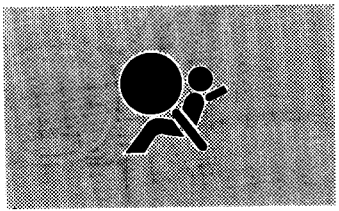

This SRS airbag system has a service reminder indicator to inform the driver of operating problems. If either of the following conditions occurs, this indicates a malfunction of the airbag. Contact your Toyota dealer as soon as possible to service the vehicle.

- The light does not come on when the ignition key is turned to the “ACC” or “ON” position, or remains on.
- The light comes on while driving.

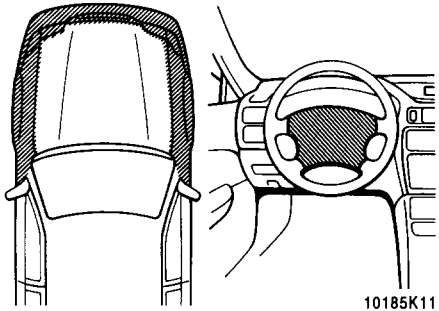

In the following cases, contact your Toyota dealer as soon as possible:

- The SRS airbag has been inflated.
- The front part of the vehicle (shaded in the illustration) was involved in an accident not of the extent to cause the SRS airbag to inflate.
- The pad section of the steering wheel (shaded in the illustration) is scratched, cracked, or otherwise damaged.

Child restraint—
—Child restraint precautions

Toyota strongly urges the use of child restraint systems for children small enough to use it.

The laws of all fifty states in the U.S.A. and Canada now require the use of a child restraint system.

CAUTION

For effective protection in automobile accidents and sudden stops, children must be properly restrained. Holding a child in your arms is not a substitute for a child restraint system. In an accident, the child can be crushed against the windshield, or between you and the vehicle’s interior if you are unrestrained.

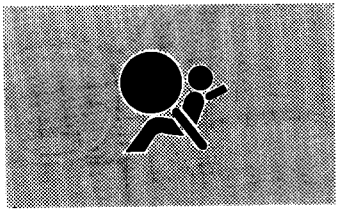

This SRS airbag system has a service reminder indicator to inform the driver of operating problems. If either of the following conditions occurs, this indicates a malfunction of the airbag. Contact your Toyota dealer as soon as possible to service the vehicle.

- The light does not come on when the ignition key is turned to the “ACC” or “ON” position, or remains on.
- The light comes on while driving.

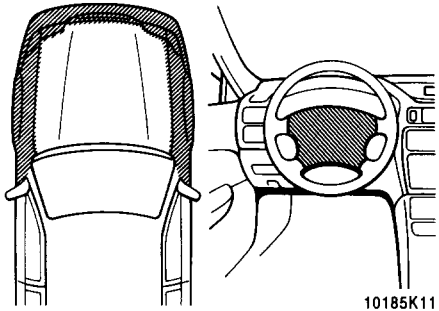

In the following cases, contact your Toyota dealer as soon as possible:

- The SRS airbag has been inflated.
- The front part of the vehicle (shaded in the illustration) was involved in an accident not of the extent to cause the SRS airbag to inflate.
- The pad section of the steering wheel (shaded in the illustration) is scratched, cracked, or otherwise damaged.

Child restraint—
—Child restraint precautions

Toyota strongly urges the use of child restraint systems for children small enough to use it.

The laws of all fifty states in the U.S.A. and Canada now require the use of a child restraint system.

CAUTION

For effective protection in automobile accidents and sudden stops, children must be properly restrained. Holding a child in your arms is not a substitute for a child restraint system. In an accident, the child can be crushed against the windshield, or between you and the vehicle’s interior if you are unrestrained.

—Child restraint system

A child restraint system for a small child or baby must itself be restrained on the seat with either the lap belt or the lap portion of the lap/shoulder belt.

The child restraint system should conform to the size of the child and properly fit the vehicle seat. For greater safety, the child restraint system should be installed in the rear seat. According to accident statistics, children are safer when properly restrained in the rear seat than in the front seat.

When installing a child restraint system, follow the instructions provided by the manufacturer of the system. General directions are also provided under the following illustrations.

CAUTION

After installing the child restraint system, make sure it is secured in place. If it is not restrained securely, it may cause injury to the child in the event of a sudden stop or accident.

When not using the child restraint system, keep it secured with the seat belt or place it somewhere other than in passenger compartment. This will prevent it injuring passengers in the event of a sudden stop or accident.

Your vehicle has anchors for securing the top strap of a child restraint system. The anchor nuts are welded beneath the sheet metal to permit installation of an anchor bracket for a child restraint system.

To install an anchor bracket, use an 8 mm X 30 mm X 1.25 mm coarse thread metric bolt and a 10 mm (0.4 in.) spacer. Note that the bolts accompanying many child restraint systems are not metric. You can damage the anchor nuts on your vehicle if you force bolts with different thread into the anchor nuts.

For instructions about how to install the anchor bracket, see “(C) TOP STRAP ANCHORS AND LOCATIONS”.

If your child restraint system does not provide any of the necessary parts, you can purchase the following items from your Toyota dealer.

* CRS installation kit
  (Part No. 04731-22012)
  —contains 1 bolt, 3 types of spacers and 1 locking clip.
* Bolt
  (Part No. 91511-60830)

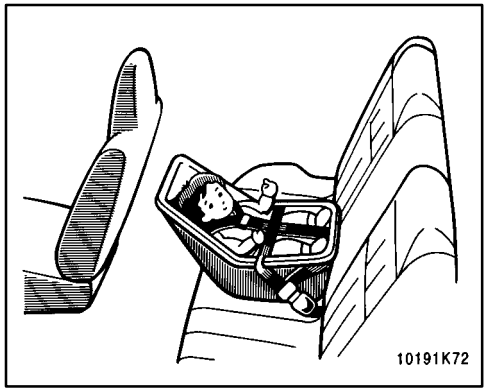

(A) INSTALLATION ON REAR SEAT CENTER

When installing a rear-facing child restraint system, follow the same procedure as when installing a forward-facing child restraint system.

CAUTION

Do not use a rear-facing child restraint system in the rear seat if it interferes with the lock mechanism of the front seats. This may cause severe injury to the child and front passenger in case of sudden braking or a collision.

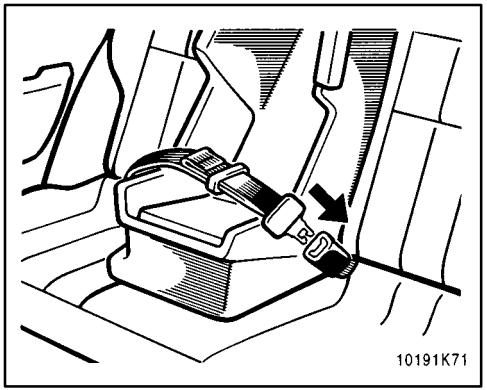

1. Fasten the center lap belt over the child restraint system following the instructions provided by its manufacturer.

CAUTION

- **After inserting the tab, make sure the tab and buckle are locked.**
- **Do not insert coins, clips, etc. in the buckle as this may prevent you from properly latching the tab and buckle.**
- **If the seat belt does not function normally, immediately contact your Toyota dealer.**

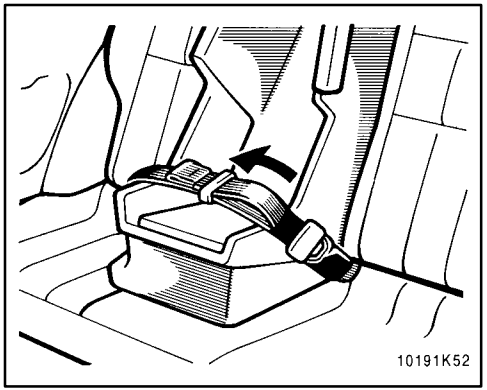

2. Make sure the belt is tight by pulling its free end while you firmly push down the child restraint system.

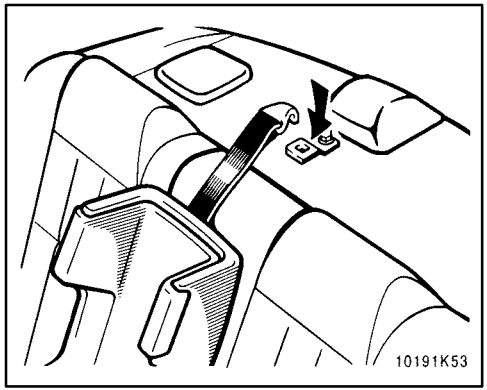

3. If your child restraint system requires the use of a top strap, latch the hook onto the anchor bracket and tighten the top strap.

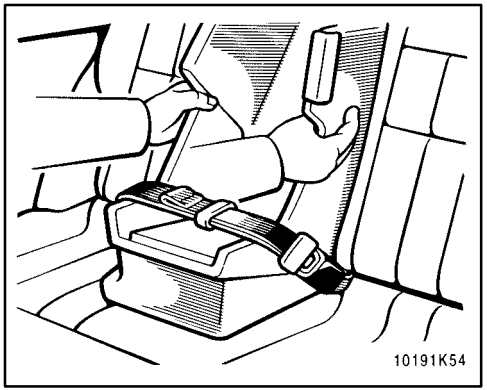

CAUTION

Push and pull the child restraint system in different directions to be sure it is secure.

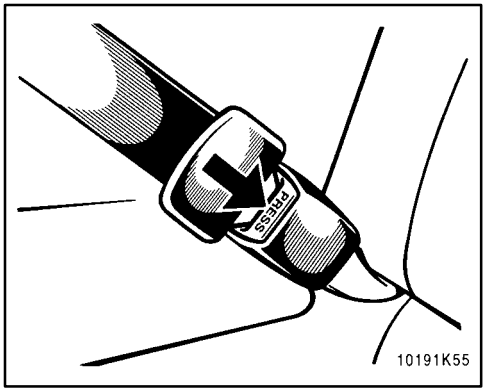

4. To remove the child restraint system, press the buckle-release button and unhook the top strap.

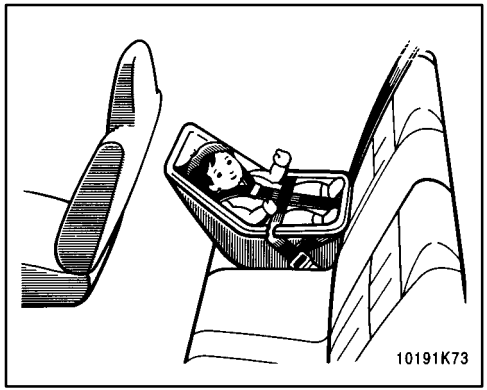

(B) INSTALLATION ON REAR SEAT OUTSIDE

When installing a rear-facing child restraint system, follow the same procedure as when installing a forward-facing child restraint system.

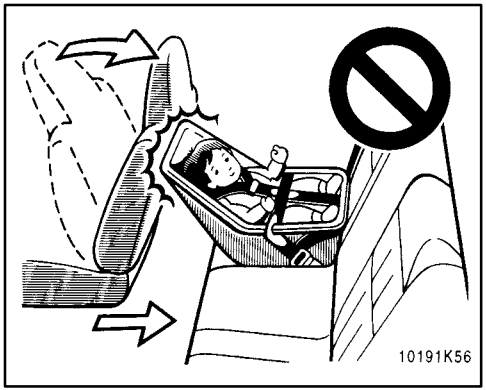

CAUTION

Do not use a rear-facing child restraint system in the rear seat if it interferes with the lock mechanism of the front seats. This may cause severe injury to the child and front passenger in case of sudden braking or a collision.

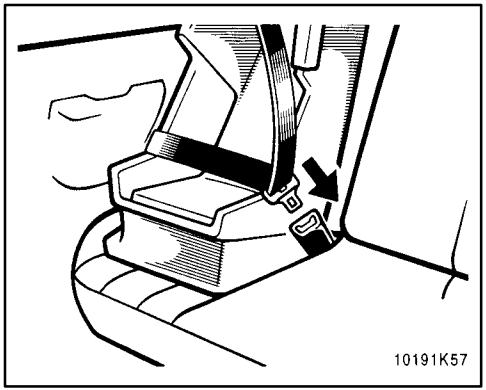

1. Fasten the lap and shoulder belt over the child restraint system following the instructions provided by its manufacturer. Keep the lap portion of the belt tight.

CAUTION

- **After inserting the tab, make sure the tab and buckle are locked.**
- **Do not insert coins, clips, etc. in the buckle as this may prevent you from properly latching the tab and buckle.**
- **If the seat belt does not function normally, immediately contact your Toyota dealer.**

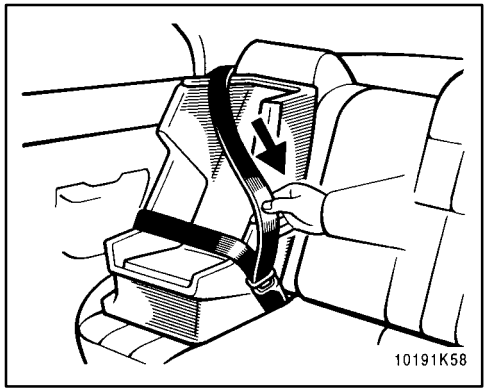

2. Fully extend the shoulder belt to put it in the lock mode.

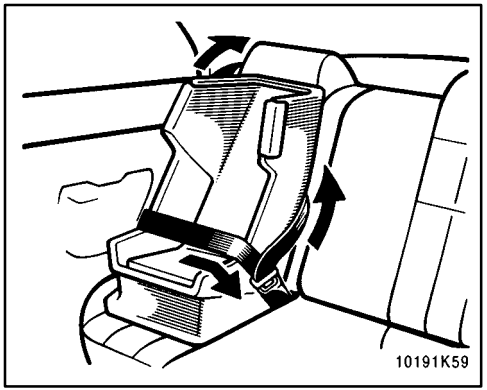

3. Place the shoulder belt between the vehicle seatback and the child restraint system and allow it to retract. To hold the child restraint system securely, let the shoulder belt retract as far as it will go while firmly pushing down the child restraint system.

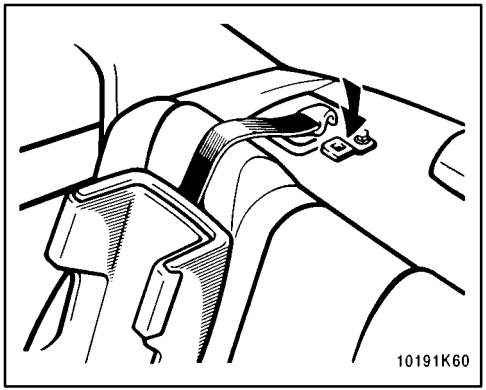

4. If your child restraint system requires the use of a top strap, latch the hook onto the anchor bracket and tighten the top strap.

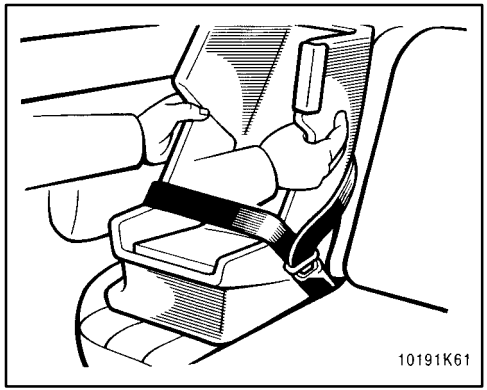

⚠ CAUTION

Make sure the seat belt is securely locked. Also make sure the child restraint system is secure by pushing and pulling it in different directions.

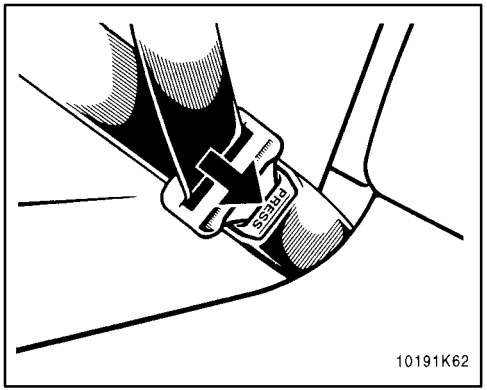

5. To remove the child restraint system, press the buckle-release button and allow the belt to retract. Unhook the top strap.

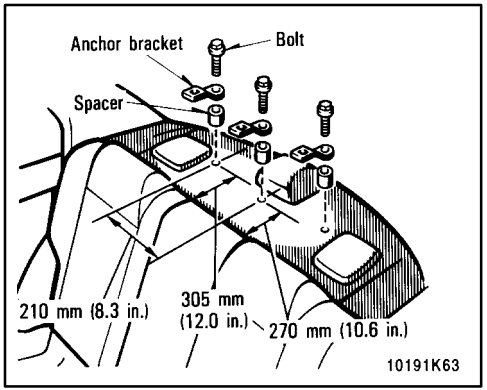

(C) TOP STRAP ANCHORS AND LOCATIONS—

—On the filler panel behind the rear seat

a. Using the illustration as a guide, run your fingers across the trim of the filler panel itself to locate the position of the holes underneath.

b. Make a hole in the covering directly above the hole in the filler panel.

c. Insert a 10 mm (0.4 in.) spacer and tighten down the anchor bracket for your child restraint system with a bolt. Torque the bolt to 16.5—24.7 N·m (1.68—2.52 kgf·m, 12.2—18.2 ft·lb.).

To comply with Canada Motor Vehicle Safety Standards, vehicles sold in Canada are provided with a bracket set in the glovebox, designed for use with any of the 3 anchor locations shown in the illustration.

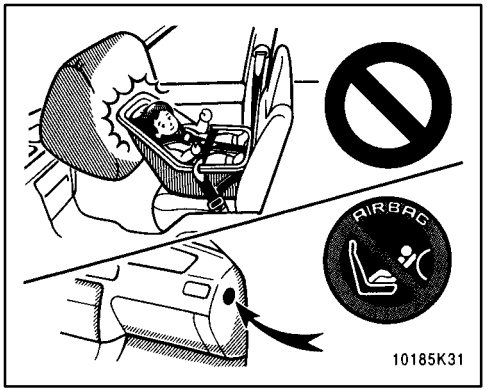

(D) INSTALLATION ON FRONT SEAT

Do not use a child restraint system which requires use of a top strap in the front seat. A child restraint system which requires use of a top strap should only be installed in the rear seat.

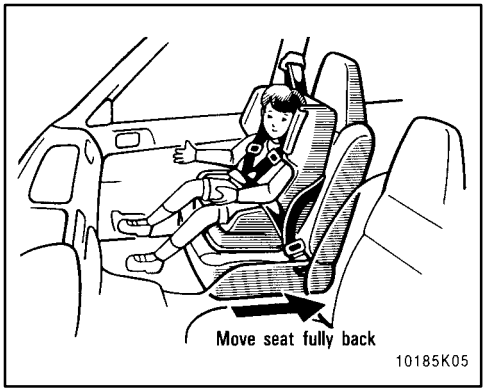

CAUTION

- **With front passenger airbag: Do not use a rear-facing child restraint system in the front seat because the force of the rapid inflation of the passenger airbag may cause severe injury to the child. Vehicles with a passenger airbag display a caution label on the passenger side instrument panel as shown above to remind you not to install a rear-facing child restraint system on the front seat.**
- **When using a forward-facing child restraint system, move the seat as far back as possible.**

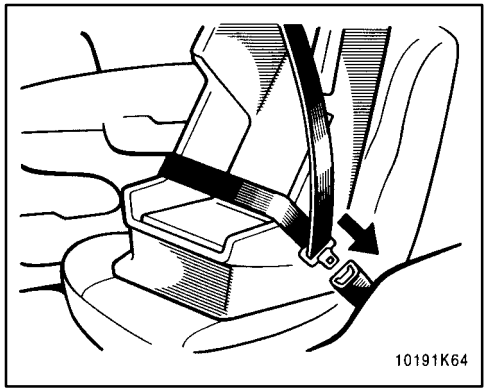

1. Fasten the lap and shoulder belt over the child restraint system following the instructions provided by its manufacturer. Keep the lap portion of the belt tight.

CAUTION

- **After inserting the tab, make sure the tab and buckle are locked.**
- **Do not insert coins, clips, etc. in the buckle as this may prevent you from properly latching the tab and buckle.**
- **If the seat belt does not function normally, immediately contact your Toyota dealer.**

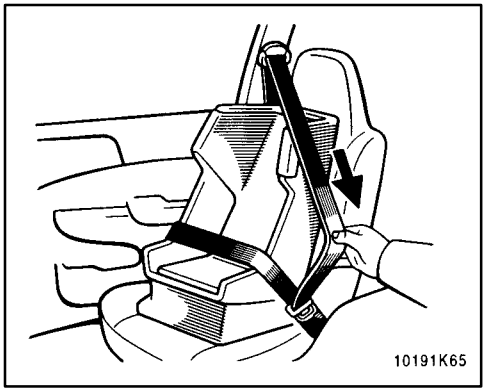

2. Fully extend the shoulder belt to put in the lock mode.

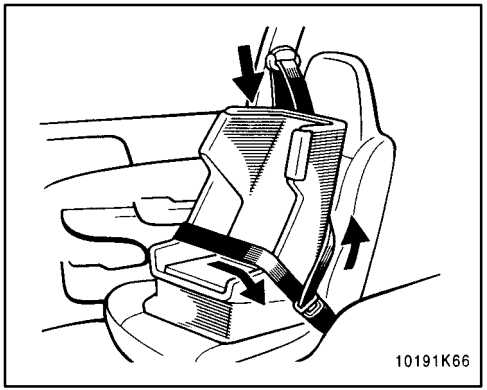

3. Place the shoulder belt between the vehicle seatback and the child restraint system and allow it to retract. To hold the child restraint system securely, let the shoulder belt retract as far as it will go while firmly pushing down the child restraint system.

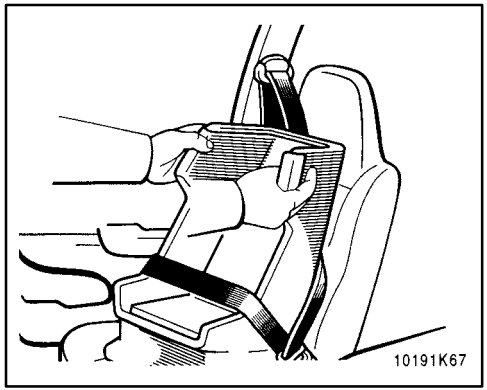

CAUTION

Make sure the seat belt is securely locked. Also make sure the child restraint system is secure by pushing and pulling it in different directions.

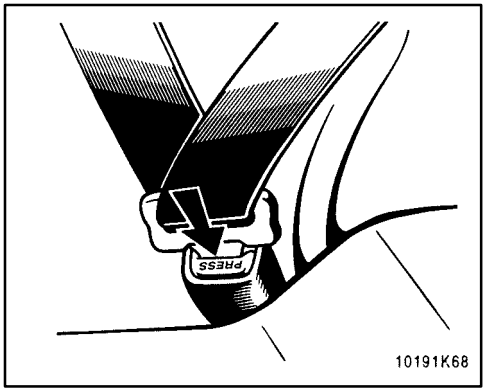

4. To remove the child restraint system, press the buckle-release button and allow the belt to retract.

Outside rear view mirrors—

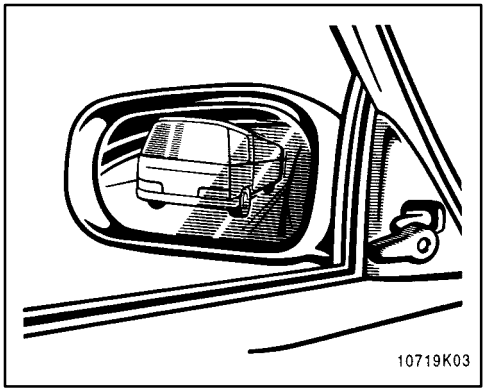

Adjust the mirror so you can see the side of your vehicle in the mirror.

Be careful when judging the size or distance of any object seen in the outside rear view mirror on the passenger's side. It is a convex mirror with a curved surface. Any object seen in a convex mirror will look smaller and farther away than when seen in a flat mirror.

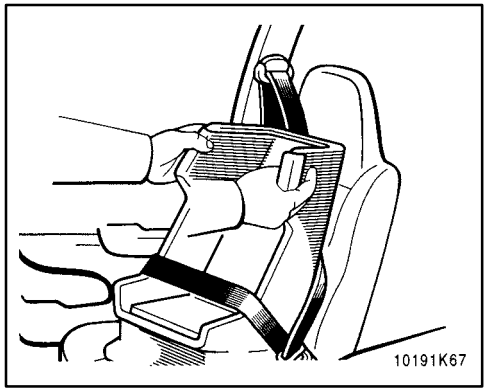

CAUTION

Make sure the seat belt is securely locked. Also make sure the child restraint system is secure by pushing and pulling it in different directions.

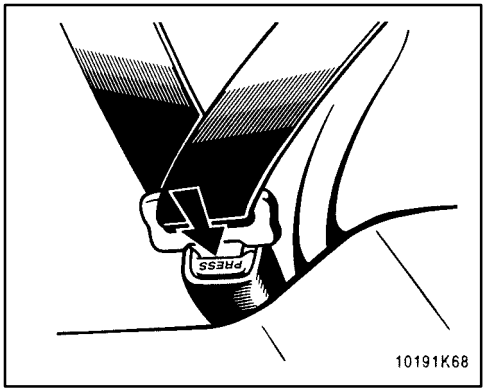

4. To remove the child restraint system, press the buckle-release button and allow the belt to retract.

Outside rear view mirrors—

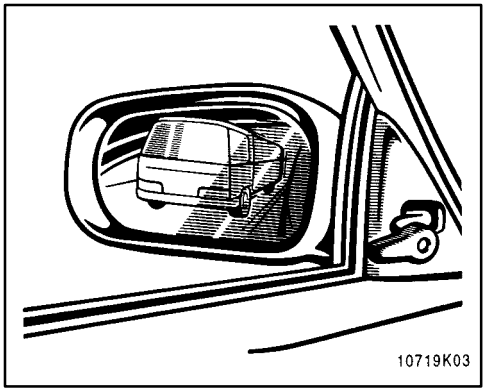

Adjust the mirror so you can see the side of your vehicle in the mirror.

Be careful when judging the size or distance of any object seen in the outside rear view mirror on the passenger's side. It is a convex mirror with a curved surface. Any object seen in a convex mirror will look smaller and farther away than when seen in a flat mirror.

—Rear view mirror remote control

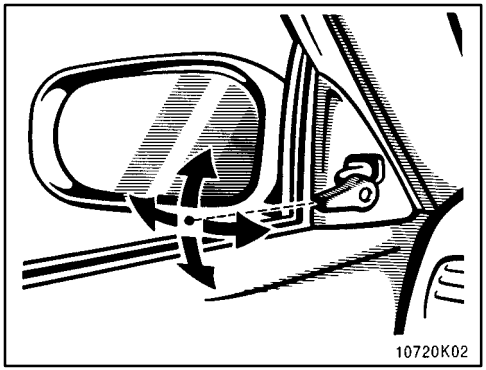

To adjust the rear view mirror, simply operate the control lever.

NOTICE
If ice should jam the mirror, do not operate the control or scrape the mirror face. Use a spray de-icer to free the mirror.

Anti-glare inside rear view mirror

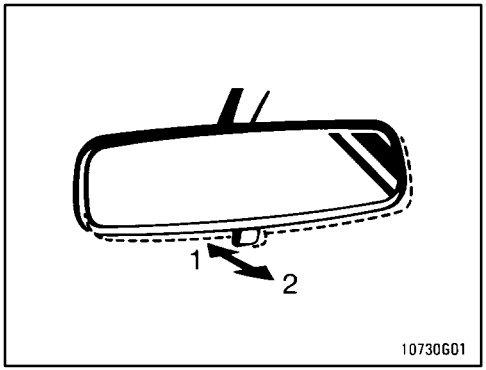

To reduce glare from the headlights of the vehicle behind you during night driving, operate the lever on the lower edge of the mirror.

Daylight driving—Lever at position 1

The reflection in the mirror has greater clarity at this position.

Night driving—Lever at position 2

Remember that by reducing glare you also lose some rear view clarity.

Part 1

OPERATION OF INSTRUMENTS AND CONTROLS—

Chapter 1-4

Lights, Wipers and Defogger

- Headlights and turn signals
- Emergency flashers
- Instrument panel light control
- Interior light
- Windshield wipers and washer
- Rear window defogger

Headlights and turn signals

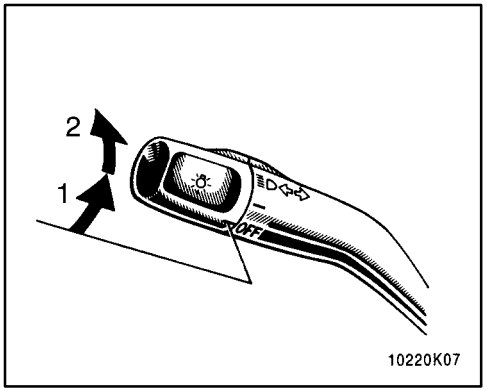

HEADLIGHTS

To turn on the following lights: Twist the headlight/turn signal lever knob.

Position 1—Parking, tail, license plate, side marker and instrument panel lights

Position 2—Headlights and all of the above

If you remove the key with the headlights left on, a buzzer reminds you to turn the lights off when you open the driver's door.

NOTICE

To prevent the battery from being discharged, do not leave the lights on for a long period when the engine is not running.

Daytime running light system (Canada only)

The headlights turn on when the parking brake is released with the engine started, even with the light switch in the "OFF" position. They will not go off until the ignition switch is turned off.

To turn on the other exterior lights and instrument panel lights, twist the knob to the position 1.

Under the daytime running light system, the headlights turn on at reduced intensity. Twist the knob to the position 2 to turn to full intensity for driving at night.

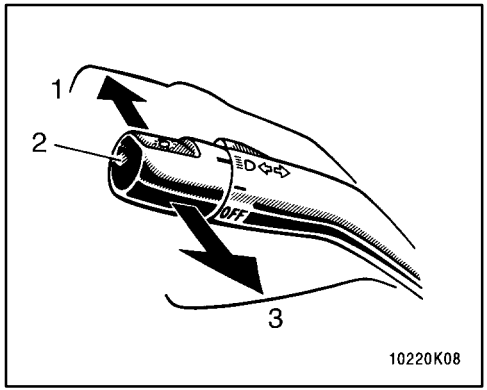

High-Low beams—For high beams, turn the headlights on and push the lever away from you (position 1). Pull the lever toward you (position 2) for low beams.

The headlight high beam indicator light (blue light) on the instrument panel will tell you that the high beams are on.

Flashing the high beam headlights (position 3)—Pull the lever all the way back. The high beam headlights turn off when you release the lever.

You can flash the high beam headlights with the knob turned to “OFF”.

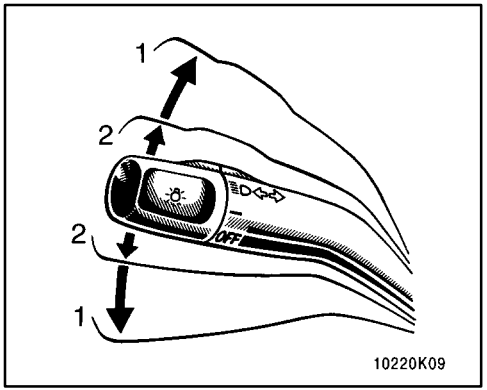

TURN SIGNALS

To signal a turn, push the headlight/ turn signal lever up or down to position 1.

The key must be in the “ON” position.

The lever automatically returns after you make a turn, but you may have to return it by hand after you change lanes.

To signal a lane change, move the lever up or down to the pressure point (position 2) and hold it.

If the turn signal indicator lights (green lights) on the instrument panel flash faster than normal, a front or rear turn signal bulb is burned out.

Emergency flashers

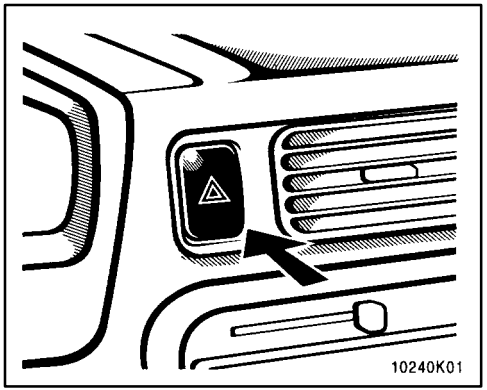

To turn on the emergency flashers, push the switch.

All the turn signal lights will flash. To turn them off, push the switch once again.

Turn on the emergency flashers to warn other drivers if your vehicle must be stopped where it might be a traffic hazard.

Always pull as far off the road as possible.

The turn signal light switch will not work when the emergency flashers are operating.

NOTICE

To prevent the battery from being discharged, do not leave the switch on longer than necessary when the engine is not running.

Instrument panel light control

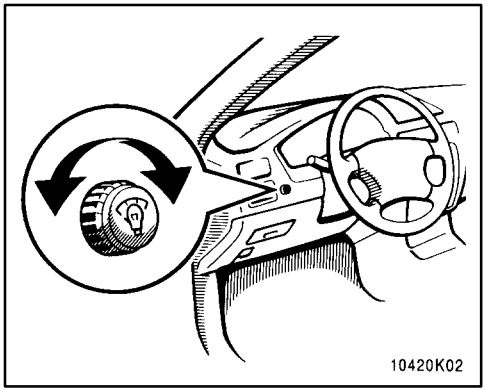

To adjust the brightness of the instrument panel lights, turn the knob.

Interior light

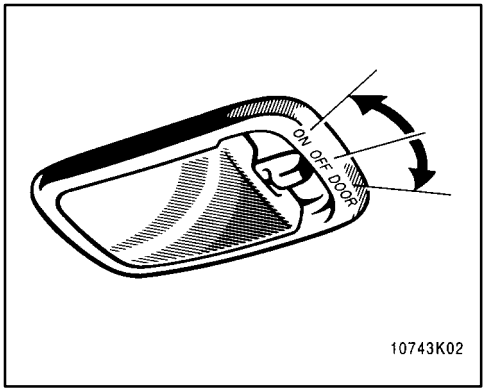

To turn on the interior light, slide the switch.

The interior light switch has the following positions:

“ON”—Keeps the light on all the time.

“OFF”—Turns the light off.

“DOOR”—Turns the light on when any of the doors are opened. The light goes off when all of the doors are closed.

Windshield wipers and washer (intermittent type)

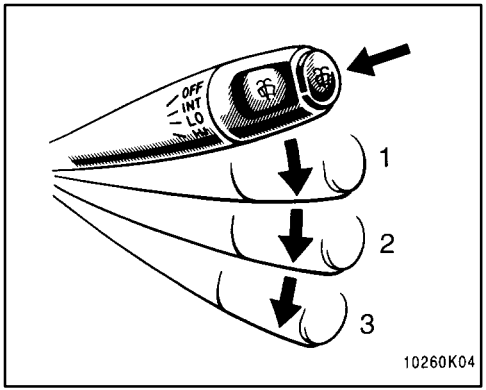

Type A

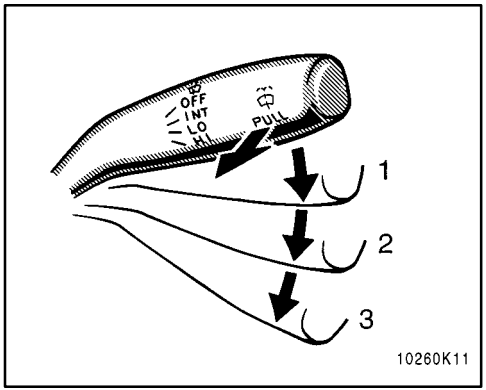

Type B

To turn on the windshield wipers, move the lever to the desired setting.

The key must be in the “ON” position.

Lever position	Speed setting
Position 1	Intermittent
Position 2	Slow
Position 3	Fast

To squirt washer fluid, push the button at the end of the lever (type A) or, pull the lever toward you and release it (type B).

If the windshield wipers are off, they will operate a couple of times after the washer squirts.

For instructions on adding washer fluid, see “Adding washer fluid” in Chapter 7- 3.

In freezing weather, warm the windshield with the defroster before using the washer. This will help prevent washer fluid from freezing on your windshield, which can block your vision.

NOTICE

Do not operate the wipers if the windshield is dry. It may scratch the glass.

Windshield wipers and washer (mist type)

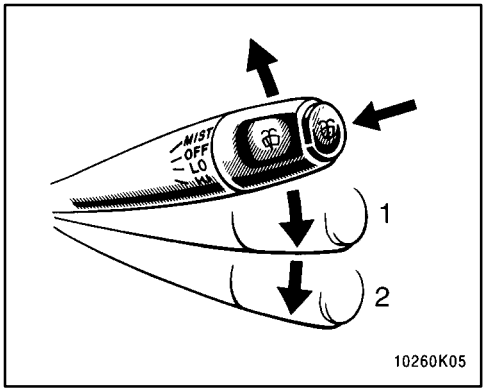

Type A

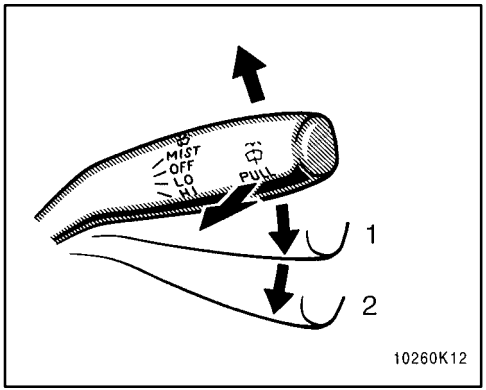

Type B

To turn on the windshield wipers, move the lever to the desired setting.

The key must be in the “ON” position.

Lever position	Speed setting
Position 1	Slow
Position 2	Fast

For a single sweep of the windshield, push the lever up and release it.

To squirt washer fluid, push the button at the end of the lever (type A) or, pull the lever toward you and release it (type B).

For instructions on adding washer fluid, see “Adding washer fluid” in Chapter 7-3.

In freezing weather, warm the windshield with the defroster before using the washer. This will help prevent the washer fluid from freezing on your windshield, which can block your vision.

NOTICE

Do not operate the wipers if the windshield is dry. It may scratch the glass.

Rear window defogger

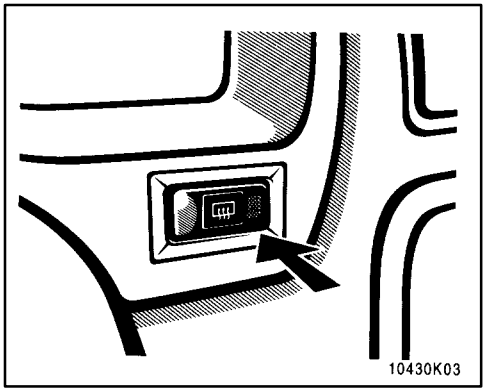

To defog or defrost the rear window, push the switch.

The key must be in the “ON” position.

The thin heater wires on the inside of the rear window will quickly clear the surface. An indicator light will illuminate to indicate the defogger is operating.

Push the switch once again to turn the defogger off.

With timer: The system will automatically shut off after the defogger has operated about 15 minutes.

Make sure you turn the defogger off when the window is clear. Leaving the defogger on for a long time could cause the battery to discharge, especially during stop-and-go driving. The defogger is not designed for drying rain water or for melting snow.

NOTICE

- ***Without timer: To prevent the battery from being discharged, turn the switch on when the engine is running.***
- ***When cleaning the inside of the rear window, be careful not to scratch or damage the heater wires.***

Part 1

OPERATION OF INSTRUMENTS AND CONTROLS—

Chapter 1-5
Gauges, Meters and Service reminder indicators

- Fuel gauge
- Engine coolant temperature gauge
- Tachometer
- Odometer and trip meter
- Service reminder indicators and warning buzzers

Fuel gauge

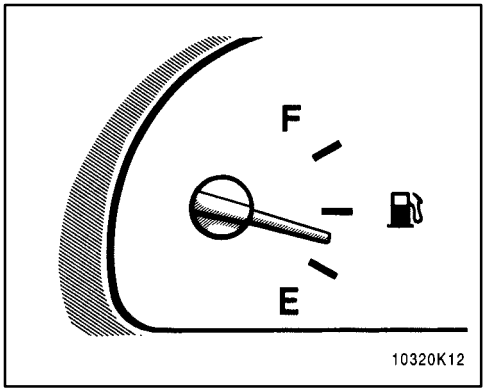

The gauge works when the ignition switch is on and indicates the approximate quantity of fuel remaining in the tank.

Nearly full—Needle at “F”

Nearly empty—Needle at “E”

It is a good idea to keep the tank over 1/4 full.

This fuel gauge has a non-return type needle which remains at the last indicated position when the ignition switch is turned off.

If the fuel level approaches “E”, fill the fuel tank as soon as possible.

If the fuel tank is completely empty, the malfunction indicator lamp comes on. Fill the fuel tank immediately.

The indicator lamp goes off after driving several times. If the indicator lamp does not go off, contact your Toyota dealer as soon as possible.

Engine coolant temperature gauge

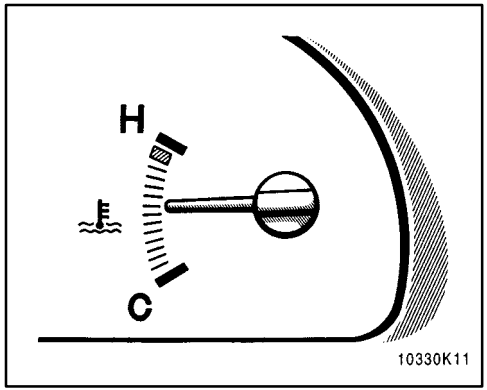

The gauge indicates the engine coolant temperature when the ignition switch is on. The engine operating temperature will vary with changes in weather and engine load.

If the needle moves into the red zone, your engine is too hot. If your vehicle overheats, stop your vehicle and allow the engine to cool.

Your vehicle may overheat during severe operating conditions, such as:

- Driving up a long hill on a hot day.
- Reducing speed or stopping after high speed driving.
- Idling for a long period with the air conditioning on in stop-and-go traffic.

NOTICE

- ***Do not remove the thermostat in the engine cooling system as this may cause the engine to overheat. The thermostat is designed to control the flow of coolant to keep the temperature of the engine within the specified operating range.***
- ***Do not continue driving with an overheated engine. See "If your vehicle overheats" in Part 4.***

Tachometer

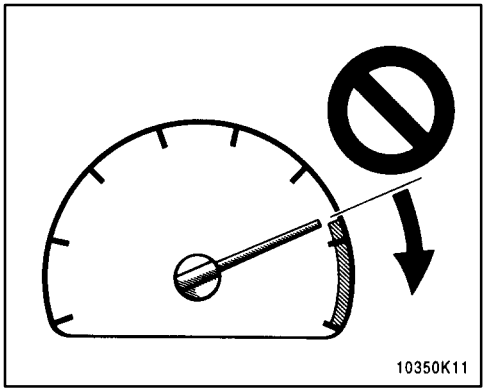

The tachometer indicates engine speed in thousands of rpm (revolutions per minute). Use it while driving to select correct shift points and to prevent engine lugging and overrevving.

Driving with the engine running too fast causes excessive engine wear and poor fuel economy. Remember, in most cases the slower the engine speed, the greater the fuel economy.

NOTICE

Do not let the indicator needle get into the red zone. This may cause severe engine damage.

Odometer and trip meter

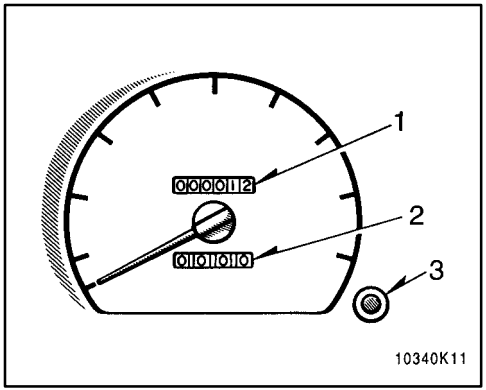

These meters show the running distance.

1. Odometer—It shows the total distance the vehicle has been driven.
2. Trip meter—It shows the distance driven since the last time it was set to zero.

The black digits on white indicate tenths of kilometers or miles.

3. Trip meter reset knob—It resets the trip meter to zero.

To reset the trip meter, push the knob.

Service reminder indicators and warning buzzers

If the indicator or buzzer comes on...		Do this.
(a)	BRAKE (type A)	If parking brake is off, stop and check.
	(type B)	
(b)		Fasten seat belts.
	(Indicator and buzzer)	
(c)		Stop and check.
(d)		Stop and check.
(e)	CHECK	Take vehicle to Toyota dealer.

10302

If the Indicator or buzzer comes on...		Do this.
(f)	ABS (type A)	Take vehicle to Toyota dealer.
	(type B)	
(g)		Close all doors.
(h)		Take vehicle to Toyota dealer immediately.
(i)	Light reminder buzzer	Turn off lights.
(j)	Key reminder buzzer	Remove key.

10302

(a) Brake System Warning Light

This light has the following functions:

Parking brake reminder

If this light is on, make sure the parking brake is fully released. The light should go off.

Low brake fluid level warning

If this light comes on and stays on while you are driving, slow down and pull off the road. Then stop the vehicle carefully. There may be a problem somewhere in the brake system. Check the fluid level of the see-through reservoir.

To make sure the parking brake has not caused the warning light to come on, check to see that the parking brake is fully released.

If the brake fluid level is low...

At a safe place, test your brakes by starting and stopping.

- If you judge that the brakes still work adequately, drive cautiously to your nearest dealer or shop for repairs.
- If the brakes are not working, have the vehicle towed in for repairs. (For towing information, see Part 4.)

CAUTION

It is dangerous to continue driving normally when the brake fluid level is low.

If the brake fluid level is correct...

Have the warning system checked by your Toyota dealer.

(b) Seat Belt Reminder Light and Buzzer

Once the ignition key is turned to “ON” or “START”, the reminder light and buzzer come on if the driver’s seat belt is not fastened. Unless the driver fastens the belt, the light stays on and the buzzer sounds for about 4 to 8 seconds.

(c) Discharge Warning Light

This light warns that the battery is being discharged.

If it comes on while you are driving, there is a problem somewhere in the charging system.

The engine ignition will continue to operate, however, until the battery is discharged. Turn off the air conditioning, blower, radio, etc., and drive directly to the nearest Toyota dealer or repair shop.

NOTICE

Do not continue driving if the engine drive belt is broken or loose.

(d) Low Oil Pressure Warning Light

This light warns that the engine oil pressure is too low.

If it flickers or stays on while you are driving, pull off the road to a safe place and stop the engine immediately. Call a Toyota dealer or qualified repair shop for assistance.

The light may occasionally flicker when the engine is idling or it may come on briefly after a hard stop. There is no cause for concern if it then goes out when the engine is accelerated slightly.

The light may come on when the oil level is extremely low. It is not designed to indicate low oil level, and the oil level must be checked using the level dipstick.

NOTICE

Do not drive the vehicle with the warning light on—even for one block. It may ruin the engine.

(e) Malfunction Indicator Lamp

This lamp comes on in the following cases.

a. The fuel tank is completely empty. (See “Fuel gauge” in Chapter 1-5 for instructions.)

b. There is a problem somewhere in your engine or automatic transmission electrical system.

If it comes on while you are driving in case b, have your vehicle checked/repaired by your Toyota dealer as soon as possible.

(f) “ABS” Warning Light

This light warns that there is a problem somewhere in your anti-lock brake system.

If the light comes on while you are driving, have your vehicle checked by your Toyota dealer as soon as possible.

The light will come on when the ignition key is turned to the “ON” position. After about 3 seconds, the light will go off.

When the “ABS” warning light is on (and the brake system warning light is off), the brake system operates conventionally but without anti-lock function.

(g) Open Door Warning Light

This light remains on until all the doors are completely closed.

(h) SRS Airbag Warning Light

This light will come on when the ignition key is turned to the “ACC” or “ON” position. After about 6 seconds, the light will go off. This means the airbag system is operating properly.

The warning light system monitors the airbag sensor assembly, inflators, warning light, interconnecting wiring and power sources.

If either of the following conditions occurs, this indicates a malfunction somewhere in the parts monitored by the warning light system. Contact your Toyota dealer as soon as possible to service the vehicle.

- The light does not come on when the ignition key is turned to the “ACC” or “ON” position or remains on.
- The light comes on while driving.

(i) Light Reminder Buzzer

This buzzer will sound if the driver’s door is opened with the key removed from the ignition switch and the headlight switch left on.

(j) Key Reminder Buzzer

This buzzer reminds you to remove the key when you open the driver’s door with the ignition key in the “ACC” or “LOCK” position.

CHECKING SERVICE REMINDER INDICATORS

1. Apply the parking brake.
2. Open one of the doors.

The open door warning light should come on.

3. Close the door.

The open door warning light should go off.

4. Turn the ignition key to “ACC”.

The SRS airbag warning light should come on. It goes off after about 6 seconds.

5. Turn the ignition key to “ON”, but do not start the engine.

All the service reminder indicators except the open door warning light and SRS airbag warning light should come on. The “ABS” warning light goes off after about 3 seconds.

If any service reminder indicator or warning buzzer does not function as described above, either the bulb is burned out or the circuit is in need of repair. Have it checked by your Toyota dealer as soon as possible.

Part 1

OPERATION OF INSTRUMENTS AND CONTROLS—

Chapter 1-6
Ignition switch, Transmission and Parking brake

- Ignition switch with steering lock
- Automatic transmission
- Manual transmission
- Parking brake

Ignition switch with steering lock

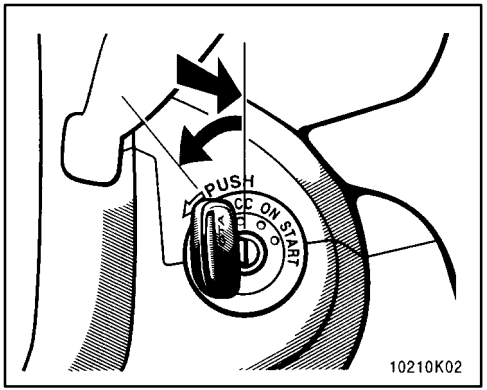

"START"—Starter motor on. The key will return to the "ON" position when released.

For starting tips, see Part 3.

"ON"—Engine on and all accessories on.

This is the normal driving position.

"ACC"—Accessories such as the radio operate, but the engine is off.

If you leave the key in the "ACC" or "LOCK" position and open the driver's door, a buzzer will remind you to remove the key.

"LOCK"—Engine is off and the steering wheel is locked. The key can be removed only at this position.

You must push in the key to turn the key from "ACC" to the "LOCK" position. On vehicles with an automatic transmission, the selector lever must be in the "P" position before pushing the key.

When starting the engine, the key may seem stuck at the "LOCK" position. To free it, first be sure the key is pushed all the way in, and then rock the steering wheel slightly while turning the key gently.

CAUTION

For manual transmission:
Never remove the key when the vehicle is moving, as this will lock the steering wheel and result in loss of steering control.

NOTICE

Do not leave the key in the "ON" position if the engine is not running. The battery will discharge and the ignition could be damaged.

Automatic transmission (3-speed type)

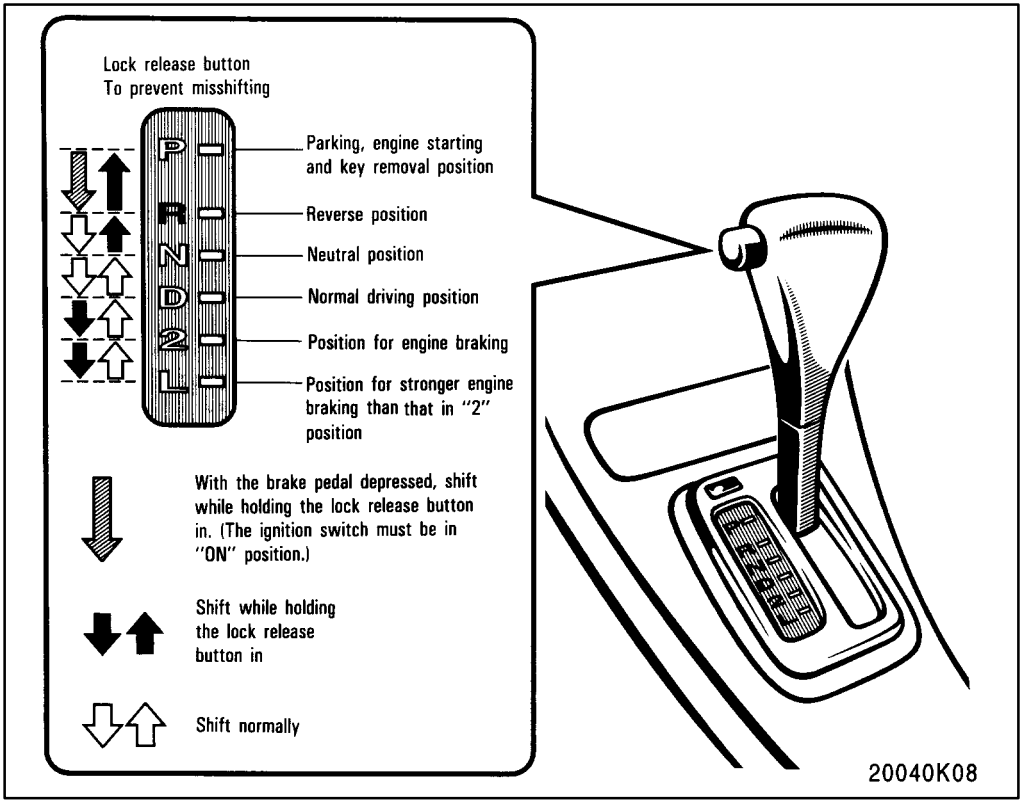

Your automatic transmission has a shift lock system to minimize the possibility of incorrect operation. This means you can only shift out of "P" position when the brake pedal is depressed (with the ignition switch in "ON" position and the lock release button depressed).

(a) Normal driving

1. Start the engine as instructed in "How to start the engine" in Part 3. The transmission must be in "P" or "N".
2. With your foot holding down the brake pedal, shift the selector lever to "D".

In "D" position, the automatic transmission system will select the most suitable gear for running conditions such as normal cruising, hill climbing, hard towing, etc.

⚠ CAUTION

Never put your foot on the accelerator pedal while shifting.

3. Release the parking brake and brake pedal. Depress accelerator pedal slowly for smooth starting.

(b) Using engine braking

To use engine braking, you can downshift the transmission as follows:

- Shift into the “2” position when the vehicle speed is lower than the maximum allowable speed for second gear. The transmission will downshift to the second gear.
- Shift into the “L” position when the vehicle speed is lower than the maximum allowable speed for “L” position. The transmission will downshift to the first gear and more engine braking will be applied.

MAXIMUM ALLOWABLE SPEEDS

“2” . . . . . 100 km/h (62 mph)
“L” . . . . . 55 km/h (34 mph)

CAUTION

Be careful when downshifting on a slippery surface. Abrupt shifting could cause the vehicle to spin or skid.

NOTICE

◆***Be careful not to overrev the engine. Watch the tachometer to keep engine rpm from going into the red zone. The maximum allowable speed (approximate) for each position is given above for your reference.***

◆***Do not continue hill climbing for a long time in the “2” or “L” position. This may cause severe automatic transmission damage from overheating. To prevent such damage, use “D” position for hill climbing or hard towing.***

(c) Backing up

1. Bring the vehicle to a complete stop.
2. With the brake pedal held down with your foot, shift the selector lever to the “R” position.

NOTICE

Never shift into reverse while the vehicle is moving.

(d) Parking

1. Bring the vehicle to a complete stop.
2. Pull the parking brake lever up fully to securely apply the parking brake.
3. With the brake pedal pressed down, shift the selector lever to the “P” position.

CAUTION

While the vehicle is moving, never attempt to move the selector lever into “P” position under any circumstances. Serious mechanical damage and loss of vehicle control may result.

(e) Good driving practice

CAUTION

Always keep your foot on the brake pedal while stopped with the engine running. This prevents the vehicle from creeping.

NOTICE

Do not hold the vehicle on an upgrade with the accelerator pedal. It can cause the transmission to overheat. Always use the brake pedal or parking brake.

(f) If you cannot shift the selector lever out of “P” position

If you cannot shift the selector lever from the “P” position even though the brake pedal is depressed, use the shift lock override button. For instructions, see “If you cannot shift automatic transmission selector lever” in Part 4.

Automatic transmission (4-speed type)

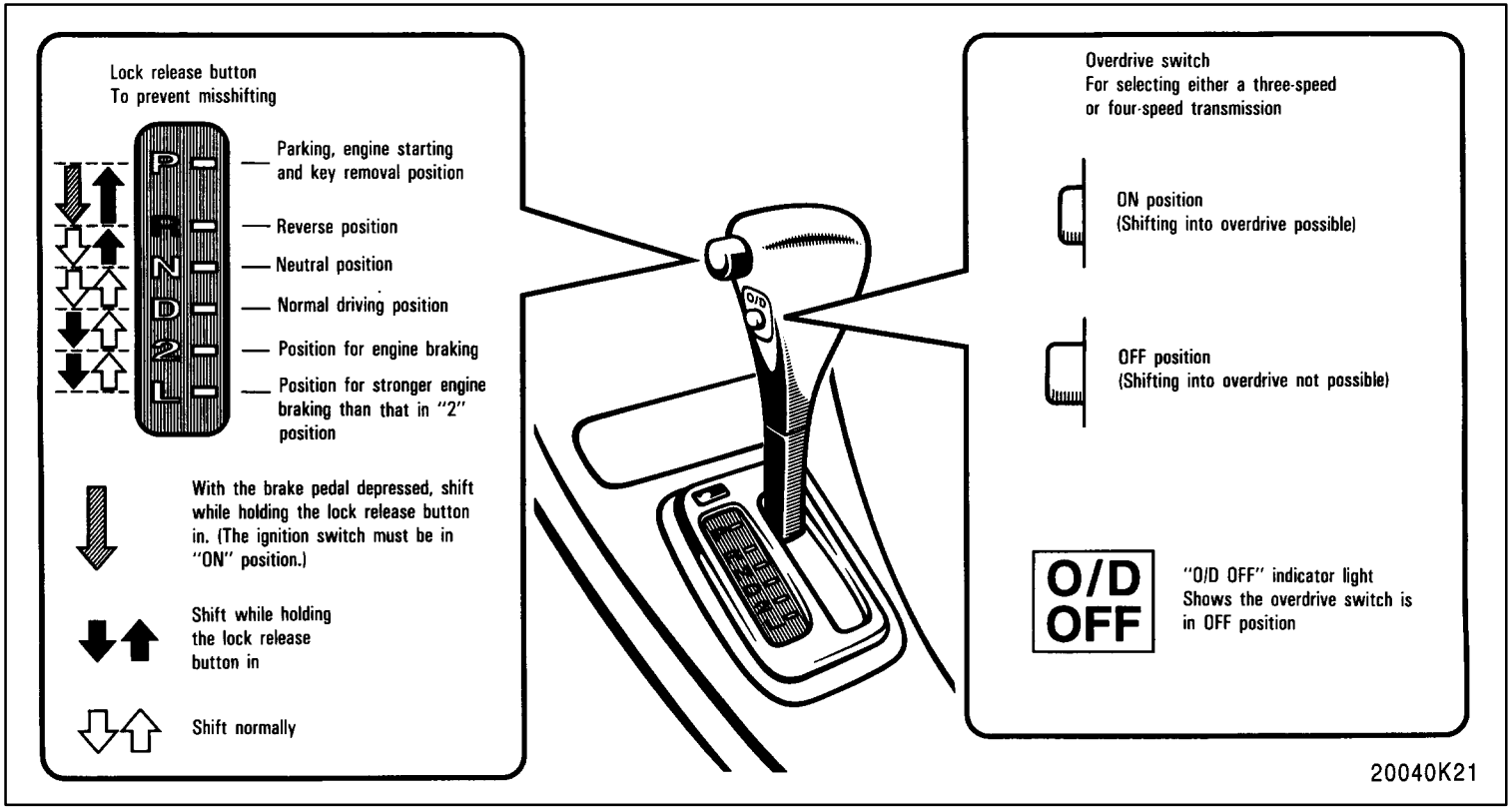

Your automatic transmission has a shift lock system to minimize the possibility of incorrect operation. This means you can only shift out of “P” position when the brake pedal is depressed (with the ignition switch in “ON” position and the lock release button depressed).

(a) Normal driving

1. Start the engine as instructed in “How to start the engine” in Part 3. The transmission must be in “P” or “N”.

2. With your foot holding down the brake pedal, shift the selector lever to “D”.

In “D” position, the automatic transmission system will select the most suitable gear for running conditions such as normal cruising, hill climbing, hard towing, etc.

Always turn the overdrive switch on for better fuel economy and quieter driving. If the engine coolant temperature is low, the transmission will not shift into the overdrive gear even with the overdrive switch on.

CAUTION

Never put your foot on the accelerator pedal while shifting.

3. Release the parking brake and brake pedal. Depress the accelerator pedal slowly for smooth starting.

(b) Using engine braking

To use engine braking, you can downshift the transmission as follows:

- Turn off the overdrive switch. (This is effective only when you are driving in the “D” position.) The “O/D OFF” indicator light will come on and the transmission will downshift to the third gear.
- Shift into the “2” position when the vehicle speed is lower than the maximum allowable speed for second gear. The transmission will downshift to the second gear and more engine braking will be obtained.
- Shift into the “L” position when the vehicle speed is lower than the maximum allowable speed for “L” position. The transmission will downshift to the first gear and maximum engine braking will be applied.

MAXIMUM ALLOWABLE SPEEDS

“2” . . . . . 96 km/h (59 mph)
“L” . . . . . 53 km/h (32 mph)

CAUTION

Be careful when downshifting on a slippery surface. Abrupt shifting could cause the vehicle to spin or skid.

NOTICE

- ***Be careful not to overrev the engine. Watch the tachometer to keep engine rpm from going into the red zone. The maximum allowable speed (approximate) for each position is given above for your reference.***
- ***Do not continue hill climbing for a long time in the “2” or “L” position. This may cause severe automatic transmission damage from overheating. To prevent such damage, use “D” position for hill climbing or hard towing.***

(c) Backing up

1. Bring the vehicle to a complete stop.

2. With the brake pedal held down with your foot, shift the selector lever to the “R” position.

NOTICE

Never shift into reverse while the vehicle is moving.

(d) Parking

1. Bring the vehicle to a complete stop.
2. Pull the parking brake lever up fully to securely apply the parking brake.
3. With the brake pedal pressed down, shift the selector lever to the “P” position.

CAUTION

While the vehicle is moving, never attempt to move the selector lever into “P” position under any circumstances. Serious mechanical damage and loss of vehicle control may result.

(e) Good driving practice

If the transmission is repeatedly upshifted and downshifted between third gear and overdrive when climbing a gentle slope, the overdrive switch should be turned off.

Be sure to turn the switch on immediately afterward.

CAUTION

Always keep your foot on the brake pedal while stopped with the engine running. This prevents the vehicle from creeping.

NOTICE

Do not hold the vehicle on an upgrade with the accelerator pedal. It can cause the transmission to overheat. Always use the brake pedal or parking brake.

(f) If you cannot shift the selector lever out of “P” position

If you cannot shift the selector lever from the “P” position even though the brake pedal is depressed, use the shift lock override button. For instructions, see “If you cannot shift automatic transmission selector lever” in Part 4.

Manual transmission

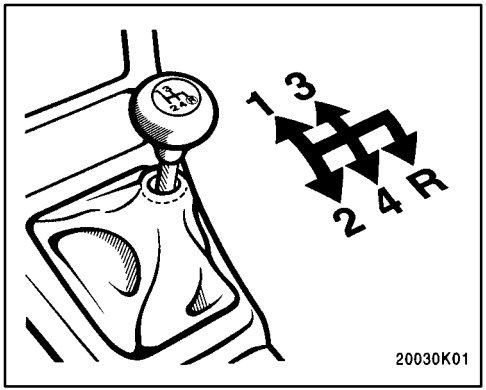

4-speed type

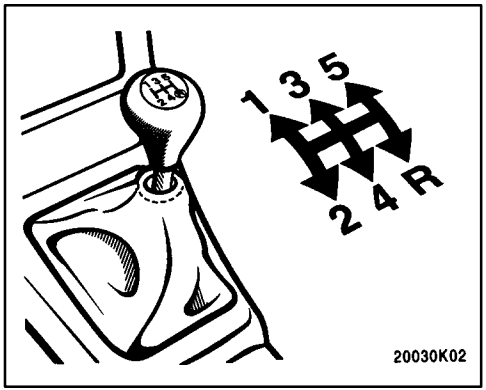

5-speed type

The shift pattern is as shown above.

Press the clutch pedal down fully while shifting, and then release it slowly. Do not rest your foot on the pedal while driving, because it will cause clutch trouble. And do not use the clutch to hold the vehicle when stopped on an uphill grade—use the parking brake.

Recommended shifting speeds

The transmission is fully synchronized and upshifting or downshifting is easy.

For the best compromise between fuel economy and vehicle performance, you should upshift or downshift at the following speeds:

4-speed

gear	km/h (mph)
1 to 2 or 2 to 1	24 (15)
2 to 3 or 3 to 2	40 (25)
3 to 4 or 4 to 3	64 (40)

5-speed

gear	km/h (mph)
1 to 2 or 2 to 1	24 (15)
2 to 3 or 3 to 2	40 (25)
3 to 4 or 4 to 3	64 (40)
4 to 5 or 5 to 4	72 (45)

Downshift to the appropriate gear if acceleration is needed when you are cruising below the above downshifting speeds.

Upshift too soon or downshifting too late will cause lugging, and, possibly, pinging. Regularly revving the engine to maximum speed in each gear will cause excessive engine wear and high fuel consumption.

Maximum allowable speeds

To get on a highway or to pass slower traffic, maximum acceleration may be necessary. Make sure you observe the following maximum allowable speeds in each gear:

4-speed

gear	km/h (mph)
1	48 (30)
2	90 (56)
3	139 (86)

5-speed

gear	km/h (mph)
1	46 (29)
2	85 (53)
3	132 (82)
4	184 (114)

NOTICE

Do not downshift if you are going faster than the maximum allowable speed for the next lower gear.

Good driving practice

If it is difficult to shift into reverse, put the transmission in neutral, release the clutch pedal momentarily, and then try again.

CAUTION

Be careful when downshifting on a slippery surface. Abrupt shifting could cause the vehicle to spin or skid.

NOTICE

Make sure the vehicle is completely stopped before shifting into reverse.

Parking brake

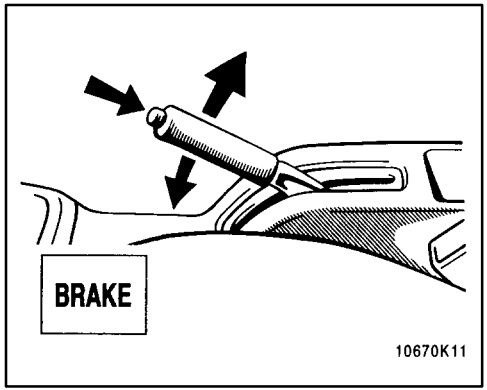

Type A

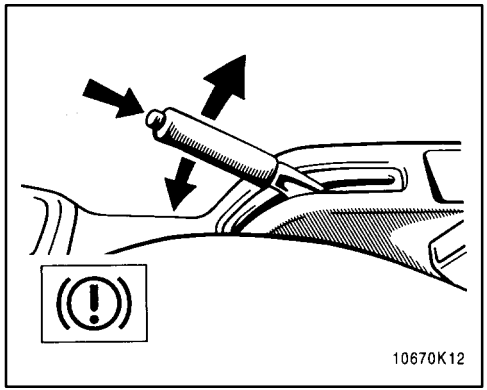

Type B

When parking, firmly apply the parking brake to avoid inadvertent creeping.

To set: Pull up the lever.

To release: Pull up the lever slightly, press the thumb button, and lower.

To remind you that the parking brake is set, the parking brake reminder light in the instrument panel remains on until you release the parking brake.

CAUTION

Before driving, be sure the parking brake is fully released and the parking brake reminder light is off.

Part 1

OPERATION OF INSTRUMENTS AND CONTROLS—

Chapter 1-7
Car audio system and Air conditioning system

Car audio system

- Reference
- Using your audio system: some basics
- Using your audio system: controls and features
- Car audio system operating hints

Air conditioning system

- Controls
- Air flow selector settings
- Operating tips
- Side vents

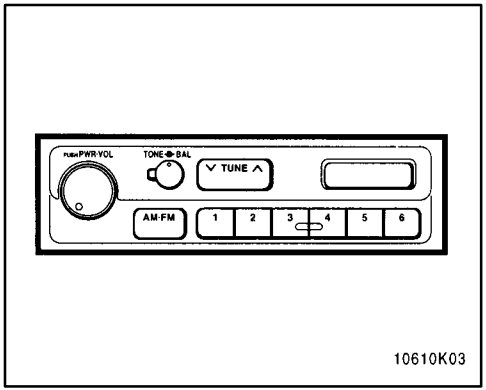

Type 1-1: AM·FM ETR radio

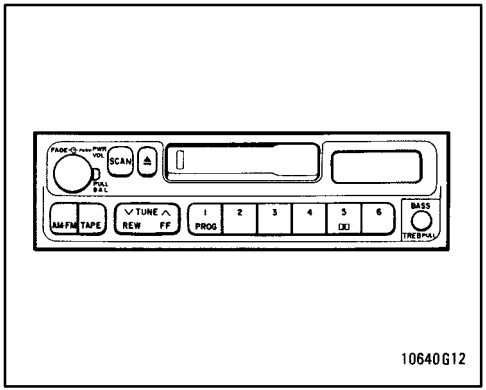

Type 2: AM·FM ETR radio/cassette player

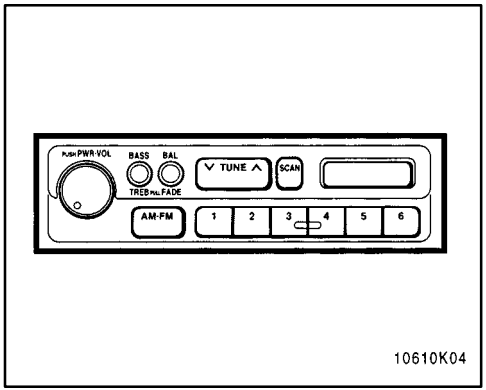

Type 1-2: AM·FM ETR radio

—Using your audio system: some basics

This section describes some of the basic features on Toyota audio systems. Some information may not pertain to your system.

Your audio system works when the ignition key is in the “ACC” or “ON” position.

TURNING THE SYSTEM ON AND OFF

Push “PWR·VOL” or “PWR/VOL” to turn the audio system on and off.

Push “AM·FM” or “TAPE” to turn on that function without pushing “PWR·VOL” or “PWR/VOL”.

You can turn on the cassette player by inserting a cassette tape.

You can turn off the cassette player by ejecting the cassette tape. If the audio system was previously off, then the entire audio system will be turned off when you eject the cassette tape. If the radio was previously on, it will come on again.

SWITCHING BETWEEN FUNCTIONS

Push “AM·FM” or “TAPE” if the system is already on but you want to switch from one function to another.

TONE AND BALANCE

For details about your system’s tone and balance controls, see the description of your own system.

Tone

How good an audio program sounds to you is largely determined by the mix of the treble and bass levels. In fact, different kinds of music and vocal programs usually sound better with different mixes of treble and bass.

Balance

A good balance of the left and right stereo channels and of the front and rear sound levels is also important.

Keep in mind that if you are listening to a stereo recording or broadcast, changing the right/left balance will increase the volume of one group of sounds while decreasing the volume of another.

YOUR RADIO ANTENNA

To lower a manual antenna, carefully push it down.

NOTICE

To prevent damage to the antenna, make sure it is retracted before driving your Toyota through an automatic car wash.

YOUR CASSETTE PLAYER

When you insert a cassette, the exposed tape should be to the right.

NOTICE

Do not oil any part of the player and do not insert anything other than cassette tapes into the slot, or the tape player may be damaged.

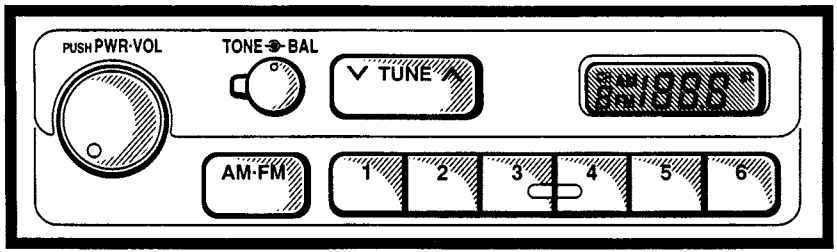

10610K05

Details of specific buttons, controls, and features are described in the alphabetical listing that follows.

▶**Type 1-2**

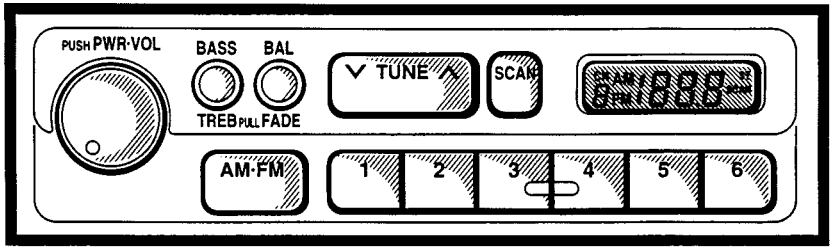

10610K06

Details of specific buttons, controls, and features are described in the alphabetical listing that follows.

1 2 3 4 5 6 (Preset buttons)

These buttons are used to preset and tune in radio stations.

To preset a station to a button: Tune in the desired station (see “TUNE”). Push and hold down the button until you hear a beep—this will set the station to the button. The button number will appear on the display.

To tune in to a preset station: Push the button for the station you want. The button number and station frequency will appear on the display.

These systems can store one AM and one FM station for each button. The preset station memory will be canceled out if the power source is interrupted (battery disconnected or fuse blown).

AM·FM

Push “AM·FM” to switch between the AM and FM bands. “AM” or “FM” will appear on the display.

If the audio system is off, you can turn on the radio by pushing “AM·FM”.

BAL (Balance)

This knob lets you adjust the balance between the right and left speakers.

Type 1-1—Move the “BAL” ring around “TONE” to adjust the right/left balance.

Type 1-2—Push “BAL/FADE” so that it pops out of its retracted position. Turn the knob to adjust the balance. Push the knob back into its retracted position.

BASS

Type 1-2 only

This knob lets you adjust the bass level.

Push “BASS/TREB” so that it pops out of its retracted position. Turn the knob to adjust the bass. Push the knob back into its retracted position.

FADE

Type 1-2 only

This knob lets you adjust the balance between the front and rear speakers.

Push “BAL/FADE” so that it pops out of its retracted position. Pull out the knob. Turn the knob to adjust the front/rear balance. Push the knob back into its retracted position.

PWR·VOL (Power·Volume)

Push “PWR·VOL” to turn the audio system on and off. Turn the “PWR·VOL” knob to adjust the volume.

SCAN

Type 1-2 only

When you push “SCAN”, the radio finds the next station up the station band, plays it for 5 seconds, and then scans again. To select a station, push “SCAN” a second time.

ST (Stereo reception) display

Your radio automatically changes to stereo reception when a stereo broadcast is received. “ST” appears on the display. If the signal becomes weak, the radio reduces the amount of channel separation to prevent the weak signal from creating noise. If the signal becomes extremely weak, the radio switches from stereo to mono reception.

TONE

Type 1-1 only

Turn “TONE” to adjust the tone.

TREB (Treble)

Type 1-2 only

This knob lets you adjust the treble level.

Push “BASS/TREB” so that it pops out of its retracted position. Pull out the knob. Turn the knob to adjust the treble. Push the knob back into its retracted position.

TUNE

Tuning

Your Toyota has an electronic tuning radio (ETR).

Push and release the “∧” (up) or “∨” (down) side of “TUNE” to step up or down the station band. If you hear a beep, you held the button too long and the radio will go into the seek mode.

Seeking

In the seek mode, the radio finds and plays the next station up or down the station band.

To seek a station, push and hold the “∧” or “∨” side of “TUNE” until you hear a beep. Do this again to find another station.

▶ **Type 2**

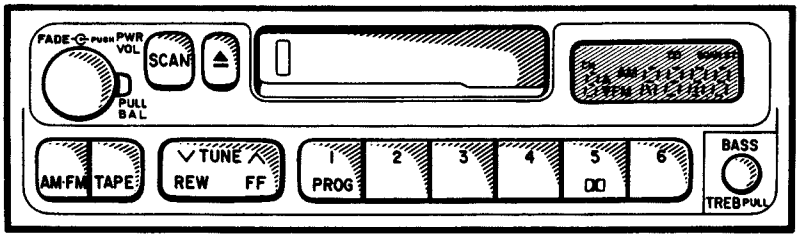

10640G16

Details of specific buttons, controls, and features are described in the alphabetical listing that follows.

1 2 3 4 5 6 (Preset buttons)

These buttons are used to preset and tune in radio stations.

To preset a station to a button: Tune in the desired station (see “TUNE”). Push and hold down the button until you hear a beep—this will set the station to the button. The button number will appear on the display.

To tune in to a preset station: Push the button for the station you want. The button number and station frequency will appear on the display.

These systems can store one AM and one FM station for each button. The preset station memory will be canceled out if the power source is interrupted (battery disconnected or fuse blown).

⏏ (Eject button)

Push this button to eject a cassette.

After you turn the ignition to “LOCK”, you will be able to eject a cassette but you will not be able to reinsert it.

AM·FM

Push “AM·FM” to switch between the AM and FM bands. “AM” or “FM” will appear on the display.

If the audio system is off, you can turn on the radio by pushing “AM·FM”. Also, push the “AM·FM” button to switch from cassette operation to radio operation.

BAL (Balance)

This knob lets you adjust the balance between the right and left speakers.

Pull out “PWR/VOL/BAL”. Turn the knob to adjust the balance. Push the knob back into its normal position.

BASS

This knob lets you adjust the bass level.

Push “BASS/TREB” so that it pops out of its retracted position. Turn the knob to adjust the bass. Push the knob back into its retracted position.

Dolby® NR*

If you are listening to a tape that was recorded with Dolby® Noise Reduction, push the button marked with the double-D symbol. The double-D symbol will appear on the display. Push the button again to turn off Dolby® NR.

The Dolby NR mode reduces tape noise by about 10 dB. For best sound reproduction, play your tapes with this button on or off according to the mode used for recording the tape.

*: Dolby noise reduction manufactured under license from Dolby Laboratories Licensing Corporation. “DOLBY” and the double-D symbol are trademarks of Dolby Laboratories Licensing Corporation.

FADE

Move the “FADE” ring around “PWR/VOL” to adjust the front/rear balance.

PROG (Program)

Push “PROG” to select the other side of a cassette tape. The display indicates which side is currently selected (“∧” indicates top side, “∨” indicates bottom side).

Auto-reverse feature—After the cassette player reaches the end of a tape side, it automatically reverses and begins to play the other side. This is true whether the cassette was playing or fast forwarding.

PWR/VOL (Power/Volume)

Push “PWR/VOL” to turn the audio system on and off. Turn the “PWR/VOL” knob to adjust the volume.

REW/FF (Rewind/Fast forward)

Push the “FF” side of the button to fast forward a cassette tape. “FF” will appear on the display. Push the “REW” side to rewind a tape. “REW” will appear on the display.

To stop the tape while it is fast forwarding, push “FF” or “TAPE”; to stop the tape while it is rewinding, push “REW” or “TAPE”. The tape will immediately begin to play.

If a tape side rewinds completely, the cassette player will stop and then play that same side. If a tape fast forwards completely, the cassette player will play the other side of the tape, using the auto-reverse feature.

SCAN

You can either scan all the frequencies on a band or scan only the preset stations for that band.

To scan the preset stations: Quickly push and release “SCAN”. If you hear a beep, you held the button too long, and the radio will scan all the frequencies. The radio will tune in the next preset station up the band, stay there for a few seconds, and then move to the next preset station. To select a station, push “SCAN” a second time.

To scan all the frequencies: Push “SCAN” until you hear a beep. The radio will find the next station up the station band, stay there for a few seconds, and then scan again. To select a station, push “SCAN” a second time.

ST (Stereo reception) display

Your radio automatically changes to stereo reception when a stereo broadcast is received. “ST” appears on the display. If the signal becomes weak, the radio reduces the amount of channel separation to prevent the weak signal from creating noise. If the signal becomes extremely weak, the radio switches from stereo to mono reception.

TAPE

Push “TAPE” to switch from radio operation to cassette operation. If the audio system is off, you can turn on the cassette player by pushing “TAPE”. In both cases, a cassette must already be loaded in the player.

TREB (Treble)

This knob lets you adjust the treble level.

Push “BASS/TREB” so that it pops out of its retracted position. Pull out the knob. Turn the knob to adjust the treble. Push the knob back into its retracted position.

TUNE

Tuning

Your Toyota has an electronic tuning radio (ETR).

Push and release the “∧” (up) or “∨” (down) side of “TUNE” to step up or down the station band. If you hear a beep, you held the button too long and the radio will go into the seek mode.

Seeking

In the seek mode, the radio finds and plays the next station up or down the station band.

To seek a station, push and hold the “∧” or “∨” side of “TUNE” until you hear a beep. Do this again to find another station.

—Car audio system operating hints

ILLUMINATION CONTROL LOGIC

On some audio-units, when the instrument panel lights are on, the letters on operable buttons of the mode in current use light up together with the mode selection and eject buttons.

RADIO RECEPTION

Usually, a problem with radio reception does not mean there is a problem with your radio—it is just the normal result of conditions outside the vehicle.

For example, nearby buildings and terrain can interfere with FM reception. Power lines or telephone wires can interfere with AM signals. And of course, radio signals have a limited range, and the farther you are from a station, the weaker its signal will be. In addition, reception conditions change constantly as your vehicle moves.

Here are some common reception problems that probably do not indicate a problem with your radio:

FM

Fading and drifting stations—Generally, the effective range of FM is about 40 km (25 miles). Once outside this range, you may notice fading and drifting, which increase with the distance from the radio transmitter. They are often accompanied by distortion.

Multi-path—FM signals are reflective, making it possible for two signals to reach your antenna at the same time. If this happens, the signals will cancel each other out, causing a momentary flutter or loss of reception.

Static and fluttering—These occur when signals are blocked by buildings, trees, or other large objects. Increasing the bass level may reduce static and fluttering.

Station swapping—If the FM signal you are listening to is interrupted or weakened, and there is another strong station nearby on the FM band, your radio may tune in the second station until the original signal can be picked up again.

AM

Fading—AM broadcasts are reflected by the upper atmosphere—especially at night. These reflected signals can interfere with those received directly from the radio station, causing the radio station to sound alternately strong and weak.

Station interference—when a reflected signal and a signal received directly from a radio station are very nearly the same frequency, they can interfere with each other, making it difficult to hear the broadcast.

Static—AM is easily affected by external sources of electrical noise, such as high tension power lines, lightening, or electrical motors. This results in static.

CARING FOR YOUR CASSETTE PLAYER AND TAPES

For high performance from your cassette player and tapes:

Clean the tape head and other parts regularly.

- A dirty tape head or tape path can decrease sound quality and tangle your cassette tapes. The easiest way to clean them is by using a cleaning tape.

Use high-quality cassettes.

- Low-quality cassette tapes can cause many problems, including poor sound, inconsistent playing speed, and constant auto-reversing. They can also get stuck or tangled in the cassette player.
- Do not use a cassette if it has been damaged or tangled or if its label is peeling off.
- Do not leave a cassette in the player if you are not listening to it, especially if it is hot outside.
- Store cassettes in their cases and out of direct sunlight.
- Avoid using cassettes with a total playing time longer than 100 minutes (50 minutes per side). The tape used in these cassettes is thin and could get stuck or tangled in the cassette player.

Air conditioning system—
—Controls

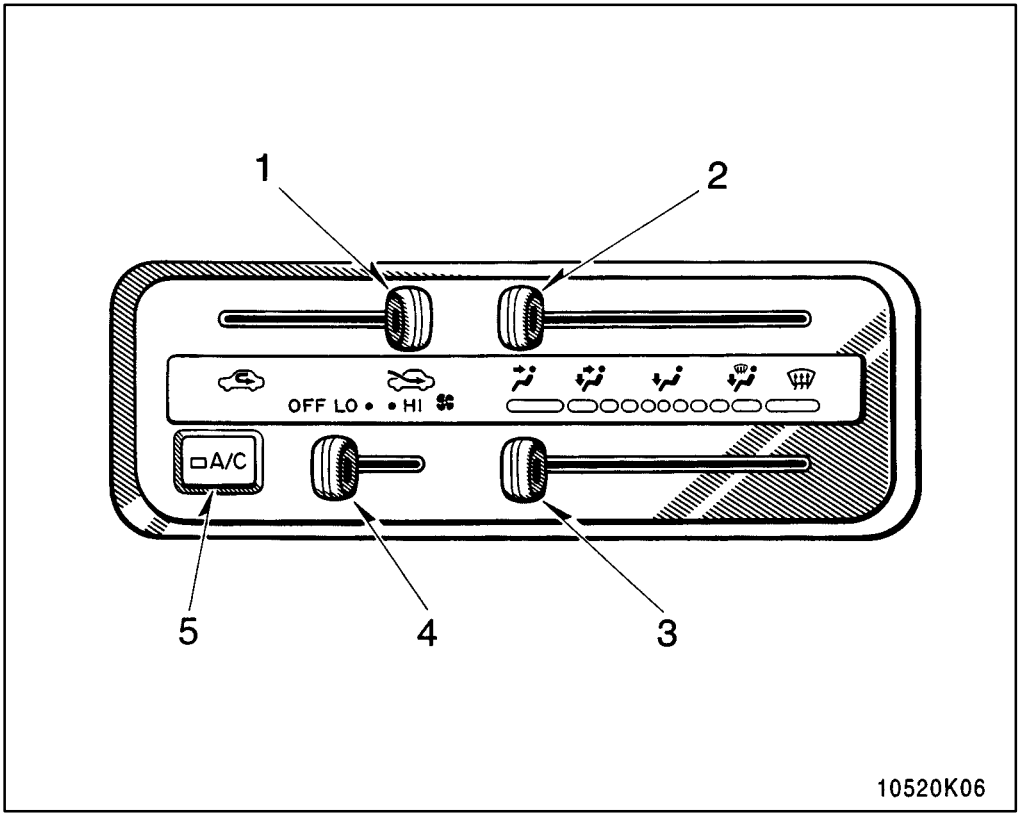

1. Air Intake Selector
2. Air Flow Selector
3. Temperature Selector
4. Fan Speed Selector
5. “A/C” Button (on some models)

Fan speed selector

Move the lever to adjust the fan speed—to the right to increase, to the left to decrease.

Temperature selector

Move the lever to adjust the temperature—to the right to warm, to the left to cool.

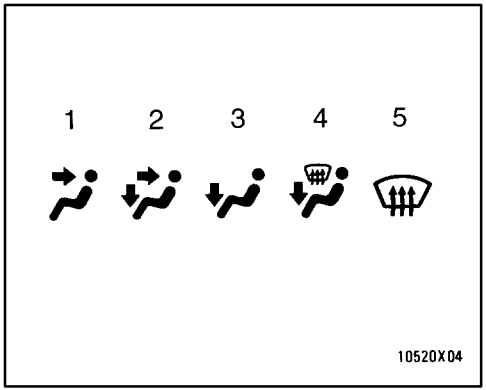

Air flow selector

Move the lever to select the vents used for air flow.

1. Panel—Air flows mainly from the instrument panel vents.

2. Bi-level —Air flows from both the floor vents and the instrument panel vents.

3. Floor—Air flows mainly from the floor vents.

4. Floor/Windshield—Air flows mainly from the floor vents and windshield vents.

5. Windshield—Air flows mainly from the windshield vents.

For details about air flow selector settings, see the illustration after “A/C” button.

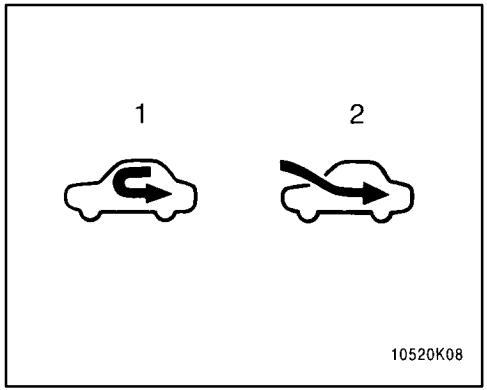

Air intake selector

Move the lever to select the air source.

1. Recirculate—Recirculates the air inside the vehicle.

2. Fresh—Draws outside air into the system.

“A/C” button

To turn on the air conditioning, press the “A/C” button. The “A/C” button indicator will come on. To turn the air conditioning off, press the button again.

If the “A/C” button indicator flashes, there is a problem in the air conditioning system and the air conditioning automatically shuts off. If this happens, take your vehicle to a Toyota dealer for service.

—Air flow selector settings

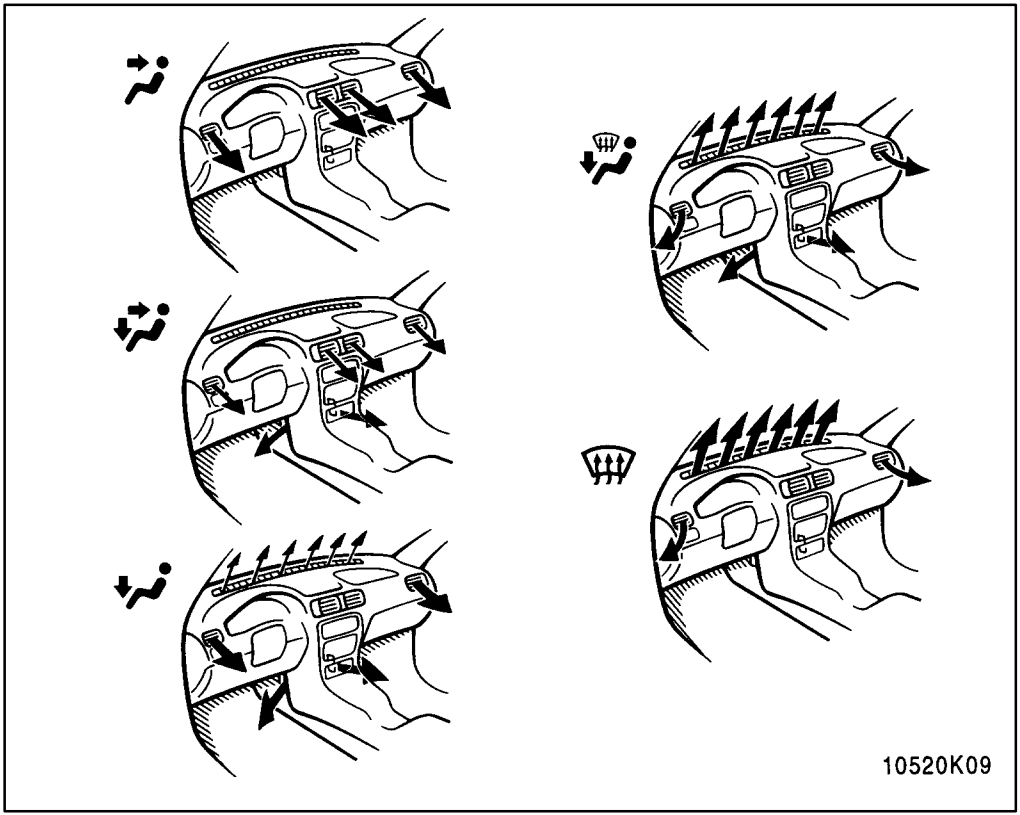

—Operating tips

- To cool off your Toyota after it has been parked in the hot sun, drive with the windows open for a few minutes. This vents the hot air, allowing the air conditioning to cool the interior more quickly.
- Make sure the air intake grilles in front of the windshield are not blocked (by leaves or snow, for example).
- On humid days, do not blow cold air on the windshield. The windshield could fog up because of the difference in air temperature on the inside and outside of the windshield.
- Keep the area under the front seats clear to allow air to circulate throughout the vehicle.
- On cold days, move the fan speed to “HI” for a minute to help clear the intake ducts of snow or moisture. This can reduce the amount of fogging on the windows.

Heating

For best results, set controls to:

Fan speed—Any setting except “OFF”
Temperature—Towards **WARM** (red zone)
Air intake—**FRESH** (outside air)
Air flow—**FLOOR**
Air conditioning—**OFF**

- For quick heating, select recirculated air for a few minutes. To keep the windows from fogging, select fresh after the vehicle interior has been warmed.
- Press the “A/C” button on for dehumidified heating.
- Choose floor/windshield air flow to heat the vehicle interior while defrosting or defogging the windshield.

Air conditioning

For best results, set controls to:

Fan speed—Any setting except “OFF”
Temperature—Towards **COLD** (blue zone)
Air intake—**FRESH** (outside air)
Air flow—**PANEL**
Air conditioning—**ON**

- For quick cooling, move the air intake selector to recirculate for a few minutes.

Ventilation

For best results, set controls to:

Fan speed—Any setting except “OFF”
Temperature—Towards **COLD** (blue zone)
Air intake—**FRESH** (outside air)
Air flow—**PANEL**
Air conditioning—**OFF**

Defogging

The inside of the windshield

For best results, set controls to:

Fan speed—Any setting except “OFF”
Temperature—Towards **WARM** (red zone) to heat; **COLD** (blue zone) to cool
Air intake—**FRESH** (outside air)
Air flow—**WINDSHIELD**
Air conditioning—**ON**

- On humid days, do not blow cold air on the windshield—the difference between the outside and inside temperatures could make the fogging worse.

Defrosting

The outside of the windshield

For best results, set controls to:

Fan speed—Any setting except “OFF”
Temperature—Towards **WARM** (red zone)
Air intake—**FRESH** (outside air)
Air flow—**WINDSHIELD**
Air conditioning—**OFF**

- To heat the vehicle interior while defrosting the windshield, choose floor/windshield air flow.

—Side vents

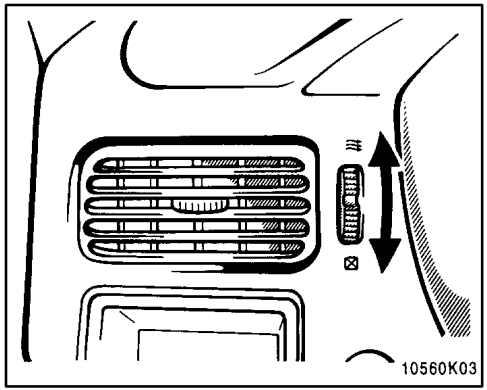

If air flow control is not satisfactory, check the side vents. The side vents may be opened or closed as shown.

Part 1

OPERATION OF INSTRUMENTS AND CONTROLS—

Chapter 1-8

Other equipment

- Clock
- Cigarette lighter and ashtray
- Glovebox
- Cup holder
- Floor mat

Clock

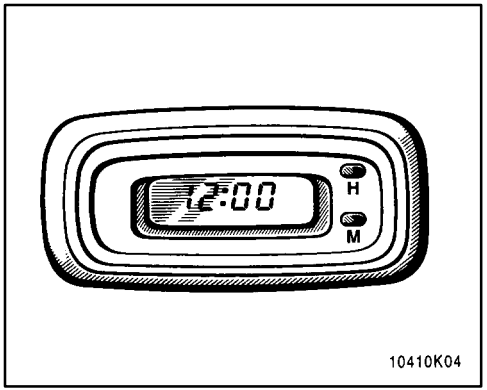

The digital clock indicates the time.

The key must be in the “ACC” or “ON” position.

To reset the hour: Push the “H” button.

To reset the minutes: Push the “M” button.

Once the electrical power source has been disconnected from the clock, the time is automatically set to 1:00 (one o’clock).

When the instrument panel lights are turned on, the brightness of the time indication will be reduced.

Cigarette lighter and ashtray

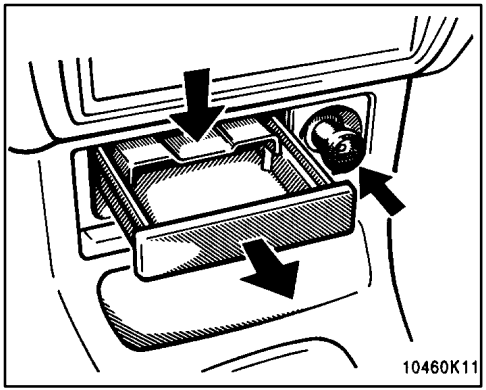

CIGARETTE LIGHTER

To use the cigarette lighter, press it in. When it becomes heated, it automatically pops out ready for use.

If the engine is not running, the key must be in the “ACC” position.

Do not hold the cigarette lighter pressed in.

Use a Toyota genuine cigarette lighter or equivalent for replacement.

CAUTION

To reduce the chance of injury in case of an accident or sudden stop while driving, always push the ashtray back in completely after using.

ASHTRAY

To use the ashtray, pull it out.

When finished with your cigarette, thoroughly extinguish it in the ashtray to prevent other cigarette butts from catching fire. After using the ashtray, push it back in completely.

To remove the ashtray, press down on the lock spring plate and pull out.

Glovebox

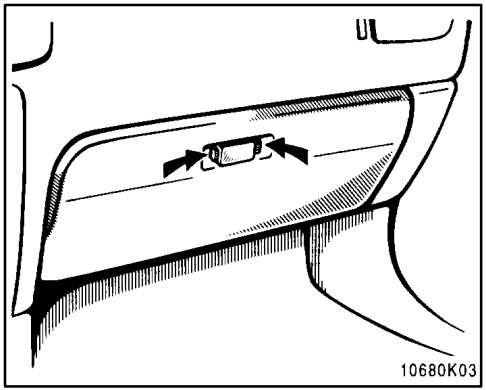

To open the glovebox door, compress the lock release buttons.

CAUTION

To reduce the chance of injury in case of an accident or sudden stop, always keep the glovebox door closed while driving.

Cup holder

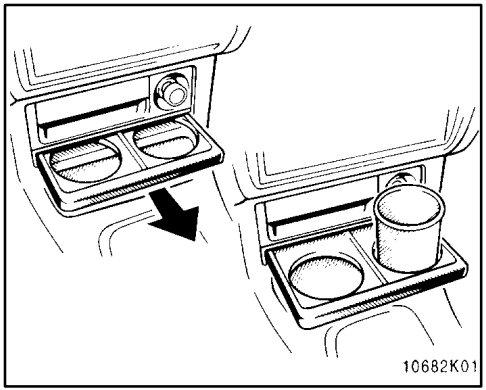

The cup holder is designed for holding cups or drink—cans fit snugly in its holes.

To use the cup holder, pull it out.

CAUTION

- **Do not place anything else on the cup holder, as such items may be thrown about and possibly injure people in the vehicle during sudden braking or an accident.**
- **Keep the cup holder shut when not in use.**

Floor mat

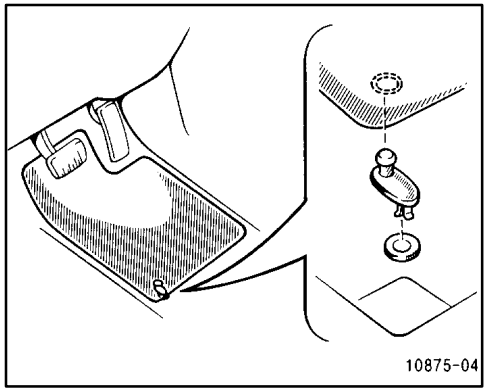

Use a floor mat of the correct size.

If the floor mat has a hole, then it is designed for use with a locking clip. Fix the floor mat and locking clip into the hole in the floor carpet.

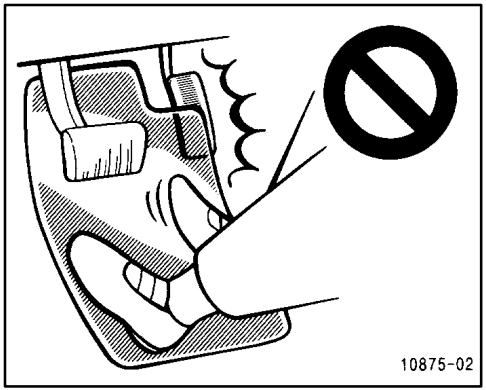

CAUTION

Make sure the floor mat is properly placed on the floor carpet. If the floor mat slips and interferes with the movement of the pedals during driving, it may cause an accident.

Part 2

INFORMATION BEFORE DRIVING YOUR TOYOTA

- Break-in period
- Fuel
- Operation in foreign countries
- Three-way catalytic converter
- Engine exhaust cautions
- Facts about engine oil consumption
- Twin ground electrode spark plugs
- Brake system
- Brake pad wear limit indicators
- Luggage stowage precautions
- Your Toyota's identification
- Theft prevention labels
- Suspension and chassis
- Types of tires

Break-in period

Drive gently and avoid high speeds.

Your vehicle does not need an elaborate break-in. But following a few simple tips for the first 1600 km (1000 miles) can add to the future economy and long life of your vehicle:

- Do not drive over 88 km/h (55 mph).
- Run the engine at moderate speed between 2000 and 4000 rpm.
- Avoid full-throttle starts.
- Try to avoid hard stops during the first 300 km (200 miles).
- Do not drive slowly with the manual transmission in a high gear.
- Do not drive for a long time at any single speed, either fast or slow.

Fuel

FUEL TYPE

Your new vehicle must use only unleaded gasoline.

To help prevent gas station mixups, your Toyota has a new smaller fuel tank opening. The special nozzle on pumps with unleaded fuel will fit it, but the larger standard nozzle on pumps with leaded gas will not.

NOTICE

Do not use leaded gasoline. Use of leaded gasoline will cause the three-way catalytic converter to lose its effectiveness and the emission control system to function improperly. Also, this can increase maintenance costs.

OCTANE NUMBER

Select Research Octane Number 91 (Octane Rating 87) or higher.

Use of unleaded fuel with an octane number rating lower than stated above will cause persistent heavy knocking. If severe, this will lead to engine damage.

If your engine knocks...

If you detect heavy knocking even when using the recommended fuel, or if you hear steady knocking while holding a steady speed on level roads, consult your Toyota dealer.

However, now and then, you may notice light knocking for a short time while accelerating or driving up hills. This is no cause for concern.

GASOLINES CONTAINING DETERGENT ADDITIVES

Toyota recommends use of gasolines that contain detergent additives to avoid build-up of engine deposits.

For further details, ask your Toyota dealer or a local gasoline retailer.

GASOLINES CONTAINING MTBE

Gasolines that contain MTBE (Methyl Tertiary-Butyl Ether) are available in the market. If you use a gasoline mixed with MTBE, make certain that it does not contain more than 15% of MTBE.

If the use of gasolines containing MTBE causes poor driveability and/or poor fuel economy, you should discontinue the use of fuels containing MTBE.

GASOLINES CONTAINING ALCOHOL

If you use gasohol in your Toyota, be sure that it is unleaded, has an octane rating no lower than 87 and does not contain more than 10% ethanol.

Gasohol is a mixture of gasoline and ethanol.

Toyota does not recommend the use of gasolines containing methanol. If you use gasoline containing methanol, use only gasoline meeting the requirements above and also containing less than 5% methanol with cosolvents and corrosion inhibitors for methanol.

NOTICE

- ***Do not use gasohol other than stated above. It will cause fuel system damage or vehicle performance problems.***
- ***If driveability problems are encountered (poor hot starting, vaporizing, engine knock, etc.), discontinue the use.***
- ***Take care not to spill gasohol during refueling. Gasohol may cause paint damage.***

FUEL TANK CAPACITY

45 L (11.9 gal., 9.9 Imp. gal.)

Operation in foreign countries

If you plan to drive your Toyota in another country...

First, comply with the vehicle registration laws.

Second, confirm the availability of the correct fuel (unleaded and minimum octane number).

Three-way catalytic converter

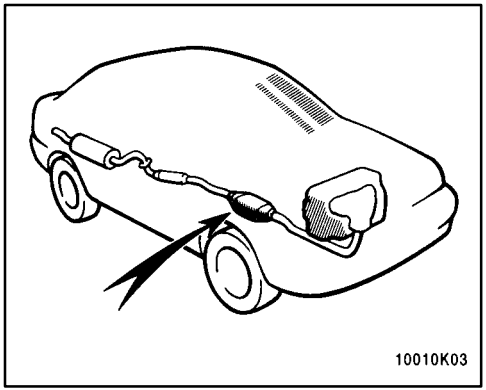

The three-way catalytic converter is an emission control device installed in the exhaust system.

The purpose is to reduce pollutants in the exhaust gas.

CAUTION

- **Keep people and combustible materials away from the exhaust pipe while the engine is running. The exhaust gas is very hot.**
- **Do not drive, idle or park your vehicle over anything that might burn easily such as grass, leaves, paper or rags.**

NOTICE

A large amount of unburned gases flowing into the three-way catalytic converter may cause it to overheat and create a fire hazard. To prevent this and other damage, observe the following precautions:

- ***Use only unleaded gasoline.***
- ***Do not drive with an extremely low fuel level; running out of fuel could cause the engine to misfire, creating an excessive load on the three-way catalytic converter.***
- ***Do not allow the engine to run at idle speed for more than 20 minutes.***
- ***Avoid racing the engine.***
- ***Do not push-start or pull-start your vehicle.***
- ***Do not turn off the ignition while the vehicle is moving.***
- ***Keep your engine in good running order. Malfunctions in the engine electrical system, electronic ignition system/distributor ignition system or fuel systems could cause an extremely high three-way catalytic converter temperature.***
- ***If the engine becomes difficult to start or stalls frequently, take your vehicle in for a check-up as soon as possible. Remember, your Toyota dealer knows your vehicle and its three-way catalytic converter system best.***
- ***To ensure that the three-way catalytic converter and the entire emission control system operate properly, your vehicle must receive the periodic inspections required by the Toyota Maintenance Schedule. For scheduled maintenance information, refer to the separate "Owner's Manual Supplement/Maintenance Schedule".***

Engine exhaust cautions

CAUTION

- **Avoid inhaling the engine exhaust. It contains carbon monoxide, which is a colorless and odorless gas. It can cause unconsciousness or even death.**
- **Make sure the exhaust system has no holes or loose connections. The system should be checked from time to time. If you hit something, or notice a change in the sound of the exhaust, have the system checked immediately.**
- **Do not run the engine in a garage or enclosed area except for the time needed to drive the vehicle in or out. The exhaust gases cannot escape, making this a particularly dangerous situation.**
- **Do not remain for a long time in a parked vehicle with the engine running. If it is unavoidable, however, do so only in an unconfined area and adjust the heating or cooling system to force outside air into the vehicle.**
- **Keep the trunk lid closed while driving. An open or unsealed trunk lid may cause exhaust gases to be drawn into the vehicle. If you must drive with the trunk lid open to accommodate a large object, close the windows, open all the instrument panel vents and have the heating or cooling system deliver fresh air into the vehicle by turning the fan to high speed with the air intake control lever set at the outside air position.**
- **To allow proper operation of your vehicle's ventilation system, keep the inlet grilles in front of the windshield clear of snow, leaves, or other obstructions.**
- **If you smell exhaust fumes in the vehicle, drive with the windows open and the trunk lid closed. Have the cause immediately located and corrected.**

Facts about engine oil consumption

FUNCTIONS OF ENGINE OIL

Engine oil has the primary functions of lubricating and cooling the inside of the engine, and plays a major role in maintaining the engine in proper working order.

ENGINE OIL CONSUMPTION

It is normal that an engine should consume some engine oil during normal engine operation. The causes of oil consumption in a normal engine are as follows.

- Oil is used to lubricate pistons, piston rings and cylinders. A thin film of oil is left on the cylinder wall when a piston moves downwards in the cylinder. High negative pressure generated when the vehicle is decelerating sucks some of this oil into the combustion chamber. This oil as well as some part of the oil film left on the cylinder wall is burned by the high temperature combustion gases during the combustion process.
- Oil is also used to lubricate the stems of the intake valves. Some of this oil is sucked into the combustion chamber together with the intake air and is burned along with the fuel. High temperature exhaust gases also burn the oil used to lubricate the exhaust valve stems.

The amount of engine oil consumed depends on the viscosity of the oil, the quality of the oil and the conditions the vehicle is driven under.

More oil is consumed by high-speed driving and frequent acceleration and deceleration.

A new engine consumes more oil, since its pistons, piston rings and cylinder walls have not become conditioned.

When judging the amount of oil consumption, note that the oil may become diluted and make it difficult to judge the true level accurately.

As an example, if a vehicle is used for repeated short trips, and consumes a normal amount of oil, the dipstick may not show any drop in the oil level at all, even after 1000 km (600 miles) or more. This is because the oil is gradually becoming diluted with fuel or moisture, making it appear that the oil level has not changed.

The diluting ingredients evaporate out when the vehicle is then driven at high speeds, as on an expressway, making it appear that oil is excessively consumed after driving at high speeds.

IMPORTANCE OF ENGINE OIL LEVEL CHECK

One of the most important points in proper vehicle maintenance is to keep the engine oil at the optimum level so that oil function will not be impaired. Therefore, it is essential that the oil level be checked regularly. Toyota recommends that the oil level be checked every time you refuel the vehicle.

NOTICE

Failure to check the oil level regularly could lead to serious engine trouble due to insufficient oil.

For detailed information on the oil level check, see “Checking the engine oil level” in Chapter 7-2.

Twin ground electrode spark plugs

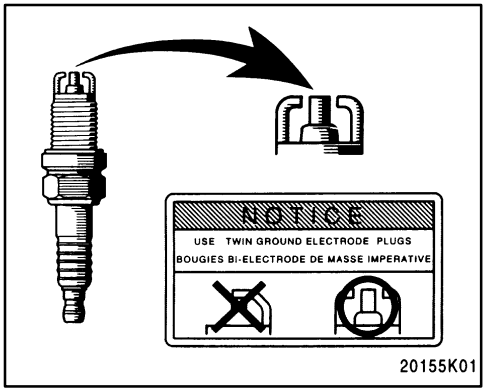

Your engine is fitted with twin ground electrode spark plugs.

NOTICE

Use only twin ground electrode spark plugs for your engine performance.

Brake system

TANDEM MASTER CYLINDER BRAKE SYSTEM

The tandem master cylinder brake system is a hydraulic system with two separate sub-systems. If either sub-system should fail, the other will still work. However, the pedal will be harder to press, and your stopping distance will be longer. Also, the brake system warning light may come on.

CAUTION

Do not drive your vehicle with only a single brake system. Have your brakes fixed immediately.

BRAKE BOOSTER

The brake booster uses engine vacuum to power-assist the brakes. If the engine should quit while you are driving, you can bring the vehicle to a stop with normal pedal pressure. There is enough reserve vacuum for one or two stops—but no more!

CAUTION

- **Do not pump the brake pedal if the engine stalls. Each push on the pedal uses up your vacuum reserve.**
- **Even if the power assist is completely lost, the brakes will still work. But you will have to push the pedal hard—much harder than normal. And your braking distance will be longer.**

ANTI-LOCK BRAKE SYSTEM (with “ABS” warning light)

The anti-lock brake system is designed to prevent lock-up of the wheels during sudden braking or braking on slippery road surfaces. This assists the driver in controlling the vehicle under these circumstances.

The anti-lock brake system becomes operative after the vehicle has accelerated to a speed in excess of approximately 10 km/h (6 mph). It stops operating when the vehicle decelerates to a speed below approximately 5 km/h (3 mph).

You may hear a sound in the engine compartment for a few seconds when the engine is started or just after the vehicle is started. This means that the anti-lock brake system is in the self check mode, and does not indicate a malfunction.

When the anti-lock brake system function is in action, you may feel the brake pedal pulsating and hear a noise. In this situation, to let the anti-lock brake system work for you, just hold the brake pedal down more firmly. Do not pump the brake.

The brake pedal pulsation caused by the anti-lock brake system may indicate hazardous road surface conditions. Although the anti-lock brake system assists in providing vehicle control, it is still important to drive with all due care, because the anti-lock brake system cannot overcome the laws of physics that act on your vehicle:

- Braking capability is dependent on tire friction with the road surface.
- Even though the anti-lock brake system is operating, a driver cannot maintain full control on certain slippery road surfaces, when cornering at high speeds, or in violent maneuvers.
- Avoid high speeds on wet roads. The anti-lock brake system cannot eliminate the risk of hydroplaning and loss of tire friction.

Always maintain a safe distance from the vehicle in front of you. Compared with vehicles not fitted with an anti-lock brake system, your vehicle may require a longer stopping distance in the following cases:

- Driving on rough, gravel or snow-covered roads.
- Driving with tire chains installed.
- Driving on roads where the road surface is pitted or has other differences in surface height.

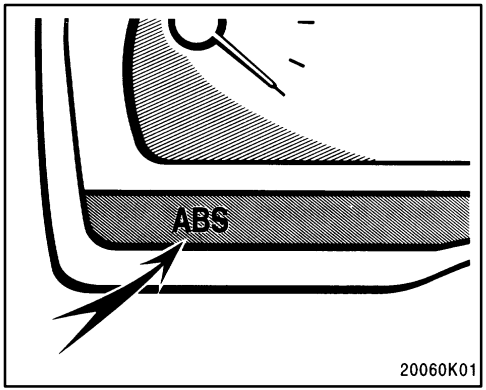

Type A

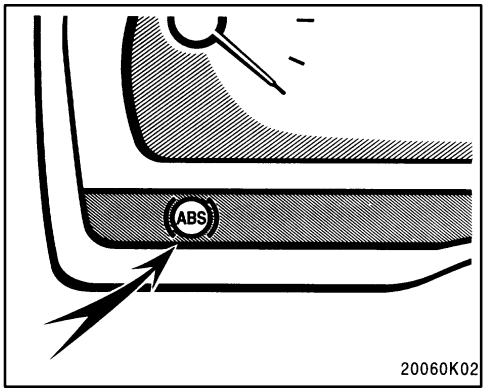

Type B

“ABS” warning light

This light comes on when the ignition key is turned to the “ON” position. After about 3 seconds, the light will go off.

If either of the following conditions occurs, this indicates a malfunction somewhere in the parts monitored by the warning light system. Contact your Toyota dealer as soon as possible to service the vehicle.

- The light does not come on as described above, or remains on.
- The light comes on while driving.

Even if the anti-lock brake system should fail, the brake system will still operate conventionally. Have your vehicle checked by your Toyota dealer as soon as possible.

Brake pad wear limit indicators

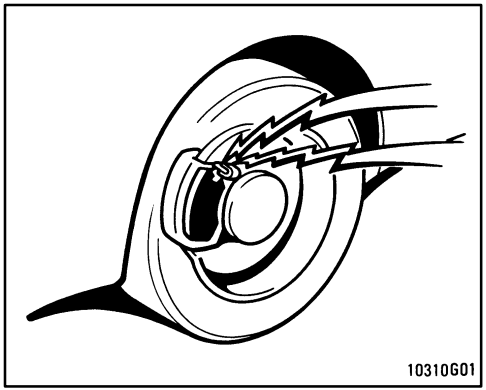

The brake pad wear limit indicators on your disc brakes give a warning noise when the brake pads are worn to where replacement is required.

If you hear a squealing or scraping noise while driving, have the brake pads checked and replaced by your Toyota dealer as soon as possible. Expensive rotor damage can result if the pads are not replaced when necessary.

Luggage stowage precautions

When stowing luggage or cargo in the vehicle, observe the following:

- Put luggage in the trunk when at all possible. Be sure all items are secured in place.
- Be careful to keep the vehicle balanced. Locating the weight as far forward as possible helps maintain balance.
- For better fuel economy, do not carry unneeded weight.

CAUTION

- **To prevent luggage or packages from sliding forward during braking, do not stack anything in the enlarged trunk room. Keep luggage or packages low, as close to the floor as possible.**
- **Never allow anyone to ride in the enlarged trunk room. It is not designed for passengers. They should ride in their seats with their seat belts properly fastened. Otherwise, they are much more likely to suffer serious bodily injury, in the event of sudden braking or a collision.**
- **Do not place anything on the filler panel behind the rear seatback. Such items may be thrown about and possibly injure people in the vehicle during sudden braking or an accident.**
- **Do not drive with objects left on top of the instrument panel. They may interfere with the driver's field of view. Or they may move during sharp vehicle acceleration or turning, and impair the driver's control of the vehicle. In an accident they may injure the vehicle occupants.**

NOTICE

Do not load the vehicle beyond the vehicle capacity weight specified in Part 8.

Your Toyota's identification-
-Vehicle identification number

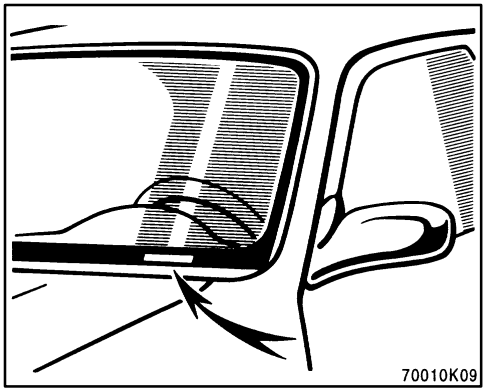

The vehicle identification number (VIN) is the legal identifier for your vehicle. This number is on the left top of the instrument panel, and can be seen through the windshield from outside.

This is the primary identification number for your Toyota. It is used in registering the ownership of your vehicle.

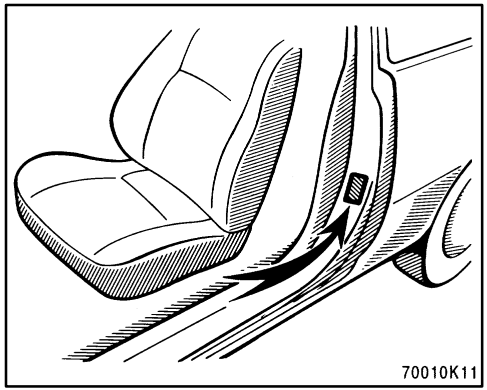

The vehicle identification number (VIN) is also on the Certification Label.

—Engine number

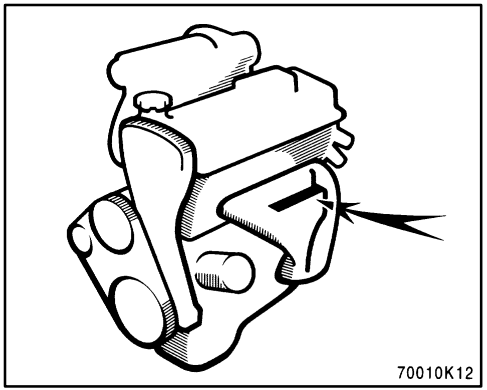

The engine number is stamped on the engine block as shown.

Theft prevention labels (except for Canada)

Your new vehicle carries theft prevention labels which are approximately 56 mm (2.20 in.) by 16 mm (0.63 in.).

The purpose of these labels is to reduce the incidence of vehicle thefts by facilitating the tracing and recovery of parts from stolen vehicles. The label is designed so that once it is applied to a surface, any attempt to remove it will result in destroying the integrity of the label. Transferring these labels intact from one part to another, will be impossible.

NOTICE

You should not attempt to remove the theft prevention labels as it may violate certain state or federal laws.

Suspension and chassis

CAUTION

Do not modify the suspension/ chassis with lift kits, spacers, springs, etc. It can cause dangerous handling characteristics, resulting in loss of control.

Types of tires

Determine what kind of tires your vehicle is originally equipped with.

1. Summer tires

Summer tires are high-speed capability tires best suited to highway driving under dry conditions.

Since summer tires do not have the same traction performance as snow tires, summer tires are inadequate for driving on snow-covered or icy roads. For driving on snow-covered or icy roads, we recommend using snow tires. If installing snow tires, be sure to replace all four tires.

2. All season tires

All season tires are designed to provide better traction in snow and to be adequate for driving in most winter conditions, as well as for use all year round.

All season tires, however, do not have adequate traction performance compared with snow tires in heavy or loose snow. Also, all season tires fall short in acceleration and handling performance compared with summer tires in highway driving.

CAUTION

- **Do not mix summer and all season tires on your vehicle as this can cause dangerous handling characteristics, resulting in loss of control.**
- **Do not use tires other than the manufacturer's designated tires, and do not mix tires or wheels of different sizes.**

Part 3

STARTING AND DRIVING

- Before starting the engine
- How to start the engine
- Tips for driving in various conditions
- Winter driving tips
- Trailer towing
- How to save fuel and make your vehicle last longer, too

Before starting the engine

1. Check the area around the vehicle before entering it.
2. Adjust seat position and seatback angle.
3. Adjust inside and outside rear view mirrors.
4. Lock all doors.
5. Fasten seat belts.

How to start the engine— (a) Before cranking

1. Apply the parking brake firmly.
2. Turn off unnecessary lights and accessories.
3. **Manual transmission:** Press the clutch pedal to the floor and shift the transmission into neutral. Hold the clutch pedal to the floor until the engine is started. A starter safety device will prevent the starter from operating if the clutch pedal is not fully depressed.

   Automatic transmission: Put the selector lever in “P”. If you need to restart the engine while the vehicle is moving, put the selector lever in “N”. A starter safety device will prevent the starter from operating if the selector lever is in any drive position.
4. **Automatic transmission only:** Depress the brake pedal and hold it to the floor until driving off.

(b) Starting the engine

Before starting the engine, be sure to follow the instructions in “(a) Before cranking”.

Normal starting procedure

The multiport fuel injection system/sequential multiport fuel injection system in your engine automatically controls the proper air-fuel mixture for starting. You can start a cold or hot engine as follows:

1. With your foot off the accelerator pedal, crank the engine by turning the key to “START”. Release it when the engine starts.
2. After the engine runs for about 10 seconds, you are ready to drive.

If the weather is below freezing, let the engine warm up for a few minutes before driving.

If the engine stalls...

Simply restart it, using the correct procedure given in normal starting.

If the engine will not start—

See “If your vehicle will not start” in Part 4.

NOTICE

- ***Do not crank for more than 15 seconds at a time. This may overheat the starter and wiring systems.***
- ***Do not race a cold engine.***

- ***If the engine becomes difficult to start or stalls frequently, have the engine checked immediately.***

Tips for driving in various conditions

- Always slow down in gusty crosswinds. This will allow you much better control.
- Drive slowly onto curbs and, if possible, at a right angle. Avoid driving onto high, sharp-edged objects and other road hazards. Failure to do so can lead to severe tire damage resulting in tire bursts.
- When parking on a hill, turn the front wheels until they touch the curb so that the vehicle will not roll. Apply the parking brake, and place the transmission in “P” (automatic) or in first or reverse (manual). If necessary, block the wheels.
- Washing your vehicle or driving through deep water may get the brakes wet. To see whether they are wet, check that there is no traffic near you, and then press the pedal lightly. If you do not feel a normal braking force, the brakes are probably wet. To dry them, drive the vehicle cautiously while lightly pressing the brake pedal with the parking brake pulled. If they still do not work safely, pull to the side of the road and call a Toyota dealer for assistance.

CAUTION

- **Before driving off, make sure that the parking brake if fully released and the parking brake reminder light is off.**
- **Do not leave your vehicle unattended while the engine is running.**
- **Do not rest your foot on the brake pedal while driving. It can cause dangerous overheating, needless wear, and poor fuel economy.**
- **To drive down a long or steep hill, reduce your speed and downshift. Remember, if you ride the brakes excessively, they may overheat and not work properly.**
- **Be careful when accelerating, upshifting, downshifting or braking on a slippery surface. Sudden acceleration or engine braking, could cause the vehicle to spin or skid.**
- **Do not drive in excess of the speed limit. Even if the legal speed limit permits it, do not drive over 140 km/h (85 mph) unless your vehicle has high-speed capability tires. Driving over 140 km/h (85 mph) may result in tire failure, loss of control and possible injury. Be sure to consult a tire dealer to determine whether the tires on your vehicle are high-speed capability tires or not before driving at such speeds.**
- **Do not continue normal driving when the brakes are wet. If they are wet, your vehicle will require a longer stopping distance, and it may pull to one side when the brakes are applied. Also, the parking brake will not hold the vehicle securely.**

Winter driving tips

Make sure you have ethylene-glycol antifreeze in the radiator.

NOTICE

Do not use alcohol type antifreeze.

Check the condition of the battery and cables.

Cold temperatures reduce the capacity of any battery, so it must be in top shape to provide enough power for winter starting. Chapter 7-3 tells you how to visually inspect the battery. Your Toyota dealer and most service stations will be pleased to check the level of charge.

Make sure the engine oil viscosity is suitable for the cold weather.

See Chapter 7-2 for recommended viscosity. Leaving a heavy summer oil in your vehicle during winter months may cause harder starting. If you are not sure about which oil to use, call your Toyota dealer—he will be pleased to help.

Keep the door locks from freezing.

Squirt lock de-icer or glycerine into the locks to keep them from freezing. To open a frozen lock, try heating the key before inserting it.

Use a washer fluid containing an antifreeze solution.

This product is available at your Toyota dealer and most auto parts stores. Follow the manufacturer's directions for how much to mix with water.

NOTICE
Do not use engine antifreeze or any other substitute because it may damage your vehicle's paint.

Do not use your parking brake when there is a possibility it could freeze.

When parking, put the transmission into "P" (automatic) or into first or reverse (manual) and block the rear wheels. Do not use the parking brake, or snow or water accumulated in and around the parking brake mechanism may freeze, making it hard to release.

Keep ice and snow from accumulating under the fenders.

Ice and snow built up under your fenders can make steering difficult. During bad winter driving, stop and check under the fenders occasionally.

Depending on where you are driving, we recommend you carry some emergency equipment.

Some of the things you might put in the vehicle are tire chains, window scraper, bag of sand or salt, flares, small shovel, jumper cables, etc.

Trailer towing

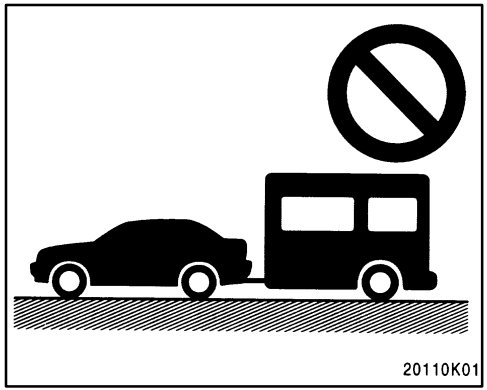

Toyota does not recommend towing a trailer with your Tercel. It is not designed for trailer towing.

How to save fuel and make your vehicle last longer, too

Getting more kilometers/mileage from a liter/gallon of fuel is easy—just take it easy. It will help make your vehicle last longer, too. Here are some specific tips on how to save money on both fuel and repairs:

- **Keep your tires inflated at the correct pressure.** Underinflation causes tire wear and wastes fuel. See Chapter 7-2 for instructions.
- **Do not carry unneeded weight in your vehicle.** Excess weight puts a heavier load on the engine, causing greater fuel consumption.
- **Avoid lengthy warm-up idling.** Once the engine is running smoothly, begin driving—but gently. Remember, however, that on cold winter days this may take a little longer.
- **Accelerate slowly and smoothly.** Avoid jackrabbit starts. Get into high gear as quickly as possible.
- **Avoid long engine idling.** If you have a long wait and you are not in traffic, it is better to turn off the engine and start again later.
- **Avoid engine lug or overrevving.** Use a gear position suitable for the road on which you are travelling.
- **Avoid continuous speeding up and slowing down.** Stop-and-go driving wastes fuel.
- **Avoid unnecessary stopping and braking.** Maintain a steady pace. Try to time the traffic signals so you only need to stop as little as possible or take advantage of through streets to avoid traffic lights. Keep a proper distance from other vehicles to avoid sudden braking. This will also reduce wear on your brakes.
- **Avoid heavy traffic or traffic jams whenever possible.**
- **Do not rest your foot on the clutch or brake pedal.** This causes needless wear, overheating and poor fuel economy.
- **Maintain a moderate speed on highways.** The faster you drive, the greater the fuel consumption. By reducing your speed, you will cut down on fuel consumption.
- **Keep the front wheels in proper alignment.** Avoid hitting the curb and slow down on rough roads. Improper alignment not only causes faster tire wear but also puts an extra load on the engine, which, in turn, wastes fuel.
- **Keep the bottom of your vehicle free from mud, etc.** This not only lessens weight but also helps prevent corrosion.
- **Keep your vehicle tuned-up and in top shape.** A dirty air cleaner, improper valve clearance, dirty plugs, dirty oil and grease, brakes not adjusted, etc. all lower engine performance and contribute to poor fuel economy. For longer life of all parts and lower operating costs, keep all maintenance work on schedule, and if you often drive under severe conditions, see that your vehicle receives more frequent maintenance (For schedule maintenance information, please refer to the separate “Owner’s Manual Supplement/Maintenance Schedule”).

CAUTION

Never turn off the engine to coast down hills. Your power steering and brake booster will not function without the engine running. Also, the emission control system operates properly only when the engine is running.

Part 4

IN CASE OF AN EMERGENCY

- If your vehicle will not start
- If your engine stalls while driving
- If your vehicle overheats
- If you have a flat tire
- If your vehicle needs to be towed
- If you cannot shift automatic transmission selector lever
- If you lose your keys

If your vehicle will not start— (a) Simple checks

Before making these checks, make sure you have followed the correct starting procedure given in “How to start the engine” in Part 3 and that you have sufficient fuel.

If the engine is not turning over or is turning over too slowly—

1. Check that the battery terminals are tight and clean.
2. If the battery terminals are O.K., switch on the interior light.
3. If the light is out, dim or goes out when the starter is cranked, the battery is discharged. You may try jump starting. See “(c) Jump starting” for further instructions.

If the light is O.K., but the engine still will not start, it needs adjustment or repair. Call a Toyota dealer or qualified repair shop.

NOTICE
Do not pull- or push-start the vehicle. It may damage the vehicle or cause a collision when the engine starts. Also the three-way catalytic converter may overheat and become a fire hazard.

If the engine turns over at its normal speed but will not start—

1. Check that all the push-on connectors are tight. (For example, connectors at the distributor and spark plugs)
2. If the connectors are O.K., the engine may be flooded because of repeated cranking. See “(b) Starting a flooded engine” for further instructions.

(b) Starting a flooded engine

If the engine will not start, your engine may be flooded because of repeated cranking.

If this happens, turn the key to “START” with the accelerator pedal held down. Keep the key and accelerator pedal so for 15 seconds and release them. Then try starting the engine with your foot off the accelerator pedal.

If the engine does not start after 15 seconds of cranking, release the key, wait a few minutes and try again.

If the engine still will not start, it needs adjustment or repair. Call a Toyota dealer or qualified repair shop for assistance.

NOTICE

Do not crank for more than 15 seconds at a time. This may overheat the starter and wiring systems.

(c) Jump starting

To avoid serious personal injury and damage to your vehicle which might result from battery explosion, acid burns, electrical burns, or damaged electronic components, these instructions must be followed precisely.

If you are unsure about how to follow this procedure, we strongly recommend that you seek the help of a competent mechanic or towing service.

CAUTION

- **Batteries contain sulfuric acid which is poisonous and corrosive. Wear protective safety glasses when jump starting, and avoid spilling acid on your skin, clothing, or vehicle.**
- **If you should accidentally get acid on yourself or in your eyes, remove any contaminated clothing and flush the affected area with water for at least 15 minutes. Then get immediate medical attention. If possible, continue to apply water with a sponge or cloth while en route to the medical office.**
- **The gas normally produced by a battery will explode if a flame or spark is brought near. Use only standardized jumper cables and do not smoke or light a match while jump starting.**

NOTICE

The battery used for boosting must be 12 V. Do not jump start unless you are sure that the booster battery is correct.

JUMP STARTING PROCEDURE

1. If the booster battery is installed in another vehicle, make sure the vehicles are not touching. Turn off all unnecessary lights and accessories.
2. If required, remove all the vent plugs from the booster and discharged batteries. Lay a cloth over the open vents on the batteries. (This helps reduce the explosion hazard, personal injuries and burns.)
3. If the engine in the vehicle with the booster battery is not running, start it and let it run for a few minutes. During jump starting, run the engine at about 2000 rpm with the accelerator pedal lightly depressed.

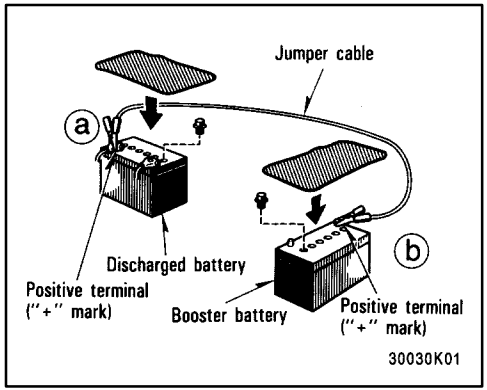

4. Make the cable connections in the order a, b, c, d.

a. Connect a positive (red) jumper cable clamp to the positive (+) terminal on the discharged battery.

b. Connect the clamp at the other end of the positive (red) cable to the positive (+) terminal on the booster battery.

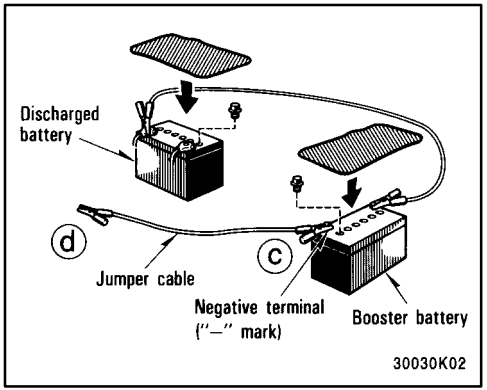

c. Connect a negative (black) cable clamp to the negative (-) terminal on the booster battery.

d. Connect the clamp at the other end of the negative (black) cable to a solid, stationary, unpainted, metallic point of the vehicle with the discharged battery.

The recommended connecting points are shown in the following illustration:

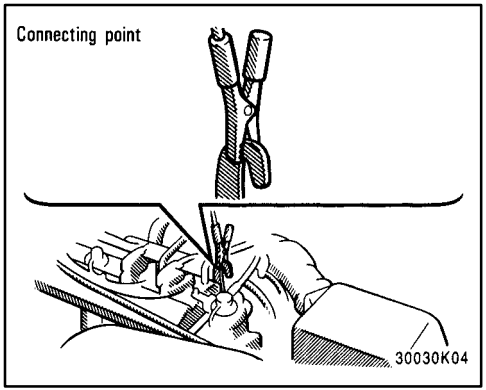

Do not connect the cable to or near any part that moves when the engine is cranked.

NOTICE

When making the connections, do not lean over the battery or accidentally let the jumper cables or clamps touch anything except the correct battery terminals or the ground.

5. Start your engine in the normal way. After starting, run it at about 2000 rpm for several minutes with the accelerator pedal lightly depressed.

6. Carefully disconnect the cables in the exact reverse order: the negative cable and then the positive cable.

7. Carefully dispose of the battery cover cloths—they may now contain sulfuric acid.

8. If removed, replace all the battery vent plugs.

If the cause of your battery discharging is not apparent (for example, lights left on), you should have it checked.

If your engine stalls while driving

If your engine stalls while driving…

1. Reduce your speed gradually, keeping a straight line. Move cautiously off the road to a safe place.

2. Turn on your emergency flashers.

3. Try starting the engine again.

If the engine will not start, see “If your vehicle will not start”.

CAUTION

If the engine is not running, the power assist for the brakes and steering will not work so steering and braking will be much harder than usual.

If your vehicle overheats

If your engine coolant temperature gauge indicates overheating, if you experience a loss of power, or if you hear a loud knocking or pinging noise, the engine has probably overheated. You should follow this procedure…

1. Pull safely off the road, stop the vehicle and turn on your emergency flashers. Put the transmission in “P” (automatic) or neutral (manual) and apply the parking brake. Turn off the air conditioning if it is being used.

2. If coolant or steam is boiling out of the radiator or reservoir, stop the engine. Wait until the steam subsides before opening the hood. If there is no coolant boiling over or steam, leave the engine running and make sure the electric cooling fan is operating. If it is not, turn the ignition off.

CAUTION

To help avoid personal injury, keep the hood closed until there is no steam. Escaping steam or coolant is a sign of very high pressure.

3. Visually check to see if the engine drive belt (water pump belt) is broken or loose. Look for obvious coolant leaks from the radiator, hoses, and under the vehicle. However, note that water draining from the air conditioning is normal if it has been used.

CAUTION

When the engine is running, keep hands and clothing away from the moving fan and engine drive belts.

4. If the engine drive belt is broken or coolant is leaking, stop the engine immediately. Call a Toyota dealer for assistance.

5. If the engine drive belt is O.K. and there are no obvious leaks, check the coolant reservoir. If it is dry, add coolant to the reservoir while the engine is running. Fill it about half full.

CAUTION

Do not attempt to remove the radiator cap when the engine and radiator are hot. Serious injury could result from scalding hot fluid and steam blown out under pressure.

6. After the engine coolant temperature has cooled to normal, again check the coolant level in the reservoir. If necessary, bring it up to half full again. Serious coolant loss indicates a leak in the system. You should have it checked as soon as possible at your Toyota dealer.

If you have a flat tire—

1. Reduce your speed gradually, keeping a straight line. Move cautiously off the road to a safe place well away from the traffic. Avoid stopping on the center divider of a highway. Park on a level spot with firm ground.

2. Stop the engine and turn on your emergency flashers.

3. Firmly set the parking brake and put the transmission in “P” (automatic) or reverse (manual).

4. Have everyone get out of the vehicle on the side away from traffic.

5. Read the following instructions thoroughly.

CAUTION

When jacking, be sure to observe the following to reduce the possibility of personal injury:

- **Follow jacking instructions.**
- **Use a jack only for lifting your vehicle during wheel changing.**
- **Never get beneath the vehicle when supported by a jack.**
- **Do not start or run the engine while your vehicle is supported by a jack.**

NOTICE

Do not continue driving with a deflated tire. Driving even a short distance can damage a tire beyond repair.

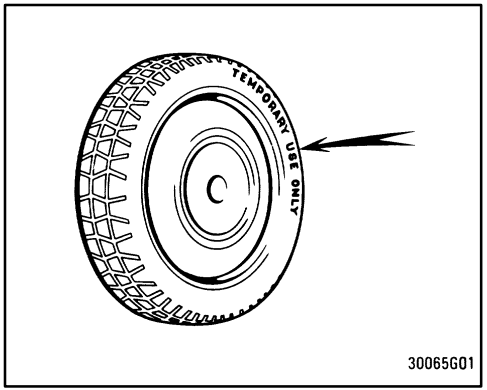

Compact spare tire

The compact spare tire is designed for temporary emergency use only.

The compact spare tire is identified by the distinctive wheel design and color and special wording “TEMPORARY USE ONLY” molded into the side wall of the tire.

The standard tire should be repaired and replaced as soon as possible.

To keep the compact spare tire noticeable, do not hide the wheel by a wheel cover or such.

The compact spare tire saves space in your trunk, and its lighter weight helps to improve fuel economy and permits easier installation in case of a flat tire.

The compact spare tire can be used many times, if necessary. It has tread life of up to 4800 km (3000 miles) depending on road conditions and your driving habits. When tread wear indicators appear on the tire, replace the tire.

See also the tire section in Chapter 7-2 for details on the tread wear indicators and other service information.

CAUTION

- **The compact spare tire was designed especially for your Toyota. Do not use it on any other vehicle.**
- **Do not exceed 80 km/h (50 mph) when driving with the compact spare tire.**

NOTICE

Your ground clearance is reduced when the compact spare tire is installed so avoid driving over obstacles and drive slowly on rough, unpaved roads and speed bumps. Also, do not attempt to go through an automatic car wash as the vehicle may get caught, resulting in damage.

—Required tools and spare tire

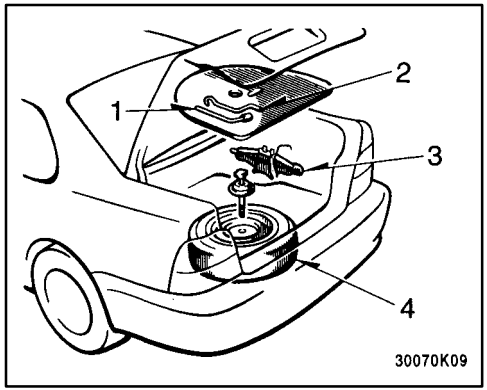

1. Get the required tools and spare tire.

1 Wheel nut wrench
2 Jack handle
3 Jack
4 Spare tire

To prepare yourself for an emergency, you should familiarize yourself with the use of the jack, each of the tools and their storage locations.

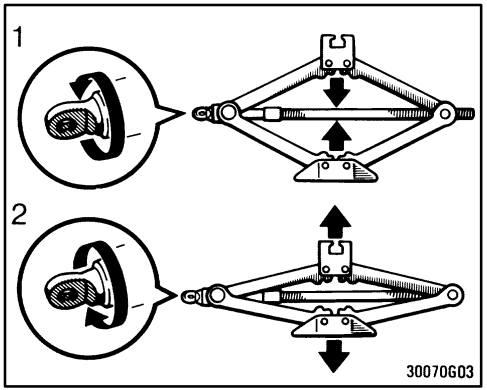

Turn the jack joint by hand.

To remove: Turn the joint in direction 1 until the jack is free.

To store: Turn the joint in direction 2 until the jack is firmly secured to prevent it flying forward during a collision or sudden braking.

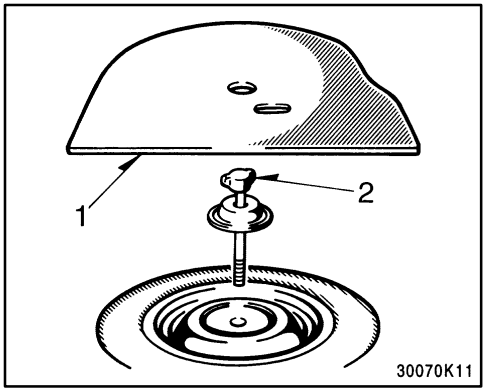

To remove the spare tire:

1. Remove the spare tire cover.
2. Loosen the bolt and remove it.

Then take the spare tire out of the vehicle.

When storing the spare tire, put it in place with the outer side of the wheel facing up. Then secure the tire by repeating the above removal steps in reverse order to prevent it from flying forward during a collision or sudden braking.

—Blocking the wheel

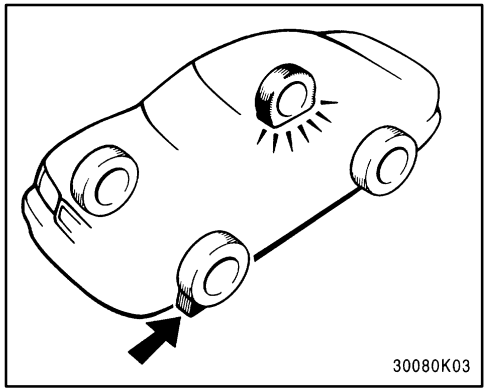

2. Block the wheel diagonally opposite the flat tire to keep the vehicle from rolling when it is jacked up.

When blocking the wheel, place a wheel block from the front for the front wheels or from the rear for the rear wheels.

—Removing wheel ornament

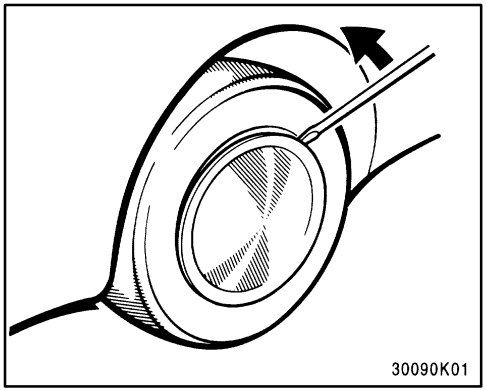

Type A

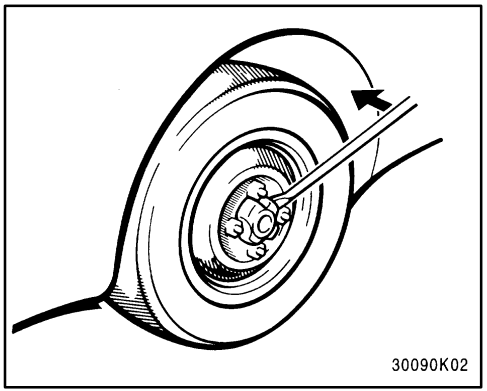

Type B

3. Remove the wheel ornament.

Pry off the wheel ornament, using the beveled end of the wheel nut wrench as shown.

CAUTION

Do not try to pull off the ornament by hand. Take due care in handling the ornament to avoid unexpected personal injury.

—Loosening wheel nuts

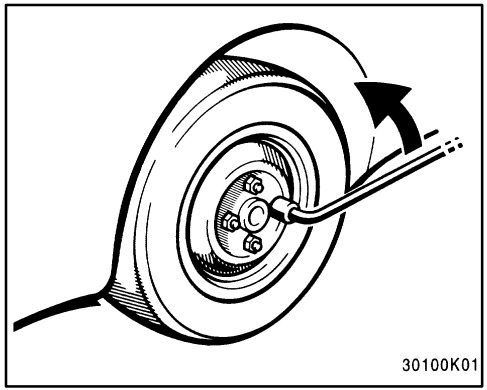

4. Loosen all the wheel nuts.
Always loosen the wheel nuts before raising the vehicle.

The nuts turn counterclockwise to loosen. To get maximum leverage, fit the wrench to the nut so that the handle is on the right side, as shown above. Grab the wrench near the end of the handle and pull up on the handle. Be careful that the wrench does not slip off the nut.

Do not remove the nuts yet—just unscrew them about one-half turn.

—Positioning the jack

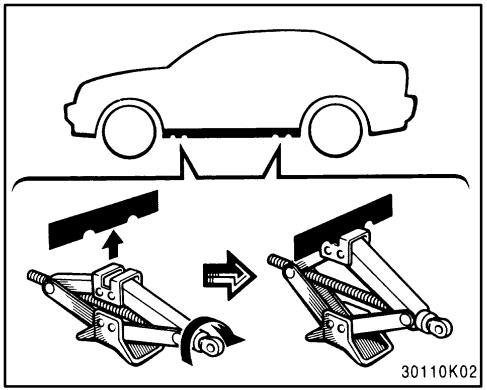

5. Position the jack at the correct jack point as shown.
Make sure the jack is positioned on a level and solid place.

—Raising your vehicle

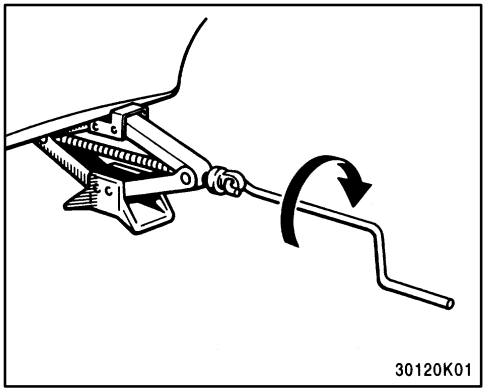

6. After making sure that no one is in the vehicle, raise it high enough so that the spare tire can be installed.
Remember you will need more ground clearance when putting in the spare tire than when removing the flat tire.

To raise the vehicle, insert the jack handle into the jack (it is a loose fit) and turn it clockwise. As the jack touches the vehicle and begins to lift, double-check that it is properly positioned.

CAUTION

Never get under the vehicle when it is supported by the jack alone.

—Changing wheels

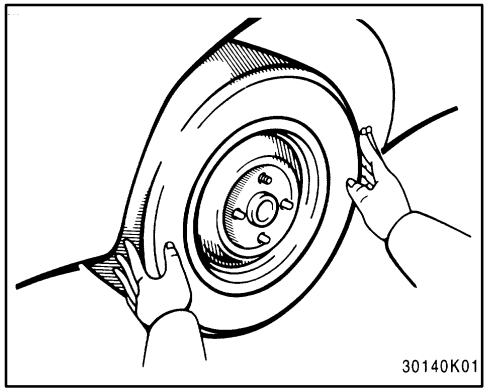

7. Remove the wheel nuts and change tires.

Lift the flat tire straight off and put it aside.

Roll the spare wheel into position and align the holes in the wheel with the bolts. Then lift up the wheel and get at least the top bolt started through its hole. Wiggle the tire and press it back over the other bolts.

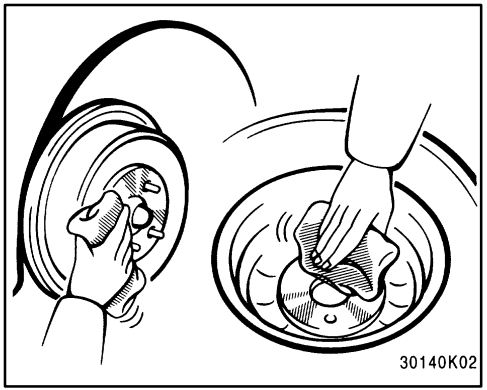

Before putting on wheels, remove any corrosion on the mounting surfaces with a wire brush or such. Installation of wheels without good metal-to-metal contact at the mounting surface can cause wheel nuts to loosen and eventually cause a wheel to come off while driving. Therefore after the first 1600 km (1000 miles), check to see that the wheel nuts are tight.

—Reinstalling wheel nuts

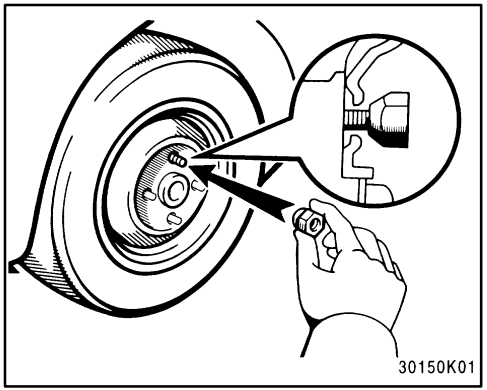

8. Reinstall all the wheel nuts finger tight.

Reinstall the wheel nuts (tapered end inward) and tighten them as much as you can by hand. Press back on the tire back and see if you can tighten them more.

—Lowering your vehicle

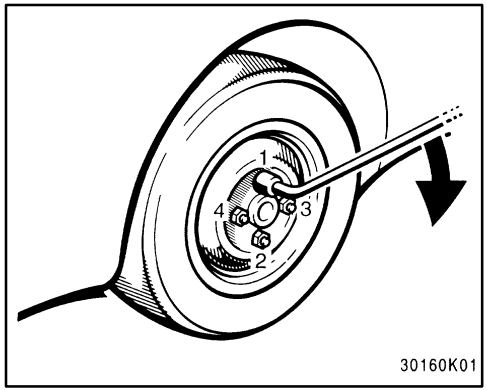

9. Lower the vehicle completely and tighten the wheel nuts.

Turn the jack handle counterclockwise to lower the vehicle.

Use only the wheel nut wrench and turn it clockwise to tighten the nuts. Do not use other tools or any additional leverage other than your hands, such as a hammer, pipe or your foot. Make sure the wrench is securely engaged over the nut.

Tighten each nut a little at a time in the order shown. Repeat the process until all the nuts are tight.

—Reinstalling wheel ornament

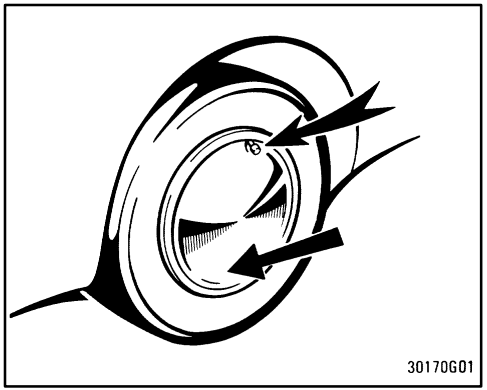

10. Reinstall the wheel ornament.

Align the cutout of the wheel ornament with the valve stem as shown. Then tap it firmly with the side or heel of your hand to snap it into place.

CAUTION

Take due care in handling the ornament to avoid unexpected personal injury.

—After changing wheels

11. Check the air pressure of the replaced tire.

Adjust the air pressure to the specification designated in Part 8. If the pressure is lower, drive slowly to the nearest service station and fill to the correct pressure.

Do not forget to reinstall the tire inflation valve cap as dirt and moisture could get into the valve core and possibly cause air leakage. If the cap is missing, have a new one put on as soon as possible.

12. Restow all the tools, jack and flat tire securely.

As soon as possible after changing wheels, tighten the wheel nuts to the torque specified in Part 8 with a torque wrench, have a technician repair the flat tire and replace the spare tire with it.

CAUTION

Before driving, make sure all the tools, jack and flat tire are securely in place in their storage location to reduce the possibility of personal injury during a collision or sudden braking.

If your vehicle needs to be towed—

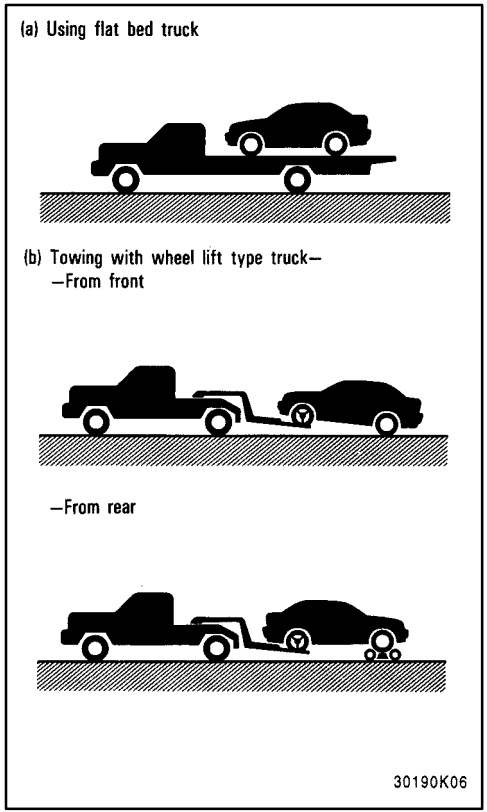

If towing is necessary, we recommend you to have it done by your Toyota dealer or a commercial tow truck service.

Proper equipment will help ensure that your vehicle is not damaged while being towed. Commercial operators are generally aware of the state/provincial and local laws pertaining to towing.

Your vehicle can be damaged if it is towed incorrectly. Although most operators know the correct procedure, it is possible to make a mistake. To avoid damage to your vehicle, make sure the following few precautions are observed. If necessary, show this page to the tow truck driver.

TOWING PRECAUTIONS:

Use a safety chain system for all towing, and abide by the state/provincial and local laws. The wheels and axle on the ground must be in good condition. If they are damaged, use a towing dolly.

(a) Using flat bed truck

Toyota recommends this as the best method for your vehicle.

(b) Towing with wheel lift type truck

From front—Release the parking brake.

From rear—

- Manual transmission:

  We recommend using a towing dolly under the front wheels. If you do not use a towing dolly, place the ignition key in the “ACC” position and put the transmission in neutral.

NOTICE

Do not tow with the key removed or in the “LOCK” position when towing from the rear without a towing dolly. The steering lock mechanism is not strong enough to hold the front wheels straight.

- Automatic transmission:

  Use a towing dolly under the front wheels.

NOTICE

Never tow a vehicle with an automatic transmission from the rear with the front wheels on the ground, as this may cause serious damage to the transmission.

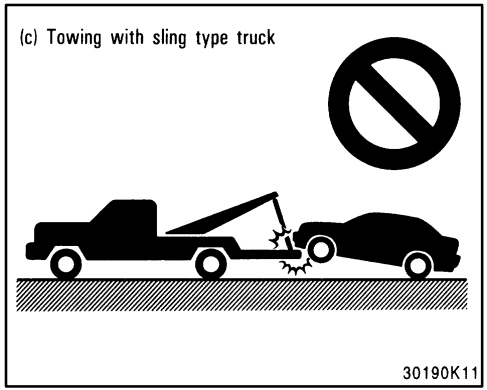

(c) Towing with sling type truck

NOTICE

Do not tow with sling type truck, either from the front or rear. This may cause body damage.

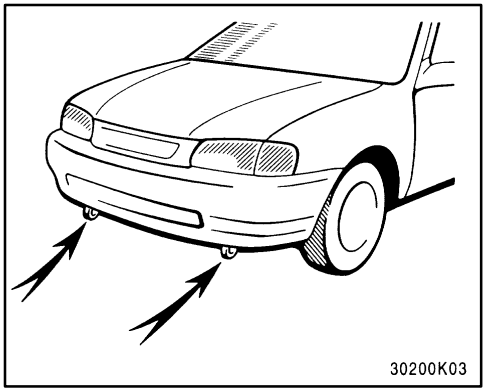

Front

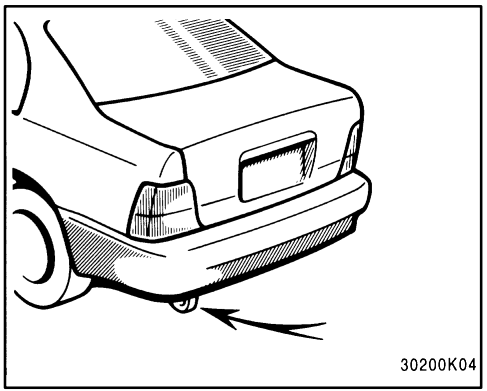

Rear

If towing service is not available in an emergency, your vehicle may be temporarily towed by a cable secured to either emergency towing eyelets under the front of the vehicle or the left emergency towing eyelet under the rear of the vehicle.

A driver must be in the vehicle to steer it and operate the brakes.

Towing in this manner may be done only on hard-surfaced roads for a short distance and at low speeds. Also, the wheels, axles, drive train, steering and brakes must all be in good condition.

Before towing, release the parking brake and put the transmission in neutral (manual) or “N” (automatic). The key must be in “ACC” (engine off) or “ON” (engine running).

CAUTION

If the engine is not running, the power assist for the brakes and steering will not work so steering and braking will be much harder than usual.

If you cannot shift automatic transmission selector lever

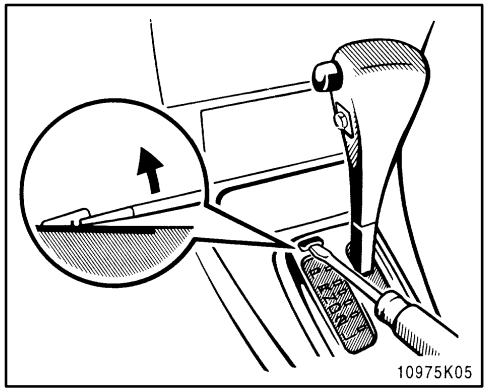

If you cannot shift the selector lever out of "P" position to other positions even though the brake pedal is depressed, use the shift lock override button as follows:

1. Turn the ignition key to "LOCK" position. Make sure the parking brake is set.

2. Pry up the cover with a flat-bladed screwdriver or equivalent.

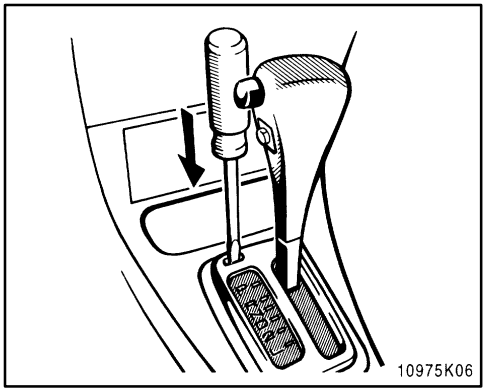

3. Insert the screwdriver or equivalent into the hole to push down the shift lock override button. You can shift out of "P" position only while pushing the button.

4. Shift into "N" position.

5. Insert the cover.

6. Start the engine. For your safety, keep the brake pedal depressed.

Be sure to have the system checked by your Toyota dealer as soon as possible.

If you lose your keys

Many Toyota dealers can make a new key if you can give them the key number.

See the suggestion given in "Keys" in Chapter 1-2.

If your keys are locked in the vehicle and you cannot get a duplicate, many Toyota dealers can still open the door for you, using their special tools. If you must break a window to get in, we suggest breaking the smallest side window because it is the least expensive to replace. Be extremely cautious to avoid cuts from the glass.

Part 5

CORROSION PREVENTION AND APPEARANCE CARE

- Protecting your Toyota from corrosion
- Washing and waxing your Toyota
- Cleaning the interior

Protecting your Toyota from corrosion

Toyota, through its diligent research, design and use of the most advanced technology available, has done its part to help prevent corrosion and has provided you with the finest quality vehicle construction. Now, it is up to you. Proper care of your Toyota can help ensure long-term corrosion prevention.

The most common causes of corrosion to your vehicle are:

- The accumulation of road salt, dirt and moisture in hard-to-reach areas under the vehicle.
- Chipping of paint, or undercoating caused by minor accidents or by stones and gravel.

Care is especially important if you live in particular areas or operate your vehicle under certain environmental conditions:

- Road salt or dust control chemicals will accelerate corrosion, as will the presence of salt in the air near the seacoast or in areas of industrial pollution.
- High humidity accelerates corrosion especially when temperatures range just above the freezing point.
- Wetness or dampness to certain parts of your vehicle for an extended period of time, may cause corrosion even though other parts of the vehicle may be dry.
- High temperatures will cause corrosion to those components of the vehicle which are prevented from quick-drying due to lack of proper ventilation.

The above signifies the necessity to keep your vehicle, particularly the underside, as clean as possible and to repair any damage to paint or protective coatings as soon as possible.

To help prevent corrosion on your Toyota, follow these guidelines:

Wash your vehicle frequently. It is, of course, necessary to keep your vehicle clean by regular washing, but to prevent corrosion, the following points should be observed:

- If you drive on salted roads in the winter or if you live near the ocean, you should hose off the undercarriage at least once a month to minimize corrosion.
- High pressure water or steam is effective for cleaning the vehicle's underside and wheel housings. Pay particular attention to these areas as it is difficult to see all the mud and dirt. It will do more harm than good to simply wet the mud and debris without removing them. The lower edge of doors, rocker panels and frame members have drain holes which should not be allowed to clog with dirt as trapped water in these areas can cause corrosion.

- Wash the underside of the vehicle thoroughly when winter is over.

See “Washing and waxing your Toyota” for more tips.

Check the condition of your vehicle’s paint and trim. If you find any chips or scratches in the paint, touch them up immediately to prevent corrosion from starting. If the chips or scratches have gone through the bare metal, have a qualified body shop make the repair.

Check the interior of your vehicle. Water and dirt can accumulate under the floor mats and could cause corrosion. Occasionally check under the mats to make sure the area is dry. Be particularly careful when transporting chemicals, cleansers, fertilizers, salt, etc.; these should be transported in proper containers. If a spill or leak should occur, immediately clean and dry the area.

Use mud shields on your wheels. If you drive on salted or gravel roads, mud shields help protect your vehicle. Full-size shields, which come as near to the ground as possible, are the best. We recommend that the fittings and the area where the shields are installed be treated to resist corrosion. Your Toyota dealer will be happy to assist in supplying and installing the shields if they are recommended for your area.

Do not park your vehicle in a damp, poorly ventilated garage. If you wash your vehicle in the garage, or if you drive it in covered with water or snow, your garage may be so damp it will cause corrosion. Even if your garage is heated, a wet vehicle can corrode if the ventilation is poor.

Washing and waxing your Toyota

Washing your Toyota by hand

Work in the shade and wait until the vehicle body is not hot to the touch.

1. Rinse off loose dirt with a hose. Remove any mud or road salt from the underside of the vehicle or in the wheel wells.

2. Wash with a mild car-wash soap, mixed according to the manufacturer’s instructions. Use a soft cotton mitt and keep it wet by dipping it frequently into the wash water. Do not rub hard—let the soap and water remove the dirt.

Plastic bumpers: Wash carefully. Do not scrub with abrasive cleaners. The bumper faces are soft.

Road tar: Remove with turpentine or cleaners that are marked safe for painted surfaces.

NOTICE
Do not use gasoline or strong solvents, which may be toxic or cause damage.

3. Rinse thoroughly—dried soap can cause streaking. In hot weather you may need to rinse each section right after you wash it.

4. To prevent water spots, dry the vehicle using a clean soft cotton towel. Do not rub or press hard—you might scratch the paint.

Automatic car wash

Your vehicle may be washed in an automatic car wash, but remember that the paint can be scratched by some type of brushes, unfiltered washing water, or the washing process itself. Scratching reduces paint durability and gloss, especially on darker colors. The manager of the car wash should be able to advise you whether the process is safe for the paint on your vehicle.

Waxing your Toyota

Polishing and waxing is recommended to maintain the original beauty of your Toyota's finish.

1. Always wash and dry the vehicle before you begin waxing, even if you are using a combined cleaner and wax.

2. Use a good quality polish and wax. If the finish has become extremely weathered, use a car-cleaning polish, followed by a separate wax. Carefully follow the manufacturer's instructions and precautions. Be sure to polish and wax the chrome trim as well as the paint.

3. Wax the vehicle again when water does not bead but remains on the surface in large patches.

NOTICE

Always remove the plastic bumpers if your vehicle is re-painted and placed in a high heat paint waxing booth. High temperatures could damage the bumpers.

Cleaning the interior

CAUTION

Do not wash the vehicle floor with water, or allow water to get onto the floor when cleaning the vehicle interior or exterior. Water may get into audio components or other electrical components above or under the floor carpet (or mat) and cause a malfunction; and it may cause body corrosion.

Vinyl interior

The vinyl upholstery may be easily cleaned with a mild soap or detergent and water.

First vacuum over the upholstery to remove loose dirt. Then, using a sponge or soft cloth, apply the soap solution to the vinyl. After allowing it to soak in for a few minutes to loosen the dirt, remove the dirt and wipe off the soap with a clean damp cloth. If all the dirt does not come off, repeat the procedure. Commercial foaming-type vinyl cleaners are also available which work well. Follow the manufacturer's instructions.

NOTICE

Do not use solvent, thinner, gasoline or window cleaner on the interior.

Carpets

Use a good foam-type shampoo to clean the carpets.

Begin by vacuuming thoroughly to remove as much dirt as possible. Several types of foam cleaners are available; some are in aerosol cans and others are powders or liquids which you mix with water to produce a foam. To shampoo the carpets, use a sponge or brush to apply the foam. Rub in overlapping circles.

Do not apply water—the best results are obtained by keeping the carpet as dry as possible. Read the shampoo instructions and follow them closely.

Seat belts

The seat belts may be cleaned with mild soap and water or with lukewarm water.

Use a cloth or sponge. As you are cleaning, check the belts for excessive wear, fraying, or cuts.

NOTICE

Do not use dye or bleach on the belts—it may weaken them.

Windows

The windows may be cleaned with any household window cleaner.

NOTICE

When cleaning the inside of the windows, be careful not to scratch or damage the heater wires on the rear window.

Air conditioning control panel, car audio, instrument panel, console panel, and switches

Use a soft damp cloth for cleaning.

Soak a clean soft cloth in water or lukewarm water then lightly wipe off any dirt.

NOTICE

- ***Do not use organic substances (solvents, kerosene, alcohol, gasoline, etc.) or alkaline or acidic solutions. These chemicals can cause discoloring, staining or peeling of the surface.***
- ***If you use cleaners or polishing agents, make sure their ingredients do not include the substances mentioned above.***
- ***If you use a liquid car freshener, do not spill the liquid onto the vehicle's interior surfaces. It may contain the ingredients mentioned above. Immediately clean any spill using the method mentioned above.***

Leather Interior

The leather upholstery may be cleaned with neutral detergent for wool.

Remove dirt using a soft cloth dampened with 5% solution of neutral detergent for wool. Then thoroughly wipe off all traces of detergent with a clean damp cloth.

After cleaning or whenever any part of the leather gets wet, dry with a soft clean cloth. Allow the leather to dry in a ventilated shaded area.

NOTICE

- ***If a stain should fail to come out with a neutral detergent, apply a cleaner that does not contain an organic solvent.***
- ***Never use organic substances such as benzine, alcohol or gasoline, or alkaline or acid solutions for cleaning the leather as these could cause discoloring.***
- ***Use of a nylon brush or synthetic fiber cloth, etc. may scratch the fine grained surface of the leather.***
- ***Mildew may develop on soiled leather upholstery. Be especially careful to avoid oil spots. Try to keep your upholstery always clean.***

- ***Long exposure to direct sunlight may cause the leather surface to harden and shrink. Keep your vehicle in a shaded area, especially in the summer.***
- ***The interior of your vehicle is apt to heat up on hot summer days, so avoid placing on the upholstery items made of vinyl or plastic or containing wax as these tend to stick to leather when warm.***
- ***Improper cleaning of the leather upholstery could result in discoloration or staining.***

If you have any questions about the cleaning of your Toyota, your local Toyota dealer will be pleased to answer them.

Part 6

VEHICLE MAINTENANCE AND CARE

- Maintenance requirements
- General maintenance
- Does your vehicle need repairing?

For scheduled maintenance information, please refer to the separate “Owner’s Manual Supplement/Maintenance Schedule”.

Maintenance requirements

Your Toyota vehicle has been designed for fewer maintenance requirements with longer service intervals to save both your time and money. However, each regular maintenance, as well as day-to-day care, is more important than ever before to ensure smooth, and trouble-free, safe, and economical drivings.

It is the owner’s responsibility to make sure the specified maintenance, including general maintenance service, is performed. Note that both the new vehicle and emission control system warranties specify that proper maintenance and care must be performed. See Owner’s Guide, Owner’s Manual Supplement or Warranty Booklet for complete warranty information.

General maintenance

General maintenance items are those day-to-day care practices that are important to your vehicle for proper operation. It is the owner’s responsibility to ensure that the general maintenance items are performed regularly.

These checks or inspections can be done either by yourself or a qualified technician, or if you prefer, your Toyota dealer will be pleased to do them at a nominal cost.

Scheduled maintenance

The scheduled maintenance items listed in the “Owner’s Manual Supplement/ Maintenance Schedule” are those required to be serviced at regular intervals.

For details of your maintenance Schedule, read the separate “Owner’s Manual Supplement/Maintenance Schedule”.

It is recommended that any replacement parts used for maintenance or for the repair of the emission control system be Toyota supplied.

The owner may elect to use non-Toyota supplied parts for replacement purposes without invalidating the emission control system warranty. However, use of replacement parts which are not of equivalent quality may impair the effectiveness of the emission control systems.

You may also elect to have maintenance, replacement, or repair of the emission control devices and system performed by any automotive repair establishment or individual without invalidating this warranty. See Owner’s Guide, Owner’s Manual Supplement or Warranty Booklet for complete warranty information.

Where to go for service?

Toyota technicians are well-trained specialists and are kept up to date with the latest service information through technical bulletins, service tips, and in-dealership training programs. They learn to work on Toyotas before they work on your vehicle, rather than while they are working on it.

You can be confident that your Toyota dealer's service department performs the best job to meet the maintenance requirements on your vehicle—reliably and economically.

Your copy of the repair order is proof that all required maintenance has been performed for warranty coverage. And if any problems should arise with your vehicle while under warranty, your Toyota dealer will promptly take care of it. Again, be sure to keep a copy of the repair order for any service performed on your Toyota.

What about do-it-yourself maintenance?

Many of the maintenance items are easy to do yourself if you have a little mechanical ability and a few basic automotive tools. Simple instructions for how to perform them are presented in Part 7.

If you are a skilled do-it-yourself mechanic, the Toyota service manuals are recommended. Please be aware that do-it-yourself maintenance can affect your warranty coverage. See Owner's Guide, Owner's Manual Supplement or Warranty Booklet for the details.

General maintenance

Listed below are the general maintenance items that should be performed as frequently as specified. In addition to checking the items listed, if you notice any unusual noise, smell or vibration, you should investigate the cause or take your vehicle to your Toyota dealer or a qualified service shop immediately. It is recommended that any problem you notice be brought to the attention of your dealer or the qualified service shop for their advice.

CAUTION

Make these checks only where adequate ventilation can be obtained if you run the engine.

OUTSIDE THE VEHICLE

Items listed below should be performed from time to time, unless otherwise specified.

Tire pressure

Check the pressure with a gauge every two weeks, or at least once a month. See Chapter 7-2 for additional information.

Tire surface and wheel nuts

Check the tires carefully for cuts, damage or excessive wear. See Chapter 7-2 for additional information. When checking the tires, make sure no nuts are missing, and check the nuts for looseness. Tighten them if necessary.

Tire rotation

Rotate the tires every 12000 km (7500 miles). See Chapter 7-2 for additional information.

Fluid leaks

Check underneath for leaking fuel, oil, water or other fluid after the vehicle has been parked for a while. If you smell fuel fumes or notice any leak, have the cause found and corrected immediately.

Doors and engine hood

Check that all doors including trunk lid operate smoothly and all latches lock securely. Make sure the engine hood secondary latch secures the hood from opening when the primary latch is released.

INSIDE THE VEHICLE

Items listed below should be checked regularly, e.g. while performing periodic services, cleaning the vehicle, etc.

Lights

Make sure the headlights, stop lights, tail lights, turn signal lights, and other lights are all working. Check headlight aim.

Service reminder indicators and warning buzzers

Check that all service reminder indicators and warning buzzers function properly.

Steering wheel

Check that it has the specified freeplay. Be alert for changes in steering condition, such as hard steering or strange noise.

Seats

Check that all front seat controls such as seat adjusters, seatback recliner, etc. operate smoothly and that all latches lock securely in any position. For folding-down rear seatbacks, check that the latches lock securely.

Seat belts

Check that the seat belt system such as buckles, retractors and anchors operate properly and smoothly. Make sure the belt webbing is not cut, frayed, worn or damaged.

Accelerator pedal

Check the pedal for smooth operation and uneven pedal effort or catching.

Clutch pedal

Check the pedal for smooth operation.

Brake pedal

Check the pedal for smooth operation and that the pedal has the proper clearance. Check the brake booster function.

Brakes

At a safe place, check that the brakes do not pull to one side when applied.

Parking brake

Check that the lever has the proper travel and that, on a safe incline, your vehicle is held securely with only the parking brake applied.

Automatic transmission “Park” mechanism

Check the lock release button of the selector lever for proper and smooth operation. On a safe incline, check that your vehicle is held securely with the selector lever in “P” position and all brakes released.

IN THE ENGINE COMPARTMENT

Items listed below should be checked from time to time, e.g. each time when refueling.

Washer fluid

Make sure there is sufficient fluid in the tank. See Chapter 7-3 for additional information.

Engine coolant level

Make sure the coolant level is between the “FULL” and “LOW” lines on the see-through reservoir. See Chapter 7-2 for additional information.

Battery electrolyte level

Make sure the electrolyte level of all battery cells is between upper and lower level lines on the case. Add only distilled water when replenishing. See Chapter 7-3 for additional information.

Brake fluid level

Make sure the brake fluid level is correct. See Chapter 7- 2 for additional information.

Engine oil level

Check the level on the dipstick with the engine turned off and the vehicle parked on a level spot. See Chapter 7-2 for additional information.

Power steering fluid level

Check the level through the reservoir. The level should be in the “HOT” or “COLD” range depending on the fluid temperature. See Chapter 7- 2 for additional information.

Exhaust system

If you notice any change in the sound of the exhaust or smell exhaust fumes, have the cause located and corrected immediately. (See engine exhaust cautions in Part 2.)

Does your vehicle need repairing?

Be on the alert for changes in performance, sounds, and visual tip-offs that indicate service is needed. Some important clues are as follows:

- Engine missing, stumbling, or pinging
- Appreciable loss of power
- Strange engine noises
- A leak under the vehicle (however, water dripping from the air conditioning after use is normal.)
- Change in exhaust sound (This may indicate a dangerous carbon monoxide leak. Drive with the windows open and have the exhaust system checked immediately.)
- Flat-looking tire; excessive tire squeal when cornering; uneven tire wear
- Vehicle pulls to one side when driving straight on a level road
- Strange noises related to suspension movement
- Loss of brake effectiveness; spongy feeling brake or clutch pedal; pedal almost touches floor; vehicle pulls to one side when braking
- Engine coolant temperature continually higher than normal

If you notice any of these clues, take your vehicle to your Toyota dealer as soon as possible. It probably needs adjustment or repair.

CAUTION

Do not continue driving with the vehicle unchecked. It could result in serious vehicle damage and possibly personal injury.

Part 7

DO-IT-YOURSELF MAINTENANCE—

Chapter 7-1

Introduction

- Engine compartment overview
- Fuse locations
- Do-it-yourself service precautions
- Parts and tools

Engine compartment overview

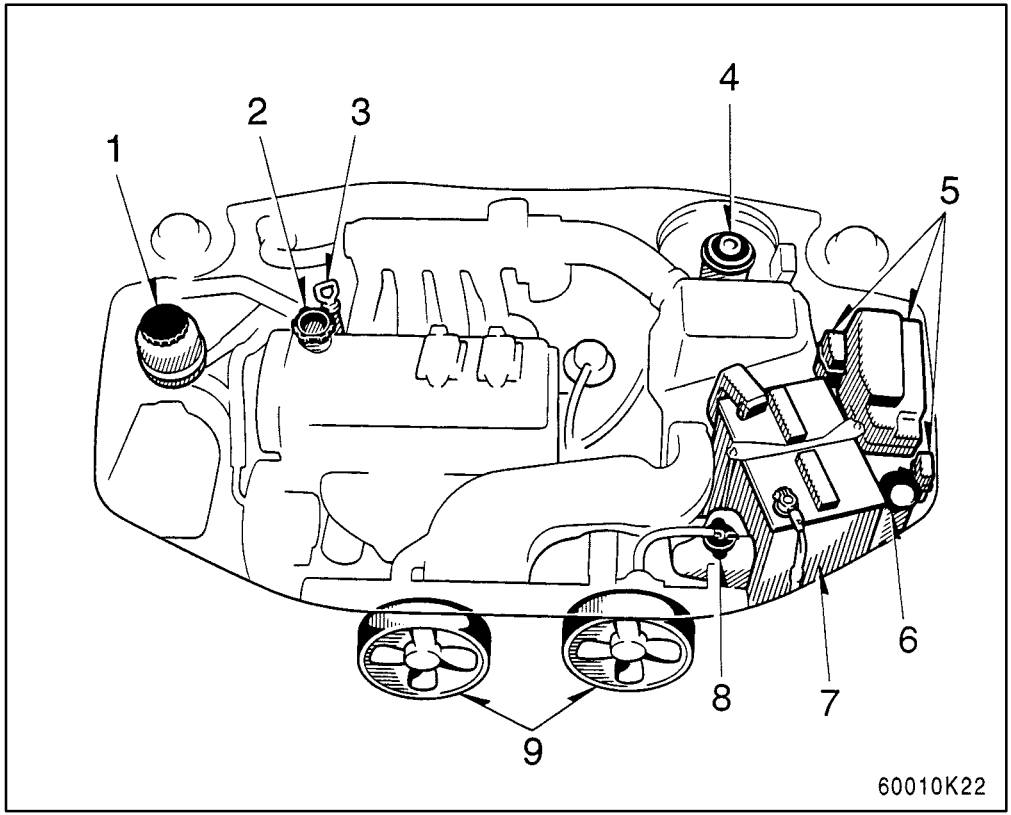

1. Power steering fluid reservoir
2. Engine oil filler cap
3. Engine oil level dipstick
4. Brake fluid reservoir
5. Fuse blocks
6. Windshield washer fluid tank
7. Battery
8. Engine coolant reservoir
9. Electric cooling fans

Fuse locations

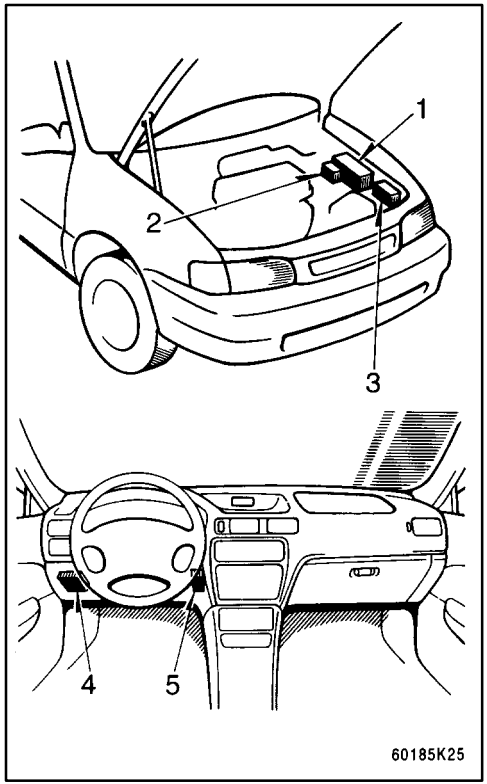

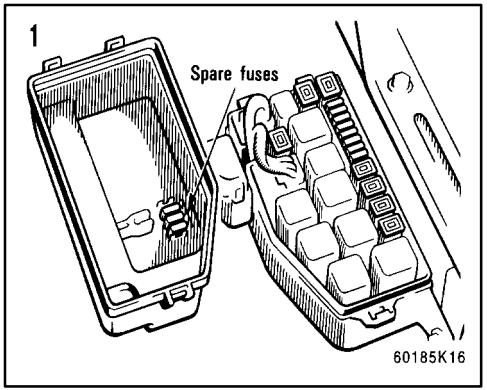

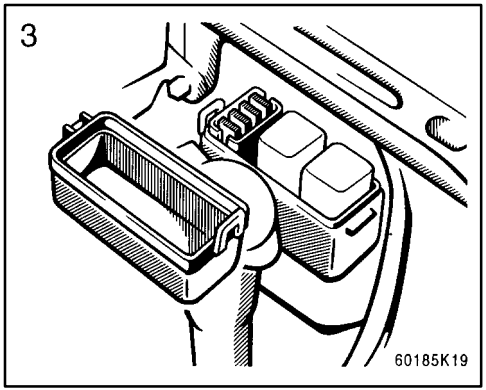

Canada only

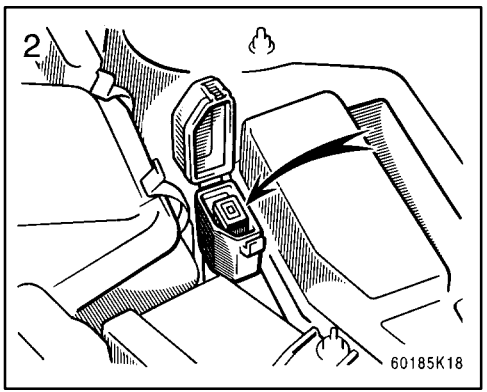

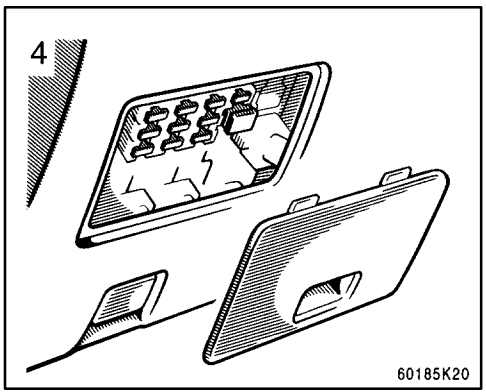

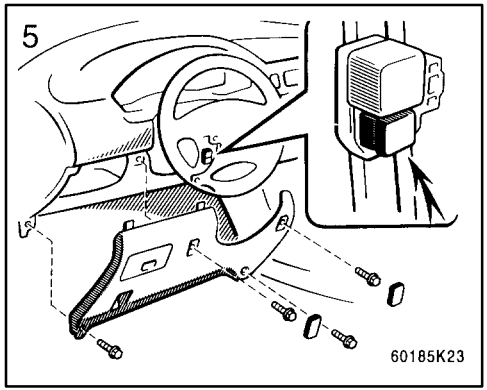

Do-it-yourself service precautions

If you perform maintenance by yourself, be sure to follow the correct procedure given in this part.

You should be aware that improper or incomplete servicing may result in operating problems.

Performing do-it-yourself maintenance during the warranty period may affect your warranty coverage. Read the separate Toyota Warranty statement for details and suggestions.

This part gives instructions only for those items that are relatively easy for an owner to perform. As explained in Part 6, there are still a number of items that must be done by a qualified technician with special tools.

For information on tools and parts for do-it-yourself maintenance, see “Parts and tools”.

Utmost care should be taken when working on your vehicle to prevent accidental injury. Here are a few precautions that you should be especially careful to observe:

CAUTION

- **When the engine is running, keep hands, clothing, and tools away from the moving fan and engine drive belts. (Removing rings, watches, and ties is advisable.)**
- **Right after driving, the engine compartment—the engine, radiator, exhaust manifold, power steering fluid reservoir and spark plug boots, etc.—will be hot. So be careful not to touch them. Oil, fluids and spark plugs may also be hot.**
- **If the engine is hot, do not remove the radiator cap or loosen the drain plugs to prevent burning yourself.**
- **Do not smoke, cause sparks or allow open flames around fuel or the battery. Their fumes are flammable.**
- **Be extremely cautious when working on the battery. It contains poisonous and corrosive sulfuric acid.**
- **Do not get under your vehicle with just the body jack supporting it. Always use automotive jack stands or other solid supports.**

- **Be sure that the ignition is off if you work near the electric cooling fans or radiator grille. With the ignition on, the electric cooling fans will automatically start to run if the engine coolant temperature is high and/or the air conditioning is on.**
- **Use eye protection whenever you work on or under your vehicle where you may be exposed to flying or falling material, fluid spray, etc.**
- **Used engine oil contains potentially harmful contaminants which may cause skin disorders such as inflammation or skin cancer, so care should be taken to avoid prolonged and repeated contact with it. To remove used engine oil from your skin, wash thoroughly with soap and water.**
- **Do not leave used oil within the reach of children.**
- **Dispose of used oil and filter only in a safe and acceptable manner. Do not dispose of used oil and filter in household trash, in sewers or onto the ground. Call your dealer or a service station for information concerning recycling or disposal.**

NOTICE

- ***Remember that battery and ignition cables carry high currents or voltages. Be careful of accidentally causing a short circuit.***
- ***Add only demineralized or distilled water to fill the radiator. And if you spill some of the coolant, be sure to wash it off with water to prevent it from damaging the parts or paint.***
- ***Do not allow dirt or anything else to fall through the spark plug holes.***
- ***Do not pry the outer electrode of a spark plug against the center electrode.***
- ***Use only spark plugs of the specified type. Using other types will cause engine damage, loss of performance or radio noise.***
- ***Do not overfill automatic transmission fluid, or the transmission could be damaged.***
- ***Do not drive with the air cleaner filter removed, or excessive engine wear could result. Also backfiring could cause a fire in the engine compartment.***
- ***Be careful not to scratch the glass surface with the wiper frame.***
- ***When closing the engine hood, check to see that you have not forgotten any tools, rags, etc.***

Parts and tools

Here is a list of parts and tools you will need on performing do-it-yourself maintenance. Remember all Toyota parts are designed in metric sizes, so your tools must be metric.

Checking the engine oil level

Parts (if level is low):

- Engine oil API SH, “Energy-Conserving II” multigrade or ILSAC multigrade having viscosity proper for your climate

Tools:

- Rag or paper towel
- Funnel (only for adding oil)

Checking the engine coolant level

Parts (if level is low):

- Ethylene-glycol antifreeze
- Demineralized or distilled water

Tools:

- Funnel (only for adding coolant)

Checking brake fluid

Parts (if level is low):

- SAE J1703 or FMVSS No. 116 DOT 3 brake fluid

Tools:

- Rag or paper towel
- Funnel (only for adding fluid)

Checking power steering fluid

Parts (if level is low):

- Automatic transmission fluid DEXRON®-II or -III

Tools:

- Rag or paper towel
- Funnel (only for adding fluid)

Checking battery condition

Non-maintenance batteries—

Tools:

- Warm water
- Baking soda
- Grease
- Conventional wrench (for terminal clamp bolts)

Maintenance type batteries—

Parts (if level is low):

- Distilled water

Tools:

- Warm water
- Baking soda
- Grease
- Conventional wrench (for terminal clamp bolts)
- Coin (for vent plugs)
- Funnel (only for adding distilled water)

Checking and replacing fuses

Parts (if replacement is necessary):

- Fuse with same amperage rating as original

Tools:

- Conventional wrench (for instrument lower panel nut)

Adding washer fluid

Parts:

- Water
- Washer fluid containing antifreeze (for winter use)

Tools:

- Funnel

Replacing light bulbs

Parts:

- Bulb with same number and wattage rating as original (See charts in “Replacing light bulbs” in Chapter 7-3.)

Tools:

- Screwdriver
- Conventional wrench

Part 7

DO-IT-YOURSELF MAINTENANCE—

Chapter 7-2

Engine and Chassis

- Checking the engine oil level
- Checking the engine coolant level
- Checking brake fluid
- Checking power steering fluid
- Checking tire pressure
- Checking and replacing tires
- Rotating tires
- Installing snow tires and chains
- Replacing wheels

Checking the engine oil level

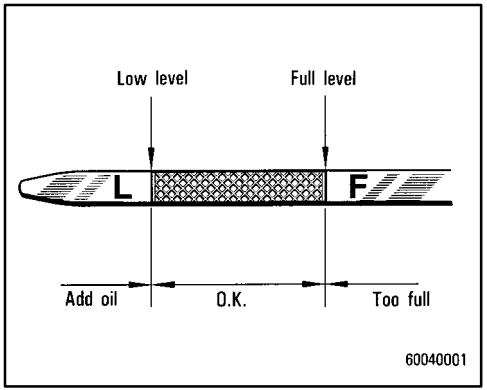

With the engine at operating temperature and turned off, check the oil level on the dipstick.

1. To get a true reading, the vehicle should be on a level spot. After turning off the engine, wait a few minutes for the oil to drain back into the bottom of the engine.
2. Pull out the dipstick, and wipe it clean with a rag.
3. Reinsert the dipstick—push it in as far as it will go, or the reading will not be correct.
4. Pull the dipstick out and look at the oil level on the end.

If the oil level is below or only slightly above the low level line, add engine oil of the same type as already in the engine.

Remove the oil filler cap and add engine oil in small quantities at a time, checking the dipstick.

The approximate quantity of oil needed to fill between the low level line and the full level line on the dipstick is indicated below for reference.

When the level reaches within the correct range, install the filler cap hand-tight.

Oil quantity, L (qt., Imp. qt.):

1.3 (1.4, 1.1)

NOTICE

- ***Avoid overfilling, or the engine could be damaged.***
- ***Check the oil level on the dipstick once again after adding the oil.***

ENGINE OIL SELECTION

Use API SH, “Energy-Conserving II” multigrade engine oil or ILSAC multigrade engine oil.

Recommended viscosity (SAE):

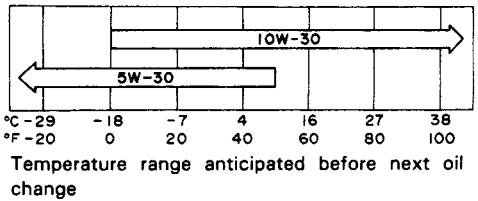

If you use SAE 10W-30 engine oil in extremely low temperatures, the engine may become difficult to start, so SAE 5W-30 engine oil is recommended.

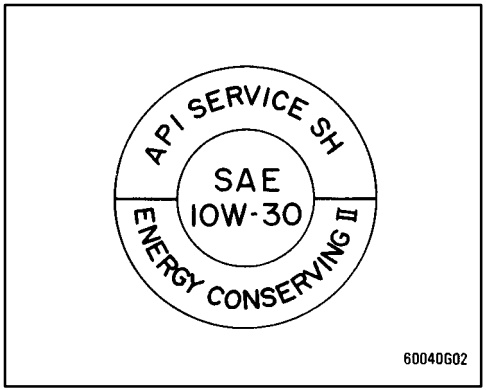

API service symbol

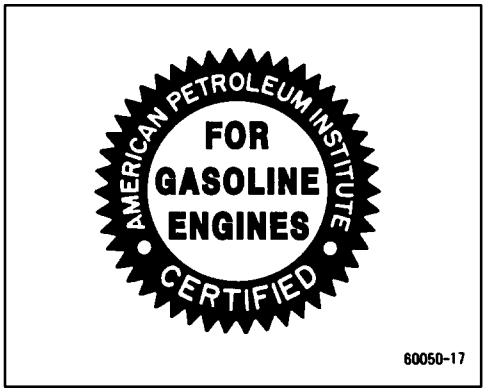

ILSAC certification mark

Oil identification marks

Either or both API registered marks are added to some oil containers to help you select the oil you should use.

The API Service Symbol is located anywhere on the outside of the container.

The top portion of the label shows the oil quality by API (American Petroleum Institute) designations such as SH. The center portion of the label shows the SAE viscosity grade such as SAE 10W-30. “Energy-Conserving II” shown in the lower portion, indicates that the oil has fuel-saving capabilities. Oils marked “Energy-Conserving II” will have higher fuel-saving capabilities than oils marked “Energy-Conserving”.

The ILSAC (International Lubricant Standardization and Approval Committee) Certification Mark is displayed on the front of the container.

Checking the engine coolant level

Look at the see-through coolant reservoir when the engine is cold. The coolant level is satisfactory if it is between the "FULL" and "LOW" lines on the reservoir. If the level is low, add ethylene-glycol type coolant.

The coolant level in the reservoir will vary with engine temperature. However, if the level is on or below the "LOW" line, add coolant. Bring the level up to the "FULL" line.

Use only ethylene-glycol type coolant. See information in the next column.

If the coolant level drops within a short time after replenishing, there may be a leak in the system. Visually check the radiator, hoses, radiator cap and drain cock and water pump.

If you can find no leak, have your Toyota dealer test the cap pressure and check for leaks in the cooling system.

CAUTION

To prevent burning yourself, do not remove the radiator cap when the engine is hot.

Coolant type selection

Your coolant must contain ethylene-glycol antifreeze. In addition to preventing freezing and subsequent damage to the engine, this will also prevent corrosion. Further supplemental inhibitors or additives are neither needed nor recommended.

Read the antifreeze container for information on freeze protection. Follow the manufacturer's directions for how much to mix with water. The total capacity of the cooling system is given in Part 8. We recommend 50% solution be used for your Toyota, or a sufficient quantity to provide protection to about -35°C (-31°F).

NOTICE

Do not use alcohol type antifreeze or plain water alone.

Checking brake fluid

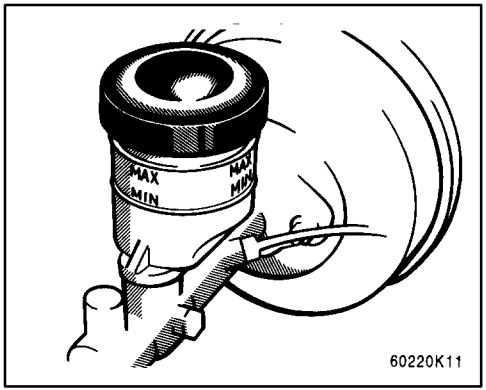

Type A

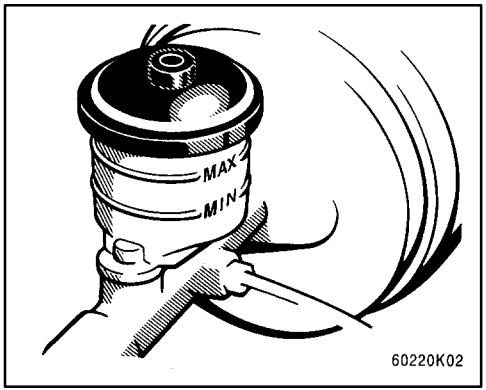

Type B

To check the fluid level, simply look at the see-through reservoir. The level should be between the "MAX" and "MIN" lines on the reservoir.

It is normal for the brake fluid level to go down slightly as the brake pads wear. So be sure to keep the reservoir filled.

If the reservoir needs frequent refilling, it may indicate a serious mechanical problem.

If the level is low, add SAE J1703 or FMVSS No. 116 DOT 3 brake fluid to the brake reservoir.

Remove and replace the reservoir cover by hand. Fill the brake fluid to the dotted line. This brings the fluid to the correct level when you put the cover back on.

Use only newly opened brake fluid. Once opened, brake fluid absorbs moisture from the air, and excess moisture can cause a dangerous loss of braking.

CAUTION

Take care when filling the reservoir because brake fluid can harm your eyes and damage painted surfaces. If fluid gets in your eyes, flush your eyes with clean water.

NOTICE

If you spill the fluid, be sure to wash it off with water to prevent it from damaging the parts or paint.

Checking power steering fluid

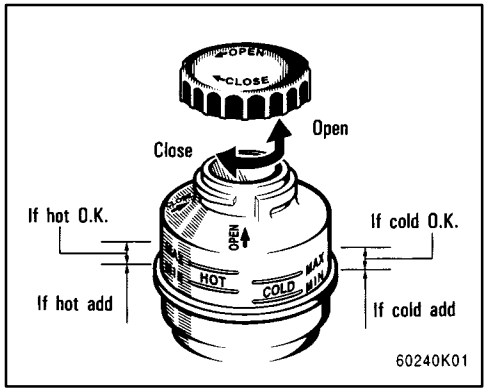

Check the fluid level through the reservoir. If necessary, add automatic transmission fluid DEXRON®-II or -III.

If the vehicle has been driven around 80 km/h (50 mph) for 20 minutes (a little more in frigid temperatures), the fluid is hot (60°C—80°C or 140°F—175°F). You may also check the level when the fluid is cold (about room temperature, 10°C—30°C or 50°F—85°F) if the engine has not been run for about five hours.

Clean all dirt from outside of the reservoir tank and look at the fluid level. If the fluid is cold, the level should be in the “COLD” range. Similarly, if it is hot, the fluid level should be in the “HOT” range. If the level is at the low side of either range, add automatic transmission fluid DEXRON®-II or -III to bring the level within the range.

To remove the filler cap, turn it counterclockwise and lift up. To reinstall it, turn it clockwise. After replacing the filler cap, visually check the steering box case, vane pump and hose connections for leaks or damage.

CAUTION

The reservoir tank may be hot so be careful not to burn yourself.

NOTICE

Avoid overfilling, or the power steering could be damaged.

Checking tire pressure

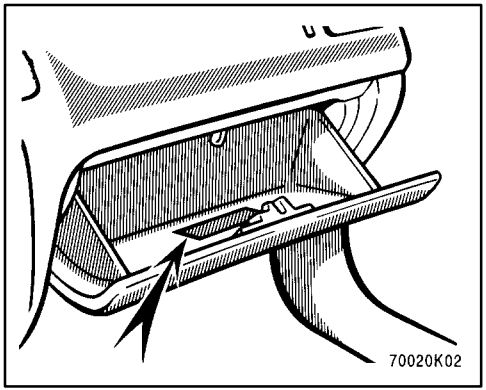

Keep your tire pressures at the proper level.

The recommended cold tire pressures, tire size and the vehicle capacity weight are given in Part 8. They are also on the tire pressure label as shown.

You should check the tire pressures every two weeks, or at least once a month. And do not forget the spare!

Incorrect tire pressure can reduce tire life and make your vehicle less safe to drive.

Low tire pressure results in excessive wear, poor handling, reduced fuel economy, and the possibility of blowouts from overheated tires. Also, low tire pressure can cause poor sealing of the tire bead. If the tire pressure is excessively low, there is the possibility of wheel deformation and/or tire separation.

High tire pressure produces a harsh ride, handling problems, excessive wear at the center of the tire tread, and a greater possibility of tire damage from road hazards.

If a tire frequently needs refilling, have it checked by your Toyota dealer.

The following instructions for checking tire pressure should be observed:

- **The pressure should be checked only when the tires are cold.** If your vehicle has been parked for at least 3 hours and has not been driven for more than 1.5 km or 1 mile since, you will get an accurate cold tire pressure reading.
- **Always use a tire pressure gauge.** The appearance of a tire can be misleading. Besides, tire pressures that are even just a few pounds off can degrade handling and ride.

- **Take special care when adding air to the compact spare tire.** The smaller tire size can gain pressure very quickly. Add compressed air in small quantities and check the pressure often until it reaches the specified pressure.
- **Do not bleed or reduce tire pressure after driving.** It is normal for the tire pressure to be higher after driving.
- **Never exceed the vehicle capacity weight.** The passenger and luggage weight should be located so that the vehicle is balanced.
- **Be sure to reinstall the tire inflation valve caps.** Without the valve caps, dirt or moisture could get into the valve core and cause air leakage. If the caps have been lost, have new ones put on as soon as possible.

Checking and replacing tires

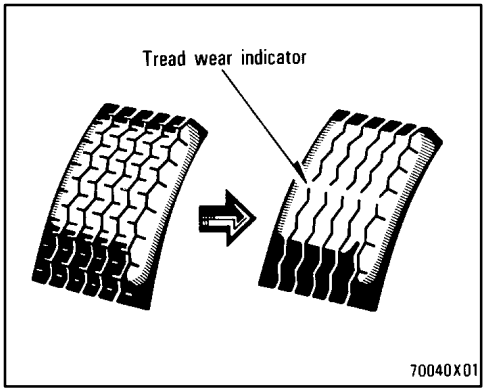

CHECKING YOUR TIRES

Check the tire tread for the tread wear indicators. If the indicators show, replace the tires.

The tires on your Toyota have built-in tread wear indicators to help you know when the tires need replacement. When the tread depth wears to 1.6 mm (0.06 in.) or less, the indicators will appear. If you can see the indicators in two or more adjacent grooves, the tire should be replaced. The lower the tread, the higher the risk of skidding.

The effectiveness of snow tires is lost if the tread wears down below 4 mm (0.16 in.).

Check the tires regularly for damage such as cuts, splits and cracks. If any damage is found, consult with a technician and have the tire repaired or replaced.

Even if the damage does not appear serious, a qualified technician should examine the damage. Objects which have penetrated the tire may have caused internal damage.

Any tires which are over six years old must be checked by a qualified technician even if damage is not obvious.

Tires deteriorate with age even if they have never or seldom been used.

This also applies to the spare tire and tires stored for future use.

REPLACING YOUR TIRES

When replacing a tire, use only the same size and construction as originally installed and with the same or greater load capacity.

Using any other size or type of tire may seriously affect handling, ride, speedometer/odometer calibration, ground clearance, and clearance between the body and tires or snow chains.

Rotating tires

CAUTION

- **Do not mix radial, bias belted, or bias-ply tires on your vehicle. It can cause dangerous handling characteristics, resulting in loss of control.**
- **Do not use tires or wheels other than the manufacturer's recommended size.**

Toyota recommends all four tires, or at least both of the front or rear tires be replaced at a time as a set.

See "If you have a flat tire" in Part 4 for tire change procedure.

When a tire is replaced, the wheel should always be balanced.

An unbalanced wheel may affect vehicle handling and tire life. Wheels can get out of balance with regular use and should therefore be balanced occasionally.

When replacing a tubeless tire, the air valve should also be replaced with a new one.

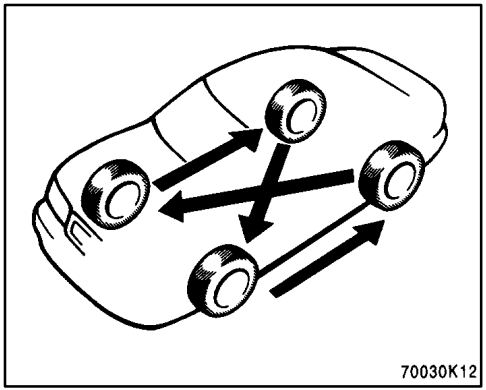

To equalize tire wear and help extend tire life, Toyota recommends that you rotate your tires approximately every 12000 km (7500 miles). However, the most appropriate timing for tire rotation may vary according to your driving habits and road surface conditions.

See "If you have a flat tire" in Part 4 for tire change procedure.

When rotating tires, check for uneven wear and damage. Abnormal wear is usually caused by incorrect tire pressure, improper wheel alignment, out-of-balance wheels, or severe braking.

CAUTION

Do not include a compact spare tire when rotating the tires. It is designed for temporary use only.

Installing snow tires and chains

WHEN TO USE SNOW TIRES OR CHAINS

Snow tires or chains are recommended when driving on snow or ice.

On wet or dry roads, conventional tires provide better traction than snow tires.

SNOW TIRE SELECTION

If you need snow tires, select the same size, construction and load capacity as the original tires on your Toyota.

Do not use tires other than those mentioned above. Do not install studded tires without first checking local regulations for possible restrictions.

SNOW TIRE INSTALLATION

Snow tires should be installed on all wheels.

Installing snow tires on the front wheels only can lead to an excessive difference in road grip capability between the front and rear tires which could cause loss of vehicle control.

When storing removed tires, you should store them in a cool dry place.

Mark the direction of rotation and be sure to install them in the same direction when replacing.

CAUTION

- **Do not drive with the snow tires incorrectly inflated.**
- **Never drive over 120 km/h (75 mph) with any type of snow tires.**

TIRE CHAIN SELECTION

Use tire chains of the correct size and type.

Use SAE Class “S” type radial tire chains except radial cable chains or V-bar type chains.

Regulations regarding the use of tire chains vary according to location or type of road, so always check them before installing chains.

CHAIN INSTALLATION

Install the chains on the front tires as tightly as possible. Do not use tire chains on the rear tires. Retighten chains after driving 0.5—1.0 km (1/4—1/2 mile).

When installing chains on your tires, carefully follow the instructions of the chain manufacturer.

If wheel covers are used, they will be scratched by the chain band, so remove the covers before putting on the chains.

CAUTION

- **Do not exceed 50 km/h (30 mph) or the chain manufacturer’s recommended speed limit, whichever is lower.**
- **Drive carefully avoiding bumps, holes, and sharp turns, which may cause the vehicle to bounce.**
- **Avoid sharp turns or locked-wheel braking, as use of chains may adversely affect vehicle handling.**

NOTICE

Do not attempt to use a tire chain on the compact spare tire, as it may result in damage to the vehicle as well as the tire.

Replacing wheels

WHEN TO REPLACE YOUR WHEELS

If you have wheel damage such as bending, cracks or heavy corrosion, the wheel should be replaced.

If you fail to replace damaged wheels, the tire may slip off the wheel or they may cause loss of handling control.

WHEEL SELECTION

When replacing wheels, care should be taken to ensure that the wheels are replaced by ones with the same load capacity, diameter, rim width, and offset.

This must be observed on compact spare tires, too.

Correct replacement wheels are available at your Toyota dealer.

A wheel of a different size or type may adversely affect handling, wheel and bearing life, brake cooling, speedometer/odometer calibration, stopping ability, headlight aim, bumper height, vehicle ground clearance, and tire or snow chain clearance to the body and chassis.

Replacement with used wheels is not recommended as they may have been subjected to rough treatment or high mileage and could fail without warning. Also, bent wheels which have been straightened may have structural damage and therefore should not be used. Never use an inner tube in a leaking wheel which is designed for a tubeless tire.

Part 7

DO-IT-YOURSELF MAINTENANCE—

Chapter 7-3

Electrical components

- Checking battery condition
- Battery recharging precautions
- Checking and replacing fuses
- Adding washer fluid
- Replacing light bulbs

Checking battery condition——Precautions

CAUTION

BATTERY PRECAUTIONS

The battery produces flammable and explosive hydrogen gas.

- **Do not cause a spark from the battery with tools.**
- **Do not smoke or light a match near the battery.**

The electrolyte contains poisonous and corrosive sulfuric acid.

- **Avoid contact with eyes, skin or clothes.**
- **Never ingest electrolyte.**
- **Wear protective safety glasses when working near the battery.**
- **Keep children away from the battery.**

EMERGENCY MEASURES

- **If electrolyte gets in your eyes, flush your eyes with clean water for at least 15 minutes and get immediate medical attention. If possible, continue to apply water with a sponge or cloth while en route to the medical office.**
- **If electrolyte gets on your skin, thoroughly wash the contact area. If you feel pain or burning, get medical attention immediately.**
- **If electrolyte gets on your clothes, there is a possibility of its soaking through to your skin, so immediately take off the exposed clothing and follow the procedure above, if necessary.**
- **If you happen to swallow electrolyte, drink a large quantity of water or milk. Follow with milk of magnesia, beaten raw egg or vegetable oil. Then go immediately for emergency help.**

—Checking battery exterior

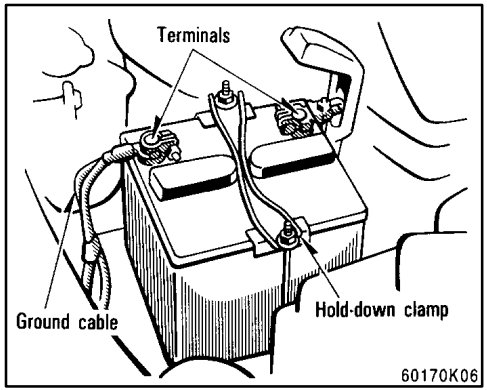

Check the battery for corroded or loose terminal connections, cracks, or loose hold-down clamp.

a. If the battery is corroded, wash it off with a solution of warm water and baking soda. Coat the outside of the terminals with grease to prevent further corrosion.

b. If the terminal connections are loose, tighten their clamp nuts—but do not overtighten.

c. Tighten the hold-down clamp only enough to keep the battery firmly in place. Overtightening may damage the battery case.

NOTICE

- ***Be sure the engine and all accessories are off before performing maintenance.***
- ***When checking the battery, remove the ground cable from the negative terminal ("-" mark) first and reinstall it last.***
- ***Be careful not to cause a short circuit with tools.***
- ***Take care no solution gets into the battery when washing it.***

—Checking battery fluid

There are two types of batteries: Maintenance type and non-maintenance type.

A non-maintenance battery has "MAINTENANCE FREE BATTERY" on its top. A maintenance type battery does not have such indication.

Maintenance type battery—

Check the fluid condition by the fluid level lines on the side of the battery. Or if the battery has a hydrometer on its top, you can also check the hydrometer.

Non-maintenance battery—

Check the battery condition by the hydrometer on the top of the battery.

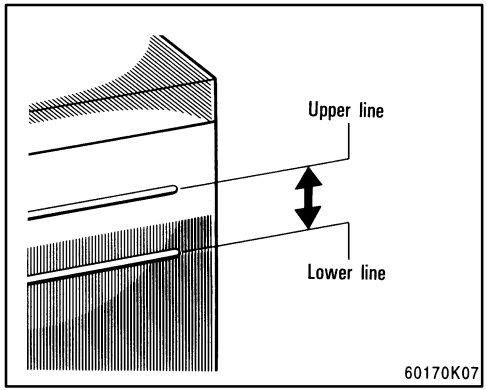

CHECKING BY THE FLUID LEVEL LINES (MAINTENANCE TYPE BATTERY ONLY)

The fluid (electrolyte) level must be between the upper and lower lines.

When checking the fluid level, look at all six cells, not just one or two.

If the level is lower than the lower line, add distilled water. (See “ADDING DISTILLED WATER”.)

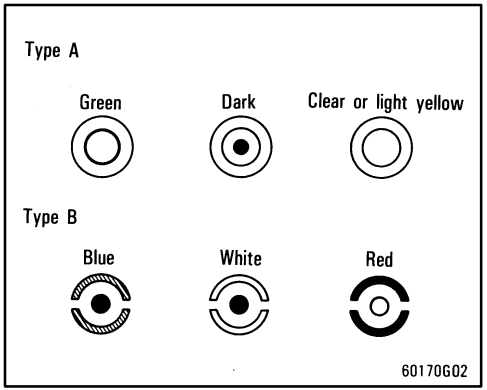

CHECKING BY THE HYDROMETER

Check the battery condition by the hydrometer color.

Maintenance type battery

Hydrometer color		Condition
Type A	Type B	
GREEN	BLUE	Good
DARK	WHITE	Charging necessary. Have battery checked by your Toyota dealer.
CLEAR or LIGHT YELLOW	RED	Add distilled water*

*: See “ADDING DISTILLED WATER”.

Non-maintenance battery

Hydrometer color		Condition
Type A	Type B	
GREEN	BLUE	Good
DARK	WHITE	Charging necessary. Have battery checked by your Toyota dealer.
CLEAR or LIGHT YELLOW	RED	Have battery checked by your Toyota dealer.

NOTICE

Do not refill the battery with water.

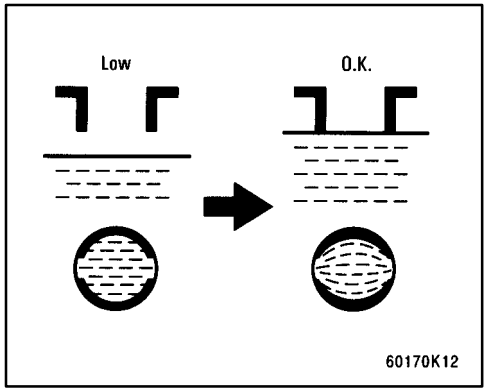

ADDING DISTILLED WATER (MAINTENANCE TYPE BATTERY ONLY)

1. Remove the vent plugs.
2. Add distilled water to cells needing fluid.

If the side of your battery is covered, check the water level by looking down directly above the cell as illustrated above.

3. Retighten the vent plugs securely.

NOTICE

Do not overfill the cells. Excess electrolyte could squirt out of the battery during heavy charging, causing corrosion or damage.

Battery recharging precautions

During recharging, the battery is producing hydrogen gas.

Therefore, before recharging:

1. Maintenance type batteries—Remove the vent plugs.
2. If recharging with the battery installed on the vehicle, be sure to disconnect the ground cable.
3. Be sure the power switch on the recharger is off when connecting the charger cables to the battery and when disconnecting them.

CAUTION

- **Always charge the battery in an unconfined area. Do not charge the battery in a garage or closed room where there is not sufficient ventilation.**
- **Non-maintenance batteries: Only do a slow charge (5A or less). Charging at a quicker rate is dangerous. The battery may explode, causing personal injuries.**

  Maintenance type batteries: Be sure to remove the vent plugs before recharging.

NOTICE

Never recharge the battery while the engine is running. Also, be sure all accessories are turned off.

Checking and replacing fuses

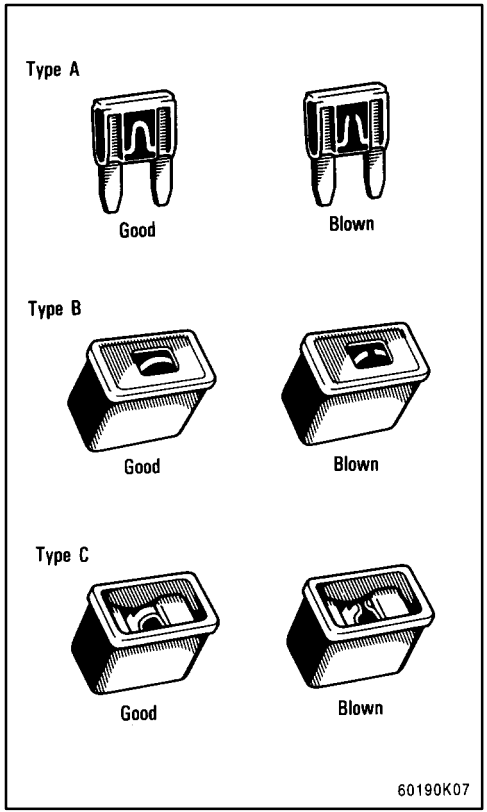

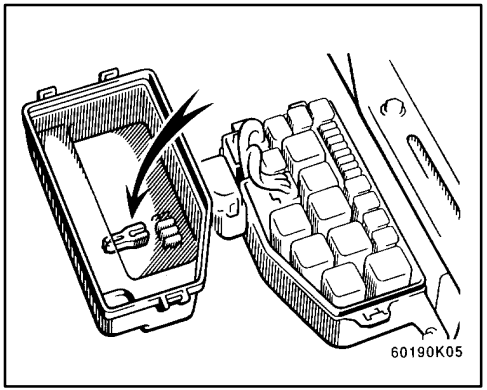

If the headlights or other electrical components do not work, check the fuses. If any of the fuses are blown, they must be replaced.

See “Fuse locations” in Chapter 7-1 for locations of the fuses.

Turn the ignition switch and inoperative component off. Pull a suspected fuse straight out and check it.

Determine which fuse may be causing the problem. The lid of the fuse box shows the name of the circuit for each fuse. See Part 8 of this manual for the functions controlled by each circuit.

Type A fuses can be pulled out by using the pull-out tool. The location of the pull-out tool is shown in the illustration.

If you are not sure whether the fuse has blown, try replacing the suspected fuse with one that you know is good.

If the fuse has blown, push a new fuse into the clip.

Only install a fuse with the amperage rating designated on the fuse box lid.

If you do not have a spare fuse, in an emergency you can pull out the “CIG & RADIO”, “DOME” or “A/C” fuse, which may be dispensable for normal driving, and use it if its amperage rating is the same.

If you cannot use one of the same amperage, use one that is lower, but as close as possible to the rating. If the amperage is lower than that specified, the fuse might blow out again but this does not indicate anything wrong. Be sure to get the correct fuse as soon as possible and return the substitute to its original clip.

It is a good idea to purchase a set of spare fuses and keep them in your vehicle for emergencies.

If the new fuse immediately blows out, there is a problem with the electrical system. Have your Toyota dealer correct it as soon as possible.

CAUTION

Never use a fuse with a higher amperage rating, or any other object, in place of a fuse. This may cause extensive damage and possibly a fire.

Adding washer fluid

If any washer does not work, the washer tank may be empty. Add washer fluid.

You may use plain water as washer fluid. However, in cold areas where temperatures range below freezing point, use washer fluid containing antifreeze. This product is available at your Toyota dealer and most auto parts stores. Follow the manufacturer's directions for how much to mix with water.

NOTICE

Do not use engine antifreeze or any other substitute because it may damage your vehicle's paint.

Replacing light bulbs—

The following illustrations show how to gain access to the bulbs. When replacing a bulb, make sure the ignition switch and light switch are off. Use bulbs with the wattage ratings given in the table.

CAUTION

Halogen bulbs have pressurized gas inside and require special handling. They can burst or shatter if scratched or dropped. Hold a bulb only by its plastic or metal case. Do not touch the glass part of a bulb with bare hands.

NOTICE

Only use a bulb of the listed type.

Light Bulbs	Bulb No.	W	Type
Headlights	9004	64/45	A
Parking, front side marker and front turn signal lights	1157	27/8	B
Rear side marker lights	168	5	C
Rear turn signal lights	1156	27	B
Stop and tail lights	1157	27/8	B
Back-up lights	1156	27	B
License plate lights	—	5	C
High mounted stop light	921	18	C
Interior light	—	8	D
Trunk light	194	3.8	C

A: HB1 halogen bulbs

B: Single end bulbs

C: Wedge base bulbs

D: Double end bulbs

—Headlights

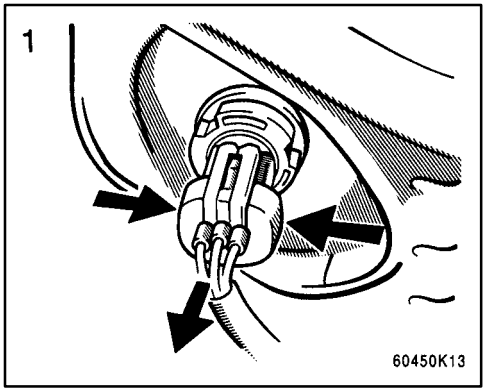

1. Open the hood. Disconnect the connector while depressing the lock release.

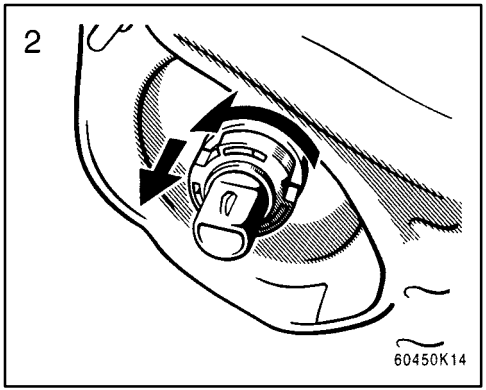

2. Turn the bulb retaining ring counterclockwise and take out the bulb.

—Parking, front side marker and front turn signal lights

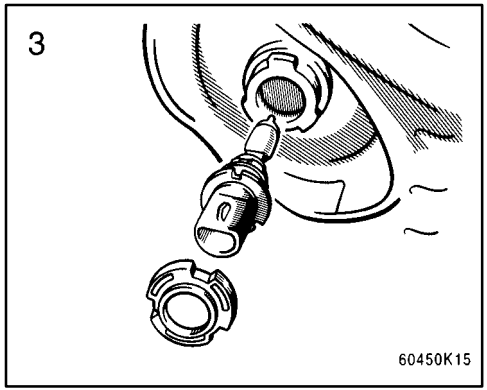

3. Install a new bulb in the reverse sequence of removal.

To install a bulb, align the cutouts of the bulb socket with the protrusions of the mounting hole.

Aiming is not necessary after replacing the bulb. When aiming adjustment is necessary, contact your Toyota dealer.

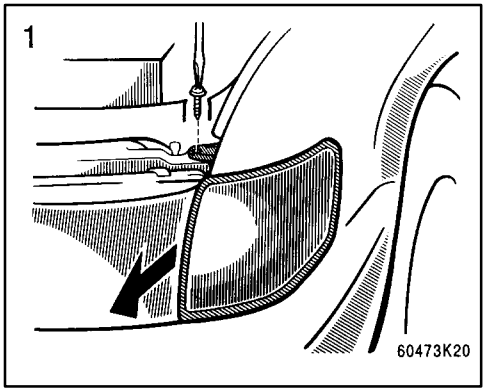

Use a Phillips-head screwdriver.

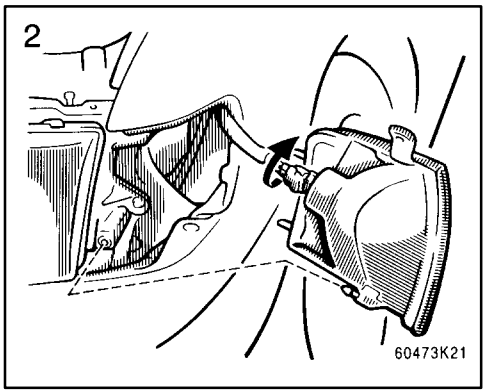

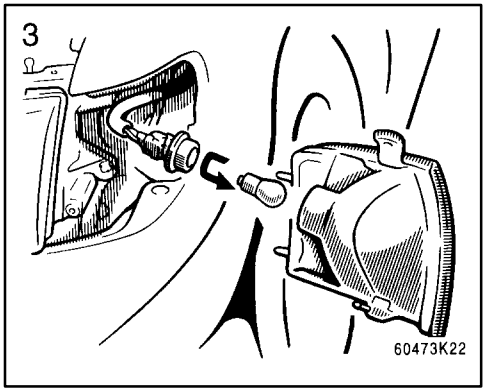

—Rear side marker, rear turn signal, stop and tail, and back-up lights

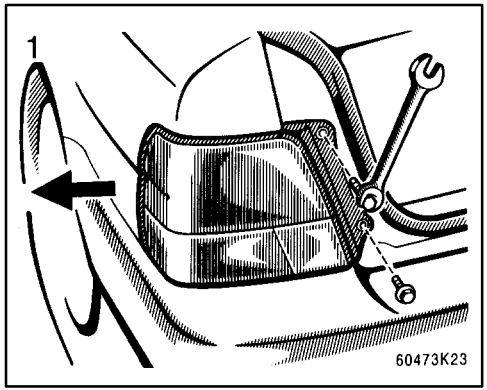

Use a wrench.

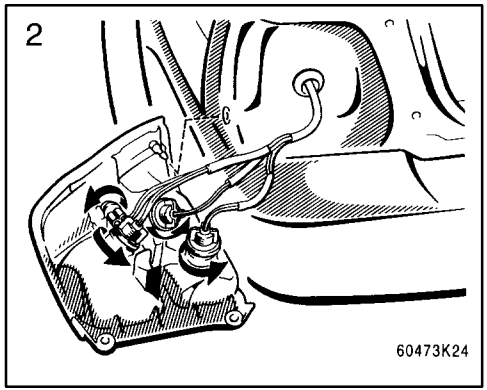

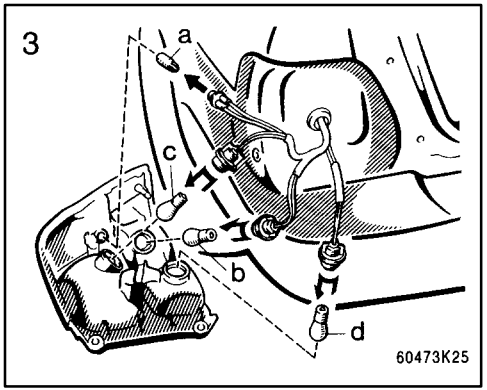

a: Rear side marker light
b: Rear turn signal light
c: Stop and tail light
d: Back-up light

—License plate lights

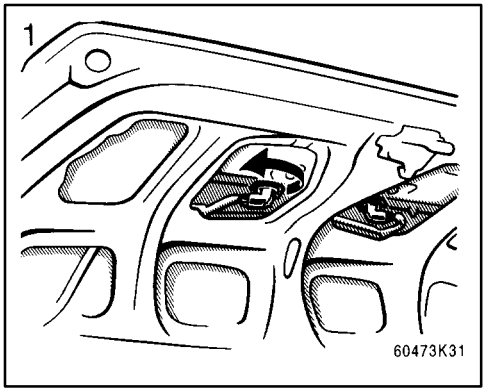

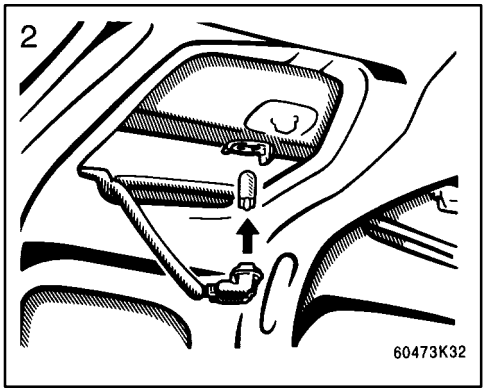

—High mounted stoplight

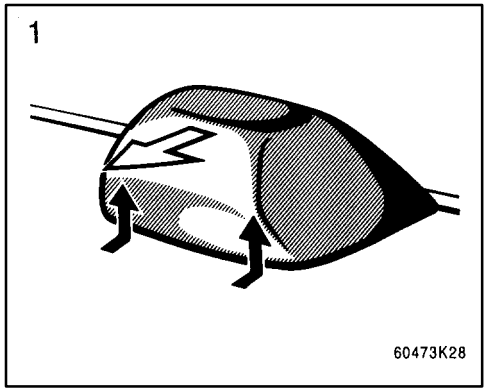

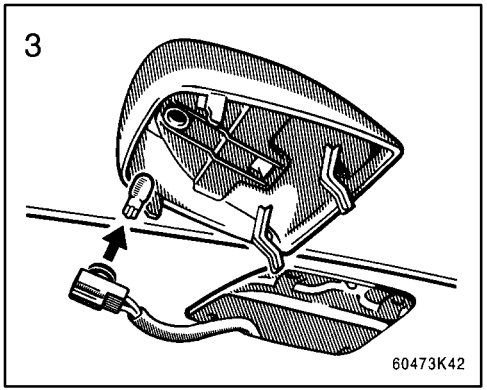

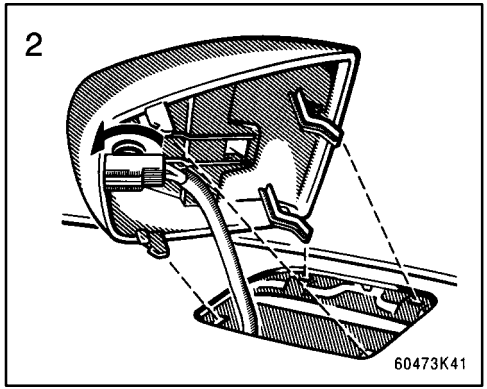

Part 8
SPECIFICATIONS

- Dimensions and weight
- Engine
- Fuel
- Service specifications
- Tires
- Fuses

Dimensions and weight

Overall length	mm (in.)	4120 (162.2)
Overall width	mm (in.)	1660 (65.4)
Overall height	mm (in.)	1350 (53.1)*1
	mm (in.)	1375 (54.1)*2
Wheelbase	mm (in.)	2380 (93.7)
Front tread	mm (in.)	1400 (55.1)
Rear tread	mm (in.)	1430 (56.3)

Vehicle capacity weight
(occupants + luggage)
kg (lb.) 352 (775)

*1: Unladen vehicle plus two occupants
*2: Unladen vehicle

Engine

Model:
5E-FE
Type:
4 cylinder in line, 4 cycle, gasoline
Bore and stroke, mm (in.):
74.0 x 87.0 (2.91 x 3.43)
Displacement, cm^3 (cu. in.):
1497 (91.3)

Fuel

Fuel type:

Unleaded gasoline, Research Octane Number 91 (Octane Rating 87) or higher

Fuel tank capacity, L (gal., Imp. gal.):

45 (11.9, 9.9)

Service specifications

ENGINE

Valve clearance (engine cold), mm (in.):

Intake	0.15—0.25 (0.006—0.010)
Exhaust	0.31—0.41 (0.012—0.016)

Spark plug type:

NIPPONDENSO	K16TR11
NGK	BKR5EKB- 11

Spark plug gap, mm (in.):

1.1 (0.043)

Drive belt tension measured with Borroughs drive belt tension gauge No. BT-33-73F (used belt), lbf:

100 ± 20

ENGINE LUBRICATION

Oil capacity (drain and refill), L (qt., Imp. qt.):

With filter	2.8 (3.0, 2.5)
Without filter	2.6 (2.7, 2.3)

Oil grade:

API SH, “Energy-Conserving II” multigrade engine oil or ILSAC multigrade engine oil is recommended.

Recommended oil viscosity (SAE):

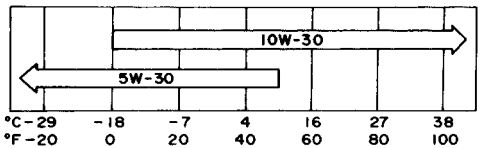

Temperature range anticipated before next oil change

80040L02U

COOLING SYSTEM

Total capacity, L (qt., Imp. qt.):

Automatic transmission

Vehicles sold in Puerto Rico

4.8 (5.1, 4.2)

Vehicles sold outside Puerto Rico

5.3 (5.6, 4.7)

Manual transmission

4.9 (5.2, 4.3)

Coolant type:

With ethylene-glycol antifreeze (Do not use alcohol type.)

BATTERY

—Maintenance type battery

Specific gravity reading at 20°C (68°F):

1.260	Fully charged
1.160	Half charged
1.060	Discharged

—Non-maintenance battery

Open voltage* at 20°C (68°F):

12.7 V	Fully charged
12.3 V	Half charged
11.9 V	Discharged

*: Voltage that is checked 20 minutes after the key is removed with all the lights turned off

Charging rates:

Non-maintenance battery	5 A max.
Maintenance type battery	
Quick charge	15 A max.
Slow charge	5 A max.

CLUTCH

Pedal freeplay, mm (in.):

5—15 (0.2—0.6)

Fluid type:

SAE J1703 or FMVSS No. 116 DOT 3

MANUAL TRANSAXLE

Oil capacity, L (qt., Imp. qt.):

1.9 (2.0, 1.7)

Oil type:

Multipurpose gear oil API GL-4 or GL-5

Recommended oil viscosity:

SAE 75W-90

AUTOMATIC TRANSAXLE

3-speed type automatic transmission

Automatic transmission

Fluid capacity (drain and refill), L (qt., Imp. qt.):

Up to 2.5 (2.6, 2.2)

Differential

Fluid capacity, L (qt., Imp. qt.):

1.4 (1.5, 1.2)

4-speed type automatic transmission

Fluid capacity (drain and refill), L (qt., Imp. qt.):

Up to 3.1 (3.3, 2.7)

Fluid type:

Automatic transmission fluid DII or DEXRON®III (DEXRON®II)

BRAKES

Minimum pedal clearance when depressed with the pressure of 490 N (50 kgf, 110 lbf) with the engine running, mm (in.):

With anti-lock brake system

55 (2.2)

Without anti-lock brake system

60 (2.4)

Pedal freeplay, mm (in.):

1—6 (0.04—0.24)

Pad wear limit, mm (in.):

1.0 (0.04)

Lining wear limit, mm (in.):

1.0 (0.04)

Parking brake adjustment when pulled with the force of 196 N (20 kgf, 44 lbf):

5—8 clicks

Fluid type:

SAE J1703 or FMVSS No. 116 DOT 3

STEERING

Wheel freeplay:

Less than 30 mm (1.2 in.)

Power steering fluid type:

Automatic transmission fluid DEXRON®II or III

Tires

Tire size:

Spare tire
With anti-lock brake system
T105/70D16
Without anti-lock brake system
T105/70D14
Except spare tire
115 SR 13

Tire pressure, kPa (kgf/cm^2 or bar, psi):

Spare tire
420 (4.2, 60)
Except spare tire
Front 240 (2.4, 34)
Rear 225 (2.25, 32)

Wheel size:

Spare tire
With anti-lock brake system
16 x 4T
Without anti-lock brake system
14 x 4T
Except spare tire
13 x 4 1/2J

Wheel nut torque, N·m (kgf·m, ft·lbf):

103 (10.5, 76)

Fuses

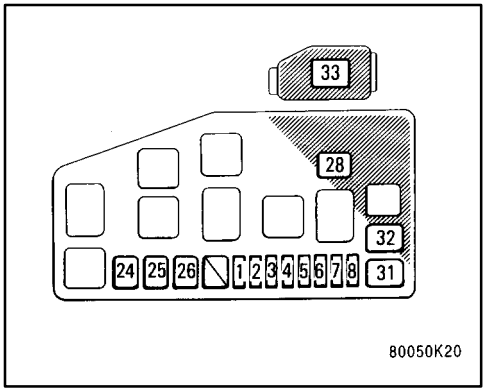

Engine compartment (U.S.A.)

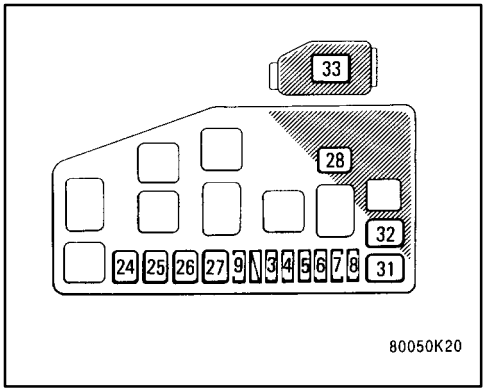

Engine compartment (Canada)

Fuses (type A)

1. HEAD (LH) 10 A: Left-hand headlight

2. HEAD (RH) 10 A: Right-hand headlight

3. AM2 15 A: Ignition system, charging system, multiport fuel injection system/sequential multiport fuel injection system, SRS airbag system, starter system

4. HAZ-HORN 15 A: Horns, turn signal lights, emergency flashers, theft deterrent system

5. EFI 15 A: Multiport fuel injection system/sequential multiport fuel injection system, air conditioning system

6. DOME 10 A: Interior lights, open door warning light, clock, car audio system, anti-lock brake system, theft deterrent system

7. OBD-II 7.5 A: On-board diagnosis system

8. ALT-S 5 A: Charging system

9. DRL 5 A: Daytime running light system

10. HEAD (RH-LWR) 10 A: Right-hand headlight (low beam)

11.HEAD (LH-LWR) 10 A: Left-hand headlight (low beam)

12. HEAD (RH-UPR) 10 A: Right-hand headlight (high beam)

13. HEAD (LH-UPR) 10 A: Left-hand headlight (high beam)

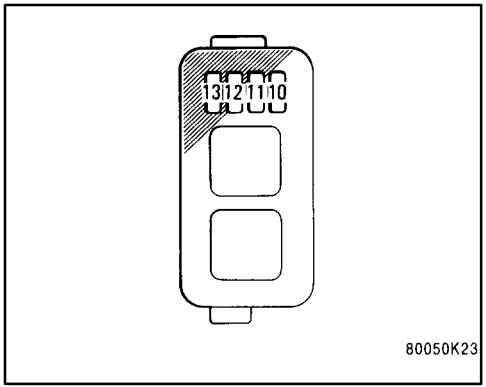

Engine compartment (Canada only)

14. STOP 10 A: Stop lights, high mounted stoplight, anti-lock brake system, shift lock control system

15. A/C 10 A: Air conditioning system

16. TAIL 15 A: Tail lights, parking lights, license plate lights, instrument panel lights, emergency flashers, air conditioning system, rear window defogger, car audio system, cigarette lighter, clock

17. GAUGE 10 A: Gauge and meters, service reminder indicator and warning buzzers (except discharge and open door warning lights), back-up lights, rear window defogger

18. TURN 7.5 A: Turn signal lights, emergency flashers

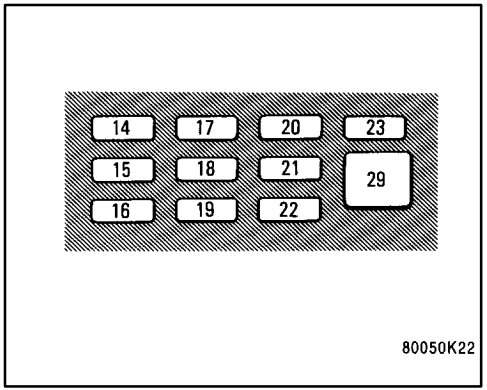

Instrument panel

19. WIPER 20 A: Windshield wipers and washer

20. ECU-IG 5 A: Anti-lock brake system, air conditioning system

21. CIG/RADIO 15 A: Cigarette lighter, car audio system, clock, anti-lock brake system, theft deterrent system, shift lock control system

22. IGN 5 A: Charging system, discharge warning light, multiport fuel injection system/sequential multiport fuel injection system, SRS airbag system

23. SRS 5 A: SRS airbag warning light

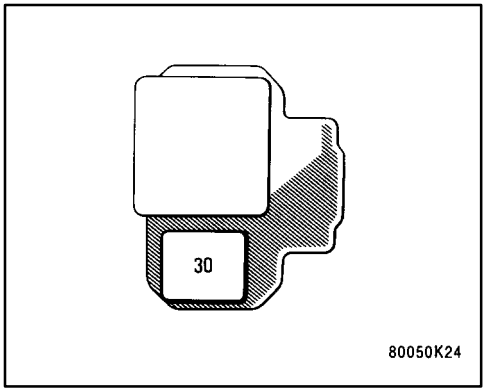

Instrument panel

Fuses (type B)

24. CDS FAN 30 A: Electric cooling fans

25. RAD FAN 30 A: Electric cooling fans

26. HEATER 40 A: Air conditioning system, “A/C” fuses

27. DIMMER 30 A: “HEAD (RH-UPR)”, “HEAD (LH-UPR)”, “HEAD (RH-LWR)” and “HEAD (LH-LWR)” fuses

28. MAIN 30 A: Starter system

29. DEF 30 A: Rear window defogger

30. PWR 30 A: Power windows, power door lock system

Fuses (type C)

31. ABS 60 A: Anti-lock brake system

32. AM1 50 A: “DEF”, “WIPER”, “GAUGE”, “ECU-IG”, “TURN”, “IGN” and “PWR” fuses

33. ALT 100 A: “ABS”, “STOP”, “TAIL”, “SRS”, “DEF”, “AM1”, “WIPER”, “GAUGE”, “ECU-IG”, “TURN”, “IGN” and “PWR” fuses

Part 9

REPORTING SAFETY DEFECTS FOR U.S. OWNERS AND UNIFORM TIRE QUALITY GRADING

- Reporting safety defects for U.S. owners
- Uniform tire quality grading

Reporting safety defects for U.S. owners

If you believe that your vehicle has a defect which could cause a crash or could cause injury or death, you should immediately inform the National Highway Traffic Safety Administration (NHTSA) in addition to notifying Toyota Motor Sales, U.S.A., Inc.
(Toll-free: 1-800-331-4331).
If NHTSA receives similar complaints, it may open an investigation, and if it finds that a safety defect exists in a group of vehicles, it may order a recall and remedy campaign. However, NHTSA cannot become involved in individual problems between you, your dealer, or Toyota Motor Sales, U.S.A., Inc.

To contact NHTSA, you may either call the Auto Safety Hotline toll-free at 1-800-424-9393 (or 366-0123 in Washington D.C. area) or write to: NHTSA. U.S. Department of Transportation. Washington D.C. 20590. You can also obtain other information about motor vehicle safety from the Hotline.

Uniform tire quality grading

This information has been prepared in accordance with regulations issued by the National Highway Traffic Safety Administration of the U.S. Department of Transportation. It provides the purchasers and/or prospective purchasers of Toyota vehicles with information on uniform tire quality grading.

Your Toyota dealer will help answer any questions you may have as you read this information.

DOT quality grades—All passenger vehicle tires must conform to Federal Safety Requirements in addition to these grades. These quality grades are molded on the sidewall.

Treadwear—The treadwear grade is a comparative rating based on the wear rate of the tire when tested under controlled conditions on a specified government test course. For example, a tire graded 150 would wear one and a half (1-1/2) times as well on the government course as a tire graded 100. The relative performance of tires depends upon the actual conditions of their use, however, and may depart significantly from the norm due to variations in driving habits, service practices and differences in road characteristics and climate.

Traction A, B, C—The traction grades, from highest to lowest, are A, B, and C, and they represent the tire's ability to stop on wet pavement as measured under controlled conditions on specified government test surfaces of asphalt and concrete. A tire marked C may have poor traction performance.

Warning: The traction grade assigned to this tire is based on braking (straight ahead) traction tests and does not include cornering (turning) traction.

Temperature A, B, C—The temperature grades are A (the highest), B, and C, representing the tire's resistance to the generation of heat and its ability to dissipate heat when tested under controlled conditions on a specified indoor laboratory test wheel. Sustained high temperature can cause the material of the tire to degenerate and reduce tire life, and excessive temperature can lead to sudden tire failure. The grade C corresponds to a level of performance which all passenger car tires must meet under the Federal Motor Vehicle Safety Standard No. 109. Grades B and A represent higher levels of performance on the laboratory test wheel than the minimum required by law.

Warning: The temperature grade for this tire is established for a tire that is properly inflated and not overloaded. Excessive speed, underinflation, or excessive loading, either separately or in combination, can cause heat buildup and possible tire failure.