HYUNDAI

OWNER'S MANUAL

Operation
Maintenance
Specifications

All information in this Owner's Manual is current at the time of publication. However, Hyundai reserves the right to make changes at any time so that our policy of continual product improvement may be carried out.

This manual applies to all Hyundai models and includes descriptions and explanations of optional as well as standard equipment. As a result, you may find material in this manual that does not apply to your specific vehicle.

Please note that some models are equipped with Right-Hand Drive (RHD). The explanations and illustrations for some operations in RHD models are opposite of those written in this manual.

CAUTION: MODIFICATIONS TO YOUR HYUNDAI

Your Hyundai should not be modified in any way. Such modifications may adversely affect the performance, safety or durability of your Hyundai and may, in addition, violate conditions of the limited warranties covering the vehicle. Certain modifications may also be in violation of regulations established by the Department of Transportation and other government agencies in your country.

TWO-WAY RADIO OR CELLULAR TELEPHONE INSTALLATION

Your vehicle is equipped with electronic fuel injection and other electronic components. It is possible for an improperly installed/adjusted two-way radio or cellular telephone to adversely affect electronic systems. For this reason, we recommend that you carefully follow the radio manufacturer's instructions or consult your Hyundai dealer for precautionary measures or special instructions if you choose to install one of these devices.

SAFETY AND VEHICLE DAMAGE WARNING

This manual includes information titled as WARNING, CAUTION and NOTICE.
These titles indicate the following:

⚠ WARNING
This indicates that a condition may result in harm, serious injury or death to you or other persons if the warning is not heeded. Follow the advice provided with the warning.

⚠ CAUTION
This indicates that a condition may result in damage to your vehicle or its equipment if the caution is not heeded. Follow the advice provided with the caution.

✻ NOTICE
This indicates that interesting or helpful information is being provided.

FOREWORD

Thank you for choosing Hyundai. We are pleased to welcome you to the growing number of discriminating people who drive Hyundais. The advanced engineering and high-quality construction of each Hyundai we build is something of which we're very proud.

Your Owner's Manual will introduce you to the features and operation of your new Hyundai. It is suggested that you read it carefully because the information it contains can contribute greatly to the satisfaction you receive from your new car.

The manufacturer also recommends that service and maintenance on your vehicle be performed by an authorized Hyundai dealer.

HYUNDAI MOTOR COMPANY

Note : Because future owners will also need the information included in this manual, if you sell this Hyundai, please leave the manual in the vehicle for their use. Thank you.

⚠ CAUTION

Severe engine and transaxle damage may result from the use of poor quality fuels and lubricants that do not meet Hyundai specifications. You must always use high quality fuels and lubricants that meet the specifications listed on Page 8-7 in the Vehicle Specifications section of the Owner's Manual.

Copyright 2013 Hyundai Motor Company. All rights reserved. No part of this publication may be reproduced, stored in any retrieval system or transmitted in any form or by any means without the prior written permission of Hyundai Motor Company.

TABLE OF CONTENTS

Introduction	1
Your vehicle at a glance	2
Safety features of your vehicle	3
Features of your vehicle	4
Driving your vehicle	5
What to do in an emergency	6
Maintenance	7
Specifications & Consumer information	8
Index	I

Introduction

1

How to use this manual 1-2
Fuel requirements 1-3
• Gasoline engine 1-3
• Gasoline containing alcohol and methanol.....1-4
• Use of MTBE 1-4
• Do not use methanol 1-4
• Fuel Additives 1-4
• Operation in foreign countries.....1-4
• Diesel engine.....1-5
• Biodiesel 1-5
Vehicle break-in process 1-6
Indicator symbols on the instrument cluster.....1-7

HOW TO USE THIS MANUAL

We want to help you get the greatest possible driving pleasure from your vehicle. Your Owner's Manual can assist you in many ways. We strongly recommend that you read the entire manual. In order to minimize the chance of death or injury, you must read the WARNING and CAUTION sections in the manual.

Illustrations complement the words in this manual to best explain how to enjoy your vehicle. By reading your manual, you learn about features, important safety information, and driving tips under various road conditions.

The general layout of the manual is provided in the Table of Contents. A good place to start is the index; it has an alphabetical listing of all information in your manual.

Sections: This manual has eight sections plus an index. Each section begins with a brief list of contents so you can tell at a glance if that section has the information you want.

You'll find various WARNING's, CAUTION's, and NOTICE's in this manual. These were prepared to enhance your personal safety. You should carefully read and follow ALL procedures and recommendations provided in these WARNING's, CAUTION's and NOTICE's.

⚠ WARNING

A WARNING indicates a situation in which harm, serious bodily injury or death could result if the warning is ignored.

⚠ CAUTION

A CAUTION indicates a situation in which damage to your vehicle could result if the caution is ignored.

✻ NOTICE

A NOTICE indicates interesting or helpful information is being provided.

FUEL REQUIREMENTS

Gasoline engine

Unleaded

For Europe

For the optimal vehicle performance, we recommend you to use unleaded gasoline with an octane rating of RON (Research Octane Number) 95 /AKI (Anti Knock Index) 91 or higher.

You may use unleaded gasoline with an octane rating of RON 91~94/AKI 87~90 but it may result in slight performance reduction of the vehicle.

Except Europe

Your new vehicle is designed to use only unleaded fuel having an Octane Rating of RON (Research Octane Number) 91/ AKI (Anti-Knock Index) 87 or higher.

Your new vehicle is designed to obtain maximum performance with UNLEADED FUEL, as well as minimize exhaust emissions and spark plug fouling.

⚠ CAUTION

NEVER USE LEADED FUEL. The use of leaded fuel is detrimental to the catalytic converter and will damage the engine control system's oxygen sensor and affect emission control.

Never add any fuel system cleaning agents to the fuel tank other than what has been specified. (We recommend that you consult with an authorized HYUNDAI dealer for details.)

⚠ WARNING

- **Do not "top off" after the nozzle automatically shuts off when refueling.**
- **Always check that the fuel cap is installed securely to prevent fuel spillage in the event of an accident.**

Leaded (if equipped)

For some countries, your vehicle is designed to use leaded gasoline. When you are going to use leaded gasoline, we recommend that you ask an authorized HYUNDAI dealer whether leaded gasoline in your vehicle is available or not.

Octane Rating of leaded gasoline is same with unleaded one.

Gasoline containing alcohol and methanol

Gasohol, a mixture of gasoline and ethanol (also known as grain alcohol), and gasoline or gasohol containing methanol (also known as wood alcohol) are being marketed along with or instead of leaded or unleaded gasoline.

Do not use gasohol containing more than 10% ethanol, and do not use gasoline or gasohol containing any methanol. Either of these fuels may cause drivability problems and damage to the fuel system.

Discontinue using gasohol of any kind if drivability problems occur.

Vehicle damage or driveability problems may not be covered by the manufacturer's warranty if they result from the use of:

1. Gasohol containing more than 10% ethanol.
2. Gasoline or gasohol containing methanol.
3. Leaded fuel or leaded gasohol.

⚠ CAUTION

Never use gasohol which contains methanol. Discontinue use of any gasohol product which impairs drivability.

Use of MTBE

Fuels containing MTBE (Methyl Tertiary Butyl Ether) over 15.0% vol. (Oxygen Content 2.7% weight) should not be used in your vehicle.

Fuel containing MTBE over 15.0% vol. (Oxygen Content 2.7% weight) may reduce vehicle performance and produce vapor lock or hard starting.

Do not use methanol

Fuels containing methanol (wood alcohol) should not be used in your vehicle. This type of fuel can reduce vehicle performance and damage components of the fuel system.

⚠ CAUTION

Your New Vehicle Limited Warranty may not cover damage to the fuel system and any performance problems that are caused by the use of fuels containing methanol or fuels containing MTBE (Methyl Tertiary Butyl Ether) over 15.0% vol. (Oxygen Content 2.7% weight.)

Fuel Additives

HYUNDAI recommends that you use good quality gasoline that meets Europe Fuel standards (EN228) or equivalents.

For customers who do not use good quality gasoline including fuel additives regularly, and have problems starting or the engine does not run smoothly, one bottle of additives added to the fuel tank at every 15,000km (for Europe)/5,000km (except Europe). Additives are available from your authorized HYUNDAI dealer along with information on how to use them.

Operation in foreign countries

If you are going to drive your vehicle in another country, be sure to:

- Observe all regulations regarding registration and insurance.
- Determine that acceptable fuel is available.

Diesel engine

Diesel fuel

Diesel engine must be operated only on commercially available diesel fuel that complies with EN 590 or comparable standard. (EN stands for "European Norm"). Do not use marine diesel fuel, heating oils, or non-approved fuel additives, as this will increase wear and cause damage to the engine and fuel system. The use of non-approved fuels and / or fuel additives will result in a limitation of your warranty rights.

Diesel fuel of above cetane 51 is used in your vehicle. If two types of diesel fuel are available, use summer or winter fuel properly according to the following temperature conditions.

- Above -5°C (23°F) ... Summer type diesel fuel.
- Below -5°C (23°F) ... Winter type diesel fuel.

Watch the fuel level in the tank very carefully : If the engine stops through fuel failure, the circuits must be completely purged to permit restarting.

⚠ CAUTION

Do not let any gasoline or water enter the tank. This would make it necessary to drain it out and to bleed the lines to avoid jamming the injection pump and damaging the engine.

⚠ CAUTION - Diesel Fuel

It is recommended to use the regulated automotive diesel fuel for diesel vehicle equipped with the DPF system.

If you use diesel fuel including high sulfur (more than 50 ppm sulfur) and unspecified additives, it can cause the DPF system to be damaged and white smoke can be emitted.

Biodiesel

Commercially supplied Diesel blends of no more than 7% biodiesel, commonly known as "B7 Diesel" may be used in your vehicle if Biodiesel meets EN 14214 or equivalent specifications. (EN stands for "European Norm"). The use of biofuels exceeding 7% made from rapeseed methyl ester (RME), fatty acid methyl ester (FAME), vegetable oil methyl ester (VME) etc. or mixing diesel exceeding 7% with biodiesel will cause increased wear or damage to the engine and fuel system. Repair or replacement of worn or damaged components due to the use of non approved fuels will not be covered by the manufactures warranty.

⚠ CAUTION

- ***Never use any fuel, whether diesel, B7 biodiesel or otherwise, that fails to meet the latest petroleum industry specification.***
- ***Never use any fuel additives or treatments that are not recommended or approved by the vehicle manufacturer.***

Biodiesel (for New Zealand)

Commercially supplied Diesel blends of no more than 7% biodiesel, commonly known as "B7 Diesel" may be used in your vehicle if Biodiesel meets EN 14214 or equivalent specifications. (EN stands for "European Norm"). The use of biofuels exceeding 7%, made from rapeseed methyl ester (RME), vegetable oil methyl ester (VME) etc. or mixing diesel exceeding 7% with biodiesel will cause increased wear or damage to the engine and fuel system. Repair or replacement of worn or damaged components due to the use of non approved fuels will not be covered by the manufactures warranty.

⚠ CAUTION

- ***Never use any fuel, whether diesel, B7 biodiesel or otherwise, that fails to meet the latest petroleum industry specification.***
- ***Never use any fuel additives or treatments that are not recommended or approved by the vehicle manufacturer.***

VEHICLE BREAK-IN PROCESS

No special break-in period is needed. By following a few simple precautions for the first 1,000 km (600 miles) you may add to the performance, economy and life of your vehicle:

- Do not race the engine.
- While driving, keep your engine speed (rpm, or revolutions per minute) between 2,000 rpm and 4,000 rpm.
- Do not maintain a single speed for long periods of time, either fast or slow.

  Varying engine speed is needed to properly break-in the engine.
- Avoid hard stops, except in emergencies, to allow the brakes to seat properly.
- Don't let the engine idle longer than 3 minutes at one time.
- Don't tow a trailer during the first 2,000 km (1,200 miles) of operation.

INDICATOR SYMBOLS ON THE INSTRUMENT CLUSTER

- Air bag warning light*
- Seat belt warning light
- Engine oil pressure warning light
- Turn signal indicator
- High beam indicator
- Front fog light indicator*
- Rear fog light indicator*
- Light on indicator
- Charging system warning light
- Electronic power steering (EPS) system warning light
- Door ajar warning light*
- Trunk open warning light*
- Immobilizer indicator*
- Low fuel level warning light
- Malfunction indicator
- Parking brake & Brake fluid warning light
- Anti-lock brake system (ABS) warning light*
- Electronic stability program (ESP) indicator*
- ESP OFF indicator*
- Cruise indicator*
- Cruise SET indicator*
- Overspeed warning light*
- ECO indicator*
- Engine coolant temperature warning light
- Electric parking brake (EPB) malfunction indicator*
- Low beam indicator*
- Glow indicator (Diesel only)
- Fuel filter warning light (Diesel only)

*: if equipped

❊: For more detailed explanations, refer to section 4, “Instrument cluster”.

Your vehicle at a glance

Exterior overview (front).....2-2
Exterior overview (rear) 2-3
Interior overview 2-4
Instrument panel overview 2-5
Engine compartment 2-6

EXTERIOR OVERVIEW (FRONT)

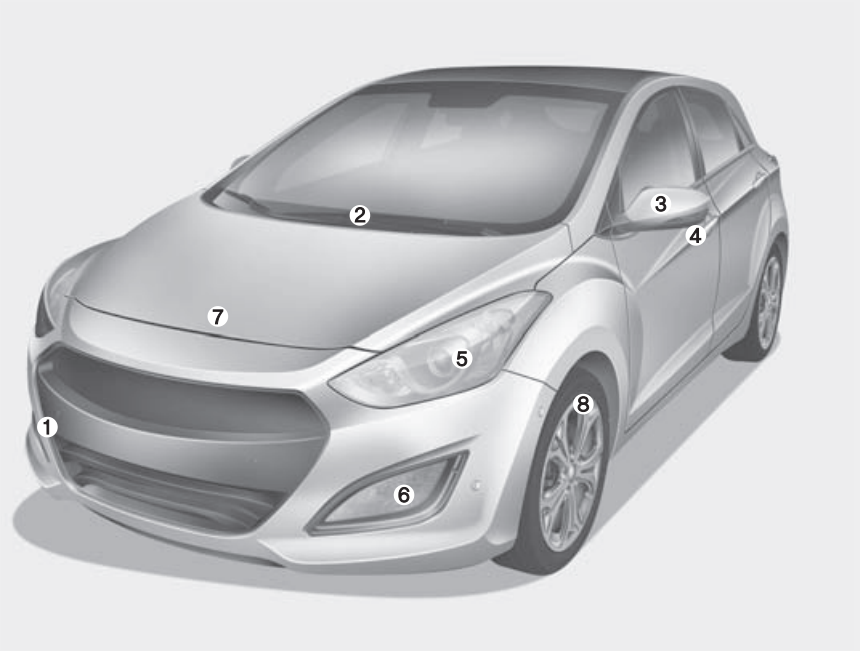

1. Front removable towing hook 6-15
2. Front windshield wiper.....4-88
3. Outside rearview mirror.....4-45
4. Door lock 4-20
5. Head lamp 4-81
6. Front fog lamp.....4-84
7. Hood 4-31
8. Tire and wheel 7-48

❊ The actual shape may differ from the illustration.

OGD011001

EXTERIOR OVERVIEW (REAR)

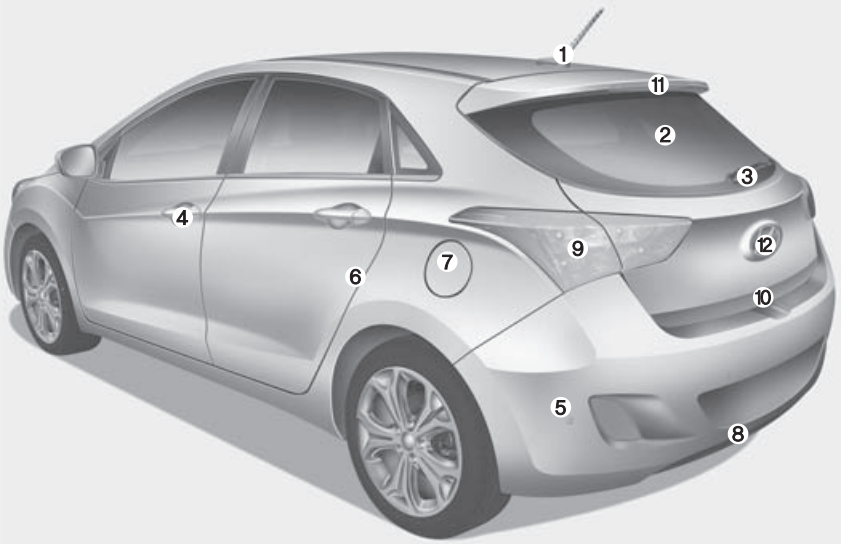

1. Roof antenna 4-130
2. Rear window defroster.....4-95
3. Rear wiper 4-90
4. Door lock 4-20
5. Rear parking assist system 4-76
6. Child-protector rear door lock.....4-23
7. Fuel filler 4-33
8. Rear towing hook.....6-15
9. Rear combination lamp 7-79
10. Tailgate handle switch 4-24
11. High mounted stop lamp 7-82
12. Rear view camera.....4-79

❊ The actual shape may differ from the illustration.

OGD011002

INTERIOR OVERVIEW

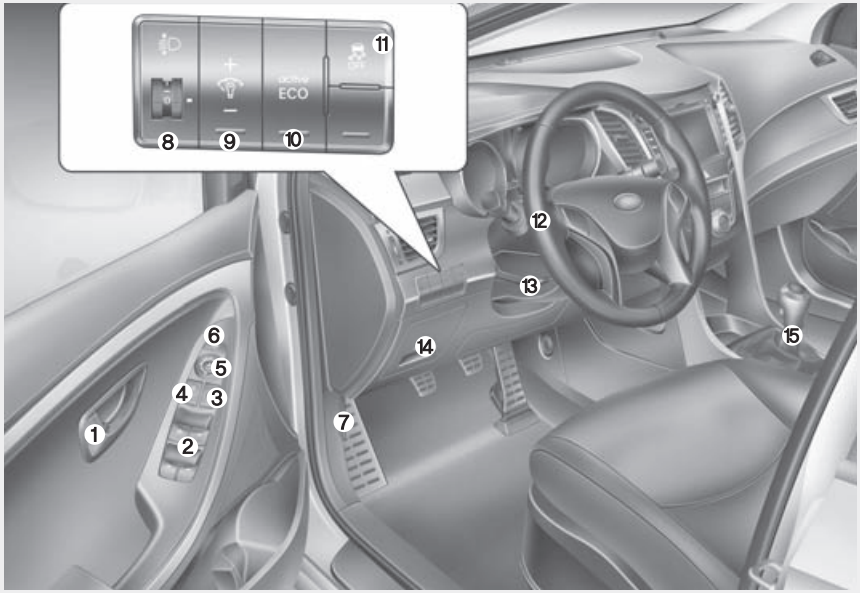

1. Inside door handle 4-21
2. Power window switch 4-26
3. Power window lock switch.....4-29
4. Central door lock switch 4-21
5. Outside rearview mirror control.....4-46
6. Outside rearview mirror folding.....4-47
7. Hood release lever 4-31
8. Headlight leveling device 4-85
9. Instrument panel illumination control system.....4-50
10. Active ECO button 5-25
11. ESP OFF button* 5-35
12. Steering wheel 4-40
13. Tilt and telescopic steering control lever.....4-41
14. Fuse box 7-59
15. Manual transaxle shift lever/ Automatic transaxle shift lever 5-16/5-19

❊ The actual shape may differ from the illustration.

OGDE012003L

INSTRUMENT PANEL OVERVIEW

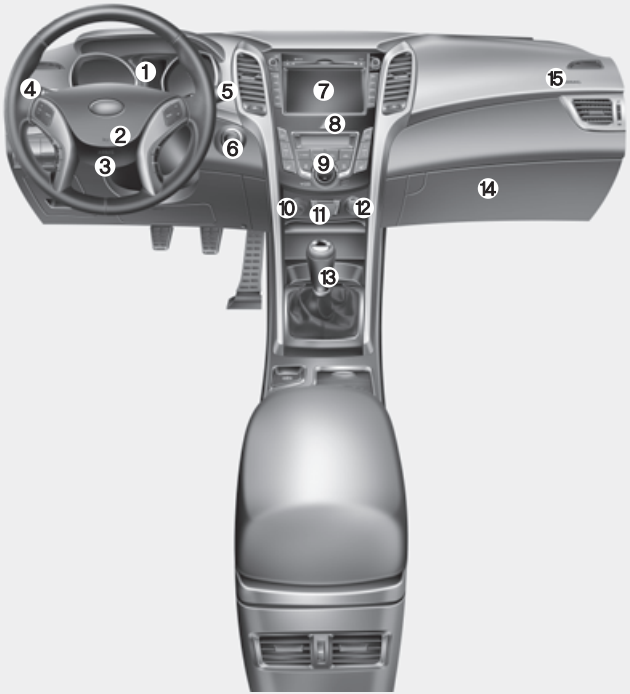

1. Instrument cluster.....4-49
2. Horn 4-41
3. Driver's air bag*.....3-45
4. Light control/Turn signals 4-82
5. Wiper/washer 4-87
6. Ignition switch* or ENGINE START/ STOP button*.....5-6/5-10
7. Audio*.....4-130
8. Hazard.....4-80
9. Climate control system 4-96/4-105
10. Cigar lighter* 4-121
11. Aux, USB and iPod port*.....4-125
12. Power outlet* 4-124
13. Transaxle shift lever.....5-16/5-19
14. Glove box 4-118
15. Front passenger's air bag* 3-45

* : if equipped

❊ The actual shape may differ from the illustration.

OGD011004

ENGINE COMPARTMENT

■ **Gasoline engine - 1.6**

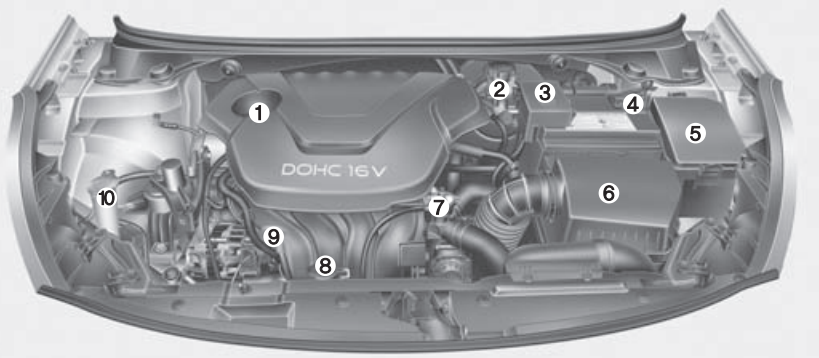

■ **Gasoline engine - 1.8**

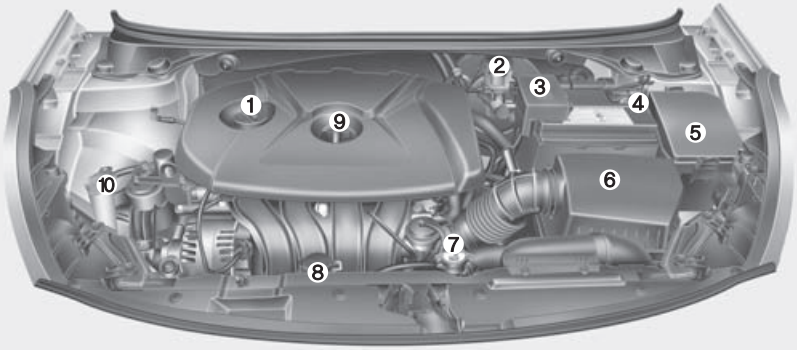

1. Engine oil filler cap 7-31
2. Brake/clutch fluid reservoir 7-36
3. Positive battery terminal 7-45
4. Negative battery terminal 7-45
5. Fuse box.....7-61
6. Air cleaner 7-39
7. Radiator cap 7-35
8. Engine coolant reservoir.....7-34
9. Engine oil dipstick.....7-31
10. Windshield washer fluid reservoir....7-37

❊ The actual engine room in the vehicle may differ from the illustration.

OGDE072070/OGDE072001L

■ **Diesel engine**

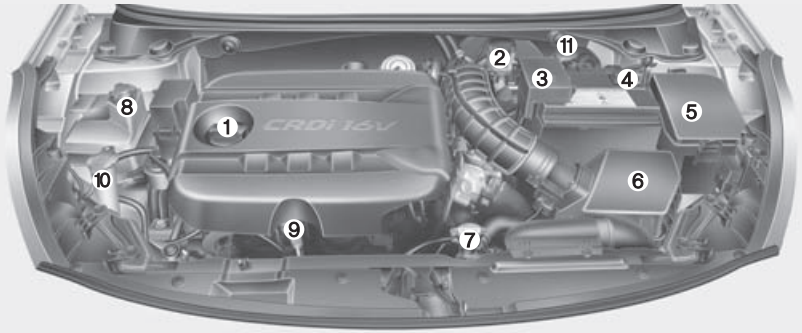

1. Engine oil filler cap 7-31
2. Brake/clutch fluid reservoir 7-36
3. Positive battery terminal 7-45
4. Negative battery terminal 7-45
5. Fuse box.....7-61
6. Air cleaner 7-39
7. Radiator cap 7-35
8. Engine coolant reservoir.....7-34
9. Engine oil dipstick.....7-31
10. Windshield washer fluid reservoir....7-37
11. Fuel filter 7-38

❊ The actual engine room in the vehicle may differ from the illustration.

OGD071002

Safety features of your vehicle

Seat.....3-2
- Front seat 3-5
- Rear seat.....3-11

Seat belt 3-16
- Seat belt warning.....3-17
- Lap/shoulder belt.....3-18
- Lap belt.....3-20
- Pre-tensioner seat belt.....3-21
- Seat belt precautions 3-24
- Care of seat belts 3-27

Child restraint system 3-28

Airbag-supplemental restraint system 3-38
- Air bag warning and indicator.....3-41
- SRS components and functions 3-42
- Driver's and passenger's front air bag 3-45
- Side impact air bag 3-49
- Curtain air bag 3-51
- SRS Care 3-57
- Additional safety precautions.....3-58
- Air bag warning label 3-59

SEATS

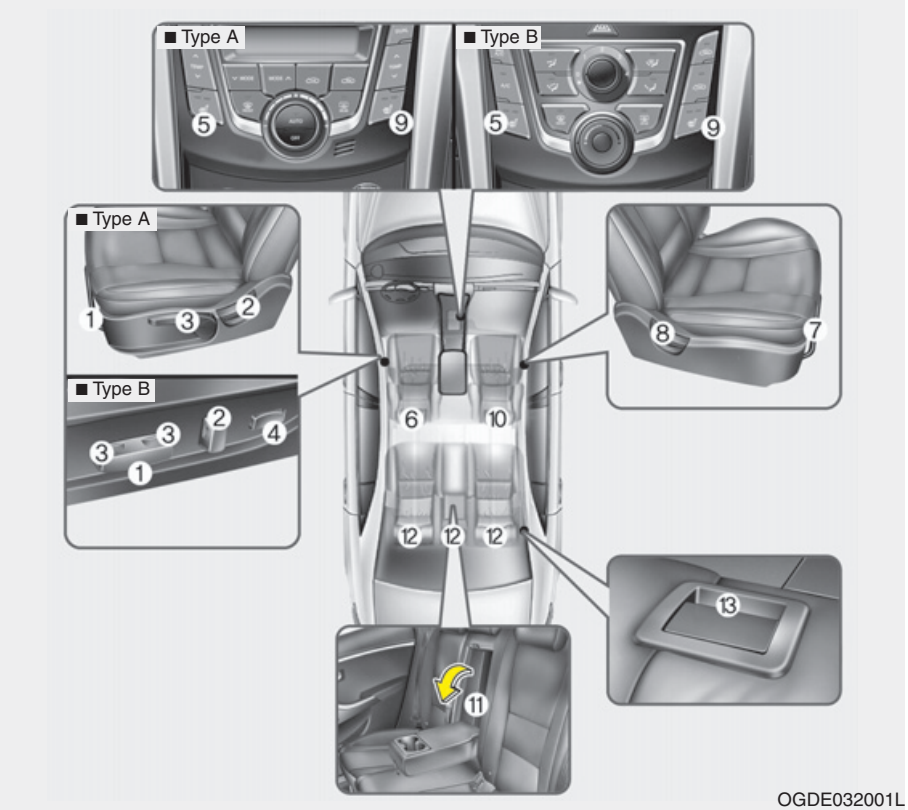

* The actual feature in the vehicle may differ from the illustration.

Driver's seat

(1) Seat adjustment, forward/backward
(2) Seatback recliner
(3) Seat adjustment, height
(4) Lumbar support*
(5) Seat warmer*
(6) Headrest adjustment

Front passenger seat

(7) Seat adjustment, forward/backward
(8) Seatback recliner
(9) Seat warmer*
(10) Headrest adjustment

Rear seat

(11) Armrest
(12) Headrest adjustment
(13) Seat back folding lever*
* if equipped

⚠ WARNING - Loose objects

Loose objects in the driver's foot area could interfere with the operation of the foot pedals, possibly causing an accident. Do not place anything under the front seats.

⚠ WARNING - Uprighting seat

When you return the seatback to its upright position, hold the seatback and return it slowly and be sure there are no other occupants around the seat. If the seatback is returned without being held and controlled, the back of the seat could move forward or backward resulting in accidental injury to a person struck by the seatback.

⚠ WARNING - Driver responsibility for passengers

Riding in a vehicle with seatback reclined could lead to serious or fatal injury in an accident. If a seat is reclined during an accident, the occupant's hips may slide under the lap portion of the seat belt applying great force to the unprotected abdomen. The protection of your restraint system (seat belt and air bags) is greatly reduced by reclining your seat. Serious or fatal internal injuries could result. The driver must advise the passenger to keep the seatback in an upright position whenever the vehicle is in motion.

⚠ WARNING

Do not use a sitting cushion that reduces friction between the seat and passenger. The passenger's hips may slide under the lap portion of the seat belt during an accident or a sudden stop. Serious or fatal internal injuries could result because the seat belt can't operate normally.

⚠ WARNING - Driver's seat

- **Never attempt to adjust seat while the vehicle is moving. This could result in loss of control, and an accident causing death, serious injury, or property damage.**
- **Do not allow anything to interfere with the normal position of the seatback. Storing items against a seatback or in any other way interfering with proper locking of a seatback could result in serious or fatal injury in a sudden stop or collision.**
- **Always drive and ride with your seatback upright and the lap portion of the seat belt snug and low across the hips. This is the best position to protect you in case of an accident.**
- **In order to avoid unnecessary and perhaps severe air bag injuries, always sit as far back as possible from the steering wheel while maintaining comfortable control of the vehicle. We recommend that your chest be at least 250 mm (10 inches) away from the steering wheel.**

⚠ WARNING - Rear seatbacks

- The rear seatback must be securely latched. If not, passengers and objects could be thrown forward resulting in serious injury or death in the event of a sudden stop or collision.
- Luggage and other cargo should be laid flat in the cargo area. If objects are large, heavy, or must be piled, they must be secured. Under no circumstances should cargo be piled higher than the seatbacks. Failure to follow these warnings could result in serious injury or death in the event of a sudden stop, collision or rollover.
- No passenger should ride in the cargo area or sit or lie on folded seatbacks while the vehicle is moving. All passengers must be properly seated in seats and restrained properly while riding.
- When resetting the seatback to the upright position, make sure it is securely latched by pushing it forward and backwards.

(Continued)

(Continued)

- To avoid the possibility of burns, do not remove the carpet in the cargo area. Emission control devices beneath this floor generate high temperatures.

⚠ WARNING

After adjusting the seat, always check that it is securely locked into place by attempting to move the seat forward or backward without using the lock release lever. Sudden or unexpected movement of the driver's seat could cause you to lose control of the vehicle resulting in an accident.

⚠ WARNING

- Do not adjust the seat while wearing seat belts. Moving the seat cushion forward may cause strong pressure on the abdomen.
- Use extreme caution so that hands or other objects are not caught in the seat mechanisms while the seat is moving.
- Do not put a cigarette lighter on the floor or seat. When you operate the seat, gas may gush out of the lighter and cause fire.

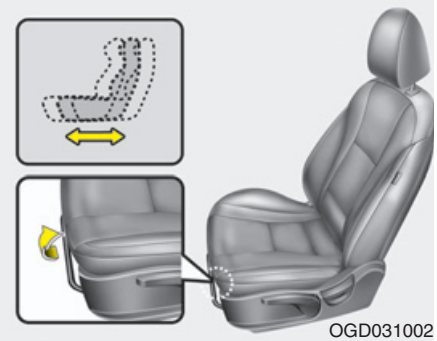
OGD031002

Front seat adjustment

Manual adjustment

Forward and backward

To move the seat forward or backward:

1. Pull the seat slide adjustment lever up and hold it.
2. Slide the seat to the position you desire.
3. Release the lever and make sure the seat is locked in place.

Adjust the seat before driving, and make sure the seat is locked securely by trying to move forward and backward without using the lever. If the seat moves, it is not locked properly.

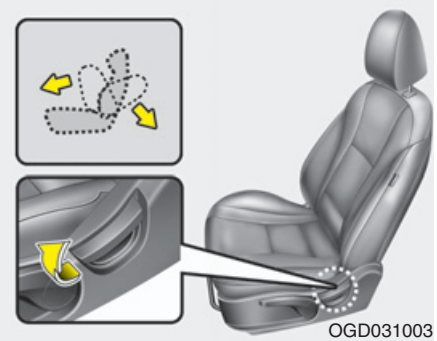
OGD031003

Seatback angle

To recline the seatback:

1. Lean forward slightly and lift up on the seatback recline lever.
2. Carefully lean back on the seat and adjust the seatback of the seat to the position you desire.
3. Release the lever and make sure the seatback is locked in place. (The lever MUST return to its original position for the seatback to lock.)

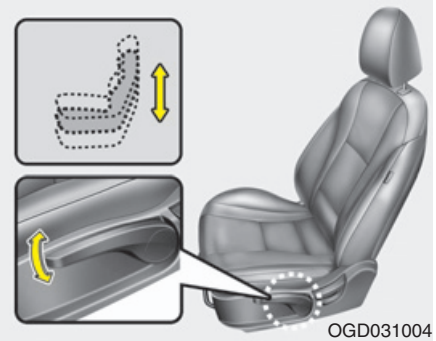
OGD031004

Seat cushion height (for driver's seat)

To change the height of the seat cushion, move the lever upwards or downwards.

- To lower the seat cushion, push the lever down several times.
- To raise the seat cushion, pull the lever up several times.

Automatic adjustment (for driver's seat) (if equipped)

The driver's seat can be adjusted by using the control knob located on the outside of the seat cushion. Before driving, adjust the seat to the proper position so as to easily control the steering wheel, pedals and switches on the instrument panel.

⚠ WARNING

The power seat is operable with the ignition OFF.

Therefore, children should never be left unattended in the car.

⚠ CAUTION

- ***The power seat is driven by an electric motor. Stop operating once the adjustment is completed. Excessive operation may damage the electrical equipment.***
- ***When in operation, the power seat consumes a large amount of electrical power. To prevent unnecessary charging system drain, don't adjust the power seat longer than necessary while the engine is not running.***
- ***Do not operate two or more power seat control knobs at the same time. Doing so may result in power seat motor or electrical component malfunction.***

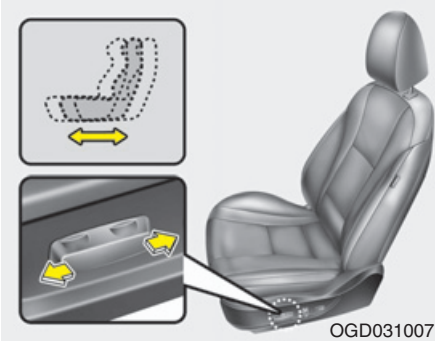

Forward and backward

1. Push the control switch forward or rearward to move the seat to the desired position.
2. Release the switch once the seat reaches the desired position.

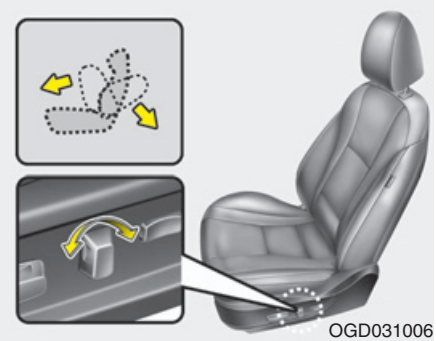

Seatback angle

1. Push the control switch forward or rearward to move the seatback to the desired angle.
2. Release the switch once the seat reaches the desired position.

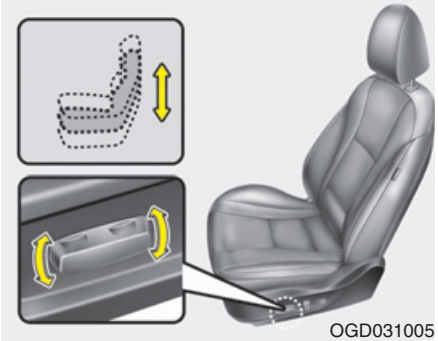

Seat cushion height (if equipped)

1. Pull the front portion of the control switch up to raise or down to lower the front part of the seat cushion. Pull the rear portion of the control switch up to raise or down to lower the rear part of the seat cushion.
2. Release the switch once the seat reaches the desired position.

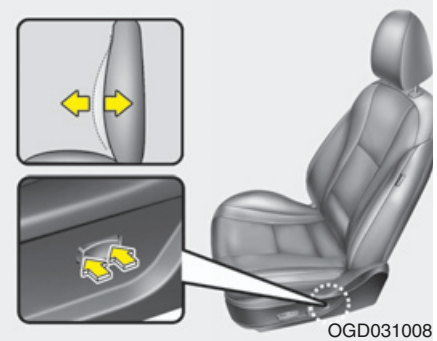

Lumbar support (if equipped)

The lumbar support can be adjusted by pressing the lumbar support switch on the side of the seat.

1. Press the front portion of the switch to increase support, or the rear portion of the switch, to decrease support.
2. Release the switch once it reaches the desired position.

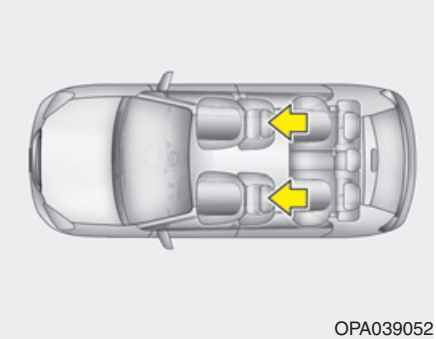
OPA039052

Headrest

The driver's and front passenger's seats are equipped with a headrest for the occupant's safety and comfort.

The headrest not only provides comfort for the driver and front passenger, but also helps to protect the head and neck in the event of a collision.

⚠ WARNING

- **For maximum effectiveness in case of an accident, the headrest should be adjusted so the middle of the headrest is at the same height of the center of gravity of an occupant's head. Generally, the center of gravity of most people's head is similar with the height of the top of their eyes. Also, adjust the headrest as close to your head as possible. For this reason, the use of a cushion that holds the body away from the seatback is not recommended.**
- **Do not operate the vehicle with the headrests removed as severe injury to the occupants may occur in the event of an accident. Headrests may provide protection against neck injuries when properly adjusted.**
- **Do not adjust the headrest position of the driver's seat while the vehicle is in motion.**

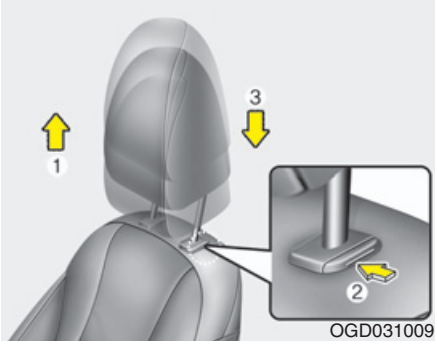

OGD031009

Adjusting the height up and down

To raise the headrest, pull it up to the desired position (1). To lower the headrest, push and hold the release button (2) on the headrest support and lower the headrest to the desired position (3).

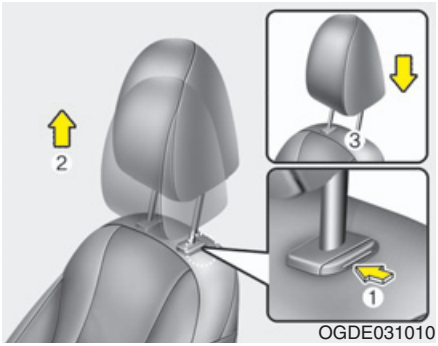

OGDE031010

Removal

To remove the headrest, raise it as far as it can go then press the release button (1) while pulling upward (2).

To reinstall the headrest, put the headrest poles (3) into the holes while pressing the release button (1). Then adjust it to the appropriate height.

⚠ WARNING

Make sure the headrest locks in position after adjusting it for proper protection of the occupants.

■ Type A

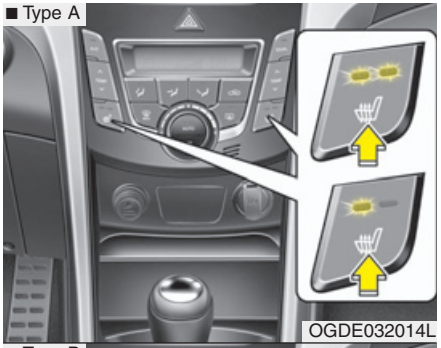
OGDE032014L

■ Type B

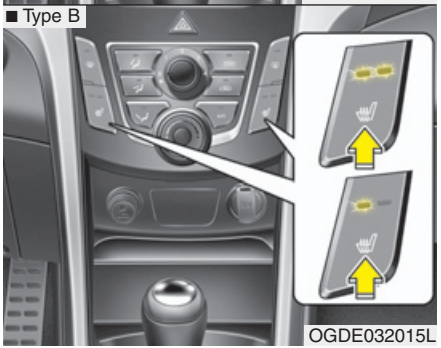
OGDE032015L

Seat warmer (if equipped)

The seat warmer is provided to warm the front seats during cold weather. With the ignition switch in the ON position, push either of the switches to warm the driver's seat or the front passenger's seat.

During mild weather or under conditions where the operation of the seat warmer is not needed, keep the switches in the "OFF" position.

- Each time you press the switch, the temperature setting of the seat will change as follows :

  OFF → HIGH ( ) → LOW ( )

- The seat warmer defaults to the OFF position whenever the ignition switch is turned on.

✻ NOTICE

With the seat warmer switch in the ON position, the heating system in the seat turns off or on automatically depending on the seat temperature.

⚠ CAUTION

- ***When cleaning the seats, do not use an organic solvent such as thinner, benzene, alcohol and gasoline. Doing so may damage the surface of the heater or seats.***
- ***To prevent overheating the seat warmer, do not place anything on the seats that insulates against heat, such as blankets, cushions or seat covers while the seat warmer is in operation.***
- ***Do not place heavy or sharp objects on seats equipped with seat warmers. Damage to the seat warming components could occur.***

⚠ WARNING - Seat warmer burns

Passengers should use extreme caution when using seat warmers due to the possibility of excess heating or burns. The seat warmer may cause burns even at low temperatures, especially if used for long periods of time. In particular, the driver must exercise extreme care for the following types of passengers:

1. **Infants, children, elderly or disabled persons, or hospital outpatients**
2. **Persons with sensitive skin or those that burn easily**
3. **Fatigued individuals**
4. **Intoxicated individuals**
5. **Individuals taking medication that can cause drowsiness or sleepiness (sleeping pills, cold tablets, etc.)**

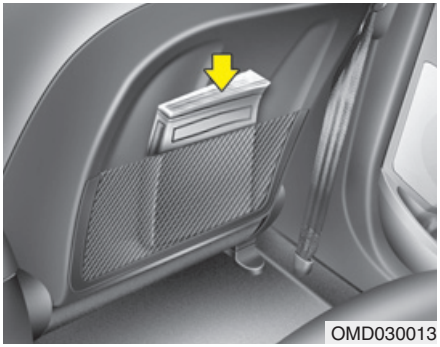

Seatback pocket (if equipped)

⚠ WARNING - Seatback pockets

Do not put heavy or sharp objects in the seatback pockets. In an accident they could come loose from the pocket and injure vehicle occupants.

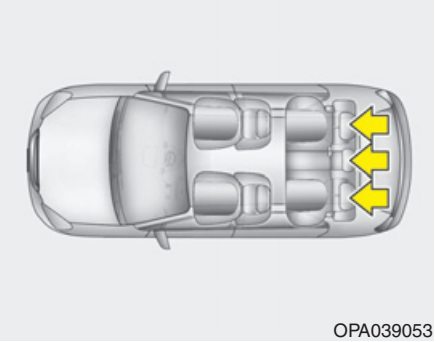

Rear seat

Headrest

The rear seat(s) is equipped with headrests in all the seating positions for the occupant's safety and comfort.

The headrest not only provides comfort for passengers, but also helps to protect the head and neck in the event of a collision.

⚠ WARNING

- **For maximum effectiveness in case of an accident, the headrest should be adjusted so the middle of the headrest is at the same height of the center of gravity of an occupant's head. Generally, the center of gravity of most people's head is similar with the height of the top of their eyes. Also adjust the headrest as close to your head as possible. For this reason, the use of a cushion that holds the body away from the seatback is not recommended.**
- **Do not operate the vehicle with the headrests removed as severe injury to an occupant may occur in the event of an accident. Headrests may provide protection against severe neck injuries when properly adjusted.**

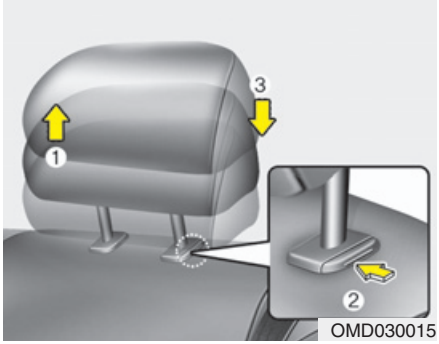

OMD030015

Adjusting the height up and down

To raise the headrest, pull it up (1). To lower the headrest, push and hold the release button (2) on the headrest support and lower the headrest (3).

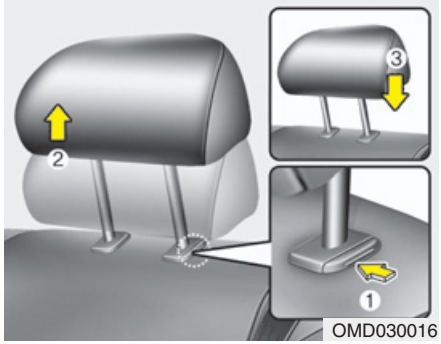

OMD030016

Removal

To remove the headrest, raise it as far as it can go then press the release button (1) while pulling upward (2).

To reinstall the headrest, put the headrest poles (3) into the holes while pressing the release button (1). Then adjust it to the appropriate height.

⚠ WARNING

Make sure the headrest locks in position after adjusting it to properly protect the occupants.

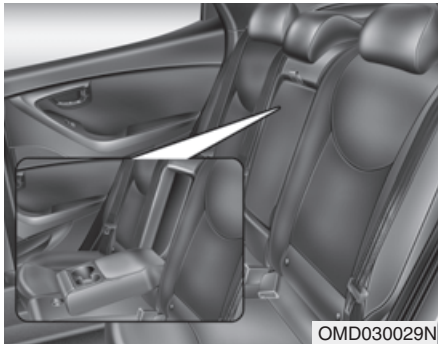
OMD030029N

Armrest (if equipped)

The armrest is located in the center of the rear seat. Pull the armrest down from the seatback.

Folding the rear seat

The rear seatbacks (or cushions) may be folded to facilitate carrying long items or to increase the luggage capacity of the vehicle.

⚠ WARNING

The purpose of the fold-down rear seatbacks (or cushions) is to allow you to carry longer objects than could otherwise be accommodated.

Never allow passengers to sit on top of the folded down seatback while the car is moving as this is not a proper seating position and no seat belts are available for use. This could result in serious injury or death in case of an accident or sudden stop. Objects carried on the folded down seatback should not extend higher than the top of the front seats. This could allow cargo to slide forward and cause injury or damage during sudden stops.

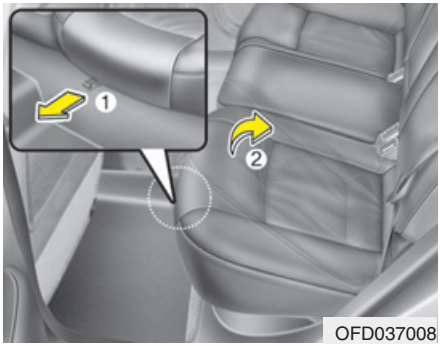

OFD037008

To fold the rear seat cushion and back

1. Set the front seatback to the upright position and if necessary, slide the front seat forward.
2. Pull the cushion folding strap (1) and lift the front portion of the seat cushion.

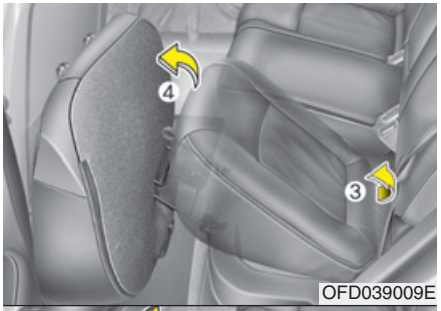

OFD039009E

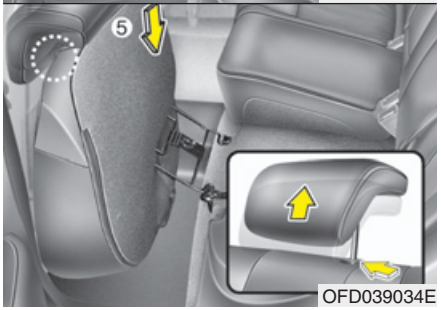

OFD039034E

3. Lift the rear portion of the seat cushion. Stand the rear seat cushion vertically.
4. Remove the headrest from the rear seatback.
5. Stow the headrest by inserting the headrest poles into the holder on the bottom of the seat cushion.

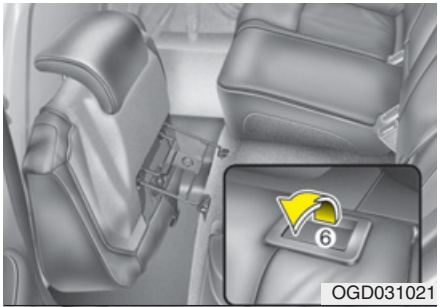

OGD031021

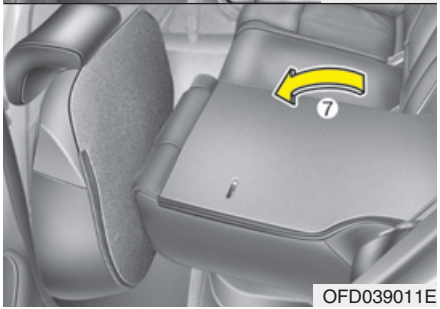

OFD039011E

6. Pull the lock release lever (red visible).
7. Fold the rear seatback forward and down firmly.

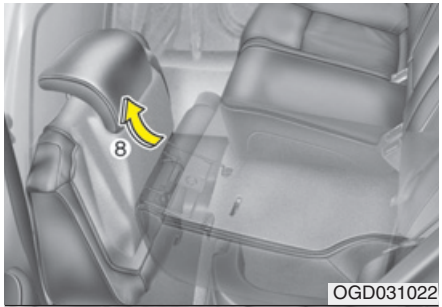

OGD031022

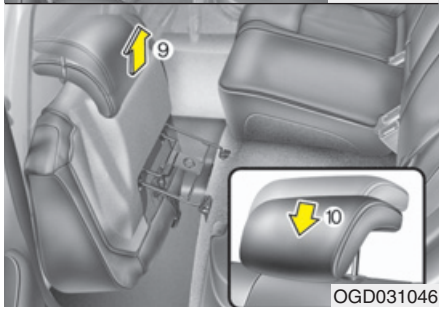

OGD031046

8. To use the rear seat, lift and push the seatback backward firmly until it clicks into place. Make sure the seatback is locked in place (red invisible).
9. Reposition the headrest on the seatback and adjust it to the desired position.

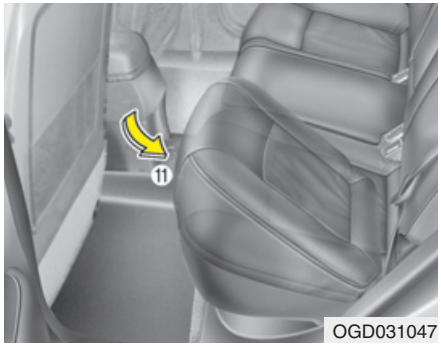

OGD031047

10. Return the seat cushion to the original position by pushing down the rear side of the seat cushion first. Make sure the seat cushion is locked in place.
11. Return the rear seat belt to the proper position.

✻ NOTICE

If you are not able to pull out the seat belt from the retractor, firmly pull the belt out and release it. Then you will be able to pull the belt out smoothly.

⚠ WARNING

When you return the rear seatback to its upright position after being folded down:

Be careful not to damage the seat belt webbing or buckle. Do not allow the seat belt webbing or buckle to get caught or pinched in the rear seat. Ensure that the seatback is completely locked into its upright position by pushing on the top of the seatback. Otherwise, in an accident or sudden stop, the seat could fold down and allow cargo to enter the passenger compartment, which could result in serious injury or death.

⚠ WARNING - Uprighting seat

When you return the seatback to its upright position, hold the seatback and return it slowly. If the seatback is returned without holding it, the back of the seat could spring forward resulting in injury caused by being struck by the seatback.

⚠ CAUTION - Rear seat belts

When returning the rear seatbacks to the upright position, remember to return the rear shoulder belts to their proper position.

⚠ WARNING - Cargo

Cargo should always be secured to prevent it from being thrown about the vehicle in a collision and causing injury to the vehicle occupants. Special care of objects should be taken when placing them in the rear seats, since those may hit the front seat occupants in a frontal collision.

⚠ WARNING - Cargo loading

Make sure the engine is off, the automatic transaxle is in P (Park) or the manual transaxle is in R (Reverse) or 1st, and the parking brake is securely applied whenever loading or unloading cargo. Failure to take these steps may allow the vehicle to move if the shift lever is inadvertently moved to another position.

SEAT BELTS

Seat belt restraint system

⚠ WARNING

- For maximum restraint system protection, the seat belts must always be used whenever the car is moving.
- Seat belts are most effective when seatbacks are in the upright position.
- Children age 12 and under must always be properly restrained in the rear seat. Never allow children to ride in the front passenger seat. If a child over 12 must be seated in the front seat, he/she must be properly belted and the seat should be moved as far back as possible.
- Never wear the shoulder belt under your arm or behind your back. An improperly positioned shoulder belt can cause serious injuries in a crash. The shoulder belt should be positioned midway over your shoulder across your collarbone.

(Continued)

(Continued)

- Avoid wearing twisted seat belts. A twisted belt can't do its job as well. In a collision, it could even cut into you. Be sure the belt webbing is straight and not twisted.
- Be careful not to damage the belt webbing or hardware. If the belt webbing or hardware is damaged, replace it.

⚠ WARNING

Seat belts are designed to bear upon the bony structure of the body, and should be worn low across the front of the pelvis or the pelvis, chest and shoulders, as applicable; wearing the lap section of the belt across the abdominal area must be avoided.

Seat belts should be adjusted as firmly as possible, consistent with comfort, to provide the protection for which they have been designed.

A slack belt will greatly reduce the protection afforded to the wearer.

(Continued)

(Continued)

Care should be taken to avoid contamination of the webbing with polishes, oils and chemicals, and particularly battery acid. Cleaning may safely be carried out using mild soap and water. The belt should be replaced if webbing becomes frayed, contaminated or damaged.

It is essential to replace the entire assembly after it has been worn in a severe impact even if damage to the assembly is not obvious. Belts should not be worn with straps twisted. Each belt assembly must only be used by one occupant; it is dangerous to put a belt around a child being carried on the occupant's lap.

⚠ WARNING

- **No modifications or additions should be made by the user which will either prevent the seat belt adjusting devices from operating to remove slack, or prevent the seat belt assembly from being adjusted to remove slack.**
- **When you fasten the seat belt, be careful not to latch the seat belt in buckles of other seat. It's very dangerous and you may not be protected by the seat belt properly.**
- **Do not unfasten the seat belt and do not fasten and unfasten the seat belt repeatedly while driving. This could result in loss of control, and an accident causing death, serious injury, or property damage.**
- **When fastening the seat belt, make sure that the seat belt does not pass over objects that are hard or can break easily.**
- **Make sure there is nothing in the buckle. The seat belt may not be fastened securely.**

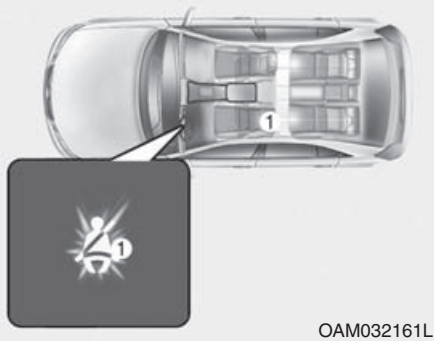

OAM032161L

Seat belt warning (if equipped)

Driver's seat belt warning (1) - Type A

As a reminder to the driver, the seat belt warning light will blink for approximately 6 seconds each time you turn the ignition switch ON regardless of belt fastening.

If the driver's seat belt is unfastened after the ignition switch is ON, the seat belt warning light blinks again for approximately 6 seconds.

If the driver's seat belt is not fastened when the ignition switch is turned ON or if it is unfastened after the ignition switch is ON, the seat belt warning chime will sound for approximately 6 seconds. At this time, if the seat belt is fastened, the chime will stop at once. (if equipped)

Driver's seat belt warning (1) - Type B

As a reminder to the driver, the driver's seat belt warning lights will illuminate for approximately 6 seconds each time you turn the ignition switch ON regardless of belt fastening.

If the driver's seat belt is not fastened when the ignition switch is turned ON or if it is disconnected after the ignition switch is turned ON, the seat belt warning light will illuminate until the belt is fastened.

If you continue not to fasten the seat belt and you drive over 9 km/h, the illuminated warning light will start to blink until you drive under 6 km/h.

If you continue not to fasten the seat belt and you drive over 20 km/h (12 mph) the seat belt warning chime will sound for approximately 100 seconds and the corresponding warning light will blink.

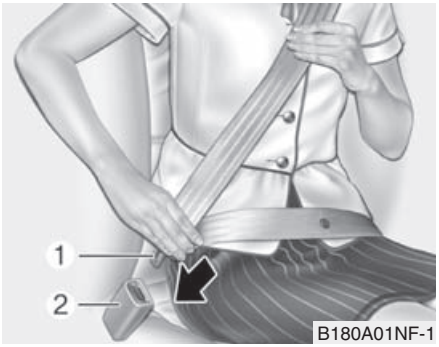

Lap/shoulder belt

To fasten your seat belt:

To fasten your seat belt, pull it out of the retractor and insert the metal tab (1) into the buckle (2). There will be an audible "click" when the tab locks into the buckle.

The seat belt automatically adjusts to the proper length only after the lap belt portion is adjusted manually so that it fits snugly around your hips. If you lean forward in a slow, easy motion, the belt will extend and let you move around. If there is a sudden stop or impact, however, the belt will lock into position. It will also lock if you try to lean forward too quickly.

✻ NOTICE

If you are not able to pull out the safety belt from the retractor, firmly pull the belt out and release it. After release, you will be able to pull the belt out smoothly.

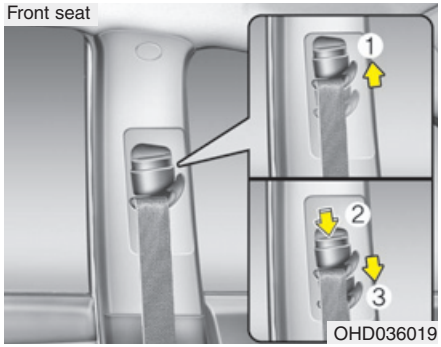

Height adjustment (Front seat)

You can adjust the height of the shoulder belt anchor to one of 4 positions for maximum comfort and safety.

The height of the adjusting seat belt should not be too close to your neck. You will not be getting the most effective protection. The shoulder portion should be adjusted so that it lies across your chest and midway over your shoulder near the door and not your neck.

To adjust the height of the seat belt anchor, lower or raise the height adjuster into an appropriate position.

To raise the height adjuster, pull it up (1). To lower it, push it down (3) while pressing the height adjuster button (2).

Release the button to lock the anchor into position. Try sliding the height adjuster to make sure that it has locked into position.

⚠ WARNING

- **Verify the shoulder belt anchor is locked into position at the appropriate height. Never position the shoulder belt across your neck or face. Improperly positioned seat belts can cause serious injuries in an accident.**
- **Failure to replace seat belts after an accident could leave you with damaged seat belts that will not provide protection in the event of another collision leading to personal injury or death. Replace your seat belts after being in an accident as soon as possible.**

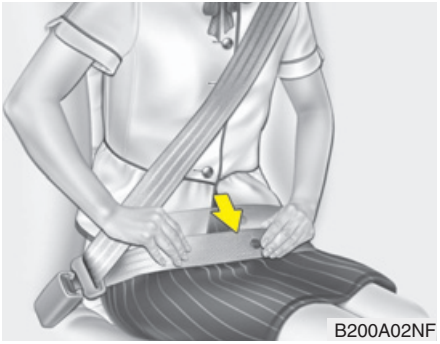
B200A02NF

⚠ WARNING

You should place the lap belt portion as low as possible and snugly across your hips, not on your waist. If the lap belt is located too high on your waist, it may increase the chance of injury in the event of a collision. Both arms should not be under or over the belt. Rather, one should be over and the other under, as shown in the illustration.

Never wear the seat belt under the arm nearest the door.

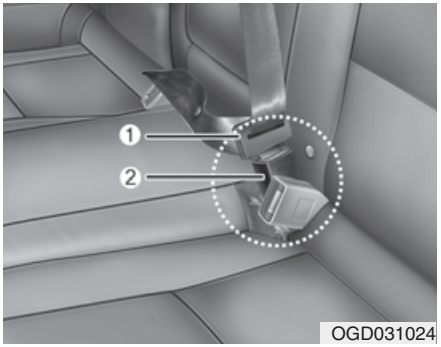

OGD031024

When using the rear center seat belt, the buckle with the “CENTER” mark must be used.

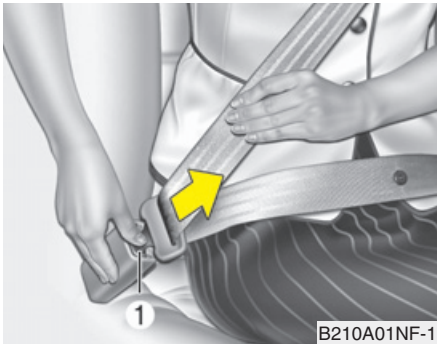

To release the seat belt:

The seat belt is released by pressing the release button (1) in the locking buckle. When it is released, the belt should automatically draw back into the retractor.

If this does not happen, check the belt to be sure it is not twisted, then try again.

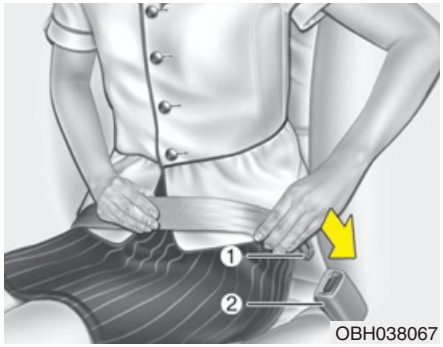

Lap belt (if equipped)

To fasten your seat belt:

To fasten a 2-point static type belt, insert the metal tab (1) into the locking buckle (2). There will be an audible "click" when the tab locks into the buckle. Check to make sure the belt is properly locked and that the belt is not twisted.

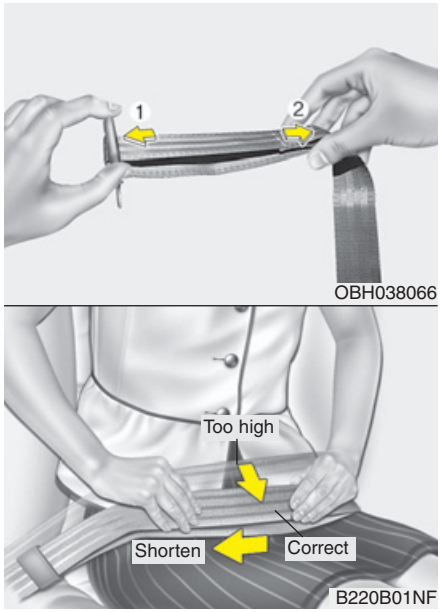

With a 2-point static type seat belt, the length must be adjusted manually so it fits snugly around your body. Fasten the belt and pull on the loose end to tighten. The belt should be placed as low as possible on your hips, not on your waist. If the belt is too high, it could increase the possibility of your being injured in an accident.

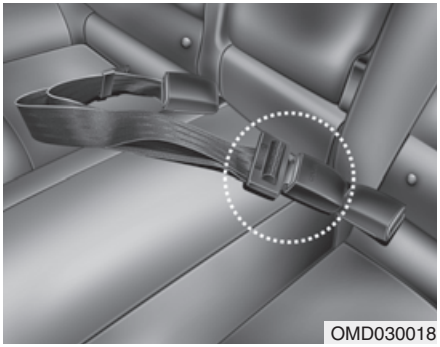
OMD030018

When using the rear center seat belt, the buckle with the “CENTER” mark must be used.

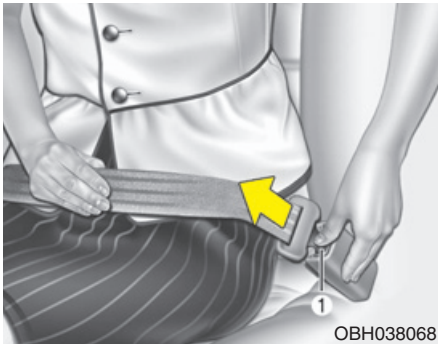

OBH038068

To release the seat belt:

When you want to release the seat belt, press the button (1) in the locking buckle.

⚠ WARNING

The center lap belt latching mechanism is different from those for the rear seat shoulder belts. When fastening the rear seat shoulder belts or the center lap belt, make sure they are inserted into the correct buckles to obtain maximum protection from the seat belt system and assure proper operation.

OED030300

Pre-tensioner seat belt (if equipped)

Your vehicle is equipped with driver's and front passenger's pre-tensioner seat belts. The purpose of the pre-tensioner is to make sure that the seat belts fit tightly against the occupant's body in certain frontal collisions. The pre-tensioner seat belts may be activated in crashes where the frontal collision is severe enough.

⚠ WARNING

For your safety, be sure that the belt webbing is not loose or twisted and always sit properly on your seat.

When the vehicle stops suddenly, or if the occupant tries to lean forward too quickly, the seat belt retractor will lock into position. In certain frontal collisions, the pre-tensioner will activate and pull the seat belt into tighter contact against the occupant's body.

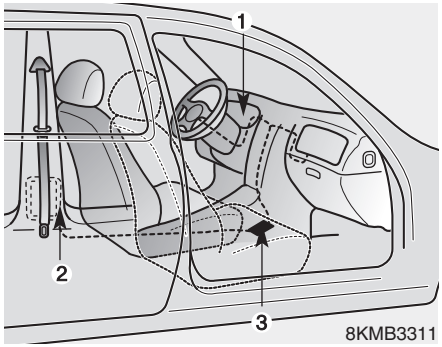

The seat belt pre-tensioner system consists mainly of the following components. Their locations are shown in the illustration:

1. SRS air bag warning light
2. Retractor pre-tensioner assembly
3. SRS control module

⚠ WARNING

To obtain maximum benefit from a pre-tensioner seat belt:

1. **The seat belt must be worn correctly and adjusted to the proper position. Please read and follow all of the important information and precautions about your vehicle's occupant safety features – including seat belts and air bags – that are provided in this manual.**
2. **Be sure you and your passengers always wear seat belts properly.**

✻ NOTICE

- When the pre-tensioner seat belts are activated, a loud noise may be heard and fine dust, which may appear to be smoke, may be visible in the passenger compartment. These are normal operating conditions and are not hazardous.
- Although it is harmless, the fine dust may cause skin irritation and should not be breathed for prolonged periods. Wash all exposed skin areas thoroughly after an accident in which the pre-tensioner seat belts were activated.
- Because the sensor that activates the SRS air bag is connected with the pre-tensioner seat belt, the SRS air bag warning light on the instrument panel will illuminate for approximately 6 seconds after the ignition switch has been turned to the ON position, and then it should turn off.

⚠ CAUTION

If the pre-tensioner seat belt is not working properly, this warning light will illuminate even if there is no malfunction of the SRS air bag. If the SRS air bag warning light does not illuminate when the ignition switch is turned to ON, or if it remains illuminated after illuminating for approximately 6 seconds, or if it illuminates while the vehicle is being driven, we recommend that the system be inspected by an authorized HYUNDAI dealer.

⚠ WARNING

- **Pre-tensioners are designed to operate only one time. After activation, pre-tensioner seat belts must be replaced. All seat belts, of any type, should always be replaced after they have been worn during a collision.**
- **The pre-tensioner seat belt assembly mechanisms become hot during activation. Do not touch the pre-tensioner seat belt assemblies for several minutes after they have been activated.**
- **Do not attempt to inspect or replace the pre-tensioner seat belts yourself. We recommend that the system be inspected by an authorized HYUNDAI dealer.**
- **Do not strike the pre-tensioner seat belt assemblies.**
- **Improper handling of the pre-tensioner seat belt assemblies, and failure to heed the warnings not to strike, modify, inspect, replace, service or repair the pre-tensioner seat belt assemblies may lead to improper operation or inadvertent activation and serious injury.**

(Continued)

(Continued)

- **Always wear the seat belts when driving or riding in a motor vehicle.**
- **If the vehicle or pre-tensioner seat belt must be discarded, we recommend that you contact an authorized HYUNDAI dealer.**

Seat belt precautions

⚠ WARNING

All occupants of the vehicle must wear their seat belts at all times. Seat belts and child restraints reduce the risk of serious or fatal injuries for all occupants in the event of a collision or sudden stop. Without a seat belt, occupants could be shifted too close to a deploying air bag, strike the interior structure or be thrown from the vehicle. Properly worn seat belts greatly reduce these hazards.

Always follow the precautions about seat belts, air bags and occupant seating contained in this manual.

Infant or small child

You should be aware of the specific requirements in your country. Child and/or infant seats must be properly placed and installed in the rear seat. For more information about the use of these restraints, refer to “Child restraint system” in this section.

⚠ WARNING

Every person in your vehicle needs to be properly restrained at all times, including infants and children. Never hold a child in your arms or lap when riding in a vehicle. The violent forces created during a crash will tear the child from your arms and throw the child against the interior. Always use a child restraint appropriate for your child's height and weight.

✻ NOTICE

Small children are best protected from injury in an accident when properly restrained in the rear seat by a child restraint system that meets the requirements of the Safety Standards of your country. Before buying any child restraint system, make sure that it has a label certifying that it meets Safety Standards of your country. The restraint must be appropriate for your child's height and weight. Check the label on the child restraint for this information. Refer to "Child restraint system" in this section.

Larger children

Children who are too large for child restraint systems should always occupy the rear seat and use the available lap/shoulder belts. The lap portion should be fastened and snugged on the hips and as low as possible. Check if the belt fits periodically. A child's squirming could put the belt out of position. Children are given the most safety in the event of an accident when they are restrained by a proper restraint system in the rear seat. If a larger child (over age 12) must be seated in the front seat, the child should be securely restrained by the available lap/shoulder belt and the seat should be placed in the rearmost position. Children age 12 and under should be restrained securely in the rear seat. NEVER place a child age 12 and under in the front seat. NEVER place a rear facing child seat in the front seat of a vehicle.

If the shoulder belt portion slightly touches the child's neck or face, try placing the child closer to the center of the vehicle. If the shoulder belt still touches their face or neck they need to be returned to a child restraint system.

⚠ WARNING - Shoulder belts on small children

- **Never allow a shoulder belt to be in contact with a child's neck or face while the vehicle is in motion.**
- **If seat belts are not properly worn and adjusted on children, there is a risk of death or serious injury.**

Pregnant women

The use of a seat belt is recommended for pregnant women to lessen the chance of injury in an accident. When a seat belt is used, the lap belt portion should be placed as low and snugly as possible on the hips, not across the abdomen. For specific recommendations, consult a physician.

⚠ WARNING - Pregnant women

Pregnant women must never place the lap portion of the safety belt over the area of the abdomen where the fetus is located or above the abdomen where the belt could crush the fetus during an impact.

Injured person

A seat belt should be used when an injured person is being transported. When this is necessary, you should consult a physician for recommendations.

One person per belt

Two people (including children) should never attempt to use a single seat belt. This could increase the severity of injuries in case of an accident.

Do not lie down

To reduce the chance of injuries in the event of an accident and to achieve maximum effectiveness of the restraint system, all passengers should be sitting up and the front and rear seats should be in an upright position when the car is moving. A seat belt cannot provide proper protection if the person is lying down in the rear seat or if the front and rear seats are in a reclined position.

⚠ WARNING

Riding with a reclined seatback increases your risk of serious or fatal injuries in the event of a collision or sudden stop. The protection of your restraint system (seat belts and air bags) is greatly reduced by reclining your seat. Seat belts must be snug against your hips and chest to work properly. The more the seatback is reclined, the greater the chance that an occupant's hips will slide under the lap belt causing serious internal injuries or the occupant's neck could strike the shoulder belt. Drivers and passengers should always sit well back in their seats, properly belted, and with the seatbacks upright.

Care of seat belts

Seat belt systems should never be disassembled or modified. In addition, care should be taken to assure that seat belts and belt hardware are not damaged by seat hinges, doors or other abuse.

⚠ WARNING

When you return the rear seatback to its upright position after the rear seatback has been folded down, be careful not to damage the seat belt webbing or buckle. Be sure that the webbing or buckle does not get caught or pinched in the rear seat. A seat belt with damaged webbing or buckle could possibly fail during a collision or sudden stop, resulting in serious injury. If the webbing or buckles are damaged, get them replaced immediately.

Periodic inspection

All seat belts should be inspected periodically for wear or damage of any kind. Any damaged parts should be replaced as soon as possible.

Keep belts clean and dry

Seat belts should be kept clean and dry. If belts become dirty, they should be cleaned by using a mild soap solution and warm water. Bleach, dye, strong detergents or abrasives should not be used because they may damage and weaken the fabric.

When to replace seat belts

The entire in-use seat belt assembly or assemblies should be replaced if the vehicle has been involved in an accident. This should be done even if no damage is visible. We recommend that you consult an authorized HYUNDAI dealer.

CHILD RESTRAINT SYSTEM

Children riding in the car should sit in the rear seat and must always be properly restrained to minimize the risk of injury in an accident, sudden stop or sudden maneuver. According to accident statistics, children are safer when properly restrained in the rear seats than in the front seat. Larger children not in a child restraint should use one of the seat belts provided.

You should be aware of the specific requirements in your country. Child and/or infant safety seats must be properly placed and installed in the rear seat. You must use a commercially available child restraint system that meets the requirements of the Safety Standards of your country.

Child restraint systems are designed to be secured in vehicle seats by lap belts or the lap belt portion of a lap/shoulder belt, or by a tether anchor and/or ISOFIX anchors.

Children could be injured or killed in a crash if their restraints are not properly secured. For small children and babies, a child seat or infant seat must be used.

Before buying a particular child restraint system, make sure it fits your car seat and seat belts, and fits your child. Follow all the instructions provided by the manufacturer when installing the child restraint system.

⚠ WARNING

- **A child restraint system must be placed in the rear seat. Never install a child or infant seat on the front passenger's seat. Should an accident occur and cause the passenger-side air bag to deploy, it could severely injure or kill an infant or child seated in an infant or child seat. Thus only use a child restraint in the rear seat of your vehicle.**
- **A seat belt or child restraint system can become very hot if it is left in a closed vehicle on a sunny day, even if the outside temperature does not feel hot. Be sure to check the seat cover and buckles before placing a child there.**

(Continued)

(Continued)

- **When the child restraint system is not in use, store it in the luggage area or fasten it with a seat belt so that it will not be thrown forward in the case of a sudden stop or an accident.**
- **Children may be seriously injured or killed by an inflating air bag. All children, even those too large for child restraints, must ride in the rear seat.**

⚠ WARNING

To reduce the chance of serious or fatal injuries:

- **Children of all ages are safer when restrained in the rear seat. A child riding in the front passenger seat can be forcefully struck by an inflating air bag resulting in serious or fatal injuries.**
- **Always follow the instructions for installation and use of the child restraint maker.**
- **Always make sure the child seat is secured properly in the car and your child is securely restrained in the child seat.**
- **Never hold a child in your arms or lap when riding in a vehicle. The violent forces created during a crash will tear the child from your arms and throw the child against the car's interior.**
- **Never put a seat belt over yourself and a child. During a crash, the belt could press deep into the child causing serious internal injuries.**

(Continued)

(Continued)

- **Never leave children unattended in a vehicle – not even for a short time. The car can heat up very quickly, resulting in serious injuries to children inside. Even very young children may inadvertently cause the vehicle to move, entangle themselves in the windows, or lock themselves or others inside the vehicle.**
- **Never allow two children, or any two persons, to use the same seat belt.**
- **Children often squirm and reposition themselves improperly. Never let a child ride with the shoulder belt under their arm or behind their back. Always properly position and secure children in rear seat.**
- **Never allow a child to stand-up or kneel on the seat or floorboard of a moving vehicle. During a collision or sudden stop, the child can be violently thrown against the vehicles interior, resulting in serious injury.**

(Continued)

(Continued)

- **Never use an infant carrier or a child safety seat that "hooks" over a seatback, it may not provide adequate security in an accident.**
- **Seat belts can become very hot, especially when the car is parked in direct sunlight. Always check seat belt buckles before fastening them over a child.**
- **After an accident, we recommend that the system be checked by an authorized HYUNDAI dealer.**
- **If there is not enough space to place the child restraint system because of the driver's seat, install the child restraint system in the rear right seat.**

Rearward-facing child restraint system

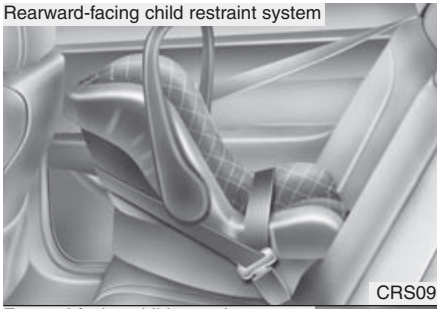

Forward-facing child restraint system

Using a child restraint system

For small children and babies, the use of a child seat or infant seat is required. This child seat or infant seat should be of appropriate size for the child and should be installed in accordance with the manufacturer's instructions.

For safety reasons, we recommend that the child restraint system is used in the rear seats.

⚠ WARNING

Never place a rear-facing child restraint in the front passenger seat, because of the danger that an inflating passenger-side air bag could impact the rear-facing child restraint and kill the child.

⚠ WARNING - Child seat installation

- **A child can be seriously injured or killed in a collision if the child restraint is not properly anchored to the car and the child is not properly restrained in the child restraint. Before installing the child restraint system, read the instructions supplied by the child restraint system manufacturer.**
- **If the seat belt does not operate as described in this section, we recommend that the system be checked by an authorized HYUNDAI dealer.**
- **Failure to observe this manual's instructions regarding child restraint system and the instructions provided with the child restraint system could increase the risk and/or severity of injury in an accident.**

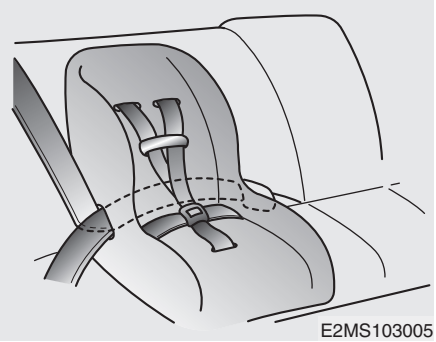

Installing a child restraint system by lap/shoulder belt

To install a child restraint system on the outboard or center rear seats, do the following:

1. Place the child restraint system in the seat and route the lap/shoulder belt around or through the restraint, following the restraint manufacturer's instructions. Be sure the seat belt webbing is not twisted.

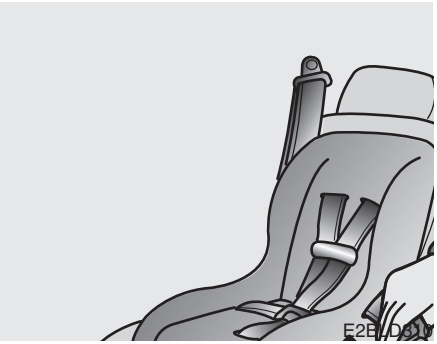

2. Fasten the lap/shoulder belt latch into the buckle. Listen for the distinct "click" sound.

Position the release button so that it is easy to access in case of an emergency.

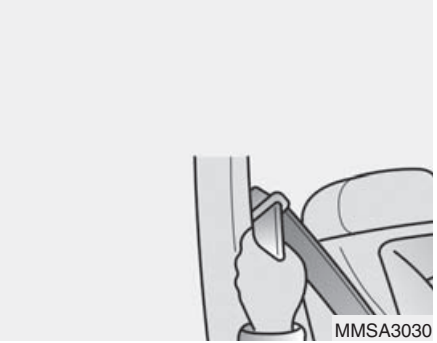

3. Buckle the seat belt and allow the seat belt to take up any slack. After installation of the child restraint system, try to move it in all directions to be sure the child restraint system is securely installed.

If you need to tighten the belt, pull more webbing toward the retractor. When you unbuckle the seat belt and allow it to retract, the retractor will automatically revert back to its normal seated passenger emergency locking usage condition.

Child seat restraint suitability for seat position using the seat belt - For Europe

Use child safety seats that have been officially approved and are appropriate for your children. When using the child safety seats, refer to the following table.

Mass Group	Seating Position		
	Front Passenger	Rear Outboard	Rear Center
0 : Up to 10 kg (0 - 9 months)	U	U	U
0+ : Up to 13 kg (0 - 2 years)	U	U	U
I : 9 kg to 18 kg (9 months - 4 years)	U	U	U
II & III : 15 kg to 36 kg (4 - 12 years)	U	U	U

U : Suitable for "universal" category restraints approved for use in this mass group

⚠ WARNING

We recommend that a child restraint seat be installed in the rear seat, even if the front passenger's air bag ON/OFF switch is set to the OFF position. To ensure the safety of your child, the front passenger's air bag must be deactivated when it should be necessary to install a child restraint seat on the front passenger seat in exceptional circumstances.

■ Type A

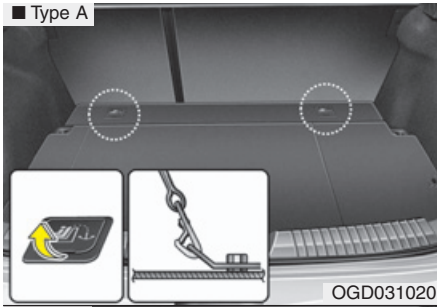

OGD031020

■ Type B

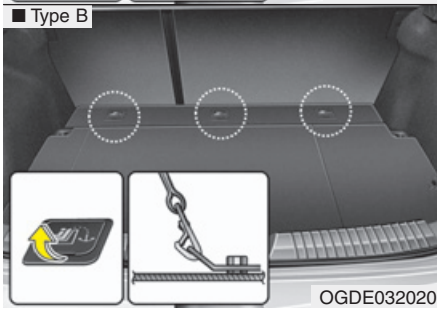

OGDE032020

Securing a child restraint seat with "Tether Anchor" system (if equipped)

Child restraint hook holders are located on the floor behind the rear seats.

OMD030021N

1. Route the child restraint seat strap over the seatback.

   For vehicles with adjustable headrest, route the tether strap under the headrest and between the headrest posts, otherwise route the tether strap over the top of the seatback.
2. Open the tether anchor cover.
3. Connect the tether strap hook to the appropriate child restraint hook holder and tighten to secure the seat.

⚠ WARNING

A child can be seriously injured or killed in a collision if the child restraint is not properly anchored to the car and the child is not properly restrained in the child restraint. Always follow the child seat manufacturer's instructions for installation and use.

⚠ WARNING - Tether strap

Never mount more than one child restraint to a single tether or to a single lower anchorage point. The increased load caused by multiple seats may cause the tethers or anchorage points to break, causing serious injury or death.

⚠ WARNING - Child restraint check

Check that the child restraint system is secure by pushing and pulling it in different directions. Incorrectly fitted child restraints may swing, twist, tip or separate causing death or serious injury.

⚠ WARNING - Child restraint anchorage

- **Child restraint anchorages are designed to withstand only those loads imposed by correctly fitted child restraints. Under no circumstances are they to be used for adult seat belts or harnesses or for attaching other items or equipment to the vehicle.**
- **The tether strap may not work properly if attached somewhere other than the correct tether anchor.**

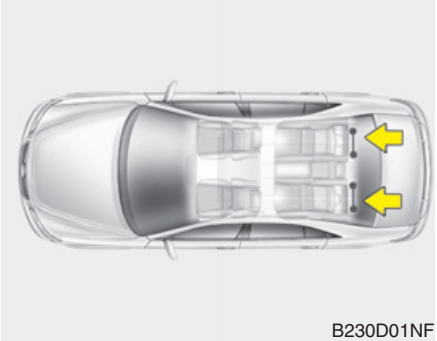

B230D01NF

Securing a child restraint system with "ISOFIX" system and "Tether Anchorage" system (if equipped)

ISOFIX is a standardized method of fitting child seats that eliminates the need to use the standard adult seat belt to secure the seat in the vehicle. This enables a much more secure and positive location with the added benefit of easier and quicker installation.

An ISOFIX-seat may only be installed if it has vehicle-specific or universal approval in accordance with the requirements of ECE-R 44.

❊ ISOFIX: International Standards Origanisation FIX

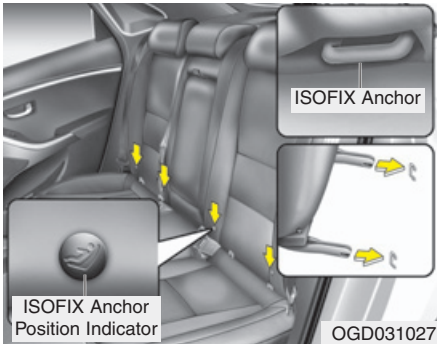

There are child restraint symbols located on the lower portion of each side of the rear seatbacks. These symbols indicate the position of the lower anchors for child restraints so equipped.

Both rear outboard seats are equipped with a pair of ISOFIX anchorages as well as a corresponding top tether anchorage on the back side of the back rest. The ISOFIX anchorages are located between seat cushion and back rest, marked with the ISOFIX icon.

For installation, CRS ISOFIX connecters have to engage with the vehicles ISOFIX anchorages (listen for a CLICK, check potential visual indicators on the CRS and cross-check by pulling).

CRS with universal approval to ECE-R 44 need to be fixed additionally with a top tether strap connected to the corresponding top tether anchorage point in the back rest.

The installing and the use of a child-seat has to be done according to the installing-manual, which is added to the ISOFIX-seat.

⚠ WARNING

- **When using the vehicle's "ISOFIX" system to install a child restraint system in the rear seat, all unused vehicle rear seat belt metal latch plates or tabs must be latched securely in their seat belt buckles and the seat belt webbing must be retracted behind the child restraint to prevent the child from reaching and taking hold of unretracted seat belts. Unlatched metal latch plates or tabs may allow the child to reach the unretracted seat belts which may result in strangulation and a serious injury or death to the child in the child restraint.**
- **Do not place anything around the ISOFIX anchors. Also make sure that the seat belt is not caught in the ISOFIX anchors.**

To secure the child restraint seat:

1. To engage the child restraint seat to the ISOFIX lower anchor, insert the child restraint seat latch into the ISOFIX anchor. Listen for the audible “click” sound.

⚠ CAUTION

Do not allow the rear seat belt webbing to get scratched or pinched by the ISOFIX-seat latch and ISOFIX anchor during the installation.

2. Connect the tether strap hook to the child restraint hook holder and tighten to secure the seat. (Refer to the previous page.)

⚠ WARNING

- **Do not install a child restraint seat at the center of the rear seat using the vehicle's ISOFIX anchors. The ISOFIX anchors are only provided for the left and right outboard rear seating positions. Do not misuse the ISOFIX anchors by attempting to attach a child restraint seat in the middle of the rear seat to the ISOFIX anchors.**

  In a crash, the child restraint seat ISOFIX attachments may not be strong enough to secure the child restraint seat properly in the center of the rear seat and may break, causing serious injury or death.
- **Do not mount more than one child restraint to a child restraint lower anchorage point. The improper increased load may cause the anchorage points or tether anchor to break, causing serious injury or death.**

(Continued)

(Continued)

- **Attach the ISOFIX or ISOFIX-compatible child restraint seat only to the appropriate locations shown in the illustration.**
- **Always follow the installation and use instructions provided by the manufacturer of the child restraint.**

Child seat restraint suitability for vehicle ISOFIX positions - For Europe

Mass Group	Size Class	Fixture	vehicle ISOFIX positions			
			Front Passenger	Rear Outboard (Driver side)	Rear Outboard (Passenger side)	Rear Center
Carrycot	F	ISO/L1	-	X	X	-
	G	ISO/L2	-	X	X	-
0 : UP to 10kg	E	ISO/R1	-	IUF	IUF	-
0+ : UP to 13kg	E	ISO/R1	-	IUF	IUF	-
	D	ISO/R2	-	IUF	IUF	-
	C	ISO/R3	-	IUF	IUF	-
I : 9 to 18kg	D	ISO/R2	-	IUF	IUF	-
	C	ISO/R3	-	IUF	IUF	-
	B	ISO/F2	-	IUF	IUF	-
	B1	ISO/F2X	-	IUF	IUF	-
	A	ISO/F3	-	IUF	IUF	-

IUF = Suitable for ISOFIX forward child restraints systems of universal category approved for use in the mass group.
X = ISOFIX position not suitable for ISOFIX child restraint system in this mass group and/or this size class.

AIR BAG - SUPPLEMENTAL RESTRAINT SYSTEM (SRS) (IF EQUIPPED)

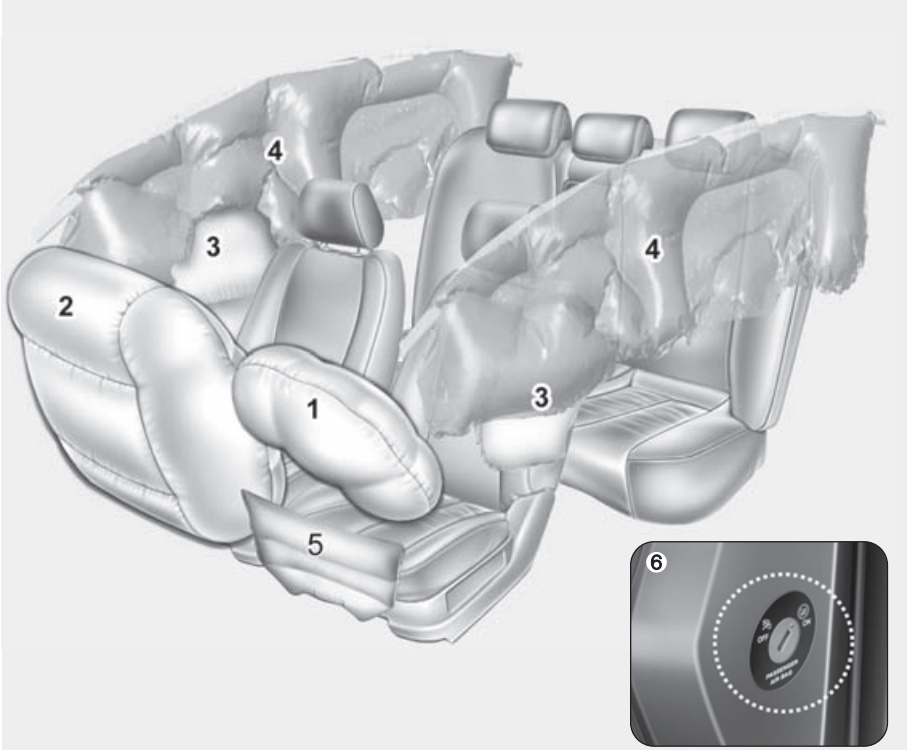

❊ The actual air bags in the vehicle may differ from the illustration.

OGD031042/OYN039026

(1) Driver's front air bag*
(2) Passenger's front air bag*
(3) Side impact air bag*
(4) Curtain air bag*
(5) Driver's knee air bag*
(6) Passenger's front air bag ON/OFF switch*

* if equipped

⚠ WARNING

Even in vehicles with air bags, you and your passengers must always wear the safety belts provided in order to minimize the risk and severity of injury in the event of a collision or rollover.

How does the air bag system operate

- Air bags are activated (able to inflate if necessary) only when the ignition switch is turned to the ON or START position.
- Air bags inflate instantly in the event of serious frontal or side collision in order to help protect the occupants from serious physical injury.
- There is no single speed at which the air bags will inflate.

  Generally, air bags are designed to inflate based upon the severity of a collision and its direction. These two factors determine whether the sensors produce an electronic deployment/ inflation signal.
- Air bag deployment depends on a number of factors including vehicle speed, angles of impact and the density and stiffness of the vehicles or objects which your vehicle hits in the collision. The determining, factors are not limited to those mentioned above.
- The front air bags will completely inflate and deflate in an instant.

  It is virtually impossible for you to see the air bags inflate during an accident. It is much more likely that you will simply see the deflated air bags hanging out of their storage compartments after the collision.
- In order to help provide protection in a severe collision, the air bags must inflate rapidly. The speed of air bag inflation is a consequence of extremely short time in which a collision occurs and the need to get the air bag between the occupant and the vehicle structures before the occupant impacts those structures. This speed of inflation reduces the risk of serious or life-threatening injuries in a severe collision and is thus a necessary part of air bag design.

  However, air bag inflation can also cause injuries which can include facial abrasions, bruises and broken bones because the inflation speed also causes the air bags to expand with a great deal of force.
- **There are even circumstances under which contact with the steering wheel air bag can cause fatal injuries, especially if the occupant is positioned excessively close to the steering wheel.**

⚠ WARNING

- **To avoid severe personal injury or death caused by deploying air bags in a collision, the driver should sit as far back from the steering wheel air bag as possible (at least 250 mm (10 inches) away). The front passenger should always move their seat as far back as possible and sit back in their seat.**
- **Air bag inflates instantly in an event of a collision, passengers may be injured by the air bag expansion force if they are not in a proper position.**
- **Air bag inflation may cause injuries including facial or bodily abrasions, injuries from broken glasses or burns.**

Noise and smoke

When the air bags inflate, they make a loud noise and they leave smoke and powder in the air inside of the vehicle. This is normal and is a result of the ignition of the air bag inflator. After the air bag inflates, you may feel substantial discomfort in breathing due to the contact of your chest with both the seat belt and the air bag, as well as from breathing the smoke and powder. **Open your doors and/or windows as soon as possible after impact in order to reduce discomfort and prevent prolonged exposure to the smoke and powder.**

Though smoke and powder are non-toxic, it may cause irritation to the skin (eyes, nose and throat, etc.). If this is the case, wash and rinse with cold water immediately and consult with the doctor if the symptom persists.

⚠ WARNING

When the air bags deploy, the air bag related parts in the steering wheel and/or instrument panel and/or in both sides of the roof rails above the front and rear doors are very hot. To prevent injury, do not touch the air bag storage areas internal components immediately after an air bag has inflated.

Do not install a child restraint on the front passenger's seat.

Never place a rear-facing child restraint in the front passenger's seat. If the air bag deploys, it would impact the rear-facing child restraint, causing serious or fatal injury.

In addition, do not place front-facing child restraints in the front passenger's seat either. If the front passenger air bag inflates, it would cause serious or fatal injuries to the child.

If your vehicle is equipped with the passenger's front air bag ON/OFF switch, you can activate or deactivate the front passenger's air bag when necessary.

For more details, please refer to 3-47 page.

⚠ WARNING

- **Extreme Hazard! Do not use a rearward facing child restraint on a seat protected by an air bag in front of it!**
- **Never put a child restraint in the front passenger's seat. If the front passenger air bag inflates, it would cause serious or fatal injuries.**
- **When children are seated in the rear outboard seats of vehicle equipped with curtain air bags, be sure to install the child restraint system as far away from the door side as possible, and securely lock the child restraint system in position.**

  Inflation of curtain air bags could cause serious injury or death to an infant or child.

W7-147

Air bag warning and indicator

Air bag warning light

The purpose of the air bag warning light in your instrument panel is to alert you of a potential problem with your air bag - Supplemental Restraint System (SRS).

When the ignition switch is turned ON, the warning light should illuminate for approximately 6 seconds, then go off.

Have the system checked if:

- The light does not turn on briefly when you turn the ignition ON.
- The light stays on after illuminating for approximately 6 seconds.
- The light comes on while the vehicle is in motion.
- The light blinks when the ignition switch is in ON position.

OGDE032051

Passenger's front air bag ON indicator (if equipped)

The passenger's front air bag ON indicator illuminates for approximately 4 seconds after the ignition switch is turned to the ON position.

The passenger's front air bag ON indicator also comes on when the passenger's front air bag ON/OFF switch is set to the ON position and goes off after approximately 60 seconds.

OGDE032052

Passenger's front air bag OFF indicator (if equipped)

The passenger's front air bag OFF indicator illuminates for about 4 seconds after the ignition switch is turned to the ON position.

The passenger's front air bag OFF indicator also comes on when the passenger's front air bag ON/OFF switch is set to the OFF position and goes off when the passenger's front air bag ON/OFF switch is set to the ON position.

⚠ CAUTION

If the passenger's front air bag ON/OFF switch malfunctions, the passenger's front air bag OFF indicator will not illuminate (The passenger's front air bag ON indicator comes on and goes off after approximately 60 seconds) and the passenger's front air bag will inflate in a frontal impact even if the passenger's front air bag ON/OFF switch is set to the OFF position.

If this occurs, we recommend that the passenger's front air bag ON/OFF switch and the SRS air bag system be inspected by an authorized HYUNDAI dealer.

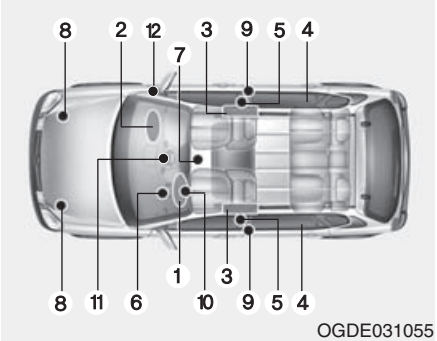

OGDE031055

SRS components and functions

The SRS consists of the following components:

1. Driver's front air bag module*
2. Passenger's front air bag module*
3. Side impact air bag modules*
4. Curtain air bag modules*
5. Retractor pre-tensioner assemblies*
6. Air bag warning light*
7. SRS control module (SRSCM)*
8. Front impact sensors*
9. Side impact sensors*
10. Driver's knee air bag module*
11. Passenger's front air bag ON/OFF indicator*
12. Passenger's front air bag ON/OFF switch*

* : if equipped

The SRSCM continuously monitors all SRS components while the ignition switch is ON to determine if a crash impact is severe enough to require air bag deployment or pre-tensioner seat belt deployment.

The SRS air bag warning light on the instrument panel will illuminate for about 6 seconds after the ignition switch is turned to the ON position, after which the air bag warning light should go out.

⚠ WARNING

If any of the following conditions occurs, this indicates a malfunction of the SRS. We recommend that the system be inspected by an authorized HYUNDAI dealer.

- **The light does not turn on briefly when you turn the ignition ON.**
- **The light stays on after illuminating for approximately 6 seconds.**
- **The light comes on while the vehicle is in motion.**
- **The light blinks when the ignition switch is in ON position.**

Driver's front air bag (1)

The air bag modules are located both in the center of the steering wheel and in the front passenger's panel above the glove box. When the SRSCM detects a sufficiently severe impact to the front of the vehicle, it will automatically deploy the front air bags.

Driver's front air bag (2)

Upon deployment, tear seams molded directly into the pad covers will separate under pressure from the expansion of the air bags. Further opening of the covers then allows full inflation of the air bags.

Driver's front air bag (3)

A fully inflated air bag, in combination with a properly worn seat belt, slows the driver's or the passenger's forward motion, reducing the risk of head and chest injury.

After complete inflation, the air bag immediately starts deflating, enabling the driver to maintain forward visibility and the ability to steer or operate other controls.

Passenger's front air bag

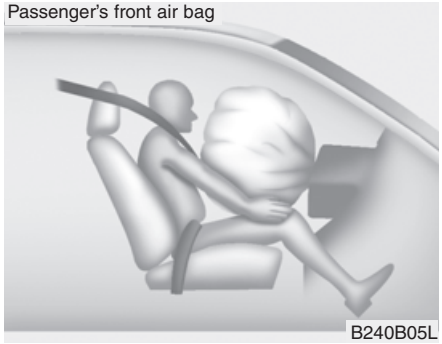

⚠ WARNING

- **Do not install or place any accessories (drink holder, cassette holder, sticker, etc.) on the front passenger's panel above the glove box in a vehicle with a passenger's air bag. Such objects may become dangerous projectiles and cause injury if the passenger's air bag inflates.**
- **When installing a container of liquid air freshener inside the vehicle, do not place it near the instrument cluster nor on the instrument panel surface.**

  It may become a dangerous projectile and cause injury if the passenger's air bag inflates.

⚠ WARNING

- **If an air bag deploys, there may be a loud noise followed by a fine dust released in the vehicle. These conditions are normal and are not hazardous - the air bags are packed in this fine powder. The dust generated during air bag deployment may cause skin or eye irritation as well as aggravate asthma for some persons. Always wash all exposed skin areas thoroughly with lukewarm water and a mild soap after an accident in which the air bags were deployed.**
- **The SRS can function only when the ignition switch is in the ON position.**
- **Before you replace a fuse or disconnect a battery terminal, turn the ignition switch to the LOCK position and remove the ignition key. Never remove or replace the air bag related fuse(s) when the ignition switch is in the ON position. Failure to heed this warning will cause the SRS air bag warning light to illuminate.**

■ Driver's front air bag

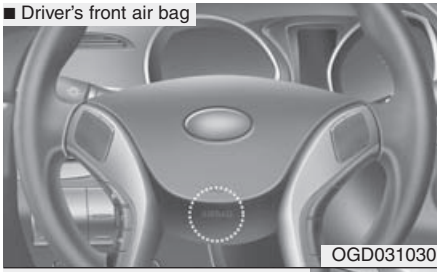

OGD031030

■ Driver's knee air bag (if equipped)

OGD031031

■ Passenger's front air bag

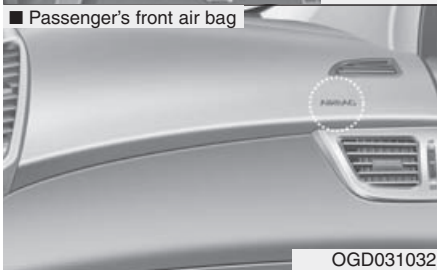

OGD031032

Driver's and passenger's front air bag (if equipped)

Your vehicle is equipped with a Supplemental Restraint (Air Bag) System and lap/shoulder belts at both the driver and passenger seating positions.

The indications of the system's presence are the letters "AIR BAG" embossed on the air bag pad cover in the steering wheel and/or on the cover of the driver's side knee bolster located below the steering wheel and the passenger's side front panel pad above the glove box.

The purpose of the SRS is to provide the vehicle's driver and/or the front passenger with additional protection than that offered by the seat belt system alone in case of a frontal impact of sufficient severity.

⚠ WARNING

Always use seat belts and child restraints – every trip, every time, everyone! Air bags inflate with considerable force and in the blink of an eye. Seat belts help keep occupants in proper position to obtain maximum benefit from the air bag. Even with air bags, improperly and unbelted occupants can be severely injured when the air bag inflates. Always follow the precautions about seat belts, air bags and occupant safety contained in this manual.

To reduce the chance of serious or fatal injuries and receive the maximum safety benefit from your restraint system:

- **Never place a child in any child or booster seat in the front seat.**
- **ABC – Always Buckle Children in the back seat. It is the safest place for children of any age to ride.**
- **Front and side impact air bags can injure occupants improperly positioned in the front seats.**

(Continued)

(Continued)

- Move your seat as far back as practical from the front air bags, while still maintaining control of the vehicle.
- You and your passengers should never sit or lean unnecessarily close to the air bags. Improperly positioned drivers and passengers can be severely injured by inflating air bags.
- Never lean against the door or center console – always sit in an upright position.
- No objects should be placed over or near the air bag modules on the steering wheel, instrument panel, and the front passenger's panel above the glove box, because any such object could cause harm if the vehicle is in a crash severe enough to cause the air bags to deploy.

(Continued)

(Continued)

- Do not tamper with or disconnect SRS wiring or other components of the SRS system. Doing so could result in injury, due to accidental deployment of the air bags or by rendering the SRS inoperative.
- If the SRS air bag warning light remains illuminated or blinks while the vehicle is being driven, we recommend that the system be inspected by an authorized HYUNDAI dealer.
- Air bags can only be used once – we recommend that the system be replaced by an authorized HYUNDAI dealer.
- The SRS is designed to deploy the front air bags only when an impact is sufficiently severe and when the impact angle is less than 30° from the forward longitudinal axis of the vehicle. Additionally, the air bags will only deploy once. Seat belts must be worn at all times.

(Continued)

(Continued)

- Front air bags are not intended to deploy in side-impact, rear-impact or rollover crashes. In addition, front air bags will not deploy in frontal crashes below the deployment threshold.
- A child restraint system must never be placed in the front seat. The infant or child could be severely injured or killed by an air bag deployment in case of an accident.
- Children age 12 and under must always be properly restrained in the rear seat. Never allow children to ride in the front passenger seat. If a child over 12 must be seated in the front seat, he or she must be properly belted and the seat should be moved as far back as possible.

(Continued)

(Continued)

- **For maximum safety protection in all types of crashes, all occupants including the driver should always wear their seat belts whether or not an air bag is also provided at their seating position to minimize the risk of severe injury or death in the event of a crash. Do not sit or lean unnecessarily close to the air bag while the vehicle is in motion.**
- **Sitting improperly or out of position can result in serious or fatal injury in a crash. All occupants should sit upright with the seat back in an upright position, centered on the seat cushion with their seat belt on, legs comfortably extended and their feet on the floor until the vehicle is parked and the ignition key is removed.**
- **The SRS air bag system must deploy very rapidly to provide protection in a crash. If an occupant is out of position because of not wearing a seat belt, the air bag may forcefully contact the occupant causing serious or fatal injuries.**

OGDE032050L

Passenger's front air bag ON/OFF switch (if equipped)

The passenger's front air bag can be deactivated by the passenger's front air bag ON/OFF switch if a child restraint is installed on the front passenger's seat or if the front passenger's seat is unoccupied by a person.

To ensure the safety of your child, the passenger's front air bag must be deactivated when it should be necessary to install a rearward facing child seat on the front passenger seat in exceptional circumstances.

OGDE032051

OGDE032052

To deactivate or reactivate the passenger's front air bag:

To deactivate the passenger's front air bag, insert the master key into the passenger's front air bag ON/OFF switch and turn it to the OFF position.

The passenger's front air bag OFF indicator ( ) will illuminate and stay on until the passenger's front air bag is reactivated.

To reactivate the passenger's front air bag, insert the master key into the passenger's front air bag ON/OFF switch and turn it to the ON position. The passenger's front air bag OFF indicator will go out and the passenger's front air bag ON indicator ( ) will illuminate for approximately 60 seconds.

⚠ WARNING

On some models, the front air bag ON/OFF switch could turn by using a similar small rigid device. Always check the status of the front air bag ON/OFF switch and passenger's front air bag ON/OFF indicator.

✻ NOTICE

- **When the passenger's front air bag ON/OFF switch is set to the ON position, the passenger's front air bag is activated and child or infant seat should not be installed on the front passenger seat.**
- **When the passenger's front air bag ON/OFF switch is set to the OFF position, the passenger's front air bag is deactivated.**

⚠ CAUTION

- ***If the passenger's front air bag ON/OFF switch is not working properly, the air bag warning light ( )on the instrument panel will illuminate.***

  And, the passenger's front air bag OFF indicator ( ) will not illuminate (The passenger's front air bag ON indicator comes on and goes off after approximately 60 seconds), the SRS Control Module reactivates the passenger's front air bag and the passenger's front air bag will inflate in frontal impact crashes even if the passenger's front air bag ON/OFF switch is set to the OFF position.

(Continued)

(Continued)

If this occurs, we recommend that the system be inspected by an authorized HYUNDAI dealer.

- ***If the SRS air bag warning light blinks or does not illuminate when the ignition switch is turned to the ON position, or if it illuminates while the vehicle is being driven, we recommend that the system be inspected by an authorized HYUNDAI dealer.***

⚠ WARNING

- **The driver is responsible for the proper position of the passenger's front air bag ON/OFF switch.**
- **Deactivate the passenger's front air bag only when the ignition switch is switched off, or the malfunction may occur in the SRS Control Module.**
  And there may be a danger that the driver's and/or front passenger's and/or side and curtain air bag may fail to trigger, or not trigger correctly during a collision.
- **Never install a rearward facing child seat on the front passenger's seat unless the passenger's front air bag has been deactivated. The infant or child could be severely injured or killed by an air bag deployment in case of an accident.**

(Continued)

(Continued)

- **Even though your vehicle is equipped with the passenger's front air bag ON/OFF switch, do not install a child restraint system in the front passenger's seat. A child restraint system must never be placed in the front seat. Children who are too large for child restraint systems should always occupy the rear seat and use the available lap/shoulder belts. Children are afforded the most safety in the event of an accident when they are restrained by a proper restraint system in the rear seat.**
- **As soon as the child seat is no longer needed on the front passenger's seat, reactivate the front passenger's air bag.**

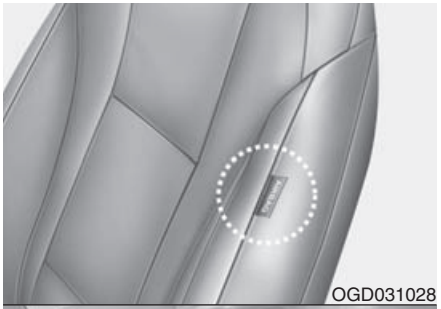
OGD031028

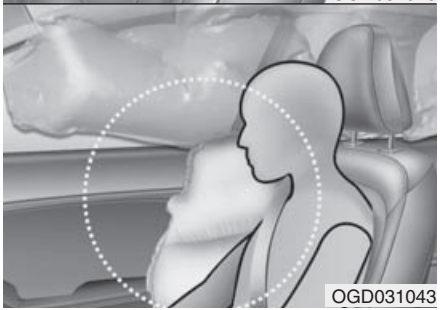
OGD031043

Side impact air bag (if equipped)

Your vehicle is equipped with a side impact air bag in each front seat. The purpose of the air bag is to provide the vehicle's driver and/or the front passenger with additional protection than that offered by the seat belt alone.

The side impact air bags are designed to deploy only during certain side-impact collisions, depending on the crash severity, angle, speed and point of impact. The side impact air bags are not designed to deploy in all side impact situations.

⚠ WARNING

Do not allow the passengers to lean their heads or bodies onto doors, put their arms on the doors, stretch their arms out of the window, or place objects between the doors and passengers when they are seated on seats equipped with side and/or curtain air bags.

⚠ WARNING

- **The side impact air bag is supplemental to the driver's and the passenger's seat belt systems and is not a substitute for them. Therefore your seat belts must be worn at all times while the vehicle is in motion. The air bags deploy only in certain side impact conditions severe enough to cause significant injury to the vehicle occupants.**
- **For best protection from the side impact air bag system and to avoid being injured by the deploying side impact air bag, both front seat occupants should sit in an upright position with the seat belt properly fastened. The driver's hands should be placed on the steering wheel at the 9:00 and 3:00 positions. The passenger's arms and hands should be placed on their laps.**
- **Do not use any accessory seat covers.**
- **Use of seat covers could reduce or prevent the effectiveness of the system.**

(Continued)

(Continued)

- **Do not install any accessories on the side or near the side impact air bag.**
- **Do not place any objects over the air bag or between the air bag and yourself.**
- **Do not place any objects (an umbrella, bag, etc.) between the front door and the front seat. Such objects may become dangerous projectiles and cause injury if the supplemental side impact air bag inflates.**
- **To prevent unexpected deployment of the side impact air bag that may result in personal injury, avoid impact to the side impact sensor when the ignition switch is on.**
- **If seat or seat cover is damaged, we recommend that the system be serviced by an authorized HYUNDAI dealer. Inform the dealer that your vehicle is equipped with side impact air bags.**

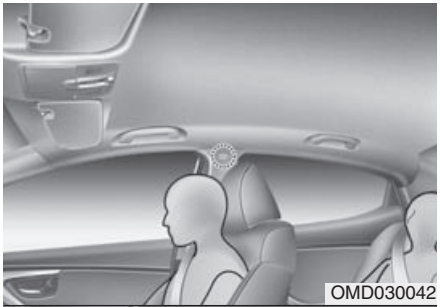
OMD030042

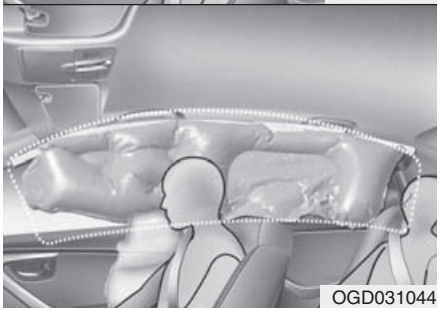
OGD031044

Curtain air bag (if equipped)

Curtain air bags are located along both sides of the roof rails above the front and rear doors.

They are designed to help protect the heads of the front seat occupants and the rear outboard seat occupants in certain side impact collisions.

The curtain air bags are designed to deploy only during certain side impact collisions, depending on the crash severity, angle, speed and impact. The curtain air bags are not designed to deploy in all side impact situations, collisions from the front or rear of the vehicle or in most rollover situations.

⚠ WARNING

- **In order for side impact and curtain air bags to provide the best protection, both front seat occupants and both outboard rear occupants should sit in an upright position with the seat belts properly fastened.**

  Importantly, children should sit in a proper child restraint system in the rear seat.
- **When children are seated in the rear outboard seats, they must be seated in the proper child restraint system. Make sure to put the child restraint system as far away from the door side as possible, and secure the child restraint system in a locked position.**

(Continued)

(Continued)

- **Do not allow the passengers to lean their heads or bodies onto doors, put their arms on the doors, stretch their arms out of the window, or place objects between the doors and passengers when they are seated on seats equipped with side and/or curtain air bags.**
- **Never try to open or repair any components of the side curtain air bag system. We recommend that the system be serviced by an authorized HYUNDAI dealer.**

Failure to follow the above mentioned instructions can result in injury or death to the vehicle occupants in an accident.

Why didn't my air bag go off in a collision? (Inflation and non-inflation conditions of the air bag)

There are many types of accidents in which the air bag would not be expected to provide additional protection.

These include rear impacts, second or third collisions in multiple impact accidents, as well as low speed impacts.

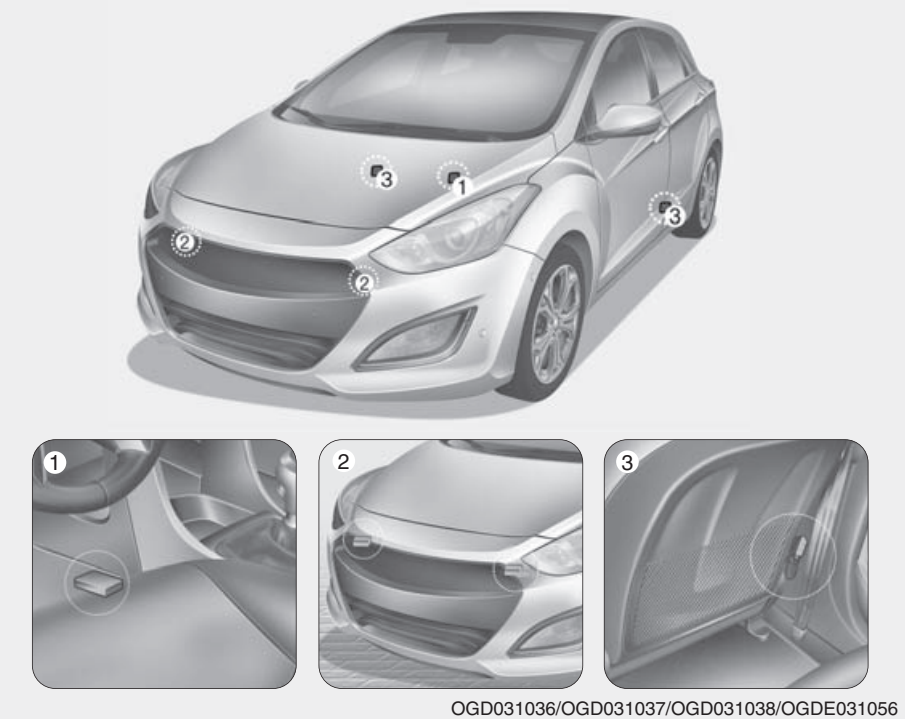

OGD031036/OGD031037/OGD031038/OGDE031056

Air bag collision sensors

(1) SRS control module

(2) Front impact sensor

(3) Side impact sensor

⚠ WARNING

- **Do not hit or allow any objects to impact the locations where air bags or sensors are installed.**

  This may cause unexpected air bag deployment, which could result in serious personal injury or death.
- **If the installation location or angle of the sensors is altered in any way, the air bags may deploy when they should not or they may not deploy when they should, causing severe injury or death.**

  Therefore, do not try to perform maintenance on or around the air bag sensors. We recommend that the system be serviced by an authorized HYUNDAI dealer.

(Continued)

(Continued)

- **Problems may arise if the sensor installation angles are changed due to the deformation of the front bumper, body or B pillar where side collision sensors are installed. We recommend that the system be serviced by an authorized HYUNDAI dealer.**
- **Your vehicle has been designed to absorb impact and deploy the air bag(s) in certain collisions. Installing aftermarket bumper guards or replacing a bumper with non-genuine parts may adversely affect your vehicles collision and air bag deployment performance.**

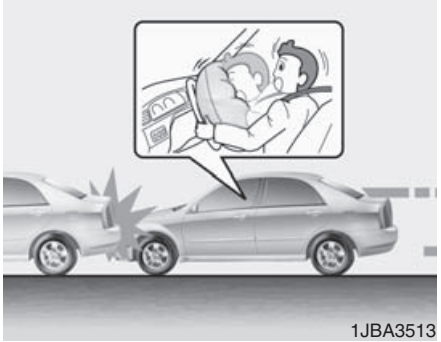

Air bag inflation conditions

Front air bags

Front air bags are designed to inflate in a frontal collision depending on the intensity, speed or angles of impact of the front collision.

1JBA3514

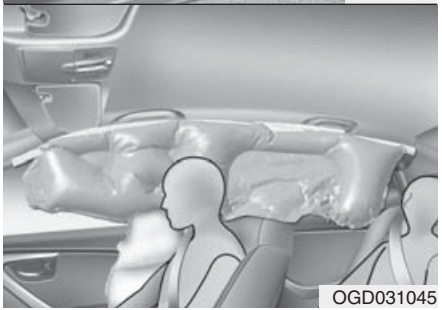
OGD031045

Side air bags

Side air bags (side impact and/or curtain air bags) are designed to inflate when an impact is detected by side collision sensors depending on the strength, speed or angles of impact resulting from a side impact collision.

Although the front air bags (driver's and front passenger's air bags) are designed to inflate only in frontal collisions, they also may inflate in other types of collisions if the front impact sensors detect a sufficient impact. Side air bags (side impact and/or curtain air bags) are designed to inflate only in side impact collisions, but they may inflate in other collisions if the side impact sensors detect a sufficient impact.

If the vehicle chassis is impacted by bumps or objects on unimproved roads or sidewalks, air bags may deploy. Drive carefully on unimproved roads or on surfaces not designed for vehicle traffic to prevent unintended air bag deployment.

1JBA3515

Air bag non-inflation conditions

- In certain low-speed collisions the air bags may not deploy. The air bags are designed not to deploy in such cases because they may not provide benefits beyond the protection of the seat belts in such collisions.

- Frontal air bags are not designed to inflate in rear collisions, because occupants are moved backward by the force of the impact. In this case, inflated air bags would not be able to provide any additional benefit.

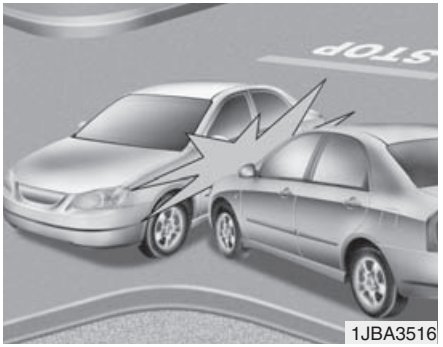

- Front air bags may not inflate in side impact collisions, because occupants move to the direction of the collision, and thus in side impacts, frontal air bag deployment would not provide additional occupant protection.

  However, side impact or curtain air bags may inflate depending on the intensity, vehicle speed and angles of impact.

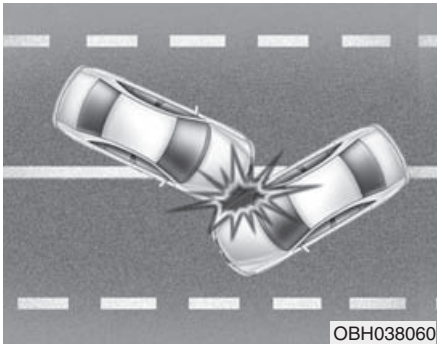

- In a slant or angled collision, the force of impact may direct the occupants in a direction where the air bags would not be able to provide any additional benefit, and thus the sensors may not deploy any air bags.

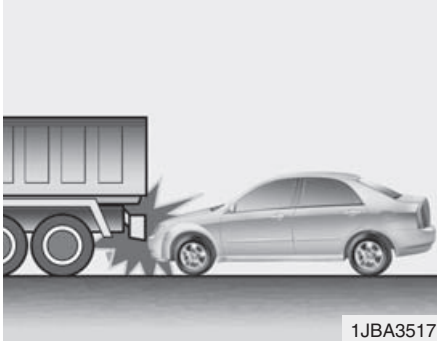
1JBA3517

- Just before impact, drivers often brake heavily. Such heavy braking lowers the front portion of the vehicle causing it to “ride” under a vehicle with a higher ground clearance. Air bags may not inflate in this "under-ride" situation because deceleration forces that are detected by sensors may be significantly reduced by such “under-ride” collisions.

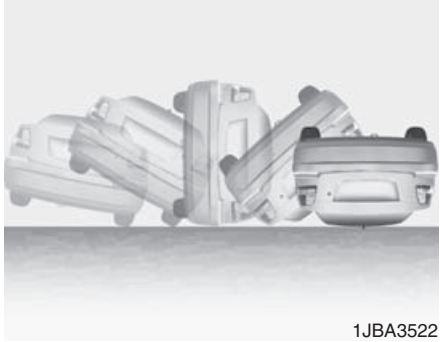
1JBA3522

- Air bags may not inflate in rollover accidents because air bag deployment would not provide protection to the occupants.

  However, side and/or curtain air bags may inflate when the vehicle is rolled over by a side impact collision, if the vehicle is equipped with side impact air bags and curtain air bags.

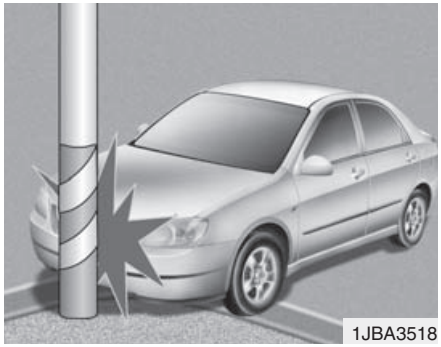
1JBA3518

- Air bags may not inflate if the vehicle collides with objects such as utility poles or trees, where the point of impact is concentrated and the collision energy is absorbed by the vehicle structure.

SRS Care

The SRS is virtually maintenance-free and so there are no parts you can safely service by yourself. If the SRS air bag warning light does not illuminate, or continuously remains on, we recommend that the system be inspected by an authorized HYUNDAI dealer.

We recommend that the any work on the SRS system, such as removing, installing, repairing, or any work on the steering wheel, the front passenger's panel, front seats and roof rails be performed by an authorized HYUNDAI dealer. Improper handling of the SRS system may result in serious personal injury.

⚠ WARNING

- **Modification to SRS components or wiring, including the addition of any kind of badges to the pad covers or modifications to the body structure, can adversely affect SRS performance and lead to possible injury.**
- **For cleaning the air bag pad covers, use only a soft, dry cloth or one which has been moistened with plain water. Solvents or cleaners could adversely affect the air bag covers and proper deployment of the system.**
- **No objects should be placed over or near the air bag modules on the steering wheel, instrument panel, and the front passenger's panel above the glove box, because any such object could cause harm if the vehicle is in a crash severe enough to cause the air bags to inflate.**

(Continued)

(Continued)

- **If the air bags inflate, we recommend that the system be replaced by an authorized HYUNDAI dealer.**
- **Do not tamper with or disconnect SRS wiring, or other components of the SRS system. Doing so could result in injury, due to accidental inflation of the air bags or by rendering the SRS inoperative.**
- **If components of the air bag system must be discarded, or if the vehicle must be scrapped, certain safety precautions must be observed. An authorized HYUNDAI dealer knows these precautions and can give you the necessary information. Failure to follow these precautions and procedures could increase the risk of personal injury.**
- **If your car was flooded and has soaked carpeting or water on the floor, you shouldn't try to start the engine; we recommend that you contact an authorized HYUNDAI dealer.**

Additional safety precautions

- **Never let passengers ride in the cargo area or on top of a folded-down back seat.** All occupants should sit upright, fully back in their seats with their seat belts on and their feet on the floor.
- **Passengers should not move out of or change seats while the vehicle is moving.** A passenger who is not wearing a seat belt during a crash or emergency stop can be thrown against the inside of the vehicle, against other occupants, or out of the vehicle.
- **Each seat belt is designed to restrain one occupant.** If more than one person uses the same seat belt, they could be seriously injured or killed in a collision.
- **Do not use any accessories on seat belts.** Devices claiming to improve occupant comfort or reposition the seat belt can reduce the protection provided by the seat belt and increase the chance of serious injury in a crash.
- **Passengers should not place hard or sharp objects between themselves and the air bags.** Carrying hard or sharp objects on your lap or in your mouth can result in injuries if an air bag inflates.
- **Keep occupants away from the air bag covers.** All occupants should sit upright, fully back in their seats with their seat belts on and their feet on the floor. If occupants are too close to the air bag covers, they could be injured if the air bags inflate.
- **Do not attach or place objects on or near the air bag covers.** Any object attached to or placed on the front or side impact air bag covers could interfere with the proper operation of the air bags.
- **Do not modify the front seats.** Modification of the front seats could interfere with the operation of the supplemental restraint system sensing components or side impact air bags.
- **Do not place items under the front seats.** Placing items under the front seats could interfere with the operation of the supplemental restraint system sensing components and wiring harnesses.
- **Never hold an infant or child on your lap.** The infant or child could be seriously injured or killed in the event of a crash. All infants and children should be properly restrained in appropriate child safety seats or seat belts in the rear seat.

⚠ WARNING

- **Sitting improperly or out of position can cause occupants to be shifted too close to a deploying air bag, strike the interior structure or be thrown from the vehicle resulting in serious injury or death.**
- **Always sit upright with the seatback in an upright position, centered on the seat cushion with your seat belt on, legs comfortably extended and your feet on the floor.**

Adding equipment to or modifying your air bag-equipped vehicle

If you modify your vehicle by changing your vehicle's frame, bumper system, front end or side sheet metal or ride height, this may affect the operation of your vehicle's air bag system.

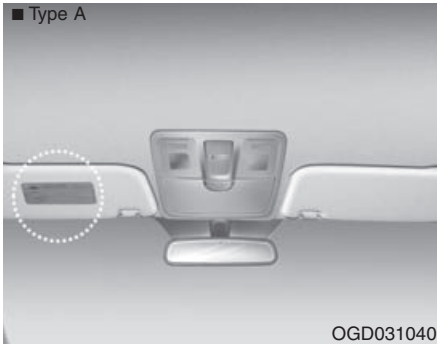

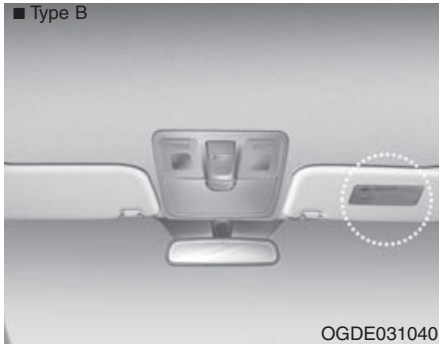

Air bag warning label

Air bag warning label is attached to alert the passengers of potential risk of the air bag system.

Note that these government warnings focus on the risk of children, we also want you to be aware of the risks which adults are exposed to that have been described in previous pages.

Features of your vehicle

Keys 4-4
- Record your key number 4-4
- Key operations 4-4
- Immobilizer system 4-5

Smart key 4-7
- Smart key function 4-7
- Smart key precautions 4-9
- Battery replacement 4-10
- Immobilizer system 4-11
- Door lock/unlock in an emergency situation 4-12

Remote keyless entry 4-13
- Transmitter precautions 4-14
- Battery replacement 4-15

Theft-alarm system 4-17
- Armed stage 4-17
- Theft-alarm stage 4-18
- Disarmed stage.....4-19

Door locks 4-20
- From outside 4-20
- From inside 4-21
- Child-protector rear door lock 4-23

Tailgate 4-24
- Opening the tailgate 4-24
- Closing the tailgate 4-24
- Emergency tailgate safety release 4-25

Windows 4-26
- Power windows 4-27
- Manual windows 4-30

Hood.....4-31
- Opening the hood 4-31
- Closing the hood 4-32

Fuel filler lid 4-33
- Opening the fuel filler lid 4-33
- Closing the fuel filler lid 4-33

Panorama sunroof 4-36
- Sunroof open warning.....4-36
- Sunshade 4-37
- Sliding the sunroof 4-37
- Tilting the sunroof.....4-37
- Closing the sunroof 4-38
- Resetting the sunroof 4-39

Steering wheel.....4-40
- Electric power steering 4-40
- Tilt & telescopic steering 4-41
- Horn 4-41
- Flex steering wheel 4-42

Mirrors 4-44
- Inside rearview mirror 4-44
- Outside rearview mirror.....4-45

Instrument cluster 4-49
• Instrument panel illumination 4-50
• Gauges 4-50
• Outside temperature 4-53
• Manual transaxle shift indicator 4-53
• Automatic transaxle shift position indicator.....4-53
• Trip computer 4-54
• Warnings and indicators.....4-60
• LCD display informations 4-70
Rear parking assist system 4-75
• Operation 4-75
• Non-operational conditions 4-76
• Precautions.....4-77
• Self-diagnosis 4-78
Rearview camera 4-79
Hazard warning flasher.....4-80
Lighting 4-81
• Battery saver function.....4-81
• Headlamp delay function 4-81
• Lighting control.....4-81
• High - beam operation 4-83
• Turn signals and lane change signals 4-84
• Front fog light 4-84
• Rear fog light 4-85
• Daytime running light.....4-85
• Headlight leveling device 4-85
Wipers and washers 4-87
• Windshield wipers (front).....4-88
• Windshield washers (front) 4-89
• Rear window wiper and washer switch 4-90
Interior light 4-91
• Interior lamp AUTO cut.....4-91
• Map lamp 4-91
• Room lamp.....4-92
• Luggage room lamp 4-92
• Vanity mirror lamp 4-93
Welcome system 4-94
• Headlamp welcome 4-94
• Interior light.....4-94
• Puddle lamp and pocket lamp 4-94
Defroster 4-95
• Rear window defroster 4-95
Manual climate control system 4-96
• Heating and air conditioning 4-97
• System operation 4-102
• Climate control air filter.....4-104
• Checking the amount of air conditioner refrigerant and compressor lubricant.....4-104
Automatic climate control system.....4-105
• Automatic heating and air conditioning 4-106

• Manual heating and air conditioning 4-107
• Climate control air filter.....4-112
• Checking the amount of air conditioner refrigerant and compressor lubricant.....4-112
Windshield defrosting and defogging.....4-113
• Manual climate control system 4-113
• Automatic climate control system 4-114
• Auto defogging system.....4-116
Clean air 4-117
Storage compartment.....4-118
• Center console storage 4-118
• Sliding armrest 4-118
• Glove box 4-119
• Cool box 4-119
• Sunglass holder 4-120
• Luggage side tray 4-120
Interior features 4-121
• Cigarette lighter.....4-121
• Ashtray 4-121
• Cup holder 4-122
• Sunvisor 4-123
• Power outlet 4-124
• Aux, USB and iPod 4-125
• Clothes hanger.....4-125
• Floor mat anchor(s).....4-126
• Luggage net (holder).....4-126
• Cargo area cover 4-127
Exterior features.....4-128
• Mounting bracket for roof carrier.....4-128
Audio system.....4-130
• Antenna 4-130
• Audio remote control.....4-131

KEYS

Record your key number

The key code number is stamped on the key code tag attached to the key set. Should you lose your keys, we recommend that you contact an authorized HYUNDAI dealer. Remove the key code tag and store it in a safe place. Also, record the key code number and keep it in a safe place (not in the vehicle).

■ Type A

OMD041003L

■ Type B

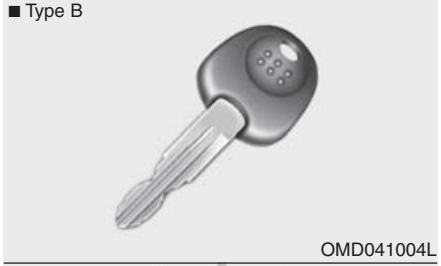

OMD041004L

■ Type C

OMG040005-1

Key operations

- Used to start the engine.
- Used to lock and unlock the doors.

Type C

To unfold the key, press the release button then the key will unfold automatically.

To fold the key, fold the key manually while pressing the release button.

⚠ CAUTION

Do not fold the key without pressing the release button. This may damage the key.

⚠ WARNING - Ignition key (smart key)

Leaving children unattended in a vehicle with the ignition key (smart key) is dangerous even if the key is not in the ignition or start button is ACC or ON position. Children copy adults and they could place the key in the ignition or press the start button. The ignition key (smart key) would enable children to operate power windows or other controls, or even make the vehicle move, which could result in serious bodily injury or even death. Never leave the keys in your vehicle with unsupervised children, when the engine is running.

⚠ WARNING

We recommend that you use parts for replacement from an authorized HYUNDAI dealer. If an aftermarket key is used, the ignition switch may not return to ON after START. If this happens, the starter will continue to operate causing damage to the starter motor and possible fire due to excessive current in the wiring.

Immobilizer system

Your vehicle may be equipped with an electronic engine immobilizer system to reduce the risk of unauthorized vehicle use.

Your immobilizer system is comprised of a small transponder in the ignition key and electronic devices inside the vehicle.

With the immobilizer system, whenever you insert your ignition key into the ignition switch and turn it to ON, it checks and determines and verifies if the ignition key is valid or not.

If the key is determined to be valid, the engine will start.

If the key is determined to be invalid, the engine will not start.

To deactivate the immobilizer system:

Insert the ignition key into the key cylinder and turn it to the ON position.

To activate the immobilizer system:

Turn the ignition key to the OFF position. The immobilizer system activates automatically. Without a valid ignition key for your vehicle, the engine will not start.

⚠ WARNING

In order to prevent theft of your vehicle, do not leave spare keys anywhere in your vehicle. Your immobilizer password is a customer unique password and should be kept confidential. Do not leave this number anywhere in your vehicle.

✻ NOTICE

When starting the engine, do not use the key with other immobilizer keys around. Otherwise the engine may not start or may stop soon after it starts. Keep each key separately in order to avoid a starting malfunction.

⚠ CAUTION

Do not put metal accessories near the ignition switch. Metal accessories may interrupt the transponder signal and may prevent the engine from being started.

✻ NOTICE

If you need additional keys or lose your keys, we recommend that you consult an authorized HYUNDAI dealer.

⚠ CAUTION

The transponder in your ignition key is an important part of the immobilizer system. It is designed to give years of trouble-free service, however you should avoid exposure to moisture, static electricity and rough handling. Immobilizer system malfunction could occur.

⚠ CAUTION

Do not change, alter or adjust the immobilizer system because it could cause the immobilizer system to malfunction. We recommend that the system be serviced by an authorized HYUNDAI dealer.

Malfunctions caused by improper alterations, adjustments or modifications to the immobilizer system are not covered by your vehicle manufacturer warranty.

SMART KEY (IF EQUIPPED)

OXM049001L

Smart key functions

1. Door lock
2. Door unlock
3. Tailgate unlock

With a smart key, you can lock or unlock a door (and tailgate) and even start the engine without inserting the key.

❊ The word “HOLD” is written on the button to inform you that you must press and hold the button for 1 second.

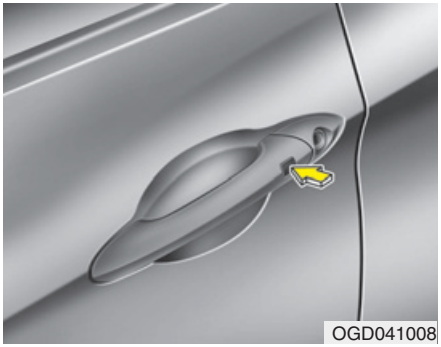
OGD041008

Locking

Using the door handle switch

1. Carry the smart key.
2. Close all doors.
3. Press the button of the outside door handle.
4. The hazard warning lights will blink once (the engine hood and tailgate must be closed).
5. Make sure that doors are locked by pulling the outside door handle.

❊ NOTICE

- **The button will only operate when the smart key is within 0.7 m (28 in.) from the outside door handle.**
- **Even though you press the outside door handle button, the doors will not lock and the chime will sound for 3 seconds if any of following occur:**
  - **The smart key is in the vehicle.**
  - **The engine start/stop button is in ACC or ON position.**
  - **Any door except the tailgate is opened.**

Using the button on the smart key

1. Close all doors.
2. Press the lock button.
3. The hazard warning light will blink once to indicate that all doors are locked (the engine hood and tailgate must be closed). Also, the outside rearview mirror will automatically fold if the outside rearview mirror folding switch is in the AUTO position (if equipped).

Unlocking

Using the door handle switch

1. Carry the smart key.
2. Press the button of the front outside door handle.
3. All doors will unlock and the hazard warning lights will blink twice.

✻ NOTICE

- **The button will only operate when the smart key is within 0.7 m (28 in.) from the outside door handle.**
- **When the smart key is recognized in the area of 0.7 m (28 in.) from the front outside door handle, other people can also open the doors.**
- **After unlocking all doors, the doors will lock automatically unless a door is opened.**

Using the button on the smart key

1. Press the unlock button.
2. The hazard warning lights will blink twice to indicate that all doors are unlocked. Also, the outside rearview mirror will automatically unfold if the outside rearview mirror folding switch is in the AUTO position (if equipped).

After pressing this button, the doors will lock automatically unless you open any door within 30 seconds.

The operating distance of the button is the area of 10 m (30 feet) from the outside door handle.

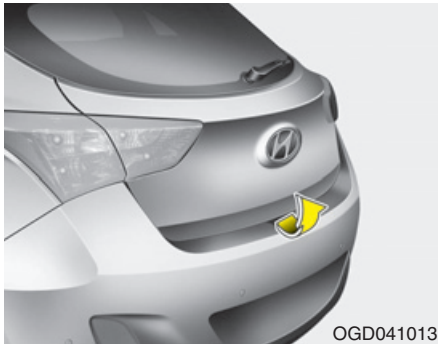

Tailgate unlocking

Using the tailgate handle switch

1. Carry the smart key.
2. Press the tailgate handle switch.
3. The tailgate will unlock.

✻ NOTICE

- **Once the tailgate is opened and then closed, the tailgate will lock automatically.**
- **The button will only operate when the smart key is within 0.7 m (28 in.) from the tailgate handle.**

Using the button on the smart key

1. Press the tailgate unlock button for more than 1 second.
2. The hazard warning light will blink twice to indicate the tailgate is unlocked.

✻ NOTICE

- **After unlocking the tailgate, the tailgate will lock automatically unless it is opened within 30 seconds.**
- **The word "HOLD" is written on the button to inform you that you must press and hold the button.**

Start-up

You can start the engine without inserting the key. For detailed information refer to “Engine start/stop button” in section 5.

Smart key precautions

✻ NOTICE

- **If, for some reason, you happen to lose your smart key, you will not be able to start the engine. Tow the vehicle, if necessary, and we recommend that you contact an authorized HYUNDAI dealer.**
- **A maximum of 2 smart keys can be registered to a single vehicle. If you lose a smart key, we recommend that you contact an authorized HYUNDAI dealer.**
- **The smart key will not work if any of following occur:**
  - **The smart key is close to a radio transmitter such as a radio station or an airport which can interfere with normal operation of the smart key.**
  - **You keep the smart key near a mobile two-way radio system or a cellular phone.**
  - **Another vehicle’s smart key is being operated close to your vehicle.**
  - **You exceed the operating distance limit.**

(Continued)

(Continued)

When the smart key does not work correctly, open and close the door with the mechanical key. If you have a problem with the smart key, we recommend that you contact an authorized HYUNDAI dealer.

- **If the smart key is in close proximity to your cell phone or smart phone, the signal from the smart key could be blocked by normal operation of your cell phone or smart phone. This is especially important when the phone is active such as making call, receiving calls, text messaging, and/or sending/receiving emails. Avoid placing the smart key and your cell phone or smart phone in the same pants or jacket pocket and maintain adequate distance between the two devices.**

⚠ CAUTION

Keep the smart key away from water or any liquid. If the keyless entry system is inoperative due to exposure to water or liquids, it will not be covered by your manufacturer's vehicle warranty.

⚠ WARNING - Smart key

Leaving children unattended in a vehicle with the smart key is dangerous. Children copy adults and they could press the engine start/stop button. It would enable children to operate power windows or other controls, or even make the vehicle move, which could result in serious bodily injury or even death. Never leave the keys in your vehicle with unsupervised children.

Battery replacement

A smart key battery should last for several years, but if the smart key is not working properly, try replacing the battery with a new one. If you are unsure how to use your smart key or replace the battery, we recommend that you contact an authorized HYUNDAI dealer.

✻ NOTICE

The circuit inside the smart key can have a problem if exposed to moisture or static electricity. If you are unsure how to use your smart key or replace the battery, we recommend that you contact an authorized HYUNDAI dealer.

1. Pry open the rear cover of the smart key.
2. Replace the battery with a new battery (CR2032). When replacing the battery, make sure the battery position.
3. Install the battery in the reverse order of removal.

✻ NOTICE

- **Using the wrong battery can cause the smart key to malfunction. Be sure to use the correct battery.**
- **Circuits inside the smart key may develop problems when dropped, exposed to moisture or static electricity.**
- **If you suspect that your smart key might have sustained some damage, or you feel your smart key is not working correctly, we recommend that you contact an authorized HYUNDAI dealer.**

⚠ CAUTION

An inappropriately disposed battery can be harmful to the environment and human health.

Dispose the battery according to your local law(s) or regulation.

Immobilizer system

Your vehicle is equipped with an electronic engine immobilizer system to reduce the risk of unauthorized vehicle use.

Your immobilizer system is comprised of a small transponder in the smart key and electronic devices inside the vehicle.

With the immobilizer system, whenever you turn the engine start/stop button to the ON position by pressing the button while carrying the smart key, it checks and determines and verifies if the smart key is valid or not.

If the key is determined to be valid, the engine will start.

If the key is determined to be invalid, the engine will not start.

To deactivate the immobilizer system:

Turn the engine start/stop button to the ON position by pressing the button while carrying the smart key.

To activate the immobilizer system:

Turn the engine start/stop button to the OFF position. The immobilizer system activates automatically. Without a valid smart key for your vehicle, the engine will not start.

⚠ WARNING

In order to prevent theft of your vehicle, do not leave spare keys anywhere in your vehicle. Your Immobilizer password is a customer unique password and should be kept confidential. Do not leave this number anywhere in your vehicle.

✻ NOTICE

When starting the engine, do not use the key with other immobilizer keys around. Otherwise the engine may not start or may stop soon after it starts. Keep each key separate in order to avoid a starting malfunction.

⚠ CAUTION

Do not put metal accessories near the smart key.

The engine may not start because the metal accessories may interrupt the transponder signal from transmitting normally.

✻ NOTICE

If you need additional keys or lose your keys, we recommend that you consult with an authorized HYUNDAI dealer.

⚠ CAUTION

The transponder in your smart key is an important part of the immobilizer system. It is designed to give years of trouble-free service, however you should avoid exposure to moisture, static electricity and rough handling. Immobilizer system malfunction could occur.

⚠ CAUTION

Do not change, alter or adjust the immobilizer system because it could cause the immobilizer system to malfunction and we recommend that the system be serviced by an authorized HYUNDAI dealer.

Malfunctions caused by improper alterations, adjustments or modifications to the immobilizer system are not covered by your vehicle manufacturer warranty.

OLM049210L

Door lock/unlock in an emergency situation

If the smart key does not operate normally, you can lock or unlock the doors by using the mechanical key.

1. Press and hold the release button (1) and remove the mechanical key (2).
2. Insert the key into the hole of the outside door handle. Turn the key toward the rear of the vehicle to unlock and toward the front of the vehicle to lock.
3. To reinstall the mechanical key, put the key into the hole and push it until a click sound is heard.

REMOTE KEYLESS ENTRY (IF EQUIPPED)

OAM049096L

Remote keyless entry system operations

- To unfold the key, press the release button then the key will unfold automatically.
- To fold the key, fold the key manually while pressing the release button.

⚠ CAUTION

Do not fold the key without pressing the release button. This may damage the key.

OXM049003

Lock (1)

1. Close all doors.
2. Press the lock button.
3. The hazard warning light will blink once to indicate that all doors are locked (the engine hood and tailgate must be closed). Also, the outside rearview mirror will automatically fold if the outside rearview mirror folding switch is in the AUTO position (if equipped).

Unlock (2)

1. Press the unlock button.
2. The hazard warning lights will blink twice to indicate that all doors are unlocked. Also, the outside rearview mirror will automatically unfold if the outside rearview mirror folding switch is in the AUTO position (if equipped).

✻ NOTICE

After unlocking all doors, the doors will lock automatically unless a door is opened within 30 seconds. Also, the outside rearview mirror will automatically fold if the outside rearview mirror folding switch is in the AUTO position (if equipped).

Tailgate unlock (3)

1. Press the tailgate unlock button for more than 1 second.
2. The hazard warning light will blink twice to indicate the tailgate is unlocked.

✻ NOTICE

- **After unlocking the tailgate, the tailgate will lock automatically unless it is opened within 30 seconds.**
- **The word "HOLD" is written on the button to inform you that you must press and hold the button.**

Transmitter precautions

✻ NOTICE

The transmitter will not work if any of following occur:

- **The ignition key is in ignition switch.**
  - **You exceed the operating distance limit (about 10 m [30 feet]).**
  - **The battery in the transmitter is weak.**
  - **Other vehicles or objects may be blocking the signal.**
  - **The weather is extremely cold.**
  - **The transmitter is close to a radio transmitter such as a radio station or an airport which can interfere with normal operation of the transmitter.**

When the transmitter does not work correctly, open and close the door with the ignition key. If you have a problem with the transmitter, we recommend that you contact an authorized HYUNDAI dealer.

(Continued)

(Continued)

- **If the transmitter is in close proximity to your cell phone or smart phone, the signal from the transmitter could be blocked by normal operation of your cell phone or smart phone. This is especially important when the phone is active such as making call, receiving calls, text messaging, and/or sending/receiving emails. Avoid placing the transmitter and your cell phone or smart phone in the same pants or jacket pocket and maintain adequate distance between the two devices.**

⚠ CAUTION

Keep the transmitter away from water or any liquid. If the keyless entry system is inoperative due to exposure to water or liquids, it will not be covered by your manufacturer vehicle warranty.

⚠ CAUTION

Changes or modifications not expressly approved by the party responsible for compliance could void the user's authority to operate the equipment. If the keyless entry system is inoperative due to changes or modifications not expressly approved by the party responsible for compliance, it will not be covered by your manufacturer's vehicle warranty.

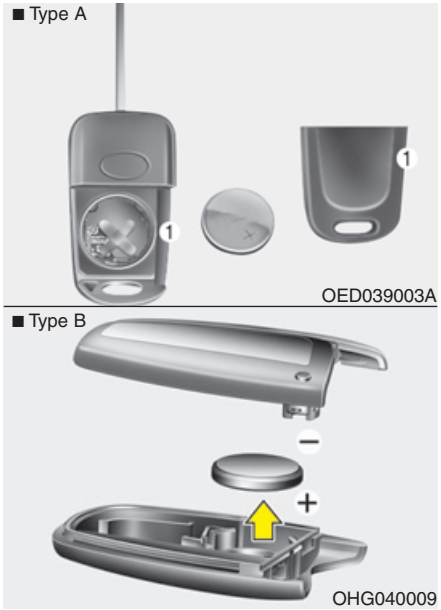

Battery replacement

A battery should last for several years, but if the transmitter or smart key is not working properly, try replacing the battery with a new one. If you are unsure how to use or replace the battery, we recommend that you contact an authorized HYUNDAI dealer.

1. Insert a slim tool into the slot and gently pry open the cover.
2. Replace the battery with a new battery (CR2032). When replacing the battery, make sure the battery position.
3. Install the rear cover.

For transmitter or smart key replacement, we recommend that you contact an authorized HYUNDAI dealer for reprogramming.

⚠ CAUTION

- ***The transmitter or smart key is designed to give you years of trouble-free use, however it can malfunction if exposed to moisture or static electricity. If you are unsure how to use or replace the battery, we recommend that you contact an authorized HYUNDAI dealer.***
- ***Using the wrong battery can cause the transmitter or smart key to malfunction. Be sure to use the correct battery.***
- ***To avoid damaging the transmitter or smart key, don't drop it, get it wet, or expose it to heat or sunlight.***

⚠ CAUTION

An inappropriately disposed battery can be harmful to the environment and human health.

Dispose the battery according to your local law(s) or regulation.

THEFT-ALARM SYSTEM (IF EQUIPPED)

Vehicles equipped with a theft alarm system will have a label attached to the vehicle with the following words:
1. WARNING
2. SECURITY SYSTEM

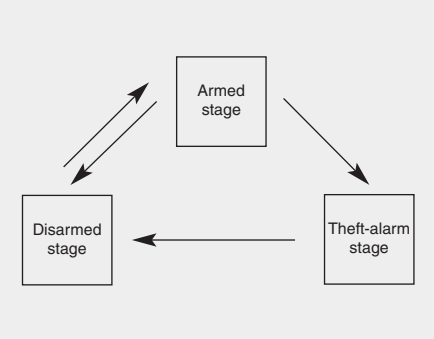

This system is designed to provide protection from unauthorized entry into the car. This system is operated in three stages: the first is the "Armed" stage, the second is the "Theft-alarm" stage, and the third is the "Disarmed" stage. If triggered, the system provides an audible alarm with blinking of the hazard warning lights.

Armed stage

Using the smart key

Park the vehicle and stop the engine. Arm the system as described below.

1. Turn off the engine.
2. Make sure that all doors, the engine hood and tailgate are closed and latched.
3. • Lock the doors by pressing the button of the front outside door handle with the smart key in your possession.

   After completion of the steps above, the hazard warning lights operate once to indicate that the system is armed.

   If any door remains open, the doors won't lock and the chime will sound for 3 seconds. Close the door and try again to lock the doors.

   If tailgate or engine hood remains open, the hazard warning lights won't operate and theft-alarm will not arm. After this, tailgate and engine hood are closed, the hazard warning lights blink once.

   • Lock the doors by pressing the lock button on the smart key.

   After completion of the steps above, the hazard warning lights will operate once to indicate that the system is armed.

If any door, tailgate or engine hood remains open, the hazard warning lights won't operate and theft-alarm will not arm. After this, if all doors, tailgate and engine hood are closed, the hazard warning lights blink once.

Using the transmitter

Park the vehicle and stop the engine. Arm the system as described below.

1. Turn off the engine and remove the ignition key from the ignition switch.
2. Make sure that all doors, the engine hood and tailgate are closed and latched.
3. Lock the doors by pressing the lock button on the transmitter.

   After completion of the steps above, the hazard warning lights will blink once to indicate that the system is armed.

   If any door, tailgate or engine hood remains open, the hazard warning lights won't operate and theft-alarm will not arm. After this, if all doors, tailgate and engine hood are closed, the hazard warning lights blink once.

Do not arm the system until all passengers have left the vehicle. If the system is armed while a passenger(s) remains in the vehicle, the alarm may be activated when the remaining passenger(s) leave the vehicle. If any door (or tailgate) or engine hood is opened within 30 seconds after the system enters the armed stage, the system is disarmed to prevent unnecessary alarm.

Theft-alarm stage

The alarm will be activated if any of the following occurs while the system is armed.

- A front or rear door is opened without using the transmitter (or smart key).
- The tailgate is opened without using the transmitter (or smart key).
- The engine hood is opened.

The horn will sound and the hazard warning lights will blink continuously for 27 seconds, unless the system is disarmed. To turn off the system, unlock the doors with the transmitter (or smart key).

Disarmed stage

The system will be disarmed when:

Transmitter

- The door unlock button is pressed.

Smart key

- The door unlock button is pressed.
- The button of the front outside door is pressed while carrying the smart key.

After the doors are unlocked, the hazard warning lights will blink twice to indicate that the system is disarmed.

After pressing the unlock button, if any door (or tailgate) is not opened within 30 seconds, the system will be rearmed.

✻ NOTICE - Non-Smart key

- **If the system is not disarmed with the transmitter, open the door with the key and insert the key into the ignition switch, turn the ignition switch to the ON position and wait for 30 seconds. Then the system will be disarmed.**
- **If you lose your keys, we recommend that you consult with an authorized HYUNDAI dealer.**

✻ NOTICE - Smart key

- **If the system is not disarmed with the smart key, open the door with the mechanical key and start the engine. Then the system will be disarmed.**
- **If you lose your keys, we recommend that you consult with an authorized HYUNDAI dealer.**

⚠ CAUTION

Do not change, alter or adjust the theft-alarm system because it could cause the theft-alarm system to malfunction and we recommend that the system be serviced by an authorized HYUNDAI dealer.

Malfunctions caused by improper alterations, adjustments or modifications to the theft-alarm system are not covered by your vehicle manufacturer's warranty.

DOOR LOCKS

OAM049097L/OXM049001L

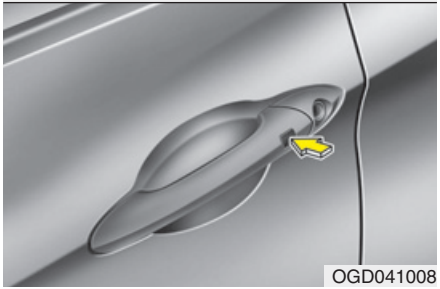

OGD041008

Operating door locks from outside the vehicle

- Turn the key toward the rear of the vehicle to unlock and toward the front of the vehicle to lock.
- If you lock/unlock the door with a key, all vehicle doors will lock/unlock automatically. (if equipped)
- Doors can also be locked and unlocked with the transmitter or smart key. (if equipped)
- Once the doors are unlocked, they may be opened by pulling the door handle.
- When closing the door, push the door by hand. Make sure that doors are closed securely.

✻ NOTICE

- **In cold and wet climates, door lock and door mechanisms may not work properly due to freezing conditions.**
- **If the door is locked/unlocked multiple times in rapid succession with either the vehicle key or door lock switch, the system may stop operating temporarily in order to protect the circuit and prevent damage to system components.**

⚠ WARNING

- **If you don't close the door securely, the door may open again.**
- **Be careful that someone's body and hands are not trapped when closing the door.**

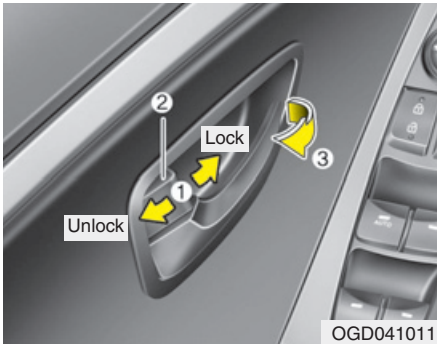

Operating door locks from inside the vehicle

With the door lock button

- To unlock a door, push the door lock button (1) to the “Unlock” position. The red mark (2) on the door lock button will be visible.
- To lock a door, push the door lock button (1) to the “Lock” position. If the door is locked properly, the red mark (2) on the door lock button will not be visible.
- To open a door, pull the door handle (3) outward.
- If the inner door handle of the front door is pulled when the door lock button is in lock position, the button is unlocked and door opens.
- Front door cannot be locked if the ignition key is in the ignition switch and the door is open.
- A door cannot be locked if the smart key is in the vehicle and any door is open.

⚠ WARNING - Door lock malfunction

If a power door lock ever fails to function while you are in the vehicle, try one or more of the following techniques to exit:

- **Operate the door unlock feature repeatedly (both electronic and manual) while simultaneously pulling on the door handle.**
- **Operate the other door locks and handles, front and rear.**
- **Lower a front window and use the key to unlock the door from outside.**

With central door lock switch (if equipped)

Operate by depressing the central door lock switch.

- When pushing down the door lock switch (1), all vehicle doors will lock.
- When pushing down door unlock switch (2), all vehicle doors will unlock.

- If the key is in the ignition switch and front door is open, the doors will not lock even though the central door lock switch (1) is pressed.
- If the smart key is in the vehicle and any door is open, the doors will not lock even though the central door lock switch (1) is pressed.

⚠ WARNING - Doors

- **The doors should always be fully closed and locked while the vehicle is in motion to prevent accidental opening of the door. Locked doors will also discourage potential intruders when the vehicle stops or slows.**
- **Be careful when opening doors and watch for vehicles, motorcycles, bicycles or pedestrians approaching the vehicle in the path of the door. Opening a door when something is approaching can cause damage or injury.**

⚠ WARNING - Unlocked vehicles

Leaving your vehicle unlocked can invite theft or possible harm to you or others from someone hiding in your vehicle while you are gone. Always remove the ignition key, engage the parking brake, close all windows and lock all doors when leaving your vehicle unattended.

⚠ WARNING - Unattended children

An enclosed vehicle can become extremely hot, causing death or severe injury to unattended children or animals who cannot escape the vehicle. Furthermore, children might operate features of the vehicle that could injure them, or they could encounter other harm, possibly from someone gaining entry to the vehicle. Never leave children or animals unattended in your vehicle.

Impact sensing door unlock system (if equipped)

All doors will automatically unlock when an impact causes the air bags to deploy.

Speed sensing door lock system (if equipped)

All doors will automatically lock after the vehicle speed exceeds 15 km/h.

For deactivation of this feature, we recommend that you contact an autherized HYUNDAI dealer.

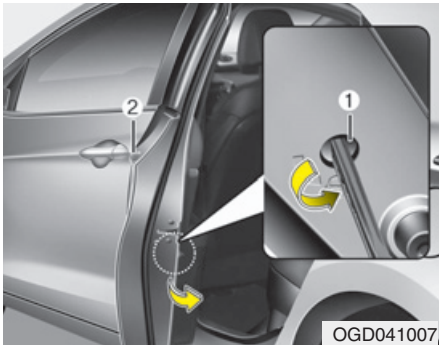

Child-protector rear door lock

The child safety lock is provided to help prevent children from accidentally opening the rear doors from inside the vehicle. The rear door safety locks should be used whenever children are in the vehicle.

1. Open the rear door.
2. Insert a key (or screwdriver) into the hole (1) and turn it to the lock (🔒) position. When the child safety lock is in the lock position, the rear door will not open even though the inner door handle is pulled.
3. Close the rear door.

To open the rear door, pull the outside door handle (2).

Even though the doors may be unlocked, the rear door will not open by pulling the inner door handle until the rear door child safety lock is unlocked.

⚠ WARNING - Rear door locks

If children accidentally open the rear doors while the vehicle is in motion, they could fall out and be severely injured or killed. To prevent children from opening the rear doors from the inside, the rear door safety locks should be used whenever children are in the vehicle.

TAILGATE

OGDE041013

Opening the tailgate

- The tailgate is locked or unlocked when all doors are locked or unlocked with the key, transmitter, smart key or central door lock/unlock switch.
- Only the tailgate is unlocked if the tailgate unlock button on the transmitter or smart key is pressed for approximately 1 second.
- If unlocked, the tailgate can be opened by pressing the handle and pulling it up.
- Once the tailgate is opened and then closed, the tailgate locks automatically. (All doors must be locked.)

✻ NOTICE

In cold and wet climates, door lock and door mechanisms may not work properly due to freezing conditions.

⚠ WARNING

The tailgate swings upward. Make sure no objects or people are near the rear of the vehicle when opening the tailgate.

⚠ CAUTION

Make certain that you close the tailgate before driving your vehicle. Possible damage may occur to the tailgate lift cylinders and attaching hardware if the tailgate is not closed prior to driving.

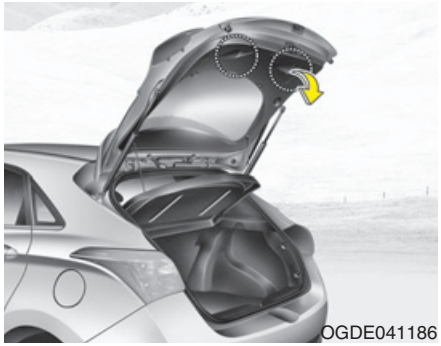
OGDE041186

Closing the tailgate

Lower and push down the tailgate firmly. Make sure that the tailgate is securely latched.

⚠ WARNING

Make sure your hands, feet and other parts of your body are safely out of the way before closing the tailgate.

⚠ CAUTION

Make sure nothing is near the tailgate latch and striker while closing the tailgate. It may damage the tailgate's latch.

⚠ WARNING - Exhaust fumes

If you drive with the tailgate opened, you will draw dangerous exhaust fumes into your vehicle which can cause serious injury or death to vehicle occupants.

If you must drive with the tailgate opened, keep the air vents and all windows open so that additional outside air comes into the vehicle.

⚠ WARNING - Rear cargo area

Occupants should never ride in the rear cargo area where no restraints are available. To avoid injury in the event of an accident or sudden stops, occupants should always be properly restrained.

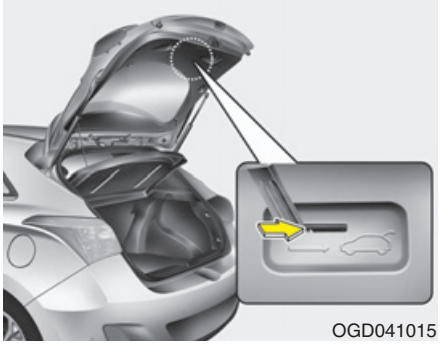

Emergency tailgate safety release

Your vehicle is equipped with the emergency tailgate safety release lever located on the bottom of the tailgate. When someone is inadvertently locked in the luggage compartment, the tailgate can be opened by doing as follows:

1. Input the mechanical key into the hole.
2. Push the mechanical key to the right.
3. Push up the tailgate.

⚠ WARNING

- **For emergencies, be fully aware of the location of the emergency tailgate safety release lever in the vehicle and how to open the tailgate if you are accidentally locked in the luggage compartment.**
- **No one should be allowed to occupy the luggage compartment of the vehicle at any time. The luggage compartment is a very dangerous location in the event of a crash.**
- **Use the release lever for emergencies only. Use with extreme caution, especially while the vehicle is in motion.**

WINDOWS

Power windows (if equipped)

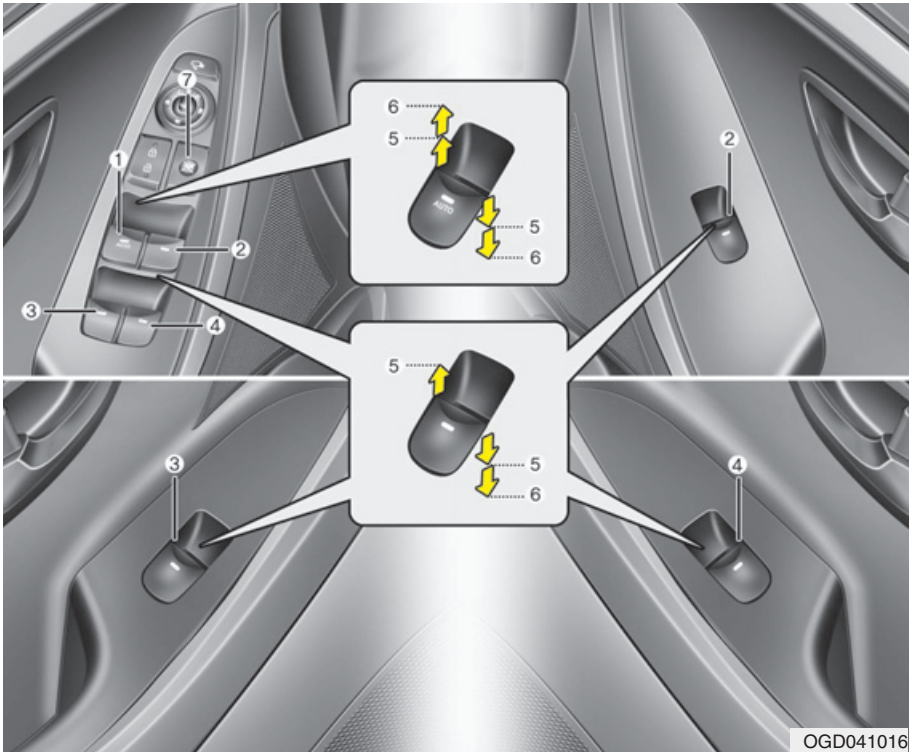

(1) Driver's door power window switch
(2) Front passenger's door power window switch
(3) Rear door (left) power window switch*
(4) Rear door (right) power window switch*
(5) Window opening and closing
(6) Automatic power window*
(7) Power window lock switch*

* if equipped

✻ NOTICE

In cold and wet climates, power windows may not work properly due to freezing conditions.

Power windows

The ignition switch must be in the ON position for power windows to operate.

Each door has a power window switch that controls the door's window. The driver has a master power window switch that controls all the windows in the vehicle. Also, a power window lock switch which that can block the operation of rear passenger windows. The power windows can be operated for approximately 30 seconds after the ignition key is removed or turned to the ACC or LOCK position. However, if the front doors are opened, the power windows cannot be operated within the 30 seconds period.

✻ NOTICE

While driving with the rear windows down or with the sunroof (if equipped) opened (or partially opened), your vehicle may demonstrate a wind buffeting or pulsation noise. This noise is a normal occurrence and can be reduced or eliminated by taking the following actions. If the noise occurs with one or both of the rear windows down, partially lower both front windows approximately one inch. If you experience the noise with the sunroof open, slightly reduce the size of the sunroof opening

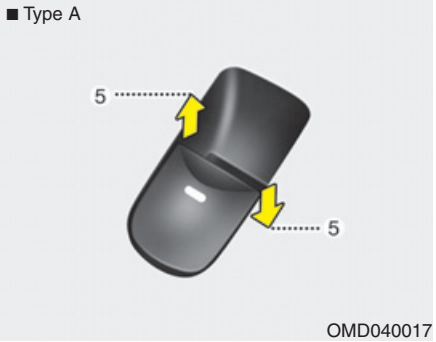

Window opening and closing

Type A

To open or close a window, press down or pull up the front portion of the corresponding switch to the first detent position (5).

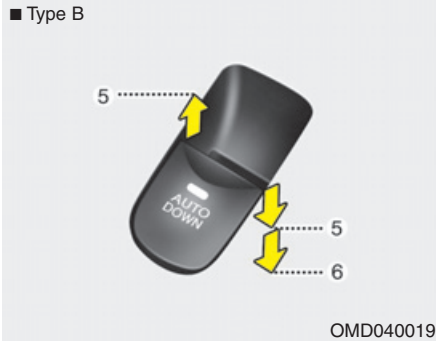

Type B - Auto down window (if equipped)

Pressing the power window switch momentarily to the second detent position (6) completely lowers the window even when the switch is released. To stop the window at the desired position while the window is in operation, pull up the switch momentarily to the opposite direction of the window movement.

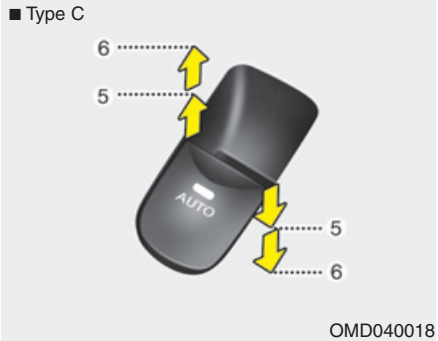

Type C - Auto up/down window (if equipped)

Pressing or pulling up the power window switch momentarily to the second detent position (6) completely lowers or lifts the window even when the switch is released. To stop the window at the desired position while the window is in operation, pull up or press down and release the switch.

If the power window does not operate normally, the automatic power window system must be reset as follows:

1. Turn the ignition switch to the ON position.
2. Close the window and continue pulling up the power window switch for at least 1 second after the window is completely closed.

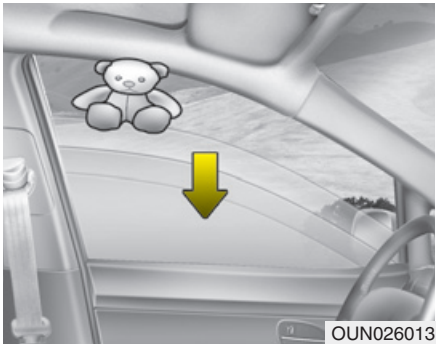

Automatic reversal (if equipped)

If the upward movement of the window is blocked by an object or part of the body, the window will detect the resistance and will stop upward movement. The window will then lower approximately 30 cm (11.8 in.) to allow the object to be cleared.

If the window detects the resistance while the power window switch is pulled up continuously, the window will stop upward movement then lower approximately 2.5 cm (1 in.). And if the power window switch is pulled up continuously again within 5 seconds after the window is lowered by the automatic window reversal feature, the automatic window reversal will not operate.

✻ NOTICE

The automatic reverse feature for the window is only active when the "auto up" feature is used by fully pulling up the switch. The automatic reverse feature will not operate if the window is raised using the halfway position on the power window switch.

⚠ WARNING

Always check for obstructions before raising any window to avoid injuries or vehicle damage. If an object less than 4 mm (0.16 in.) in diameter is caught between the window glass and the upper window channel, the automatic reverse window may not detect the resistance and will not stop and reverse direction.

Power window lock switch (if equipped)

For Europe

The driver can disable the power window switches on the rear passengers' doors by pressing the power window lock switch to the lock position(pressed).

When the power window lock switch is pressed :

- The driver's master control can operate the front passenger's power window but cannot operate the rear passengers' power windows.
- The front passenger's control can operate the front passenger's power window.
- The rear passengers' control cannot operate the rear passengers' power window.

Except Europe

The driver can disable the power window switches on the front and rear passengers' doors by pressing the power window lock switch to lock position (pressed).

When the power window lock switch is pressed, the driver's master control cannot operate the front and rear passengers' power windows.

⚠ CAUTION

- ***To prevent possible damage to the power window system, do not open or close two windows or more at the same time. This will also ensure the longevity of the fuse.***
- ***Never try to operate the main switch on the driver's door and the individual door window switch in opposite directions at the same time. If this is done, the window will stop and cannot be opened or closed.***

⚠ WARNING - Windows

- **NEVER leave the keys in your vehicle with unsupervised children, when the engine is running.**
- **NEVER leave any child unattended in the vehicle. Even very young children may inadvertently cause the vehicle to move, entangle themselves in the windows, or otherwise injure themselves or others.**
- **Always double check to make sure all arms, hands, head and other obstructions are safely out of the way before closing a window.**
- **Do not allow children to play with the power windows. Keep the driver's door power window lock switch in the LOCK position (pressed). Serious injury can result from unintentional window operation by the child.**
- **Do not extend face or arms outside the window opening while driving.**

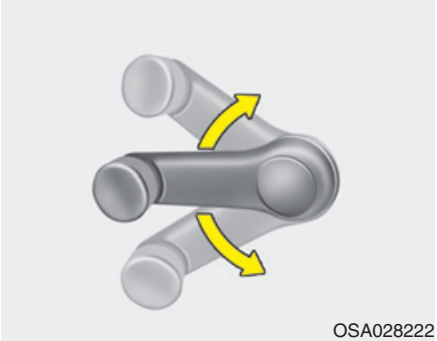
OSA028222

Manual windows (if equipped)

To raise or lower the window, turn the window regulator handle clockwise or counterclockwise.

⚠ WARNING

When opening or closing the windows, make sure your passenger's arms, hands and body are safely out of the way.

HOOD

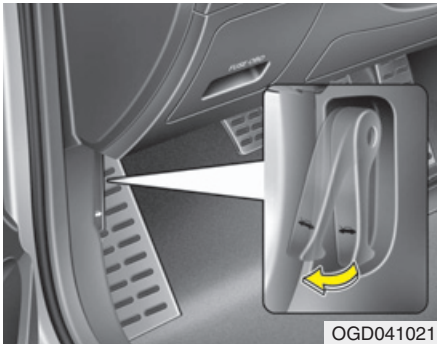
OGD041021

Opening the hood

1. Pull the release lever to unlatch the hood. The hood should pop open slightly.

⚠ WARNING

Open the hood after turning off the engine on a flat surface, shifting the shift lever to the P(Park) position for automatic transaxle and to the 1st(First) gear or R(Reverse) for manual transaxle, and setting the parking brake.

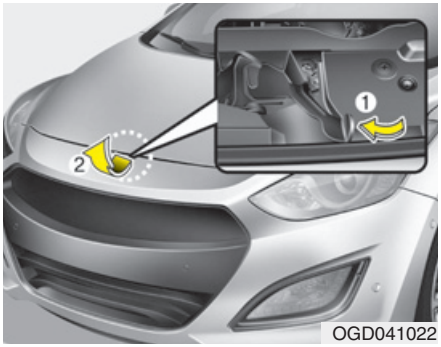

OGD041022

2. Go to the front of the vehicle, raise the hood slightly, push the secondary latch up (1) inside of the hood center and lift the hood (2).

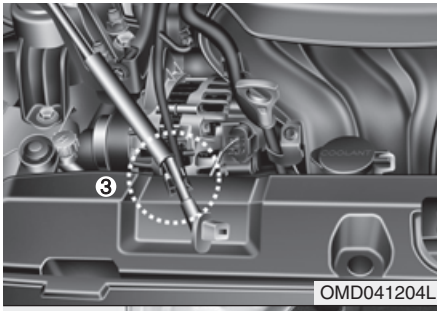

OMD041204L

OMD040023

3. Pull out the support rod (3).
4. Hold the hood opened with the support rod (4).

⚠ WARNING - Hot parts

Be very careful not to touch the support rod when the engine and parts are hot. You could get burned or get seriously injured.

Closing the hood

1. Before closing the hood, check the following:
   - All filler caps in engine compartment must be correctly installed.
   - Gloves, rags or any other combustible material must be removed from the engine compartment.
2. Return the support rod to its clip to prevent it from rattling.
3. Lower the hood until it is about 30 cm (1 ft.) above the closed position and let it drop. Make sure that it locks into place.

⚠ WARNING

- **Before closing the hood, ensure that all obstructions are removed from the hood opening. Closing the hood with an obstruction present in the hood opening may result in property damage or severe personal injury.**
- **Do not leave gloves, rags or any other combustible material in the engine compartment. Doing so may cause a heat-induced fire.**

⚠ WARNING

- **Always double check to be sure that the hood is firmly latched before driving away. If it is not latched, the hood could open while the vehicle is being driven, causing a total loss of visibility, which might result in an accident.**
- **The support rod must be inserted completely into the hole provided whenever you inspect the engine compartment. This will prevent the hood from falling and possibly injuring you.**
- **Do not move the vehicle with the hood raised. The view will be blocked and the hood could fall or get damaged.**

FUEL FILLER LID

Opening the fuel filler lid

1. Press the center edge of the lid when all doors are unlocked.

✻ NOTICE

The fuel filler lid will open and close only when all doors are unlocked.

✻ NOTICE

If the fuel filler lid does not open because ice has formed around it, tap lightly or push on the lid to break the ice and release the lid. Do not pry on the lid. If necessary, spray around the lid with an approved de-icer fluid (do not use radiator anti-freeze) or move the vehicle to a warm place and allow the ice to melt.

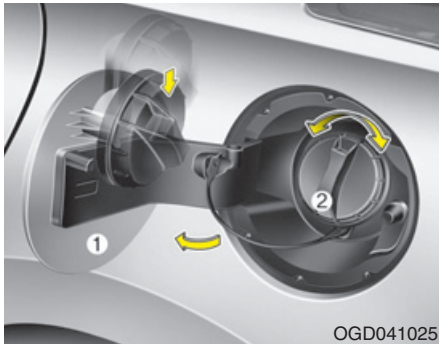

2. Fully open the lid (1).
3. To open the cap, turn it counterclockwise (2).
4. Refuel as needed.

Closing the fuel filler lid

1. To install the cap, turn it clockwise until it “clicks” once. This indicates that the cap is securely tightened.
2. Close the fuel filler lid and push it lightly and make sure that it is securely closed.

⚠ WARNING - Refueling

- **If pressurized fuel sprays out, it can cover your clothes or skin and thus subject you to the risk of fire and burns. Always remove the fuel cap carefully and slowly. If the cap is venting fuel or if you hear a hissing sound, wait until the condition stops before completely removing the cap.**
- **Do not "top off" after the nozzle automatically shuts off when refueling.**
- **Always check that the fuel cap is installed securely to prevent fuel spillage in the event of an accident.**

⚠ WARNING - Refueling dangers

Automotive fuels are flammable materials. When refueling, please note the following guidelines carefully. Failure to follow these guidelines may result in severe personal injury, severe burns or death by fire or explosion.

- **Read and follow all warning at the gas station facility.**
- **Before refueling note the location of the Emergency Gasoline Shut-Off, if available, at the gas station facility.**
- **Before touching the fuel nozzle, you should eliminate potentially dangerous static electricity discharge by touching another metal part of the vehicle, a safe distance away from the fuel filler neck, nozzle, or other gas source.**

(Continued)

(Continued)

- **Do not get back into a vehicle once you have begun refueling since you can generate static electricity by touching, rubbing or sliding against any item or fabric (polyester, satin, nylon, etc.) capable of producing static electricity. Static electricity discharge can ignite fuel vapors resulting in rapid burning. If you must re-enter the vehicle, you should once again eliminate potentially dangerous static electricity discharge by touching a metal part of the vehicle, away from the fuel filler neck, nozzle or other gasoline source.**
- **When using an approved portable fuel container, be sure to place the container on the ground prior to refueling. Static electricity discharge from the container can ignite fuel vapors causing a fire. Once refueling has begun, contact with the vehicle should be maintained until the filling is complete.**

(Continued)

(Continued)

Use only approved portable plastic fuel containers designed to carry and store gasoline.

- **Do not use cellular phones while refueling. Electric current and/or electronic interference from cellular phones can potentially ignite fuel vapors causing a fire.**
- **When refueling, always shut the engine off. Sparks produced by electrical components related to the engine can ignite fuel vapors causing a fire. Once refueling is complete, check to make sure the filler cap and filler door are securely closed, before starting the engine.**
- **DO NOT use matches or a lighter and DO NOT SMOKE or leave a lit cigarette in your vehicle while at a gas station especially during refueling. Automotive fuel is highly flammable and can, when ignited, result in fire.**

(Continued)

(Continued)

- **If a fire breaks out during refueling, leave the vicinity of the vehicle, and immediately contact the manager of the gas station and then contact the local fire department. Follow any safety instructions they provide.**

⚠ CAUTION

- ***Make sure to refuel your vehicle according to the "Fuel requirements" suggested in section 1.***
- ***If the fuel filler cap requires replacement, please make sure that you use parts designed for replacement in your vehicle. An incorrect fuel filler cap can result in a serious malfunction of the fuel system or emission control system. For more detailed information, we recommend that you contact an authorized HYUNDAI dealer.***
- ***Do not spill fuel on the exterior surfaces of the vehicle. Any type of fuel spilled on painted surfaces may damage the paint.***
- ***After refueling, make sure the fuel cap is installed securely to prevent fuel spillage in the event of an accident.***

PANORAMA SUNROOF (IF EQUIPPED)

OGD041026

If your vehicle is equipped with a sunroof, you can slide or tilt your sunroof with the sunroof control lever located on the overhead console.

The sunroof can only be opened, closed, or tilted when the ignition switch is in the ON position.

- In cold and wet climates, the sunroof may not work properly due to freezing conditions.
- After the vehicle is washed or in a rainstorm, be sure to wipe off any water that is on the sunroof before operating it.

⚠ CAUTION - Sunroof control lever

Do not continue to move the sunroof control lever after the sunroof is fully opened, closed, or tilted. Damage to the motor or system components could occur.

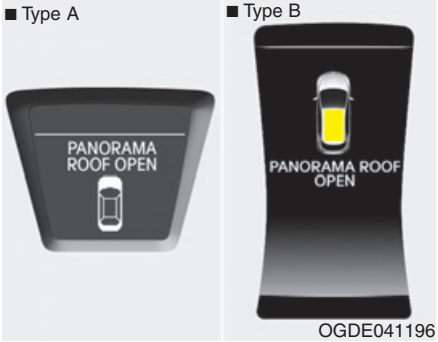

OGDE041196

Sunroof open warning (if equipped)

If the driver removes the ignition key (smart key: turns off the engine) and opens the driver-side door when the sunroof is not fully closed, the warning chime will sound for approximately 7 seconds and a message “Panorama Roof Open” will appear on the LCD display.

Close the sunroof securely when leaving your vehicle.

OGD041028

Sunshade

- To open the sunshade, press the sunshade control switch(1).
- To close the sunshade when the sunroof glass is closed.
  - Press the sunshade control switch(2).
  - Push the sunroof control lever forward or pull it down.

To stop the sliding at any point, press the sunshade control switch momentarily.

OGD041027

Sliding the sunroof

When the sunshade is closed

If you pull the sunroof control lever backward, the sunshade will slide all the way open then the sunroof glass will slide all the way open. To stop the sunroof movement at any point, pull or push the sunroof control lever momentarily.

When the sunshade is opened

If you pull the sunroof control lever backward, the sunroof glass will slide all the way open. To stop the sunroof movement at any point, pull or push the sunroof control lever momentarily.

OGD041029

Tilting the sunroof

When the sunshade is closed

If you push the sunroof control lever upward, the sunshade will slide all the way open then the sunroof glass will tilt.

To stop the sunroof movement at any point, pull or push the sunroof control lever momentarily.

When the sunshade is opened

If you push the sunroof control lever upward, the sunroof glass will tilt.

To stop the sunroof movement at any point, pull or push the sunroof control lever momentarily.

Closing the sunroof

To close the sunroof glass with the sunshade

Push the sunroof control lever forward. The sunroof glass will close then the sunshade will close automatically.

To stop the sunroof movement at any point, pull or push the sunroof control lever momentarily.

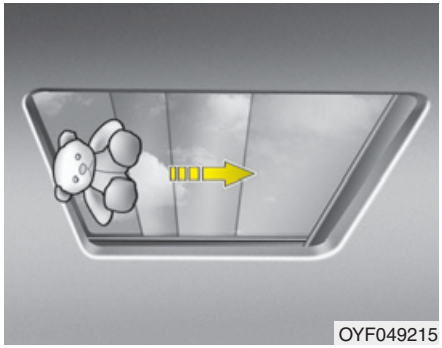

Automatic reversal

If an object or part of the body is detected while the sunroof glass or sunshade is closing automatically, it will reverse the direction, and then stop.

The auto reverse function does not work if a tiny obstacle is between the sliding glass or sunshade and the sunroof sash. You should always check that all passengers and objects are away from the sunroof before closing it.

Do not extend the face, neck, arms or body outside the sunroof while driving.

Periodically remove any dirt that may accumulate on the guide rail. The sunroof is made to slide together with the sunshade. Do not leave the sunshade closed while the sunroof is opened.

While using sunroof for a long time, a dust between sunroof and roof panel can make a noise. Open the sunroof and remove regularly the dust using clean cloth.

⚠ CAUTION - Sunroof motor damage

If you try to open the sunroof when the temperature is below freezing or when the sunroof is covered with snow or ice, the glass or the motor could be damaged.

Resetting the sunroof

Whenever the vehicle battery is disconnected or discharged, or related fuse is blown, you must reset your sunroof system as follows:

1. Turn the engine on and close the sunroof glass and sunshade completely.
2. Release the control lever.
3. Push the sunroof control lever forward in the direction of close (about 10 seconds) until the sunroof operates as follows;

   SUNSHADE OPEN → TILT OPEN

   Then, release the control lever.

4. Push the sunroof control lever forward in the direction of close until the sunroof operates as follows;

   SLIDE OPEN → SLIDE CLOSE

   Then, release the control lever.

   When this is complete, the sunroof system is reset.

For more detailed information, we recommend that you contact an authorized HYUNDAI dealer.

✻ NOTICE

If you do not reset the sunroof, it may not work properly.

STEERING WHEEL

Electric power steering (EPS)

Power steering uses the motor to assist you in steering the vehicle. If the engine is off or if the power steering system becomes inoperative, the vehicle may still be steered, but it will require increased steering effort.

The electric power steering is controlled by the power steering control unit which senses the steering wheel torque and vehicle speed to command the motor.

The steering effort becomes heavier as the vehicle's speed increases and becomes lighter as the vehicle's speed decreases for better control of the steering wheel.

Should you notice any change in the effort required to steer during normal vehicle operation, we recommend that the system be checked by an authorized HYUNDAI dealer.

✻ NOTICE

The following symptoms may occur during normal vehicle operation:

- **The EPS warning light does not illuminate.**
- **The steering effort is high immediately after turning the ignition switch on. This happens as the EPS system performs the diagnostics. When the diagnostics is completed, the steering effort will return to its normal condition.**
- **A click noise may be heard from the EPS relay after the ignition switch is turned to the ON or LOCK position.**
- **Motor noise may be heard when the vehicle is at a stop or at a low driving speed.**
- **If an error is detected in the electric power steering system, EPS will stop assisting driver in steering the vehicle to prevent accidents and the warning light on the cluster will illuminate or blink. We recommend that the system be checked by an authorized HYUNDAI dealer.**
- **The steering effort increases if the steering wheel is rotated continuously when the vehicle is not in motion. However, after a few minutes, it will return to its normal conditions.**

(Continued)

(Continued)

- **When you operate the steering wheel in low temperature, abnormal noise could occur. If temperature rises, the noise will disappear. This is a normal condition.**
- **When the charging system warning light comes on or the voltage is low (When the alternator (or battery) does not operate normally or it malfunctions), the steering wheel may get heavy and become difficult to control operate abnormally.**

Tilt steering

Tilt steering allows you to adjust the steering wheel before you drive. You can also raise it to give your legs more room when you exit and enter the vehicle.

The steering wheel should be positioned so that it is comfortable for you to drive, while permitting you to see the instrument panel warning lights and gauges.

⚠ WARNING

- **Never adjust the angle of the steering wheel while driving. You may lose steering control and cause severe personal injury, death or accidents.**
- **After adjusting, push the steering wheel both up and down to be certain it is locked in position.**

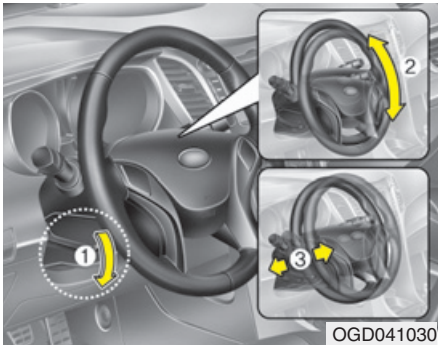

OGD041030

To change the steering wheel angle, push down the lock release lever (1), adjust the steering wheel to the desired angle (2) and height (3), then pull up the lock-release lever to lock the steering wheel in place. Be sure to adjust the steering wheel to the desired position before driving.

OMD040030

Horn

To sound the horn, press the horn symbol on your steering wheel.
Check the horn regularly to be sure it operates properly.

✻ NOTICE

To sound the horn, press the area indicated by the horn symbol on your steering wheel (see illustration). The horn will operate only when this area is pressed.

⚠ CAUTION

Do not strike the horn severely to operate it, or hit it with your fist. Do not press on the horn with a sharp-pointed object.

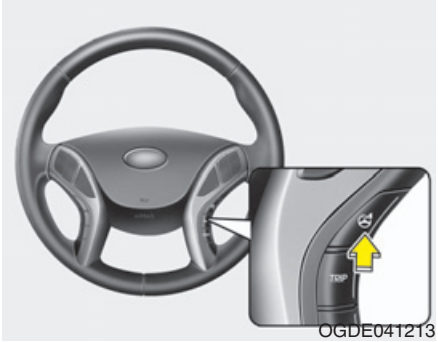

OGDE041213

FLEX STEER (if equipped)

The FLEX STEER controls steering effort as driver's preference or road condition.

You can select the desired steering mode by pressing the FLEX STEER button.

■ Type A

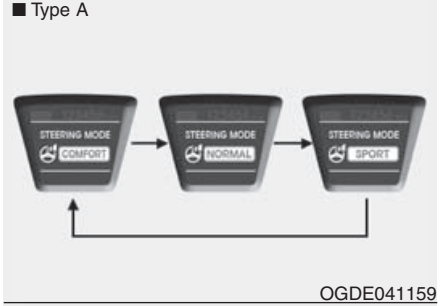

OGDE041159

■ Type B

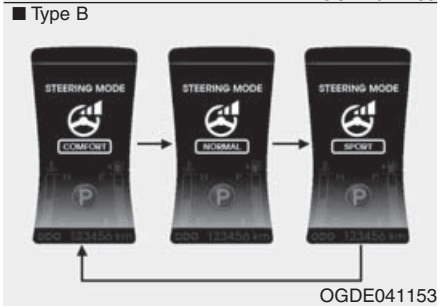

OGDE041153

When the steering mode button is pressed, the selected steering mode will appear on the LCD display.

If the steering mode button is pressed within 4 seconds, the steering mode will change as above pictures. If the steering wheel mode button is not pressed for about 4 seconds, the LCD display will change to the previous screen.

■ Type A

OGD041161

■ Type B

OGD041155

Normal mode

The normal mode offers medium steering effort.

■ Type A

OGD041160

■ Type B

OGD041154

Comfort mode

The steering wheel becomes lighter. The comfort mode is usually used when driving in downtown or parking the vehicle.

Also, the comfort mode helps weak people to drive easily.

■ Type A

OGD041162

■ Type B

OGD041156

Sport mode

The steering wheel becomes heavier. The sport mode is usually used when driving in highway.

⚠ CAUTION

- ***For your safety, if you press the steering mode button while operating the steering wheel, the LCD display will change, but the steering effort will not change immediately. After operating the steering wheel, the steering effort will change automatically to the selected mode.***
- ***Be careful when changing the steering mode while driving.***
- ***When the electronic power steering is not working properly, the flex steering wheel will not work.***

MIRRORS

Inside rearview mirror

Adjust the rearview mirror so that the center view through the rear window is seen. Make this adjustment before you start driving.

⚠ WARNING - Rear visibility

Do not place objects in the rear seat or cargo area which would interfere with your vision out of the rear window.

⚠ WARNING

Do not adjust the rearview mirror while the vehicle is moving. This could result in loss of control, and an accident which could cause death, serious injury or property damage.

⚠ WARNING

Do not modify the inside mirror and do not install a wide mirror. It could result in injury, during an accident or deployment of the air bag.

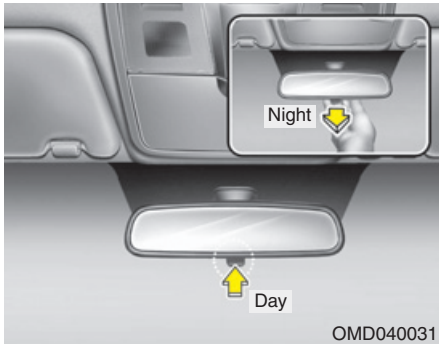

Day/night rearview mirror

Make this adjustment before you start driving and while the day/night lever is in the day position.

Pull the day/night lever toward you to reduce glare from the headlights of the vehicles behind you during night driving.

Remember that you lose some rearview clarity in the night position.

Electrochromic mirror (ECM) (if equipped)

The electric rearview mirror automatically controls the glare from the headlights of the car behind you in nighttime or low light driving conditions. The sensor mounted in the mirror senses the light level around the vehicle, and automatically controls the headlight glare from vehicles behind you.

When the engine is running, the glare is automatically controlled by the sensor mounted in the rearview mirror.

Whenever the shift lever is shifted into reverse, the mirror will automatically go to the brightest setting in order to improve the drivers view behind the vehicle.

⚠ CAUTION

When cleaning the mirror, use a paper towel or similar material dampened with glass cleaner. Do not spray glass cleaner directly on the mirror as that may cause the liquid cleaner to enter the mirror housing.

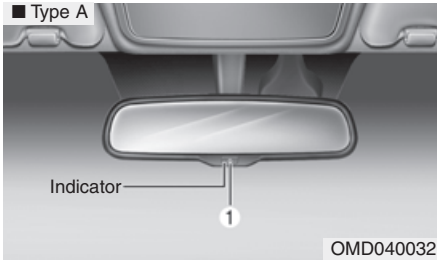

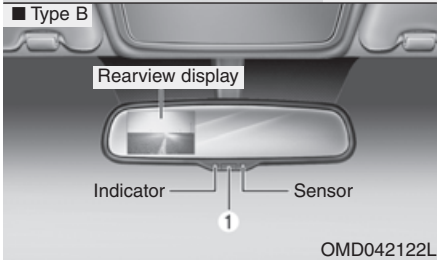

To operate the electric rearview mirror:

- The mirror defaults to the ON position whenever the ignition switch is turned on.
- Press the ON/OFF button (1) to turn the automatic dimming function off. The mirror indicator light will turn off.

  Press the ON/OFF button (1) to turn the automatic dimming function on. The mirror indicator light will illuminate.

Outside rearview mirror

Be sure to adjust the mirror angles before driving.

Your vehicle is equipped with both left-hand and right-hand outside rearview mirrors. The mirrors can be adjusted remotely with the remote switch (if equipped). The mirror heads can be folded back to prevent damage during an automatic car wash or when passing through a narrow street.

⚠ WARNING - Rearview mirrors

- **The right outside rearview mirror is convex. In some countries, the left outside rearview mirror is also convex. Objects seen in the mirror are closer than they appear.**
- **Use your interior rearview mirror or direct observation to determine the actual distance of following vehicles when changing lanes.**

⚠ CAUTION

Do not scrape ice off the mirror face; this may damage the surface of the glass. If ice should restrict movement of the mirror, do not force the mirror for adjustment. To remove ice, use a deicer spray.

⚠ CAUTION

If the mirror is jammed with ice, do not adjust the mirror by force. Use an approved spray de-icer (not radiator antifreeze) to release the frozen mechanism or move the vehicle to a warm place and allow the ice to melt.

⚠ WARNING

Do not adjust or fold the outside rearview mirrors while the vehicle is moving. This could result in loss of control, and an accident which could cause death, serious injury or property damage.

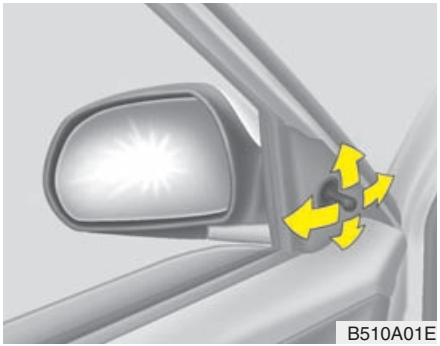

Remote control

Manual type (if equipped)

To adjust an outside mirror, move the control lever.

Electric type (if equipped)

The electric remote control mirror switch allows you to adjust the position of the left and right outside rearview mirrors. To adjust the position of either mirror, move the lever (1) to R (Right) or L (Left) to select the right side mirror or the left side mirror, then press a corresponding point on the mirror adjustment control to position the selected mirror up, down, left or right.

After adjustment, put the lever into neutral (center) position to prevent inadvertent adjustment.

⚠ CAUTION

- ***The mirrors stop moving when they reach the maximum adjusting angles, but the motor continues to operate while the switch is pressed. Do not press the switch longer than necessary, the motor may be damaged.***
- ***Do not attempt to adjust the outside rearview mirror by hand. Doing so may damage the parts.***

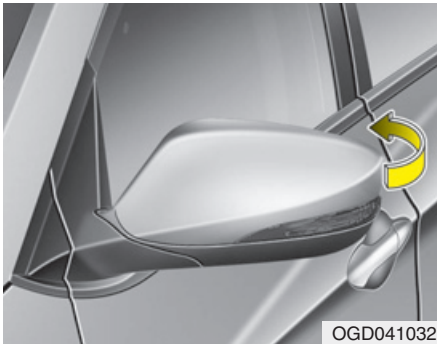
OGD041032

Folding the outside rearview mirror

Manual type

To fold the outside rearview mirror, grasp the housing of the mirror and then fold it toward the rear of the vehicle.

OGDE041033

Electric type A

To fold the outside rearview mirror, press the button.

To unfold it, press the button again.

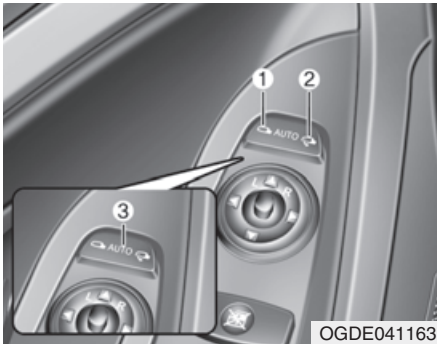

OGDE041163

Electric type B

The outside rearview mirror can be folded or unfolded by pressing the switch as below.

Left (1) : The mirror will unfold.

Right (2) : The mirror will fold.

Center (AUTO, 3) :

The mirror will fold or unfold automatically as follows:

- Without smart key system
  - The mirror will fold or unfold when the door is locked or unlocked by the transmitter.

- With smart key system
  - The mirror will fold or unfold when the door is locked or unlocked by the smart key.
  - The mirror will fold or unfold when the door is locked or unlocked by the button on the outside door handle.
  - The mirror will unfold when you approach the vehicle (all doors closed and locked) with a smart key in possession. (if equipped)

⚠ CAUTION

The electric type outside rearview mirror operates even though the ignition switch is in the OFF position. However, to prevent unnecessary battery discharge, do not adjust the mirrors longer than necessary while the engine is not running.

⚠ CAUTION

In case it is an electric type outside rearview mirror, don't fold it by hand. It could cause motor failure.

INSTRUMENT CLUSTER

■ Type A

■ Type B

1. Tachometer
2. Turn signal indicators
3. Speedometer
4. Warning and indicator lights
5. Engine temperature gauge
6. Fuel gauge
7. Odometer/Tripmeter

* The actual cluster in the vehicle may differ from the illustration.

OGDE042040K/OGDE042041K

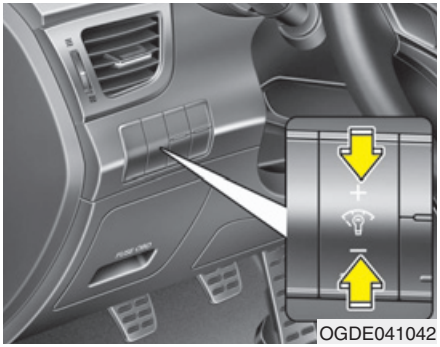
OGDE041042

Instrument panel illumination (if equipped)

Press the upper or lower part of the switch to adjust the brightness of the instrument panel illumination.

The illumination intensity will show on the LCD screen.

■ Kilometer per hour

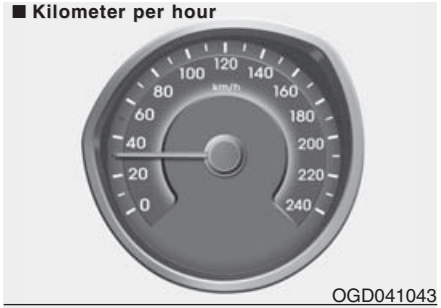

OGD041043

■ Mile per hour

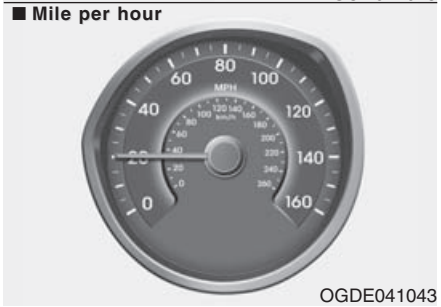

OGDE041043

Gauges

Speedometer

The speedometer indicates the forward speed of the vehicle.

The speedometer is calibrated in kilometers per hour and/or miles per hour.

■ Gasoline Engine

OGD041044

■ Diesel Engine

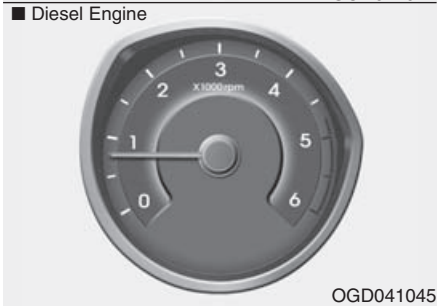

OGD041045

Tachometer

The tachometer indicates the approximate number of engine revolutions per minute (rpm).

Use the tachometer to select the correct shift points and to prevent lugging and/or over-revving the engine.

The tachometer pointer may move slightly when the ignition switch is in ON position with the engine OFF. This movement is normal and will not affect the accuracy of the tachometer once the engine is running.

⚠ CAUTION

Do not operate the engine within the tachometer's RED ZONE.

This may cause severe engine damage.

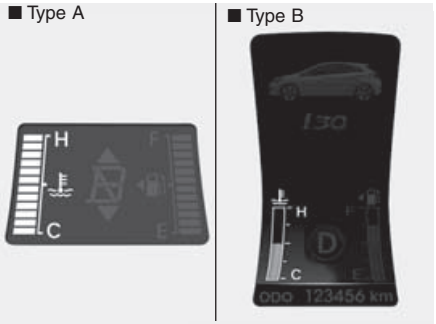

OMD040048/OGDE042189L

Engine temperature gauge

This gauge shows the temperature of the engine coolant when the ignition switch is ON. The gauge is supplemented by a Engine coolant temperature warning light, which illuminates when the engine is overheating.

Do not continue driving with an overheated engine. If your vehicle overheats, refer to “If the engine overheats” in section 6.

⚠ CAUTION

If the gauge shows beyond the normal range area toward the “H” position, it indicates overheating that may damage the engine.

⚠ WARNING

Never remove the radiator cap when the engine is hot. The engine coolant is under pressure and could cause severe burns. Wait until the engine is cool before adding coolant to the reservoir.

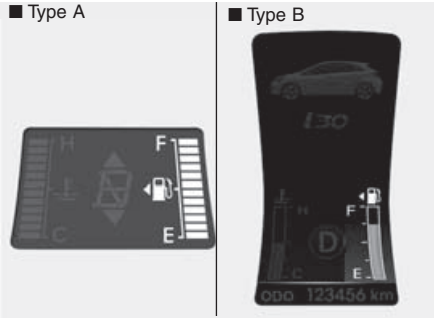

OMD040050/OGDE042191L

Fuel gauge

The fuel gauge indicates the approximate amount of fuel remaining in the fuel tank. The fuel tank capacity is given in section 8. The fuel gauge is supplemented by a low fuel warning light, which will illuminate when the fuel tank is nearly empty.

On inclines or curves, the fuel gauge may fluctuate or the low fuel warning light may come on earlier than usual due to the movement of fuel in the tank.

⇦ : The arrow indicates the fuel filler lid is in the left side of the vehicle.

⚠ WARNING - Fuel gauge

Running out of fuel can expose vehicle occupants to danger.

You must stop and obtain additional fuel as soon as possible after the warning light comes on or when the gauge indicator comes close to the "E" level.

⚠ CAUTION

Avoid driving with a extremely low fuel level. Running out of fuel could cause the engine to misfire damaging the catalytic converter.

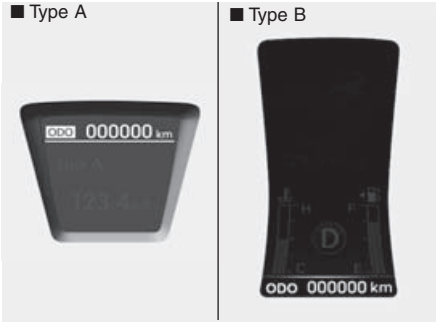

OMD040054/OMD040055

Odometer (km or mi.)

The odometer indicates the total distance the vehicle has been driven.

You will also find the odometer useful to determine when periodic maintenance should be performed.

✻ NOTICE

It is forbidden to alter the odometer of all vehicles with the intent to change the mileage registered on the odometer. The alteration may void your warranty coverage.

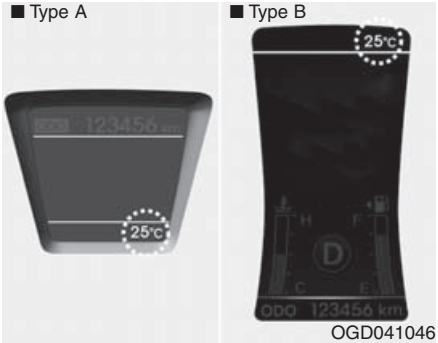

OGD041046

Outside temperature

The current outside temperature is displayed in 1°C (1°F) increments. The temperature range is between -40°C ~ 60°C (-40°F ~ 140°F).

- The outside temperature on the display may not change immediately like a general thermometer to prevent the driver from being inattentive.
- You can convert from °C to °F or °F to °C. Refer to “User setting” in this section.

OGDE041048

Manual transaxle shift indicator (if equipped)

This indicator informs you which gear is desired while driving to save fuel.

For example

▲3: Indicates that shifting up to the 3rd gear is desired (currently the shift lever is in the 2nd or 1st gear).

▼3: Indicates that shifting down to the 3rd gear is desired (currently the shift lever is in the 4th or 5th gear).

When the system is not working properly, the indicator is not displayed.

OGD041047

Automatic transaxle shift position indicator (if equipped)

The indicator displays which automatic transaxle shift lever is selected.

Trip computer (if equipped)

The trip computer is a microcomputer-controlled driver information system that displays information related to driving, when the ignition switch is in the ON position. All stored driving information (except odometer) resets if the battery is disconnected.

Press the TRIP button for less than 1 second to select any mode as follows:

Type A

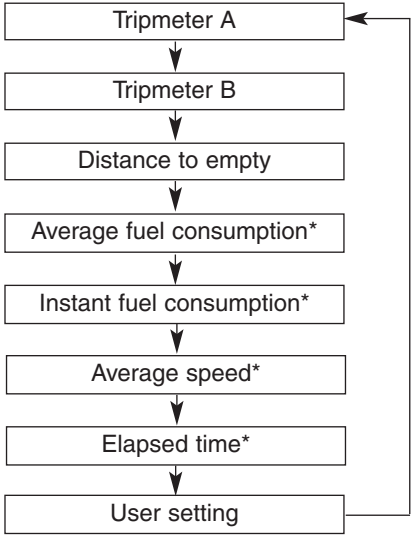

* if equipped

Type B

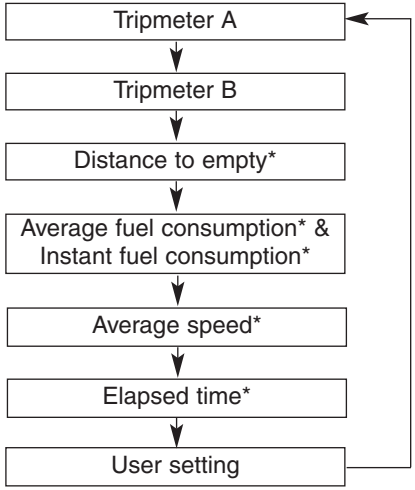

* if equipped

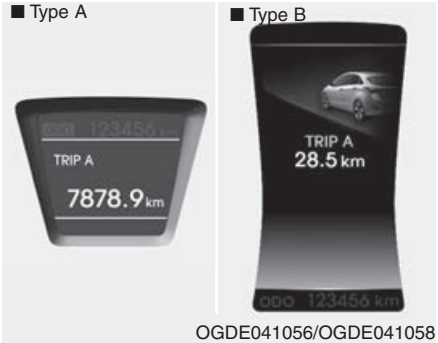

OGDE041056/OGDE041058

Tripmeter (km or mi.)

TRIP A : Tripmeter A

TRIP B : Tripmeter B

This mode indicates the distance of individual trips selected since the last tripmeter reset.

The meter's working range is from 0.0 to 9999.9 km (0.0 to 9999.9 miles).

Pressing the RESET button for more than 1 second, when the tripmeter is being displayed, clears the tripmeter to zero (0.0).

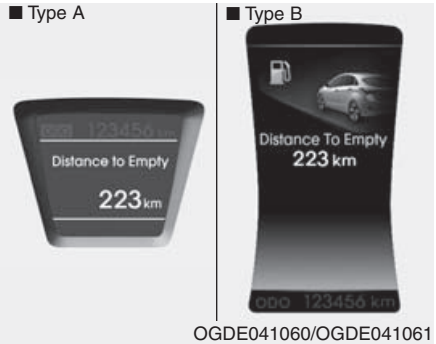

OGDE041060/OGDE041061

Distance to empty (if equipped) (km or mi.)

This mode indicates the estimated distance to empty based on the current fuel in the fuel tank and the amount of fuel delivered to the engine. When the remaining distance is below 50 km (30 miles), “---” will be displayed.

The meter’s working range is from 50 to 999 km (30 to 999 miles).

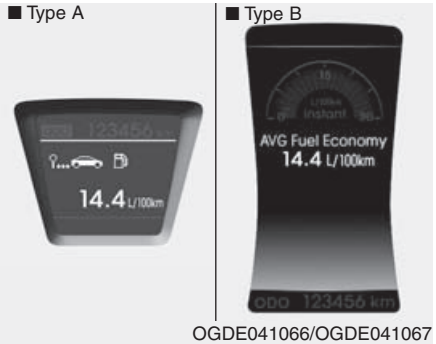

OGDE041066/OGDE041067

Average fuel consumption (if equipped) (L/100 km or MPG)

This mode calculates the average fuel consumption from the total fuel used and the distance since the last average consumption reset. The total fuel used is calculated from the fuel consumption input. For an accurate calculation, drive more than 50 m (0.03 miles).

• When the "AVG Fuel Economy" of "User Setting" is in the "Auto Reset"

If the vehicle speed exceeds 1 km/h after refueling more than 6 *l*, the average fuel consumption will be cleared to zero (---).

• When the "AVG Fuel Economy" of "User Setting" is in the "Manual Reset"

Pressing the RESET button for more than 1 second, when the average fuel consumption is displayed, clears the average fuel consumption to zero (--.-).

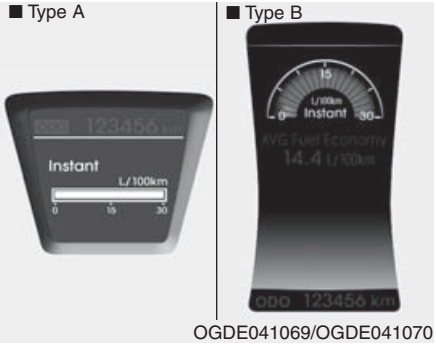

OGDE041069/OGDE041070

Instant fuel consumption (if equipped) (L/100 km or MPG)

This mode calculates the instant fuel consumption of the last few seconds.

✻ NOTICE

- **If the vehicle is not on level ground or the battery power has been interrupted, the "Distance to empty" function may not operate correctly.**
  The trip computer may not register additional fuel if less than 6 liters (1.6 gallons) of fuel are added to the vehicle.
- **The fuel consumption and distance to empty may vary significantly based on driving conditions, driving habits, and condition of the vehicle.**
- **The distance to empty value is an estimate of the available driving distance. This may differ from the actual driving distance available.**

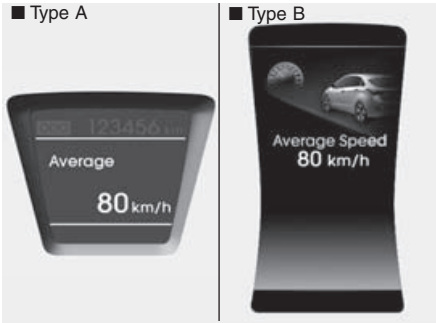

OGDE041072/OGDE041073

Average speed (km/h or MPH)

This mode calculates the average speed of the vehicle since the last average speed reset.

Even if the vehicle is not in motion, the average speed keeps going while the engine is running.

Pressing the RESET button for more than 1 second, when the average speed is being displayed, clears the average speed to zero (---).

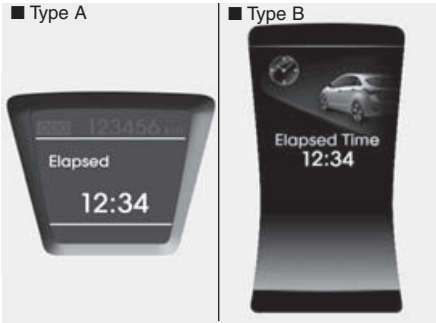

OGDE041075/OGDE041076

Elapsed time (if equipped)

This mode indicates the total time traveled since the last driving time reset.

Even if the vehicle is not in motion, the driving time keeps going while the engine is running.

The meter's working range is from 00:00~99:59.

Pressing the RESET button for more than 1 second, when the driving time is being displayed, clears the driving time to zero (00:00).

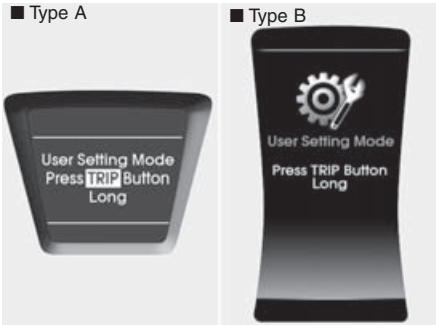

OGDE041049

User Settings

1. Stop the vehicle with the ignition switch in the ON position or engine running.
2. Press the TRIP button until the User setting mode is displayed.
3. With the User setting mode displayed, press the TRIP button until the screen is changed.
4. You can change the item by pressing the TRIP button and select an item by pressing the RESET button.

Auto door lock

Off - The auto door lock operation will be canceled.

Speed - All doors will be automatically locked when the vehicle speed exceeds 15km/h (9.3mph).

Shift Lever - All doors will be automatically locked if the shift lever is shifted from the P (Park) position to the R (Reverse), N (Neutral) or D (Drive) position. (for automatic transaxle shift lever)

Auto door unlock

Off - The auto door unlock operation will be canceled.

Key Out - All doors will be automatically unlocked when the ignition key is removed from ignition switch (or engine is turned OFF).

Shift Lever - All doors will be automatically unlocked if the shift lever is shifted to the P (Park) position. (for automatic transaxle shift lever)

Headlamp delay (if equipped)

On - The Headlamp delay and Headlamp Welcome function will be activated.

Off - The Headlamp delay and Headlamp Welcome function will be inactivated.

Auto Triple Turn
(One-touch triple turn signal)

On - The lane change signals will blink 3 times when the turn signal lever is moved slightly.

Off - The Auto Triple Turn function will be inactivated.

Welcome Light (if equipped)

On - The Welcome Light function will be activated.

Off - The Welcome Light function will be inactivated.

Welcome Sound (if equipped)

On - The Welcome Sound function will be activated.

Off - The Welcome Sound function will be deactivated.

AVG fuel economy

Auto Reset - The average fuel economy will reset automatically when you drive after refueling.

Manual Reset - The average fuel economy will not reset automatically when you drive after refueling.

Temperature unit

Convert the temperature unit from °C to °F from °F to °C.

Eco driving (if equipped)

On - The shift indicator will illuminate (manual transaxle vehicles).

The ECO indicator will illuminate (automatic transaxle vehicles).

Off - The shift indicator will turn off (manual transaxle vehicles).

The ECO indicator will turn off (automatic transaxle vehicles).

If your vehicle is equipped with the Active ECO system, you can turn off the ECO indicator by pressing the Active ECO button. Refer to "Active ECO" in Chapter 5.

Warnings and indicators

All warning lights are checked by turning the ignition switch ON (do not start the engine). If any light does not illuminate, we recommend that the system be checked by an authorized HYUNDAI dealer.

After starting the engine, check to make sure that all warning lights are off. If any are still on, this indicates a situation that needs attention.

ECO indicator (if equipped)

ECO

With Active ECO system

When the active ECO is operating the ECO indicator illuminates green. For more detailed information, refer to "Active ECO" in chapter 5.

Without Active ECO system

The ECO indicator is a system that informs you to drive economically.
It is displayed if you drive fuel efficiently to help you improve fuel efficiency.

- The ECO indicator (green) will turn on when you are driving fuel efficiently in the ECO ON mode. You can turn off the ECO indicator in the user setting mode. As per ECO ON/OFF Mode operation, refer to the previous page.
- Fuel-efficiency can be changed by the driver's driving habit and road condition.
- It doesn't work at the condition which doesn't meet economical driving such as P (Park), N (Neutral), R (Reverse) or sports mode.

⚠ WARNING

Don't keep watching the indicator while driving. It will distract you while driving and cause an accident that results in severe personal injury.

Air bag warning light

This warning light will illuminate for approximately 6 seconds each time you turn the ignition switch to the ON position.

This light also comes on when the Supplemental Restraint System (SRS) is not working properly. If the AIR BAG warning light does not come on, or continuously remains on after operating for about 6 seconds when you turned the ignition switch to the ON position or started the engine, or if it comes on while driving, we recommend that the system be inspected by an authorized HYUNDAI dealer.

Seat belt warning

As a reminder to the driver and passenger, the seat belt warning light will illuminate for approximately 6 seconds each time you turn the ignition switch ON regardless of belt fastening.

For details, refer to the “Seat belt” in section 3.

Engine oil pressure warning

This warning light indicates the engine oil pressure is low.

If the warning light illuminates while driving:

1. Drive safely to the side of the road and stop.
2. With the engine off, check the engine oil level. If the level is low, add oil as required.

If the warning light remains on after adding oil or if oil is not available, we recommend that you call an authorized HYUNDAI dealer.

⚠ CAUTION

If the engine is not stopped immediately after the engine oil pressure warning light is illuminated, severe damage could result.

⚠ CAUTION

If the oil pressure warning light stays on while the engine is running, serious engine damage may result. The oil pressure warning light comes on whenever there is insufficient oil pressure. In normal operation, it should come on when the ignition switch is turned on, then go out when the engine is started. If the oil pressure warning light stays on while the engine is running, there is a serious malfunction.

If this happens, stop the car as soon as it is safe to do so, turn off the engine and check the oil level. If the oil level is low, fill the engine oil to the proper level and start the engine again. If the light stays on with the engine running, turn the engine off immediately. In any instance where the oil light stays on when the engine is running, we recommend that the engine be checked by an authorized HYUNDAI dealer before the car is driven again.

Turn signal indicator

The blinking green arrows on the instrument panel show the direction indicated by the turn signals. If the arrow comes on but does not blink, blinks more rapidly than normal, or does not illuminate at all, it indicates a malfunction in the turn signal system. You should consult your dealer for repairs.

This indicator also blinks when the hazard warning switch is turned on.

High beam indicator

This indicator illuminates when the headlights are on and in the high beam position or when the turn signal lever is pulled into the Flash-to-Pass position.

Low Beam Indicator Light (if equipped)

This indicator light illuminates when the headlights are on.

Front fog light indicator (if equipped)

This indicator illuminates when the front fog lights are ON.

Rear fog light indicator

This indicator illuminates when the rear fog lights are ON.

Light on indicator

The indicator illuminates when the tail lights or headlights are ON.

Charging system warning light

This warning light indicates a malfunction of either the generator or electrical charging system.

If the warning light illuminates while the vehicle is in motion:

1. Drive to the nearest safe location.
2. With the engine off, check the generator drive belt for looseness or breakage.
3. If the belt is adjusted properly, a problem exists somewhere in the electrical charging system. We recommend that the system be checked by an authorized HYUNDAI dealer as soon as possible.

EPS (Electric power steering) system warning light

This warning light illuminates after the ignition key is turned to the ON position and then it will go off when the engine starts.

This light also comes on when the EPS has malfunctioned. If it comes on while driving, we recommend that the system be inspected by an authorized HYUNDAI dealer.

Door ajar warning light (if equipped)

This warning light illuminates when a door is not closed securely.

Tailgate open warning light (if equipped)

This warning light illuminates when the tailgate is not closed securely.

EPB (Electric Parking Brake) malfunction indicator

The EPB malfunction indicator will illuminate when the ignition switch is turned ON, but should go off after approximately 3 seconds. If the warning light does not come on, or continuously remains on, we recommend that the system be checked by an authorized HYUNDAI dealer.

Also, the EPB malfunction indicator may illuminate when the ESP indicator comes on to indicate that the ESP is not working properly, but if this occurs, it does not indicate the EPB has malfunctioned.

For more details, refer to "EPB" in section 5.

Immobilizer indicator (if equipped)

Without smart key system

This indicator illuminates when the immobilizer key is inserted and turned to the ON position to start the engine.

At this time, you can start the engine. The indicator goes out after approximately 30 seconds.

If this indicator blinks when the ignition switch is in the ON position before starting the engine, we recommend that the system be checked by an authorized HYUNDAI dealer.

With smart key system

If any of the following occurs in a vehicle equipped with the smart key, the immobilizer indicator illuminates, blinks or goes off.

- When the smart key is in the vehicle, if the ENGINE START/STOP button is in the ACC or ON position, the indicator will illuminate for approximately 30 seconds to indicate that you are able to start the engine. However, when the smart key is not in the vehicle, if the ENGINE START/STOP button is pressed, the indicator will blink for a few seconds to indicate that you are not able to start the engine.
- If the indicator illuminates only for 2 seconds and goes out when the ENGINE START/STOP button is turned to ON position with the smart key in the vehicle, we recommend that the system be checked by an authorized HYUNDAI dealer.
- When the battery is weak, if the ENGINE START/STOP button is pressed, the indicator blinks, you are not able to start the engine. However, you are able to start the engine by pressing the ENGINE START/STOP button directly with the smart key. Also, if the smart key system related parts have a problem, the indicator will blink.

Low fuel level warning

This warning light indicates the fuel tank is nearly empty. When it comes on, you should add fuel as soon as possible. Driving with the fuel level warning light on or with the fuel level below “E” can cause the engine to misfire and damage the catalytic converter (if equipped).

Malfunction indicator lamp (MIL) (check engine light) (if equipped)

This indicator is part of the Engine Control System which monitors various emission control system components. If this indicator illuminates while driving, it indicates that a potential malfunction has been detected somewhere in the emission control system.

This indicator will also illuminate when the ignition switch is turned to the ON position, and will go off in a few seconds after the engine is started. If it illuminates while driving, or does not illuminate when the ignition switch is turned to the ON position, we recommend that the system be checked by an authorized HYUNDAI dealer.

Generally, your vehicle will continue to be drivable, we recommend that the system be checked by an authorized HYUNDAI dealer promptly.

⚠ CAUTION

Prolonged driving with the Emission Control System Malfunction Indicator Light illuminated may cause damage to the emission control systems which could effect drivability and/or fuel economy.

⚠ CAUTION - Gasoline engine

If the Emission Control System Malfunction Indicator Light illuminates, potential catalytic converter damage is possible which could result in loss of engine power. We recommend that the Engine Control System be inspected by an authorized HYUNDAI dealer as soon as possible.

⚠ CAUTION - Diesel engine (if equipped with DPF)

When the malfunction indicator light is blinks, it may stop blinking after driving the vehicle at more than 60km/h (37 mph) or at more than second gear with 1500 ~ 2000 engine rpm for a certain time (for about 25 minutes).

If the malfunction indicator light continues to be blinked in spite of the procedure, we recommend that the DPF system be checked by an authorized HYUNDAI dealer.

If you continue to drive with the malfunction indicator light blinking for a long time, the DPF system can be damaged and fuel consumption can be worsen.

⚠ CAUTION - Diesel engine

If the Emission Control System Malfunction Indicator Light blinks, some error related to the injection quantity adjustment occurs which could result in loss of engine power, combustion noise and poor emission. We recommend that the Engine Control System be inspected by an authorized HYUNDAI dealer as soon as possible.

Engine coolant temperature warning light (if equipped)

The warning light illuminates if the temperature of the engine coolant is above 125±2.5°C (257±4.5°F).

Do not continue driving with an overheated engine. If your vehicle overheats, refer to “Overheating” in section 6.

✻ NOTICE

If the engine coolant temperature warning light illuminates, it indicates overheating that may damage the engine.

Parking brake & brake fluid warning

Parking brake warning

This warning light is illuminated when the parking brake is applied with the ignition switch in the START or ON position. The warning light should go off when the parking brake is released.

Always release the parking brake before you drive.

Low brake fluid level warning

If the warning light remains on, it may indicate that the brake fluid level in the reservoir is low.

If the warning light remains on:

1. Drive carefully to the nearest safe location and stop your vehicle.
2. With the engine stopped, check the brake fluid level immediately and add fluid as required. Then check all brake components for fluid leaks.
3. Do not drive the vehicle if leaks are found, the warning light remains on or the brakes do not operate properly. We recommend that the vehicle be towed to any authorized HYUNDAI dealer for a brake system inspection and necessary repairs.

Your vehicle is equipped with dual-diagonal braking systems. This means you still have braking on two wheels even if one of the dual systems should fail. With only one of the dual systems working, more than normal pedal travel and greater pedal pressure are required to stop the vehicle. Also, the vehicle will not stop in as short a distance with only a portion of the brake system working. If the brakes fail while you are driving, shift to a lower gear for additional engine braking and stop the vehicle as soon as it is safe to do so.

To check bulb operation, check whether the parking brake and brake fluid warning light illuminates when the ignition switch is in the ON position.

⚠ WARNING

Driving the vehicle with a warning light on is dangerous. If the brake warning light remains on, we recommend that the brakes be checked and repaired immediately by an authorized HYUNDAI dealer.

ABS (Anti-lock brake system) warning light (if equipped)

This warning light illuminates if the ignition switch is turned ON and goes off in approximately 3 seconds if the system is operating normally.

If the ABS warning light remains on, comes on while driving, or does not come on when the ignition switch is turned to the ON position, this indicates that the ABS may have malfunctioned.

If this occurs, we recommend that the system be checked by an authorized HYUNDAI dealer as soon as possible. The normal braking system will still be operational, but without the assistance of the anti-lock brake system.

Electronic brake force distribution (EBD) system warning light

If two warning lights illuminate at the same time while driving, your vehicle may have a malfunction with ABS and EBD system.

In this case, your ABS and regular brake system may not work normally. We recommend that the system be checked by an authorized HYUNDAI dealer as soon as possible.

⚠ WARNING

If both ABS and Brake warning lights are on and stay on, your vehicle's brake system will not work normally. So you may experience an unexpected and dangerous situation during sudden braking. In this case, avoid high speed driving and abrupt braking. We recommend that the vehicle be checked by an authorized HYUNDAI dealer as soon as possible.

ESP (Electronic Stability Program) indicator (if equipped)

The ESP indicator will illuminate when the ignition switch is turned ON, but should go off after approximately 3 seconds. When the ESP is on, it monitors the driving conditions. Under normal driving conditions, the ESP indicator will remain off. When a slippery or low traction condition is encountered, the ESP will operate, and the ESP indicator will blink to indicate the ESP is operating.

But, if the ESP system malfunctions the indicator illuminates and stays on. We recommend that the system be checked by an authorized HYUNDAI dealer.

ESP OFF indicator (if equipped)

The ESP OFF indicator will illuminate when the ignition switch is turned ON, but should go off after approximately 3 seconds. To switch to ESP OFF mode, press the ESP OFF button. The ESP OFF indicator will illuminate indicating the ESP is deactivated.

Cruise indicator (if equipped)

CRUISE indicator

CRUISE

The indicator illuminates when the cruise control system is enabled.

The cruise indicator in the instrument cluster is illuminated when the CRUISE button on the steering wheel is pushed.

The indicator goes off when the CRUISE button is pushed again. For more information about the use of cruise control, refer to “Cruise control system” in section 5.

Cruise SET indicator

SET

The indicator illuminates when the cruise control switch (SET- or RES+) is ON.

The cruise SET indicator in the instrument cluster illuminats when the cruise control switch (SET- or RES+) is pushed.

The cruise SET indicator does not illuminate when the cruise control switch (CANCEL) is pushed or the system is disengaged.

Glow indicator (Diesel engine)

The indicator light illuminates when the ignition switch is placed at the ON position. The engine can be started after the preheat indicator light goes off. The illuminating time varies with the water temperature, air temperature and battery condition.

✻ NOTICE

If the engine was not started within 10 seconds after the preheating is completed, turn the ignition key once more to the LOCK position during 10 seconds, and then to the ON position, in order to preheat again.

⚠ CAUTION

If the preheat indicator light continues to illuminate or flash on and off after the engine has warmed up or while driving, we recommend that the system be checked by an authorized HYUNDAI dealer as soon as possible.

Fuel filter warning light (Diesel engine)

This warning light illuminates for 3 seconds after the ignition switch is set to the ON position and then it will go out. If it lights up while the engine is running, it indicates that water has accumulated inside the fuel filter. If this happens, remove the water from the fuel filter. For more Information, refer to “Fuel filter” in section 7.

⚠ CAUTION

When the fuel filter warning light is illuminated, engine power (vehicle speed & idle speed) may decrease. If you keep driving with the warning light on, you can damage your vehicle's engine parts and injection system of the Common Rail. If this occurs, we recommend that the vehicle be checked by an authorized HYUNDAI dealer as soon as possible.

Overspeed warning (if equipped)

Overspeed warning light

If you drive with the speed of 120 km/h or more, the overspeed warning light will blink. This is to prevent you from driving your vehicle with overspeed.

Overspeed warning chime (if equipped)

If you drive with the speed of 120 km/h or more, the overspeed warning chime will sound for about 5 seconds. This is to prevent you from driving your vehicle with overspeed.

LCD display warning (if equipped)

Key is not in vehicle

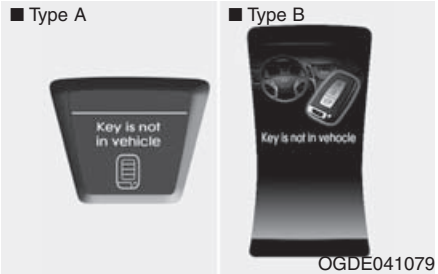

If the smart key is not in the vehicle and if any door is opened or closed with the ENGINE START/STOP button in the ACC, ON, or START position, the warning illuminates on the LCD display. Also, the chime sounds for 5 seconds when the smart key is not in the vehicle and the door is closed.

Always have the smart key with you.

Key is not detected

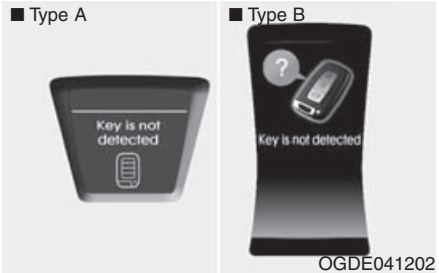

If the smart key is not in the vehicle or is not detected and you press the ENGINE START/ STOP button, the warning illuminates on the LCD display for 10 seconds. Also, the immobilizer indicator blinks for 10 seconds.

Low key battery

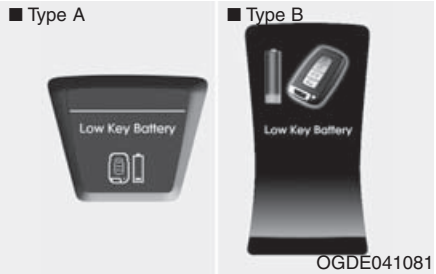

If the ENGINE START/STOP button turns to the OFF position when the smart key in the vehicle discharges, the warning illuminates on the LCD display for about 10 seconds. Also, the warning chime sounds once.

Replace the battery with a new one.

Press brake pedal to start engine (Automatic transaxle)

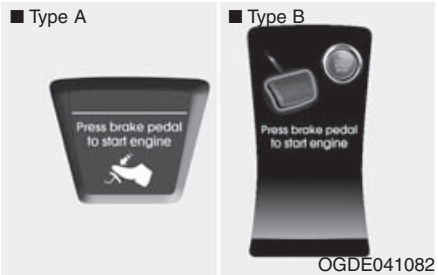

If the ENGINE START/STOP button turns to the ACC position twice by pressing the button repeatedly without depressing the brake pedal, the warning illuminates on the LCD display for about 10 seconds to indicate that you should depress the brake pedal to start the engine.

Press clutch pedal to start engine (Manual transaxle)

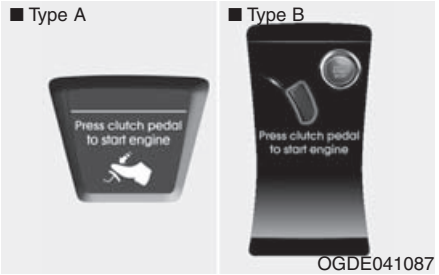

If the ENGINE START/STOP button turns to the ACC position twice by pressing the button repeatedly without depressing the clutch pedal, the warning illuminates on the LCD display for about 10 seconds to indicate that you should depress the clutch pedal to start the engine.

Shift to "P" position (Automatic transaxle)

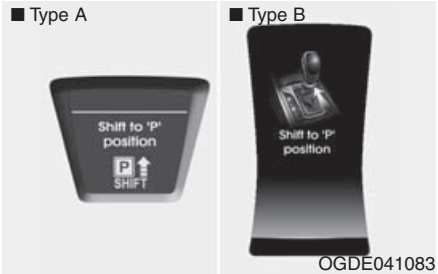

If you try to turn off the engine without the shift lever in the P (Park) position, the ENGINE START/STOP button will turn to the ACC position. If the button is pressed once more it will turn to the ON position. The warning illuminates on the LCD display for about 10 seconds to indicate that you should press the ENGINE START/ STOP button with the shift lever in the P (Park) position to turn off the engine.

Also, the warning chime sounds for about 10 seconds. (if equipped)

Press start button again

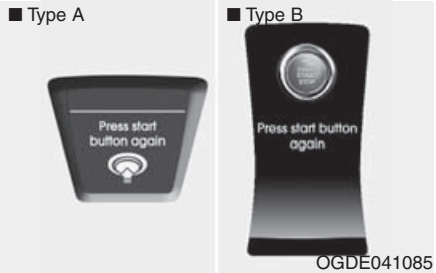

If you can not operate the ENGINE START/ STOP button when there is a problem with the ENGINE START/STOP button system, the warning illuminates for 10 seconds and the chime sounds continuously to indicate that you could start the engine by pressing the ENGINE START/STOP button once more.

The chime will stop if the ENGINE START/STOP button system works normally or the theft alarm system is armed.

If the warning illuminates each time you press the ENGINE START/STOP button, we recommend that the system be checked by an authorized HYUNDAI dealer.

Shift to "P" or "N" to start engine (Automatic transaxle)

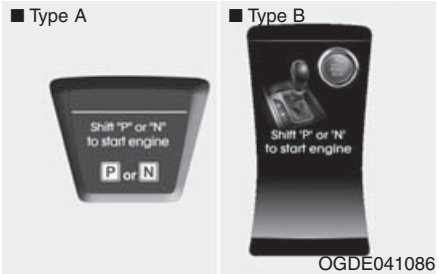

If you try to start the engine with the shift lever not in the P(Park) or N(Neutral) position, the warning illuminates for about 10 seconds on the LCD display.

You can also start the engine with the shift lever in the N(Neutral) position, but for your safety start the engine with the shift lever in the P(Park) position.

Press start button while turn steering

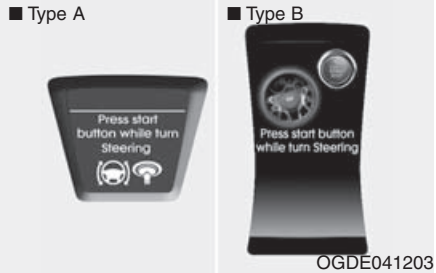

If the steering wheel does not unlock normally when the ENGINE START/STOP button is pressed, the warning illuminates for 10 seconds on the LCD display. Also, the warning chime sounds once and the ENGINE START/STOP button light blinks for 10 seconds.

When you are warned, press the ENGINE START/STOP button while turning the steering wheel right and left.

Check steering wheel lock

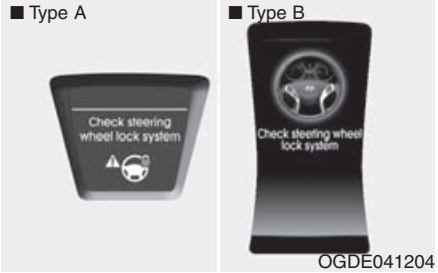

If the steering wheel does not lock normally when the ENGINE START/STOP button turns to the OFF position, the warning illuminates for 10 seconds on the LCD display. Also, the warning chime sounds for 3 seconds and the ENGINE START/STOP button light blinks for 10 seconds.

Please press start button with smart key

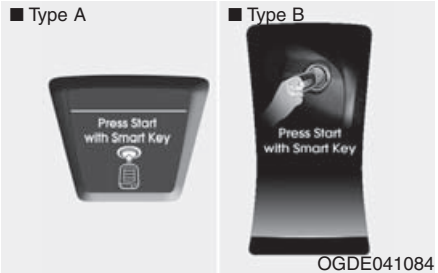

If you press the ENGINE START/ STOP button while the warning “Key is not detected” illuminates the warning “Please press the start button with smart key” illuminates for 10 seconds on the LCD display. Also, the immobilizer indicator blinks for 10 seconds.

Check brake switch fuse

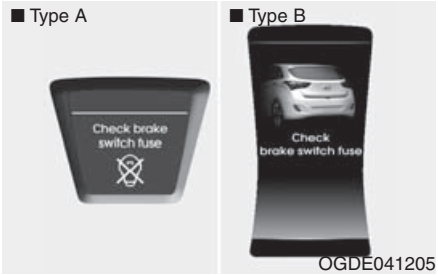

When the brake switch fuse is disconnected, the warning illuminates for 10 seconds on the LCD display.

Replace the fuse with a new one. If that is not possible you can start the engine by pressing the ENGINE START/STOP button for 10 seconds in ACC.

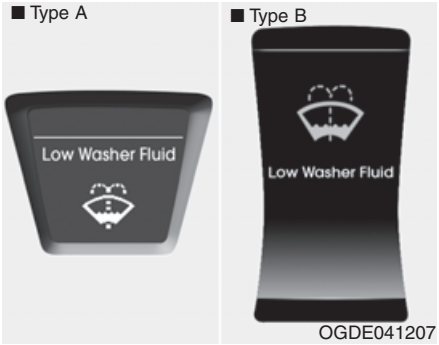

Low washer fluid (if equipped)

This warning light illuminates when the washer fluid reservoir is nearly empty. If you press the TRIP button while the warning light is illuminating, LCD display mode is changed to the trip mode for 4 seconds and then will return to the low washer fluid mode. Refill the washer fluid as soon as possible.

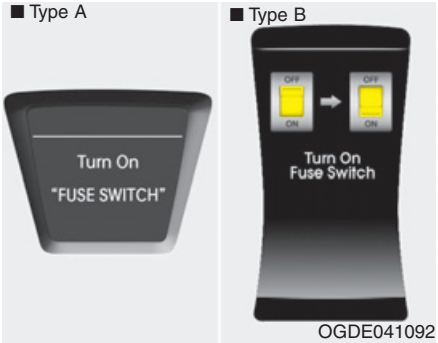

Turn on fuse switch (mode switch)

The notice appears to inform the driver to turn on the fuse switch in the instrument panel under the steering wheel.

For more details, refer to “Fuses” in section 7.

REAR PARKING ASSIST SYSTEM (IF EQUIPPED)

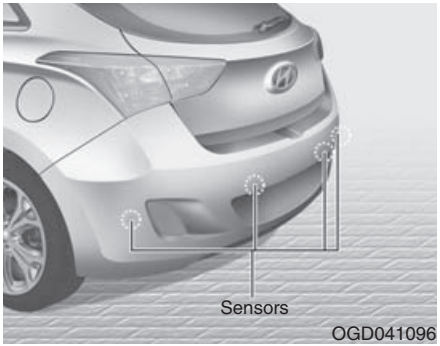

The rear parking assist system assists the driver during backward movement of the vehicle by chiming if any object is sensed within a distance of 120 cm (47 in.) behind the vehicle. This system is a supplemental system and it is not intended to nor does it replace the need for extreme care and attention of the driver. The sensing range and objects detectable by the back sensors are limited. Whenever backing-up, pay as much attention to what is behind you as you would in a vehicle without a rear parking assist system.

⚠ WARNING

The rear parking assist system is a supplementary function only. The operation of the rear parking assist system can be affected by several factors (including environmental conditions). It is the responsibility of the driver to always check the area behind the vehicle before and while backing up.

Operation of the rear parking assist system

Operating condition

- This system will activate when backing up with the ignition switch ON.
- The sensing distance while the rear parking assist system is in operation is approximately 120 cm (47 in.).
- When more than two objects are sensed at the same time, the closest one will be recognized first.

Types of warning sound

- When an object is 120 cm to 61 cm (47 in. to 23.6 in.) from the rear bumper: Buzzer beeps intermittently.
- When an object is 60 cm to 31 cm (23.6 in. to 12.2 in.) from the rear bumper: Buzzer beeps more frequently.
- When an object is within 30 cm (11.8 in.) of the rear bumper:
  Buzzer sounds continuously.

Type of the warning indicator (if equipped)

Distance from object	Warning indicator
61cm ~ 120 cm (24 in. ~ 47 in.)	*1
31cm ~ 60 cm (12.2 in. ~ 23.6 in.)	*1
Less than 30 cm (11.8 in.)	*1

*1: It indicates the range of sensing object by each sensor. (Left, Center, Right)

❊: In case of that the object is between sensors or close, indicator could be different.

Non-operational conditions of rear parking assist system

The rear parking assist system may not operate properly when:

1. Moisture is frozen to the sensor. (It will operate normally when the moisture has been cleared.)
2. The sensor is covered with foreign matter, such as snow or water, or the sensor cover is blocked. (It will operate normally when the material is removed or the sensor is no longer blocked.)
3. Driving on uneven road surfaces (unpaved roads, gravel, bumps, gradient).
4. Objects generating excessive noise (vehicle horns, loud motorcycle engines, or truck air brakes) are within range of the sensor.
5. Heavy rain or water spray exists.
6. Wireless transmitters or mobile phones are within range of the sensor.
7. The sensor is covered with snow.
8. Trailer towing

The detecting range may decrease when:

1. The sensor is stained with foreign matter such as snow or water. (The sensing range will return to normal when removed.)
2. Outside air temperature is extremely hot or cold.

The following objects may not be recognized by the sensor:

1. Sharp or slim objects such as ropes, chains or small poles.
2. Objects which tend to absorb the sensor frequency such as clothes, spongy material or snow.
3. Undetectable objects smaller than 1 m (40 in.) in height and narrower than 14 cm (6 in.) in diameter.

Rear parking assist system precautions

- The rear parking assist system may not sound sequentially depending on the speed and shapes of the objects detected.
- The rear parking assist system may malfunction if the vehicle bumper height or sensor installation has been modified or damaged. Any non-factory installed equipment or accessories may also interfere with the sensor performance.
- The sensor may not recognize objects less than 30 cm (11.8 in.) from the sensor, or it may sense an incorrect distance. Use caution.
- When the sensor is frozen or stained with snow, dirt, or water, the sensor may be inoperative until the stains are removed using a soft cloth.
- Do not push, scratch or strike the sensor. Sensor damage could occur.

✻ NOTICE

This system can only sense objects within the range and location of the sensors; it can not detect objects in other areas where sensors are not installed. Also, small or slim objects, such as poles or objects located between sensors may not be detected by the sensors.
Always visually check behind the vehicle when backing up.
Be sure to inform any drivers of the vehicle that may be unfamiliar with the system regarding the systems capabilities and limitations.

⚠ WARNING

Pay close attention when the vehicle is driven close to objects on the road, particularly pedestrians, and especially children. Be aware that some objects may not be detected by the sensors, due to the object's distance, size or material, all of which can limit the effectiveness of the sensor. Always perform a visual inspection to make sure the vehicle is clear of all obstructions before moving the vehicle in any direction.

Self-diagnosis

When you shift the gear to the R (Reverse) position and if one or more of the below occurs you may have a malfunction in the rear parking assist system.

- You don't hear an audible warning sound or if the buzzer sounds intermittently.
- is displayed. (if equipped)
  (blinks)

If this occurs, we recommend that the system be checked by an authorized HYUNDAI dealer as soon as possible.

⚠ WARNING

Your new vehicle warranty does not cover any accidents or damage to the vehicle or injuries to its occupants due to a rear parking assist system malfunction. Always drive safely and cautiously.

REARVIEW CAMERA (IF EQUIPPED)

If you move the shift lever to the R (Reverse) position with the ignition switch on, the back-up light will illuminate, the rearview camera cover will open and then the rearview camera will activate.

When moving the shift lever from R (Reverse) into P (Park), D (Drive) or N (Neutral), the rearview camera cover will close after 10 seconds.

✻ NOTICE

Closing the rearview camera cover makes a sound, but it is normal condition.

The rearview camera may be turned off by pressing the ON/OFF button when the rearview camera is activated.

To turn the camera on again, press the ON/OFF button again when the ignition switch is on and the shift lever in R (Reverse). Also, the camera will turn on automatically whenever the ignition switch is turned off and on again.

⚠ CAUTION

- ***Before washing the vehicle, check that the rearview camera cover is closed. If you wash the vehicle while the rearview camera cover is opened, the rearview camera may be damaged.***
- ***Do not try to open the rearview camera cover manually. The rearview camera may be damaged.***

⚠ WARNING

- **This system is a supplementary function only. It is the responsibility of the driver to always check the inside/outside rearview mirror and the area behind the vehicle before and while backing up because there is a dead zone that can't be seen through the camera.**
- **Always keep the camera lens clean. If lens is covered with foreign matter, the camera may not operate normally.**

⚠ CAUTION

If the rearview camera was jammed with ice, the camera would not operate normally. Use an approved spray de-icer (not radiator antifreeze) to release the frozen mechanism or move the vehicle to a warm place and allow the ice to melt.

HAZARD WARNING FLASHER

OGDE042103L

The hazard warning flasher should be used whenever you find it necessary to stop the vehicle in a hazardous location. When you must make such an emergency stop, always pull off the road as far as possible.

The hazard warning lights are turned on by pushing in the hazard switch. Both turn signal lights will blink. The hazard warning lights will operate even though the key is not in the ignition switch.

To turn the hazard warning lights off, push the switch again.

LIGHTING

Battery saver function

- The purpose of this feature is to prevent the battery from being discharged. The system automatically turns off the parking lights when the driver removes the ignition key (Smart key : turns off the engine) and opens the driver-side door.
- With this feature, the parking lights will turn off automatically if the driver parks on the side of road at night.

  If necessary, to keep the lights on when the ignition key is removed, perform the following:

  1) Open the driver-side door.
  2) Turn the parking lights OFF and ON again using the light switch on the steering column.

Headlight (Headlamp) escort function (if equipped)

The headlights (and/or taillights) remain on for approximately 5 minutes after the ignition key is removed or turned to the ACC or LOCK position. However, if the driver's door is opened and closed, the headlights are turned off after 15 seconds.

The headlights can be turned off by pressing the lock button on the transmitter or smart key twice or turning off the light switch from the headlight or Auto light position.

⚠ CAUTION

If the driver gets out of the vehicle through other doors (except driver's door), the battery saver function does not operate and the headlight escort function does not turn off automatically. Therefore, it causes the battery to be discharged. In this case, make sure to turn off the lamp before getting out of the vehicle.

OBK049045

Lighting control

The light switch has a Headlight and a Parking light position.

To operate the lights, turn the knob at the end of the control lever to one of the following positions:

(1) Off(O) position
(2) Parking light position
(3) Headlight position
(4) Auto light position (if equipped)

OBK049046

Parking light position ( )

When the light switch is in the parking light position (1st position), the tail position, license and instrument panel lights will turn ON.

OBK049047

Headlight position ( )

When the light switch is in the headlight position (2nd position), the head, tail, position, license and instrument panel lights are ON.

✻ NOTICE

The ignition switch must be in the ON position to turn on the headlights.

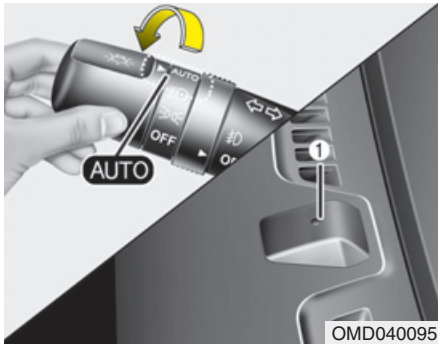

OMD040095

Auto light position (if equipped)

When the light switch is in the AUTO light position, the taillights and headlights will be turned ON or OFF automatically depending on the amount of light outside the vehicle.

⚠ CAUTION

- *Never place anything over sensor (1) located on the instrument panel, this will ensure better auto-light system control.*
- *Don't clean the sensor using a window cleaner, the cleanser may leave a light film which could interfere with sensor operation.*
- *If your vehicle has window tint or other types of metallic coating on the front windshield, the Auto light system may not work properly.*

OBK049050

High beam operation

To turn on the high beam headlights, push the lever away from you. Pull it back for low beams.

The high beam indicator will light when the headlight high beams are switched on.

To prevent the battery from being discharged, do not leave the lights on for a prolonged time while the engine is not running.

⚠ WARNING

Do not use high beam when there are other vehicles. Using high beam could obstruct the other driver's vision.

OBK049049

To flash the headlights, pull the lever towards you. It will return to the normal (low beam) position when released. The headlight switch does not need to be on to use this flashing feature.

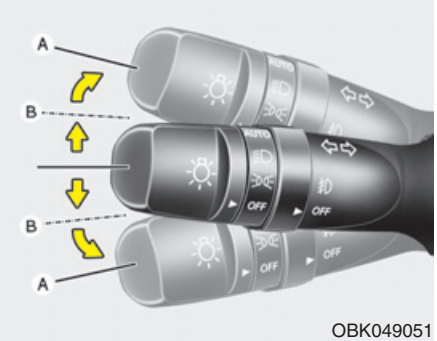

OBK049051

Turn signals and lane change signals

The ignition switch must be on for the turn signals to function. To turn on the turn signals, move the lever up or down (A). The green arrow indicators on the instrument panel indicate which turn signal is operating. They will self-cancel after a turn is completed. If the indicator continues to flash after a turn, manually return the lever to the off position.

To signal a lane change, move the turn signal lever slightly and hold it in position (B). The lever will return to the off position when released.

If an indicator stays on and does not flash or if it flashes abnormally, one of the turn signal bulbs may be burned out and will require replacement.

One-touch lane change function (if equipped)

To activate an one-touch lane change function, move the turn signal lever slightly and then release it. The lane change signals will blink 3 times.

✻ NOTICE

If an indicator flash is abnormally quick or slow, a bulb may be burned out or have a poor electrical connection in the circuit.

OBK049052

Front fog light (if equipped)

Fog lights are used to provide improved visibility when visibility is poor due to fog, rain or snow, etc. The fog lights will turn on when the fog light switch (1) is turned on after the parklight is turned on.

To turn off the fog lights, turn the fog light switch (1) to the O (Off) position.

⚠ CAUTION

When in operation, the fog lights consume large amounts of vehicle electrical power. Only use the fog lights when visibility is poor.

■ Type A

OED040806

■ Type B

OAM049046L

Rear fog light

To turn the rear fog lights on, turn the rear fog light switch (1) to the on position when the headlight is turned on.

Also, the rear fog lights turn on when the rear fog light switch is turned on after the front fog light switch (if equipped) is turned on and the headlight switch is in the parklight position.

To turn the rear fog lights off, turn the rear fog light switch to the on position again.

Daytime running light (if equipped)

The Daytime Running Lights (DRL) can make it easier for others to see the front of your vehicle during the day. DRL can be helpful in many different driving conditions, and it is especially helpful after dawn and before sunset.

The DRL system will turn the dedicated lamp OFF when:

1. The parklight switch is ON.
2. The engine is OFF.

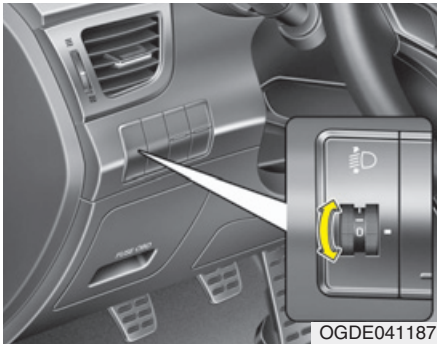

OGDE041187

Headlight leveling device (if equipped)

Manual type

To adjust the headlight beam level according to the number of the passengers and loading weight in the luggage area, turn the beam leveling switch.

The higher the number of the switch position, the lower the headlight beam level. Always keep the headlight beam at the proper leveling position, or headlights may dazzle other road users.

Listed below are the examples of proper switch settings. For loading conditions other than those listed below, adjust the switch position so that the beam level may be the nearest as the condition obtained according to the list.

Loading condition	Switch position
Driver only	0
Driver + Front passenger	0
Full passengers (including driver)	1
Full passengers (including driver) + Maximum permissible loading	2
Driver + Maximum permissible loading	3

Automatic type

It automatically adjusts the headlight beam level according to the number of passengers and loading weight in the luggage area.

And it offers proper headlight beam under various conditions.

⚠ WARNING

If it does not work properly even though your car is inclined backward according to passenger's posture, or the headlight beam is irradiated to the high or low position, we recommend that the system be inspected by an authorized HYUNDAI dealer.

Do not attempt to inspect or replace the wiring yourself.

WIPERS AND WASHERS

Windshield wiper/washer

■ Type A

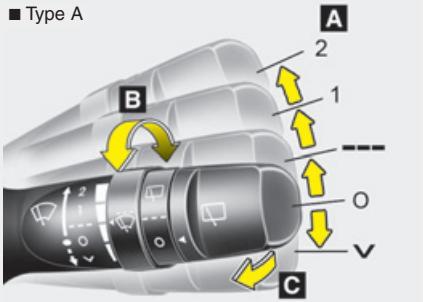

■ Type B

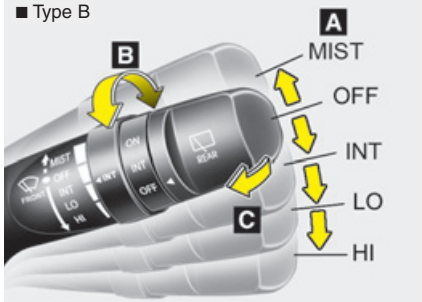

Rear window wiper/washer

■ Type A

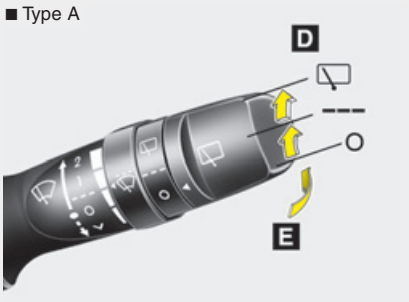

■ Type B

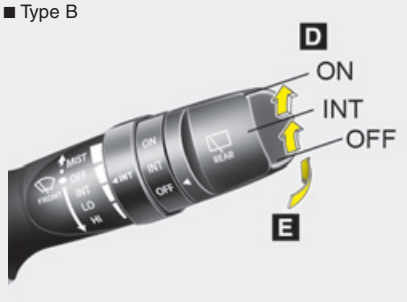

OXM049230L/OXM049231L/OAM049048L/OAM049048N

A : Wiper speed control (front)
- V / MIST – Single wipe
- O / OFF – Off
- --- / INT – Intermittent wipe
  AUTO* – Auto control wipe
- 1 / LO– Low wiper speed
- 2 / HI – High wiper speed

B : Intermittent control wipe time adjustment

C : Wash with brief wipes (front)

D : Rear wiper/washer control
- / ON – Continuous wipe
- --- / INT* – Intermittent wipe
- O / OFF – Off

E : Wash with brief wipes (rear)

* : if equipped

Windshield wipers

Operates as follows when the ignition switch is turned ON.

∨ / MIST : For a single wiping cycle, move the lever to this (∨/ MIST) position and release it. The wipers will operate continuously if the lever is held in this position.

O / OFF : Wiper is not in operation

--- / INT : Wiper operates intermittently at the same wiping intervals. Use this mode in light rain or mist. To vary the speed setting, turn the speed control knob.

1 / LO : Normal wiper speed

2 / HI : Fast wiper speed

✻ NOTICE

If there is heavy accumulation of snow or ice on the windshield, defrost the windshield for about 10 minutes, or until the snow and/or ice is removed before using the windshield wipers to ensure proper operation.

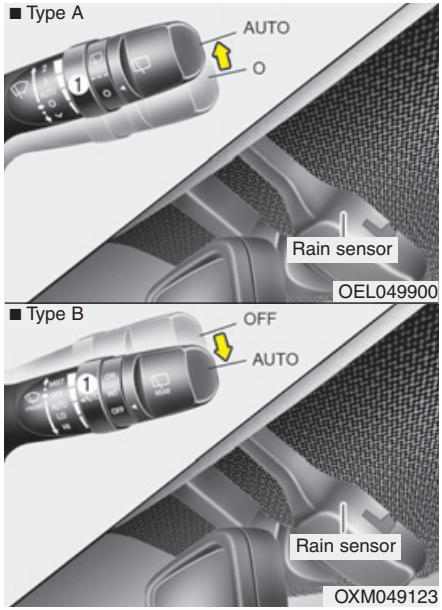

Auto control (if equipped)

The rain sensor located on the upper end of the windshield glass senses the amount of rainfall and controls the wiping cycle for the proper interval. The more it rains, the faster the wiper operates. When the rain stops, the wiper stops.

To vary the speed setting, turn the speed control knob (1).

If the wiper switch is set in AUTO mode when the ignition switch is ON, the wiper will operate once to perform a self-check of the system. Set the wiper to OFF position when the wiper is not in use.

⚠ CAUTION

When the ignition switch is ON and the windshield wiper switch is placed in the AUTO mode, use caution in the following situations to avoid any injury to the hands or other parts of the body:

- ***Do not touch the upper end of the windshield glass facing the rain sensor.***
- ***Do not wipe the upper end of the windshield glass with a damp or wet cloth.***
- ***Do not put pressure on the windshield glass.***

⚠ CAUTION

When washing the vehicle, set the wiper switch in the OFF position to stop the auto wiper operation.

The wiper may operate and be damaged if the switch is set in the AUTO mode while washing the vehicle.

Do not remove the sensor cover located on the upper end of the passenger side windshield glass. Damage to system parts could occur and may not be covered by your vehicle warranty.

When starting the vehicle in winter, set the wiper switch in the OFF position. Otherwise, wipers may operate and ice may damage the windshield wiper blades. Always remove all snow and ice and defrost the windshield properly prior to operating the windshield wipers.

■ Type A

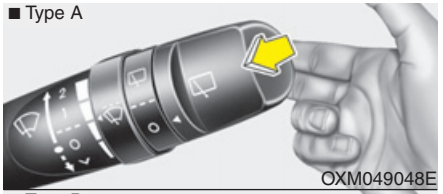

OXM049048E

■ Type B

OAM049102N

Windshield washers

In the OFF position, pull the lever gently toward you to spray washer fluid on the windshield and to run the wipers 1-3 cycles.

Use this function when the windshield is dirty.

The spray and wiper operation will continue until you release the lever.

If the washer does not work, check the washer fluid level. If the fluid level is not sufficient, you will need to add appropriate non-abrasive windshield washer fluid to the washer reservoir.

The reservoir filler neck is located in the front of the engine compartment on the passenger side.

⚠ CAUTION

To prevent possible damage to the washer pump, do not operate the washer when the fluid reservoir is empty.

⚠ WARNING

Do not use the washer in freezing temperatures without first warming the windshield with the defrosters; the washer solution could freeze on the windshield and obscure your vision.

⚠ CAUTION

- ***To prevent possible damage to the wipers or windshield, do not operate the wipers when the windshield is dry.***
- ***To prevent damage to the wiper blades, do not use gasoline, kerosene, paint thinner, or other solvents on or near them.***
- ***To prevent damage to the wiper arms and other components, do not attempt to move the wipers manually.***

Headlight washer (if equipped)

If your vehicle is equipped with the headlight washer it will operate at the same time when you operate the windshield washer. It will operate when the headlight switch is in the first or second position and the ignition switch or engine start/stop button is in the ON position.

The washer fluid will be sprayed on to the headlights.

✻ NOTICE

Check the headlight washers periodically to confirm that the washer fluid is being sprayed properly onto the headlight lenses.

■ Type A

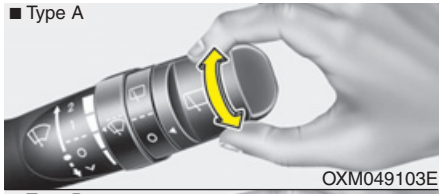

OXM049103E

■ Type B

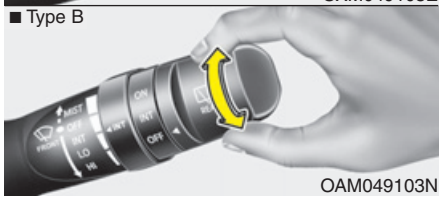

OAM049103N

Rear window wiper and washer switch

The rear window wiper and washer switch is located at the end of the wiper and washer switch lever. Turn the switch to the desired position to operate the rear wiper and washer.

/ ON - Normal wiper operation

--- / INT - Intermittent wiper operation (if equipped)

O / OFF - Wiper is not in operation

■ Type A

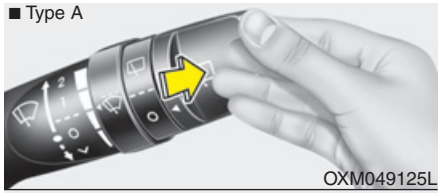

OXM049125L

■ Type B

OXM049125

Push the lever away from you to spray rear washer fluid and to run the rear wipers 1~3 cycles. The spray and wiper operation will continue until you release the lever. (if equipped)

INTERIOR LIGHT

⚠ CAUTION

Do not use the interior lights for extended periods when the engine is not running.

It may cause battery discharge.

⚠ WARNING

Do not use the interior lights when driving in the dark. Accidents could happen because the view may be obscured by interior lights.

Interior lamp AUTO cut

- When all entrances are closed, if you lock the vehicle by using the transmitter or the smart key, all interior lamp will be off after a few seconds.
- If you do not operate anything in the vehicle after turning off the engine, the lights will turn off after 20 minutes.

■ Type A

OGD041104

■ Type B

OGD041105

Map lamp (if equipped)

Push the lens (1) to turn the map lamp on or off. This light produces a spot beam for convenient use as a map lamp at night or as a personal lamp for the driver and the front passenger.

- /OFF (2) : The lights turn off even if a door is opened.
- /DOOR (3) :

  In the DOOR position, the map lamp and the room lamp come on when any door is opened regardless of the ignition switch position.

  When doors are unlocked by the transmitter (or smart key), the map lamp and the room lamp come on for approximately 30 seconds as long as any door is not open. The map lamp and the room lamp goes out gradually after approximately 30 seconds if the door is closed. However, if the ignition switch is ON or all doors are locked, the map lamp and the room lamp will turn off immediately.
- /ON (4) : Map lamp and room lamp stay on at all times.

  ❊ When the lamp is turned ON by pressing the lens (1), the lamp does not turn off even if the switch (2) is in the OFF position.

OMD040097

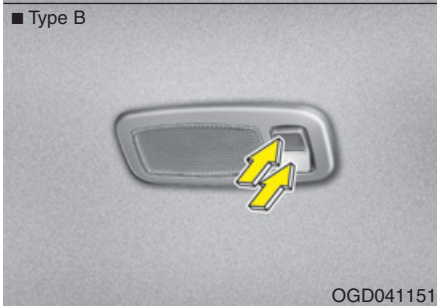

OGD041151

Room lamp

Type A

To turn the room lamp ON or OFF, push the switch.

Type B

Press the switch to turn on the room lamp.

Press the switch to turn off the room lamp.

⚠ CAUTION

Do not leave the lamp switches on for an extended period of time when the vehicle is not running.

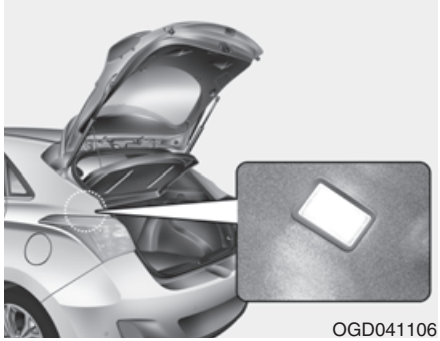
OGD041106

Luggage room lamp

The luggage room lamp comes on when the tailgate is opened.

⚠ CAUTION

The luggage lamp comes on as long as the tailgate is open. To prevent unnecessary charging system drain, close the tailgate securely after using the luggage room.

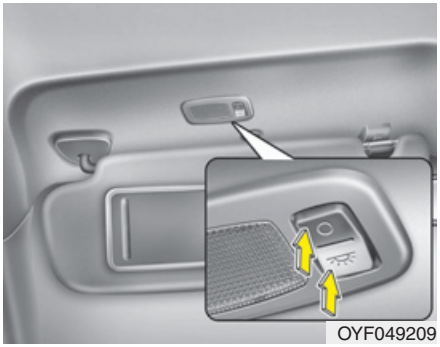

Vanity mirror lamp (if equipped)

Pull the sunvisor downward and you can turn the vanity mirror lamp ON or OFF by pushing the button.

- : To turn the lamp ON.
- O : To turn the lamp OFF.

⚠ CAUTION

To prevent unnecessary charging system drain, turn off the lamp by pushing the O button after using the lamp.

WELCOME SYSTEM (IF EQUIPPED)

Headlamp welcome

When the headlight(light switch in the headlight or AUTO position) is on and all doors (and tailgate) are locked and closed, the headlight, position light and tail light will come on for 15 seconds if any of the below is performed.

- Without smart key system
  - When the door unlock button is pressed on the transmitter.
- With the smart key system
  - When the door unlock button is pressed on the smart key.

At this time, if you press the door lock button (on the transmitter or smart key), the lights will turn off immediately.

Interior light

When the interior light switch is in the DOOR position and all doors (and tailgate) are locked and closed, the room lamp will come on for 30 seconds if any of the below is performed.

- Without smart key system
  - When the door unlock button is pressed on the transmitter.
- With the smart key system
  - When the door unlock button is pressed on the smart key.
  - When the button of the outside door handle is pressed.

At this time, if you press the door lock button, the lamps will turn off immediately.

Puddle lamp and pocket lamp (if equipped)

When all doors are locked and closed, the puddle lamp and pocket lamp will come on for 15 seconds if any of the below is performed.

- Without smart key system
  - When the door unlock button is pressed on the transmitter.
- With the smart key system
  - When the door unlock button is pressed on the smart key.
  - When the button of the outside door handle is pressed.
  - When the vehicle is approached with the smart key in possession.

At this time, if you press the door lock button, the lamps will turn off immediately.

DEFROSTER

⚠ CAUTION

To prevent damage to the conductors bonded to the inside surface of the rear window, never use sharp instruments or window cleaners containing abrasives to clean the window.

✻ NOTICE

If you want to defrost and defog the front windshield, refer to "Windshield defrosting and defogging" in this section.

■ Manual climate control

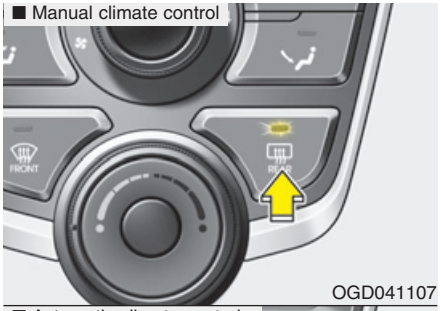

OGD041107

■ Automatic climate control

OGD041108

Rear window defroster

The defroster heats the window to remove frost, fog and thin ice from the interior and exterior of the rear window, while engine is running.

To activate the rear window defroster, press the rear window defroster button located in the center facia switch panel.

The indicator on the rear window defroster button illuminates when the defroster is ON.

If there is heavy accumulation of snow on the rear window, brush it off before operating the rear defroster.

The rear window defroster automatically turns off after approximately 20 minutes or when the ignition switch is turned off.

To turn off the defroster, press the rear window defroster button again.

Outside mirror defroster (if equipped)

If your vehicle is equipped with outside mirror defrosters, they will operate at the same time when you turn on the rear window defroster.

Front wiper deicer (if equipped)

If your vehicle is equipped with front wiper deicer, they will operate at the same time when you turn on the rear window defroster.

MANUAL CLIMATE CONTROL SYSTEM (IF EQUIPPED)

1. MAX A/C (Max airconditioning) button (if equipped)
2. A/C (Air conditioning) button (if equipped)
3. Mode selection buttons
4. Fan speed control knob
5. Rear window defroster button
6. Front windshield defrost button
7. Temperature control knob
8. Air intake control button

OGDE042109

Heating and air conditioning

1. Start the engine.
2. Set the mode to the desired position.
   To improve the effectiveness of heating and cooling :
   - Heating:
   - Cooling:
3. Set the temperature control to the desired position.
4. Set the air intake control to the outside (fresh) air position.
5. Set the fan speed control to the desired speed.
6. If air conditioning is desired, turn the air conditioning system (if equipped) on.

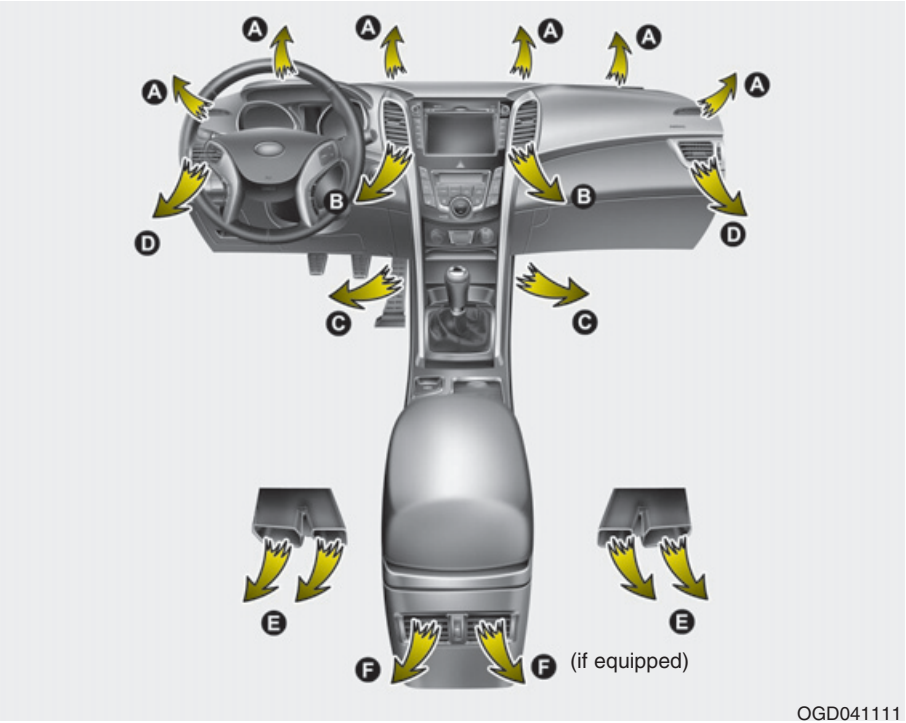

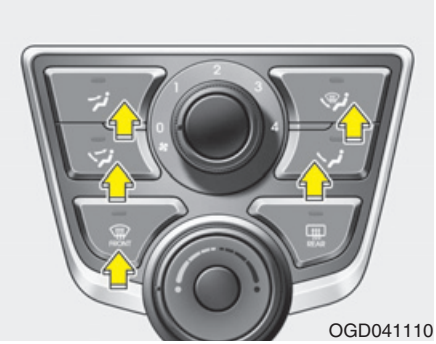

Mode selection

The mode selection button controls the direction of the air flow through the ventilation system.

Air can be directed to the floor, dashboard outlets, or windshield. Five symbols are used to represent Face, Bi-Level, Floor, Floor-Defrost and Defrost air position.

Face-Level (B, D, F*)

Air flow is directed toward the upper body and face. Additionally, each outlet can be controlled to direct the air discharged from the outlet.

Bi-Level (B, D, C, E, F*)

Air flow is directed towards the face and the floor.

Floor-Level (C, E, A, D)

Most of the air flow is directed to the floor, with a small amount of the air being directed to the windshield and side window defrosters.

Floor/Defrost-Level (A, C, E, D)

Most of the air flow is directed to the floor and the windshield with a small amount directed to the side window defrosters.

Defrost-Level (A, D)

Most of the air flow is directed to the windshield with a small amount of air directed to the side window defrosters.

* : if equipped

OGD041112

MAX A/C-Level (if equipped)

To select the MAX A/C, turn the fan speed control knob to the right then press the MAX A/C button.

Air flow is directed toward the upper body and face.

In this mode, the air conditioning, recirculated air position and max cool temperature condition will be selected automatically.

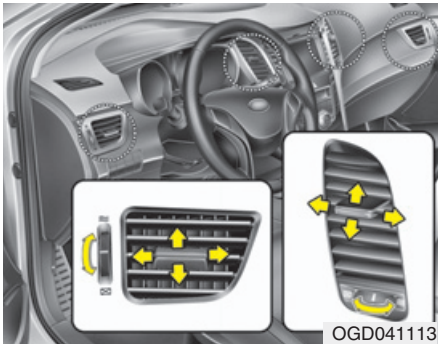
OGD041113

Instrument panel vents

The outlet vents can be opened or closed separately using the thumbwheel.

Also, you can adjust the direction of air delivery from these vents using the vent control lever as shown.

OGD041116

Temperature control

The temperature control knob allows you to control the temperature of the air flowing from the ventilation system. To change the air temperature in the passenger compartment, turn the knob to the right position for warm and hot air or left position for cooler air.

Air intake control

This is used to select outside (fresh) air position or recirculated air position.

To change the air intake control position, press the control button.

Recirculated air position

With the recirculated air position selected, air from the passenger compartment will be drawn through the heating system and heated or cooled according to the function selected.

Outside (fresh) air position

With the outside (fresh) air position selected, air enters the vehicle from outside and is heated or cooled according to the function selected.

✻ NOTICE

It should be noted that prolonged operation of the heater in the recirculated air position (without air conditioning selected) will cause fogging of the windshield and side windows and the air within the passenger compartment will become stale.

In addition, prolonged use of the air conditioning with the recirculated air position selected will result in excessively dry air in the passenger compartment.

⚠ WARNING

- **Continuous operation of the climate control system in the recirculated air position may allow humidity to increase inside the vehicle which may fog the glass and obscure visibility.**
- **Do not sleep in a vehicle with air conditioning or heating system on. It may cause serious harm or death due to a drop in the oxygen level and/or body temperature.**
- **Continuous operation of the climate control system in the recirculated air position can cause drowsiness or sleepiness, and loss of vehicle control. Set the air intake control to the outside (fresh) air position as much as possible while driving.**

OGD041114

Fan speed control

The ignition switch must be in the ON position for fan operation.

The fan speed control knob allows you to control the fan speed of the air flowing from the ventilation system. To change the fan speed, turn the knob to the right for higher speed or left for lower speed.

Setting the fan speed control knob to the “0” position turns off the fan.

OGD043114A

To turn off the blowers

To turn off the blowers, turn the fan speed control knob to the "0" position.

OGD041117

Air conditioning (A/C) (if equipped)

Press the A/C button to turn the air conditioning system on (indicator light will illuminate). Press the button again to turn the air conditioning system off.

System operation

Ventilation

1. Set the mode to the position.
2. Set the air intake control to the outside (fresh) air position.
3. Set the temperature control to the desired position.
4. Set the fan speed control to the desired speed.

Heating

1. Set the mode to the position.
2. Set the air intake control to the outside (fresh) air position.
3. Set the temperature control to the desired position.
4. Set the fan speed control to the desired speed.
5. If dehumidified heating is desired, turn the air conditioning system (if equipped) on.

- If the windshield fogs up, set the mode to the or position.

Operation Tips

- To keep dust or unpleasant fumes from entering the car through the ventilation system, temporarily set the air intake control to the recirculated air position. Be sure to return the control to the fresh air position when the irritation has passed to keep fresh air in the vehicle. This will help keep the driver alert and comfortable.
- Air for the heating/cooling system is drawn in through the grilles just ahead of the windshield. Care should be taken that these are not blocked by leaves, snow, ice or other obstructions.
- To prevent interior fog on the windshield, set the air intake control to the fresh air position and fan speed to the desired position, turn on the air conditioning system, and adjust the temperature control to desired temperature.

Air conditioning (if equipped)

HYUNDAI Air Conditioning Systems are filled with environmentally friendly R-134a refrigerant.

1. Start the engine. Push the air conditioning button.
2. Set the mode to the position.
3. Set the air intake control to the outside air or recirculated air position.
4. Adjust the fan speed control and temperature control to maintain maximum comfort.

✻ NOTICE

- **When using the air conditioning system, monitor the temperature gauge closely while driving up hills or in heavy traffic when outside temperatures are high. Air conditioning system operation may cause engine overheating. Continue to use the blower fan but turn the air conditioning system off if the temperature gauge indicates engine overheating.**
- **When opening the windows in humid weather air conditioning may create water droplets inside the vehicle. Since excessive water droplets may cause damage to electrical equipment, air conditioning should only be used with the windows closed.**

Air conditioning system operation tips

- If the vehicle has been parked in direct sunlight during hot weather, open the windows for a short time to let the hot air inside the vehicle escape.
- To help reduce moisture inside of the windows on rainy or humid days, decrease the humidity inside the vehicle by operating the air conditioning system.
- During air conditioning system operation, you may occasionally notice a slight change in engine speed as the air conditioning compressor cycles. This is a normal system operation characteristic.
- Use the air conditioning system every month only for a few minutes to ensure maximum system performance.
- When using the air conditioning system, you may notice clear water dripping (or even puddling) on the ground under the passenger side of the vehicle. This is a normal system operation characteristic.
- Operating the air conditioning system in the recirculated air position provides maximum cooling, however, continual operation in this mode may cause the air inside the vehicle to become stale.
- During cooling operation, you may occasionally notice a misty air flow because of rapid cooling and humid air intake. This is a normal system operation characteristics.

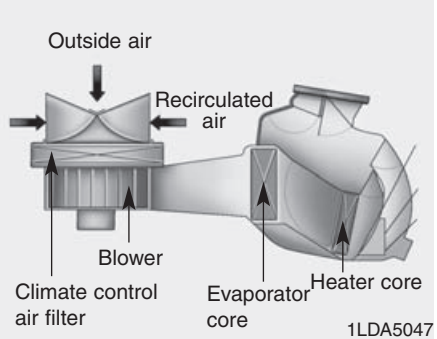

Climate control air filter

The climate control air filter installed behind the glove box filters the dust or other pollutants that come into the vehicle from the outside through the heating and air conditioning system. If dust or other pollutants accumulate in the filter over a period of time, the air flow from the air vents may decrease, resulting in moisture accumulation on the inside of the windshield even when the outside (fresh) air position is selected. If this happens, we recommend that the climate control air filter be replaced by an authorized HYUNDAI dealer.

✻ NOTICE

- **Replace the filter according to the Maintenance Schedule.**
  If the vehicle is being driven in severe conditions such as dusty, rough roads, more frequent climate control air filter inspections and changes are required.
- **When the air flow rate suddenly decreases, we recommend that the system be checked at an authorized HYUNDAI dealer.**

Checking the amount of air conditioner refrigerant and compressor lubricant

When the amount of refrigerant is low, the performance of the air conditioning is reduced. Overfilling also has a negative influence on the air conditioning system.

Therefore, if abnormal operation is found, we recommend that system be inspected by an authorized HYUNDAI dealer.

✻ NOTICE

It is important that the correct type and amount of oil and refrigerant is used. Otherwise, damage to the compressor and abnormal system operation may occur.

⚠ WARNING

We recommend that the air conditioning system be serviced by an authorized HYUNDAI dealer. Improper service may cause serious injury to the person performing the service.

AUTOMATIC CLIMATE CONTROL SYSTEM (IF EQUIPPED)

1. A/C (Air conditioning) button
2. Driver's temperature control button
3. LCD display
4. Mode selection button
5. Air intake control button
6. Front windshield defrost button
7. Fan speed control knob
8. AUTO (automatic control) button
9. OFF button
10. Rear window defrost button
11. Dual temperature control selection but-
    ton
12. Passenger's temperature control button

OGDE042118E

OGDE042119L

Automatic heating and air conditioning

1. Press the AUTO button.
The modes, fan speeds, air intake and air-conditioning will be controlled automatically according to the temperature setting.

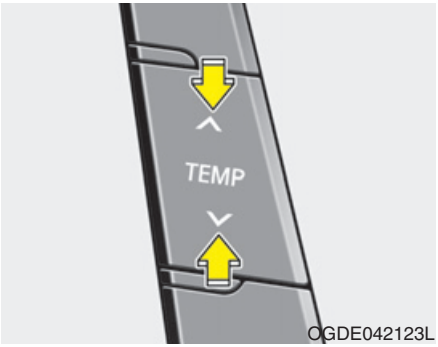

OGDE042123L

2. Press the temperature control button to set the desired temperature.

✻ NOTICE

- **To turn the automatic operation off, select any button of the following:**
  - Mode selection button
  - Front windshield defrost button
  - Fan speed control button
  The selected function will be controlled manually while other functions operate automatically.
- **For your convenience and to improve the effectiveness of the climate control, use the AUTO button and set the temperature to 23°C (73°F).**

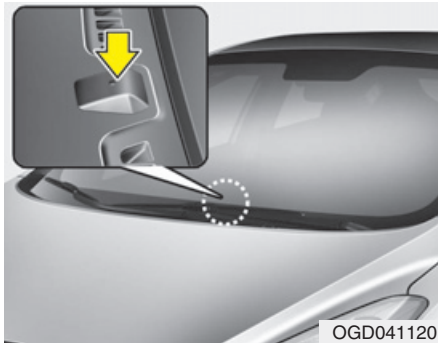
OGD041120

✻ NOTICE

Never place anything over the sensor located on the instrument panel to ensure better control of the heating and cooling system.

Manual heating and air conditioning

The heating and cooling system can be controlled manually by pressing buttons other than the AUTO button. In this case, the system works sequentially according to the order of buttons selected.

When pressing any button (or turning any knob) except AUTO button while automatic operation, the functions not selected will be controlled automatically.

1. Start the engine.
2. Set the mode to the desired position.
3. Set the temperature control to the desired position.
4. Set the air intake control to the outside (fresh) air position.
5. Set the fan speed control to the desired speed.
6. If air conditioning is desired, turn the air conditioning system on.

Press the AUTO button in order to convert to full automatic control of the system.

OGDE042121L

Mode selection

The mode selection button controls the direction of the air flow through the ventilation system.

The air flow outlet port is converted as follows:

Refer to the illustration in the “Manual climate control system”.

Floor & Defrost

Most of the air flow is directed to the floor and the windshield with a small amount directed to the side window defrosters.

Floor-Level

Most of the air flow is directed to the floor, with a small amount of the air being directed to the windshield and side window defrosters.

Bi-Level

Air flow is directed towards the face and the floor.

Face-Level

Air flow is directed toward the upper body and face. Additionally, each outlet can be controlled to direct the air discharged from the outlet.

OGDE042122L

Defrost-Level

Most of the air flow is directed to the windshield with a small amount of air directed to the side window defrosters.

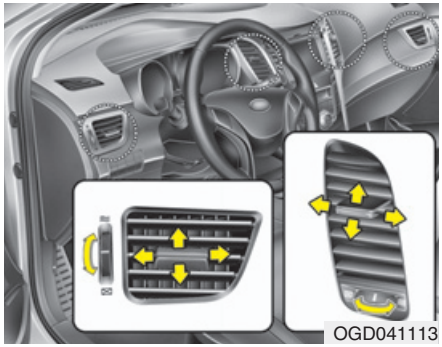
OGD041113

Instrument panel vents

The outlet vents can be opened or closed separately using the thumbwheel.

Also, you can adjust the direction of air delivery from these vents using the vent control lever as shown.

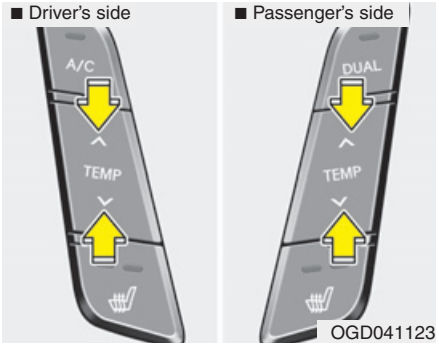

OGD041123

Temperature control

The temperature will increase to the maximum (HI) by pushing the up (∧) button.

The temperature will decrease to the minimum (Lo) by pushing the down (∨) button.

Each time you press the button, the temperature will increase or decrease by 0.5°C/1°F. When set to the lowest temperature setting, the air conditioning will operate continuously.

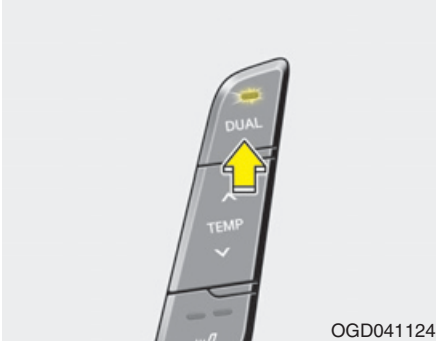

OGD041124

Adjusting the driver and passenger side temperature individually

1. Press the DUAL button to operate the driver and passenger side temperature individually. Pressing the passenger side temperature control button will automatically switch to the DUAL mode as well.
2. Press the driver side temperature control to adjust the driver side temperature. Press the passenger side temperature control to adjust the passenger side temperature.

When the driver side temperature is set to the highest or lowest temperature setting, the DUAL mode is deactivated for maximum heating or cooling.

Adjusting the driver and passenger side temperature equally

1. Press the DUAL button again to deactivate DUAL mode. The passenger side temperature will be set to the same temperature as the driver side temperature.
2. Press the driver side temperature control button. The driver and passenger side temperature will be adjusted equally.

Temperature conversion

If the battery has been discharged or disconnected, the temperature mode display will reset to Centigrade.

This is a normal condition. You can switch the temperature mode between Centigrade to Fahrenheit as follows;

While pressing the MODE button, depress the DUAL button for 3 seconds or more. The display will change from Centigrade to Fahrenheit, or from Fahrenheit to Centigrade.

OGDE041125L

Air intake control

This is used to select outside (fresh) air position or recirculated air position.

To change the air intake control position, push the control button.

Recirculated air position

The indicator light on the button illuminates when the recirculated air position is selected.

With the recirculated air position selected, air from passenger compartment will be drawn through the heating system and heated or cooled according to the function selected.

Outside (fresh) air position

The indicator light on the button does not illuminate when the outside (fresh) air position is selected.

With the outside (fresh) air position selected, air enters the vehicle from outside and is heated or cooled according to the function selected.

✻ NOTICE

It should be noted that prolonged operation of the heating in recirculated air position will cause fogging of the windshield and side windows and the air within the passenger compartment will become stale.

In addition, prolonged use of the air conditioning with the recirculated air position selected, will result in excessively dry air in the passenger compartment.

⚠ WARNING

- **Continued climate control system operation in the recirculated air position may allow humidity to increase inside vehicle which may fog the glass and obscure visibility.**
- **Do not sleep in a vehicle with air conditioning or heating system on. It may cause serious harm or death due to a drop in the oxygen level and/or body temperature.**
- **Continued climate control system operation in the recirculated air position can cause drowsiness or sleepiness, and loss of vehicle control. Set the air intake control to the outside (fresh) air position as much as possible while driving.**

OGD041126

Fan speed control

The fan speed can be set to the desired speed by turning the fan speed control knob.

To change the fan speed, turn the knob to the right for higher speed or left for lower speed.

Pressing the OFF button turns off the fan.

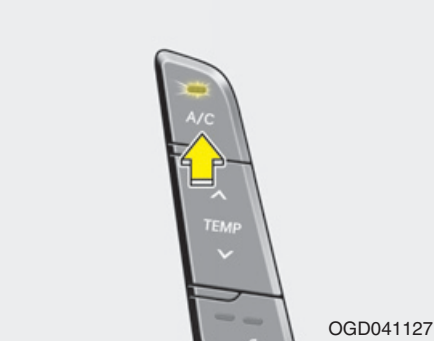

OGD041127

Air conditioning

Press the A/C button to turn the air conditioning system on (indicator light will illuminate).

Press the button again to turn the air conditioning system off.

OGD041128

OFF mode

Push the OFF button to turn off the air climate control system. However you can still operate the mode and air intake buttons as long as the ignition switch is in the ON position.

Climate control air filter

The climate control air filter installed behind the glove box filters the dust or other pollutants that come into the vehicle from the outside through the heating and air conditioning system. If dust or other pollutants accumulate in the filter over a period of time, the air flow from the air vents may decrease, resulting in moisture accumulation on the inside of the windshield even when the outside (fresh) air position is selected. If this happens, we recommend that the climate control air filter be replaced by an authorized HYUNDAI dealer.

✻ NOTICE

- **Replace the filter according to the Maintenance Schedule.**
  If the vehicle is being driven in severe conditions such as dusty, rough roads, more frequent climate control air filter inspections and changes are required.
- **When the air flow rate suddenly decreases, we recommend that the system be checked by an authorized HYUNDAI dealer.**

Checking the amount of air conditioner refrigerant and compressor lubricant

When the amount of refrigerant is low, the performance of the air conditioning is reduced. Overfilling also has a negative influence on the air conditioning system.

Therefore, if abnormal operation is found, we recommend that the system be inspected by an authorized HYUNDAI dealer.

✻ NOTICE

It is important that the correct type and amount of oil and refrigerant is used. Otherwise, damage to the compressor and abnormal system operation may occur.

⚠ WARNING

We recommend that the air conditioning system be serviced by an authorized HYUNDAI dealer. Improper service may cause serious injury to the person performing the service.

WINDSHIELD DEFROSTING AND DEFOGGING

⚠ WARNING - Windshield heating

Do not use the or position during cooling operation in extremely humid weather. The difference between the temperature of the outside air and that of the windshield could cause the outer surface of the windshield to fog up, causing loss of visibility. In this case, set the mode selection knob or button to the position and fan speed control knob or button to lower speed.

- For maximum defrosting, set the temperature control to the extreme right/hot position and the fan speed control to the highest speed.
- If warm air to the floor is desired while defrosting or defogging, set the mode to the floor-defrost position.
- Before driving, clear all snow and ice from the windshield, rear window, outside rear view mirrors, and all side windows.
- Clear all snow and ice from the hood and air inlet in the cowl grill to improve heater and defroster efficiency and to reduce the probability of fogging up inside of the windshield.

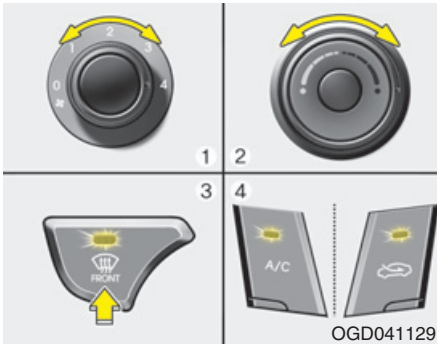

Manual climate control system

To defog inside windshield

1. Select any fan speed except “0” position.
2. Select desired temperature.
3. Select the or position.
4. The outside (fresh) air will be selected automatically. Additionally, the air conditioning (if equipped) will automatically operate if the mode is selected to the or position.

If the air conditioning and outside (fresh) air position are not selected automatically, press the corresponding button manually.

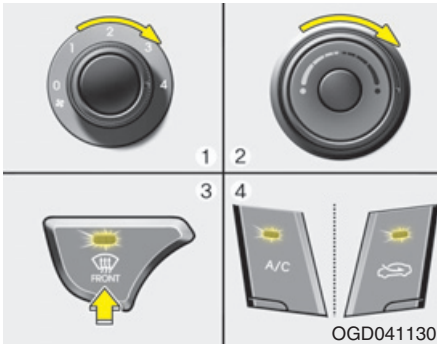

OGD041130

To defrost outside windshield

1. Set the fan speed to the highest (extreme right) position.
2. Set the temperature to the extreme hot position.
3. Select the or position.
4. The outside (fresh) air and air conditioning (if equipped) will be selected automatically.

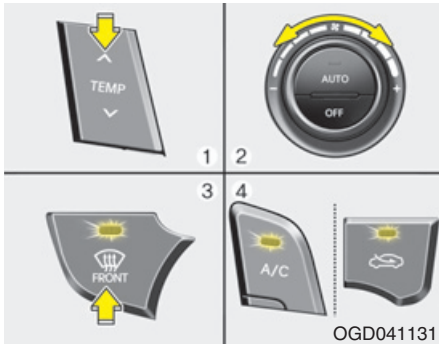

OGD041131

Automatic climate control system

To defog inside windshield

1. Select desired temperature.
2. Select desired fan speed.
3. Select the or position.
4. The air-conditioning will turn on according to the detected ambient temperature, outside (fresh) air position and higher fan speed will be selected automatically.

If the air-conditioning, outside (fresh) air position and higher fan speed are not selected automatically, adjust the corresponding button or knob manually.

If the or position is selected, lower fan speed is controlled to higher fan speed.

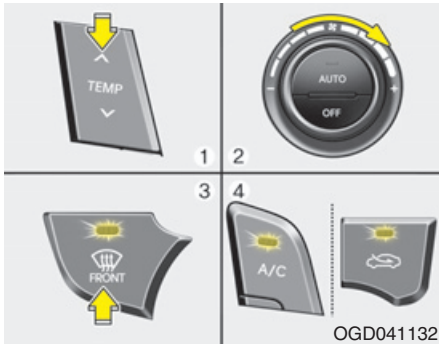

OGD041132

To defrost outside windshield

1. Set temperature to the extreme hot (HI) position.
2. Set fan speed to the highest position.
3. Select the or position.
4. The air-conditioning will turn on according to the detected ambient temperature and outside (fresh) air position will be selected automatically.

If the or position is selected, lower fan speed is controlled to higher fan speed.

Defogging logic (if equipped)

To reduce the probability of fogging up the inside of the windshield, the air intake or air conditioning are controlled automatically according to certain conditions such as or position. To cancel or return the defogging logic, do the following.

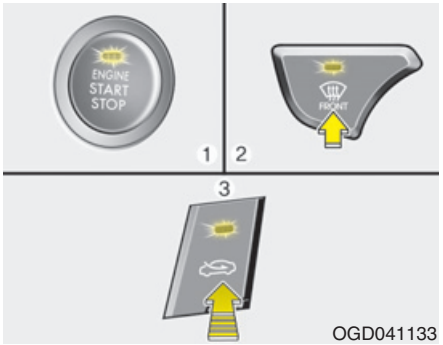

Manual climate control system

1. Turn the ignition switch to the ON position.
2. Press the defroster button ( ).
3. Press the air intake control button at least 5 times within 3 seconds.

The indicator on the air intake button blinks 3 times with 0.5 seconds of interval. It indicates that the defogging logic is canceled or returned to the programmed status.

If the battery has been discharged or disconnected, it resets to the defog logic status.

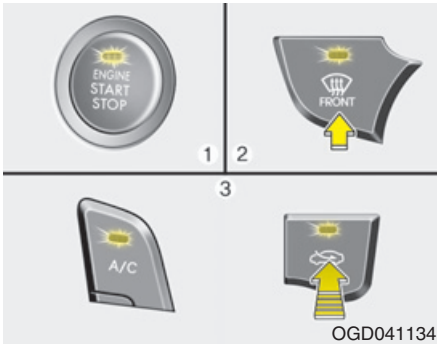

Automatic climate control system

1. Turn the ignition switch to the ON position.
2. Press the defroster button ( ).
3. While pressing the air conditioning button (A/C), press the air intake control button at least 5 times within 3 seconds.

The indicator on the air intake button blinks 3 times with 0.5 seconds of interval. It indicates that the defogging logic is canceled or returned to the programmed status.

If the battery has been discharged or disconnected, it resets to the defog logic status.

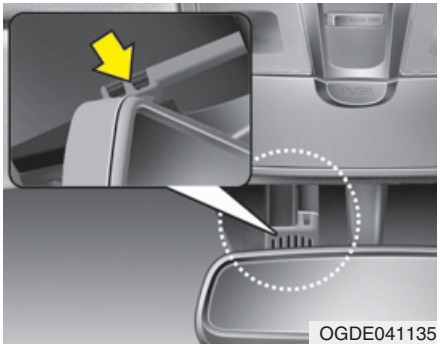
OGDE041135

Auto defogging system (if equipped)

Auto defogging reduces the probability of fogging up the inside of the windshield by automatically sensing the moisture of inside the windshield.

The auto defogging system operates when the heater or air conditioning is on.

This indicator illuminates when the auto defogging system senses the moisture of inside the windshield and operates.

✻ NOTICE

The auto defogging system may not operate with temperature below -15°C to prevent the system from malfuntioning.

If more moisture is in the vehicle, the higher steps operate as follow. For example if auto defogging does not defog inside the windshield at step 1 Outside air position, it tries to defog again at step 2 Blowing air toward the windshield.

Step 1 : Outside air position
Step 2 : Blowing air toward the windshield
Step 3 : Increasing air flow toward the windshield
Step 4 : Operating the air conditioning
Step 5 : Maximizing the air conditioning

The auto defogging system is automatically activated when the conditions are met. However, if you would like to cancel the auto defogging system, press the front defroster button 4 times within 2 seconds while pressing the AUTO button. The indicator of the front defroster button will blink 3 times to notify you that the system is cancelled. To use the auto defogging system again, follow the procedures mentioned above.

If the battery has been disconnected or discharged, it resets to the auto defogging status.

✻ NOTICE

- **When the air conditioning is turned on by Auto defogging system, if you try to turn off the air conditioning, the indicator will blink 3 times and the air conditioning will not be turned off.**
- **For efficiency, do not select recirculated air position while Auto defogging system is operating.**

⚠ CAUTION

Do not remove the sensor cover located on the upper end of the driver side windshield glass. Damage to system parts could occur and may not be covered by your vehicle warranty.

CLEAN AIR (IF EQUIPPED)

OGDE041214

When the ignition switch is in the ON position, the clean air function turns on automatically.

Also, the clean air function turns off automatically, when the ignition switch turns to the OFF position.

STORAGE COMPARTMENT

⚠ CAUTION

- *To avoid possible theft, do not leave valuables in the storage compartment.*
- *Always keep the storage compartment covers closed while driving. Do not attempt to place so many items in the storage compartment that the storage compartment cover cannot close securely.*

⚠ WARNING - Flammable materials

Do not store cigarette lighters, propane cylinders, or other flammable/explosive materials in the vehicle. These items may catch fire and/or explode if the vehicle is exposed to hot temperatures for extended periods.

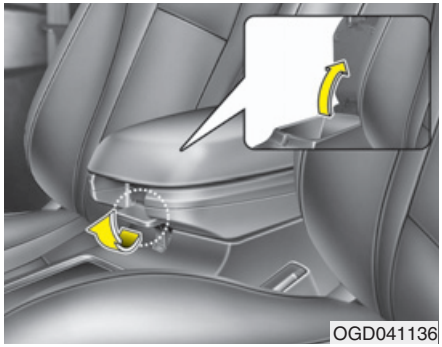

Center console storage (if equipped)

To open the center console storage, pull up the lever.

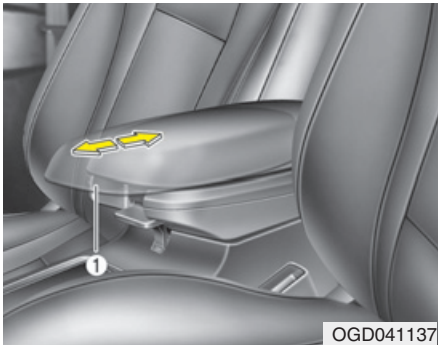

Sliding armrest (if equipped)

To move forward

Grab the front portion of the armrest (1) then pull it forward

To move rearward

Push the armrest rearward with your palm.

⚠ WARNING

Do not grab the front portion of the armrest (1) when moving the armrest rearward. It may pinch your fingers.

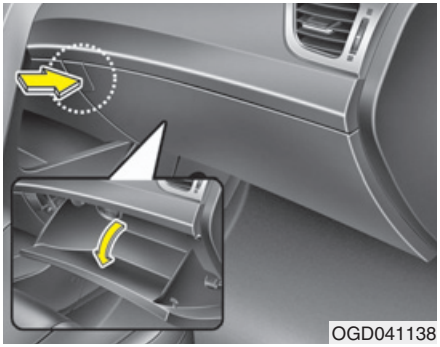

Glove box

To open the glove box, push the button and the glove box will automatically open. Close the glove box after use.

⚠ WARNING

To reduce the risk of injury in an accident or sudden stop, always keep the glove box door closed while driving.

⚠ CAUTION

Do not keep food in the glove box for a long time.

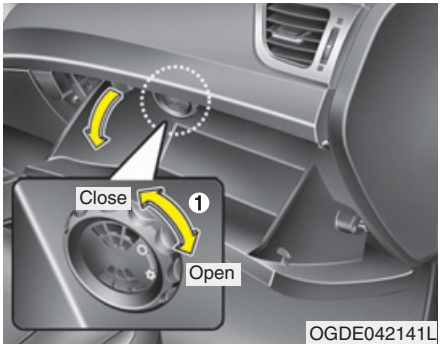

Cool box (if equipped)

You can keep beverage cans or other items cool in the glove box.

1. Turn on the air conditioning. The temperature of the cool box will change according to the temperature of air conditioning system.
2. Slide the open/close lever (1) of the vent installed in the glove box to the open position.
3. When the cool box is not used, slide the lever (1) to the closed position.

✻ NOTICE

If some items in the cool box block the vent, the cooling effectiveness of the cool box is reduced.

⚠ WARNING

Do not put perishable food in the cool box because it may not maintain the necessary consistent temperature to keep the food fresh.

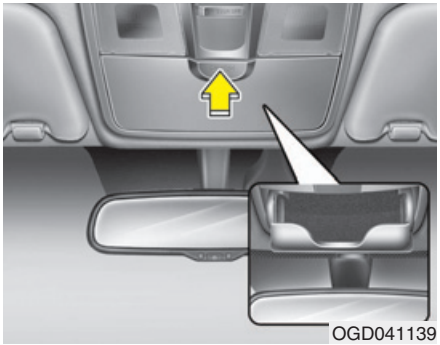
OGD041139

Sunglass holder (if equipped)

To open the sunglass holder, press the cover and the holder will slowly open. Place your sunglasses in the compartment door with the lenses facing out. Push to close.

⚠ WARNING

- **Do not keep objects except sunglasses inside the sunglass holder. Such objects can be thrown from the holder in the event of a sudden stop or an accident, possibly injuring the passengers in the vehicle.**
- **Do not open the sunglass holder while the vehicle is moving. The rear view mirror of the vehicle can be blocked by an open sunglass holder.**
- **Do not put the glasses forcibly into a sunglass holder to prevent breakage or deformation of glasses. It may cause personal injury if you try to open it forcibly when the glasses are jammed in holder.**

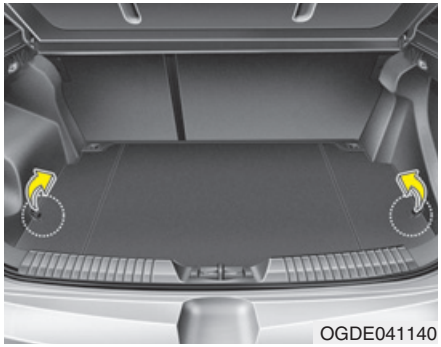
OGDE041140

Luggage side tray (if equipped)

The luggage side tray can be used for storing small items.

- To open the cover, pull up the handle and lift the cover.

INTERIOR FEATURES

OGDE041142

Cigarette lighter (if equipped)

For the cigarette lighter to work, the ignition switch must be in the ACC or ON position.

To use the cigarette lighter, push it all the way into its socket. When the element is heated, the lighter will pop out to the "ready" position.

We recommend that you use parts for replacement from an authorized HYUNDAI dealer.

⚠ WARNING

- **Do not hold the lighter in after it is already heated because it will overheat.**
- **If the lighter does not pop out within 30 seconds, remove it to prevent overheating.**

⚠ CAUTION

The use of plug-in accessories (shavers, hand-held vacuums, and coffee pots, etc.) may damage the socket or cause electrical failure.

■ Type A

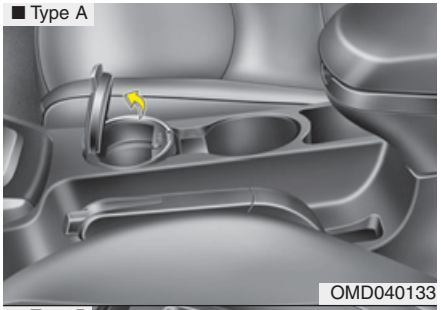
OMD040133

■ Type B

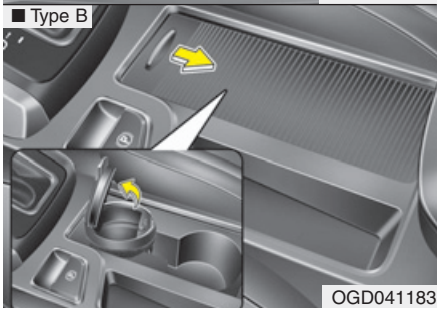
OGD041183

Ashtray (if equipped)

To use the ashtray, open the cover.

To clean or empty the ashtray, pull it out.

⚠ WARNING - Ashtray use

- **Do not use the vehicle's ashtrays as waste receptacles.**
- **Putting lit cigarettes or matches in an ashtray with other combustible materials may cause a fire.**

■ Type A

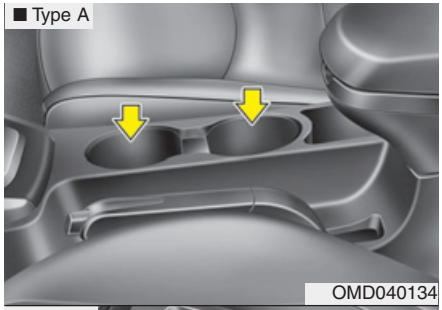

OMD040134

■ Type B

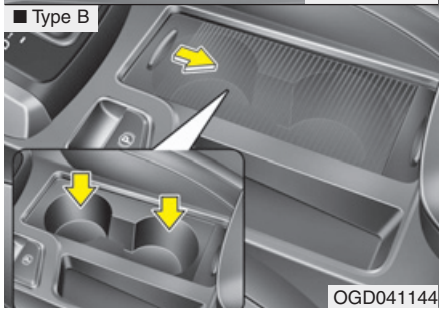

OGD041144

Cup holder

Front

Cups or small beverage cans may be placed in the cup holders.

■ Rear (if equipped)

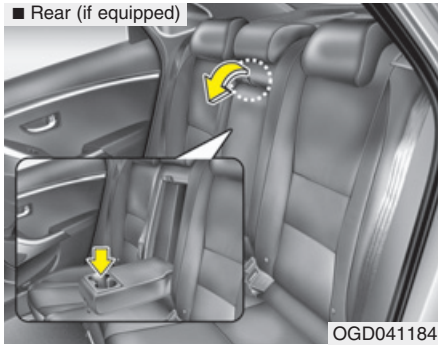

OGD041184

Rear

To use the cup holder, pull down the armrest.

⚠ WARNING - Hot liquids

- **Do not place uncovered cups with hot liquid in the cup holder while the vehicle is in motion. If the hot liquid spills, you may burn yourself. Such a burn to the driver could lead to loss of control of the vehicle.**
- **To reduce the risk of personal injury in the event of sudden stop or collision, do not place uncovered or unsecured bottles, glasses, cans, etc., in the cup holder while the vehicle is in motion.**

⚠ WARNING

Keep cans or bottles out of direct sun light and do not put them in a vehicle that is heated up. It may explode.

⚠ CAUTION

When cleaning spilled liquids, do not dry the cup holder at high temperature.

This may damage the chrome part of the cup holer.

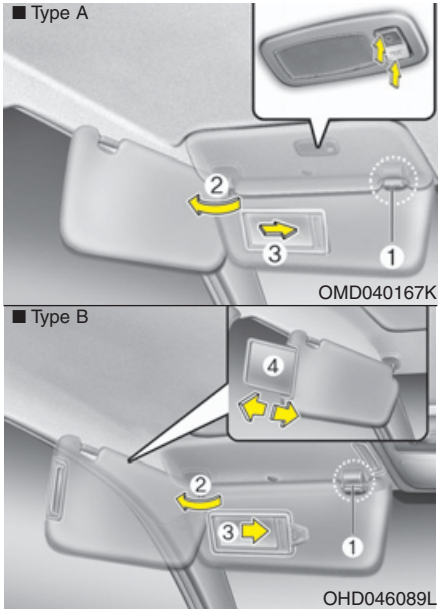

Sunvisor

Use the sunvisor to shield direct light through the front or side windows.

To use a sunvisor, pull it downward.

To use a sunvisor for a side window, pull it downward, unsnap it from the bracket (1) and swing it to the side (2).

To use the vanity mirror, pull down the visor and open the mirror cover (3).

To use the vanity mirror lamp, switch it on. (if equipped)

Adjust the sunvisor extension (if equipped) forward or backward (4).

✻ NOTICE

Close the vanity mirror cover securely and return the sunvisor to its original position after use.

⚠ CAUTION - Vanity mirror lamp (if equipped)

Always have the switch in the off position when the vanity mirror lamp is not in use. If the sunvisor is closed without the lamp off, it may discharge the battery or damage the sunvisor.

⚠ WARNING

For your safety, do not obstruct your vision when using the sunvisor.

❊ To learn how to use the vanity mirror lamp, refer to "Interior light" in this section.

■ Front (Type A)

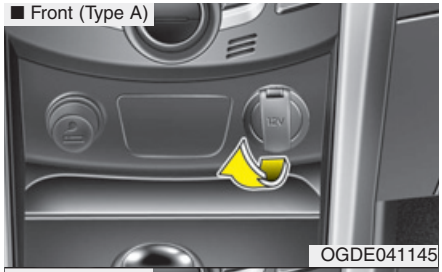

OGDE041145

■ Front (Type B)

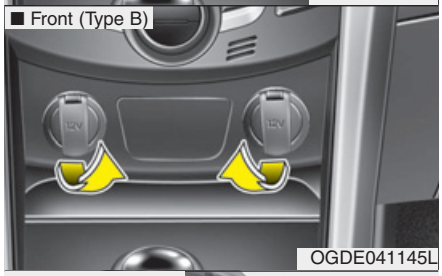

OGDE041145L

■ Rear (if equipped)

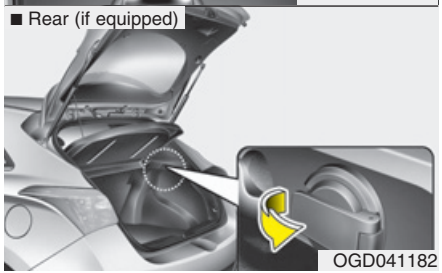

OGD041182

Power outlet (if equipped)

The power outlet is designed to provide power for mobile telephones or other devices designed to operate with vehicle electrical systems. The devices should draw less than 10 amps with the engine running.

⚠ CAUTION

- ***Use the power outlet only when the engine is running and remove the accessory plug after use. Using the accessory plug for prolonged periods of time with the engine off could cause the battery to discharge.***
- ***Only use 12V electric accessories which are less than 10A in electric capacity.***
- ***Adjust the air-conditioner or heater to the lowest operating level when using the power outlet.***
- ***Close the cover when not in use.***
- ***Some electronic devices can cause electronic interference when plugged into a vehicle's power outlet. These devices may cause excessive audio static and malfunctions in other electronic systems or devices used in your vehicle.***

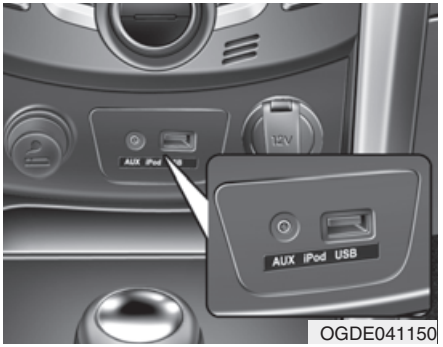

OGDE041150

Aux, USB and iPod port (if equipped)

If your vehicle has an Aux (Auxiliary) and/or USB (Universal Serial Bus) port or iPod port, you can use an aux port to connect audio devices and an USB port to plug in an USB and also an iPod port to plug in an iPod.

✻ NOTICE

When using a portable audio device connected to the power outlet, noise may occur during playback. If this happens, use the power source of the portable audio device.

❊ iPod is a trademark of Apple Inc.

OUN026348

Clothes hanger (if equipped)

To use the hanger, pull down the upper portion of hanger.

⚠ CAUTION

Do not hang heavy clothes, since those may damage the hook.

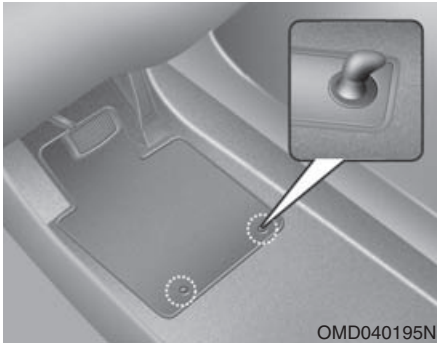

Floor mat anchor(s) (if equipped)

When using a floor mat on the front floor carpet, make sure it attaches to the floor mat anchor(s) in your vehicle. This keeps the floor mat from sliding forward.

⚠ WARNING

The following must be observed when installing ANY floor mat to the vehicle.

- **Ensure that the floor mats are securely attached to the vehicle's floor mat anchor(s) before driving the vehicle.**
- **Do not use ANY floor mat that cannot be firmly attached to the vehicle's floor mat anchors.**
- **Do not stack floor mats on top of one another (e.g. all-weather rubber mat on top of a carpeted floor mat). Only a single floor mat should be installed in each position.**

  IMPORTANT - Your vehicle was manufactured with driver's side floor mat anchors that are designed to securely hold the floor mat in place. To avoid any interference with pedal operation, HYUNDAI recommends that only the HYUNDAI floor mat designed for use in your vehicle be installed.

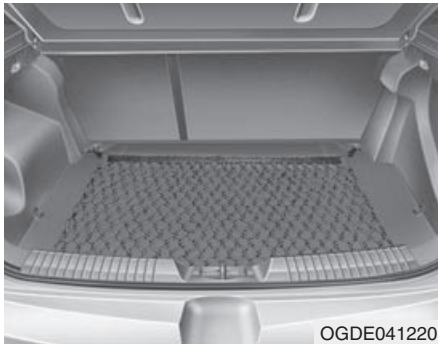

Luggage net holder (if equipped)

To keep items from shifting in the cargo area, you can use the 4 holders located in the cargo area (under the floor panel) to attach the luggage net.

If your vehicle is equipped with a luggage board, set the board to the lower position before installing the luggage net.

If necessary, we recommend that you contact an authorized HYUNDAI dealer to obtain a luggage net.

⚠ CAUTION

To prevent damage to the goods or the vehicle, care should be taken when carrying fragile or bulky objects in the luggage compartment.

⚠ WARNING

Avoid eye injury. DO NOT overstretch the luggage net, ALWAYS keep your face and body out of the luggage net's recoil path. DO NOT use when the strap has visible signs of wear or damage.

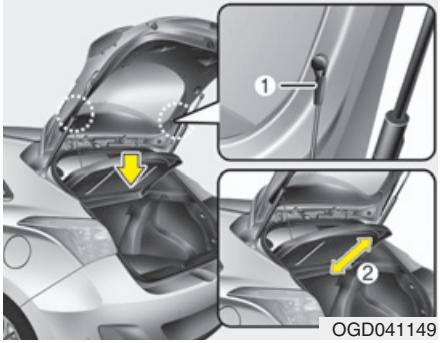

Cargo area cover (if equipped)

Use the cover to hide items stored in the cargo area.

The cargo area cover will be lifted when the tailgate is opened. Disconnect the strap (1) from holder if you want to return the cover to original position. To remove the cargo area cover completely, lift the cover to a 50-degree angle and pull it out to the full (2). For installation of the cover, reverse the removal procedure.

⚠ CAUTION

- ***When you return the cargo area cover to its original position, hold the cover and lower it.***
- ***Do not operate the vehicle with the cover removed. It may damage to the cover.***
- ***The cargo area cover may be lifted when the tailgate is opened. Ensure that the luggage on the cover is moved to a safe place.***
- ***Since the cargo area cover may be damaged or malformed, do not apply excessive force to the cover or do not put the heavy loads on it.***

EXTERIOR FEATURES

⚠ WARNING

- **Do not place objects on the cargo security screen. Such objects may be thrown about inside the vehicle and possibly injure vehicle occupants during an accident or when braking.**
- **Never allow anyone to ride in the luggage compartment. It is designed for luggage only.**
- **Maintain the balance of the vehicle and locate the weight as forward as possible.**

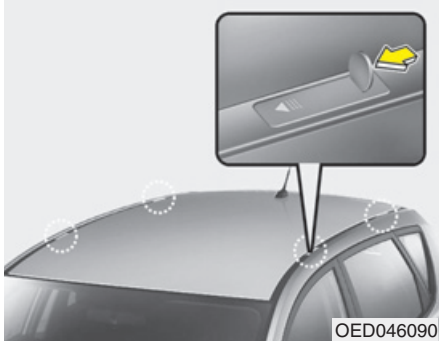

Mounting bracket for roof carrier (if equipped)

To install or remove a roof carrier, you can use the mounting bracket and cover on the roof.

When you install a roof carrier, use the following procedure.

1. Insert a slim tool(coin or flat blade driver) into the slot and slide the cover toward the arrow on the cover.

⚠ WARNING

Use a coin or flat blade driver when you remove the roof carrier cover. If you use your fingernail, it may damage your fingernail.

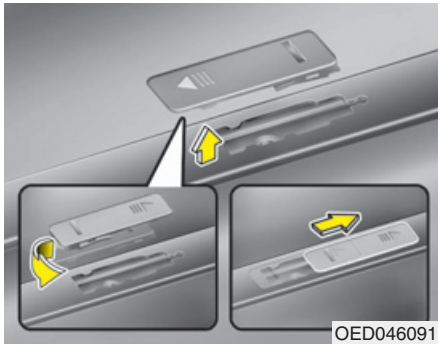

2. Rotate the cover half way and insert the cover on the roof hole as the illustration.

✻ NOTICE

To prevent loosing the roof carrier cover, install the cover on the roof before you install the roof carrier.

3. After using the roof carrier, install the cover back on the roof in the reverse order.

✻ NOTICE

If the vehicle is equipped with a sunroof, be sure not to position cargo onto the roof in such a way that it could interfere with sunroof operation.

⚠ CAUTION

- *When carrying cargo on the roof, take the necessary precautions to make sure the cargo does not damage the roof of the vehicle.*
- *When carrying large objects on the roof, make sure they do not exceed the overall roof length or width.*

⚠ WARNING

- **The vehicle center of gravity will be higher when items are loaded onto the roof. Avoid sudden starts, braking, sharp turns, abrupt maneuvers or high speeds that may result in loss of vehicle control or rollover resulting in an accident.**
- **Always drive slowly and turn corners carefully when carrying items on the roof. Severe wind updrafts, caused by passing vehicles or natural causes, can cause sudden upward pressure on items loaded on the roof. This is especially true when carrying large, flat items such as wood panels or mattresses. This could cause the items to fall off the roof and cause damage to your vehicle or others around you.**
- **To prevent damage or loss of cargo while driving, check frequently before or while driving to make sure the items on the roof are securely fastened.**

AUDIO SYSTEM

✻ NOTICE

- **If you install an aftermarket HID head lamp, your vehicle's audio and electronic device may malfunction.**
- **Prevent chemicals such as perfume, cosmetic oil, sun cream, hand cleaner, and air freshener from contacting the interior parts because they may cause damage or discoloration.**

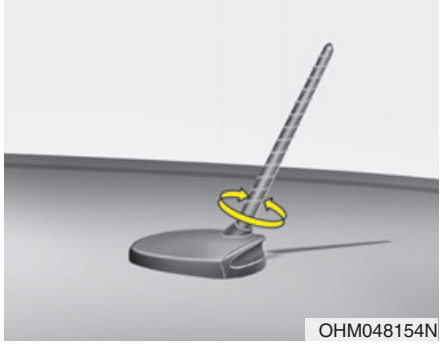

Roof antenna (if equipped)

Your car uses a roof antenna to receive both AM and FM broadcast signals. This antenna is a removable type. To remove the antenna, turn it counterclockwise. To install the antenna, turn it clockwise.

⚠ CAUTION

- ***Before entering a place with a low height clearance or a car wash, remove the antenna by rotating it counterclockwise. If not, the antenna may be damaged.***
- ***When reinstalling your antenna, it is important that it is fully tightened and adjusted to the upright position to ensure proper reception. But it could be removed when parking the vehicle or when loading cargo on the roof rack.***

■ Type A

OMD040139N

■ Type B

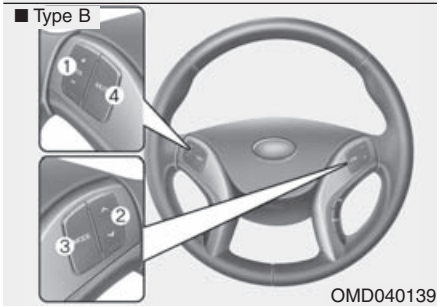

OMD040139

Steering wheel audio control (if equipped)

The steering wheel audio control button is installed to promote safe driving.

⚠ CAUTION

Do not operate audio remote control buttons simultaneously.

VOLUME (VOL +/-) (1)

- Press the up button (+) to increase volume.
- Press the down button (-) to decrease volume.

SEEK/PRESET (∧ / ∨) (2)

If the SEEK/PRESET button is pressed for 0.8 second or more, it will work as follows in each mode.

RADIO mode

It will function as the AUTO SEEK select button. It will SEEK until you release the button.

CDP mode

It will function as the FF/REW button.

If the SEEK/PRESET button is pressed for less than 0.8 second, it will work as follows in each mode.

RADIO mode

It will function as the PRESET STATION select buttons.

CDP mode

It will function as the TRACK UP/DOWN button.

MODE (3)

Press the MODE button to select Radio, CD (Compact Disc) or AUX (Auxiliary, if equipped).

MUTE (4, if equipped)

- Press the button to mute the sound.
- Press the button to turn off the microphone during a telephone call.

Detailed information for audio control buttons is included in the following pages in this section.

■ **CD Player : AC100A5GG / AC101A5GG / AC110A5UG / AC100A5MG / AC102A5GG / AC100A5GJ / AC100A5GL / AC110A5GN / AC110A5GE / AC110A5GL**

✻No Bluetooth logo will be shown if the *Bluetooth®* Wireless Technology feature is not supported.

SYSTEM CONTROLLERS AND FUNCTIONS

❊ Display and settings may differ depending on the selected audio.

Audio Head Unit

1. ▲ (EJECT)
- Ejects the disc.

2. RADIO
- Changes to FM/AM mode.
- Each time the key is pressed,the mode is changed in order of FM1 ➞ FM2 ➞ AM.

❊ In Setup>Display, the radio pop up screen will be displayed when [Mode Pop up] is turned On.

When the pop up screen is displayed, use the TUNE knob or keys 1 ~ 6 to select the desired mode.

3. MEDIA
- Changes to CD, USB MP3, iPod, BT MP3, AUX modes.
- Each time the key is pressed, the mode is changed in order of CD, USB, iPod, AUX, My Music, BT Audio.

❊ In Setup>Display, the media pop up screen will be displayed when [Mode Pop up] is turned On.

When the pop up screen is displayed, use the TUNE knob or keys 1 ~ 5 to select the desired mode.

4. PHONE
- Operates Phone Screen

❊ When a phone is not connected, the connection screen is displayed.

5. SEEK, TRACK
- Radio Mode : Automatically searches for broadcast frequencies.
- CD, USB, iPod, My Music modes
  - Shortly press the key (under 0.8 seconds): Moves to next or previous song (file).
  - Press and hold the key (over 0.8 seconds): Rewinds or fast-forwards the current song(file).

6. PWR/VOL knob
- Power Knob: Turns power On/Off by pressing the knob
- Volume Knob: Sets volume by turning the knob left/right

7. FM
- Changes to FM mode.

8. AM
- Changes to AM mode.

9. 1 ~ 6 (Preset)
- Radio Mode: Saves frequencies (channels) or receives saved frequencies (channels)
- CD, USB, iPod, My Music mode
  - 1 RPT : Repeat
  - 2 RDM : Random
- In the Radio, Media, Setup, and Menu pop up screen, the number menu is selected.

10. FOLDER, FOLDER
- MP3, CD, USB mode : Folder Search
- iPod mode: Moves to parent folder

11. DISP
- Each time the button is shortly pressed (under 0.8 seconds), it sets screen Off ➞ Screen On ➞ Screen Off

❊ Audio operation is maintained and only the screen will be turned Off. In the screen Off state, press any key to turn the screen On again.

12. SCAN
- Radio Mode
  - Shortly press the key (under 0.8 seconds): Previews each broadcast for 5 seconds each
  - Press and hold the key (over 0.8 seconds): Previews the broadcasts saved in Preset 1 ~ 6 for 5 seconds each.

❊ Press the SCAN key again to continue listening to the current frequency.
- CD, USB, iPod mode
  - Shortly press the key (under 0.8 seconds): Previews each song (file) for 10 seconds each

❊ Press the SCAN key again to continue listening to the current song (file).

13. SETUP CLOCK
- Shortly press the key (under 0.8 seconds) : Moves to the Display, Sound, Clock, Phone, System setting modes
- Press and hold the key (over 0.8 seconds) : Move to the Time setting screen

14. MEMU

Displays menus for the current mode.

15. TUNE knob
- Radio mode : Changes frequency by turning the knob left/right
- CD, USB, iPod mode: Searches songs (files) by turning the knob left/right

❊ When the desired song is displayed, press the knob to play the song.
- Moves focus in all selection menus and selects menus.

DISPLAY SETTINGS

Press the SETUP key ▸ Select [Display] through ◎ TUNE knob or 1 RPT key ▸ Select menu through ◎ TUNE knob

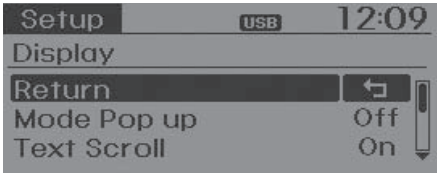

Mode Pop up

[Mode Pop up] ▸ Changes On / Off . selection mode

- During On state, press the RADIO or MEDIA key to display the mode change pop up screen.

Text Scroll

[Text Scroll] ▸ Set On / Off

- On : Maintains scroll
- Off : Scrolls only one (1) time.

Media Display

When playing an MP3 file, select the desired display info from ‘Folder/File’ or ‘Album/Artist/Song’.

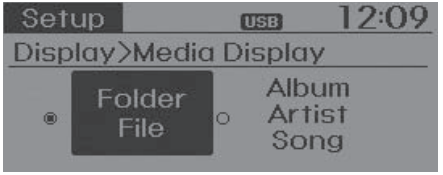

SOUND SETTINGS

Press the SETUP key▸Select [Sound] through ◎ TUNE knob or 2 RDM key▸Select menu through ◎ TUNE knob

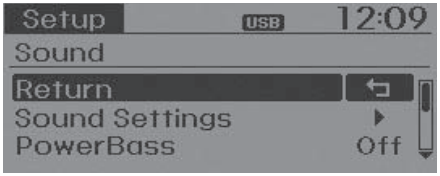

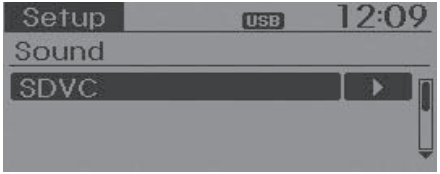

Sound Settings

This menu allows you to set the 'Bass, Middle, Treble' and the Sound Fader and Balance.

Select [Sound Settings]▸Select menu through ◎ TUNE knob▸Turn ◎ TUNE knob left/right to set

- Bass, Middle, Treble : Selects the sound tone.

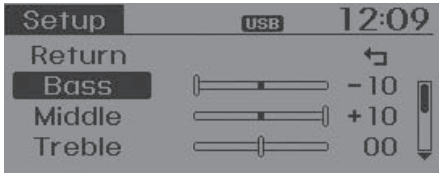

- Fader, Balance : Moves the sound fader and balance.

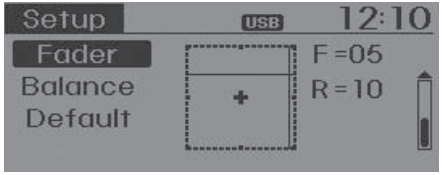

- Default : Restores default settings.

❊ Return : While adjusting values, repressing the ◎ TUNE knob will restore the parent menu.

Power Bass

This is a sound system feature that provides live bass.

Select [Power Bass] ▸Set On/Off through ◎ TUNE knob

Speed Dependent Volume Control

This feature is used to automatically control the volume level according to the speed of the vehicle.

Select [SDVC]▸Set in 4 levels [Off/Low/Mid/High] of ◎ TUNE knob

CLOCK SETTINGS

Press the SETUP CLOCK key▸Select [Clock] through ◎ TUNE knob or 3 key▸Select menu through ◎ TUNE knob

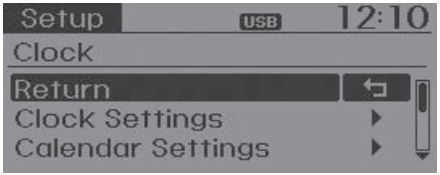

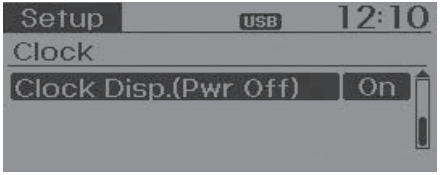

Clock Settings

This menu is used to set the time.

Select [Clock Settings]▸Set through ◎ TUNE knob▸Press ◎ TUNE knob

❊ Adjust the number currently in focus to set the [hour] and press the tune knob to set the [minute].

Calendar Settings

This menu is used to set the date (YYYY/MM/DD).

Select [Calendar Settings]▸Set through ◎ TUNE knob▸Press ◎ TUNE knob

❊ Adjust the number currently in focus to make the settings and press the tune knob to move to the next setting. (Set in order of Month/Day/Year)

Clock Display when Power is OFF

Select [Clock Disp.(Pwr Off)▸Set On / Off through ◎ TUNE knob

- On : Displays time/date on screen
- Off : Turn off.

PHONE SETUP

Press the SETUP key ▸ Select [Phone] through ◎ TUNE knob or 4 key ▸ Select menu through ◎ TUNE knob

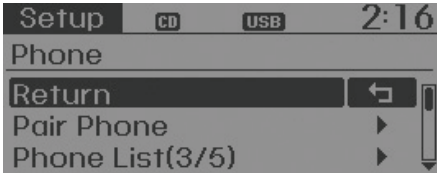

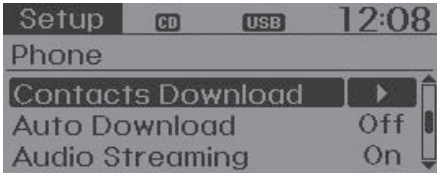

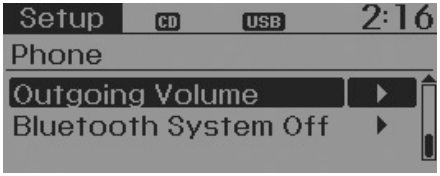

Pair Phone

⚠ CAUTION

To pair a Bluetooth® Wireless Technology enabled mobile phone, authentication and connection processes are first required. As a result, you cannot pair your mobile phone while driving the vehicle. First park your vehicle before use.

Select [Pair Phone] ▸ Set through ◎ TUNE knob

① Search for device names as displayed on your mobile phone and connect.

② Input the passkey displayed on the screen. (Passkey : 0000)

❊ The device name and passkey will be displayed on the screen for up to 3 minutes. If pairing is not completed within the 3 minutes, the mobile phone pairing process will automatically be canceled.

③ Pairing completion is displayed.

❊ In some mobile phones, pairing will automatically be followed by connection.

❊ It is possible to pair up to five *Bluetooth®* Wireless Technology enabled mobile phones.

Phone List

The names of up to 5 paired phones will be displayed.

A [▶] is displayed in front of the currently connected phone.

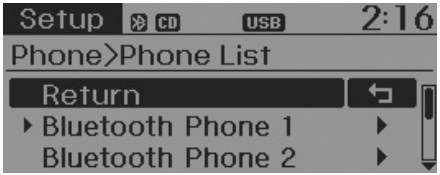

Select the desired name to setup the selected phone.

• Connecting a phone

Select [Phone List]▶Select mobile phone through ◎ TUNE knob▶Select [Connect Phone]

① Select a mobile phone that is not currently connected.

② Connect the selected mobile phone.

③ Connection completion is displayed.

❊ If a phone is already connected, disconnect the currently connected phone and select a new phone to connect.

• Disconnecting a connected phone

Select [Phone List]▶Select mobile phone through ◎ TUNE knob▶Select [Disconnect Phone]

① Select the currently connected mobile phone.

② Disconnect the selected mobile phone.

③ Disconnection completion is displayed.

• Changing connection sequence (Priority)

This is used to change the order (priority) of automatic connection for the paired mobile phones.

Select [Phone List]▶Select [Priority] through ◎ TUNE knob▶Select No. 1 Priority mobile phone

① Select [Priority].

② From the paired phones, select the phone desired for No.1 priority.

③ The changed priority sequence is displayed.

❊ Once the connection sequence (priority) is changed, the new no. 1 priority mobile phone will be connected.

- when the no. 1 priority cannot be connected: Automatically attempts to connect the most recently connected phone.
- Cases when the most recently connected phone cannot be connected: Attempts to connect in the order in which paired phones are listed.
- The connected phone will automatically be changed to No. 1 priority.

• Delete

Select [Phone List]▸Select mobile phone through ◎ TUNE knob▸Select [Delete]

① Select the desired mobile phone.
② Delete the selected mobile phone.
③ Deletion completion is displayed.
❊ When attempting to delete a currently connected phone, the phone is first disconnected.

⚠ **CAUTION**

- ***When you delete a mobile phone, the mobile phone contacts will also be erased.***
- ***For stable Bluetooth® Wireless Technology communication, delete the mobile phone from the audio and also delete the audio from your mobile phone.***

Contacts Download

This feature is used to download contacts and call histories into the audio system.

Select [Contacts Download]▸Select through ◎ TUNE knob

⚠ **CAUTION**

- ***The download feature may not be supported in some mobile phones.***
- ***If a different operation is performed while Contacts are being downloaded, downloading will be discontinued. Contacts already downloaded will be saved.***
- ***When downloading new Contacts, delete all previously saved Contacts before starting download.***

Auto Download

When connecting a mobile phone, it is possible to automatically download new Contacts and Call Histories.

Select [Auto Download]▸Set On / Off through ◎ TUNE knob

Audio Streaming

Songs (files) saved in your *Bluetooth®* Wireless Technology enabled mobile phone can be played through the audio system.

Select [Audio Streaming]▸Set On / Off through ◎ TUNE knob

⚠ **CAUTION**

The Bluetooth® Wireless Technology audio streaming feature may not be supported in some mobile phones.

Outgoing Volume

This is used to set the volume of your voice as heard by the other party while on a *Bluetooth®* Wireless Technology enabled handsfree call.

Select [Outgoing Volume]▸Set volume through ◎ TUNE knob

❊ Even while on a call, the volume can be changed by using the SEEK, TRACK key.

Bluetooth® Wireless Technology System Off

This feature is used when you do not wish to use the *Bluetooth®* Wireless Technology system.

Select [*Bluetooth®* Wireless Technology System Off]▸Set through ◎ TUNE knob

❊ If a phone is already connected, disconnect the currently connected phone and turn the *Bluetooth®* Wireless Technology system off.

Using the *Bluetooth®* Wireless Technology System

To use *Bluetooth®* Wireless Technology when the system is currently off, follow these next steps.

- Turning On *Bluetooth®* Wireless Technology through the PHONE Key

Press the PHONE key▸Screen Guidance

❊ Moves to the screen where *Bluetooth®* Wireless Technology functions can be used and displays guidance.

- Turning On *Bluetooth®* Wireless Technology through the SETUP Key

Press the SETUP key▸Select [Phone] through ◎ TUNE knob or 3 key

① A screen asking whether to turn on *Bluetooth®* Wireless Technology will be displayed.

② On the screen, select YES to turn on *Bluetooth®* Wireless Technology and display guidance.

❊ If the *Bluetooth®* Wireless Technology system is turned on, the system will automatically try to connect the most recently connected *Bluetooth®* Wireless Technology mobile phone.

⚠ CAUTION

- ***Bluetooth® Wireless Technology connection may become intermittently disconnected in some mobile phones. Follow these next steps to try again.***

1) ***Turn the Bluetooth® Wireless Technology function within the mobile phone ON/OFF and try to connect again.***
2) ***Turn the mobile phone power ON/OFF and try to connect again.***
3) ***Completely remove the mobile phone battery, reboot, and then try to connect again.***
4) ***Reboot the audio system and try to connect again***
5) ***Delete all paired devices in your mobile phone and the audio system and pair again for use.***

SYSTEM SETTINGS

Press the SETUP key ▶ Select [System] through tune knob or 5 key ▶ Select menu through ◎ TUNE knob

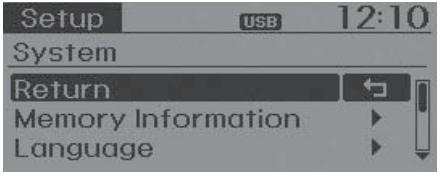

Memory Information

Displays currently used memory and total system memory.

Select [Memory Information] ▶ OK

The currently used memory is displayed on the left side while the total system memory is displayed on the right side.

Language

This menu is used to set the display and voice recognition language.

Select [Language] ▶ Set through ◎ TUNE knob

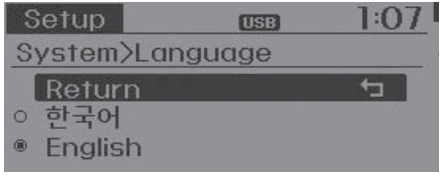

❊ The system will reboot after the language is changed.

❊ Language support by region
- English, Korean

RADIO

Changing RADIO mode

Press the RADIO key to change the mode in order of FM1 ➞ FM2 ➞ AM.

Press the FM or AM key to change the mode in order of FM1 ➞ FM2 and AM.

- When the power is off, press the RADIO key to turn on the audio system and receive radio broadcasts.
  [Mode Pop up] On state : Displays the change radio mode pop up screen.
  While the pop up screen is displayed, you can change the radio mode through the tune knob or 1 ~ 5 keys.

Adjust Volume

Turn the ◎ VOL knob left/right to adjust the volume.

SEEK

Press the RADIO (FM, AM)key ▶ SEEK, TRACK

- Shortly pressing the key (under 0.8 seconds): Changes the frequency.
- Pressing and holding the key (over 0.8 seconds): Automatically searches for the next frequency.

Preset SEEK

Press the RADIO (FM, AM) key ▶ 1 ~ 6

- Shortly pressing the key (under 0.8 seconds): Plays the frequency saved in the corresponding key.
- Pressing and holding the key (over 0.8 seconds): Pressing and holding the desired key from 1 ~ 6 will save the currently playing broadcast to the selected key and sound a BEEP.

SCAN

Press the RADIO (FM, AM) key ▶ SCAN

- Shortly pressing the key (under 0.8 seconds): The broadcast frequency increases and previews each broadcast for 5 seconds each. After scanning all frequencies, returns and plays the current broadcast frequency.
- Pressing and holding the key (over 0.8 seconds): Previews the broadcasts saved in Preset 1 ~ 6 for 5 seconds each.

Press the RADIO (FM, AM) key ▶ SCAN

- Pressing and holding the key (over 0.8 seconds): The broadcast frequency increases and previews each broadcast for 5 seconds each. After scanning all frequencies, returns and plays the current broadcast frequency.

Selecting through manual search

Turn the ◎ TUNE knob left/right to adjust the frequency.

- AC100A5GG / AC101A5GG / AC110A5UG / AC100A5GJ
  - FM : Changes by 100Khz
  - AM : Changes by 9khz
- AC100A5MG / AC110A5GN
  - FM : Changes by 200Khz
  - AM : Changes by 10khz
- AC102A5GG / AC110A5GE
  - FM : Changes by 50Khz
  - AM : Changes by 9khz
- AC100A5GL / AC110A5GL
  - FM : Changes by 100Khz
  - AM : Changes by 10khz

MENU

Within MENU key are the A.Store (Auto Store) and Info functions.

AST (Auto Store)

Press the MENU key▸Set [1 AST] through TUNE knob or 1 RPT key.

Select AST (Auto Store) to save frequencies with superior reception to presets 1 ~ 6. If no frequencies are received, then the most recently received frequency will be broadcast.

FM reception

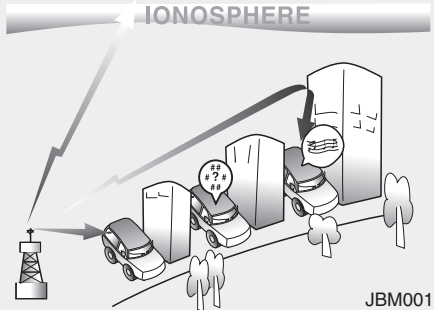

AM reception

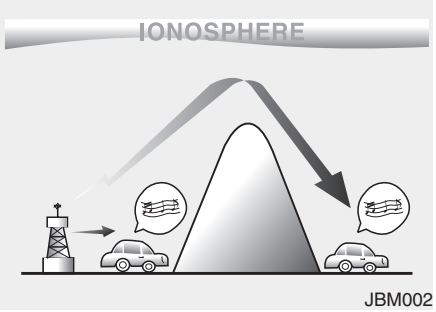

FM radio station

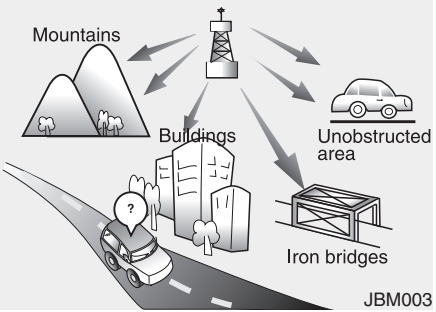

How vehicle audio works

AM and FM radio signals are broadcast from transmitter towers located around your city. They are intercepted by the radio antenna on your vehicle. This signal is then received by the radio and sent to your vehicle speakers.

When a strong radio signal has reached your vehicle, the precise engineering of your audio system ensures the best possible quality reproduction. However, in some cases the signal coming to your vehicle may not be strong and clear. This can be due to factors, such as the distance from the radio station, closeness of other strong radio stations or the presence of buildings, bridges or other large obstructions in the area.

AM broadcasts can be received at greater distances than FM broadcasts. This is because AM radio waves are transmitted at low frequencies. These long, low frequency radio waves can follow the curvature of the earth rather than travelling straight out into the atmosphere. In addition, they curve around obstructions so that they can provide better signal coverage.

FM broadcasts are transmitted at high frequencies and do not bend to follow the earth's surface. Because of this, FM broadcasts generally begin to fade at short distances from the station. Also, FM signals are easily affected by buildings, mountains, or other obstructions. These can result in certain listening conditions which might lead you to believe a problem exists with your radio. The following conditions are normal and do not indicate radio trouble:

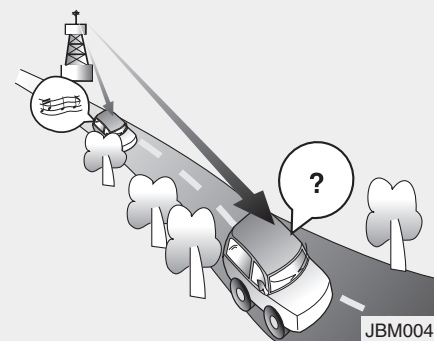

- Fading - As your vehicle moves away from the radio station, the signal will weaken and sound will begin to fade. When this occurs, we suggest that you select another stronger station.
- Flutter/Static - Weak FM signals or large obstructions between the transmitter and your radio can disturb the signal causing static or fluttering noises to occur. Reducing the treble level may lessen this effect until the disturbance clears.

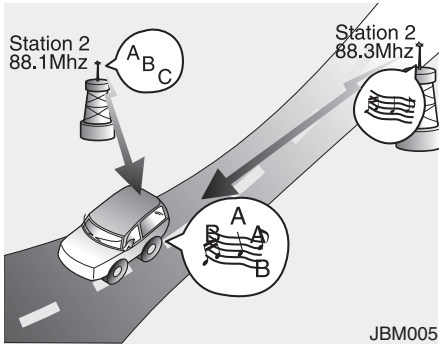

- Station Swapping - As a FM signal weakens, another more powerful signal near the same frequency may begin to play. This is because your radio is designed to lock onto the clearest signal. If this occurs, select another station with a stronger signal.
- Multi-Path Cancellation - Radio signals being received from several directions can cause distortion or fluttering. This can be caused by a direct and reflected signal from the same station, or by signals from two stations with close frequencies. If this occurs, select another station until the condition has passed.

Using a cellular phone or a two-way radio

When a cellular phone is used inside the vehicle, noise may be produced from the audio system. This does not mean that something is wrong with the audio equipment. In such a case, use the cellular phone at a place as far as possible from the audio equipment.

⚠ CAUTION

When using a communication system such as a cellular phone or a radio set inside the vehicle, a separate external antenna must be fitted. When a cellular phone or a radio set is used with an internal antenna alone, it may interfere with the vehicle's electrical system and adversely affect safe operation of the vehicle.

⚠ WARNING

Do not use a cellular phone while driving. Stop at a safe location to use a cellular phone.

BASIC METHOD OF USE : Audio CD / MP3 CD / USB / iPod / My Music

Press the MEDIA key to change the mod mode in order of CD➞USB(iPod)➞AUX ➞My Music➞BT Audio.

The folder/file name is displayed on the screen.

❊ The CD is automatically played when a CD is inserted.

❊ The USB music is automatically played when a USB is connected.

Press the SETUP key ▸ Select [1 Display] through the TUNE knob or 1 RPT key ▸ Select [Song Info] ▸ Media Display

- [Song Info] : The screen display info can be changed to Album/Artist/ Song name.

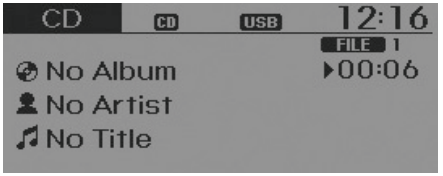

Repeat

While song (file) is playing ▸ 1 RPT (RPT) key

Audio CD, MP3 CD, USB, iPod, My Music mode: RPT on screen

- To repeat one song (Shortly pressing the key (under 0.8 seconds)): Repeats the current song.

MP3 CD, USB mode: FLD.RPT on screen

- To repeat folder (Pressing and holding the key (over 0.8 seconds)): repeats all files within the current folder.

❊ Press the 1 RPT key again to turn off repeat.

Random

While song (file) is playing ▸ 2 RDM (RDM) key

Audio CD, My Music mode: RDM on screen

- Random (Shortly pressing the key (under 0.8 seconds)): Plays all songs in random order.

MP3 CD, USB mode: FLD.RDM on screen

- Folder Random (Shortly pressing the key (under 0.8 seconds)): Plays all files within the current folder in random order.

iPod mode: ALB RDM on screen

- Album Random (Shortly pressing the key (under 0.8 seconds)): Plays all files within albums of the current category in random order.

MP3 CD, USB, iPod mode: ALL RDM on screen

- All Random (pressing and holding the key (over 0.8 seconds)): Plays all files in random order.

❊ Press the 2 RDM key again to turn off repeat.

Changing Song/File

While song (file) is playing ▶ TRACK key

- Shortly pressing the key (under 0.8 seconds): Plays the current song from the beginning.

❊ If the TRACK key is pressed again within 1 second, the previous song is played.

- Pressing and holding the key (over 0.8 seconds): Rewinds the song.

While song (file) is playing ▶ SEEK key

- Shortly pressing the key (under 0.8 seconds): Plays the next song.
- Pressing and holding the key (over 0.8 seconds): Fast forwards the song.

Scan

While song (file) is playing ▶ SCAN key

- Shortly pressing the key (under 0.8 seconds) : Scans all songs from the next song for 10 seconds each.

While song (file) is playing ▶ SCAN key

- Pressing and holding the key (over 0.8 seconds) : Scans all songs for 10 seconds starting from the next song.

❊ Press the SCAN key again to turn off.

❊ The SCAN function is not supported in iPod mode.

Folder Search : MP3 CD, USB Mode

While file is playing ▶ FORDER (Folder Up) key

- Searches the next folder.

While file is playing ▶ FORDER (Folder Down) key

- Searches the parent folder.

❊ If a folder is selected by pressing the TUNE knob, the first file within the selected folder will be played.

❊ In iPod mode, moves to the Parent Folder.

Searching Songs (File)

- Turning TUNE knob : Searches for songs (files)
- Pressing TUNE knob : Plays selected song (file).

MENU : Audio CD

Press the CD MP3 mode MENU key to set the Repeat, Random, Information features.

Repeat

Press the MENU key▸Set [①RPT] through the ◎ TUNE knob or 1 RPT key to repeat the current song.

❊ Press RPT again to turn off.

Random

Press the MENU key▸Set [②RDM] through the ◎ TUNE knob or 2 RDM key to randomly play songs within the current folder.

❊ Press RDM again to turn off.

Information

Press the MENU key▸Set [③Info] through the ◎ TUNE knob or 3 key to display information of the current song.

❊ Press the MENU key to turn off info display.

MENU : MP3 CD / USB

Press the CD MP3 mode MENU key to set the Repeat, Folder Random, Folder Repeat, All Random, Information, and Copy features.

Repeat

Press the MENU key▸Set [①RPT] through the ◎ TUNE knob or 1 RPT key to repeat the current song.

❊ Press RPT again to turn off.

Folder Random

Press the MENU key▸Set [②F.RDM] through the ◎ TUNE knob or 2 RDM key to randomly play songs within the current folder.

❊ Press F.RDM again to turn off.

Folder Repeat

Press the MENU key▸Set [③F.RPT] through the ◎ TUNE knob or 3 key to repeat songs within the current folder.

❊ Press F.RPT again to turn off.

All Random

Press the MENU key▸Set [④A.RDM] through the ◎TUNE knob or 4 key to randomly play all songs within the CD.

❊ Press A.RDM again to turn off.

Information

Press the MENU key▸Set [⑤Info] through the ◎ TUNE knob or 5 key to display information of the current song.

❊ Press the MENU key to turn off info display.

Copy

Press the MENU key▸Set [⑥Copy] through the ◎ TUNE knob or 6 key.

This is used to copy the current song into My Music. You can play the copied Music in My Music mode.

❊ If another key is pressed while copying is in progress, a pop up asking you whether to cancel copying is displayed.

❊ If another media is connected or inserted (USB, CD, iPod, AUX) while copying is in progress, copying is canceled.

❊ Music will not be played while copying is in progress.

MENU : iPod

In iPod mode, press the MENU key to set the Repeat, Album Random, All Random, and Information features.

Repeat

Press the MENU key▸Set [①RPT] through the ◎ TUNE knob or 1 RPT key to repeat the current song.

❊ Press RPT again to turn repeat off.

Album Random

Press the MENU key▸Set [②Alb.RDM] through the ◎ TUNE knob or 2 RDM key.

Plays albums within the currently playing category in random order.

❊ Press Alb.RDM again to turn off.

All Random

Press the MENU key▸Set [3A.RDM] through the ◎ TUNE knob or 3 key.

Plays all songs within the currently playing category in random order.

❊ Press A.RDM again to turn off.

Information

Press the MENU key▸Set [4Info] through the ◎ TUNE knob or 4 key.

Displays information of the current song.

❊ Press the MENU key to turn off info display.

MENU : My Music Mode (for Bluetooth equipped model)

In My Music mode, press the MENU key to set the Repeat, Random, Information, Delete, Delete All, and Delete Selection features.

Repeat

Press the MENU key▸Set [①RPT] through the ◎ TUNE knob or 1 RPT key.

Repeats the currently playing song.

❊ Press RPT again to turn repeat off.

Random

Press the MENU key▸Set [②RDM] through the ◎ TUNE knob or 2 RDM key.

Plays all songs within the currently playing folder in random order.

❊ Press RDM again to turn random off.

Information

Press the MENU key▸Set [③Info] through the ◎ TUNE knob or 3 key.

Displays information of the current song.

❊ Press the MENU key to turn off info display.

Delete

Press the MENU key▸Set [④Delete] through the ◎ TUNE knob or 4 key.

Deletes currently playing file

In the play screen, pressing delete will delete the currently playing song.

Deletes file from list

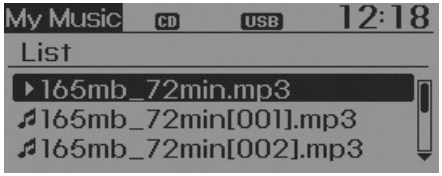

① Select the file you wish to delete by using the ◎ TUNE knob.

② Press the MENU key and select the delete menu to delete the selected file.

Delete All

Press the MENU key▸Set [⑤Del.All] through the ◎ TUNE knob or 5 key.

Deletes all songs of My Music.

Delete Selection

Press the MENU key▸Set [⑥Del.Sel] through the ◎ TUNE knob or 6 key.

Songs within My Music are selected and deleted.

① Select the songs you wish to delete from the list.

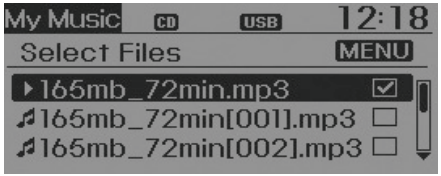

② After selecting, press the MENU key and select the delete menu.

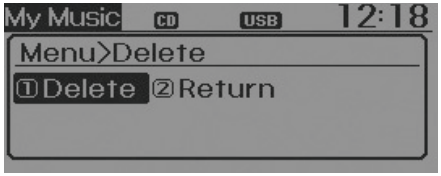

AUX

AUX is used to play external MEDIA currently connected with the AUX terminal.

AUX mode will automatically start when an external device is connected with the AUX terminal.

If an external device is connected, you can also press the MEDIA key to change to AUX mode.

❊ AUX mode cannot be started unless there is an external device connected to the AUX terminal.

❊ NOTICE FOR USING THE AUX

- **Fully insert the AUX cable into the AUX terminal for use.**

Caring for disc

- If the temperature inside the car is too high, open the car windows to ventilate before using the system.
- It is illegal to copy and use MP3/WMA files without permission. Use CDs that are created only by lawful means.
- Do not apply volatile agents, such as benzene and thinner, normal cleaners and magnetic sprays made for analogue disc onto CDs.
- To prevent the disc surface from getting damaged, hold CDs by the edges or the center hole only.
- Clean the disc surface with a piece of soft cloth before playback (wipe it from the center to the outside edge).
- Do not damage the disc surface or attach pieces of sticky tape or paper.
- Make certain only CDs are inserted into the CD player (Do not insert more than one CD at a time).
- Keep CDs in their cases after use to protect them from scratches or dirt.
- Depending on the type of CD-R/CD-RW CDs, certain CDs may not operate normally according to manufacturing companies or making and recording methods. In such circumstances, continued use may cause malfunctions to your audio system.

✻ NOTICE - Playing an Incompatible Copy Protected Audio CD

Some copy protected CDs, which do not comply with international audio CD standards (Red Book), may not play on your car audio. Please note that inabilities to properly play a copy protected CD may indicate that the CD is defective, not the CD player.

NOTE:

Order of playing files (folders) :

1. **Song playing order : ① to ⑭ sequentially.**
2. **Folder playing order :**

✻ If no song file is contained in the folder, that folder is not displayed.

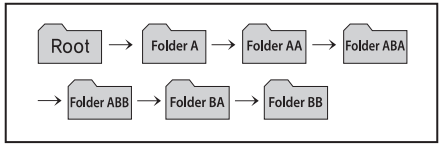

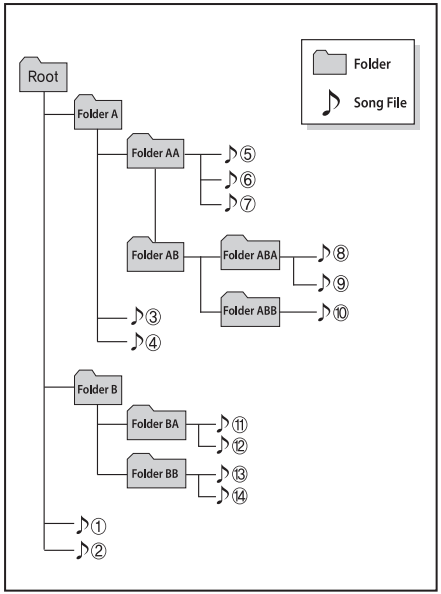

⚠ CAUTION IN USING USB DEVICE

- *To use an external USB device, make sure the device is not connected when starting up the vehicle. Connect the device after starting up.*
- *If you start the engine when the USB device is connected, it may damage the USB device. (USB flashdrives are very sensitive to electric shock.)*
- *If the engine is started up or turned off while the external USB device is connected, the external USB device may not work.*
- *The System may not play inauthentic MP3 or WMA files.*
  1) *It can only play MP3 files with the compression rate between 8Kbps~320Kbps.*
  2) *It can only play WMA music files with the compression rate between 8Kbps~320Kbps.*
- *Take precautions for static electricity when connecting or disconnecting the external USB device.*

(Continued)

(Continued)

- *An encrypted MP3 PLAYER is not recognizable.*
- *Depending on the condition of the external USB device, the connected external USB device can be unrecognizable.*
- *When the formatted byte/sector setting of External USB device is not either 512BYTE or 2048BYTE, then the device will not be recognized.*
- *Use only a USB device formatted to FAT 12/16/32.*
- *USB devices without USB I/F authentication may not be recognizable.*
- *Make sure the USB connection terminal does not come in contact with the human body or other objects.*
- *If you repeatedly connect or disconnect the USB device in a short period of time, it may break the device.*
- *You may hear a strange noise when connecting or disconnecting a USB device.*

(Continued)

(Continued)

- *If you disconnect the external USB device during playback in USB mode, the external USB device can be damaged or may malfunction. Therefore, disconnect the external USB device when the audio is turned off or in another mode. (e.g, Radio, CD)*
- *Depending on the type and capacity of the external USB device or the type of the files stored in the device, there is a difference in the time taken for recognition of the device.*
- *Do not use the USB device for purposes other than playing music files.*
- *Playing videos through the USB is not supported.*
- *Use of USB accessories such as rechargers or heaters using USB I/F may lower performance or cause trouble.*
- *If you use devices such as a USB hub purchased separately, the vehicle's audio system may not recognize the USB device. In that case, connect the USB device directly to the multimedia terminal of the vehicle.*

(Continued)

(Continued)

- *If the USB device is divided by logical drives, only the music files on the highest-priority drive are recognized by car audio.*
- *Devices such as MP3 Player/ Cellular phone/Digital camera can be unrecognizable by standard USB I/F can be unrecognizable.*
- *Charging through the USB may not be supported in some mobile devices.*
- *USB HDD or USB types liable to connection failures due to vehicle vibrations are not supported. (i-stick type)*
- *Some non-standard USB devices (METAL COVER TYPE USB) can be unrecognizable.*
- *Some USB flash memory readers (such as CF, SD, micro SD, etc.) or external-HDD type devices can be unrecognizable.*
- *Music files protected by DRM (DIGITAL RIGHTS MANAGEMENT) are not recognizable.*

(Continued)

(Continued)

- *The data in the USB memory may be lost while using this audio. Always back up important data on a personal storage device.*
- *Please avoid using USB memory products which can be used as key chains or cellular phone accessories as they could cause damage to the USB jack. Please make certain only to use plug type connector products as shown below.*

✻ NOTICE FOR USING THE iPod® DEVICE

- Some iPod models may not support communication protocol and files may not properly play.
  Supported iPod models:
  - iPod Mini
  - iPod 4th(Photo) ~ 6th(Classic) generation
  - iPod Nano 1st~4th generation
  - iPod Touch 1st~2nd generation
- The order of search or playback of songs in the iPod can be different from the order searched in the audio system.
- If the iPod disabled due to its own malfunction, reset the iPod. (Reset: Refer to iPod manual)
- An iPod may not operate normally on low battery.
- Some iPod devices, such as the iPhone, can be connected through the *Bluetooth®* Wireless Technology interface. The device must have audio *Bluetooth®* Wireless Technology capability (such as for stereo headphone *Bluetooth®* Wireless Technology). The device can play, but it will not be controlled by the audio system.

(Continued)

(Continued)

- To use iPod features within the audio, use the cable provided upon purchasing an iPod device.
- Skipping or improper operation may occur depending on the characteristics of your iPod/Phone device.
- If your iPhone is connected to both the *Bluetooth®* Wireless Technology and USB, the sound may not be properly played. In your iPhone, select the Dock connector or *Bluetooth®* Wireless Technology to change the sound output (source).

⚠ CAUTION IN USING THE iPod® DEVICE

- *When connecting iPod with the iPod Power Cable, insert the connector to the multimedia socket completely. If not inserted completely, communications between iPod and audio may be interrupted.*
- *When adjusting the sound effects of the iPod and the audio system, the sound effects of both devices will overlap and might reduce or distort the quality of the sound.*
- *Deactivate (turn off) the equalizer function of an iPod when adjusting the audio system's volume, and turn off the equalizer of the audio system when using the equalizer of an iPod.*
- *When not using iPod with car audio, detach the iPod cable from iPod. Otherwise, iPod may remain in accessory mode, and may not work properly.*

✻ NOTICE FOR USING THE My Music

- **Even if memory is available, a maximum of 6,000 songs can be stored.**
- **The same song can be copied up to 1,000 times.**
- **Memory info can be checked in the System menu of Setup.**

Bluetooth® Wireless Technology AUDIO

What is *Bluetooth®* Wireless Technology?

Bluetooth® Wireless Technology is a wireless technology that allows multiple devices to be connected in a short range, low-powered devices like hands-free, stereo headset, wireless remote controller, etc. For more information, visit the *Bluetooth®* Wireless Technology website at www.Bluetooth.com

Before using *Bluetooth®* Wireless Technology audio features

- *Bluetooth®* Wireless Technology audio may not be supported depending on the compatibility of your *Bluetooth®* Wireless Technology mobile phone.
- In order to use *Bluetooth®* Wireless Technology audio, you must first pair and connect the *Bluetooth®* Wireless Technology mobile phone.
- *Bluetooth®* Wireless Technology audio can be used only when the [Audio Streaming] of Phone is turned On.

❊ Setting *Bluetooth®* Wireless Technology Audio Streaming : Press the SETUP key ▶ Select [Phone] through the tune knob or 3 key ▶ Select [Audio Streaming] through the TUNE knob ▶ Set On/Off

Starting *Bluetooth®* Wireless Technology Audio

- Press the MEDIA key to change the mode in order of CD➡USB➡AUX➡My Music➡BT Audio.
- If BT Audio is selected, *Bluetooth®* Wireless Technology audio will start playing.

❊ Audio may not automatically start playing in some mobile phones.

Using the *Bluetooth®* Wireless Technology audio features

- Play / Stop

Press the TUNE knob to play and pause the current song.

❊ The previous song / next song / play / pause functions may not be supported in some mobile phones.

PHONE

Before using the *Bluetooth®* Wireless Technology phone features

- In order to use *Bluetooth®* Wireless Technology phone, you must first pair and connect the *Bluetooth®* Wireless Technology mobile phone.
- If the mobile phone is not paired or connected, it is not possible to enter Phone mode. Once a phone is paired or connected, the guidance screen will be displayed.
- If Priority is set upon vehicle ignition (IGN/ACC ON), the *Bluetooth®* Wireless Technology phone will be automatically connected. Even if you are outside, the *Bluetooth®* Wireless Technology phone will be automatically connected once you are in the vicinity of the vehicle. If you do not want automatic *Bluetooth®* Wireless Technology phone connection, set the *Bluetooth®* Wireless Technology power to OFF.

Making a call using the Steering remote controller

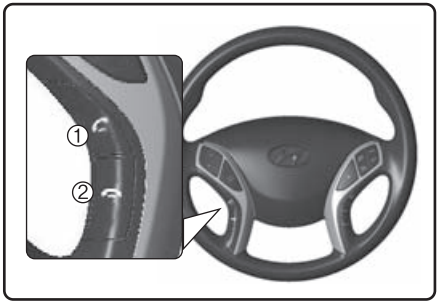

1. button : Places and transfers calls.
2. button : Ends calls or cancels functions.

- Check call history and making call

① Shortly press (under 0.8 seconds) the key on the steering remote controller.

② The call history list will be displayed on the screen.

③ Press the key again to connect a call to the selected number.

- Redialing the most recently called number

① Press and hold (over 0.8 seconds) the key on the steering remote controller.

② The most recently called number is redialed.

Phone MENU

Press the PHONE key to display three menus (Call History, Phone book, Phone Setup).

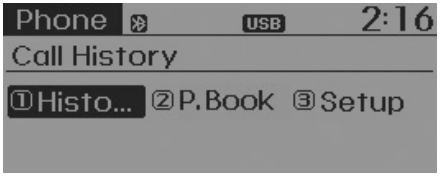

Call History

Press the PHONE key▸Set [①Call History] through the ◎ TUNE knob or 1 RPT key.

The call history is displayed and can be used to select a number and make a call.

If call history does not exist, a screen asking whether to download call history is displayed. (The download feature may not be supported in some mobile phones)

Phone Book

Press the PHONE key▸Set [②P. Book] through the ◎ TUNE knob or 2 RDM key.

The Contacts are displayed and can be used to select a number and make a call.

❊ If more than one number is saved to one contact, then a screen showing the mobile phone number, house and office number is displayed. Select the desired number to make the call.

❊ If Contacts do not exist, a screen asking whether to download Contacts is displayed. (The download feature may not be supported in some mobile phones)

Phone Setup

Press the PHONE key▸Set [③Phone Setup] through the ◎ TUNE knob or 3 key.

The *Bluetooth®* Wireless Technology mobile phone setup screen is displayed. For more information, refer to “Phone Setup”.

⚠ CAUTION IN USING *BLUETOOTH®* WIRELESS TECHNOLOGY CELLULAR PHONE

- *Do not use a cellular phone or perform Bluetooth® Wireless Technology settings (e.g. pairing a phone) while driving.*
- *Some Bluetooth® Wireless Technology -enabled phones may not be recognized by the system or fully compatible with the system.*
- *Before using Bluetooth® Wireless Technology related features of the audio system, refer your phone's User's Manual for phone-side Bluetooth® Wireless Technology operations.*
- *The phone must be paired to the audio system to use Bluetooth® Wireless Technology related features.*
- *You will not be able to use the hands-free feature when your phone (in the car) is outside of the cellular service area (e.g. in a tunnel, in a underground, in a mountainous area, etc.).*

(Continued)

(Continued)

- *If the cellular phone signal is poor or the vehicles interior noise is too loud, it may be difficult to hear the other person's voice during a call.*
- *Do not place the phone near or inside metallic objects, otherwise communications with Bluetooth® Wireless Technology system or cellular service stations can be disturbed.*
- *While a phone is connected through Bluetooth® Wireless Technology your phone may discharge quicker than usual for additional ® Wireless Technology-related operations.*
- *Some cellular phones or other devices may cause interference noise or malfunction to audio system. In this case, store the device in a different location may resolve the condition.*
- *Phone contact names should be saved in English or they may not be displayed correctly.*

(Continued)

(Continued)

- *If Priority is set upon vehicle ignition(IGN/ACC ON), the Bluetooth® Wireless Technology phone will be automatically connected.*
  Even if you are outside, the Bluetooth® Wireless Technology phone will be automatically connected once you are in the vicinity of the vehicle.
  If you do not want automatic Bluetooth® Wireless Technology connection, turn the Bluetooth® Wireless Technology feature off.
- *The hands-free call volume and quality may differ depending on the mobile phone type.*

⚠ CAUTION

- *Bluetooth® Wireless Technology features can be used only when the mobile phone has been paired and connected with the device. For more information on pairing and connecting Bluetooth® Wireless Technology enabled mobile phones, refer to the "Phone Setup" section.*

  When a Bluetooth® Wireless Technology mobile phone is connected, a ( ) icon will appear at the top of the screen. If a ( ) icon is not displayed, this indicates that a Bluetooth® Wireless Technology enabled device has not been connected. Your must connect the device before use. For more information on Bluetooth® Wireless Technology mobile phones, refer to the "Phone Setup" section.

  Pairing and connecting a Bluetooth® Wireless Technology enabled mobile phone will work only when the Bluetooth® Wireless Technology option within your mobile phone has been turned on. (Methods of turning on the Bluetooth® Wireless Technology enabled feature may differ depending on the mobile phone.)

(Continued)

(Continued)

In some mobile phones, starting the ignition while talking through Bluetooth® Wireless Technology enabled handsfree call will result in the call becoming disconnected. (Switch the call back to your mobile phone when starting the ignition.)

Some features may not be supported in some Bluetooth® Wireless Technology mobile phone and devices.

Bluetooth® Wireless Technology enabled operation may be unstable depending on the communication state.

Driving your vehicle

Before driving 5-4
- Before entering vehicle 5-4
- Necessary inspections 5-4
- Before starting 5-4

Key positions 5-6
- Illuminated ignition switch.....5-6
- Ignition switch position.....5-6
- Starting the engine 5-7

Engine start/stop button 5-10
- Illuminated engine start/stop button 5-10
- Engine start/stop button position.....5-10
- Starting the engine 5-13

Manual transaxle 5-16
- Manual transaxle operation 5-16
- Good driving practices 5-18

Automatic transaxle 5-19
- Automatic transaxle operation.....5-19
- Good driving practices 5-23

Active ECO system.....5-25
- Active ECO operation 5-25
- Limitation of Active ECO operation 5-25

Brake system.....5-26
- Power brakes 5-26
- Parking brake - Hand type.....5-27
- Electric parking brake (EPB) 5-29
- Anti-lock brake system (ABS) 5-33
- Electronic stability progam (ESP) 5-35
- Vehicle stability management (VSM) 5-38
- Good braking practices.....5-39

Cruise control system.....5-41
- Cruise control switch 5-42
- To set cruise control speed 5-42
- To increase cruise control set speed.....5-43
- To decrease the cruising speed 5-43
- To temporarily accelerate with the cruise control on 5-43
- To cancel cruise control, do one of the following 5-44
- To resume cruising speed at more than approximately 30 km/h (20 mph) 5-44
- To turn cruise control off, do one of the following....5-45

Economical operation 5-45

Special driving conditions 5-47
- Hazardous driving conditions 5-47
- Rocking the vehicle 5-47
- Smooth cornering 5-48
- Driving at night 5-48
- Driving in the rain.....5-48
- Driving in flooded areas 5-49
- Highway driving 5-49

Winter driving 5-50
- Snowy or Icy conditions 5-50

• Use high quality ethylene glycol coolant 5-52
• Check battery and cables 5-52
• Change to “winter weight” oil if necessary 5-53
• Check spark plugs and ignition system.....5-53
• To keep locks from freezing 5-53
• Use approved window washer anti-freeze in system 5-53
• Don’t let your parking brake freeze 5-53
• Don’t let ice and snow accumulate underneath 5-53
• Carry emergency equipment 5-53
Trailer towing 5-54
• Hitches 5-55
• Safety chains 5-55
• Trailer brakes.....5-56
• Driving with a trailer 5-56
• Maintenance when trailer towing 5-59
• If you do decide to pull a trailer 5-60
Vehicle weight 5-62

⚠ WARNING - ENGINE EXHAUST CAN BE DANGEROUS!

Engine exhaust fumes can be extremely dangerous. If, at any time, you smell exhaust fumes inside the vehicle, open the windows immediately.

- **Do not inhale exhaust fumes.**
  Exhaust fumes contain carbon monoxide, a colorless, odorless gas that can cause unconsciousness and death by asphyxiation.
- **Be sure the exhaust system does not leak.**
  The exhaust system should be checked whenever the vehicle is raised to change the oil or for any other purpose. If you hear a change in the sound of the exhaust or if you drive over something that strikes the underneath side of the car, we recommend that the exhaust system be checked as soon as possible by an authorized HYUNDAI dealer.
- **Do not run the engine in an enclosed area.**
  Letting the engine idle in your garage, even with the garage door open, is a hazardous practice. Never run the engine in your garage any longer than it takes to start the engine and back the vehicle out.
- **Avoid idling the engine for prolonged periods with people inside the vehicle.**
  If it is necessary to idle the engine for a prolonged period with people inside the vehicle, be sure to do so only in an open area with the air intake set at "Fresh" and fan operating at one of the higher speeds so fresh air is drawn into the interior.

If you must drive with the trunk lid open because you are carrying objects that make this necessary:

1. Close all windows.
2. Open side vents.
3. Set the air intake control at "Fresh", the air flow control at "Floor" or "Face" and the fan at one of the higher speeds.

To assure proper operation of the ventilation system, be sure the ventilation air intakes located just in front of the windshield are kept clear of snow, ice, leaves or other obstructions.

BEFORE DRIVING

Before entering vehicle

- Be sure that all windows, outside mirror(s), and outside lights are clean.
- Check the condition of the tires.
- Check under the vehicle for any sign of leaks.
- Be sure there are no obstacles behind you if you intend to back up.

Necessary inspections

Fluid levels, such as engine oil, engine coolant, brake fluid, and washer fluid should be checked on a regular basis, with the exact interval depending on the fluid. Further details are provided in section 7, “Maintenance”.

⚠ WARNING

Driving while distracted can result in a loss of vehicle control, that may lead to an accident, severe personal injury, and death. The driver’s primary responsibility is in the safe and legal operation of a vehicle, and use of any handheld devices, other equipment, or vehicle systems which take the driver’s eyes, attention and focus away from the safe operation of a vehicle or which are not permissible by law should never be used during operation of the vehicle.

Before starting

- Close and lock all doors.
- Position the seat so that all controls are easily reached.
- Adjust the inside and outside rearview mirrors.
- Be sure that all lights work.
- Check all gauges.
- Check the operation of warning lights when the ignition switch is turned to the ON position.
- Release the parking brake and make sure the brake warning light goes out.

For safe operation, be sure you are familiar with your vehicle and its equipment.

⚠ WARNING

All passengers must be properly belted whenever the vehicle is moving. Refer to “Seat belts” in section 3 for more information on their proper use.

⚠ WARNING

Always check the surrounding areas near your vehicle for people, especially children, before putting a car into D (Drive) or R (Reverse).

⚠ WARNING - Driving under the influence of alcohol or drugs

Drinking and driving is dangerous. Drunk driving is the number one contributor to the highway death toll each year. Even a small amount of alcohol will affect your reflexes, perceptions and judgment. Driving while under the influence of drugs is as dangerous or more dangerous than driving drunk.

You are much more likely to have a serious accident if you drink or take drugs and drive.

If you are drinking or taking drugs, don't drive. Do not ride with a driver who has been drinking or taking drugs. Choose a designated driver or call a cab.

⚠ WARNING

- **When you intend to park or stop the vehicle with the engine on, be careful not to depress the accelerator pedal for a long period of time. It may overheat the engine or exhaust system and cause fire.**
- **When you make a sudden stop or turn the steering wheel rapidly, loose objects may drop on the floor and it could interfere with the operation of the foot pedals, possibly causing an accident. Keep all things in the vehicle safely stored.**
- **If you do not focus on driving, it may cause an accident. Be careful when operating what may disturb driving such as audio or heater. It is the responsibility of the driver to always drive safely.**

KEY POSITIONS

■ Type A

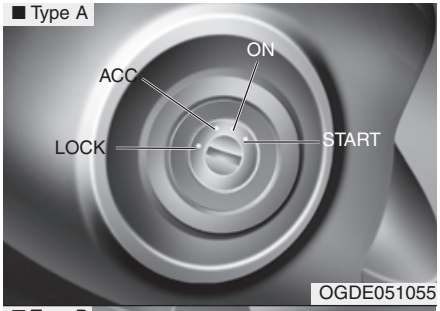

OGDE051055

■ Type B

OUN036001

Illuminated ignition switch (if equipped)

Whenever a front door is opened, the ignition switch will be illuminated for your convenience, provided the ignition switch is not in the ON position. The light will go off immediately when the ignition switch is turned on or go off after about 30 seconds when the door is closed.

Ignition switch position

LOCK

The steering wheel locks to protect against theft. The ignition key can be removed only in the LOCK position. When turning the ignition switch to the LOCK position, push the key inward at the ACC position and turn the key toward the LOCK position.

ACC (Accessory)

The steering wheel is unlocked and electrical accessories are operative.

✻ NOTICE

If difficulty is experienced turning the ignition switch to the ACC position, turn the key while turning the steering wheel right and left to release the tension.

ON

The warning lights can be checked before the engine is started. This is the normal running position after the engine is started.

Do not leave the ignition switch ON if the engine is not running to prevent battery discharge.

START

Turn the ignition switch to the START position to start the engine. The engine will crank until you release the key; then it returns to the ON position. The brake warning light can be checked in this position.

⚠ WARNING - Ignition switch

- **Never turn the ignition switch to LOCK or ACC while the vehicle is moving. This would result in loss of directional control and braking function, which could cause an accident.**
- **Before leaving the driver's seat, always make sure the shift lever is engaged in 1st gear for the manual transaxle or P (Park) for the automatic transaxle, set the parking brake fully and shut the engine off. Unexpected and sudden vehicle movement may occur if these precautions are not taken.**
- **Never reach for the ignition switch, or any other controls through the steering wheel while the vehicle is in motion. The presence of your hand or arm in this area could cause a loss of vehicle control, an accident and serious bodily injury or death.**
- **Do not place any movable objects around the driver's seat as they may move while driving, interfere with the driver and lead to an accident.**

Starting the engine

⚠ WARNING

Always wear appropriate shoes when operating your vehicle. Unsuitable shoes (high heels, ski boots,etc.) may interfere with your ability to use the brake and accelerator pedal, and clutch (if equipped).

Starting the gasoline engine

1. Make sure the parking brake is applied.
2. **Manual Transaxle** - Depress the clutch pedal fully and shift the transaxle into Neutral. Keep the clutch pedal and brake pedal depressed while turning the ignition switch to the start position.

   Automatic Transaxle - Place the transaxle shift lever in P (Park). Depress the brake pedal fully.

   You can also start the engine when the shift lever is in the N (Neutral) position.
3. Turn the ignition switch to START and hold it there until the engine starts (a maximum of 10 seconds), then release the key.
4. In extremely cold weather (below -18°C/0°F) or after the vehicle has not been operated for several days, let the engine warm up without depressing the accelerator pedal.

Whether the engine is cold or warm, it should be started ***without depressing the accelerator pedal.***

⚠ CAUTION

If the engine stalls while you are in motion, do not attempt to move the shift lever to the P (Park) position. If traffic and road conditions permit, you may put the shift lever in the N (Neutral) position while the vehicle is still moving and turn the ignition switch to the START position in an attempt to restart the engine.

⚠ CAUTION

Do not engage the starter for more than 10 seconds. If the engine stalls or fails to start, wait 5 to 10 seconds before re-engaging the starter. Improper use of the starter may damage it.

Starting the diesel engine

To start the diesel engine when the engine is cold, it has to be pre-heated before starting the engine and then have to be warmed up before starting to drive.

1. Make sure the parking brake is applied.
2. **Manual Transaxle** - Depress the clutch pedal fully and shift the transaxle into Neutral. Keep the clutch pedal and brake pedal depressed while turning the ignition switch to the start position.

   Automatic Transaxle - Place the transaxle shift lever in P(park). Depress the brake pedal fully.

   You can also start the engine when the shift lever is in the N(neutral) position.

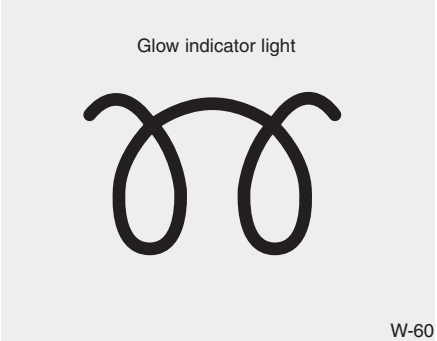

3. Turn the ignition switch to the ON position to pre-heat the engine. Then the glow indicator light will illuminate.
4. If the glow indicator light goes out, turn the ignition switch to the START position and hold it there until the engine starts (a maximum of 10 seconds), then release the key.

✻ NOTICE

If the engine does not start within 10 seconds after the preheating is completed, turn the ignition key once more to the LOCK position for 10 seconds, and then to the ON position, in order to preheat again.

Starting and stopping the engine for turbocharger intercooler

1. Do not race or accelerate the engine immediately after starting.

   If the engine is cold, idle for several seconds before sufficient lubrication is ensured in the turbocharger unit.

2. After high speed or extended driving, requiring a heavy engine load, run the engine on idle condition about 1 minute before turning it off.

   This idle time will allow the turbocharger to cool prior to shutting the engine off.

⚠ **CAUTION**

Do not turn off the engine immediately after it has been subjected to a heavy load. Doing so may cause severe damage to the engine or turbo charger unit.

ENGINE START/STOP BUTTON (IF EQUIPPED)

OGD051005

Illuminated engine start/stop button

Whenever the front door is opened, the engine start/stop button will illuminate for your convenience. The light will go off after about 30 seconds when the door is closed. It will also go off immediately when the theft-alarm system is armed.

Engine start/stop button position

OFF

Not illuminated

• With manual transaxle

To turn off the engine (START/RUN position) or vehicle power (ON position), stop the vehicle then press the engine start/stop button.

• With automatic transaxle

To turn off the engine (START/RUN position) or vehicle power (ON position), press the engine start/stop button with the shift lever in the P (Park) position. When you press the engine start/stop button without the shift lever in the P (Park) position, the engine start/stop button will not change to the OFF position but to the ACC position.

The steering wheel locks when the engine start/stop button is in the OFF position to protect you against theft. It locks when the door is opened.

If the steering wheel is not locked properly when you open the driver's door, the warning chime will sound. Try locking the steering wheel again. If the problem is not solved, we recommend that the system be checked by an authorized HYUNDAI dealer.

In addition, if the engine start/stop button is in the OFF position after the driver's door is opened, the steering wheel will not lock and the warning chime will sound. In such a situation, close the door. Then the steering wheel will lock and the warning chime will stop.

✻ NOTICE

If the steering wheel doesn't unlock properly, the engine start/stopbutton will not work. Press the engine start/stop button while turning the steering wheel right and left to release the tension.

⚠ **CAUTION**

You are able to turn off the engine (START/RUN) or vehicle power (ON), only when the vehicle is not in motion. In an emergency situation while the vehicle is in motion, you are able to turn the engine off and to the ACC position by pressing the engine start/stop button for more than 2 seconds or 3 times successively within 3 seconds. If the vehicle is still moving, you can restart the engine without depressing the brake pedal by pressing the engine start/stop button with the shift lever in the N (Neutral) position.

ACC(Accessory)

Orange indicator

• With manual transaxle

Press the engine start/stop button when the button is in the OFF position without depressing the clutch pedal.

• With automatic transaxle

Press the engine start/stop button while it is in the OFF position without depressing the brake pedal.

The steering wheel unlocks and electrical accessories are operational.

If the engine start/stop button is in the ACC position for more than 1 hour, the button turns off automatically to prevent battery discharge.

ON

Blue indicator

• With manual transaxle

Press the engine start/stop button when the button is in the ACC position without depressing the clutch pedal.

• With automatic transaxle

Press the engine start/stop button while it is in the ACC position without depressing the brake pedal.

The warning lights can be checked before the engine is started. Do not leave the engine start/stop button in the ON position for a long time. The battery may discharge, because the engine is not running.

START/RUN

Not illuminated

• With manual transaxle

To start the engine, depress the clutch pedal and brake pedal, then press the engine start/stop with the shift lever in the Neutral position.

• With automatic transaxle

To start the engine, depress the brake pedal and press the engine start/stop button with the shift lever in the P (Park) or the N (Neutral) position. For your safety, start the engine with the shift lever in the P (Park) position.

✻ NOTICE

If you press the engine start/stop button without depressing the clutch pedal for manual transaxle vehicles or without depressing the brake pedal for automatic transaxle vehicles, the engine will not start and the engine start/stop button changes as follow:
OFF ➔ACC ➔ ON ➔ OFF or ACC

✻ NOTICE

If you leave the engine start/stop button in the ACC or ON position for a long time, the battery will discharge.

⚠ WARNING

- **Never press the engine start/stop button while the vehicle is in motion. This would result in loss of directional control and braking function, which could cause an accident.**
- **The anti-theft steering column lock is not a substitute for the parking brake. Before leaving the driver's seat, always make sure the shift lever is engaged in P (Park), set the parking brake fully and shut the engine off. Unexpected and sudden vehicle movement may occur if these precautions are not taken.**

(Continued)

(Continued)

- **Never reach for the engine start/stop button or any other controls through the steering wheel while the vehicle is in motion. The presence of your hand or arm in the area could cause loss of vehicle control, an accident and serious bodily injury or death.**
- **Do not place any movable objects around the driver's seat as they may move while driving, interfere with the driver and lead to an accident.**

Starting the engine

⚠ WARNING

Always wear appropriate shoes when operating your vehicle. Unsuitable shoes (high heels, ski boots,etc.) may interfere with your ability to use the brake and accelerator pedal.

Starting the gasoline engine

1. Carry the smart key or leave it inside the vehicle.
2. Make sure the parking brake is firmly applied.
3. **Manual Transaxle** - Depress the clutch pedal fully and shift the transaxle into Neutral. Keep the clutch pedal and brake pedal depressed while starting the engine.

   Automatic Transaxle - Place the transaxle shift lever in P (Park). Depress the brake pedal fully.

   You can also start the engine when the shift lever is in the N (Neutral) position.
4. Press the engine start/stop button.
5. In extremely cold weather (below -18°C / 0°F) or after the vehicle has not been operated for several days, let the engine warm up without depressing the accelerator.

Whether the engine is cold or warm, it should be started without depressing the accelerator.

Starting the diesel engine

To start the diesel engine when the engine is cold, it has to be pre-heated before starting the engine and then have to be warmed up before starting to drive.

1. Make sure the parking brake is applied.
2. **Manual Transaxle** - Depress the clutch pedal fully and shift the transaxle into Neutral. Keep the clutch pedal and brake pedal depressed while pressing the engine start/stop button to the START position.

   Automatic Transaxle - Place the transaxle shift lever in P (Park). Depress the brake pedal fully.

   You can also start the engine when the shift lever is in the N (Neutral) position.

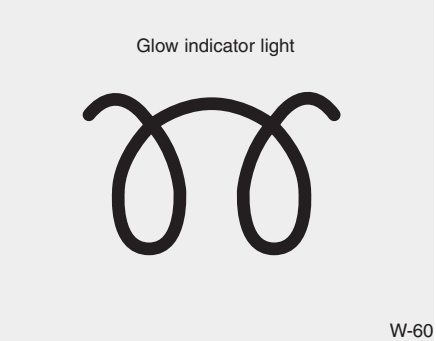

3. Press the engine start/stop button while depressing the brake pedal.
4. Continue depressing the brake pedal until the illuminated glow indicator goes off. (approximately 5 seconds)
5. The engine starts running when the glow indicator goes off.

✻ NOTICE

If the engine start/stop button is pressed once more while the engine is pre-heating, the engine may start.

Starting and stopping the engine for turbocharger intercooler

1. Do not race or accelerate the engine immediately after starting.

   If the engine is cold, idle for several seconds before sufficient lubrication is ensured in the turbocharger unit.
2. After high speed or extended driving, requiring a heavy engine load, idle the engine about 1 minute before turning it off.

   This idle time will allow the turbocharger to cool prior to shutting the engine off.

⚠ CAUTION

Do not turn the engine off immediately after it has been subjected to a heavy load. Doing so may cause severe damage to the engine or turbocharger unit.

- Even if the smart key is in the vehicle, if it is far away from you, the engine may not start.
- When the engine start/stop button is in the ACC position or above, if any door is opened, the system checks for the smart key. If the smart key is not in the vehicle, a message “Key is not in the vehicle” will appear on the LCD display. And if all doors are closed, the chime will sound for 5 seconds. The indicator or warning will turn off while the vehicle is moving. Always have the smart key with you.

⚠ WARNING

The engine will start, only when the smart key is in the vehicle.

Never allow children or any person who is unfamiliar with the vehicle touch the engine start/stop button or related parts.

⚠ CAUTION

If the engine stalls while the vehicle is in motion, do not attempt to move the shift lever to the P (Park) position. If the traffic and road conditions permit, you may put the shift lever in the N (Neutral) position while the vehicle is still moving and press the engine start/stop button in an attempt to restart the engine.

OGD051006

✻ NOTICE

- **If the battery is weak or the smart key does not work correctly, you can start the engine by pressing the engine start/stop button with the smart key.**
- **When the brake switch fuse is blown, you cannot start the engine normally. Replace the fuse with a new one. If not possible, you can start the engine by pressing the engine start/stop button for 10 seconds while it is in the ACC position. The engine can start without depressing the brake pedal. But for your safety always depress the brake pedal before starting the engine.**

⚠ CAUTION

Do not press the engine start/stop button for more than 10 seconds except when the brake switch fuse is blown.

MANUAL TRANSAXLE (IF EQUIPPED)

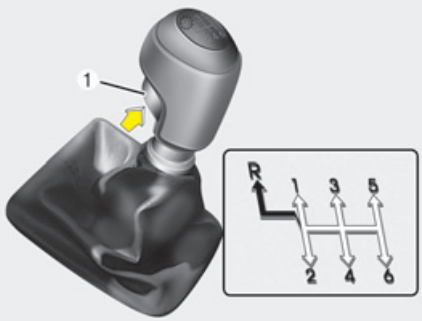

⇨ The shift lever can be moved without pulling the button (1).

➡ The button (1) must be pulled up while moving the shift lever.

OMD050009

* The actual shift lever in the vehicle may differ from the illustration.

Manual transaxle operation

The manual transaxle has 6 forward gears.

This shift pattern is imprinted on the shift knob. The transaxle is fully synchronized in all forward gears so shifting to either a higher or a lower gear is easily accomplished.

Depress the clutch pedal down fully while shifting, then release it slowly.

If your vehicle is equipped with an ignition lock system, the engine will not start when starting the engine without depressing the clutch pedal.

The shift lever must return to the Neutral position before shifting into R (Reverse).

The button (1) located immediately below the shift knob must be pulled upward while moving the shift lever to the R (Reverse) position.

Make sure the vehicle is completely stopped before shifting into R (Reverse).

Never operate the engine with the tachometer (rpm) in the red zone.

⚠ CAUTION

- ***When downshifting from 5th (Fifth) gear to 4th (Fourth) gear, caution should be taken not to inadvertently move the shift lever sideways in such a manner that second gear is engaged. Such a drastic downshift may cause the engine speed to increase to the point that the tachometer will enter the red-zone. Such over-revving of the engine may possibly cause engine and transaxle damage.***
- ***Do not downshift more than 2 gears or downshift the gear when the engine is running at high speed (5,000 RPM or higher). Such a downshifting may damage the engine and transaxle.***
- ***When shifting from 5th gear to 6th gear or from 6th gear to 5th gear, push the shift lever to the right while shifting. Otherwise, the shift lever might move to 3rd gear or 4th gear and it may damage the engine and transaxle.***

- During cold weather, shifting may be difficult until the transaxle lubricant has warmed up. This is normal and not harmful to the transaxle.
- If you've come to a complete stop and it's hard to shift into 1st (First) or R (Reverse), leave the shift lever at Neutral position and release the clutch. Depress the clutch pedal back down, and then shift into 1st (First) or R (Reverse) gear position.

⚠ CAUTION

- ***To avoid premature clutch wear and damage, do not drive with your foot resting on the clutch pedal. Also, don't use the clutch to hold the vehicle stopped on an uphill grade, while waiting for a traffic light, etc.***
- ***Do not use the shift lever as a handrest during driving, as this can result in premature wear of the transaxle shift forks.***
- ***When operating the clutch pedal, press the clutch pedal down fully. If you don't press the clutch pedal fully, the clutch may be damaged or noise may occur.***

⚠ WARNING

- **Before leaving the driver's seat, always set the parking brake fully and shut the engine off. Then make sure the transaxle is shifted into 1st (First) gear when the vehicle is parked on a level or uphill grade, and shifted into R (Reverse) on a downhill grade. Unexpected and sudden vehicle movement can occur if these precautions are not followed in the order identified.**
- **If your vehicle has a manual transaxle not equipped with a ignition lock switch, it may move and cause a serious accident when starting the engine without depressing the clutch pedal while the parking brake is released and the shift lever not in the Neutral position.**

Using the clutch

The clutch should be pressed all the way to the floor before shifting, then released slowly. The clutch pedal should always be fully released while driving. Do not rest your foot on the clutch pedal while driving. This can cause unnecessary wear. Do not partially engage the clutch to hold the car on an incline. This causes unnecessary wear. Use the foot brake or parking brake to hold the car on an incline. Do not operate the clutch pedal rapidly and repeatedly.

⚠ CAUTION

When operating the clutch pedal, depress the clutch pedal down fully. If you don't depress the clutch pedal fully, the clutch may be damaged or noise may occur.

Downshifting

When you must slow down in heavy traffic or while driving up steep hills, downshift before the engine starts to labor. Downshifting reduces the chance of stalling and gives better acceleration when you need to increase your speed again. When the vehicle is traveling down steep hills, downshifting helps maintain safe speed and prolongs brake life.

Good driving practices

- Never take the vehicle out of gear and coast down a hill. This is extremely hazardous. Always leave the vehicle in gear.
- Don't "ride" the brakes. This can cause them to overheat and malfunction. Instead, when you are driving down a long hill, shift to a lower gear. When you do this, engine braking will help slow down the vehicle.
- Slow down before shifting to a lower gear. This will help avoid over-revving the engine, which can cause damage.
- Slow down when you encounter cross winds. This gives you much better control of your vehicle.
- Be sure the vehicle is completely stopped before you attempt to shift into R (Reverse). The transaxle can be damaged if you do not. To shift into R (Reverse), depress the clutch, move the shift lever to Neutral, then shift to the R (Reverse) position.
- Exercise extreme caution when driving on a slippery surface. Be especially careful when braking, accelerating or shifting gears. On a slippery surface, an abrupt change in vehicle speed can cause the drive wheels to lose traction and the vehicle to go out of control.

⚠ WARNING

- **Always buckle-up! In a collision, an unbelted occupant is significantly more likely to be seriously injured or killed than a properly belted occupant.**
- **Avoid high speeds when cornering or turning.**
- **Do not make quick steering wheel movements, such as sharp lane changes or fast, sharp turns.**
- **The risk of rollover is greatly increased if you lose control of your vehicle at highway speeds.**
- **Loss of control often occurs if two or more wheels drop off the roadway and the driver oversteers to reenter the roadway.**
- **In the event your vehicle leaves the roadway, do not steer sharply. Instead, slow down before pulling back into the travel lanes.**
- **Never exceed posted speed limits.**

AUTOMATIC TRANSAXLE (IF EQUIPPED)

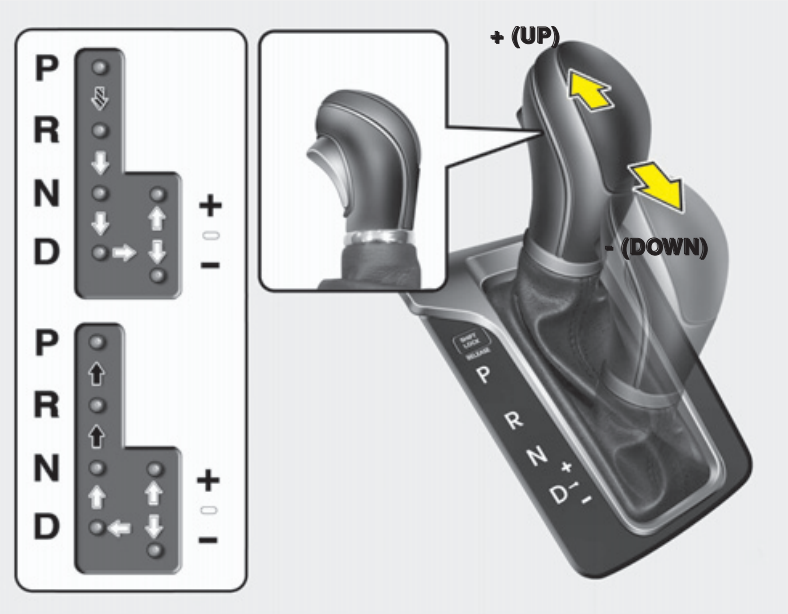

Depress the brake pedal and the lock release button when shifting.
(If the shift lock system is not equipped, it is not necessary to depress the brake pedal. However, it is recommended to depress the brake pedal to avoid inadvertent movement of the vehicle.)

Press the lock release button when shifting.

The shift lever can be shifted freely.

OGD051011

Automatic transaxle operation

The automatic transaxle has 6 forward speeds and one reverse speed. The individual speeds are selected automatically, depending on the position of the shift lever.

✻ NOTICE

The first few shifts on a new vehicle, if the battery has been disconnected, may be somewhat abrupt. This is a normal condition, and the shifting sequence will adjust after shifts are cycled a few times by the TCM (Transaxle Control Module) or PCM (Powertrain Control Module).

For smooth operation, depress the brake pedal when shifting from N (Neutral) to a forward or reverse gear.

⚠ WARNING - Automatic transaxle

- **Always check the surrounding areas near your vehicle for people, especially children, before shifting a car into D (Drive) or R (Reverse).**
- **Before leaving the driver's seat, always make sure the shift lever is in the P (Park) position; then set the parking brake fully and shut the engine off. Unexpected and sudden vehicle movement can occur if these precautions are not followed in the order identified.**

⚠ CAUTION

- ***To avoid damage to your transaxle, do not accelerate the engine in R (Reverse) or any forward gear position with the brakes on.***
- ***When stopped on an upgrade, do not hold the vehicle with engine power. Use the service brake or the parking brake.***
- ***Do not shift from N (Neutral) or P (Park) into D (Drive), or R (Reverse) when the engine is above idle speed.***

Transaxle ranges

The indicator lights in the instrument cluster displays the shift lever position when the ignition switch is in the ON position.

P (Park)

Always come to a complete stop before shifting into P (Park). This position locks the transaxle and prevents the front wheels from rotating.

⚠ WARNING

- **Shifting into P (Park) while the vehicle is in motion will cause the drive wheels to lock which will cause you to lose control of the vehicle.**
- **Do not use the P (Park) position in place of the parking brake. Always make sure the shift lever is latched in the P (Park) position and set the parking brake fully.**
- **Never leave a child unattended in a vehicle.**

⚠ CAUTION

The transaxle may be damaged if you shift into P (Park) while the vehicle is in motion.

R (Reverse)

Use this position to drive the vehicle backward.

⚠ **CAUTION**

Always come to a complete stop before shifting into or out of R (Reverse); you may damage the transaxle if you shift into R (Reverse) while the vehicle is in motion, except as explained in "Rocking the vehicle" in this section.

N (Neutral)

The wheels and transaxle are not locked. The vehicle will roll freely even on the slightest incline unless the parking brake or service brakes are applied.

D (Drive)

This is the normal forward driving position. The transaxle will automatically shift through a 6-gear sequence, providing the best fuel economy and power.

For extra power when passing another vehicle or climbing grades, depress the accelerator fully, at which time the transaxle will automatically downshift to the next lower gear.

✻ **NOTICE**

Always ensure vehicle is stationary, at a complete stop, before selecting D (Drive).

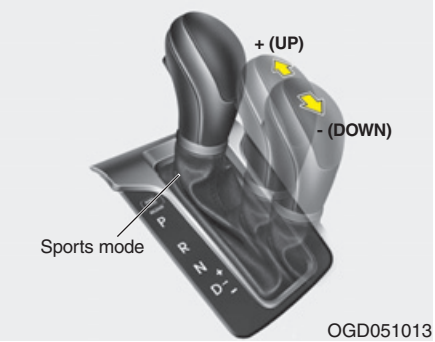

OGD051013

Sports mode

Whether the vehicle is stationary or in motion, sports mode is selected by pushing the shift lever from the D (Drive) position into the manual gate. To return to D (Drive) range operation, push the shift lever back into the main gate.

In sports mode, moving the shift lever backwards and forwards will allow you to make gearshifts rapidly.

Up (+) : Push the lever forward once to shift up one gear.

Down (-) : Pull the lever backwards once to shift down one gear.

✻ NOTICE

- **In sports mode, the driver must execute upshifts in accordance with road conditions, taking care to keep the engine speed below the red zone.**
- **In sports mode, only the 6 forward gears can be selected. To reverse or park the vehicle, move the shift lever to the R (Reverse) or P (Park) position as required.**
- **In sports mode, downshifts are made automatically when the vehicle slows down. When the vehicle stops, 1st gear is automatically selected.**
- **In sports mode, when the engine rpm approaches the red zone shift points are varied to upshift automatically.**
- **To maintain the required levels of vehicle performance and safety, the system may not execute certain gearshifts when the shift lever is operated.**
- **When driving on a slippery road, push the shift lever forward into the +(up) position. This causes the transaxle to shift into the 2nd gear which is better for smooth driving on a slippery road. Push the shift lever to the -(down) side to shift back to the 1st gear.**

Shift lock system (if equipped)

For your safety, the automatic transaxle has a shift lock system which prevents shifting the transaxle from P (Park) or N (Neutral) into R (Reverse) unless the brake pedal is depressed.

To shift the transaxle from P (Park) or N (Neutral) into R (Reverse):

1. Depress and hold the brake pedal.
2. Start the engine or turn the ignition switch to the ON position.
3. Move the shift lever.

If the brake pedal is repeatedly depressed and released with the shift lever in the P (Park) position, a chattering noise near the shift lever may be heard. This is a normal condition.

⚠ WARNING

Always fully depress the brake pedal before and while shifting out of the P (Park) position into another position to avoid inadvertent motion of the vehicle which could injure persons in or around the car.

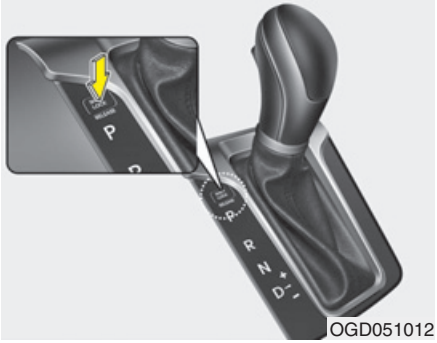

Shift-lock override

If the shift lever cannot be moved from the P (Park) or N (Neutral) position into R (Reverse) position with the brake pedal depressed, continue depressing the brake, then do the following:

1. Move the shift lever while pressing the shift-lock release button.
2. We recommend that the system be inspected by an authorized HYUNDAI dealer immediately.

Ignition key interlock system (if equipped)

The ignition key cannot be removed unless the shift lever is in the P (Park) position.

Good driving practices

- Never move the shift lever from P (Park) or N (Neutral) to any other position with the accelerator pedal depressed.
- Never move the shift lever into P (Park) when the vehicle is in motion.
- Be sure the vehicle is completely stopped before you attempt to shift into R (Reverse) or D (Drive).
- Never take the vehicle out of gear and coast down a hill. This may be extremely hazardous. Always leave the vehicle in gear when moving.
- Do not "ride" the brakes. This can cause them to overheat and malfunction. Instead, when you are driving down a long hill, slow down and shift to a lower gear. When you do this, engine braking will help slow down the vehicle.
- Slow down before shifting to a lower gear. Otherwise, the lower gear may not be engaged.
- Always use the parking brake. Do not depend on placing the transaxle in P (Park) to keep the vehicle from moving.
- Exercise extreme caution when driving on a slippery surface. Be especially careful when braking, accelerating or shifting gears. On a slippery surface, an abrupt change in vehicle speed can cause the drive wheels to lose traction and the vehicle to go out of control.
- Optimum vehicle performance and economy is obtained by smoothly depressing and releasing the accelerator pedal.

⚠ WARNING

- **Always buckle-up! In a collision, an unbelted occupant is significantly more likely to be seriously injured or killed than a properly belted occupant.**
- **Avoid high speeds when cornering or turning.**
- **Do not make quick steering wheel movements, such as sharp lane changes or fast, sharp turns.**
- **The risk of rollover is greatly increased if you lose control of your vehicle at highway speeds.**
- **Loss of control often occurs if two or more wheels drop off the roadway and the driver oversteers to reenter the roadway.**
- **In the event your vehicle leaves the roadway, do not steer sharply. Instead, slow down before pulling back into the travel lanes.**
- **Never exceed posted speed limits.**

⚠ WARNING

If your vehicle becomes stuck in snow, mud, sand, etc., then you may attempt to rock the vehicle free by moving it forward and backward. Do not attempt this procedure if people or objects are anywhere near the vehicle. During the rocking operation the vehicle may suddenly move forward of backward as it becomes unstuck, causing injury or damage to nearby people or objects.

Moving up a steep grade from a standing start

To move up a steep grade from a standing start, depress the brake pedal, shift the shift lever to D (Drive). Select the appropriate gear depending on load weight and steepness of the grade, and release the parking brake. Depress the accelerator pedal gradually while releasing the service brakes.

ACTIVE ECO SYSTEM (IF EQUIPPED)

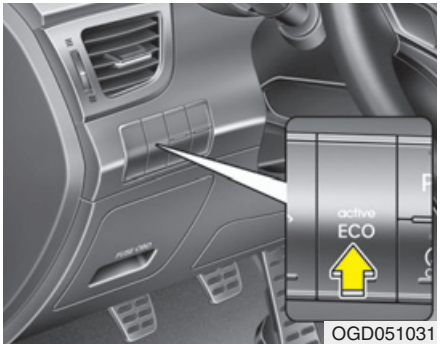

OGD051031

Active ECO operation

Active ECO helps improve fuel efficiency by controlling the engine and transaxle. But fuel-efficiency can be changed by the driver's driving habits and road conditions.

- When the Active ECO button is pressed the ECO indicator (green) will illuminate to show that the Active ECO is operating.
- When the Active ECO is activated, it does not turn off even though the engine is restarted again. To turn off the system, press the active ECO button again.
- If Active ECO is turned off, it will return to the normal mode.

Limitation of Active ECO operation:

If the following conditions occur while Active ECO is operating, the system operation is limited even though there is no change in the ECO indicator.

- When the coolant temperature is low: The system will be limited until engine performance becomes normal.
- When driving up a hill: The system will be limited to gain power when driving uphill because the engine torque is restricted.
- When using sports mode: The system will be limited according to the shift location.
- When the accelerator pedal is deeply pressed for a few seconds: The system will be limited, judging that the driver wants to speed up.

BRAKE SYSTEM

Power brakes

Your vehicle has power-assisted brakes that adjust automatically through normal usage.

In the event that the power-assisted brakes lose power because of a stalled engine or some other reason, you can still stop your vehicle by applying greater force to the brake pedal than you normally would. The stopping distance, however, will be longer.

When the engine is not running, the reserve brake power is partially depleted each time the brake pedal is applied. Do not pump the brake pedal when the power assist has been interrupted.

Pump the brake pedal only when necessary to maintain steering control on slippery surfaces.

⚠ WARNING - Brakes

- **Do not drive with your foot resting on the brake pedal. This will create abnormal high brake temperatures, excessive brake lining and pad wear, and increased stopping distances.**
- **When descending a long or steep hill, shift to a lower gear and avoid continuous application of the brakes. Continuous brake application will cause the brakes to overheat and could result in a temporary loss of braking performance.**
- **Wet brakes may impair the vehicle's ability to safely slow down; the vehicle may also pull to one side when the brakes are applied. Applying the brakes lightly will indicate whether they have been affected in this way. Always test your brakes in this fashion after driving through deep water. To dry the brakes, apply them lightly while maintaining a safe forward speed until brake performance returns to normal.**

(Continued)

(Continued)

- **Always, confirm the position of the brake and accelerator pedal before driving. If you don't check the position of the accelerator and brake pedal before driving, you may depress the accelerator instead of the brake pedal. It may cause a serious accident.**

In the event of brake failure (if equipped)

If service brakes fail to operate while the vehicle is in motion, you can make an emergency stop with the parking brake. The stopping distance, however, will be much greater than normal.

⚠ WARNING - Parking brake

Applying the parking brake while the vehicle is moving at normal speeds can cause a sudden loss of control of the vehicle. If you must use the parking brake to stop the vehicle, use great caution in applying the brake.

Disc brakes wear indicator

Your vehicle has disc brakes.

When your brake pads are worn and new pads are required, you will hear a high-pitched warning sound from your front brakes or rear brakes (if equipped). You may hear this sound come and go or it may occur whenever you depress the brake pedal.

Please remember that some driving conditions or climates may cause a brake squeal when you first apply (or lightly apply) the brakes. This is normal and does not indicate a problem with your brakes.

⚠ CAUTION

- ***To avoid costly brake repairs, do not continue to drive with worn brake pads.***
- ***Always replace brake pads as complete front or rear axle sets.***

⚠ WARNING - Brake wear

This brake wear warning sound means your vehicle needs service. If you ignore this audible warning, you will eventually lose braking performance, which could lead to a serious accident.

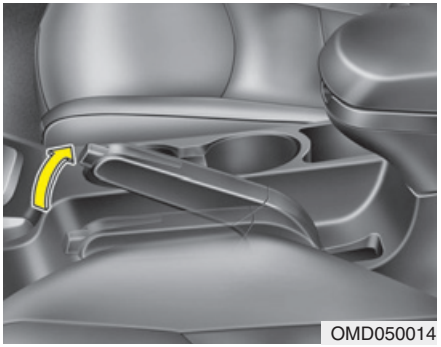

Parking brake - Hand type

Applying the parking brake

To engage the parking brake, first apply the foot brake and then without pressing the release button in, pull the parking brake lever up as far as possible. In addition it is recommended that when parking the vehicle on a gradient, the shift lever should be positioned in the appropriate low gear for manual transaxle vehicles or in the P (Park) position for automatic transaxle vehicles.

⚠ CAUTION

- ***Driving with the parking brake applied will cause excessive brake pad (or lining) and brake rotor wear.***
- ***Do not operate the parking brake while the vehicle is moving except in an emergency situation. It could damage the vehicle system and make endanger driving safety.***

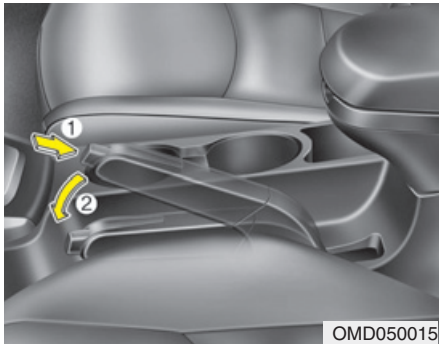

Releasing the parking brake

To release the parking brake, first apply the foot brake and pull up the parking brake lever slightly. Secondly press the release button (1) and lower the parking brake lever (2) while pressing the button.

⚠ WARNING

- **To prevent unintentional movement when stopped and leaving the vehicle, do not use the shift lever instead of the parking brake. Set the parking brake AND make sure the shift lever is securely positioned in 1st (First) gear or R (Reverse) for manual transaxle equipped vehicles and in P (Park) for automatic transaxle equipped vehicles.**
- **Never allow anyone who is unfamiliar with the vehicle to touch the parking brake. If the parking brake is released unintentionally, serious injury may occur.**
- **All vehicles should always have the parking brake fully engaged when parking to avoid inadvertent movement of the vehicle which can injure occupants or pedestrians.**

Check the brake warning light by turning the ignition switch ON (do not start the engine). This light will illuminate when the parking brake is applied with the ignition switch in the START or ON position.

Before driving, be sure the parking brake is fully released and the brake warning light is off.

If the brake warning light remains on after the parking brake is released while the engine is running, there may be a malfunction in the brake system. Immediate attention is necessary.

If at all possible, cease driving the vehicle immediately. If that is not possible, use extreme caution while operating the vehicle and only continue to drive the vehicle until you can reach a safe location or repair shop.

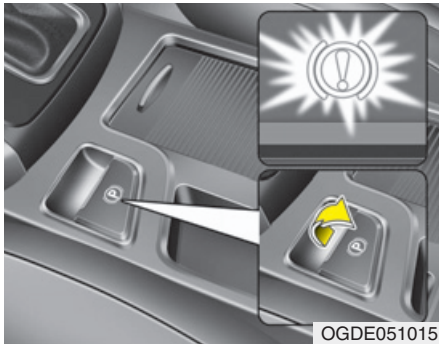

Electric parking brake (EPB) (if equipped)

Applying the parking brake

To apply the EPB (electric parking brake):

1. Depress the brake pedal.
2. Pull up the EPB switch.

Make sure the warning light comes on.

✻ NOTICE

On a steep incline or when pulling a trailer if the vehicle does not stand still, do as follows:

1. Apply the EPB.
2. Pull up the EPB switch for more than 3 seconds.

⚠ CAUTION

Do not operate the parking brake while the vehicle is moving except in an emergency situation. It could damage the vehicle system and endanger driving safety.

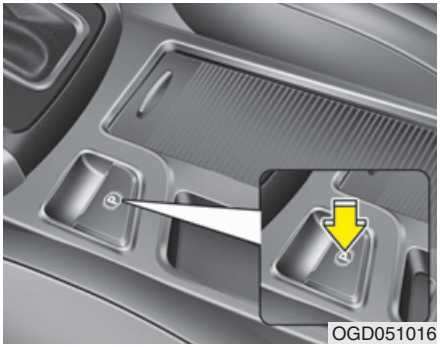

Releasing the parking brake

To release the EPB (electric parking brake), press the EPB switch in the following condition:

- Have the ignition switch or engine start/stop button in the ON position.
- Depress the brake pedal.

Make sure the brake warning light goes off.

To release EPB (electric parking brake) automatically:

- Manual transaxle vehicle
  1. Start the engine.
  2. Fasten the driver's seat belt.
  3. Close the driver's door, engine hood and tailgate.
  4. Depress the clutch pedal with the gear engaged.
  5. Depress the accelerator pedal while releasing the clutch pedal.
- Automatic transaxle vehicle
  1. Start the engine.
  2. Fasten the driver's seat belt.
  3. Close the driver's door, engine hood and tailgate.
  4. Depress the accelerator pedal while the shift lever is in R (Rear), D (Drive) or Sports mode.
- Shift lever in P (Park)

  With the engine running depress the brake pedal and shift out of P (Park) to R (Rear) or D (Drive).
- Shift lever in N (Neutral)

  With the engine running depress the brake pedal and shift out of N (Neutral) to R (Rear) or D (Drive).

Make sure the brake warning light goes off.

✻ NOTICE

- **For your safety, you can engage the EPB even though the ignition switch or engine stop/start button is in the OFF position, but you cannot release it.**
- **For your safety, depress the brake pedal and release the parking brake manually with the EPB switch when you drive downhill or when backing up the vehicle.**

✻ NOTICE - Manual transaxle

A vehicle towing a trailer on a hill or on an incline may slightly roll backwards when starting the vehicle. To prevent the situation follow the below instructions.

1. **Depress the clutch pedal and select a gear.**
2. **Keep pulling up the EPB switch.**
3. **Depress the accelerator pedal and slowly release the clutch pedal.**
4. **If the vehicle starts off with enough driving power release the EPB switch.**

Do not follow the above procedure when driving on a flat level ground. The vehicle may suddenly move forward.

⚠ CAUTION

- ***If the parking brake warning light is still on even though the EPB has been released, we recommend that the system be checked by an authorized HYUNDAI dealer.***
- ***Do not drive your vehicle with the EPB applied. It may cause excessive brake pad and brake rotor wear.***

EPB (electric parking brake) may be automatically applied when:

- The EPB is overheated
- Requested by other systems

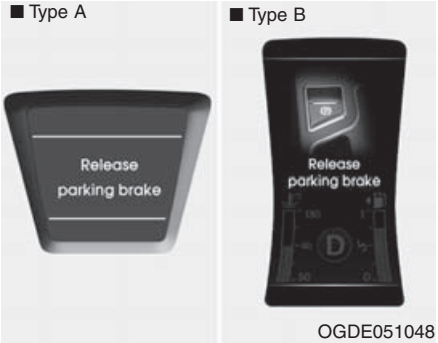

- If you try to drive off depressing the accelerator pedal with the EPB applied, but doesn't release automatically, a warning will sound and a message will appear.
- If the driver's seat belt is not fastened and any door, the engine hood or tailgate is opened, a warning will sound and a message will appear.
- If there is a problem with the vehicle, a warning may sound and a message may appear.

If the above situation occurs, depress the brake pedal and release EPB by pressing the EPB switch.

⚠ WARNING

- **To prevent unintentional movement when stopped and leaving the vehicle, do not use the shift lever in place of the parking brake. Set the parking brake and make sure the shift lever is securely positioned in P (Park).**
- **Never allow anyone who is unfamiliar with the vehicle to touch the parking brake. If the parking brake is released unintentionally, serious injury may occur.**
- **All vehicles should always have the parking brake fully engaged when parking to avoid inadvertent movement of the car which can injure occupants or pedestrians.**

⚠ CAUTION

- ***A click sound may be heard while operating or releasing the EPB, but these conditions are normal and indicate that the EPB is functioning properly.***
- ***When leaving your keys with a parking lot attendant or valet, make sure to inform him/her how to operate the EPB.***
- ***The EPB may malfunction if you drive with the EPB applied.***
- ***When you automatically release EPB by depressing the accelerator pedal, depress it slowly.***

EPB malfunction indicator (if equipped)

This warning light illuminates if the engine start/stop button is changed to the ON position and goes off in approximately 3 seconds if the system is operation normally.

If the EPB malfunction indicator remains on, comes on while driving, or does not come on when the ignition switch or the engine start/stop button is changed to the ON position, this indicates that the EPB may have malfunctioned.

If this occurs, we recommend that the system be checked by an authorized HYUNDAI dealer.

The EPB malfunction indicator may illuminate when the ESC indicator comes on to indicate that the ESC is not working properly, but it does not indicate a malfunction of the EPB.

⚠ CAUTION

- ***The EPB warning light may illuminate if the EPB switch operates abnormally. Shut the engine off and turn it on again after a few minutes. The warning light will go off and the EPB switch will operate normally. However, if the EPB warning light is still on, we recommend that the system be checked by an authorized HYUNDAI dealer.***
- ***If the parking brake warning light does not illuminate or blinks even though the EPB switch was pulled up, the EPB is not applied.***
- ***If the parking brake warning light blinks when the EPB warning light is on, press the switch, then pull it up. Once more press it back to its original position and pull it back up. If the EPB warning does not go off, we recommend that the system be checked by an authorized HYUNDAI dealer.***

Emergency braking

If there is a problem with the brake pedal while driving, emergency braking is possible by pulling up and holding the EPB switch. Braking is possible only while you are holding the EPB switch.

⚠ WARNING

Do not operate the parking brake while the vehicle is moving except in an emergency situation.

✻ NOTICE

During emergency braking by the EPB, the parking brake warning light will illuminate to indicate that the system is operating.

⚠ CAUTION

If you continuously notice a noise or burning smell when the EPB is used for emergency braking, we recommend that the system be checked by an authorized HYUNDAI dealer.

When the EPB (electric parking brake) does not release

If the EPB does not release normally, we recommend that you take your vehicle to an authorized HYUNDAI dealer by loading the vehicle on a flatbed tow truck and have the system checked.

Anti-lock brake system (ABS) (if equipped)

⚠ WARNING

ABS (or ESP) will not prevent accidents due to improper or dangerous driving maneuvers. Even though vehicle control is improved during emergency braking, always maintain a safe distance between you and objects ahead. Vehicle speeds should always be reduced during extreme road conditions.

The braking distance for vehicles equipped with an anti-lock braking system (or Electronic Stability Program System) may be longer than for those without it in the following road conditions.

During these conditions the vehicle should be driven at reduced speeds:

- **Rough, gravel or snow-covered roads.**
- **With tire chains installed.**

(Continued)

(Continued)

- **On roads where the road surface is pitted or has different surface height.**

The safety features of an ABS (or ESP) equipped vehicle should not be tested by high speed driving or cornering. This could endanger the safety of yourself or others.

The ABS continuously senses the speed of the wheels. If the wheels are going to lock, the ABS system repeatedly modulates the hydraulic brake pressure to the wheels.

When you apply your brakes under conditions which may lock the wheels, you may hear a “tik-tik” sound from the brakes, or feel a corresponding sensation in the brake pedal. This is normal and it means your ABS is active.

In order to obtain the maximum benefit from your ABS in an emergency situation, do not attempt to modulate your brake pressure and do not try to pump your brakes. Depress your brake pedal as hard as possible or as hard as the situation allows the ABS to control the force being delivered to the brakes.

✻ NOTICE

A click sound may be heard in the engine compartment when the vehicle begins to move after the engine is started. These conditions are normal and indicate that the anti-lock brake system is functioning properly.

- Even with the anti-lock brake system, your vehicle still requires sufficient stopping distance. Always maintain a safe distance from the vehicle in front of you.
- Always slow down when cornering. The anti-lock brake system cannot prevent accidents resulting from excessive speeds.
- On loose or uneven road surfaces, operation of the anti-lock brake system may result in a longer stopping distance than for vehicles equipped with a conventional brake system.

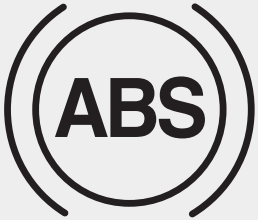

W-78

⚠ CAUTION

- ***If the ABS warning light is on and stays on, you may have a problem with the ABS. In this case, however, your regular brakes will work normally.***
- ***The ABS warning light will stay on for approximately 3 seconds after the ignition switch is ON. During that time, the ABS will go through self-diagnosis and the light will go off if everything is normal. If the light stays on, you may have a problem with your ABS. We recommend that you contact an authorized HYUNDAI dealer as soon as possible.***

⚠ CAUTION

- *When you drive on a road having poor traction, such as an icy road, and operate your brakes continuously, the ABS will be active continuously and the ABS warning light may illuminate. Pull your vehicle over to a safe place and stop the engine.*
- *Restart the engine. If the ABS warning light is off, then your ABS system is normal. Otherwise, you may have a problem with the ABS. We recommend that you contact an authorized HYUNDAI dealer as soon as possible.*

✻ NOTICE

When you jump start your vehicle because of a drained battery, the engine may not run as smoothly and the ABS warning light may turn on at the same time. This happens because of low battery voltage. It does not mean your ABS is malfunctioning.

- **Do not pump your brakes!**
- **Have the battery recharged before driving the vehicle.**

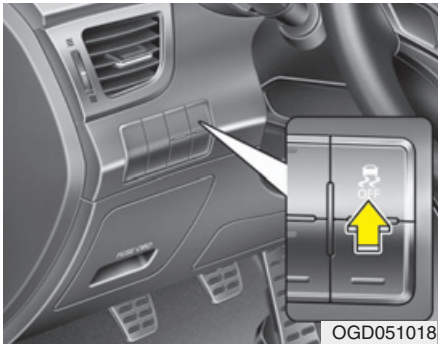

Electronic stability program (ESP) (if equipped)

The Electronic Stability Program (ESP) system is designed to stabilize the vehicle during cornering maneuvers. ESP checks where you are steering and where the vehicle is actually going.

ESP applies the brakes at individual wheels and intervenes with the engine management system to stabilize the vehicle.

⚠ WARNING

Never drive too fast according to the road conditions or too quickly when cornering. Electronic stability program (ESP) will not prevent accidents. Excessive speed in turns, abrupt maneuvers and hydroplaning on wet surfaces can still result in serious accidents. Only a safe and attentive driver can prevent accidents by avoiding maneuvers that cause the vehicle to lose traction. Even with ESP installed, always follow all the normal precautions for driving - including driving at safe speeds for the conditions.

The Electronic Stability Program (ESP) system is an electronic system designed to help the driver maintain vehicle control under adverse conditions. It is not a substitute for safe driving practices. Factors including speed, road conditions and driver steering input can all affect whether ESP will be effective in preventing a loss of control. It is still your responsibility to drive and corner at reasonable speed and to leave a sufficient margin of safety.

When you apply your brakes under conditions which may lock the wheels, you may hear a “tik-tik” sound from the brakes, or feel a corresponding sensation in the brake pedal. This is normal and it means your ESP is active.

✻ NOTICE

A click sound may be heard in the engine compartment when the vehicle begins to move after the engine is started. These conditions are normal and indicate that the Electronic Stability Program System is functioning properly.

ESP operation

ESP ON condition

- When the ignition is turned ON, ESP and ESP OFF indicator lights illuminate for approximately 3 seconds, then ESP is turned on.
- Press the ESP OFF button for at least half a second after turning the ignition ON to turn ESP off. (ESP OFF indicator will illuminate). To turn the ESP on, press the ESP OFF button (ESP OFF indicator light will go off).
- When starting the engine, you may hear a slight ticking sound. This is the ESP performing an automatic system self-check and does not indicate a problem.

When operating

When the ESP is in operation, ESP indicator light blinks.

- When the Electronic Stability Program is operating properly, you can feel a slight pulsation in the vehicle. This is only the effect of brake control and indicates nothing unusual.
- When moving out of the mud or slippery road, the engine rpm (revolution per minute) may not increase even if you press the accelerator pedal deeply. This is to maintain the stability and traction of the vehicle and does not indicate a problem.

ESP operation off

ESP OFF state

- To cancel the engine management system of ESP, press the ESP OFF button for less than 3 seconds (ESP OFF indicator light illuminates). The brake control function still operates.
- To cancel the engine management and brake control function of ESP, press the ESP OFF button for more than 3 seconds (ESP OFF indicator light illuminates).
- If the ignition switch is turned to LOCK position when ESP is off, ESP remains off. Upon restarting the engine, the ESP will automatically turn on again.

■ ESP indicator light

■ ESP OFF indicator light

Indicator light

When ignition switch is turned to the ON position, the indicator light illuminates, then goes off if the ESP system is operating normally.

The ESP indicator light blinks whenever ESP is operating or illuminates when ESP fails to operate.

ESP OFF indicator light comes on when the ESP is turned off with the button.

⚠ CAUTION

Driving with varying tire or wheel sizes may cause the ESP system to malfunction. When replacing tires, make sure they are the same size as your original tires.

⚠ WARNING

The Electronic Stability Program system is only a driving aid; use precautions for safe driving by slowing down on curved, snowy, or icy roads. Drive slowly and don't attempt to accelerate whenever the ESP indicator light is blinking, or when the road surface is slippery.

ESP OFF usage

When driving

- ESP should be turned on for daily driving whenever possible.
- To turn ESP off while driving, press the ESP OFF button while driving on a flat road surface.

⚠ WARNING

Never press ESP OFF button while ESP is operating (ESP indicator light blinks).

If ESP is turned off while ESP is operating, the vehicle may slip out of control.

✻ NOTICE

- **When operating the vehicle on a dynamometer, ensure that the ESC is turned off by pressing the ESC OFF button for more than 3 seconds (ESC OFF light illuminated). If the ESC is left on, it may prevent the vehicle speed from increasing, and result in false diagnosis.**
- **Turning the ESC off does not affect ABS or brake system operation.**

Vehicle stability management (VSM)

This system provides further enhancements to vehicle stability and steering responses when a vehicle is driving on a slippery road or a vehicle detected changes in coefficient of friction between right wheels and left wheels when braking.

VSM operation

When the VSM is operating:

- ESP (Electronic Stability Program) ( ) light will blink.
- The steering wheel may be controlled.

When the vehicle stability management is operating properly, you can feel a slight pulsation in the vehicle. This is only the effect of brake control and indicates nothing unusual.

The VSM does not operate when:

- Driving on bank road such as gradient or incline
- Driving rearward
- ESP OFF indicator light ( ) remains on the instrument cluster
- EPS (Electronic Power Steering) indicator light remains on the instrument cluster

VSM operation off

If you press the ESP OFF button to turn off the ESP, the VSM will also cancel and the ESP OFF indicator light ( ) illuminates.

To turn on the VSM, press the button again. The ESP OFF indicator light goes out.

Malfunction indicator

The VSM can be deactivated even if you don't cancel the VSM operation by pressing the ESP OFF button. It indicates that a malfunction has been detected somewhere in the EPS system or VSM system. If the ESP indicator light ( ) or EPS warning light illuminate or blink, we recommend that the system be checked by an authorized HYUNDAI dealer and have the system checked.

✻ NOTICE

- **The VSM is designed to function above approximately 15 km/h (9 mph) on curves.**
- **The VSM is designed to function above approximately 30 km/h (18 mph) when a vehicle is braking on a split-mu road. The split-mu road is made of surfaces which have different friction forces.**

⚠ WARNING

- **The Vehicle Stability Management system is not a substitute for safe driving practices but a supplementary function only. It is the responsibility of the driver to always check the speed and the distance to the vehicle ahead. Always hold the steering wheel firmly while driving.**
- **Your vehicle is designed to activate according to the driver's intention, even with the VSM installed. Always follow all the normal precautions for driving at safe speeds for the conditions – including driving in inclement weather and on a slippery road.**
- **Driving with varying tire or wheel sizes may cause the VSM system to malfunction. When replacing tires, make sure they are the same size as your original tires.**

Good braking practices

⚠ WARNING

- **Whenever leaving vehicle or parking, always set the parking brake as far as possible and fully engage the vehicle's transaxle into the park position. Vehicles not fully engaged in park with the parking brake set are at risk for moving inadvertently and injuring yourself or others.**
- **All vehicles should always have the parking brake fully engaged when parking to avoid inadvertent movement of the car which can injure occupants or pedestrians.**

- After parking the vehicle, check to be sure the parking brake is not engaged and that the parking brake indicator light is out before driving away.
- Driving through water may get the brakes wet. They can also get wet when the car is washed. Wet brakes can be dangerous! Your car will not stop as quickly if the brakes are wet. Wet brakes may cause the car to pull to one side.

  To dry the brakes, apply the brakes lightly until the braking action returns to normal, taking care to keep the car under control at all times. If the braking action does not return to normal, stop as soon as it is safe to do so and we recommend that you call an authorized HYUNDAI dealer.
- Don't coast down hills with the car out of gear. This is extremely hazardous. Keep the car in gear at all times, use the brakes to slow down, then shift to a lower gear so that engine braking will help you maintain a safe speed.

- Don't "ride" the brake pedal. Resting your foot on the brake pedal while driving can be dangerous because it can result in the brakes overheating and losing their effectiveness. It also increases the wear of the brake components.
- If a tire goes flat while you are driving, apply the brakes gently and keep the car pointed straight ahead while you slow down. When you are moving slowly enough for it to be safe to do so, pull off the road and stop in a safe place.
- If your car is equipped with an automatic transaxle, don't let your car creep forward. To avoid creeping forward, keep your foot firmly on the brake pedal when the car is stopped.
- Use caution when parking on a hill. Firmly engage the parking brake and place the shift lever in P. If your car is facing downhill, turn the front wheels into the curb to help keep the car from rolling. If your car is facing uphill, turn the front wheels away from the curb to help keep the car from rolling. If there is no curb or if it is required by other conditions to keep the car from rolling, block the wheels.
- Under some conditions your parking brake can freeze in the engaged position. This is most likely to happen when there is an accumulation of snow or ice around or near the rear brakes or if the brakes are wet. If there is a risk that the parking brake may freeze, apply it only temporarily while you put the shift lever in P and block the rear wheels so the car cannot roll. Then release the parking brake.
- Do not hold the vehicle on the upgrade with the accelerator pedal. This can cause the transaxle to overheat. Always use the brake pedal or parking brake.

CRUISE CONTROL SYSTEM (IF EQUIPPED)

1. Cruise indicator
2. Cruise set indicator

The cruise control system allows you to program the vehicle to maintain a constant speed without depressing the accelerator pedal.

This system is designed to function above approximately 30 km/h (20 mph).

⚠ WARNING

- **If the cruise control is left on, (CRUISE indicator light in the instrument cluster illuminated) the cruise control can be switched on accidentally. Keep the cruise control system off (CRUISE indicator light OFF) when the cruise control is not in use, to avoid inadvertently setting a speed.**
- **Use the cruise control system only when driving on open highways in good weather.**
- **Do not use the cruise control when it may not be safe to keep the vehicle at a constant speed, for instance, driving in heavy or varying traffic, or on slippery (rainy, icy or snow-covered) or winding roads or over 6% up-hill or down-hill roads.**
- **Pay particular attention to the driving conditions whenever using the cruise control system.**

⚠ CAUTION

During cruise-speed driving with a manual transaxle vehicle, do not shift into neutral without depressing the clutch pedal, since the engine will be overrevved. If this happens, depress the clutch pedal or release the cruise control ON-OFF switch.

✻ NOTICE

- **During normal cruise control operation, when the SET switch is activated or reactivated after applying the brakes, the cruise control will energize after approximately 3 seconds. This delay is normal.**
- **To activate cruise control, depress the brake pedal at least once after turning the ignition switch to the ON position or starting the engine. This is to check if the brake switch which is important part to cancel cruise control is in normal condition.**

OGDE052033L

Cruise control switch

CRUISE : Turns cruise control system on or off.

CANCEL : Cancels cruise control operation.

RES+ : Resumes or increases cruise control speed.

SET- : Sets or decreases cruise control speed.

OUD052033N

To set cruise control speed:

1. Press the CRUISE button on the steering wheel, to turn the system on. The CRUISE indicator light in the instrument cluster will illuminate.
2. Accelerate to the desired speed, which must be more than 30 km/h (20 mph).

OUD052036N

3. Push the SET- switch, and release it at the desired speed. The SET indicator light in the instrument cluster will illuminate. Release the accelerator pedal. The desired speed will automatically be maintained.

On a steep grade, the vehicle may slow down or speed up slightly while going uphill or downhill.

OUD052035N

To increase cruise control set speed:

Follow either of these procedures:

- Push the RES+ switch and hold it. Your vehicle will accelerate. Release the switch at the speed you want.
- Push the RES+ switch and release it immediately. The cruising speed will increase by 2.0 km/h or 1.0 mph each time the RES+ switch is operated in this manner.

OUD052036N

To decrease the cruising speed:

Follow either of these procedures:

- Push the SET- switch and hold it. Your vehicle will gradually slow down. Release the switch at the speed you want to maintain.
- Push the SET- switch and release it immediately. The cruising speed will decrease by 2.0 km/h or 1.0 mph each time the SET- switch is operated in this manner.

To temporarily accelerate with the cruise control on:

If you want to speed up temporarily when the cruise control is on, depress the accelerator pedal. Increased speed will not interfere with cruise control operation or change the set speed.

To return to the set speed, take your foot off the accelerator pedal.

OUD052034N

To cancel cruise control, do one of the following:

- Depress the brake pedal.
- Depress the clutch pedal if equipped with a manual transaxle.
- Shift into N (Neutral) if equipped with an automatic transaxle.
- Press the CANCEL switch located on the steering wheel.
- Decrease the vehicle speed lower than the memory speed by 20 km/h (12 mph).
- Decrease the vehicle speed to less than approximately 30 km/h (20 mph).

Each of these actions will cancel cruise control operation (the SET indicator light in the instrument cluster will go off), but it will not turn the system off. If you wish to resume cruise control operation, push the RES+ switch located on your steering wheel. You will return to your previously preset speed.

OUD052035N

To resume cruising speed at more than approximately 30 km/h (20 mph):

If any method other than the cruise switch was used to cancel cruising speed and the system is still activated, the most recent set speed will automatically resume when the RES+ switch is pushed.

It will not resume, however, if the vehicle speed has dropped below approximately 30 km/h (20 mph).

✻ NOTICE

Always check the road conditions when pressing the RES+ switch to resume the speed.

To turn cruise control off, do one of the following:

- Press the CRUISE button (the CRUISE indicator light in the instrument cluster will go off).
- Turn the ignition off.

Both of these actions cancel cruise control operation. If you want to resume cruise control operation, repeat the steps provided in “To set cruise control speed” on the previous page.

ECONOMICAL OPERATION

Your vehicle's fuel economy depends mainly on your style of driving, where you drive and when you drive.

Each of these factors affects how many kilometers (miles) you can get from a liter (gallon) of fuel. To operate your vehicle as economically as possible, use the following driving suggestions to help save money in both fuel and repairs:

- Drive smoothly. Accelerate at a moderate rate. Don't make "jack-rabbit" starts or full-throttle shifts and maintain a steady cruising speed. Don't race between stoplights. Try to adjust your speed to the traffic so you don't have to change speeds unnecessarily. Avoid heavy traffic whenever possible. Always maintain a safe distance from other vehicles so you can avoid unnecessary braking. This also reduces brake wear.
- Drive at a moderate speed. The faster you drive, the more fuel your vehicle uses. Driving at a moderate speed, especially on the highway, is one of the most effective ways to reduce fuel consumption.
- Don't "ride" the brake or clutch pedal. This can increase fuel consumption and also increase wear on these components. In addition, driving with your foot resting on the brake pedal may cause the brakes to overheat, which reduces their effectiveness and may lead to more serious consequences.
- Take care of your tires. Keep them inflated to the recommended pressure. Incorrect inflation, either too much or too little, results in unnecessary tire wear. Check the tire pressures at least once a month.
- Be sure that the wheels are aligned correctly. Improper alignment can result from hitting curbs or driving too fast over irregular surfaces. Poor alignment causes faster tire wear and may also result in other problems as well as greater fuel consumption.

- Keep your vehicle in good condition. For better fuel economy and reduced maintenance costs, maintain your vehicle in accordance with the maintenance schedule in section 7. If you drive your vehicle in severe conditions, more frequent maintenance is required (see section 7 for details).
- Keep your vehicle clean. For maximum service, your vehicle should be kept clean and free of corrosive materials. It is especially important that mud, dirt, ice, etc. not be allowed to accumulate on the underside of the vehicle. This extra weight can result in increased fuel consumption and also contribute to corrosion.
- Travel lightly. Don't carry unnecessary weight in your vehicle. Weight reduces fuel economy.
- Don't let the engine idle longer than necessary. If you are waiting (and not in traffic), turn off your engine and restart only when you're ready to go.
- Remember, your vehicle does not require extended warm-up. After the engine has started, allow the engine to run for 10 to 20 seconds prior to placing the vehicle in gear. In very cold weather, however, give your engine a slightly longer warm-up period.
- Don't "lug" or "over-rev" the engine. Lugging is driving too slowly in too high a gear resulting engine bucking. If this happens, shift to a lower gear. Over-revving is racing the engine beyond its safe limit. This can be avoided by shifting at the recommended speeds.
- Use your air conditioning sparingly. The air conditioning system is operated by engine power so your fuel economy is reduced when you use it.
- Open windows at high speeds can reduce fuel economy.
- Fuel economy is less in crosswinds and headwinds. To help offset some of this loss, slow down when driving in these conditions.

Keeping a vehicle in good operating condition is important both for economy and safety. We recommend in general that the vehicle be serviced by an authorized HYUNDAI dealer.

⚠ WARNING - Engine off during motion

Never turn the engine off to coast down hills or anytime the vehicle is in motion. The power steering and power brakes will not function properly without the engine running. Instead, keep the engine on and downshift to an appropriate gear for engine braking effect. In addition, turning off the ignition while driving could engage the steering wheel lock resulting in loss of vehicle steering which could cause serious injury or death.

SPECIAL DRIVING CONDITIONS

Hazardous driving conditions

When hazardous driving conditions are encountered such as water, snow, ice, mud, sand, or similar hazards, follow these suggestions:

- Drive cautiously and allow extra distance for braking.
- Avoid sudden braking or steering.
- When braking with non-ABS brakes pump the brake pedal with a light up-and-down motion until the vehicle is stopped.

⚠ WARNING - ABS

Do not pump the brake pedal on a vehicle equipped with ABS.

- If stalled in snow, mud, or sand, use second gear. Accelerate slowly to avoid spinning the drive wheels.
- Use sand, rock salt, tire chains, or other non-slip material under the drive wheels to provide traction when stalled in ice, snow, or mud.

⚠ WARNING - Downshifting

Downshifting with an automatic transaxle, while driving on slippery surfaces can cause an accident. The sudden change in tire speed could cause the tires to skid. Be careful when downshifting on slippery surfaces.

Rocking the vehicle

If it is necessary to rock the vehicle to free it from snow, sand, or mud, first turn the steering wheel right and left to clear the area around your front wheels. Then, shift back and forth between 1st (First) and R (Reverse) in vehicles equipped with a manual transaxle or R (Reverse) and any forward gear in vehicles equipped with an automatic transaxle. Do not race the engine, and spin the wheels as little as possible. If you are still stuck after a few tries, have the vehicle pulled out by a tow vehicle to avoid engine overheating and possible damage to the transaxle.

⚠ CAUTION

Prolonged rocking may cause engine over-heating, transaxle damage or failure, and tire damage.

⚠ WARNING - Spinning tires

Do not spin the wheels, especially at speeds more than 56 km/h (35 mph). Spinning the wheels at high speeds when the vehicle is stationary could cause a tire to overheat which could result in tire damage that may injure bystanders.

✻ NOTICE

The ESP system (if equipped) should be turned OFF prior to rocking the vehicle.

⚠ WARNING

If your vehicle becomes stuck in snow, mud, sand, etc., then you may attempt to rock the vehicle free by moving it forward and backward. Do not attempt this procedure if people or objects are anywhere near the vehicle. During the rocking operation the vehicle may suddenly move forward of backward as it becomes unstuck, causing injury or damage to nearby people or objects.

Smooth cornering

Avoid braking or gear changing in corners, especially when roads are wet. Ideally, corners should always be taken under gentle acceleration. If you follow these suggestions, tire wear will be held to a minimum.

Driving at night

Because night driving presents more hazards than driving in the daylight, here are some important tips to remember:

- Slow down and keep more distance between you and other vehicles, as it may be more difficult to see at night, especially in areas where there may not be any street lights.
- Adjust your mirrors to reduce the glare from other driver's headlights.
- Keep your headlights clean and properly aimed on vehicles not equipped with the automatic headlight aiming feature. Dirty or improperly aimed headlights will make it much more difficult to see at night.
- Avoid staring directly at the headlights of oncoming vehicles. You could be temporarily blinded, and it will take several seconds for your eyes to readjust to the darkness.

Driving in the rain

Rain and wet roads can make driving dangerous, especially if you're not prepared for the slick pavement. Here are a few things to consider when driving in the rain:

- A heavy rainfall will make it harder to see and will increase the distance needed to stop your vehicle, so slow down.
- Keep your windshield wiping equipment in good shape. Replace your windshield wiper blades when they show signs of streaking or missing areas on the windshield.
- If your tires are not in good condition, making a quick stop on wet pavement can cause a skid and possibly lead to an accident. Be sure your tires are in good shape.
- Turn on your headlights to make it easier for others to see you.
- Driving too fast through large puddles can affect your brakes. If you must go through puddles, try to drive through them slowly.
- If you believe you may have gotten your brakes wet, apply them lightly while driving until normal braking operation returns.

Driving in flooded areas

Avoid driving through flooded areas unless you are sure the water is no higher than the bottom of the wheel hub. Drive through any water slowly. Allow adequate stopping distance because brake performance may be affected.

After driving through water, dry the brakes by gently applying them several times while the vehicle is moving slowly.

Driving off-road

Drive carefully off-road because your vehicle may be damaged by rocks or roots of trees. Become familiar with the off-road conditions where you are going to drive before you begin driving.

OMG015008

Highway driving

Tires

Adjust the tire inflation pressures to specification. Low tire inflation pressures will result in overheating and possible failure of the tires.

Avoid using worn or damaged tires which may result in reduced traction or tire failure.

✻ NOTICE

Never exceed the maximum tire inflation pressure shown on the tires.

⚠ WARNING

- **Underinflated or overinflated tires can cause poor handling, loss of vehicle control, and sudden tire failure leading to accidents, injuries, and even death. Always check tires for proper inflation before driving. For proper tire pressures, refer to "Tires and wheels" in section 8.**
- **Driving on tires with no or insufficient tread is dangerous. Worn-out tires can result in loss of vehicle control, collisions, injury, and even death. Worn-out tires should be replaced as soon as possible and should never be used for driving. Always check the tire tread before driving your car. For further information and tread limits, refer to "Tires and wheels" in section 7.**

Fuel, engine coolant and engine oil

High speed travel consumes more fuel than urban motoring. Do not forget to check both engine coolant and engine oil.

Drive belt

A loose or damaged drive belt may result in overheating of the engine.

WINTER DRIVING

More weather conditions of winter result in greater wear and other problems. To minimize winter driving problem, you should follow these suggestions:

Snowy or icy conditions

To drive your vehicle in deep snow, it may be necessary to use snow tires or to install tire chains on your tires. If snow tires are needed, it is necessary to select tires equivalent in size and type of the originally equipped tires. Failure to do so may adversely affect the safety and handling of your car. Furthermore, speeding, rapid acceleration, sudden brake applications, and sharp turns are potentially very hazardous practices.

During deceleration, use engine braking to the fullest extent. Sudden brake applications on snowy or icy roads may cause skids to occur. You need to keep sufficient distance between the vehicle in operation in front and your vehicle. Also, apply the brake gently. It should be noted that installing tire chains on the tire will provide a greater driving force, but will not prevent side skids.

✻ NOTICE

Tire chains are not legal in all countries. Check the country laws before fitting tire chains.

Snow tires

If you mount snow tires on your vehicle, make sure they are radial tires of the same size and load range as the original tires. Mount snow tires on all four wheels to balance your vehicle's handling in all weather conditions. Keep in mind that the traction provided by snow tires on dry roads may not be as high as your vehicle's originally equipped tires. You should drive cautiously even when the roads are clear. Check with the tire dealer for maximum speed recommendations.

⚠ WARNING - Snow tire size

Snow tires should be equivalent in size and type to the vehicle's standard tires. Otherwise, the safety and handling of your vehicle may be adversely affected.

Do not install studded tires without first checking local, state and municipal regulations for possible restrictions against their use.

Tire chains

Since the sidewalls of radial tires are thinner, they can be damaged by mounting some types of snow chains on them. Therefore, the use of snow tires is recommended instead of snow chains. Do not mount tire chains on vehicles equipped with aluminum wheels; snow chains may cause damage to the wheels. If snow chains must be used, use wire-type chains with a thickness of less than 15 mm (0.59 in). Damage to your vehicle caused by improper snow chain use is not covered by your vehicle manufacturers warranty.

Install tire chains only on the front tires.

⚠ CAUTION

- ***Make sure the snow chains are the correct size and type for your tires. Incorrect snow chains can cause damage to the vehicle body and suspension and may not be covered by your vehicle manufacturer warranty. Also, the snow chain connecting hooks may be damaged from contacting vehicle components causing the snow chains to come loose from the tire. Make sure the snow chains are SAE class "S" certified.***
- ***Always check chain installation for proper mounting after driving approximately 0.5 to 1 km (0.3 to 0.6 miles) to ensure safe mounting. Retighten or remount the chains if they are loose.***

Chain installation

When installing chains, follow the manufacturer's instructions and mount them as tightly as you can. Drive slowly with chains installed. If you hear the chains contacting the body or chassis, stop and tighten them. If they still make contact, slow down until it stops. Remove the chains as soon as you begin driving on cleared roads.

⚠ WARNING - Mounting chains

When mounting snow chains, park the vehicle on level ground away from traffic. Turn on the vehicle Hazard Warning flashers and place a triangular emergency warning device behind the vehicle if available. Always place the vehicle in P (Park), apply the parking brake and turn off the engine before installing snow chains.

⚠ WARNING - Tire chains

- **The use of chains may adversely affect vehicle handling.**
- **Do not exceed 30 km/h (20 mph) or the chain manufacturer's recommended speed limit, whichever is lower.**
- **Drive carefully and avoid bumps, holes, sharp turns, and other road hazards, which may cause the vehicle to bounce.**
- **Avoid sharp turns or locked-wheel braking.**

⚠ CAUTION

- ***Chains that are the wrong size or improperly installed can damage your vehicle's brake lines, suspension, body and wheels.***
- ***Stop driving and retighten the chains any time you hear them hitting the vehicle.***

Use high quality ethylene glycol coolant

Your vehicle is delivered with high quality ethylene glycol coolant in the cooling system. It is the only type of coolant that should be used because it helps prevent corrosion in the cooling system, lubricates the water pump and prevents freezing. Be sure to replace or replenish your coolant in accordance with the maintenance schedule in section 7. Before winter, have your coolant tested to assure that its freezing point is sufficient for the temperatures anticipated during the winter.

Check battery and cables

Winter puts additional burdens on the battery system. Visually inspect the battery and cables as described in section 7. The level of charge in your battery can be checked by an authorized HYUNDAI dealer or a service station.

Change to "winter weight" oil if necessary

In some climates it is recommended that a lower viscosity "winter weight" oil be used during cold weather. See section 8 for recommendations. If you aren't sure what weight oil you should use, we recommend that you consult with an authorized HYUNDAI dealer.

Check spark plugs and ignition system

Inspect your spark plugs as described in section 7 and replace them if necessary. Also check all ignition wiring and components to be sure they are not cracked, worn or damaged in any way.

To keep locks from freezing

To keep the locks from freezing, squirt an approved de-icer fluid or glycerine into the key opening. If a lock is covered with ice, squirt it with an approved de-icing fluid to remove the ice. If the lock is frozen internally, you may be able to thaw it out by using a heated key. Handle the heated key with care to avoid injury.

Use approved window washer anti-freeze in system

To keep the water in the window washer system from freezing, add an approved window washer anti-freeze solution in accordance with instructions on the container. Window washer anti-freeze is available from an authorized HYUNDAI dealer and most auto parts outlets. Do not use engine coolant or other types of anti-freeze as these may damage the paint finish.

Don't let your parking brake freeze

Under some conditions your parking brake can freeze in the engaged position. This is most likely to happen when there is an accumulation of snow or ice around or near the rear brakes or if the brakes are wet. If there is a risk the parking brake may freeze, apply it only temporarily while you put the shift lever in P (automatic transaxle) or in first or reverse gear (manual transaxle) and block the rear wheels so the vehicle cannot roll. Then release the parking brake.

Don't let ice and snow accumulate underneath

Under some conditions, snow and ice can build up under the fenders and interfere with the steering. When driving in severe winter conditions where this may happen, you should periodically check underneath the car to be sure the movement of the front wheels and the steering components is not obstructed.

Carry emergency equipment

Depending on the severity of the weather, you should carry appropriate emergency equipment. Some of the items you may want to carry include tire chains, tow straps or chains, flashlight, emergency flares, sand, shovel, jumper cables, window scraper, gloves, ground cloth, coveralls, blanket, etc.

TRAILER TOWING (FOR EUROPE)

If you are considering towing with your vehicle, you should first check with your country's Department of Motor Vehicles to determine their legal requirements.

Since laws vary the requirements for towing trailers, cars, or other types of vehicles or apparatus may differ. We recommend that you ask an authorized HYUNDAI dealer.

⚠ WARNING - Towing a trailer

If you don't use the correct equipment and drive improperly, you can lose control when you pull a trailer. For example, if the trailer is too heavy, the brakes may not work well - or even at all. You and your passengers could be seriously or fatally injured. Pull a trailer only if you have followed all the steps in this section.

⚠ WARNING - Weight limits

Before towing, make sure the total trailer weight, gross combination weight, gross vehicle weight, gross axle weight and trailer tongue load are all within the limits.

✻ NOTICE - For Europe

- **The technically permissible maximum load on the rear axle(s) may be exceeded by not more than 15% and the technically permissible maximum laden mass of the vehicle may be exceeded by not more than 10% or 100kg (220.4 lbs), whichever value is lower. In this case, do not exceed 100 km/h (62.1 mph) for vehicle of category M1 or 80 km/h (49.7 mph) for vehicle of category N1.**
- **When a vehicle of category M1 is towing a trailer, the additional load imposed at the trailer coupling device may cause the tire maximum load ratings to be exceeded, but not by more than 15%. In this case, do not exceed 100 km/h (62.1 mph) and increase the tire inflation pressure by at least 0.2 bar.**

⚠ CAUTION

Pulling a trailer improperly can damage your vehicle and result in costly repairs not covered by your warranty. To pull a trailer correctly, follow the advice in this section.

Your vehicle can tow a trailer. To identify what the vehicle trailering capacity is for your vehicle, you should read the information in “Weight of the trailer” that appears later in this section.

Remember that trailering is different than just driving your vehicle by itself. Trailering means changes in handling, durability, and fuel economy. Successful, safe trailering requires correct equipment, and it has to be used properly.

This section contains many time-tested, important trailering tips and safety rules. Many of these are important for your safety and that of your passengers. Please read this section carefully before you pull a trailer.

Load-pulling components such as the engine, transaxle, wheel assemblies, and tires are forced to work harder against the load of the added weight. The engine is required to operate at relatively higher speeds and under greater loads. This additional burden generates extra heat. The trailer also considerably adds wind resistance, increasing pulling requirements.

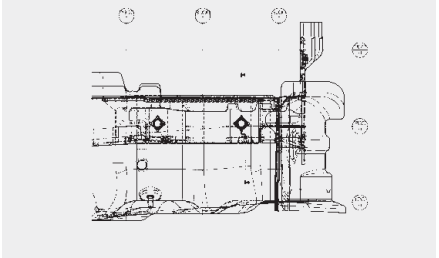

MOUNTING LOCATION
QTY :6 (LH:3, RH:3) OGDE051056

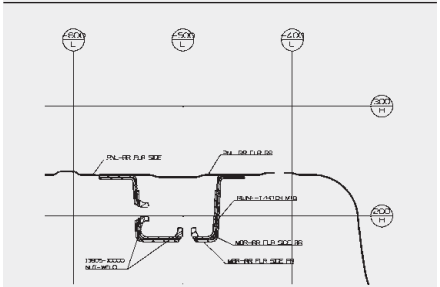

OGDE051057

Hitches

It's important to have the correct hitch equipment. Crosswinds, large trucks going by, and rough roads are a few reasons why you'll need the right hitch. Here are some rules to follow:

- Do you have to make any holes in the body of your vehicle when you install a trailer hitch? If you do, then be sure to seal the holes later when you remove the hitch.

  If you don't seal them, deadly carbon monoxide (CO) from your exhaust can get into your vehicle, as well as dirt and water.
- The bumpers on your vehicle are not intended for hitches. Do not attach rental hitches or other bumper-type hitches. Use only a frame-mounted hitch that does not attach to the bumper.
- HYUNDAI trailer hitch accessory is available at an authorized HYUNDAI dealer.

Safety chains

You should always attach chains between your vehicle and your trailer. Cross the safety chains under the tongue of the trailer so that the tongue will not drop to the road if it becomes separated from the hitch.

Instructions about safety chains may be provided by the hitch manufacturer or by the trailer manufacturer. Follow the manufacturer's recommendation for attaching safety chains. Always leave just enough slack so you can turn with your trailer. And, never allow safety chains drag on the ground.

Trailer brakes

If your trailer is equipped with a braking system, make sure it conforms to your country's regulations and that it is properly installed and operating correctly.

If your trailer weighs more than the maximum trailer weight without trailer brakes loaded, then it needs its own brakes and they must be adequate. Be sure to read and follow the instructions for the trailer brakes so you'll be able to install, adjust and maintain them properly.

- Don't tap into your vehicle's brake system.

⚠ WARNING - Trailer brakes

Do not use a trailer with its own brakes unless you are absolutely certain that you have properly set up the brake system. This is not a task for amateurs. Use an experienced, competent trailer shop for this work.

Driving with a trailer

Towing a trailer requires a certain amount of experience. Before setting out for the open road, you must get to know your trailer. Acquaint yourself with the feel of handling and braking with the added weight of the trailer. And always keep in mind that the vehicle you are driving is now a good deal longer and not nearly so responsive as your vehicle is by itself.

Before you start, check the trailer hitch and platform, safety chains, electrical connector(s), lights, tires and mirror adjustment. If the trailer has electric brakes, start your vehicle and trailer moving and then apply the trailer brake controller by hand to be sure the brakes are working. This lets you check your electrical connection at the same time.

During your trip, check occasionally to be sure that the load is secure, and that the lights and trailer brakes are still working.

Following distance

Stay at least twice as far behind the vehicle ahead as you would when driving your vehicle without a trailer. This can help you avoid situations that require heavy braking and sudden turns.

Passing

You'll need more passing distance up ahead when you're towing a trailer. And, because of the increased vehicle length, you'll need to go much farther beyond the passed vehicle before you can return to your lane.

Backing up

Hold the bottom of the steering wheel with one hand. Then, to move the trailer to the left, just move your hand to the left. To move the trailer to the right, move your hand to the right. Always back up slowly and, if possible, have someone guide you.

Making turns

When you're turning with a trailer, make wider turns than normal. Do this so your trailer won't strike soft shoulders, curbs, road signs, trees, or other objects. Avoid jerky or sudden maneuvers. Signal well in advance.

Turn signals when towing a trailer

When you tow a trailer, your vehicle has to have a different turn signal flasher and extra wiring. The green arrows on your instrument panel will flash whenever you signal a turn or lane change. Properly connected, the trailer lights will also flash to alert other drivers you're about to turn, change lanes, or stop.

When towing a trailer, the green arrows on your instrument panel will flash for turns even if the bulbs on the trailer are burned out. Thus, you may think drivers behind you are seeing your signals when, in fact, they are not. It's important to check occasionally to be sure the trailer bulbs are still working. You must also check the lights every time you disconnect and then reconnect the wires.

Do not connect a trailer lighting system directly to your vehicle's lighting system. Use only an approved trailer wiring harness.

An authorized HYUNDAI dealer can assist you in installing the wiring harness.

⚠ WARNING

Failure to use an approved trailer wiring harness could result in damage to the vehicle electrical system and/or personal injury.

Driving on grades

Reduce speed and shift to a lower gear before you start down a long or steep downgrade. If you don't shift down, you might have to use your brakes so much that they would get hot and no longer operate efficiently.

On a long uphill grade, shift down and reduce your speed to around 70 km/h (45 mph) to reduce the possibility of engine and transaxle overheating.

If your trailer weighs more than the maximum trailer weight without trailer brakes and you have an automatic transaxle, you should drive in D (Drive) when towing a trailer.

Operating your vehicle in D (Drive) when towing a trailer will minimize heat build up and extend the life of your transaxle.

⚠ CAUTION

- ***When towing a trailer on steep grades (in excess of 6%) pay close attention to the engine coolant temperature gauge to ensure the engine does not overheat.***

  If the needle of the coolant temperature gauge moves across the dial towards "H" (HOT), pull over and stop as soon as it is safe to do so, and allow the engine to idle until it cools down. You may proceed once the engine has cooled sufficiently.
- ***You must decide driving speed depending on trailer weight and uphill grade to reduce the possibility of engine and transaxle overheating.***

Parking on hills

Generally, if you have a trailer attached to your vehicle, you should not park your vehicle on a hill. People can be seriously or fatally injured, and both your vehicle and the trailer can be damaged if unexpectedly roll down hill.

⚠ WARNING - Parking on a hill

Parking your vehicle on a hill with a trailer attached could cause serious injury or death, should the trailer break loose.

However, if you ever have to park your trailer on a hill, here's how to do it:

1. Pull the vehicle into the parking space. Turn the steering wheel in the direction of the curb (right if headed down hill, left if headed up hill).
2. If the vehicle has a manual transaxle, place the car in Neutral. If the vehicle has an automatic transaxle, place the car in P (Park).
3. Set the parking brake and shut off the vehicle.
4. Place chocks under the trailer wheels on the down hill side of the wheels.
5. Start the vehicle, hold the brakes, shift to neutral, release the parking brake and slowly release the brakes until the trailer chocks absorb the load.
6. Reapply the brakes, reapply the parking brake and shift the vehicle to R (Reverse) for manual transaxle or P (Park) for automatic transaxle.
7. Shut off the vehicle and release the vehicle brakes but leave the parking brake set.

⚠ WARNING - Parking brake

It can be dangerous to get out of your vehicle if the parking brake is not firmly set.

If you have left the engine running, the vehicle can move suddenly. You or others could be seriously or fatally injured.

When you are ready to leave after parking on a hill

1. With the manual transaxle in N (Neutral) or automatic transaxle in P (Park), apply your brakes and hold the brake pedal down while you:
   - Start your engine;
   - Shift into gear; and
   - Release the parking brake.
2. Slowly remove your foot from the brake pedal.
3. Drive slowly until the trailer is clear of the chocks.
4. Stop and have someone pick up and store the chocks.

Maintenance when trailer towing

Your vehicle will need service more often when you regularly pull a trailer. Important items to pay particular attention to include engine oil, automatic transaxle fluid, axle lubricant and cooling system fluid. Brake condition is another important item to frequently check. Each item is covered in this manual, and the Index will help you find them quickly. If you're trailering, it's a good idea to review these sections before you start your trip.

Don't forget to also maintain your trailer and hitch. Follow the maintenance schedule that accompanied your trailer and check it periodically. Preferably, conduct the check at the start of each day's driving. Most importantly, all hitch nuts and bolts should be tight.

⚠ CAUTION

- ***Due to higher load during trailer usage, overheating might occur in hot days or during uphill driving. If the coolant gauge indicates over-heating, switch off the air conditioner and stop the vehicle in a safe area to cool down the engine.***
- ***When towing, check the transaxle fluid more frequently.***
- ***If your vehicle is not equipped with an air conditioner, you should install a condenser fan to improve engine performance when towing a trailer.***

If you do decide to pull a trailer

Here are some important points if you decide to pull a trailer:

- Consider using a sway control. You can ask a hitch dealer about sway control.
- Do not do any towing with your car during its first 2,000 km (1,200 miles) in order to allow the engine to properly break in. Failure to heed this caution may result in serious engine or transaxle damage.
- When towing a trailer, we recommend that you consult with an authorized HYUNDAI dealer for further information on additional requirements such as a towing kit, etc.
- Always drive your vehicle at a moderate speed (less than 100 km/h / 60 mph). If your vehicle is a commercial vehicle, drive less than 80 km/h.
- On a long uphill grade, do not exceed 70 km/h (45 mph) or the posted towing speed limit, whichever is lower.

- The chart contains important considerations that have to do with weight:

Item \ Engine		Gasoline Engine		Diesel Engine	
		M/T	A/T	M/T	A/T
Maximum trailer weight kg (lbs.)	Without brake System	600 (1,323)	600 (1,323)	650 (1,433)	650 (1,433)
	With brake System	1,300 (2,866)	1200 (2,646)	1,500 (3,307)	1,400 (3,086)
Maximum permissible static vertical load on the coupling device kg (lbs.)		60 (132)		75 (165)	
Recommended distance from rear wheel center to coupling point mm (inch)		870 (34.3)			

M/T : Manual transaxle
A/T : Automatic transaxle

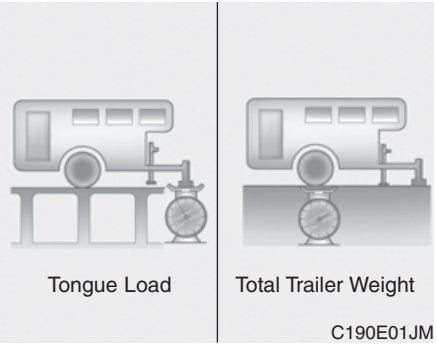

Weight of the trailer

What is the maximum safe weight of a trailer? It should never weigh more than the maximum trailer weight with trailer brakes. But even that can be too heavy.

It depends on how you plan to use your trailer. For example, speed, altitude, road grades, outside temperature and how often your vehicle is used to pull a trailer are all important. The ideal trailer weight can also depend on any special equipment that you have on your vehicle.

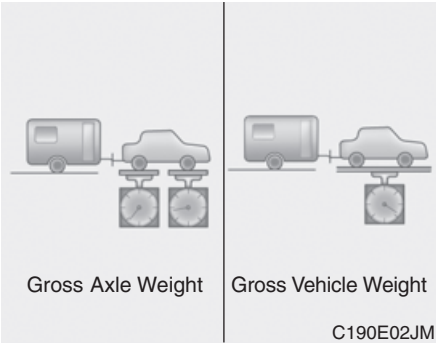

Weight of the trailer tongue

The tongue load of any trailer is an important weight to measure because it affects the total gross vehicle weight (GVW) of your vehicle. This weight includes the curb weight of the vehicle, any cargo you may carry in it, and the people who will be riding in the vehicle. And if you tow a trailer, you must add the tongue load to the GVW because your vehicle will also be carrying that weight.

The trailer tongue should weigh a maximum of 10% of the total loaded trailer weight, within the limits of the maximum trailer tongue load permissible. After you've loaded your trailer, weigh the trailer and then the tongue, separately, to see if the weights are proper. If they aren't, you may be able to correct them simply by moving some items around in the trailer.

⚠ WARNING - Trailer

- **Never load a trailer with more weight in the rear than in the front. The front should be loaded with approximately 60% of the total trailer load; the rear should be loaded with approximately 40% of the total trailer load.**
- **Never exceed the maximum weight limits of the trailer or trailer towing equipment. Improper loading can result in damage to your vehicle and/or personal injury. Check weights and loading at a commercial scale or highway patrol office equipped with scales.**
- **An improperly loaded trailer can cause loss of vehicle control.**

VEHICLE WEIGHT

This section will guide you in the proper loading of your vehicle and/or trailer, to keep your loaded vehicle weight within its design rating capability, with or without a trailer. Properly loading your vehicle will provide maximum return of the vehicle design performance. Before loading your vehicle, familiarize yourself with the following terms for determining your vehicle's weight ratings, with or without a trailer, from the vehicle's specifications and the certification label:

Base curb weight

This is the weight of the vehicle including a full tank of fuel and all standard equipment. It does not include passengers, cargo, or optional equipment.

Vehicle curb weight

This is the weight of your new vehicle when you picked it up from your dealer plus any aftermarket equipment.

Cargo weight

This figure includes all weight added to the Base Curb Weight, including cargo and optional equipment.

GAW (Gross axle weight)

This is the total weight placed on each axle (front and rear) - including vehicle curb weight and all payload.

GAWR (Gross axle weight rating)

This is the maximum allowable weight that can be carried by a single axle (front or rear). These numbers are shown on the certification label.
The total load on each axle must never exceed its GAWR.

GVW (Gross vehicle weight)

This is the Base Curb Weight plus actual Cargo Weight plus passengers.

GVWR (Gross vehicle weight rating)

This is the maximum allowable weight of the fully loaded vehicle (including all options, equipment, passengers and cargo). The GVWR is shown on the certification label located on the driver's (or front passenger's) door sill.

Overloading

⚠ WARNING - Vehicle weight

The gross axle weight rating (GAWR) and the gross vehicle weight rating (GVWR) for your vehicle are on the certification label attached to the driver's (or front passenger's) door. Exceeding these ratings can cause an accident or vehicle damage. You can calculate the weight of your load by weighing the items (and people) before putting them in the vehicle. Be careful not to overload your vehicle.

What to do in an emergency

Road warning 6-2
- Hazard warning flasher 6-2

In case of an emergency while driving.....6-2
- If the engine stalls at a crossroad or crossing.....6-2
- If you have a flat tire while driving 6-2
- If engine stalls while driving 6-3

If the engine does not start 6-3
- If engine doesn't turn over or turns over slowly 6-3
- If engine turns over normally but does not start 6-3

Emergency starting 6-4
- Jump starting.....6-4
- Push-starting 6-5

If the engine overheats.....6-6

If you have a flat tire 6-7
- Jack and tools 6-7
- Removing and storing the spare tire 6-8
- Changing tires 6-8
- Wheel nut tightening torque.....6-11

Towing 6-14
- Towing service 6-14
- Removable towing hook 6-15
- Emergency towing.....6-15

Emergency commodity 6-18
- Fire extinguisher 6-18
- First aid kit.....6-18
- Triangle reflector 6-18
- Tire pressure gauge 6-18

ROAD WARNING

OGDE042103L

Hazard warning flasher

The hazard warning flasher serves as a warning to other drivers to exercise extreme caution when approaching, overtaking, or passing your vehicle.

It should be used whenever emergency repairs are being made or when the vehicle is stopped near the edge of a roadway.

Press the flasher switch with the ignition switch in any position. The flasher switch is located in the center console switch panel. All turn signal lights will flash simultaneously.

- The hazard warning flasher operates whether your vehicle is running or not.
- The turn signals do not work when the hazard flasher is on.
- The hazard warning flasher should always be on while the vehicle is being towed.

IN CASE OF AN EMERGENCY WHILE DRIVING

If the engine stalls at a crossroad or crossing

- If the engine stalls at a crossroad or crossing, set the shift lever in the N (Neutral) position and then push the vehicle to a safe place.
- If your vehicle has a manual transaxle not equipped with an ignition lock switch, the vehicle can move forward by shifting to the 2nd (Second) or 3 rd (Third) gear and then turning the starter without depressing the clutch pedal.

If you have a flat tire while driving

If a tire goes flat while you are driving:

1. Take your foot off the accelerator pedal and let the vehicle slow down while driving straight ahead. Do not apply the brakes immediately or attempt to pull off the road as this may cause a loss of control. When the vehicle has slowed down to such a speed that it is safe to do so, brake carefully and pull off the road. Drive off the road as far as possible and park on a firm level ground. If you are on a divided highway, do not park in the median area between the two traffic lanes.

2. When the vehicle is stopped, turn on your emergency hazard flashers, set the parking brake and put the transaxle in P (automatic transaxle) or Reverse (manual transaxle).
3. Have all passengers get out of the vehicle. Be sure they all get out on the side of the vehicle that is away from traffic.
4. When changing a flat tire, follow the instruction provided later in this section.

If engine stalls while driving

1. Reduce your speed gradually, keeping a straight line. Move cautiously off the road to a safe place.
2. Turn on your emergency flashers.
3. Try to start the engine again. If your vehicle will not start, contact an authorized HYUNDAI dealer or seek other qualified assistance.

IF THE ENGINE WILL NOT START

If engine doesn't turn over or turns over slowly

1. If your vehicle has an automatic transaxle, be sure the shift lever is in N (Neutral) or P (Park) and the emergency brake is set.
2. Check the battery connections to be sure they are clean and tight.
3. Turn on the interior light. If the light dims or goes out when you operate the starter, the battery is discharged.
4. Check the starter connections to be sure they are securely tightened.
5. Do not push or pull the vehicle to start it. See instructions for "Jump starting".

⚠ WARNING

If the engine will not start, do not push or pull the vehicle to start it. This could result in a collision or cause other damage. In addition, push or pull starting may cause the catalytic converter to be overloaded and create a fire hazard.

If engine turns over normally but does not start

1. Check the fuel level.
2. With the ignition switch in the LOCK position, check all connectors at the ignition coils and spark plugs. Reconnect any that may be disconnected or loose.
3. If the engine still does not start, call an authorized HYUNDAI dealer or seek other qualified assistance.

EMERGENCY STARTING

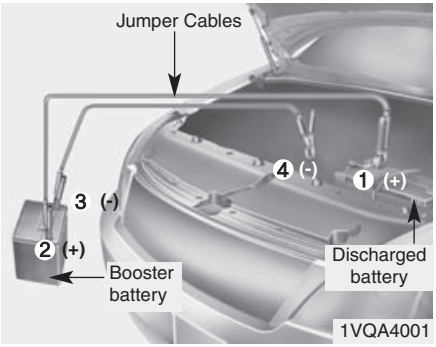

Connect cables in numerical order and disconnect in reverse order.

Jump starting

Jump starting can be dangerous if done incorrectly. Therefore, to avoid harm to yourself or damage to your vehicle or battery, follow the jump starting procedures. If in doubt, we strongly recommend that you have a competent technician or towing service jump start your vehicle.

⚠ CAUTION

Use only a 12-volt jumper system. You can damage a 12-volt starting motor, ignition system, and other electrical parts beyond repair by use of a 24-volt power supply (either two 12-volt batteries in series or a 24-volt motor generator set).

⚠ WARNING - Battery

Never attempt to check the electrolyte level of the battery as this may cause the battery to rupture or explode causing serious injury.

⚠ WARNING - Battery

- **Keep all flames or sparks away from the battery. The battery produces hydrogen gas which may explode if exposed to flame or sparks.**

  If these instructions are not followed exactly, serious personal injury and damage to the vehicle may occur! If you are not sure how to follow this procedure, seek qualified assistance. Automobile batteries contain sulfuric acid. This is poisonous and highly corrosive. When jump starting, wear protective glasses and be careful not to get acid on yourself, your clothing or on the vehicle.
- **Do not attempt to jump start the vehicle if the discharged battery is frozen or if the electrolyte level is low; the battery may rupture or explode.**

Jump starting procedure

✻ NOTICE

If the battery is discharged, the engine can be started using a battery of another vehicle and two jumper cables. Only use jumper cables with fully insulated clamp handles.
To prevent personal injury or damage to both vehicles, adhere strictly to the following procedure.

1. Make sure the booster battery is 12-volt and that its negative terminal is grounded.
2. If the booster battery is in another vehicle, do not allow the vehicles to touch.
3. Turn off all unnecessary electrical loads.
4. Connect the jumper cables in the exact sequence shown in the illustration. First connect one end of a jumper cable to the positive terminal of the discharged battery (1), then connect the other end to the positive terminal on the booster battery (2). Proceed to connect one end of the other jumper cable to the negative terminal of the booster battery (3), then the other end to a solid, stationary, metallic point (for example, the engine lifting bracket) away from the battery (4).
   Do not connect it to or near any part that moves when the engine is cranked. Make sure that there is no contact between the bodywork of the two vehicles; otherwise, there is the danger of short circuits.
   Do not allow the jumper cables to contact anything except the correct battery terminals or the correct ground. Do not lean over the battery when making connections.

⚠ CAUTION - Battery cables

Do not connect the jumper cable from the negative terminal of the booster battery to the negative terminal of the discharged battery. This can cause the discharged battery to overheat and crack, releasing battery acid.

5. Start the engine of the vehicle with the booster battery and let it run at 2,000 rpm, then start the engine of the vehicle with the discharged battery. If the first starting attempt is not successful, wait a few minutes before making another attempt in order to allow the discharged battery to recharge.

If the cause of your battery discharging is not apparent, we recommend that the system be checked by an authorized HYUNDAI dealer.

Push-starting

Your manual transaxle-equipped vehicle should not be push-started because it might damage the emission control system.

Vehicles equipped with automatic transaxle cannot be push-started.

Follow the directions in this section for jump-starting.

⚠ WARNING

Never tow a vehicle to start it because the sudden surge forward when the engine starts could cause a collision with the tow vehicle.

IF THE ENGINE OVERHEATS

If your temperature gauge indicates overheating, you will experience a loss of power, or hear loud pinging or knocking, the engine is probably too hot. If this happens, you should:

1. Pull off the road and stop as soon as it is safe to do so.
2. Place the shift lever in P (automatic transaxle) or Neutral (manual transaxle) and set the parking brake. If the air conditioning is on, turn it off.
3. If engine coolant is running out under the vehicle or steam is coming out from the hood, stop the engine. Do not open the hood until the coolant has stopped running or the steaming has stopped. If there is no visible loss of engine coolant and no steam, leave the engine running and check to be sure the engine cooling fan is operating. If the fan is not running, turn the engine off.
4. Check to see if the water pump drive belt is missing. If it is not missing, check to see that it is tight. If the drive belt seems to be satisfactory, check for coolant leaking from the radiator, hoses or under the vehicle. (If the air conditioning had been in use, it is normal for cold water to be draining from it when you stop).

⚠ WARNING

While the engine is running, keep hair, hands and clothing away from moving parts such as the fan and drive belts to prevent injury.

5. If the water pump drive belt is broken or engine coolant is leaking out, stop the engine immediately and we recommend that you call the nearest authorized HYUNDAI dealer for assistance.

⚠ WARNING

Do not remove the radiator cap when the engine is hot. This can allow coolant to be blown out of the opening and cause serious burns.

6. If you cannot find the cause of overheating, wait until the engine temperature has returned to normal. Then, if coolant has been lost, carefully add coolant to the reservoir to bring the fluid level in the reservoir up to the halfway mark.
7. Proceed with caution, keeping alert for further signs of overheating. If overheating happens again, we recommend that you call an authorized HYUNDAI dealer for assistance.

⚠ CAUTION

Serious loss of coolant indicates there is a leak in the cooling system and we recommend that the system be checked as soon as possible by an authorized HYUNDAI dealer.

IF YOU HAVE A FLAT TIRE

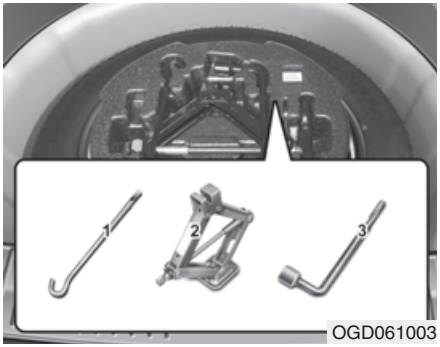

Jack and tools

The jack, jack handle, wheel lug nut wrench are stored in the luggage compartment.

Pull up the luggage box cover to reach this equipment.

(1) Jack handle

(2) Jack

(3) Wheel lug nut wrench

Jacking instructions

The jack is provided for emergency tire changing only.

To prevent the jack from “rattling” while the vehicle is in motion, store it properly.

Follow jacking instructions to reduce the possibility of personal injury.

⚠ WARNING - Changing tires

- **Never attempt vehicle repairs in the traffic lanes of a public road or highway.**
- **Always move the vehicle completely off the road and onto the shoulder before trying to change a tire. The jack should be used on firm level ground. If you cannot find a firm level place off the road, call a towing service company for assistance.**

(Continued)

(Continued)

- **Be sure to use the correct front and rear jacking positions on the vehicle; never use the bumpers or any other part of the vehicle for jacking support.**
- **The vehicle can easily roll off the jack causing serious injury or death.**
- **Do not get under a vehicle that is supported by a jack.**
- **Do not start or run the engine while the vehicle is on the jack.**
- **Do not allow anyone remain in the vehicle while it is on the jack.**
- **Make sure any children present are in a secure place away from the road and from the vehicle to be raised with the jack.**

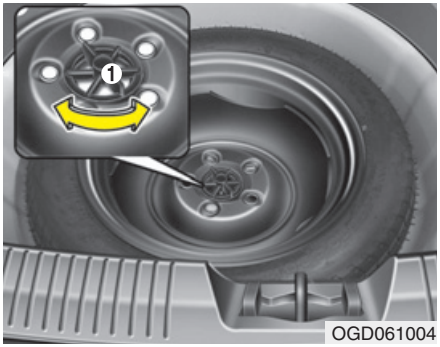

OGD061004

Removing and storing the spare tire

Turn the tire hold-down wing bolt counterclockwise.

Store the tire in the reverse order of removal.

To prevent the spare tire and tools from “rattling” while the vehicle is in motion, store them properly.

OBH068002L

Changing tires

1. Park on a level surface and apply the parking brake firmly.
2. Shift the shift lever into R (Reverse) for manual transaxle or P (Park) for automatic transaxle.
3. Activate the hazard warning flasher.

1JBA6504

4. Remove the wheel lug nut wrench, jack, jack handle, and spare tire from the vehicle.
5. Block both the front and rear of wheel that is diagonally opposite the jack position.

⚠ WARNING - Changing a tire

- **To prevent vehicle movement while changing a tire, always set the parking brake fully, and always block the wheel diagonally opposite the wheel being changed.**
- **We recommend that the wheels of the vehicle be chocked, and that no person remain in a vehicle that is being jacked.**

OGD061009

6. Loosen the wheel lug nuts counterclockwise one turn each, but do not remove any nut until the tire has been raised off the ground.

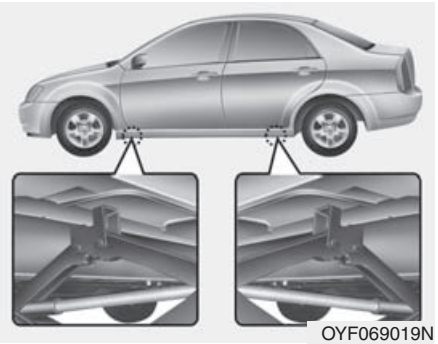
OYF069019N

7. Place the jack at the front or rear jacking position closest to the tire you are changing. Place the jack at the designated locations under the frame. The jacking positions are plates welded to the frame with two tabs and a raised dot to index with the jack.

⚠ WARNING - Jack location

To reduce the possibility of injury, be sure to use only the jack provided with the vehicle and in the correct jack position; never use any other part of the vehicle for jack support.

8. Insert the jack handle into the jack and turn it clockwise, raising the vehicle until the tire just clears the ground. This measurement is approximately 30 mm (1.2 in). Before removing the wheel lug nuts, make sure the vehicle is stable and that there is no chance for movement or slippage.

9. Loosen the wheel nuts and remove them with your fingers. Slide the wheel off the studs and lay it flat so it cannot roll away. To put the wheel on the hub, pick up the spare tire, line up the holes with the studs and slide the wheel onto them. If this is difficult, tip the wheel slightly and get the top hole in the wheel lined up with the top stud. Then jiggle the wheel back and forth until the wheel can be slid over the other studs.

⚠ WARNING

- **Wheels may have sharp edges. Handle them carefully to avoid possible severe injury.**
- **Before putting the wheel into place, be sure that there is nothing on the hub or wheel (such as mud, tar, gravel, etc.) that interferes with the wheel from fitting solidly against the hub. If there is, remove it. If the contact of the mounting surface between the wheel and hub is not good, the wheel nuts could come loose and cause the loss of a wheel. Loss of a wheel may result in loss of control of the vehicle. This may cause serious injury or death.**

10. To reinstall the wheel, hold it on the studs, put the wheel nuts on the studs and tighten them finger tight. Jiggle the tire to be sure it is completely seated, then tighten the nuts as much as possible with your fingers again.
11. Lower the vehicle to the ground by turning the wheel nut wrench counterclockwise.

OGD061013

Then position the wrench as shown in the drawing and tighten the wheel nuts. Be sure the socket is seated completely over the nut. Do not stand on the wrench handle or use an extension pipe over the wrench handle. Go around the wheel tightening every nut following the numerical sequence shown in the image until they are all tight. Then double-check each nut for tightness. After changing wheels, we recommend that the wheel nuts be tighten by an authorized HYUNDAI dealer to their proper torque as soon as possible.

Wheel nut tightening torque:

Steel wheel & aluminum alloy wheel:
9~11 kg·m (65~79 lb·ft)

If you have a tire gauge, remove the valve cap and check the air pressure. If the pressure is lower than recommended, drive slowly to the nearest service station and inflate to the correct pressure. If it is too high, adjust it until it is correct. Always reinstall the valve cap after checking or adjusting tire pressure. If the cap is not replaced, air may leak from the tire. If you lose a valve cap, buy another and install it as soon as possible.

After you have changed wheels, always secure the flat tire in its place and return the jack and tools to their proper storage locations.

⚠ CAUTION

Your vehicle has metric threads on the wheel studs and nuts. Make certain during wheel removal that the same nuts that were removed are reinstalled - or, if replaced, that nuts with metric threads and the same chamfer configuration are used. Installation of a non-metric thread nut on a metric stud or vice-versa will not secure the wheel to the hub properly and will damage the stud so that it must be replaced.

Note that most lug nuts do not have metric threads. Be sure to use extreme care in checking for thread style before installing aftermarket lug nuts or wheels. If in doubt, we recommend that you consult with an authorized HYUNDAI dealer.

⚠ WARNING - Wheel studs

If the studs are damaged, they may lose their ability to retain the wheel. This could lead to the loss of the wheel and a collision resulting in serious injuries.

To prevent the jack, jack handle, wheel lug nut wrench and spare tire from rattling while the vehicle is in motion, store them properly.

⚠ WARNING - Inadequate spare tire pressure

Check the inflation pressures as soon as possible after installing the spare tire. Adjust it to the specified pressure, if necessary. Refer to "Tires and wheels" in section 8.

Important - use of compact spare tire (if equipped)

Your vehicle is equipped with a compact spare tire. This compact spare tire takes up less space than a regular-size tire. This tire is smaller than a conventional tire and is designed for temporary use only.

⚠ CAUTION

- ***You should drive carefully when the compact spare is in use. The compact spare should be replaced by the proper conventional tire and rim at the first opportunity.***
- ***The operation of this vehicle is not recommended with more than one compact spare tire in use at the same time.***

⚠ WARNING

The compact spare tire is for emergency use only. Do not operate your vehicle on this compact spare at the speed over 80 km/h (50 mph). The original tire should be repaired or replaced as soon as possible to avoid failure of the spare possibly leading to personal injury or death.

The compact spare should be inflated to 420 kPa (60 psi).

✻ NOTICE

Check the inflation pressure after installing the spare tire. Adjust it to the specified pressure, as necessary.

When using a compact spare tire, observe the following precautions:

- Under no circumstances should you exceed 80 km/h (50 mph); a higher speed could damage the tire.
- Ensure that you drive slowly enough to avoid all hazards. Any road hazard, such as a pothole or debris, could seriously damage the compact spare.
- Any continuous road use of this tire could result in tire failure, loss of vehicle control, and possible personal injury.
- Do not exceed the vehicle's maximum load rating or the load-carrying capacity shown on the sidewall of the compact spare tire.
- Avoid driving over obstacles. The compact spare tire diameter is smaller than the diameter of a conventional tire and reduces the ground clearance approximately 25 mm (1 inch), which could result in damage to the vehicle.
- Do not take this vehicle through an automatic car wash while the compact spare tire is installed.
- Do not use tire chains on the compact spare tire. Because of the smaller size, a tire chain will not fit properly. This could damage the vehicle and result in loss of the chain.
- The compact spare tire should not be installed on the front axle if the vehicle must be driven in snow or on ice.
- Do not use the compact spare tire on any other vehicle because this tire has been designed especially for your vehicle.
- The compact spare tire's tread life is shorter than a regular tire. Inspect your compact spare tire regularly and replace worn compact spare tires with the same size and design, mounted on the same wheel.

- The compact spare tire should not be used on any other wheels, nor should standard tires, snow tires, wheel covers or trim rings be used with the compact spare wheel. If such use is attempted, damage to these items or other car components may occur.
- Do not use more than one compact spare tire at a time.
- Do not tow a trailer while the compact spare tire is installed.

TOWING

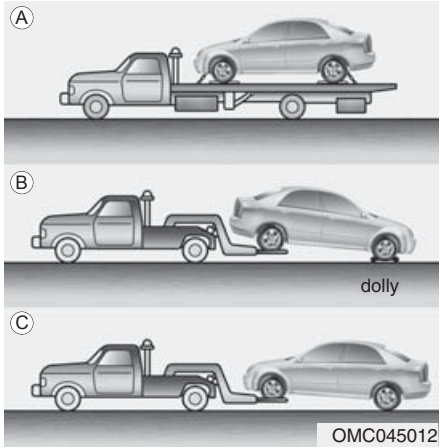

Towing service

If emergency towing is necessary, we recommend having it done by an authorized HYUNDAI dealer or a commercial tow-truck service. Proper lifting and towing procedures are necessary to prevent damage to the vehicle. The use of wheel dollies or flatbed is recommended.

For trailer towing guidelines information, refer to “Trailer towing” in section 5.

It is acceptable to tow the vehicle with the rear wheels on the ground (without dollies) and the front wheels off the ground.

If any of the loaded wheels or suspension components are damaged or the vehicle is being towed with the front wheels on the ground, use a towing dolly under the front wheels.

When being towed by a commercial tow truck and wheel dollies are not used, the front of the vehicle should always be lifted, not the rear.

When towing your vehicle in an emergency without wheel dollies :

1. Set the ignition switch in the ACC position.
2. Place the transaxle shift lever in N (Neutral).
3. Release the parking brake.

⚠ CAUTION

Failure to place the transaxle shift lever in N (Neutral) may cause internal damage to the transaxle.

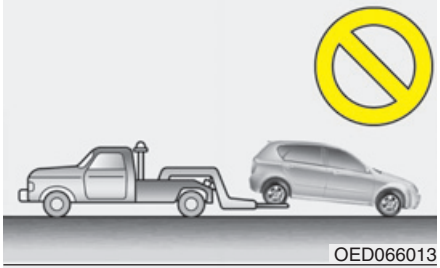
OED066013

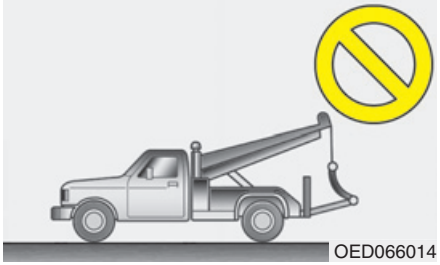
OED066014

⚠ **CAUTION**

- ***Do not tow the vehicle backwards with the front wheels on the ground as this may cause damage to the vehicle.***
- ***Do not tow with sling-type equipment. Use wheel lift or flatbed equipment.***

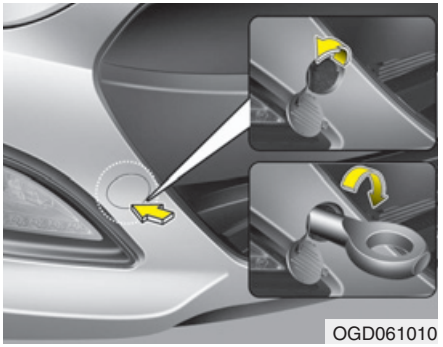
OGD061010

Removable towing hook (front)

1. Open the tailgate, and remove the towing hook from the tool case.
2. Remove the hole cover pressing the lower part of the cover on the front bumper.
3. Install the towing hook by turning it clockwise into the hole until it is fully secured.
4. Remove the towing hook and install the cover after use.

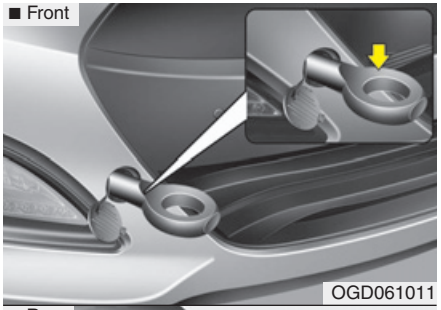

OGD061011

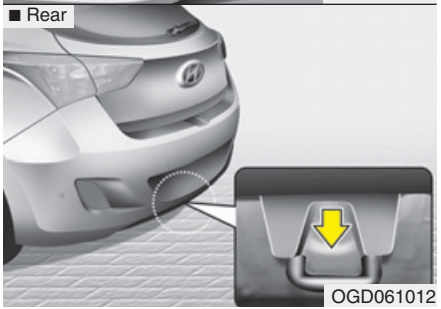

OGD061012

Emergency towing (if equipped)

If towing is necessary, we recommend having it done by an authorized HYUNDAI dealer or a commercial tow truck service.

If towing service is not available in an emergency, your vehicle may be temporarily towed using a cable or chain secured to the emergency towing hook under the front (or rear) of the vehicle. Use extreme caution when towing the vehicle. A driver must be in the vehicle to steer it and operate the brakes.

Towing in this manner may be done only on hard-surfaced roads for a short distance and at low speed. Also, the wheels, axles, power train, steering and brakes must all be in good condition.

- Do not use the tow hooks to pull a vehicle out of mud, sand or other conditions from which the vehicle cannot be driven out under its own power.
- Avoid towing a vehicle heavier than the vehicle doing the towing.
- The drivers of both vehicles should communicate with each other frequently.

⚠ CAUTION

- ***Attach a towing strap to the tow hook.***
- ***Using a portion of the vehicle other than the tow hooks for towing may damage the body of your vehicle.***
- ***Use only a cable or chain specifically intended for use in towing vehicles. Securely fasten the cable or chain to the towing hook provided.***

- Before emergency towing, check if the hook is not broken or damaged.
- Fasten the towing cable or chain securely to the hook.
- Do not jerk the hook. Apply it steadily and with even force.
- To avoid damaging the hook, do not pull from the side or at a vertical angle. Always pull straight ahead.

⚠ WARNING

Use extreme caution when towing the vehicle.

- **Avoid sudden starts or erratic driving maneuvers which would place excessive stress on the emergency towing hook and towing cable or chain. The hook and towing cable or chain may break and cause serious injury or damage.**
- **If the disabled vehicle is unable to move, do not forcibly continue the towing. We recommend that you contact an authorized HYUNDAI dealer or a commercial tow truck service for assistance.**
- **Tow the vehicle as straight ahead as possible.**
- **Keep away from the vehicle during towing.**

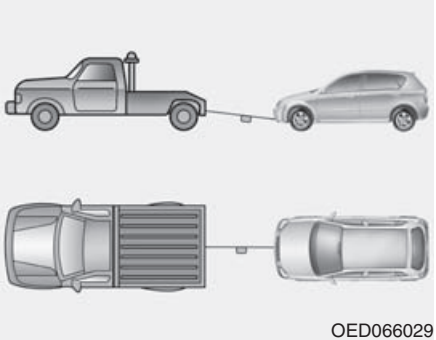

- Use a towing strap less than 5 m (16 feet) long. Attach a white or red cloth (about 30 cm (12 inches) wide) in the middle of the strap for easy visibility.
- Drive carefully so that the towing strap is not loosened during towing.

Emergency towing precautions

- Turn the ignition switch to ACC so the steering wheel isn't locked.
- Place the transaxle shift lever in N (Neutral).
- Release the parking bake.
- Press the brake pedal with more force than normal since you will have reduced brake performance.
- More steering effort will be required because the power steering system will be disabled.
- If you are driving down a long hill, the brakes may overheat and brake performance will be reduced. Stop often and let the brakes cool off.

⚠ CAUTION - Automatic transaxle

- ***If the car is being towed with all four wheels on the ground, it can be towed only from the front. Be sure that the transaxle is in neutral. Be sure the steering is unlocked by placing the ignition switch in the ACC position. A driver must be in the towed vehicle to operate the steering and brakes.***
- ***To avoid serious damage to the automatic transaxle, limit the vehicle speed to 15 km/h (10 mph) and drive less than 1.5 km (1 mile) when towing.***
- ***Before towing, check the automatic transaxle fluid leak under your vehicle. If the automatic transaxle fluid is leaking, a flatbed equipment or towing dolly must be used.***

EMERGENCY COMMODITY (IF EQUIPPED)

There are some emergency commodities in the vehicle to help you respond to the emergency situation.

Fire extinguisher

If there is small fire and you know how to use the fire extinguisher, take the following steps carefully.

1. Pull the pin at the top of the extinguisher that keeps the handle from being accidentally pressed.
2. Aim the nozzle toward the base of the fire.
3. Stand approximately 2.5 m (8 ft) away from the fire and squeeze the handle to discharge the extinguisher. If you release the handle, the discharge will stop.
4. Sweep the nozzle back and forth at the base of the fire. After the fire appears to be out, watch it carefully since it may re-ignite.

First aid kit

There are some items such as scissors, bandage and adhesive tape and etc. in the kit to give first aid to an injured person.

Triangle reflector

Place the triangle reflector on the road to warn oncoming vehicles during emergencies, such as when the vehicle is parked by the roadside due to any problems.

Tire pressure gauge (If equipped)

Tires normally lose some air in day-to-day use, and you may have to add a few pounds of air periodically and it is not usually a sign of a leaking tire, but of normal wear. Always check tire pressure when the tires are cold because tire pressure increases with temperature.

To check the tire pressure, take the following steps;

1. Unscrew the inflation valve cap that is located on the rim of the tire.
2. Press and hold the gauge against the tire valve. Some air will escape as you begin and more will escape if you don't press the gauge in firmly.
3. A firm non-leaking push will activate the gauge.
4. Read the tire pressure on the gauge to know whether the tire pressure is low or high.
5. Adjust the tire pressures to the specified pressure. Refer to “Tires and wheels” in section 8.
6. Reinstall the inflation valve cap.

Maintenance

Engine compartment 7-3
Maintenance services 7-5
• Owner's responsibility 7-5
• Owner maintenance precautions 7-5
• Engine compartment precautions (Diesel engine) 7-6
Owner maintenance 7-7
• Owner maintenance schedule.....7-7
Scheduled maintenance service.....7-8
• Gasoline engine 7-9
• Diesel engine.....7-20
Explanation of scheduled maintenance items 7-28
Engine oil.....7-31
• Checking the engine oil level 7-31
• Changing the engine oil and filter 7-32
Engine coolant 7-33
• Checking the coolant level 7-33
• Changing the coolant 7-35
Brake/clutch fluid.....7-36
• Checking the brake fluid level 7-36
Washer fluid 7-37
• Checking the washer fluid level 7-37
Parking brake - hand type 7-37
• Checking the parking brake.....7-37
Fuel filter (for Diesel).....7-38
• Draining water from fuel filter 7-38
• Extracting air from the fuel filter 7-38
Air cleaner.....7-39
• Filter replacement 7-39
Climate control air filter 7-40
• Filter inspection 7-40
• Filter replacement 7-40
Wiper blades 7-42
• Blade inspection.....7-42
• Blade replacement 7-42
Battery 7-45
• For best battery service 7-45
• Battery recharging 7-46
• Reset items 7-47
Tires and wheels 7-48
• Tire care 7-48
• Recommended cold tire inflation pressures 7-48
• Checking tire inflation pressure.....7-49
• Tire rotation 7-50
• Wheel alignment and tire balance 7-51
• Tire replacement 7-52
• Wheel replacement 7-53
• Tire traction 7-53
• Tire maintenance 7-53
• Tire sidewall labeling 7-54
• Low aspect ratio tire 7-57

Fuses 7-59
- Fuse/relay panel description.....7-61

Light bulbs 7-73
- Front light replacement 7-74
- Side repeater light bulb replacement 7-78
- Rear combination light bulb replacement 7-79
- High mounted stop light bulb replacement 7-82
- License plate light bulb replacement.....7-82
- Interior light bulb replacement 7-83

Appearance care.....7-84
- Exterior care 7-84
- Interior care.....7-88

Emission control system 7-90

ENGINE COMPARTMENT

■ **Gasoline engine - 1.6**

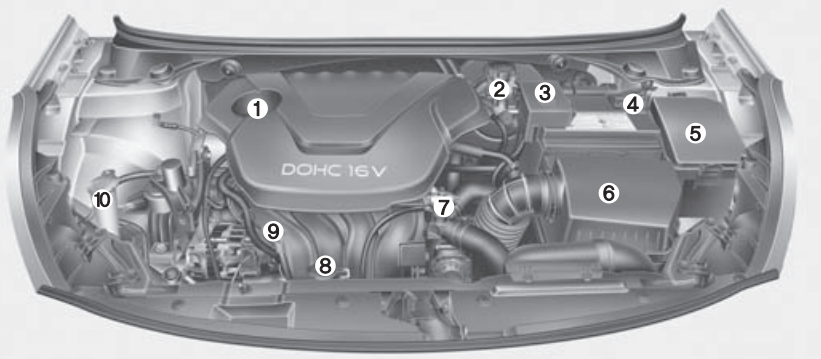

■ **Gasoline engine - 1.8**

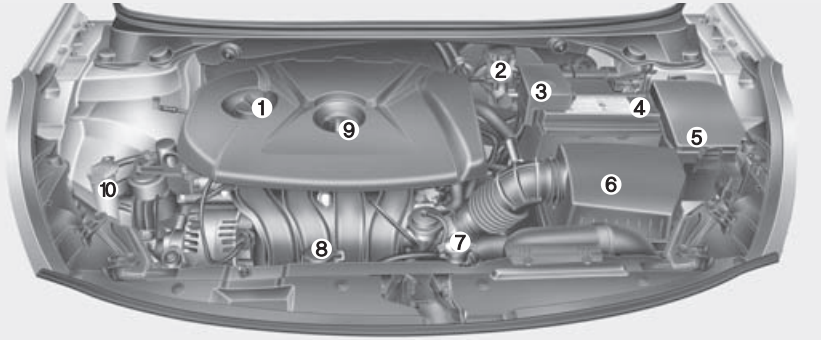

1. Engine oil filler cap
2. Brake/clutch fluid reservoir
3. Positive battery terminal
4. Negative battery terminal
5. Fuse box
6. Air cleaner
7. Radiator cap
8. Engine coolant reservoir
9. Engine oil dipstick
10. Windshield washer fluid reservoir

❊ The actual engine room in the vehicle may differ from the illustration.

OGDE072070/OGDE072001L

■ **Diesel engine**

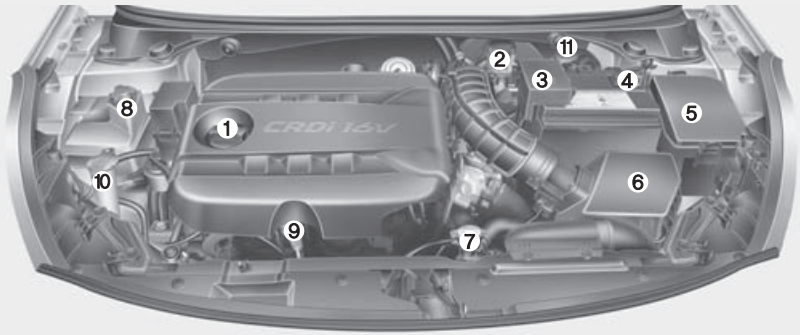

1. Engine oil filler cap
2. Brake/clutch fluid reservoir
3. Positive battery terminal
4. Negative battery terminal
5. Fuse box
6. Air cleaner
7. Radiator cap
8. Engine coolant reservoir
9. Engine oil dipstick
10. Windshield washer fluid reservoir
11. Fuel filter

❊ The actual engine room in the vehicle may differ from the illustration.

OGD071002

MAINTENANCE SERVICES

You should exercise the utmost care to prevent damage to your vehicle and injury to yourself whenever performing any maintenance or inspection procedures.

Inadequate, incomplete or insufficient servicing may result in operational problems with your vehicle that could lead to vehicle damage, an accident, or personal injury.

Owner's responsibility

✻ NOTICE

Maintenance Service and Record Retention are the owner's responsibility.

We recommend in general that you have your vehicle serviced by an authorized HYUNDAI dealer. You should retain documents that show proper maintenance has been performed on your vehicle in accordance with the maintenance schedule. You need this information to establish your compliance with the servicing and maintenance requirements of your vehicle warranties. Detailed warranty information is provided in your Service Passport. Repairs and adjustments required as a result of improper maintenance or a lack of required maintenance are not covered when your vehicle is covered by warranty.

Owner maintenance precautions

Improper or incomplete service may result in problems. This section gives instructions only for the maintenance items that are easy to perform.

✻ NOTICE

Improper owner maintenance during the warranty period may affect warranty coverage. For details, read the separate Service Passport provided with the vehicle. If you're unsure about any servicing or maintenance procedure, we recommend that the system be checked by an authorized HYUNDAI dealer.

⚠ WARNING

Do not leave gloves, rags or any other combustible material in the engine compartment. Doing so may cause a heat-induced fire.

⚠ WARNING - Maintenance work

- **Performing maintenance work on a vehicle can be dangerous. You can be seriously injured while performing some maintenance procedures. If you lack sufficient knowledge and experience or the proper tools and equipment to do the work, we recommend that the system be checked by an authorized HYUNDAI dealer.**
- **Working under the hood with the engine running is dangerous. It becomes even more dangerous when you wear jewelry or loose clothing. These can become entangled in moving parts and result in injury. Therefore, if you must run the engine while working under the hood, make certain that you remove all jewelry (especially rings, bracelets, watches, and necklaces) and all neckties, scarves, and similar loose clothing before getting near the engine or cooling fans.**

Engine compartment precautions (Diesel engine)

- The injector operates at high voltage (maximum 200v). Therefore, the following accidents may occur.
  - Direct contact with the injector or injector wiring may cause electric shock or damage your muscle or nerve system.
  - The electromagnetic wave from the operating injector may cause the artificial heart pacemaker to malfunction.
- Follow the safety tips provided below, when you are checking the engine room while the engine is running.
  - Do not touch the injector, injector wirings, and the engine computer while the engine is running.
  - Do not remove the injector connector while the engine is running.
  - People using pacemakers must not go near the engine while the engine is starting or running.

⚠ WARNING - Diesel Engine

Never work on injection system with engine running or within 30 seconds after shutting off engine. High-pressure pump, rail, injectors and high-pressure pipes are subject to high pressure even after the engine stopped. The fuel jet produced by fuel leaks may cause serious injury, if it touches the body. People using pacemakers should not move more than 30cm closer to the ECU or wiring harness within the engine room while engine is running, since the high currents in the electronic engine control system produce considerable magnetic fields.

OWNER MAINTENANCE

We recommend that the following lists are vehicle checks and inspections that should be performed by the owner or an authorized HYUNDAI dealer at the frequencies indicated to help ensure safe, dependable operation of your vehicle.

If you have any question, we recommend that you consult an authorized HYUNDAI dealer.

These Owner Maintenance Checks are generally not covered by warranties and you may be charged for labor, parts and lubricants used.

Owner maintenance schedule

When you stop for fuel:

- Check the engine oil level.
- Check the coolant level in coolant reservoir.
- Check the windshield washer fluid level.
- Look for low or under-inflated tires.
- Check the radiator and condenser.

  Check if the front of the radiator and condenser are clean and not blocked with leaves, dirt or insects etc.

  If any of the above parts are extremely dirty or you are not sure of their condition, we recommend that you contact an authorized HYUNDAI dealer.

⚠ WARNING

Be careful when checking your engine coolant level when the engine is hot. Scalding hot coolant and steam may blow out under pressure. This could cause burns or other serious injury.

While operating your vehicle:

- Note any changes in the sound of the exhaust or any smell of exhaust fumes in the vehicle.
- Check for vibrations in the steering wheel. Notice any increased steering effort or looseness in the steering wheel, or change in its straight-ahead position.
- Notice if your vehicle constantly turns slightly or “pulls” to one side when traveling on smooth, level road.
- When stopping, listen and check for unusual sounds, pulling to one side, increased brake pedal travel or “hard-to-push” brake pedal.
- If any slipping or changes in the operation of your transaxle occurs, check the transaxle fluid level.
- Check automatic transaxle P (Park) function.
- Check the parking brake.
- Check for fluid leaks under your vehicle (water dripping from the air conditioning system during or after use is normal).

At least monthly:

- Check the coolant level in the engine coolant reservoir.
- Check the operation of all exterior lights, including the stoplights, turn signals and hazard warning flashers.
- Check the inflation pressures of all tires including the spare.

At least twice a year (i.e., every Spring and Fall):

- Check the radiator, heater and air conditioning hoses for leaks or damage.
- Check the windshield washer spray and wiper operation. Clean wiper blades with clean cloth dampened with washer fluid.
- Check the headlight alignment.
- Check the muffler, exhaust pipes, shields and clamps.
- Check the lap/shoulder belts for wear and function.
- Check for worn tires and loose wheel lug nuts.

At least once a year:

- Clean the body and door drain holes.
- Lubricate the door hinges and checks, and hood hinges.
- Lubricate the door and hood locks and latches.
- Lubricate the door rubber weatherstrips.
- Check the air conditioning system.
- Inspect and lubricate automatic transaxle linkage and controls.
- Clean the battery and terminals.
- Check the brake/clutch fluid level.

SCHEDULED MAINTENANCE SERVICE

Follow the Normal Maintenance Schedule if the vehicle is usually operated where none of the following conditions apply. If any of the following conditions apply, follow Maintenance Under Severe Usage Conditions.

- Repeated short distance driving.
- Driving in dusty conditions or sandy areas.
- Extensive use of brakes.
- Driving in areas where salt or other corrosive materials are being used.
- Driving on rough or muddy roads.
- Driving in mountainous areas.
- Extended periods of idling or low speed operation.
- Driving for a prolonged period in cold temperatures and/or extremely humid climates.
- More than 50% driving in heavy city traffic during hot weather above 32°C (90°F).

If your vehicle is operated under the above conditions, you should inspect, replace or refill more frequently than the following Normal Maintenance Schedule. After the periods or distance shown in the chart, continue to follow the prescribed maintenance intervals.

NORMAL MAINTENANCE SCHEDULE - FOR GASOLINE ENGINE

The following maintenance services must be performed to ensure good emission control and performance. Keep receipts for all vehicle emission services to protect your warranty. Where both mileage and time are shown, the frequency of service is determined by whichever occurs first.

*1 : Inspect drive belt tensioner, idler and alternator pulley and if necessary correct or replace.

*2 : Check the engine oil level and leak every 500 km (350 miles) or before starting a long trip.

*3 : Driving in outer temperature over 40 °C (104 °F) or driving over 170 km/h (106 mile/h) must conform the severe driving condition.

*4 : If good quality gasolines that meet Europe Fuel standards (EN228) or equivalents including fuel additives is not available, one bottle of additive is recommended. Additives are available from your authorized HYUNDAI dealer along with information on how to use them. Do not mix other additives

*5 : For your convenience, it can be replaced prior to it's interval when you do maintenance of other items.

*6 : The engine oil level should be checked regularly and maintained properly. Operating with an insufficient amount of oil can damage the engine, and such damage is not covered by warranty.

*7 : If the recommended oil and oil filter are not available, replace engine oil and engine oil filter every 7,500 km or 6 months.

*8 : The fuel filter is considered to be maintenance free but periodic inspection is recommended for this maintenance schedule depends on fuel quality. If there are some important matters like fuel flow restriction, surging, loss of power, hard starting problem etc, we recommend replacing the fuel filter immediately regardless of maintenance schedule and consulting with an authorized HYUNDAI dealer for details.

*9 : When adding coolant, use only deionized water or soft water for your vehicle and never mix hard water in the coolant filled at the factory. An improper coolant mixture can result in serious malfunction or engine damage.

*10 : Manual transaxle fluid should be changed anytime they have been submerged in water.

*11 : Inspect for excessive valve noise and/or engine vibration and adjust if necessary.

NORMAL MAINTENANCE SCHEDULE - FOR GASOLINE ENGINE (CONT.)

15,000 km (10,000 miles) or 12months
❑ Inspect air cleaner filter - Except China, Middle East
❑ Inspect air conditioner refrigerant/compressor (if equipped)
❑ Inspect battery condition
❑ Inspect brake lines, hoses and connections
❑ Inspect brake/clutch (if equipped) fluid
❑ Inspect disc brakes and pads
❑ Inspect drive shafts and boots
❑ Inspect exhaust system
❑ Inspect front suspension ball joints
❑ Inspect parking brake
❑ Inspect steering gear rack, linkage and boots
❑ Inspect tire (pressure & tread wear)
❑ Replace air cleaner filter - For China, Middle East
❑ Replace climate control air filter
❑ Replace engine oil and filter - Except Middle East, Brazil, Libya *2 *3 *6 *7
❑ Replace engine oil and filter - For Middle East, Brazil, Libya *2 *3 *6 *7 (Every 10,000 km (6,500 miles) or 12months)
❑ Add fuel additives *4 (Every 5,000 km or 6 months)

❊ Inspect : Inspect and if necessary, adjust, correct, clean or replace.

NORMAL MAINTENANCE SCHEDULE - FOR GASOLINE ENGINE (CONT.)

30,000 km (20,000 miles) or 24months

- ❑ Inspect air cleaner filter - Except China, Middle East
- ❑ Inspect air conditioner refrigerant/compressor (if equipped)
- ❑ Inspect battery condition
- ❑ Inspect brake lines, hoses and connections
- ❑ Inspect brake/clutch(if equipped) fluid
- ❑ Inspect brake/clutch(if equipped) pedal
- ❑ Inspect disc brakes and pads
- ❑ Inspect drive belt *1
- ❑ Inspect drive shafts and boots
- ❑ Inspect exhaust system
- ❑ Inspect front suspension ball joints
- ❑ Inspect fuel filter *8
- ❑ Inspect fuel tank air filter
- ❑ Inspect parking brake
- ❑ Inspect steering gear rack, linkage and boots
- ❑ Inspect tire (pressure & tread wear)
- ❑ Replace air cleaner filter - For China, Middle East
- ❑ Replace climate control air filter
- ❑ Replace engine oil and filter
  - Except Middle East, Brazil, Libya *2 *3 *6 *7

(Continued)

(Continued)

- ❑ Replace engine oil and filter
  - For Middle East, Brazil, Libya *2 *3 *6 *7
    (Every 10,000 km (6,500 miles) or 12months)
- ❑ Add fuel additives *4
  (Every 5,000 km or 6 months)

❊ Inspect : Inspect and if necessary, adjust, correct, clean or replace.

NORMAL MAINTENANCE SCHEDULE - FOR GASOLINE ENGINE (CONT.)

45,000 km (30,000 miles) or 36months
❑ Inspect air conditioner refrigerant/compressor (if equipped)
❑ Inspect battery condition
❑ Inspect brake lines, hoses and connections
❑ Inspect brake/clutch(if equipped) fluid
❑ Inspect disc brakes and pads
❑ Inspect drive shafts and boots
❑ Inspect exhaust system
❑ Inspect front suspension ball joints
❑ Inspect parking brake
❑ Inspect steering gear rack, linkage and boots
❑ Inspect tire (pressure & tread wear)
❑ Replace air cleaner filter
❑ Replace climate control air filter
❑ Replace engine oil and filter - Except Middle East, Brazil, Libya *2 *3 *6 *7
❑ Replace engine oil and filter - For Middle East, Brazil, Libya *2 *3 *6 *7 (Every 10,000 km (6,500 miles) or 12months)
❑ Add fuel additives *4 (Every 5,000 km or 6 months)

❊ Inspect : Inspect and if necessary, adjust, correct, clean or replace.

NORMAL MAINTENANCE SCHEDULE - FOR GASOLINE ENGINE (CONT.)

60,000 km (40,000 miles) or 48months

- ❑ Inspect air cleaner filter - Except China, Middle East
- ❑ Inspect air conditioner refrigerant/compressor (if equipped)
- ❑ Inspect battery condition
- ❑ Inspect brake lines, hoses and connections
- ❑ Inspect brake/clutch (if equipped) fluid
- ❑ Inspect brake/clutch(if equipped) pedal
- ❑ Inspect disc brakes and pads
- ❑ Inspect drive belt *1
- ❑ Inspect drive shafts and boots
- ❑ Inspect exhaust system
- ❑ Inspect front suspension ball joints
- ❑ Inspect fuel lines, hoses and connections
- ❑ Inspect parking brake
- ❑ Inspect steering gear rack, linkage and boots
- ❑ Inspect tire (pressure & tread wear)
- ❑ Inspect manual transaxle fluid (if equipped) *10
- ❑ Inspect vapor hose and fuel filler cap
- ❑ Replace air cleaner filter - For China, Middle East
- ❑ Replace climate control air filter
- ❑ Replace engine oil and filter
  - Except Middle East, Brazil, Libya *2 *3 *6 *7

(Continued)

(Continued)

- ❑ Replace engine oil and filter
  - For Middle East, Brazil, Libya *2 *3 *6 *7
    (Every 10,000 km (6,500 miles) or 12months)
- ❑ Replace fuel filter *8
- ❑ Replace fuel tank air filter
- ❑ Inspect cooling system
  (At first, 60,000 km (40,000 miles) or 48months
  after that, every 30,000 km (20,000 miles) or 24months)
- ❑ Add fuel additives *4
  (Every 5,000 km or 6 months)
- ❑ Replace spark plugs (1.6 Engine)

❊ Inspect : Inspect and if necessary, adjust, correct, clean or replace.

NORMAL MAINTENANCE SCHEDULE - FOR GASOLINE ENGINE (CONT.)

75,000 km (50,000 miles) or 60months
❑ Inspect air cleaner filter - Except China, Middle East
❑ Inspect air conditioner refrigerant/compressor (if equipped)
❑ Inspect battery condition
❑ Inspect brake lines, hoses and connections
❑ Inspect brake/clutch(if equipped) fluid
❑ Inspect disc brakes and pads
❑ Inspect drive shafts and boots
❑ Inspect exhaust system
❑ Inspect front suspension ball joints
❑ Inspect parking brake
❑ Inspect steering gear rack, linkage and boots
❑ Inspect tire (pressure & tread wear)
❑ Replace air cleaner filter - For China, Middle East
❑ Replace climate control air filter
❑ Replace engine oil and filter - Except Middle East, Brazil, Libya *2 *3 *6 *7
❑ Replace engine oil and filter - For Middle East, Brazil, Libya *2 *3 *6 *7 (Every 10,000 km (6,500 miles) or 12months)
❑ Add fuel additives *4 (Every 5,000 km or 6 months)

❊ Inspect : Inspect and if necessary, adjust, correct, clean or replace.

NORMAL MAINTENANCE SCHEDULE - FOR GASOLINE ENGINE (CONT.)

90,000 km (60,000 miles) or 72months

- ❑ Inspect air conditioner refrigerant/compressor (if equipped)
- ❑ Inspect battery condition
- ❑ Inspect brake lines, hoses and connections
- ❑ Inspect brake/clutch(if equipped) fluid
- ❑ Inspect brake/clutch(if equipped) pedal
- ❑ Inspect disc brakes and pads
- ❑ Inspect drive belt *1
- ❑ Inspect drive shafts and boots
- ❑ Inspect exhaust system
- ❑ Inspect front suspension ball joints
- ❑ Inspect fuel filter *8
- ❑ Inspect fuel tank air filter
- ❑ Inspect parking brake
- ❑ Inspect steering gear rack, linkage and boots
- ❑ Inspect tire (pressure & tread wear)
- ❑ Inspect valve clearance (1.6 Engine) *11
- ❑ Replace air cleaner filter
- ❑ Replace climate control air filter
- ❑ Replace engine oil and filter
  - Except Middle East, Brazil, Libya *2 *3 *6 *7

(Continued)

(Continued)

- ❑ Replace engine oil and filter
  - For Middle East, Brazil, Libya *2 *3 *6 *7
    (Every 10,000 km (6,500 miles) or 12months)
- ❑ Inspect cooling system
  (At first, 60,000 km (40,000 miles) or 48months
  after that, every 30,000 km (20,000 miles) or 24months)
- ❑ Add fuel additives *4
  (Every 5,000 km or 6 months)

❊ Inspect : Inspect and if necessary, adjust, correct, clean or replace.

NORMAL MAINTENANCE SCHEDULE - FOR GASOLINE ENGINE (CONT.)

105,000 km (70,000 miles) or 84months
❑ Inspect air cleaner filter - Except China, Middle East
❑ Inspect air conditioner refrigerant/compressor (if equipped)
❑ Inspect battery condition
❑ Inspect brake lines, hoses and connections
❑ Inspect brake/clutch(if equipped) fluid
❑ Inspect disc brakes and pads
❑ Inspect drive shafts and boots
❑ Inspect exhaust system
❑ Inspect front suspension ball joints
❑ Inspect parking brake
❑ Inspect steering gear rack, linkage and boots
❑ Inspect tire (pressure & tread wear)
❑ Replace air cleaner filter - For China, Middle East
❑ Replace climate control air filter
❑ Replace engine oil and filter - Except Middle East, Brazil, Libya *2 *3 *6 *7
❑ Replace engine oil and filter - For Middle East, Brazil, Libya *2 *3 *6 *7 (Every 10,000 km (6,500 miles) or 12months)
❑ Add fuel additives *4 (Every 5,000 km or 6 months)

❊ Inspect : Inspect and if necessary, adjust, correct, clean or replace.

NORMAL MAINTENANCE SCHEDULE - FOR GASOLINE ENGINE (CONT.)

120,000 km (80,000 miles) or 96months

- ❑ Inspect air cleaner filter - Except China, Middle East
- ❑ Inspect air conditioner refrigerant/compressor (if equipped)
- ❑ Inspect battery condition
- ❑ Inspect brake lines, hoses and connections
- ❑ Inspect brake/clutch(if equipped) fluid
- ❑ Inspect brake/clutch(if equipped) pedal
- ❑ Inspect disc brakes and pads
- ❑ Inspect drive belt *1
- ❑ Inspect drive shafts and boots
- ❑ Inspect exhaust system
- ❑ Inspect front suspension ball joints
- ❑ Inspect fuel lines, hoses and connections
- ❑ Inspect parking brake
- ❑ Inspect steering gear rack, linkage and boots
- ❑ Inspect tire (pressure & tread wear)
- ❑ Inspect manual transaxle fluid (if equipped) *10
- ❑ Inspect vapor hose and fuel filler cap
- ❑ Replace air cleaner filter - For China, Middle East
- ❑ Replace climate control air filter
- ❑ Replace engine oil and filter
  - Except Middle East, Brazil, Libya *2 *3 *6 *7

(Continued)

(Continued)

- ❑ Replace engine oil and filter
  - For Middle East, Brazil, Libya *2 *3 *6 *7
    (Every 10,000 km (6,500 miles) or 12months)
- ❑ Replace fuel filter *8
- ❑ Replace fuel tank air filter
- ❑ Replace coolant *9
  (At first, 200,000 km (120,000 miles) or 120months
  after that, every 40,000 km (25,000 miles) or 24months *5)
- ❑ Inspect cooling system
  (At first, 60,000 km (40,000 miles) or 48months
  after that, every 30,000 km (20,000 miles) or 24months)
- ❑ Add fuel additives *4
  (Every 5,000 km or 6 months)
- ❑ Replace spark plugs (1.6 Engine)
- ❑ Replace spark plugs (1.8 Engine)
  (Every 160,000 km (100,000 miles))

❊ Inspect : Inspect and if necessary, adjust, correct, clean or replace.

No check, No service required

- ❑ Automatic transaxle fluid

NORMAL MAINTENANCE SCHEDULE - FOR GASOLINE ENGINE (CONT.)

The following items must be serviced more frequently on cars mainly used under severe driving conditions.
Refer to the chart below for the appropriate maintenance intervals.
R : Replace I : Inspect and if necessary, adjust, correct, clean or replace

Maintenance item		Maintenance operation	Maintenance intervals	Driving condition
Engine oil and engine oil filter	Except Middle East, Brazil, Libya	R	Every 7,500 km (5,000 miles) or 6 months	A, B, C, D, E, F, G, H, I, K, L
	For Middle East, Brazil, Libya	R	Every 5,000 km (3,000 miles) or 6 months	
Air cleaner filter		R	Replace more frequently depending on the condition	C, E
Spark plugs		R	Replace more frequently depending on the condition	A, B, H, I, L
Manual transaxle fluid (if equipped)		R	Every 120,000 km (80,000 miles)	C, D, E, G, H, I, K
Automatic transaxle fluid (if equipped)		R	Every 100,000 km (62,000 miles)	A, C, D, E, F, G, H, I, K
Steering gear rack, linkage and boots		I	Inspect more frequently depending on the condition	C, D, E, F, G
Front suspension ball joints		I	Inspect more frequently depending on the condition	C, D, E, F, G

Maintenance item	Maintenance operation	Maintenance intervals	Driving condition
Disc brakes and pads, calipers and rotors	I	Inspect more frequently depending on the condition	C, D, E, G, H
Parking brake	I	Inspect more frequently depending on the condition	C, D, G, H
Driveshaft and boots	I	Inspect more frequently depending on the condition	C, D, E, F, G, H, I, J, K
Climate control air filter	R	Replace more frequently depending on the condition	C, E, G

SEVERE DRIVING CONDITIONS

A : Repeatedly driving short distance of less than 8 km (5 miles) in normal temperature or less than 16 km (10 miles) in freezing temperature.

B : Extensive engine idling or low speed driving for long distances.

C : Driving on rough, dusty, muddy, unpaved, graveled or salt-spread roads.

D : Driving in areas using salt or other corrosive materials or in very cold weather

E : Driving in sandy areas

F : More than 50 % driving in heavy city traffic during hot weather above 32 °C (90 °F)

G : Driving on uphill, downhill, or mountain roads.

H : Towing a trailer or using a camper on roof rack.

I : Driving for patrol car, taxi, commercial car or vehicle towing.

J : Driving in very cold weather.

K : Driving over 170 km/h (106 mile/h).

L : Frequently driving in stop-and-go conditions.

NORMAL MAINTENANCE SCHEDULE - FOR DIESEL ENGINE

The following maintenance services must be performed to ensure good emission control and performance. Keep receipts for all vehicle emission services to protect your warranty. Where both mileage and time are shown, the frequency of service is determined by whichever occurs first.

*1 : Check the engine oil level and leak every 500 km (350 miles) or before starting a long trip.

*2 : Driving in summer season temperature over 40 °C (104 °F - SAUDI, UAE, OMAN, KUWAIT, BAHRAIN, QATAR, IRAN, YEMEN ETC) or driving over 170 km/h (106 mile/h) must conform the severe driving condition.

*3 : This maintenance schedule depends on fuel quality. It is applicable only when using a qualified fuel <"EN590 or equivalent">. If the diesel fuel specifications don't meet the EN590, it must be replaced more frequently. HYUNDAI recommends "every 7,500km inspection, every 15,000km replacement". If there are some important safety matters like fuel flow restriction, surging, loss of power, hard starting problem etc., we recommend replacing the fuel filter immediately regardless of maintenance schedule and consulting with an authorized HYUNDAI dealer for details

*4 : The engine oil level should be checked regularly and maintained properly. Operating with an insufficient amount of oil can damage the engine, and such damage is not covered by warranty.

*5 : Manual transaxle should be changed anytime they have been submerged in water.

*6 : When adding coolant, use only deionized water or soft water for your vehicle and never mix hard water in the coolant filled at the factory. An improper coolant mixture can result in serious malfunction or engine damage.

*7 : Inspect drive belt tentioner, idler and alternator pulley and if necessary repair or replace.

*8 : For your convenience, it can be replaced prior to it's interval when you do maintenance of other items.

NORMAL MAINTENANCE SCHEDULE - FOR DIESEL ENGINE (CONT.)

15,000 km (10,000 miles) or 12months	30,000 km (20,000 miles) or 24months
❑ Inspect air cleaner filter - Except Middle East	❑ Inspect air cleaner filter - Except Middle East
❑ Inspect air conditioner refrigerant/compressor (if equipped)	❑ Inspect air conditioner refrigerant/compressor (if equipped)
❑ Inspect battery condition	❑ Inspect battery condition
❑ Inspect brake lines, hoses and connections	❑ Inspect brake lines, hoses and connections
❑ Inspect brake/clutch (if equipped) fluid	❑ Inspect brake/clutch(if equipped) fluid
❑ Inspect disc brakes and pads	❑ Inspect disc brakes and pads
❑ Inspect drive shafts and boots	❑ Inspect drive shafts and boots
❑ Inspect exhaust system	❑ Inspect exhaust system
❑ Inspect front suspension ball joints	❑ Inspect front suspension ball joints
❑ Inspect parking brake	❑ Inspect fuel lines, hoses and connections
❑ Inspect steering gear rack, linkage and boots	❑ Inspect fuel filter cartridge *3
❑ Inspect tire (pressure & tread wear)	❑ Inspect parking brake
❑ Replace air cleaner filter - For Middle East	❑ Inspect steering gear rack, linkage and boots
❑ Replace climate control air filter	❑ Inspect tire (pressure & tread wear)
❑ Replace engine oil and filter *1 *2 *4 (Every 10,000 km (6,500 miles) or 12months)	❑ Replace air cleaner filter - For Middle East
	❑ Replace climate control air filter
	❑ Replace engine oil and filter *1 *2 *4 (Every 10,000 km (6,500 miles) or 12months)

❊ Inspect : Inspect and if necessary, adjust, correct, clean or replace.

❊ Inspect : Inspect and if necessary, adjust, correct, clean or replace.

NORMAL MAINTENANCE SCHEDULE - FOR DIESEL ENGINE (CONT.)

45,000 km (30,000 miles) or 36months

- ❑ Inspect air conditioner refrigerant/compressor (if equipped)
- ❑ Inspect battery condition
- ❑ Inspect brake lines, hoses and connections
- ❑ Inspect brake/clutch(if equipped) fluid
- ❑ Inspect disc brakes and pads
- ❑ Inspect drive shafts and boots
- ❑ Inspect exhaust system
- ❑ Inspect front suspension ball joints
- ❑ Inspect parking brake
- ❑ Inspect steering gear rack, linkage and boots
- ❑ Inspect tire (pressure & tread wear)
- ❑ Replace air cleaner filter
- ❑ Replace climate control air filter
- ❑ Replace engine oil and filter *1 *2 *4
  (Every 10,000 km (6,500 miles) or 12months)

❊ Inspect : Inspect and if necessary, adjust, correct, clean or replace.

60,000 km (40,000 miles) or 48months

- ❑ Inspect air cleaner filter - Except Middle East
- ❑ Inspect air conditioner refrigerant/compressor (if equipped)
- ❑ Inspect battery condition
- ❑ Inspect brake lines, hoses and connections
- ❑ Inspect brake/clutch (if equipped) fluid
- ❑ Inspect disc brakes and pads
- ❑ Inspect drive shafts and boots
- ❑ Inspect exhaust system
- ❑ Inspect front suspension ball joints
- ❑ Inspect fuel filler cap
- ❑ Inspect fuel lines, hoses and connections
- ❑ Inspect parking brake
- ❑ Inspect steering gear rack, linkage and boots
- ❑ Inspect tire (pressure & tread wear)
- ❑ Inspect manual transaxle fluid *5 (if equipped)
- ❑ Replace air cleaner filter - For Middle East
- ❑ Replace climate control air filter
- ❑ Replace fuel filter cartridge *3
- ❑ Replace engine oil and filter *1 *2 *4
  (Every 10,000 km (6,500 miles) or 12months)
- ❑ Inspect cooling system
  (At first, 60,000 km (40,000 miles) or 48months
  after that, every 30,000 km (20,000 miles) or 24months)

❊ Inspect : Inspect and if necessary, adjust, correct, clean or replace.

NORMAL MAINTENANCE SCHEDULE - FOR DIESEL ENGINE (CONT.)

75,000 km (50,000 miles) or 60months

- ❑ Inspect air cleaner filter - Except Middle East
- ❑ Inspect air conditioner refrigerant/compressor (if equipped)
- ❑ Inspect battery condition
- ❑ Inspect brake lines, hoses and connections
- ❑ Inspect brake/clutch(if equipped) fluid
- ❑ Inspect disc brakes and pads
- ❑ Inspect drive shafts and boots
- ❑ Inspect exhaust system
- ❑ Inspect front suspension ball joints
- ❑ Inspect parking brake
- ❑ Inspect steering gear rack, linkage and boots
- ❑ Inspect tire (pressure & tread wear)
- ❑ Replace air cleaner filter - For Middle East
- ❑ Replace climate control air filter
- ❑ Replace engine oil and filter *1 *2 *4
  (Every 10,000 km (6,500 miles) or 12months)
- ❑ Inspect drive belt *7
  (At first, 80,000 km (50,000 miles) or 48months
  after that, every 20,000 km (12,500 miles) or 24months)

❊ Inspect : Inspect and if necessary, adjust, correct, clean or replace.

90,000 km (60,000 miles) or 72months

- ❑ Inspect air conditioner refrigerant/compressor (if equipped)
- ❑ Inspect battery condition
- ❑ Inspect brake lines, hoses and connections
- ❑ Inspect brake/clutch(if equipped) fluid
- ❑ Inspect disc brakes and pads
- ❑ Inspect drive shafts and boots
- ❑ Inspect exhaust system
- ❑ Inspect front suspension ball joints
- ❑ Inspect fuel filter cartridge *3
- ❑ Inspect fuel lines, hoses and connections
- ❑ Inspect parking brake
- ❑ Inspect steering gear rack, linkage and boots
- ❑ Inspect tire (pressure & tread wear)
- ❑ Replace air cleaner filter
- ❑ Replace climate control air filter
- ❑ Inspect cooling system
  (At first, 60,000 km (40,000 miles) or 48months
  after that, every 30,000 km (20,000 miles) or 24months)
- ❑ Replace engine oil and filter *1 *2 *4
  (Every 10,000 km (6,500 miles) or 12months)
- ❑ Inspect drive belt *7
  (At first, 80,000 km (50,000 miles) or 48months
  after that, every 20,000 km (12,500 miles) or 24months)

❊ Inspect : Inspect and if necessary, adjust, correct, clean or replace.

NORMAL MAINTENANCE SCHEDULE - FOR DIESEL ENGINE (CONT.)

105,000 km (70,000 miles) or 84months

- ❑ Inspect air cleaner filter - Except Middle East
- ❑ Inspect air conditioner refrigerant/compressor (if equipped)
- ❑ Inspect battery condition
- ❑ Inspect brake lines, hoses and connections
- ❑ Inspect brake/clutch(if equipped) fluid
- ❑ Inspect disc brakes and pads
- ❑ Inspect drive shafts and boots
- ❑ Inspect exhaust system
- ❑ Inspect front suspension ball joints
- ❑ Inspect parking brake
- ❑ Inspect steering gear rack, linkage and boots
- ❑ Inspect tire (pressure & tread wear)
- ❑ Replace air cleaner filter - For Middle East
- ❑ Replace climate control air filter

(Continued)

(Continued)

- ❑ Replace engine oil and filter *1 *2 *4
  (Every 10,000 km (6,500 miles) or 12months)
- ❑ Inspect drive belt *7
  (At first, 80,000 km (50,000 miles) or 48months
  after that, every 20,000 km (12,500 miles) or 24months)

❊ Inspect : Inspect and if necessary, adjust, correct, clean or replace.

NORMAL MAINTENANCE SCHEDULE - FOR DIESEL ENGINE (CONT.)

120,000 km (80,000 miles) or 96months

- ❑ Inspect air cleaner filter - Except Middle East
- ❑ Inspect air conditioner refrigerant/compressor (if equipped)
- ❑ Inspect battery condition
- ❑ Inspect brake lines, hoses and connections
- ❑ Inspect brake/clutch(if equipped) fluid
- ❑ Inspect disc brakes and pads
- ❑ Inspect drive shafts and boots
- ❑ Inspect exhaust system
- ❑ Inspect front suspension ball joints
- ❑ Inspect fuel filler cap
- ❑ Inspect fuel lines, hoses and connections
- ❑ Inspect parking brake
- ❑ Inspect steering gear rack, linkage and boots
- ❑ Inspect tire (pressure & tread wear)
- ❑ Inspect manual transaxle fluid *5 (if equipped)
- ❑ Replace air cleaner filter - For Middle East
- ❑ Replace climate control air filter
- ❑ Replace fuel filter cartridge *3
- ❑ Replace coolant *6
  (At first, 210,000 km (120,000 miles) or 120months
  after that, every 30,000 km (20,000 miles) or 24months *8)

(Continued)

(Continued)

- ❑ Replace engine oil and filter *1 *2 *4
  (Every 10,000 km (6,500 miles) or 12months)
- ❑ Inspect cooling system
  (At first, 60,000 km (40,000 miles) or 48months
  after that, every 30,000 km (20,000 miles) or 24months)
- ❑ Inspect drive belt *7
  (At first, 80,000 km (50,000 miles) or 48months
  after that, every 20,000 km (12,500 miles) or 24months)

❊ Inspect : Inspect and if necessary, adjust, correct, clean or replace.

No check, No service required

- ❑ Automatic transaxle fluid

MAINTENANCE UNDER SEVERE USAGE CONDITIONS - FOR DIESEL ENGINE

The following items must be serviced more frequently on cars mainly used under severe driving conditions.
Refer to the chart below for the appropriate maintenance intervals.
R : Replace I : Inspect and if necessary, adjust, correct, clean or replace

Maintenance item	Maintenance operation	Maintenance intervals	Driving condition
Engine oil and engine oil filter	R	Every 5,000 km (3,000 miles) or 6 months	A, B, C, F, G, H, I, J, K, L
Air cleaner filter	R	Replace more frequently depending on the condition	C, E
Manual transaxle fluid (if equipped)	R	Every 120,000 km (80,000 miles)	C, D, E, G, H, I, K
Automatic transaxle fluid (if equipped)	R	Every 100,000 km (62,000 miles)	A, C, D, E, F, G, H, I, K
Steering gear rack, linkage and boots	I	Inspect more frequently depending on the condition	C, D, E, F, G
Front suspension ball joints	I	Inspect more frequently depending on the condition	C, D, E, F, G

Maintenance item	Maintenance operation	Maintenance intervals	Driving condition
Disc brakes and pads, calipers and rotors	I	Inspect more frequently depending on the condition	C, D, E, G, H
Parking brake	I	Inspect more frequently depending on the condition	C, D, G, H
Driveshaft and boots	I	Inspect more frequently depending on the condition	C, D, E, F, G, H, I, K
Climate control air filter	R	Replace more frequently depending on the condition	C, E, G

SEVERE DRIVING CONDITIONS

A : Repeatedly driving short distance of less than 8 km (5 miles) in normal temperature or less than 16 km (10 miles) in freezing temperature.

B : Extensive engine idling or low speed driving for long distances.

C : Driving on rough, dusty, muddy, unpaved, graveled or salt-spread roads.

D : Driving in areas using salt or other corrosive materials or in very cold weather

E : Driving in sandy areas

F : More than 50 % driving in heavy city traffic during hot weather above 32 °C (90 °F)

G : Driving on uphill, downhill, or mountain roads.

H : Towing a trailer or using a camper on roof rack.

I : Driving for patrol car, taxi, commercial car or vehicle towing.

J : Driving in very cold weather.

K : Driving over 170 km/h (106 mile/h).

L : Frequently driving in stop-and-go conditions.

EXPLANATION OF SCHEDULED MAINTENANCE ITEMS

Engine oil and filter

The engine oil and filter should be changed at the intervals specified in the maintenance schedule. If the car is being driven in severe conditions, more frequent oil and filter changes are required.

Drive belts

Inspect all drive belts for evidence of cuts, cracks, excessive wear or oil saturation and replace if necessary. Drive belts should be checked periodically for proper tension and adjusted as necessary.

Fuel filter

A clogged filter can limit the speed at which the vehicle may be driven, damage the emission system and cause multiple issues such as hard starting. If an excessive amount of foreign matter accumulates in the fuel tank, the filter may require replacement more frequently.

After installing a new filter, run the engine for several minutes, and check for leaks at the connections. We recommend that fuel filters be installed by an authorized HYUNDAI dealer.

Fuel lines, fuel hoses and connections

Check the fuel lines, fuel hoses and connections for leakage and damage. We recommend that any damaged or leaking parts be replaced by an authorized HYUNDAI dealer immediately.

⚠ WARNING - Diesel only

Never work on injection system with engine running or within 30 seconds after shutting off engine. High pressure pump, rail, injectors and high pressure pipes are subject to high pressure even after the engine stopped. The fuel jet produced by fuel leaks may cause serious injury, if it touch the body. People using pacemakers should not move than 30cm closer to the ECU or wiring harness within the engine room while engine is running, since the high currents in the Common Rail system produce considerable magnetic fields.

Vapor hose and fuel filler cap

The vapor hose and fuel filler cap should be inspected at those intervals specified in the maintenance schedule. Make sure that a new vapor hose or fuel filler cap is correctly replaced.

Vacuum crankcase ventilation hoses (if equipped)

Inspect the surface of hoses for evidence of heat and/or mechanical damage. Hard and brittle rubber, cracking, tears, cuts, abrasions, and excessive swelling indicate deterioration. Particular attention should be paid to examine those hose surfaces nearest to high heat sources, such as the exhaust manifold.

Inspect the hose routing to assure that the hoses do not come in contact with any heat source, sharp edges or moving component which might cause heat damage or mechanical wear. Inspect all hose connections, such as clamps and couplings, to make sure they are secure, and that no leaks are present. Hoses should be replaced immediately if there is any evidence of deterioration or damage.

Air cleaner filter

We recommend that you use parts for replacement from an authorized HYUNDAI dealer.

Spark plugs (for gasoline engine)

Make sure to install new spark plugs of the correct heat range.

Valve clearance (for 1.6 gasoline engine)

Inspect for excessive valve noise and/or engine vibration and adjust if necessary. We recommend that the valve clearance be serviced by an authorized HYUNDAI dealer.

Cooling system

Check cooling system components, such as radiator, coolant reservoir, hoses and connections for leakage and damage. Replace any damaged parts.

Coolant

The coolant should be changed at the intervals specified in the maintenance schedule.

Manual transaxle fluid (if equipped)

Inspect the manual transaxle fluid according to the maintenance schedule.

Automatic transaxle fluid (if equipped)

Automatic transaxle fluid should not be checked under normal usage conditions.

But in severe conditions, we recommend that the fluid be replaced by an authorized HYUNDAI dealer in accordance to the scheduled maintenance at the beginning of this chapter.

✻ NOTICE

Automatic transaxle fluid color is basically red.
As the vehicle is driven, the automatic transaxle fluid will begin to look darker. It is normal condition and you should not judge the need to replace the fluid based upon the changed color.

⚠ CAUTION

The use of a non-specified fluid could result in transaxle malfunction and failure.

Use only specified automatic transaxle fluid. (Refer to "Recommended lubricants and capacities" in section 8.)

Brake hoses and lines

Visually check for proper installation, chafing, cracks, deterioration and any leakage. Replace any deteriorated or damaged parts immediately.

Brake fluid

Check brake fluid level in the brake fluid reservoir. The level should be between “MIN” (Minimum) and “MAX” (Maximum) marks on the side of the reservoir. Use only hydraulic brake fluid conforming to DOT 3 or DOT 4 specification.

Parking brake

Inspect the parking brake system including the parking brake pedal and cables.

Brake discs, pads, calipers and rotors

Check the pads for excessive wear, discs for run out and wear, and calipers for fluid leakage.

For more information on checking the pads or lining wear limit, refer to the Hyundai web site.

(**http://brakemanual.hmc.co.kr**)

Suspension mounting bolts

Check the suspension connections for looseness or damage. Retighten to the specified torque.

Steering gear box, linkage & boots/lower arm ball joint

With the vehicle stopped and engine off, check for excessive free-play in the steering wheel.

Check the linkage for bends or damage. Check the dust boots and ball joints for deterioration, cracks, or damage. Replace any damaged parts.

Drive shafts and boots

Check the drive shafts, boots and clamps for cracks, deterioration, or damage. Replace any damaged parts and, if necessary, repack the grease.

Air conditioning refrigerant (if equipped)

Check the air conditioning lines and connections for leakage and damage.

ENGINE OIL

■ Gasoline engine

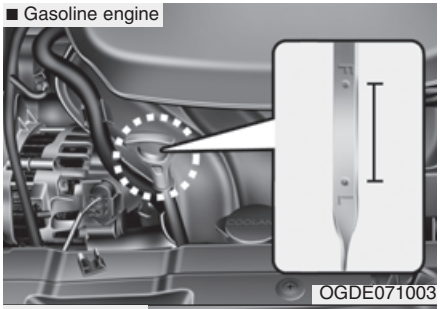

OGDE071003

■ Diesel engine

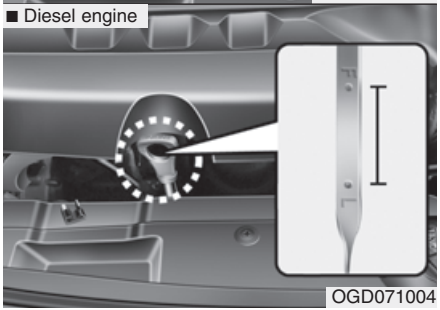

OGD071004

Checking the engine oil level

1. Be sure the vehicle is on level ground.
2. Start the engine and allow it to reach normal operating temperature.
3. Turn the engine off and wait for a few minutes (about 5 minutes) for the oil to return to the oil pan.
4. Pull the dipstick out, wipe it clean, and reinsert it fully.

⚠ WARNING - Radiator hose

Be very careful not to touch the radiator hose when checking or adding the engine oil as it may be hot enough to burn you.

5. Pull the dipstick out again and check the level. The level should be between F (Full) and L (Low).

⚠ CAUTION

Do not spill engine oil, when adding or changing engine oil. If you drop the engine oil on the engine room, wipe it off immediately.

■ Gasoline engine

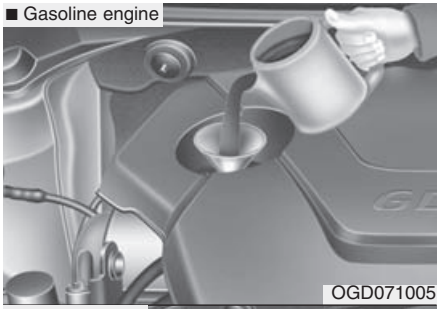

OGD071005

■ Diesel engine

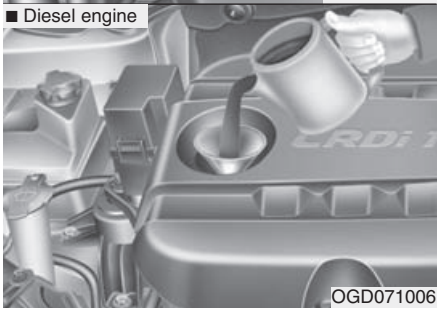

OGD071006

If it is near or at L (Low), add enough oil to bring the level to F (Full). **Do not overfill.**

Use a funnel to help prevent oil from being spilled on engine components.

Use only the specified engine oil. (Refer to "Recommended lubricants and capacities" in section 8.)

⚠ CAUTION

Do not overfill the engine oil. It may damage the engine.

Changing the engine oil and filter

We recommend that the engine oil and filter be replaced by an authorized HYUNDAI dealer according to the Maintenance Schedule at the beginning of this section.

⚠ WARNING

Used engine oil may cause skin irritation or cancer if left in contact with the skin for prolonged periods of time. Used engine oil contains chemicals that have caused cancer in laboratory animals. Always protect your skin by washing your hands thoroughly with soap and warm water as soon as possible after handling used oil.

ENGINE COOLANT

The high-pressure cooling system has a reservoir filled with year-round antifreeze coolant. The reservoir is filled at the factory.

Check the antifreeze protection and coolant level at least once a year, at the beginning of the winter season, and before traveling to a colder climate.

Checking the coolant level

⚠ WARNING

Removing radiator cap

- **Never attempt to remove the radiator cap while the engine is operating or hot. Doing so might lead to cooling system and engine damage and could result in serious personal injury from escaping hot coolant or steam.**
- **Turn the engine off and wait until it cools down. Use extreme care when removing the radiator cap. Wrap a thick towel around it, and turn it counterclockwise slowly to the first stop. Step back while the pressure is released from the cooling system. When you are sure all the pressure has been released, press down on the cap, using a thick towel, and continue turning counterclockwise to remove it.**

(Continued)

(Continued)

- **Even if the engine is not operating, do not remove the radiator cap or the drain plug while the engine and radiator are hot. Hot coolant and steam may still blow out under pressure, causing serious injury.**

⚠ WARNING

The electric motor (cooling fan) is controlled by engine coolant temperature, refrigerant pressure and vehicle speed. It may sometimes operate even when the engine is not running. Use extreme caution when working near the blades of the cooling fan so that you are not injured by a rotating fan blades. As the engine coolant temperature decreases, the electric motor will automatically shut off. This is a normal condition.

If your vehicle is equipped with GDI, the electric motor (cooling fan) may operate until you disconnect the negative battery cable.

■ Gasoline engine

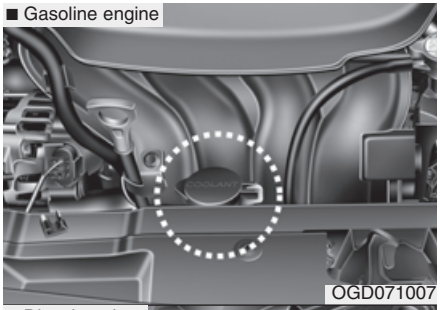

OGD071007

■ Diesel engine

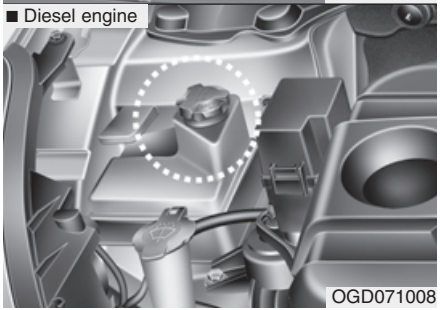

OGD071008

Check the condition and connections of all cooling system hoses and heater hoses. Replace any swollen or deteriorated hoses.

The coolant level should be filled between F (Full) and L (Low) marked on the side of the coolant reservoir when the engine is cool.

If the coolant level is low, add enough distilled (deionized) water (except Middle East) or add enough pre-mixed coolant (for Middle East). Bring the level to F (Full), but do not overfill. If frequent additions are required, we recommend that the cooling system be inspected by an authorized HYUNDAI dealer.

Recommended engine coolant

- Use only soft (distilled) water in the coolant mixture.
- The engine in your vehicle has aluminum engine parts and must be protected by an ethylene-glycol-based coolant to prevent corrosion and freezing.
- DO NOT USE alcohol or methanol coolant or mix them with the specified coolant.
- Do not use a solution that contains more than 60% antifreeze or less than 35% antifreeze, which would reduce the effectiveness of the solution.

For mixture percentage, refer to the following table.

Ambient Temperature	Mixture Percentage (volume)	
	Antifreeze	Water
-15°C (5°F)	35	65
-25°C (-13°F)	40	60
-35°C (-31°F)	50	50
-45°C (-49°F)	60	40

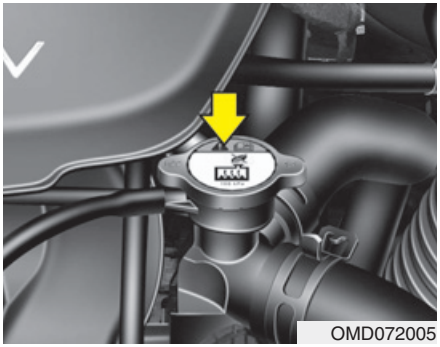
OMD072005

⚠ WARNING

Radiator cap

Do not remove the radiator cap when the engine and radiator are hot. Scalding hot coolant and steam may blow out under pressure causing serious injury.

Changing the coolant

We recommend that the coolant be replaced by an authorized HYUNDAI dealer according to the Maintenance Schedule at the beginning of this section.

⚠ CAUTION

Put a thick cloth or fabric around the radiator cap before refilling the coolant in order to prevent the coolant from overflowing into engine parts such as the alternator.

⚠ WARNING - Coolant

- **Do not use radiator coolant or antifreeze in the washer fluid reservoir.**
- **Radiator coolant can severely obscure visibility when sprayed on the windshield and may cause loss of vehicle control or damage to paint and body trim.**

BRAKE/CLUTCH FLUID (IF EQUIPPED)

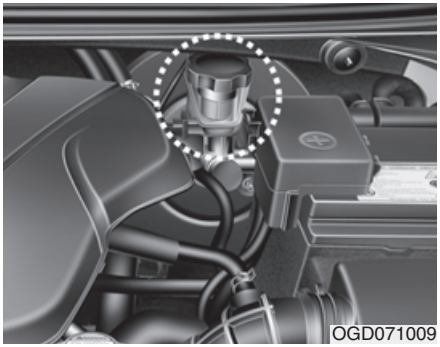

Checking the brake/clutch fluid level

Check the fluid level in the reservoir periodically. The fluid level should be between MAX (Maximum) and MIN (Minimum) marks on the side of the reservoir.
Before removing the reservoir cap and adding brake/clutch fluid, clean the area around the reservoir cap thoroughly to prevent brake/clutch fluid contamination.
If the level is low, add fluid to the MAX (Maximum) level. The level will fall with accumulated mileage. This is a normal condition associated with the wear of the brake linings and/or clutch disc (if equipped).

If the fluid level is excessively low, we recommend that the brake system be checked by an authorized HYUNDAI dealer.
Use only the specified brake/clutch fluid. (Refer to "Recommended lubricants or capacities" in section 8.)

Never mix different types of fluid.

⚠ WARNING - Loss of brake fluid

In the event the brake system requires frequent additions of fluid, we recommend that the vehicle be inspected by an authorized HYUNDAI dealer.

⚠ WARNING - Brake/clutch fluid

When changing and adding brake/clutch fluid, handle it carefully. Do not let it come in contact with your eyes. If brake/clutch fluid come in contact with your eyes, immediately flush them with a large quantity of fresh tap water. Have your eyes examined by a doctor as soon as possible.

⚠ CAUTION

Do not allow brake/clutch fluid to contact the vehicle's body paint, as paint damage will result.

Brake/clutch fluid, which has been exposed to open air for an extended time should never be used as its quality cannot be guaranteed. It should be properly disposed. Don't put in the wrong kind of fluid. A few drops of mineral-based oil, such as engine oil, in your brake/clutch system can damage brake/clutch system parts.

WASHER FLUID

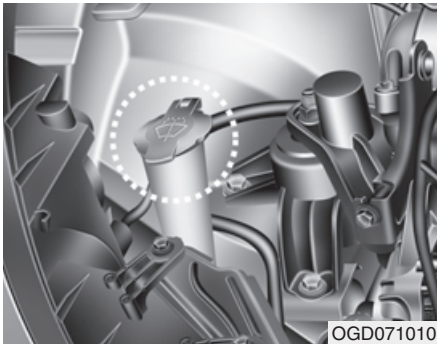
OGD071010

Checking the washer fluid level

Check the fluid level in the washer fluid reservoir and add fluid if necessary. Plain water may be used if washer fluid is not available. However, use washer solvent with antifreeze characteristics in cold climates to prevent freezing.

⚠ WARNING - Coolant

- **Do not use radiator coolant or antifreeze in the washer fluid reservoir.**
- **Radiator coolant can severely obscure visibility when sprayed on the windshield and may cause loss of vehicle control or damage to the paint and body trim.**
- **Windshield washer fluid agents contain some amounts of alcohol and can be flammable under certain circumstances. Do not allow sparks or flame come in contact with the washer fluid or the washer fluid reservoir. Damage to the vehicle or occupants could occur.**
- **Windshield washer fluid is poisonous to humans and animals. Do not drink and avoid coming in contact with the windshield washer fluid. Serious injury or death could occur.**

PARKING BRAKE - HAND TYPE

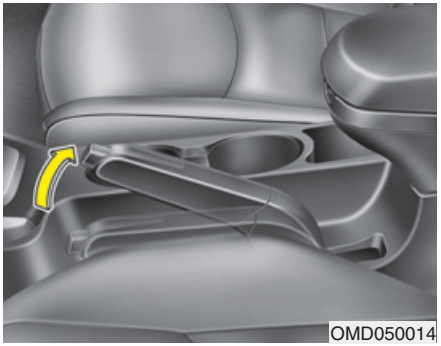
OMD050014

Checking the parking brake

Check the stroke of the parking brake by counting the number of “clicks” heard while fully applying it from the released position. Also, the parking brake alone should securely hold the vehicle on a fairly steep grade. If the stroke is more or less than specified, we recommend that the parking brake be adjusted by an authorized HYUNDAI dealer.

Stroke : 6~8 “clicks” at a force of 20 kg (44 lbs, 196 N).

FUEL FILTER (FOR DIESEL)

Draining water from fuel filter

The fuel filter for diesel engine plays an important role of separating water from fuel and accumulating the water in its bottom.

If water accumulates in the fuel filter, the warning light comes on when the ignition switch is in the ON position.

If this warning light illuminates, we recommend that you have the water drained and the system checked by an authorized HYUNDAI dealer.

⚠ CAUTION

If the water accumulated in the fuel filter is not drained at proper times, damages to the major parts such as the fuel system can be caused by water permeation in the fuel filter.

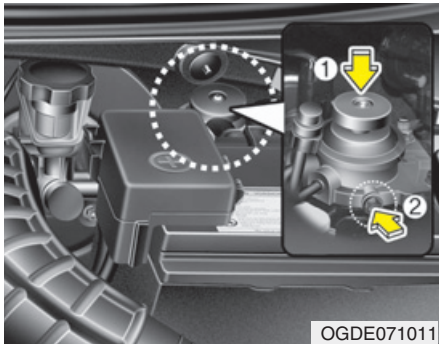

Extracting air from the fuel filter

If you drive until you have no fuel left or if you replace the fuel filter, be sure to extract air from the fuel system as it makes it difficult to start the engine.

1. Pump up and down(1) approximately 50 times until the pump is hard.
2. Extract air from the fuel filter by removing the bolt(2) with a cross-tip screw driver and reinstall the bolt(2).
3. Pump up and down(1) approximately 15 times.
4. Extract air from the fuel filter by removing the bolt(2) with a cross-tip screw driver and reinstall the bolt(2).
5. Pump up and down(1) approximately 5 times.

✻ NOTICE

- **Use cloths when you extract air so that the fuel is not sprayed around.**
- **Clean the fuel around the fuel filter or the injection pump before starting the engine to prevent fire.**
- **Finally, check each part if the fuel is leaking.**

AIR CLEANER

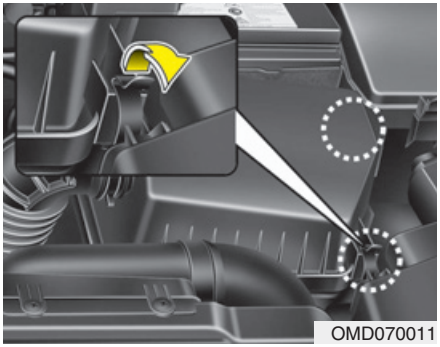
OMD070011

Filter replacement

You can clean the filter when inspecting the air cleaner element.

Clean the filter by using compressed air.

1. Loosen the air cleaner cover attaching clips and open the cover.

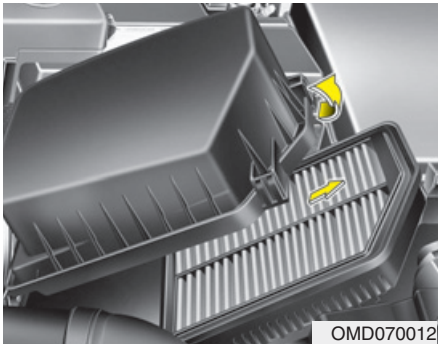
OMD070012

2. Wipe the inside of the air cleaner.
3. Replace the air cleaner filter.
4. Lock the cover with the cover attaching clips.

Replace the filter according to the Maintenance Schedule.

If the vehicle is operated in extremely dusty or sandy areas, replace the element more often than the usual recommended intervals. (Refer to "Maintenance under severe usage conditions" in this section.)

⚠ CAUTION

- ***Do not drive with the air cleaner removed; this will result in excessive engine wear.***
- ***When removing the air cleaner filter, be careful that dust or dirt does not enter the air intake, or damage may result.***
- ***We recommend that you use parts for replacement from an authorized HYUNDAI dealer.***

CLIMATE CONTROL AIR FILTER

Filter inspection

If the vehicle is operated in the severely air-polluted cities or on dusty rough roads for a long period, it should be inspected more frequently and replaced earlier. When you, the owner, replace the climate control air filter, replace it performing the following procedure, and be careful to avoid damaging other components.

Replace the filter according to the maintenance Schedule.

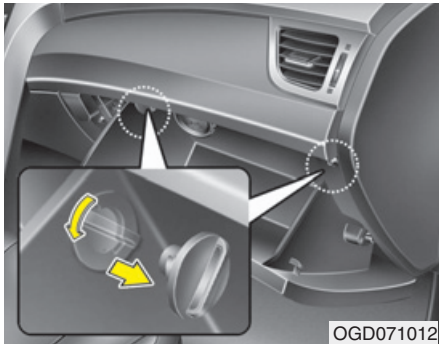

Filter replacement

1. Open the glove box. Remove the stoppers on both sides.

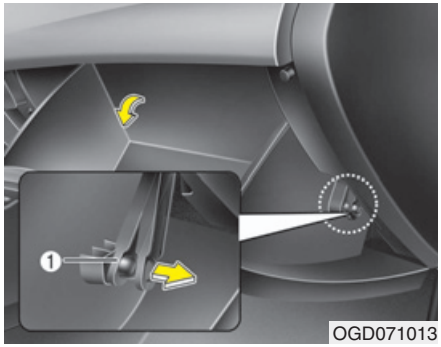

2. Remove the support strap (1).

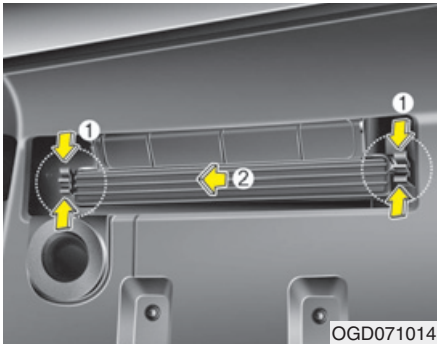

OGD071014

3. Remove the climate control air filter cover while pressing the lock on the both side of the cover.

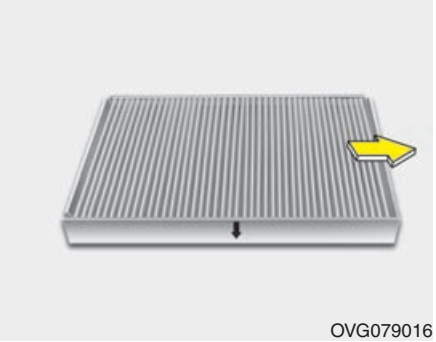
OVG079016

4. Replace the climate control air filter.
5. Reassemble in the reverse order of disassembly.

✻ NOTICE

When replacing the climate control air filter install it properly. Otherwise, the system may produce noise and the effectiveness of the filter may be reduced.

WIPER BLADES

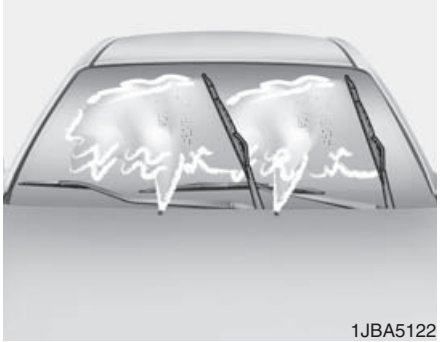
1JBA5122

Blade inspection

✻ NOTICE

Commercial hot waxes applied by automatic car washes have been known to make the windshield difficult to clean.

Contamination of either the windshield or the wiper blades with foreign matter can reduce the effectiveness of the windshield wipers. Common sources of contamination are insects, tree sap, and hot wax treatments used by some commercial car washes. If the blades are not wiping properly, clean both the window and the blades with a good cleaner or mild detergent, and rinse thoroughly with clean water.

⚠ CAUTION

To prevent damage to the wiper blades, do not use gasoline, kerosene, paint thinner, or other solvents on or near them.

Blade replacement

When the wipers no longer clean adequately, the blades may be worn or cracked, and require replacement.

⚠ CAUTION

To prevent damage to the wiper arms or other components, do not attempt to move the wipers manually.

⚠ CAUTION

The use of a non-specified wiper blade could result in wiper malfunction and failure.

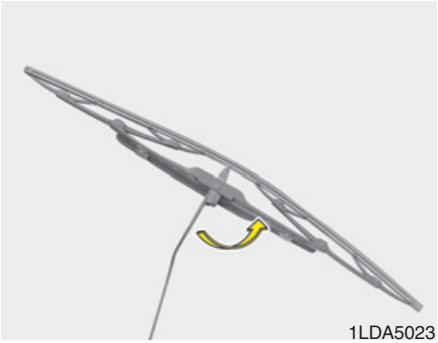

Front windshield wiper blade

Type A

1. Raise the wiper arm and turn the wiper blade assembly to expose the plastic locking clip.

⚠ CAUTION

Do not allow the wiper arm to fall against the windshield, since it may chip or crack the windshield.

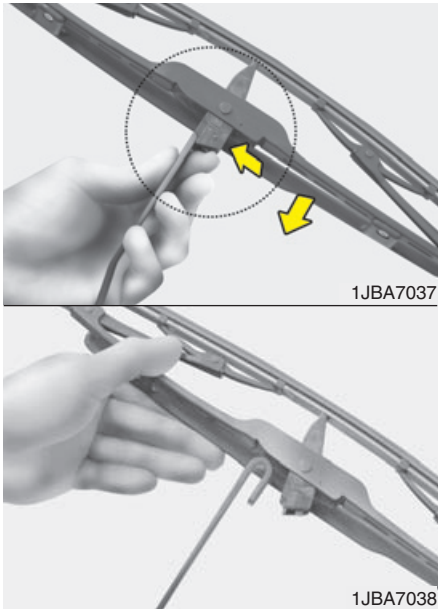

2. Compress the clip and slide the blade assembly downward.
3. Lift it off the arm.
4. Install the blade assembly in the reverse order of removal.

Type B

1. Raise the wiper arm.

⚠ CAUTION

Do not allow the wiper arm to fall against the windshield, since it may chip or crack the windshield.

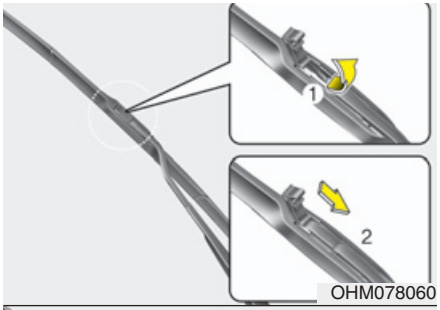

OHM078060

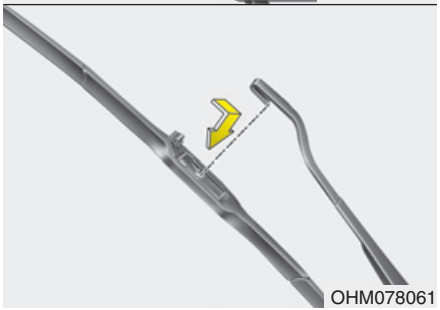
OHM078061

2. Lift up the wiper blade clip. Then pull down the blade assembly and remove it.
3. Install the new blade assembly in the reverse order of removal.

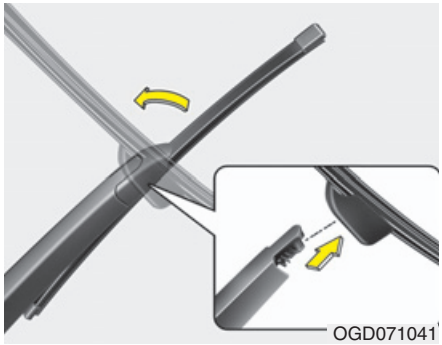
OGD071041

Rear window wiper blade

1. Raise the wiper arm and pull out the wiper blade assembly.

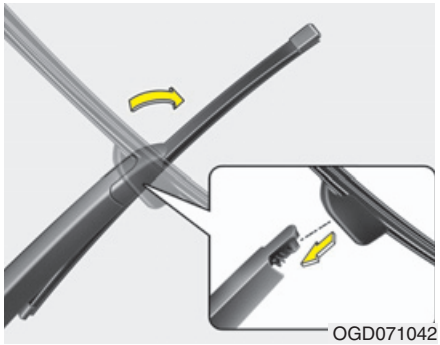
OGD071042

2. Install the new blade assembly by inserting the center part into the slot in the wiper arm until it clicks into place.
3. Make sure the blade assembly is installed firmly by trying to pull it slightly.

To prevent damage to the wiper arms or other components, we recommend that the wiper blade be replaced by an authorized HYUNDAI dealer.

BATTERY

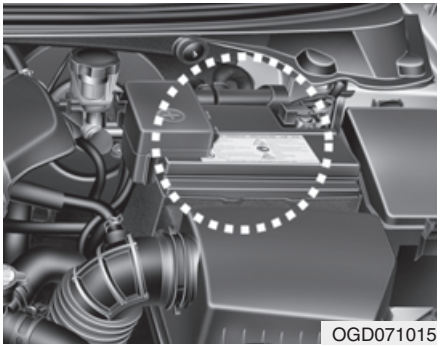
OGD071015

For best battery service

- Keep the battery securely mounted.
- Keep the battery top clean and dry.
- Keep the terminals and connections clean, tight, and coated with petroleum jelly or terminal grease.
- Rinse any spilled electrolyte from the battery immediately with a solution of water and baking soda.
- If the vehicle is not going to be used for an extended time, disconnect the battery cables.

✻ NOTICE

If your vehicle is equipped with the battery marked with LOWER and UPPER on the side, you can check the electrolyte level. The electrolyte level should be between LOWER and UPPER.
If the electrolyte level is low, it needs to add enough distilled (deionized) water. We recommend that you contact an authorized HYUNDAI dealer.

⚠ WARNING - Battery dangers

Always read the following instructions carefully when handling a battery.

Keep lighted cigarettes and all other flames or sparks away from the battery.

Hydrogen, a highly combustible gas, is always present in battery cells and may explode if ignited.

Keep batteries out of the reach of children because batteries contain highly corrosive SULFURIC ACID. Do not allow battery acid to contact your skin, eyes, clothing or paint finish.

If any electrolyte gets into your eyes, flush your eyes with clean water for at least 15 minutes and get immediate medical attention.

(Continued)

(Continued)

If electrolyte gets on your skin, thoroughly wash the contacted area. If you feel a pain or a burning sensation, get medical attention immediately.

Wear eye protection when charging or working near a battery. Always provide ventilation when working in an enclosed space.

An inappropriately disposed battery can be harmful to the environment and human health.

Dispose the battery according to your local law(s) or regulation.

The battery contains lead. Do not dispose of it after use. Please return the battery to an authorized HYUNDAI dealer to be recycled.

(Continued)

(Continued)

- **When lifting a plastic-cased battery, excessive pressure on the case may cause battery acid to leak, resulting in personal injury. Lift with a battery carrier or with your hands on opposite corners.**
- **Never attempt to recharge the battery when the battery cables are connected.**
- **The electrical ignition system works with high voltage. Never touch these components with the engine running or the ignition switched on.**

Failure to follow the above warnings can result in serious bodily injury or death.

⚠ CAUTION

If you connect unauthorized electronic devices to the battery, the battery may be discharged. Never use unauthorized devices.

■ Example

OJD072039

❊ The actual battery label in the vehicle may differ from the illustration.

Battery capacity label

1. CMF65L-BCI : The HYUNDAI model name of battery
2. 12V : The nominal voltage
3. 60Ah(20HR) : The nominal capacity (in Ampere hours)
4. 92RC : The nominal reserve capacity (in min.)
5. 550CCA : The cold-test current in amperes by SAE
6. 440A : The cold-test current in amperes by EN

Battery recharging

Your vehicle has a maintenance-free, calcium-based battery.

- If the battery becomes discharged in a short time (because, for example, the headlights or interior lights were left on while the vehicle was not in use), recharge it by slow charging (trickle) for 10 hours.
- If the battery gradually discharges because of high electric load while the vehicle is being used, recharge it at 20-30A for two hours.

⚠ WARNING - Recharging battery

When recharging the battery, observe the following precautions:

- **The battery must be removed from the vehicle and placed in an area with good ventilation.**
- **Do not allow cigarettes, sparks, or flame near the battery.**
- **Watch the battery during charging, and stop or reduce the charging rate if the battery cells begin gassing (boiling) violently or if the temperature of the electrolyte of any cell exceeds 49°C (120°F).**
- **Wear eye protection when checking the battery during charging.**
- **Disconnect the battery charger in the following order.**

1. **Turn off the battery charger main switch.**
2. **Unhook the negative clamp from the negative battery terminal.**
3. **Unhook the positive clamp from the positive battery terminal.**

⚠ WARNING

- **Before performing maintenance or recharging the battery, turn off all accessories and stop the engine.**
- **The negative battery cable must be removed first and installed last when the battery is disconnected.**

Reset items

Items should be reset after the battery has been discharged or the battery has been disconnected.

- Auto up/down window (See section 4)
- Sunroof (See section 4)
- Trip computer (See section 4)
- Climate control system (See section 4)
- Audio (See section 4)

TIRES AND WHEELS

Tire care

For proper maintenance, safety, and maximum fuel economy, you must always maintain recommended tire inflation pressures and stay within the load limits and weight distribution recommended for your vehicle.

Recommended cold tire inflation pressures

All tire pressures (including the spare) should be checked when the tires are cold. “Cold Tires” means the vehicle has not been driven for at least three hours or driven less than 1.6 km (one mile).

Recommended pressures must be maintained for the best ride, top vehicle handling, and minimum tire wear.

For recommended inflation pressure, refer to “Tire and wheels” in section 8.

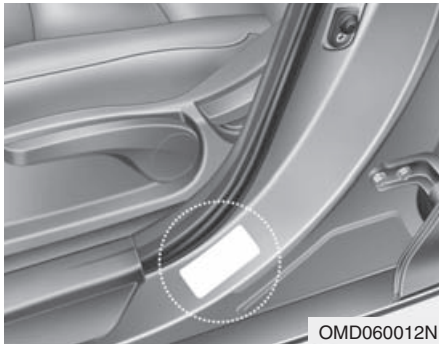
OMD060012N

All specifications (sizes and pressures) can be found on a label attached to the vehicle.

⚠ WARNING - Tire underinflation

Severe underinflation (70 kPa (10 psi) or more) can lead to severe heat build-up, causing blowouts, tread separation and other tire failures that can result in the loss of vehicle control leading to severe injury or death. This risk is much higher on hot days and when driving for long periods at high speeds.

⚠ CAUTION

- ***Underinflation also results in excessive wear, poor handling and reduced fuel economy. Wheel deformation also is possible. Keep your tire pressures at the proper levels. If a tire frequently needs refilling, we recommend that the system be checked by an authorized HYUNDAI dealer.***
- ***Overinflation produces a harsh ride, excessive wear at the center of the tire tread, and a greater possibility of damage from road hazards.***

⚠ CAUTION

- ***Warm tires normally exceed recommended cold tire pressures by 28 to 41 kPa (4 to 6 psi). Do not release air from warm tires to adjust the pressure or the tires will be underinflated.***
- ***Be sure to reinstall the tire inflation valve caps. Without the valve cap, dirt or moisture could get into the valve core and cause air leakage. If a valve cap is missing, install a new one as soon as possible.***

⚠ WARNING - Tire Inflation

Overinflation or underinflation can reduce tire life, adversely affect vehicle handling, and lead to sudden tire failure. This could result in loss of vehicle control and potential injury.

⚠ CAUTION - Tire pressure

Always observe the following:

- ***Check tire pressure when the tires are cold. (After vehicle has been parked for at least three hours or hasn't been driven more than 1.6 km (one mile) since startup.)***
- ***Check the pressure of your spare tire each time you check the pressure of other tires.***
- ***Never overload your vehicle. Be careful not to overload a vehicle luggage rack if your vehicle is equipped with one.***
- ***Worn, old tires can cause accidents. If your tread is badly worn, or if your tires have been damaged, replace them.***

Checking tire inflation pressure

Check your tires once a month or more.

Also, check the tire pressure of the spare tire.

How to check

Use a good quality gage to check tire pressure. You can not tell if your tires are properly inflated simply by looking at them. Radial tires may look properly inflated even when they're underinflated.

Check the tire's inflation pressure when the tires are cold. - "Cold" means your vehicle has been sitting for at least three hours or driven no more than 1.6 km (1 mile).

Remove the valve cap from the tire valve stem. Press the tire gage firmly onto the valve to get a pressure measurement. If the cold tire inflation pressure matches the recommended pressure on the tire and loading information label, no further adjustment is necessary. If the pressure is low, add air until you reach the recommended amount.

If you overfill the tire, release air by pushing on the metal stem in the center of the tire valve. Recheck the tire pressure with the tire gage. Be sure to put the valve caps back on the valve stems. They help prevent leaks by keeping out dirt and moisture.

⚠ WARNING

- **Inspect your tires frequently for proper inflation as well as wear and damage. Always use a tire pressure gauge.**
- **Tires with too much or too little pressure wear unevenly causing poor handling, loss of vehicle control, and sudden tire failure leading to accidents, injuries, and even death. The recommended cold tire pressure for your vehicle can be found in this manual and on the tire label located on the driver's side center pillar.**
- **Worn tires can cause accidents. Replace tires that are worn, show uneven wear, or are damaged.**
- **Remember to check the pressure of your spare tire. HYUNDAI recommends that you check the spare every time you check the pressure of the other tires on your vehicle.**

Tire rotation

To equalize tread wear, it is recommended that the tires be rotated every 12,000 km (7,500 miles) or sooner if irregular wear develops.

During rotation, check the tires for correct balance.

When rotating tires, check for uneven wear and damage. Abnormal wear is usually caused by incorrect tire pressure, improper wheel alignment, out-of-balance wheels, severe braking or severe cornering. Look for bumps or bulges in the tread or side of tire. Replace the tire if you find either of these conditions. Replace the tire if fabric or cord is visible. After rotation, be sure to bring the front and rear tire pressures to specification and check lug nut tightness.

Refer to “Tire and wheels” in section 8.

With a full-size spare tire (if equipped)

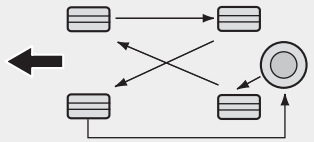

CBGQ0706

Without a spare tire

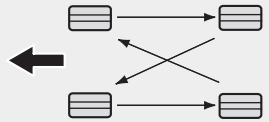

CBGQ0707

Directional tires (if equipped)

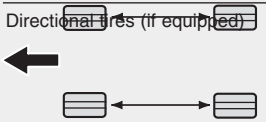

CBGQ0707A

Disc brake pads should be inspected for wear whenever tires are rotated.

✻ NOTICE

Rotate radial tires that have an asymmetric tread pattern only from front to rear and not from right to left.

⚠ WARNING

- **Do not use the compact spare tire for tire rotation.**
- **Do not mix bias ply and radial ply tires under any circumstances. This may cause unusual handling characteristics that could result in death, severe injury, or property damage.**

Wheel alignment and tire balance

The wheels on your vehicle were aligned and balanced carefully at the factory to give you the longest tire life and best overall performance.

In most cases, you will not need to have your wheels aligned again. However, if you notice unusual tire wear or your vehicle pulling one way or the other, the alignment may need to be reset.

If you notice your vehicle vibrating when driving on a smooth road, your wheels may need to be rebalanced.

⚠ CAUTION

Improper wheel weights can damage your vehicle's aluminum wheels. Use only approved wheel weights.

Tire replacement

If the tire is worn evenly, a tread wear indicator will appear as a solid band across the tread. This shows there is less than 1.6 mm (1/16 inch) of tread left on the tire. Replace the tire when this happens.

Do not wait for the band to appear across the entire tread before replacing the tire.

⚠ WARNING - Replacing tires

- **Driving on worn-out tires is very hazardous and will reduce braking effectiveness, steering accuracy, and traction.**
- **Your vehicle is equipped with tires designed to provide for safe ride and handling capability. Do not use a size and type of tire and wheel that is different from the one that is originally installed on your vehicle. It can affect the safety and performance of your vehicle, which could lead to handling failure or rollover and serious injury. When replacing the tires, be sure to equip all four tires with the tire and wheel of the same size, type, tread, brand and load-carrying capacity.**

(Continued)

(Continued)

- **The use of any other tire size or type may seriously affect ride, handling, ground clearance, stopping distance, body to tire clearance, snow tire clearance, and speedometer reliability.**
- **It is best to replace all four tires at the same time. If that is not possible, or necessary, then replace the two front or two rear tires as a pair. Replacing just one tire can seriously affect your vehicle's handling.**
- **The ABS works by comparing the speed of the wheels. Tire size can affect wheel speed. When replacing tires, all 4 tires must use the same size originally supplied with the vehicle. Using tires of a different size can cause the ABS (Anti-lock Brake System) and ESP (Electronic Stability Program) to work irregularly.**

Compact spare tire replacement (if equipped)

A compact spare tire has a shorter tread life than a regular size tire. Replace it when you can see the tread wear indicator bars on the tire. The replaced compact spare tire should be the same size and design tire as the one provided with your new vehicle and should be mounted on the same compact spare tire wheel. The compact spare tire is not designed to be mounted on a regular size wheel, and the compact spare tire wheel is not designed to mount a regular size tire.

Wheel replacement

When replacing the metal wheels for any reason, make sure the new wheels are equivalent to the original factory units in diameter, rim width and offset.

⚠ WARNING

A wheel that is not the correct size may adversely affect wheel and bearing life, braking and stopping abilities, handling characteristics, ground clearance, body-to-tire clearance, snow chain clearance, speedometer and odometer calibration, headlight aim and bumper height.

Tire traction

Tire traction can be reduced if you drive on worn tires, tires that are improperly inflated or on slippery road surfaces. Tires should be replaced when tread wear indicators appear. Slow down whenever there is rain, snow or ice on the road, to reduce the possibility of losing control of the vehicle.

Tire maintenance

In addition to proper inflation, correct wheel alignment helps decrease tire wear. If you find a tire worn unevenly, have your dealer check the wheel alignment.

When you have new tires installed, make sure they are balanced. This will increase vehicle ride comfort and tire life. Additionally, a tire should always be rebalanced if it is removed from the wheel.

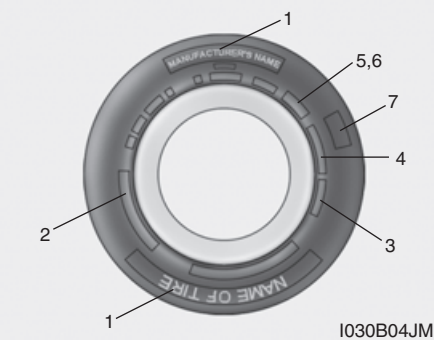

Tire sidewall labeling

This information identifies and describes the fundamental characteristics of the tire and also provides the tire identification number (TIN) for safety standard certification. The TIN can be used to identify the tire in case of a recall.

1. Manufacturer or brand name

Manufacturer or Brand name is shown.

2. Tire size designation

A tire's sidewall is marked with a tire size designation. You will need this information when selecting replacement tires for your car. The following explains what the letters and numbers in the tire size designation mean.

Example tire size designation:

(These numbers are provided as an example only; your tire size designator could vary depending on your vehicle.)

P195/65R15 94H

P - Applicable vehicle type (tires marked with the prefix "P" are intended for use on passenger cars or light trucks; however, not all tires have this marking).

195 - Tire width in millimeters.

65 - Aspect ratio. The tire's section height as a percentage of its width.

R - Tire construction code (Radial).

15 - Rim diameter in inches.

94 - Load Index, a numerical code associated with the maximum load the tire can carry.

H - Speed Rating Symbol. See the speed rating chart in this section for additional information.

Wheel size designation

Wheels are also marked with important information that you need if you ever have to replace one. The following explains what the letters and numbers in the wheel size designation mean.

Example wheel size designation:

6.0JX15

6.0 - Rim width in inches.

J - Rim contour designation.

15 - Rim diameter in inches.

Tire speed ratings

The chart below lists many of the different speed ratings currently being used for passenger car tires. The speed rating is part of the tire size designation on the sidewall of the tire. This symbol corresponds to that tire's designed maximum safe operating speed.

Speed Rating Symbol	Maximum Speed
S	180 km/h (112 mph)
T	190 km/h (118 mph)
H	210 km/h (130 mph)
V	240 km/h (149 mph)
Z	Above 240 km/h (149 mph)
W*	270 km/h (168 mph)

* W speed rating is sub-category of the Z speed rating.

3. Checking tire life (TIN : Tire Identification Number)

Any tires that are over 6 years old, based on the manufacturing date, (including the spare tire) should be replaced by new ones. You can find the manufacturing date on the tire sidewall (possibly on the inside of the wheel), displaying the DOT Code. The DOT Code is a series of numbers on a tire consisting of numbers and English letters. The manufacturing date is designated by the last four digits (characters) of the DOT code.

DOT : XXXX XXXX OOOO

The front part of the DOT means a plant code number, tire size and tread pattern and the last four numbers indicate week and year manufactured.

For example:

DOT XXXX XXXX 1613 represents that the tire was produced in the 16th week of 2013.

⚠ WARNING - Tire age

Tires degrade over time, even when they are not being used.

Regardless of the remaining tread, it is recommended that tires generally be replaced after six (6) years of normal service. Heat caused by hot climates or frequent high loading conditions can accelerate the aging process. Failure to follow this warning could cause sudden tire failure, which could lead to a loss of control and an accident involving serious injury or death.

4. Tire ply composition and material

The number of layers or plies of rubber-coated fabric in the tire. Tire manufacturers also must indicate the materials in the tire, which include steel, nylon, polyester, and others. The letter "R" means radial ply construction; the letter "D" means diagonal or bias ply construction; and the letter "B" means belted-bias ply construction.

5. Maximum permissible inflation pressure

This number is the greatest amount of air pressure that should be put in the tire. Do not exceed the maximum permissible inflation pressure. Refer to the Tire and Loading Information label for recommended inflation pressure.

6. Maximum load rating

This number indicates the maximum load in kilograms and pounds that can be carried by the tire. When replacing the tires on the vehicle, always use a tire that has the same load rating as the factory installed tire.

7. Uniform tire quality grading

Quality grades can be found where applicable on the tire sidewall between tread shoulder and maximum section width.

For example:

TREAD wear 200

TRACTION AA

TEMPERATURE A

Tread wear

The tread wear grade is a comparative rating based on the wear rate of the tire when tested under controlled conditions on a specified government test course. For example, a tire graded 150 would wear one-and-a-half times (1½) as well on the government course as a tire graded 100.

The relative performance of tires depends upon the actual conditions of their use, however, and may depart significantly from the norm due to variations in driving habits, service practices and differences in road characteristics and climate.

These grades are molded on the side-walls of passenger vehicle tires. The tires available as standard or optional equipment on your vehicle may vary with respect to grade.

Traction - AA, A, B & C

The traction grades, from highest to lowest, are AA, A, B and C. Those grades represent the tire's ability to stop on wet pavement measured under controlled conditions on specified government test surfaces of asphalt and concrete. A tire marked C may have poor traction performance.

⚠ WARNING

The traction grade assigned to this tire is based on straight-ahead braking traction tests, and does not include acceleration, cornering, hydroplaning, or peak traction characteristics.

Temperature -A, B & C

The temperature grades are A (the highest), B, and C, representing the tire's resistance to the generation of heat and its ability to dissipate heat when tested under controlled conditions on a specified indoor laboratory test wheel.

Sustained high temperature can cause the material of the tire to degenerate and reduce tire life, and excessive temperature can lead to sudden tire failure. Grades B and A represent higher levels of performance on the laboratory test wheel than the minimum required by law.

⚠ WARNING - Tire temperature

The temperature grade for this tire is established for a tire that is properly inflated and not overloaded. Excessive speed, underinflation, or excessive loading, either separately or in combination, can cause heat build-up and sudden tire failure. This can cause loss of vehicle control and serious injury or death.

Low aspect ratio tire (if equipped)

Low aspect ratio tires, whose aspect ratio is lower than 50, are provided for sporty looks.

Because the low aspect ratio tires are optimized for handling and braking, it may be more uncomfortable to ride in and there is more noise compare with normal tires.

⚠ **CAUTION**

Because the sidewall of the low aspect ratio tire is shorter than the normal, the wheel and tire of the low aspect ratio tire is easier to be damaged. So, follow the instructions below.

- ***When driving on a rough road or off road, drive cautiously because tires and wheels may be damaged. And after driving, inspect tires and wheels.***
- ***When passing over a pothole, speed bump, manhole, or curb stone, drive slowly so that the tires and wheels are not damaged.***
- ***If the tire is impacted, we recommend that you inspect the tire condition or contact an authorized HYUNDAI dealer.***
- ***To prevent damage to the tire, inspect the tire condition and pressure every 3,000km.***

⚠ **CAUTION**

- ***It is not easy to recognize the tire damage with your own eyes. But if there is the slightest hint of tire damage, even though you cannot see the tire damage with your own eyes, have the tire checked or replaced because the tire damage may cause air leakage from the tire.***
- ***If the tire is damaged by driving on a rough road, off road, pothole, manhole, or curb stone, it will not be covered by the warranty.***
- ***You can find out the tire information on the tire sidewall.***

FUSES

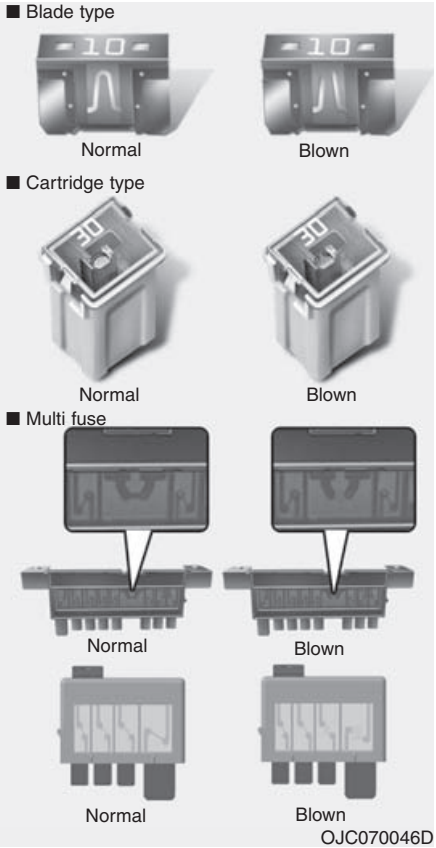

A vehicle's electrical system is protected from electrical overload damage by fuses.

This vehicle has 2 fuse panels, one located in the driver's side panel bolster, the other in the engine compartment near the battery.

If any of your vehicle's lights, accessories, or controls do not work, check the appropriate circuit fuse. If a fuse has blown, the element inside the fuse will be melted.

If the electrical system does not work, first check the driver's side fuse panel.

Before replacing a blown fuse, disconnect the negative battery cable.

Always replace a blown fuse with one of the same rating.

If the replacement fuse blows, this indicates an electrical problem. Avoid using the system involved and we recommend that you consult with an authorized HYUNDAI dealer immediately.

Three kinds of fuses are used: blade type for lower amperage rating, cartridge type and multi fuse for higher amperage ratings.

⚠ WARNING - Fuse replacement

- **Never replace a fuse with anything but another fuse of the same rating.**
- **A higher capacity fuse could cause damage and possibly a fire.**
- **Never install a wire or aluminum foil instead of the proper fuse - even as a temporary repair. It may cause extensive wiring damage and a possible fire.**

⚠ CAUTION

Do not use a screwdriver or any other metal object to remove fuses because it may cause a short circuit and damage the system.

✻ NOTICE

The actual fuse/relay panel label may differ from equipped items.

⚠ CAUTION

- ***When replacing a blown fuse or relay with a new one, make sure the new fuse or relay fits tightly into the clips. The incomplete fastening fuse or relay may cause the vehicle wiring and electric systems damage and a possible fire.***
- ***Do not remove fuses, relays and terminals fastened with bolts or nuts. The fuses, relays and terminals may be fastened incompletely, and it may cause a possible fire. If fuses, relays and terminals fastened with bolts or nuts are blown, consult with an authorized HYUNDAI dealer.***
- ***Do not input any other objects except fuses or relays into fuse/relay terminals such as a driver or wiring. It may cause contact failure and system malfunction.***

OGD071016

Instrument panel fuse replacement

1. Turn the ignition switch and all other switches off.
2. Open the fuse panel cover.

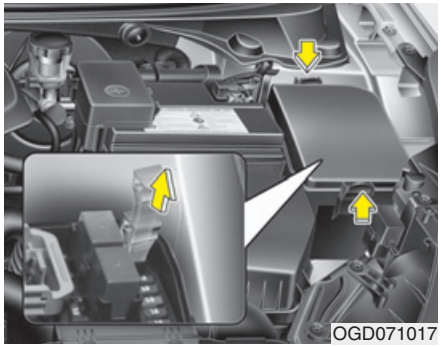
OGD071017

3. Pull the suspected fuse straight out. Use the removal tool provided in the engine compartment fuse panel.
4. Check the removed fuse; replace it if it is blown.
5. Push in a new fuse of the same rating, and make sure it fits tightly in the clips.

If it fits loosely, we recommend that you consult with an authorized HYUNDAI dealer.

If you do not have a spare, use a fuse of the same rating from a circuit you may not need for operating the vehicle, such as the cigarette lighter fuse.

If the electrical components do not work and the fuses are OK, check the fuse panel in the engine compartment. If a fuse is blown, it must be replaced.

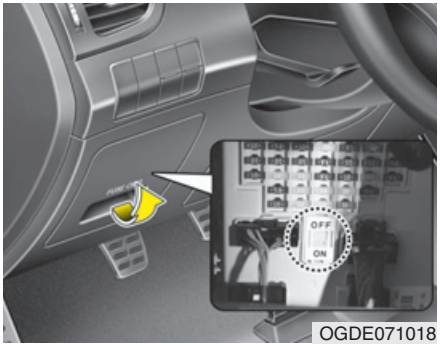

OGDE071018

Fuse switch

Always, put the mode switch at the ON position.

If you move the switch to the OFF position, some items such as audio and digital clock must be reset and transmitter (or smart key) may not work properly.

⚠ CAUTION

Always place the fuse switch in the ON position while driving the vehicle.

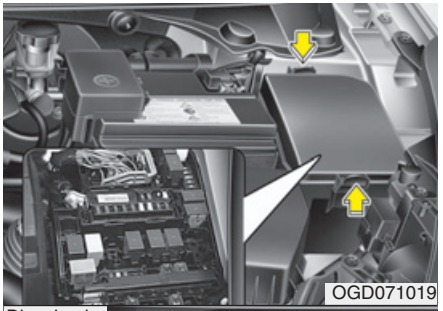
OGD071019

Diesel only

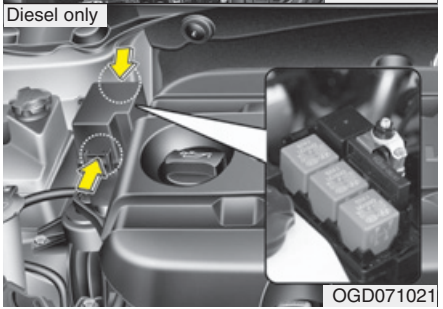
OGD071021

Engine compartment panel fuse replacement

1. Turn the ignition switch and all other switches off.
2. Remove the fuse box cover by pressing the tab and pulling up the cover.
3. Check the removed fuse; replace it if it is blown. To remove or insert the fuse, use the fuse puller in the engine compartment fuse panel.
4. Push in a new fuse of the same rating, and make sure it fits tightly in the clips. If it fits loosely, we recommend that you consult with an authorized HYUNDAI dealer.

⚠ CAUTION

After checking the fuse panel in the engine compartment, securely install the fuse panel cover. If not, electrical failures may occur from water leaking in.

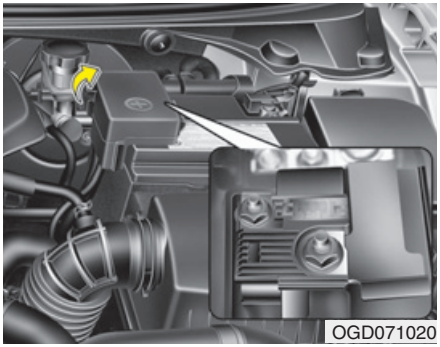

Main fuse

If the main fuse is blown, it must be removed as follows:

1. Disconnect the negative battery cable.
2. Remove the nuts shown in the picture above.
3. Replace the fuse with a new one of the same rating.
4. Reinstall in the reverse order of removal.

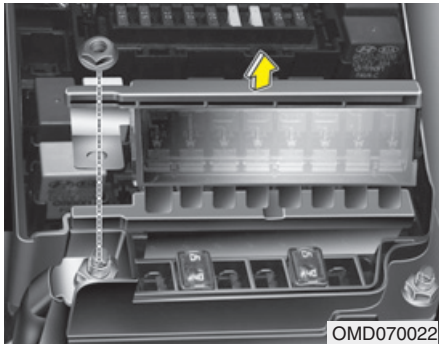

Multi fuse

If the multi fuse is blown, it must be removed as follows:

1. Remove the fuse panel in the engine compartment.
2. Remove the nuts shown in the picture above.
3. Replace the fuse with a new one of the same rating.
4. Reinstall in the reverse order of removal.

✻ NOTICE

If the main or multi fuse is blown, we recommend that you consult with an authorized HYUNDAI dealer.

OGDE071022

Fuse/relay panel description

Inner fuse panel

Inside the fuse/relay panel covers, you can find the fuse/relay label describing fuse/relay name and capacity.

✻ NOTICE

Not all fuse panel descriptions in this manual may be applicable to your vehicle. It is accurate at the time of printing. When you inspect the fuse panel in your vehicle, refer to the fuse panel label.

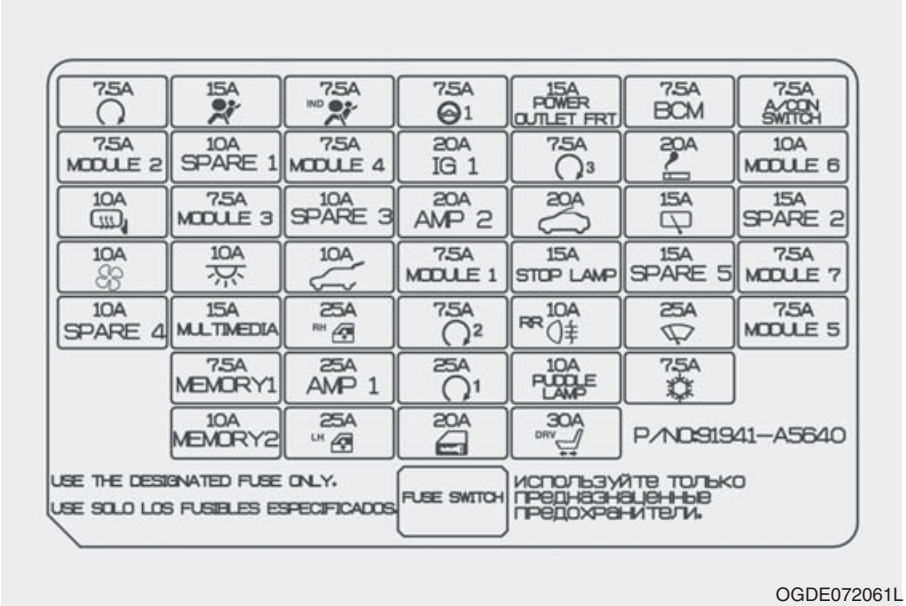

OGDE072061L

Instrument panel (Driver's side fuse panel)

No.	Fuse rating	Symbol	Fuse Name	Protected component
1	20A		CIGAR LIGHT	Console Cigar Light, Rear Power Outlet
2	7.5A	**MODULE 1**	MODULE 1	Sport Mode Switch, Power Outside Mirror Switch
3	7.5A	**MODULE 4**	MODULE 4	ATM Shift Lever IND., Multipurpose Check Connector, Electro Chromic Mirror, A/C Control Module, Head Lamp Leveling Device Actuator LH/RH, Fuel Filter Warning Sensor(D4FD)
4	7.5A	**MODULE 3**	MODULE 3	Instrument Cluster, BCM, Tire Pressure Monitoring Module, Audio, Driver/Passenger Seat Warmer Module
5	15A	**POWER OUTLET**	POWER OUTLET	Front Power Outlet
6	10A		HTD MIRR	Driver/Passenger Power Outside Mirror, A/C Control Module, ECU
7	25A		WIPER FRT	ICM Relay Box (Rain Sensor Relay), Multifunction Switch, E/R Fuse & Relay Box (RLY. 7) Front Wiper Motor
8	7.5A		A/CON	A/C Control Module, E/R Fuse & Relay Box (RLY. 4)
9	25A	LH	P/WDW LH	P/WDW LH Relay, Driver Safety Power Window Module (LHD)
10	10A		TAIL GATE	Tail Gate, Rear Camera Open Actuator
11	30A	DRV	P/SEAT DRV	Driver Manual Switch
12	7.5A	**MODULE2**	MODULE2	Lane Keeping Assist Module, ICM Relay Box (HAC Relay), Electric Parking Brake Module, Rear Camera Module

No.	Fuse rating	Symbol	Fuse Name	Protected component
13	15A		WIPER RR	Rear Wiper Relay, Rear Wiper Motor, Multifunction Switch
14	15A	**STOP LAMP**	STOP LAMP	Stop Lamp Switch, ICM Relay Box (HAC Relay)
15	25A	RH	P/WDW RH	P/WDW RH Relay, Driver Safety Power Window Module (RHD)
16	7.5A	2	PDM 2	Smart Key Control Module, Start/Stop Button Switch
17	7.5A	**MODULE 5**	MODULE 5	EMS BOX (Head Lamp Washer Relay), Ionizer Unit, Panorama Sunroof, DC-DC Converter, DSL BOX (PTC Relay), E/R Fuse & Relay BOX(RLY.), Driver/Passenger Seat Warmer Module
18	20A	**IG1**	IG1	E/R Fuse & Relay Box (Fuse – F)
19	10A	**MODULE 6**	MODULE 6	Outside Mirror Switch, Audio, Navigation Head Unit, Digital Clock, DC-DC Converter
20	7.5A	1	MDPS	EPS Control Module
21	20A		DR LOCK	Door Lock/Unlock Relay, ICM Relay BOX (Dead Lock Relay), Driver/Passenger Door Lock Actuator, Fuel filler actuator, Door Lock Actuator LH/RH
22	10A	**INTERIOR LAMP**	INTERIOR LAMP	Glove Box Lamp, Vanity Lamp LH/RH, Overhead Console Lamp, Room Lamp, Luggage Lamp, DR Warning Switch
23	15A	**MULTI MEDIA**	MULTI MEDIA	Audio, Navigation Head Unit, DC-DC Converter (Audio)
24	15A		A/BAG	SRS Control Module

No.	Fuse rating	Symbol	Fuse Name	Protected component
25	7.5A	**MEMORY 1**	MEMORY 1	Ultrasonic instruction Protection Sensor
26	7.5A	IND	A/BAG IND	Instrument Cluster
27	7.5A	3	PDM 3	Smart Key Control Module, Ultrasonic instrusion Protection Sensor
28	10A	**MEMORY 2**	MEMORY 2	Outside Mirror Switch, Tire Pressure Monitoring Module, BCM, Auto Light & Photo Sensor, Instrument Cluster, OBD, Digital Clock, A/C Control Module
29	25A	1	PDM 1	Smart Key Control Module
30	7.5A		START	W/O Button Start : E/R Fuse & Relay Box (RLY.) Ignition Lock Switch, Transaxle Range Switch With Button Start : ECM/PCM, Transaxle Range Switch
31	20A		SUNROOF	Panorama Sunroof
32	7.5A	**BCM**	BCM	BCM, Smart Key Control Module
33	7.5A	**A/CON SW**	A/CON SW	A/C Control Module
34	10A	**AFLS**	AFLS	Adaptive Front Lighting System Module
35	7.5A	**MODULE 7**	MODULE 7	BCM, Smart Key Control Module
36	10A		FOG LAMP RR	Rear Fog Lamp
37	10A	**PUDDLE LAMP**	PUDDLE LAMP	Driver/Passenger Power Outside Mirror

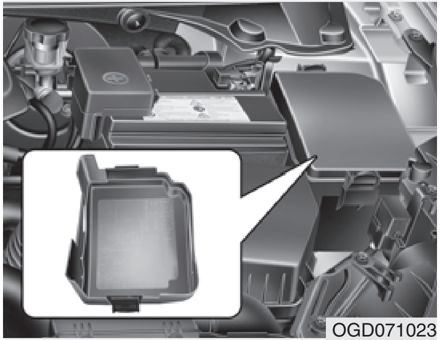
OGD071023

Engine compartment fuse panel

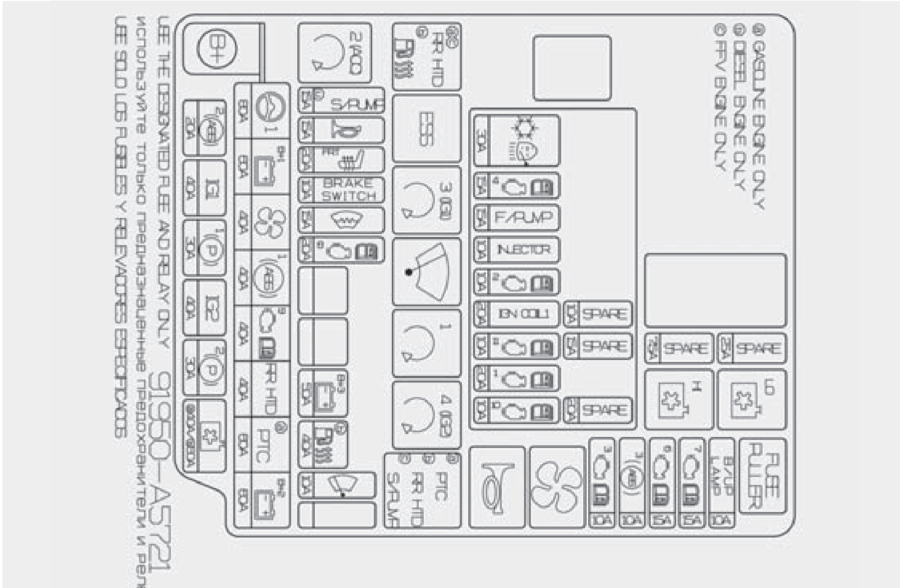

OGDE072060L

No.		Fuse rating		Symbol	Protected component
MULTI FUSE	1	80A		1	EPS Control Module
	2	60A		B+1	I/P Junction Box (IPS 0 (4CH), IPS 1 (4CH), IPS 2 (2CH), Fuse - F13/F14/F19/F20/F21/F26/ F36)
	3	60A		1 (ABS)	ESC Control Module, Multipurpose Check Connector
	4	40A			RLY. 4 (Blower Relay)
	5	60A		B+2	I/P Junction Box (IPS 3 (4CH), IPS 4 (4CH), Fuse - F2/F7/F9/F15)
	6	60A		PTC HTR	RLY. 12 (GASOLINE PTC Relay)
FUSE	7	Gasoline engine	40A		RLY. 1 (C/FAN LO Relay), RLY. 2 (C/FAN HI Relay)
		Diesel engine	50A		
	8	20A		2 (ABS)	ESC Control Module, Multipurpose Check Connector
	9	40A		IG2	RLY. 9 (Start Relay), Ignition Switch (W/O Button Start), RLY. 6 (PDM 4 (IG2) Relay, With Button Start)
	10	40A		IG1	W/O Button Start : Ignition Switch, With Button Start : RLY. 8 (PDM 2 (ACC) Relay)/RLY. 10 (PDM 3 (IG1) Relay
	11	15A			ICM Relay Box (Front Deicer Relay)
	12	50A		B+3	I/P Junction Box (Leak Current Autocut Device, Fuse - F18/F25/F30/F34/F38)
	13	10A		BRAKE SW	Smart Key Control Module, Stop Signal Relay

No.		Fuse rating	Symbol	Protected component
FUSE	14	30A	1 (P)	Electric Parking Brake Module
	15	30A	2 (P)	Electric Parking Brake Module
	16	20A	8	D4FD & A/T : TCM
	17	15A	5	G4NA/G4NC : PCM (A/T), ECM (M/T)
	18	20A	FRT	Driver/Passenger Seat Warmer Module
	19	50A	**PTC HTR**	RLY. 12 (Fuel Filter Relay)
	20	10A		PCM/ECM
	21	15A		RLY. 5 (Horn Relay), ICM Relay Box (B/A Horn Relay)
	22	15A	7	A/T - TCM (D4FD), Transaxle Range Switch
	23	15A	6	RLY. 9 (D4FD, Start Relay), ECM/PCM
	24	10A	3 (ABS)	ESC Control Module, Multipurpose Check Connector
	25	10A	3	ECM/PCM, Air Flow Sensor, Stop Lamp Switch
	26	10A	**B/UP LAMP**	M/T - Back-Up Lamp Switch, A/T - Rear Combination Lamp (IN) LH/RH, Rear Curtain Module, Navigation Head Unit, Electro Chromic Mirror, IPS Control Module

No.		Fuse rating	Symbol	Protected component
FUSE	27	20A	1	G4FD/D4FD : ECM G4NA/G4NC : PCM (A/T), ECM (M/T)
	28	20A	IGN COIL	G4NA : Ignition Coil #1/#2/#3/#4, Condenser
	29	10A	10	G4FD : Oxygen Sensor (UP/DOWN), Variable Intake Solenoid Valve,Purge Control Solenoid Valve G4NA/G4NC : Oxygen Sensor (UP/DOWN), Variable Intake Solenoid Valve, Purge Control Solenoid Valve D4FD : Camshaft Position Sensor, EGR Cooling Bypass Solenoid Valve, Diesel Box (Glow Relay)
	30	10A	11	G4FD : Oil Control Valve #1/ #2, Oil Level Sensor, E/R Fuse & Relay Box (RLY. 1) G4NA/G4NC : Oil Control Valve #1/ #2, Camshaft Position Sensor (Intake/Exhaust), E/R Fuse & Relay Box (RLY. 1) D4FD : E/R Fuse & Relay Box (RLY. 1), Diesel Box (PTC Heater Relay#1), Lambda Sensor, VGT Control Solenoid Valve
	31	10A	2	G4FD : ECM G4NA : Fuel Pump Relay G4NC : Fuel Pump Relay, PCM (A/T), ECM (M/T) D4FD : Oil Level Sensor, Fuel Pressure Regulating Valve
	32	10A	INJECTOR	G4NA - Injector #1/#2/#3/#4
	33	15A	4	G4NA/G4NC : PCM (A/T), ECM (M/T)
	34	15A	F/PUMP	EMS Box (Fuel Pump Relay)
	35	30A		EMS Box (Head Lamp Washer Relay)
	36	40A	9	EMS Box

No.		Symbol	Protected component	Type
FUSE	37	LO	C/FAN LO RELAY	PLUG MICRO
	38	HI	C/FAN HI RELAY	PLUG MICRO
	39	ESS	ESS RELAY	PLUG MICRO
	40		BLOWER RELAY	PLUG MICRO
	41		HORN RELAY	PLUG MICRO
	42	4 (IG2)	PDM 4 (IG2) RELAY	PLUG MICRO
	43		FRONT WIPER RELAY	PLUG MICRO
	44	2 (ACC)	PDM 2 (ACC) RELAY	PLUG MICRO
	45	1	START RELAY	PLUG MICRO
	46	3 (IG1)	PDM 3 (IG1) RELAY	PLUG MICRO
	47	RR HTD	RR HTD RELAY	PLUG MICRO
	48	Gasoline : PTC Diesel :	PTC Heater/Fuel Filter	PLUG MINI

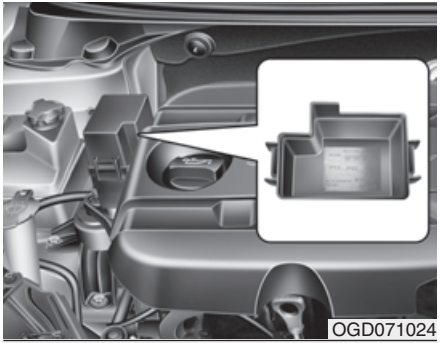

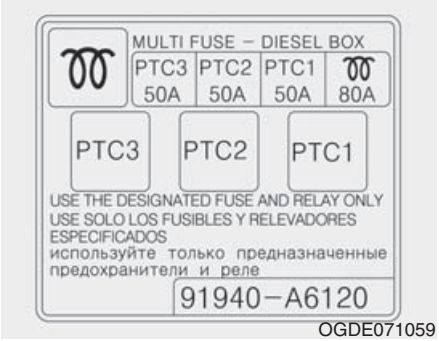

Engine compartment fuse panel (Diesel engine only)

Description	Fuse rating	Protected Component
	80A	Glow Relay
PTC 1	50A	PTC 1 Relay
PTC 2	50A	PTC 2 Relay
PTC 3	50A	PTC 3 Relay

LIGHT BULBS

⚠ WARNING - Working on the lights

Prior to working on the light, firmly apply the parking brake, ensure that the ignition switch is turned to the LOCK position and turn off the lights to avoid sudden movement of the vehicle and burning your fingers or receiving an electric shock.

Use only the bulbs of the specified wattage.

⚠ CAUTION

Be sure to replace the burned-out bulb with one of the same wattage rating. Otherwise, it may cause damage to the fuse or electric wiring system.

⚠ CAUTION

The headlight aiming adjustment may be necessary after the headlight assembly is reinstalled. If you are unsure how to replace or aim the headlight, we recommend that you consult with an authorized HYUNDAI dealer.

⚠ CAUTION

If you don't have necessary tools, the correct bulbs and the expertise, we recommend that you consult with an authorized HYUNDAI dealer. In many cases, it is difficult to replace vehicle light bulbs because other parts of the vehicle must be removed before you can get to the bulb. This is especially true if you have to remove the headlight assembly to get to the bulb(s). Removing/installing the headlight assembly can result in damage to the vehicle.

✻ NOTICE

After heavy, driving rain or washing, headlight and taillight lenses could appear frosty. This condition is caused by the temperature difference between the lamp inside and outside. This is similar to the condensation on your windows inside your vehicle during the rain and doesn't indicate a problem with your vehicle. If the water leaks into the lamp bulb circuitry, we recommend that the vehicle be checked by an authorized HYUNDAI dealer.

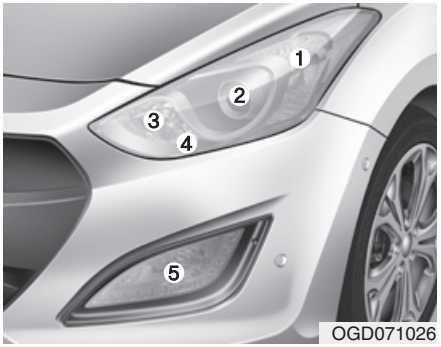

OGD071026

Headlight, position light, turn signal light, front fog light bulb replacement

(1) Front turn signal light
(2) Headlight (Low)
(3) Headlight (High)
(4) Position light
(5) Front fog light (if equipped)

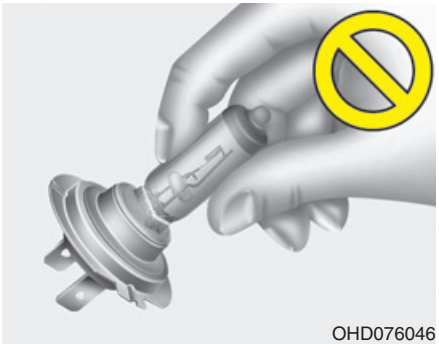
OHD076046

⚠ WARNING - Halogen bulbs

- **Halogen bulbs contain pressurized gas that will produce flying pieces of glass if broken.**
- **Always handle them carefully, and avoid scratches and abrasions. If the bulbs are lit, avoid contact with liquids. Never touch the glass with bare hands. Residual oil may cause the bulb to overheat and burst when lit. A bulb should be operated only when installed in a headlight.**

(Continued)

(Continued)

- **If a bulb becomes damaged or cracked, replace it immediately and carefully dispose of it.**
- **Wear eye protection when changing a bulb. Allow the bulb to cool down before handling it.**

OGDE071050

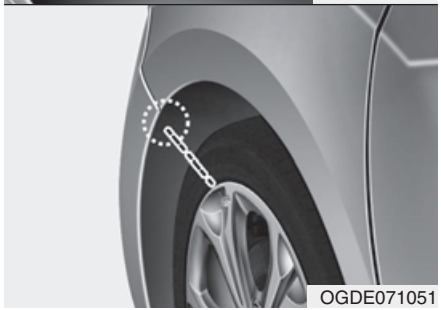
OGDE071051

Replace front lamps

1. Open the hood.
2. Disconnect the negative battery cable.
3. Loosen the assembly retaining screws and nuts.

OGDE071052

4. Pull out the both side of the front bumper and then pull out the front bumper.
5. Remove the headlight assembly from the body of the vehicle. If you can reach the bulb without removing the headlight assembly, you do not need to do step 3 and 5.
6. Disconnect the power connector(s) from the back of the headlight assembly.

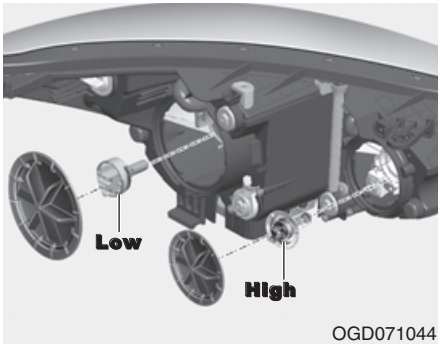

OGD071044

Headlight bulb (high)

Follow the steps 1 to 6 from the previous page.

7. Remove the headlight bulb cover by turning it counterclockwise.
8. Disconnect the headlight bulb socket-connector.
9. Unsnap the headlight bulb retaining wire by depressing the end and pushing it upward.
10. Remove the bulb from the headlight assembly.
11. Install a new headlight bulb and snap the headlight bulb retaining wire into position by aligning the wire with the groove on the bulb.
12. Connect the headlight bulb socket-connector.
13. Install the headlight bulb cover by turning it clockwise.

Headlight (Low, Non-HID Type)

Follow the steps 1 to 6 from the previous page.

7. Remove the cover by turning it counterclockwise.
8. Remove the socket from the assembly by turning the socket counterclockwise until the tabs on the socket align with the slots on the assembly.
9. Pull the bulb out of the socket.
10. Insert a new bulb into the socket.
11. Install the socket in the assembly by aligning the tabs on the socket with the slots in the assembly. Push the socket into the assembly and turn the socket clockwise.
12. Install the headlight bulb cover by turning it clockwise.

Headlight (Low, HID type)

If the light does not operate, we recommend that the system be checked by an authorized HYUNDAI dealer.

⚠ WARNING - HID Headlight low beam (if equipped)

Do not attempt to replace or inspect the low beam (XENON bulb) due to electric shock danger. If the low beam (XENON bulb) is not working, we recommend that the system be checked by an authorized HYUNDAI dealer.

✻ NOTICE

HID lamps have superior performance vs. halogen bulbs. HID lamps are estimated by the manufacturer to last twice as long or longer than halogen bulbs depending on their frequency of use. They will probably require replacement at some point in the life of the vehicle. Cycling the headlamps on and off more than typical use will shorten HID lamps life. HID lamps do not fail in the same manner as halogen incandescent lamps. If a headlamp goes out after a period of operation but will immediately relight when the headlamp switch is cycled it is likely the HID lamp needs to be replaced. HID lighting components are more complex than conventional halogen bulbs thus have higher replacement cost.

❋ Traffic Change (For Europe)

The low beam light distribution is asymmetric. If you go abroad to a country with opposite traffic direction, this asymmetric part will dazzle oncoming car driver. To prevent dazzle, ECE regulation demand several technical solutions (ex. automatic change system, adhesive sheet, down aiming). This headlamps are designed not to dazzle opposite drivers. So, you need not change your headlamps in a country with opposite traffic direction.

Position light

Follow the steps 1 to 6 from the previous page.

7. Remove the cover by turning it counterclockwise.
8. Pull out the socket from the assembly.
9. Pull the bulb out of the socket.
10. Insert a new bulb into the socket.
11. Install the socket into the assembly.
12. Install the headlight bulb cover by turning it clockwise.

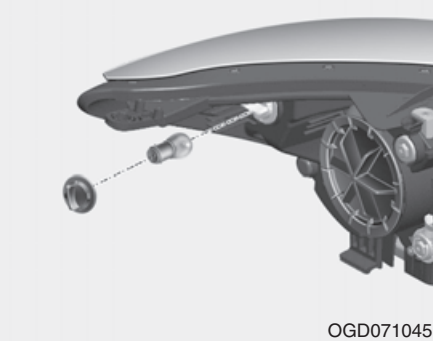

OGD071045

Front turn signal bulb

Follow the steps 1 to 6 from the previous page.

7. Remove the socket from the assembly by turning the socket counterclockwise until the tabs on the socket align with the slots on the assembly.
8. Remove the bulb from the socket by pressing it in and rotating it counterclockwise until the tabs on the bulb align with the slots in the socket. Pull the bulb out of the socket.
9. Insert a new bulb by inserting it into the socket and rotating it until it locks into place.

10. Install the socket in the assembly by aligning the tabs on the socket with the slots in the assembly. Push the socket into the assembly and turn the socket clockwise.
11. Reinstall the light assembly to the body of the vehicle.

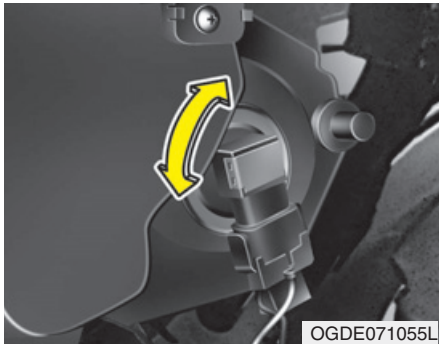
OGDE071055L

Front fog light (if equipped)

Follow the steps 1 to 6 from the previous page.

7. Disconnect the power connector from the socket.
8. Remove the bulb-socket from the housing by turning the socket counter clockwise until the tabs on the socket align with the slots on the housing.
9. Install the new bulb-socket into the housing by aligning the tabs on the socket with the slots in the housing. Push the socket into the housing and turn the socket clockwise.
10. Connect the power connector to the socket.

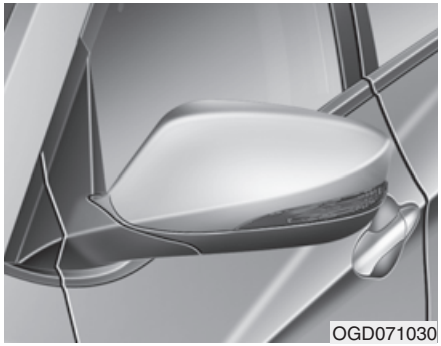
OGD071030

Side repeater light bulb replacement (if equipped)

If the light bulb is not operating, we recommend that the vehicle be checked by an authorized HYUNDAI dealer.

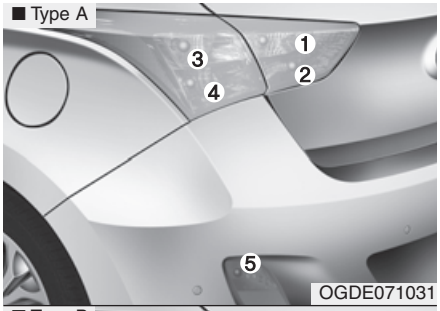

OGDE071031

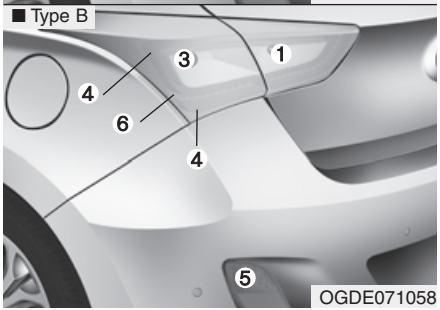

OGDE071058

Rear combination light bulb replacement

(1) Back-up light
(2) Tail light
(3) Rear turn signal light
(4) Stop/tail light
(5) Rear fog light (if equipped)
(6) Stop light

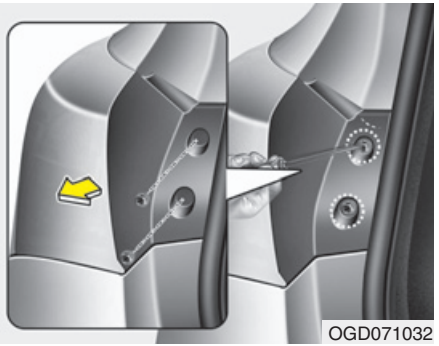
OGD071032

Outside light

Rear turn signal light and stop/tail light (Bulb type)

1. Turn off the engine.
2. Open the tailgate.
3. Loosen the light assembly retaining screws with a cross-tip screwdriver.
4. Remove the rear combination light assembly from the body of the vehicle.

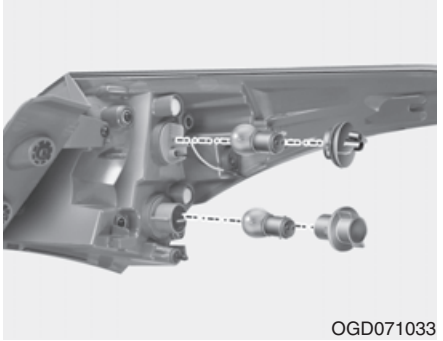
OGD071033

5. Remove the socket from the assembly by turning the socket counterclockwise until the tabs on the socket align with the slots on the assembly.
6. Remove the bulb from the socket by pressing it in and rotating it counterclockwise until the tabs on the bulb align with the slots in the socket. Pull the bulb out of the socket.
7. Insert a new bulb by inserting it into the socket and rotating it until it locks into place.
8. Install the socket in the assembly by aligning the tabs on the socket with the slots in the assembly. Push the socket into the assembly and turn the socket clockwise.
9. Reinstall the light assembly to the body of the vehicle.

Stop/tail light and Stop light (LED type)

If the light does not operate, we recommend that the system be checked by an authorized HYUNDAI dealer.

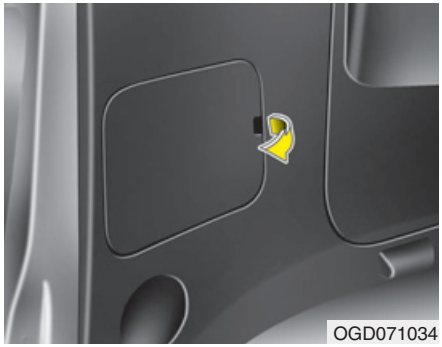

Inside light

1. Turn off the engine.
2. Open the tailgate.
3. Remove the service cover using a flat-blade screwdriver.

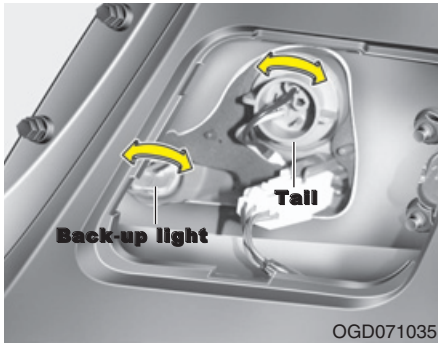

Tail light (Bulb type)

4. Remove the socket from the assembly by turning the socket counterclockwise until the tabs on the socket align with the slots on the assembly.
5. Remove the bulb from the socket by pressing it in and rotating it counterclockwise until the tabs on the bulb align with the slots in the socket. Pull the bulb out of the socket.
6. Insert a new bulb by inserting it into the socket and rotating it until it locks into place.

7. Install the socket in the assembly by aligning the tabs on the socket with the slots in the assembly. Push the socket into the assembly and turn the socket clockwise.
8. Install the service cover by putting it into the service hole.

Back-up light (Bulb type)

4. Remove the socket from the assembly by turning the socket counterclockwise until the tabs on the socket align with the slots on the assembly.
5. Pull the bulb out of the socket.
6. Insert a new bulb into the socket.
7. Install the socket into the assembly by aligning the tabs on the socket with the slots on the assembly and turning the socket clockwise.
8. Reinstall the light assembly to the body of the vehicle

Stop/tail light and Stop light (LED type)

If the light does not operate, we recommend that the system be checked by an authorized HYUNDAI dealer.

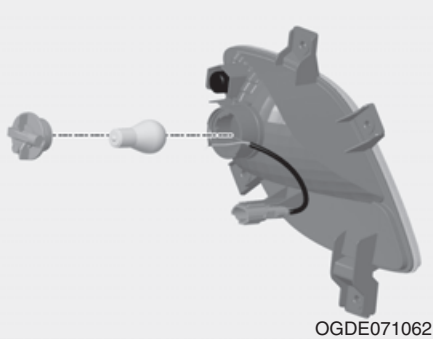
OGDE071062

Rear fog light (if equipped)

1. Remove the rear tire and wheel cover.
2. Remove the socket from the assembly by turning the socket counterclockwise until the tabs on the socket align with the slots on the assembly.
3. Remove the bulb from the socket by pressing it in and rotating it counterclockwise until the tabs on the bulb align with the slots in the socket. Pull the bulb out of the socket.
4. Insert a new bulb in the socket.
5. Reinstall the light assembly to the body of the vehicle.

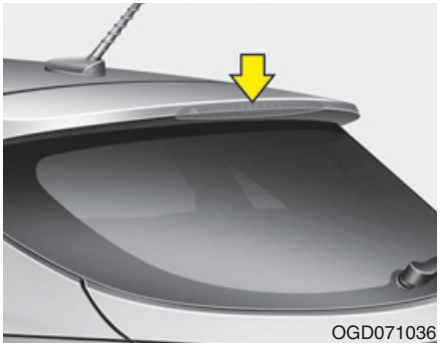

High mounted stop light replacement

If the light does not operate, we recommend that the system be checked by an authorized HYUNDAI dealer.

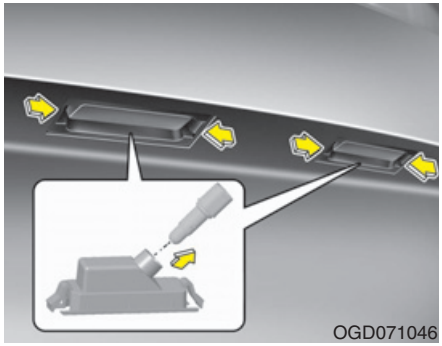

License plate light bulb replacement

1. Turn off the engine.
2. Remove the cover by pressing it as direction of the arrows.
3. Remove the bulb by pulling it straight out.
4. Install a new bulb.
5. Reinstall in the reverse order.

■ Map lamp

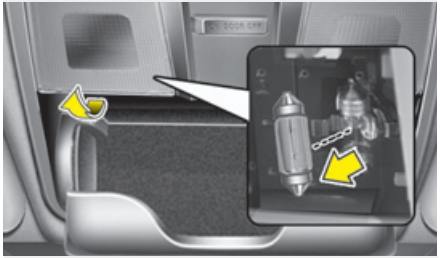

■ Room lamp

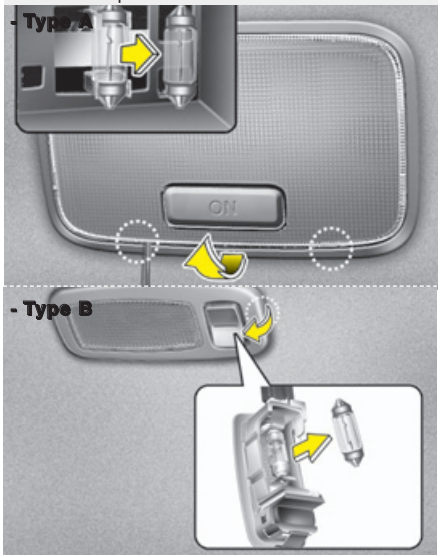

■ Luggage room lamp

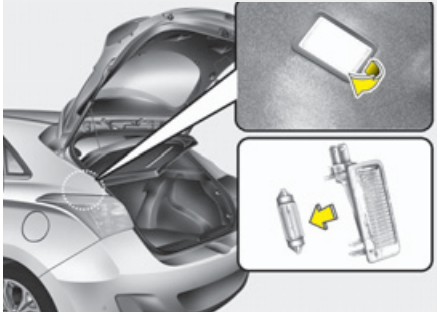

■ Sunvisor lamp

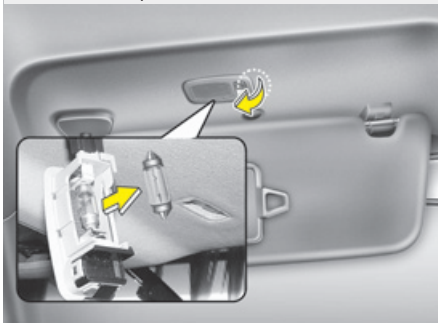

OGD071039/OMD070043/OGD071038/
OGD071040/OTD079035

Interior light bulb replacement

1. Using a flat-blade screwdriver, gently pry the lens from the interior light housing.
2. Remove the bulb by pulling it straight out.

⚠ WARNING

Prior to working on the Interior Lights, ensure that the "OFF" button is depressed to avoid burning your fingers or receiving an electric shock.

3. Install a new bulb in the socket.
4. Align the lens tabs with the interior light housing notches and snap the lens into place.

⚠ CAUTION

Use care not to dirty or damage lens, lens tab, and plastic housings.

APPEARANCE CARE

Exterior care

Exterior general caution

It is very important to follow the label directions when using any chemical cleaner or polish. Read all warning and caution statements that appear on the label.

Finish maintenance

Washing

To help protect your vehicle's finish from rust and deterioration, wash it thoroughly and frequently at least once a month with lukewarm or cold water.

If you use your vehicle for off-road driving, you should wash it after each off-road trip. Pay special attention to the removal of any accumulation of salt, dirt, mud, and other foreign materials. Make sure the drain holes in the lower edges of the doors and rocker panels are kept clear and clean.

Insects, tar, tree sap, bird droppings, industrial pollution and similar deposits can damage your vehicle's finish if not removed immediately.

Even prompt washing with plain water may not completely remove all these deposits. A mild soap, safe for use on painted surfaces, may be used.

After washing, rinse the vehicle thoroughly with lukewarm or cold water. Do not allow soap to dry on the finish.

⚠ CAUTION

- ***Do not use strong soap, chemical detergents or hot water, and do not wash the vehicle in direct sunlight or when the body of the vehicle is warm.***
- ***Be careful when washing the side windows of your vehicle. Especially, with high-pressure water, water may leak through the windows and wet the interior.***
- ***To prevent damage to the plastic parts and lamps, do not clean with chemical solvents or strong detergents.***

⚠ WARNING - Wet brakes

After washing the vehicle, test the brakes while driving slowly to see if they have been affected by water. If braking performance is impaired, dry the brakes by applying them lightly while maintaining a slow forward speed.

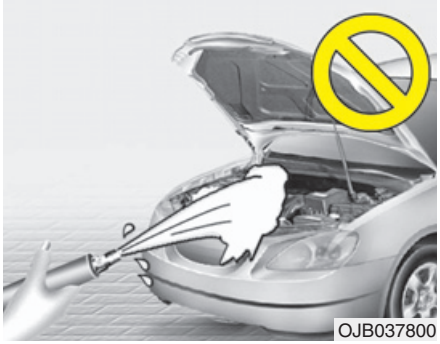

⚠ **CAUTION**

- ***Water washing in the engine compartment including high pressure water washing may cause the failure of electrical circuits located in the engine compartment.***
- ***Never allow water or other liquids to come in contact with electrical/electronic components inside the vehicle as this may damage them.***

Waxing

Wax the vehicle when water will no longer bead on the paint.

Always wash and dry the vehicle before waxing. Use a good quality liquid or paste wax, and follow the manufacturer's instructions. Wax all metal trim to protect it and to maintain its luster.

Removing oil, tar, and similar materials with a spot remover will usually strip the wax from the finish. Be sure to re-wax these areas even if the rest of the vehicle does not yet need waxing.

⚠ **CAUTION**

- ***Wiping dust or dirt off the body with a dry cloth will scratch the finish.***
- ***Do not use steel wool, abrasive cleaners, or strong detergents containing highly alkaline or caustic agents on chrome-plated or anodized aluminum parts. This may result in damage to the protective coating and cause discoloration or paint deterioration.***

Finish damage repair

Deep scratches or stone chips in the painted surface must be repaired promptly. Exposed metal will quickly rust and may develop into a major repair expense.

✻ **NOTICE**

If your vehicle is damaged and requires any metal repair or replacement, be sure the body shop applies anti-corrosion materials to the parts repaired or replaced.

Bright-metal maintenance

- To remove road tar and insects, use a tar remover, not a scraper or other sharp object.
- To protect the surfaces of bright-metal parts from corrosion, apply a coating of wax or chrome preservative and rub to a high luster.
- During winter weather or in coastal areas, cover the bright metal parts with a heavier coating of wax or preservative. If necessary, coat the parts with non-corrosive petroleum jelly or other protective compound.

Underbody maintenance

Corrosive materials used for ice and snow removal and dust control may collect on the underbody. If these materials are not removed, accelerated rusting can occur on the underbody parts such as the fuel lines, frame, floor pan and exhaust system, even though they have been treated with rust protection.

Thoroughly flush the vehicle underbody and wheel openings with lukewarm or cold water once a month, after off-road driving and at the end of each winter. Pay special attention to these areas because it is difficult to see all the mud and dirt. It will do more harm than good to wet down the road grime without removing it. The lower edges of the doors, rocker panels, and frame members have drain holes that should not clog with dirt; trapped water in these areas can cause rusting.

⚠ WARNING

After washing the vehicle, test the brakes while driving slowly to see if they have been affected by water. If braking performance is impaired, dry the brakes by applying them lightly while maintaining a slow forward speed.

Aluminum or chrome wheel maintenance

The aluminum or chrome wheels are coated with a clear protective finish.

- Do not use any abrasive cleaner, polishing compound, solvent, or wire brushes on aluminum or chrome wheels. They may scratch or damage the finish.
- Clean the wheel when it has cooled.
- Use only a mild soap or neutral detergent, and rinse thoroughly with water. Also, be sure to clean the wheels after driving on salted roads. This helps prevent corrosion.
- Avoid washing the wheels with high-speed car wash brushes.
- Do not use any alkaline or acid detergent. It may damage and corrode the aluminum or chrome wheels coated with a clear protective finish.

Corrosion protection

Protecting your vehicle from corrosion

By using the most advanced design and construction practices to combat corrosion, we produce vehicles of the highest quality. However, this is only part of the job. To achieve the long-term corrosion resistance your vehicle can deliver, the owner's cooperation and assistance is also required.

Common causes of corrosion

The most common causes of corrosion on your vehicle are:

- Road salt, dirt and moisture that is allowed to accumulate underneath the vehicle.
- Removal of paint or protective coatings by stones, gravel, abrasion or minor scrapes and dents which leave unprotected metal exposed to corrosion.

High-corrosion areas

If you live in an area where your vehicle is regularly exposed to corrosive materials, corrosion protection is particularly important. Some of the common causes of accelerated corrosion are road salts, dust control chemicals, ocean air and industrial pollution.

Moisture breeds corrosion

Moisture creates the conditions in which corrosion is most likely to occur. For example, corrosion is accelerated by high humidity, particularly when temperatures are just above freezing. In such conditions, the corrosive material is kept in contact with the vehicle's surface by moisture that slowly evaporates.

Mud is particularly corrosive because it dries slowly and holds moisture in contact with the vehicle. Although the mud appears to be dry, it can still retain moisture and promote corrosion.

High temperatures can also accelerate corrosion of parts that are not properly ventilated so the moisture can be dispersed. For all these reasons, it is particularly important to keep your vehicle clean and free of mud or accumulations of other materials. This applies not only to the visible surfaces but particularly to the underside of the vehicle.

To help prevent corrosion

You can help prevent corrosion from getting started by observing the following:

Keep your vehicle clean

The best way to prevent corrosion is to keep your vehicle clean and free of corrosive materials. Attention to the underside of the vehicle is particularly important.

- If you live in a high-corrosion area — where road salts are used, near the ocean, areas with industrial pollution, acid rain, etc.—, you should take extra care to prevent corrosion. In winter, hose off the underside of your vehicle at least once a month and be sure to clean the underside thoroughly when winter is over.
- When cleaning underneath the vehicle, give particular attention to the components under the fenders and other areas that are hidden from view. Do a thorough job; just dampening the accumulated mud rather than washing it away will accelerate corrosion rather than prevent it. Water under high pressure and steam are particularly effective in removing accumulated mud and corrosive materials.

- When cleaning lower door panels, rocker panels and frame members, be sure that drain holes are kept open so that moisture can escape and not be trapped inside to accelerate corrosion.

Keep your garage dry

Don't park your vehicle in a damp, poorly ventilated garage. This creates a favorable environment for corrosion. This is particularly true if you wash your vehicle in the garage or drive it into the garage when it is still wet or covered with snow, ice or mud. Even a heated garage can contribute to corrosion unless it is well ventilated so moisture is dispersed.

Keep paint and trim in good condition

Scratches or chips in the finish should be covered with "touch-up" paint as soon as possible to reduce the possibility of corrosion. If bare metal is showing through, the attention of a qualified body and paint shop is recommended.

Bird droppings : Bird droppings are highly corrosive and may damage painted surfaces in just a few hours. Always remove bird droppings as soon as possible.

Don't neglect the interior

Moisture can collect under the floor mats and carpeting and cause corrosion. Check under the mats periodically to be sure the carpeting is dry. Use particular care if you carry fertilizers, cleaning materials or chemicals in the vehicle.

These should be carried only in proper containers and any spills or leaks should be cleaned up, flushed with clean water and thoroughly dried.

Interior care

Interior general precautions

Prevent caustic solutions such as perfume and cosmetic oil from contacting the dashboard because they may cause damage or discoloration. If they do contact the dashboard, wipe them off immediately. See the instructions for the proper way to clean vinyl.

⚠ CAUTION

Never allow water or other liquids to come in contact with electrical/electronic components inside the vehicle as this may damage them.

⚠ CAUTION

When cleaning leather products (steering wheel, seats etc.), use neutral detergents or low alcohol content solutions. If you use high alcohol content solutions or acid/alkaline detergents, the color of the leather may fade or the surface may get stripped off.

Cleaning the upholstery and interior trim

Vinyl

Remove dust and loose dirt from vinyl with a whisk broom or vacuum cleaner. Clean vinyl surfaces with a vinyl cleaner.

Fabric

Remove dust and loose dirt from fabric with a whisk broom or vacuum cleaner. Clean with a mild soap solution recommended for upholstery or carpets. Remove fresh spots immediately with a fabric spot cleaner. If fresh spots do not receive immediate attention, the fabric can be stained and its color can be affected. Also, its fire-resistant properties can be reduced if the material is not properly maintained.

⚠ CAUTION

Using anything but recommended cleaners and procedures may affect the fabric's appearance and fire-resistant properties.

Cleaning the lap/shoulder belt webbing

Clean the belt webbing with any mild soap solution recommended for cleaning upholstery or carpet. Follow the instructions provided with the soap. Do not bleach or re-dye the webbing because this may weaken it.

Cleaning the interior window glass

If the interior glass surfaces of the vehicle become fogged (that is, covered with an oily, greasy or waxy film), they should be cleaned with glass cleaner. Follow the directions on the glass cleaner container.

⚠ CAUTION

Do not scrape or scratch the inside of the rear window. This may result in damage to the rear window defroster grid.

EMISSION CONTROL SYSTEM

The emission control system of your vehicle is covered by a written limited warranty. Please see the warranty information contained in the Service Passport in your vehicle.

Your vehicle is equipped with an emission control system to meet all emission regulations.

There are three emission control systems which are as follows.

(1) Crankcase emission control system
(2) Evaporative emission control system
(3) Exhaust emission control system

In order to assure the proper function of the emission control systems, it is recommended that you have your vehicle inspected and maintained by an authorized HYUNDAI dealer in accordance with the maintenance schedule in this manual.

Caution for the Inspection and Maintenance Test (With Electronic Stability Program (ESP) system)

- **To prevent the vehicle from misfiring during dynamometer testing, turn the Electronic Stability Program (ESP) system off by pressing the ESP switch.**
- **After dynamometer testing is completed, turn the ESP system back on by pressing the ESP switch again.**

1. Crankcase emission control system

The positive crankcase ventilation system is employed to prevent air pollution caused by blow-by gases being emitted from the crankcase. This system supplies fresh filtered air to the crankcase through the air intake hose. Inside the crankcase, the fresh air mixes with blow-by gases, which then pass through the PCV valve into the induction system.

2. Evaporative emission control system

The Evaporative Emission Control System is designed to prevent fuel vapors from escaping into the atmosphere.

Canister

Fuel vapors generated inside the fuel tank are absorbed and stored in the onboard canister. When the engine is running, the fuel vapors absorbed in the canister are drawn into the surge tank through the purge control solenoid valve.

Purge Control Solenoid Valve (PCSV)

The purge control solenoid valve is controlled by the Engine Control Module (ECM); when the engine coolant temperature is low during idling, the PCSV closes so that evaporated fuel is not taken into the engine. After the engine warms up during ordinary driving, the PCSV opens to introduce evaporated fuel to the engine.

3. Exhaust emission control system

The Exhaust Emission Control System is a highly effective system which controls exhaust emissions while maintaining good vehicle performance.

Vehicle modifications

- This vehicle should not be modified. Modification of your vehicle could affect its performance, safety or durability and may even violate governmental safety and emissions regulations.

  In addition, damage or performance problems resulting from any modification may not be covered under warranty.
- If you use unauthorized electronic devices, it may cause the vehicle to operate abnormally, wire damage, battery discharge and fire. For your safety, do not use unauthorized electronic devices.

Engine exhaust gas precautions (carbon monoxide)

- Carbon monoxide can be present with other exhaust fumes. Therefore, if you smell exhaust fumes of any kind inside your vehicle, have it inspected and repaired immediately. If you ever suspect exhaust fumes are coming into your vehicle, drive it only with all the windows fully open. Have your vehicle checked and repaired immediately.

⚠ WARNING - Exhaust

Engine exhaust gases contain carbon monoxide (CO). Though colorless and odorless, it is dangerous and could be lethal if inhaled. Follow the instructions on this page to avoid CO poisoning.

- Do not operate the engine in confined or closed areas (such as garages) any more than what is necessary to move the vehicle in or out of the area.
- When the vehicle is stopped in an open area for more than a short time with the engine running, adjust the ventilation system (as needed) to draw outside air into the vehicle.
- Never sit in a parked or stopped vehicle for any extended time with the engine running.
- When the engine stalls or fails to start, excessive attempts to restart the engine may cause damage to the emission control system.

Operating precautions for catalytic converters (if equipped)

⚠ WARNING - Fire

- **A hot exhaust system can ignite flammable items under your vehicle. Do not park, idle, or drive the vehicle over or near flammable objects, such as grass, vegetation, paper, leaves, etc.**
- **The exhaust system and catalytic system are very hot while the engine is running or immediately after the engine is turned off. Keep away from the exhaust system and catalytic converters, or you may get burned. Also, do not remove the heat sink around the exhaust system, do not seal the bottom of the vehicle or do not coat the vehicle for corrosion control. It may present a fire risk under certain conditions.**

Your vehicle is equipped with a catalytic converter emission control device.

Therefore, the following precautions must be observed:

- Make sure to refuel your vehicle according to the "Fuel requirements" suggested in section 1.
- Do not operate the vehicle when there are signs of engine malfunction, such as misfire or a noticeable loss of performance.
- Do not misuse or abuse the engine. Examples of misuse are coasting with the ignition off and descending steep grades in gear with the ignition off.
- Do not operate the engine at high idle speed for extended periods (5 minutes or more).
- Do not modify or tamper with any part of the engine or emission control system. We recommend that the system be inspected by an authorized HYUNDAI dealer.
- Avoid driving with a extremely low fuel level. Running out of fuel could cause the engine to misfire, damaging the catalytic converter.

Failure to observe these precautions could result in damage to the catalytic converter and to your vehicle. Additionally, such actions could void your warranties.

Diesel Particulate Filter (if equipped)

The Diesel Particulate Filter (DPF) system removes the soot emitted from the vehicle.

Unlike a disposable air filter, the DPF system automatically burns (oxidizes) and removes the accumulated soot according to the driving condition. In other words, the active burning by engine control system and high exhaust gas temperature caused by normal/high driving condition burns and removes the accumulated soot.

However, if the vehicle continues to be driven at low speed for long time, the accumulated soot may not be automatically removed because of low exhaust gas temperature. In this particular case, the amount of soot is out of detection limit, the soot oxidation process by engine control system may not happen and the malfunction indicator light may blink.

When the malfunction indicator light blinks, it may stop blinking by driving the vehicle at more than 60km/h (37 mph) or at more than second gear with 1500 ~ 2000 engine rpm for a certain time (for about 25 minutes).

If the malfunction indicator light continues to be blinked in spite of the procedure, we recommend that the DPF system be checked by an authorized HYUNDAI dealer.

If you continue to drive with the malfunction indicator light blinking for a long time, the DPF system can be damaged and fuel consumption can be worsen.

⚠ CAUTION - Diesel Fuel (if equipped with DPF)

It is recommended to use the regulated automotive diesel fuel for diesel vehicle equipped with the DPF system.

If you use diesel fuel including high sulfur (more than 50 ppm sulfur) and unspecified additives, it can cause the DPF system to be damaged and white smoke can be emitted.

Specifications, Consumer information and Reporting safety defects

Dimensions 8-2
Luggage volume 8-2
Engine 8-3
Gross vehicle weight.....8-4
Bulb wattage 8-5
Tires and wheels 8-6
Recommended lubricants and capacities.....8-7
Vehicle identification number (VIN) 8-10
Vehicle certification label.....8-10
Tire specification and pressure label 8-11
Engine number 8-11
Air conditioner compressor label 8-11

DIMENSIONS

Item	mm (in)		
Overall length	4,300 (169.3)		
Overall width	1,780 (70.1)		
Overall height	For Austrailia		1,470 (57.9)
	For Brazil		1,495 (58.9)
	Except Austrailia and Brazil		1,480 (58.3)
Front tread	195/65R15	Steel wheel	1,563 (61.5)
		Aluminum wheel	1,569 (61.8)
	205/55R16	Steel wheel	1,549 (61.0)
		Aluminum wheel	1,555 (61.2)
	205/60R16		1,555 (61.2)
	225/45R17		1,549 (61.0)
Rear tread	195/65R15	Steel wheel	1,576 (62.0)
		Aluminum wheel	1,582 (62.3)
	205/55R16	Steel wheel	1,562 (61.5)
		Aluminum wheel	1,568 (61.7)
	205/60R16		1,568 (61.7)
	225/45R17		1,562 (61.5)
Wheelbase	2,650 (104.3)		

LUGGAGE VOLUME

Min.	378 *l* (13.3 cu ft)
Max.	1,316 *l* (46.5 cu ft)

Min. : Behind rear seat to upper edge of the seat back.
Max. : Behind front seat to roof.

ENGINE

Item	Gasoline 1.6 D-CVVT	Gasoline 1.6 FFV	Gasoline 1.8	Diesel 1.6
Displacement cc (cu. in)	1,591 (97.09)	1,582 (96.53)	1,797 (109.66)	1,582 (96.53)
Bore x Stroke mm (in.)	77x85.44 (3.03x3.36)	77x85.44 (3.03x3.32)	81x87.2 (3.19x3.43)	77.2x84.5 (3.03x3.32)
Firing order	1-3-4-2	1-3-4-2	1-3-4-2	1-3-4-2
No. of cylinders	4, In-line	4, In-line	4, In-line	4, In-line

GROSS VEHICLE WEIGHT

For Middle East

Item	Gasoline 1.6	Gasoline 1.8	Diesel 1.6
Manual transaxle	1,800 kg (3,968 lbs.)	1,840 kg (4,056 lbs.)	1,890 kg (4,167 lbs.)
Automatic transaxle	1,800 kg (3,968 lbs.)	1,840 kg (4,056 lbs.)	1,890 kg (4,167 lbs.)

For Austrailia

Item	Gasoline 1.8	Diesel 1.6
Manual transaxle	1,840 kg (4,056 lbs.)	1,890 kg (4,167 lbs.)
Automatic transaxle	1,840 kg (4,056 lbs.)	1,890 kg (4,167 lbs.)

For Brazil

Item	Gasoline 1.6 FFV
Manual transaxle	1,800 kg (3,968 lbs.)
Automatic transaxle	1,800 kg (3,968 lbs.)

Except Austrailia, Middle East and Brazil

Item	Gasoline 1.6	Gasoline 1.8	Diesel 1.6
Manual transaxle	1,800 kg (3,968 lbs.)	1,840 kg (4,056 lbs.)	1,890 kg (4,167 lbs.)
Automatic transaxle	1,800 kg (3,968 lbs.)	1,840 kg (4,056 lbs.)	1,890 kg (4,167 lbs.)

BULB WATTAGE

Light Bulb			Wattage	Bulb type
Front	Headlights	Low	55 or 35 (HID)	H7S or D1S
		High	55	H7L
	Front turn signal lights		21	PY21W
	Position lights		5	5W
	Front fog lights		35	H8L
Rear	Rear fog lights		21	21W
	Stop/tail lights	Bulb	21/5	P21/5W
		LED	LED	LED
	Stop lights		LED	LED
	Rear turn signal lights		21	PY21W
	Tail lights		5	P21/5W
	Back-up lights		16	16W
	High mounted stop light		LED	LED
	License plate lights		5	W5W
Interior	Map lamps		8	FESTOON
	Room lamps		8	FESTOON
	Luggage lamp		8	FESTOON
	Vanity mirror lamps		5	FESTOON

HID : High Intensity Discharge

TIRES AND WHEELS

Item	Tire size	Wheel size	Load Capacity		Speed capacity		Inflation pressure bar(psi, kPa)				Wheel lug nut torque Kgf·m (lb·ft, N·m)
							Normal load		Maximum load		
			LI *1	Kg	SS *2	Km/h	Front	Rear	Front	Rear	
Full size tire	195/65R15	6.0J×15	91	615	H	210	2.2 (32,220)	2.2 (32,220)	2.2 (32,220)	2.2 (32,220)	9~11 (65~79, 88~107)
	205/55R16	6.5J×16	91	615	H	210					
	205/60R16	6.5J×16	92	630	H	210					
	225/45R17	7.0J×17	91	615	V	240					
Compact spare tire	T125/80D15	4.0T×15	95	690	M	130	4.2 (60, 420)	4.2 (60, 420)	4.2 (60, 420)	4.2 (60, 420)	
	T125/80D16	4.0T×16	97	730	M	130					

*1 : Load Index
*2 : Speed Symbol

RECOMMENDED LUBRICANTS AND CAPACITIES

To help achieve proper engine and powertrain performance and durability, use only lubricants of the proper quality. The correct lubricants also help promote engine efficiency that results in improved fuel economy.

These lubricants and fluids are recommended for use in your vehicle.

Lubricant			Volume	Classification
Engine oil *1 *2 (drain and refill) Recommends Shell HELIX Motor oils	Gasoline Engine	1.6	3.6 *l* (3.8 US qt.)	API Service SM, ILSAC GF-4 (or above), ACEA A5 (or above)
		1.8	4.0 *l* (4.2 US qt.)	
	Diesel Engine	with DPF *3	5.3 *l* (5.60 US qt.)	ACEA C2 or C3
		without DPF *3	5.3 *l* (5.60 US qt.)	ACEA B4
Manual transaxle fluid			1.9 *l* ~ 2.0 *l* (2.01 ~ 2.11 US qt.)	API GL-4, SAE 75W/85
Automatic transaxle fluid	Gasoline Engine		7.3 *l* (7.71 US qt.)	MICHANG ATF SP-IV SK ATF SP-IV NOCA ATF SP-IV HYUNDAI genuine ATF SP-IV
	Diesel Engine		7.1 *l* (7.50 US qt.)	

*1 Refer to the recommended SAE viscosity numbers on 8-9 page.

*2 Engine oils labeled Energy Conserving Oil are now available. Along with other additional benefits, they contribute to fuel economy by reducing the amount of fuel necessary to overcome engine friction. Often, these improvements are difficult to measure in everyday driving, but in a year's time, they can offer significant cost and energy savings.

*3 Diesel Particulate Filter

Lubricant			Volume	Classification
Coolant	Gasoline Engine 1.6	A/T	5.7 *l* (6.02 US qt.)	Mixture of antifreeze and distilled water (Ethylene glycol base coolant for aluminum radiator)
		M/T	5.8 *l* (6.12 US qt.)	
	Gasoline Engine 1.8	A/T	5.8 *l* (6.12 US qt.)	
		M/T	5.9 *l* (6.23 US qt.)	
	Diesel	A/T	6.7 *l* (7.08 US qt.)	
		M/T	6.9 *l* (7.29 US qt.)	
Brake/clutch fluid			0.7~0.8 *l* (0.7~0.8 US qt.)	FMVSS116 DOT-3 or DOT-4
Fuel			50 *l* (13.21 US gal.)	Refer to “Fuel requirements” in section 1

* A/T : Automatic transaxle
M/T : Manual transaxle

Recommended SAE viscosity number

⚠ CAUTION

Always be sure to clean the area around any filler plug, drain plug, or dipstick before checking or draining any lubricant. This is especially important in dusty or sandy areas and when the vehicle is used on unpaved roads. Cleaning the plug and dipstick areas will prevent dirt and grit from entering the engine and other mechanisms that could be damaged.

Engine oil viscosity (thickness) has an effect on fuel economy and cold weather operating (engine start and engine oil flowability). Lower viscosity engine oils can provide better fuel economy and cold weather performance, however, higher viscosity engine oils are required for satisfactory lubrication in hot weather.

Using oils of any viscosity other than those recommended could result in engine damage.
When choosing an oil, consider the range of temperature your vehicle will be operated in before the next oil change. Proceed to select the recommended oil viscosity from the chart.

Temperature Range for SAE Viscosity Numbers

Temperature	°C	-30	-20	-10	0	10	20	30	40	50
	(°F)	-10	0	20	40	60	80	100	120	
Gasoline Engine Oil *1										
Diesel Engine Oil										

20W-50
15W-40
10W-30
5W-20*2, 5W-30
15W-40
10W-30
5W-30
0W-30

*1 : For better fuel economy, it is recommended to use the engine oil of a viscosity grade SAE 5W-20,5W-30 (API SM / ILSAC GF 4 or above). However, if the engine oil is not available in your country, select the proper engine oil using the engine oil viscosity chart.
*2 : In Middle East & Libya, do not use the engine oil of viscosity grade SAE 5W-20.

VEHICLE IDENTIFICATION NUMBER (VIN)

■ Frame number

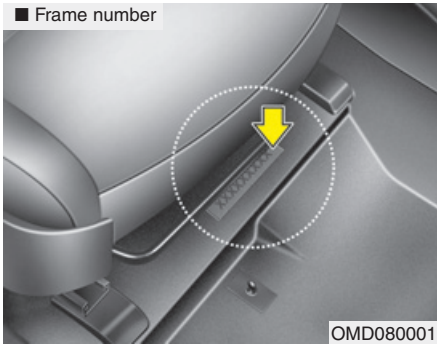

The vehicle identification number (VIN) is the number used in registering your vehicle and in all legal matters pertaining to its ownership, etc.

The number is punched on the floor under the passenger seat. To check the number, open the cover.

■ VIN label (if equipped)

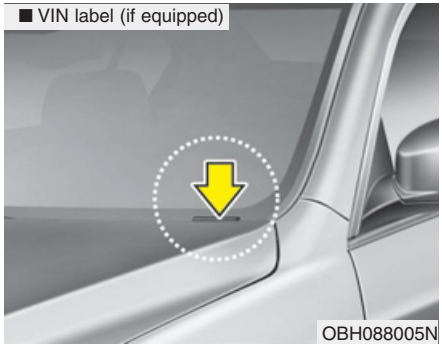

The VIN is also on a plate attached to the top of the dashboard. The number on the plate can easily be seen through the windshield from outside.

VEHICLE CERTIFICATION LABEL

■ Type A

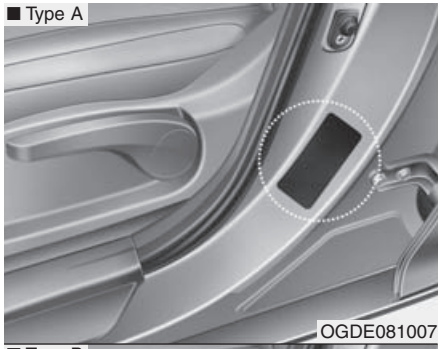

■ Type B

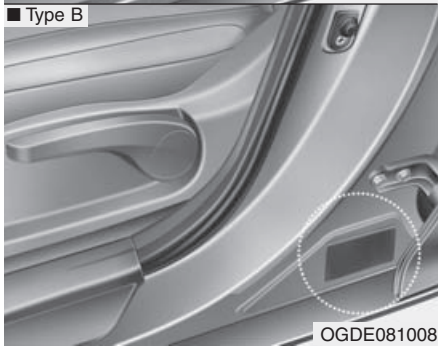

The vehicle certification label attached on the driver's (or front passenger's) side center pillar gives the vehicle identification number (VIN).

TIRE SPECIFICATION AND PRESSURE LABEL

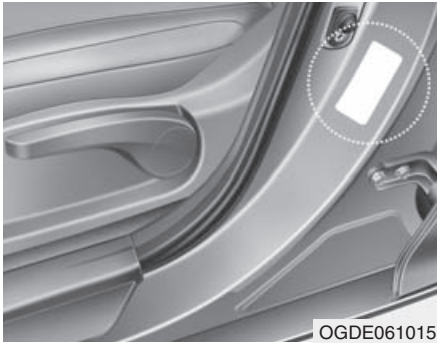

The tires supplied on your new vehicle are chosen to provide the best performance for normal driving.

The tire label located on the driver's side center pillar gives the tire pressures recommended for your vehicle.

ENGINE NUMBER

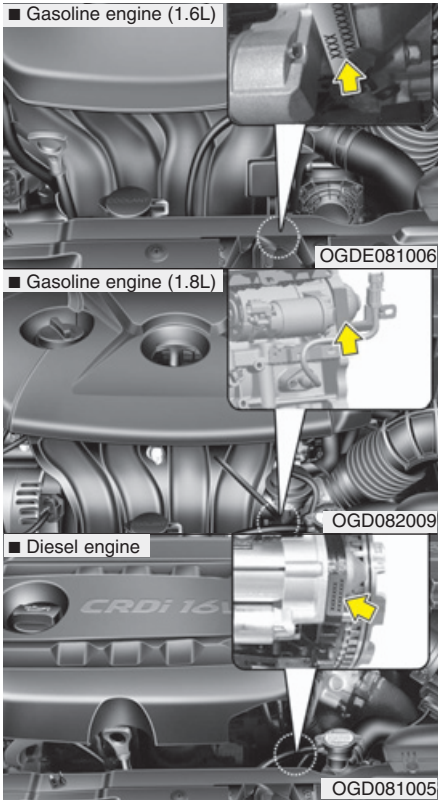

The engine number is stamped on the engine block as shown in the drawing.