Automatic Transaxle and Transfer Workshop Manual AW6A–EL AW6AX–EL

CONTENTS

Title	Section	
	FEATURES	SERVICE
GENERAL INFORMATION	00	00
DRIVELINE/AXLE	03	03
TRANSMISSION/TRANSAXLE	05	05

© 2006 Mazda Motor Corporation
PRINTED IN U.S.A., FEBRUARY 2006
Form No. 1874–1U–06B
Part No. 9999–95–0AW6–07

FOREWORD

This manual explains the service points for the above-indicated automotive system.
This manual covers all models with the above-indicated automotive system, not any one specific model.
In order to do these procedures safely, quickly, and correctly, you must first read this manual and any other relevant service materials carefully.
All the contents of this manual, including drawings and specifications, are the latest available at the time of printing.
As modifications affecting repair or maintenance occur, relevant information supplementary to this volume will be made available at Mazda dealers.
This manual should be kept up-to-date.
Mazda Motor Corporation reserves the right to alter the specifications and contents of this manual without obligation or advance notice.
All rights reserved.
No part of this book may be reproduced or used in any form or by any means, electronic or mechanical-including photocopying and recording and the use of any kind of information storage and retrieval system-without permission in writing.

Mazda Motor Corporation
HIROSHIMA, JAPAN

FEATURES

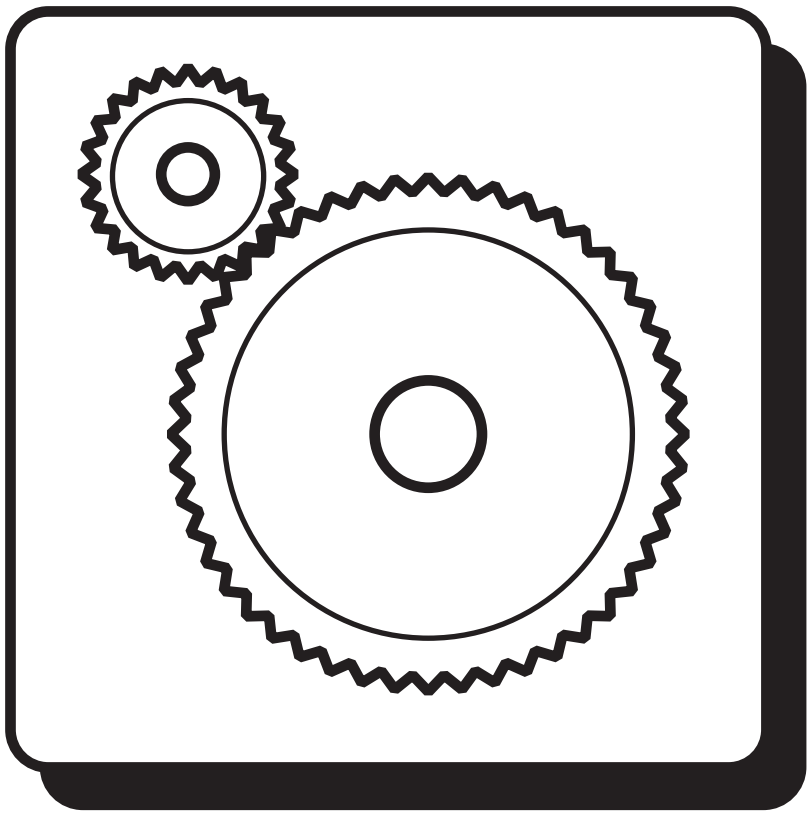

DRIVELINE/AXLE

03
SECTION

OUTLINE 03-00
TRANSFER 03-16

03-00 OUTLINE

DRIVELINE/AXLE FEATURES 03-00–1
DRIVELINE/AXLE SPECIFICATIONS. . . 03-00–1

DRIVELINE/AXLE FEATURES

id030000100100

Improved reliability	• Separate oil pump and oil cooler have been adopted to the transfer

DRIVELINE/AXLE SPECIFICATIONS

id030000100200

Item			Specification
Transfer oil	Type	Grade	API service GL-5
		Viscosity	SAE 80W-90
	Oil capacity (approx. quantity)	(L {US qt, Imp qt})	1.2 {1.3,1.1}

03-16 TRANSFER

TRANSFER STRUCTURAL VIEW 03-16–1
TRANSFER CROSS-SECTIONAL VIEW 03-16–1
TRANSFER POWER FLOW 03-16–2
TRANSFER OIL COOLER CONSTRUCTION 03-16–2

TRANSFER STRUCTURAL VIEW

id031600100100

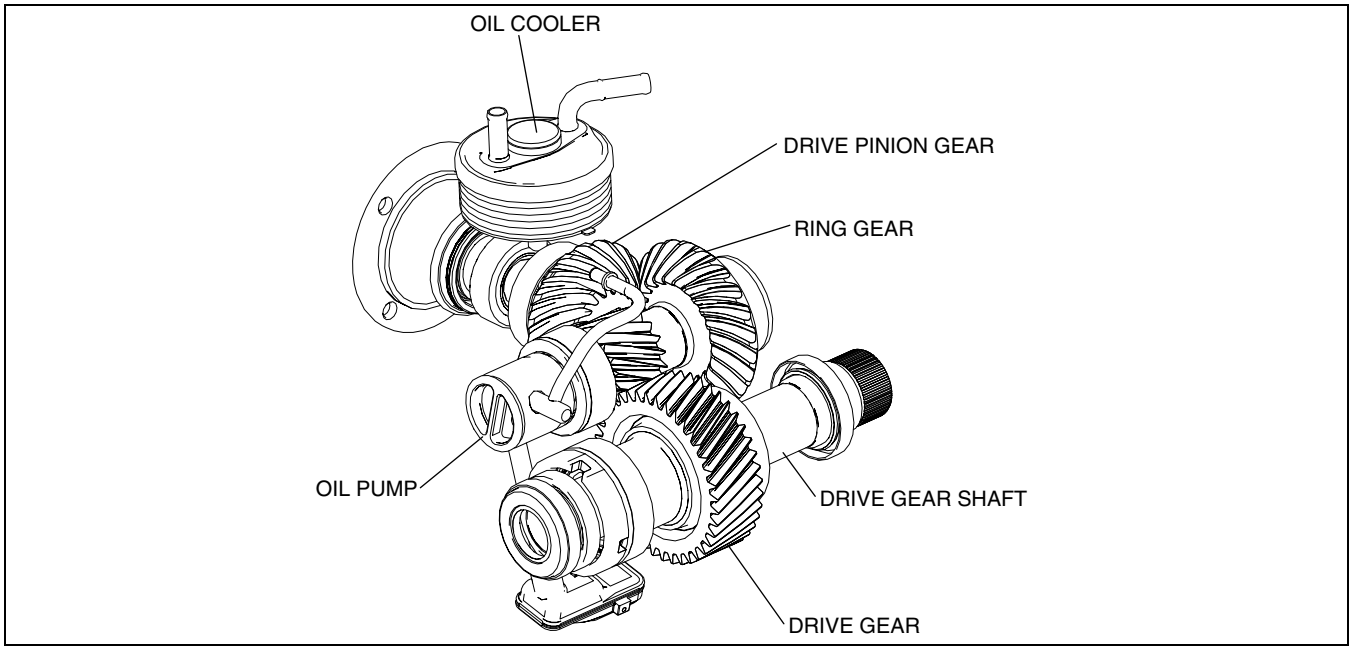

acxuun00000598

TRANSFER CROSS-SECTIONAL VIEW

id031600100200

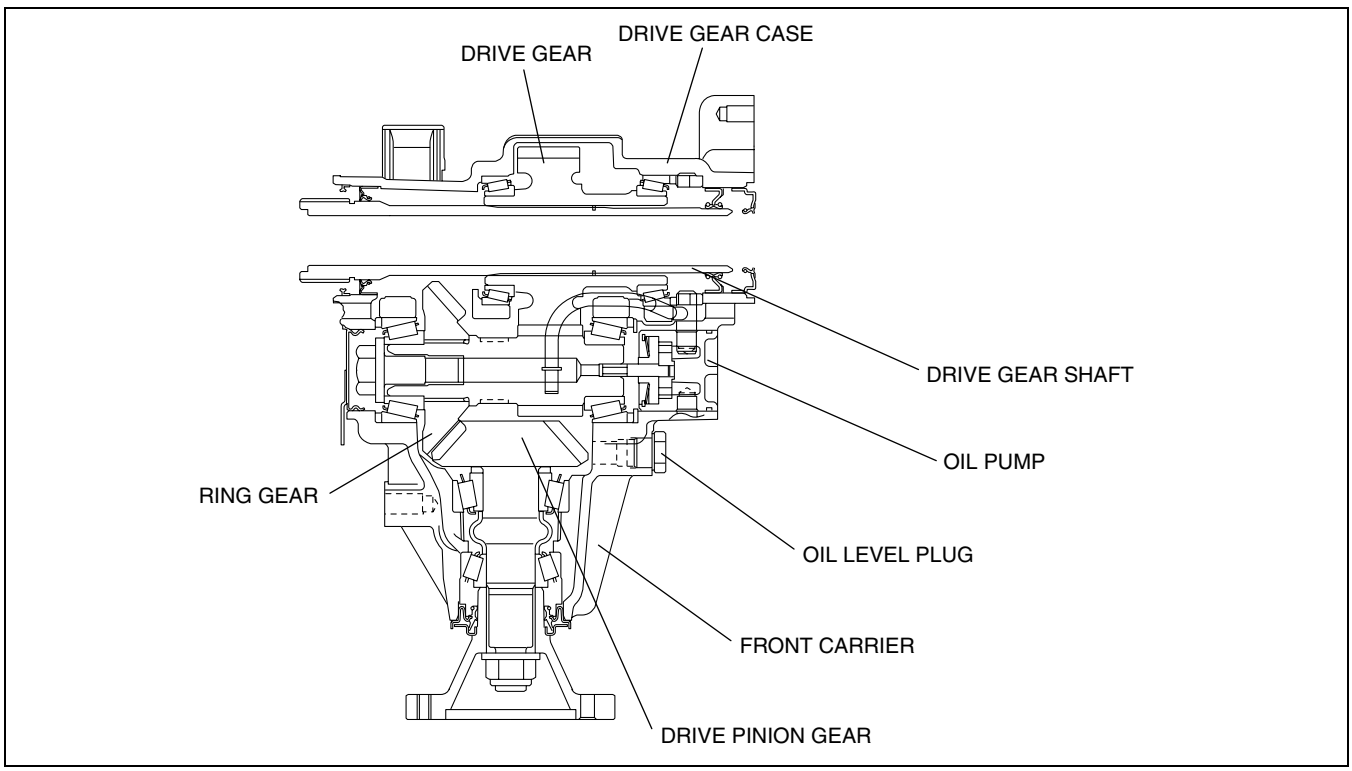

acxuun00000599

TRANSFER POWER FLOW

id031600100300

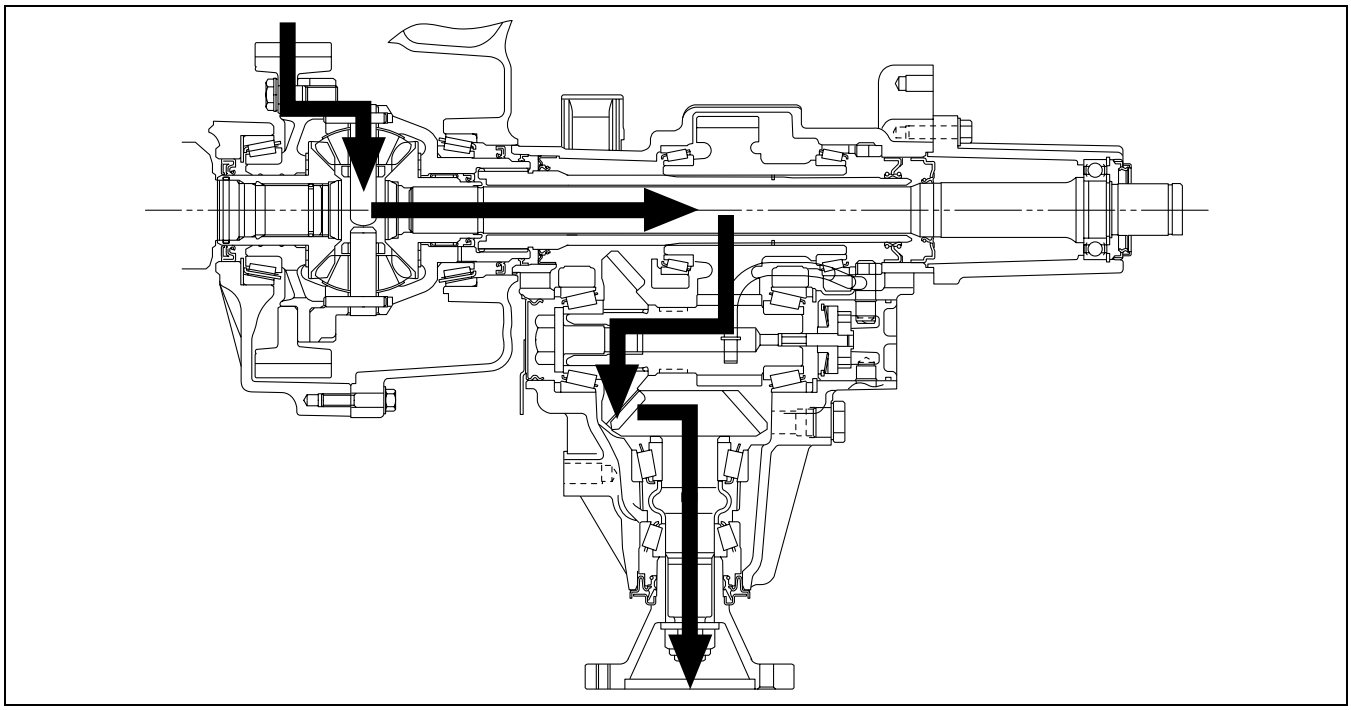

acxuun00000600

TRANSFER OIL COOLER CONSTRUCTION

id031600100400

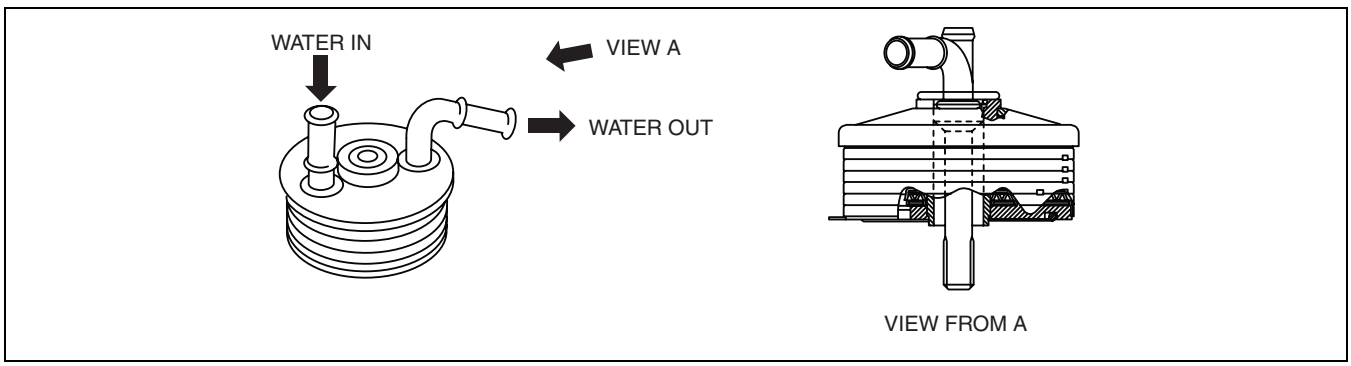

acxuun00000601

OUTLINE 05-00
AUTOMATIC TRANSAXLE . . . 05-17

05-00 OUTLINE

TRANSMISSION/TRANSAXLE FEATURES 05-00–1
AUTOMATIC TRANSAXLE SPECIFICATIONS 05-00–1

TRANSMISSION/TRANSAXLE FEATURES

id050000100200

ATX [AW6A-EL, AW6AX-EL]	
Superior shift quality	• Centrifugal hydraulic pressure cancel clutch has been adopted.

AUTOMATIC TRANSAXLE SPECIFICATIONS

id050000100300

Item		Specifications
Transaxle type		**AW6A-EL, AW6AX-EL**
Gear ratio	1GR	4.148
	2GR	2.370
	3GR	1.555
	4GR	1.154
	5GR	0.859
	6GR	0.685
	Reverse	3.393
Final gear ratio		3.749
ATF	Type	JWS3309
	Capacity (approx. quantity) (L {US qt, Imp qt})	7.0 {7.4, 6.2}
Torque converter stall torque ratio		2.15
Hydraulic system (Number of drive/driven plates)	C1 clutch	7/7
	C2 clutch	4/4
	C3 clutch	4/4
	B2 brake	7/6
Band servo (mm {in})	Servo diameter (piston outer dia./retainer outer dia.)	61.3/66.0 {2.41/2.60}
Front planetary gear (Number of teeth)	Ring gear	81
	Sun gear	45
	Pinion gear	17
Rear planetary gear (Number of teeth)	Ring gear	72
	Middle sun gear	33
	Rear sun gear	27
	Long pinion gear	18
	Short pinion gear	17
Counter drive gear (Number of teeth)		52
Counter gear (Number of teeth)	Driven gear	49
	Drive gear	15
Ring gear (Number of teeth)		53

- The example of automatic transaxle specifications. (specifications of the CX-7)

05-17 AUTOMATIC TRANSAXLE

AUTOMATIC TRANSAXLE OUTLINE . . 05-17–1
AUTOMATIC TRANSAXLE CROSS-SECTIONAL VIEW 05-17–2
POWERFLOW STRUCTURE 05-17–4
Description of Components **05-17–4**
POWERFLOW OPERATION 05-17–5
1GR (D range) **05-17–6**
1GR (M range) **05-17–7**
2GR **05-17–8**
3GR **05-17–9**
4GR **05-17–10**
5GR **05-17–11**
6GR **05-17–12**
R position **05-17–13**
CENTRIFUGAL HYDRAULIC PRESSURE CANCEL CLUTCH OUTLINE 05-17–15
TORQUE CONVERTER OUTLINE 05-17–17

AUTOMATIC TRANSAXLE OUTLINE

id051700101700

- The AW6A (X) -EL automatic transaxle is a compact, lightweight, next-generation electronically controlled FF 6-speed automatic transaxle that employs a Ravigneaux-type planetary gear. It employs a high-precision clutch hydraulic control system for smooth, highly responsive gear shift feel.

AUTOMATIC TRANSAXLE CROSS-SECTIONAL VIEW

id051700101900

AW6A-EL

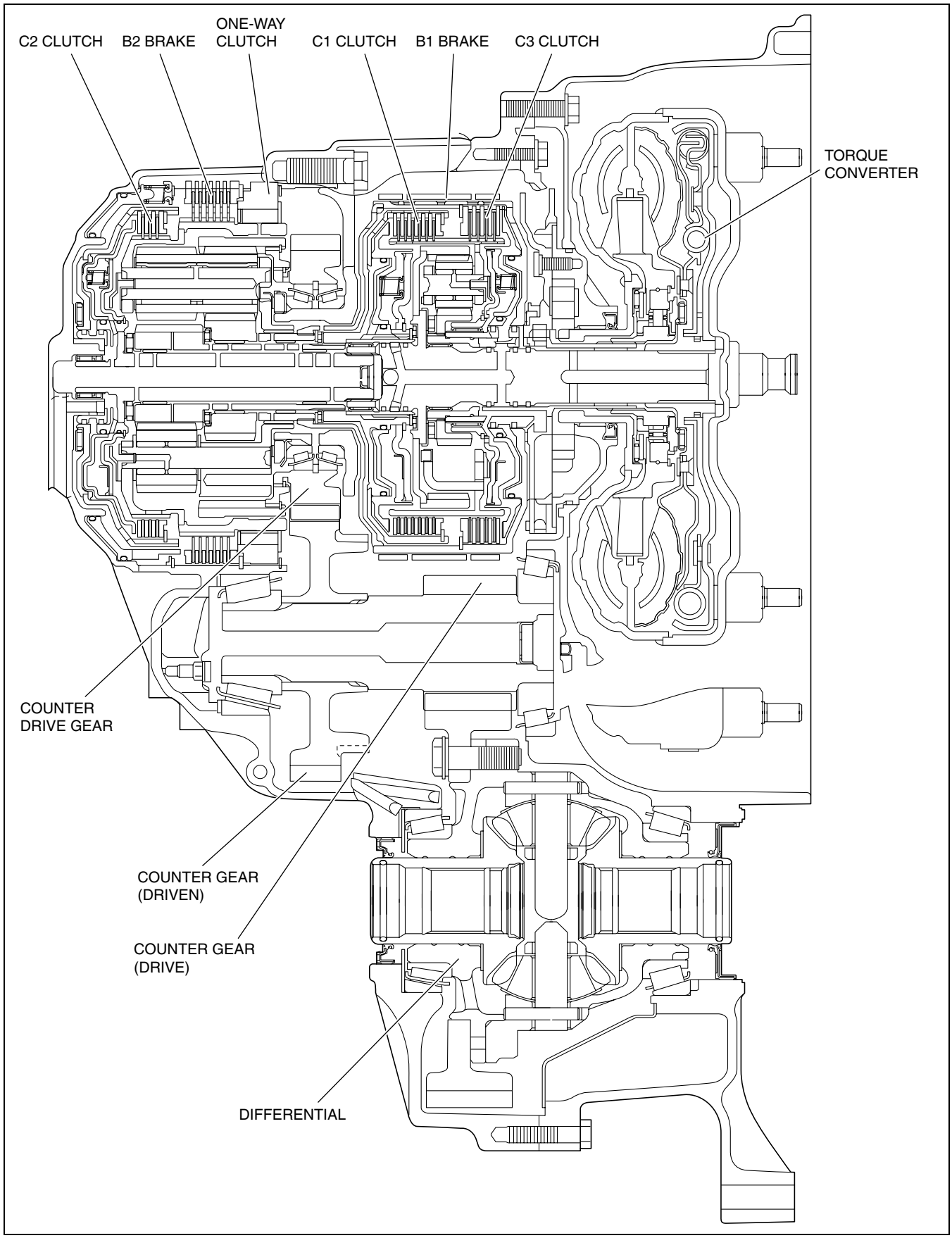

acxuun00000612

AW6AX-EL

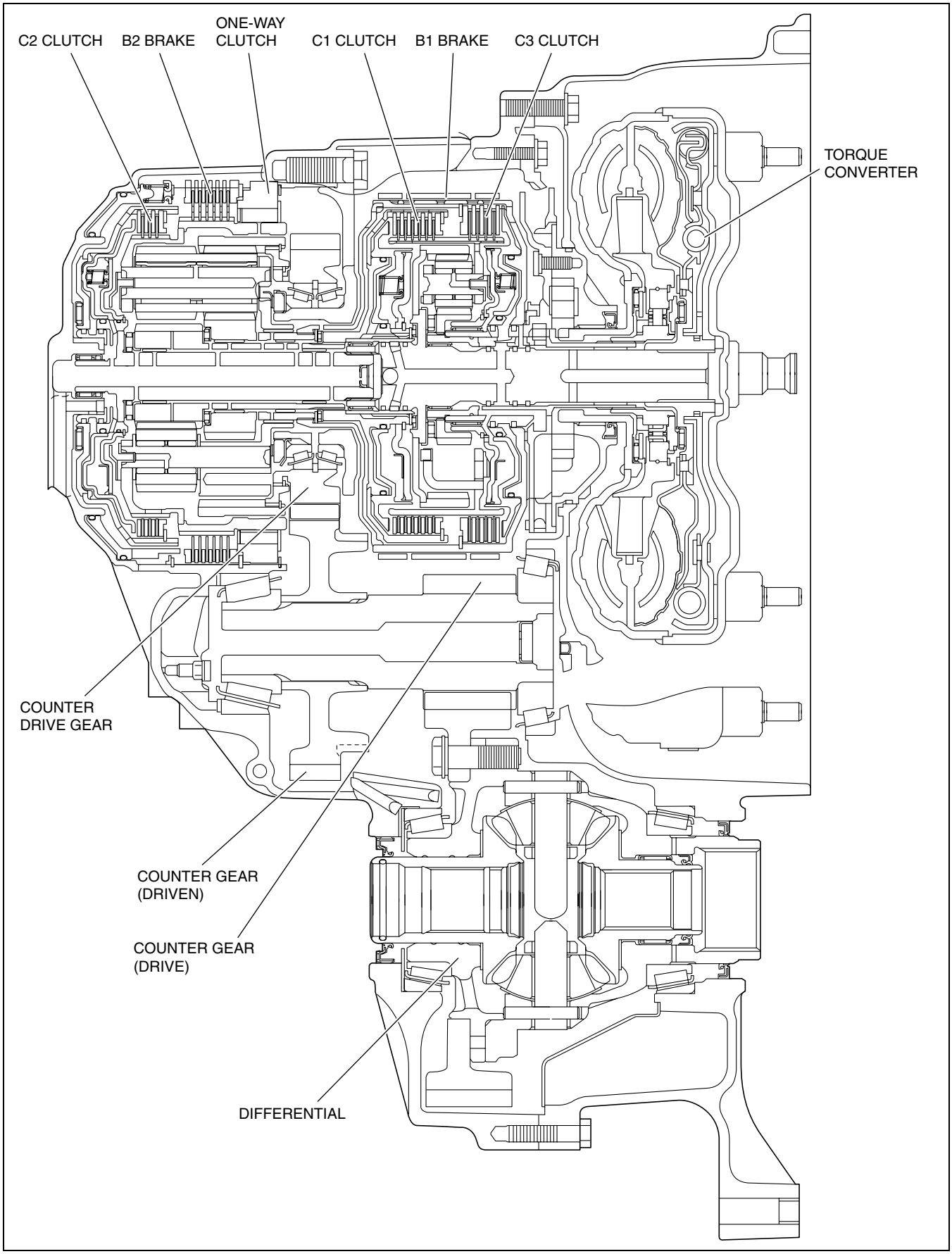

acxuun00000613

POWERFLOW STRUCTURE

id051700102200

Description of Components

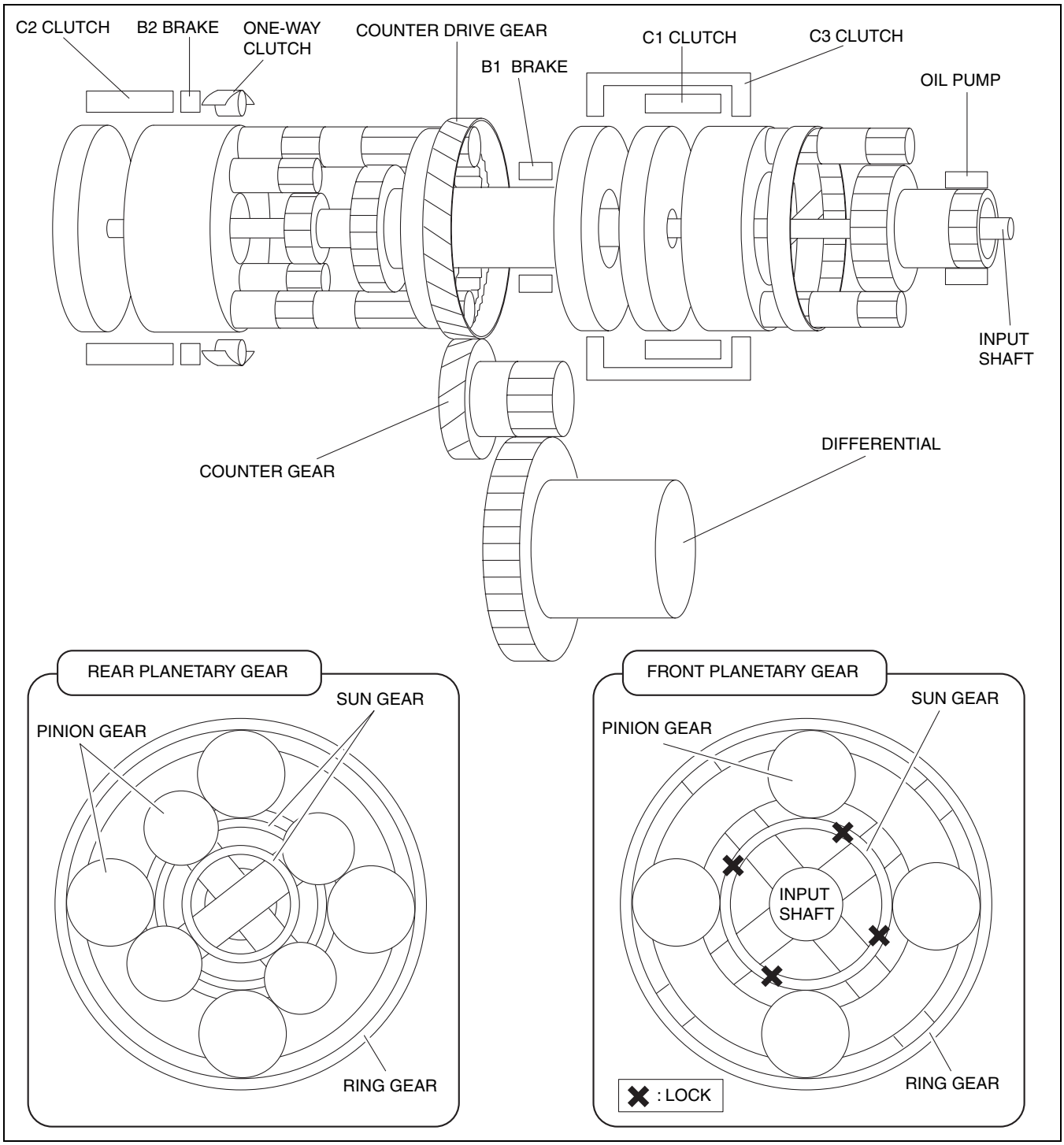

acxuun00000680

- The number of pinion gears differs depending on the engine displacement and vehicle.
  - — Mazda6
    - Front: 3 pinions
    - Rear: 3 pinions
  - — CX-7
    - Front: 5 pinions
    - Rear: 3 pinions

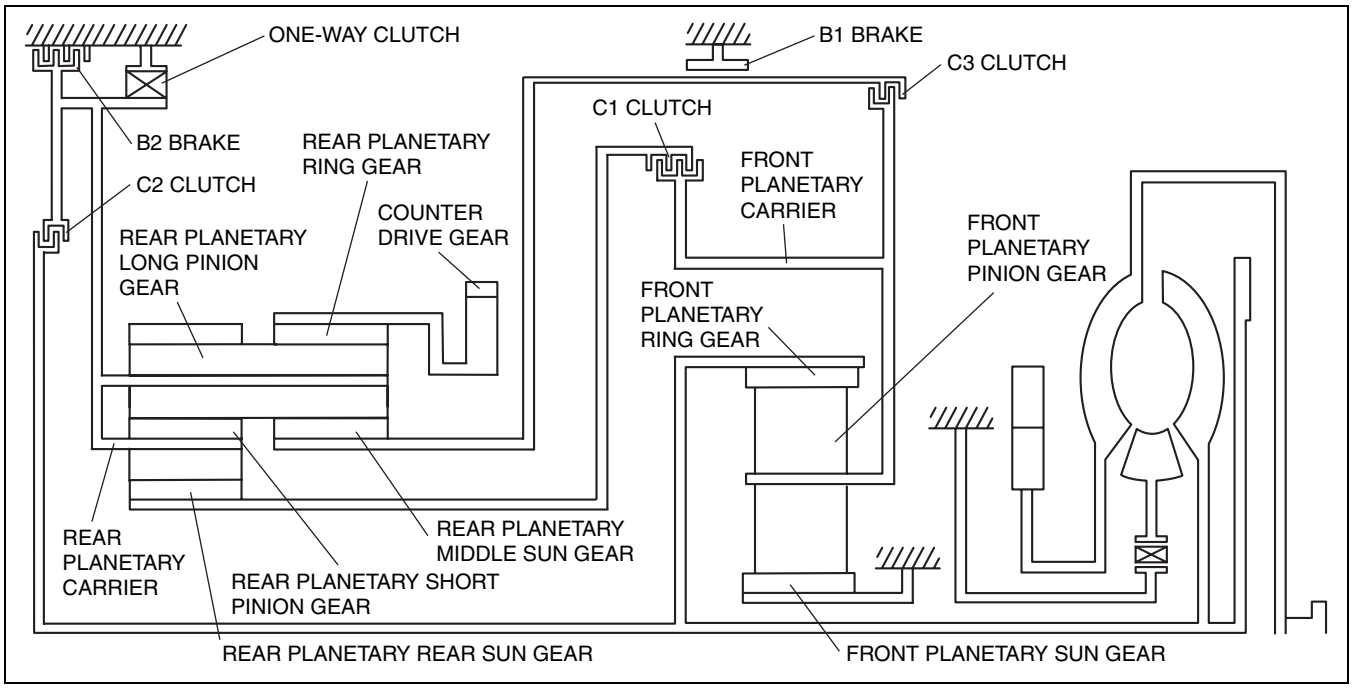

acxuun00000681

POWERFLOW OPERATION

id051700102300

List of operating components

Clutch / Brake	Operation
C1 clutch	• Connects front planetary carrier to rear planetary rear sun gear
C2 clutch	• Connects intermediate shaft to rear planetary carrier
C3 clutch	• Connects front planetary carrier to rear planetary middle sun gear
B1 brake	• Locks rear planetary middle sun gear
B2 brake	• Locks rear planetary carrier
One-way clutch	• Locks counterclockwise rotation of rear planetary carrier

1GR (D range)

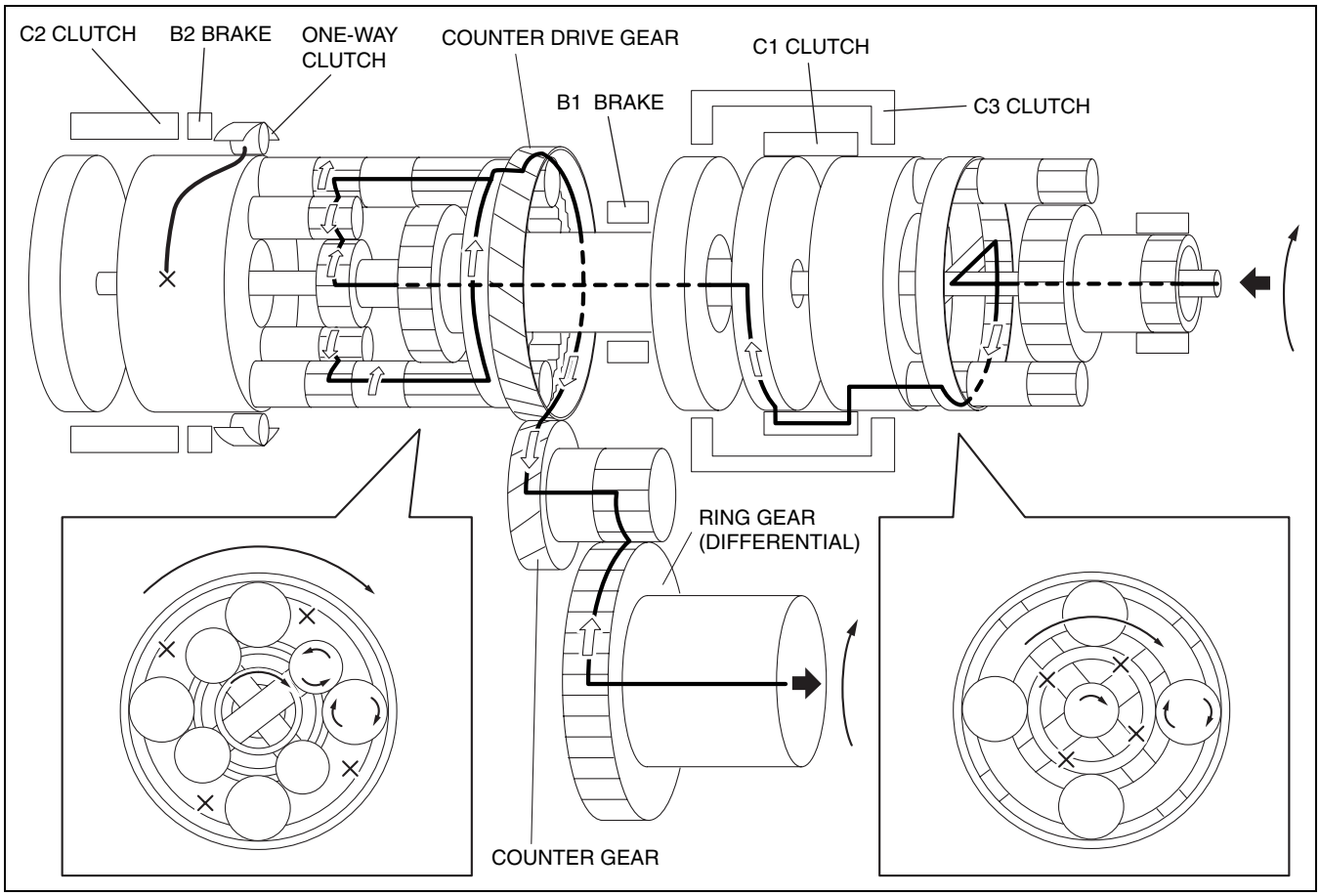

acxuun00000620

Power transmission pathway

[Operating components: C1 clutch, One-way clutch]

- Operating components:
  C1 clutch, One-way clutch (counterclockwise rotation is locked), B2 brake (ON when engine brake is operating)

Planetary gear unit	Input, Locked, Output
Front	Input: Ring gear Locked: Sun gear Output: Carrier
Rear	Input: Rear sun gear Locked: Carrier Output: Ring gear

1. Input shaft (rotates clockwise) [same revolutions as the torque converter's turbine runner]
2. Front planetary ring gear (rotates clockwise) [same revolutions as the input shaft]
3. Front planetary pinion gear (rotates clockwise on its axis, orbits clockwise)
   [because the front planetary sun gear is locked by the oil pump, it is pressed against the front planetary ring gear and orbits the sun gear while rotating on its axis (because the front planetary ring gear has internal gears, the rotational direction does not change)]
4. Front planetary carrier (rotates clockwise)
   [reduction: same revolution as the front planetary pinion gear orbit revolution]
5. C1 clutch (rotates clockwise) [connects the front planetary carrier and the rear planetary rear sun gear]
6. Rear planetary rear sun gear (rotates clockwise) [same revolution as the front planetary carrier]
7. Rear planetary short pinion gear (rotates counterclockwise on its axis)
   [the rear planetary carrier tries to rotate counterclockwise, but the counterclockwise rotation is locked by one-way clutch.]
8. Rear planetary long pinion gear (rotates clockwise on its axis)
   [the rear planetary middle sun gear rotates counterclockwise (idling)]

9. Rear planetary ring gear (rotates clockwise)
   [the rear planetary ring gear is rotated by the rear planetary long pinion gear (because the rear planetary ring gear has internal gears, the rotational direction does not change)]
10. Counter drive gear (rotates clockwise)
    [because the rear planetary ring gear is installed on the counter drive gear, the rotational direction and the revolution are the same as the rear planetary ring gear]
11. Counter gear (rotates counterclockwise)
12. Differential ring gear (rotates clockwise)

1GR (M range)

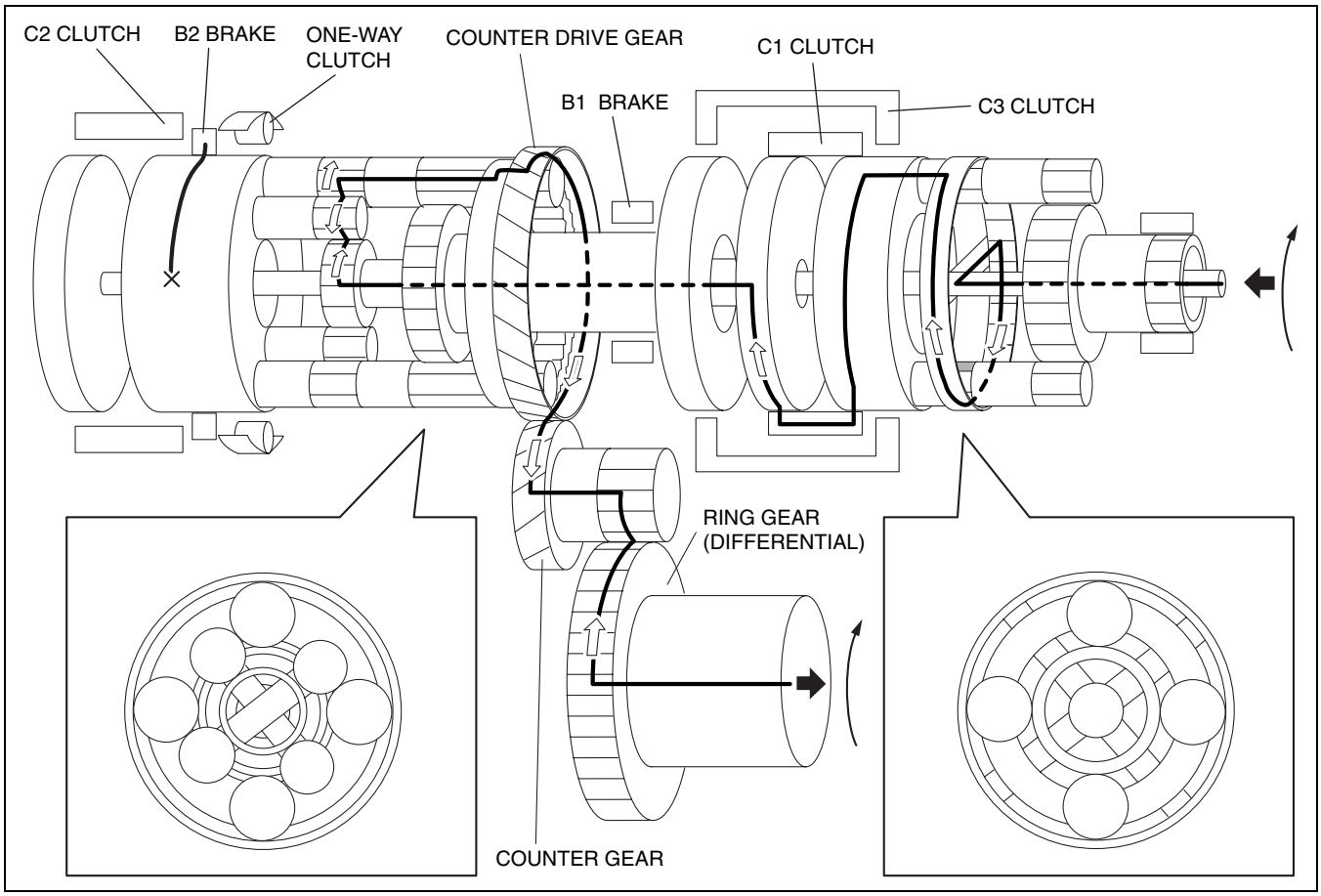

acxuun00000621

[Operating components: C1 clutch, B2 brake]

- When the engine brake is operating, driving force is transmitted from the tires. Because the rear planetary carrier, which is locked in its counterclockwise rotation by the one-way clutch, tries to rotate clockwise, B2 brake is turned ON and the rear planetary carrier is locked, and kinematic energy is transmitted from the tires to the engine.

2GR

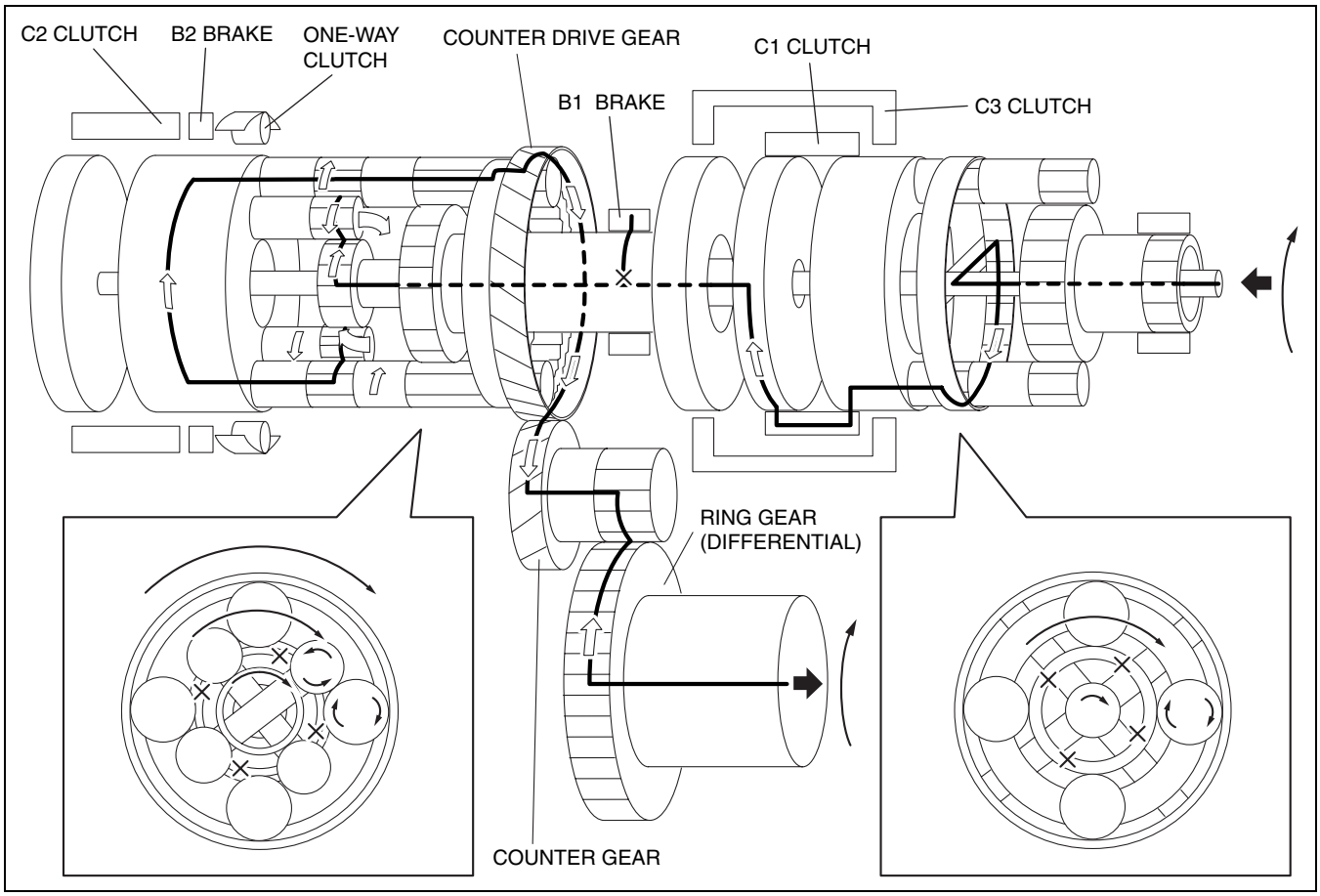

acxuun00000622

Power transmission pathway
[Operating components: C1 clutch, B1 brake]

Planetary gear unit	Input, Locked, Output
Front	Input: Ring gear Locked: Sun gear Output: Carrier
Rear	Input: Rear Sun gear Locked: Middle Sun gear Output: Ring gear

1. Input shaft (rotates clockwise) [same revolutions as the torque converter's turbine runner]
2. Front planetary ring gear (rotates clockwise) [same revolution as the input shaft]
3. Front planetary pinion gear (rotates clockwise on its axis, orbits clockwise)
   [because the front planetary sun gear is locked by the oil pump, it is pressed against the front planetary ring gear and orbits the sun gear while rotating on its axis (because the front planetary ring gear has internal gears, the rotational direction does not change)]
4. Front planetary carrier (rotates clockwise)
   [reduction: same revolution as the front planetary pinion gear orbit revolution]
5. C1 clutch (rotates clockwise) [connects the front planetary carrier and the rear planetary rear sun gear]
6. Rear planetary rear sun gear (rotates clockwise) [same revolution as the front planetary carrier]
7. Rear planetary middle sun gear is locked by B1 brake
8. Rear planetary short pinion gear (rotates counterclockwise on its axis, orbits clockwise)
9. Rear planetary long pinion gear (rotates clockwise on its axis, orbits clockwise)
10. Rear planetary ring gear (rotates clockwise)
    [the rear planetary ring gear is rotated by the rear planetary long pinion gear (because the rear planetary ring gear has internal gears, the rotational direction does not change)]
11. Counter drive gear (rotates clockwise)
    [because the rear planetary ring gear is installed on the counter drive gear, the rotational direction and the revolution are the same as the rear planetary ring gear]
12. Counter gear (rotates counterclockwise)
13. Differential ring gear (rotates clockwise)

Engine brake

- When the engine brake is operating, driving force is transmitted from the tires.

3GR

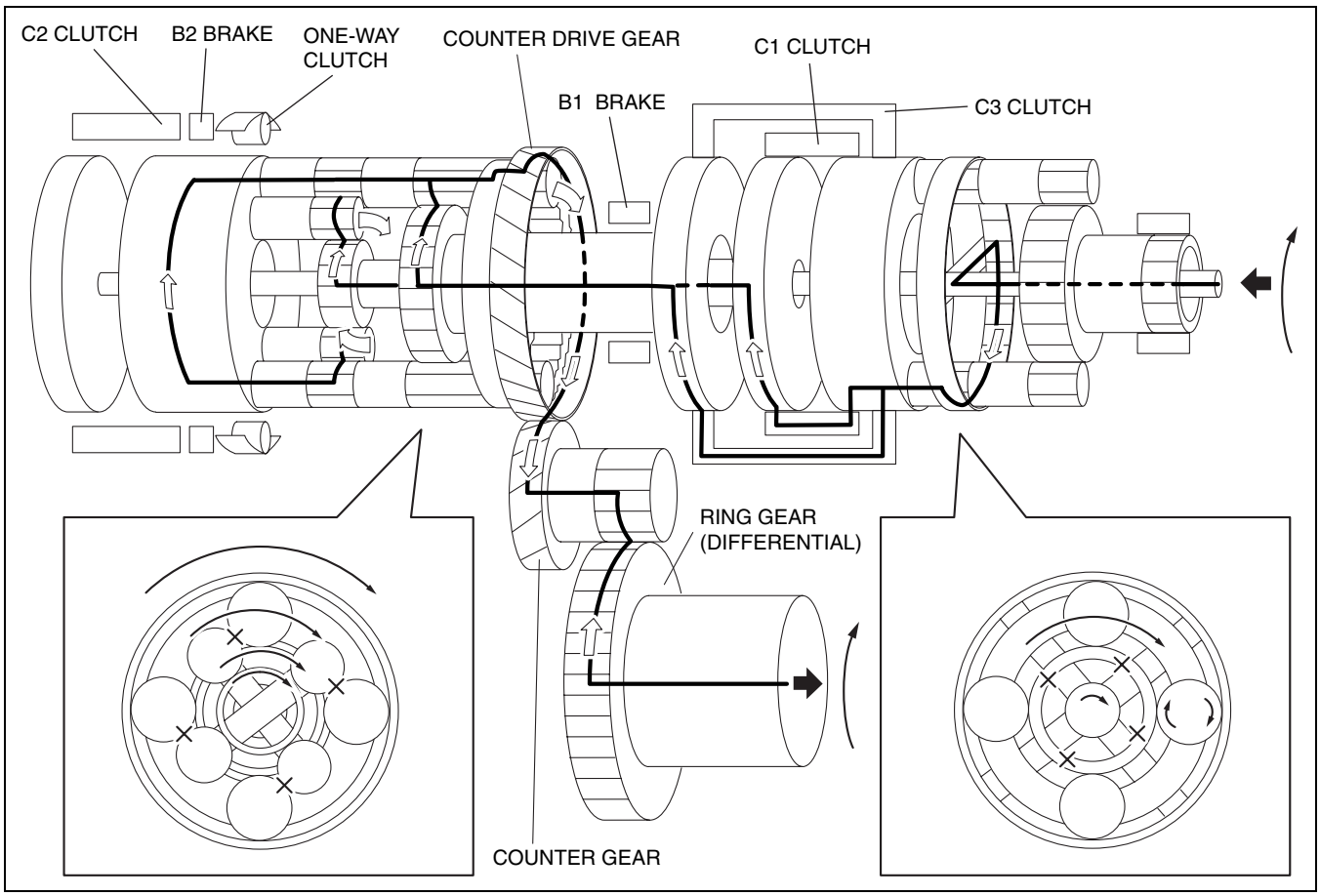

acxuun00000623

Power transmission pathway
[Operating components: C1 clutch, C3 clutch]

Planetary gear unit	Input, Locked, Output
Front	Input: Ring gear Locked: Sun gear Output: Carrier
Rear	Input: Rear Sun gear, Middle Sun gear Locked: - Output: Ring gear

1. Input shaft (rotates clockwise) [same revolution as the torque converter's turbine runner]
2. Front planetary ring gear (rotates clockwise) [same revolution as the input shaft]
3. Front planetary pinion gear (rotates clockwise on its axis, orbits clockwise)
   [because the front planetary sun gear is locked by the oil pump, it is pressed against the front planetary ring gear and orbits the sun gear while rotating on its axis (because the front planetary ring gear has internal gears, the rotational direction does not change)]
4. Front planetary carrier (rotates clockwise)
   [reduction: same revolution as the front planetary pinion gear orbit revolution]
5. C1 clutch (rotates clockwise) [connects the front planetary carrier and the rear planetary rear sun gear]
6. C3 clutch (rotates clockwise) [connects the front planetary carrier and the rear planetary middle sun gear]
7. Rear planetary gear component (rotates clockwise)
   [because the rear planetary short pinion gear and the rear planetary long pinion gear are engaged, both the pinion gears are locked due to the difference in the rotational directions, and kinematic energy of the rear planetary sun gear and rear planetary middle sun gear is transmitted to the rear planetary ring gear]
8. Rear planetary ring gear (rotates clockwise) [same revolution as the rear planetary carrier]
9. Counter drive gear (rotates clockwise)
   [because the rear planetary ring gear is installed on the counter drive gear, the rotational direction and the revolution are same as the rear planetary ring gear]

10. Counter gear (rotates counterclockwise)
11. Differential ring gear (rotates clockwise)

Engine brake

- When the engine brake is operating, driving force is transmitted from the tires.

4GR

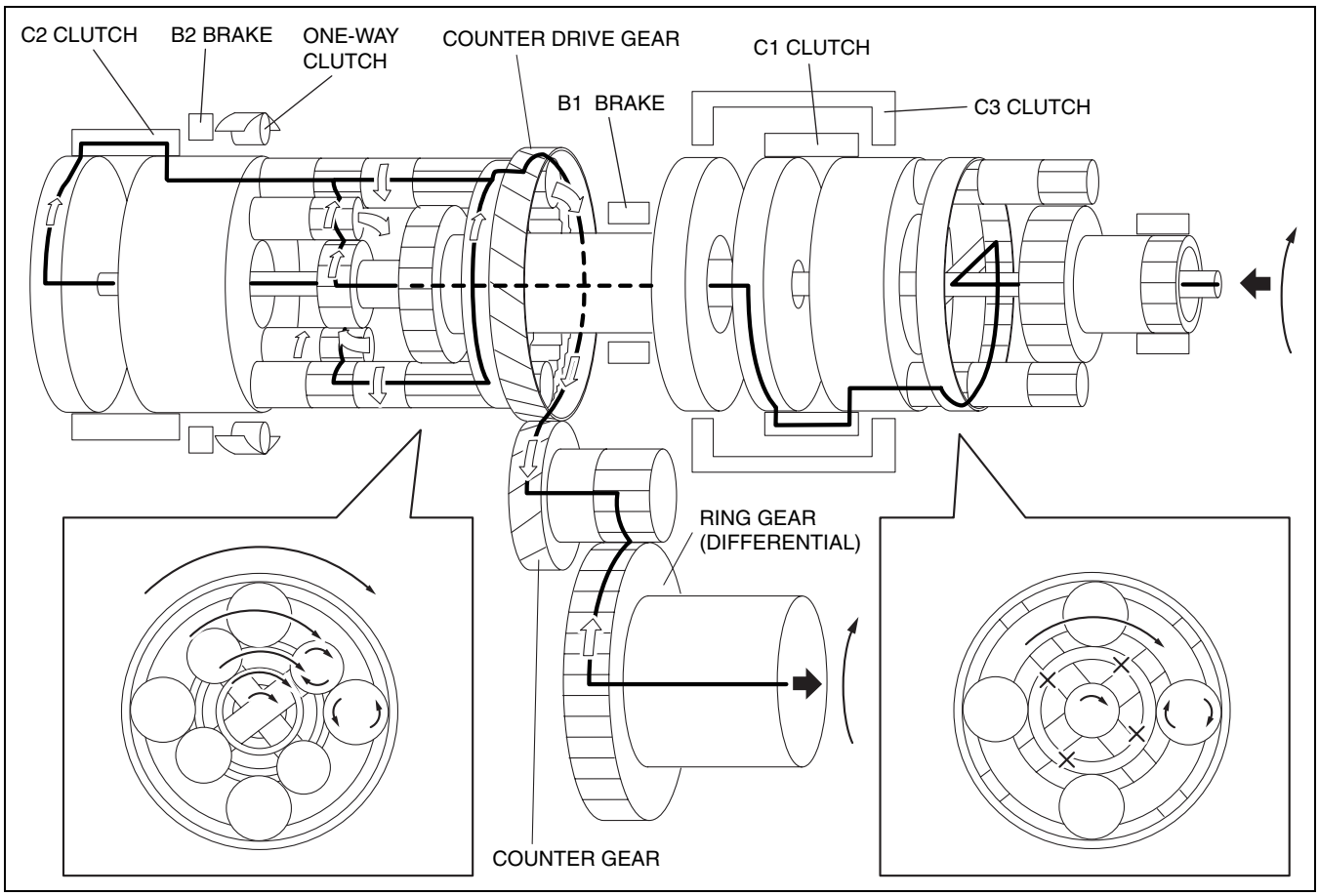

acxuun00000624

Power transmission pathway
[Operating components: C1 clutch, C2 clutch]

Planetary gear unit	Input, Locked, Output
Front	Input: Ring gear Locked: Sun gear Output: Carrier
Rear	Input: Rear Sun gear, Carrier Locked: - Output: Ring gear

1. Input shaft (rotates clockwise) [same revolution as the torque converter's turbine runner]
2. Front planetary ring gear (rotates clockwise) [same revolution as the input shaft]
3. Front planetary pinion gear (rotates clockwise on its axis, orbits clockwise)
   [because the front planetary sun gear is locked by the oil pump, it is pressed against the front planetary ring gear and orbits the sun gear while rotating on its axis (because the front planetary ring gear has internal gears, the rotational direction does not change)]
4. Front planetary carrier (rotates clockwise)
   [reduction: same revolution as the front planetary pinion gear orbit revolution]
5. C1 clutch (rotates clockwise) [connects the front planetary carrier and the rear planetary rear sun gear]
6. Intermediate shaft (rotates clockwise) [same revolution as the input shaft]
7. C2 clutch (rotates clockwise) [same revolution as the intermediate shaft]
8. Rear planetary carrier (rotates clockwise) [same revolution as the intermediate shaft]
9. Rear planetary short pinion gear (rotates clockwise on its axis, orbits clockwise)
   [because the rear planetary carrier rotates faster than the rear planetary sun gear]

10. Rear planetary long pinion gear (rotates counterclockwise on its axis, orbits clockwise)
11. Rear planetary ring gear (rotates clockwise)
    [because the rear planetary long pinion gear's rotation is subtracted from the rear planetary carrier revolution, the rear planetary ring gear revolution is slower than those of the rear planetary carrier]
12. Counter drive gear (rotates clockwise)
    [because the rear planetary ring gear is installed on the counter drive gear, the rotational direction and the revolution is the same as the rear planetary ring gear]
13. Counter gear (rotates counterclockwise)
14. Differential ring gear (rotates clockwise)

Engine brake

- When the engine brake is operating, driving force is transmitted from the tires.

5GR

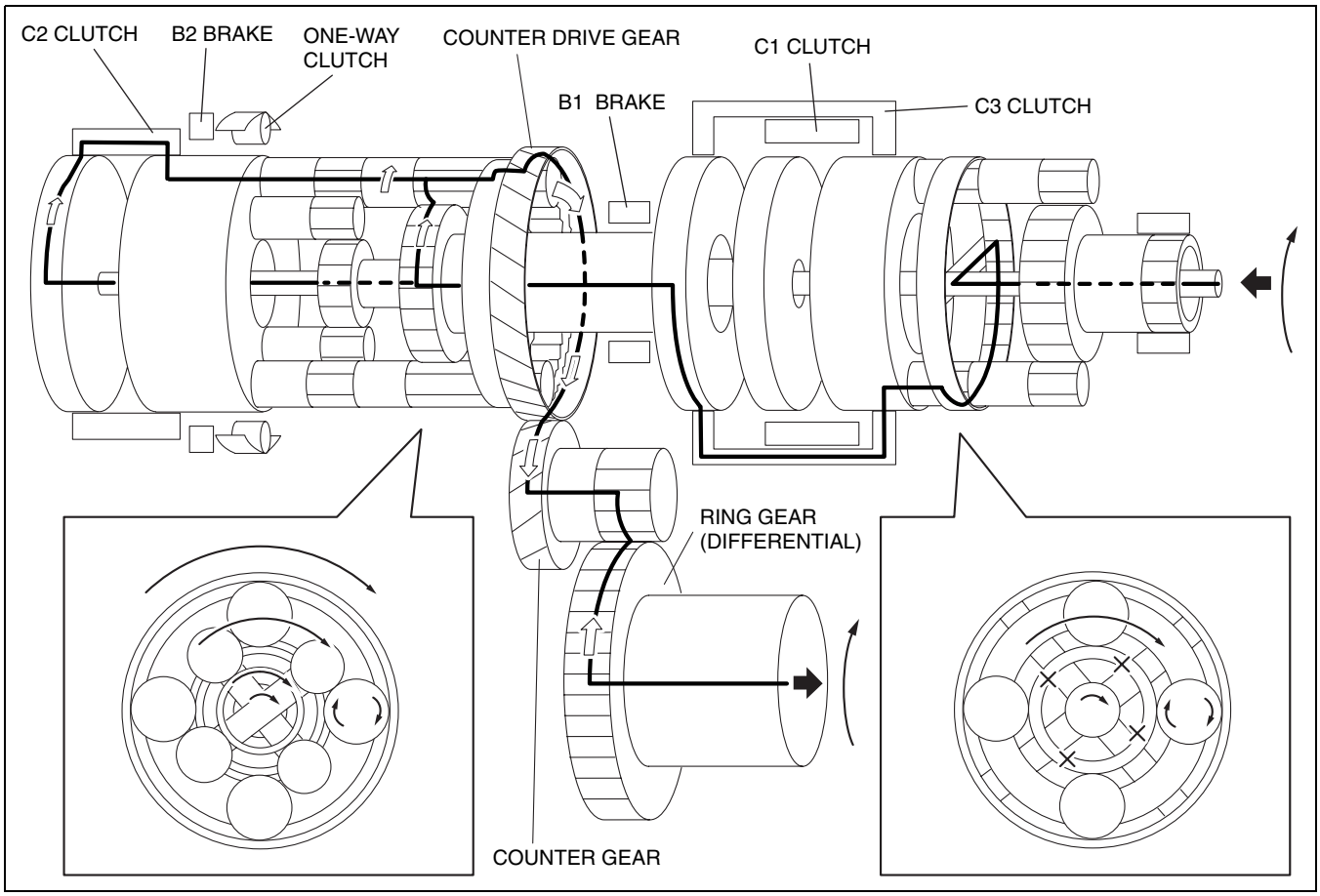

acxuun00000625

Power transmission pathway
[Operating components: C2 clutch, C3 clutch]

Planetary gear unit	Input, Locked, Output
Front	Input: Ring gear Locked: Sun gear Output: Carrier
Rear	Input: Carrier, Middle Sun gear Locked: - Output: Ring gear

1. Input shaft (rotates clockwise) [same revolutions as torque converter's turbine runner]
2. Front planetary ring gear (rotates clockwise) [same revolution as the input shaft]
3. Front planetary pinion gear (rotates clockwise on its axis, orbits clockwise)
   [because the front planetary sun gear is locked by the oil pump, it is pressed against the front planetary ring gear and orbits the sun gear while rotating on its axis (because the front planetary ring gear has internal gears, the rotational direction does not change)]

4. Front planetary carrier (rotates clockwise)
   [reduction: same revolution as the front planetary pinion gear orbit revolution]
5. C3 clutch (rotates clockwise) [connects the front planetary carrier and the rear planetary middle sun gear]
6. Rear planetary middle sun gear (rotates clockwise)
   [same revolution as C3 clutch (decelerates by the front planetary gear, so the revolutions are slower than the input shaft)]
7. Intermediate shaft (rotates clockwise) [same revolution as the input shaft]
8. C2 clutch (rotates clockwise) [same revolution as the intermediate shaft]
9. Rear planetary carrier (rotates clockwise) [same revolutions as intermediate shaft]
10. Rear planetary long pinion gear (rotates clockwise on its axis, orbits clockwise)
    [because the rear planetary carrier rotates faster than the rear planetary middle sun gear, the rear planetary middle pinion gear is pushed out by the speed difference, and orbits clockwise while rotating clockwise on its axis.]
11. Rear planetary ring gear (rotates clockwise)
    [because the rear planetary long pinion gear's rotation is added to the rear planetary carrier revolutions, rear planetary ring gear revolution is faster than those of the rear planetary carrier]
12. Counter drive gear (rotates clockwise)
    [because the rear planetary ring gear is installed on the counter drive gear, the rotational direction and revolution is the same as the rear planetary ring gear]
13. Counter gear (rotates counterclockwise)
14. Differential ring gear (rotates clockwise)

Engine brake

- When the engine brake is operating, driving force is transmitted from the tires.

6GR

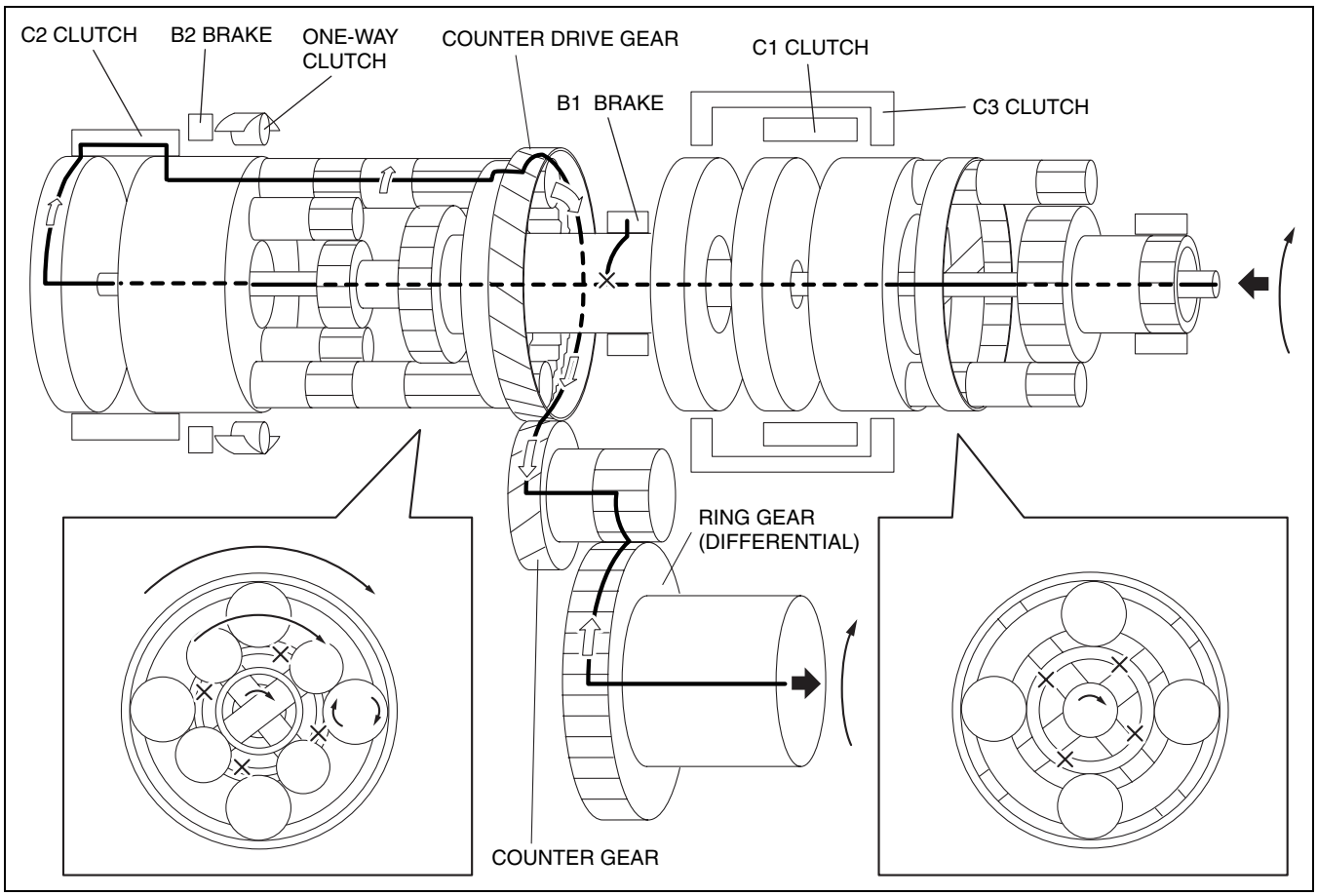

acxuun00000626

Power transmission pathway
[Operating components: B1 brake, C2 clutch]

Planetary gear unit	Input, Locked, Output
Front	-
Rear	Input: Carrier Locked: Middle Sun gear Output: Ring gear

1. Input shaft (rotates clockwise) [same revolution as the torque converter's turbine runner]
2. Intermediate shaft (rotates clockwise) [same revolution as the torque converter's turbine runner]
3. B1 brake [locks the rear planetary middle sun gear]
4. C2 clutch [connects the intermediate shaft and the rear planetary carrier]
5. Rear planetary carrier (rotates clockwise) [same revolution as the intermediate shaft]
6. Rear planetary long pinion gear (rotates clockwise on its axis, orbits clockwise)
   [because the rear planetary middle sun gear is locked, it is always in a speed increasing condition]
7. Rear planetary ring gear (rotates clockwise)
   [because the rear planetary long pinion gear's rotation is added to the rear planetary carrier revolution, the rear planetary ring gear revolution is faster than those of the rear planetary carrier]
8. Counter drive gear (rotates clockwise)
   [because the rear planetary ring gear is installed on the counter drive gear, the rotational direction and revolution are the same as the rear planetary ring gear]
9. Counter gear (rotates counterclockwise)
10. Differential ring gear (rotates clockwise)

Engine brake

- When the engine brake is operating, driving force is transmitted from the tires.

R position

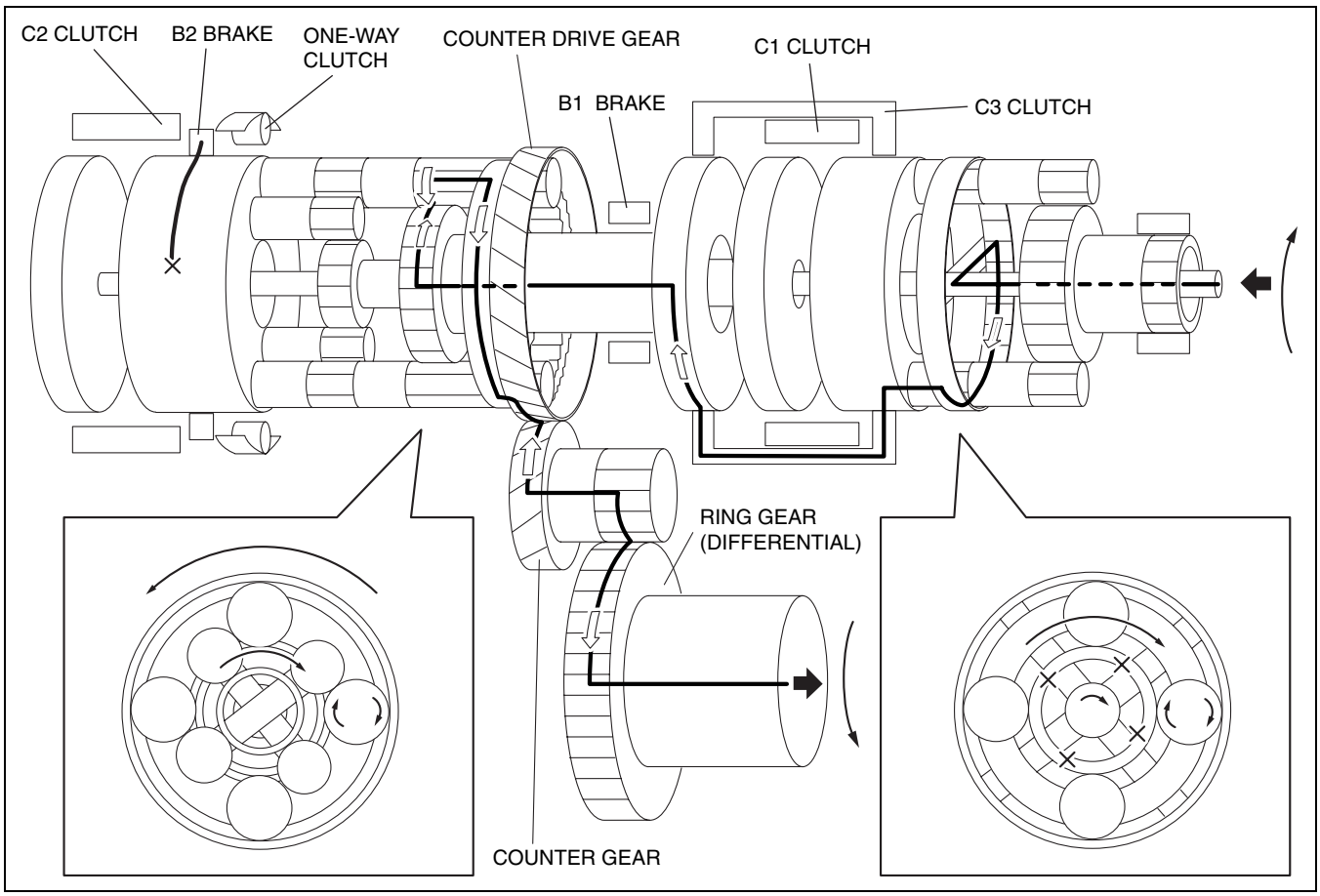

acxuun00000627

Power transmission pathway
[Operating components: C3 clutch, B2 brake]

Planetary gear unit	Input, Locked, Output
Front	Input: Ring gear Locked: Sun gear Output: Carrier
Rear	Input: Middle Sun gear Locked: Carrier Output: Ring gear

1. Input shaft (rotates clockwise) [same revolution as the torque converter's turbine runner]
2. Front planetary ring gear (rotates clockwise) [same revolution as the input shaft]
3. Front planetary pinion gear (rotates clockwise on its axis, orbits clockwise)
   [because the front planetary sun gear is locked by the oil pump, it is pressed against the front planetary ring gear and orbits the sun gear while rotating on its axis (because the front planetary ring gear has internal gears, the rotational direction does not change)]
4. Front planetary carrier (rotates clockwise)
   [reduction: same revolution as the front planetary pinion gear orbit revolution]
5. C3 clutch (rotates clockwise) [connects the front planetary carrier and the rear planetary middle sun gear]
6. Rear planetary middle sun gear (rotates clockwise)
   [same revolutions as the C3 clutch (rotates slower than the input shaft)]
7. B2 brake [locks the rear planetary carrier]
8. Rear planetary long pinion gear (rotates counterclockwise)
9. Rear planetary ring gear (rotates counterclockwise)
   [the rear planetary ring gear is rotated by the rear planetary long pinion gear (because the rear planetary ring gear has internal gears, the rotational direction does not change)]
10. Counter drive gear (rotates counterclockwise)
    [because the rear planetary ring gear is installed on the counter drive gear, the rotational direction and revolution are the same as the rear planetary ring gear]
11. Counter gear (rotates clockwise)
12. Differential ring gear (rotates counterclockwise)

Engine brake

- When the engine brake is operating, driving force is transmitted from the tires.

CENTRIFUGAL HYDRAULIC PRESSURE CANCEL CLUTCH OUTLINE

id051700102400

- When the rotation of the clutch rises, centrifugal force operates on the oil inside the clutch, hydraulic pressure rises, and the clutch is engaged at an earlier timing. Because of this, a difference arises in rotation between the input shaft and the output shaft, and shift shock may occur. To solve this, an additional chamber has been provided opposite the piston hydraulic pressure chamber. This causes centrifugal hydraulic pressure to operate in the opposite direction with the same force as the piston, counteracting that pressure.

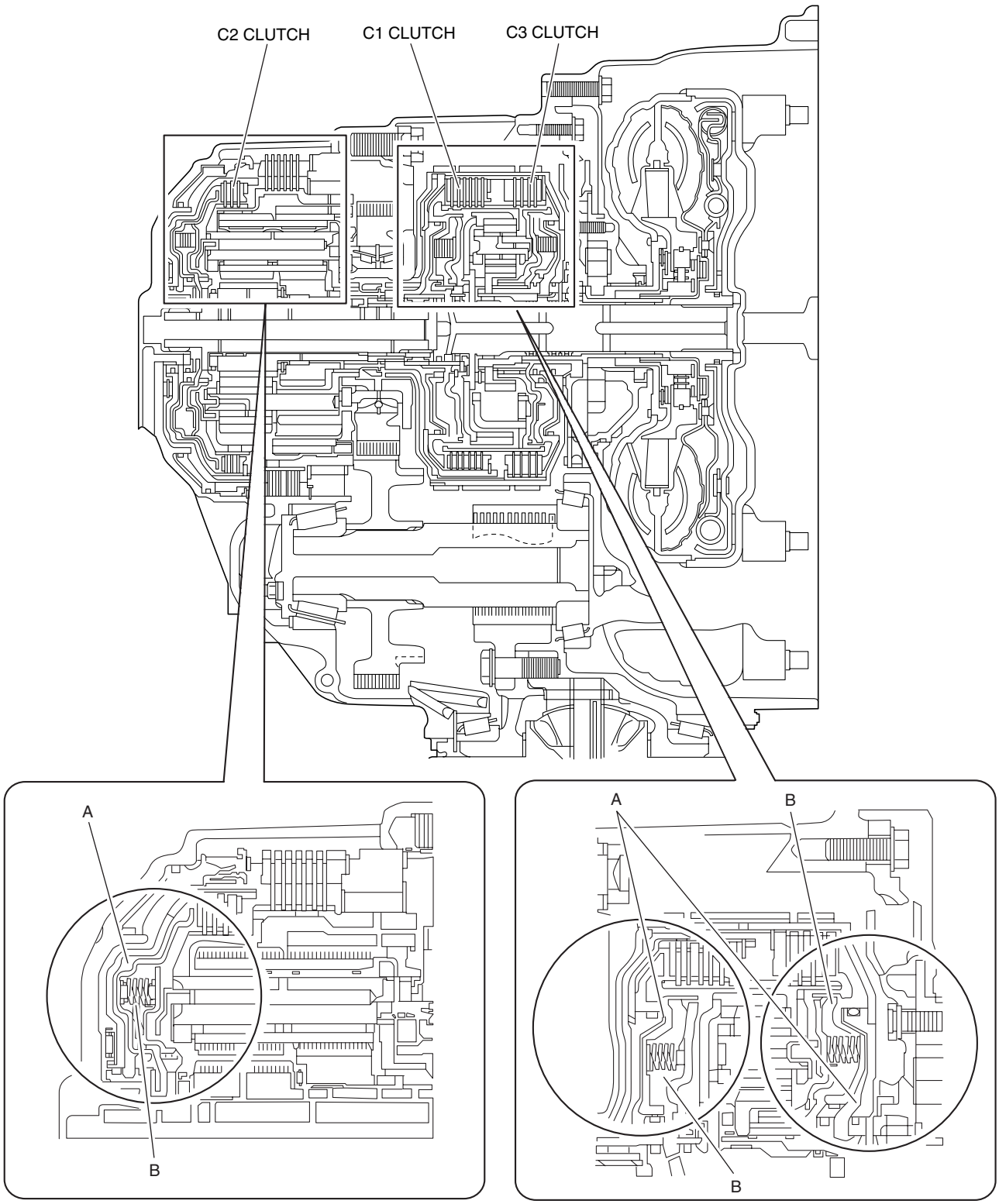

A : PISTON HYDRAULIC PRESSURE CHAMBER
B : CENTRIFUGAL HYDRAULIC PRESSURE CANCEL CHAMBER

acxuun00000628

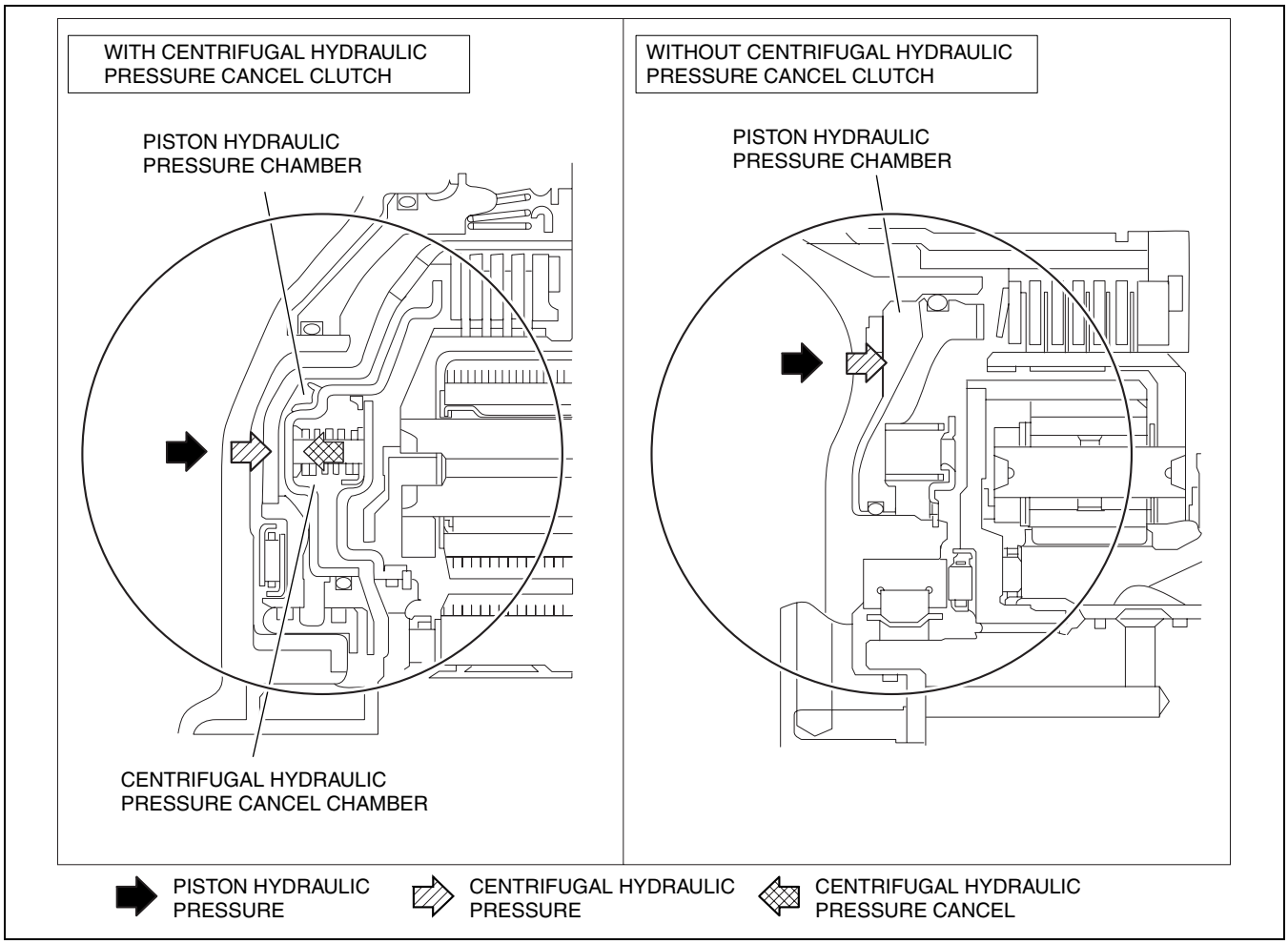

acxuun00000629

TORQUE CONVERTER OUTLINE

id051700100700

- The torque converter is composed of the converter cover, pump impeller, turbine runner, stator, one-way clutch, and TCC. The torque converter transmits and amplifies torque by means of the ATF inside it. In addition, the use of the TCC is intended to improve fuel economy as a direct coupling between the engine and automatic transaxle.

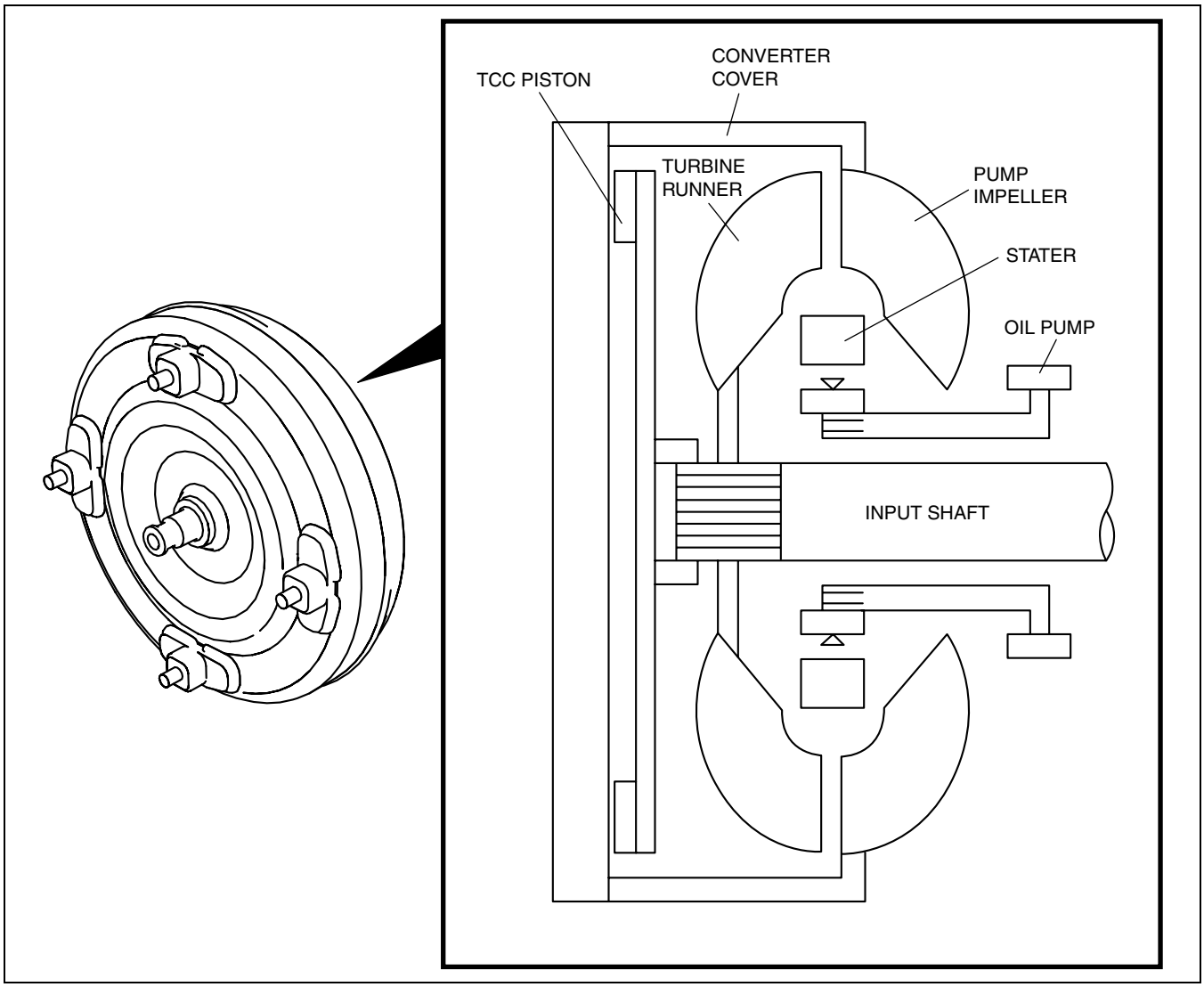

acxuun00000605

SERVICE

GENERAL INFORMATION 00-00

00-00 GENERAL INFORMATION

HOW TO USE THIS MANUAL 00-00–2
Range of Topics **00-00–2**
Service Procedure **00-00–2**
Symbols **00-00–4**
Advisory Messages. **00-00–4**
UNITS 00-00–5
Conversion to SI Units (Système International d'Unités) **00-00–5**
Rounding Off. **00-00–5**
Upper and Lower Limits **00-00–5**
FUNDAMENTAL PROCEDURES. 00-00–6
Preparation of Tools and Measuring Equipment **00-00–6**
Special Service Tools **00-00–6**
Disassembly **00-00–6**
Inspection During Removal, Disassembly. **00-00–6**
Arrangement of Parts. **00-00–7**
Cleaning of Parts **00-00–7**
Reassembly **00-00–7**
Adjustment **00-00–8**
Rubber Parts and Tubing **00-00–8**
Hose Clamps **00-00–8**
Torque Formulas **00-00–8**
Vise **00-00–9**
ELECTRICAL SYSTEM. 00-00–9
Connectors. **00-00–9**
SAE STANDARDS. 00-00–10
ABBREVIATIONS 00-00–11

HOW TO USE THIS MANUAL

id000000800100

Range of Topics

- This manual contains procedures for performing all required service operations. The procedures are divided into the following five basic operations:
  - — Removal/Installation
  - — Disassembly/Assembly
  - — Replacement
  - — Inspection
  - — Adjustment
- Simple operations which can be performed easily just by looking at the vehicle (i.e., removal/installation of parts, jacking, vehicle lifting, cleaning of parts, and visual inspection) have been omitted.

Service Procedure

Inspection, adjustment

- Inspection and adjustment procedures are divided into steps. Important points regarding the location and contents of the procedures are explained in detail and shown in the illustrations.

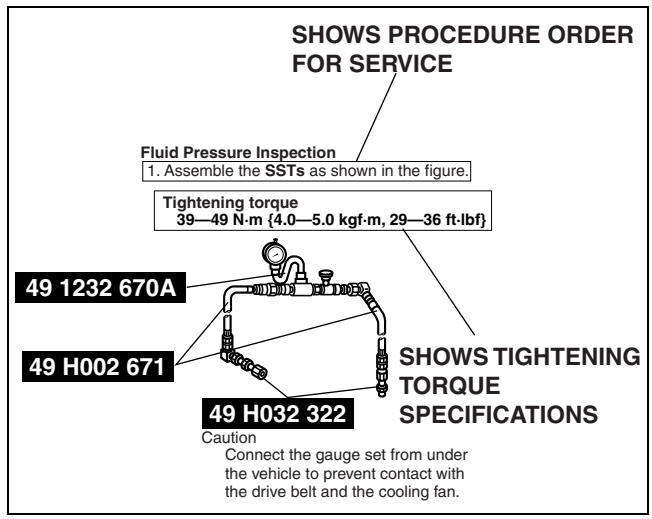

acxuuw00000434

Repair procedure

1. Most repair operations begin with an overview illustration. It identifies the components, shows how the parts fit together, and describes visual part inspection. However, only removal/installation procedures that need to be performed methodically have written instructions.
2. Expendable parts, tightening torques, and symbols for oil, grease, and sealant are shown in the overview illustration. In addition, symbols indicating parts requiring the use of special service tools or equivalent are also shown.
3. Procedure steps are numbered and the part that is the main point of that procedure is shown in the illustration with the corresponding number. Occasionally, there are important points or additional information concerning a procedure. Refer to this information when servicing the related part.

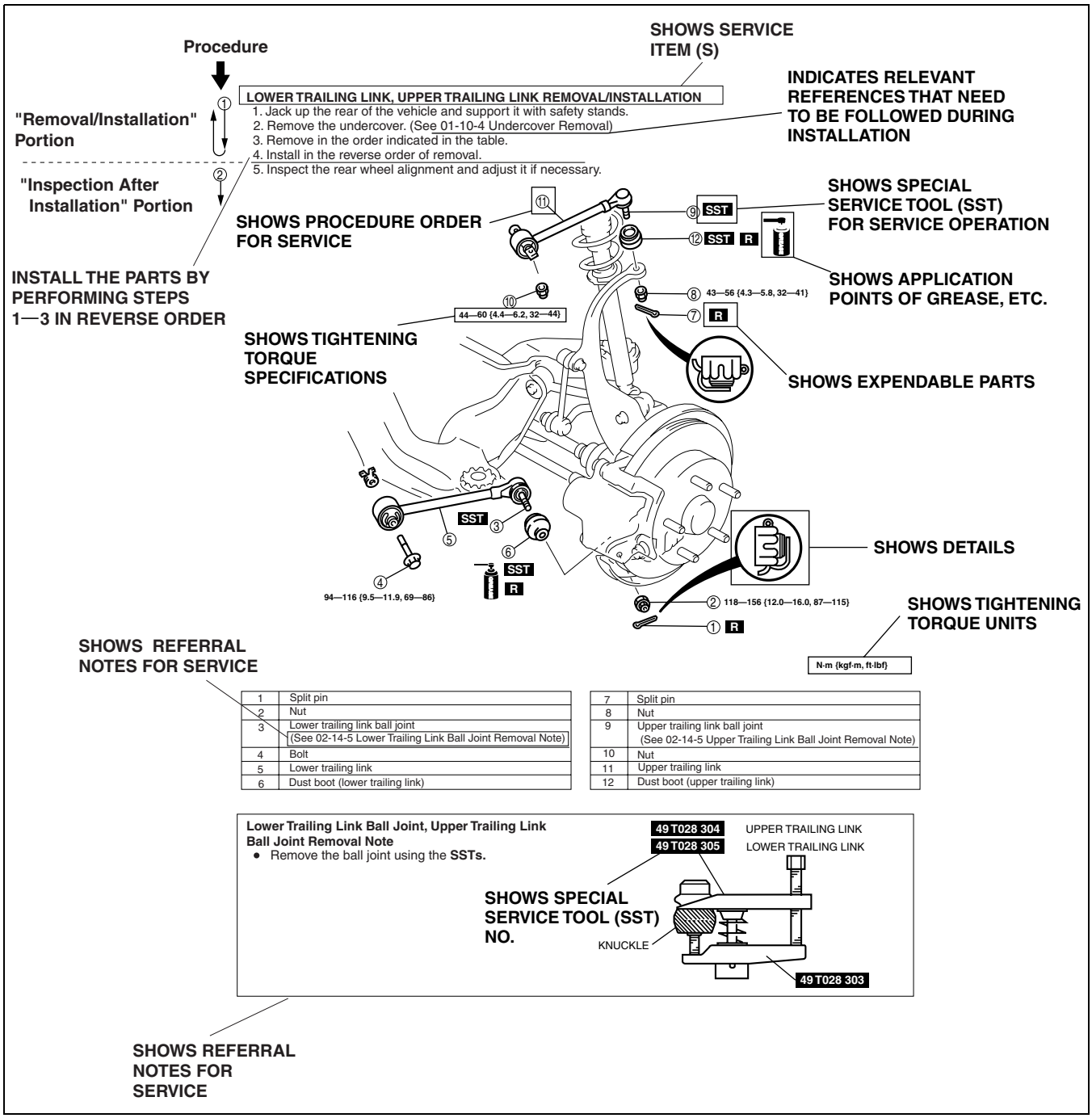

1	Split pin
2	Nut
3	Lower trailing link ball joint (See 02-14-5 Lower Trailing Link Ball Joint Removal Note)
4	Bolt
5	Lower trailing link
6	Dust boot (lower trailing link)

7	Split pin
8	Nut
9	Upper trailing link ball joint (See 02-14-5 Upper Trailing Link Ball Joint Removal Note)
10	Nut
11	Upper trailing link
12	Dust boot (upper trailing link)

acxuuw00000435

Symbols

- There are eight symbols indicating oil, grease, fluids, sealant, and the use of **SST** or equivalent. These symbols show application points or use of these materials during service.

Symbol	Meaning	Kind
OIL	Apply oil	New appropriate engine oil or gear oil
BRAKE FLUID	Apply brake fluid	New appropriate brake fluid
ATF	Apply automatic transaxle/ transmission fluid	New appropriate automatic transaxle/ transmission fluid
GREASE	Apply grease	Appropriate grease
SEALANT	Apply sealant	Appropriate sealant
P	Apply petroleum jelly	Appropriate petroleum jelly
R	Replace part	O-ring, gasket, etc.
SST	Use SST or equivalent	Appropriate tools

Advisory Messages

- You will find several **Warnings, Cautions, Notes, Specifications and Upper and Lower Limits in this manual.**

Warning

- A Warning indicates a situation in which serious injury or death could result if the warning is ignored.

Caution

- A Caution indicates a situation in which damage to the vehicle or parts could result if the caution is ignored.

Note

- A Note provides added information that will help you to complete a particular procedure.

Specification

- The values indicate the allowable range when performing inspections or adjustments.

Upper and lower limits

- The values indicate the upper and lower limits that must not be exceeded when performing inspections or adjustments.

UNITS

id000000100400

Electrical current	A (ampere)
Electric power	W (watt)
Electric resistance	ohm
Electric voltage	V (volt)
Length	mm (millimeter)
	in (inch)
Negative pressure	kPa (kilo pascal)
	mmHg (millimeters of mercury)
	inHg (inches of mercury)
Positive pressure	kPa (kilo pascal)
	kgf/cm^2 (kilogram force per square centimeter)
	psi (pounds per square inch)
Number of revolutions	rpm (revolutions per minute)
Torque	N·m (Newton meter)
	kgf·m (kilogram force meter)
	kgf·cm (kilogram force centimeter)
	ft·lbf (foot pound force)
	in·lbf (inch pound force)
Volume	L (liter)
	US qt (U.S. quart)
	Imp qt (Imperial quart)
	ml (milliliter)
	cc (cubic centimeter)
	cu in (cubic inch)
	fl oz (fluid ounce)
Weight	g (gram)
	oz (ounce)

Conversion to SI Units (Système International d'Unités)

- All numerical values in this manual are based on SI units. Numbers shown in conventional units are converted from these values.

Rounding Off

- Converted values are rounded off to the same number of places as the SI unit value. For example, if the SI unit value is 17.2 and the value after conversion is 37.84, the converted value will be rounded off to 37.8.

Upper and Lower Limits

- When the data indicates upper and lower limits, the converted values are rounded down if the SI unit value is an upper limit, and rounded up if the SI unit value is a lower limit. Therefore, converted values for the same SI unit value may differ after conversion. For example, consider 2.7 kgf/cm^2 in the following specifications:

  210— 260 kPa {2.1— 2.7 kgf/cm^2, 30— 38 psi}
  270— 310 kPa {2.7— 3.2 kgf/cm^2, 39— 45 psi}

- The actual converted values for 2.7 kgf/cm^2 are 265 kPa and 38.4 psi. In the first specification, 2.7 is used as an upper limit, so the converted values are rounded down to 260 and 38. In the second specification, 2.7 is used as a lower limit, so the converted values are rounded up to 270 and 39.

FUNDAMENTAL PROCEDURES

id000000810000

Preparation of Tools and Measuring Equipment

- Be sure that all necessary tools and measuring equipment are available before starting any work.

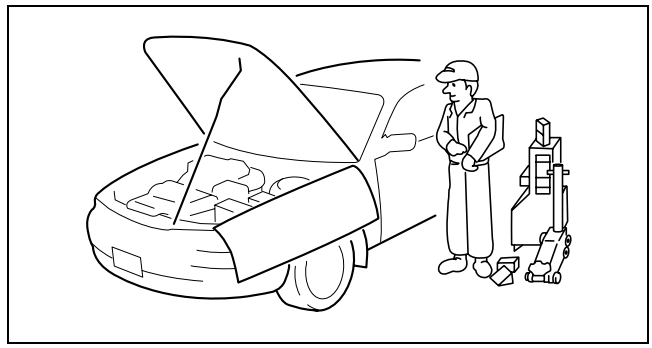

acxuuw00000006

Special Service Tools

- Use special service tools or the equivalent when they are required.

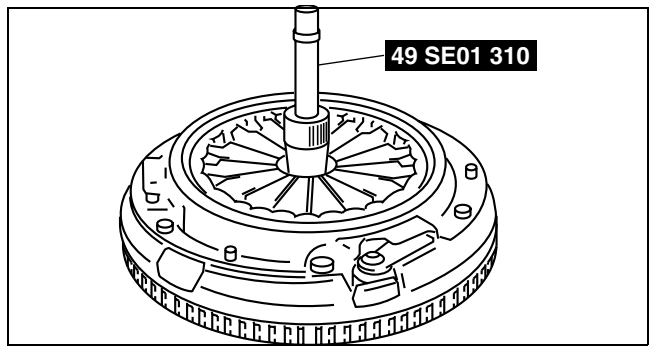

acxuuw00000007

Disassembly

- If the disassembly procedure is complex, requiring many parts to be disassembled, all parts should be marked in a place that will not affect their performance or external appearance, and identified so that reassembly can be performed easily and efficiently.

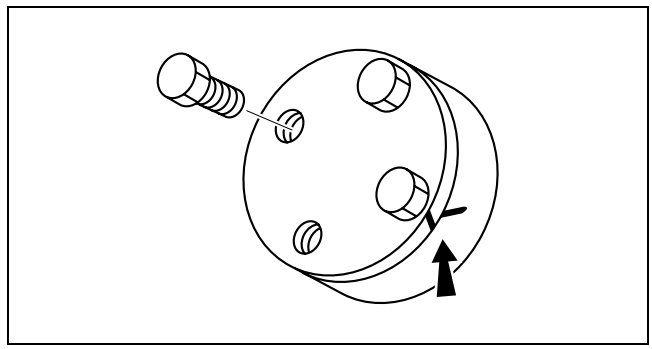

acxuuw00000010

Inspection During Removal, Disassembly

- When removed, each part should be carefully inspected for malfunction, deformation, damage and other problems.

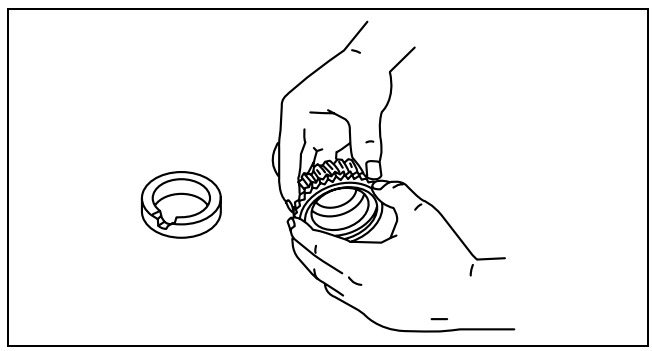

acxuuw00000011

Arrangement of Parts

- All disassembled parts should be carefully arranged for reassembly.
- Be sure to separate or otherwise identify the parts to be replaced from those that will be reused.

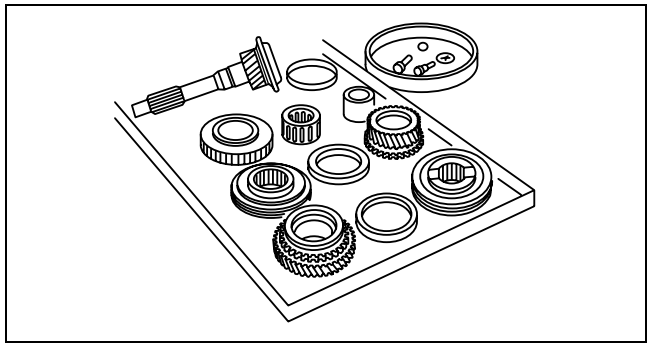

acxuuw00000012

Cleaning of Parts

- All parts to be reused should be carefully and thoroughly cleaned in the appropriate method.

  Warning
  - **Using compressed air can cause dirt and other particles to fly out causing injury to the eyes. Wear protective eye wear whenever using compressed air.**

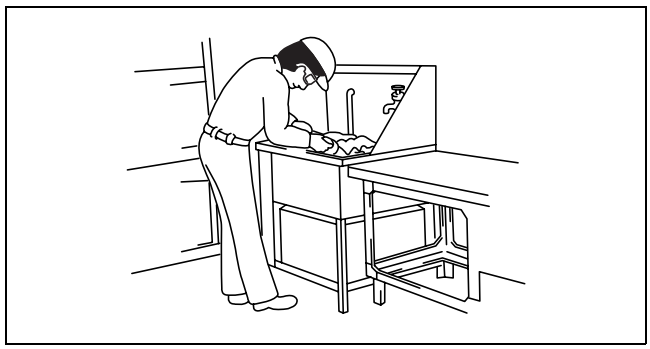

acxuuw00000013

Reassembly

- Standard values, such as torques and certain adjustments, must be strictly observed in the reassembly of all parts.
- If removed, these parts should be replaced with new ones:
  — Oil seals
  — Gaskets
  — O-rings
  — Lock washers
  — Cotter pins
  — Nylon nuts

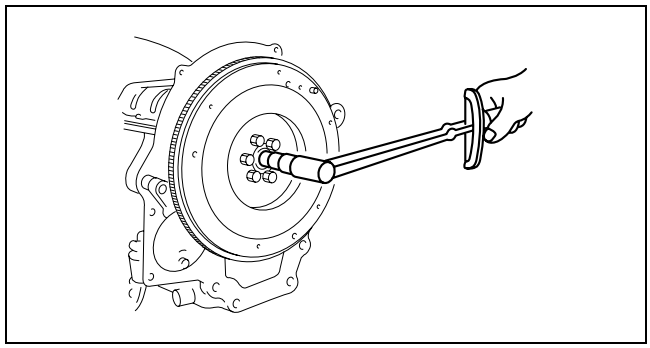

acxuuw00000014

- Depending on location:
  — Sealant and gaskets, or both, should be applied to specified locations. When sealant is applied, parts should be installed before sealant hardens to prevent leakage.
  — Oil should be applied to the moving components of parts.
  — Specified oil or grease should be applied at the prescribed locations (such as oil seals) before reassembly.

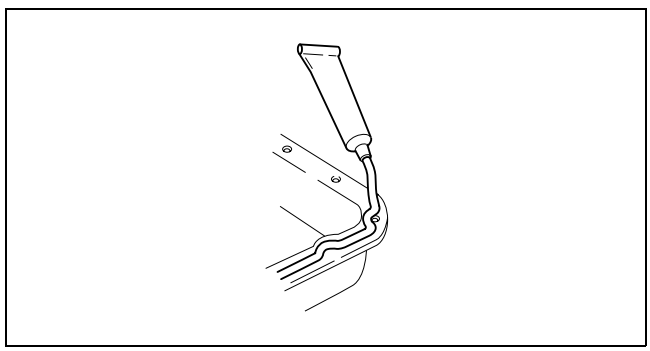

acxuuw00000326

Adjustment

- Use suitable gauges and testers when making adjustments.

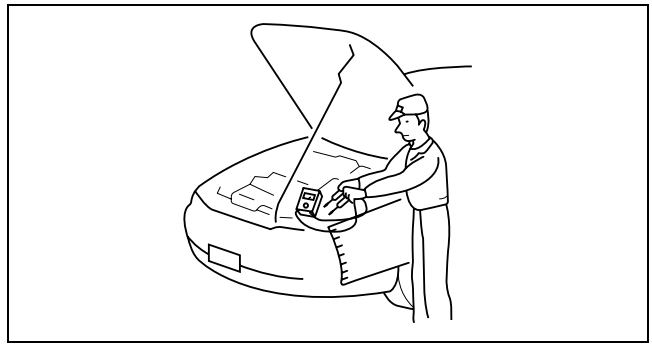

acxuuw00000016

Rubber Parts and Tubing

- Prevent gasoline or oil from getting on rubber parts or tubing.

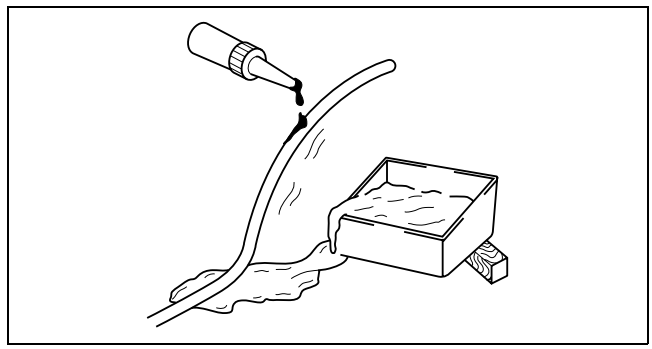

acxuuw00000017

Hose Clamps

- When reinstalling, position the hose clamp in the original location on the hose and squeeze the clamp lightly with large pliers to ensure a good fit.

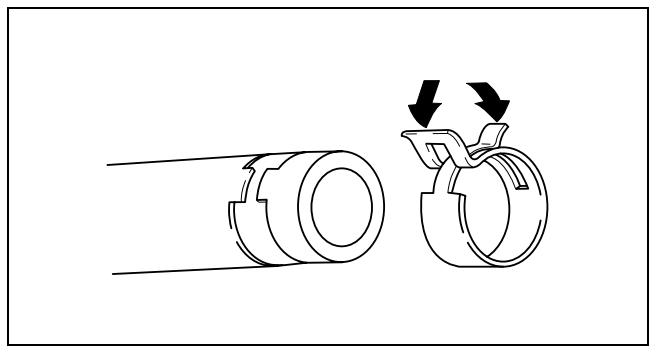

acxuuw00000018

Torque Formulas

- When using a torque wrench-**SST** or equivalent combination, the specified torque must be recalculated due to the extra length that the **SST** or equivalent adds to the torque wrench. Recalculate the torque by using the following formulas. Choose the formula that applies to you.

Torque Unit	Formula
N·m	N·m × [L/(L+A)]
kgf·m	kgf·m × [L/(L+A)]
kgf·cm	kgf·cm × [L/(L+A)]
ft·lbf	ft·lbf × [L/(L+A)]
in·lbf	in·lbf × [L/(L+A)]

A : The length of the **SST** past the torque wrench drive.
L : The length of the torque wrench.

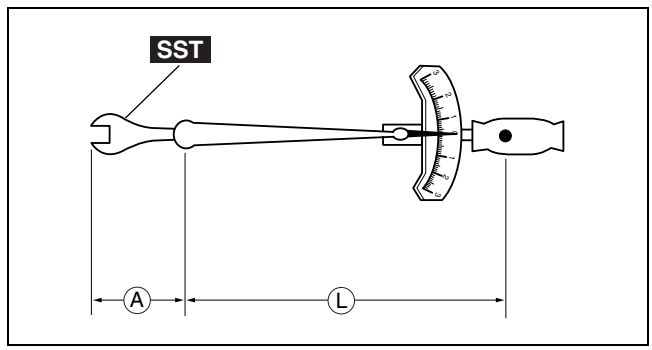

acxuuw00000019

Vise

- When using a vise, put protective plates in the jaws of the vise to prevent damage to parts.

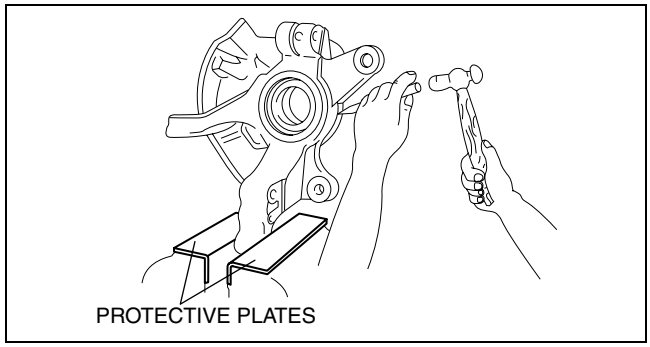

acxuuw00000020

ELECTRICAL SYSTEM

id000000800400

Connectors

Disconnecting connectors

- When disconnecting a connector, grasp the connectors, not the wires.

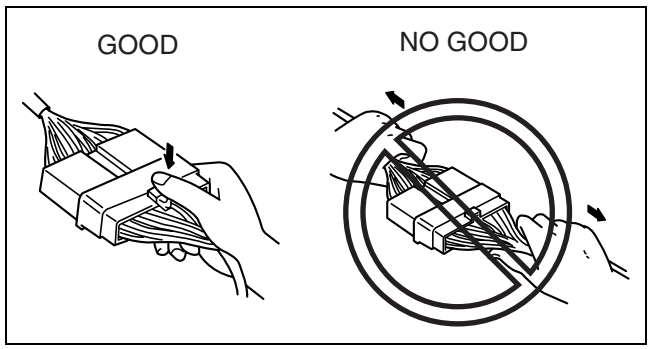

acxuuw00000454

- Connectors can be disconnected by pressing or pulling the lock lever as shown.

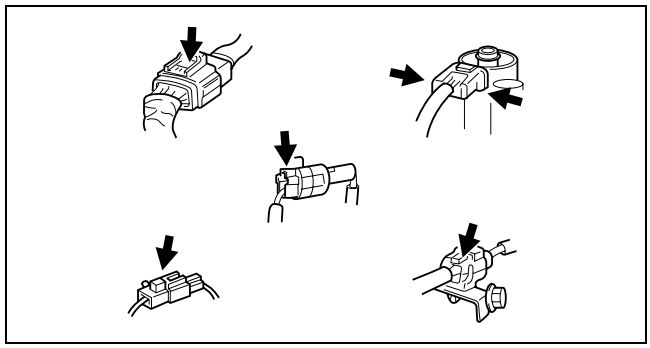

acxuuw00000455

Locking connector

- When locking connectors, listen for a click indicating they are securely locked.

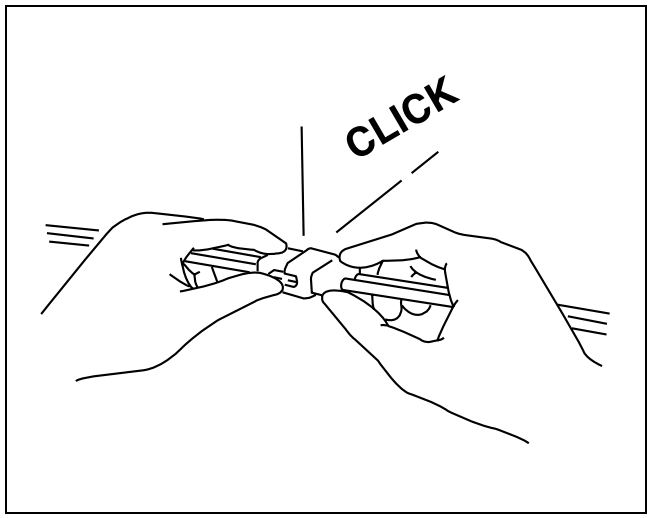

acxuuw00000456

Inspection

Caution
- **To prevent damage to the terminal, wrap a thin wire around the tester probe before inserting into terminal.**

- When a tester is used to inspect for continuity or measuring voltage, insert the tester probe from the wiring harness side.

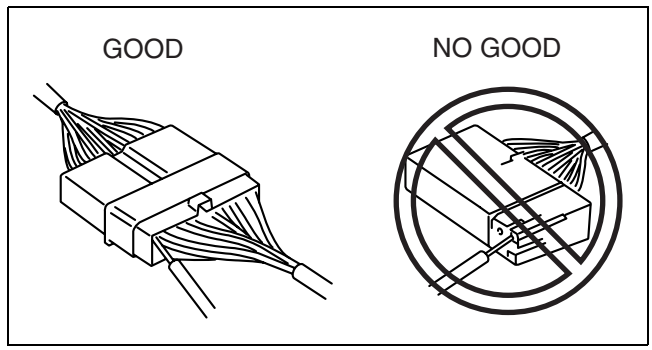

acxuuw00000457

- Inspect the terminals of waterproof connectors from the connector side since they cannot be accessed from the wiring harness side.

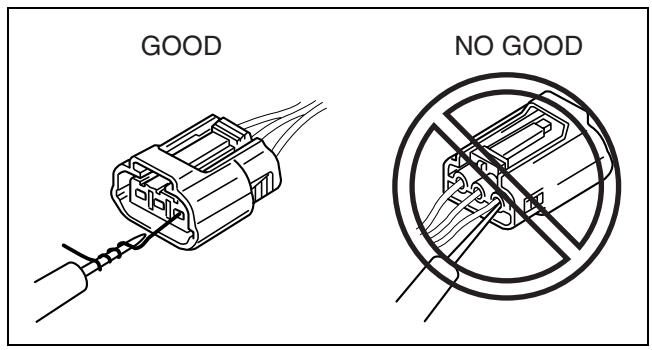

acxuuw00000458

SAE STANDARDS

id000000800900

- In accordance with new regulations, SAE (Society of Automotive Engineers) standard names and abbreviations are now used in this manual. The table below lists the names and abbreviations that have been used in Mazda manuals up to now and their SAE equivalents.

SAE Standard		Remark		SAE Standard		Remark
Abbreviation	Name			Abbreviation	Name	
AP	Accelerator Pedal			MAP	Manifold Absolute Pressure	
APP	Accelerator Pedal Position			MAF sensor	Mass Air Flow Sensor	
ACL	Air Cleaner			MFL	Multiport Fuel Injection	
A/C	Air Conditioning			OBD	On-board Diagnostic System	
BARO	Barometric Pressure			OL	Open Loop	
B+	Battery Positive Voltage			OC	Oxidation Catalytic Converter	
CMP sensor	Camshaft Position Sensor			O2S	Oxygen sensor	
CAC	Charge Air Cooler			PNP	Park/Neutral Position	
CLS	Closed Loop System			PSP	Power Steering Pressure	
CTP	Closed Throttle Position			PCM	Powertrain Control Module	#3
CPP	Clutch Pedal Position			PAIR	Pulsed Secondary Air Injection	Pulsed injection
CIS	Continuous Fuel Injection System					
CKP sensor	Crankshaft Position Sensor			AIR	Secondary Air Injection	Injection with air pump
DLC	Data Link Connector					
DTM	Diagnostic Test Mode	#1				
DTC	Diagnostic Test Code(s)			SAPV	Secondary Air Pulse Valve	
DI	Distributor Ignition			SFI	Sequential Multiport Fuel Injection	
DLI	Distributorless Ignition					
EI	Electronic Ignition	#2		3GR	Third Gear	
ECT	Engine Coolant Temperature			TWC	Three Way Catalytic Converter	
EM	Engine Modification			TB	Throttle Body	
EVAP	Evaporative Emission			TP sensor	Throttle Position Sensor	

SAE Standard		Remark		SAE Standard		Remark
Abbreviation	Name			Abbreviation	Name	
EGR	Exhaust Gas Recirculation			TCC	Torque Converter Clutch	
FC	Fan Control			TCM	Transmission (Transaxle) Control Module	
FF	Flexible Fuel					
4GR	Fourth Gear			TR	Transmission (Transaxle) Range	
GEN	Generator			TC	Turbocharger	
GND	Ground			VSS	Vehicle Speed Sensor	
HO2S	Heated Oxygen Sensor	With heater		VR	Voltage Regulator	
				VAF sensor	Volume Air Flow Sensor	
IAC	Idle Air Control			WU-TWC	Warm Up Three Way Catalytic Converter	#4
IAT	Intake Air Temperature					
KS	Knock Sensor			WOP	Wide Open Throttle	
MIL	Malfunction Indicator Lamp					

#1: Diagnostic trouble codes depend on the diagnostic test mode.
#2: Controlled by the PCM
#3: Device that controls engine and powertrain
#4: Directly connected to exhaust manifold

ABBREVIATIONS

id000000801000

ATF	Automatic Transaxle Fluid
LH	Left Hand
RH	Right Hand
SST	Special Service Tool
TFT	Transaxle Fluid Temperature
2WD	2 Wheel Drive

DRIVELINE/AXLE

03
SECTION

TRANSFER 03-16
TECHNICAL DATA 03-50
SERVICE TOOLS 03-60

03-16 TRANSFER

TRANSFER CLEANING 03-16–1
Cleaning Precautions **03-16–1**
TRANSFER DISASSEMBLY 03-16–1
Before Service Precautions. **03-16–1**
Transfer Component Disassembly **03-16–2**
Transfer Component Disassembling Procedure **03-16–3**
Drive Gear Case Component Disassembly **03-16–4**
Drive Gear Case Component Disassembly Procedure **03-16–5**
Front Carrier Component Disassembly **03-16–9**
Front Carrier Component Disassembling Procedure **03-16–10**
TRANSFER ASSEMBLY 03-16–13
Before Service Precautions **03-16–13**
Drive Gear Case Component Assembly. **03-16–14**
Drive Gear Case Component Assembly Procedure **03-16–15**
Front Carrier Component Assembly. . . **03-16–21**
Front Carrier Component Assembly Procedure **03-16–22**
Transfer Component Assembly **03-16–28**
Transfer Component Assembly Procedure **03-16–29**

TRANSFER CLEANING

id031600500100

Cleaning Precautions

1. Clean the surface of the transfer using steam and cleaning fluids when disassembly.

   Warning
   - **Always wear safety glasses when using compressed air since the foreign material could be blown by the compression air and damage your eyes.**

2. Clean removed components with cleaning fluids and use compressed air to blow off the oil. Clean the oil holes and passages with compressed air.

TRANSFER DISASSEMBLY

id031600500200

Before Service Precautions

- To prevent foreign material from entering the transfer, perform disassembly and servicing in a clean, dust-free environment.
- Inspect the each part while disassembling.

Warning
- **The engine stand is equipped with a self-lock mechanism. However, if the transfer is tilted, the self-lock mechanism could become inoperative. This could cause the transfer to rotate accidentally, resulting in injury. Therefore, make sure that the transfer is not tilted when it is on the engine stand. When turning the transfer, grasp the rotation handle firmly.**

Transfer Component Disassembly

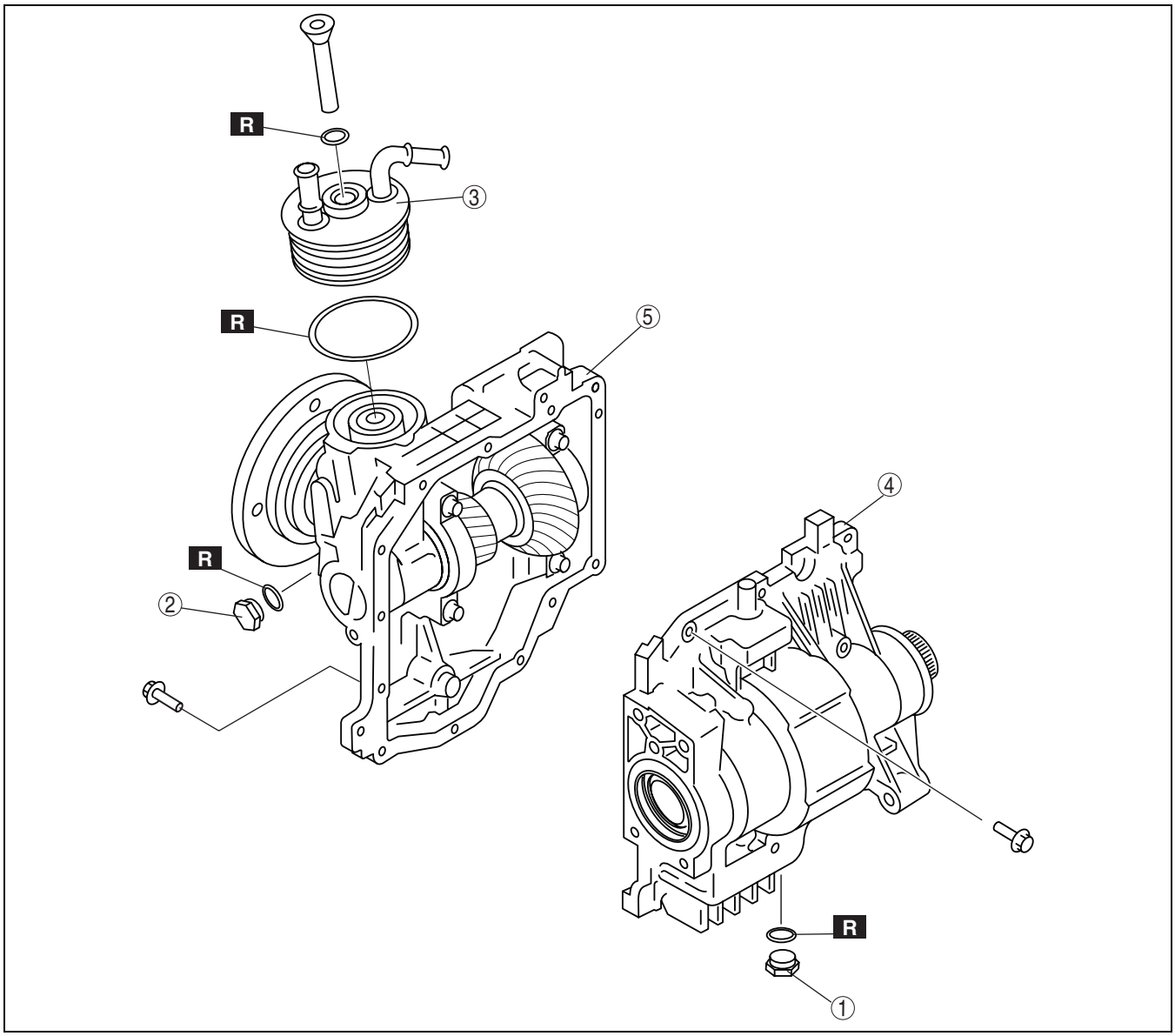

bawuua00000167

1	Drain plug
2	Oil level plug
3	Oil cooler

4	Drive gear case component
5	Front carrier component

Transfer Component Disassembling Procedure

1. Assemble the **SSTs.**

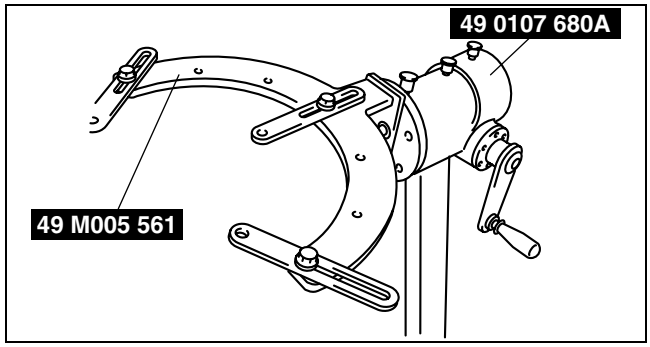

bawuua00000168

2. Install the transfer component to the **SSTs.**
3. Remove the oil cooler.
4. Remove the drive gear case component.

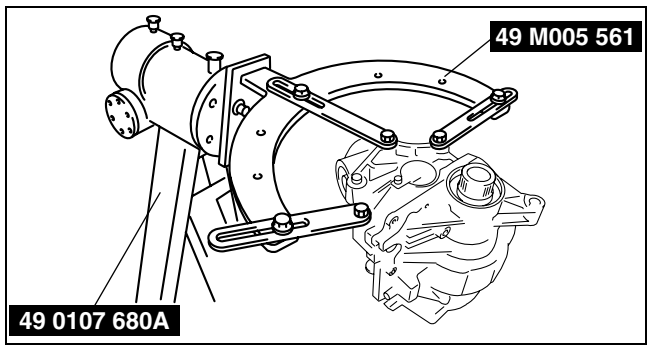

bawuua00000169

Drive Gear Case Component Disassembly

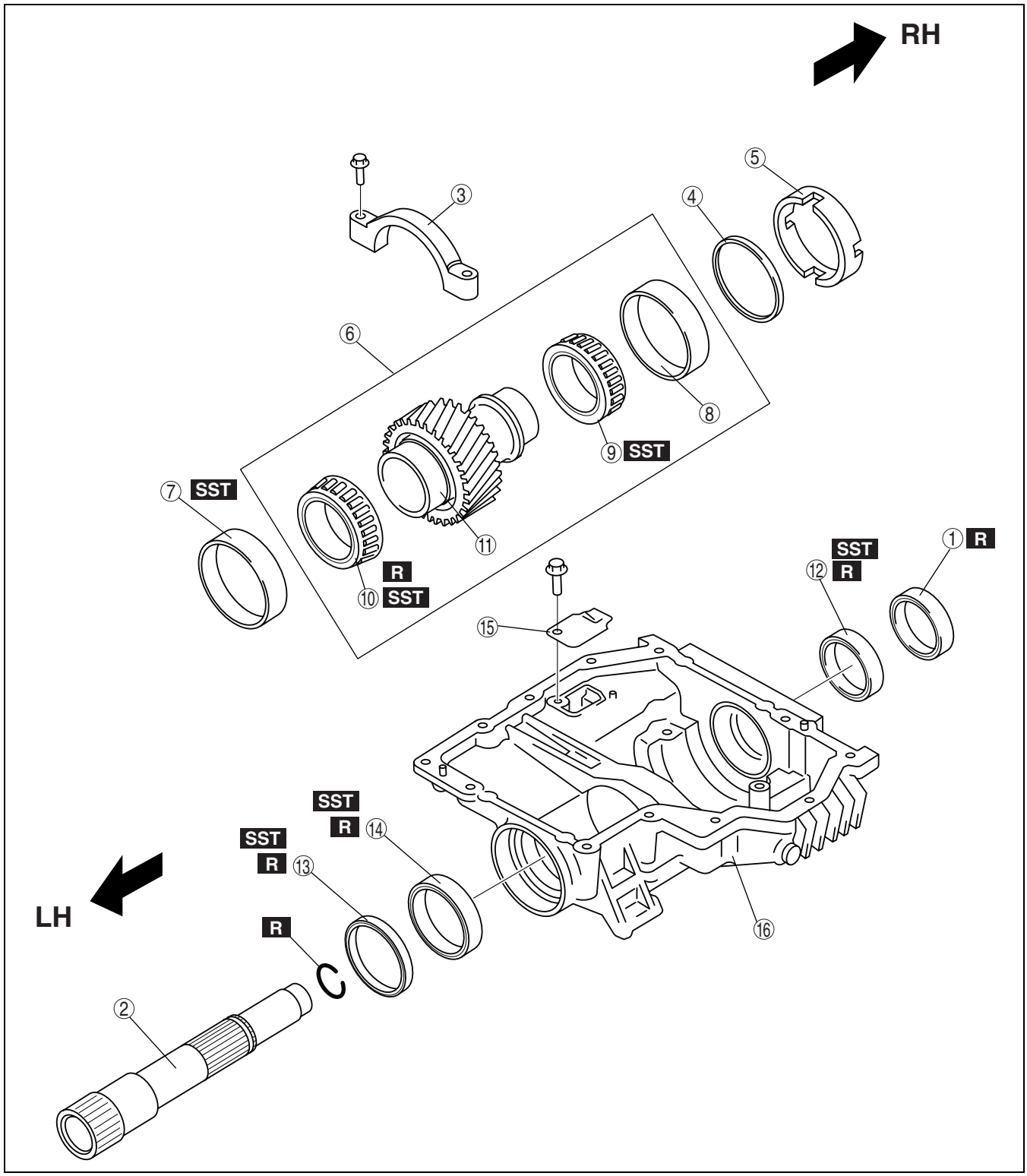

bawuua00000170

1	Oil seal (RH outer)
2	Drive gear shaft
3	Bearing cap
4	Adjustment shim
5	Spacer
6	Drive gear component
7	Bearing outer race (LH)
8	Bearing outer race (RH)

9	Bearing (RH)
10	Bearing (LH)
11	Drive gear
12	Oil seal (RH inner)
13	Oil seal (LH outer)
14	Oil seal (LH inner)
15	Baffle plate
16	Drive gear case

Drive Gear Case Component Disassembly Procedure

1. Install the drive gear case component to the **SST.**

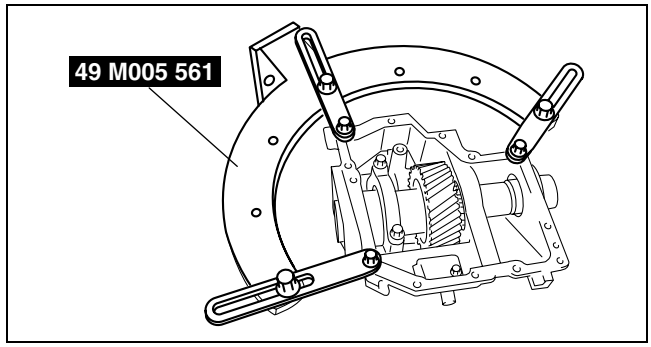

bawuua00000171

2. Tap the drive gear shaft using a suitable rod and hammer.

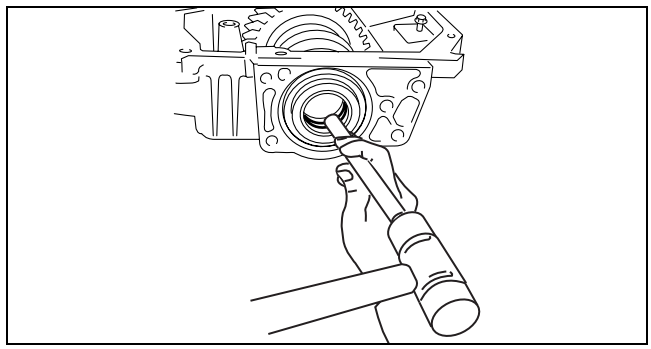

bawuua00000172

3. Take out the drive gear shaft from the drive gear case.

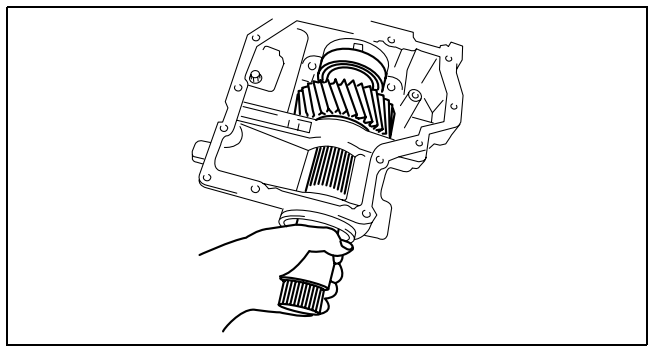

bawuua00000173

4. Make alignment marks on the bearing cap and drive gear case.
5. Remove the bearing cap.

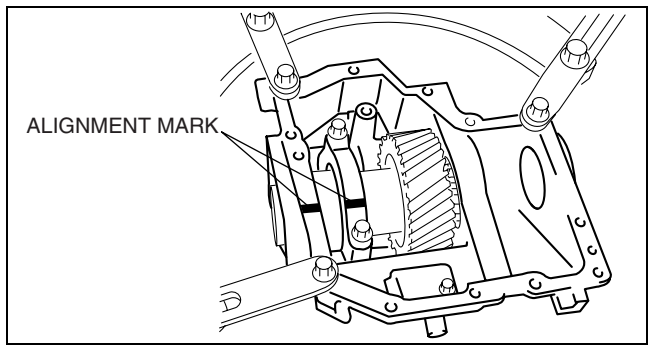

bawuua00000174

6. Insert a flathead screwdriver into spacer notch and remove the adjustment shim.

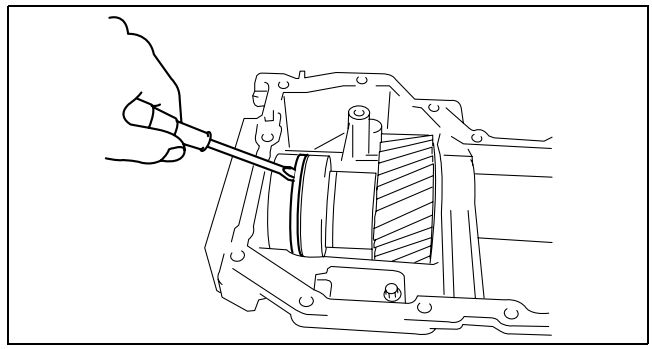

bawuua00000175

Caution

- **Place a rag on the case to protect it from damage.**

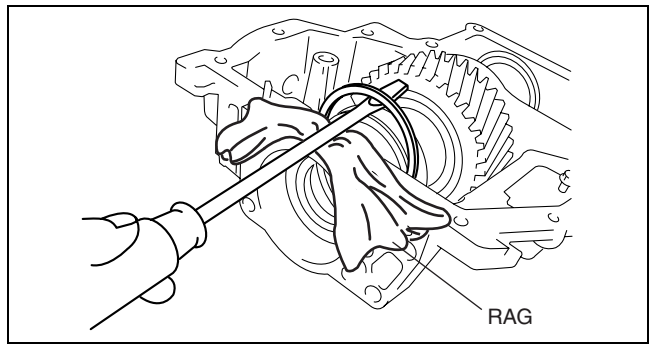

bawuua00000176

7. Remove the spacer.

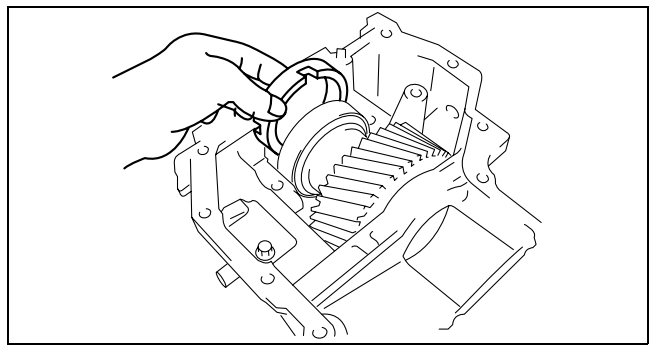

bawuua00000177

8. Remove the drive gear component.

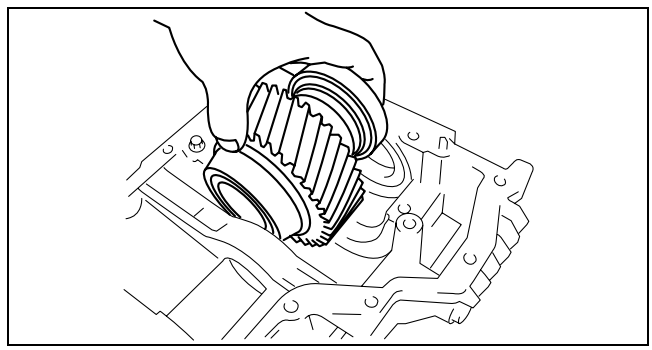

bawuua00000178

9. Using the **SST**, remove the oil seal (LH outer).

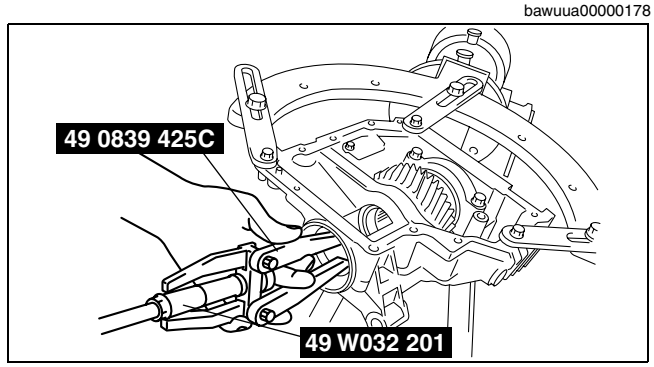

bawuua00000179

10. Using the **SST**, remove the oil seal (LH inner).

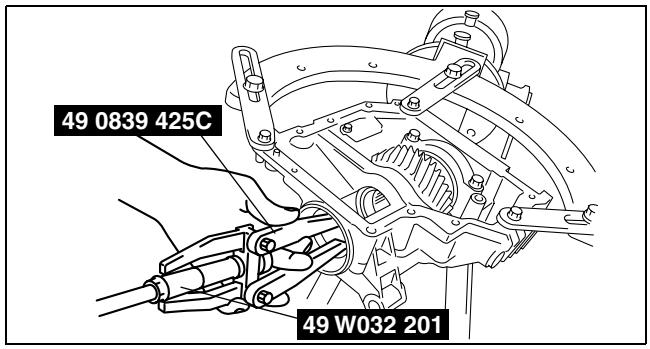

bawuua00000179

11. Using a suitable rod and hammer, remove the oil seal (RH outer).

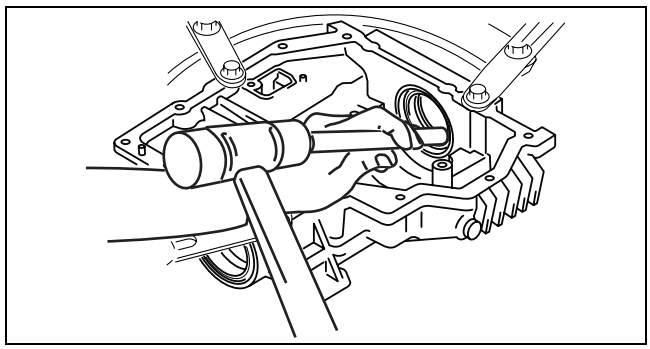

bawuua00000180

12. Using the **SST**, remove the oil seal (RH inner).

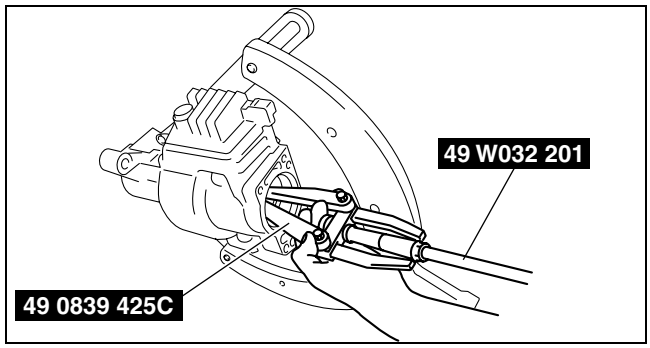

bawuua00000181

13. Using the **SST**, remove the bearing outer race (LH).

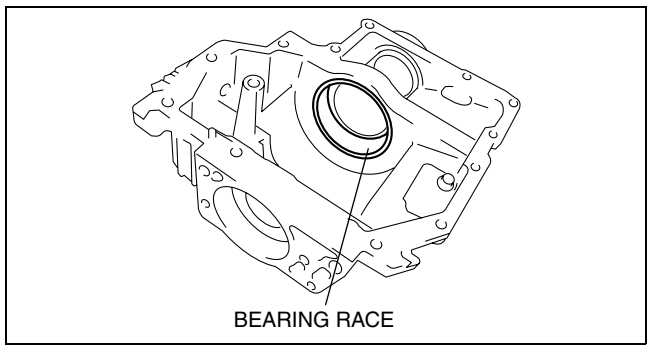

bawuua00000182

(1) Install the **SSTs** (49 W032 202, 49 S019 005).

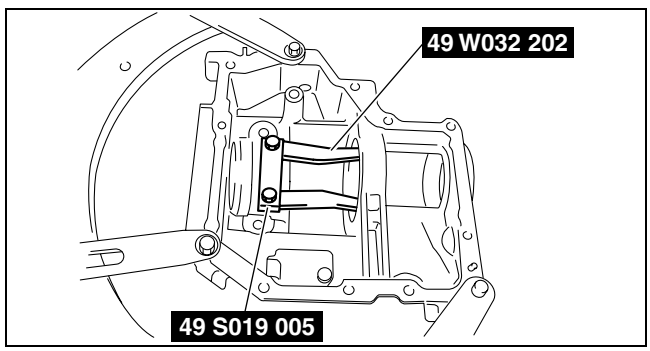

bawuua00000183

(2) Connect the **SST** (49 T032 316, 49 T032 317) to the **SSTs** (49 W032 202, 49 S019 005).

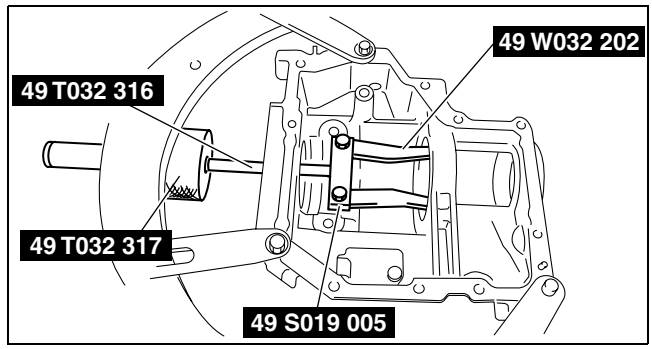

bawuua00000184

14. Remove the baffle plate.

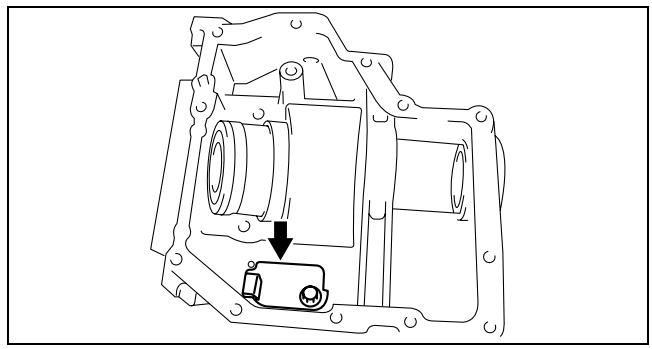

bawuua00000185

15. Using the **SST**, remove the bearing (RH).

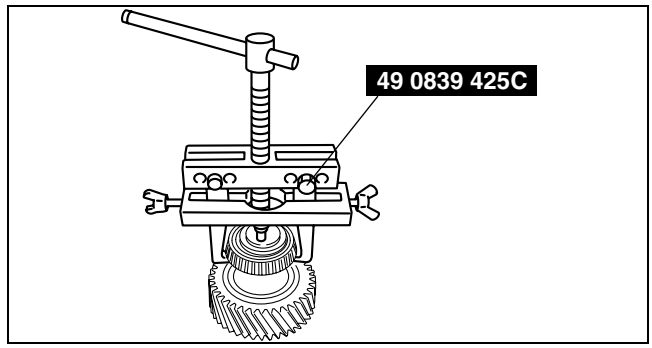

bawuua00000186

16. Using a flathead screwdriver, deform the bearing roller guide (LH) and remove it.

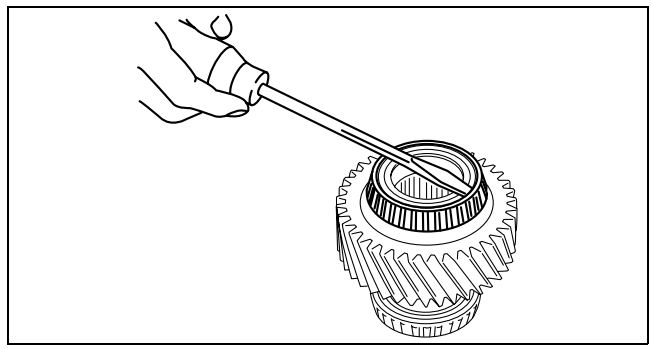

bawuua00000187

17. Using the **SST**, remove the bearing inner race (LH).

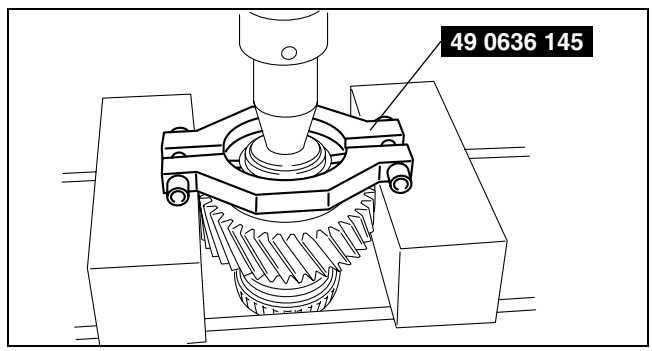

bawuua00000188

Front Carrier Component Disassembly

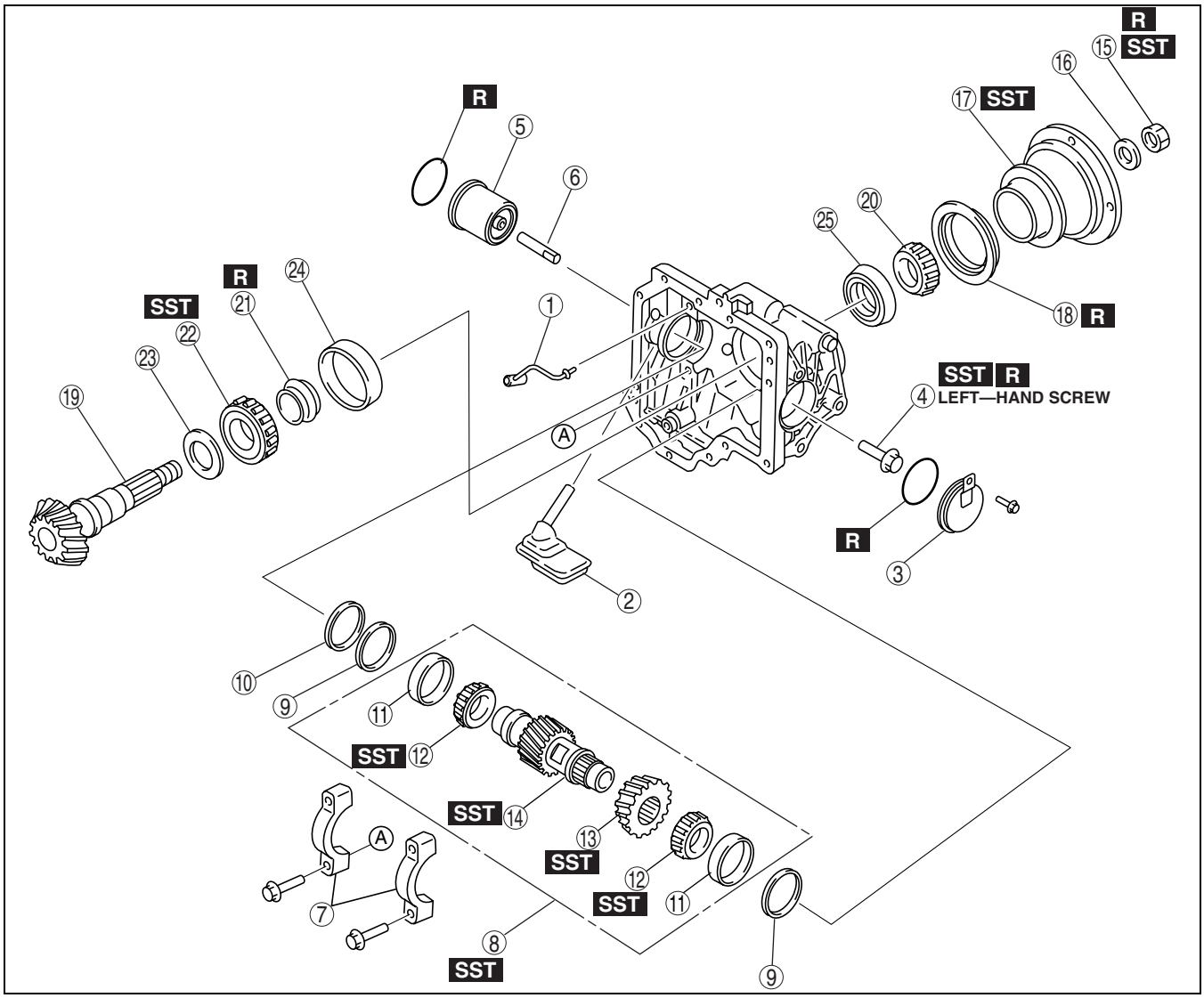

bawuua00000189

1	Oil pipe
2	Oil strainer
3	Side cover
4	Ring gear lockbolt
5	Oil pump
6	Oil pump shaft
7	Bearing cap
8	Ring gear component
9	Adjustment shim
10	Spacer
11	Bearing outer race (side)
12	Bearing (side)
13	Ring gear

14	Ring gear shaft
15	Locknut
16	Washer
17	Companion flange
18	Oil seal
19	Drive pinion gear
20	Bearing (rear)
21	Distance piece
22	Bearing (front)
23	Spacer
24	Bearing outer race (front)
25	Bearing outer race (rear)

Front Carrier Component Disassembling Procedure

1. Install the front carrier component to the **SST.**
2. Remove the oil strainer.
3. Remove the oil pipe.
4. Remove the side cover.

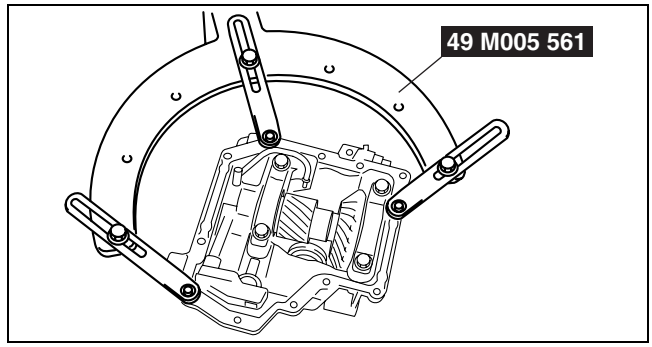

bawuua00000190

5. Remove the oil pump by turning it using pliers as shown in the figure.
   - If the oil pump shaft remains in the gear shaft side, remove the oil pump shaft.

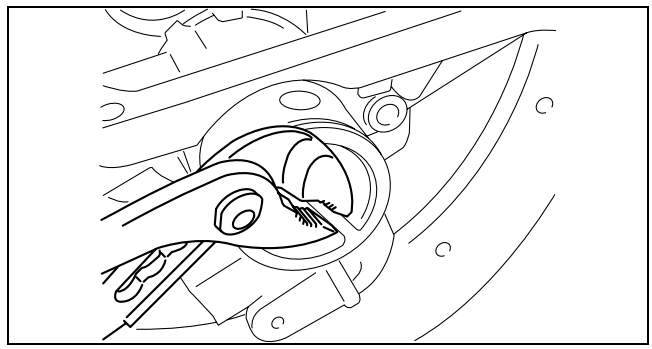

bawuua00000191

6. Make alignment marks on the bearing caps and front carrier.
7. Remove the bearing caps.

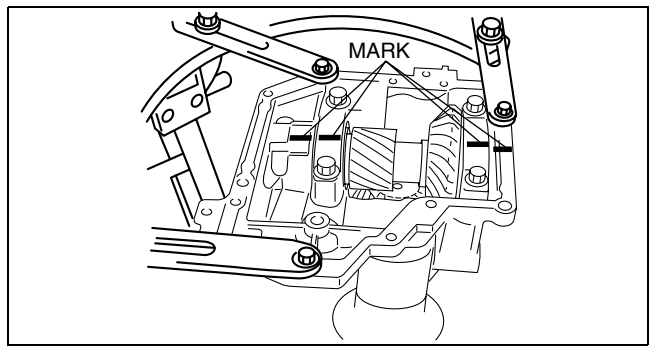

bawuua00000192

8. Using a suitable wrench, secure the ring gear shaft, and remove the ring gear lockbolt.

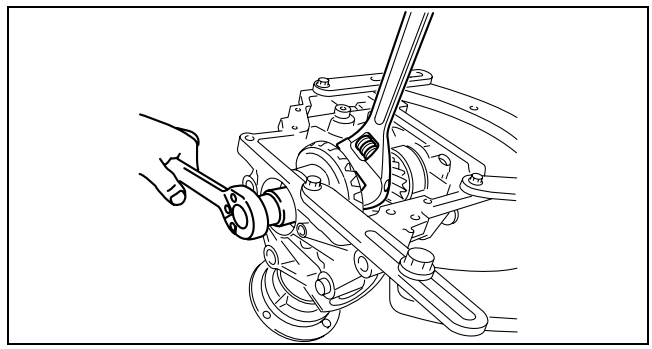

bawuua00000193

9. Using the **SST**, secure the companion flange, and remove the locknut and washer.

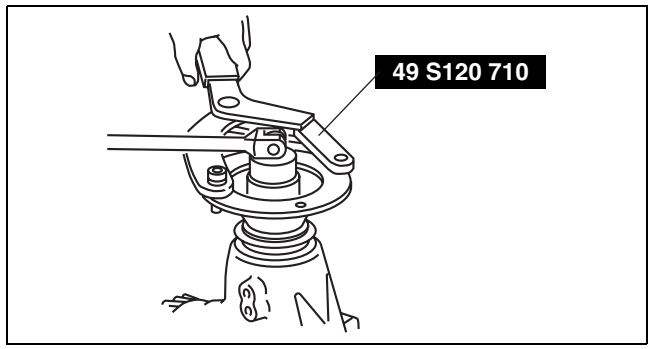

bawuua00000546

10. Using the **SST**, remove the companion flange.

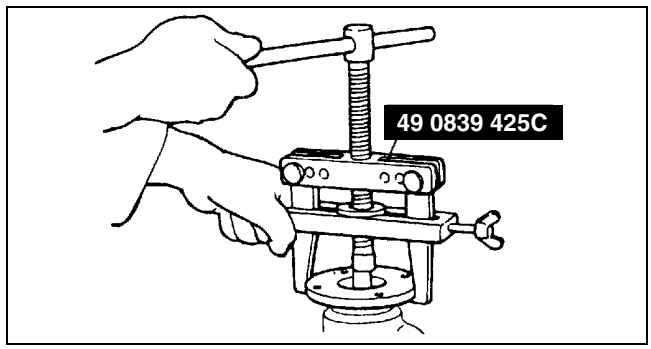

bawuua00000536

11. Using the **SSTs**, remove the ring gear component.
12. Remove the adjustment shims and spacer.

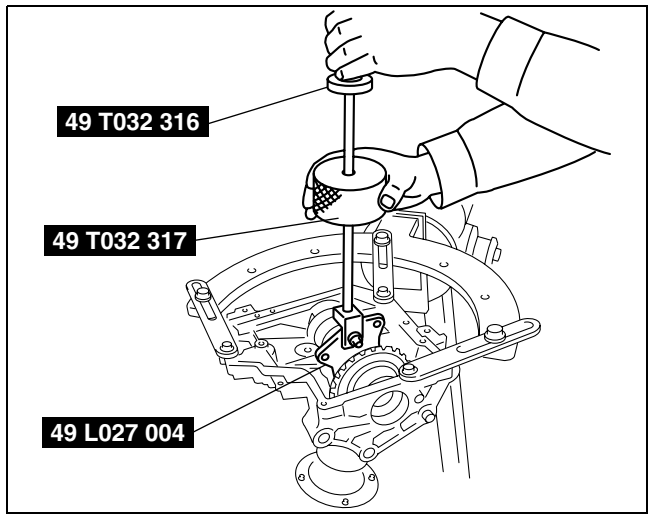

bawuua00000196

13. Install an appropriate nut to the drive pinion to prevent the thread from being damaged.
14. Lightly tap the drive pinion using a copper hammer and remove the drive pinion gear.

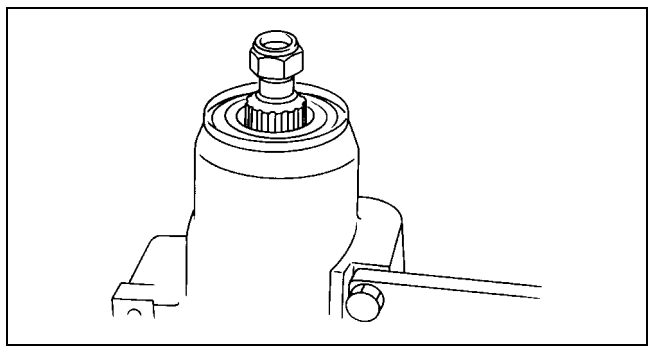

bawuua00000537

15. Using a flathead screwdriver, remove the oil seal.
16. Remove the bearing (rear) and distance piece.

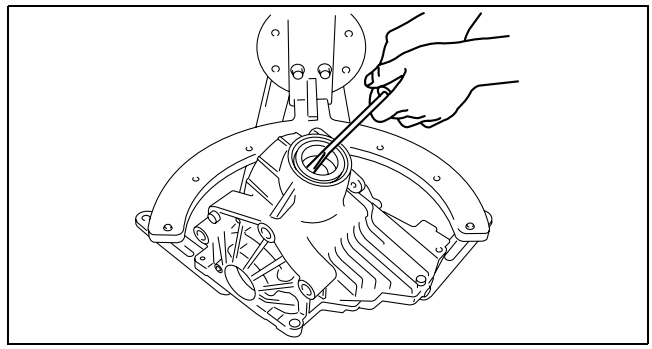

bawuua00000198

17. Using the **SST**, remove the bearing (front).
18. Remove the spacer.

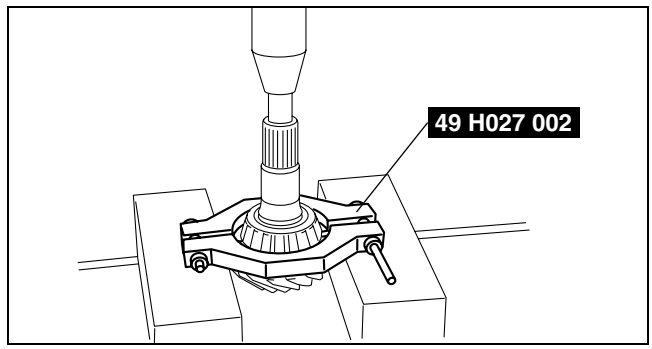

bawuua00000199

19. Attach the brass stick to the notch, tap the race end lightly and evenly, then remove the bearing outer races.

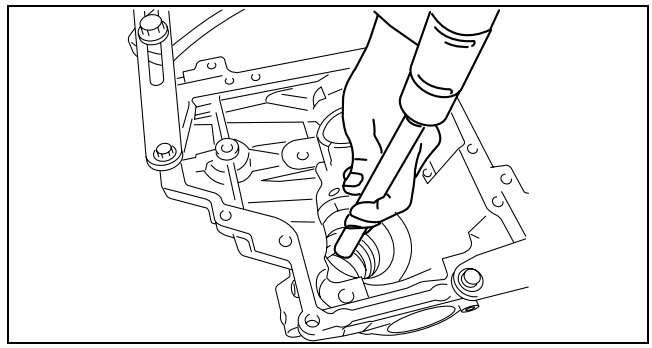

bawuua00000200

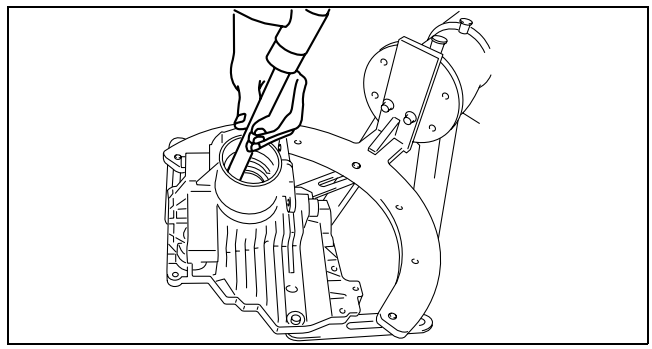

bawuua00000201

20. Using the **SSTs**, remove the bearing (side) (opposite ring gear side).

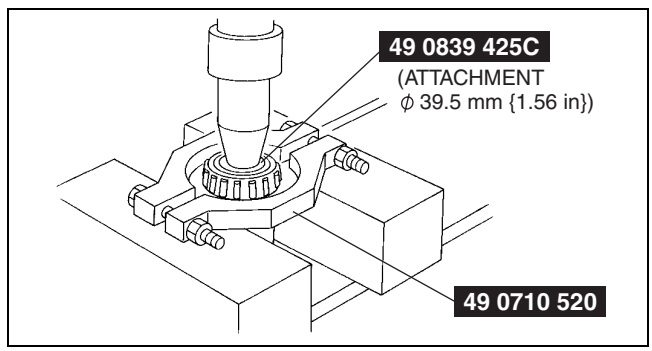

bawuua00000202

21. Using a **SST**, remove the bearing (side) (ring gear side) together with ring gear.
    Substitution SST
    - **49 T032 302**
      Outer diameter: 25— 30 mm {0.99— 1.18 in}
      Plate thickness: 1 mm {0.04 in} or more

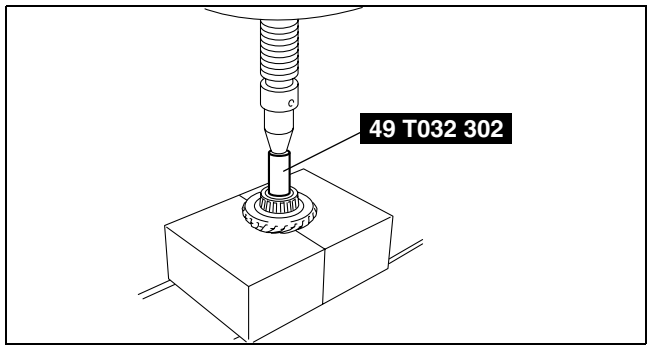

bawuua00000203

TRANSFER ASSEMBLY

id031600500300

Before Service Precautions

- Assemble with bare hands or using vinyl gloves. To prevent foreign material from entering the transfer, do not use cotton work gloves or a rag.
- Apply sufficient gear oil to the sliding surfaces and O-rings, and be careful not to damage when assembling.
- Replace the transfer with a new one if the case alignment surface is damaged. Be careful not to damage it since it may cause oil leakage.
- When installing silicone sealant, clean off the old sealant adhering to the sealing area and clean the sealing area with cleaning fluids.
- After installing a seal, leave the parts alone for **2 h or more**. Do not add oil or operate the vehicle during this time.

Warning

- **The engine stand is equipped with a self-lock mechanism. However, if the transfer is tilted, the self-lock mechanism could become inoperative. This could cause the transfer to rotate accidentally, resulting in injury. Therefore, make sure that the transfer is not tilted when it is on the engine stand. When turning the transfer, grasp the rotation handle firmly.**

Drive Gear Case Component Assembly

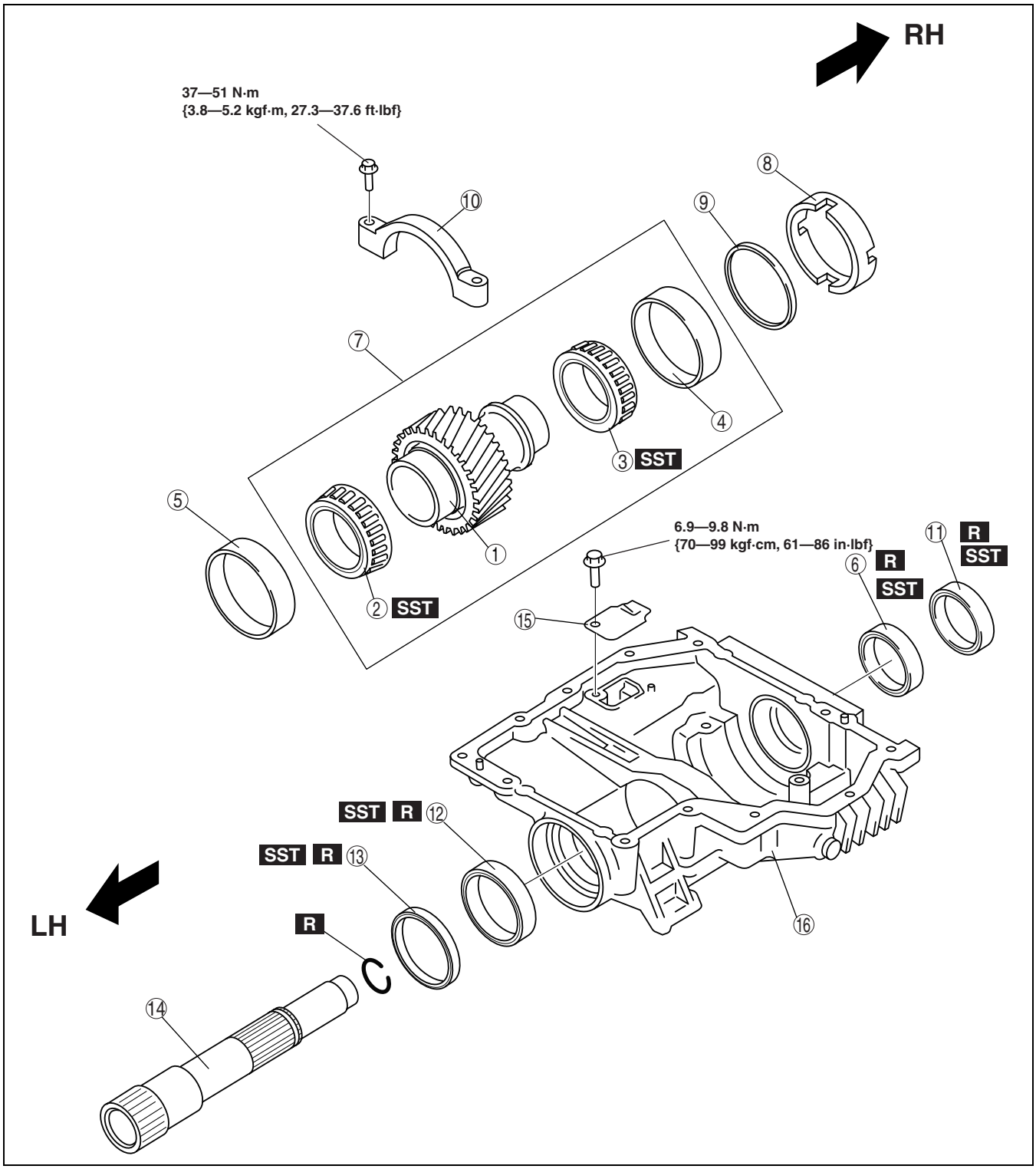

bawuua00000204

1	Drive gear
2	Bearing (LH)
3	Bearing (RH)
4	Bearing outer race (RH)
5	Bearing outer race (LH)
6	Oil seal (RH inner)
7	Drive gear component
8	Spacer

9	Adjustment shim
10	Bearing cap
11	Oil seal (RH outer)
12	Oil seal (LH inner)
13	Oil seal (LH outer)
14	Drive gear shaft
15	Baffle plate
16	Drive gear case

Drive Gear Case Component Assembly Procedure

1. Install the drive gear case to the **SST**.

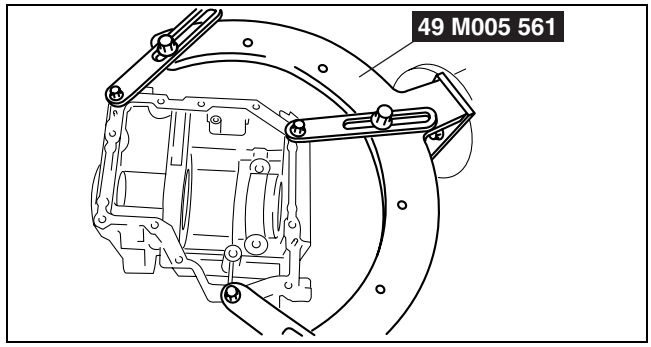

bawuua00000205

2. Install the baffle plate.

   Tightening torque
   6.9— 9.8 N·m {70— 99 kgf·cm, 61— 86 in·lbf}

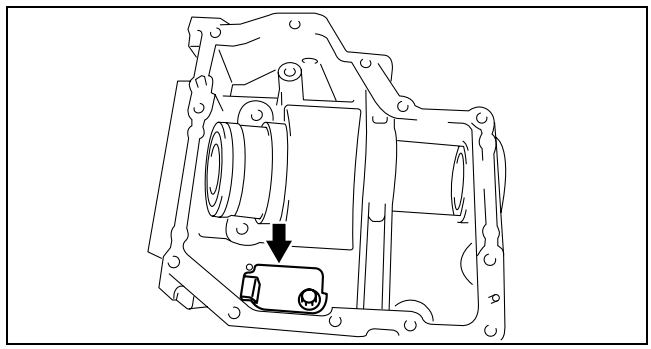

bawuua00000206

3. Using a press, assemble the bearing (RH).
   Substitution SST
   - **49 H028 202**
     Outer diameter: 58— 61 mm {2.29— 2.40 in}
     Inner diameter: 56 mm {2.20 in} or more
     Plate thickness: 1 mm {0.04 in} or more

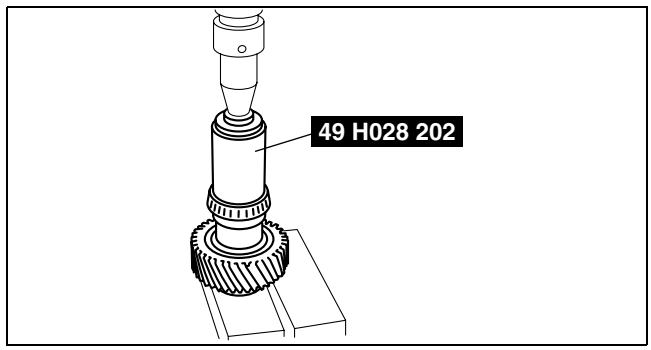

bawuua00000207

4. Using a press, assemble the bearing (LH).
   Substitution SST
   - **49 H028 202**
     Outer diameter: 58— 61 mm {2.29— 2.40 in}
     Inner diameter: 56 mm {2.20 in} or more
     Plate thickness: 1 mm {0.04 in} or more
5. Temporarily assemble the bearing outer race (RH) and spacer to the drive gear.

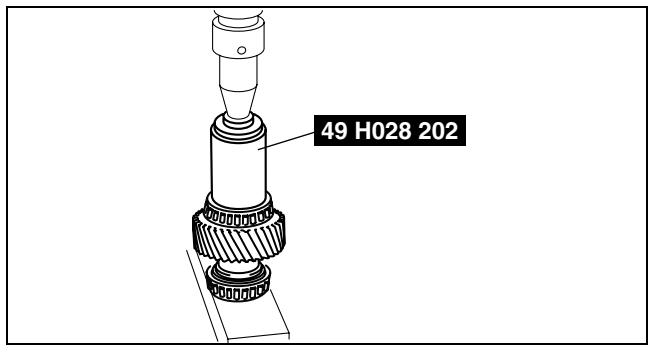

bawuua00000208

6. Place the drive gear component on the surface plate as shown in the figure, and measure the height using a vernier caliper or height gauge. This is dimension A.

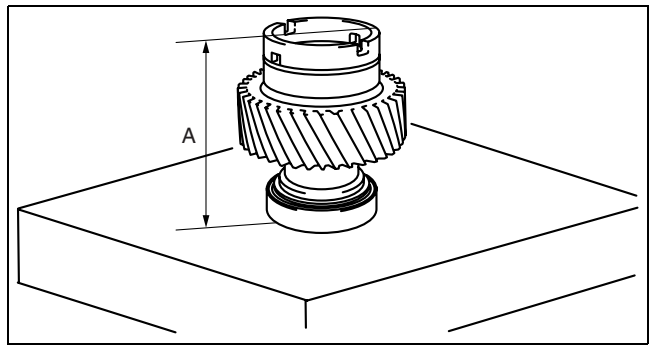

bawuua00000209

7. Measure the width of the drive gear installation area in the drive gear case. This is dimension B.
8. The maximum and minimum thickness C of the adjustment shim can be expressed by the following formula:

   C = B - A - (0.01— 0.03 mm {0.00039— 0.00118 in})

9. If the thickness of the installed adjustment shim is within the C range, use the shim as it is.
10. If the thickness of the installed adjustment shim is not within the C range, select the appropriate adjustment shim from the table below and use it.

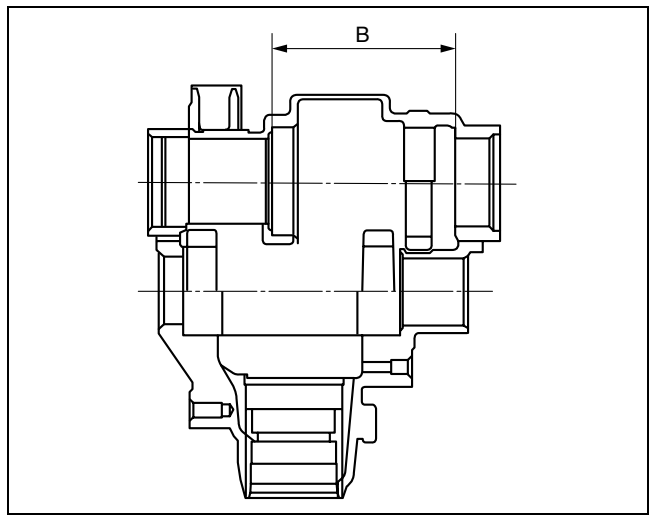

bawuua00000210

Adjustment shim

Identification mark	Thickness (mm {in})	Identification mark	Thickness (mm {in})
350	3.50 {0.1378}	420	4.20 {0.1654}
355	3.55 {0.1398}	425	4.25 {0.1673}
360	3.60 {0.1417}	430	4.30 {0.1693}
365	3.65 {0.1437}	435	4.35 {0.1713}
370	3.70 {0.1457}	440	4.40 {0.1732}
375	3.75 {0.1476}	445	4.45 {0. 1752}
380	3.80 {0.1496}	450	4.50 {0.1772}
385	3.85 {0.1516}	455	4.55 {0.1791}
390	3.90 {0.1535}	460	4.60 {0. 1811}
395	3.95 {0.1555}	-	-
400	4.00 {0.1575}	-	-
405	4.05 {0.1594}	-	-
410	4.10 {0.1614}	-	-
415	4.15 {0.1634}	-	-

11. Using the plastic hammer, install the bearing outer race (LH).

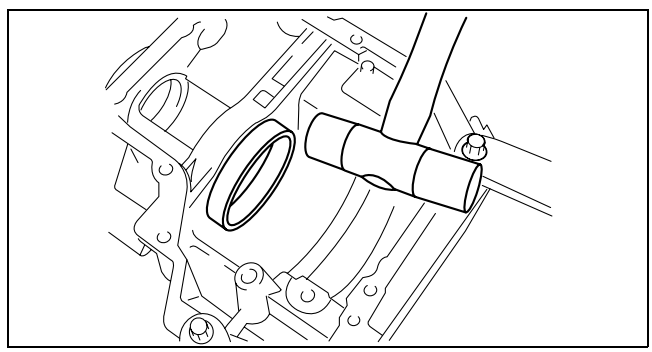

bawuua00000211

12. Install the drive gear component.

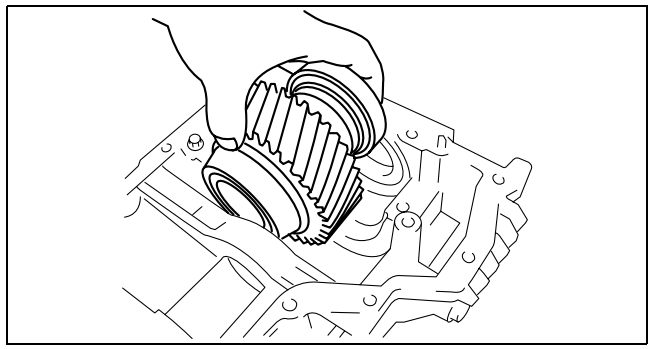

bawuua00000212

13. Install the spacer with its notch facing the bearing, and also facing upward, as shown in the figure.

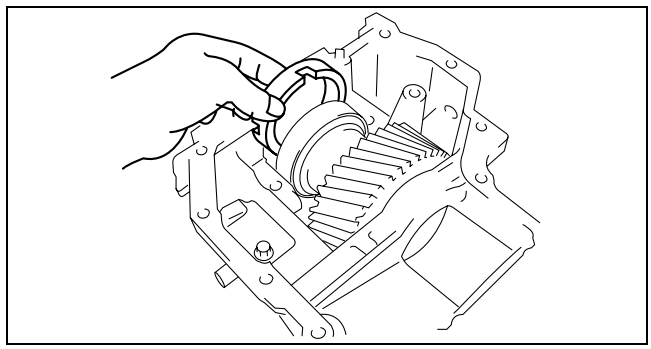

bawuua00000213

14. Using a plastic hammer, assemble the adjustment shim.

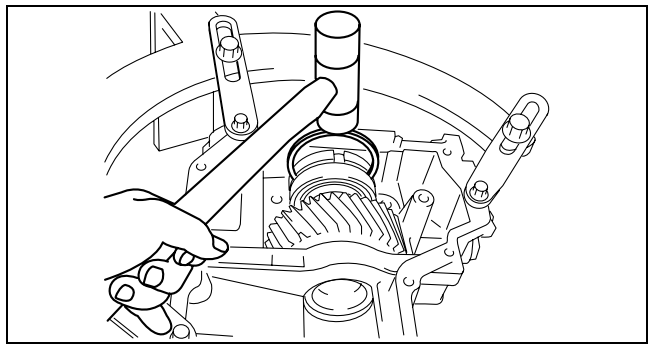

bawuua00000214

15. Align the bearing cap alignment marks, assemble the bearing cap.

    Tightening torque
    37— 51 N·m {3.8— 5.2 kgf·m, 27.3— 37.6 ft·lbf}

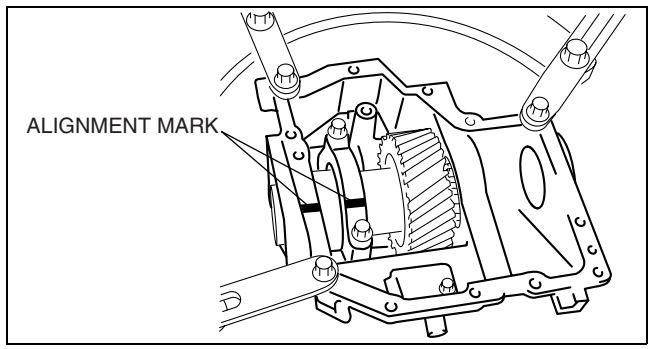

bawuua00000215

16. Assemble the **SST** to the drive gear shaft, and hand-tighten the nut.

    SST tightening torque
    2.1 N·m {21 kgf·cm, 19 in·lbf}

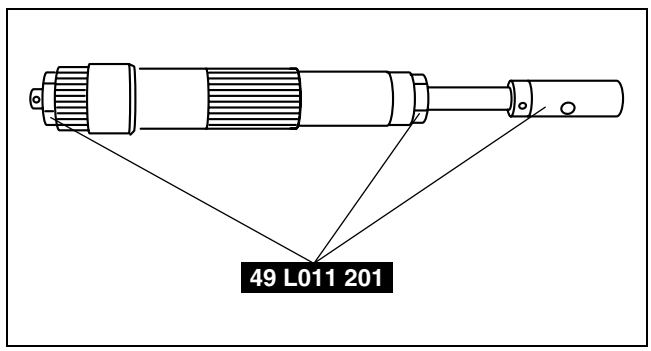

bawuua00000216

17. Install the drive gear shaft with the **SST** assembled and verify that the preload is within the specification using the torque wrench as shown in the figure.

    Standard drive gear bearing preload
    0.6— 2.1 N·m {6.2— 21.4 kgf·cm, 5.4— 18.5 in·lbf}

    - If the drive gear rotational torque is not within the specification, adjust it by selecting the proper spacer.

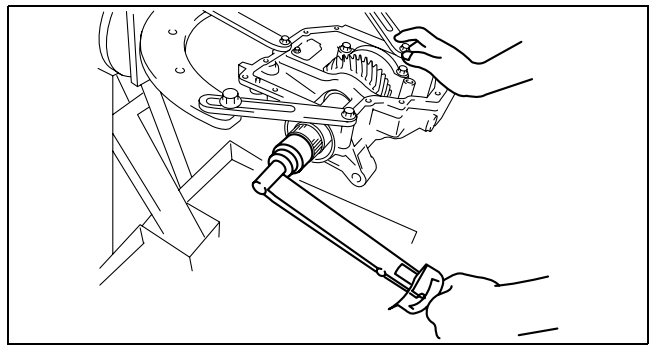

bawuua00000217

18. Remove the drive gear shaft.
19. Using a **SSTs**, install the oil seals.

Note
- Mark the press-in depth of each oil seal to the SST and press fit oil seals to the specified position.

LH inner

Substitution SST
- **49 S019 006**
  Outer diameter: 61— 66 mm {2.41— 2.59 in}
  Plate thickness: 2 mm {0.08 in} or more

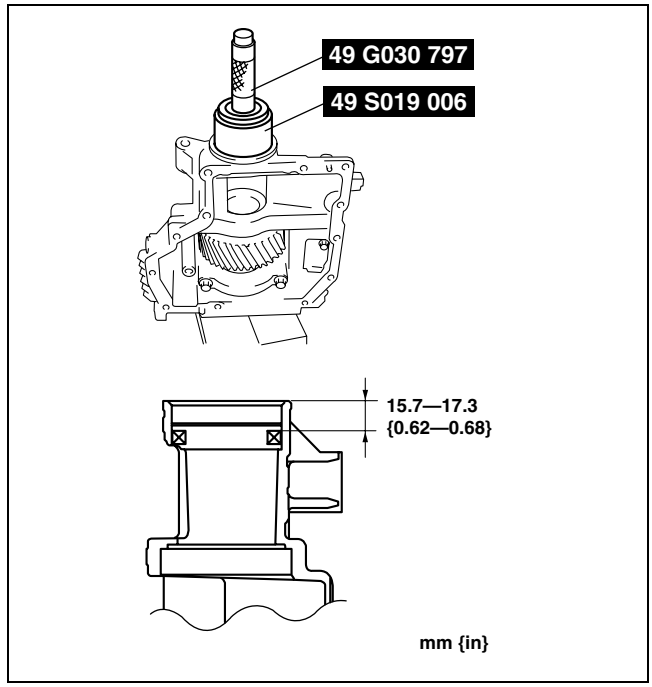

bawuua00000218

LH outer

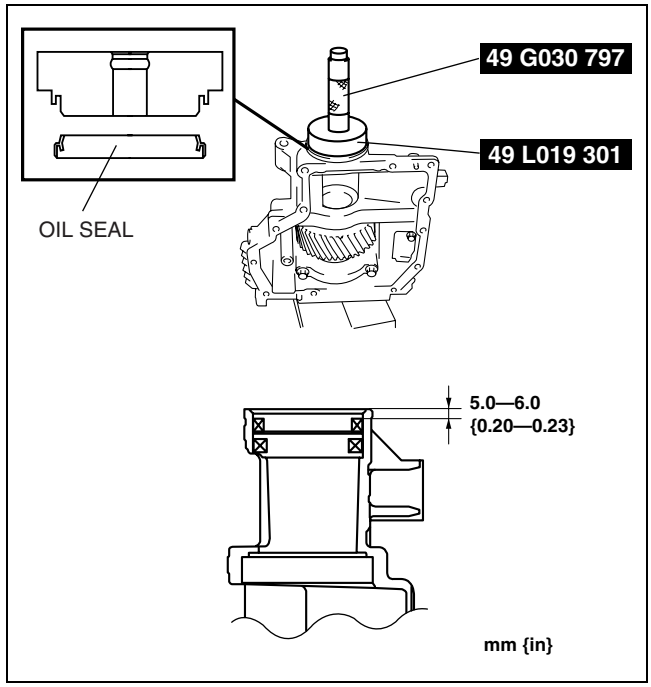

bawuua00000219

RH inner

Substitution SST

- **49 B025 001**
  Outer diameter: 57— 64 mm {2.25— 2.51 in}
  Plate thickness: 2 mm {0.08 in} or more

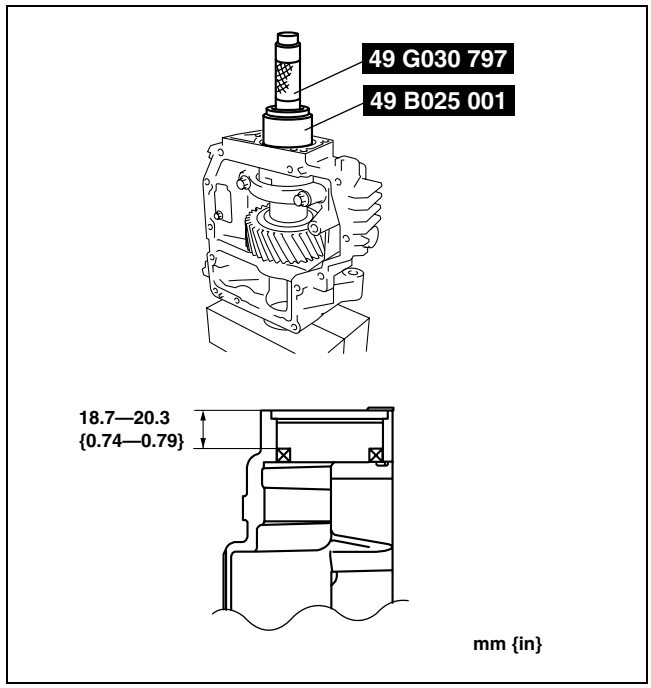

bawuua00000220

RH outer

Substitution SST

- **49 T034 201A**
  Outer diameter: 59— 64 mm {2.33— 2.51 in}
  Inner diameter: 55 mm {2.17 in} or more
  Length: 5 mm {0.20 in} or more
  Plate thickness: 2 mm {0.08 in} or more

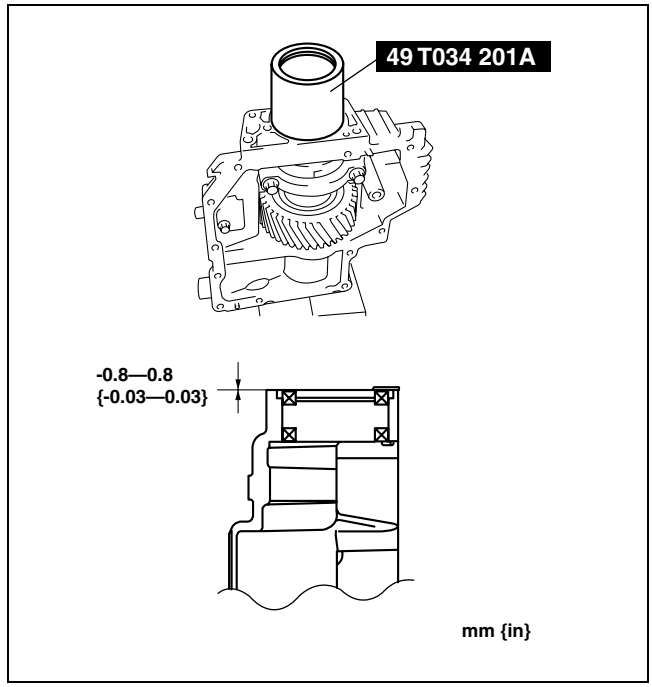

bawuua00000221

20. Install the C-ring to the drive gear shaft and insert the drive gear shaft until it is secured by the C-ring.

    Caution
    - **Be careful not to damage the oil seal when installing the drive gear shaft.**

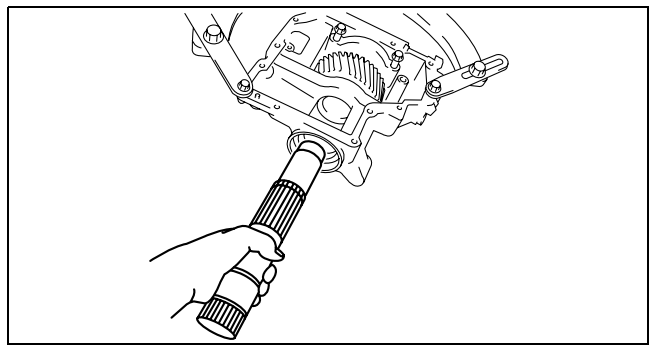

bawuua00000222

21. Pull the drive gear shaft by hand and verify that the drive gear shaft is secured by the C-ring at the specified position.

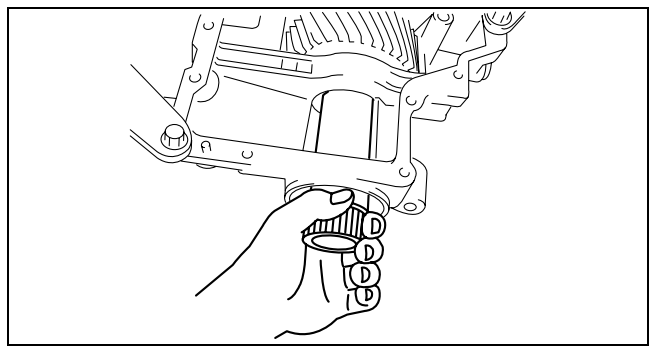

bawuua00000223

Front Carrier Component Assembly

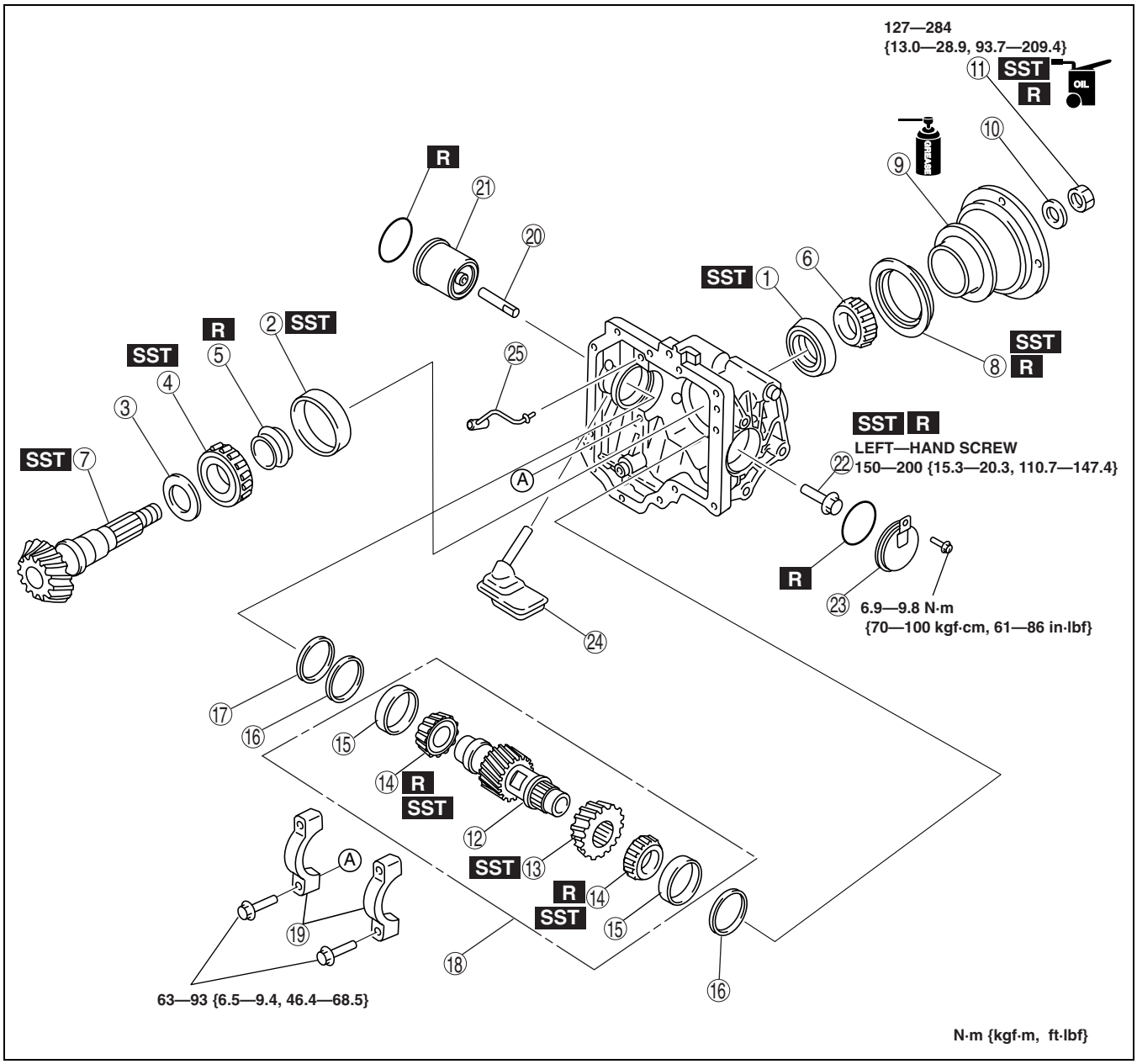

bawuua00000224

1	Bearing outer race (rear)
2	Bearing outer race (front)
3	Spacer
4	Bearing (front)
5	Distance piece
6	Bearing (rear)
7	Drive pinion gear
8	Oil seal
9	Companion flange
10	Washer
11	Locknut
12	Ring gear shaft
13	Ring gear

14	Bearing (side)
15	Bearing outer race (side)
16	Adjustment shim
17	Spacer
18	Ring gear component
19	Bearing cap
20	Oil pump shaft
21	Oil pump
22	Ring gear lockbolt
23	Side cover
24	Oil strainer
25	Oil pipe

Front Carrier Component Assembly Procedure

1. Using a press, assemble the opposite ring gear side bearing (side) to the ring gear shaft.
   Substitution SST
   - **49 G033 105** (A)
     Outer diameter: 25 mm {0.99 in} or more
   - **49 G033 105** (B)
     Outer diameter: 34— 40 mm {1.34— 1.57 in}
     Plate thickness: 1 mm {0.04 in} or more

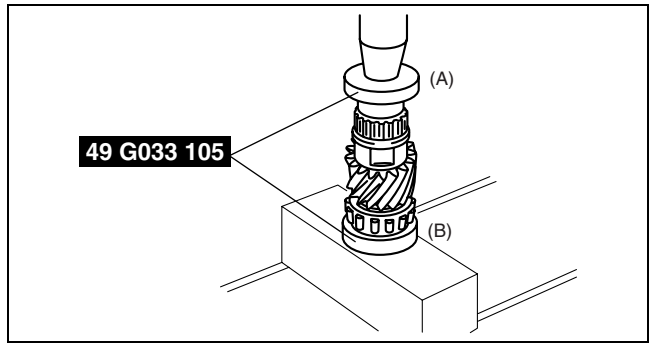

bawuua00000225

2. Using a press, assemble the ring gear to the ring gear shaft
   Substitution SST
   - **49 G033 105**
     Outer diameter: 15— 30 mm {0.60— 1.18 in}

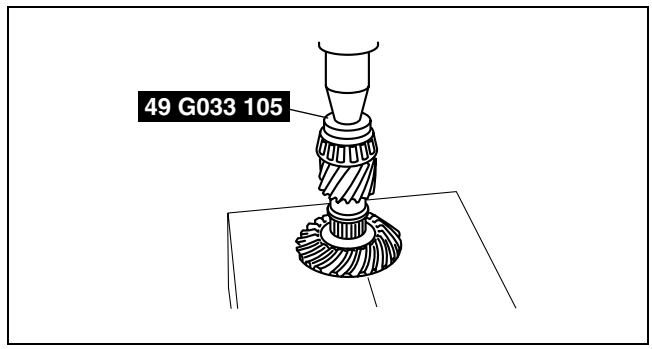

bawuua00000226

3. Using a press, assemble the ring gear side bearing (side).
   Substitution SST
   - **49 G033 105** (A)
     Outer diameter: 15— 30 mm {0.60— 1.18 in}
   - **49 G033 105** (B)
     Outer diameter: 34— 40 mm {1.34— 1.57 in}
     Plate thickness: 1 mm {0.04 in} or more
4. Temporarily assemble the bearing outer races (side).

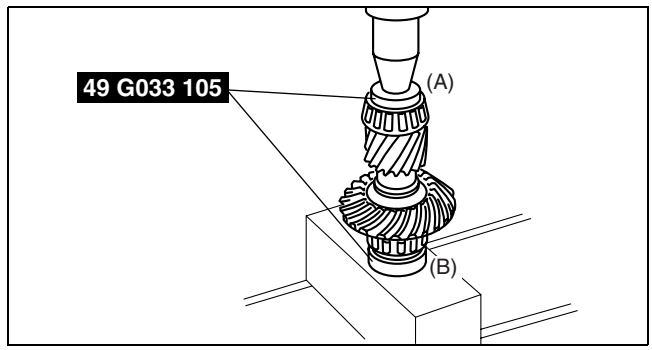

bawuua00000227

5. Place the ring gear component on the surface plate as shown in the figure, and measure the height using a vernier caliper or height gauge. This is dimension A.

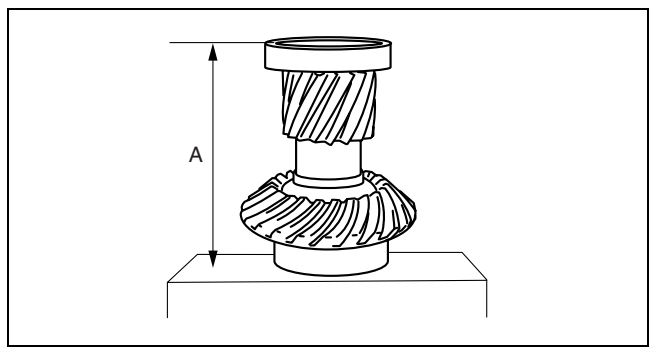

bawuua00000228

6. Measure the width of the front carrier ring gear installation area with the spacer installed. This is dimension B.
7. The maximum and minimum total thickness C of the adjustment shims on both sides can be expressed by the following formula:

   C = B - A - (0.01— 0.03 mm {0.00039— 0.00118 in})

8. If the total thickness of the installed adjustment shims is within the C range, use the shims as they are.

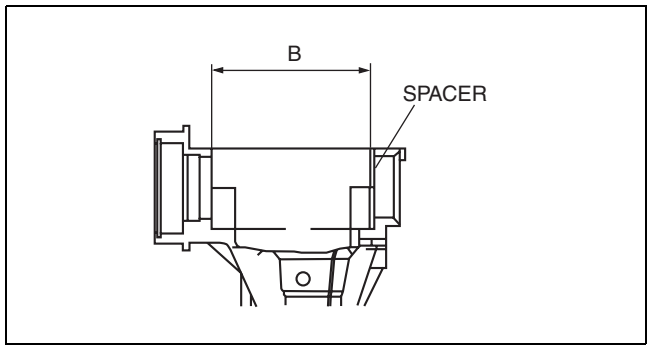

bawuua00000229

9. If the total thickness of the installed adjustment shims is not within the C range, select the appropriate number of adjustment shims from the table below and use them.

Adjustment shim

Identification mark	Thickness (mm {in})	Identification mark	Thickness (mm {in})
350	3.50 {0.1378}	410	4.10 {0.1614}
355	3.55 {0.1398}	415	4.15 {0.1634}
360	3.60 {0.1417}	420	4.20 {0.1654}
365	3.65 {0.1437}	425	4.25 {0.1673}
370	3.70 {0.1457}	430	4.30 {0.1693}
375	3.75 {0.1476}	435	4.35 {0.1713}
380	3.80 {0.1496}	440	4.40 {0.1732}
385	3.85 {0.1516}	445	4.45 {0.1752}
390	3.90 {0.1535}	450	4.50 {0.1772}
395	3.95 {0.1555}	455	4.55 {0.1791}
400	4.00 {0.1574}	460	4.60 {0.1811}
405	4.05 {0.1594}	-	-

Note
- When reusing adjustment shims, do not mix up the left and right shims.
- Do not mix up the left and right side bearing races and spacers.

10. Install the front carrier to the **SST**.
11. Install the adjustment shim chosen for the front carrier ring gear side and spacer on opposite side.
12. Assemble the ring gear component to the front carrier.

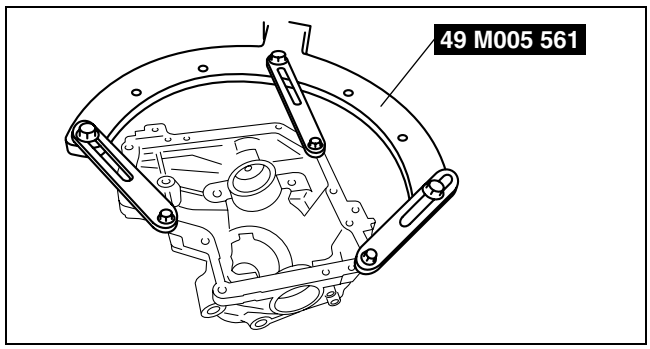

bawuua00000230

13. Using the plastic hammer, assemble the selected adjustment shim in between the spacer and bearing race as shown in the figure.

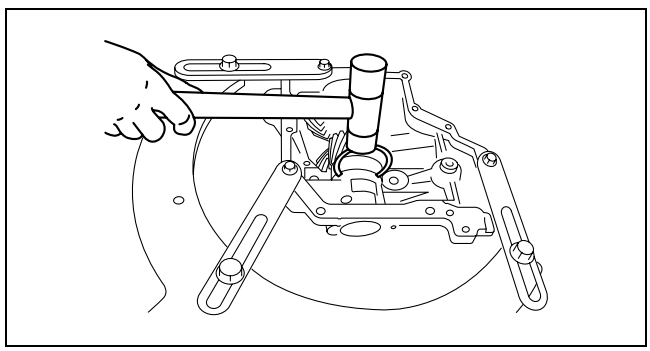

bawuua00000231

14. Align the alignment marks of the bearing caps, assemble the bearing caps, and tighten the bolts temporarily.

    Caution
    - **Locking compound is applied to a new ring gear lockbolt. Reuse the old ring gear lock bolt when inspecting the preload.**

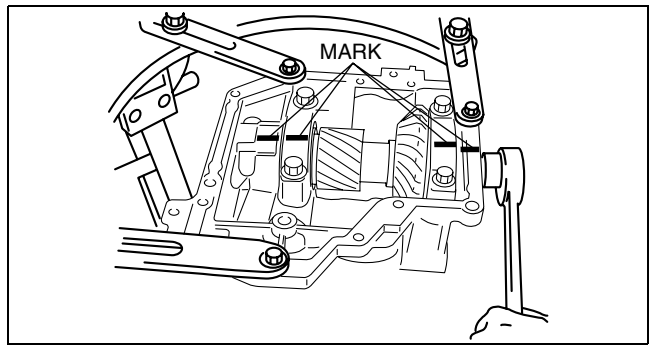

bawuua00000232

15. Install the ring gear lockbolt and inspect the ring gear bearing preload.

    Standard ring gear bearing preload
    0.6— 2.1 N·m {6.2— 21.4 kgf·cm, 5.4— 18.5 in·lbf}

    - If the rotational torque is not within the specification, select the suitable adjustment shim and reinstall so that the rotational torque is within the specification.
16. Follow the disassembling procedure in Step 11 to remove the ring gear component.

    Note
    - Identify the left and right side of the adjustment shim for reinstallation.

17. Using the **SSTs**, assemble the bearing outer races.
    Substitution SST
    - **49 F027 005**
      Outer diameter: 61— 61.8 mm {2.41— 2.43 in}
      Plate thickness: 1 mm {0.04 in} or more
    - **49 F027 007**
      Outer diameter: 70— 71.8 mm {2.76— 2.82 in}
      Plate thickness: 1 mm {0.04 in} or more

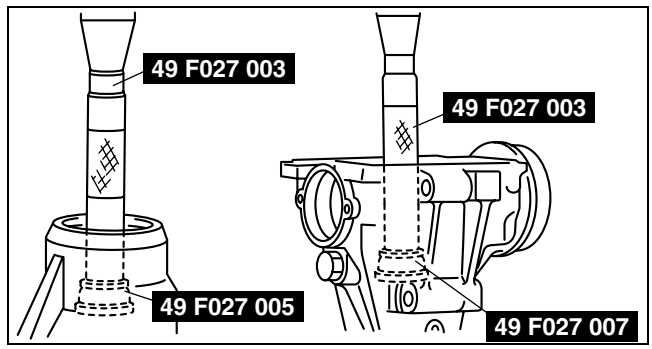

bawuua00000233

18. Using the **SSTs**, adjust the drive pinion height as follows:
    (1) Install the **SSTs** to the removed spacer and bearing.
    (2) Assemble the spacer, bearing and **SSTs**. Using an O-ring, secure the **SST**.
    (3) Assemble the bearing, **SSTs**, washer, and nut.
    (4) Tighten the nut to the **SST** to where it can still be rotated by hand.

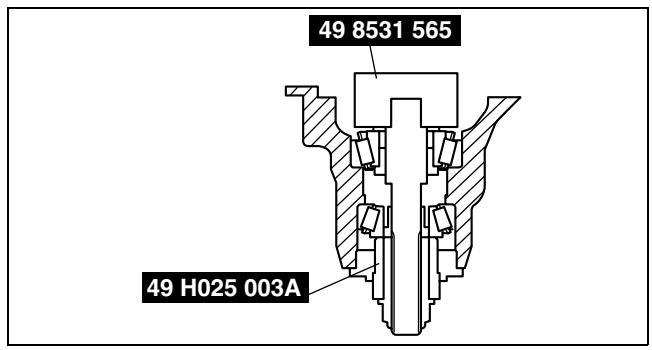

bawuua00000234

    (5) Place the **SSTs** on the plate surface and set the dial gauge to “0”.

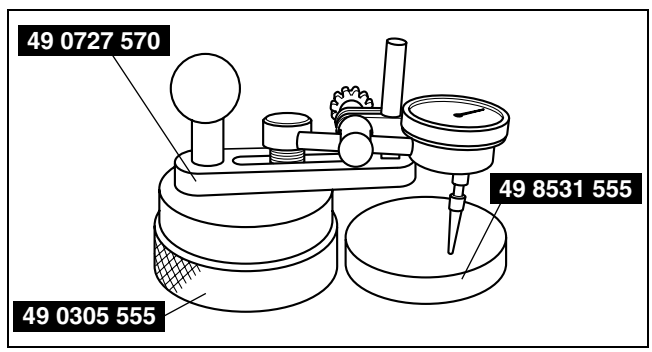

bawuua00000235

(6) Position the **SST** (49 0727 570) on the driver pinion model.
(7) Attach the dial gauge head to where the carrier bearing outer race (side) is installed and measure the lowest position. Also, measure the value of where the side bearing outer race (side) is installed on the opposite side.
(8) Measure the average value between the values of both sides measured in Step 7. This value is the spacer thickness which determines the pinion height.

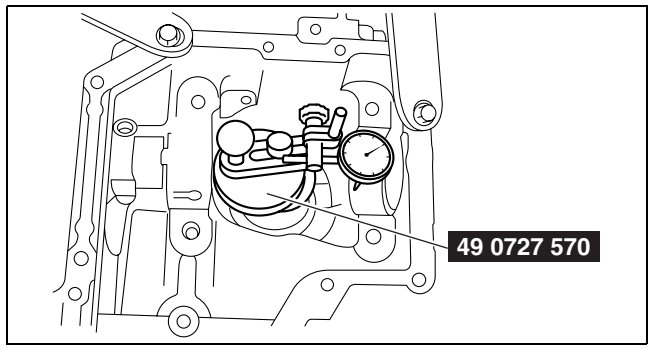

bawuua00000236

Pinion height error factor within allowance limit
± 0.032 mm {± 0.00126 in}

Spacer

Identification mark	Thickness (mm {in})	Identification mark	Thickness (mm {in})
08	3.08 {0.1213}	29	3.29 {0.1295}
09	3.095 {0.1219}	30	3.305 {0.1301}
11	3.11 {0.1224}	32	3.32 {0.1307}
12	3.125 {0.1230}	33	3.335 {0.1313}
14	3.14 {0.1236}	35	3.35 {0.1319}
15	3.155 {0.1242}	36	3.365 {0.1325}
17	3.17 {0.1248}	38	3.38 {0.1331}
18	3.185 {0.1254}	39	3.395 {0.1335}
20	3.20 {0.1260}	41	3.41 {0.1343}
21	3.215 {0.1266}	42	3.425 {0.1348}
23	3.23 {0.1272}	44	3.44 {0.1354}
24	3.245 {0.1278}	45	3.455 {0.1360}
26	3.26 {0.1283}	47	3.47 {0.1366}
27	3.275 {0.1289}	-	-

19. Assemble the spacer selected for pinion height adjustment with the rounded off side facing the gears.
20. Using the **SST**, assemble the bearing (front) to the drive pinion gear.
    Substitution SST
    - **49 F401 331, 49 F401 337A**
      Outer diameter: 37.2— 43.3 mm {1.47— 1.70 in}
      Inner diameter: 35.2 mm {1.39 in} or more
      Plate thickness: 1 mm {0.04 in} or more
      Inner diameter depth: 140 mm {5.51 in} or more
21. Assemble a new distance piece to the drive pinion gear.
22. Assemble the drive pinion gear to the front carrier.
23. Install the bearing (rear), companion flange, washer, and new locknut to the drive pinion and temporarily tighten.
24. Rotate the companion flange by hand and seat the bearing.

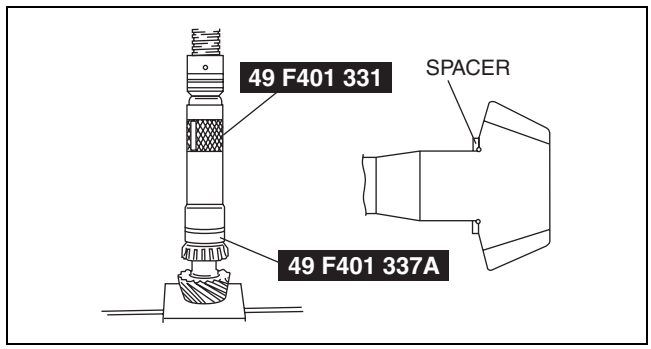

bawuua00000237

25. Using the **SST**, tighten the locknut from the lower limit of the specified tightening torque and set to the preload value. Note the tightening torque when the specified preload value is obtained.

    Tightening torque
    127— 284 N·m {13.0— 28.9 kgf·m, 93.7— 209.4 ft·lbf}

    Drive pinion preload value
    0.88— 1.37 N·m {9.0— 14.0 kgf·cm, 7.9— 12.1 in·lbf}

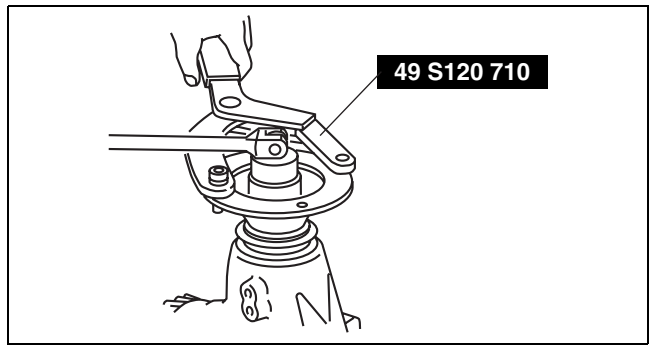

bawuua00000546

26. Remove the locknut, washer, and companion flange.
27. Apply oil to the lip area of a new oil seal.
28. Using the **SST**, assemble the oil seal.
    Substitution SST
    - **49 U027 003**
      Outer diameter: 66— 70.8 mm {2.60— 2.78 in}
      Inner diameter: 53.7 mm {2.12 in} or more
      Plate thickness: 1 mm {0.04 in} or more
      Inner diameter depth: 50 mm {1.97 in} or more
29. Apply the grease to the bearing contact surface of the companion flange.
30. Assemble the companion flange.

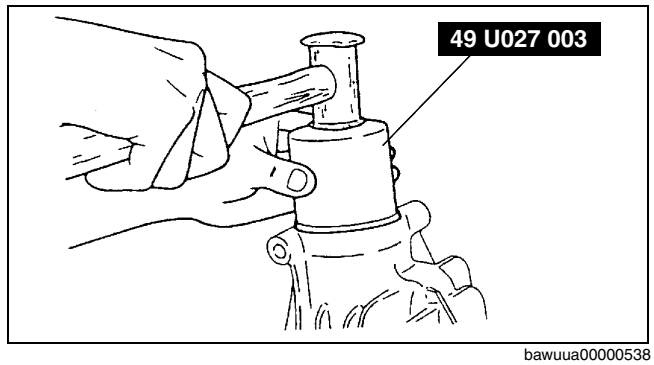

bawuua00000538

31. Using the **SST**, tighten the new locknut to the tightening torque noted when the preload was adjusted.
32. Reverify the preload.

    Drive pinion preload value
    0.88— 1.37 N·m {9.0— 14.0 kgf·cm, 7.9— 12.1 in·lbf}

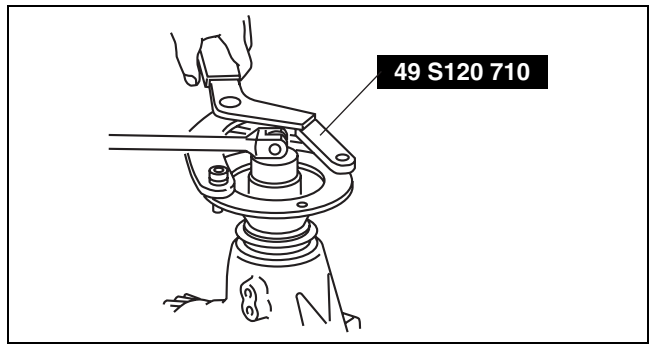

bawuua00000546

33. Assemble the ring gear component following the procedure in Step 11 to 14.
34. Set the dial gauge with the measuring probe attached perpendicularly to the end of one of the ring gear teeth.
35. Secure the drive pinion and measure the backlash from when the ring gear is moved.

    Standard drive pinion backlash
    0.09— 0.11 mm {0.0035— 0.0043 in}

    Caution
    - **Perform the backlash measurement on the ring gear circumference at four points.**

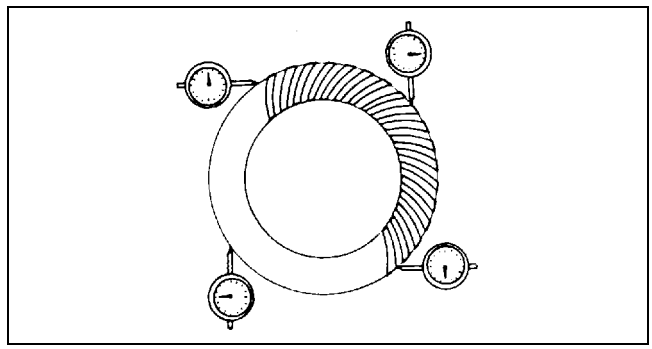
bawuua00000539

36. If the backlash is not within the specified range above, adjust it by sliding the ring gear in the shaft direction.

    Note
    - Slide the ring gear in the shaft direction by replacing the adjustment shim. If the right side adjustment shim is replaced with one that is 0.05 mm {0.002 in} thicker, the left side shim must be replaced with one that is 0.05 mm {0.002 in} thinner.

37. Tighten the bearing cap bolts.

Tightening torque
63— 93 N·m {6.5— 9.4 kgf·m, 46.4— 68.5 ft·lbf}

38. Perform the drive pinion and ring gear tooth contact inspection.
    (1) Apply tooth marking compound evenly to both surfaces of the ring gear.
    (2) Rotate the ring gear back and forth several times.
    (3) Inspect for gear tooth contact at four points on the ring gear circumference and verify that the gear tooth contact indicated by the tooth marking compound is as indicated in the figure.
        - If the tooth contact points are normal, wipe off the marking compound.
        - If the tooth contact points are not normal, adjust the pinion height, then adjust the backlash.

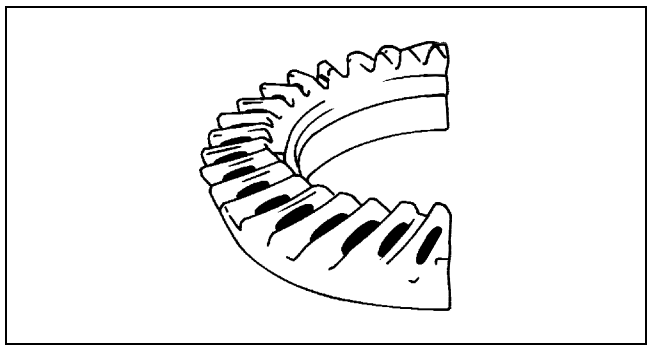

bawuua00000540

    (4) If toe and flank contact is indicated as shown in the figure, replace the drive pinion spacer with a thinner one to maintain the drive pinion further away.

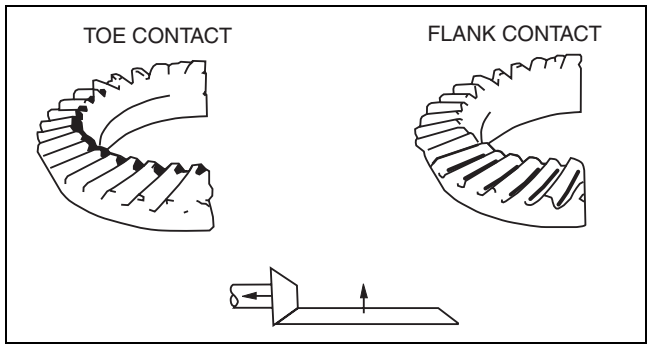

bawuua00000242

    (5) If heal and face contact is indicated as shown in the figure, replace the drive pinion spacer with a thicker one to bring the drive pinion closer.

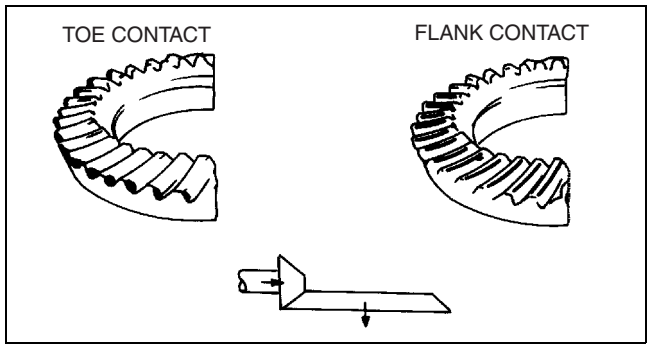

bawuua00000243

39. Using a suitable wrench, secure the ring gear shaft and tighten the new ring gear lockbolt to the specified tightening torque.

Caution
- **Before installing the new ring gear lockbolt, remove the old thread-locking compound remaining on the thread of the ring gear shaft.**

Tightening torque
150— 200 N·m {15.3— 20.3 kgf·m, 110.7— 147.4 ft·lbf}

40. Align the cast hexagon of the oil pump shaft and assemble the oil pump and oil pump shaft.

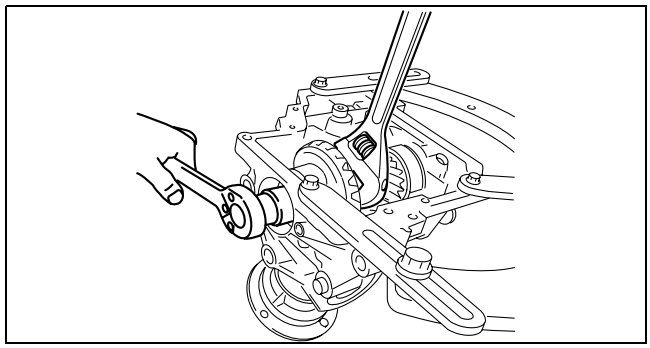

bawuua00000244

41. Align the oil holes of the oil pump and front carrier.
42. Assemble the oil strainer.
43. Assemble the oil pipe.
44. Apply oil to a new O-ring and assemble the side cover.
45. Assemble the side cover to the front carrier.

    Tightening torque
    6.9— 9.8 N·m {70— 100 kgf·cm, 61— 86 in·lbf}

46. Remove the front carrier component from the **SST**.

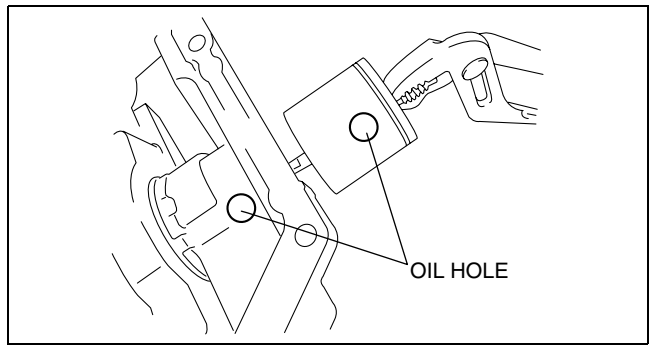

bawuua00000245

Transfer Component Assembly

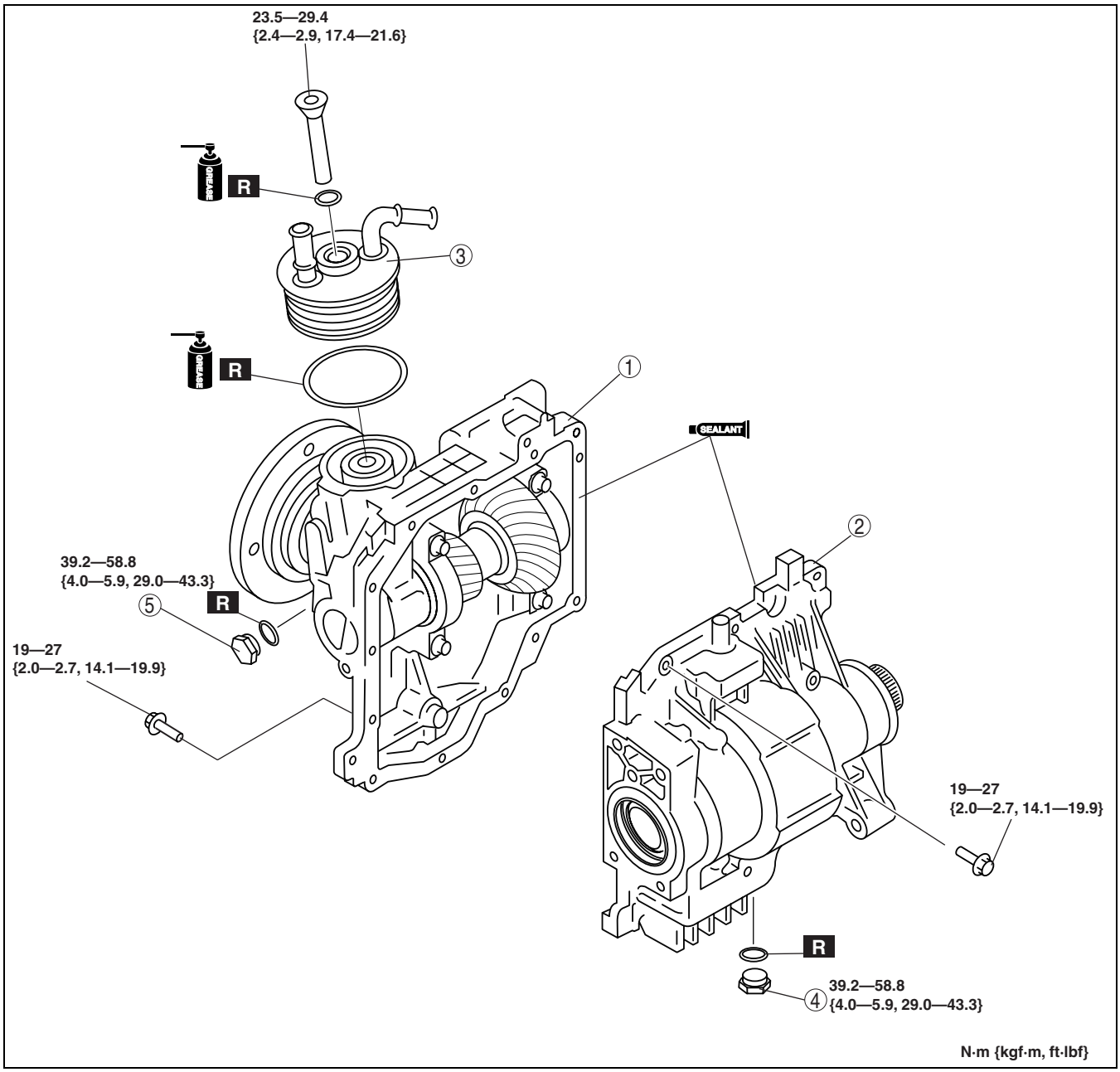

bawuua00000246

1	Front carrier component
2	Drive gear case component
3	Oil cooler

4	Drain plug
5	Oil level plug

Transfer Component Assembly Procedure

Note
- Before applying silicone sealant, completely clean off any old silicone sealant and remove any oil or grease.
- After applying silicone sealant, install the drive gear case within 10 min.
- After connecting the sealing area, leave it for 30 min. or more, then add transfer oil.

1. Clean the alignment surface of the front carrier and drive gear case, and lightly apply silicone sealant.
2. Assemble the transfer component.

   Tightening torque
   19— 27 N·m {2.0— 2.7 kgf·m, 14.1— 19.9 ft·lbf}

3. Install the oil cooler.
4. Tighten the oil cooler installation bolt with a O-ring.

   Tightening torque
   23.5— 29.4 N·m {2.4— 2.9 kgf·m, 17.4— 21.6 ft·lbf}

5. Tighten the drain plug with a new washer.

   Tightening torque
   39.2— 58.8 N·m {4.0— 5.9 kgf·m, 29.0— 43.3 ft·lbf}

03-50 TECHNICAL DATA

DRIVELINE/AXLE TECHNICAL DATA . . 03-50–1

DRIVELINE/AXLE TECHNICAL DATA

id035000800100

Item	Specification
Standard drive gear bearing preload	0.6—2.1 N·m {6.2—21.4 kgf·cm, 5.4—18.5 in·lbf}
Standard ring gear bearing preload	0.6—2.1 N·m {6.2—21.4 kgf·cm, 5.4—18.5 in·lbf}
Pinion height error factor within allowance limit	± 0.032 mm {± 0.00126 in}
Drive pinion preload value	0.88—1.37 N·m {9.0—14.0 kgf·cm, 7.9—12.1 in·lbf}
Standard drive pinion backlash	0.09—0.11 mm {0.0035—0.0043 in}

03-60 SERVICE TOOLS

SERVICE TOOLS 03-60–1

SERVICE TOOLS

id036000500100

49 0107 680A Engine stand	49 M005 561 Differential carrier hanger	49 W032 201 Body
49 B025 001 (Dust Seal Installer) Body	49 T032 316 Shaft	49 T032 317 Weight
49 S019 005 Oil seal puller	49 W032 202 Attachment	49 0839 425C Bearing puller set
49 0636 145 Water pump pulley boss puller	49 S120 710 Coupling flange holder	49 L027 004 Gear case remover
49 H027 002 Bearing remover	49 T034 201A Dust boot installer	49 T032 302 Bearing installer
49 G033 105 Attachment	49 F027 003 Handle	49 F027 005 Attachment for 62
49 F027 007 Attachment for 72	49 8531 565 Drive pinion model	49 L019 301 Installer

49 H025 003A Bearing installer 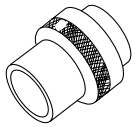	49 0727 570 Pinion height gauge body 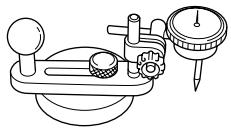	49 0305 555 Block Gauge (20mm)
49 8531 555 Block Gauge (11mm) 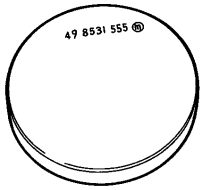	49 F401 331 Body 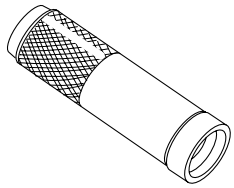	49 F401 337A Attachment C 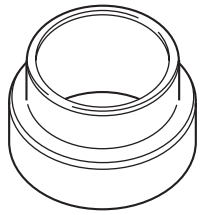
49 U027 003 Oil seal installer 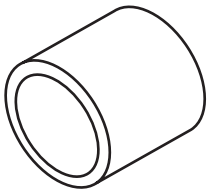	49 H028 202 Block L 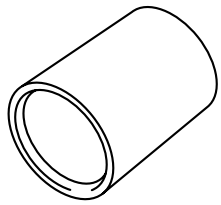	49 L011 201 Shaft 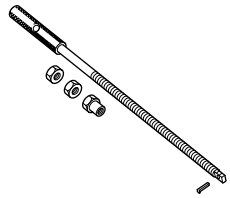
49 G030 797 Handle 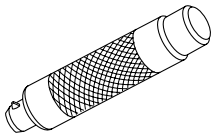	49 0710 520 Universal bearing puller 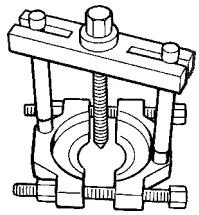	49 S019 006 Oil seal installer 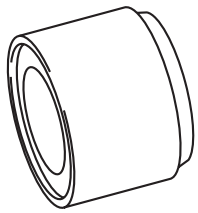

TRANSMISSION/TRANSAXLE

05 SECTION

AUTOMATIC TRANSAXLE 05-17
TECHNICAL DATA 05-50
SERVICE TOOLS 05-60

05-17 AUTOMATIC TRANSAXLE

AUTOMATIC TRANSAXLE DISASSEMBLY 05-17–2
Precaution 05-17–2
Disassembly 05-17–3
Disassembly procedure 05-17–9
OIL PUMP DISASSEMBLY/ASSEMBLY 05-17–26
Components 05-17–26
Disassembly Procedure 05-17–27
Assembly Procedure 05-17–28
B1 BRAKE PISTON DISASSEMBLY/ASSEMBLY 05-17–29
Components 05-17–29
Disassembly Procedure 05-17–30
Assembly Procedure 05-17–30
C3 CLUTCH COMPONENT DISASSEMBLY 05-17–31
Components 05-17–31
Disassembly Procedure 05-17–32
C3 CLUTCH INSPECTION 05-17–33
C3 CLUTCH COMPONENT ASSEMBLY 05-17–34
Components 05-17–34
Assembly Procedure 05-17–35
FRONT PLANETARY GEAR COMPONENT INPUT SHAFT DISASSEMBLY/ASSEMBLY 05-17–37
Components 05-17–37
Disassembly Procedure 05-17–38
Assembly Procedure 05-17–39
C1 CLUTCH COMPONENT DISASSEMBLY 05-17–42
Components 05-17–42
Disassembly Procedure 05-17–43
C1 CLUTCH INSPECTION 05-17–44
C1 CLUTCH COMPONENT ASSEMBLY 05-17–45
Components 05-17–45
Assembly Procedure 05-17–46
COUNTER DRIVE GEAR DISASSEMBLY/ASSEMBLY 05-17–49
Components 05-17–49
Disassembly Procedure 05-17–50
Assembly Procedure 05-17–52
ONE-WAY CLUTCH COMPONENT INSPECTION 05-17–55
REAR PLANETARY GEAR COMPONENT AND ONE-WAY CLUTCH COMPONENT DISASSEMBLY 05-17–56
Components 05-17–56
Disassembly Procedure 05-17–56
REAR PLANETARY GEAR INSPECTION 05-17–57
REAR PLANETARY GEAR COMPONENT AND ONE-WAY CLUTCH COMPONENT ASSEMBLY 05-17–58
Components 05-17–58
Assembly Procedure 05-17–59
C2 CLUTCH COMPONENT DISASSEMBLY 05-17–60
Components 05-17–60
Disassembly Procedure 05-17–61
C2 CLUTCH INSPECTION 05-17–63
C2 CLUTCH COMPONENT ASSEMBLY 05-17–64
Components 05-17–64
Assembly Procedure 05-17–65
TRANSAXLE CASE AND B2 BRAKE DISASSEMBLY/ASSEMBLY 05-17–68
Low and Reverse Brake Piston Disassembly Note 05-17–69
Low and Reverse Brake Piston Assembly Note 05-17–70
Low and Reverse Brake Return Spring Assembly Note 05-17–70
TRANSAXLE CASE AND B2 BRAKE INSPECTION 05-17–71
CONTROL VALVE BODY DISASSEMBLY/ASSEMBLY 05-17–72
Components 05-17–72
Disassembly Procedure 05-17–73
Assembly Procedure 05-17–74
AUTOMATIC TRANSAXLE ASSEMBLY 05-17–75
Assembly 05-17–75
Components 05-17–77
Assembly Procedure 05-17–83
AUTOMATIC TRANSAXLE INSPECTION 05-17–104
B2 Brake Inspection 05-17–104

AUTOMATIC TRANSAXLE DISASSEMBLY

id051700502100

Precaution

The following are precautions that must be followed when performing removal/installation.

1. Handle electronic parts with care
   - Do not pull the wiring harness forcibly when disconnecting the connector. Unlock the lock first and pull the connector.
   - When connecting the connector, verify to insert it until it is properly locked. (Verify that a click sound is heard.)
   - Do not shock electronic parts. Replace with new parts if they have been dropped or subjected to shock.
2. Prevent foreign matter from penetrating
   - Be sure to remove foreign matter such as dust and sand from the automatic transaxle before removing parts.
   - Protect removed parts from dust with an object such as a vinyl sheet.
   - Do not use cotton work gloves or shop rags as frayed strings might get caught in the unit. Thus work with bare hands or use vinyl gloves.
3. Prevent scratching
   - Do not pry with a screwdriver forcibly. Slightly hit the case with a plastic hammer when separating component cases at seams.
   - Do not pull the valve forcibly.
   - Be careful not to get the wire harness caught between parts during installation.
4. Prevent incorrect installation and lack of or missing parts
   - Be careful not to install parts incorrectly or lose parts since there are similar types of O-rings, snap rings, bearings and races. Take great care for straightening parts and checking installation direction.
   - Be careful not to drop small parts such as check balls or lose them during installation.
5. Wash parts and apply oil
   - Wash each part before installing and dry using compressed air, and then apply the specified ATF type JWS3309.
   - Soak disks in ATF type JWS3309 before installing. In particular, soak new disks for **2 h or more** so that the oil seeps into the lining.
   - If the thrust bearing or race falls during installation, use a small amount of yellow petrolatum grease.
   - Apply ATF type JWS3309 to contact and rotating surfaces.
   - Do not apply oil or drive the vehicle immediately after installing a part applied with sealant. Leave it for one hour or more.
   - Do not wash aluminum parts or rubber parts with alkaline chemicals.
   - Do not wash the rubber parts with white gasoline.
6. Handling ATF with care
   - If you spill ATF on the floor, wipe it off immediately, as it is quite slippery and dangerous.
   - Be sure to use JWS3309 type ATF.

Disassembly
Components

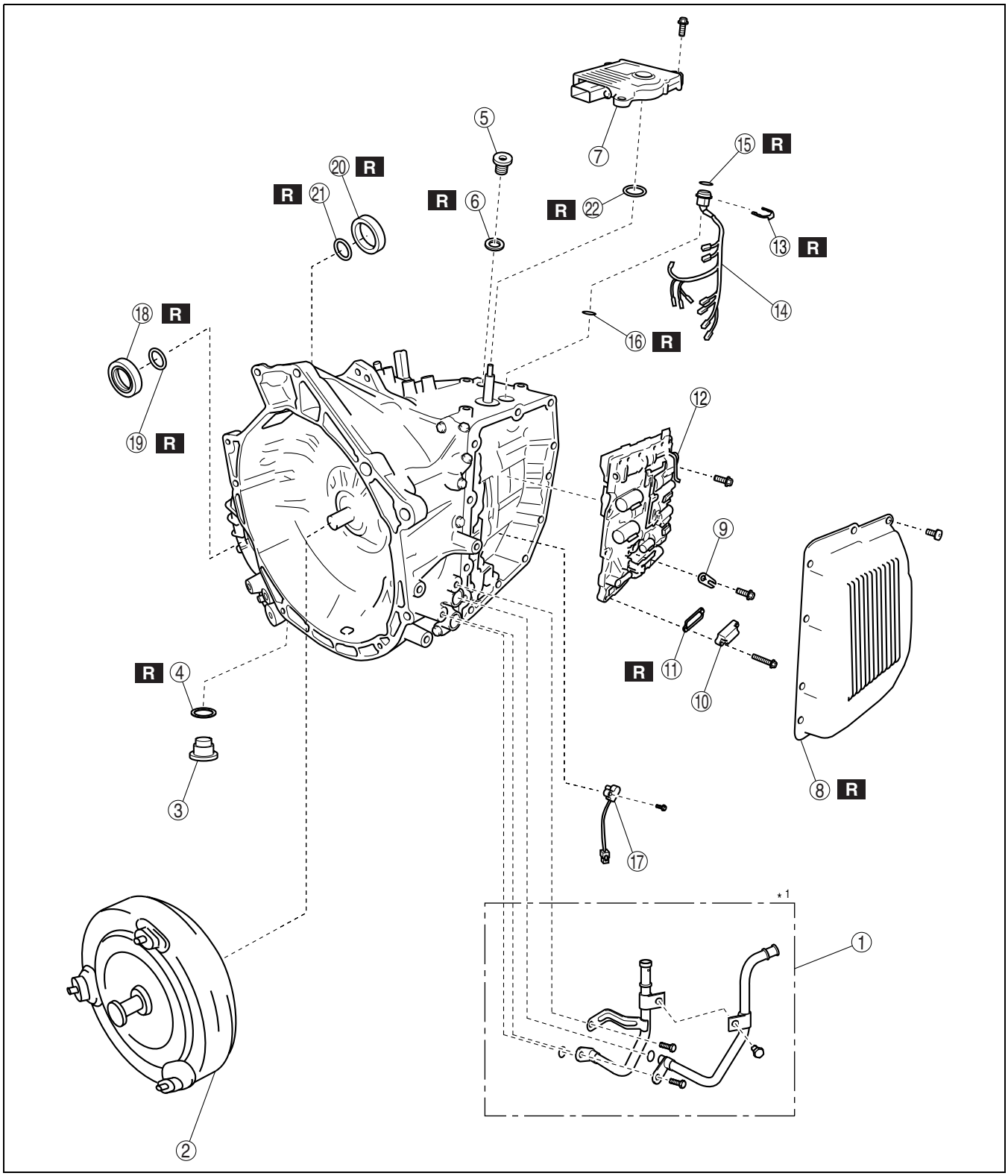

bawuua00000279

1	Oil pipe and O-ring
2	Torque converter
3	Drain plug
4	Gasket
5	Filler plug
6	O-ring

7	TCM
8	Control valve body cover
9	Lock plate
10	Suction cover
11	Gasket
12	Control valve body component

13	Coupler component lock plate
14	Coupler component
15	O-ring
16	Gasket
17	Input/turbine speed sensor

18	Oil seal (converter housing side)
19	O-ring (converter housing side) (2WD)
20	Oil seal (transaxle case side)
21	O-ring (transaxle case side)
22	Oil seal (manual shaft)

*1 : The figure shows Mazda6 specification.

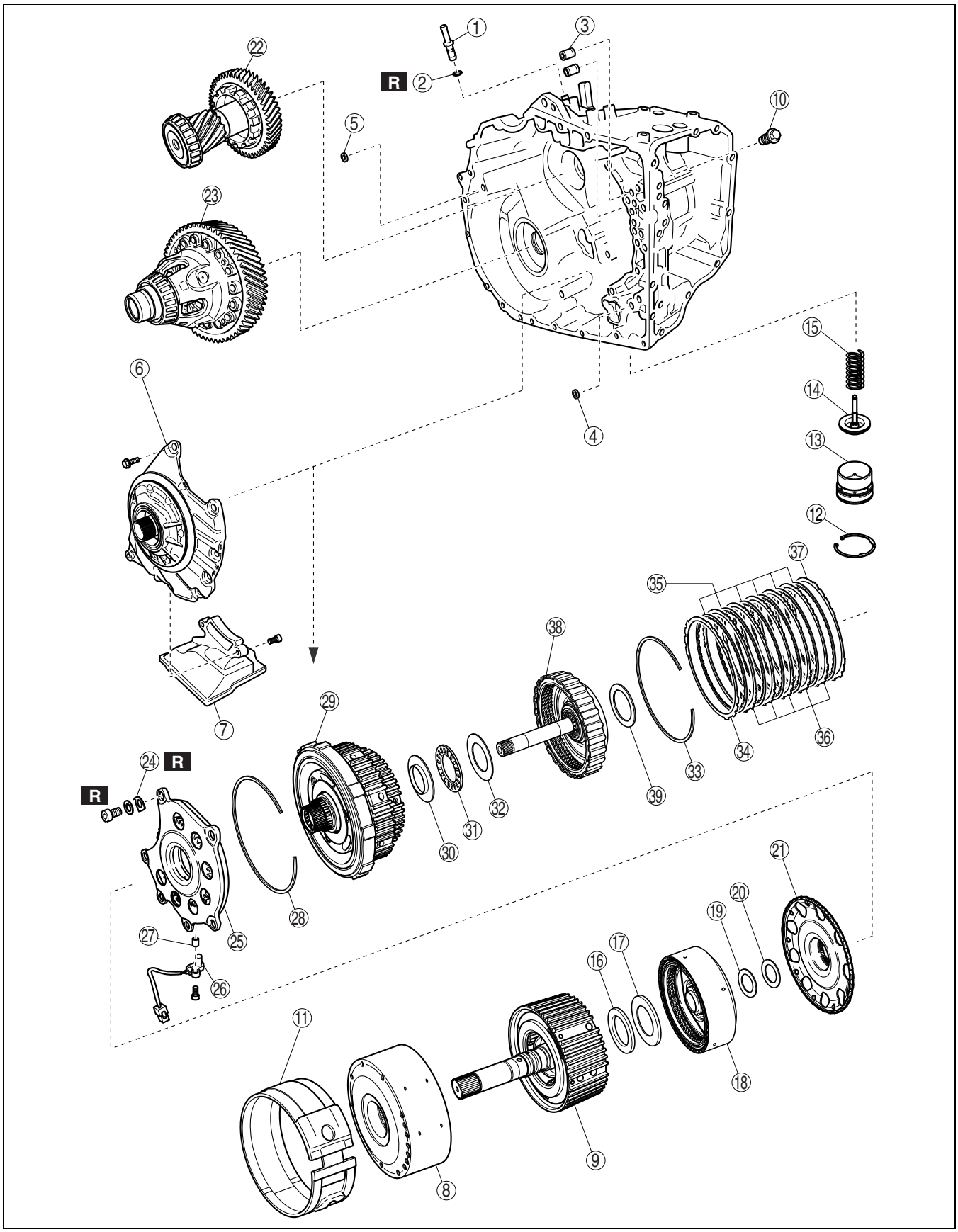

bawuua00000280

1	Breather pipe
2	O-ring
3	Transaxle case gasket

4	Gasket
5	Gasket
6	Oil Pump component

7	Oil strainer
8	C3 clutch component
9	Front planetary gear component and input shaft
10	Brake band anchor bolt
11	B1 brake band
12	Snap ring
13	Brake piston cover
14	B1 brake piston
15	Piston return spring
16	Thrust bearing
17	Bearing race
18	C1 clutch component
19	Thrust bearing
20	Bearing race
21	Sun gear input drum
22	Counter gear component
23	Differential component

24	Lock washer
25	Counter drive gear
26	Vehicle speed sensor (VSS)
27	Spacer
28	Snap Ring
29	Rear planetary gear component and one-way clutch component
30	Bearing race
31	Thrust bearing
32	Bearing race
33	Snap ring
34	Retaining plate
35	Drive plate
36	Driven plate
37	Retaining plate
38	C2 clutch component
39	Thrust bearing

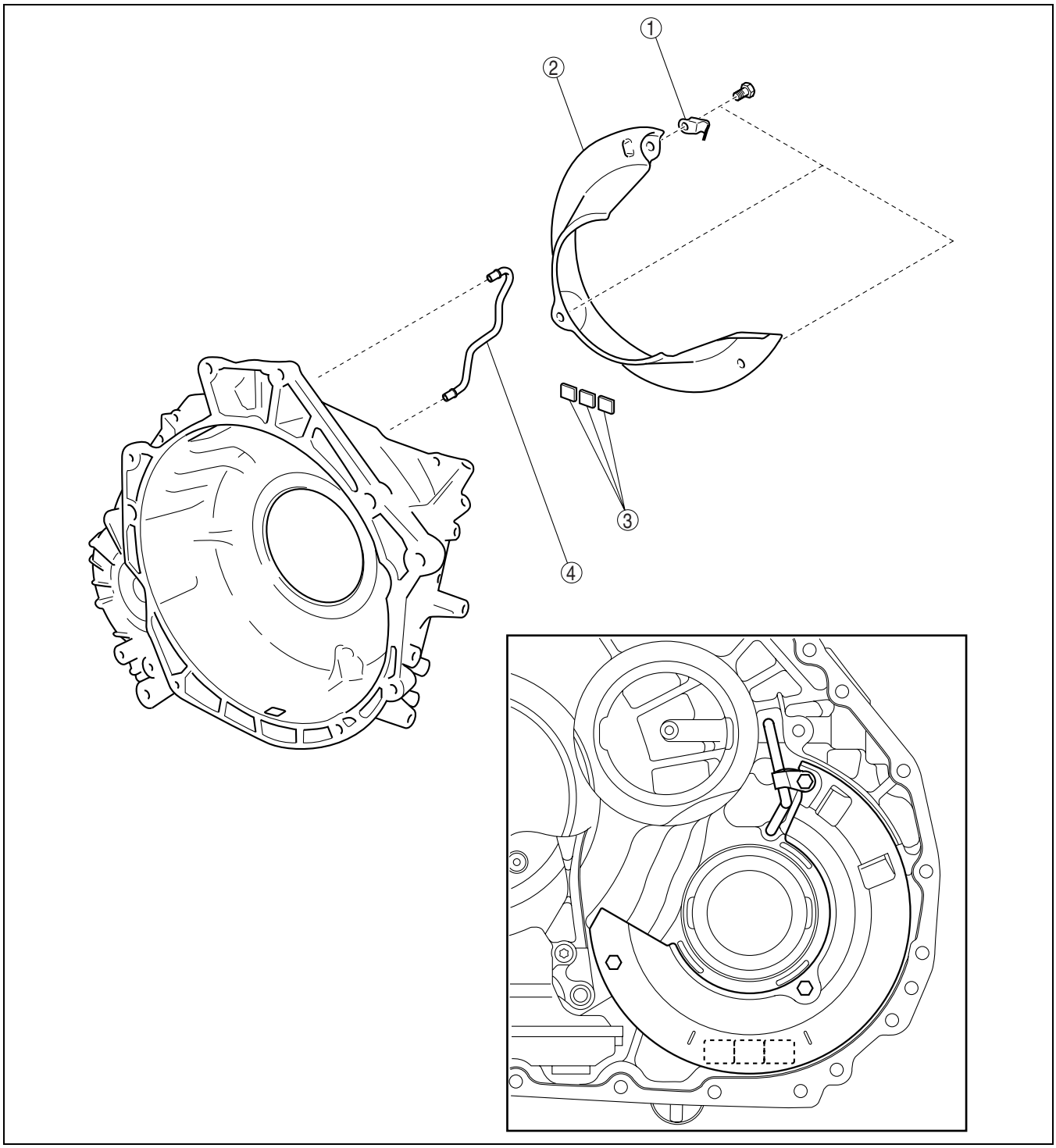

bawuua00000281

1	Tube clamp
2	Oil reservoir lock plate

3	Magnet
4	Oil pipe

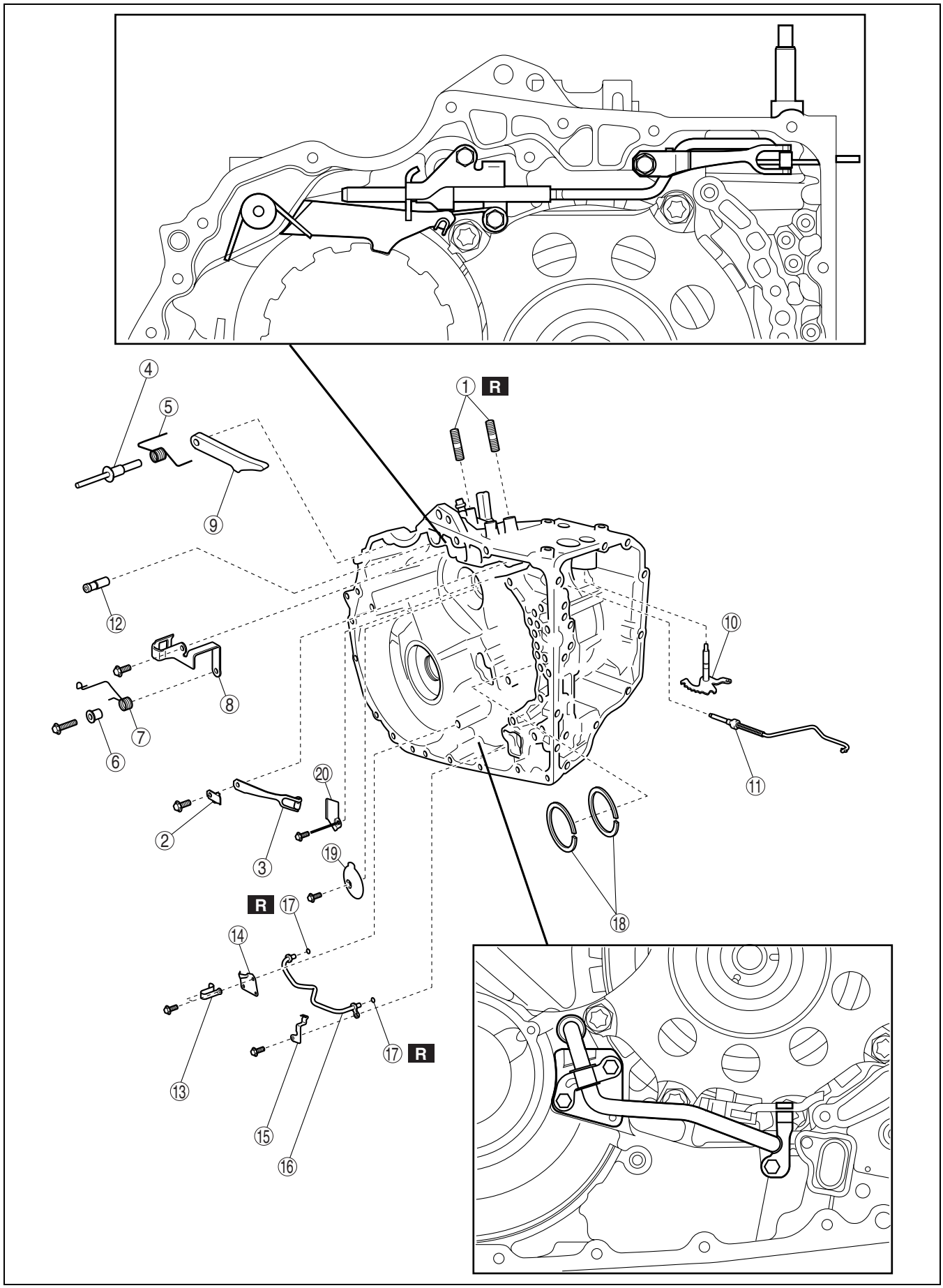

bawuua00000282

1	Stud bolt
2	Detent spring cover
3	Detent spring
4	Parking pawl shaft
5	Pawl return spring
6	Spring guide sleeve
7	Torsion spring
8	Parking pawl bracket
9	Parking pawl
10	Manual valve lever

11	Parking rod
12	Parking pin
13	Pipe clamp
14	Transaxle case No.1 plate
15	Wiring harness clip
16	Oil cooler outlet tube
17	O-ring
18	Seal ring
19	Transaxle case plate No.2
20	Transaxle case plate No.3

Disassembly procedure

1. Remove the oil pipes and O-rings. (Refer to Workshop Manual.)

   Caution
   - **Do not damage the oil seal.**
   - **Do not drop the torque converter.**

2. Remove the torque converter.

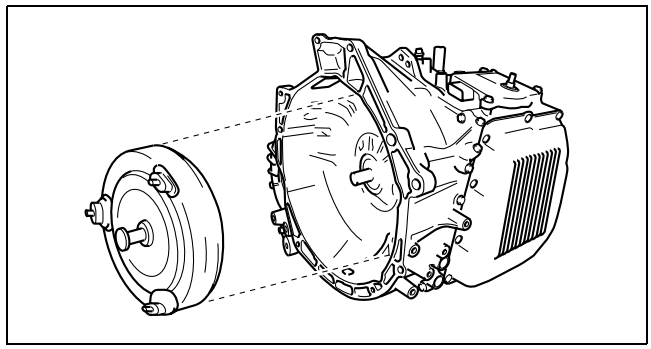

bawuua00000283

3. Remove the drain plug and gasket.
4. Drain the ATF.

   Caution
   - **Do not repair the threads using a tap or other tools.**

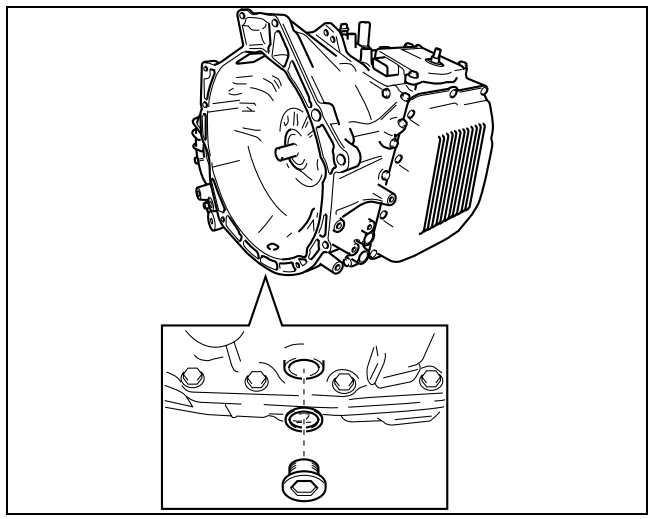

bawuua00000284

5. Remove the stud bolts.

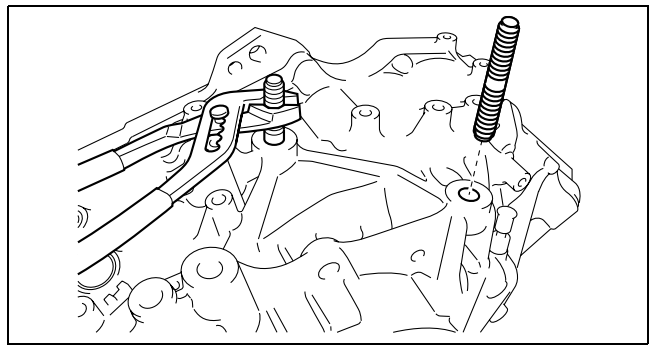

bawuua00000285

Caution
- **Do not touch the terminals.**

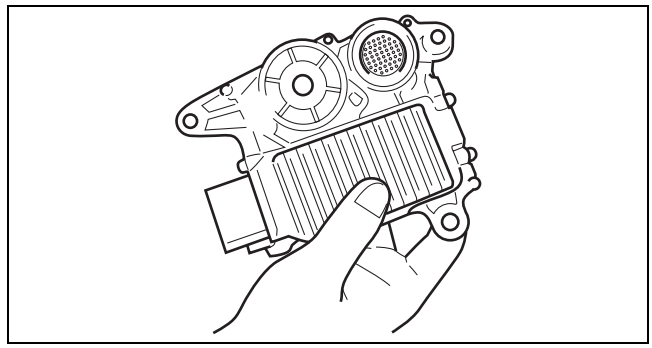

bawuua00000286

6. Remove the TCM.

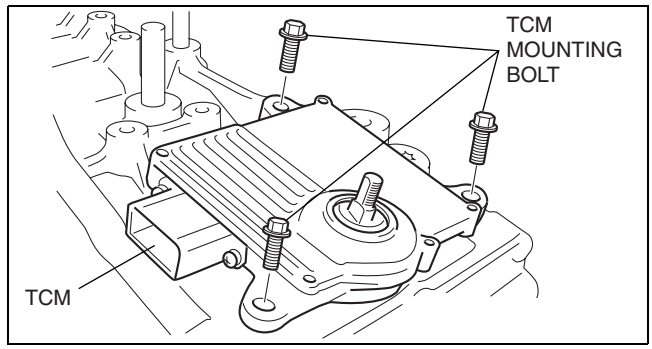

bawuua00000287

7. Set the **SST** as shown in the figure.

Caution
- **When installing the SST to the transaxle, use bolts (M12×1.25) with a thread length of 90 mm {3.54 in}.**

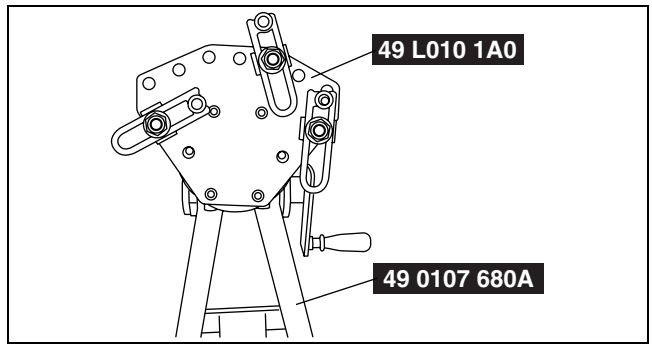

bawuua00000288

8. Install the **SST** to the position where the transaxle stud bolts were removed.

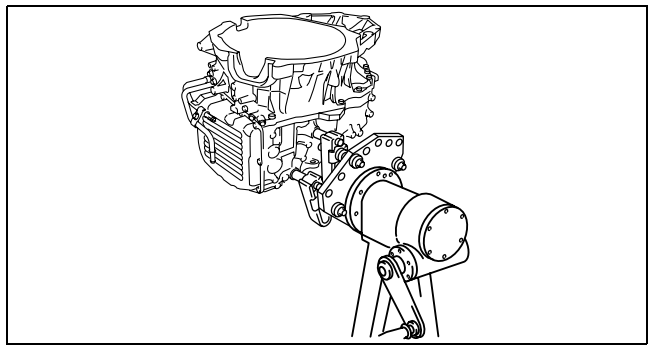

bawuua00000289

9. Remove the control valve body cover installation bolt.

Caution
- **Do not damage the fitting surface of the transaxle case and the control valve body cover.**
- **Do not deform the control valve body cover.**

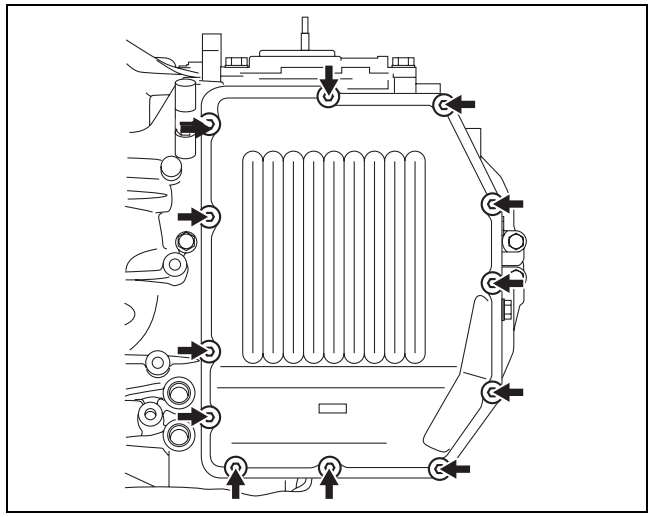

bawuua00000290

10. Using a plastic hammer, tap the control valve body cover to remove it.

Caution
- **Be careful not to damage the solenoid valves and connectors.**
- **Do not pull the wiring harnesses when removing the connector.**

Note
- Disconnect the solenoid connector according to the following procedure:

(1) Insert a precision screwdriver from the backside into the connector as shown in the figure.

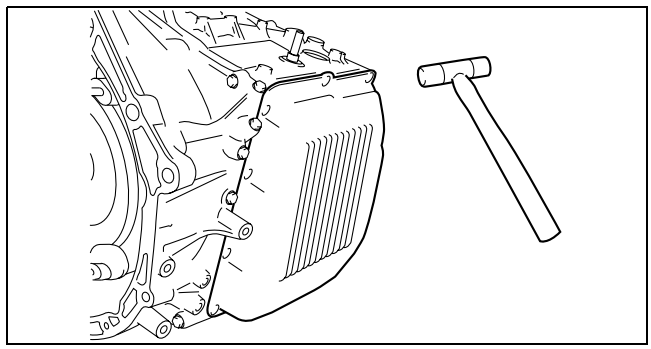

bawuua00000291

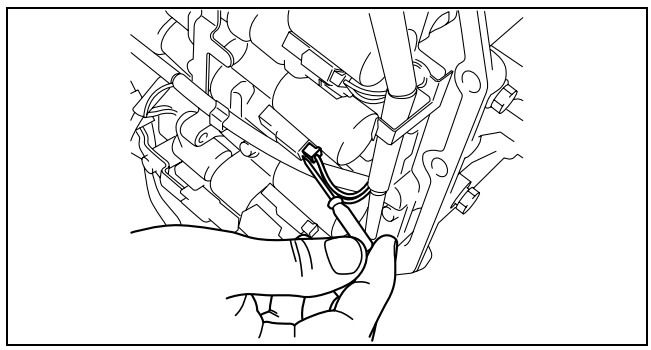

bawuua00000292

(2) Pry the screwdriver in the direction of the arrow and disconnect the connector.

Caution

- **Do not damage the solenoid valves and connectors with the screwdriver.**
- **When disconnecting connectors, grasp the connectors, not the wiring harnesses. Otherwise, the wiring harnesses may be pulled out of the connector causing poor contact.**

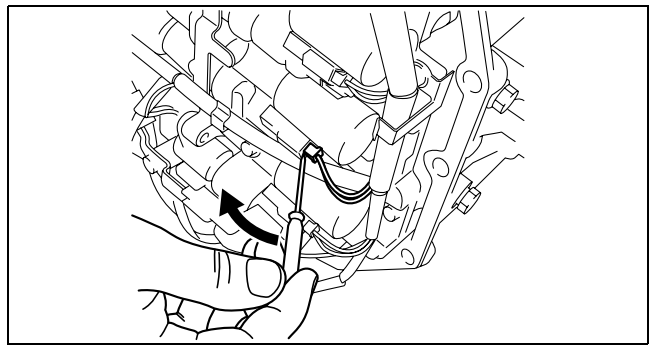

bawuua00000293

11. Disconnect the solenoid connectors, VSS connector and the input/turbine speed sensor connector.
12. Disconnect the coupler component from the clamp.

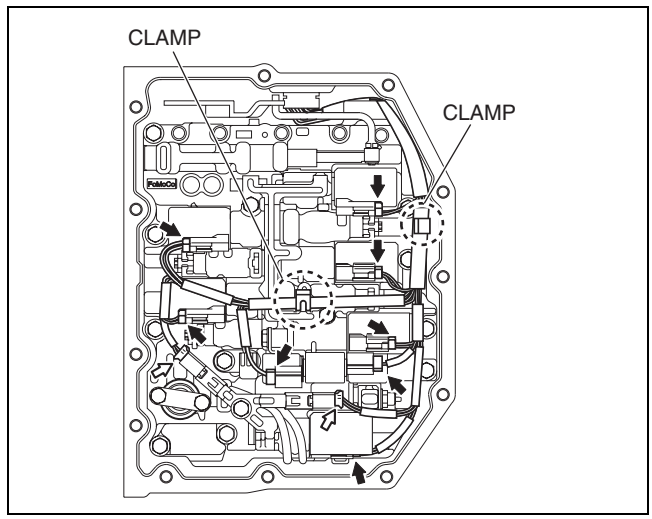

bawuua00000294

13. Remove the lock plate, and pull out the TFT sensor from the control valve body.
14. Remove the O-ring from the TFT sensor.

Note

- Be sure to secure the coupler component with tape so that it will not interfere with the control valve body component.

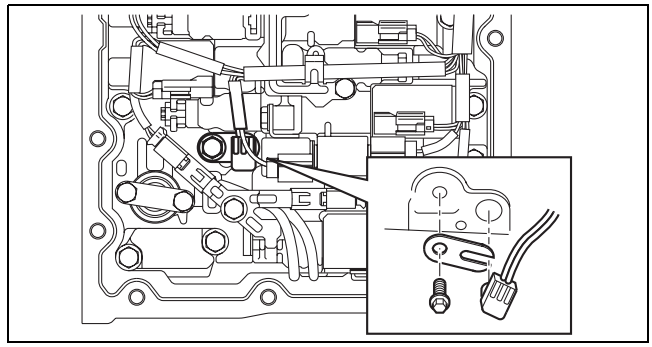

bawuua00000295

15. Fix the coupler component with tape to the transaxle case as shown in the figure.

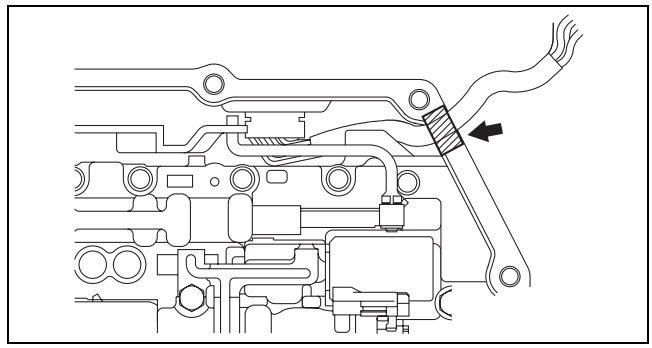

bawuua00000296

16. Remove the VSS connector and input/turbine speed sensor connector from the solenoid clamp.

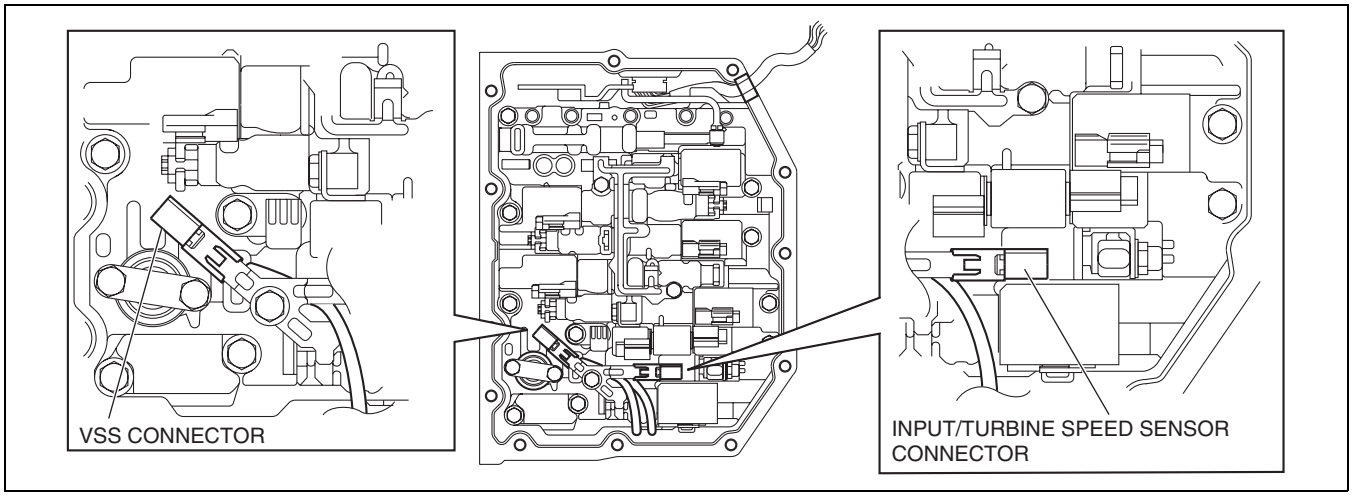

bawuua00000297

Note

- Be sure to secure the VSS and input/turbine speed sensor with tape so that they do not interfere with the control valve body component.

17. Secure the VSS wiring harness and input/turbine speed sensor wiring harness with tape to the transaxle case as shown in the figure.

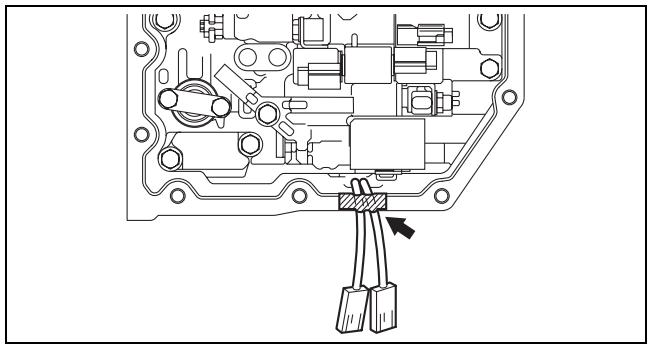

bawuua00000298

18. Remove the suction cover and the gasket.

Caution

- **Loosen the bolts evenly a little at a time in the order shown in the figure.**

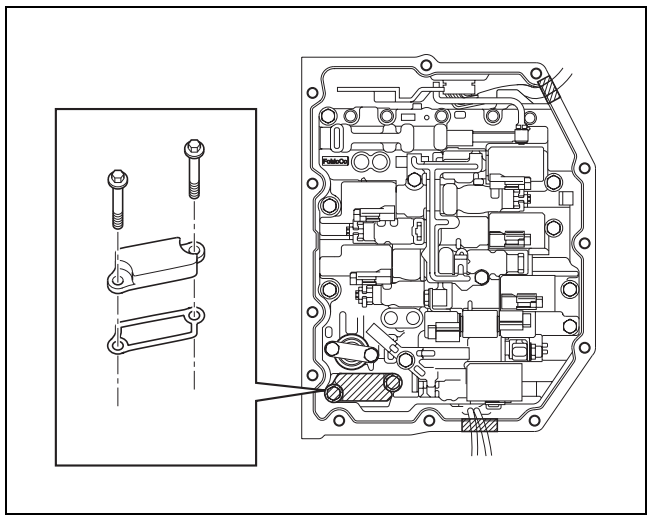

bawuua00000299

19. Remove the control valve body installation bolts.

Caution
- **Do not drop the control valve body component.**

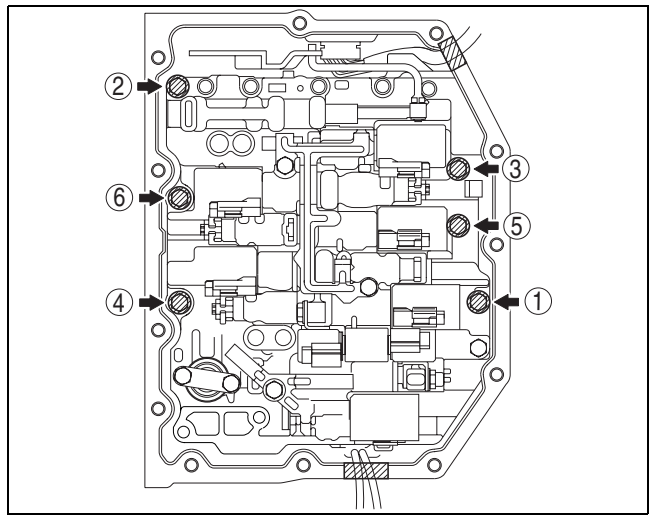

bawuua00000300

20. Disconnect the manual valve link and remove the control valve body component.

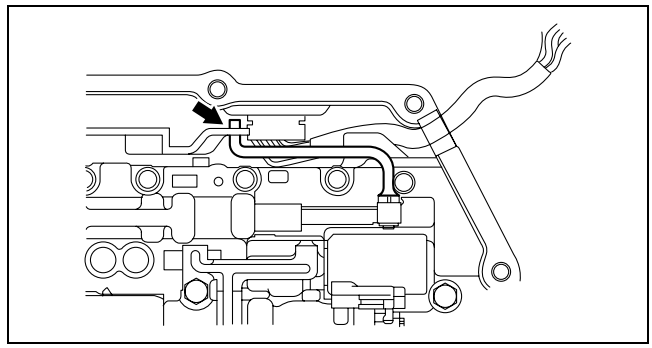

bawuua00000301

21. Remove the coupler component lock plate.

Caution
- **Do not damage the wiring harness.**
- **Do not pull hard on the wiring harness.**

22. Remove the coupler component from the transaxle case.

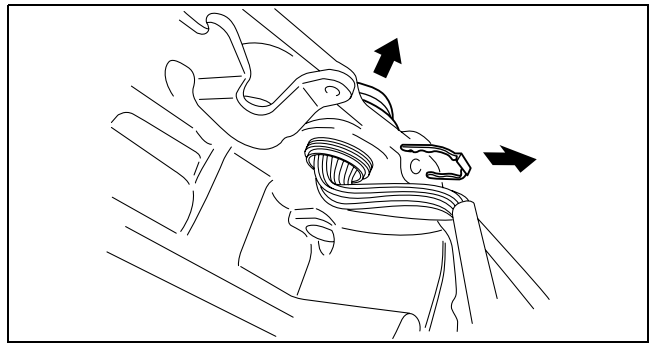

bawuua00000302

23. Remove the O-ring and the gasket from the coupler component.

Caution
- **Do not damage the input/turbine speed sensor.**

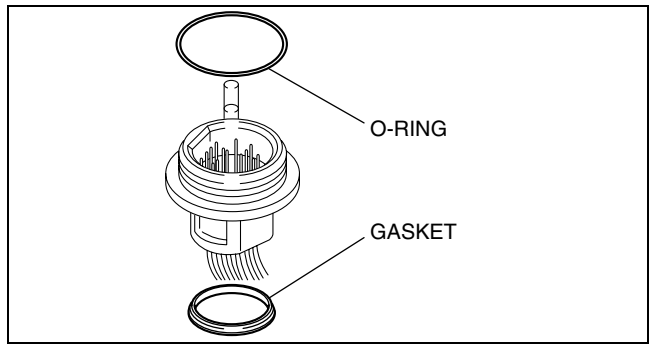

bawuua00000303

24. Remove the input/turbine speed sensor.
25. Remove the bolts as shown in the figure.

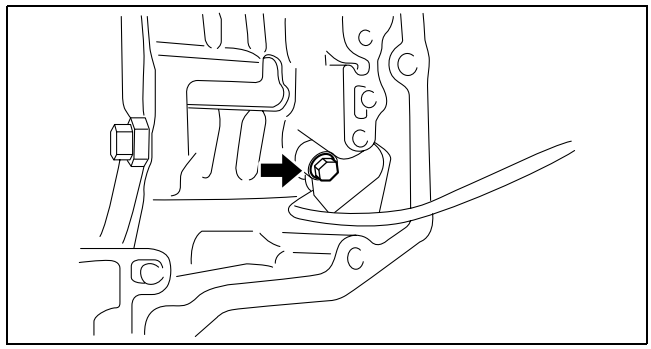

bawuua00000304

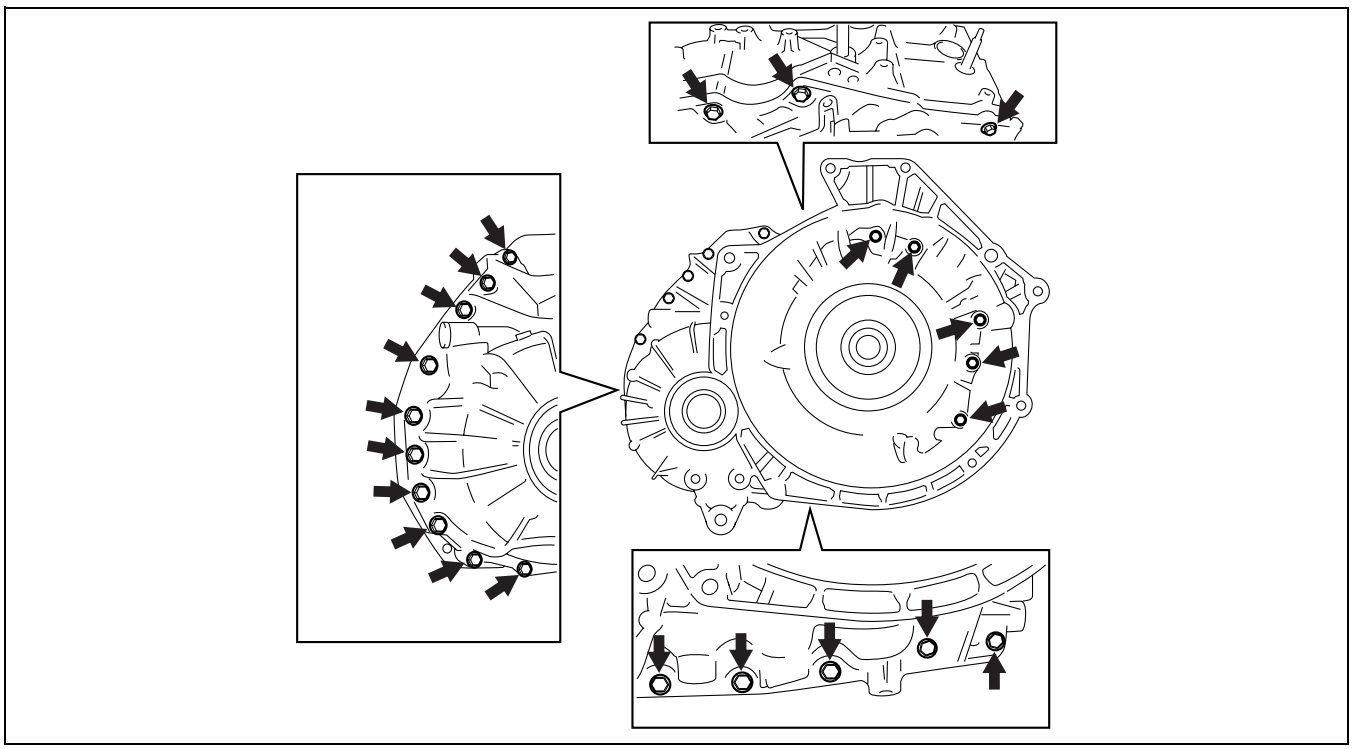

bawuua00000305

Caution

- **Do not damage the fitting surface of the converter housing and the transaxle case.**

26. Using a plastic hammer, tap the converter housing to remove it.

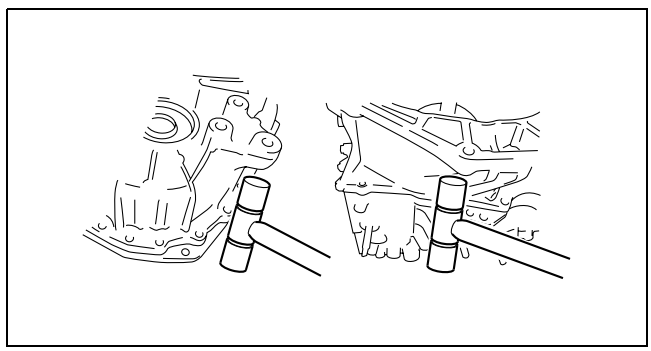

bawuua00000306

27. Remove the transaxle case gaskets as shown in the figure.

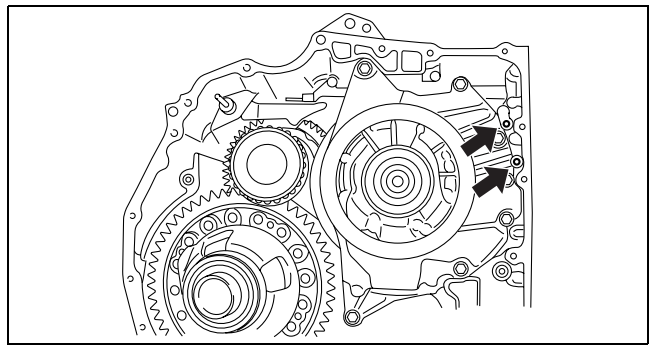

bawuua00000307

28. Remove the gaskets as shown in the figure.

Caution
- **Do not damage the oil reservoir lock plate.**

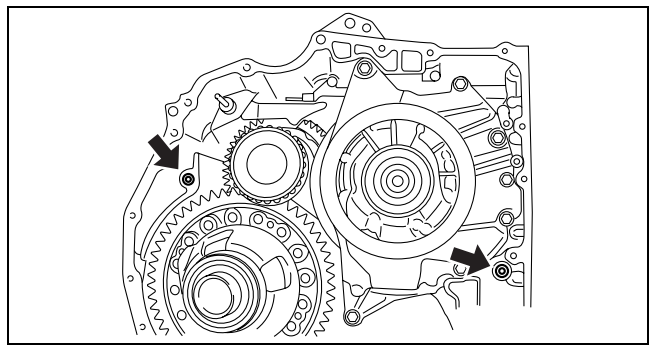

bawuua00000308

29. Remove the tube clamp and the oil reservoir lock plate.

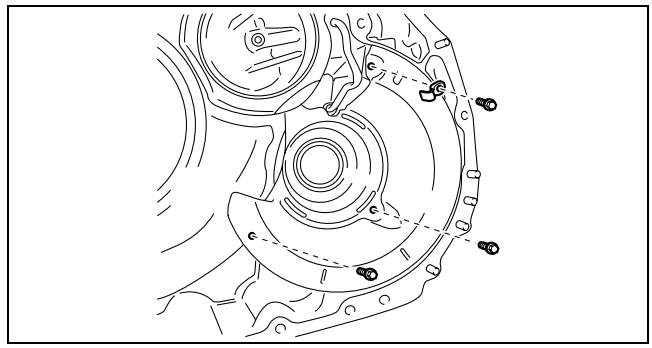

bawuua00000309

30. Remove the magnets from the oil reservoir lock plate.

Caution
- **Do not damage the differential gear lube apply tube.**

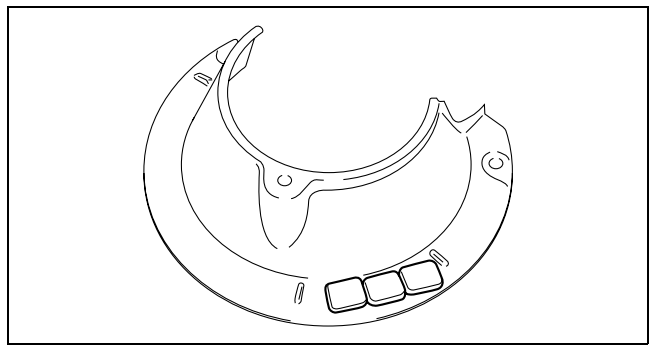

bawuua00000310

31. Using a flathead screwdriver, remove the oil pipe.

Caution
- **Do not damage the converter housing.**
- **If using a screwdriver, use a wooden block or equivalent to avoid damaging the fitting surface of the converter housing.**

32. Remove the oil seal lip using a razor.

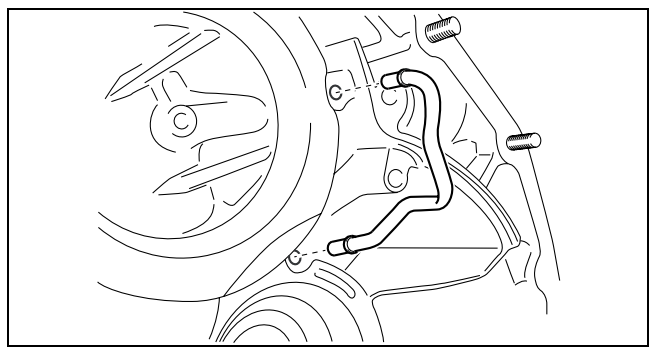

bawuua00000311

33. Using a tape-wrapped flathead screwdriver, remove the oil seal (converter housing side).

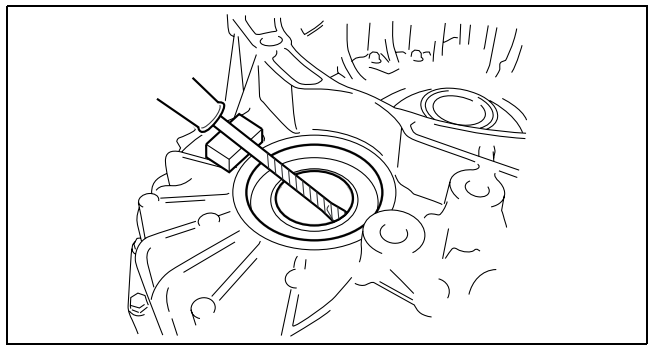

bawuua00000312

34. Remove the oil pump component.

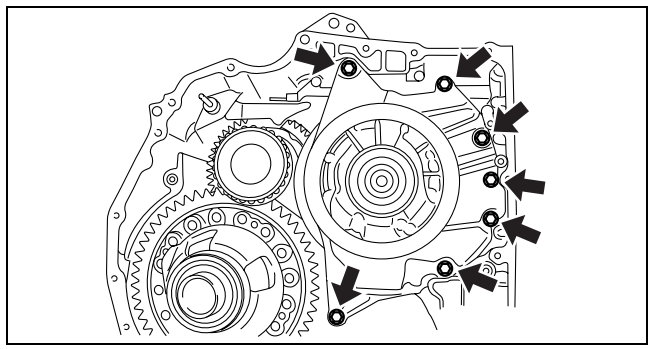

bawuua00000313

35. Remove the oil seal and the oil strainer from the oil pump component.

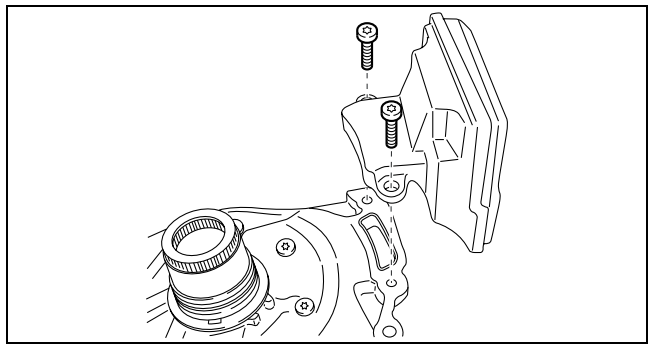

bawuua00000314

36. Remove the C3 clutch component, input shaft and the front planetary gear component.

Note
- In some cases, the input shaft may be detached with the thrust roller bearing attached.

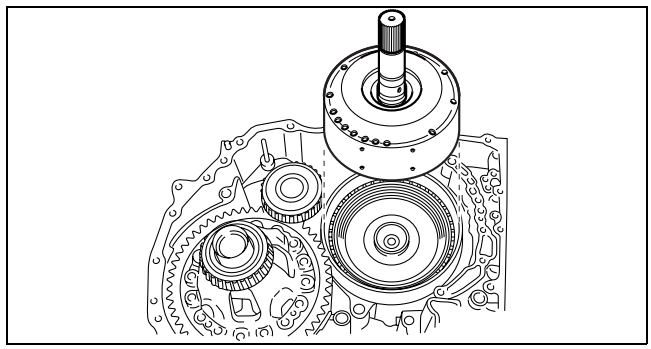

bawuua00000315

37. Remove the C3 clutch component from the input shaft and the front planetary gear component.

Note
- In some cases, the C3 clutch component may be detached with the thrust washer attached.

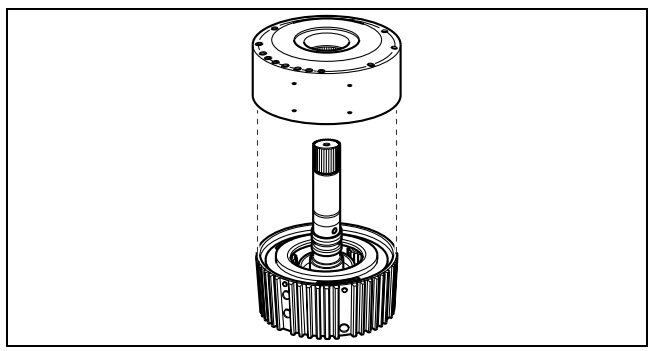

bawuua00000316

38. Remove the brake band anchor bolt.

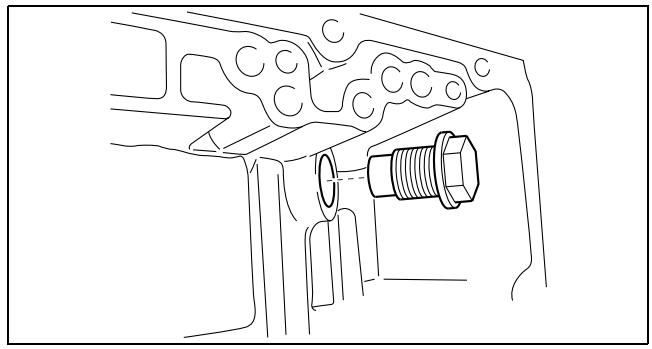

bawuua00000317

39. Remove B1 the brake band.

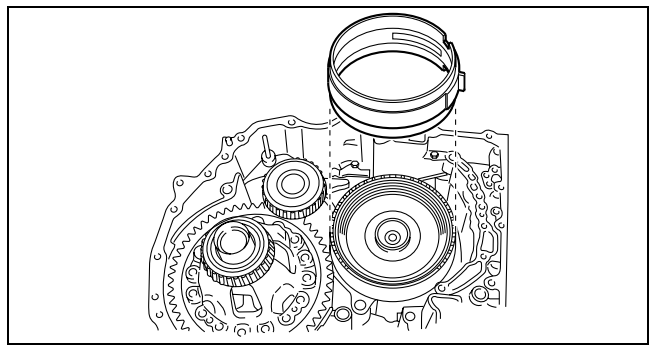

bawuua00000318

40. Inspect the lining of the brake band.
    - If the lining is flaking or has changed color, or if it is worn or the print mark is wearing away, replace with a new brake band and C3 clutch. When replacing, inspect the contact surfaces between the C3 clutch drum and B1 brake band. If they are scratched or have changed color, replace with new parts.

    Note
    - Before replacing with a new B1 brake band, soak it at least **2 h** in ATF.

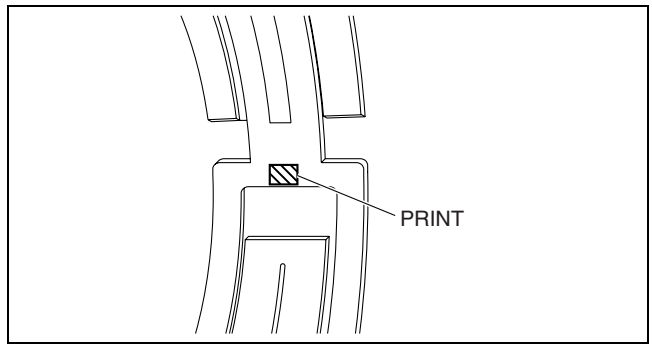

bawuua00000319

41. Remove the snap ring using snap ring pliers.

    Caution
    - **The brake piston cover will fly off due to the force of the piston return spring.**
    - **Do not drop the brake piston cover.**
    - **Do not drop the B1 brake piston.**

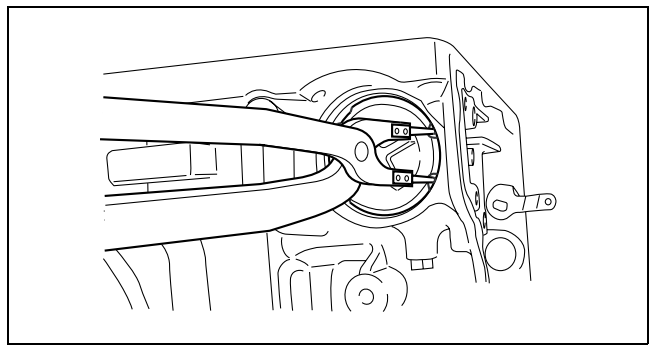

bawuua00000320

42. Remove the brake piston cover, B1 brake piston and the piston return spring.

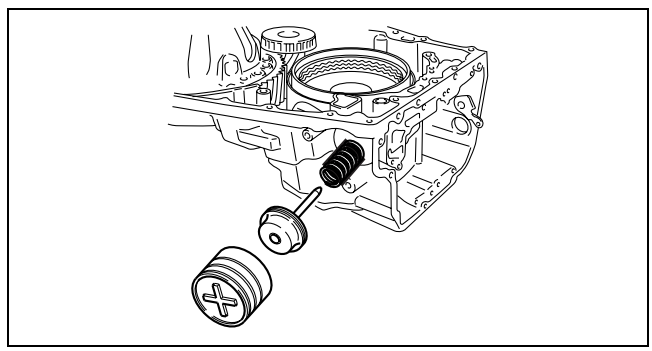

bawuua00000321

43. Remove the thrust bearing, bearing race and the C1 clutch component.

Note
- In some cases, the C1 clutch component may be detached with the thrust bearing attached.

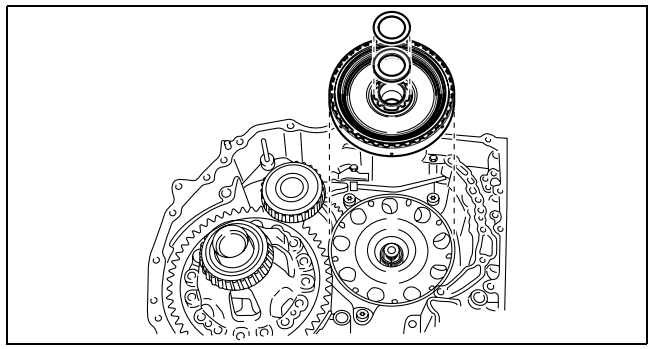

bawuua00000322

44. Remove the thrust bearing, bearing race and the sun gear input drum.

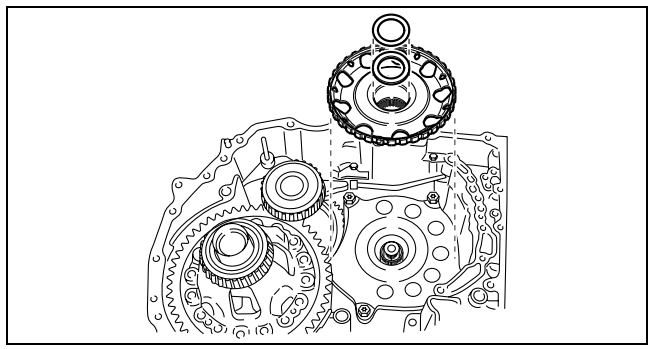

bawuua00000323

45. Remove the detent spring cover and detent spring.

Caution
- **Be careful not to apply too much force to the pawl return spring.**

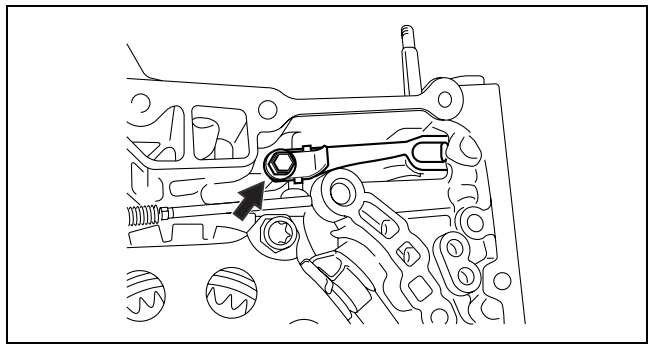

bawuua00000324

46. Remove the pawl return spring and the parking pawl shaft.

Caution
- **Be careful not to apply too much force to the torsion spring.**

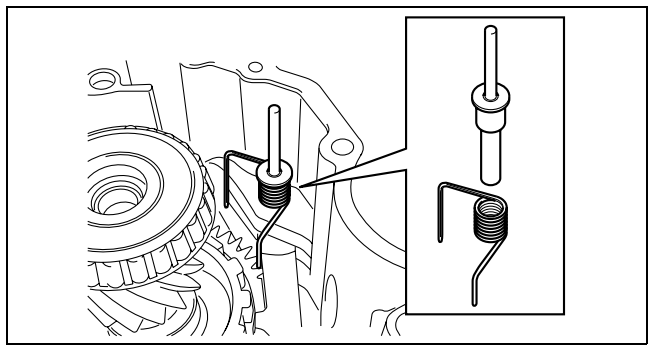

bawuua00000325

47. Remove the torsion spring and the spring guide sleeve.

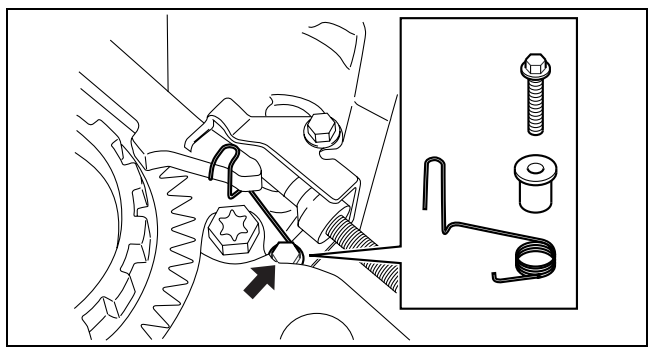

bawuua00000326

48. Remove the parking pawl and the parking pawl bracket.

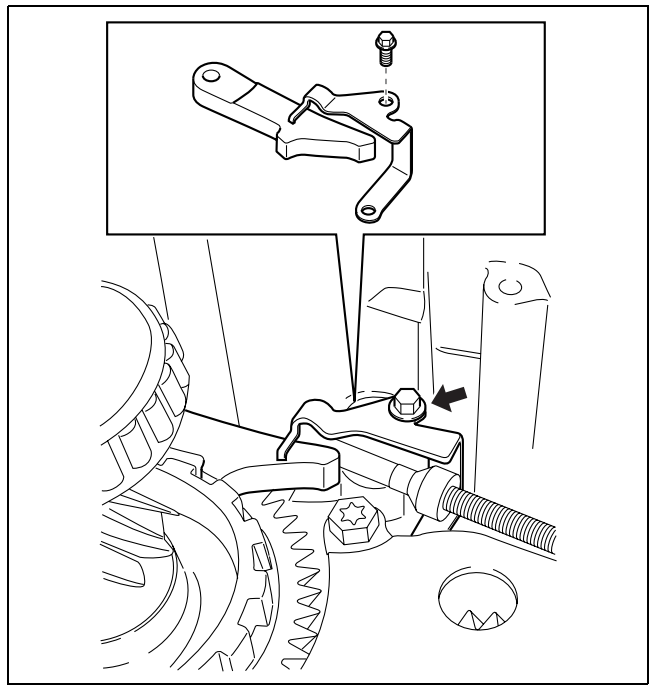

bawuua00000327

49. Disconnect the parking rod from the manual valve lever.

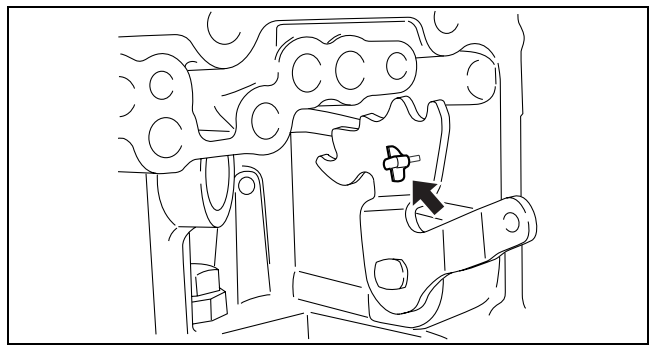

bawuua00000328

50. Remove the manual valve lever from the transaxle case.

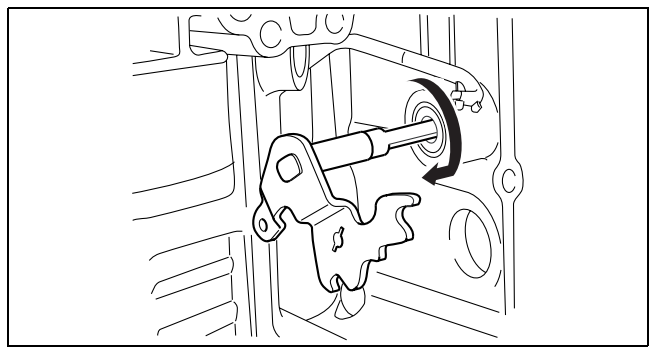

bawuua00000329

51. Remove the parking rod from the transaxle case.

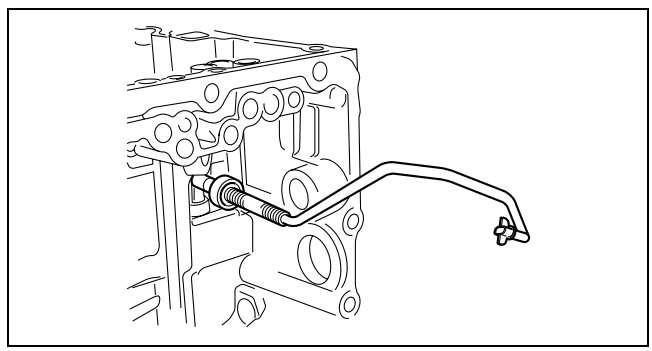

bawuua00000330

52. Remove the parking pin from the transaxle case.

Note
- Inspect the direction of the parking pin.

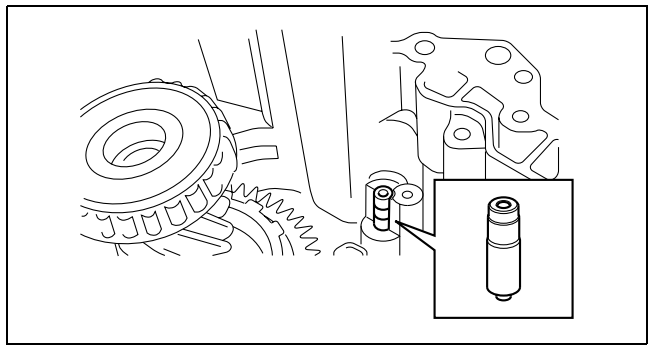

bawuua00000331

53. Remove the counter gear component.

Note
- For easy removal, tilt the counter gear component slightly.

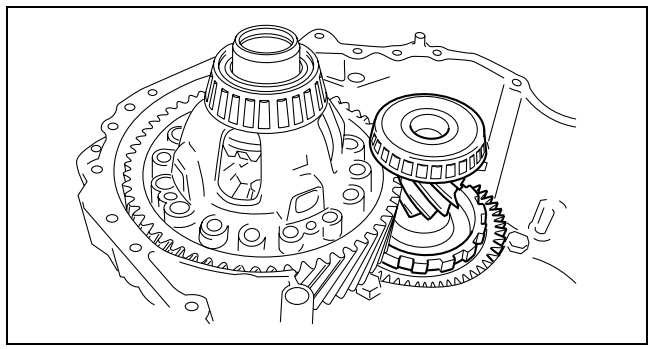

bawuua00000332

54. Remove the differential component.

Caution
- **Do not damage the VSS wiring harness.**
- **Do not pull hard on the VSS wiring harness.**

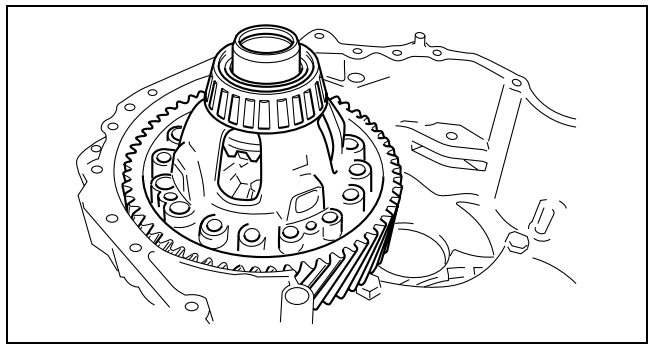

bawuua00000333

55. Disconnect the VSS wiring harness from the tube wiring clamp.

Caution
- **Do not damage the oil cooler outlet tube.**

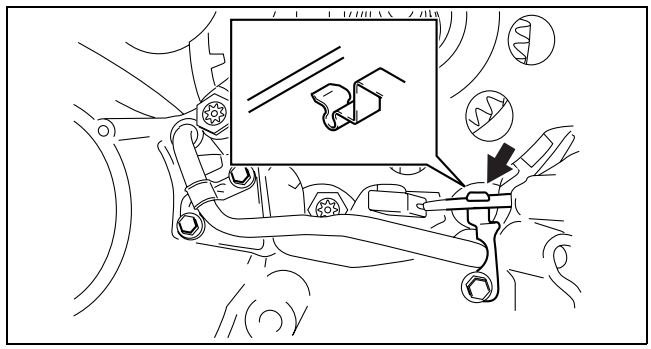

bawuua00000334

56. Remove the pipe clamp, transaxle case No.1 plate, wiring harness clip and the oil cooler outlet tube.
57. Remove the O-rings from the oil cooler outlet tube.

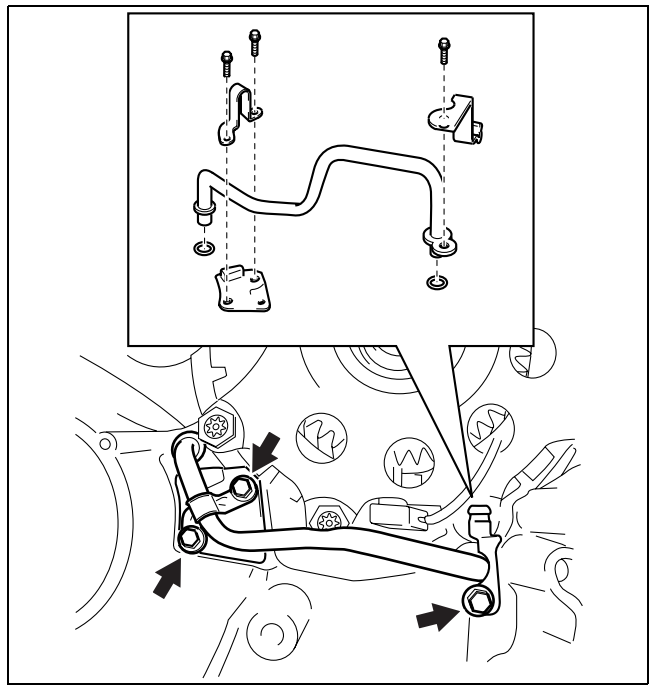

bawuua00000335

58. Using a flathead screwdriver and a hammer, pry back the crimp on the lockwashers.

    Caution
    - **If the lockwasher crimp is not completely pried back, the tool cannot fit over the bolt properly and the bolt cannot be loosened.**

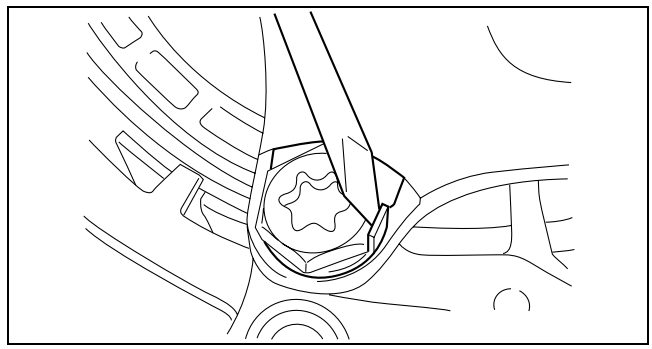

bawuua00000336

59. Remove the lockwashers, washers and the counter drive gear.

    Caution
    - **Do not damage the VSS wiring harness.**
    - **Do not pull hard on the VSS wiring harness.**
    - **Do not damage the VSS.**

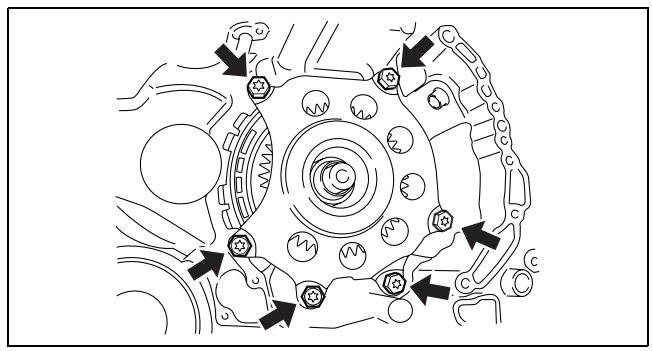

bawuua00000337

60. Remove the VSS and spacer from the counter drive gear.

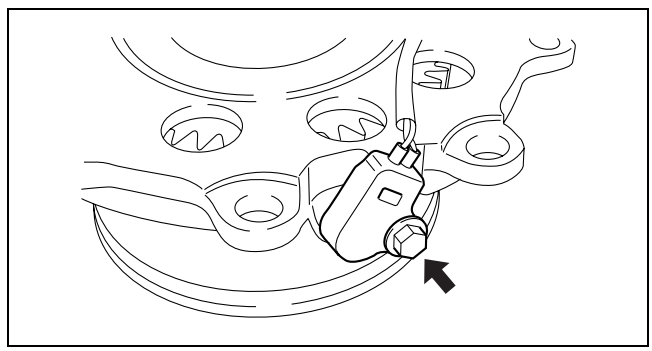

bawuua00000338

61. Using a flathead screwdriver, remove the snap ring.

Caution
- **Do not drop the sun gear.**

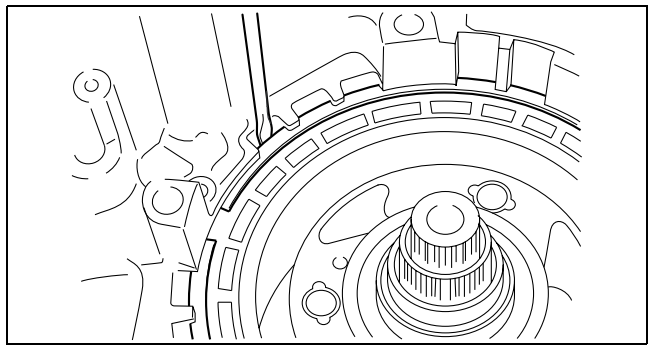

bawuua00000339

62. Remove the rear planetary gear component and the one-way clutch.

Note
- In some cases, the sun gear may be detached with the bearing race attached.

Note
- Remove the sun gear in the center while holding it.
- The thrust washer of the rear planetary gear on the rear side might remain on the transaxle case side when removing the rear planetary gear component.

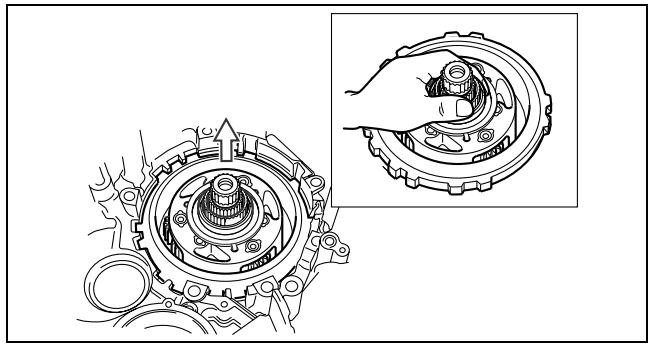

bawuua00000340

63. Remove the thrust bearing and the bearing races.

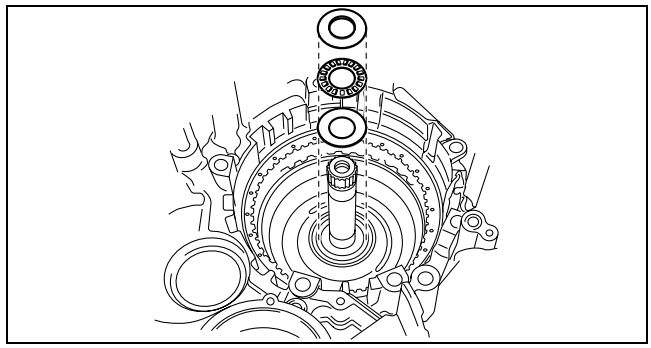

bawuua00000341

64. Using a flathead screwdriver, remove the snap ring.

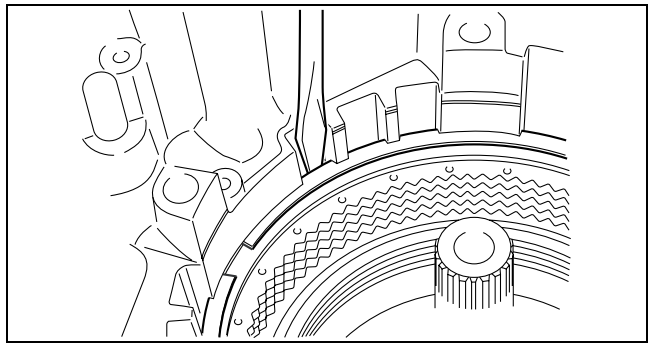

bawuua00000342

65. Remove the retaining plates, drive and driven plates.

Note
- Inspect the number of drive plates and driven plates.

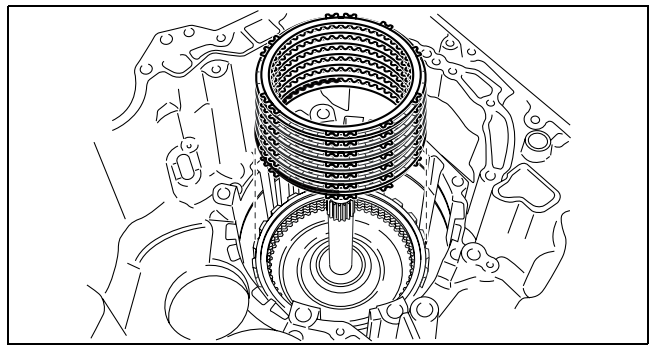

bawuua00000343

66. Inspect the lining of all drive plates.
    - If the lining is flaking or has changed color, or if it is worn or the print mark is wearing away, replace with a new drive plate. When replacing, inspect the contact surfaces between the retaining plate, driven plate and drive plate. If they are scratched or have changed color, replace with new parts.

Note
- Before replacing with new drive plates, soak them at least **2 h** in ATF.

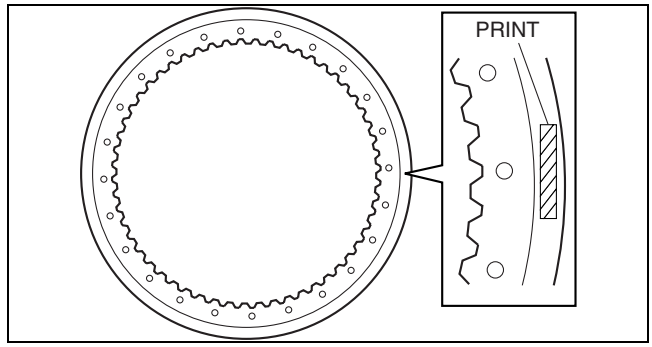

bawuua00000344

67. Remove the C2 clutch component and the thrust bearing.

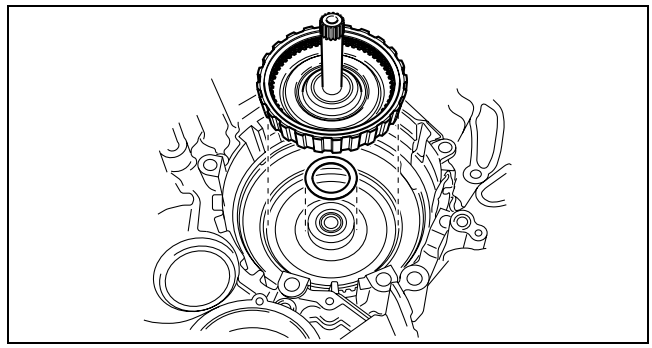

bawuua00000345

68. Remove the seal rings from the transaxle case.

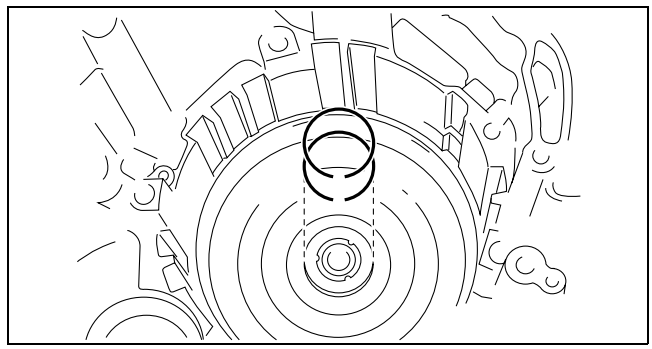

bawuua00000346

69. Remove the transaxle case plate No.2.

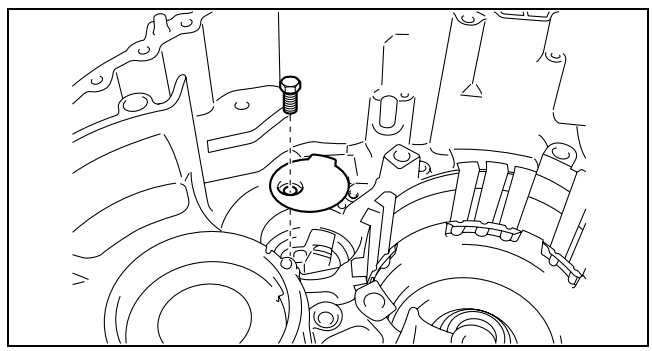

bawuua00000347

70. Remove the transaxle case plate No.3.

Caution
- **Do not damage the transaxle case.**
- **If using a screwdriver, use a wooden block or equivalent to avoid damaging the fitting surface of the transaxle case.**

71. Remove the oil seal lip using a razor.

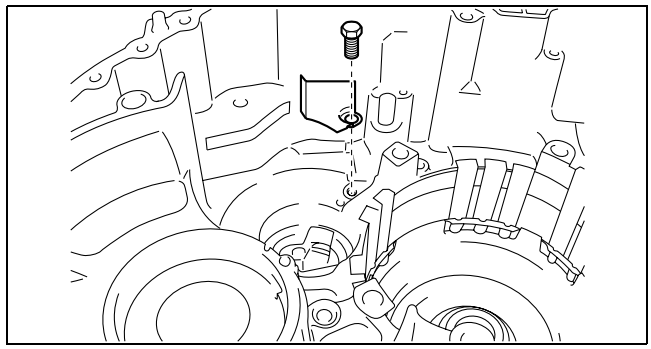

bawuua00000348

72. Using a tape-wrapped flathead screwdriver, remove the oil seal (transaxle case side).

Caution
- **Do not damage the transaxle case.**
- **If using a screwdriver, use a wooden block or equivalent to avoid damaging the fitting surface of the transaxle case.**

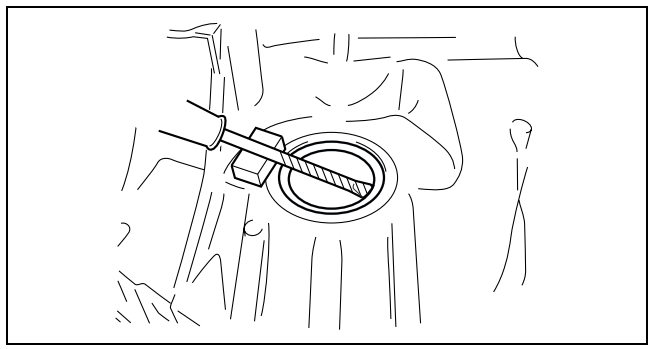

bawuua00000349

73. Using a tape-wrapped flathead screwdriver, remove the oil seal (manual shaft).

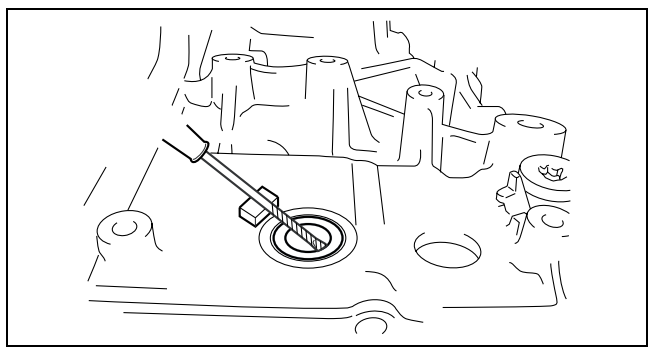

bawuua00000350

OIL PUMP DISASSEMBLY/ASSEMBLY

id051700500100

Components

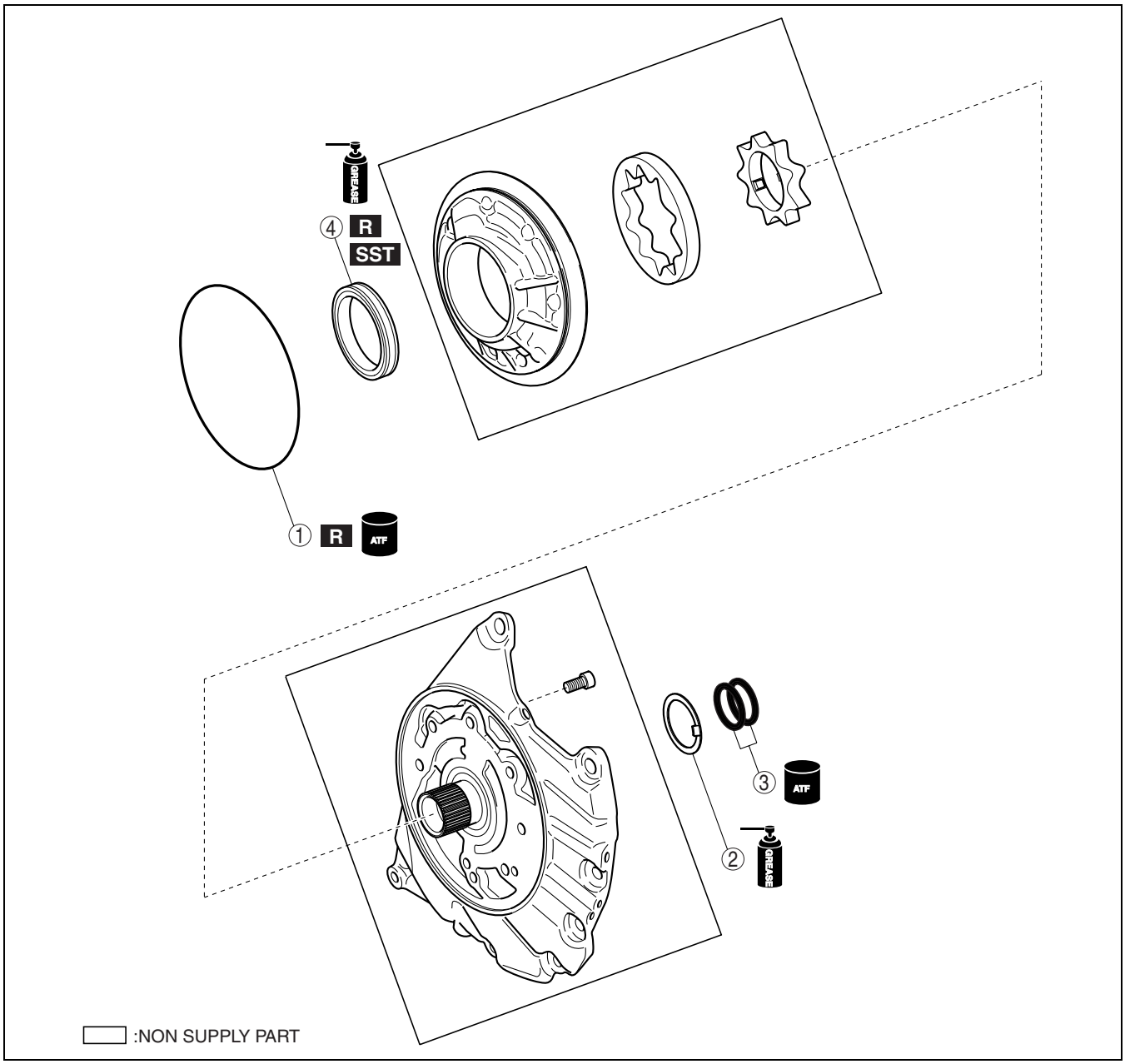

bawuua00000001

1	O-ring
2	Thrust washer

3	Seal ring
4	Oil seal

Disassembly Procedure

1. Remove the O-ring from the oil pump.

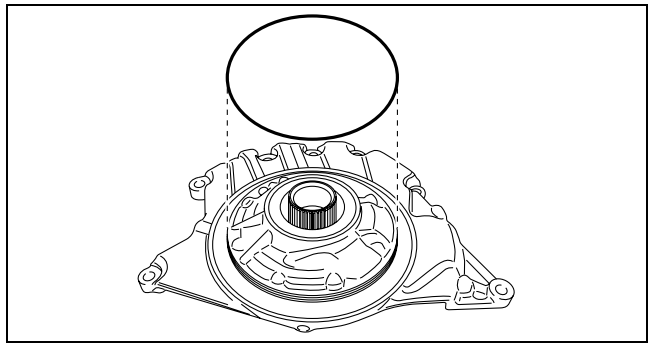

bawuua00000002

2. Remove the thrust washer from the oil pump.

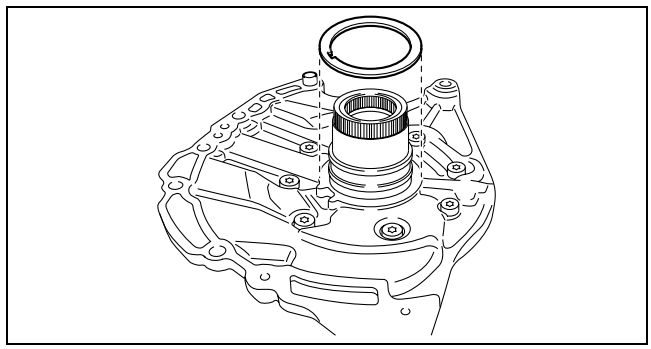

bawuua00000003

3. Remove the seal rings from the oil pump.

   Caution
   - **Do not damage the bushing on the oil pump body.**

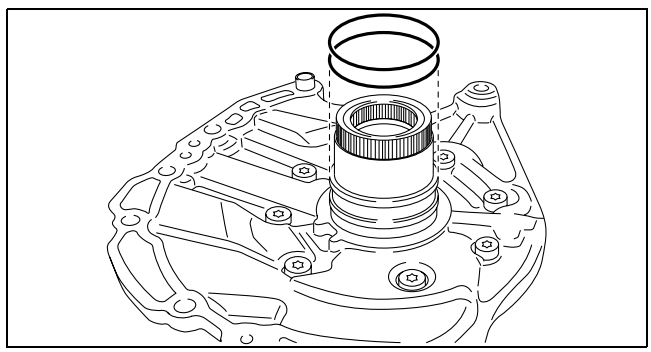

bawuua00000004

4. Using a tape-wrapped flathead screwdriver, remove the oil seal from the oil pump body.

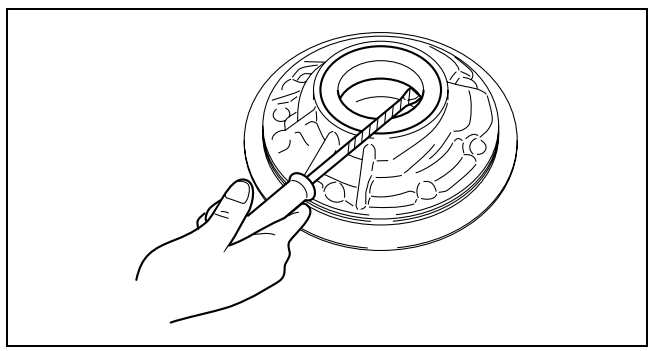

bawuua00000005

Assembly Procedure

Caution
- **Do not damage the oil seal.**

1. Using the **SST** and a hammer, install the new oil seal to the oil pump body.
   Substitution SST
   - **49 U027 003**
     Outer diameter: 67 mm {2.64 in} or more
     Inner diameter: 54— 61 mm {2.13— 2.40 in}
     Plate thickness: 2 mm {0.08 in} or more
2. Apply grease to the oil seal lip.
3. Apply ATF to the new seal rings and sliding surface of the oil pump component.

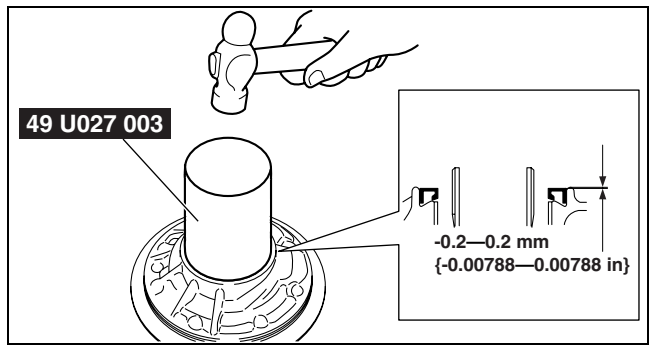

bawuua00000006

Caution
- **Do not expand the seal rings too much.**
- **Be careful not to shorten the seal rings too much, when installing the seal rings.**

4. Compress the seal rings as shown in the figure. Then install the seal rings to the oil pump component.

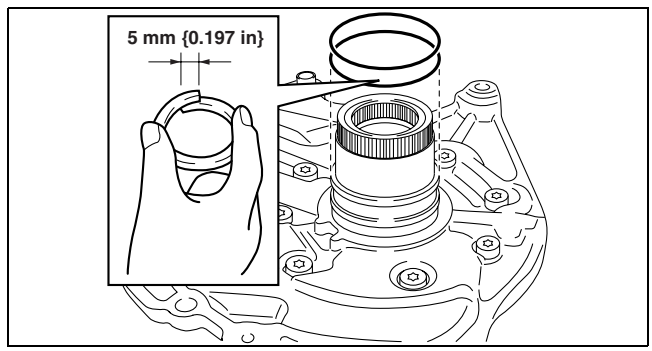

bawuua00000007

Note
- Verify that oil seal rings rotate smoothly after installing them.

5. Apply grease to the thrust washer.

Caution
- **Apply grease to the mounting surface of the thrust washer so that it does not drop when installed.**

6. Install the thrust washer to the oil pump component.
7. Apply ATF to a new O-ring.

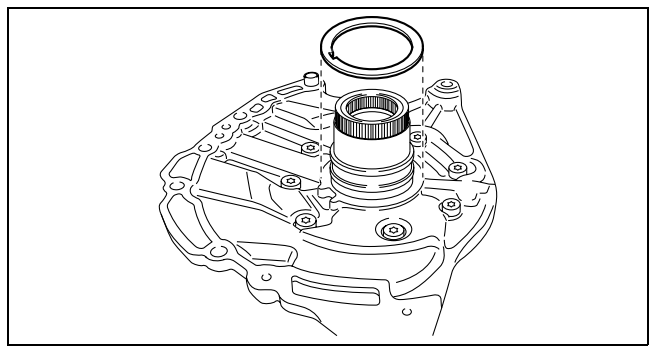
bawuua00000003

8. Install the O-ring to the oil pump component.

Caution
- **Do not damage the oil seal lip.**

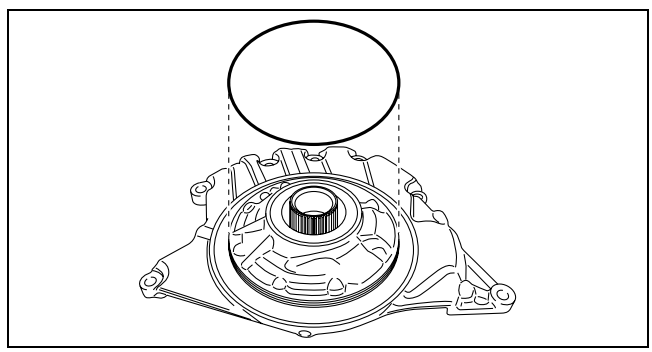
bawuua00000002

9. Turn the drive gear with flathead screwdrivers and verify it rotates smoothly.

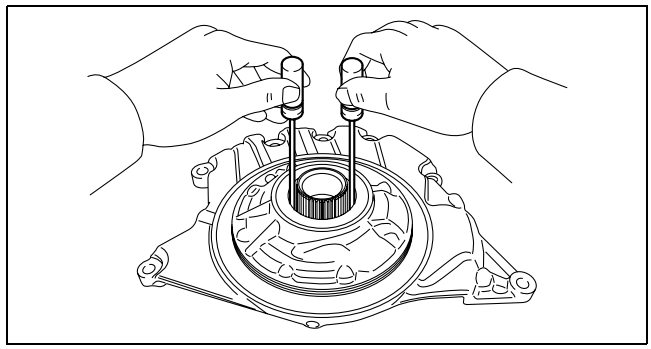

bawuua00000008

B1 BRAKE PISTON DISASSEMBLY/ASSEMBLY

id051700500200

Components

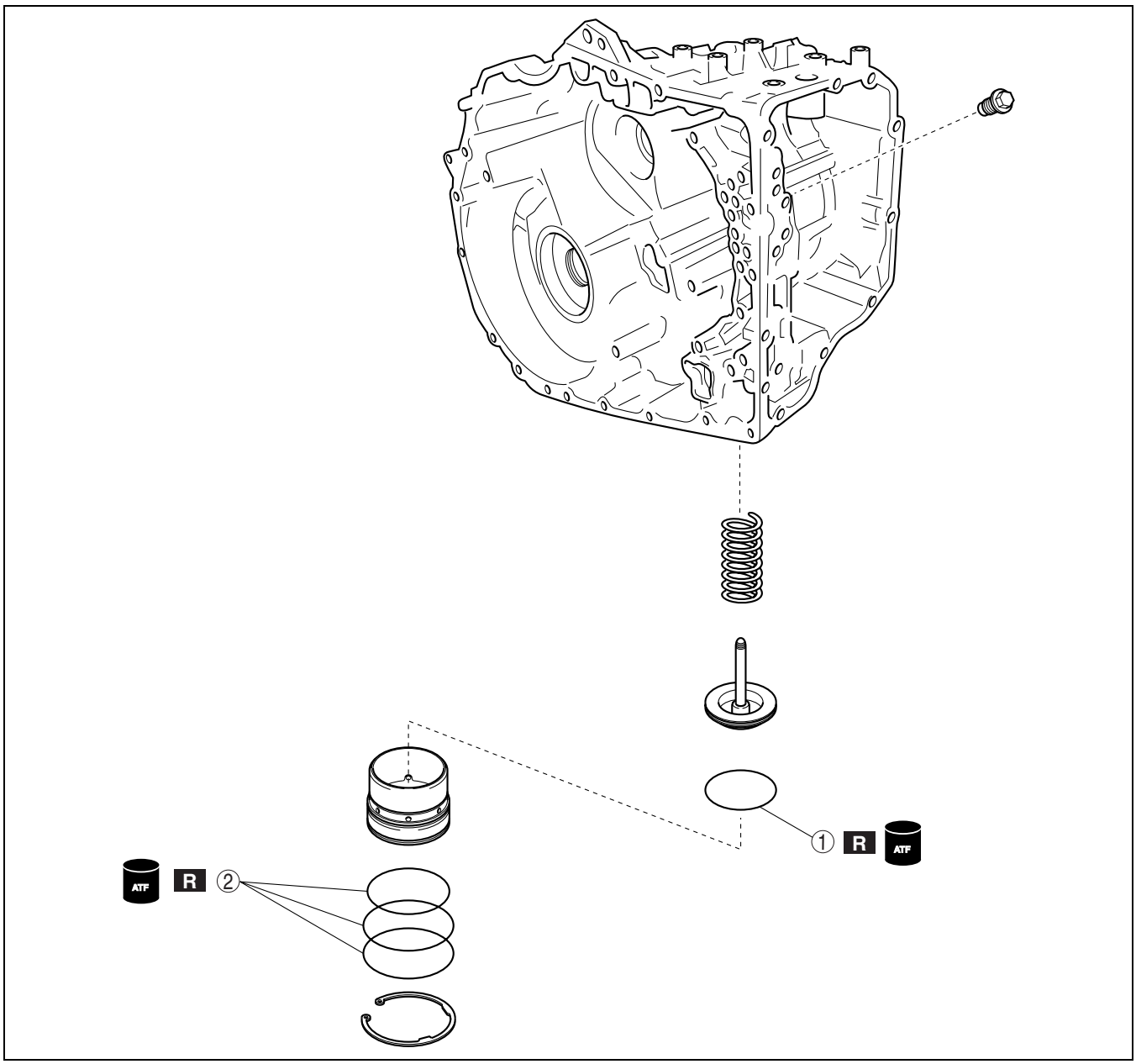

bawuua00000351

1	O-ring

2	O-ring

Disassembly Procedure

1. Remove the O-ring from the B1 brake piston.

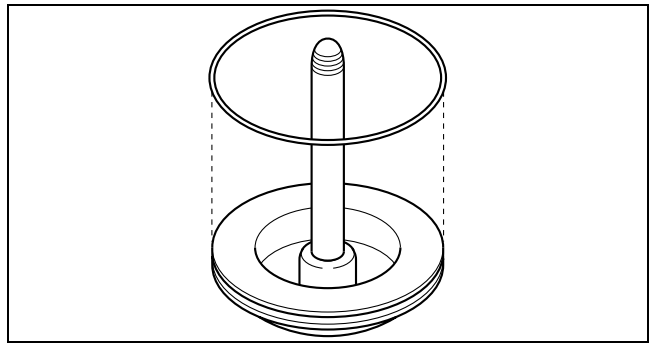

bawuua00000352

2. Remove the O-rings from the brake piston cover.

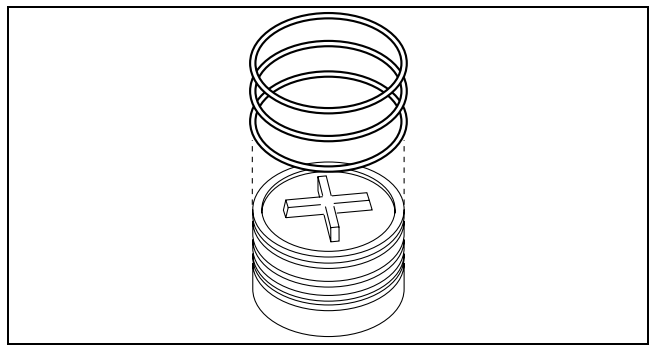

bawuua00000353

Assembly Procedure

1. Apply ATF to the new O-rings.
2. Install the O-rings to the brake piston cover.
   Number of O-ring
   - AJ: 3
   - L3 with TC: 2
3. Apply ATF to a new O-ring.

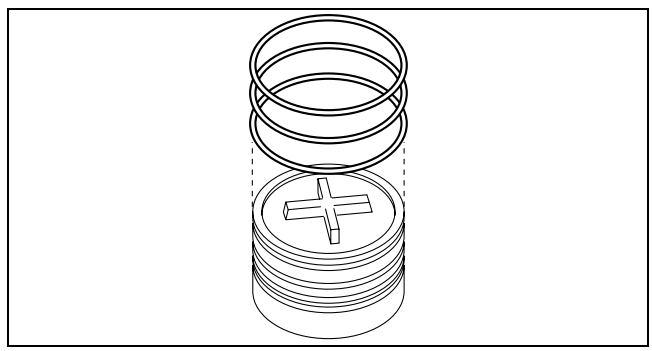

bawuua00000353

4. Install the O-ring to the B1 brake piston.

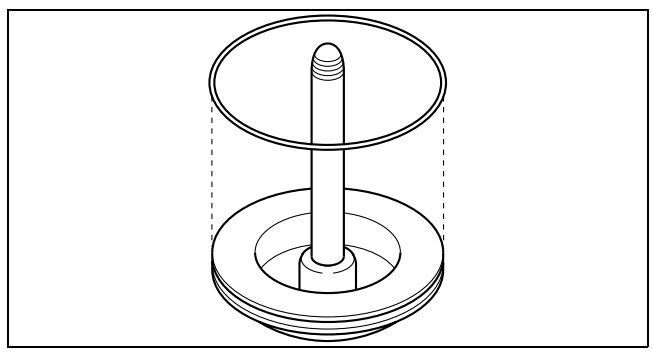

bawuua00000352

C3 CLUTCH COMPONENT DISASSEMBLY

id051700500300

Components

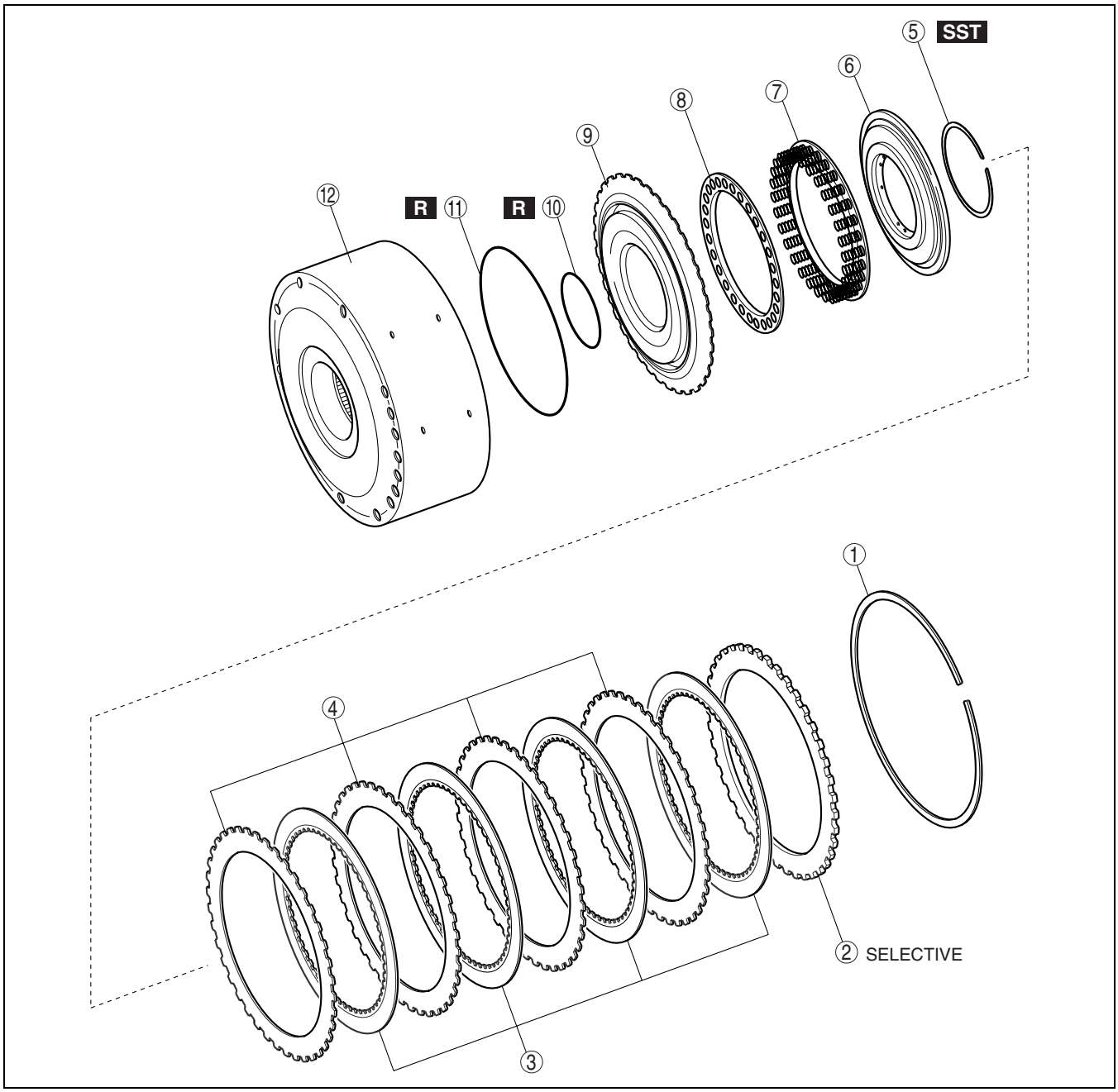

bawuua00000354

1	Snap ring
2	Retaining plate
3	Drive plate
4	Driven plate
5	Snap ring
6	C3 clutch balancer

7	Piston return spring
8	Spring retainer
9	C3 clutch piston
10	O-ring
11	O-ring
12	C3 clutch drum

Disassembly Procedure

1. Using a flathead screwdriver, remove the snap ring from the C3 clutch drum.

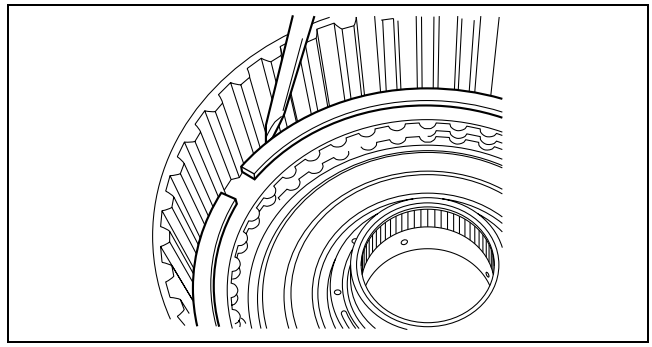

bawuua00000355

2. Remove the retaining plate, drive and driven plates from the C3 clutch drum.

   Note
   - Inspect the number of drive and driven plates.

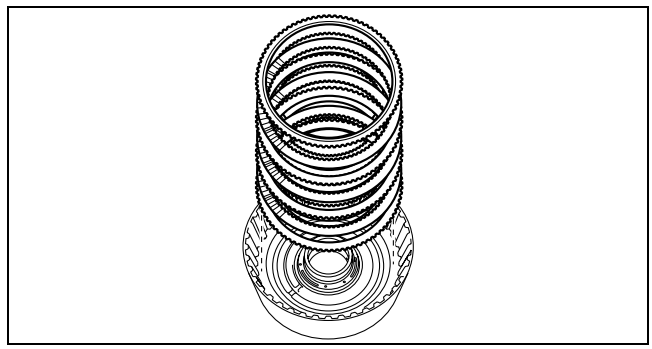

bawuua00000356

3. Place the **SST** on the clutch balancer and compress the return spring with a press.

   Caution
   - **Be careful not to expand the snap ring too much.**

4. Remove the snap ring using snap ring pliers.

   Caution
   - **Do not damage the seal on the clutch balancer.**

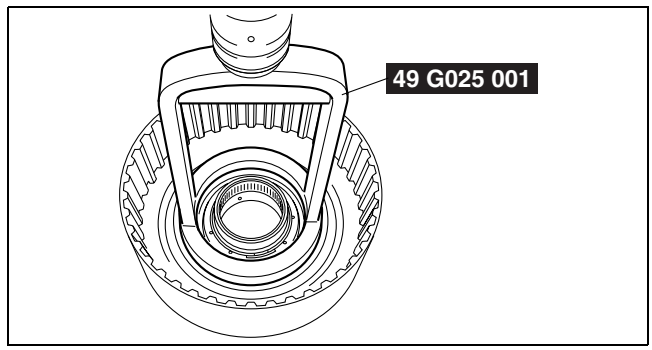

bawuua00000357

5. Remove the clutch balancer, return spring and the retainer from the C3 clutch drum.

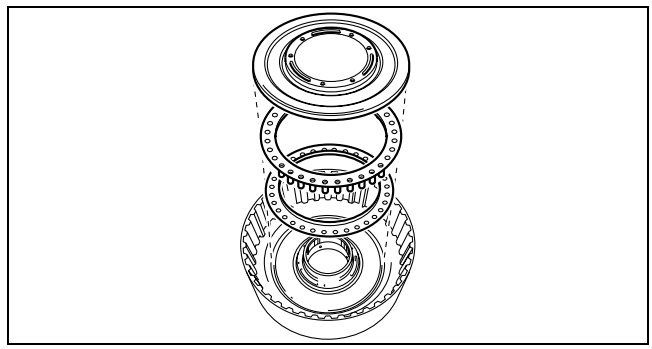

bawuua00000358

6. While pushing the C3 clutch piston by hand, apply compressed air into the oil passage as shown in the figure and remove the C3 clutch piston from the C3 clutch drum.

   Air pressure
   392 kPa {4.0 kgf/cm^2, 57 psi}

   Note
   - When applying compressed air, shut the 3 oil passages of the C3 clutch drum as shown in the figure.

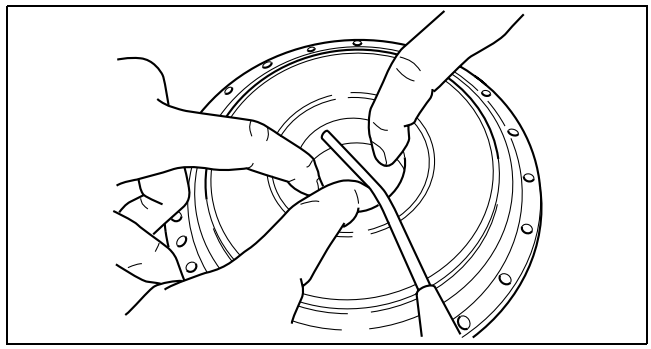

bawuua00000359

7. Remove the O-rings from the C3 clutch drum.

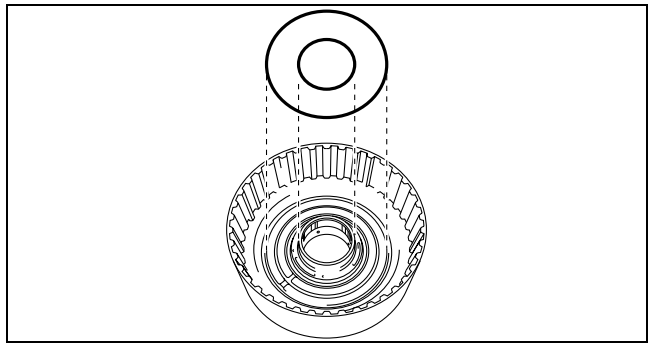

bawuua00000360

C3 CLUTCH INSPECTION

id051700500400

1. Inspect the lining of all drive plates.
   - If the lining is flaking or has changed color, or if it is worn or the print mark is wearing away, replace with a new drive plate. When replacing, inspect the contact surfaces between the retaining plate, driven plate and drive plate. If they are scratched or have changed color, replace with new parts.

   Note
   - Before replacing with new drive plates, soak them at least **2 h** in ATF.

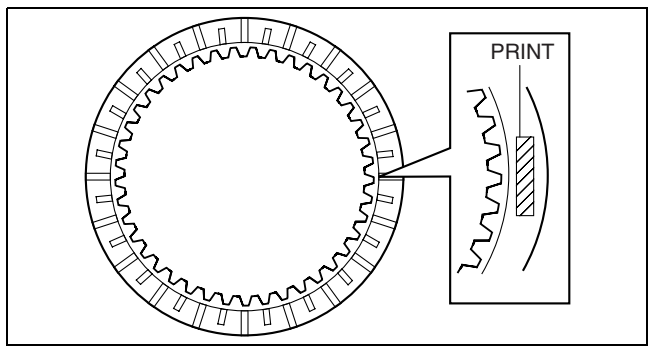

bawuua00000495

2. Using vernier calipers, measure the free length of the piston return spring.

   C3 clutch return spring free length
   Standard: 12.91 mm {0.5083 in}

   - If it is less than the specification, replace the piston return spring with a new one.

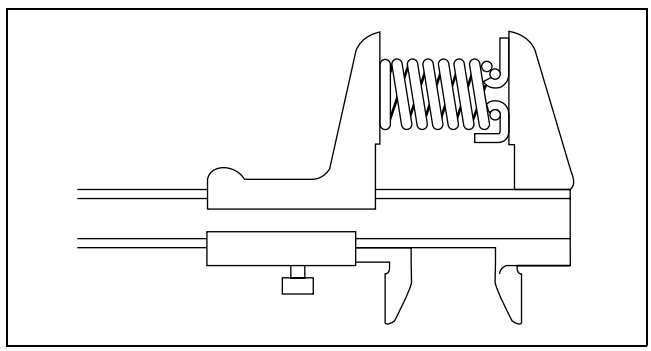

bawuua00000496

C3 CLUTCH COMPONENT ASSEMBLY

id051700500500

Components

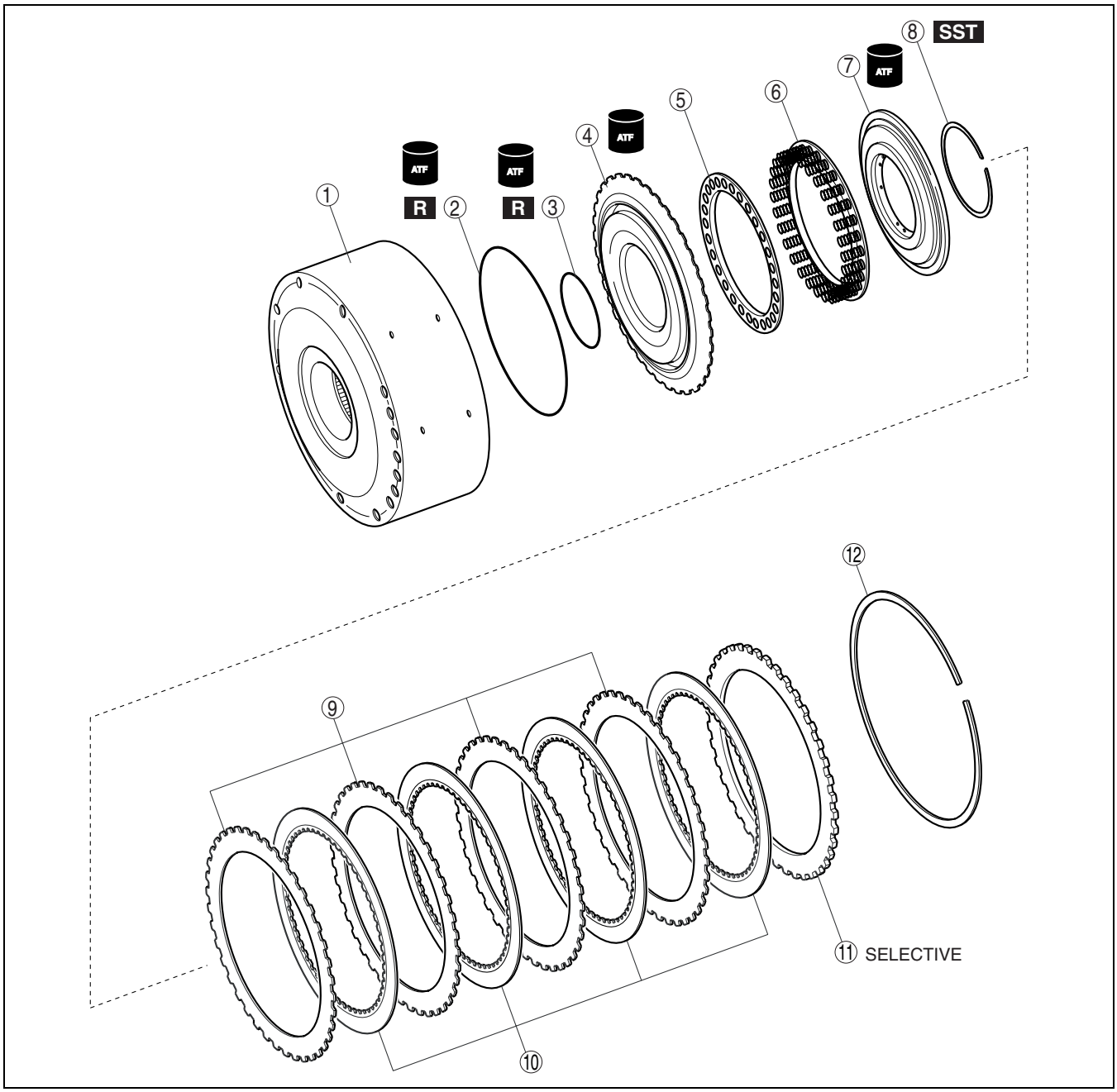

bawuua00000361

1	C3 clutch drum
2	O-ring
3	O-ring
4	C3 clutch piston
5	Spring retainer
6	Piston return spring

7	C3 clutch balancer
8	Snap ring
9	Driven plate
10	Drive plate
11	Retaining plate
12	Snap ring

Assembly Procedure

1. Apply ATF to the new O-rings and the C3 clutch drum.
2. Install the O-rings to the C3 clutch drum.
3. Apply ATF to the sliding surface of the C3 clutch piston.

Caution
- **Do not damage the seal on the piston and O-rings.**

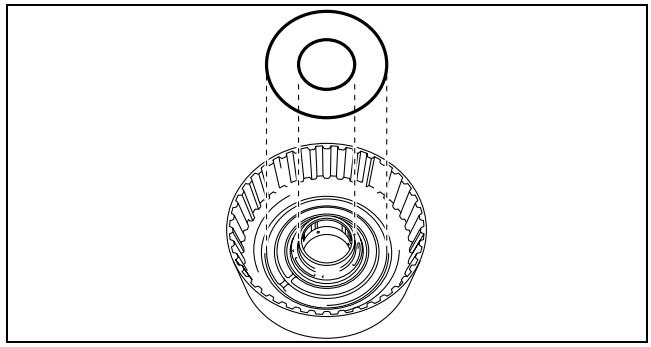

bawuua00000362

4. Install the C3 clutch piston to the C3 clutch drum.
5. Apply ATF to the seal on the clutch balancer.

Caution
- **Do not damage the seal on the clutch balancer.**

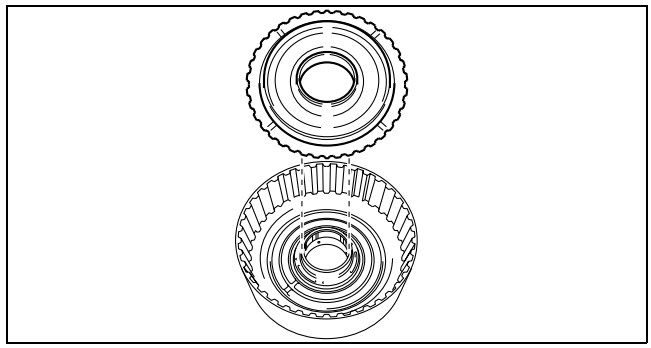

bawuua00000363

6. Install the retainer, return spring and the clutch balancer to the C3 clutch drum.

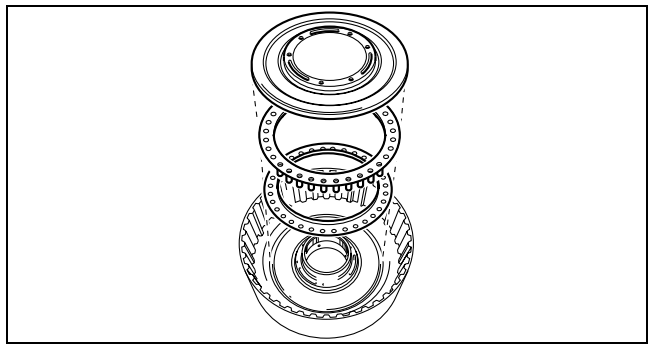

bawuua00000364

7. Place the **SST** on the clutch balancer and compress the piston return spring with a press.

Caution
- **When installing the snap ring, set the end gap of the snap ring as shown in the figure.**
- **Do not expand the snap ring too much.**

8. Install the snap ring in the groove using snap ring pliers.

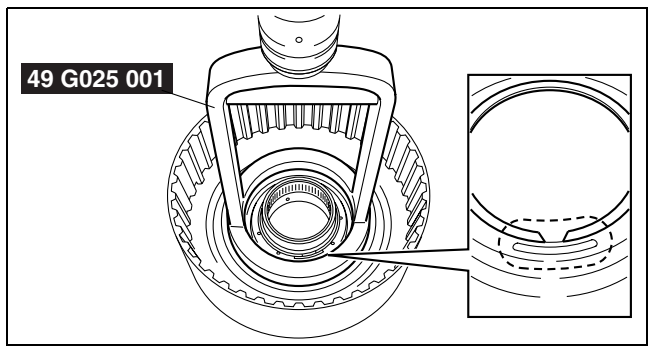

bawuua00000365

9. Install the driven plates, drive plates and the retaining plate in the following order to the C3 clutch drum as shown in the figure.
   - Driven— Drive— Driven— Drive— Driven— Drive— Driven— Drive— Retaining

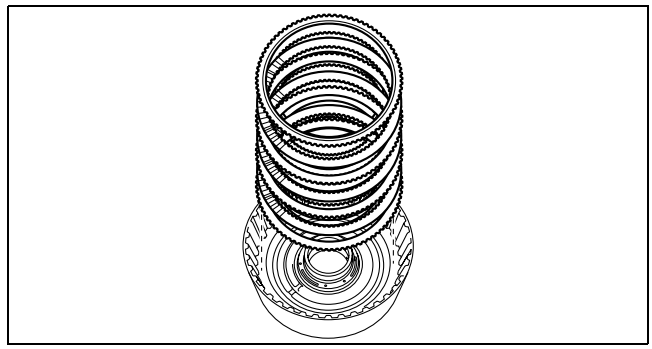

bawuua00000366

Caution
- **Inspect the number and order of the retaining plate, drive and driven plates.**

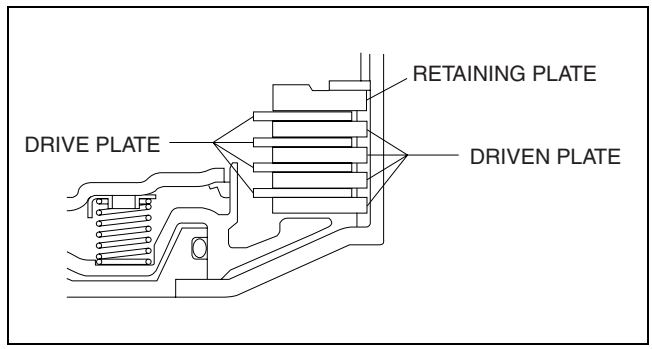

bawuua00000367

10. Using a flathead screwdriver, install the snap ring in the groove.

Caution
- **When installing the snap ring, set the end gap of the snap ring as shown in the figure.**

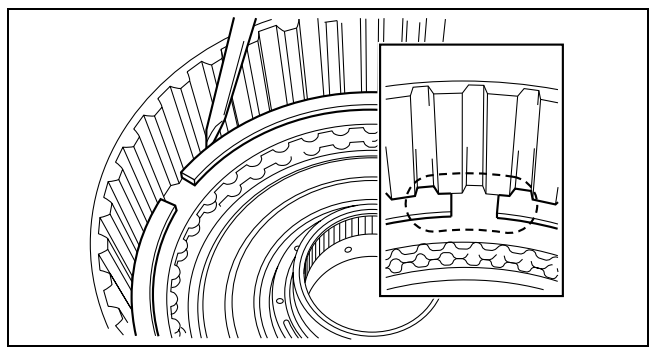

bawuua00000368

11. Install the C3 clutch component to the oil pump and set a dial indicator as shown in the figure.
12. Apply compressed air as shown in the figure and measure the C3 clutch piston stroke.

Air pressure
200 kPa {2.0 kgf/cm^2, 29 psi}

C3 clutch piston stroke
0.6 — 0.8 mm {0.024 — 0.031 in}

- If not within the specification, select an appropriate retaining plate.

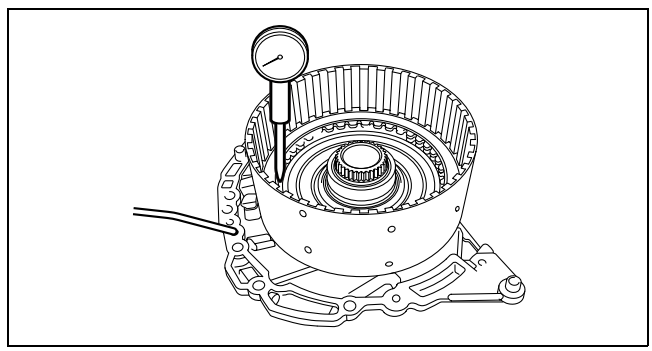

bawuua00000369

Retaining plate size

Identification mark	Thickness (mm {in})
1	2.8 {0.110}
A	2.85 {0.112}
2	2.9 {0.114}
B	2.95 {0.116}
3	3.0 {0.118}
C	3.05 {0.120}
4	3.1 {0.122}
5	3.2 {0.126}
6	3.3 {0.130}
7	3.4 {0.134}
8	3.5 {0.138}

FRONT PLANETARY GEAR COMPONENT INPUT SHAFT DISASSEMBLY/ASSEMBLY

id051700500600

Components

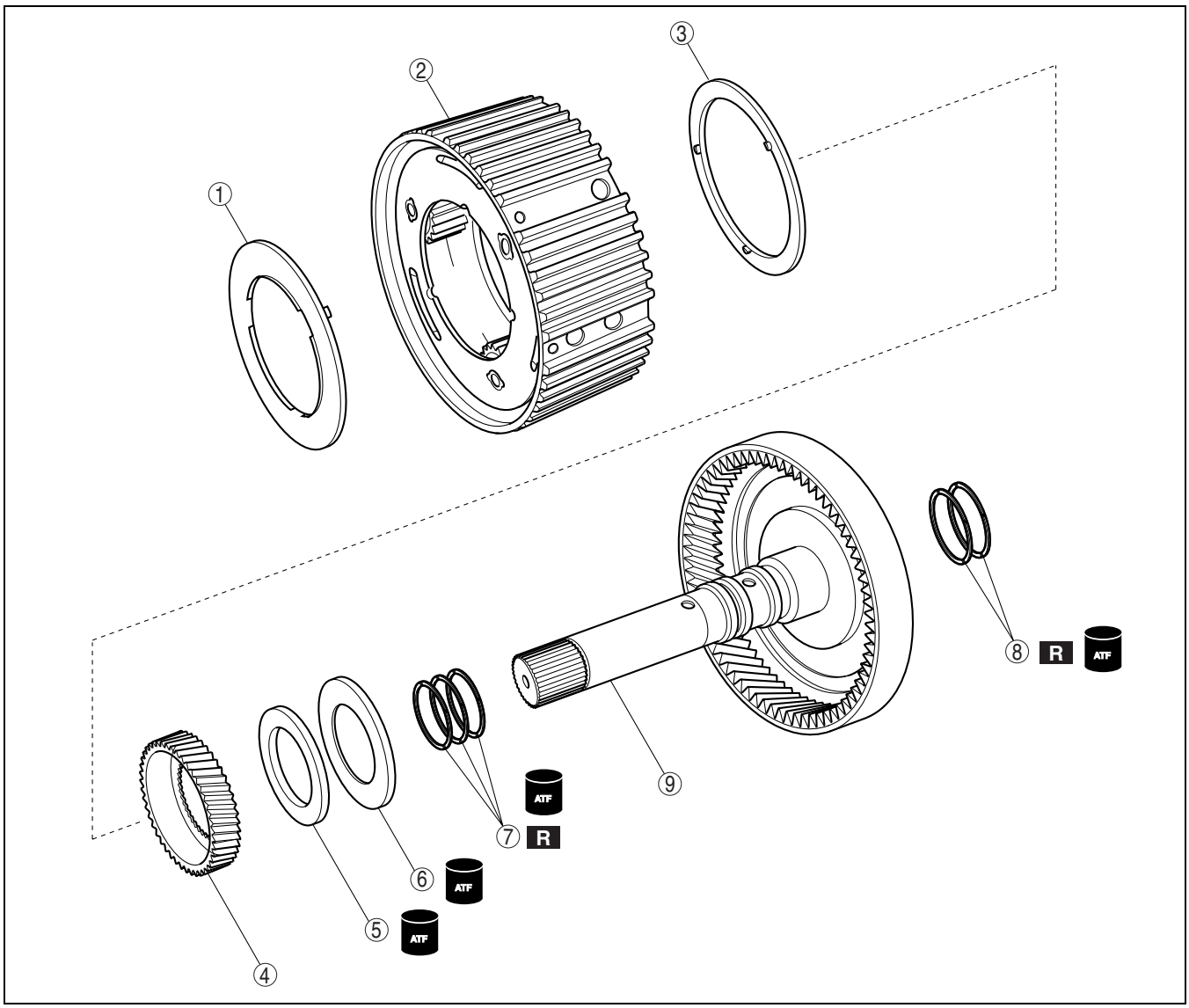

bawuua00000497

1	Thrust washer
2	Front planetary gear component
3	Thrust washer
4	Front planetary sun gear
5	Thrust bearing

6	Bearing race
7	Seal ring
8	Seal ring
9	Input shaft

Disassembly Procedure

1. Remove the thrust washer from the front planetary gear component.

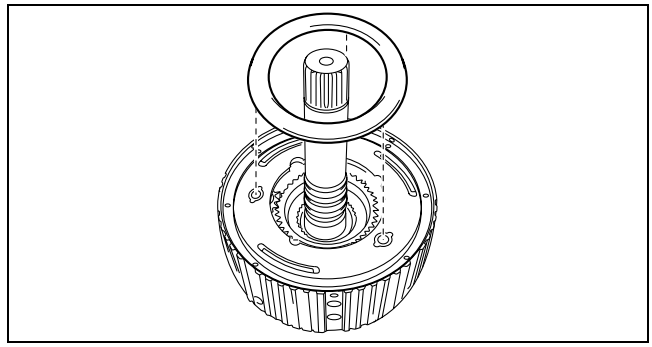

bawuua00000498

2. Remove the front planetary gear component from the input shaft.

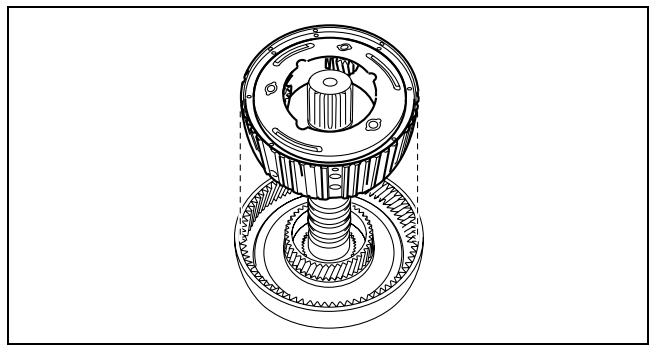

bawuua00000499

3. Remove the thrust washer from the front planetary gear component.

   Note
   - In some cases, the thrust washer may be detached with the input shaft attached.

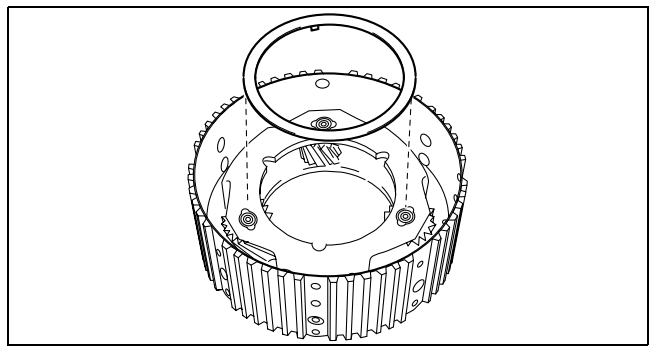

bawuua00000500

4. Remove the front planetary sun gear, thrust bearing and the bearing race from the input shaft.

   Note
   - If it is difficult to remove the bearing race, pry it off gently using a flathead screwdriver.

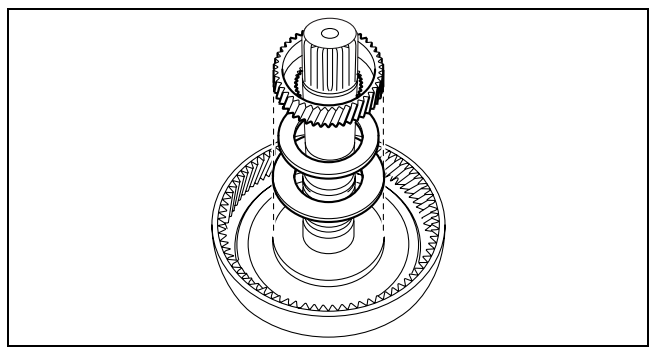

bawuua00000501

5. Remove the seal rings from the input shaft.

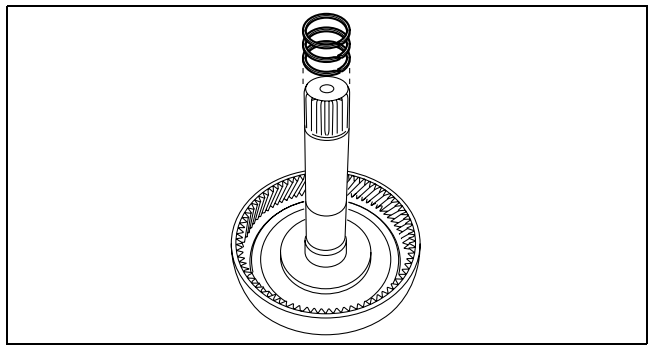

bawuua00000502

6. Remove the seal rings from the input shaft.

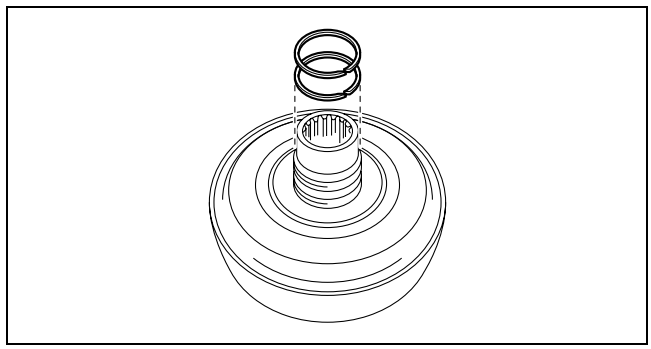

bawuua00000503

Assembly Procedure

1. Apply ATF to the new seal rings and sliding surface of the input shaft.

   Caution
   - **Do not expand the seal ring too much.**
   - **Be careful not to shorten the seal rings too much, when installing the seal rings.**

2. Compress the seal rings as shown in the figure. Then install the seal rings to the input shaft.

   Note
   - Verity that seal rings rotate smoothly after installing them.

3. Apply ATF to the bearing race.

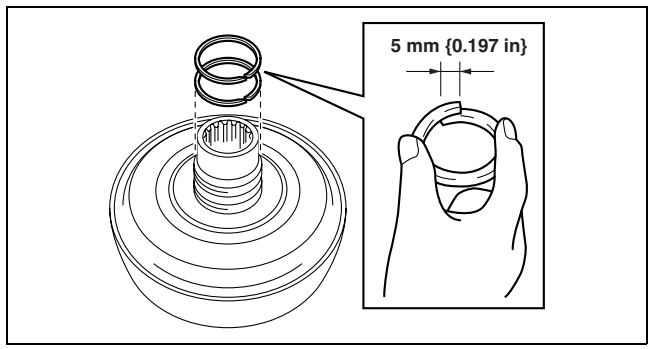

bawuua00000504

4. Install the bearing race to the input shaft.

   Caution
   - **Apply grease to the mounting surface of the thrust washer so that it does not drop when the front planetary gear component is installed.**
   - **Do not apply grease to the oil holes of the thrust washer.**
   - **Do not drop the thrust washer.**

5. Apply grease to the thrust washer.

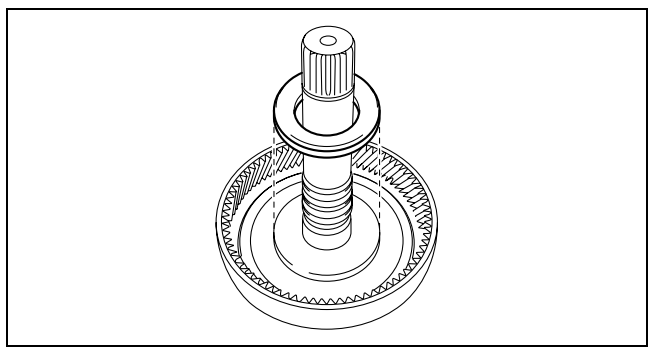

bawuua00000505

6. Install the thrust washer to the front planetary gear component.

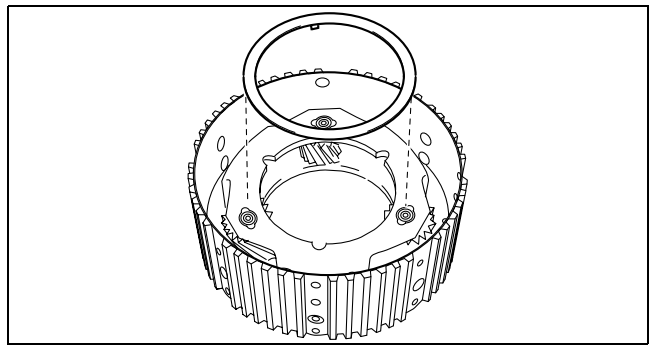

bawuua00000500

7. Install the front planetary gear component to the input shaft.
8. Apply ATF to the thrust bearing.

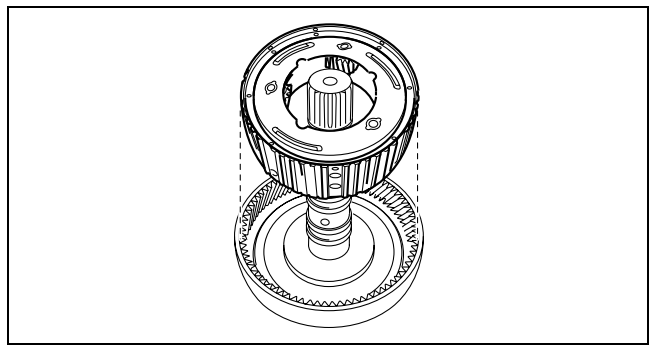

bawuua00000506

9. Install the thrust bearing to the input shaft as shown in the figure.

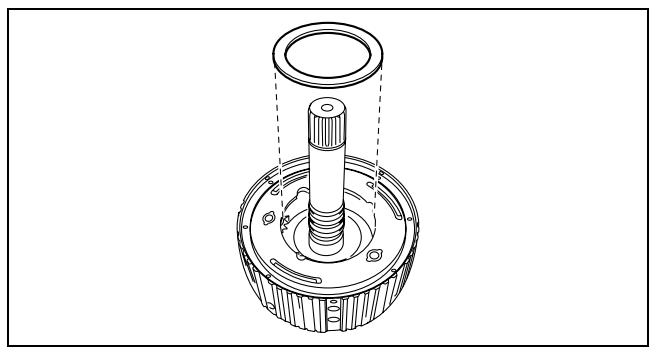

bawuua00000507

10. Install the front planetary sun gear to the input shaft as shown in the figure.
11. Apply ATF to the new seal rings and sliding surface of the input shaft.

Caution

- **Do not expand the oil seal rings too much.**
- **Be careful not to shorten the seal rings too much, when installing the seal rings.**

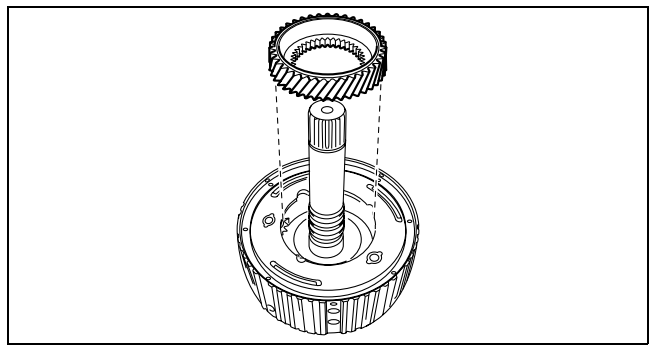

bawuua00000508

12. Compress the seal rings as shown in the figure. Then install the seal rings to the input shaft.

Note
- Verify that seal rings rotate smoothly after installing them.

Caution
- **Apply grease to the mounting surface of the thrust washer so that it does not drop when the front planetary gear component is installed.**
- **Do not coat grease to the oil holes of the thrust washer.**

13. Apply grease to the thrust washer.
14. Install the thrust washer to the front planetary gear component.

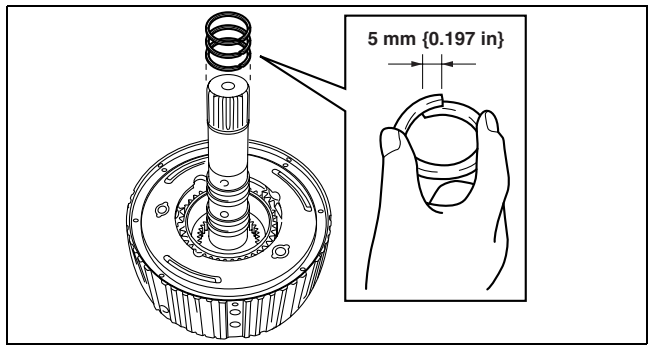

bawuua00000509

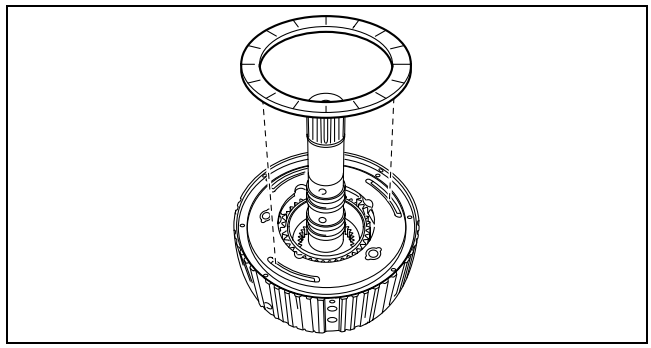
bawuua00000510

C1 CLUTCH COMPONENT DISASSEMBLY

id051700500700

Components

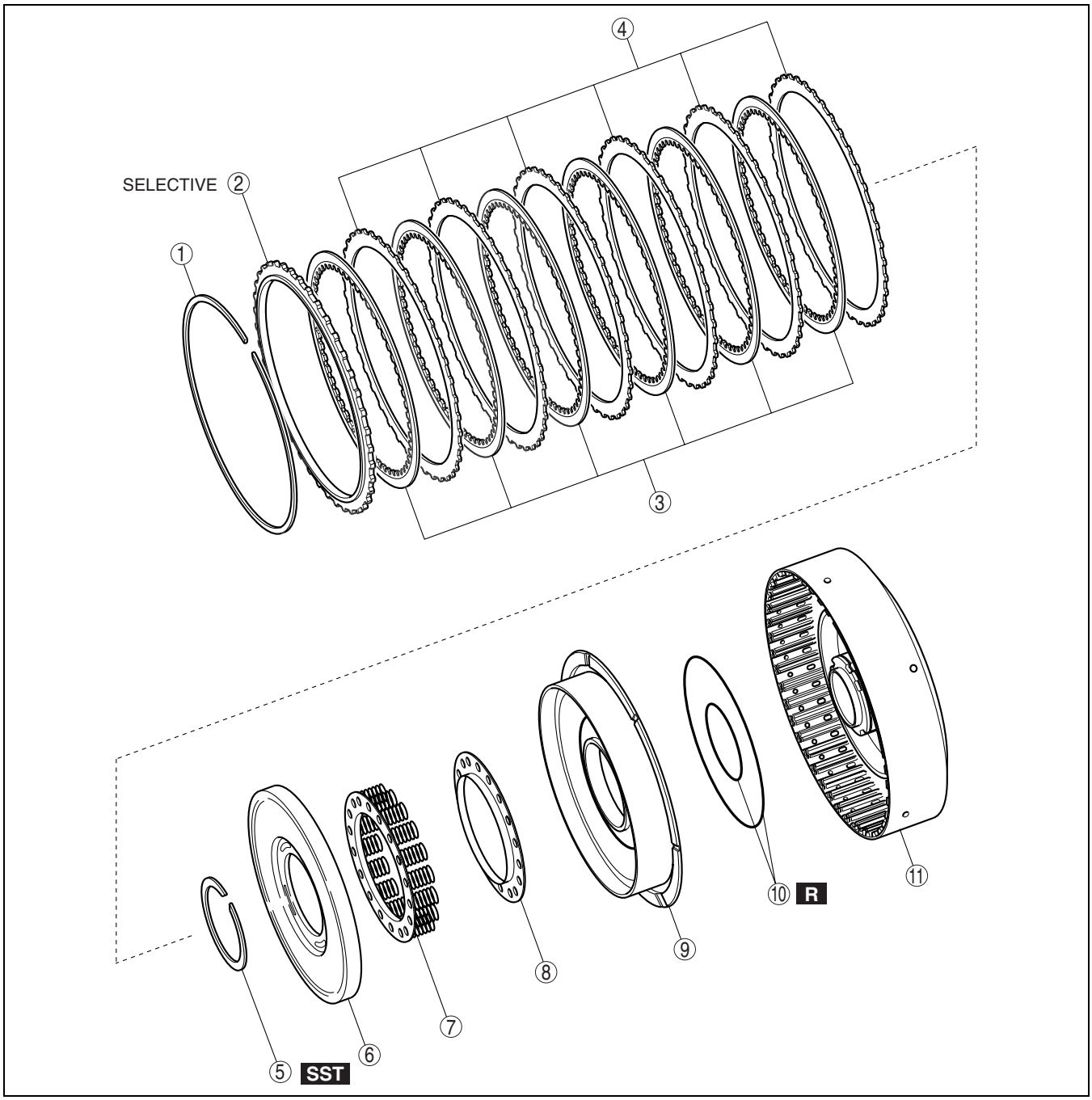

bawuua00000370

1	Snap ring
2	Retaining plate
3	Drive plate
4	Driven plate
5	Snap ring
6	C1 clutch balancer

7	Piston return spring
8	Spring retainer
9	C1 clutch piston
10	O-ring
11	C1 clutch drum

Disassembly Procedure

1. Using a flathead screwdriver, remove the snap ring from the C1 clutch drum.

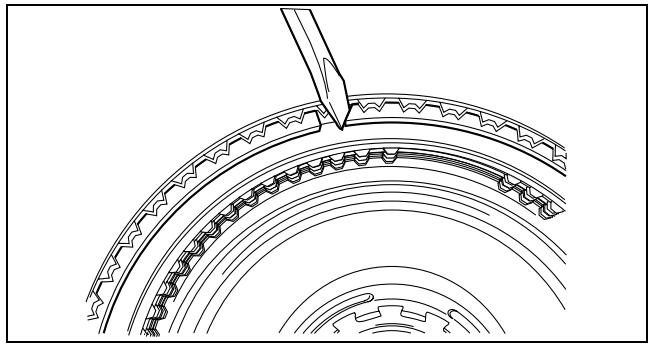

bawuua00000371

2. Remove the retaining plate, drive and driven plates from the C1 clutch drum.

   Note
   - Inspect the number of drive and driven plates.

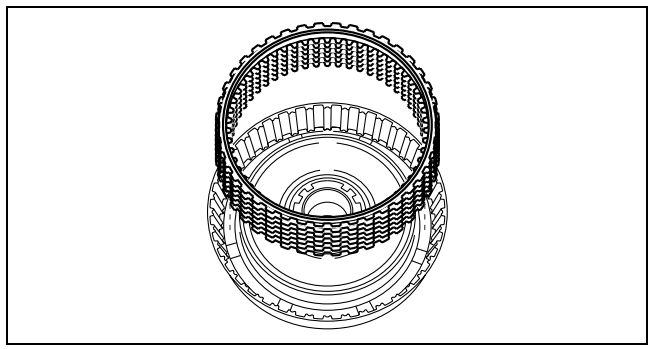

bawuua00000372

3. Place the **SST** on the clutch balancer and compress the return spring with a press.

   Caution
   - **Do not expand the snap ring too much.**

4. Remove the snap ring using snap ring pliers.

   Caution
   - **Do not damage the seal on the clutch balancer.**

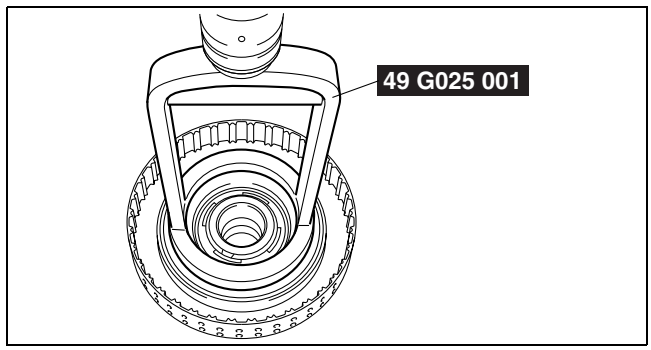

bawuua00000373

5. Remove the clutch balancer, return spring and the retainer from the C1 clutch drum.

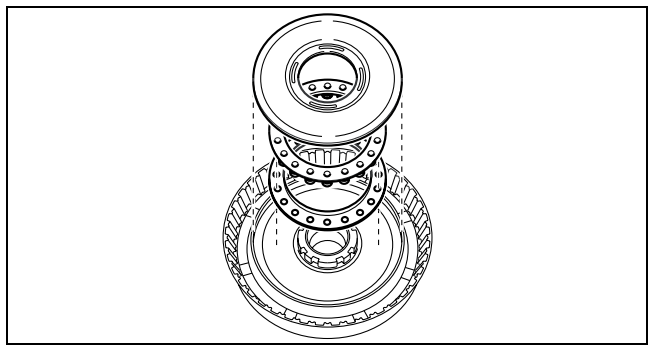

bawuua00000374

6. While pushing the C1 clutch piston by hand, apply compressed air into the oil passage as shown in the figure and remove the forward clutch piston from the C1 clutch drum.

   Air pressure
   392 kPa {4.0 kgf/cm^2, 57 psi}

   Note
   - When applying compressed air, block the one oil passage of the C1 clutch drum as shown in the figure.

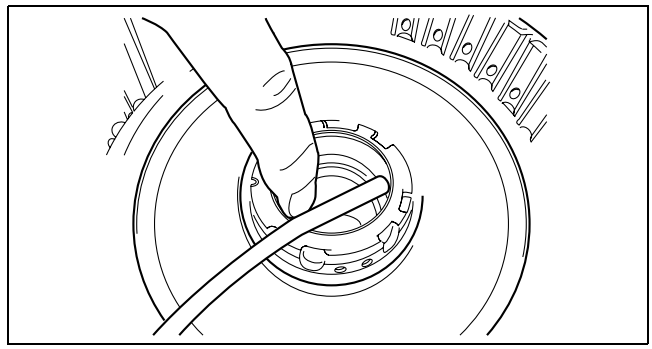

bawuua00000375

7. Remove the O-rings from the C1 clutch drum.

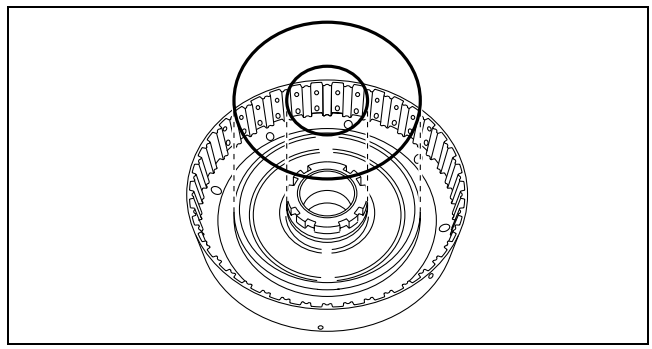

bawuua00000376

C1 CLUTCH INSPECTION

id051700500800

1. Inspect the lining of all drive plates.
   - If the lining is flaking or has changed color, or if it is worn or the print mark is wearing away, replace with a new drive plate. When replacing, inspect the contact surfaces between the retaining plate, driven plate and drive plate. If they are scratched or have changed color, replace with new parts.

   Note
   - Before replacing with new drive plates, soak them at least **2 h** in ATF.

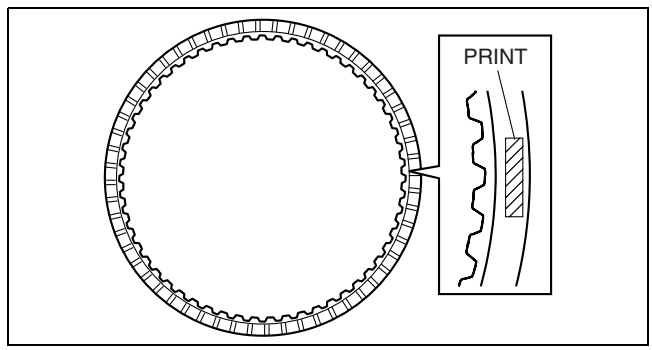

bawuua00000511

2. Using vernier calipers, measure the free length of the piston return spring.

   C1 clutch return spring free length
   Standard: 17.01 mm {0.6697 in}

   - If it is less than the specification, replace the piston return spring with a new one.

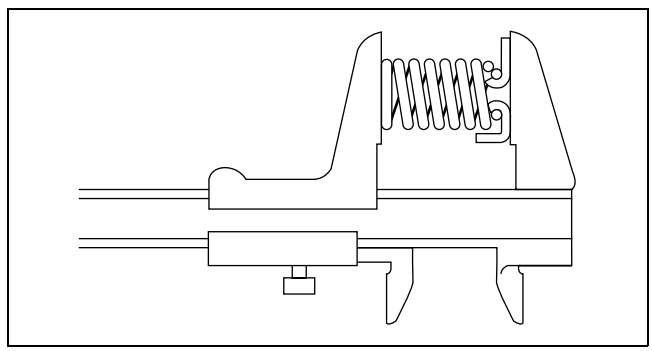

bawuua00000512

C1 CLUTCH COMPONENT ASSEMBLY

id051700500900

Components

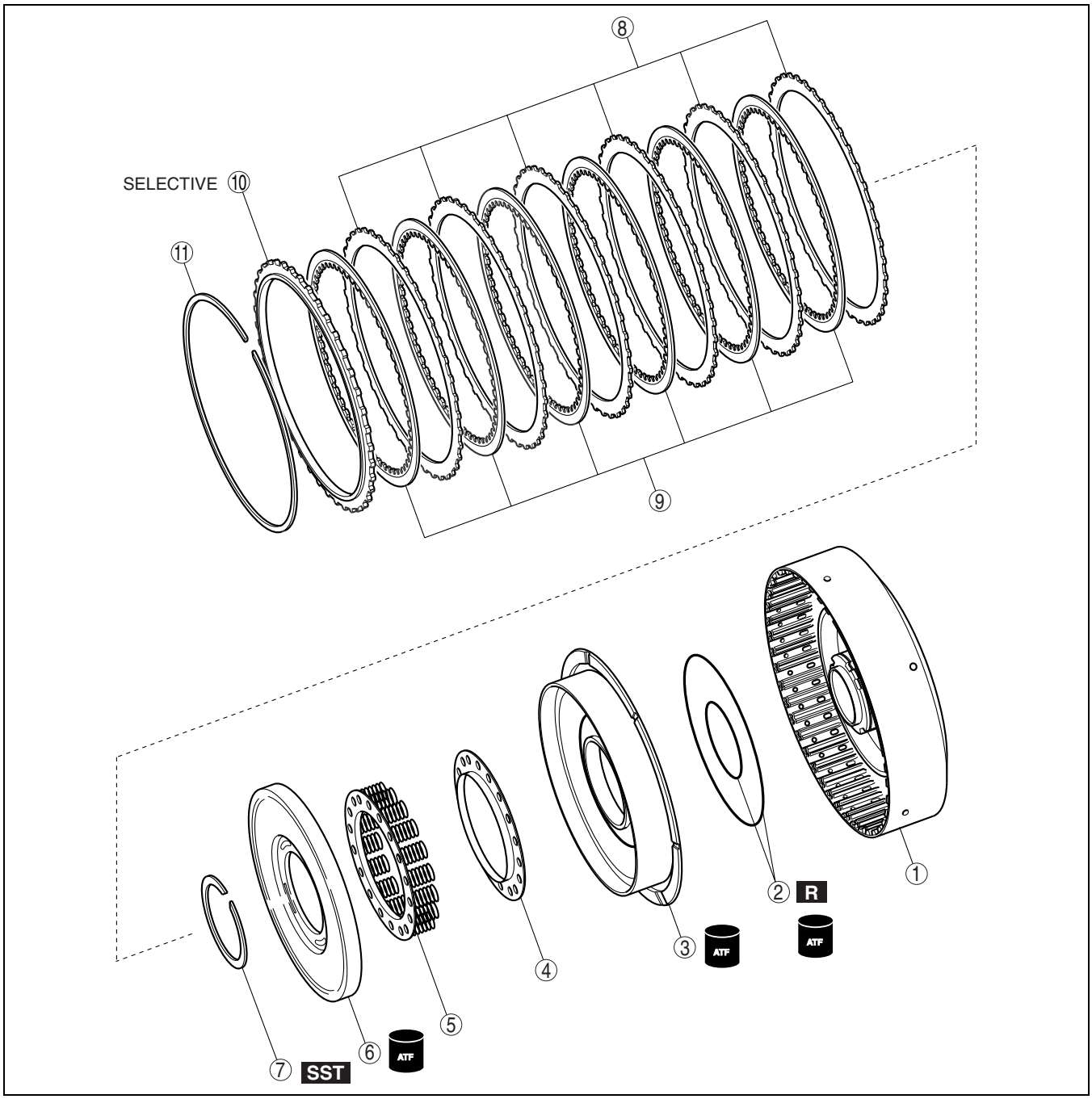

bawuua00000377

1	C1 clutch drum
2	O-ring
3	C1 clutch piston
4	Spring retainer
5	Piston return spring
6	C1 clutch balancer

7	Snap ring
8	Driven plate
9	Drive plate
10	Retaining plate
11	Snap ring

Assembly Procedure

1. Apply ATF to the new O-rings and the C1 clutch drum.
2. Install the O-rings to the C1 clutch drum.
3. Apply ATF to the sliding surface of the forward clutch piston.

   Caution
   - **Do not damage the seal on the piston and O-ring.**

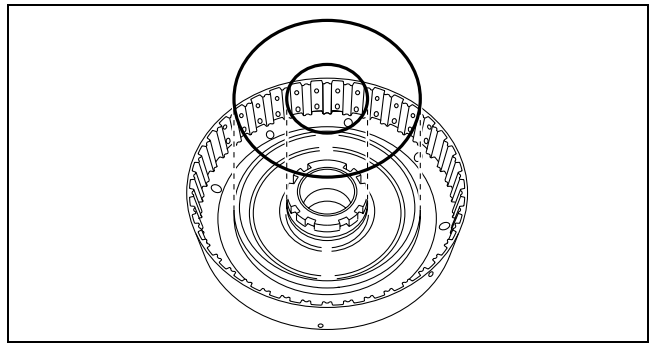

bawuua00000378

4. Install the C1 clutch piston to the C1 clutch drum.
5. Apply ATF to the seal on the clutch balancer.

   Caution
   - **Do not damage the seal on the clutch balancer.**

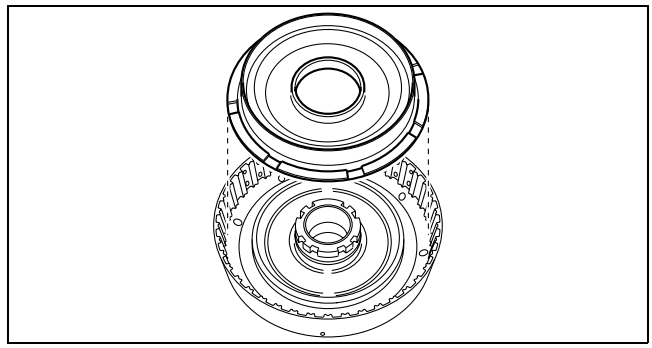

bawuua00000379

6. Install the retainer, return spring and the clutch balancer to the C1 clutch drum.

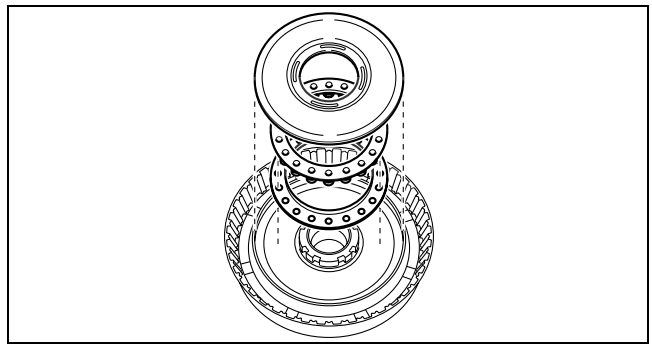

bawuua00000380

7. Place the **SST** on the clutch balancer and compress the return spring component with a press.

   Caution
   - **When installing the snap ring, set the end gap of the snap ring as shown in the figure.**
   - **Do not expand the snap ring too much.**

8. Install the snap ring in the groove using snap ring pliers.

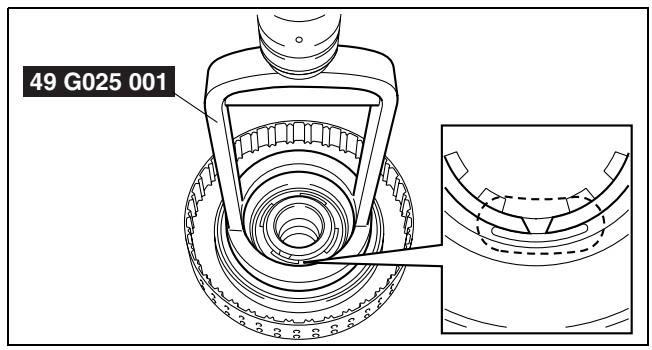

bawuua00000381

9. Install the driven plates, drive plates and the retaining plate in the following order to the C1 clutch drum as shown in the figure.
   Six drive plates type
   - Driven— Drive— Driven— Drive— Driven— Drive— Driven— Drive— Driven— Drive— Driven— Drive— Retaining

   Seven drive plates type
   - Driven— Drive— Driven— Drive— Driven— Drive— Driven— Drive— Driven— Drive— Driven— Drive— Driven— Drive— Retaining

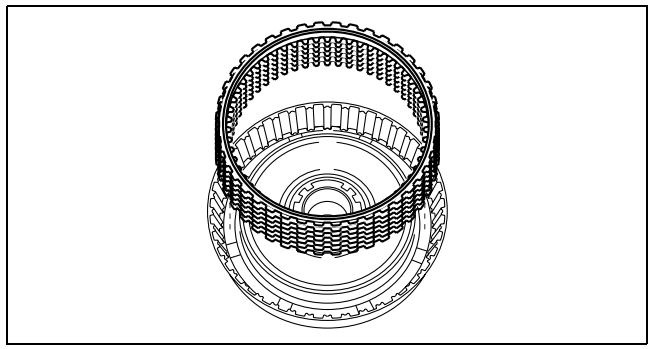

bawuua00000382

Caution
- **Inspect the number and order of the retaining plate, drive and driven plates.**

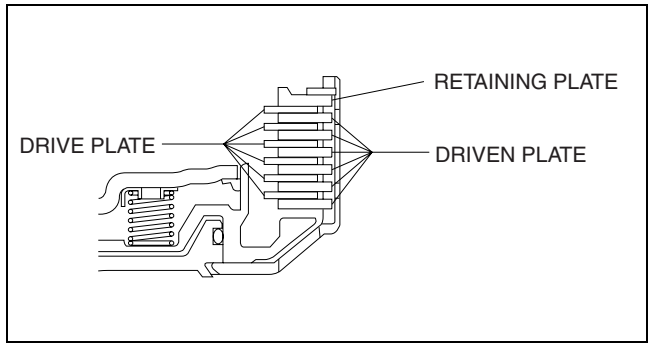

bawuua00000383

10. Using a flathead screwdriver, install the snap ring in the groove.

Caution
- **When installing the snap ring, set the end gap of the snap ring as shown in the figure.**

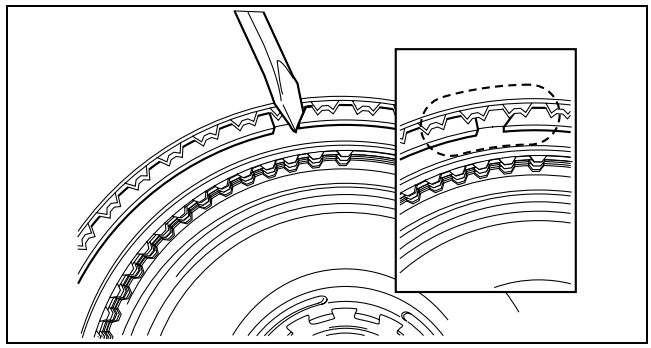

bawuua00000384

11. Install the C1 clutch component on the input shaft and set a dial indicator as shown in the figure.
12. Apply compressed air as shown in the figure and measure the C1 clutch piston stroke.

Air pressure
200 kPa {2.0 kgf/cm^2, 29 psi}

C1 clutch piston stroke
1.2 — 1.4 mm {0.047 — 0.055 in}

- If not within the specification, select an appropriate retaining plate.

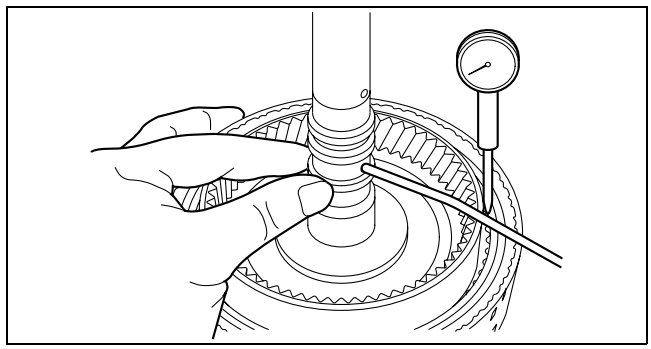

bawuua00000385

Retaining plate size

Identification mark	Thickness (mm {in})
1	2.8 {0.110}
2	2.9 {0.114}
3	3.0 {0.118}
4	3.1 {0.122}
A	3.15 {0.124}
5	3.2 {0.126}
B	3.25 {0.128}
6	3.3 {0.130}
C	3.35 {0.132}
7	3.4 {0.134}
8	3.5 {0.138}

COUNTER DRIVE GEAR DISASSEMBLY/ASSEMBLY

id051700501000

Components

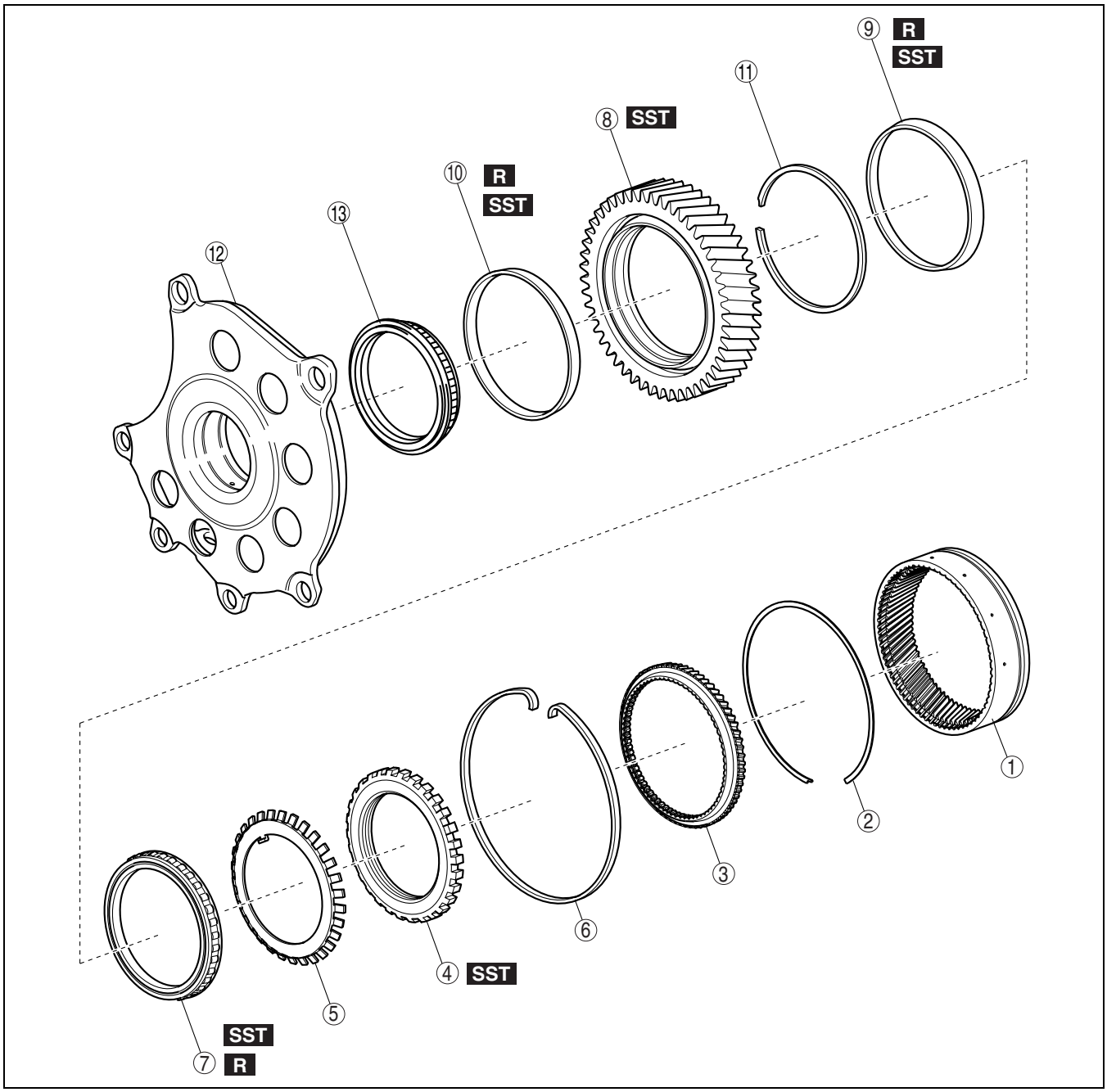

bawuua00000386

1	Rear planetary ring gear
2	Snap ring
3	Rear planetary ring gear flange
4	Nut
5	Washer
6	Snap ring
7	Tapered roller bearing

8	Counter drive gear
9	Bearing race
10	Bearing race
11	Snap ring
12	Center support
13	Tapered roller bearing

Disassembly Procedure

1. Using the snap ring pliers, loosen the snap ring and remove the rear planetary ring gear.

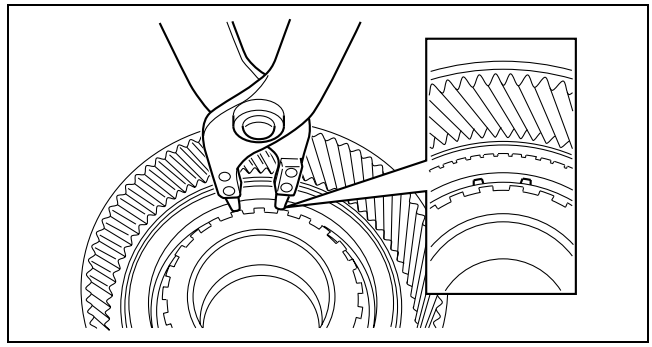

bawuua00000387

2. Using a flathead screwdriver, remove the snap ring from the rear planetary ring gear.
3. Remove the ring gear flange from the rear planetary ring gear.

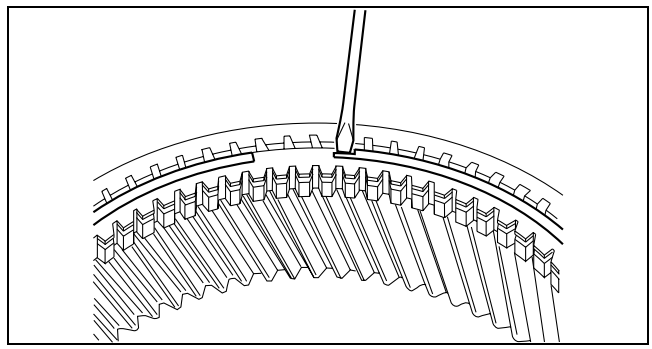

bawuua00000388

4. Using a flathead screwdriver and hammer, pry back the crimps locking the washer.

   Caution
   - **If the lockwasher crimps are not completely pried back, the tool cannot fit over the bolt properly and the bolt cannot be loosened.**

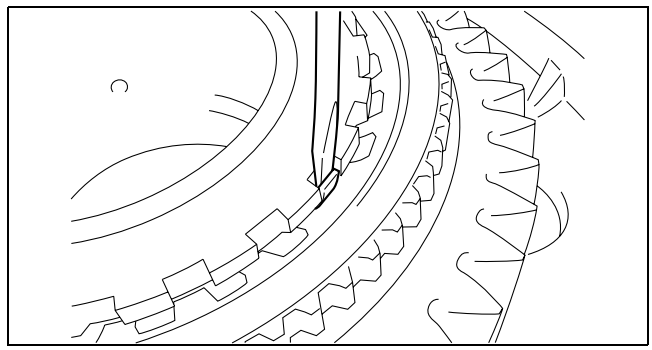

bawuua00000389

5. Using the **SST**, remove the nut and the washer.

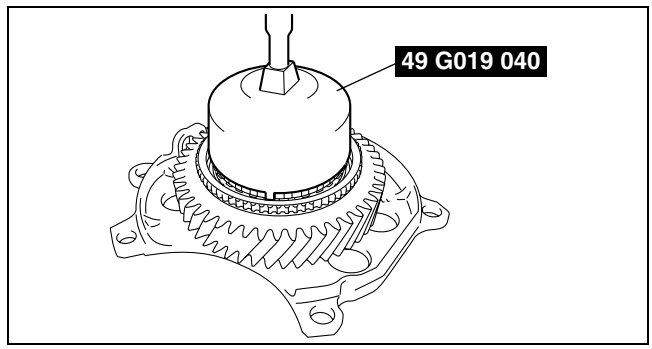

bawuua00000390

6. Using a flathead screwdriver, remove the snap ring from the counter drive gear.

   Caution
   - **Do not drop the tapered roller bearing.**

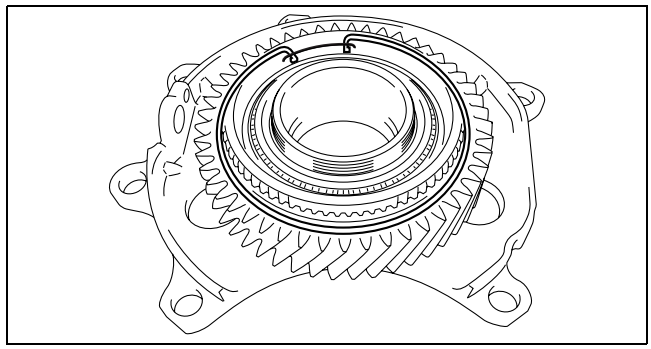

bawuua00000391

7. Using the **SST**, remove the counter drive gear and tapered roller bearing.

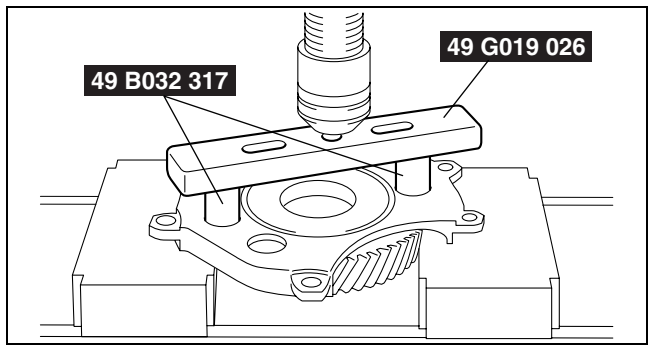

bawuua00000392

8. Using a flathead screwdriver and hammer, remove the bearing race inner from the counter drive gear.

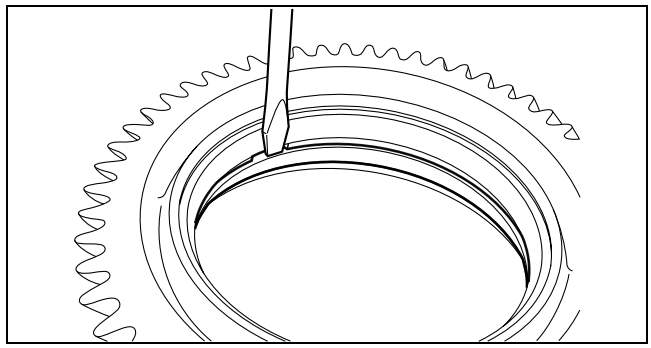

bawuua00000393

9. Using a flathead screwdriver and hammer, remove the bearing race outer from the counter drive gear.

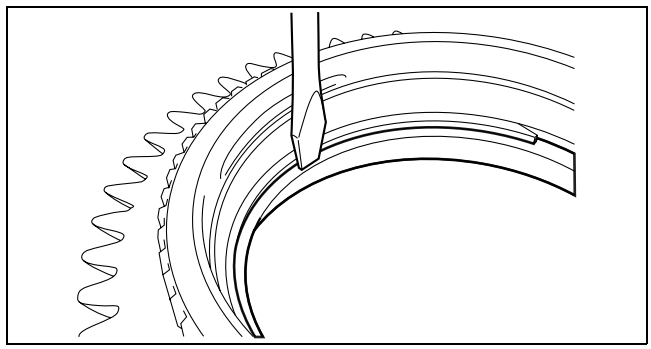

bawuua00000394

10. Using a flathead screwdriver, remove the snap ring from the counter drive gear.

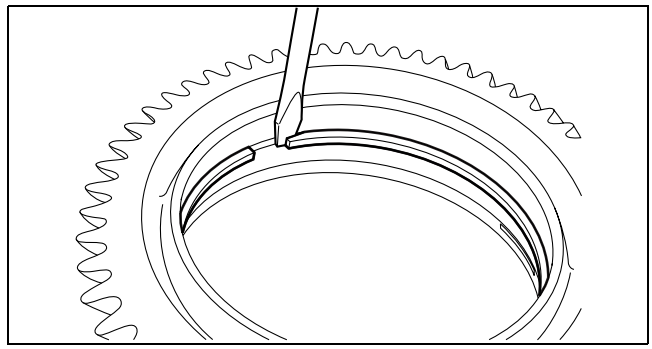

bawuua00000395

Note
- The tapered roller bearing cannot be removed from the center support.
- The tapered roller bearing and center support must be replaced as a set.

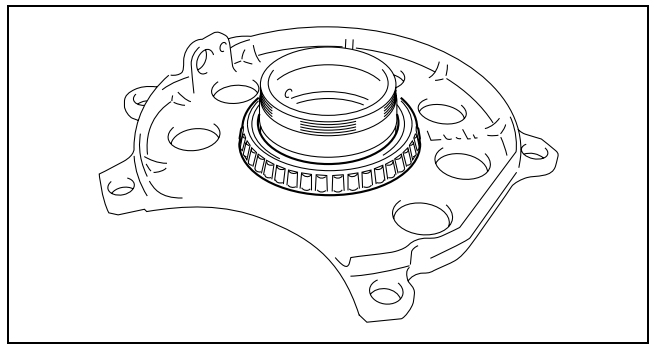

bawuua00000396

Assembly Procedure

Note
- The tapered roller bearing and bearing race outer must be replaced as a set.

1. Using the **SST** and a press, install the tapered roller bearing to the center support.
   Substitution SST
   - **49 L033 101**
     Outer diameter: 70— 76 mm {2.76— 2.99 in}
     Inner diameter: 68.2 mm {2.69 in} or more
     Plate thickness: 1 mm {0.04 in} or more

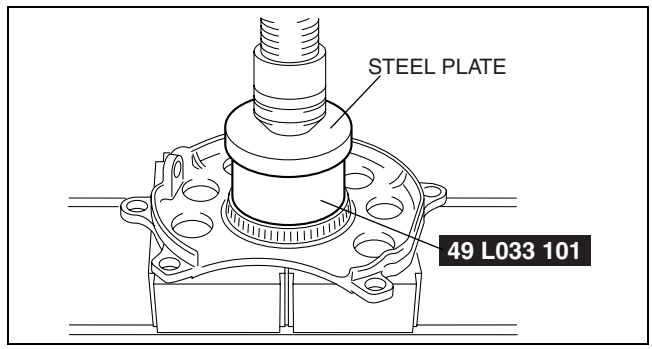

bawuua00000397

2. Using a flathead screwdriver, install the hole snap ring to the counter drive gear.

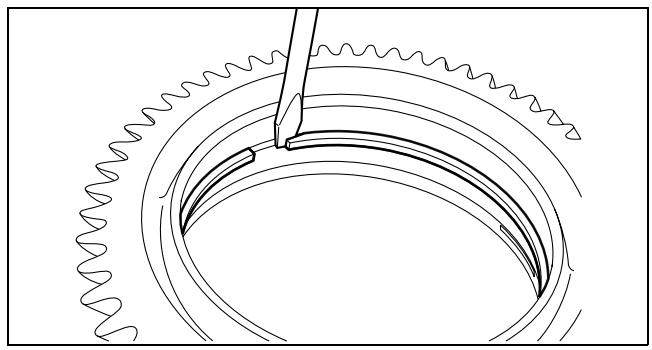

bawuua00000395

3. Using the old bearing race and the steel plate as shown in the figure, install the new bearing race outer to the counter drive gear.

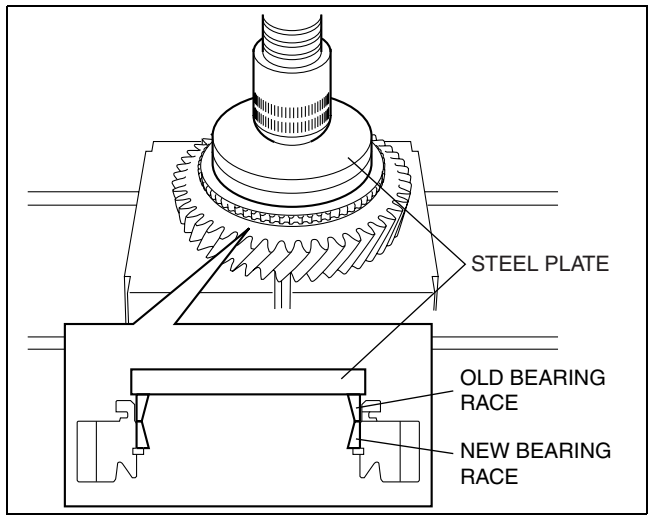

bawuua00000398

4. Using the old bearing race and the steel plate as shown in the figure, install the new bearing race inner to the counter drive gear.

   Caution
   - **Do not press fit the bearing too deeply.**
   - **Verify that the bearing is press fit to allow the installation of the nut.**

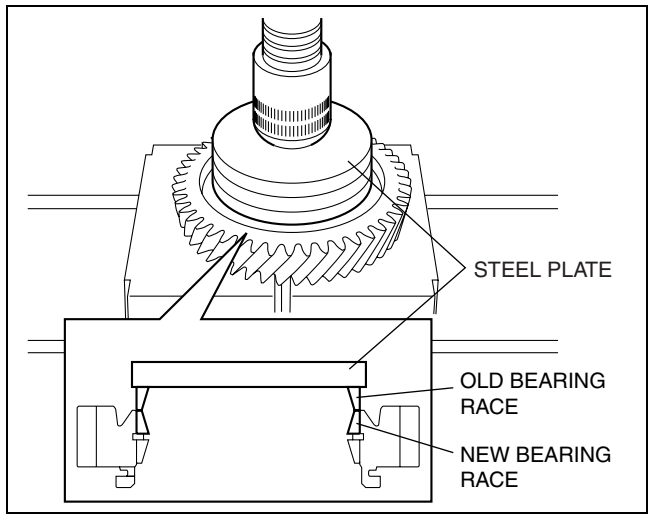

bawuua00000399

5. Using the **SST** and a press, install the counter drive gear with the tapered roller bearing.
   Substitution SST
   - **49 W027 001**
     Outer diameter: 70— 81 mm {2.76— 3.18 in}
     Plate thickness: 1 mm {0.04 in} or more

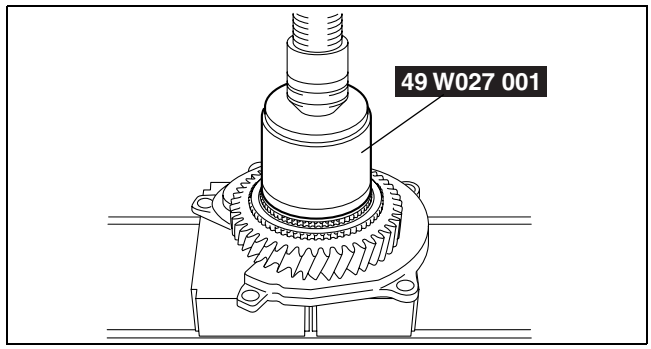

bawuua00000400

   Note
   - Verify that the claw of the washer is fit into the groove on the center support.
   - Verify that the nut is installed in the correct direction.

6. Install the washer and nut.
7. Using the **SST**, tighten the nut.

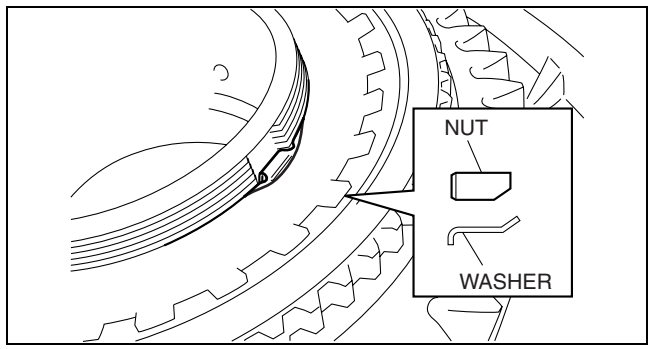

bawuua00000401

8. Using a spring balance, measure the starting and rotating torque of the counter drive gear.

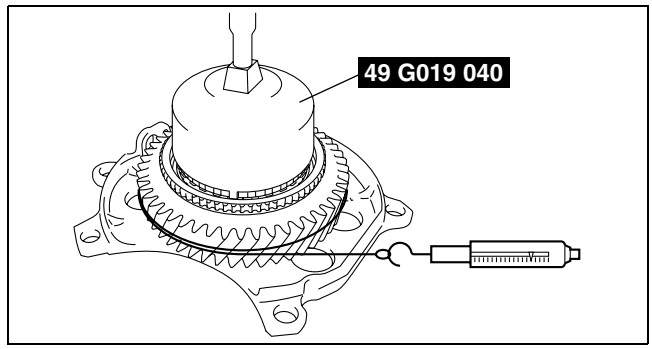

bawuua00000402

Counter drive gear starting and rotating torque

N·m {kgf·cm, in·lbf}

Bearing	Starting torque	Rotating torque
New	0.40 — 0.50 {4.08 — 5.09, 3.55 — 4.41}	0.40 — 0.48 {4.08 — 4.89, 3.55 — 4.24}
Reused	0.20 — 0.25 {2.04 — 2.54, 1.77 — 2.20}	0.20 — 0.24 {2.04 — 2.44, 1.77 — 2.11}

- Adjust the starting and rotating torque by tightening the nut.
- If the starting and rotating torque does not fall within the specification, loosen the nut and retighten the nut to adjust torque.

9. Using a flathead screwdriver and hammer, crimp down the washer.

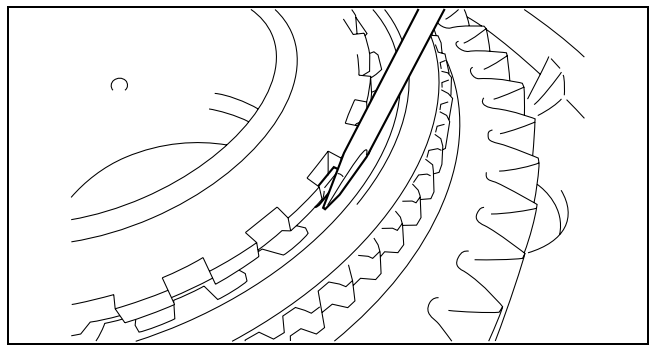

bawuua00000403

10. Using a flathead screwdriver, install the hole snap ring to the counter drive gear.
11. Install the rear planetary ring gear flange to the rear planetary ring gear.

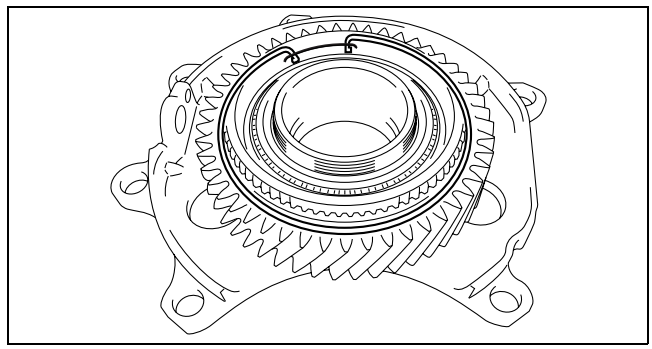

bawuua00000391

12. Using a flathead screwdriver, install the snap ring in the groove.
13. Install the rear planetary ring gear to the counter drive gear.

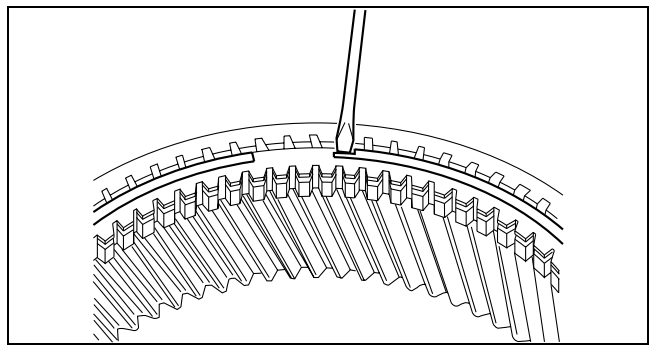

bawuua00000388

14. Using the snap ring pliers, while loosening the snap ring, install the rear planetary ring gear.

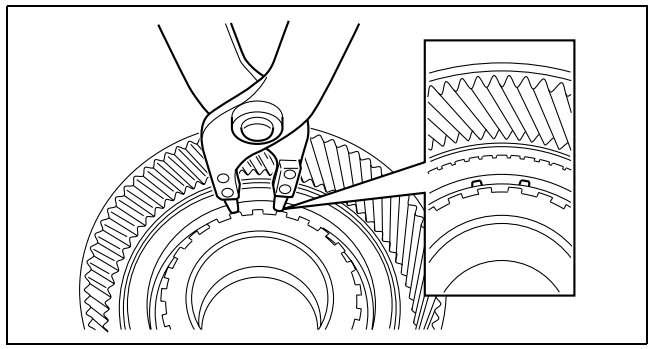

bawuua00000387

ONE-WAY CLUTCH COMPONENT INSPECTION

id051700501100

1. Hold the one-way clutch component in place. Verify that the rear planetary gear rotates when turned clockwise and does not rotate when turned counterclockwise.

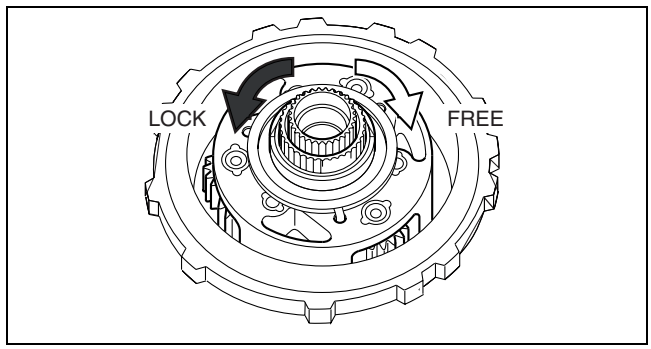

bawuua00000513

REAR PLANETARY GEAR COMPONENT AND ONE-WAY CLUTCH COMPONENT DISASSEMBLY

id051700501200

Components

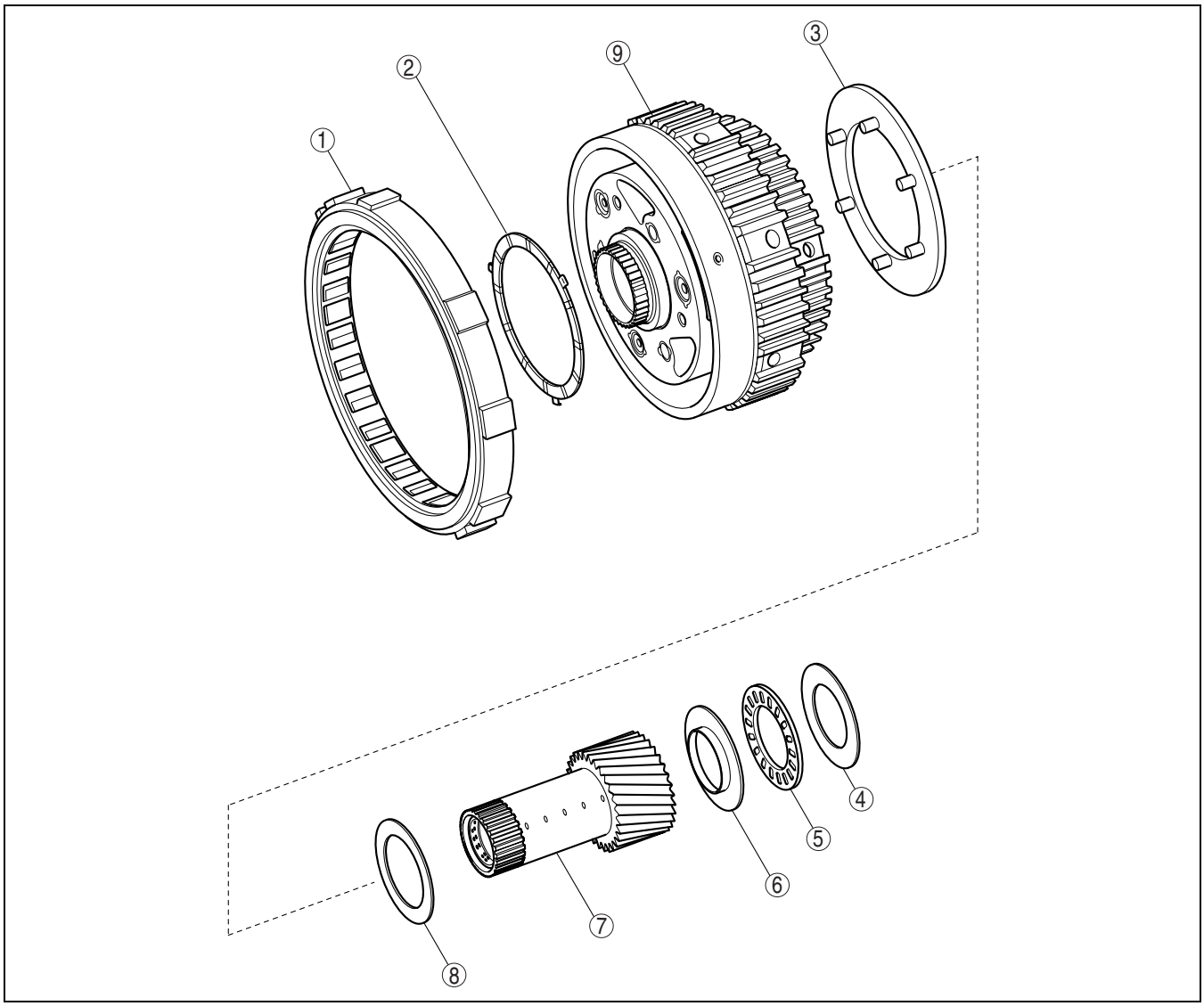

bawuua00000514

1	One-way clutch component
2	Thrust washer
3	Thrust washer
4	Bearing race
5	Thrust bearing

6	Bearing race
7	Planetary sun gear
8	Bearing race
9	Rear planetary gear component

Disassembly Procedure

1. Remove the one-way clutch component from the rear planetary gear component.

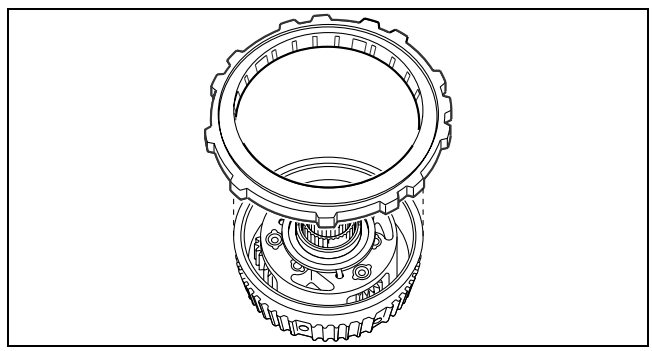

bawuua00000515

2. Remove the thrust washer from the rear planetary gear component.

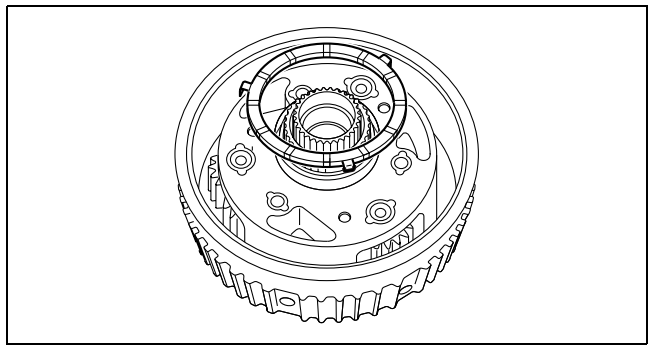

bawuua00000516

3. Remove the thrust washer from the rear planetary gear component.

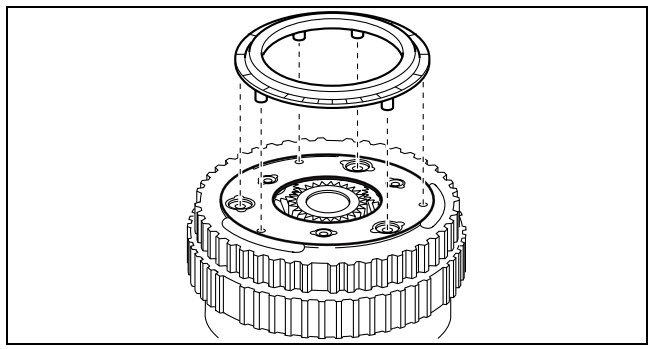

bawuua00000517

4. Remove the planetary sun gear and bearing races from the rear planetary gear component.

Note
- If it is difficult to remove the bearing race, remove it gently using a flathead screwdriver.

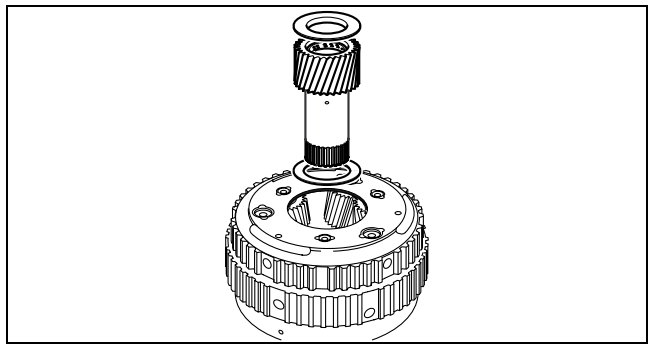

bawuua00000518

REAR PLANETARY GEAR INSPECTION

id051700501300

Note
- Measure at different places and take an average.

1. Using a dial indicator, measure the inner diameter of the rear planetary gear bushings.

Rear planetary gear bushing inner diameter
Front side: 33.26 — 33.286 mm {1.3095 — 1.3104 in}
Rear side: 33.26 — 33.286 mm {1.3095 — 1.3104 in}

- If it exceeds the specification, replace the rear planetary gear component with a new one.
- When the rear planetary gear component is replaced, inspect the contact surface opposed to the planetary sun gear.
- If the surface of it is scratched or has changed color, replace the planetary sun gear with a new one.

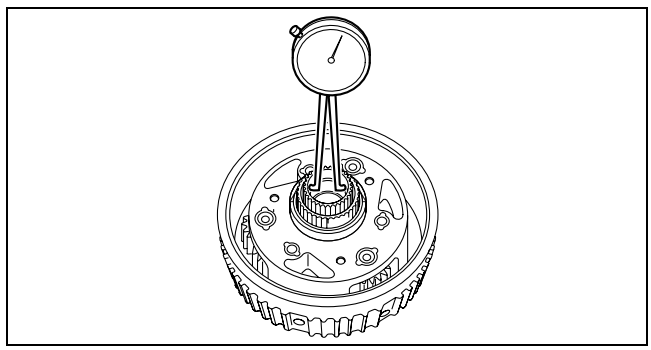

bawuua00000519

2. Using a dial indicator, measure the inner diameter of the planetary sun gear bushings.

   Rear planetary sun gear bushing inner diameter
   Front side: 24.2 — 24.226 mm {0.9528 — 0.9537 in}
   Rear side: 24.2 — 24.226 mm {0.9528 — 0.9537 in}

   - If it exceeds the specification, replace the planetary sun gear component with a new one.
   - When the planetary sun gear component is replaced, inspect the contact surface opposed to the intermediate shaft.
   - If the surface of it is scratched or has changed color, replace the intermediate shaft with a new one.

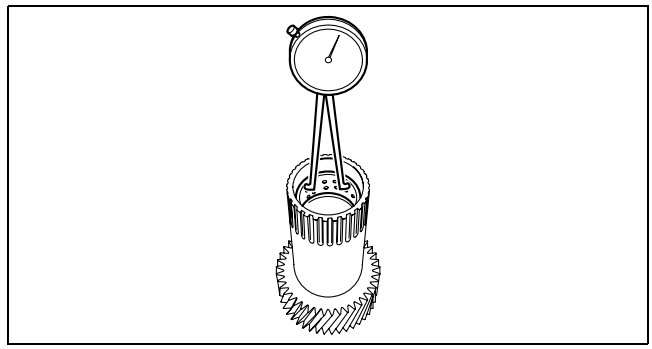

bawuua00000520

REAR PLANETARY GEAR COMPONENT AND ONE-WAY CLUTCH COMPONENT ASSEMBLY

id051700501400

Components

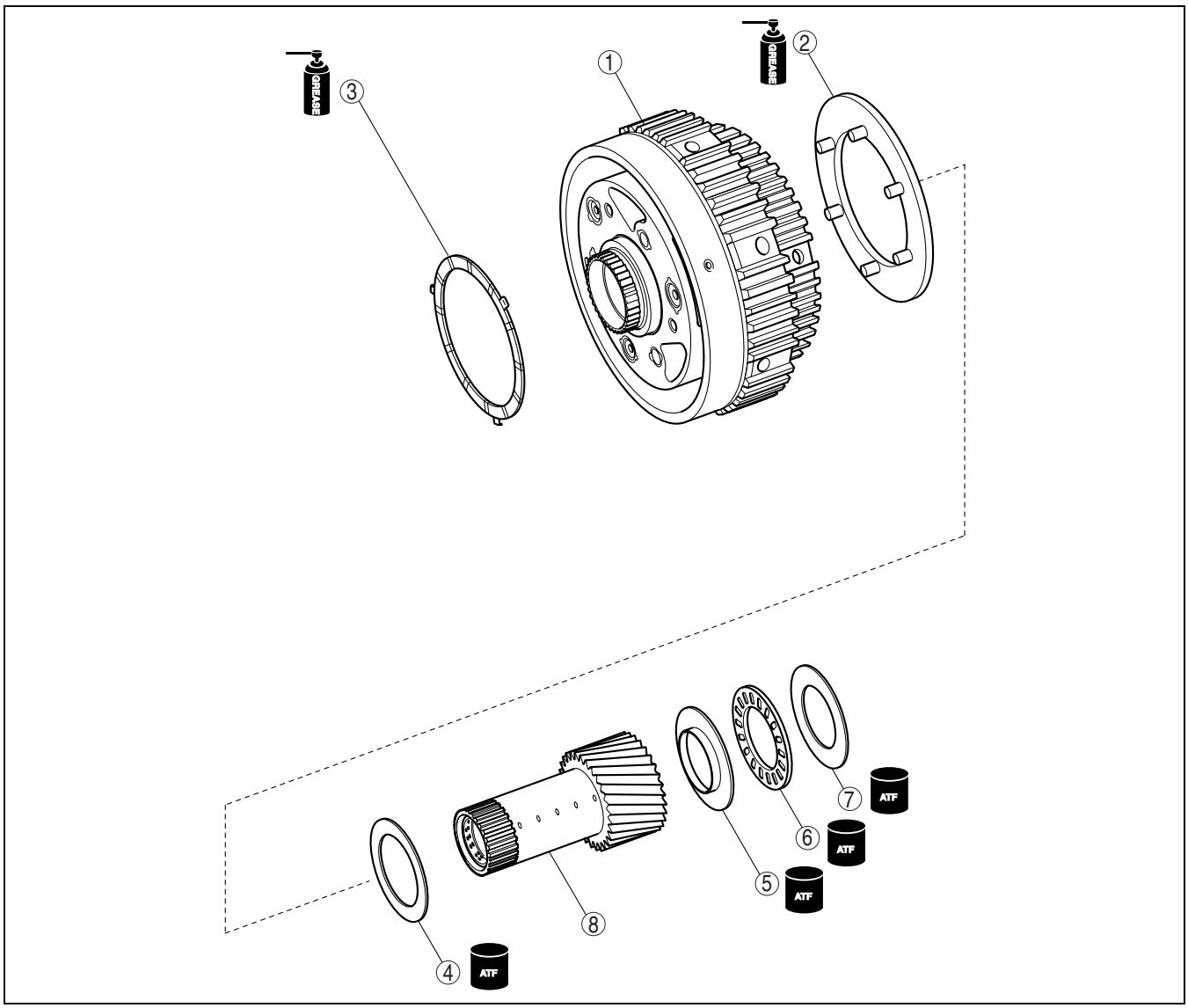

bawuua00000521

1	Rear planetary gear component
2	Thrust washer
3	Thrust washer
4	Bearing race

5	Bearing race
6	Thrust bearing
7	Bearing race
8	Planetary sun gear

Assembly Procedure

Caution
- **Apply grease to the mounting surface of the thrust washer so that it will not drop when the rear planetary gear component is installed.**
- **Do not apply grease to the oil holes of the thrust washer.**

1. Apply grease to the thrust washer.
2. Install the thrust washer to the rear planetary gear component.

Caution
- **Apply grease to the mounting surface of the thrust washer so that it will not drop when the rear planetary gear component is installed.**
- **Do not apply grease to the oil holes of the thrust washer.**

3. Apply grease to the thrust washer.

4. Install the thrust washer to the rear planetary gear component.

Caution
- **Apply grease to the mounting surface of the thrust washer so that it will not drop when the rear planetary gear component is installed.**
- **Do not apply grease to the oil holes of the thrust washer.**

5. Apply ATF to the bearing races and the thrust bearing.
6. Install the bearing races to the planetary sun gear as shown in the figure.
7. Install the planetary sun gear to the rear planetary gear component.

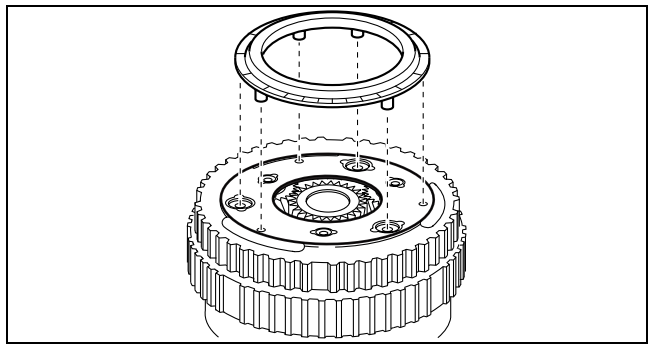

bawuua00000522

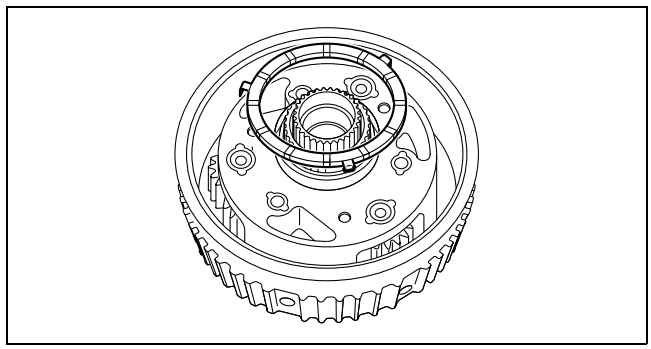

bawuua00000523

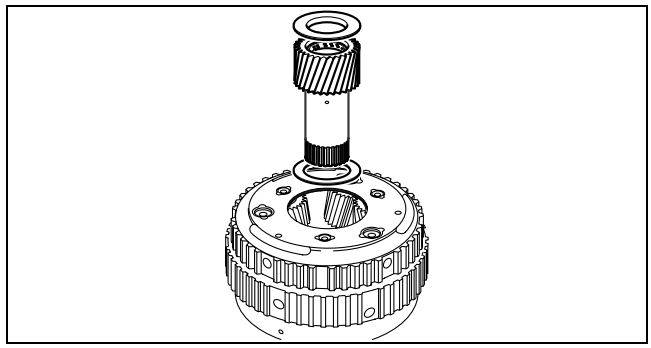

bawuua00000524

C2 CLUTCH COMPONENT DISASSEMBLY

id051700501500

Components

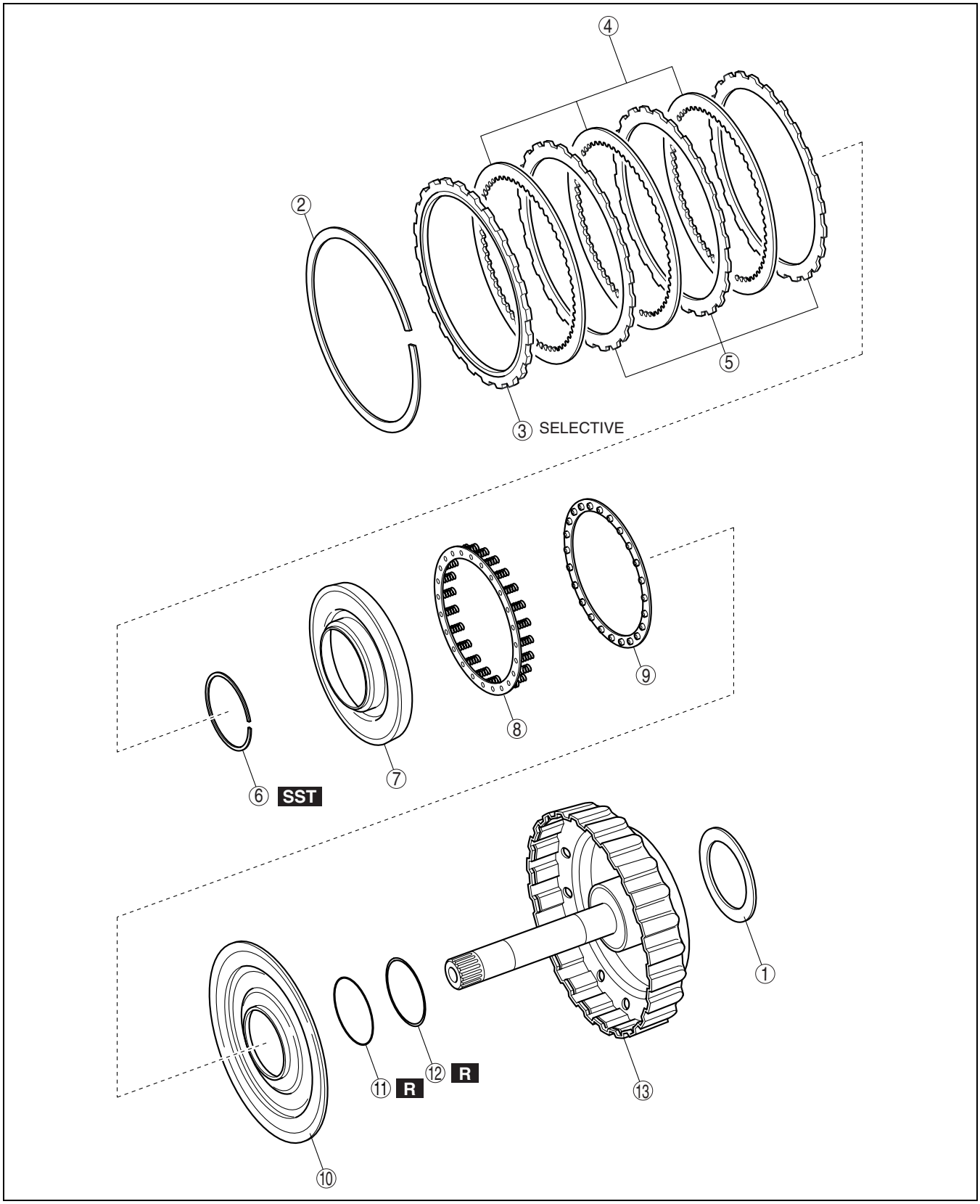

bawuua00000045

1	Thrust bearing
2	Snap ring
3	Retaining plate

4	Drive plate
5	Driven plate
6	Snap ring

7	C2 clutch balancer
8	Piston return spring
9	Spring retainer
10	C2 clutch piston
11	O-ring
12	O-ring
13	Intermediate shaft

Disassembly Procedure

1. Remove the thrust bearing from the intermediate shaft.

   Note
   - If the bearing is difficult to remove, blow air between the bearing and the intermediate shaft.

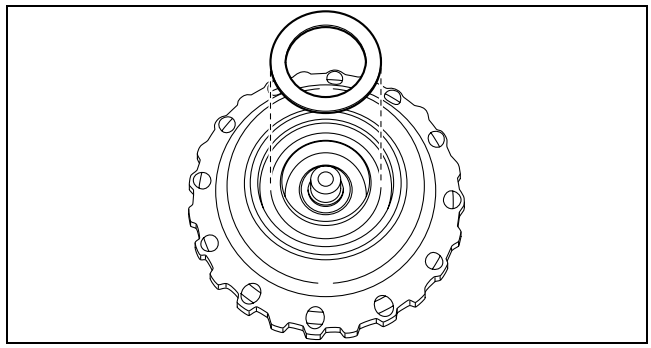

bawuua00000046

2. Using a flathead screwdriver, remove the snap ring from the intermediate shaft.

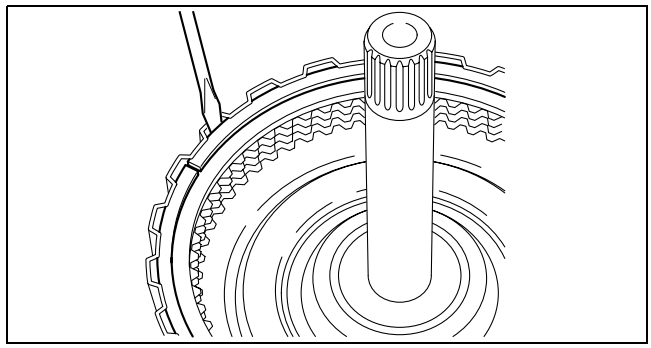

bawuua00000047

3. Remove the retaining plate, drive and driven plates from the intermediate shaft.

   Note
   - Inspect the number of drive and driven plates.

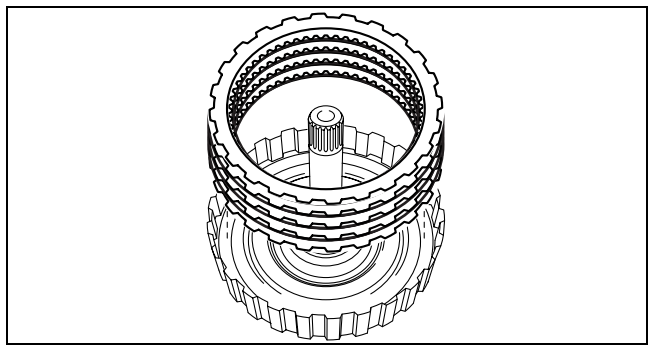

bawuua00000048

4. Place the **SST** on the clutch balancer and compress the return spring with a press.

   Caution
   - **Do not contract the return spring too much.**
   - **Do not expand the snap ring too much.**

5. Remove the snap ring using snap ring pliers.

   Caution
   - **Do not damage the seal on the clutch balancer.**

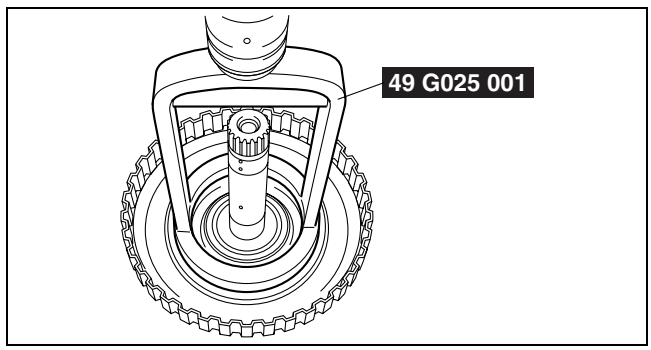

bawuua00000049

6. Remove the clutch balancer, return spring and the spring retainer from the intermediate shaft.

   Caution
   - **Do not damage the seal on the piston.**

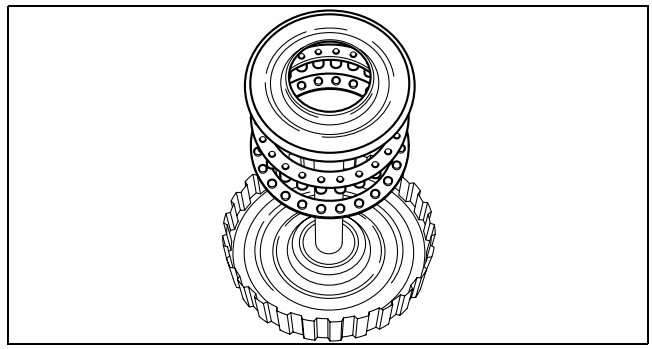

bawuua00000050

7. While pushing the C2 clutch piston by hand, apply compressed air into the oil passage as shown in the figure and remove the C2 clutch piston from the intermediate shaft.

   Air pressure
   392 kPa {4.0 kgf/cm^2, 57 psi}

   Note
   - When applying compressed air, block the three oil passages of the intermediate shaft as shown in the figure.

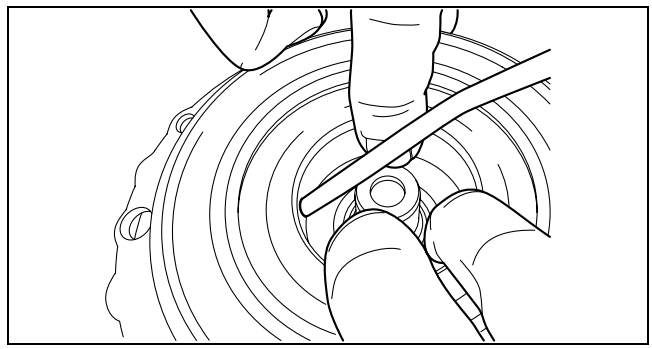

bawuua00000051

8. Remove the O-rings from the intermediate shaft.

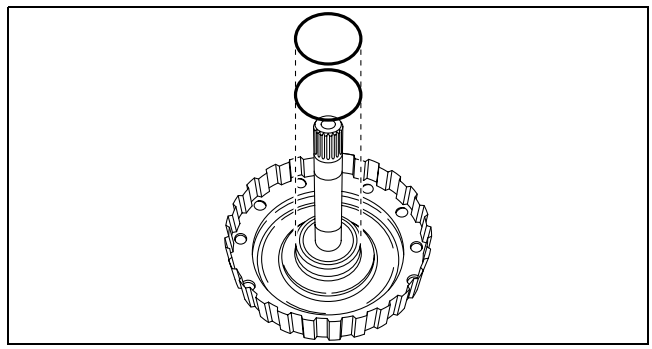

bawuua00000052

C2 CLUTCH INSPECTION

1. Inspect the lining of all drive plates.
   - If the lining is flaking or has changed color, or if it is worn or the print mark is wearing away, replace with a new drive plate. When replacing, inspect the contact surfaces between the retaining plate, driven plate and drive plate. If they are scratched or have changed color, replace with new parts.

   Note
   - Before replacing with new drive plates, soak them at least **2 h** in ATF.

2. Using vernier calipers, measure the free length of the piston return spring.

   C2 clutch return spring free length
   Standard: 14.02 mm {0.5520 in}

   - If it is less than the specification, replace the piston return spring with a new one.

id051700501600

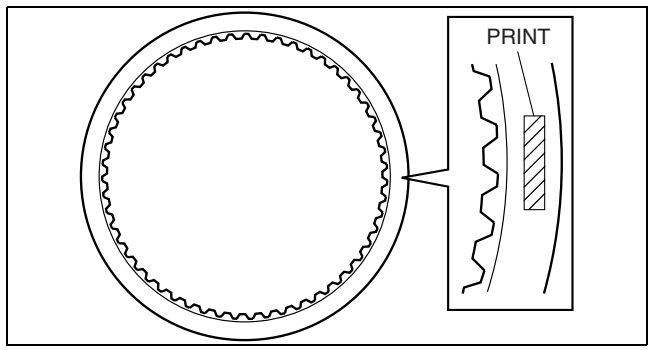

bawuua00000525

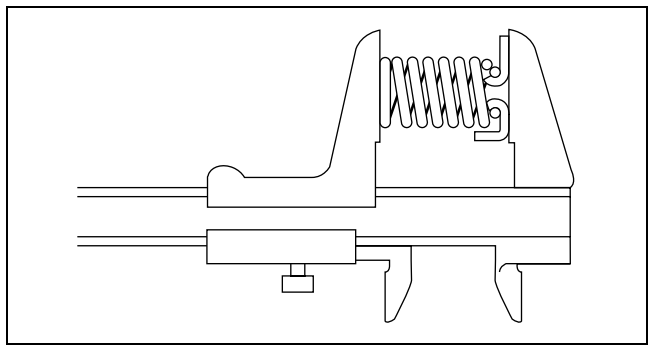

bawuua00000526

C2 CLUTCH COMPONENT ASSEMBLY

id051700501700

Components

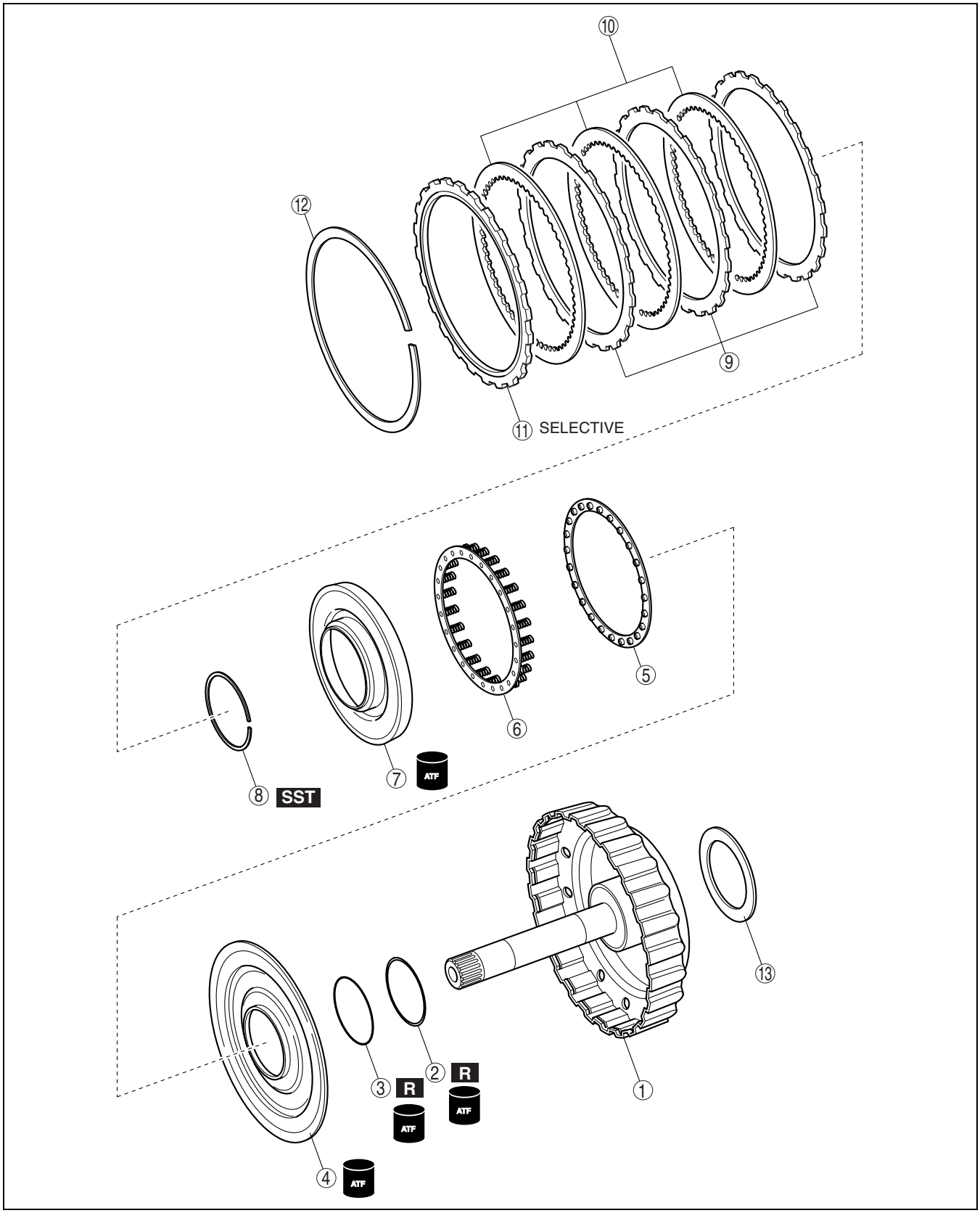

bawuua00000086

1	Intermediate shaft
2	O-ring
3	O-ring

4	C2 clutch piston
5	Spring retainer
6	Piston return spring

7	C2 clutch balancer
8	Snap ring
9	Driven plate
10	Drive plate
11	Retaining plate
12	Snap ring
13	Thrust bearing

Assembly Procedure

1. Apply ATF to the new O-rings and the intermediate shaft.
2. Install the O-rings to the intermediate shaft.

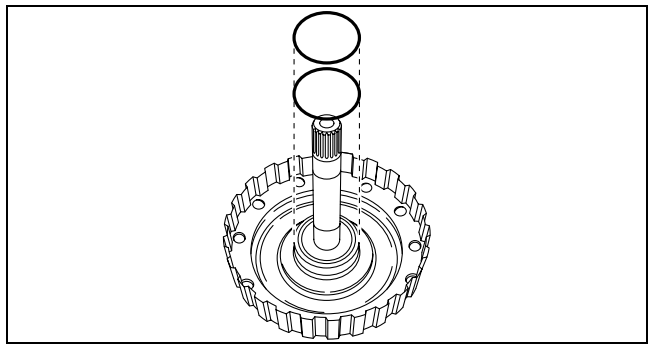

bawuua00000087

O-ring size

mm {in}

	Inner diameter	Thickness
Upper	51.90 {2.043}	1.60 {0.0630}
Lower	50.40 {1.984}	2.62 {0.1031}

3. Apply ATF to the sliding surface of the C2 clutch piston.

   Caution
   - **Do not damage the seal on the piston and O-ring.**

4. Install the C2 clutch piston to the intermediate shaft.
5. Apply ATF to the seal on the clutch balancer and sliding surface.

   Caution
   - **Do not damage the seal on the clutch balancer.**
   - **Do not damage the O-ring.**

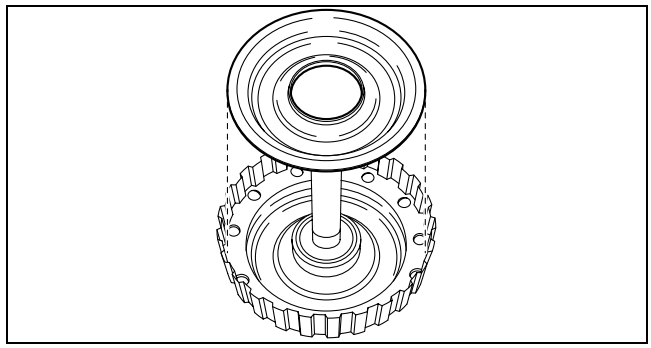

bawuua00000088

6. Install the spring retainer, return spring and the clutch balancer to the intermediate shaft.

   Caution
   - **Be careful not to shorten the spring too much. If it is too short, it will bite into the O-ring.**

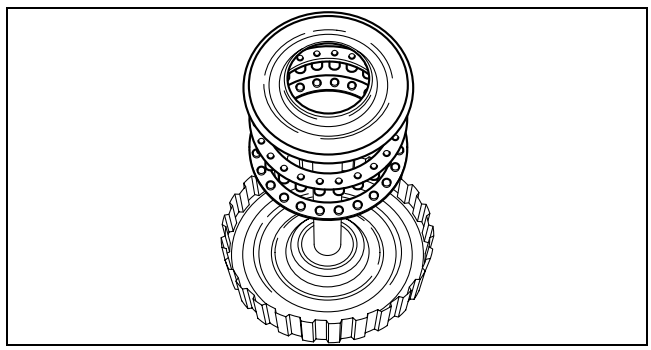

bawuua00000089

7. Place the **SST** on the clutch balancer and compress the return spring with a press.

   Caution
   - **Do not expand the snap ring too much.**

8. Install the snap ring into the groove using snap ring pliers.

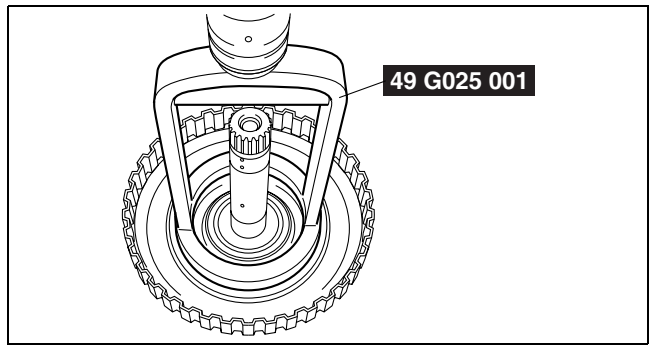

bawuua00000090

9. Install the driven plates, drive plates and the retaining plate in the following order to the intermediate shaft as shown in the figure.
   Three drive plates type
   - Driven— Drive— Driven— Drive— Driven— Drive— Retaining

   Four drive plates type
   - Driven— Drive— Driven— Drive— Driven— Drive— Driven— Drive— Retaining

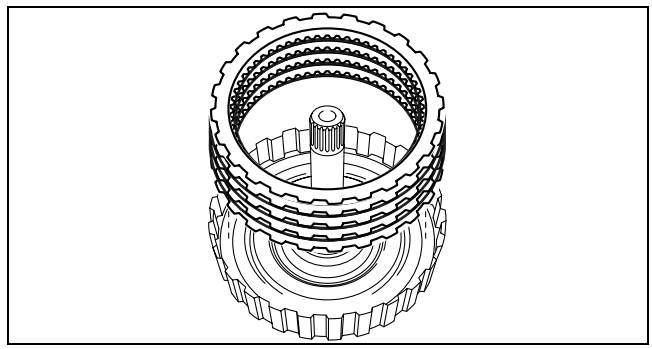

bawuua00000091

   Caution
   - **Inspect the number and order of the retaining plate, drive and driven plates.**

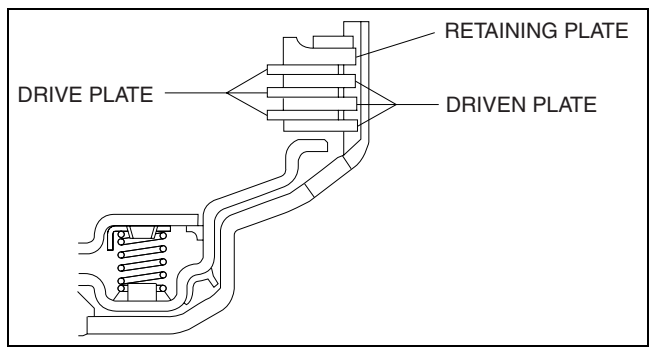

bawuua00000092

10. Using a flathead screwdriver, install the snap ring into the groove.
11. Apply ATF to the thrust bearing.

    Note
    - Install the bearing in the correct direction as shown in the figure.

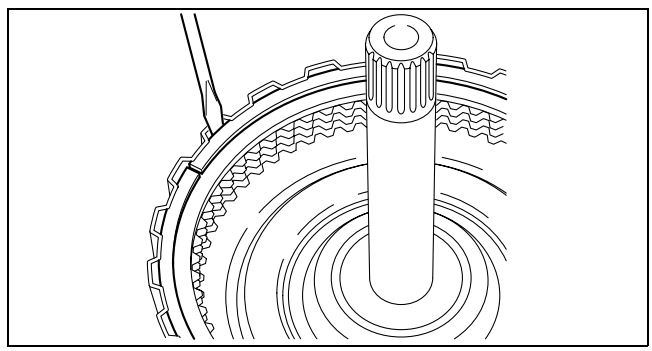

bawuua00000093

12. Install the thrust bearing to the intermediate shaft.

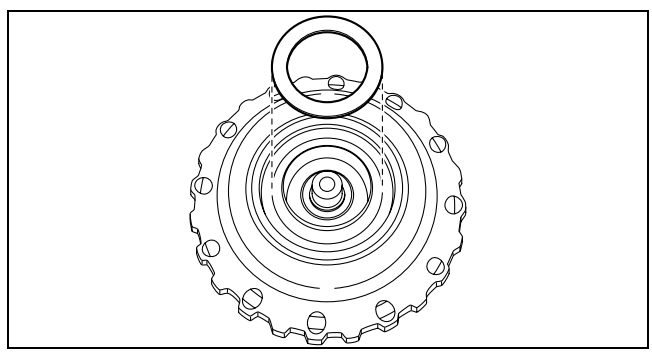

bawuua00000094

13. Install the intermediate shaft on the transaxle case and set a dial indicator as shown in the figure.
14. Apply compressed air as shown in the figure and measure the C2 clutch piston stroke.

Air pressure
400 kPa {4.1 kgfcm^2, 58 psi}

C2 clutch piston stroke
0.45 — 0.65 mm {0.0178 — 0.0255 in}

- If not within the specification, select an appropriate retaining plate.

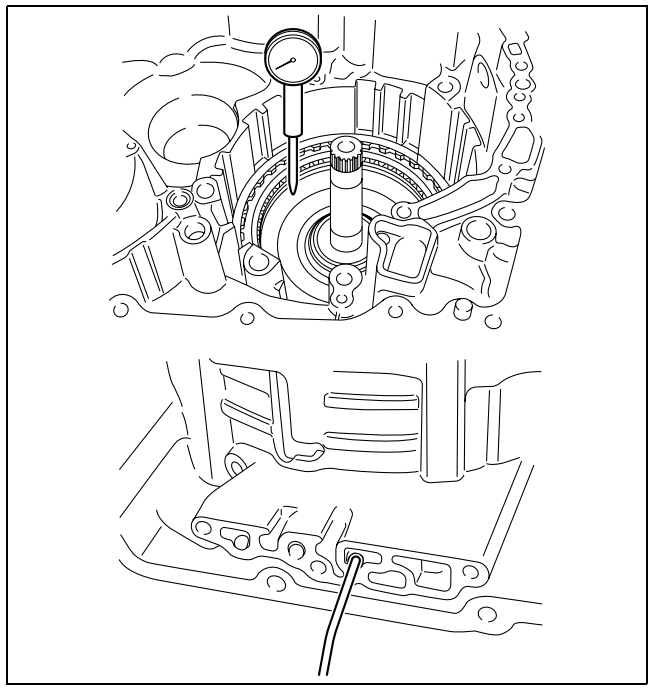

bawuua00000095

Retaining plate size

Identification mark	Thickness (mm {in})
1	2.5 {0.0984}
2	2.6 {0.102}
3	2.7 {0.106}
4	2.8 {0.110}
A	2.85 {0.112}
5	2.9 {0.114}
B	2.95 {0.116}
6	3.0 {0.118}
C	3.05 {0.120}
7	3.1 {0.122}
8	3.2 {0.126}

TRANSAXLE CASE AND B2 BRAKE DISASSEMBLY/ASSEMBLY

id051700501800

1. Disassemble in the order indicated in the table.
2. Assemble in the reverse order of disassembly.

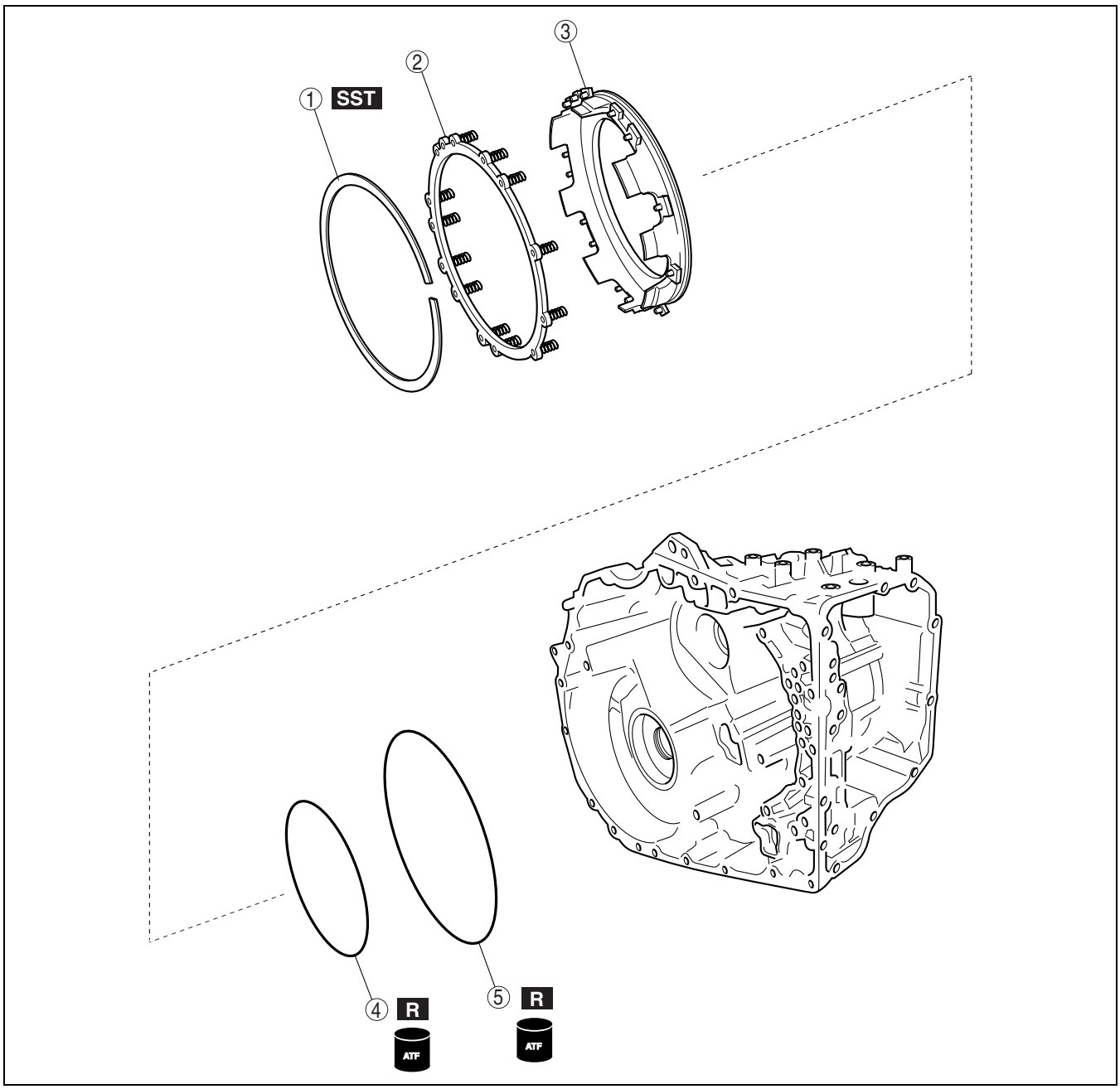

bawuua00000404

1	Snap ring
2	Low and reverse brake return spring (See 05-17-70 Low and Reverse Brake Return Spring Assembly Note.)
3	Low and reverse brake piston (See 05-17-69 Low and Reverse Brake Piston Disassembly Note.) (See 05-17-70 Low and Reverse Brake Piston Assembly Note.)
4	O-ring
5	O-ring

Low and Reverse Brake Piston Disassembly Note

1. Using a flathead screwdriver, remove the snap ring from the transaxle case.

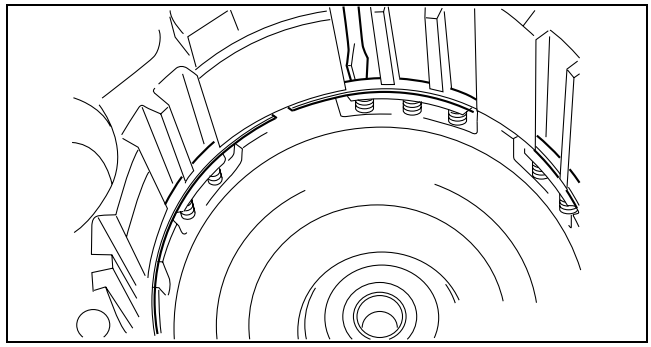

bawuua00000405

2. Remove the low and reverse brake return spring from the transaxle case.

   Caution
   - **Do not damage the seal on the piston.**

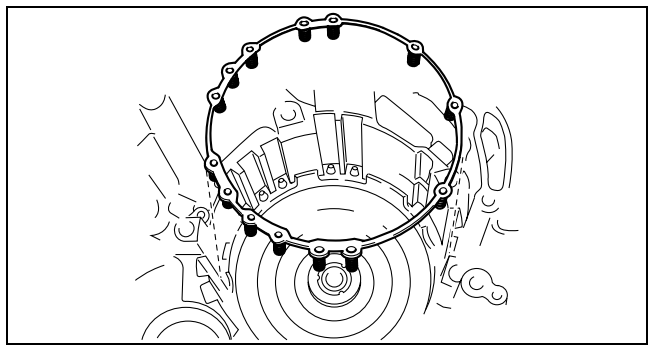

bawuua00000406

3. While pushing the low and reverse brake piston by hand, apply compressed air into the oil passage of the transaxle case as shown in the figure and remove the low and reverse brake piston.

   Air pressure
   392 kPa {4.0 kgf/cm^2, 57 psi}

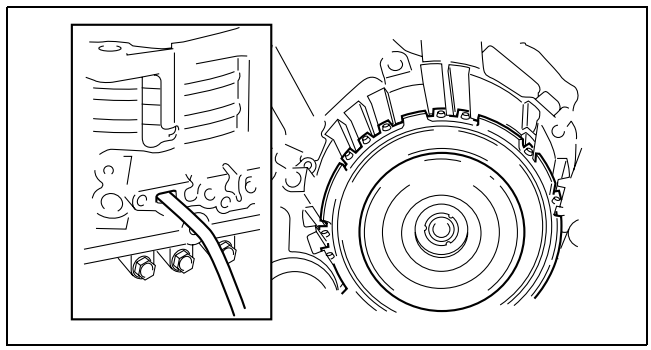

bawuua00000407

4. Remove the O-rings from the low and reverse brake piston.

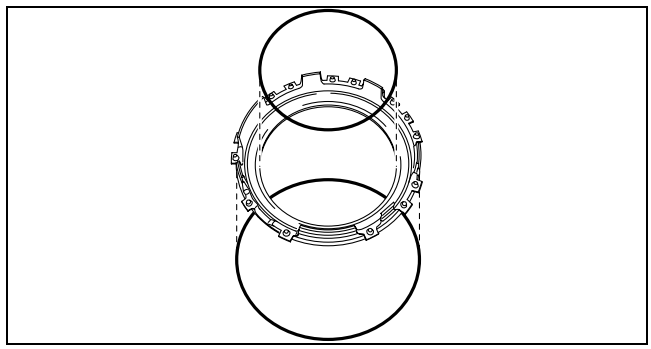

bawuua00000408

Low and Reverse Brake Piston Assembly Note

1. Apply ATF to the new O-rings.
2. Install the O-ring to the low and reverse brake piston.
3. Apply ATF to the sliding surface of the transaxle case.

Caution

- **Do not damage the seal on the piston and O-ring.**

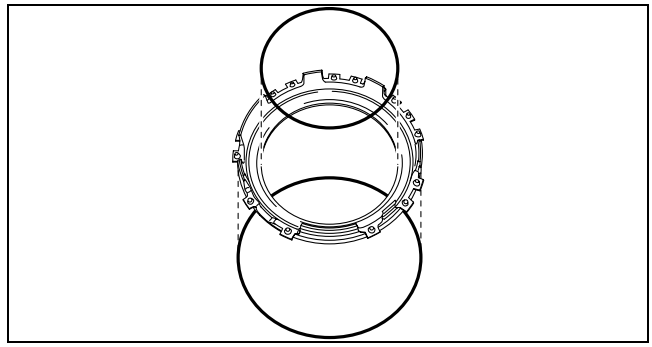

bawuua00000408

4. Install the low and reverse brake piston to the transaxle case.

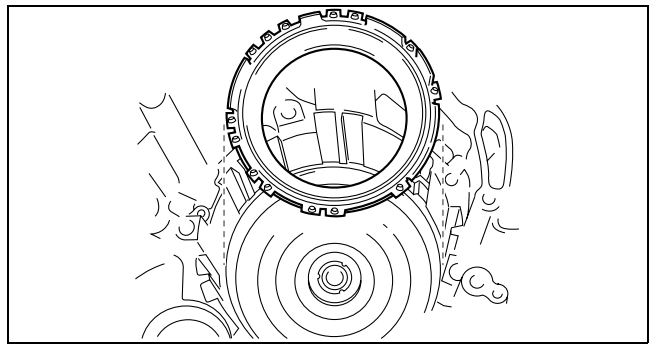

bawuua00000409

Low and Reverse Brake Return Spring Assembly Note

1. Install the low and reverse brake return spring to the transaxle case.

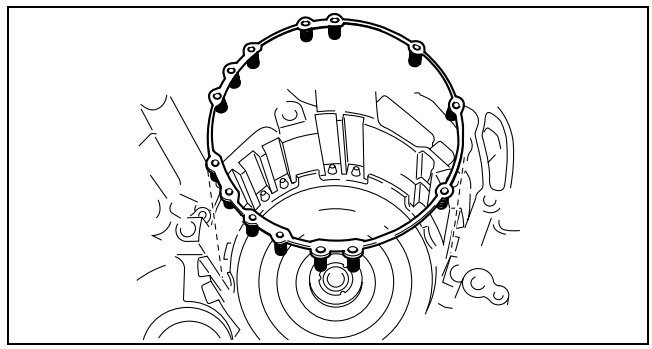

bawuua00000406

2. Using the **SST**, press the return spring into the position where the snap ring groove is visible.

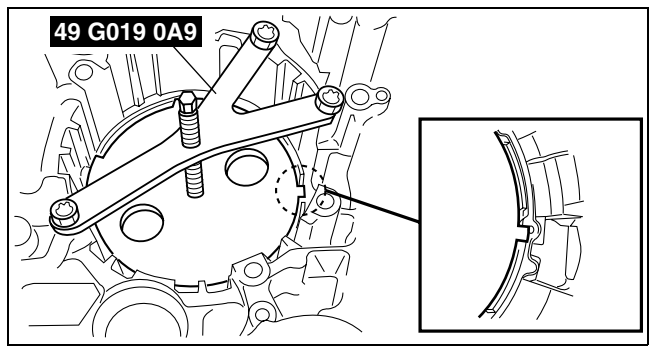

bawuua00000410

3. Using a flathead screwdriver, install the snap ring in the groove.

   Caution
   - **When installing the snap ring, set the end gap of the snap ring as shown in the figure.**

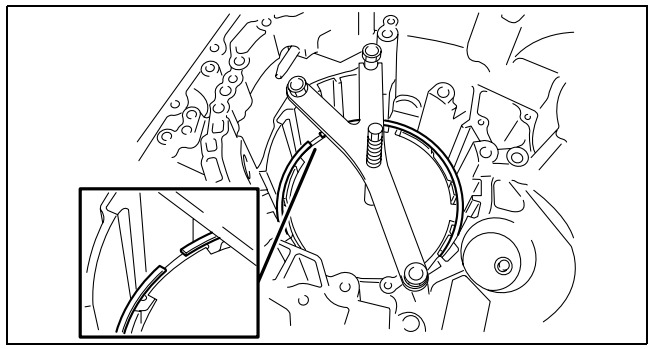

bawuua00000411

TRANSAXLE CASE AND B2 BRAKE INSPECTION

id051700501900

Note
- Measure at different places and take an average.

1. Using a dial indicator, inspect the transaxle case bushing.

   Transaxle case bushing inner diameter
   Standard: 21.932 — 21.953 mm {0.86347 — 0.86429 in}

   - If it exceeds the specification, replace the transaxle case with a new one.
   - When the transaxle case is replaced, inspect the contact surface of the intermediate shaft bushing.
   - If the surface is scratched or has changed color, replace the intermediate shaft with a new one.

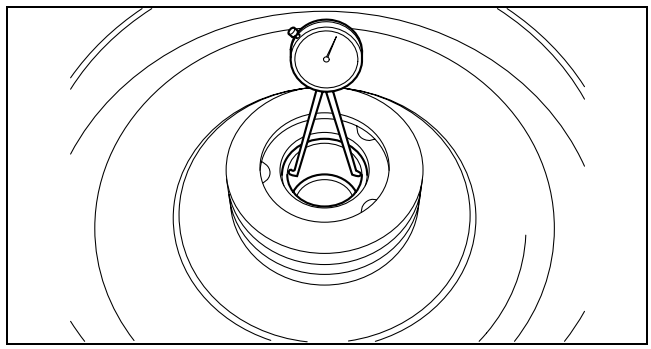

bawuua00000527

2. Inspect the lining of all drive plates.
   - If the lining is flaking or has changed color, or if it is worn or the print mark is wearing away, replace with a new drive plate. When replacing, inspect the contact surfaces between the retaining plate, driven plate and drive plate. If they are scratched or have changed color, replace with new parts.

   Note
   - Before replacing with new drive plates, soak them at least **2 h** in ATF.

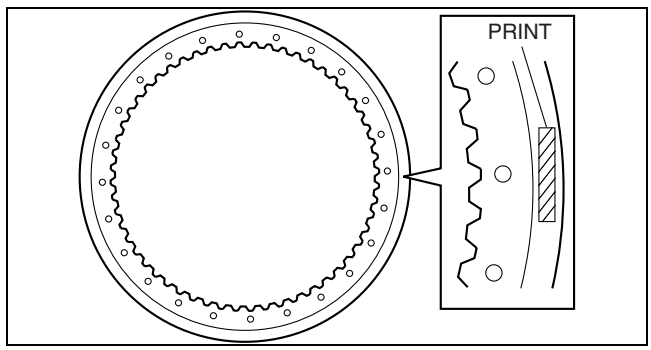

bawuua00000528

3. Using vernier calipers, measure the free length of the piston return spring.

   B2 brake return spring free length
   Standard: 19.01 mm {0.7485 in}

   - If it is less than the specification, replace the piston return spring with a new one.

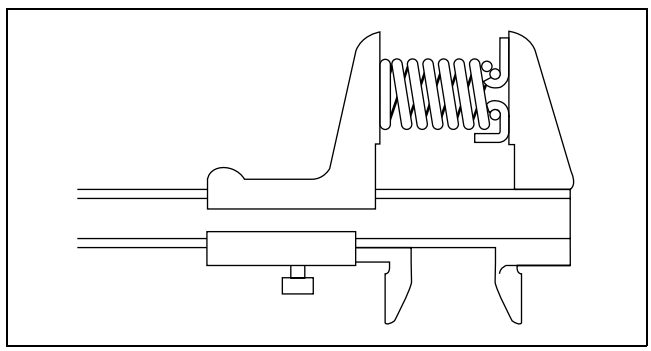

bawuua00000529

CONTROL VALVE BODY DISASSEMBLY/ASSEMBLY

id051700502000

Components

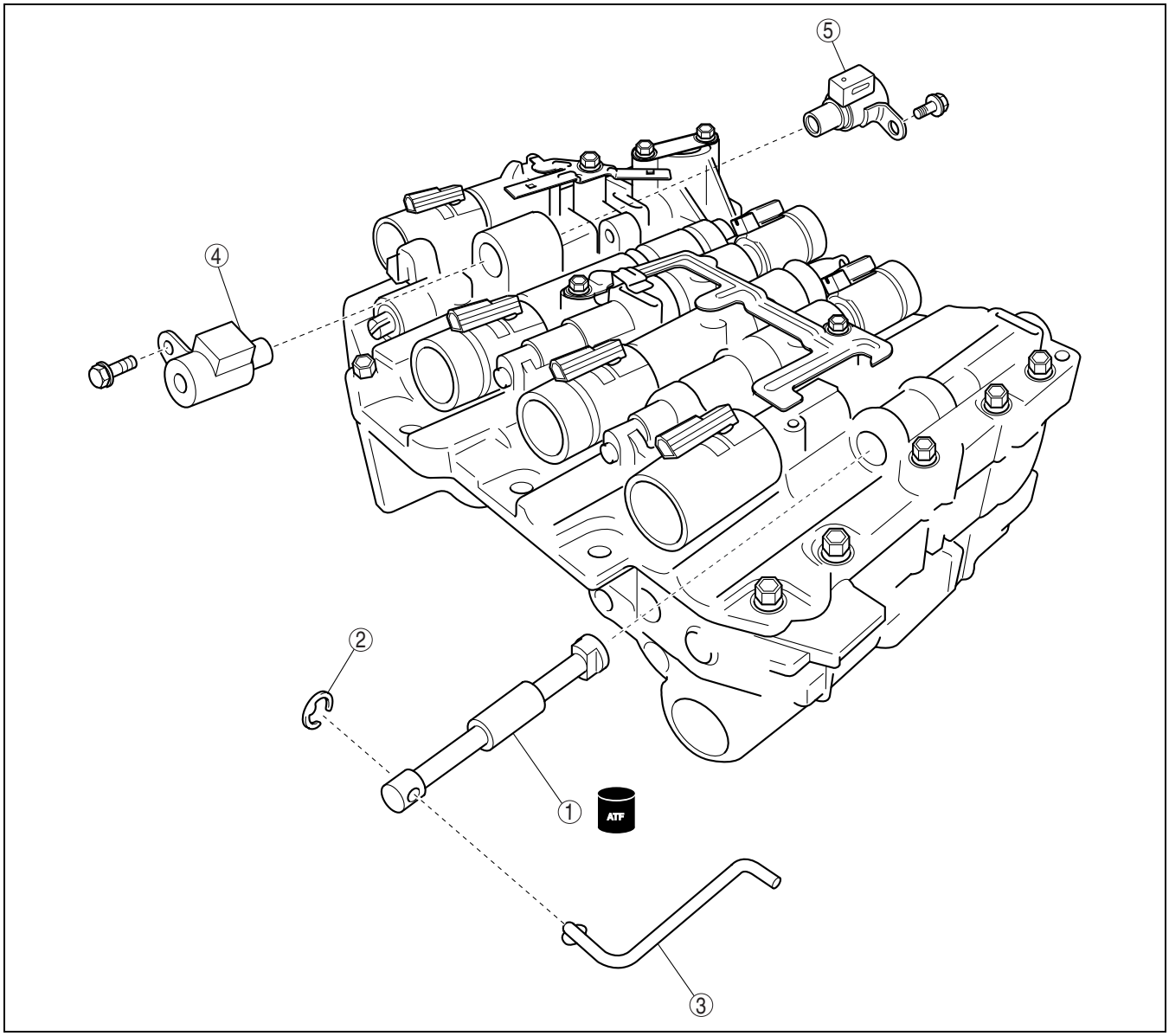

bawuua00000530

1	Manual valve
2	E-ring
3	Manual valve connecting rod

4	Shift solenoid A
5	Shift solenoid B

Disassembly Procedure

Caution
- **Do not pull the manual valve strongly.**

1. Remove the manual valve from the control valve body.

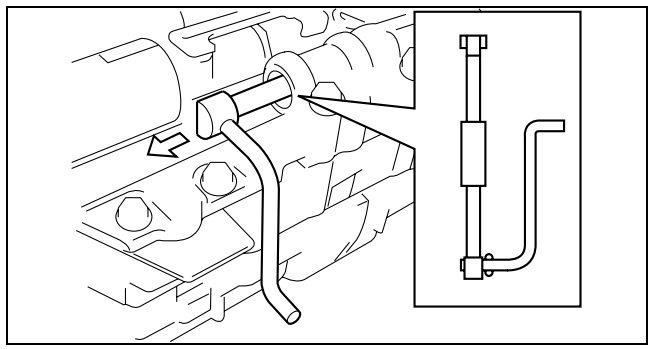

bawuua00000531

2. Using a flathead screwdriver, remove the E-ring.
3. Remove the manual valve connecting rod from the manual valve.

Caution
- **Do not damage the solenoid.**

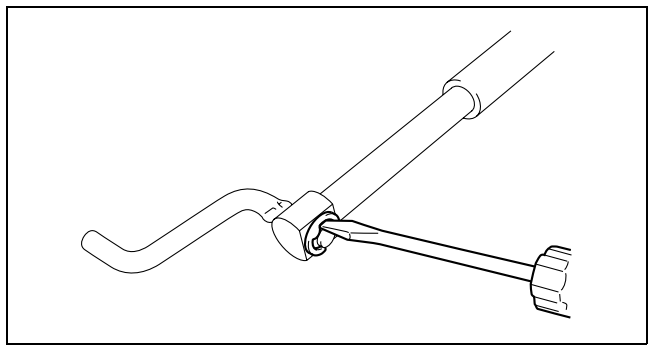

bawuua00000532

4. Remove the solenoids from the control valve body.

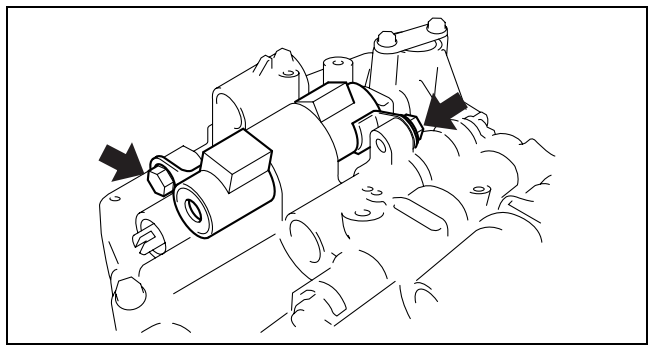

bawuua00000533

Assembly Procedure

Caution
- **Do not damage the solenoid.**

1. Install the solenoids to the front control valve body.

   Tightening torque
   8.0 — 12.0 N·m {81.6 — 122.3 kgf·cm, 70.9 — 106.1 in·lbf}

2. Install the manual valve connecting rod to the manual valve.

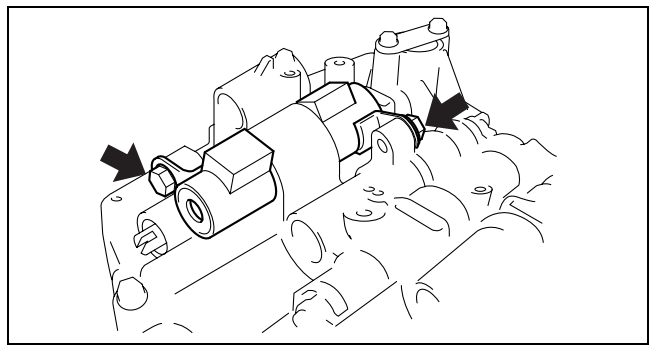

bawuua00000533

3. Install the E-ring.
4. Apply ATF to the manual valve.

   Caution
   - **Do not damage the manual valve.**

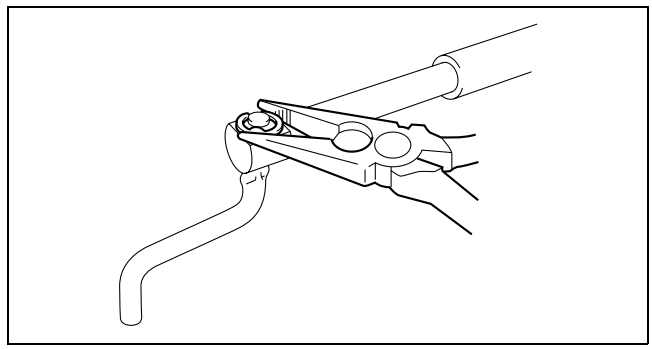

bawuua00000534

5. Install the manual valve to the control valve body.

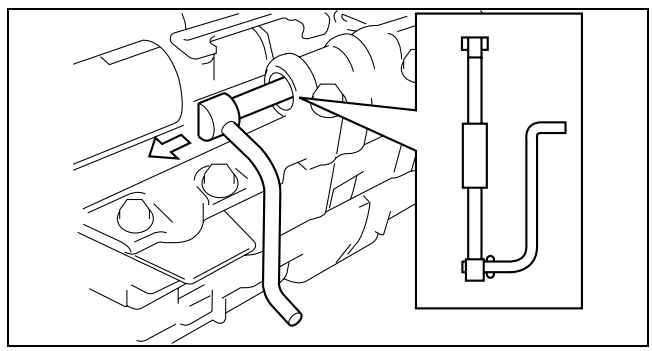

bawuua00000531

AUTOMATIC TRANSAXLE ASSEMBLY

id051700502200

Assembly
Bearing and race locations

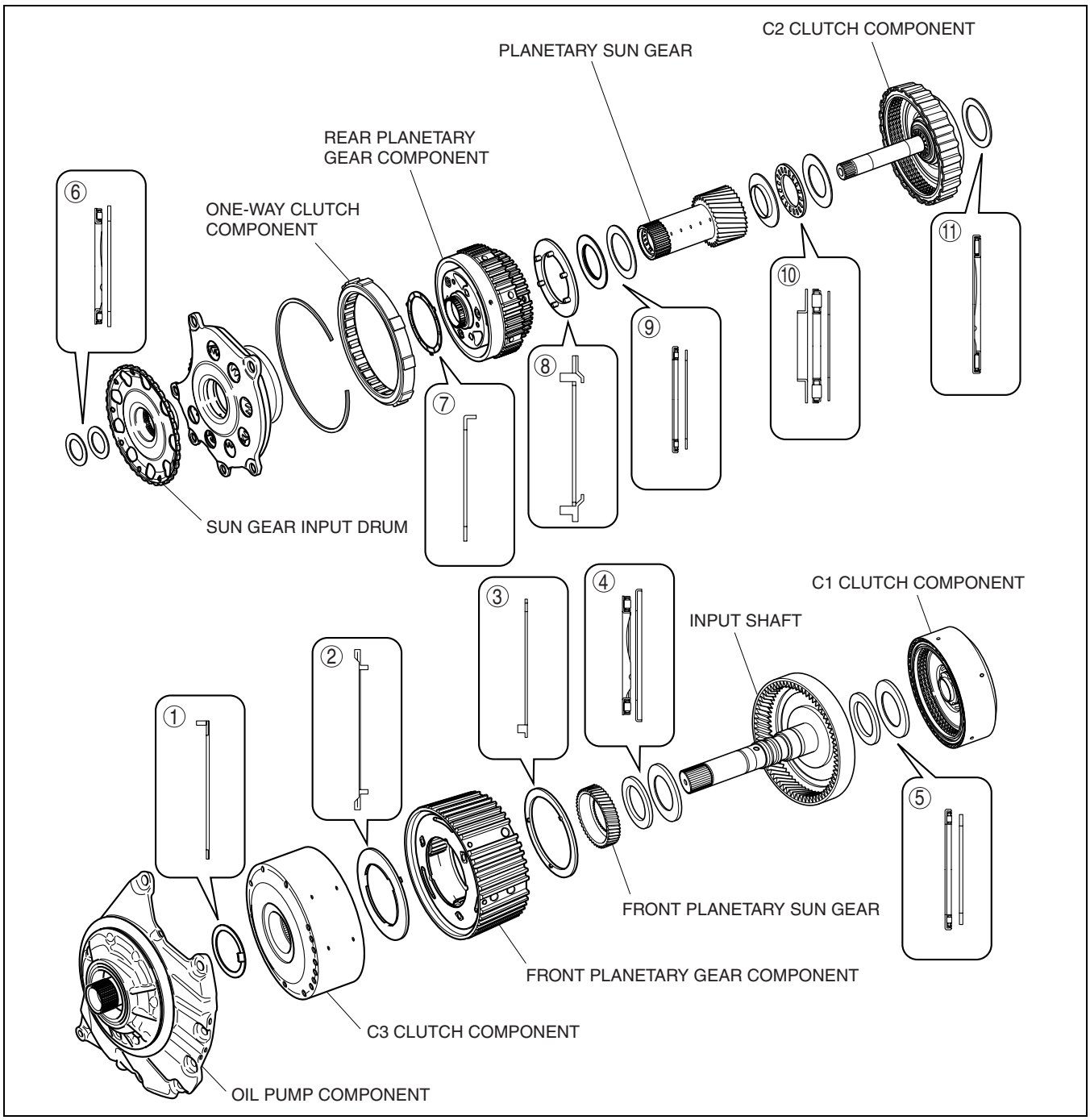

bawuua00000412

		1	2	3	4	5	6	7	8	9	10	11
Thrust washer (mm {in})	Outer	64.0 {2.52}	101.0 {3.98}	85.0 {3.35}	—	—	—	79.8 {3.14}	104.2 {4.10}	—	—	—
	Inner	51.0 {2.01}	75.3 {2.96}	72.7 {2.86}	—	—	—	68.3 {2.69}	69.0 {2.72}	—	—	—
Bearing race (front) (mm {in})	Outer	—	—	—	—	—	—	—	—	—	43.7 {1.72}	—
	Inner	—	—	—	—	—	—	—	—	—	25.6 {1.01}	—
Bearing (mm {in})	Outer	—	—	—	61.3 {2.41}	52.6 {2.07}	45.6 {1.80}	—	—	48.7 {1.92}	43.8 {1.72}	75.0 {2.95}
	Inner	—	—	—	43.7 {1.72}	39.2 {1.54}	33.2 {1.31}	—	—	35.0 {1.38}	24.25 {0.9547}	50.5 {1.99}
Bearing race (rear) (mm {in})	Outer	—	—	—	68.8 {2.71}	48.5 {1.91}	47.0 {1.85}	—	—	45.6 {1.80}	41.7 {1.64}	—
	Inner	—	—	—	46.9 {1.85}	38.1 {1.50}	35.2 {1.39}	—	—	33.2 {1.31}	24.2 {0.953}	—

Components

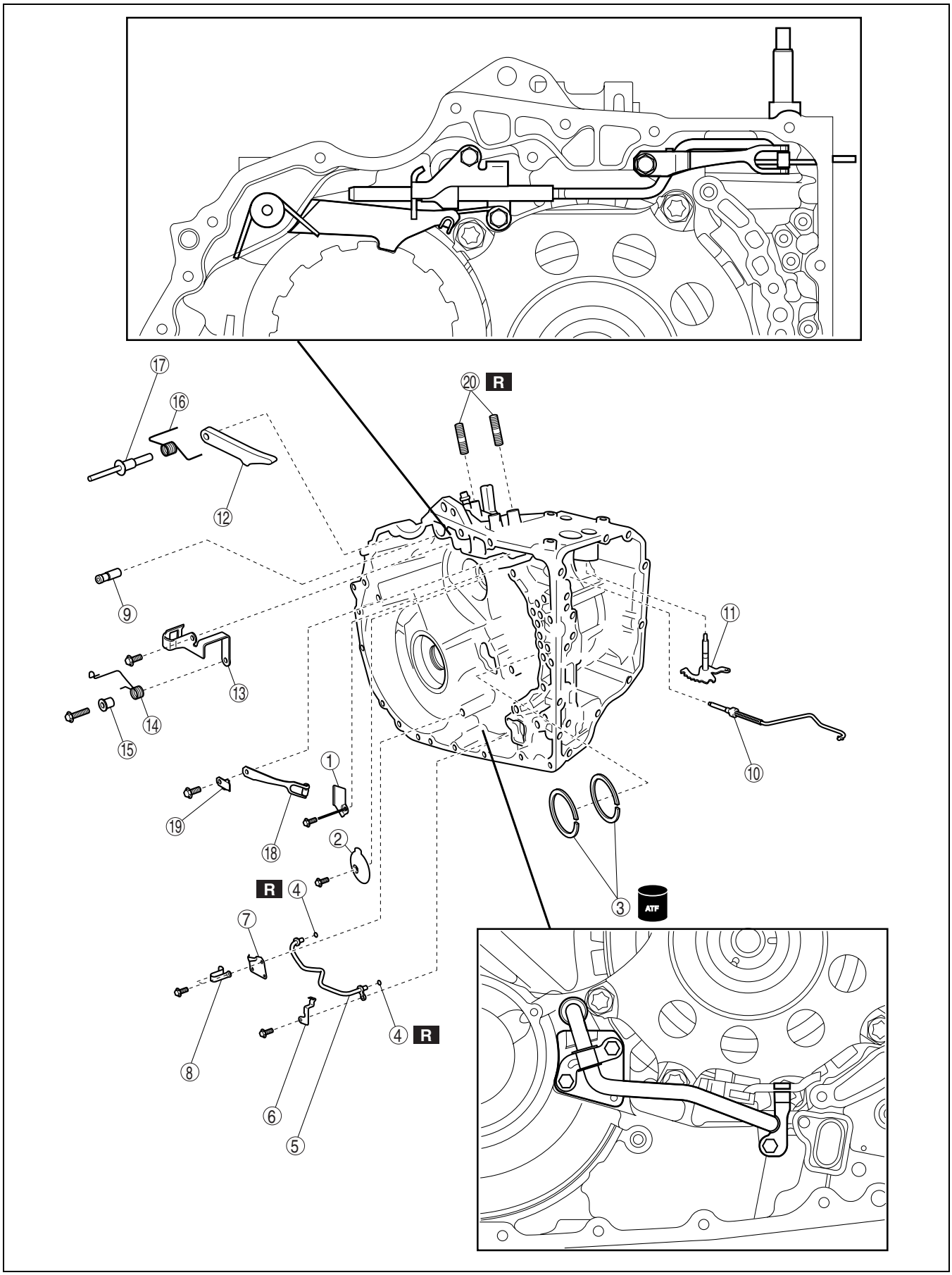

bawuua00000413

1	Transaxle case plate No.3
2	Transaxle case plate No.2
3	Seal ring
4	O-ring
5	Oil cooler outlet tube
6	Wiring harness clip
7	Transaxle case No.1 plate
8	Pipe clamp
9	Parking pin
10	Parking rod

11	Manual valve lever
12	Parking pawl
13	Parking pawl bracket
14	Torsion spring
15	Spring guide sleeve
16	Pawl return spring
17	Parking pawl shaft
18	Detent spring
19	Detent spring cover
20	Stud bolt

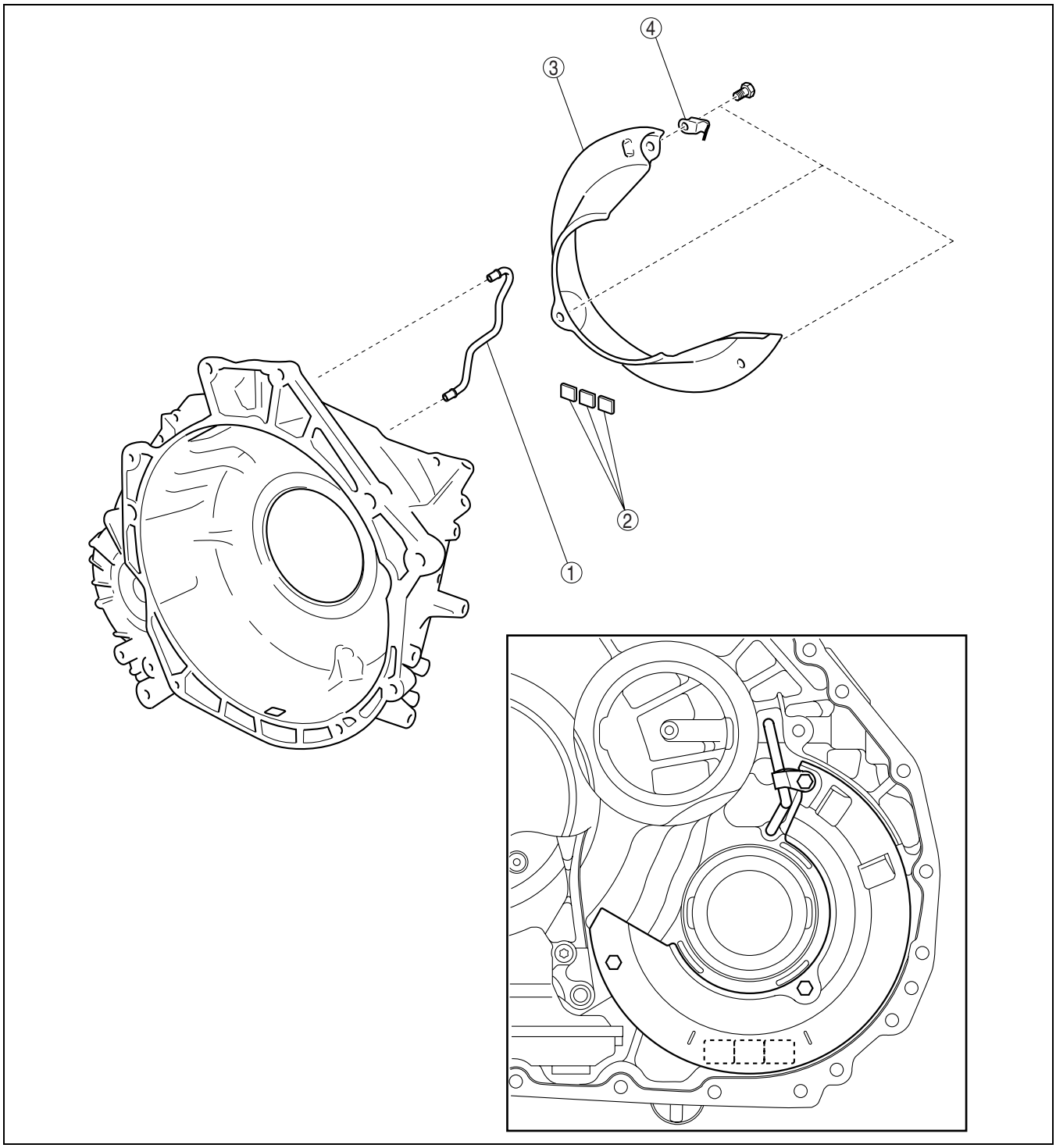

bawuua00000414

1	Oil pipe
2	Magnet

3	Oil reservoir lock plate
4	Tube clamp

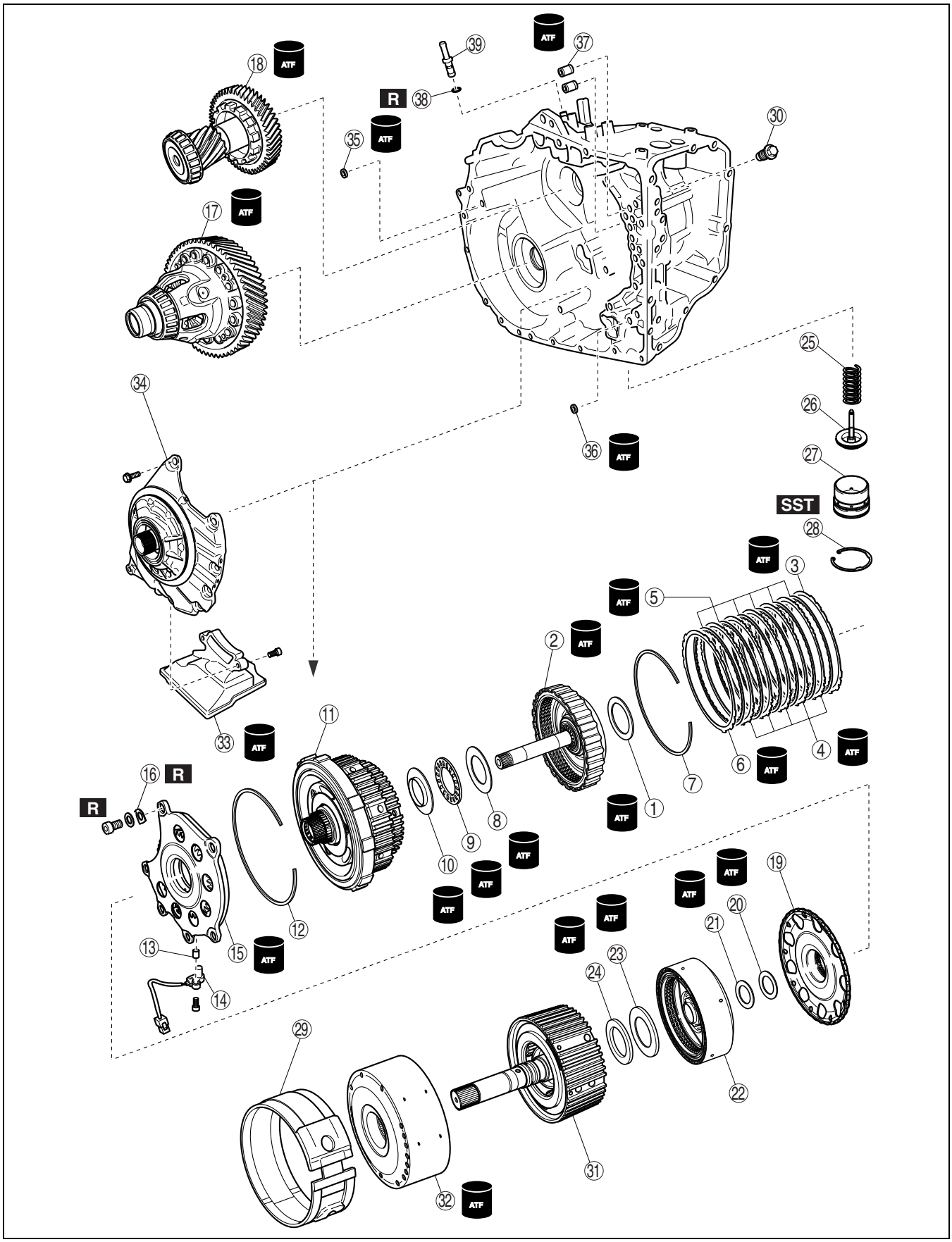

bawuua00000415

1	Thrust bearing
2	C2 clutch component

3	Retaining plate
4	Driven plate

5	Drive plate
6	Retaining plate
7	Snap ring
8	Bearing race
9	Thrust bearing
10	Bearing race
11	Rear planetary gear component and one-way clutch component
12	Snap Ring
13	Spacer
14	Vehicle speed sensor (VSS)
15	Counter drive gear
16	Lock washer
17	Differential component
18	Counter gear component
19	Sun gear input drum
20	Bearing race
21	Thrust bearing

22	C1 clutch component
23	Bearing race
24	Thrust bearing
25	Piston return spring
26	B1 brake piston
27	Brake piston cover
28	Snap ring
29	B1 brake band
30	Brake band anchor bolt
31	Front planetary gear component and input shaft
32	C3 clutch component
33	Oil strainer
34	Oil Pump component
35	Gasket
36	Gasket
37	Transaxle case gasket
38	O-ring
39	Breather pipe

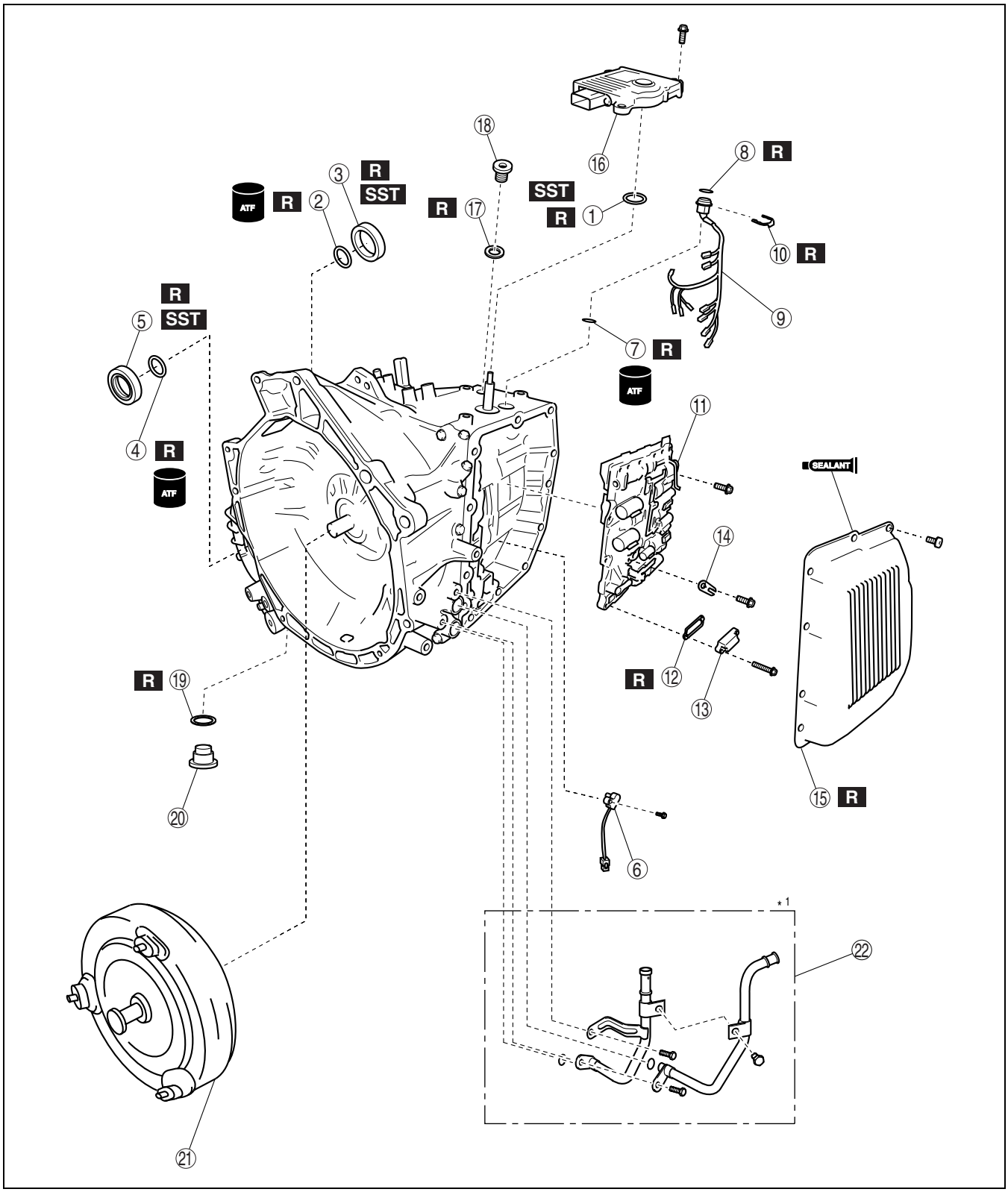

bawuua00000416

1	Oil seal (manual shaft)
2	O-ring (transaxle case side)
3	Oil seal (transaxle case side)
4	O-ring (converter housing side) (2WD)
5	Oil seal (converter housing side)
6	Input/turbine speed sensor
7	Gasket

8	O-ring
9	Coupler component
10	Coupler component lock plate
11	Control valve body component
12	Gasket
13	Suction cover
14	Lock plate

15	Control valve body cover
16	TCM
17	O-ring
18	Filler plug

19	Gasket
20	Drain plug
21	Torque converter
22	Oil pipe and O-ring

*1 : The figure shows Mazda6 specification.

Assembly Procedure

Caution
- **Do not damage the oil seal.**

1. Using the **SST** and a hammer, install a new oil seal to the transaxle case.
   Substitution SST
   - **49 F026 102**
     Outer diameter: 27 mm {1.07 in} or more
     Inner diameter: 15— 18 mm {0.60— 0.70 in}
2. Apply ATF to the new seal rings and sliding surface of the transaxle case.

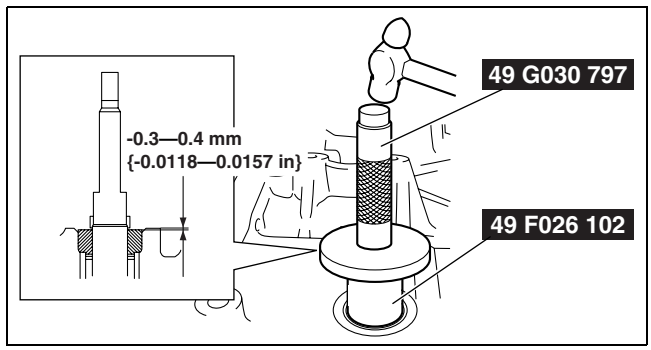

bawuua00000417

3. Compress the seal rings as shown in the figure. Then install the seal rings in the transaxle case.

   Caution
   - **Do not expand the seal rings too much.**
   - **Be careful not to shorten the seal rings too much, when installing the seal rings.**

   Note
   - Inspect that seal rings rotate smoothly after installing them.

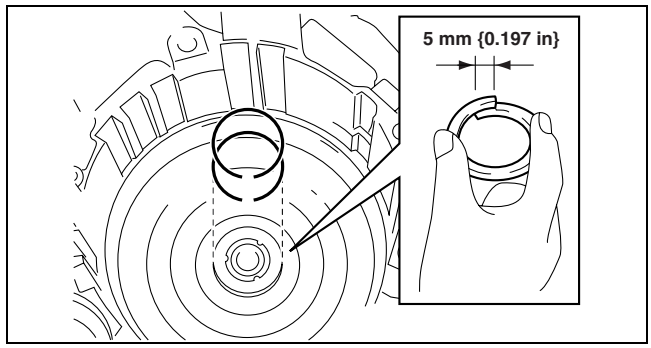

bawuua00000418

4. Install the transaxle case plate No.3.

   Tightening torque
   3.9 — 6.9 N·m {40 — 70 kgf·cm, 26 — 60 in·lbf}

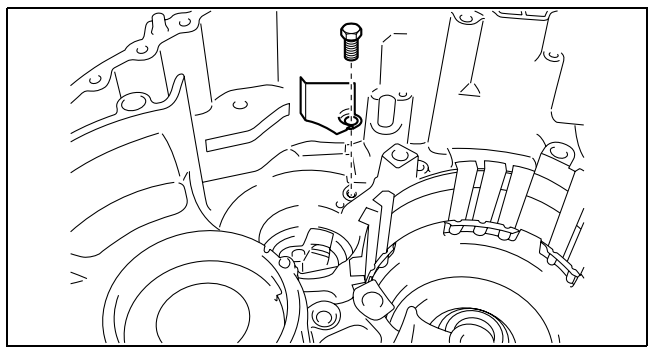
bawuua00000419

5. Install the transaxle case plate No.2.

   Tightening torque
   3.9 — 6.9 N·m {40 — 70 kgf·cm, 26 — 60 in·lbf}

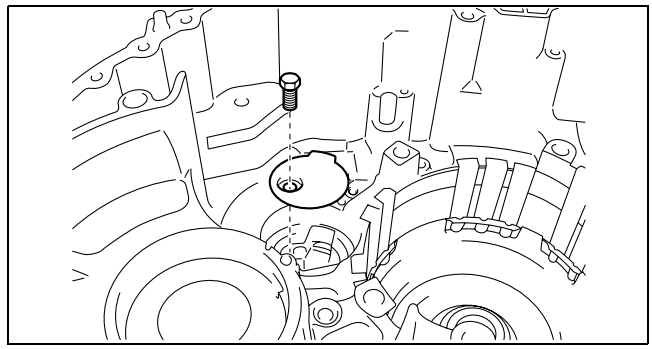

bawuua00000420

6. Apply ATF or grease to the thrust bearing and install it to the C2 clutch component.
7. Apply ATF to the seal ring and rubbing surface of the C2 clutch component where the bushing is fit.

   Caution
   - **Do not damage the seal ring.**

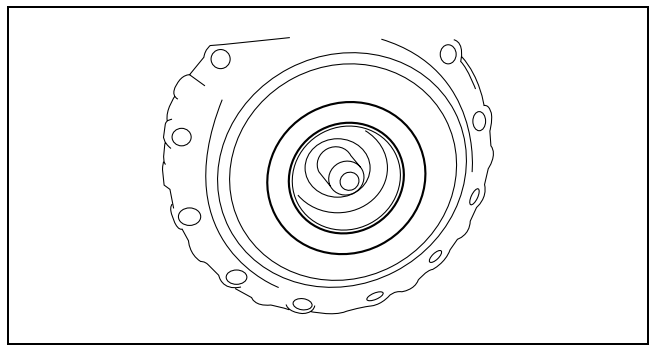

bawuua00000421

8. Install the C2 clutch component to the transaxle case.
9. Apply ATF to the driven plates, drive plates and retaining plates.

   Note
   - Replace with new drive plates after soaking them at least **2 h** in ATF.

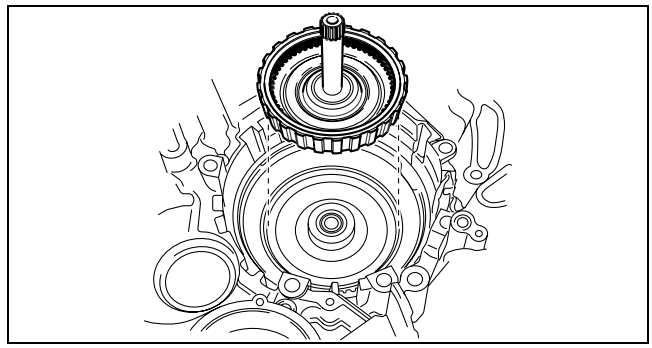

bawuua00000422

10. Install driven plates, drive plates and the retaining plate in the following order to the transaxle case as shown in the figure.
    Six drive plates type
    - Retaining— Drive— Driven— Drive— Driven— Drive— Driven— Drive— Driven— Drive— Driven— Drive— Retaining

    Seven drive plates type
    - Retaining— Drive— Driven— Drive— Driven— Drive— Driven— Drive— Driven— Drive— Driven— Drive— Driven— Drive— Retaining

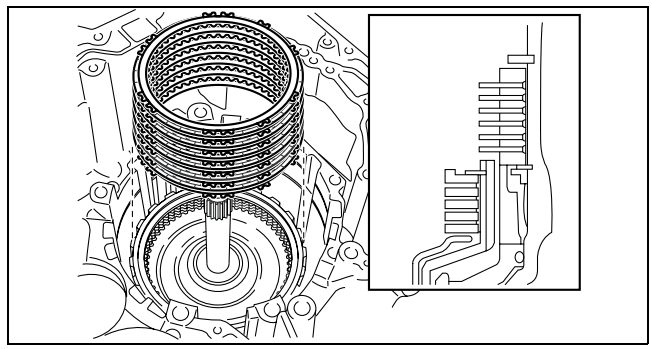

bawuua00000423

    Caution
    - **Inspect the number and order of the retaining plates, drive and driven plates.**

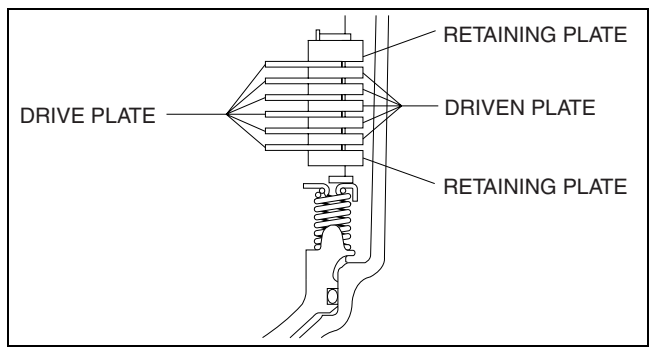

bawuua00000424

11. Using a flathead screwdriver, install the snap ring in the groove.

Caution
- **Align the opening of the snap ring with the position as shown in the figure.**

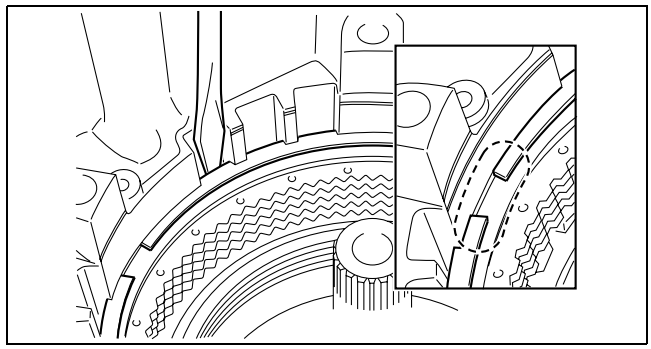

bawuua00000425

12. Apply ATF to the thrust bearing and the bearing races and install them to the transaxle case.

Note
- Align the spline of the C2 clutch drive plates and B2 brake drive plates before installing the rear planetary gear component.

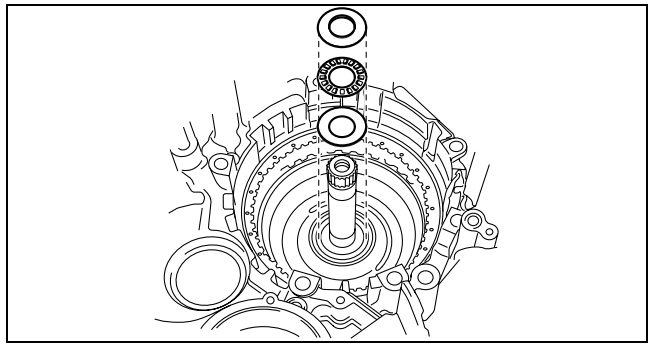

bawuua00000426

13. Apply ATF to each gear and the bushing, and then install the rear planetary gear component to the transaxle case.
14. Apply ATF to the sliding surface of the one-way clutch.

Note
- For easy installation, while turning the rear planetary gear component, install it.

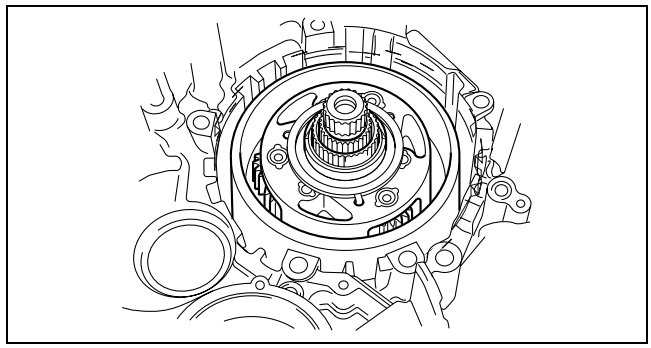

bawuua00000427

15. Install the one-way clutch to the transaxle case.

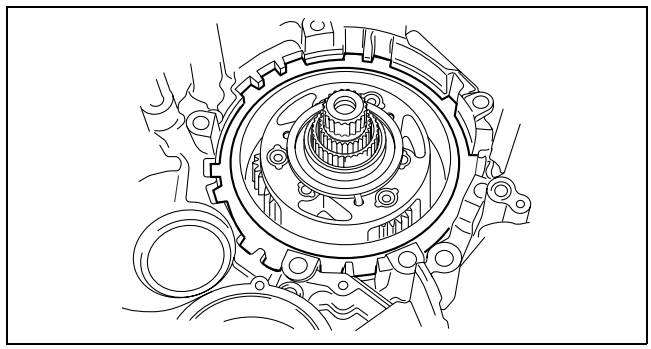

bawuua00000428

16. Using a flathead screwdriver, install the snap ring in the groove.

Caution
- **Align the opening of the snap ring with the position shown in the figure.**

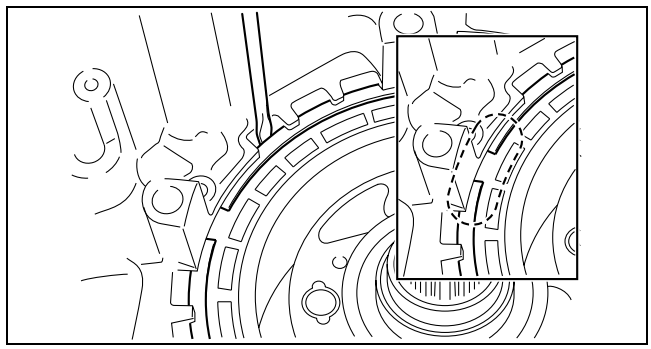

bawuua00000429

17. While holding the one-way clutch component, inspect that the planetary gear turns to right (clockwise) but does not turn to left (counterclockwise).

    Caution
    - **Do not damage the VSS.**

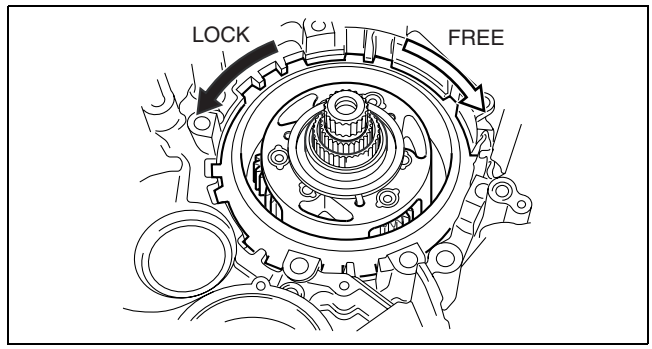

bawuua00000430

18. Install the VSS and spacer to the counter drive gear.

    Tightening torque
    3.9 — 6.9 N·m {40 — 70 kgf·cm, 26 — 60 in·lbf}

19. Apply ATF to the spline on the counter drive gear and spline on the ring gear.

    Caution
    - **Do not damage the VSS wiring harness.**
    - **Do not pull hard on the VSS wiring harness.**

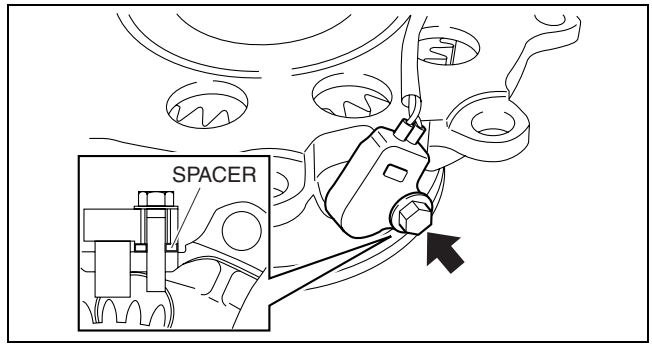

bawuua00000431

20. Install the counter drive gear to the transaxle case.

    Note
    - Verify that the claws of the lockwashers are facing upward.

21. Install the new lockwashers and washers with new bolts.

    Tightening torque
    82.7 — 93.6 N·m {8.5 — 9.5 kgf·cm, 61.0 — 69.0 ft·lbf}

    Bolt length (measured from below the head)
    A: 28 mm {1.102 in}
    B: 35 mm {1.378 in}

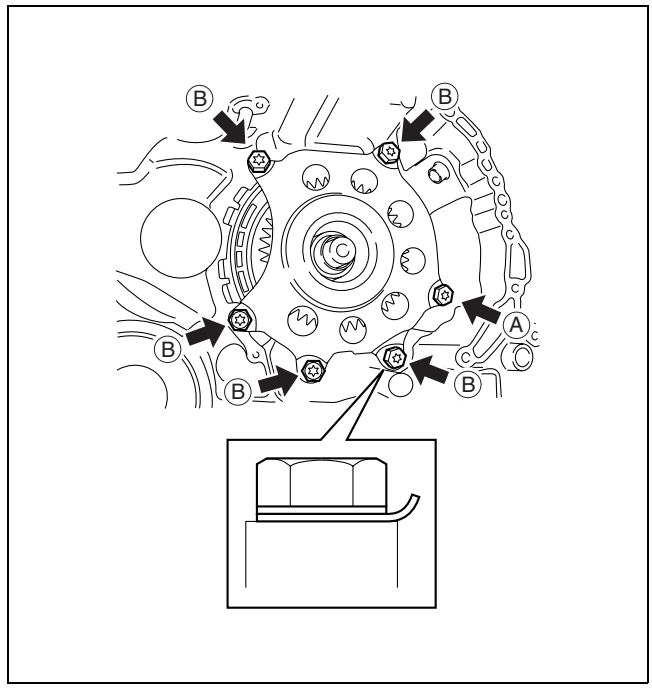

bawuua00000432

22. Using a flathead screwdriver and a hammer, pry back the crimp locking the lockwashers.
23. Apply ATF to the new O-rings.
24. Install the O-rings to the oil cooler outlet tube.

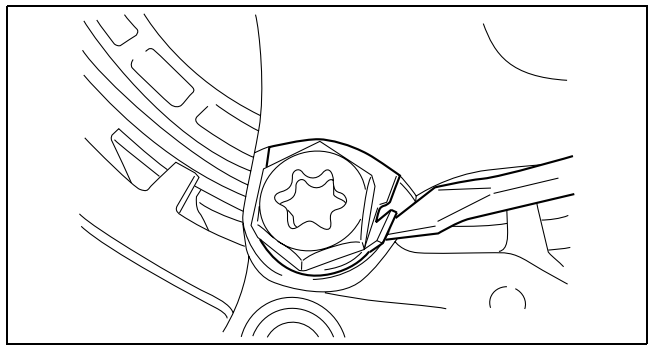

bawuua00000433

25. Install the oil cooler outlet tube, pipe clamp, transaxle case No.1 plate and the wiring harness clip to the converter housing.

Caution
- **Do not damage the VSS wiring harness.**
- **Do not pull hard on the VSS wiring harness.**

Tightening torque
7.8 — 11.8 N·m {82 — 122 kgf·cm, 72 — 105 in·lbf}

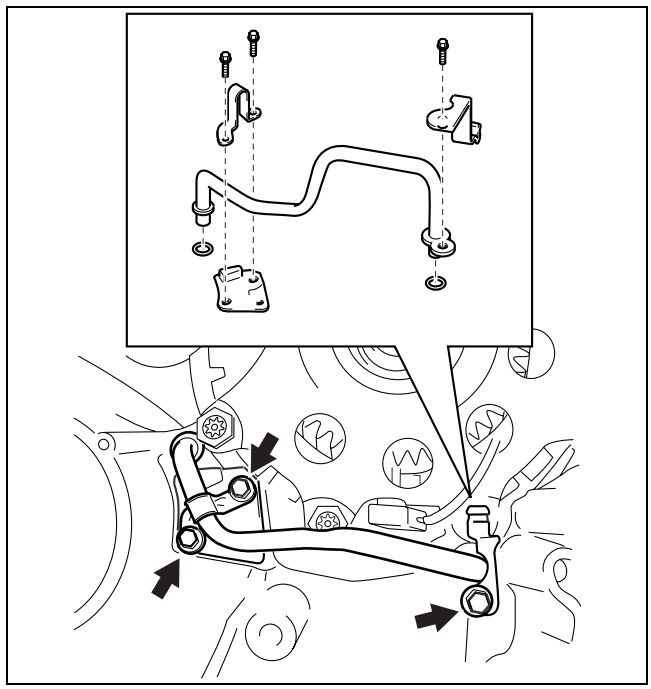

bawuua00000434

26. Connect the VSS wiring harness to the wiring harness clip.
27. Apply ATF to the bearing and gear of the differential component.

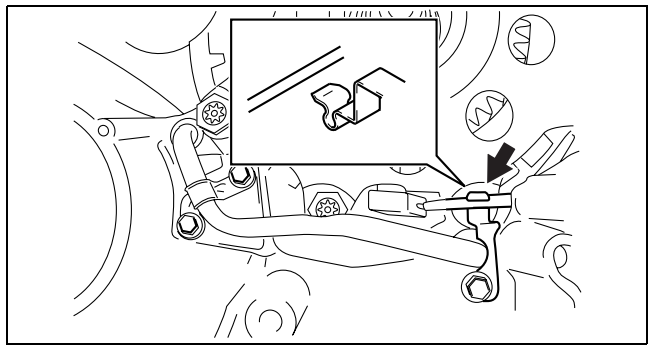

bawuua00000435

28. Install the differential component to the transaxle case.
29. Apply ATF to the bearing and gear of the counter gear component.

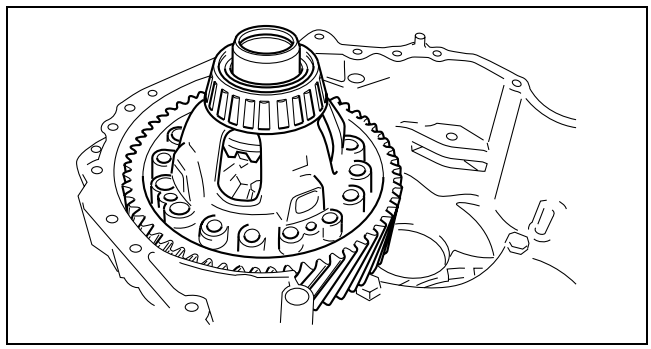

bawuua00000436

30. Install the counter gear component to the transaxle case.

Note
- If it is difficult to install the counter driven gear, remove the differential component and then install the counter driven gear. Install the differential component again.
- For easy installation, tilt the counter gear slightly.

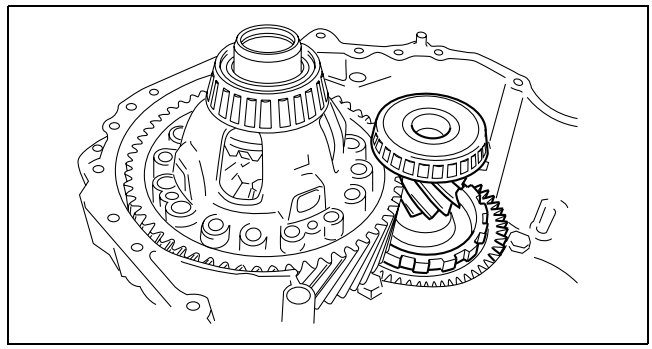

bawuua00000437

31. Install the parking pin to the transaxle case.

Caution
- **Verify to install the parking pin as shown in the figure.**

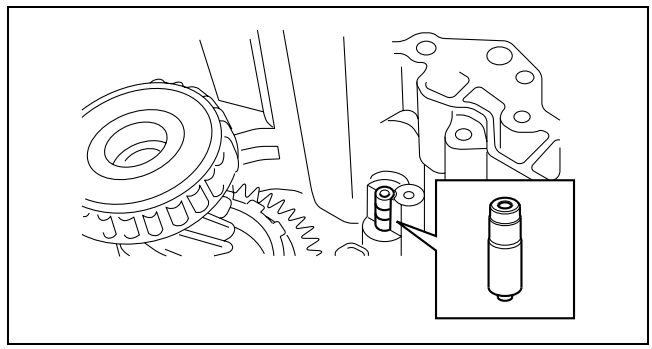

bawuua00000438

32. Insert the parking rod to the transaxle case.

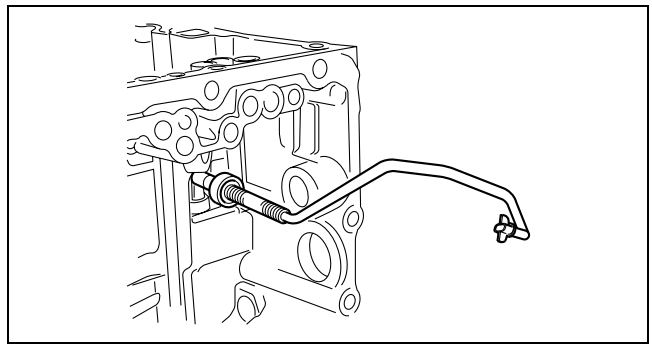

bawuua00000439

33. Install the manual valve lever to the transaxle case.

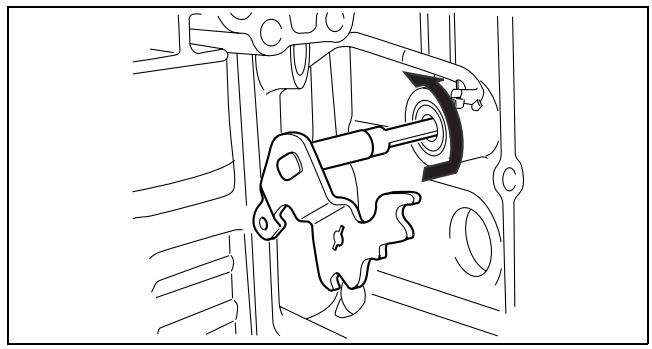

bawuua00000440

34. Connect the parking rod to the manual valve lever.

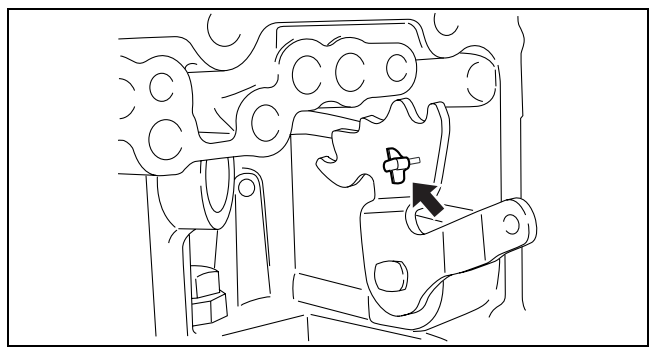

bawuua00000441

35. Install the parking pawl, parking pawl bracket and the parking rod to the transaxle case.

Caution
- **Do not apply too much force to the torsion spring.**

Tightening torque
7.8 — 11.8 N·m {82 — 122 kgf·cm, 72 — 105 in·lbf}

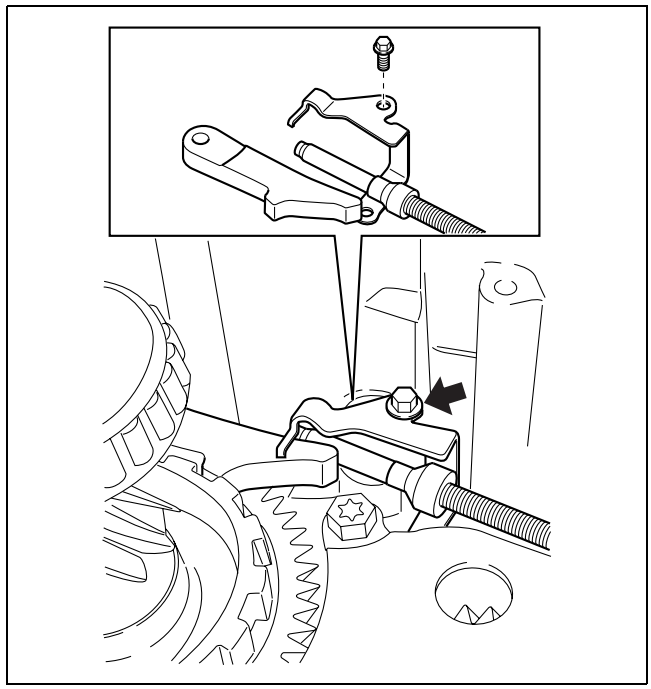

bawuua00000442

36. Install the spring guide sleeve and the torsion spring.

Tightening torque
7.8 — 11.8 N·m {82 — 122 kgf·cm, 72 — 105 in·lbf}

Note
- Install the torsion spring to the position of the parking lock pawl and parking lock pawl bracket shown in the figure together with the spring guide sleeve and torsion spring installed.

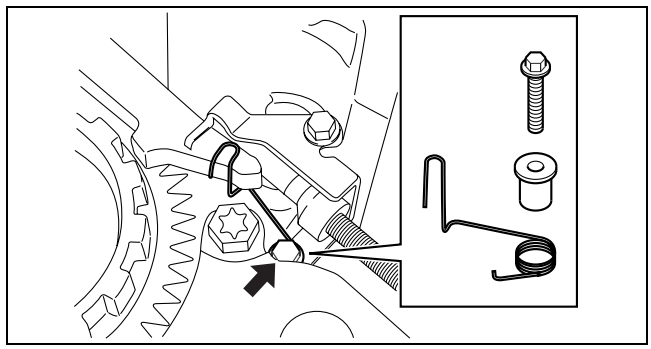

bawuua00000443

Caution
- **Do not apply too much force to the pawl return spring.**

37. Install the pawl return spring to the parking pawl shaft.
38. Install the pawl return spring and the parking pawl shaft to the transaxle case.

Caution
- **Do not apply too much force to the detent spring.**

Note
- When installing the pawl return spring to transaxle case, install the parking pawl side of the spring, then install the parking pawl shaft.

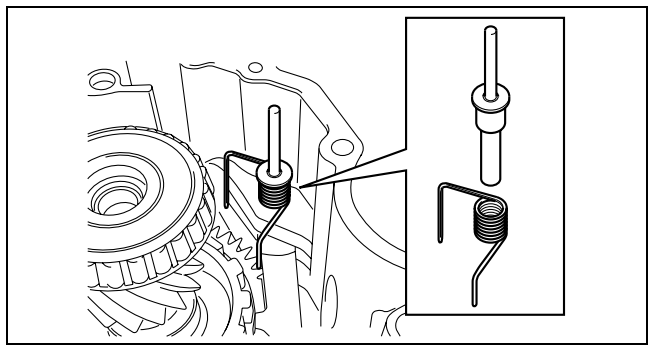

bawuua00000444

39. Install the detent spring cover and detent spring to the transaxle case.

Tightening torque
7.8 — 11.8 N·m {82 — 122 kgf·cm, 72 — 105 in·lbf}

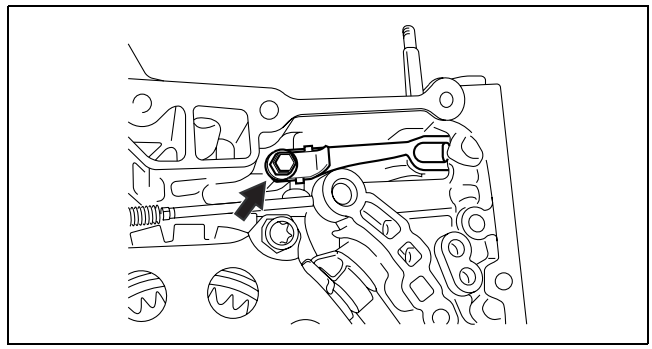

bawuua00000445

Note
- When installing, ensure that the center of the detent spring's roller fits the center of the manual valve lever.

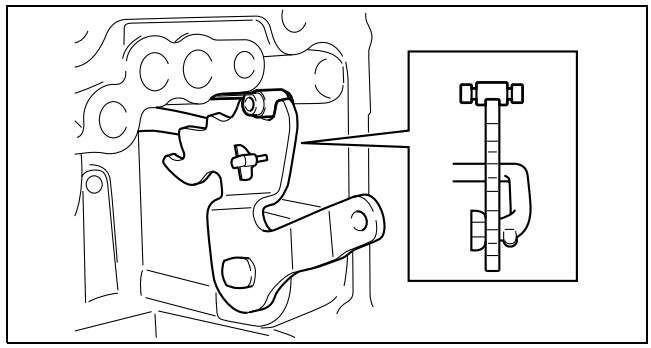

bawuua00000446

40. Install the sun gear input drum to the transaxle case.
41. Apply ATF to the bearing race and the thrust bearing, and then install them to the transaxle case.

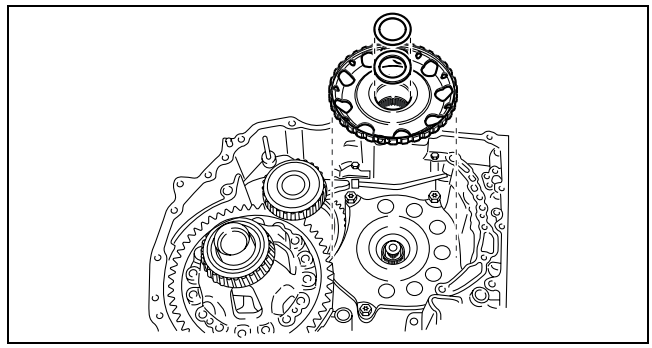

bawuua00000447

42. Install the C1 clutch component to the transaxle case.
43. Apply ATF to the bearing race and the thrust bearing, and then install them to the transaxle case.

Caution
- **If the input shaft is not hold during installation, the thrust washer might be come off.**

Note
- Align the spline of the C1 clutch drive plates before installing the input shaft and front planetary gear.
- Hold the C1 clutch component and install the front planetary gear while holding the input shaft.

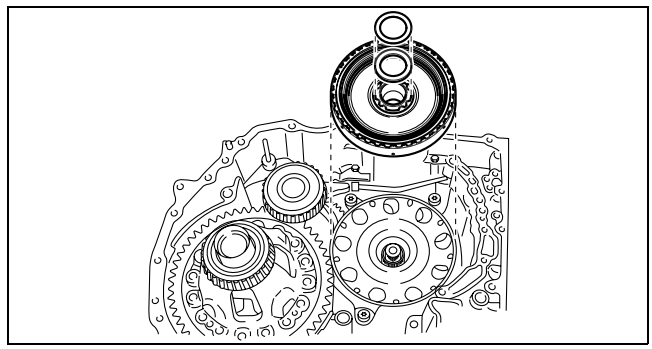

bawuua00000448

44. Install the input shaft and the front planetary gear to the transaxle case.
45. Apply ATF to the bushing of the C3 clutch component.

Note
- Before installing the C3 clutch component, align the spline of the C3 clutch drive plates and the spline of the B1 brake drive plates.

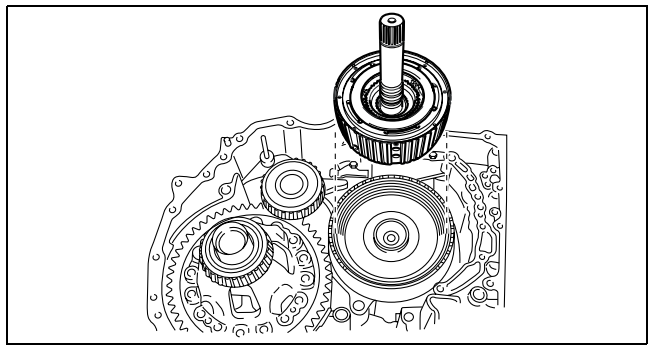

bawuua00000449

46. Install the C3 clutch component to the transaxle case.

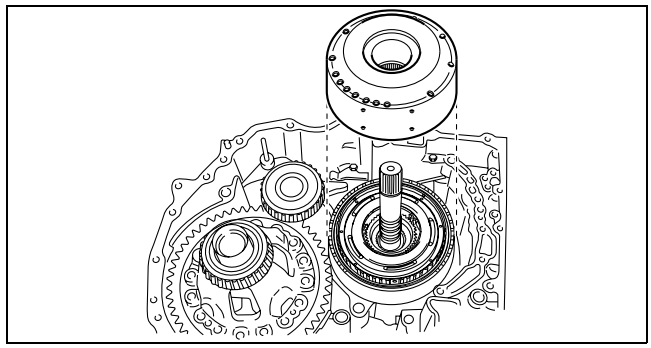

bawuua00000450

Note
- Install the C3 clutch component so that it engages with the sun gear drum as shown in the figure.

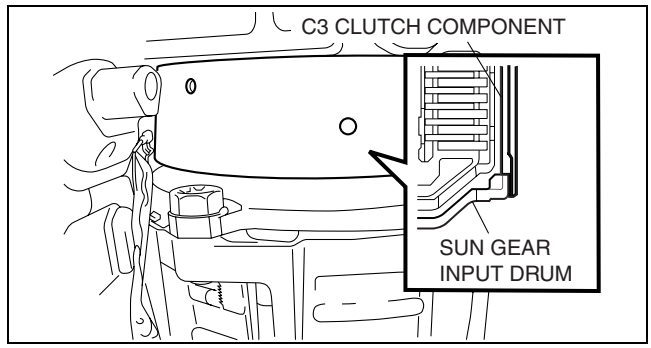

bawuua00000451

47. Install the B1 brake band to the transaxle case.

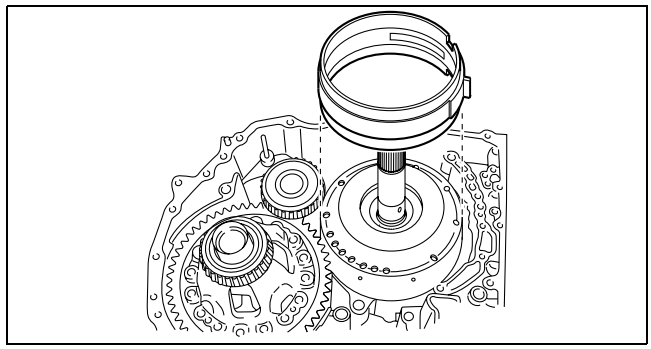

bawuua00000452

48. Install the brake band anchor bolt to the transaxle case.

Tightening torque
133.3 — 199.9 N·m {13.6 — 20.3 kgf·m, 98.3 — 147.4 ft·lbf}

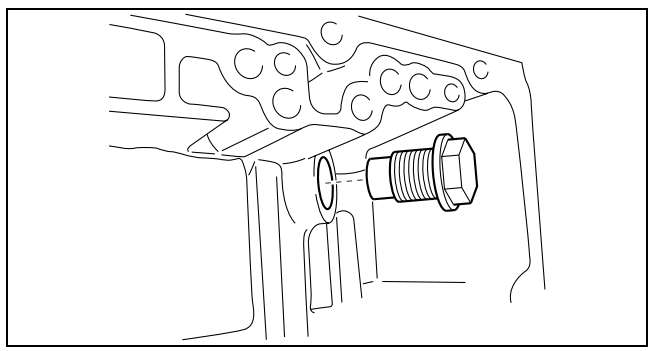

bawuua00000453

49. Install the piston return spring, B1 brake piston and the brake piston cover to the transaxle case.

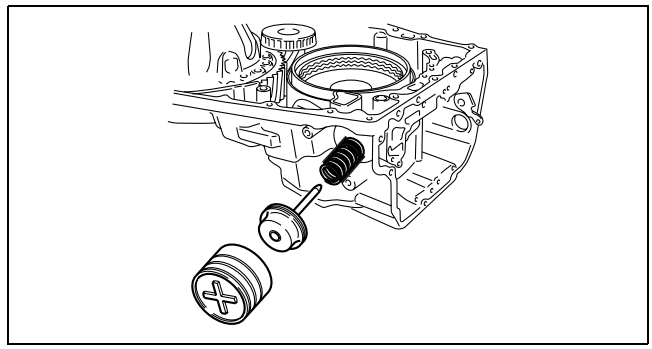

bawuua00000454

50. Using the **SST**, press the brake piston cover into the position where the snap ring groove is visible.
51. Apply ATF to the oil seal.

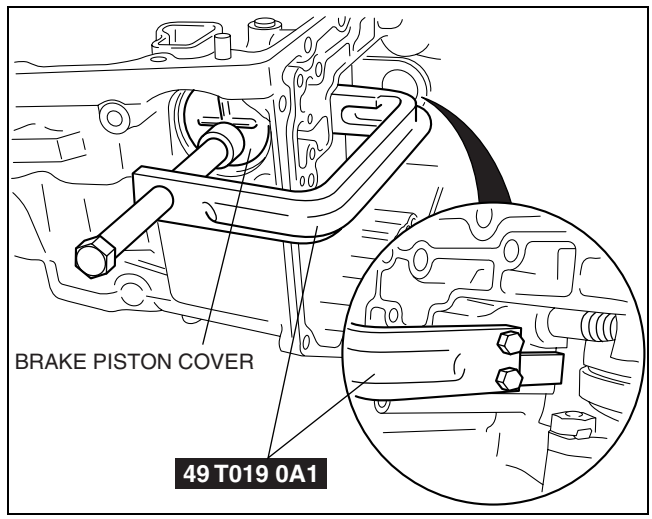

bawuua00000455

52. Install the oil strainer and the oil seal to the oil pump component.
53. Apply ATF to each rubbing surface of the oil pump component.

Caution
- **Do not drop the thrust washer.**
- **Do not damage the oil seal.**

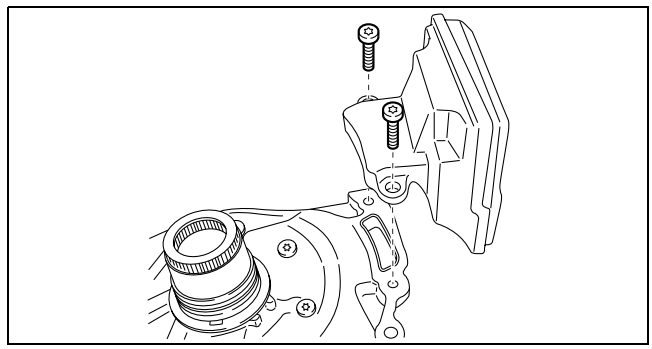

bawuua00000456

54. Install the oil pump component to the transaxle case.

Tightening torque
19.6 — 29.4 N·m {2.0 — 2.9 kgf·m, 14.5 — 21.6 ft·lbf}

Bolt length (measured from below the head)
A: 22 mm {0.866 in}
B: 35 mm {1.378 in}

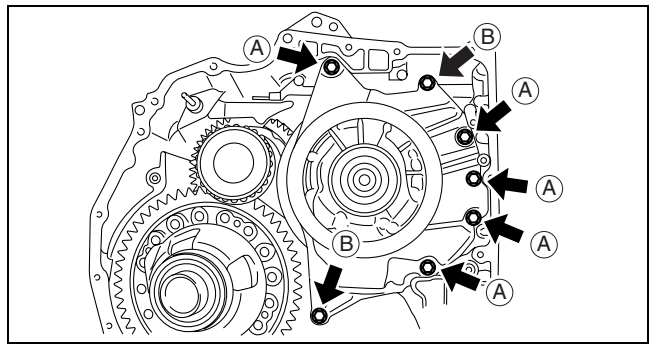

bawuua00000457

55. Verify that the input shaft turns smoothly.

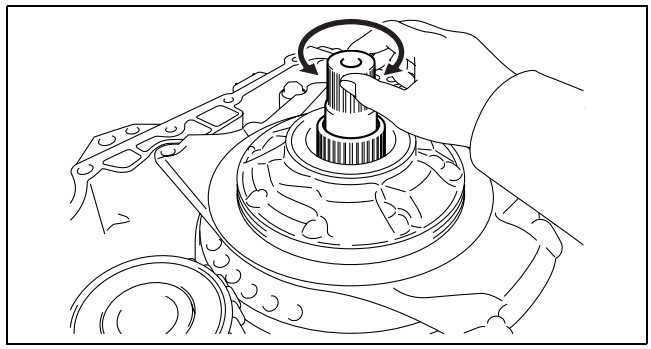

bawuua00000458

56. Using a dial indicator, measure the input shaft end play.

Input shaft end play
0.349 — 1.081 mm {0.01374 — 0.04255 in}

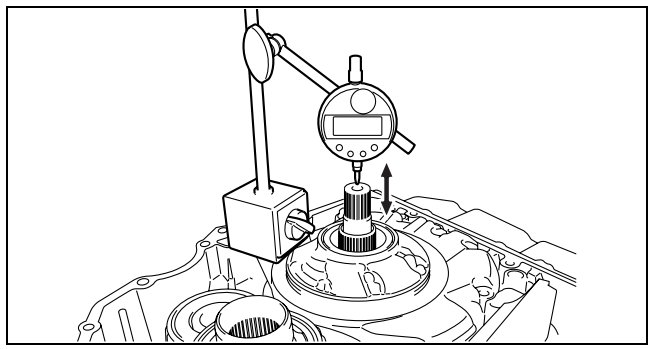

bawuua00000459

57. Put a mark on the piston rod at the point where it intersects with the case.

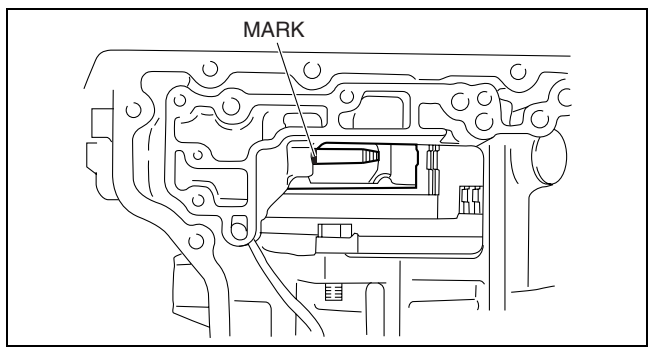

bawuua00000460

58. Measure the stroke between the transaxle case and the mark on the piston rod when applying compressed air into the oil hole as shown in the figure.

Air pressure
400 kPa {4.1 kgf/cm^2, 58 psi}

B1 brake piston stroke
5.50 — 6.00 mm {0.217 — 0.236 in}

- If not within the specification, select an appropriate piston rod.

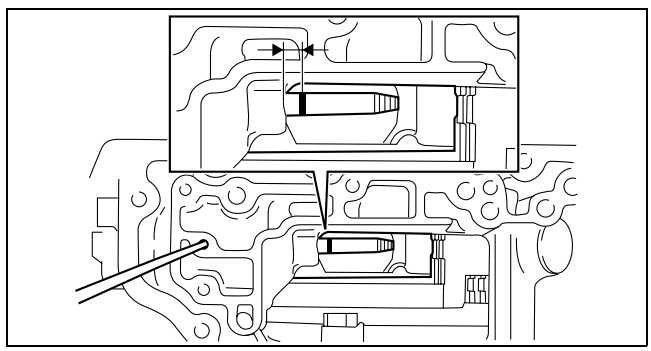

bawuua00000461

Piston rod size

Identification mark	Length (mm {in})
—	102.80 {4.0473}
1	103.05 {4.0571}
2	103.30 {4.0669}
3	103.55 {4.0768}
4	103.80 {4.0866}
5	104.05 {4.0965}
6	104.30 {4.1063}
7	104.55 {4.1161}
8	104.80 {4.1260}
9	105.05 {4.1358}
10	105.30 {4.1457}

Caution
- **Do not damage the differential gear lube apply tube.**

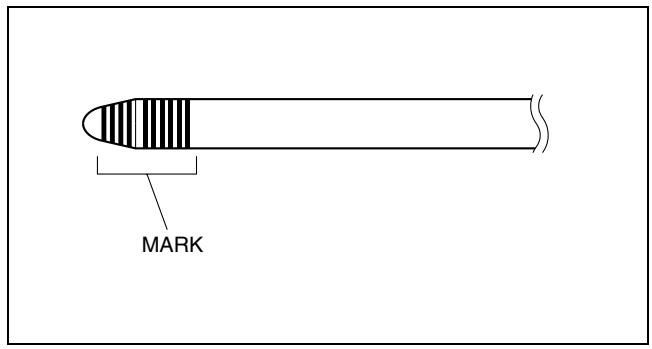

bawuua00000462

59. Install the differential gear lube apply tube to the converter housing.

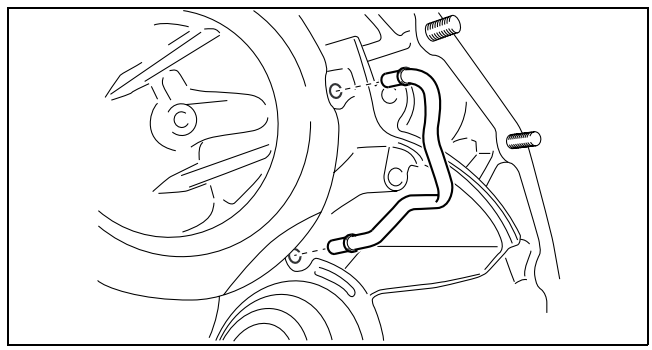

bawuua00000463

60. Install the magnets to the oil reservoir lock plate.

Caution
- **Do not damage the oil reservoir lock plate.**

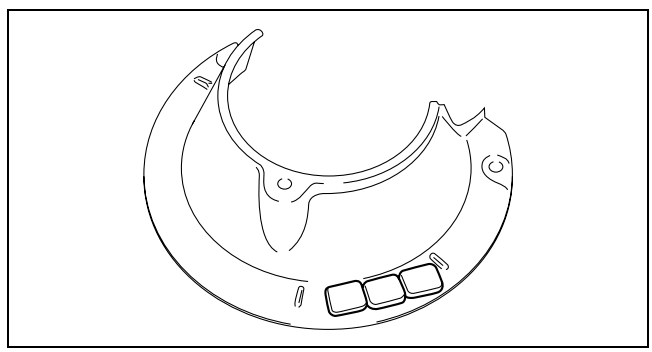

bawuua00000464

61. Install the oil reservoir lock plate and the tube clamp to the converter housing.

    Tightening torque
    3.9 — 6.9 N·m {40 — 70 kgf·cm, 26 — 60 in·lbf}

62. Apply ATF to the new gaskets.

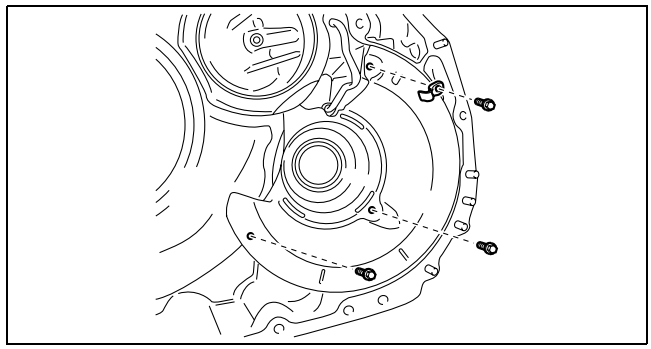

bawuua00000465

63. Install the gaskets to the transaxle case as shown in the figure.
64. Apply ATF to the new transaxle case gaskets.

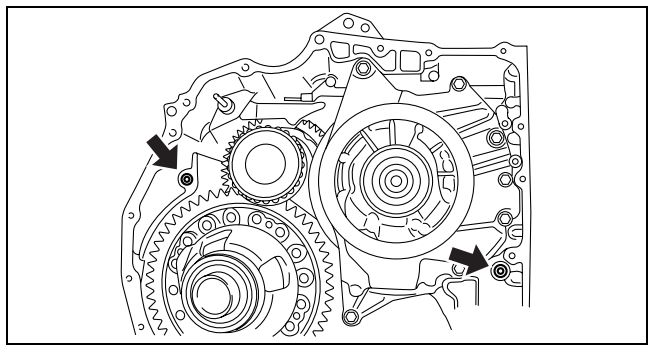

bawuua00000466

65. Install the transaxle case gaskets to the transaxle case as shown in the figure.

    Caution
    - **Verify to install the transaxle case gasket as shown in the figure.**

66. Remove any packing material and be careful not to get oil on the contact surface of the transaxle case and the converter housing.
67. Clean the contact surface of the transaxle case and the converter housing and the bolt holes.

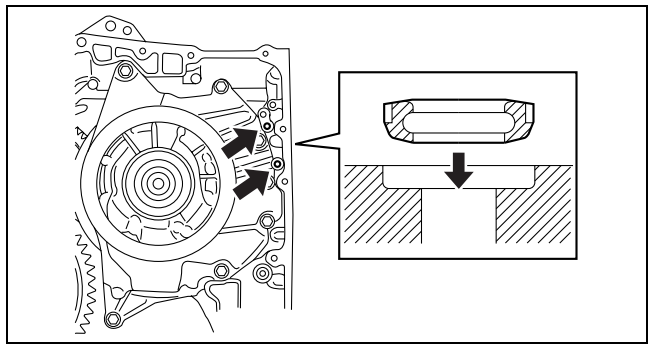

bawuua00000467

Note
- Completely remove sealant and oil with white gasoline or equivalent.

68. Apply ATF to a O-ring of the oil pump.
69. Apply sealant to the converter housing as shown in the figure.

    Note
    - Spread sealant over the contact surface.
    - Do not apply sealant to the transaxle case.

    Caution
    - **Do not damage the O-ring on the oil pump component.**
    - **Do not damage the housing oil seal.**

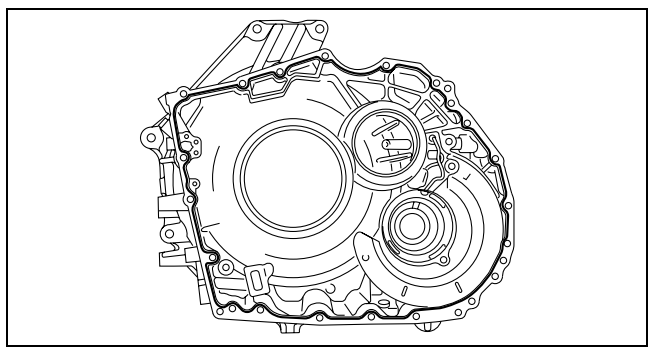

bawuua00000468

70. Install the converter housing to the transaxle case.

Note
- Tap all around the contact surface with a plastic hammer during installation.

71. Temporarily tighten the bolts by hand as shown in the figure.

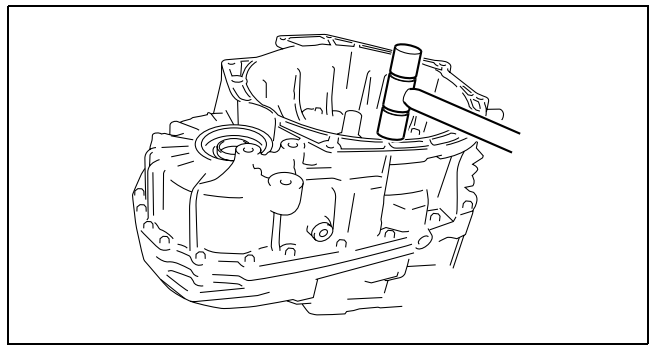

bawuua00000469

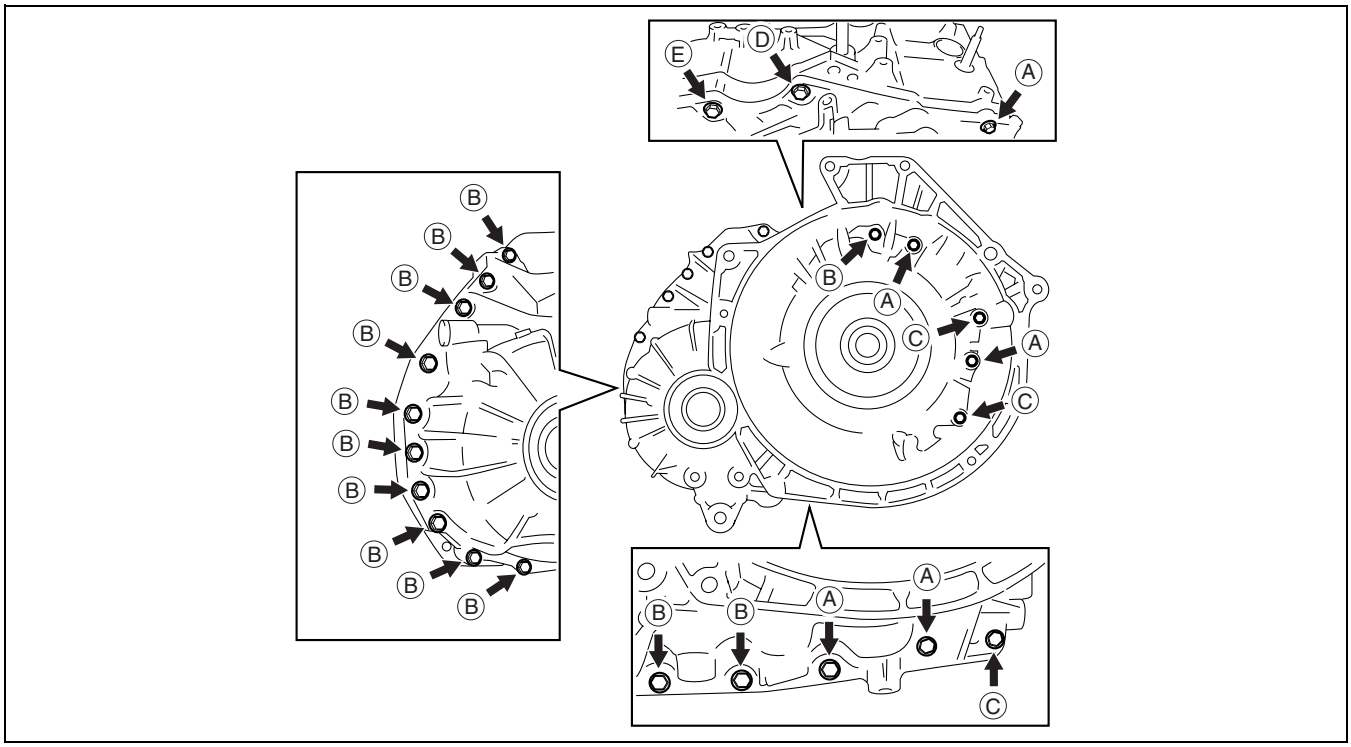

bawuua00000470

Bolt number	Bolt size	Length (measured from below the head) (mm {in})
A	M8 × 1.25	30 {1.18}
B	M8 × 1.25	35 {1.38}
C	M8 × 1.25	39 {1.54}
D	M10 × 1.25	25 {0.984}
E	M10 × 1.25	40 {1.57}

72. Tighten the bolts.

Tightening torque
A, B, C: 23.5 — 35.3 N·m {2.4 — 3.5 kgf·m, 17.4 — 26.0 ft·lbf}
D, E: 29.4 — 41.2 N·m {3.0 — 4.2 kgf·m, 21.7 — 30.3 ft·lbf}

Caution
- **Do not damage the input/turbine speed sensor.**

73. Install the input/turbine speed sensor to the transaxle case.

Tightening torque
3.9 — 6.9 N·m {40 — 70 kgf·cm, 26 — 60 in·lbf}

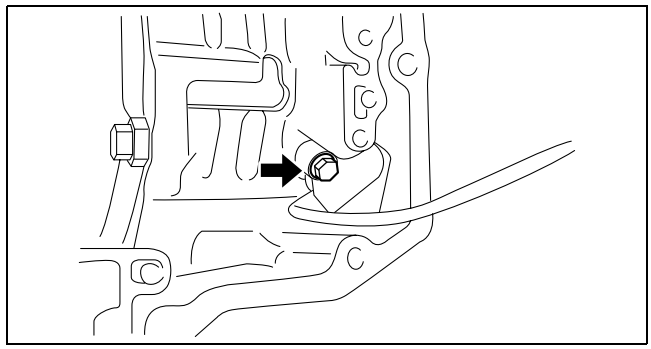

bawuua00000471

74. Apply ATF to a new gasket as shown in the figure.
75. Install the gasket to the coupler component.

Caution
- **Do not apply ATF to the O-ring.**

76. Install a new O-ring to the coupler component.

Caution
- **Do not apply too much force to the coupler component.**
- **Do not damage the coupler component.**

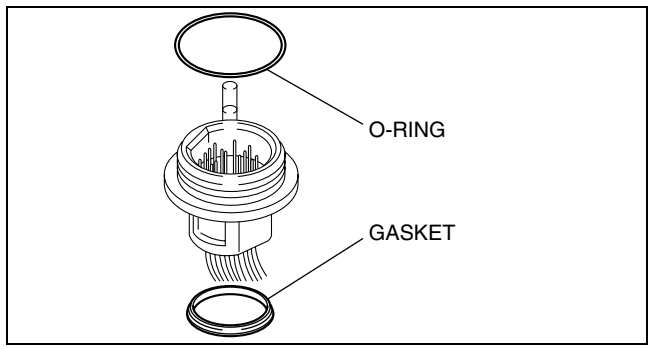

bawuua00000472

77. Install the coupler component to the transaxle case.

Note
- Install the coupler component to the transaxle case by engaging its claw.

78. Install a new coupler component lock plate.

Caution
- **When installing the control valve body component, do not put the coupler component in the open space of the separate plate in the control valve body component.**
- **Do not pinch the coupler component between the separate plate and the control valve body component.**

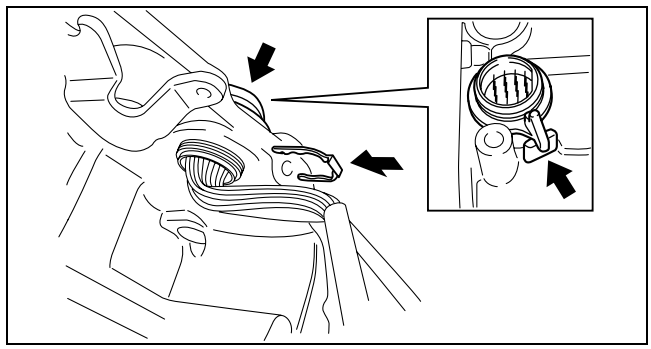

bawuua00000473

79. Connect the manual valve link and install the control valve body component.

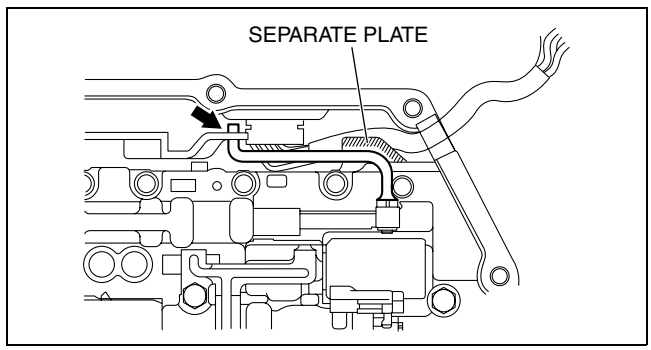

bawuua00000474

80. Temporarily install the control valve body component with the bolts.

Bolt length (measured from below the head)
A: 31 mm {1.220 in}
B: 17 mm {0.669 in}
C: 21 mm {0.827 in}

Note
- Aligning the bolt holes, temporarily tighten the bolts by hand.

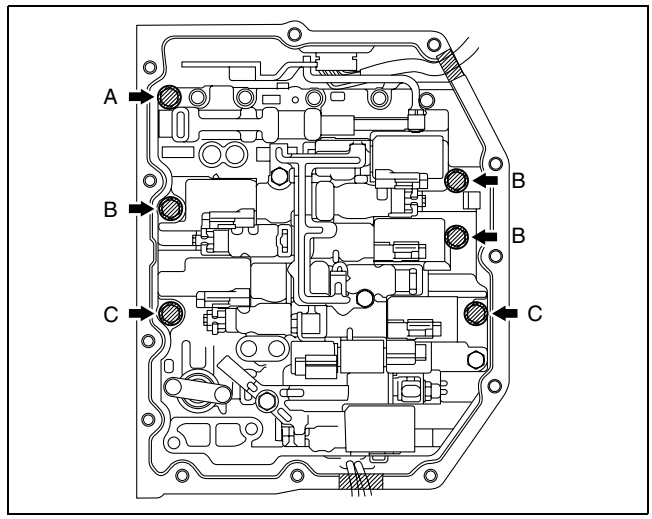

bawuua00000475

81. Temporarily install the suction cover and a new gasket with the bolts.

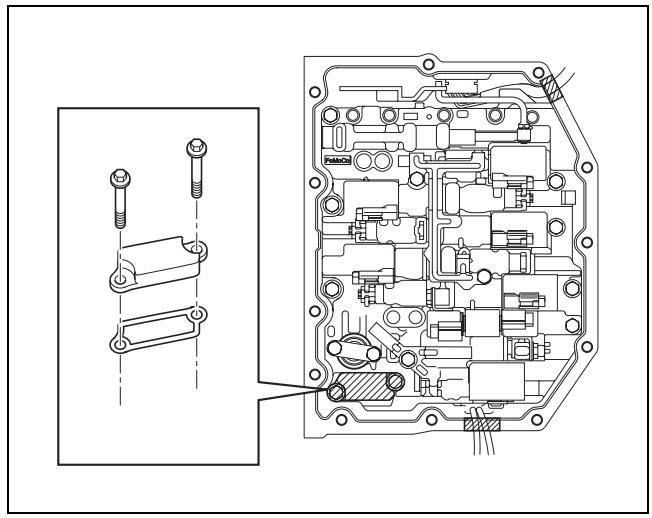

bawuua00000476

82. Tighten the bolts in the order shown in the figure.

Tightening torque
8 — 12 N·m {82 — 122 kgf·cm, 72 — 105 in·lbf}

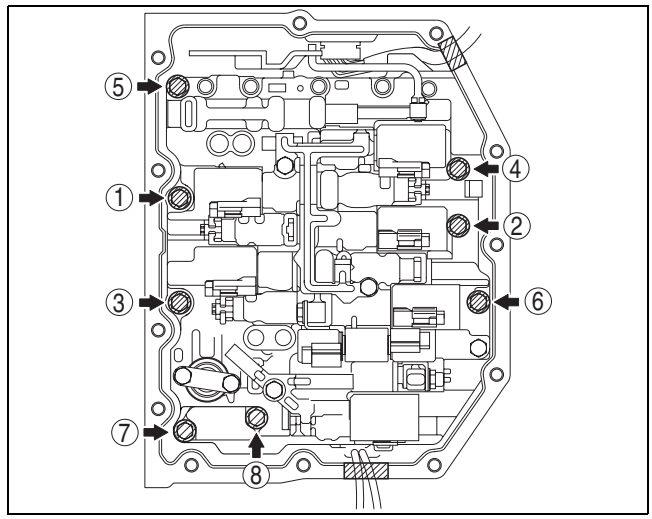

bawuua00000477

83. Install the connector of the VSS and input/turbine speed sensor to the solenoid clamp.

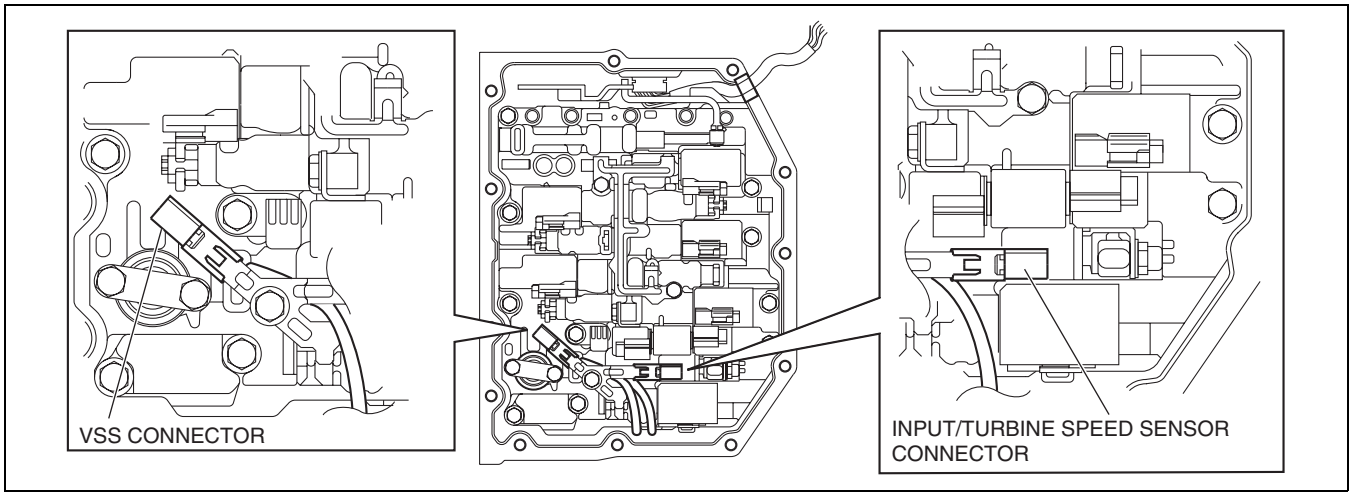

bawuua00000478

Caution

- **If the control valve body cover is installed with the wiring harnesses overlapped, the wiring harnesses may be pinched between the cover and valve body causing the wiring harnesses to be damaged. Therefore, verify that the wiring harnesses are not overlapped when installing the control valve body cover.**

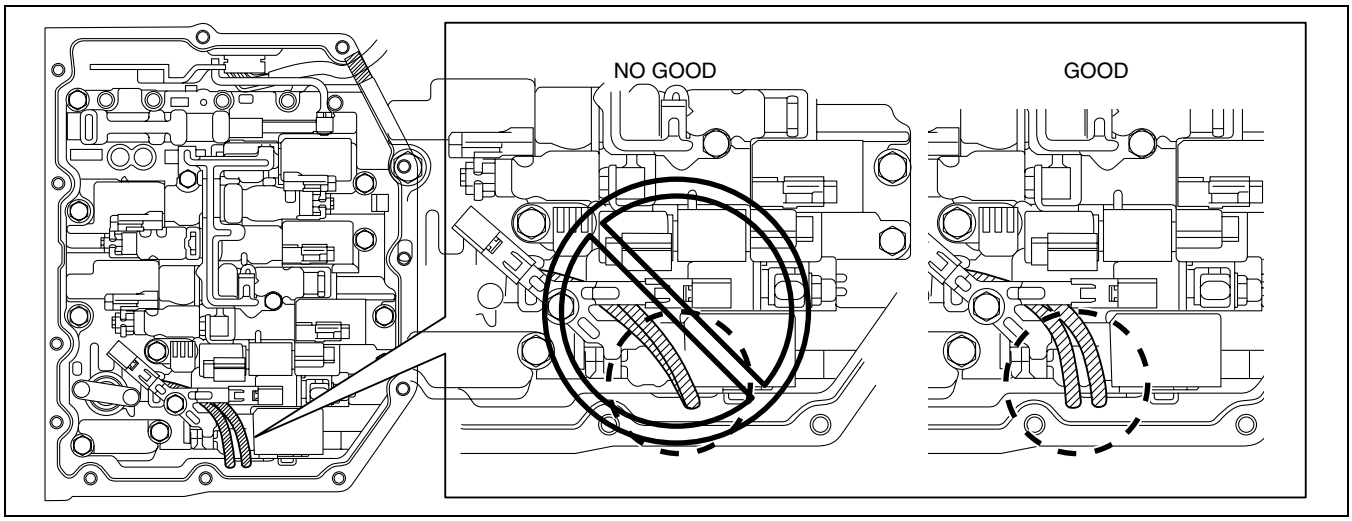

bawuua00000479

84. Apply ATF to a new O-ring and install it on the TFT sensor.
85. Install the TFT sensor with the lock plate and a bolt to the control valve body component as shown in the figure.

    Tightening torque
    8 — 12 N·m {82 — 122 kgf·cm, 72 — 105 in·lbf}

86. Connect the solenoid connectors, VSS connector and the input/turbine speed sensor connector.

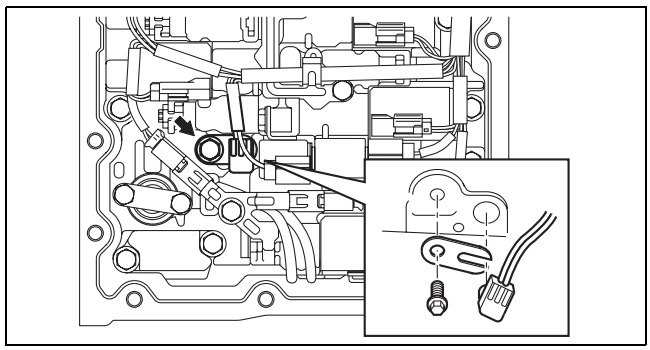

bawuua00000480

87. Connect the coupler component to the clamps.

Note
- Completely remove sealant and oil with white gasoline or similar.

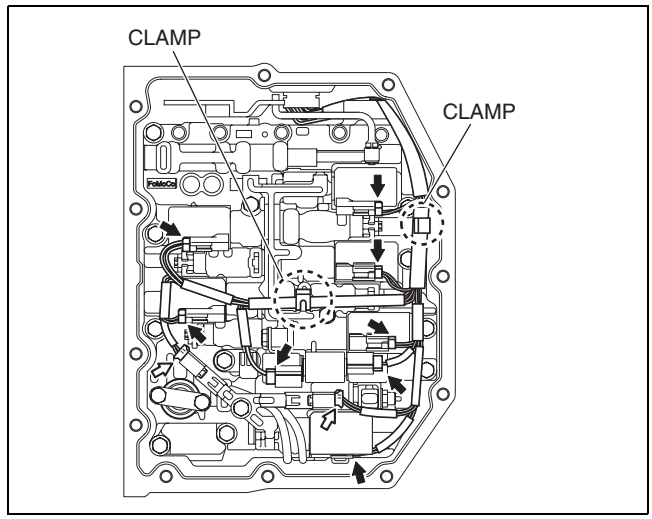

bawuua00000481

88. Clean sealant and oil off the contact surface of the transaxle case with the control valve body cover and the bolt holes.

Note
- Completely remove oil with white gasoline or similar.

89. Clean oil off the contact surface of the new control valve body cover with the transaxle case.

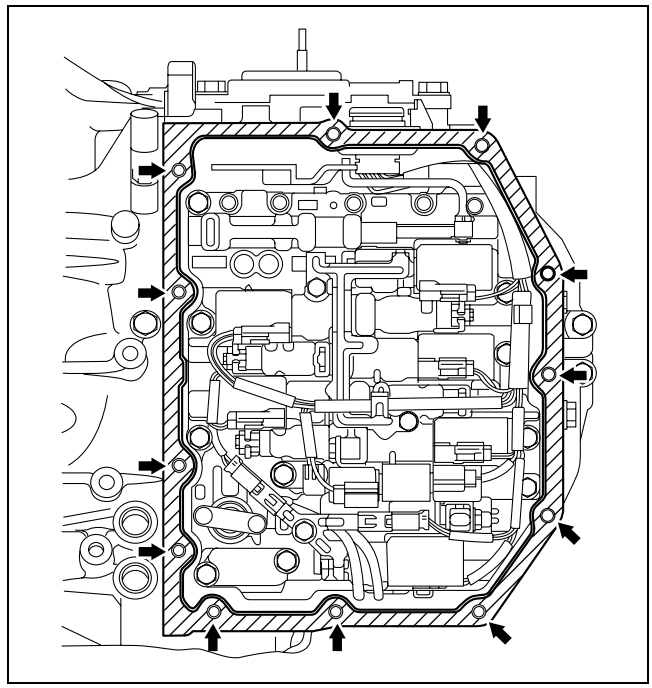

bawuua00000482

90. Apply sealant to the new control valve body cover as shown in the figure.

Caution
- **Be careful that the coupler component will not become caught between the control valve body cover and transaxle case.**

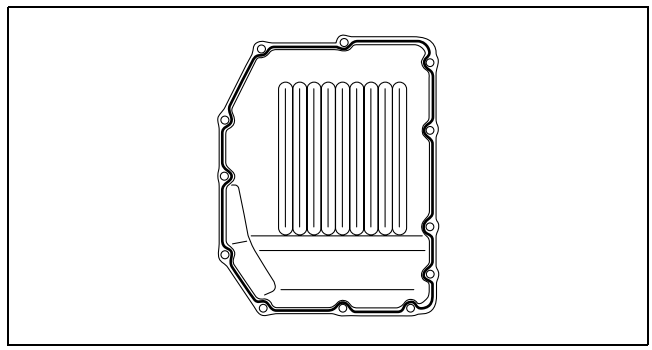

bawuua00000483

91. Install the new control valve body cover with new seal bolts.

    Tightening torque
    9.8 — 15.7 N·m {100 — 160 kgf·cm, 87 — 138 in·lbf}

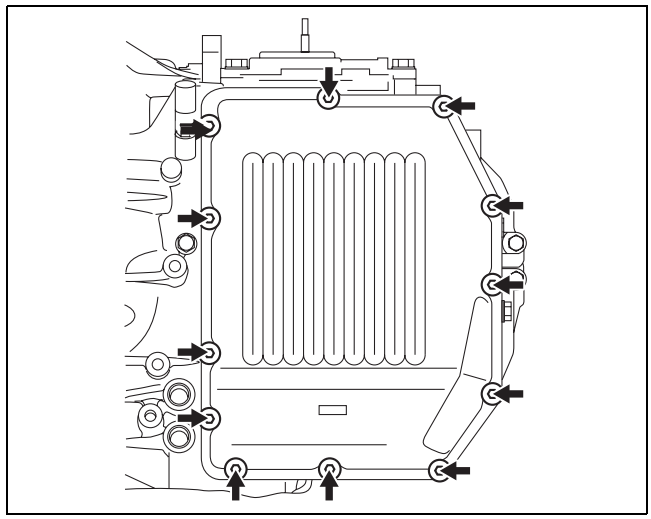

bawuua00000484

92. Inspect the condition of connector pin of the coupler component (foreign material, bent/broken pins) and O-ring.

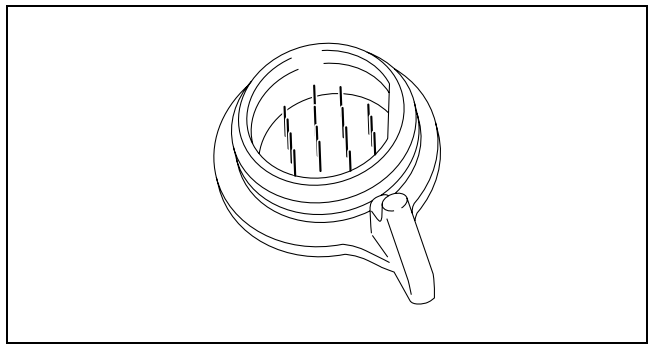

bawuua00000485

93. Align the transaxle case and the coupler component connector.

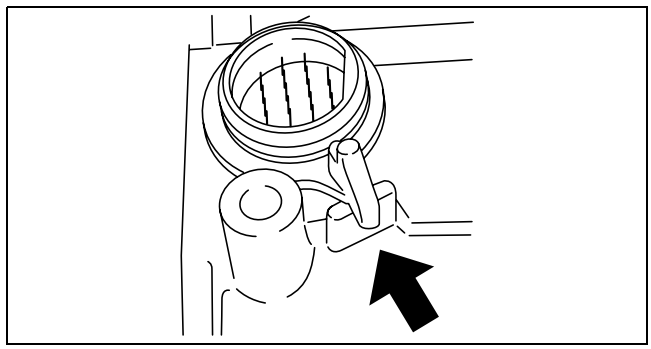

bawuua00000486

94. Be sure to match the position of the TCM marking.

    Caution
    - **Do not turn more than 60° from the marking.**

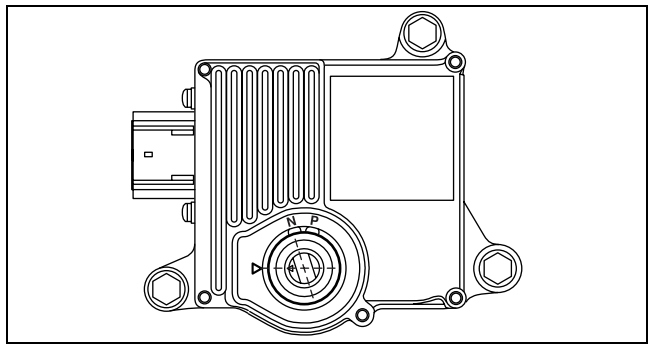

bawuua00000487

95. Verify the correct positioning of the TCM and coupler component.
96. Install the TCM to the transaxle case.

Tightening torque
19.6 — 29.4 N·m {2.0 — 2.9 kgf·m, 14.5 — 21.6 ft·lbf}

Caution
- **Do not repair the threads using a tap or other tools.**
- **Do not damage the transaxle case.**
- **Do not overtighten the stud bolts. (The stud bolts should remain protruded from the end of the transaxle case more than 47 mm {1.85 in}.)**
- **If any of the stud bolts is overtightened, the transaxle case may be damaged (holes in the case may result).**
- **If the transaxle case is damaged, the transaxle must be replaced.**

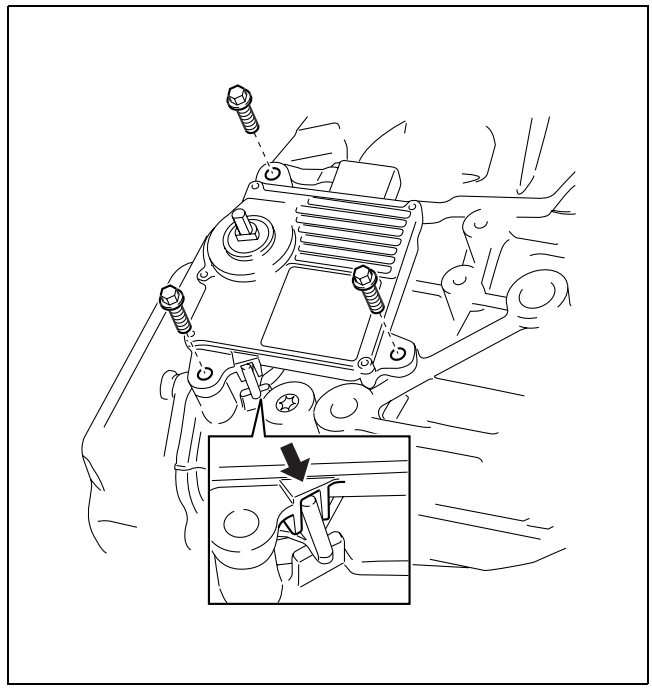

bawuua00000488

97. Install the double nutted stud bolts to the transaxle case.
98. Remove the double nutted from the stud bolt.

Caution
- **Do not damage the oil seal.**

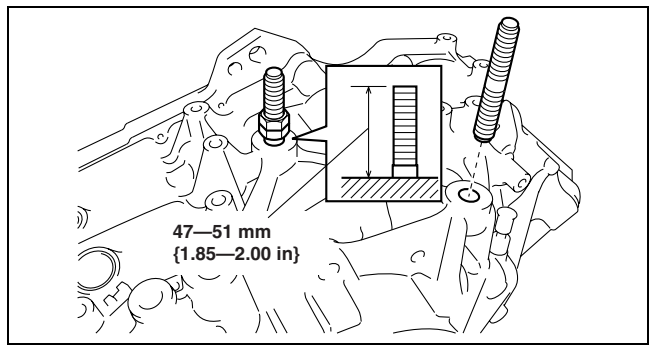

bawuua00000489

99. Using the **SST** and a hammer, tap a new oil seal so that the specified oil seal position is obtained.

Transaxle Case Side

Substitution SST
- **49 H028 202**
  Outer diameter: 54.5— 61 mm {2.15— 2.40 in}
  Inner diameter: 52 mm {2.05 in} or more
  Plate thickness: 2 mm {0.08 in} or more

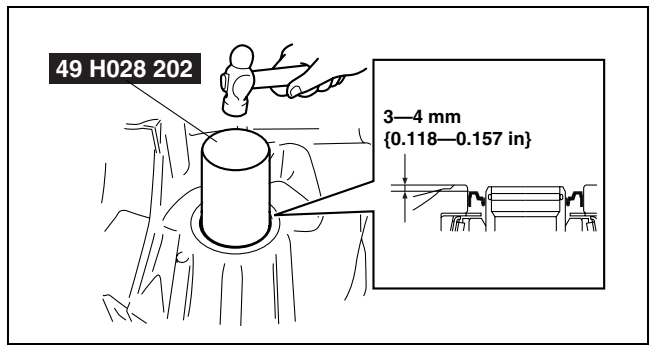

bawuua00000490

Converter Housing Side

Substitution SST

- **49 F027 009**
  Outer diameter: 76.8 mm {3.02 in}
  Plate thickness: 2 mm {0.08 in} or more
- **49 L033 101**
  Outer diameter: 73— 76.3 mm {2.88— 3.00 in}
  Inner diameter: 69 mm {2.72 in} or more
  Length: 20 mm {0.79 in} or more
  Plate thickness: 2 mm {0.08 in} or more

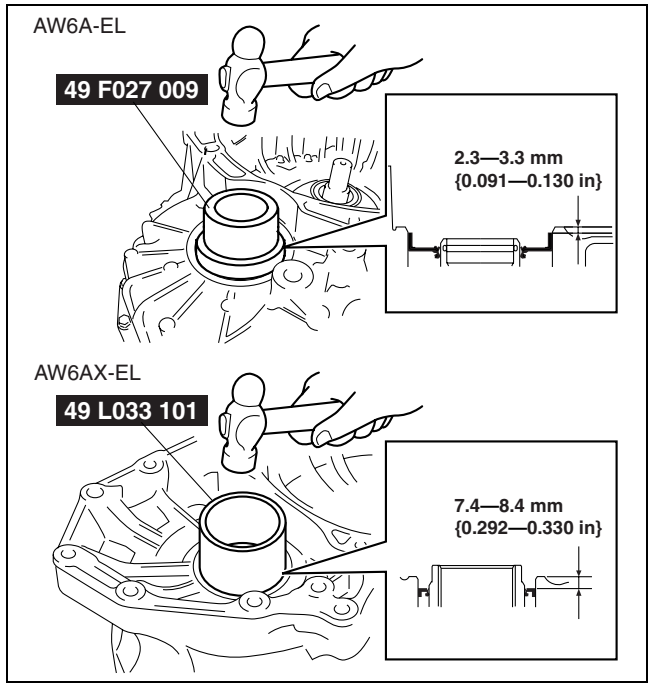

bawuua00000491

100. Install a new gasket and the drain plug.

Tightening torque
23.5 — 54.9 N·m {2.4 — 5.5 kgf·m, 17.4 — 40.4 ft·lbf}

Caution
- **Do not damage the oil seal.**
- **Do not drop the torque converter.**
- **Be careful that fingers do not get caught.**

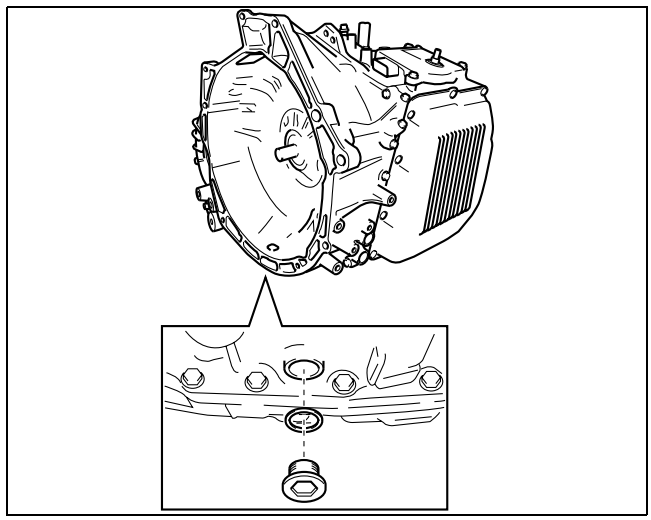

bawuua00000492

101. Using a flathead screwdriver, position the drive gear on the oil pump component in the center. Then install the torque converter component to the transaxle.

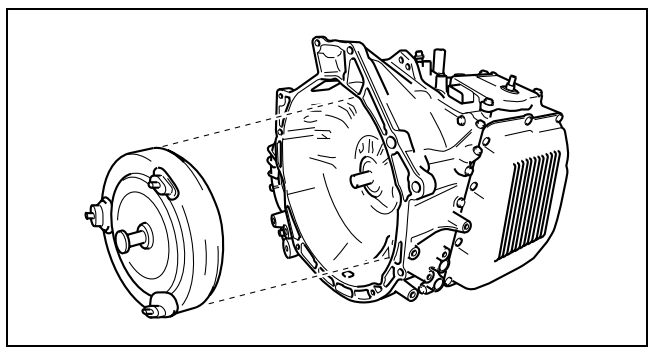

bawuua00000493

102. To ensure that the torque converter is installed accurately, measure distance A between the end of the torque converter and the end of the converter housing.

Distance A (between the end of the torque converter and the end of the converter housing)
Mazda6: 18 mm {0.709 in}
CX-7: 31.4 mm {1.24 in}

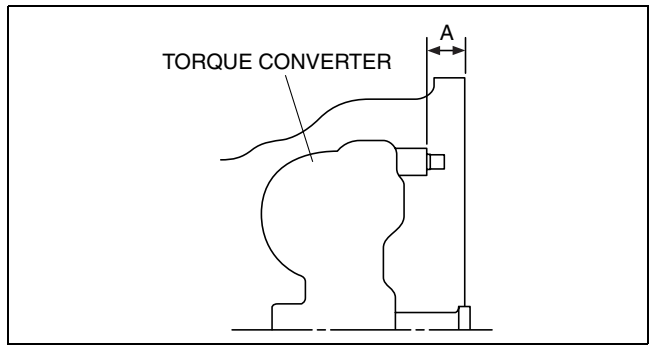

bawuua00000494

103. Install the O-rings and oil pipes. (Refer to the Workshop Manual.)
104. Add the ATF.

AUTOMATIC TRANSAXLE INSPECTION

id051700502300

B2 Brake Inspection

1. Apply ATF to the driven plates, drive plates and retaining plates.

Note
- Replace with new drive plates after soaking them at least **2 h** in ATF.

2. Install driven plates, drive plates and the retaining plate in the following order to the transaxle case as shown in the figure.
Six drive plates type
- Retaining— Drive— Driven— Drive— Driven— Drive— Driven— Drive— Driven— Drive— Retaining

Seven drive plates type
- Retaining— Drive— Driven— Drive— Driven— Drive— Driven— Drive— Driven— Drive— Driven— Drive— Retaining

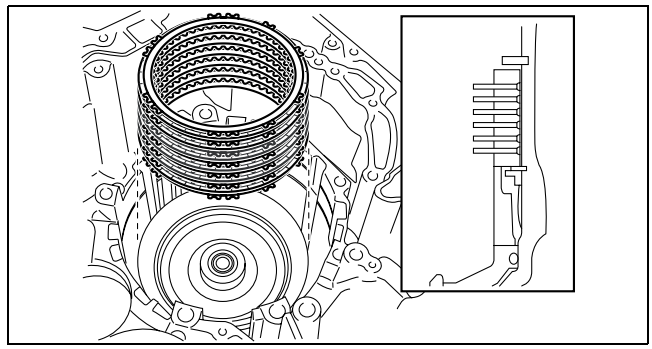
bawuua00000012

Caution
- **Inspect the number and order of the retaining plates, drive and driven plates.**

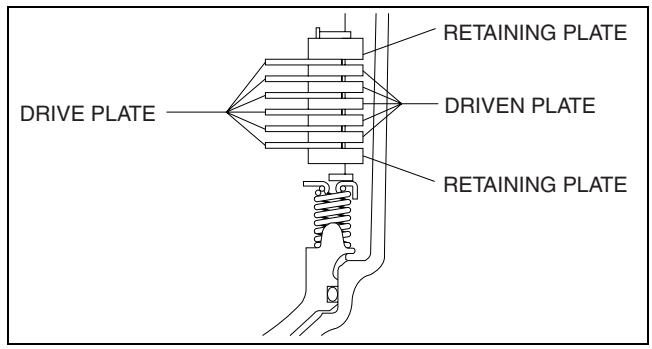

bawuua00000013

3. Using a flathead screwdriver, install the snap ring into the groove.

Caution
- **Align the opening of the snap ring with the position shown in the figure.**

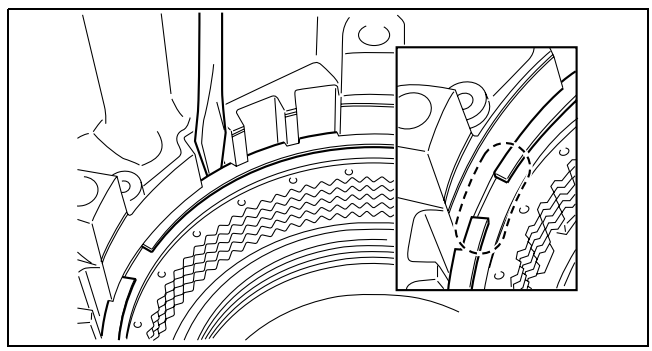
bawuua00000014

4. Set a dial indicator as shown in the figure.
5. While applying compressed air into the oil passage as shown in the figure, measure the B2 brake clearance and inspect the piston moves smoothly.

   Air pressure
   200 kPa {2.0 kgf/cm^2, 29 psi}

   B2 brake clearance
   1.20 — 1.40 mm {0.047 — 0.055 in}

   - If not within the specification, select another retaining plate.

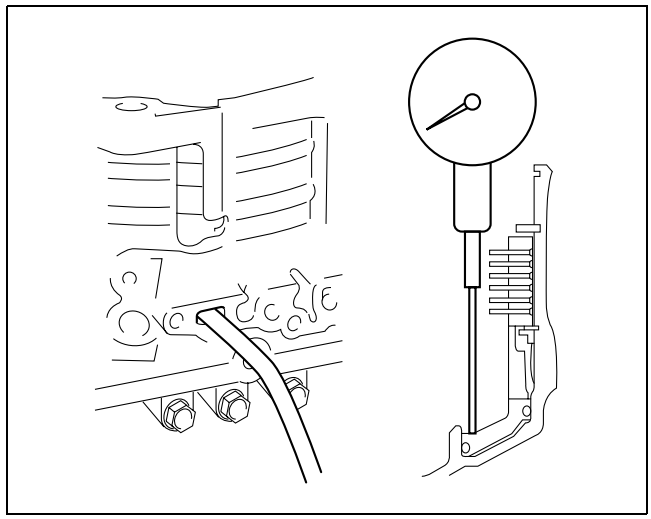

bawuua00000015

Retaining plate size

Identification mark	Thickness (mm {in})
47	4.7 {0.185}
48	4.8 {0.189}
49	4.9 {0.193}
50	5.0 {0.197}
51	5.1 {0.201}
52	5.2 {0.205}
53	5.3 {0.209}

6. Using a flathead screwdriver, remove the snap ring.

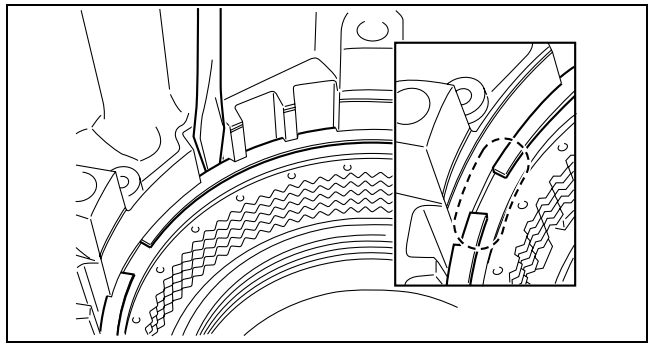

bawuua00000014

7. Remove the retaining plates, drive and driven plates.

   Note
   - Inspect the number of drive and driven plates.

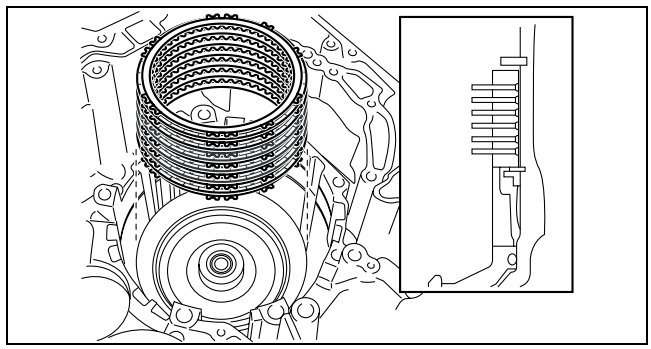

bawuua00000012

05-50 TECHNICAL DATA

TRANSMISSION/TRANSAXLE
TECHNICAL DATA 05-50–1

TRANSMISSION/TRANSAXLE TECHNICAL DATA

id055000800100

Item	Specification
C3 clutch return spring free length	Standard: 12.91 mm {0.5083 in}
C3 clutch piston stroke	0.6 — 0.8 mm {0.024 — 0.031 in}
C1 clutch return spring free length	Standard: 17.01 mm {0.6697 in}
C1 clutch piston stroke	1.2 — 1.4 mm {0.047 — 0.055 in}
Rear planetary gear bushing inner diameter	Front side: 33.26 — 33.286 mm {1.3095 — 1.3104 in} Rear side: 33.26 — 33.286 mm {1.3095 — 1.3104 in}
Rear planetary sun gear bushing inner diameter	Front side: 24.2 — 24.226 mm {0.9528 — 0.9537 in} Rear side: 24.2 — 24.226 mm {0.9528 — 0.9537 in}
C2 clutch return spring free length	Standard: 14.02 mm {0.5520 in}
C2 clutch piston stroke	0.45 — 0.65 mm {0.0178 — 0.0255 in}
Transaxle case bushing inner diameter	Standard: 21.932 — 21.953 mm {0.86347 — 0.86429 in}
B2 brake return spring free length	Standard: 19.01 mm {0.7485 in}
Input shaft end play	0.349 — 1.081 mm {0.01374 — 0.04255 in}
B1 brake piston stroke	5.50 — 6.00 mm {0.217 — 0.236 in}
Distance A (between the end of the torque converter and the end of the converter housing)	Mazda6: 18 mm {0.709 in} CX-7: 31.4 mm {1.24 in}
B2 brake clearance	1.20 — 1.40 mm {0.047 — 0.055 in}

Counter drive gear starting and rotating torque

N·m {kgf·cm, in·lbf}

Bearing	Starting torque	Rotating torque
New	0.40 — 0.50 {4.08 — 5.09, 3.55 — 4.41}	0.40 — 0.48 {4.08 — 4.89, 3.55 — 4.24}
Reused	0.20 — 0.25 {2.04 — 2.54, 1.77 — 2.20}	0.20 — 0.24 {2.04 — 2.44, 1.77 — 2.11}

05-60 SERVICE TOOLS

TRANSMISSION/TRANSAXLE SST. . . . 05-60–1

TRANSMISSION/TRANSAXLE SST

id056000500100

49 0107 680A Engine stand 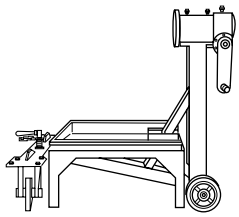	49 L010 1A0 Engine hanger set 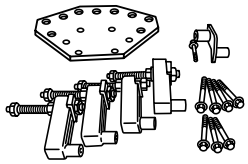	49 U027 003 Oil seal installer 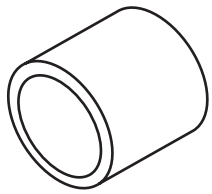
49 G025 001 Sensor rotor installer 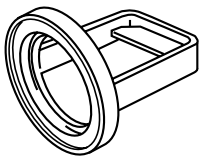	49 G019 040 Wrench 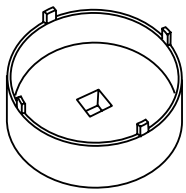	49 G019 026 Plate 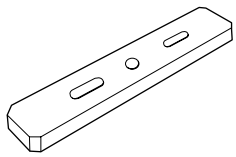
49 B032 317 Bearing & oil seal remover 	49 F027 009 Attachment for 68 & 77 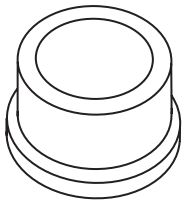	49 L033 101 Oil seal installer 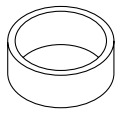
49 W027 001 Body 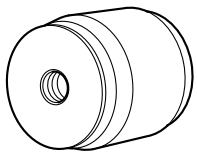	49 G019 0A9 Compressor 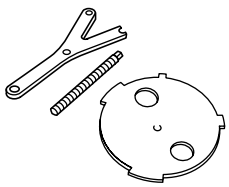	49 G030 797 Handle 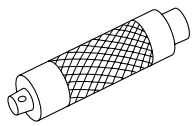
49 F026 102 Bearing installer 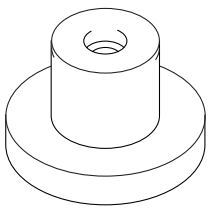	49 T019 0A1 Servo piston lifter set 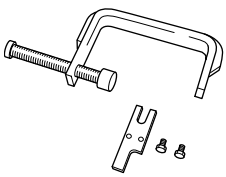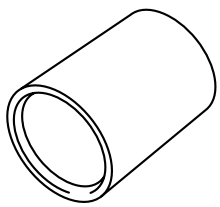	49 H028 202 Block L