For your safety, read carefully and keep in this vehicle.

2010 Infiniti M35/M45 | Owner's Manual

INFINITI®

Your INFINITI represents a new way of thinking about vehicle design. It integrates advanced engineering and superior craftsmanship with a simple, refined aesthetic sensitivity associated with traditional Japanese culture.

The result is a different notion of luxury and beauty. The car itself is important, but so is the sense of harmony that the vehicle evokes in its driver, and the sense of satisfaction you feel with the INFINITI — from the way it looks and drives to the high level of retailer service.

To ensure that you enjoy your INFINITI to the fullest, we encourage you to read this Owner's Manual immediately. It explains all of the features, controls and performance characteristics of your INFINITI; it also provides important instructions and safety information.

A separate Warranty Information Booklet is included in your Owner's literature portfolio. The INFINITI Service and Maintenance Guide explains details about maintaining and servicing your vehicle. Always carry it with you when you take your vehicle to an INFINITI retailer. The Warranty Information Booklet contents provide complete information about all warranties covering this vehicle, the requirements to keep the warranties in effect as well as the INFINITI Roadside Assistance program.

Additionally, a separate Customer Care and Lemon Law Information Booklet will explain how to resolve any concerns you may have with your vehicle, as well as clarify your rights under your state's lemon law.

READ FIRST — THEN DRIVE SAFELY

Before driving your vehicle, read your Owner's Manual carefully. This will ensure familiarity with controls and maintenance requirements, assisting you in the safe operation of your vehicle.

⚠ WARNING

IMPORTANT SAFETY INFORMATION REMINDERS FOR SAFETY!

Follow these important driving rules to help ensure a safe and comfortable trip for you and your passengers!

- **NEVER drive under the influence of alcohol or drugs.**
- **ALWAYS observe posted speed limits and never drive too fast for conditions.**
- **ALWAYS give your full attention to driving and avoid using vehicle features or taking other actions that could distract you.**
- **ALWAYS use your seat belts and appropriate child restraint systems. Pre-teen children should be seated in the rear seat.**
- **ALWAYS provide information about the proper use of vehicle safety features to all occupants of the vehicle.**
- **ALWAYS review this Owner's Manual for important safety information.**

MODIFICATION OF YOUR VEHICLE

This vehicle should not be modified. Modification could affect its performance, safety or durability, and may even violate governmental regulations. In addition, damage or performance problems resulting from modification will not be covered under the INFINITI warranties.

WHEN READING THE MANUAL

This manual includes information for all options available on this model. Therefore, you may find some information that does not apply to your vehicle.

All information, specifications and illustrations in this manual are those in effect at the time of printing. INFINITI reserves the right to change specifications or design at any time without notice.

IMPORTANT INFORMATION ABOUT THIS MANUAL

You will see various symbols in this manual. They are used in the following ways:

⚠ WARNING

This is used to indicate the presence of a hazard that could cause death or serious personal injury. To avoid or reduce the risk, the procedures must be followed precisely.

⚠ CAUTION

This is used to indicate the presence of a hazard that could cause minor or moderate personal injury or damage to your vehicle. To avoid or reduce the risk, the procedures must be followed carefully.

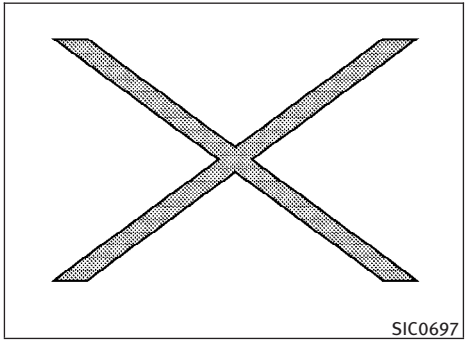

If you see the symbol above, it means **"Do not do this"** or **"Do not let this happen"** .

If you see a symbol similar to those above in an illustration, it means the arrow points to the front of the vehicle.

Arrows in an illustration that are similar to those above indicate movement or action.

Arrows in an illustration that are similar to those above call attention to an item in the illustration.

CALIFORNIA PROPOSITION 65 WARNING

WARNING

Engine exhaust, some of its constituents, and certain vehicle components contain or emit chemicals known to the State of California to cause cancer and birth defects or other reproductive harm. In addition, certain fluids contained in vehicles and certain products of component wear contain or emit chemicals known to the State of California to cause cancer and birth defects or other reproductive harm.

CALIFORNIA PERCHLORATE ADVISORY

Some vehicle parts, such as lithium batteries, may contain perchlorate material. The following advisory is provided: "Perchlorate Material - special handling may apply, See www.dtsc.ca.gov/ hazardouswaste/perchlorate."

BLUETOOTH® is a trademark owned by Bluetooth SIG, Inc., U.S.A.

Gracenote® is a registered trademark of Gracenote, Inc. The Gracenote logo and logo type, and the "Powered by Gracenote" logo are trademarks of Gracenote.

XM Radio® requires subscription, sold separately after first 90 days. Not available in Alaska, Hawaii or Guam. For more information, visit www. xmradio.com.

INFINITI®

© 2009 NISSAN MOTOR CO., LTD.

All rights reserved. No part of this Owner's Manual may be reproduced or stored in a retrieval system, or transmitted in any form, or by any means, electronic, mechanical, photocopying, recording or otherwise, without the prior written permission of Nissan Motor Co., Ltd.

INFINITI CUSTOMER CARE PROGRAM

INFINITI CARES ...

Both INFINITI and your INFINITI retailer are dedicated to serving all your automotive needs. Your satisfaction with your vehicle and your INFINITI retailer are our primary concerns. Your INFINITI retailer is always available to assist you with all your automobile sales and service needs.

However, if there is something that your INFINITI retailer cannot assist you with or you would like to provide INFINITI directly with comments or questions, please contact our (INFINITI's) Consumer Affairs Department using our toll-free number:

For U.S. customers
1-800-662-6200

For Canadian customers
1-800-361-4792

The Consumer Affairs Department will ask for the following information:

- Your name, address, and telephone number
- Vehicle identification number (on dash panel)
- Date of purchase
- Current odometer reading
- Your INFINITI retailer's name
- Your comments or questions

OR

You can write to INFINITI with the information on the left at:

For U.S. customers
INFINITI Division
Nissan North America, Inc.
Consumer Affairs Department
P.O. Box 685003
Franklin, TN 37068-5003

For Canadian customers
INFINITI Division
Nissan Canada Inc.
5290 Orbitor Drive
Mississauga, Ontario L4W 4Z5

We appreciate your interest in INFINITI and thank you for buying a quality INFINITI vehicle.

Table of Contents

Illustrated table of contents	0
Safety — Seats, seat belts and supplemental restraint system	1
Instruments and controls	2
Pre-driving checks and adjustments	3
Monitor, climate, audio, phone and voice recognition systems	4
Starting and driving	5
In case of emergency	6
Appearance and care	7
Maintenance and do-it-yourself	8
Technical and consumer information	9
Index	10

0 Illustrated table of contents

Seats, seat belts and supplemental restraint system (SRS) 0-2
Exterior front. 0-3
Exterior rear 0-4
Passenger compartment 0-5
Cockpit. 0-7
Instrument panel. 0-8
Meters and gauges. 0-10
Engine compartment. 0-11
VK45DE engine*. 0-11
VQ35HR engine* 0-12
Warning and indicator lights 0-13

SEATS, SEAT BELTS AND SUPPLEMENTAL RESTRAINT SYSTEM (SRS)

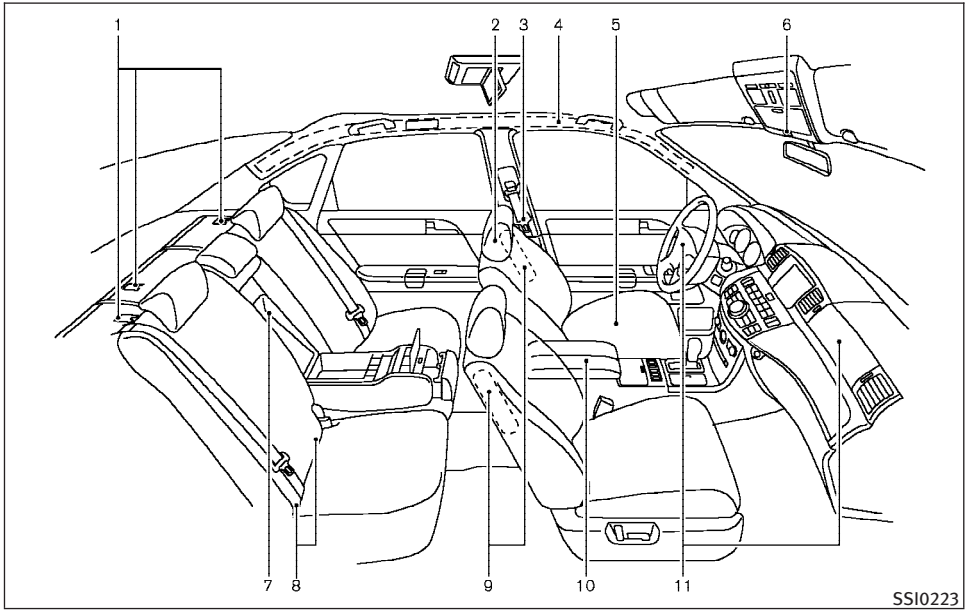

1. Child restraint anchor points (for top tether strap child restraint) (Page 1-23)
2. Head restraints (P. 1-5)
   — Front-seat Active Head Restraints (P. 1-8)
3. Seat belts (P. 1-12)
   — Seat belts with pretensioners (front seats) (P. 1-51)
4. Roof-mounted curtain side-impact supplemental air bags (P. 1-40)
5. Seats (P. 1-2)
   — Front seats (P. 1-2)
   — Rear seats (P. 1-4)
   — Child restraints (P. 1-19)
6. Front passenger air bag status light (P. 1-47)
7. Rear armrest (P. 1-11)
8. LATCH (Lower Anchors and Tethers for CHildren) system (P. 1-21)
9. Front seat-mounted side-impact supplemental air bags (P. 1-40)
10. Front armrest (P. 1-11)
11. Supplemental front-impact air bags (P. 1-40)
    — Advanced air bag system (P. 1-45)

EXTERIOR FRONT

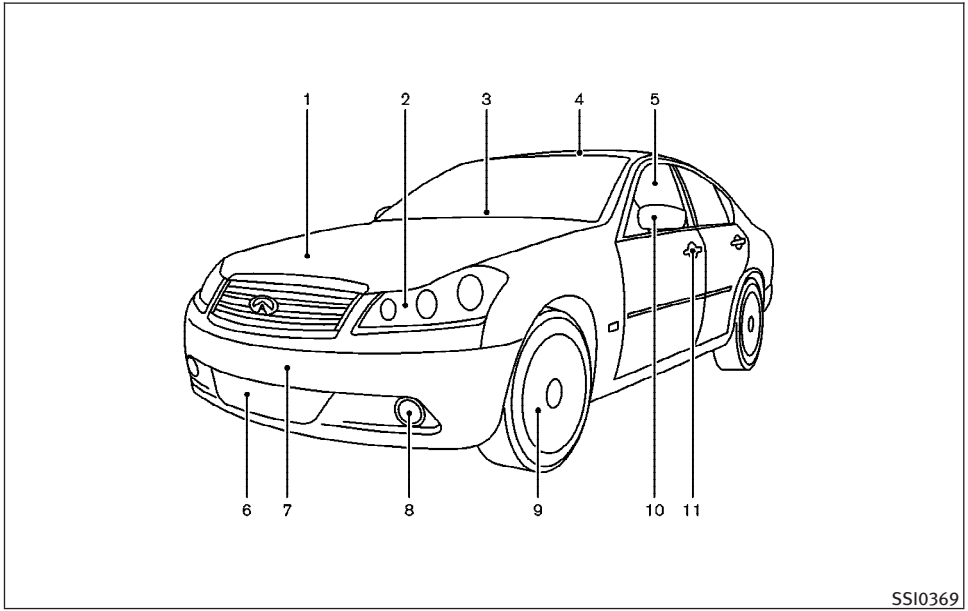

1. Hood (P. 3-17)
2. Headlight and turn signal lights
   — Switch operation (P. 2-29)
   — Bulb replacement (P. 8-30)
   — Adaptive Front lighting System (AFS) (if so equipped) (P. 2-31)
3. Windshield wiper and washer
   — Switch operation (P. 2-27)
   — Rain-sensing auto wiper system (P. 2-28)
   — Blade replacement (P. 8-22)
   — Window washer fluid (P. 8-17)
4. Moonroof (P. 2-46)
5. Power windows (P. 2-43)
6. Recovery hook (P. 6-14)
7. License plate installation (P. 9-14)
8. Fog lights (P. 2-33)
9. Tires
   — Wheel and tires (P. 8-34, P. 9-9)
   — Flat tire (P. 6-2)
   — Tire Pressure Monitoring System (TPMS) (P. 2-15, P. 5-3)
10. Outside mirrors (P. 3-24)
11. Doors
    — Keys (P. 3-2)
    — Door locks (P. 3-4)
    — Intelligent Key system (P. 3-6)
    — Security system (P. 2-24)

EXTERIOR REAR

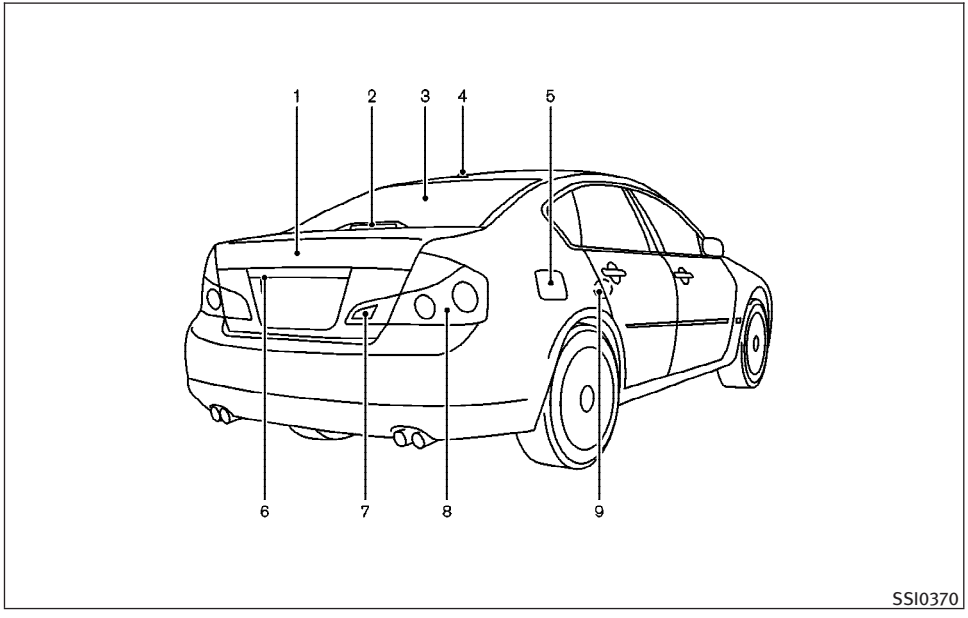

1. Trunk
   — Trunk lid (P. 3-17)
   — Intelligent Key system (P. 3-6)
2. High-mounted stop light
   — Bulb replacement (P. 8-30)
3. Rear window defroster (P. 2-28)
4. Satellite radio antenna (if so equipped) (P. 4-35)
5. Fuel-filler door
   — Operation (P. 3-20)
   — Fuel recommendation (P. 9-4)
6. Rear view camera (if so equipped) (P. 4-22)
7. Back-up lights
   — Bulb replacement (P. 8-30)
8. Rear combination lights
   — Bulb replacement (P. 8-30)
9. Child safety rear door locks (P. 3-6)

PASSENGER COMPARTMENT

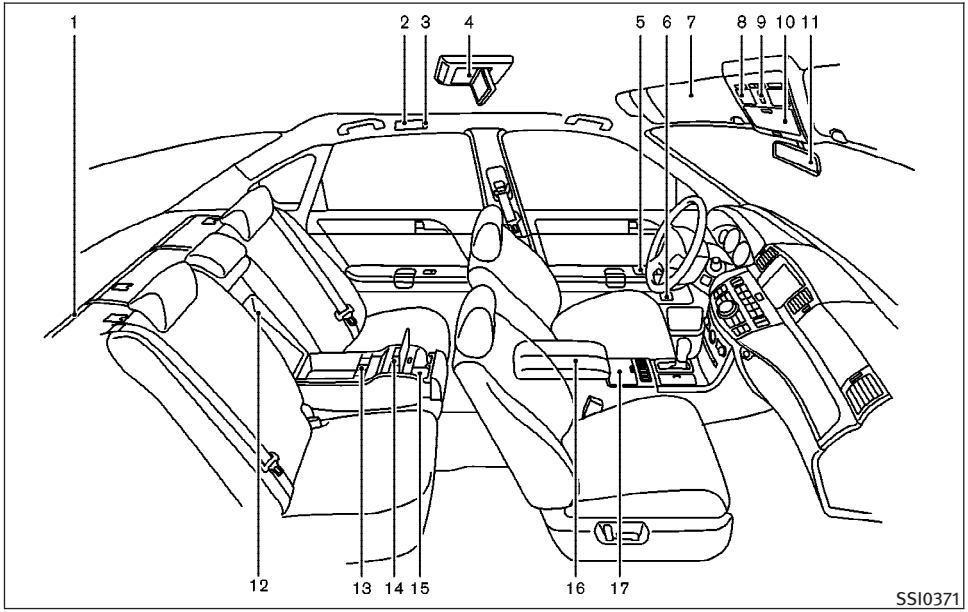

1. Rear sunshade (if so equipped) (P. 2-47)
2. Rear personal lights (P. 2-49)
3. Coat hooks (P. 2-43)
4. Mobile Entertainment System (MES) (if so equipped)
   — Flip-down screen (P. 4-63)
   — Digital Versatile Disc (DVD) drive (P. 4-62)
   — Headphones (P. 4-64)
   — DVD remote controller (P. 4-65)
5. Door armrest
   — Power window switches (P. 2-43)
   — Power door lock switch (P. 3-5)
6. Automatic drive positioner switch (if so equipped) (P. 3-26)
7. Sun visors (P. 3-22)
8. Front map lights (P. 2-49)
9. Moonroof switch (P. 2-46)
10. Sunglasses holder (P. 2-41)
11. Inside rearview mirror (P. 3-23)
    — HomeLink® universal transceiver (P. 2-51)
    — Compass (if so equipped) (P. 2-9)
12. Trunk pass-through/Rear armrest (P. 1-11)
13. Rear seat controls (if so equipped)
    — Rear power seat adjust switch (P. 1-4)
    — Heated seat switches (P. 2-34)
    — Automatic return ON/CANCEL switch (P. 1-4)
    — Rear sunshade control switch (P. 2-47)
14. Rear passenger control switches (if so equipped)
    — For climate control (P. 4-33)
    — For audio system (P. 4-60)
15. Rear cup holders (P. 2-40)

16. Console box
    — Power outlet (P. 2-38)
    — Auxiliary input jacks (P. 4-61)
    — DVD drive (if so equipped) (P. 4-62)
    — iPod® connection (if so equipped) (P. 4-48)
17. Front cup holders (P. 2-40)

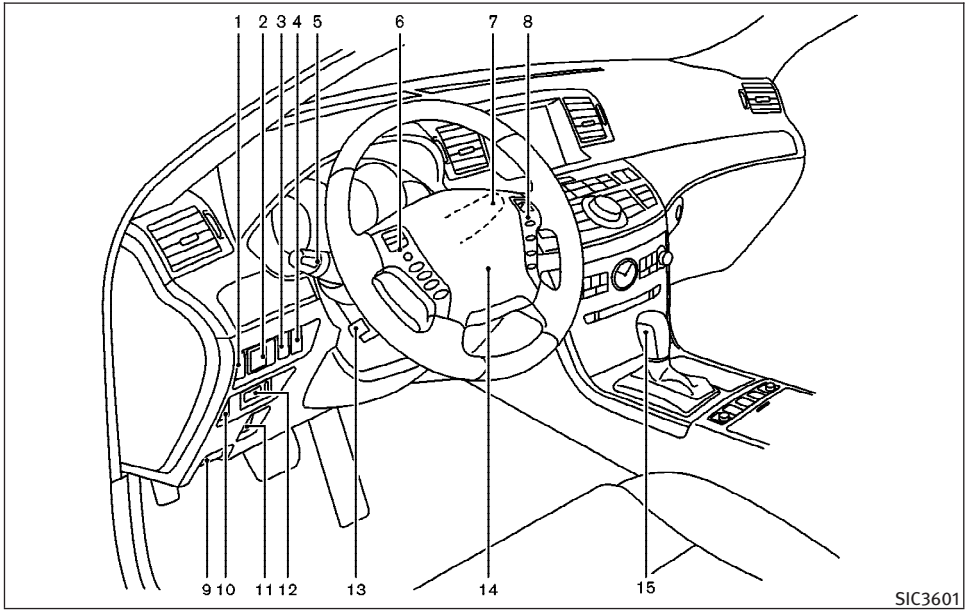

1. Instrument brightness control switch (P. 2-32)
2. Outside mirror remote control switch (P. 3-24)
3. Adaptive Front lighting System (AFS) switch (P. 2-31)
4. Vehicle Dynamic Control (VDC) OFF switch (P. 2-37)
5. Headlight, fog light and turn signal switch (P. 2-29)
6. Steering-wheel-mounted controls (left side)
   — ENTER switch (if so equipped) (P. 4-6, P. 4-58)
   — For audio system (P. 4-58)
   — For phone system (P. 4-74, P. 4-84)
   — For voice recognition system (if so equipped) (P. 4-98)
7. Windshield wiper and washer switch (P. 2-27)
8. Steering-wheel-mounted controls (right side)
   — Cruise control switches (P. 5-23)
   — Intelligent Cruise Control (ICC) switches (if so equipped) (P. 5-25)
   — Lane Departure Prevention (LDP) switch (if so equipped) (P. 5-16)
9. Hood release handle (P. 3-17)
10. Trunk lid release switch (P. 3-18)
11. Lane Departure Warning (LDW) switch (if so equipped) (P. 2-36, P. 5-16)
12. Intelligent Key port (P. 5-9)
13. Tilting/telescopic steering wheel switch (P. 3-22)
14. Steering wheel
    — Horn (P. 2-34)
    — Driver supplemental air bag (P. 1-40)
15. Automatic Transmission (AT) selector lever (P. 5-11)

INSTRUMENT PANEL

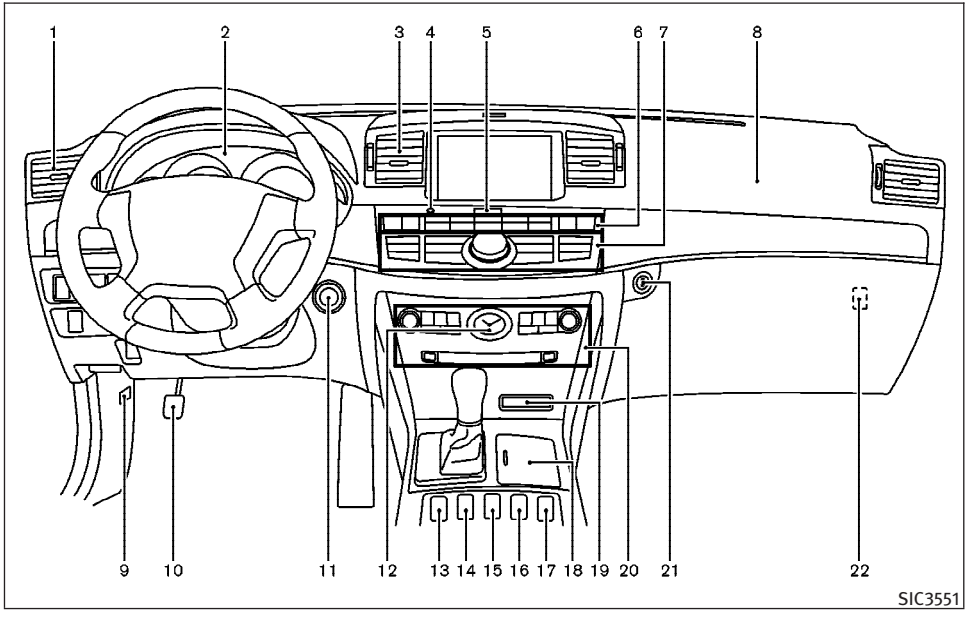

1. Side ventilator (P. 4-28)
2. Meters and gauges (P. 2-5)
3. Center ventilator (P. 4-28)
4. Security indicator light (P. 2-26)
5. Hazard warning flasher switch (P. 2-33)
6. Automatic climate control system (P. 4-29)
7. Center multi-function control panel (P. 4-2)
   — Navigation system* (if so equipped)
   — Vehicle information and setting buttons (P. 4-7)
   — Phone system (P. 4-74, P. 4-84)
   — Audio system (P. 4-34)
8. Front passenger supplemental air bag (P. 1-40)
9. Fuse box cover (P. 8-25)
10. Parking brake
    — Operation (P. 5-16)
    — Parking (P. 5-48)
11. Push-button ignition switch (P. 5-8)
12. Clock (P. 2-38)
13. Climate controlled seat switch (if so equipped) (P. 2-35)
14. Snow mode switch (if so equipped) (P. 2-37)
15. Rear sunshade switch (if so equipped) (P. 2-47)
16. Rear control cancel switch (if so equipped) (P. 2-47) or Climate controlled seat switch (if so equipped) (P. 2-35)
17. Climate controlled seat switch (if so equipped) (P. 2-35)
18. Cigarette lighter and ashtrays (P. 2-39)

19. CompactFlash card slot (if so equipped) (P. 4-47)
20. Audio system (P. 4-34)
21. Glove box lid release button (P. 2-41)
22. Trunk release power cancel switch (P. 3-19)

*: Refer to the separate Navigation System Owner's Manual.

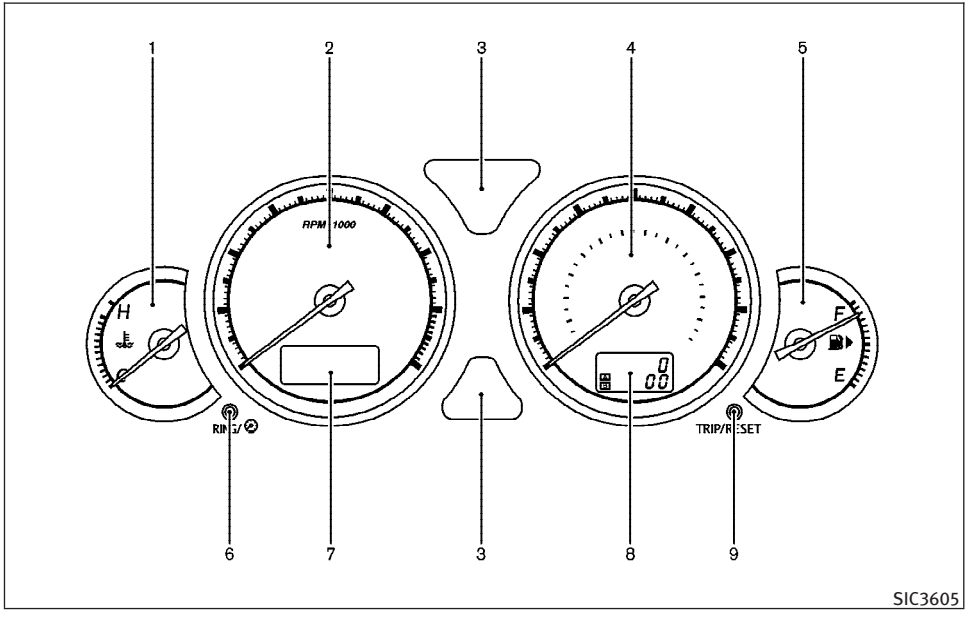

1. Engine coolant temperature gauge (P. 2-7)
2. Tachometer (P. 2-6)
3. Warning/Indicator lights (P. 2-12)
4. Speedometer (P. 2-6)
5. Fuel gauge (P. 2-7)
6. Meter illumination control knob (P. 2-8)
7. Dot matrix liquid crystal display (P. 2-21)
8. Odometer/twin trip odometer (P. 2-6)
9. TRIP/RESET knob for twin trip odometer (P. 2-6)

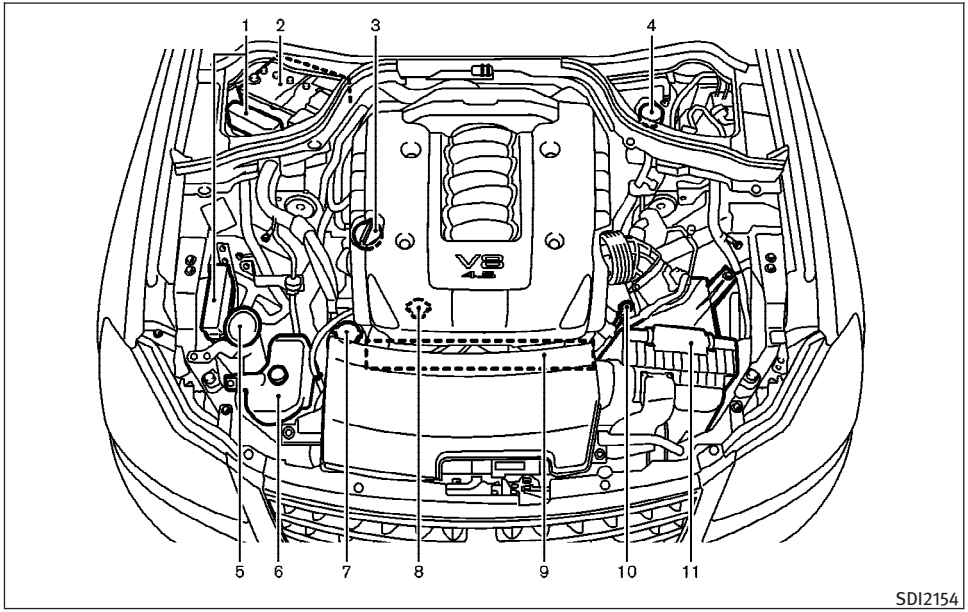

VK45DE ENGINE*

1. Fuse/fusible link holder (P. 8-25)
2. Battery (P. 8-17)
   — Jump starting (P. 6-7)
3. Engine oil filler cap (P. 8-12)
4. Brake fluid reservoir (P. 8-16)
5. Window washer fluid reservoir (P. 8-17)
6. Engine coolant reservoir (P. 8-10)
7. Power steering fluid reservoir (P. 8-16)
8. Radiator filler cap (P. 8-10)
   — Vehicle overheat (P. 6-10)
9. Engine drive belt location (P. 8-19)
10. Engine oil dipstick (P. 8-12)
11. Air cleaner (P. 8-21)

* Shown with the engine compartment access panels removed. For removal and replacement instructions, see “ENGINE COMPARTMENT CHECK LOCATIONS” in the “8. Maintenance and do-it-yourself” section.

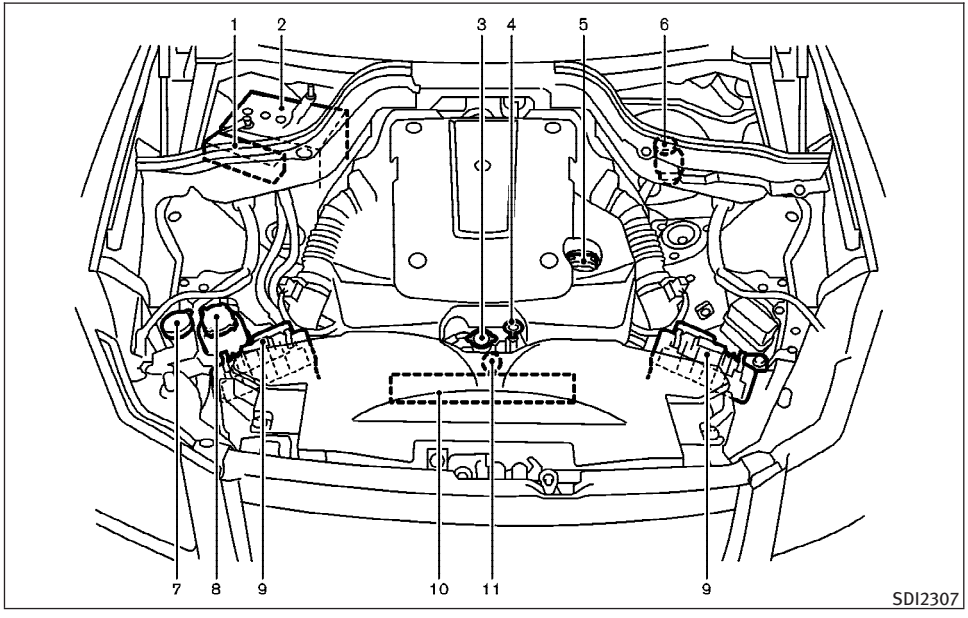

VQ35HR ENGINE*

1. Fuse/fusible link holder (P. 8-25)
2. Battery (P. 8-17)
   — Jump starting (P. 6-7)
3. Radiator filler cap (P. 8-10)
   — Vehicle overheat (P. 6-10)
4. Engine oil dipstick (P. 8-12)
5. Engine oil filler cap (P. 8-12)
6. Brake fluid reservoir (P. 8-16)
7. Window washer fluid reservoir (P. 8-17)
8. Power steering fluid reservoir (P. 8-16)
9. Air cleaner (P. 8-21)
10. Engine drive belt location (P. 8-19)
11. Engine coolant reservoir (P. 8-10)

* Shown with the engine compartment access panels removed. For removal and replacement instructions, see “ENGINE COMPARTMENT CHECK LOCATIONS” in the “8. Maintenance and do-it-yourself” section.

WARNING AND INDICATOR LIGHTS

Warning light	Name	Page
AWD	All-Wheel Drive (AWD) warning light (AWD models)*	2-13
ABS	Anti-lock Braking System (ABS) warning light	2-13
AT CHECK	Automatic Transmission (AT) check warning light	2-13
BRAKE	Brake warning light	2-14
	Charge warning light	2-14
	Door open warning light	2-14
	Engine oil pressure warning light	2-14
CRUISE	Intelligent Cruise Control (ICC) system warning light (orange)*	2-15
KEY	Intelligent Key system warning light	2-15
	Lane departure warning light (orange)*	2-15

Warning light	Name	Page
	Low fuel warning light	2-15
	Low tire pressure warning light	2-15
	Low washer fluid warning light	2-17
CRUISE	Preview Function warning light (orange)*	2-17
RAS	Rear Active Steer warning light*	2-17
	Seat belt warning light	2-17
	Supplemental air bag warning light	2-17

Indicator light	Name	Page
AFS OFF	Adaptive Front lighting System (AFS) indicator light	2-18
P/N	Automatic Transmission (AT) position indicator light	2-18
CRUISE	Cruise main switch indicator light (green)	2-18

Indicator light	Name	Page
SET	Cruise set switch indicator light	2-18
PASS AIR BAG OFF	Front passenger air bag status light	2-18
	High beam indicator light	2-18
CRUISE	Intelligent Cruise Control (ICC) system MAIN switch indicator light (green)*	2-19
	Lane Departure Prevention (LDP) ON indicator light (green)*	2-19
SERVICE ENGINE SOON	Malfunction Indicator Light (MIL)	2-19
SLIP	Slip indicator light	2-20
	Small light indicator lights	2-20
	Turn signal/hazard indicator lights	2-20
VDC OFF	Vehicle Dynamic Control (VDC) off indicator light	2-20

*: if so equipped

MEMO

1 Safety — Seats, seat belts and supplemental restraint system

Seats 1-2
Front seats 1-2
Rear seats 1-4
Head restraints 1-5
Adjustable headrests 1-8
Armrest 1-11
Seat belts 1-12
Precautions on seat belt usage 1-12
Child safety 1-14
Pregnant women 1-15
Injured persons 1-15
Pre-crash seat belts (front seats) 1-15
Three-point type seat belt 1-16
Seat belt extenders 1-18
Seat belt maintenance 1-19
Child restraints 1-19
Precautions on child restraints 1-19
Lower Anchors and Tethers for CHildren System (LATCH) 1-21
Top tether strap child restraint 1-23
Child restraint installation using LATCH 1-24
Child restraint installation using the seat belts 1-28
Booster seats 1-35
Precautions on booster seats 1-35
Booster seat installation 1-37
Supplemental restraint system 1-40
Precautions on supplemental restraint system 1-40
INFINITI Advanced Air Bag System (front seats) 1-45
Front seat-mounted side-impact supplemental air bags and roof-mounted curtain side-impact supplemental air bag systems 1-50
Seat belts with pretensioners (front seats) 1-51
Supplemental air bag warning labels 1-52
Supplemental air bag warning light 1-53
Repair and replacement procedure 1-53

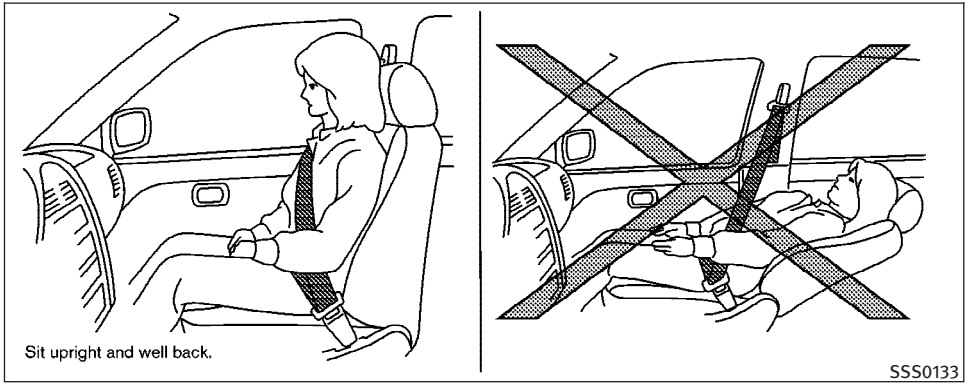

⚠ WARNING

- **Do not ride in a moving vehicle when the seatback is reclined. This can be dangerous. The shoulder belt will not be against your body. In an accident, you could be thrown into it and receive neck or other serious injuries. You could also slide under the lap belt and receive serious internal injuries.**
- **For the most effective protection when the vehicle is in motion, the seat should be upright. Always sit well back in the seat with both feet on the floor and adjust the seat properly. See "PRECAUTIONS ON SEAT BELT USAGE" later in this section.**
- **After adjustment, gently rock in the seat to make sure it is securely locked.**
- **Do not leave children unattended inside the vehicle. They could unknowingly activate switches or controls. Unattended children could become involved in serious accidents.**
- **The seatback should not be reclined any more than needed for comfort. Seat belts are most effective when the passenger sits well back and straight up in the seat. If the seatback is reclined, the risk of sliding under the lap belt and being injured is increased.**

⚠ CAUTION

When adjusting the seat positions, be sure not to contact any moving parts to avoid possible injuries and/or damages.

FRONT SEATS

Front power seat adjustment

Operating tips :

- The power seat motor has an auto-reset overload protection circuit. If the motor stops during operation, wait 30 seconds, then reactivate the switch.
- Do not operate the power seat switch for a long period of time when the engine is off. This will discharge the battery.

See "AUTOMATIC DRIVE POSITIONER" in the "3. Pre-driving checks and adjustments" section for the seat position memory function.

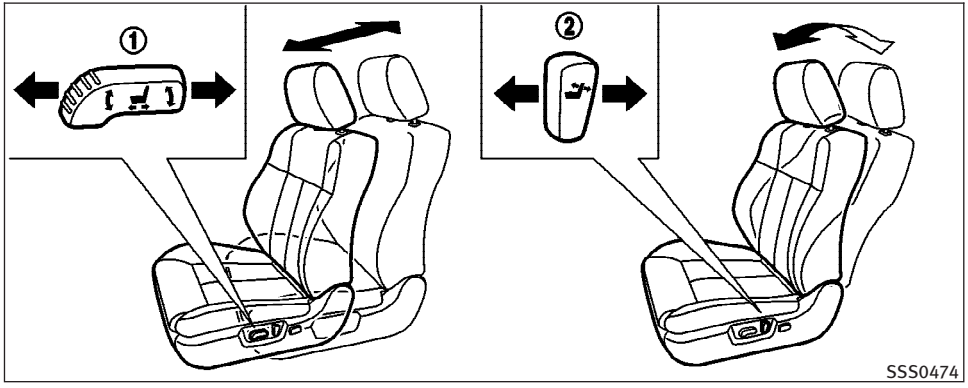

Forward and backward :

Moving the switch ① forward or backward will slide the seat forward or backward to the desired position.

Reclining :

Move the recline switch ② backward until the desired angle is obtained. To bring the seatback forward again, move the switch ② forward.

The reclining feature allows adjustment of the seatback for occupants of different sizes for added comfort and to help obtain proper seat belt fit. (See “PRECAUTIONS ON SEAT BELT USAGE” later in this section.) Also, the seatback can be reclined to allow occupants to rest when the vehicle is stopped and the transmission is in the P (Park) position with the parking brake fully applied.

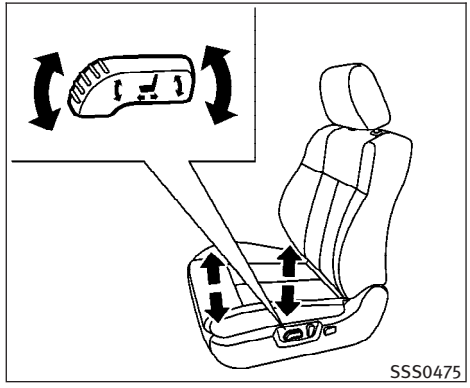

Seat lifter :

Push the front or rear end of the switch up or down to adjust the angle of the front portion or height of the seat.

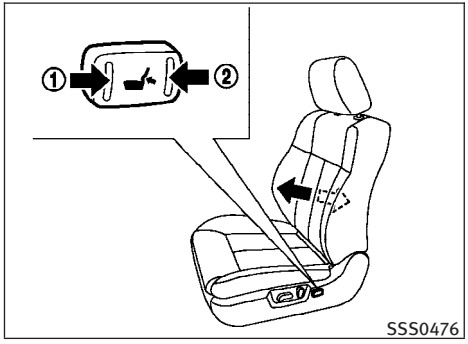

Lumbar support :

The lumbar support feature provides lower back support.

Push the front ① or back ② end of the switch to adjust the seatback lumbar area.

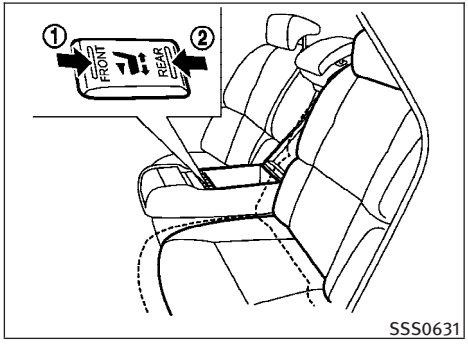

REAR SEATS

Rear power seat adjustment (if so equipped)

Forward and backward :

Push the front ① or back ② end of the switch to move the rear outboard seats forward or backward. The seats move continuously while the switch is being pushed.

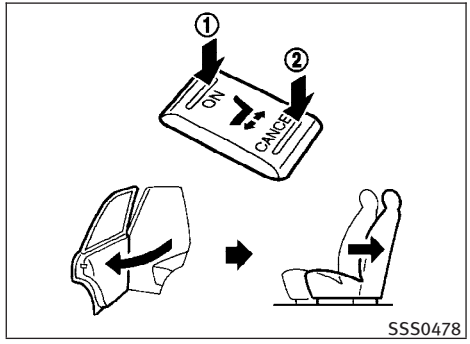

Entry/exit assist (automatic return) :

Pushing the ON side ① of the switch located on the rear center armrest, the automatic return function will activate.

When a rear door is opened, the rear seat of the corresponding side automatically slides all the way back, facilitating ease of entry and exit.

Pushing the CANCEL side ② of the switch will deactivate the automatic return function.

HEAD RESTRAINTS

⚠ WARNING

Head restraints supplement the other vehicle safety systems. They may provide additional protection against injury in certain rear end collisions. Adjust the head restraints properly, as specified in this section. Check the adjustment after someone else uses the seat. Do not attach anything to the head restraint stalks or remove the head restraint. Do not use the seat if the head restraint has been removed. If the head restraint was removed, install and properly adjust the head restraint before an occupant uses the seating position. Failure to follow these instructions can reduce the effectiveness of the head restraints. This may increase the risk of serious injury or death in a collision.

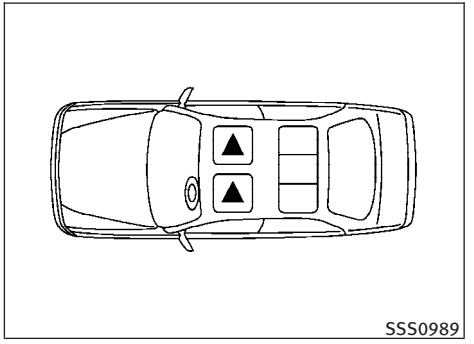

The illustration shows the seating positions equipped with head restraints. The head restraints are adjustable.

▲ Indicates the seating position is equipped with a head restraint.

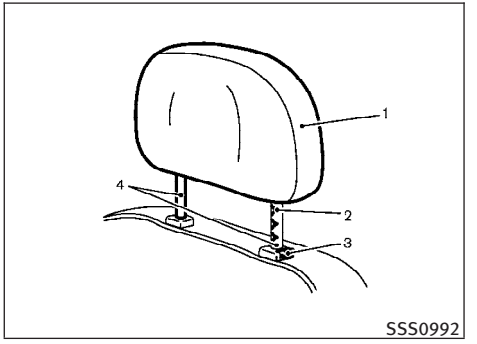

Components

1. Head restraint
2. Adjustment notches
3. Lock knob
4. Stalk

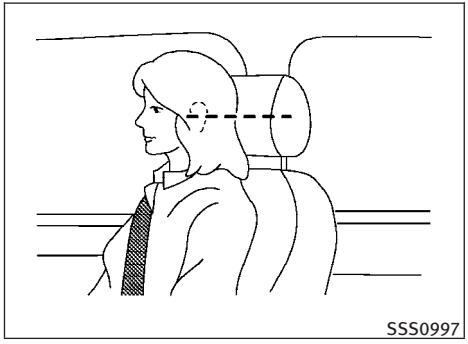

Adjustment

Adjust the head restraint so the center is level with the center of your ears.

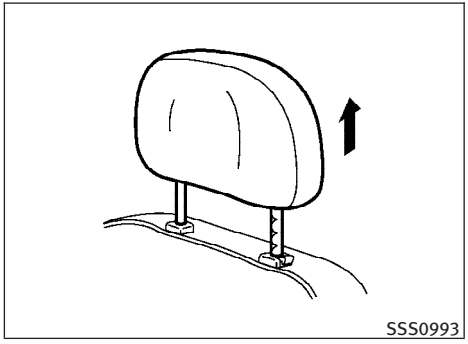

To raise the head restraint, pull it up.

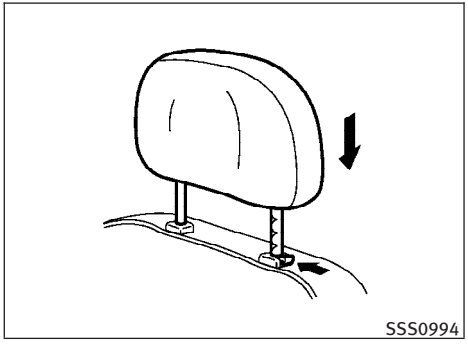

To lower, push and hold the lock knob and push the head restraint down.

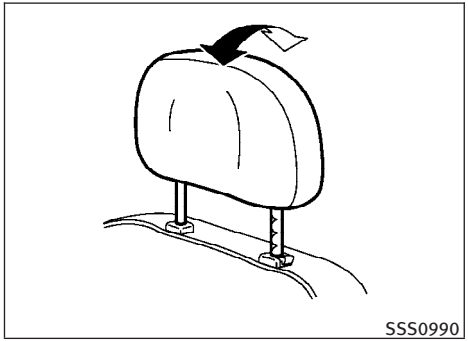

To adjust the angle, push it in the direction required.

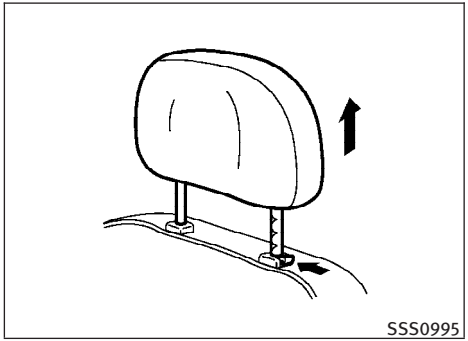

Removal

Use the following procedure to remove the adjustable head restraints.

1. Pull the head restraint up to the highest position.
2. Push and hold the lock knob.
3. Remove the head restraint from the seat.
4. Store the head restraint properly in a secure place so it is not loose in the vehicle.

Reinstall and properly adjust the head restraint before an occupant uses the seating position.

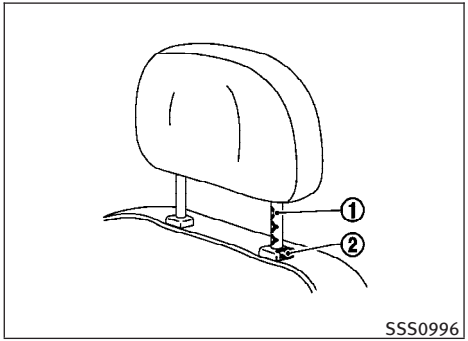

Install

1. Align the head restraint stalks with the holes in the seat. Make sure that the head restraint is facing the correct direction. The stalk with the adjustment notches ① must be installed in the hole with the lock knob ②.
2. Push and hold the lock knob and push the head restraint down.
3. Properly adjust the head restraint before an occupant uses the seating position.

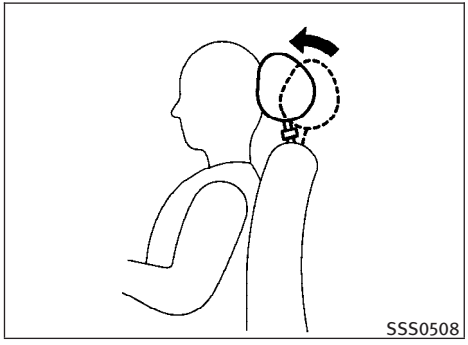

Front-seat Active Head Restraints

The Active Head Restraint moves forward utilizing the force that the seatback receives from the occupant in a rear-end collision. The movement of the head restraint helps support the occupant's head by reducing its backward movement and helping absorb some of the forces that may lead to whiplash-type injuries.

Active Head Restraints are effective for collisions at low to medium speeds in which it is said that whiplash injury occurs most.

Active Head Restraints operate only in certain rear-end collisions. After the collision, the head restraints return to their original positions.

Adjust the Active Head Restraints properly as described earlier in this section.

ADJUSTABLE HEADRESTS

⚠ WARNING

The adjustable headrests supplement the other vehicle safety systems. They may provide additional protection against injury in certain rear end collisions. Adjust the headrest properly, as specified in this section. Check the adjustment after someone else uses the seat. Do not attach anything to the headrest stalks or remove the headrest. Do not use the seat if the headrest has been removed. If the headrest was removed, install and properly adjust the headrest before an occupant uses the seating position. Failure to follow these instructions can reduce the effectiveness of the headrests. This may increase the risk of serious injury or death in a collision.

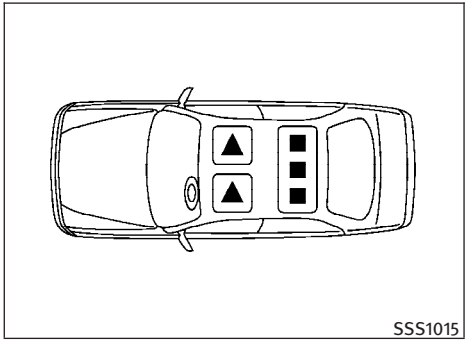

The illustration shows the seating positions equipped with adjustable headrests.

■ Indicates the seating position is equipped with an adjustable headrest.

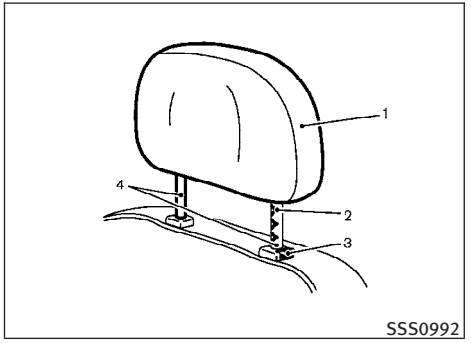

Components

1. Adjustable headrest
2. Adjustment notches
3. Lock knob
4. Stalks

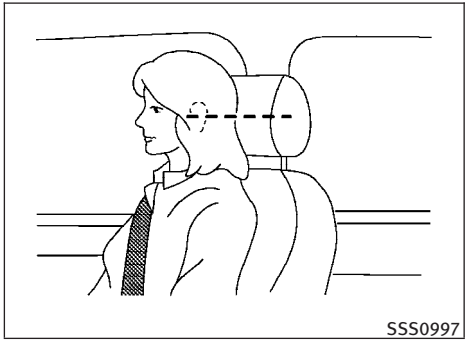

Adjustment

Adjust the headrest so the center is level with the center of your ears.

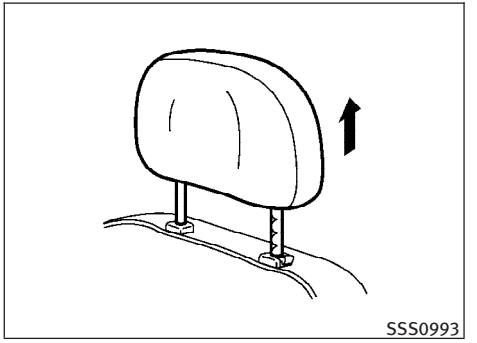

To raise the headrest, pull it up.

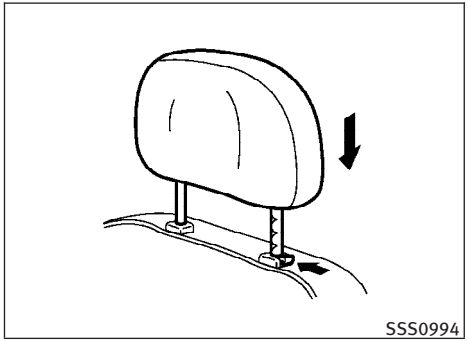

To lower, push and hold the lock knob and push the headrest down.

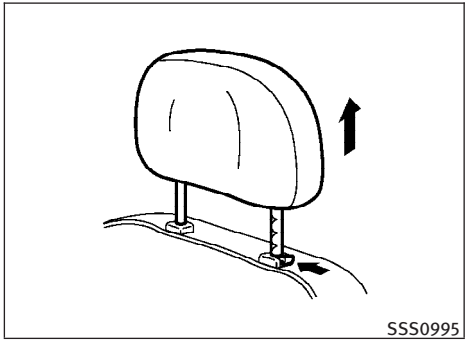

Removal

Use the following procedure to remove the adjustable headrests.

1. Pull the headrest up to the highest position.
2. Push and hold the lock knob.
3. Remove the headrest from the seat.
4. Store the headrest properly in a secure place so it is not loose in the vehicle.
5. Install and properly adjust the headrest before an occupant uses the seating position.

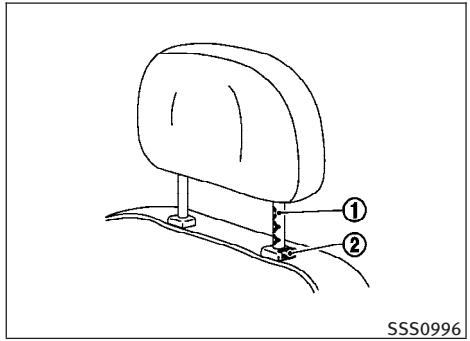

Install

1. Align the headrest stalks with the holes in the seat. Make sure that the headrest is facing the correct direction. The stalk with the adjustment notches ① must be installed in the hole with the lock knob ②.
2. Push and hold the lock knob and push the headrest down.
3. Properly adjust the headrest before an occupant uses the seating position.

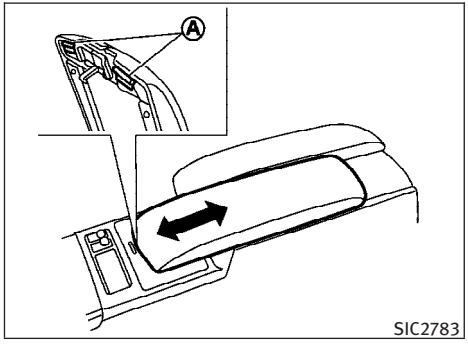

ARMREST

Front armrest

Pull the lever Ⓐ up and slide the driver's or passenger's armrest forward and backward.

Slide the armrest to the original position when using the front cup holders.

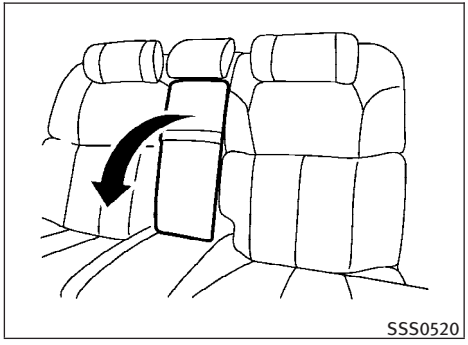

Rear armrest

Pull the armrest down until it is horizontal.

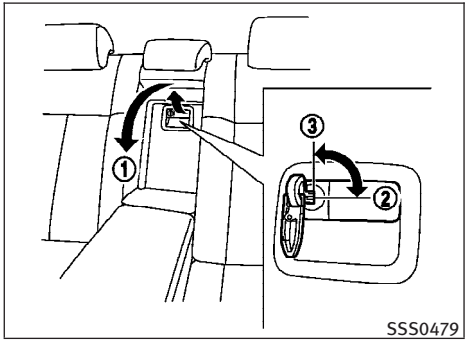

Trunk pass-through

The rear center seatback can be folded to allow trunk access from inside of the vehicle.

To access the trunk, pull down the rear center armrest and pull out the trunk pass-through lid ①.

To lock the lid, use the mechanical key and turn it to the LOCK position ②. To unlock, turn the mechanical key to the UNLOCK position ③. For the mechanical key usage, see "KEYS" in the "3. Pre-driving checks and adjustments" section.

Make sure that the mechanical key is removed from the trunk pass-through lid key cylinder before opening or closing the lid. Otherwise the lid and the rear armrest may be damaged.

PRECAUTIONS ON SEAT BELT USAGE

If you are wearing your seat belt properly adjusted, and you are sitting upright and well back in your seat with both feet on the floor, your chances of being injured or killed in an accident and/or the severity of injury may be greatly reduced. INFINITI strongly encourages you and all of your passengers to buckle up every time you drive, even if your seating position includes a supplemental air bag.

Most U.S. states and Canadian provinces or territories specify that seat belts be worn at all times when a vehicle is being driven.

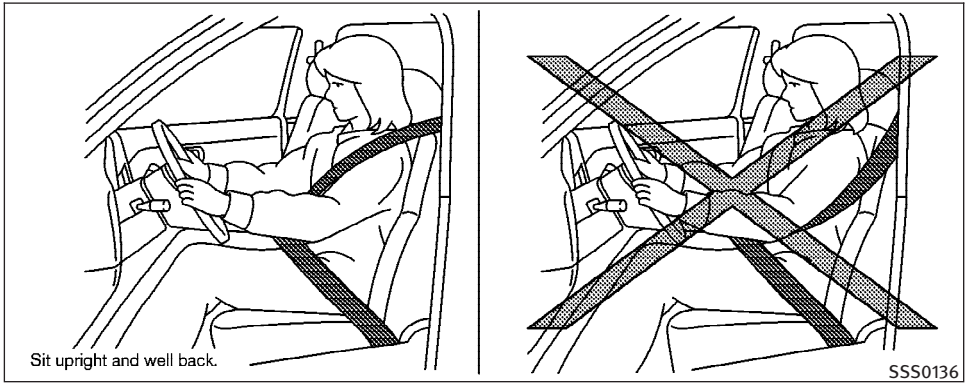

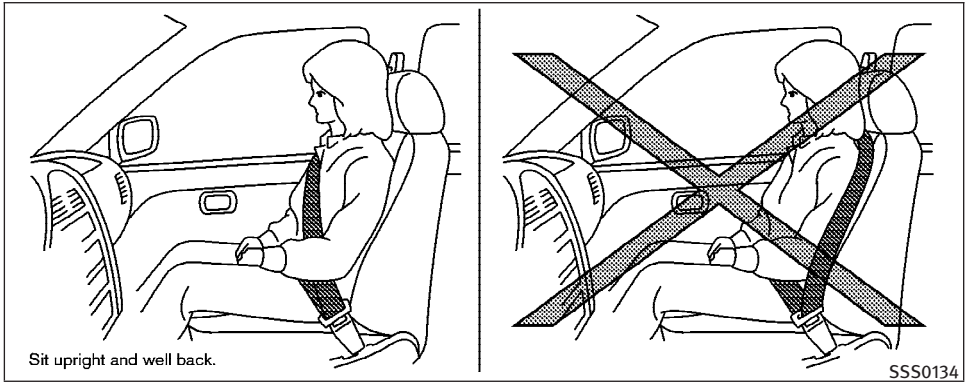

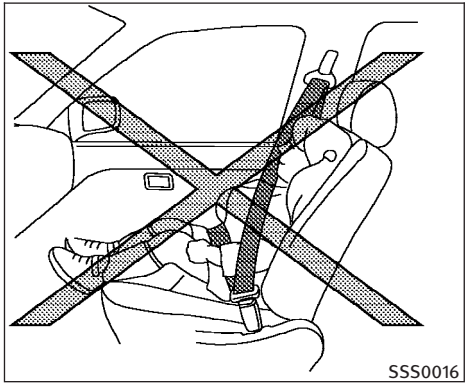

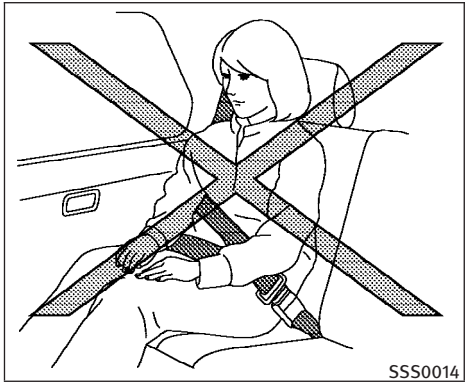

⚠ WARNING

- **Every person who drives or rides in this vehicle should use a seat belt at all times. Children should be properly restrained in the rear seat and, if appropriate, in a child restraint.**
- **The seat belt should be properly adjusted to a snug fit. Failure to do so may reduce the effectiveness of the entire restraint system and increase the chance or severity of injury in an accident. Serious injury or death can occur if the seat belt is not worn properly.**
- **Always route the shoulder belt over your shoulder and across your chest. Never put the belt behind your back, under your arm or across your neck. The belt should be away from your face and neck, but not falling off your shoulder.**
- **Position the lap belt as low and snug as possible AROUND THE HIPS, NOT THE WAIST. A lap belt worn too high could increase the risk of internal injuries in an accident.**
- **Be sure the seat belt tongue is securely fastened to the proper buckle.**
- **Do not wear the seat belt inside out or twisted. Doing so may reduce its effectiveness.**
- **Do not allow more than one person to use the same seat belt.**
- **Never carry more people in the vehicle than there are seat belts.**
- **If the seat belt warning light glows continuously while the ignition is turned ON with all doors closed and all seat belts fastened, it may indicate a malfunction in the system. Have the system checked by an INFINITI retailer.**
- **No changes should be made to the seat belt system. For example, do not modify the seat belt, add material, or install devices that may change the seat belt routing or tension. Doing so may affect the operation of the seat belt system. Modifying or tampering with the seat belt system may result in serious personal injury.**
- **Once a seat belt pretensioner has activated, it cannot be reused and must be replaced together with the retractor. See an INFINITI retailer.**
- **Removal and installation of the pretensioner system components should be done by an INFINITI retailer.**

- **All seat belt assemblies, including retractors and attaching hardware, should be inspected after any collision by an INFINITI retailer. INFINITI recommends that all seat belt assemblies in use during a collision be replaced unless the collision was minor and the belts show no damage and continue to operate properly. Seat belt assemblies not in use during a collision should also be inspected and replaced if either damage or improper operation is noted.**
- **All child restraints and attaching hardware should be inspected after any collision. Always follow the restraint manufacturer's inspection instructions and replacement recommendations. The child restraints should be replaced if they are damaged.**

CHILD SAFETY

Children need adults to help protect them. They need to be properly restrained.

In addition to the general information in this manual, child safety information is available from many other sources, including doctors, teachers, government traffic safety offices, and community organizations. Every child is different, so be sure to learn the best way to transport your child.

There are three basic types of child restraint systems:

- Rear-facing child restraint
- Front-facing child restraint
- Booster seat

The proper restraint depends on the child's size. Generally, infants (up to about 1 year and less than 20 lb (9 kg)) should be placed in rear-facing child restraints. Front-facing child restraints are available for children who outgrow rear-facing child restraints and are at least 1 year old. Booster seats are used to help position a vehicle lap/shoulder belt on a child who can no longer use a front-facing child restraint.

⚠ WARNING

Infants and children need special protection. The vehicle's seat belts may not fit them properly. The shoulder belt may come too close to the face or neck. The lap belt may not fit over their small hip bones. In an accident, an improperly fitting seat belt could cause serious or fatal injury. Always use appropriate child restraints.

All U.S. states and Canadian provinces or territories require the use of approved child restraints for infants and small children. (See "CHILD RESTRAINTS" later in this section.)

Also, there are other types of child restraints available for larger children for additional protection.

INFINITI recommends that all pre-teens and children be restrained in the rear seat. According to accident statistics, children are safer when properly restrained in the rear seat than in the front seat.
This is especially important because your vehicle has a supplemental restraint system (air bag system) for the front passenger. (See "SUPPLEMENTAL RESTRAINT SYSTEM" later in this section.)

Infants

Infants up to at least 1 year old should be placed in a rear-facing child restraint. INFINITI recommends that infants be placed in child restraints that comply with Federal Motor Vehicle Safety Standards or Canadian Motor Vehicle Safety Standards. You should choose a child restraint that fits your vehicle and always follow the manufacturer's instructions for installation and use.

Small children

Children that are over 1 year old and weigh at least 20 lb (9 kg) can be placed in a front-facing child restraint. Refer to the manufacturer's instructions for minimum and maximum weight and height recommendations. INFINITI recommends that small children be placed in child restraints that comply with Federal Motor Vehicle Safety Standards or Canadian Motor Vehicle Safety Standards. You should choose a child restraint that fits your vehicle and always follow the manufacturer's instructions for installation and use.

Larger children

Children who are too large for child restraints should be seated and restrained by the seat belts which are provided. The seat belt may not fit properly if the child is less than 4 ft 9 in (142.5 cm) tall and weighs between 40 lb (18 kg) and 80 lb (36 kg). A booster seat should be used to obtain proper seat belt fit.

INFINITI recommends that a child be placed in a commercially available booster seat if the shoulder belt in the child's seating position fits close to the face or neck or if the lap portion of the seat belt goes across the abdomen. The booster seat should raise the child so that the shoulder belt is properly positioned across the top, middle portion of the shoulder and the lap belt is low on the hips. A booster seat can only be used in seating positions that have a three-point type seat belt. The booster seat should fit the vehicle seat and have a label certifying that it complies with Federal Motor Vehicle Safety Standards or Canadian Motor Vehicle Safety Standards. Once the child has grown so the shoulder belt is no longer on or near the face and neck, use the shoulder belt without the booster seat.

⚠ WARNING

Never let a child stand or kneel on any seat and do not allow a child in the cargo areas while the vehicle is moving. The child could be seriously injured or killed in an accident or sudden stop.

PREGNANT WOMEN

INFINITI recommends that pregnant women use seat belts. The seat belt should be worn snug, and always position the lap belt as low as possible around the hips, not the waist. Place the shoulder belt over your shoulder and across your chest. Never run the lap/shoulder belt over your abdominal area. Contact your doctor for specific recommendations.

INJURED PERSONS

INFINITI recommends that injured persons use seat belts, depending on the injury. Check with your doctor for specific recommendations.

PRE-CRASH SEAT BELTS (front seats)

The pre-crash seat belt tightens the seat belt to help restrain front seat occupants under emergency braking. This can help reduce the risk of injury when a collision occurs.

Pre-crash seat belt will not be activated when:

- the brake pedal is not depressed
- the seat belt is not fastened
- the selector lever is in the R (Reverse) position
- the vehicle speed is under 10 MPH (15 km/h)

Always wear your seat belt correctly and sit upright and well back in the seat with both feet on the floor.

If the seat belt warning light blinks even if the driver's and front passenger's seat belts are fastened, it may indicate the pre-crash seat belt system has a malfunction. Have your INFINITI retailer check and repair the system.

THREE-POINT TYPE SEAT BELT

⚠ WARNING

- **Every person who drives or rides in this vehicle should use a seat belt at all times.**
- **Do not ride in a moving vehicle when the seatback is reclined. This can be dangerous. The shoulder belt will not be against your body. In an accident, you could be thrown into it and receive neck or other serious injuries. You could also slide under the lap belt and receive serious internal injuries.**
- **For the most effective protection when the vehicle is in motion, the seat should be upright. Always sit well back in the seat with both feet on the floor and adjust the seat belt properly.**

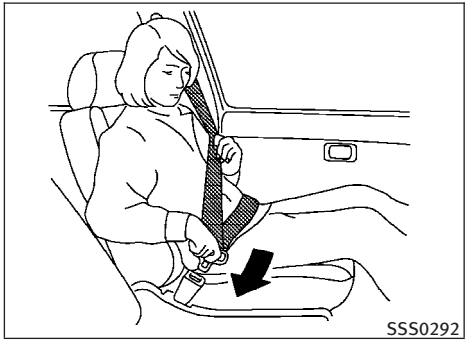

Fastening the seat belts

1. Adjust the seat. (See "SEATS" earlier in this section.)
2. Slowly pull the seat belt out of the retractor and insert the tongue into the buckle until you hear and feel the latch engage.

- **The retractor is designed to lock during a sudden stop or on impact. A slow pulling motion permits the belt to move, and allows you some freedom of movement in the seat.**
- **If the seat belt cannot be pulled from its fully retracted position, firmly pull the belt and release it. Then smoothly pull the belt out of the retractor.**

3. Position the lap belt portion **low and snug on the hips** as shown.
4. Pull the shoulder belt portion toward the retractor to take up extra slack. Be sure the shoulder belt is routed over your shoulder and across your chest.

The front passenger and the rear seating positions three-point type seat belts have two modes of operation:

- Emergency Locking Retractor (ELR)
- Automatic Locking Retractor (ALR)

The Emergency Locking Retractor (ELR) mode allows the seat belt to extend and retract to allow the driver and passengers some freedom

of movement in the seat. The ELR locks the seat belt when the vehicle slows down rapidly or during certain impacts.

The Automatic Locking Retractor (ALR) mode (child restraint mode) locks the seat belt for child restraint installation.

When the ALR mode is activated the seat belt cannot be extended again until the seat belt tongue is detached from the buckle and fully retracted. The seat belt returns to the ELR mode after the seat belt fully retracts. For additional information, see “CHILD RESTRAINTS” later in this section.

The ALR mode should be used only for child restraint installation. During normal seat belt use by an occupant, the ALR mode should not be activated. If it is activated it may cause uncomfortable seat belt tension. It can also change the operation of the front passenger air bag. See “Front passenger air bag and status light” later in this section.

⚠ WARNING

When fastening the seat belts, be certain that seatbacks are completely secured in the latched position. If they are not completely secured, passengers may be injured in an accident or sudden stop.

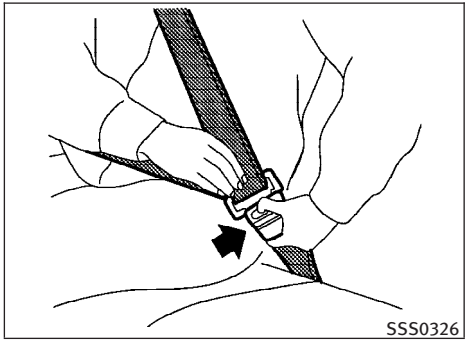

Unfastening the seat belts

To unfasten the seat belt, push the button on the buckle. The seat belt automatically retracts.

Checking seat belt operation

Seat belt retractors are designed to lock seat belt movement by two separate methods:

- When the belt is pulled quickly from the retractor.
- When the vehicle slows down rapidly.

To increase your confidence in the seat belts, check the operation as follows:

- Grasp the shoulder belt and pull forward quickly. The retractor should lock and restrict further belt movement.

If the retractor does not lock during this check or if you have any question about seat belt operation, see an INFINITI retailer.

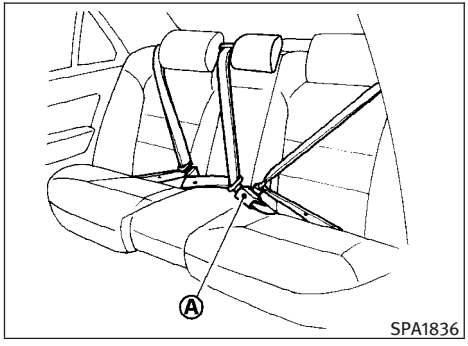

Center of rear seat

Selecting correct set of seat belts :

The center seat belt buckle is identified by the CENTER mark Ⓐ. The center seat belt tongue can be fastened **only** into the center seat belt buckle.

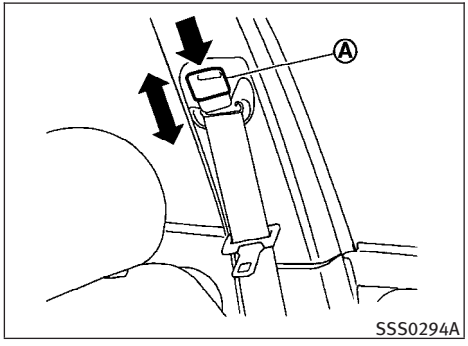

Shoulder belt height adjustment (front seats)

The shoulder belt anchor height should be adjusted to the position best for you. (See "PRECAUTIONS ON SEAT BELT USAGE" earlier in this section.)

To adjust, push the adjustment button Ⓐ, and then move the shoulder belt anchor to the desired position, so that the belt passes over the center of the shoulder. The belt should be away from your face and neck, but not falling off of your shoulder. Release the adjustment button to lock the shoulder belt anchor into position.

⚠ WARNING

- **After adjustment, release the adjustment button and try to move the shoulder belt anchor up and down to make sure it is securely fixed in position.**
- **The shoulder belt anchor height should be adjusted to the position best for you. Failure to do so may reduce the effectiveness of the entire restraint system and increase the chance or severity of injury in an accident.**

SEAT BELT EXTENDERS

If, because of body size or driving position, it is not possible to properly fit the lap-shoulder belt and fasten it, an extender is available that is compatible with the installed seat belts. The extender adds approximately 8 in (200 mm) of length and may be used for either the driver or front passenger seating position. See an INFINITI retailer for assistance if an extender is required.

⚠ WARNING

- **Only INFINITI seat belt extenders, made by the same company which made the original equipment seat belts, should be used with the INFINITI seat belts.**

- **Adults and children who can use the standard seat belt should not use an extender. Such unnecessary use could result in serious personal injury in the event of an accident.**
- **Never use seat belt extenders to install child restraints. If the child restraint is not secured properly, the child could be seriously injured in a collision or a sudden stop.**

SEAT BELT MAINTENANCE

- **To clean the seat belt webbing,** apply a mild soap solution or any solution recommended for cleaning upholstery or carpets. Then, wipe with a cloth and allow the seat belts to dry in the shade. Do not allow the seat belts to retract until they are completely dry.
- **If dirt builds up in the shoulder belt guide** of the seat belt anchors, the seat belts may retract slowly. Wipe the shoulder belt guide with a clean, dry cloth.
- **Periodically check to see that the seat belt and the metal components** , such as buckles, tongues, retractors, flexible wires and anchors work properly. If loose parts, deterioration, cuts or other damage on the webbing is found, the entire seat belt assembly should be replaced.

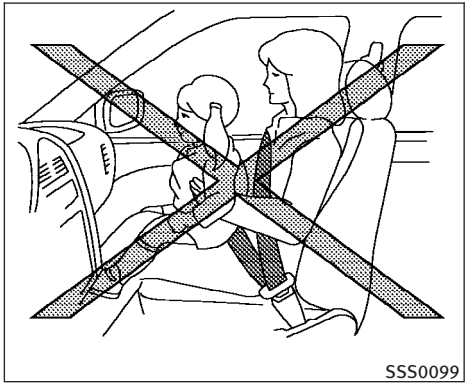
SSS0099

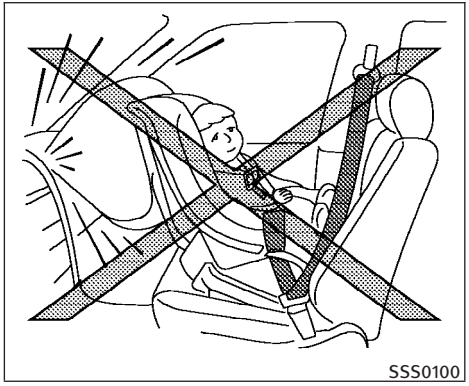
SSS0100

PRECAUTIONS ON CHILD RESTRAINTS

⚠ WARNING

- **Infants and small children should always be placed in an appropriate child restraint while riding in the vehicle. Failure to use a child restraint can result in serious injury or death.**
- **Infants and small children should never be carried on your lap. It is not possible for even the strongest adult to resist the forces of a severe accident. The child could be crushed between the adult and parts of the vehicle. Also, do not put the same seat belt around both your child and yourself.**
- **Even with the INFINITI Advanced Air Bag System, never install a rear-facing child restraint in the front seat. An inflating front air bag could seriously injure or kill your child. A rear-facing child restraint must only be used in the rear seat.**

- **INFINITI recommends that the child restraint be installed in the rear seat. According to accident statistics, children are safer when properly restrained in the rear seat than in the front seat. If you must install a front-facing child restraint in the front seat, see "CHILD RESTRAINT INSTALLATION USING THE SEAT BELTS" later in this section.**
- **Improper use or improper installation of a child restraint can increase the risk or severity of injury for both the child and other occupants of the vehicle and can lead to serious injury or death in an accident.**
- **Follow all of the child restraint manufacturer's instructions for installation and use. When purchasing a child restraint, be sure to select one which will fit your child and vehicle. It may not be possible to properly install some types of child restraints in your vehicle.**
- **If the child restraint is not anchored properly, the risk of a child being injured in a collision or a sudden stop greatly increases.**
- **Child restraint anchor points are designed to withstand only those loads imposed by correctly fitted child restraints. Under no circumstances are they to be used for adult seat belts or harnesses.**
- **Adjustable seatbacks should be positioned to fit the child restraint, but as upright as possible.**
- **After attaching the child restraint, test it before you place the child in it. Push it from side to side while holding the seat near the LATCH attachment or by the seat belt path. The child restraint should not move more than 1 inch (25 mm) from side to side. Try to tug it forward and check to see if the belt holds the restraint in place. If the restraint is not secure, tighten the belt as necessary, or put the restraint in another seat and test it again. You may need to try a different child restraint. Not all child restraints fit in all types of vehicles.**
- **When your child restraint is not in use, keep it secured with the LATCH system or a seat belt to prevent it from being thrown around in case of a sudden stop or accident.**

⚠ CAUTION

Remember that a child restraint left in a closed vehicle can become very hot. Check the seating surface and buckles before placing your child in the child restraint.

This vehicle is equipped with a universal child restraint lower anchor system, referred to as the Lower Anchors and Tethers for CHildren System or LATCH. Some child restraints include two rigid or webbing-mounted attachments that can be connected to these lower anchors. For details, see "Lower Anchors and Tethers for CHildren System (LATCH)" later in this section.

If you do not have a LATCH compatible child restraint, the vehicle seat belts can be used. (See "CHILD RESTRAINT INSTALLATION USING THE SEAT BELTS" later in this section.) In general, child restraints are also designed to be installed with a lap/shoulder seat belt.

Several manufacturers offer child restraints for infants and small children of various sizes. When selecting any child restraint, keep the following points in mind:

- Choose only a restraint with a label certifying that it complies with Federal Motor Vehicle Safety Standard 213 or Canadian Motor Vehicle Safety Standard 213.
- Check the child restraint in your vehicle to be sure it is compatible with the vehicle's seat and seat belt system.
- If the child restraint is compatible with your vehicle, place your child in the child restraint and check the various adjustments to be

sure the child restraint is compatible with your child. Choose a child restraint that is designed for your child's height and weight. Always follow all recommended procedures.

All U.S. states and Canadian provinces or territories require that infants and small children be restrained in an approved child restraint at all times while the vehicle is being operated. Canadian law requires the top tether strap on front-facing child restraints be secured to the designated anchor point on the vehicle.

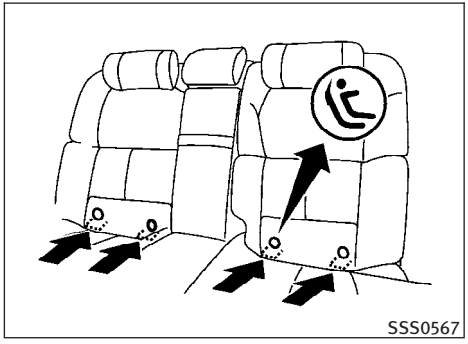

LATCH system anchor location

LOWER ANCHORS AND TETHERS FOR CHILDREN SYSTEM (LATCH)

Your vehicle is equipped with special anchor points that are used with Lower Anchors and Tethers for CHildren System (LATCH) compatible child restraints. This system may also be referred to as the ISOFIX or ISOFIX compatible system. With this system, you do not have to use a vehicle seat belt to secure the child restraint.

The LATCH anchor points are provided to install child restraints in the rear outboard seating positions only. Do not attempt to install a child restraint in the center position using the LATCH anchors.

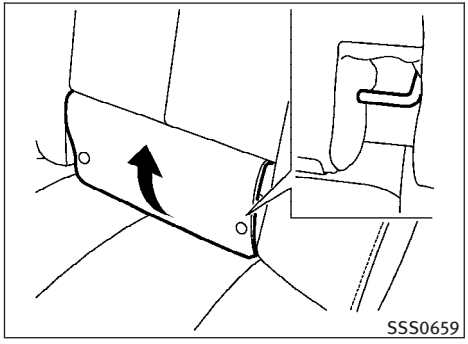

LATCH lower anchor location (Type A)

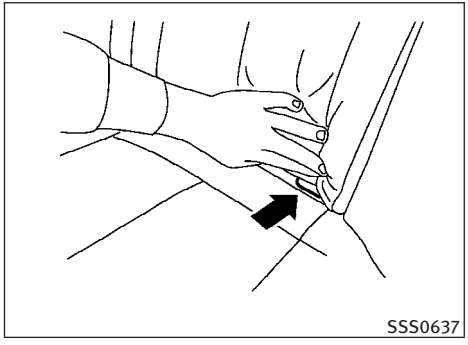

LATCH lower anchor location (Type B)

LATCH lower anchor point locations

The LATCH anchors are located at the rear of the seat cushion near the seatback. A label is attached to the seatback to help you locate the LATCH anchors.

⚠ WARNING

- **Attach LATCH system compatible child restraints only at the locations shown in the illustration. If a child restraint is not secured properly, your child could be seriously injured or killed in an accident.**
- **Do not secure a child restraint in the center rear seating position using the LATCH anchors. The child restraint will not be secured properly.**
- **Child restraint anchor points are designed to withstand only those loads imposed by correctly fitted child restraints. Under no circumstances are they to be used for adult seat belts or harnesses.**

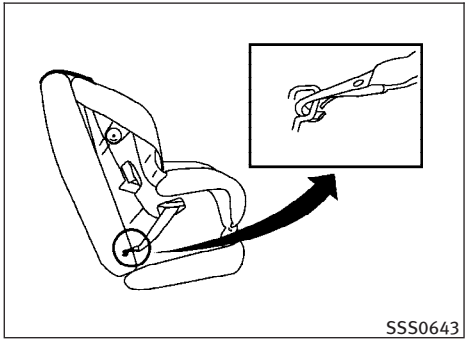

LATCH webbing-mounted attachment

Installing child restraint LATCH anchor attachments

LATCH compatible child restraints include two rigid or webbing-mounted attachments that can be connected to two anchors located at certain seating positions in your vehicle. With this system, you do not have to use a vehicle seat belt to secure the child restraint. Check your child restraint for a label stating that it is compatible with the LATCH system. This information may also be in the instructions provided by the child restraint manufacturer.

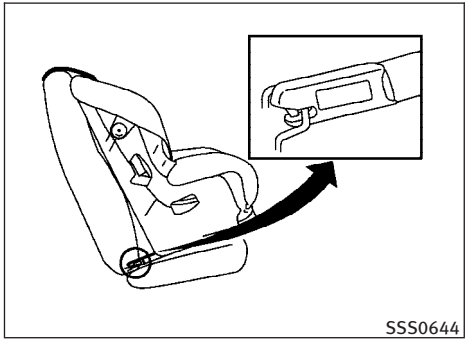

LATCH rigid-mounted attachment

LATCH child restraints generally require the use of a top tether strap. (See "TOP TETHER STRAP CHILD RESTRAINT" later in this section for installation instructions.)

When installing a child restraint, carefully read and follow the instructions in this manual and those supplied with the child restraint. (See "CHILD RESTRAINT INSTALLATION USING LATCH" later in this section.)

TOP TETHER STRAP CHILD RESTRAINT

If the manufacturer of your child restraint requires the use of a top tether strap, it must be secured to an anchor point.

⚠ WARNING

Child restraint anchor points are designed to withstand only those loads imposed by correctly fitted child restraints. Under no circumstances are they to be used for adult seat belts or harnesses.

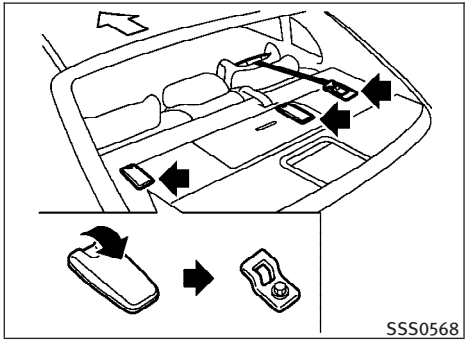

Top tether anchor point locations

Anchor points are located on the rear parcel shelf.

Installing top tether strap

First secure the child restraint with the LATCH system (rear outboard seating positions only) or the seat belt as applicable.

1. Flip up the anchor cover from the anchor point which is located directly behind the child seat.
2. Position the top tether strap over the top of the seatback.

3. Secure the tether strap to tether anchor bracket that provides the straightest installation.
4. Tighten the strap according to the manufacturer's instructions to remove any slack.

If you have any questions when installing a top tether strap child restraint on the rear seat, consult your INFINITI retailer for details.

CHILD RESTRAINT INSTALLATION USING LATCH

WARNING

- **Attach LATCH system compatible child restraints only at the locations shown. For the LATCH lower anchor locations, see "Lower Anchors and Tethers for CHildren System (LATCH)" earlier in this section. If a child restraint is not secured properly, your child could be seriously injured or killed in an accident.**
- **The LATCH anchors are designed to withstand only those loads imposed by correctly fitted child restraints. Under no circumstance are they to be used for adult seat belts or harnesses.**
- **Inspect the lower anchors by inserting your fingers into the lower anchor area and feeling to make sure there are no obstructions over the LATCH anchors, such as seat belt webbing or seat cushion material. The child restraint will not be secured properly if the LATCH anchors are obstructed.**

Front-facing

Follow these steps to install a front-facing child restraint using LATCH system:

1. If your vehicle is equipped with rear power seat adjustment, adjust the rear outboard seats to the upright and rearmost position. (See "REAR SEATS" earlier in this section.)
2. Position the child restraint on the seat. Always follow the child restraint manufacturer's instructions.

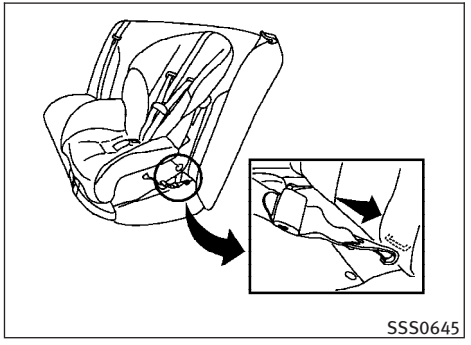

Front-facing (webbing-mounted) — step 3

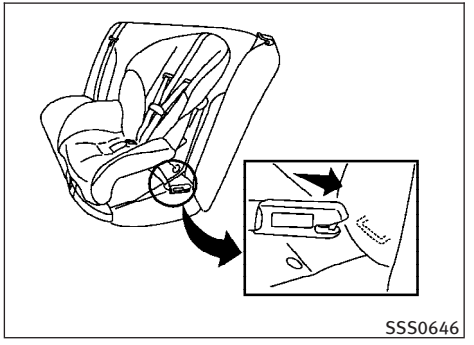

Front-facing (rigid-mounted) — step 3

3. Secure the child restraint anchor attachments to the LATCH lower anchors. Check to make sure the LATCH attachment is properly attached to the lower anchors.

4. The back of the child restraint should be secured against the vehicle seatback. If necessary, adjust or remove the head restraint to obtain the correct child restraint fit. (See “HEAD RESTRAINTS” earlier in this section.)

   If the head restraint is removed, store it in a secure place. Be sure to reinstall the head restraint when the child restraint is removed.

   If the seating position does not have an adjustable head restraint and it is interfering with the proper child restraint fit, try another seating position or a different child restraint.

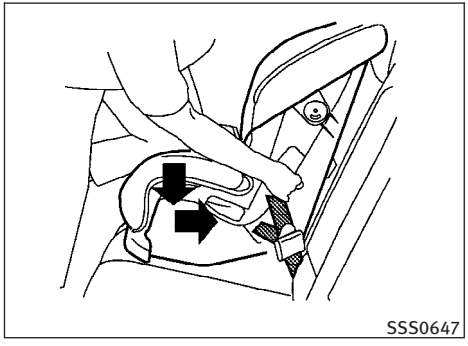

Front-facing — step 5

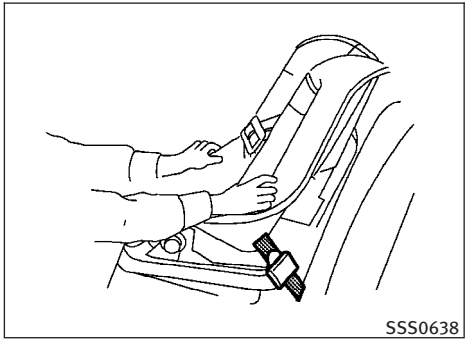

Front-facing — step 7

5. For child restraints that are equipped with webbing-mounted attachments, remove any additional slack from the anchor attachments. Press downward and rearward firmly in the center of the child restraint with your knee to compress the vehicle seat cushion and seatback while tightening the webbing of the anchor attachments.
6. If the child restraint is equipped with a top tether strap, route the top tether strap and secure the tether strap to the tether anchor point. (See “TOP TETHER STRAP CHILD RESTRAINT” earlier in this section.)
7. After attaching the child restraint, test it before you place the child in it. Push it from side to side while holding the seat near the LATCH attachment path. The child restraint should not move more than 1 inch (25 mm) from side to side. Try to tug it forward and check to see if the LATCH attachment holds the restraint in place. If the restraint is not secure, tighten the LATCH attachment as necessary, or put the restraint in another seat and test it again. You may need to try a different child restraint. Not all child restraints fit in all types of vehicles.
8. Check to make sure the child restraint is properly secured prior to each use. If the child restraint is loose, repeat steps 4 through 7.

Rear-facing

Follow these steps to install a rear-facing child restraint using LATCH system:

1. If your vehicle is equipped with rear power seat adjustment, adjust the rear outboard seats to the upright and rearmost position. (See “REAR SEATS” earlier in this section.)
2. Position the child restraint on the seat. Always follow the child restraint manufacturer’s instructions.

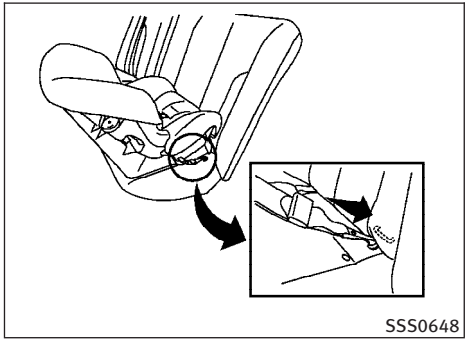

Rear-facing (webbing-mounted) — step 3

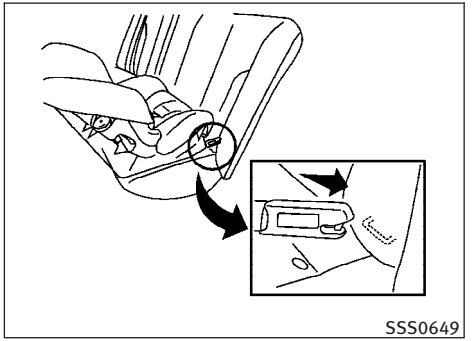

Rear-facing (rigid-mounted) — step 3

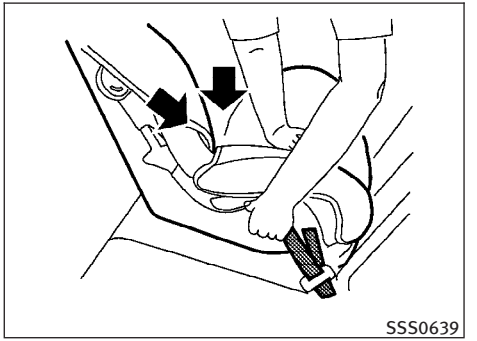

Rear-facing — step 4

3. Secure the child restraint anchor attachments to the LATCH lower anchors. Check to make sure the LATCH attachment is properly attached to the lower anchors.

4. For child restraints that are equipped with webbing-mounted attachments, remove any additional slack from the anchor attachments. Press downward and rearward firmly in the center of the child restraint with your hand to compress the vehicle seat cushion and seatback while tightening the webbing of the anchor attachments.

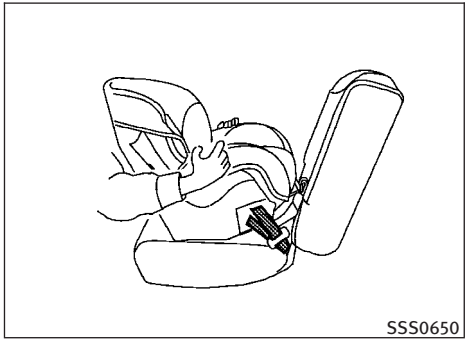

Rear-facing — step 5

5. After attaching the child restraint, test it before you place the child in it. Push it from side to side while holding the seat near the LATCH attachment path. The child restraint should not move more than 1 inch (25 mm) from side to side. Try to tug it forward and check to see if the LATCH attachment holds the restraint in place. If the restraint is not secure, tighten the LATCH attachment as necessary, or put the restraint in another seat and test it again. You may need to try a different child restraint. Not all child restraints fit in all types of vehicles.
6. Check to make sure the child restraint is properly secured prior to each use. If the child restraint is loose, repeat steps 4 through 5.

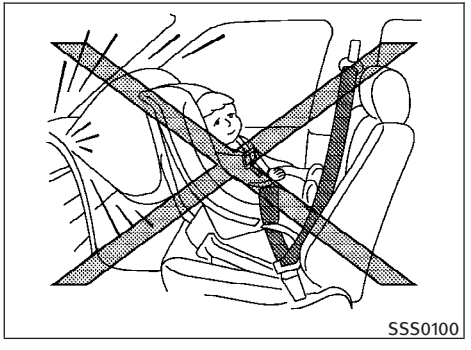

CHILD RESTRAINT INSTALLATION USING THE SEAT BELTS

⚠ WARNING

- **Even with the INFINITI Advanced Air Bag System, never install a rear-facing child restraint in the front passenger seat. Front air bags inflate with great force. A rear-facing child restraint could be struck by the front air bag in a crash and could seriously injure or kill your child.**

- **INFINITI recommends that child restraints be installed in the rear seat. However, if you must install a front-facing child restraint in the front passenger seat, move the passenger seat to the rearmost position. Also, be sure the front passenger air bag status light is illuminated to indicate the passenger air bag is OFF. See "Front passenger air bag and status light" later in this section for details.**
- **The three-point seat belt in your vehicle is equipped with an Automatic Locking Retractor (ALR) which must be used when installing a child restraint.**
- **Failure to use the ALR mode will result in the child restraint not being properly secured. The restraint could tip over or otherwise be unsecured and cause injury to the child in a sudden stop or collision. Also, it can change the operation of the front passenger air bag. See "Front passenger air bag and status light" later in this section.**
- **A child restraint with a top tether strap should not be used in the front passenger seat.**

The instructions in this section apply to child restraint installation using the vehicle seat belts in the rear seat or the front passenger seat.

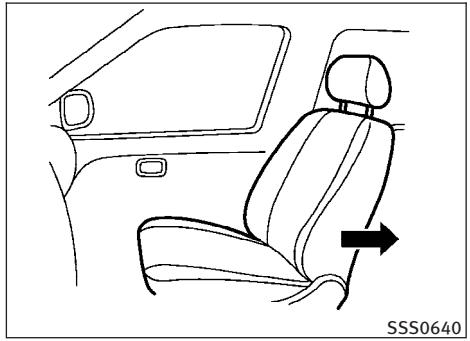

Front-facing (front passenger seat) — step 1

Front-facing

Follow these steps to install a front-facing child restraint using the vehicle seat belt in the rear seat or in the front passenger seat:

1. If your vehicle is equipped with rear power seat adjustment, adjust the rear outboard seats to the upright and rearmost position. (See "REAR SEATS" earlier in this section.)

   If you must install a child restraint in the front seat, it should be placed in a front-facing direction only. Move the seat to the rearmost position. Child restraints for infants must be used in the rear-facing direction and therefore must not be used in the front seat.

2. Position the child restraint on the seat. Always follow the child restraint manufacturer's instructions.

   The back of the child restraint should be secured against the seatback. If necessary, adjust or remove the head restraint to obtain the correct child restraint fit. (See "HEAD RESTRAINTS" earlier in this section.)

   If the head restraint is removed, store it in a secure place. Be sure to reinstall the head restraint when the child restraint is removed.

   If the seating position does not have an adjustable head restraint and it is interfering with the proper child restraint fit, try another seating position or a different child restraint.

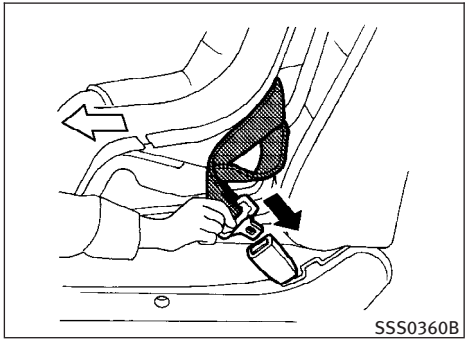

Front-facing — step 3

3. Route the seat belt tongue through the child restraint and insert it into the buckle until you hear and feel the latch engage. Be sure to follow the child restraint manufacturer's instructions for belt routing.

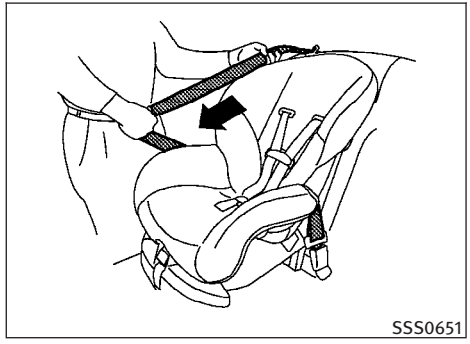

Front-facing — step 4

4. Pull the shoulder belt until the belt is fully extended. At this time, the seat belt retractor is in the Automatic Locking Retractor (ALR) mode (child restraint mode). It reverts to the Emergency Locking Retractor (ELR) mode when the seat belt is fully retracted.

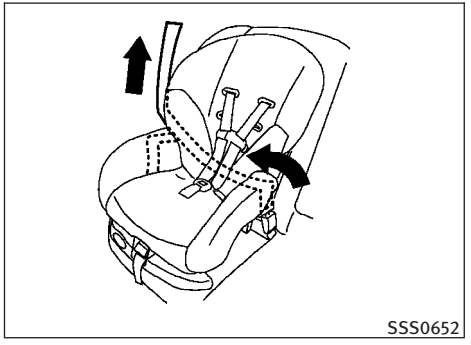

Front-facing — step 5

5. Allow the seat belt to retract. Pull up on the shoulder belt to remove any slack in the belt.

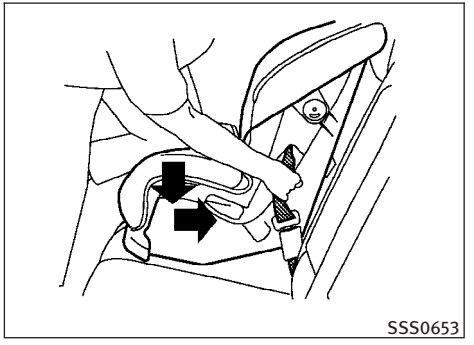

Front-facing — step 6

6. Remove any additional slack from the seat belt; press downward and rearward firmly in the center of the child restraint with your knee to compress the vehicle seat cushion and seatback while pulling up on the seat belt.

7. If the child restraint is equipped with a top tether strap, route the top tether strap and secure the tether strap to the tether anchor point (rear seat installation only). (See "TOP TETHER STRAP CHILD RESTRAINT" earlier in this section.) Do not install child restraints that require the use of a top tether strap to seating positions that do not have a top tether anchor.

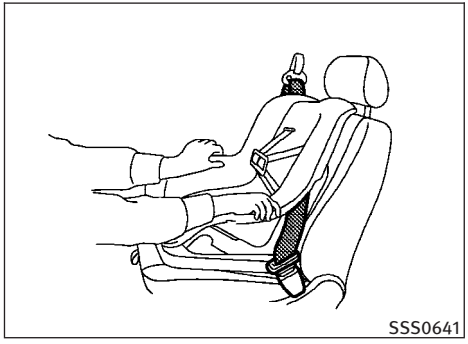

Front-facing — step 8

8. After attaching the child restraint, test it before you place the child in it. Push it from side to side while holding the seat near the seat belt path. The child restraint should not move more than 1 inch (25 mm) from side to side. Try to tug it forward and check to see if the belt holds the restraint in place. If the restraint is not secure, tighten the belt as necessary, or put the restraint in another seat and test it again. You may need to try a different child restraint. Not all child restraints fit in all types of vehicles.
9. Check that the retractor is in the ALR mode by trying to pull more seat belt out of the retractor. If you cannot pull any more belt webbing out of the retractor, the retractor is in the ALR mode.
10. Check to make sure the child restraint is properly secured prior to each use. If the seat belt is not locked, repeat steps 3 through 9.

Front-facing — step 11

11. If the child restraint is installed in the front passenger seat, push the ignition switch to the ON position. The front passenger air bag status light OFF 2 should illuminate. If this light is not illuminated, see “Front passenger air bag and status light” later in this section. **Move the child restraint to another seating position** . Have the system checked by an INFINITI retailer.

After the child restraint is removed and the seat belt is fully retracted, the ALR mode (child restraint mode) is canceled.

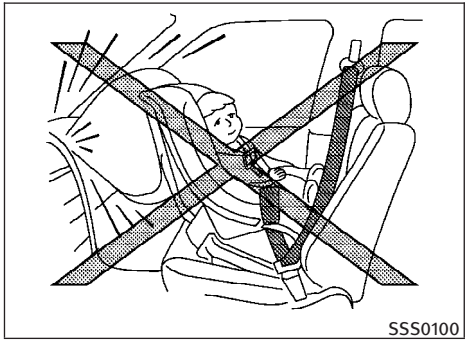

Rear-facing

Follow these steps to install a rear-facing child restraint using the vehicle seat belt in the rear seat:

1. **Child restraints for infants must be used in the rear-facing direction and therefore must not be used in the front seat.**

   If your vehicle is equipped with rear power seat adjustment, adjust the rear outboard seats to the upright and rearmost position. (See “REAR SEATS” earlier in this section.)

2. Position the child restraint on the seat. Always follow the restraint manufacturer’s instructions.

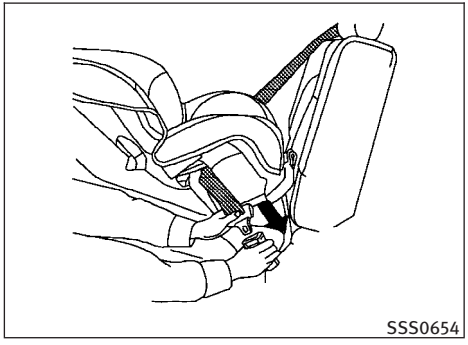

Rear-facing — step 3

3. Route the seat belt tongue through the child restraint and insert it into the buckle until you hear and feel the latch engage. Be sure to follow the child restraint manufacturer’s instructions for belt routing.

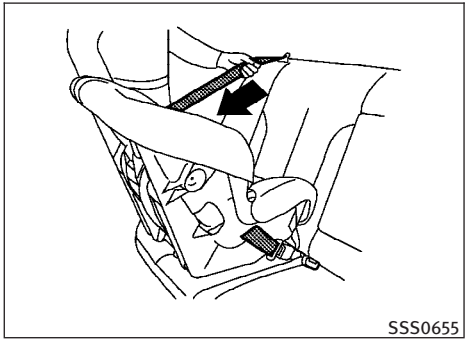

Rear-facing — step 4

4. Pull the shoulder belt until the belt is fully extended. At this time, the seat belt retractor is in the Automatic Locking Retractor (ALR) mode (child restraint mode). It reverts to the Emergency Locking Retractor (ELR) mode when the seat belt is fully retracted.

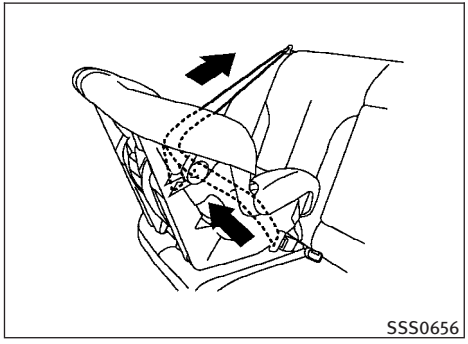

Rear-facing — step 5

5. Allow the seat belt to retract. Pull up on the shoulder belt to remove any slack in the belt.

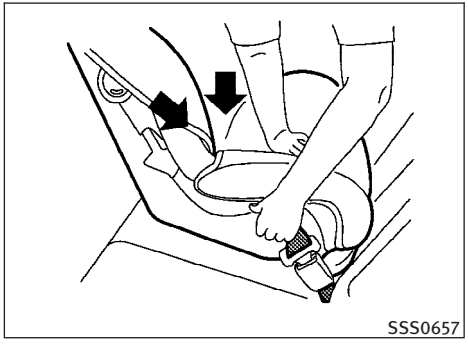

Rear-facing — step 6

6. Remove any additional slack from the child restraint; press downward and rearward firmly in the center of the child restraint with your hand to compress the vehicle seat cushion and seatback while pulling up on the seat belt.

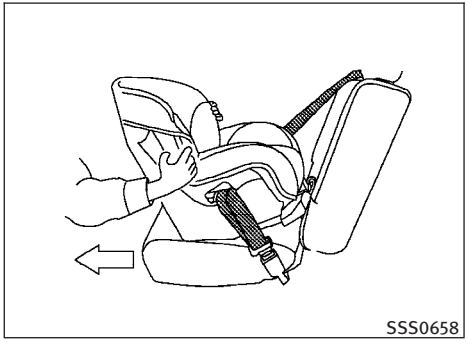

Rear-facing — step 7

7. After attaching the child restraint, test it before you place the child in it. Push it from side to side while holding the seat near the seat belt path. The child restraint should not move more than 1 inch (25 mm) from side to side. Try to tug it forward and check to see if the belt holds the restraint in place. If the restraint is not secure, tighten the belt as necessary, or put the restraint in another seat and test it again. You may need to try a different child restraint. Not all child restraints fit in all types of vehicles.

8. Check that the retractor is in the ALR mode by trying to pull more seat belt out of the retractor. If you cannot pull any more seat belt webbing out of the retractor, the retractor is in the ALR mode.
9. Check to make sure that the child restraint is properly secured prior to each use. If the seat belt is not locked, repeat steps 3 through 8.

After the child restraint is removed and the seat belt fully retracted, the ALR mode (child restraint mode) is canceled.

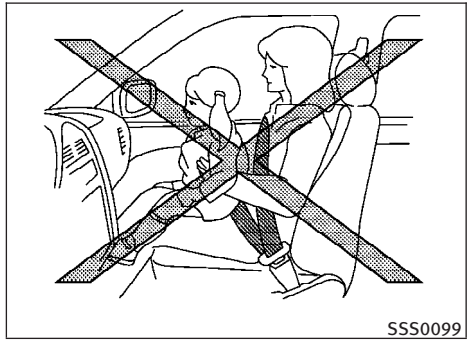

PRECAUTIONS ON BOOSTER SEATS

⚠ WARNING

- **Infants and small children should always be placed in an appropriate child restraint while riding in the vehicle. Failure to use a child restraint or booster seat can result in serious injury or death.**
- **Infants and small children should never be carried on your lap. It is not possible for even the strongest adult to resist the forces of a severe accident. The child could be crushed between the adult and parts of the vehicle. Also, do not put the same seat belt around both your child and yourself.**
- **INFINITI recommends that the booster seat be installed in the rear seat. According to accident statistics, children are safer when properly restrained in the rear seat than in the front seat. If you must install a booster seat in the front seat, see "BOOSTER SEAT INSTALLATION" later in this section.**
- **A booster seat must only be installed in a seating position that has a lap/shoulder belt. Failure to use a three-point type seat belt with a booster seat can result in a serious injury in sudden stop or collision.**
- **Improper use or improper installation of a booster seat can increase the risk or severity of injury for both the child and other occupants of the vehicle and can lead to serious injury or death in an accident.**
- **Do not use towels, books, pillows or other items in place of a booster seat. Items such as these may move during normal driving or a collision and result in serious injury or death. Booster seats are designed to be used with a lap/shoulder belt. Booster seats are designed to properly route the lap and shoulder portions of the seat belt over the strongest portions of a child's body to provide the maximum protection during a collision.**

- **Follow all of the booster seat manufacturer's instructions for installation and use. When purchasing a booster seat, be sure to select one which will fit your child and vehicle. It may not be possible to properly install some types of booster seats in your vehicle.**
- **If the booster seat and seat belt is not used properly, the risk of a child being injured in a collision or a sudden stop greatly increases.**
- **Adjustable seatbacks should be positioned to fit the booster seat, but as up- right as possible.**
- **After placing the child in the booster seat and fastening the seat belt, make sure the shoulder portion of the belt is away from the child's face and neck and the lap portion of the belt does not cross the abdomen.**
- **Do not put the shoulder belt behind the child or under the child's arm. If you must install a booster seat in the front seat, see "BOOSTER SEAT INSTALLATION" later in this section.**
- **When your booster seat is not in use, keep it secured with a seat belt to prevent it from being thrown around in case of a sudden stop or accident.**

⚠ CAUTION

Remember that a booster seat left in a closed vehicle can become very hot. Check the seating surface and buckles before placing your child in the booster seat.

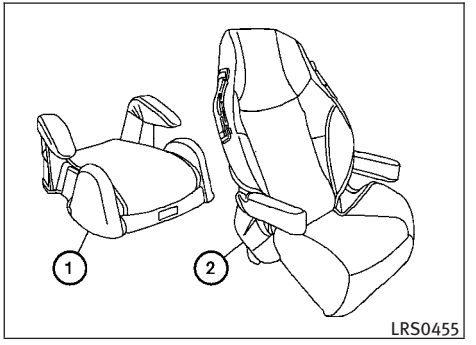

Booster seats of various sizes are offered by several manufacturers. When selecting any booster seat, keep the following points in mind:

- Choose only a booster seat with a label certifying that it complies with Federal Motor Vehicle Safety Standard 213 or Canadian Motor Vehicle Safety Standard 213.
- Check the booster seat in your vehicle to be sure it is compatible with the vehicle's seat and seat belt system.

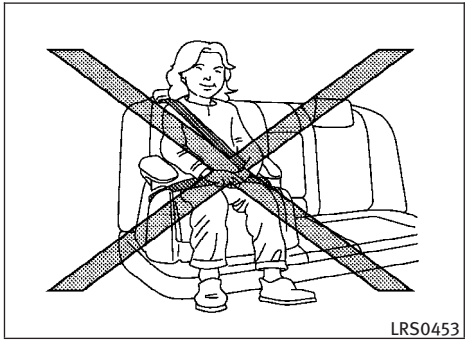

- Make sure the child's head will be properly supported by the booster seat or vehicle seat. The seatback must be at or above the center of the child's ears. For example, if a low back booster seat ① is chosen, the vehicle seatback must be at or above the center of the child's ears. If the seatback is lower than the center of the child's ears, a high back booster seat ② should be used.

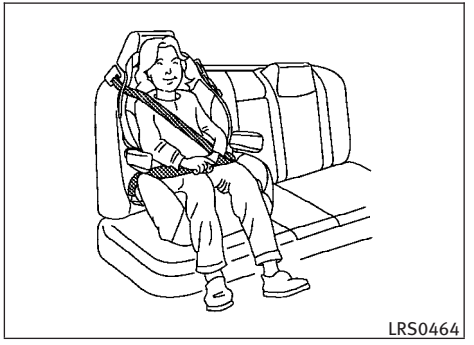

- If the booster seat is compatible with your vehicle, place your child in the booster seat and check the various adjustments to be sure the booster seat is compatible with your child. Always follow all recommended procedures.

All U.S. states and Canadian provinces or territories require that infants and small children be restrained in an approved child restraint at all times while the vehicle is being operated.

The instructions in this section apply to booster seat installation in the rear seats or the front passenger seat.

BOOSTER SEAT INSTALLATION

⚠ WARNING

INFINITI recommends that booster seats be installed in the rear seat. However, if you must install a booster seat in the front passenger seat, move the passenger's seat to the rearmost position.

⚠ CAUTION

Do not use the lap/shoulder belt Automatic Locking Retractor (ALR) mode when using a booster seat with the seat belts.

Follow these steps to install a booster seat in the rear seat or in the front passenger seat:

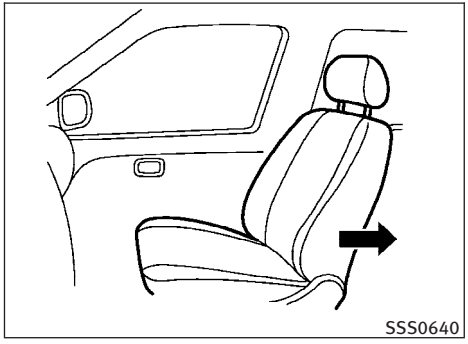

Front passenger seat

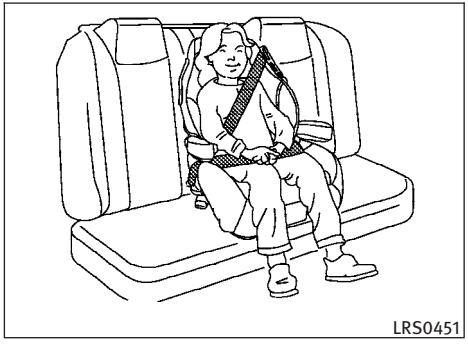

Rear center position

Rear outboard position

1. If your vehicle is equipped with rear power seat adjustment, adjust the rear outboard seats to the upright and rearmost position. (See “REAR SEATS” earlier in this section.)

   If you must install a booster seat in the front seat, move the seat to the rearmost position.

2. Position the booster seat on the seat. Only place it in a front-facing direction. Always follow the booster seat manufacturer’s instructions.

3. The booster seat should be positioned on the vehicle seat so that it is stable. If necessary, adjust or remove the head restraint to obtain the correct booster seat fit. (See “HEAD RESTRAINTS” earlier in this section.)

   If the head restraint is removed, store it in a secure place. Be sure to reinstall the head restraint when the booster seat is removed.

   If the seating position does not have an adjustable head restraint and it is interfering with the proper booster seat fit, try another seating position or a different booster seat.

4. Position the lap portion of the seat belt low and snug on the child’s hips. Be sure to follow the booster seat manufacturer’s instructions for adjusting the seat belt routing.

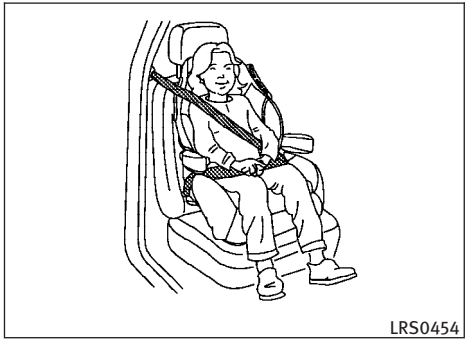

Front passenger seat

5. Pull the shoulder belt portion of the seat belt toward the retractor to take up extra slack. Be sure the shoulder belt is positioned across the top, middle portion of the child's shoulder. Be sure to follow the booster seat manufacturer's instructions for adjusting the seat belt routing.

6. Follow the warnings, cautions and instructions for properly fastening a seat belt shown in the "THREE-POINT TYPE SEAT BELT" earlier in this section.

7. If the booster seat is installed in the front passenger seat, push the ignition switch to the ON position. The front passenger air bag status light OFF 2 may or may not be illuminated depending on the size of the child and the type of booster seat used. (See "Front passenger air bag and status light" later in this section.)

PRECAUTIONS ON SUPPLEMENTAL RESTRAINT SYSTEM

This Supplemental Restraint System (SRS) section contains important information concerning the following systems:

- Driver and passenger supplemental front-impact air bag (INFINITI Advanced Air Bag System)
- Front seat-mounted side-impact supplemental air bag
- Roof-mounted curtain side-impact supplemental air bag
- Seat belt with pretensioner

Supplemental front-impact air bag system: The INFINITI Advanced Air Bag System can help cushion the impact force to the head and chest of the driver and front passenger in certain frontal collisions.

Front seat-mounted side-impact supplemental air bag system: This system can help cushion the impact force to the chest and pelvis area of the driver and front passenger in certain side impact collisions. The side air bags are designed to inflate on the side where the vehicle is impacted.

Roof-mounted curtain side-impact supplemental air bag system: This system can help cushion the impact force to the head of occupants in front and rear outboard seating positions in certain side impact collisions. The curtain air bags are designed to inflate on the side where the vehicle is impacted.

These supplemental restraint systems are designed to **supplement** the crash protection provided by the driver and passenger seat belts and are **not a substitute** for them. Seat belts should always be correctly worn and the occupant seated a suitable distance away from the steering wheel, instrument panel and door finishers. (See “SEAT BELTS” earlier in this section for instructions and precautions on seat belt usage.)

The supplemental air bags operate only when the ignition switch is in the ON position.

After pushing the ignition switch to the ON position, the supplemental air bag warning light illuminates. The supplemental air bag warning light will turn off after about 7 seconds if the systems are operational.

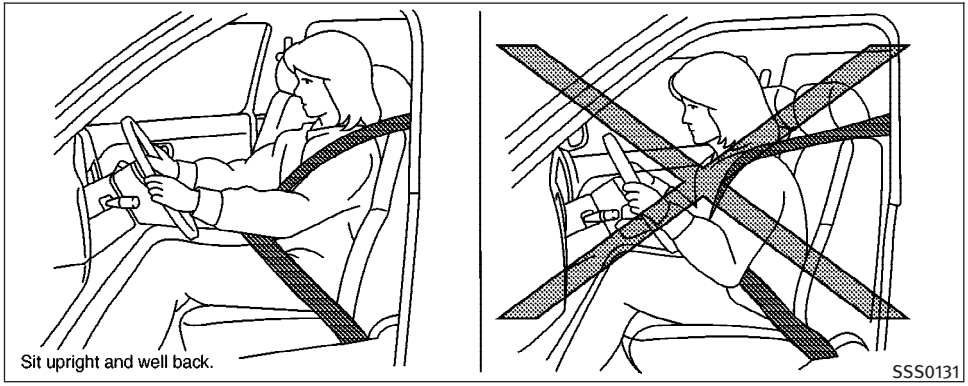

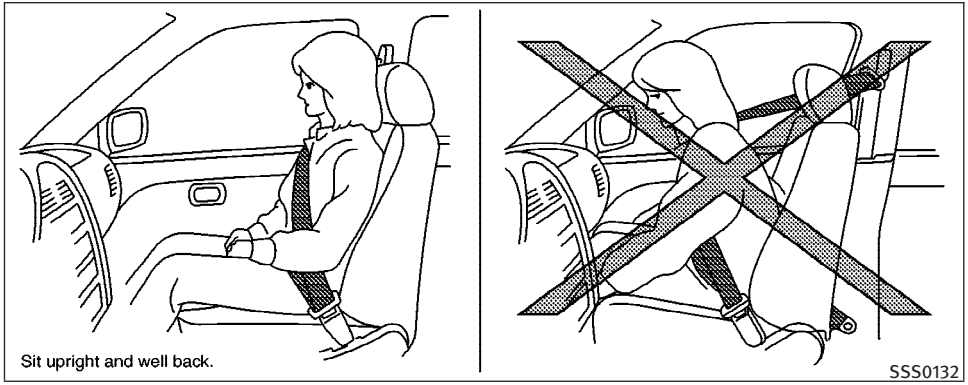

⚠ WARNING

- **The front air bags ordinarily will not inflate in the event of a side impact, rear impact, rollover, or lower severity frontal collision. Always wear your seat belts to help reduce the risk or severity of injury in various kinds of accidents.**
- **The front passenger air bag will not inflate if the passenger air bag status light is lit or if the front passenger seat is unoccupied. See "Front passenger air bag and status light" later in this section.**
- **The seat belts and the front air bags are most effective when you are sitting well back and upright in the seat with both feet on the floor. The front air bags inflate with great force. Even with the INFINITI advanced air bag system, if you are unrestrained, leaning forward, sitting sideways or out of position in any way, you are at greater risk of injury or death in a crash. You may also receive serious or fatal injuries from the front air bag if you are up against it when it inflates. Always sit back against the seatback and as far-away as practical from the steering wheel or instrument panel. Always use the seat belts.**

- **The driver and front passenger seat belt buckles are equipped with sensors that detect if the seat belts are fastened. The Advanced Air Bag System monitors the severity of a collision and seat belt usage then inflates the air bags. Failure to properly wear seat belts can increase the risk or severity of injury in an accident.**
- **The front passenger seat is equipped with an occupant classification sensor (pressure sensor) that turns the front passenger air bag OFF under some conditions. This sensor is only used in this seat. Failure to be properly seated and wearing the seat belt can increase the risk or severity of injury in an accident. See "Front passenger air bag and status light" later in this section.**
- **Keep hands on the outside of the steering wheel. Placing them inside the steering wheel rim could increase the risk that they are injured when the supplemental front air bag inflates.**

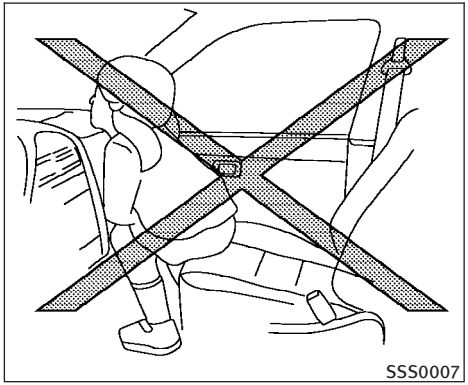
SSS0007

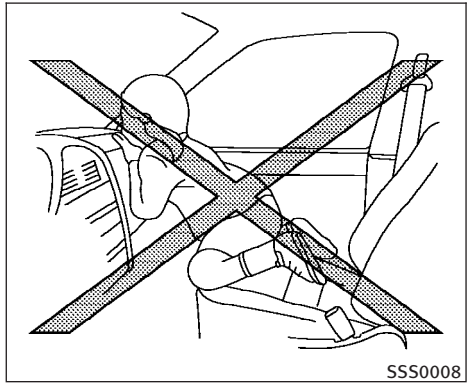
SSS0008

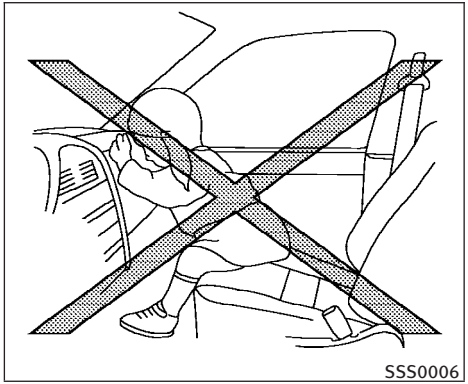
SSS0006

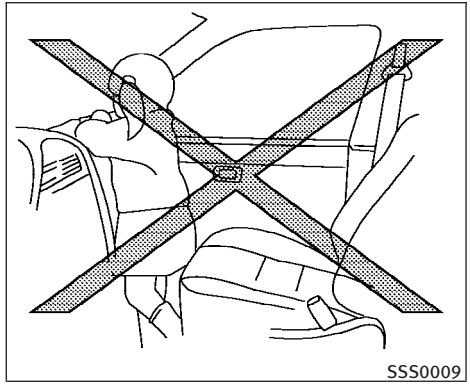
SSS0009

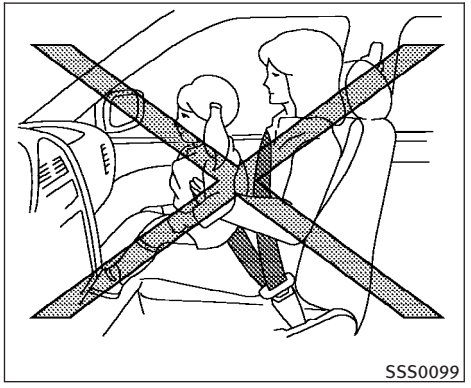
SSS0099

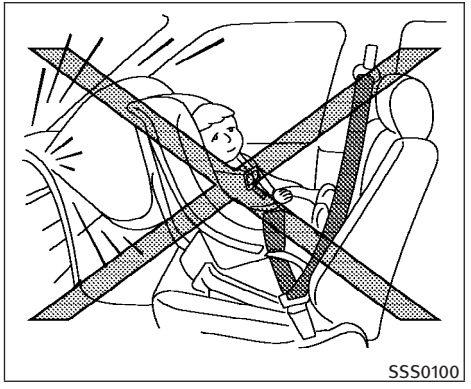
SSS0100

⚠ WARNING

- **Never let children ride unrestrained or extend their hands or face out of the window. Do not attempt to hold them in your lap or arms. Some examples of dangerous riding positions are shown in the illustrations.**
- **Children may be severely injured or killed when the front air bags, side air bags or curtain air bags inflate if they are not properly restrained. Pre-teens and children should be properly restrained in the rear seat, if possible.**
- **Even with the INFINITI Advanced Air Bag System, never install a rear-facing child restraint in the front seat. An inflating front air bag could seriously injure or kill your child. See "CHILD RESTRAINTS" earlier in this section for details.**

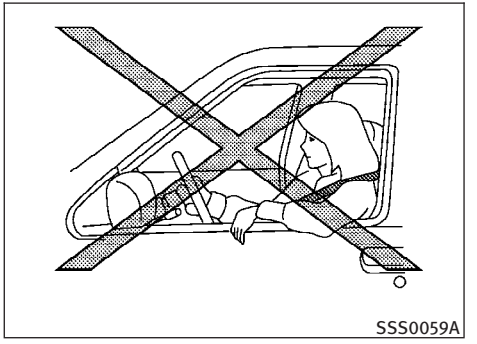
SSS0059A

Do not lean against doors or windows.

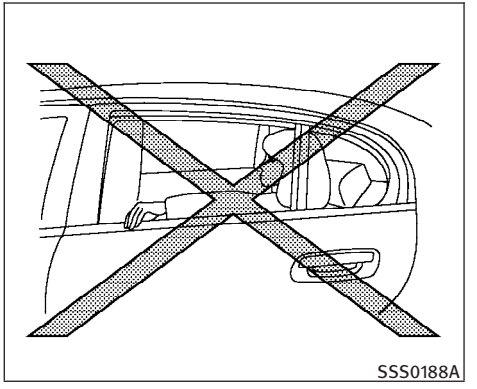
SSS0188A

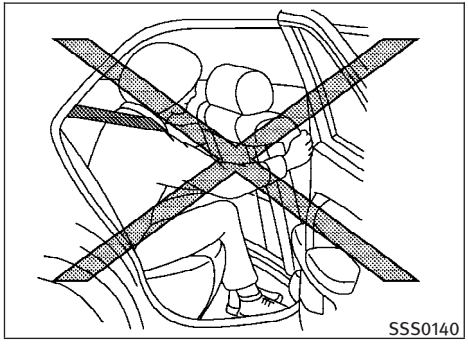

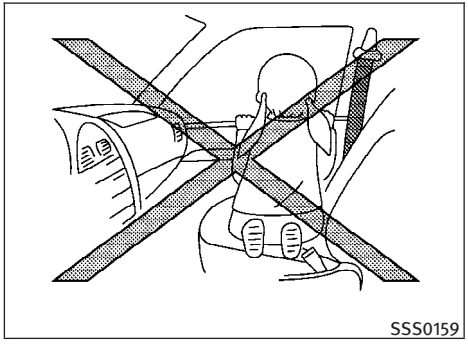

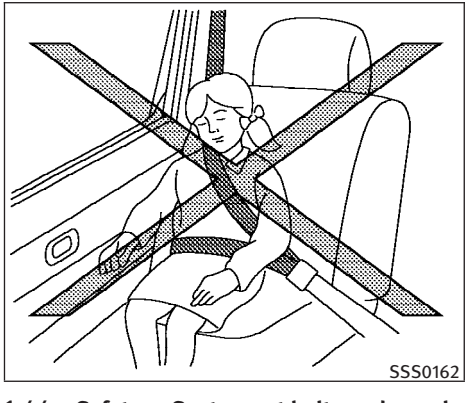

⚠ WARNING

Front seat-mounted side-impact supplemental air bags and roof-mounted curtain side-impact supplemental air bags:

- **The side air bags and curtain air bags ordinarily will not inflate in the event of a frontal impact, rear impact, rollover or lower severity side collision. Always wear your seat belts to help reduce the risk or severity of injury in various kinds of accidents.**
- **The seat belts, the side air bags and curtain air bags are most effective when you are sitting well back and upright in the seat with both feet on the floor. The side air bag and curtain air bag inflate with great force. Do not allow anyone to place their hand, leg or face near the side air bag on the side of the seatback of the front seat or near the side roof rails. Do not allow anyone sitting in the front seats or rear outboard seats to extend their hand out of the window or lean against the door. Some examples of dangerous riding positions are shown in the previous illustrations.**
- **When sitting in the rear seat, do not hold onto the seatback of the front seat. If the side air bag inflates, you may be seriously injured. Be especially careful with children, who should always be properly restrained. Some examples of dangerous riding positions are shown in the illustrations.**
- **Do not use seat covers on the front seatbacks. They may interfere with side air bag inflation.**

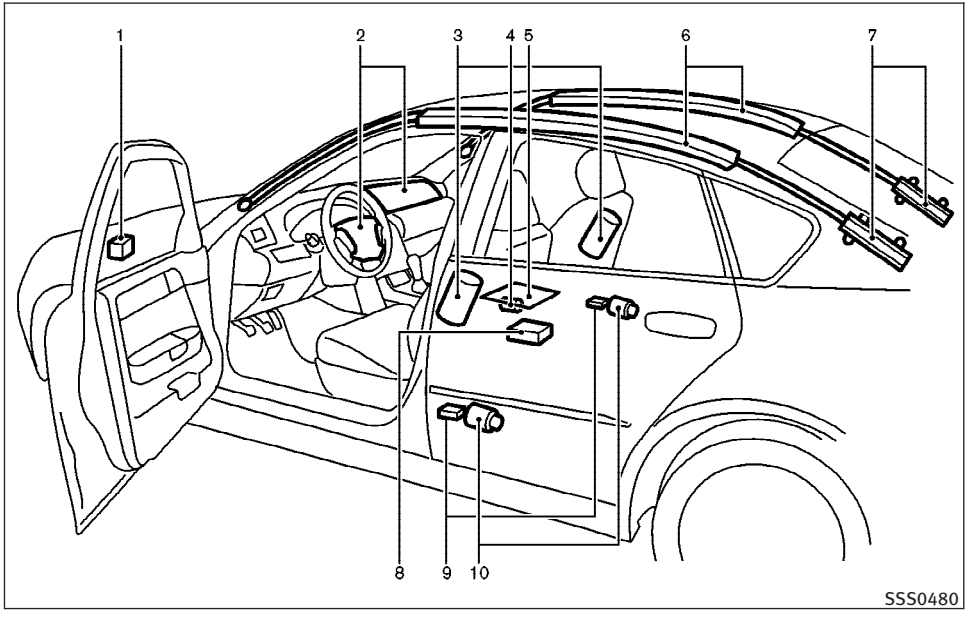

1. Crash zone sensor
2. Supplemental front-impact air bag modules
3. Front seat-mounted side-impact supplemental air bag modules
4. Occupant classification system control unit
5. Occupant classification sensor (pressure sensor)
6. Roof-mounted curtain side-impact supplemental air bags
7. Roof-mounted curtain side-impact supplemental air bags inflators
8. Air bag Control Unit (ACU)
9. Satellite sensors
10. Seat belt with pretensioners

INFINITI ADVANCED AIR BAG SYSTEM (front seats)

This vehicle is equipped with the INFINITI Advanced Air Bag System for the driver and front passenger seats. This system is designed to meet certification requirements under U.S. regulations. It is also permitted in Canada. **However, all of the information, cautions and warnings in this manual still apply and must be followed.**

The driver supplemental front-impact air bag is located in the center of the steering wheel. The passenger supplemental front-impact air bag is mounted in the instrument panel above the glove box. The front air bags are designed to inflate in higher severity frontal collisions, although they may inflate if the forces in another type of collision are similar to those of a higher severity frontal impact. They may not inflate in certain frontal collisions. Vehicle damage (or lack of it) is not always an indication of proper front air bag operation.

The INFINITI Advanced Air Bag System has dual stage inflators. The system monitors information from the crash zone sensor, the Air bag Control Unit (ACU), seat belt buckle switches, occupant classification sensor (pressure sensor) and passenger seat belt tension sensor. Inflator operation is based on the severity of a collision and seat belt usage for the driver. For the front passenger, it additionally monitors the weight of an occupant or object on the seat and seat belt tension. Based on information from the sensors, only one front air bag may inflate in a crash, depending on the crash severity and whether the front occupants are belted or unbelted. Additionally, the front passenger air bag may be automatically turned OFF under some conditions, depending on the weight detected on the passenger seat and how the seat belt is used. If the front passenger air bag is OFF, the passenger air bag status light will be illuminated (if the seat is unoccupied, the light will not be illuminated, but the air bag will be off). (See "Front passenger air bag and status light" later in this section for further details.) One front air bag inflating does not indicate improper performance of the system.

If you have any questions about your air bag system, contact INFINITI or an INFINITI retailer. If you are considering modification of your vehicle due to a disability, you may also contact INFINITI. Contact information is contained in the front of this Owner's Manual.

When a front air bag inflates, a fairly loud noise may be heard, followed by release of smoke. This smoke is not harmful and does not indicate a fire. Care should be taken not to inhale it, as it may cause irritation and choking. Those with a history of a breathing condition should get fresh air promptly.

Front air bags, along with the use of seat belts, help to cushion the impact force on the head and chest of the front occupants. They can help save lives and reduce serious injuries. However, an inflating front air bag may cause facial abrasions or other injuries. Front air bags do not provide restraint to the lower body.

Even with INFINITI advanced air bags, seat belts should be correctly worn and the driver and passenger seated upright as far as practical away from the steering wheel or instrument panel. The front air bags inflate quickly in order to help protect the front occupants. Because of this, the force of the front air bag inflating can increase the risk of injury if the occupant is too close to, or is against, the front air bag module during inflation.

The front air bags deflate quickly after a collision.

The front air bags operate only when the ignition switch is in the ON position.

After pushing the ignition switch to the ON position, the supplemental air bag warning light illuminates. The supplemental air bag warning light will turn off after about 7 seconds if the system is operational.

Front passenger air bag status light

Front passenger air bag and status light

⚠ WARNING

The front passenger air bag is designed to automatically turn OFF under some conditions. Read this section carefully to learn how it operates. Proper use of the seat, seat belt and child restraints is necessary for most effective protection. Failure to follow all instructions in this manual concerning the use of seats, seat belts and child restraints can increase the risk or severity of injury in an accident.

Status light :

The front passenger air bag status light OFF is located on the overhead console. The light operates as follows:

- Unoccupied passenger seat: The OFF light is OFF and the front passenger air bag is OFF and will not inflate in a crash.
- Passenger seat occupied by a small adult, child or child restraint as outlined in this section: The OFF light illuminates to indicate that the front passenger air bag is OFF and will not inflate in a crash.
- Occupied passenger seat and the passenger meets the conditions outlined in this section: The OFF light is OFF to indicate that the front passenger air bag is operational.

Front passenger air bag :

The front passenger air bag is designed to automatically turn OFF when the vehicle is operated under some conditions as described below as permitted by U.S. regulations. If the front passenger air bag is OFF, it will not inflate in a crash. The driver air bag and other air bags in your vehicle are not part of this system.

The purpose of the regulation is to help reduce the risk of injury or death from an inflating air bag to certain front passenger seat occupants, such as children, by requiring the air bag to be automatically turned OFF. Certain sensors are used to meet the requirements.

One sensor used is the occupant classification sensor (pressure sensor). It is in the bottom of the front passenger seat cushion and is designed to detect an occupant and objects on the seat by weight. It works together with seat belt sensors described later. For example, if a child is in the front passenger seat, the Advanced Air Bag System is designed to turn the passenger air bag OFF in accordance with the regulations. Also, if a child restraint of the type specified in the regulations is on the seat, its weight and the child's weight can be detected and cause the air bag to turn OFF. The occupant classification sensor operation can vary depending on the front passenger seat belt sensors.

The front passenger seat belt sensors are designed to detect if the seat belt is buckled and the amount of tension on the seat belt, such as when it is in the Automatic Locking Retractor (ALR) mode (child restraint mode). Based on the weight on the seat detected by the occupant classification sensor and the belt tension detected on the seat belt, the Advanced Air Bag System determines whether the front passenger air bag should be automatically turned OFF as required by the regulations.

Front passenger seat adult occupants who are properly seated and using the seat belt as outlined in this manual should not cause the passenger air bag to be automatically turned OFF. For small adults it may be turned OFF, however, if the occupant takes his/her weight off the seat cushion (for example, by not sitting upright, by sitting on an edge of the seat, or by otherwise being out of position), this could cause the sensor to turn the air bag OFF. In addition, if the occupant improperly uses the seat belt in the ALR mode, this could cause the air bag to be turned OFF. Always be sure to be seated and wearing the seat belt properly for the most effective protection by the seat belt and supplemental air bag.

INFINITI recommends that pre-teens and children be properly restrained in a rear seat. INFINITI also recommends that appropriate child restraints and booster seats be properly installed in a rear seat. If this is not possible, the occupant classification sensor and seat belt sensors are designed to operate as described above to turn the front passenger air bag OFF for specified child restraints as required by the regulations. Failing to properly secure child restraints and to use the ALR mode may allow the restraint to tip or move in an accident or sudden stop. This can also result in the passenger air bag inflating in a crash instead of being OFF. (See “CHILD RESTRAINTS” earlier in this section for proper use and installation.)

If the front passenger seat is not occupied, the passenger air bag is designed not to inflate in a crash. However, heavy objects placed on the seat could result in air bag inflation, because of the object’s weight detected by the occupant classification sensor. Other conditions could also result in air bag inflation, such as if a child is standing on the seat, or if two children are on the seat, contrary to the instructions in this manual. Always be sure that you and all vehicle occupants are seated and restrained properly.

Using the passenger air bag status light, you can monitor when the front passenger air bag is automatically turned OFF with the seat occupied. The light will not illuminate when the front passenger seat is unoccupied.

If an adult occupant is in the seat but the passenger air bag status light is illuminated (indicating that the air bag is OFF), it could be that the person is a small adult, or is not sitting on the seat properly or not using the seat belt properly.

If a child restraint must be used in the front seat, the passenger air bag status light may or may not be illuminated, depending on the size of the child and the type of child restraint being used. If the passenger air bag status light is not illuminated (indicating that the air bag might inflate in a crash), it could be that the child restraint or seat belt is not being used properly. Make sure that the child restraint is installed properly, the seat belt is used properly and the occupant is positioned properly. If the passenger air bag status light is not illuminated, reposition the occupant or child restraint in a rear seat.

If the passenger air bag status light will not illuminate even though you believe that the child restraint, the seat belts and the occupant are properly positioned, the system may be sensing an unoccupied seat (in which case the air bag is OFF). Your INFINITI retailer can check that the system is OFF by using a special tool. However, until you have confirmed with your retailer that your air bag is working properly, reposition the occupant or child restraint in a rear seat.

The INFINITI advanced air bag system and passenger air bag status light will take a few seconds to register a change in the passenger seat status. For example, if a large adult who is sitting in the front passenger seat exits the vehicle, the passenger air bag status light will change from OFF to ON for a few seconds and then to OFF. This is normal system operation and does not indicate a malfunction.

If a malfunction occurs in the front passenger air bag system, the supplemental air bag warning light , located in the meter and gauges area, will blink. Have the system checked by an INFINITI retailer.

Other supplemental front-impact air bag precautions

WARNING

- **Do not place any objects on the steering wheel pad or on the instrument panel. Also, do not place any objects between any occupant and the steering wheel or instrument panel. Such objects may become dangerous projectiles and cause injury if the front air bag inflates.**
- **Immediately after inflation, several front air bag system components will be hot. Do not touch them; you may severely burn yourself.**
- **No unauthorized changes should be made to any components or wiring of the supplemental air bag system. This is to prevent accidental inflation of the supplemental air bag or damage to the supplemental air bag system.**
- **Do not make unauthorized changes to your vehicle's electrical system, suspension system or front end structure. This could affect proper operation of the front air bag system.**
- **Tampering with the air bag system may result in serious personal injury. Tampering includes changes to the steering wheel and the instrument panel assembly by placing material over the steering wheel pad and above the instrument panel or by installing additional trim material around the air bag system.**
- **Modifying or tampering with the front passenger seat may result in serious personal injury. For example, do not change the front seats by placing material on the seat cushion or by installing additional trim material, such as seat covers, on the seat that is not specifically designed to assure proper air bag operation. Additionally, do not stow any objects under the front passenger seat or the seat cushion and seatback. Such objects may interfere with the proper operation of the occupant classification sensor (pressure sensor).**
- **No unauthorized changes should be made to any components or wiring of the seat belt system. This may affect the front air bag system. Tampering with the seat belt system may result in serious personal injury.**
- **Maintenance on and around the front air bag system should be done by an INFINITI retailer. Installation of electrical equipment should also be done by an INFINITI retailer. The Supplemental Restraint System (SRS) wiring harnesses* should not be modified or disconnected. Unauthorized electrical test equipment and probing devices should not be used on the air bag system.**
- **A cracked windshield should be replaced immediately by a qualified repair facility. A cracked windshield could affect the function of the supplemental air bag system.**

*** The SRS wiring harness connectors are yellow and orange for easy identification.**

When selling your vehicle, we request that you inform the buyer about the front air bag system and guide the buyer to the appropriate sections in this Owner's Manual.

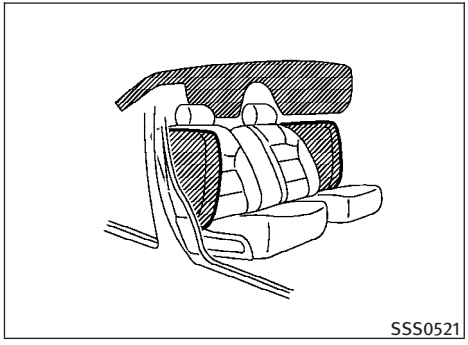

FRONT SEAT-MOUNTED SIDE-IMPACT SUPPLEMENTAL AIR BAGS AND ROOF-MOUNTED CURTAIN SIDE-IMPACT SUPPLEMENTAL AIR BAG SYSTEMS

The side air bags are located in the outside of the seatback of the front seats. The curtain air bags are located in the side roof rails. These systems are designed to meet voluntary guidelines to help reduce the risk of injury to out-of-position occupants. **However, all of the information, cautions and warnings in this manual still apply and must be followed.** The side air bags and curtain air bags are designed to inflate in higher severity side collisions, although they may inflate if the forces in another type of collision are similar to those of a higher severity side impact. They are designed to inflate on the side where the vehicle is impacted. They may not inflate in certain side collisions on the side where the vehicle is impacted.

Vehicle damage (or lack of it) is not always an indication of proper side air bag and curtain air bag operation.

When the side air bags and curtain air bags inflate, a fairly loud noise may be heard, followed by release of smoke. This smoke is not harmful and does not indicate a fire. Care should be taken not to inhale it, as it may cause irritation and choking. Those with a history of a breathing condition should get fresh air promptly.

Side air bags, along with the use of seat belts, help to cushion the impact force on the chest and pelvic area of the front occupants. Curtain air bags help to cushion the impact force to the head of occupants in the front and rear outboard seating positions. They can help save lives and reduce serious injuries. However, an inflating side air bag and curtain air bag may cause abrasions or other injuries. Side air bags and curtain air bags do not provide restraint to the lower body.

The seat belts should be correctly worn and the driver and passenger seated upright as far as practical away from the side air bag. Rear seat passengers should be seated as far away as practical from the door finishers and side roof rails. The side air bags and curtain air bags inflate quickly in order to help protect the occupants. Because of this, the force of the side air bag and curtain air bag inflating can increase the risk of injury if the occupant is too close to, or is against, these air bag modules during inflation. The side air bag and curtain air bag will deflate quickly after the collision is over.

The side air bags and curtain air bags operate only when the ignition switch is in the ON position.

After pushing the ignition switch to the ON position, the supplemental air bag warning light illuminates. The supplemental air bag warning light will turn off after about 7 seconds if the systems are operational.

⚠ WARNING

- **Do not place any objects near the seatback of the front seats. Also, do not place any objects (an umbrella, bag, etc.) between the front door finisher and the front seat. Such objects may become dangerous projectiles and cause injury if a side air bag inflates.**

- **Right after inflation, several side air bag and curtain air bag system components will be hot. Do not touch them; you may severely burn yourself.**
- **No unauthorized changes should be made to any components or wiring of the side air bag and curtain air bag systems. This is to prevent damage to or accidental inflation of the side air bag and curtain air bag systems.**
- **Do not make unauthorized changes to your vehicle's electrical system, suspension system or side panel. This could affect proper operation of the side air bag and curtain air bag systems.**
- **Tampering with the side air bag system may result in serious personal injury. For example, do not change the front seats by placing material near the seatbacks or by installing additional trim material, such as seat covers, around the side air bag.**
- **Work around and on the side air bag and curtain air bag system should be done by an INFINITI retailer. Installation of electrical equipment should also be done by an INFINITI retailer. The Supplemental Restraint System (SRS) wiring harnesses* should not be modified or disconnected. Unauthorized electrical test equipment and probing devices should not be used on the side air bag or curtain air bag system.**

*** The SRS wiring harness connectors are yellow and orange for easy identification.**

When selling your vehicle, we request that you inform the buyer about the side air bag and curtain air bag systems and guide the buyer to the appropriate sections in this Owner's Manual.

SEAT BELTS WITH PRETENSIONERS (front seats)

⚠ WARNING

- **The pretensioners cannot be reused after activation. They must be replaced together with the retractor and buckle as a unit.**
- **If the vehicle becomes involved in a frontal collision but a pretensioner is not activated, be sure to have the pretensioner system checked and, if necessary, replaced by an INFINITI retailer.**
- **No unauthorized changes should be made to any components or wiring of the pretensioner system. This is to prevent damage to or accidental activation of the pretensioners. Tampering with the pretensioner system may result in serious personal injury.**
- **Work around and on the pretensioner system should be done by an INFINITI retailer. Installation of electrical equipment should also be done by an INFINITI retailer. Unauthorized electrical test equipment and probing devices should not be used on the pretensioner system.**

- **If you need to dispose of a pretensioner or scrap the vehicle, contact an INFINITI retailer. Correct pretensioner disposal procedures are set forth in the appropriate INFINITI Service Manual. Incorrect disposal procedures could cause personal injury.**

The pretensioner system activates in conjunction with the front air bag system. Working with the seat belt retractor, it helps tighten the seat belt when the vehicle becomes involved in certain types of collisions, helping to restrain front seat occupants.

The pretensioner is encased with the seat belt retractor. These seat belts are used the same way as conventional seat belts.

When a pretensioner activates, smoke is released and a loud noise may be heard. The smoke is not harmful, and it does not indicate a fire. Care should be taken not to inhale it as it may cause irritation and choking. Those with a history of a breathing condition should get fresh air promptly.

After pretensioner activation, load limiters allow the seat belt to release webbing (if necessary) to reduce forces against the chest.

If any abnormality occurs in the pretensioner system, the supplemental air bag warning light will not come on, will flash intermittently or will turn on for 7 seconds and remain on after the ignition switch has been pushed to the ON position. In this case, the pretensioner system may not function properly. They must be checked and repaired. Take your vehicle to the nearest INFINITI retailer.

When selling your vehicle, we request that you inform the buyer about the pretensioner system and guide the buyer to the appropriate sections in this Owner's Manual.

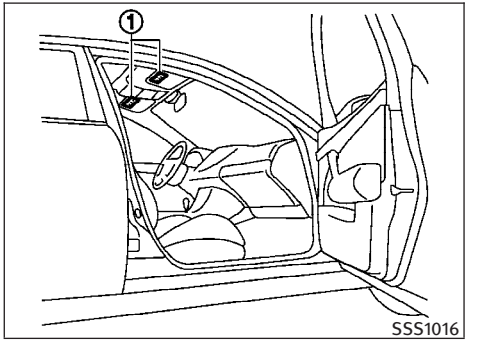

SUPPLEMENTAL AIR BAG WARNING LABELS

Warning labels about the supplemental front-impact air bag are placed in the vehicle as shown in the illustration.

① SRS air bag

The warning labels are located on the surface of the sun visors.

SUPPLEMENTAL AIR BAG WARNING LIGHT

The supplemental air bag warning light, displaying in the instrument panel, monitors the circuits of the supplemental front-impact air bag, front seat-mounted side-impact supplemental air bag, roof-mounted curtain side-impact supplemental air bag and seat belt pretensioner systems. The monitored circuits include the Air bag Control Unit (ACU), satellite sensors, occupant classification system, crash zone sensor, front air bag modules, side air bag modules, curtain air bag modules, pretensioners and all related wiring.

When the ignition switch is in the ON position, the supplemental air bag warning light illuminates for about 7 seconds and then turns off. This means the system is operational.

If any of the following conditions occur, the front air bag, side air bag, curtain air bag and pretensioner systems need servicing:

- The supplemental air bag warning light remains on after approximately 7 seconds.
- The supplemental air bag warning light flashes intermittently.
- The supplemental air bag warning light does not come on at all.

Under these conditions, the front air bag, side air bag, curtain air bag or pretensioner systems may not operate properly. They must be checked and repaired. Take your vehicle to the nearest INFINITI retailer.

⚠ WARNING

If the supplemental air bag warning light is on, it could mean that the front air bag, side air bag, curtain air bag and/or pretensioner systems will not operate in an accident. To help avoid injury to yourself or others, have your vehicle checked by a retailer as soon as possible.

REPAIR AND REPLACEMENT PROCEDURE

The front air bags, side air bags, curtain air bags and pretensioners are designed to activate on a one-time-only basis. As a reminder, unless it is damaged, the supplemental air bag warning light will remain illuminated after inflation has occurred. Repair and replacement of these systems should be done only by an INFINITI retailer.

When maintenance work is required on the vehicle, the front air bags, side air bags, curtain air bags, pretensioners and related parts should be pointed out to the person conducting the maintenance. The ignition switch should always be in the LOCK position when working under the hood or inside the vehicle.

⚠ WARNING

- **Once a front air bag, side air bag or curtain air bag has inflated, the air bag module will not function again and must be replaced. Additionally, if any of the front air bags inflate, the activated pretensioner system must also be replaced. The air bag module and pretensioners should be replaced by an INFINITI retailer. The air bag modules and pretensioner system cannot be repaired.**

- **The front air bag, side air bag and curtain air bag systems and pretensioner system should be inspected by an INFINITI retailer if there is any damage to the front end or side portion of the vehicle.**
- **If you need to dispose of the supplemental air bag, pretensioner systems or scrap the vehicle, contact an INFINITI retailer. Correct supplemental air bag and pretensioner system disposal procedures are set forth in the appropriate INFINITI Service Manual. Incorrect disposal procedures could cause personal injury.**

MEMO

2 Instruments and controls

Cockpit 2-2
Instrument panel 2-3
Meters and gauges 2-5
Speedometer and odometer 2-6
Tachometer 2-6
Engine coolant temperature gauge 2-7
Fuel gauge 2-7
Meter/ring illumination and needle sweep 2-8
Compass (if so equipped) 2-9
Zone variation change procedure 2-10
Warning/indicator lights and audible reminders 2-12
Checking bulbs 2-13
Warning lights 2-13
Indicator lights 2-18
Audible reminders 2-20
Dot matrix liquid crystal display 2-21
Indicators for operation 2-22
Security systems 2-24
Vehicle security system 2-24
INFINITI Vehicle Immobilizer System 2-25
Windshield wiper and washer switch 2-27
Rain-sensing auto wiper system 2-28
Rear window and outside mirror defroster switch . . . 2-28
Headlight and turn signal switch 2-29
Xenon headlights 2-29
Headlight switch 2-29
Turn signal switch 2-33
Fog light switch 2-33
Hazard warning flasher switch 2-33
Horn 2-34
Heated seats (rear seats) (if so equipped) 2-34
Climate controlled seats (front seats) 2-35
Lane Departure Warning (LDW) switch
(if so equipped) 2-36
SNOW mode switch (if so equipped) 2-37
Vehicle Dynamic Control (VDC) OFF switch 2-37
Clock 2-38
Adjusting the time 2-38
Power outlets 2-38
Cigarette lighter and ashtrays 2-39
Front 2-39
Rear 2-39
Storage 2-40
Cup holders 2-40
Sunglasses holder 2-41
Glove box 2-41

Console box 2-42
Coat hooks 2-43
Cargo net (if so equipped) 2-43
Windows 2-43
Power windows 2-43
Moonroof 2-46
Automatic moonroof 2-46
Rear control cancel switch (if so equipped) 2-47
Rear sunshade (if so equipped) 2-47
Interior lights 2-48
Map lights 2-49
Personal lights 2-49
Interior light control switch 2-49
Vanity mirror lights 2-50
Trunk light 2-51
HomeLink® Universal Transceiver 2-51
Programming HomeLink® 2-51
Programming HomeLink® for Canadian customers 2-53
Operating the HomeLink® Universal Transceiver 2-53
Programming trouble-diagnosis 2-54
Clearing the programmed information 2-54
Reprogramming a single HomeLink® button 2-54
If your vehicle is stolen 2-54

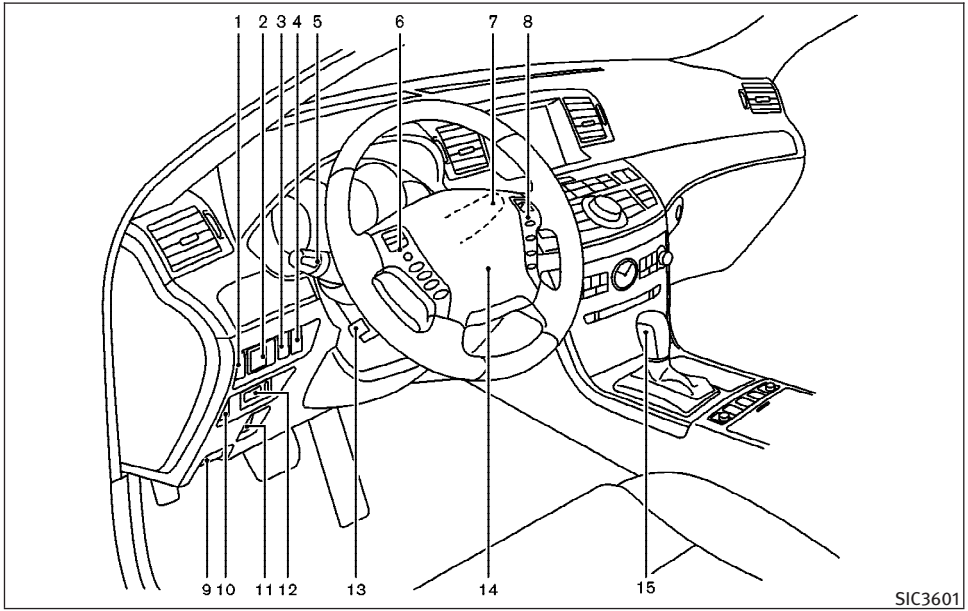

1. Instrument brightness control switch (P. 2-32)
2. Outside mirror remote control switch (P. 3-24)
3. Adaptive Front lighting System (AFS) switch (P. 2-31)
4. Vehicle Dynamic Control (VDC) OFF switch (P. 2-37)
5. Headlight, fog light and turn signal switch (P. 2-29)
6. Steering-wheel-mounted controls (left side)
   — ENTER switch (if so equipped) (P. 4-6, P. 4-58)
   — For audio system (P. 4-58)
   — For phone system (P. 4-74, P. 4-84)
   — For voice recognition system (if so equipped) (P. 4-98)
7. Windshield wiper and washer switch (P. 2-27)
8. Steering-wheel-mounted controls (right side)
   — Cruise control switches (P. 5-23)
   — Intelligent Cruise Control (ICC) switches (if so equipped) (P. 5-25)
   — Lane Departure Prevention (LDP) switch (if so equipped) (P. 5-16)
9. Hood release handle (P. 3-17)
10. Trunk lid release switch (P. 3-18)
11. Lane Departure Warning (LDW) switch (if so equipped) (P. 2-36, P. 5-16)
12. Intelligent Key port (P. 5-9)
13. Tilting/telescopic steering wheel switch (P. 3-22)
14. Steering wheel
    — Horn (P. 2-34)
    — Driver supplemental air bag (P. 1-40)
15. Automatic Transmission (AT) selector lever (P. 5-11)

INSTRUMENT PANEL

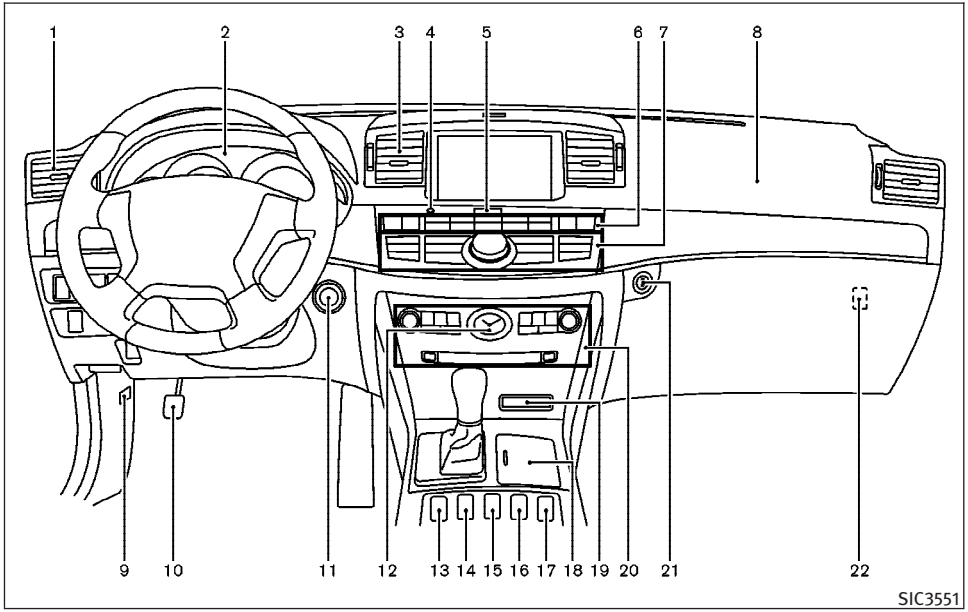

1. Side ventilator (P. 4-28)
2. Meters and gauges (P. 2-5)
3. Center ventilator (P. 4-28)
4. Security indicator light (P. 2-26)
5. Hazard warning flasher switch (P. 2-33)
6. Automatic climate control system (P. 4-29)
7. Center multi-function control panel
   — Navigation system* (if so equipped)
   — Vehicle information and setting buttons (P. 4-7) — Phone system (P. 4-74, P. 4-84)
   — Audio system (P. 4-34)
8. Front passenger supplemental air bag (P. 1-40)
9. Fuse box cover (P. 8-25)
10. Parking brake
    — Operation (P. 5-16)
    — Parking (P. 5-48)
11. Push-button ignition switch (P. 5-8)
12. Clock (P. 2-38)
13. Climate controlled seat switch (if so equipped) (P. 2-35)
14. Snow mode switch (if so equipped) (P. 2-37)
15. Rear sunshade switch (if so equipped) (P. 2-47)
16. Rear control cancel switch (if so equipped) (P. 2-47) or Climate controlled seat switch (if so equipped) (P. 2-35)
17. Climate controlled seat switch (if so equipped) (P. 2-35)
18. Cigarette lighter and ashtrays (P. 2-39)
19. CompactFlash card slot (if so equipped) (P. 4-34)

20. Audio system (P. 4-34)
21. Glove box lid release button (P. 2-41)
22. Trunk release power cancel switch (P. 3-19)

*: Refer to the separate Navigation System Owner's Manual.

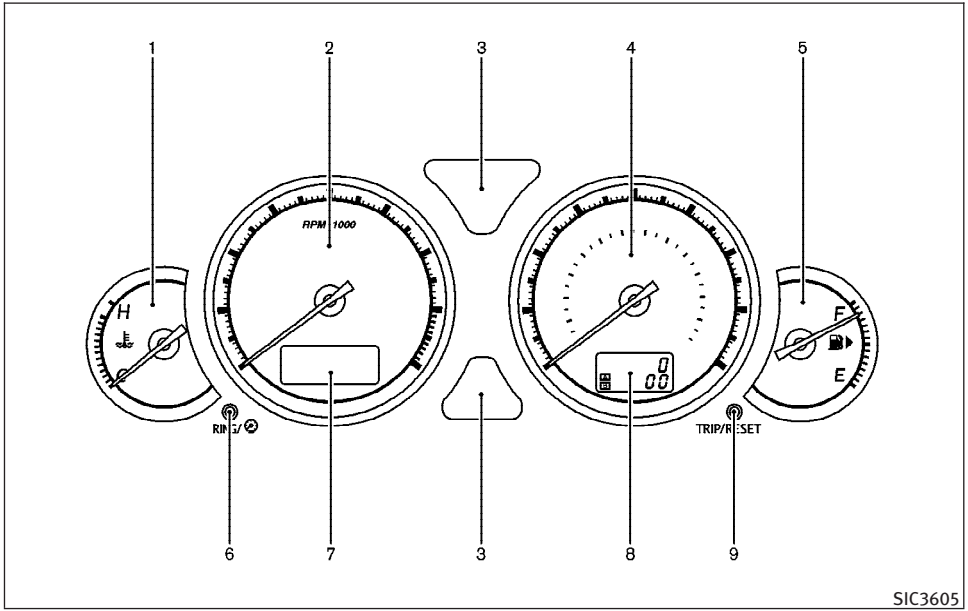

1. Engine coolant temperature gauge*
2. Tachometer*
3. Warning/Indicator lights
4. Speedometer*
5. Fuel gauge*
6. Meter illumination control knob
7. Dot matrix liquid crystal display
8. Odometer/twin trip odometer
9. TRIP/RESET knob for twin trip odometer

***: The needle indicators in the meters and gauges may move slightly after the ignition switch is pushed to the LOCK position. This is not a malfunction.**

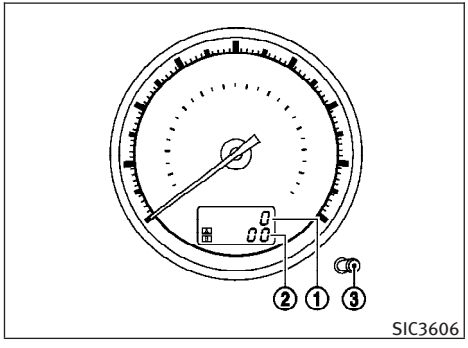

SPEEDOMETER AND ODOMETER

Speedometer

The speedometer indicates vehicle speed in miles per hour (MPH) and kilometers per hour (km/h).

Odometer/twin trip odometer

The odometer ① and twin trip odometer ② are displayed when the ignition switch is in the ON position.

The odometer records the total distance the vehicle has been driven.

The twin trip odometer records the distance of individual trips.

Changing the display :

Pushing the TRIP/RESET knob ③ at the bottom right of the combination meter panel changes the display as follows:

TRIP A → TRIP B → TRIP A

Resetting the trip odometer :

Pushing the TRIP/RESET switch ③ for more than 1 second resets the trip odometer to zero.

Average fuel economy and distance to empty information is also available. (See “HOW TO USE STATUS BUTTON” in the “4. Monitor, climate, audio, phone and voice recognition systems” section.)

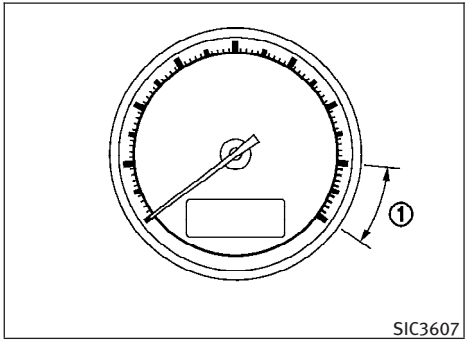

TACHOMETER

The tachometer indicates engine speed in revolutions per minute (RPM). **Do not rev the engine into the red zone ①.**

The scale length and the red zone vary with the engine model.

⚠ CAUTION

When engine speed approaches the red zone, shift to a higher gear or reduce engine speed. Operating the engine in the red zone may cause serious engine damage.

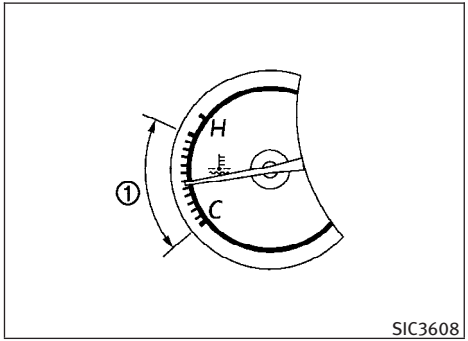

ENGINE COOLANT TEMPERATURE GAUGE

The gauge indicates the engine coolant temperature.

The engine coolant temperature is within the normal range when the gauge needle points within the zone ① shown in the illustration.

The engine coolant temperature varies with the outside air temperature and driving conditions.

⚠ CAUTION

If the gauge indicates engine coolant temperature near the hot (H) end of the normal range, reduce vehicle speed to decrease temperature. If gauge is over the normal range, stop the vehicle as soon as safely possible. If the engine is overheated, continued operation of the vehicle may seriously damage the engine. See "IF YOUR VEHICLE OVERHEATS" in the "6. In case of emergency" section for immediate action required.

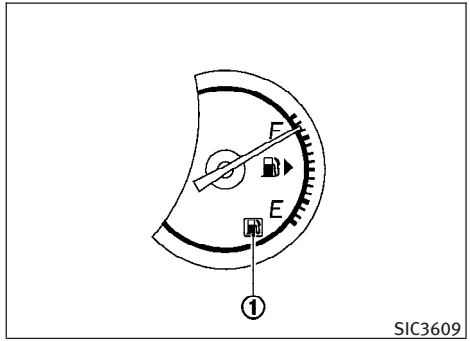

FUEL GAUGE

The gauge indicates the **approximate** fuel level in the tank.

The gauge may move slightly during braking, turning, acceleration, or going up or down hills.

The gauge needle returns to E (Empty) after the ignition switch is pushed to the LOCK position.

Refill the fuel tank before the gauge registers "E" (Empty).

The low fuel warning ⛽ ① appears when the fuel tank is getting low. Refuel as soon as it is convenient, preferably before the gauge

reaches “E”. There will be a small reserve of fuel in the tank when the fuel gauge needle reaches “E”.

The ⛽▶ indicates that the fuel-filler door is located on the passenger’s side of the vehicle.

⚠ CAUTION

- **If the vehicle runs out of fuel, the SERVICE ENGINE SOON malfunction indicator light (MIL) may come on. Refuel as soon as possible. After a few driving trips, the SERVICE ENGINE SOON light should turn off. If the light remains on after a few driving trips, have the vehicle inspected by an INFINITI retailer.**
- **For additional information, see “Malfunction Indicator Light (MIL)” later in this section.**

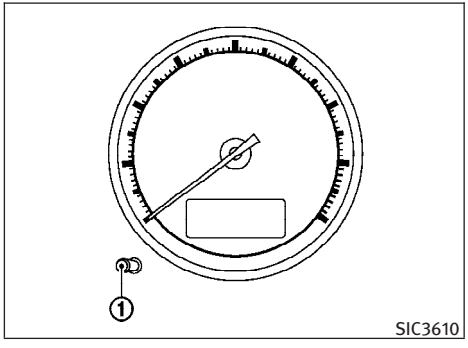

METER/RING ILLUMINATION AND NEEDLE SWEEP

The ring illumination surrounding meters and gauges illuminates when the driver’s door is closed after getting into the vehicle with the Intelligent Key carried in.

When the engine is started, the indicator needles will sweep in the speedometer and tachometer and the ring illumination will be brightened gradually.

Meter illumination control knob

The meter illumination control knob ① operates when the headlight switch is in the AUTO (not lighting) or OFF position with the ignition switch in the ON position.

To adjust the brightness of the meters, push the control knob several times until the desired brightness is achieved.

To turn the ring illumination and needle sweep on and off, push the control knob and hold it for 1 second.

COMPASS (if so equipped)

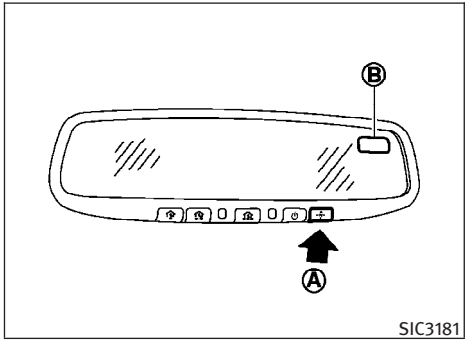

When the ignition switch is pushed to the ON position, the compass display Ⓑ will indicate the direction of the vehicle's heading.

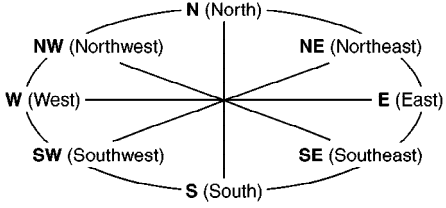

If the display reads "C", calibrate the compass by driving the vehicle in 3 complete circles at less than 5 MPH (8 km/h). You can also calibrate the compass by driving your vehicle on your everyday route. The compass will be calibrated once it has tracked 3 complete circles.

To turn on and off the compass manually, push the -N- switch Ⓐ while the ignition switch is in the ON position.

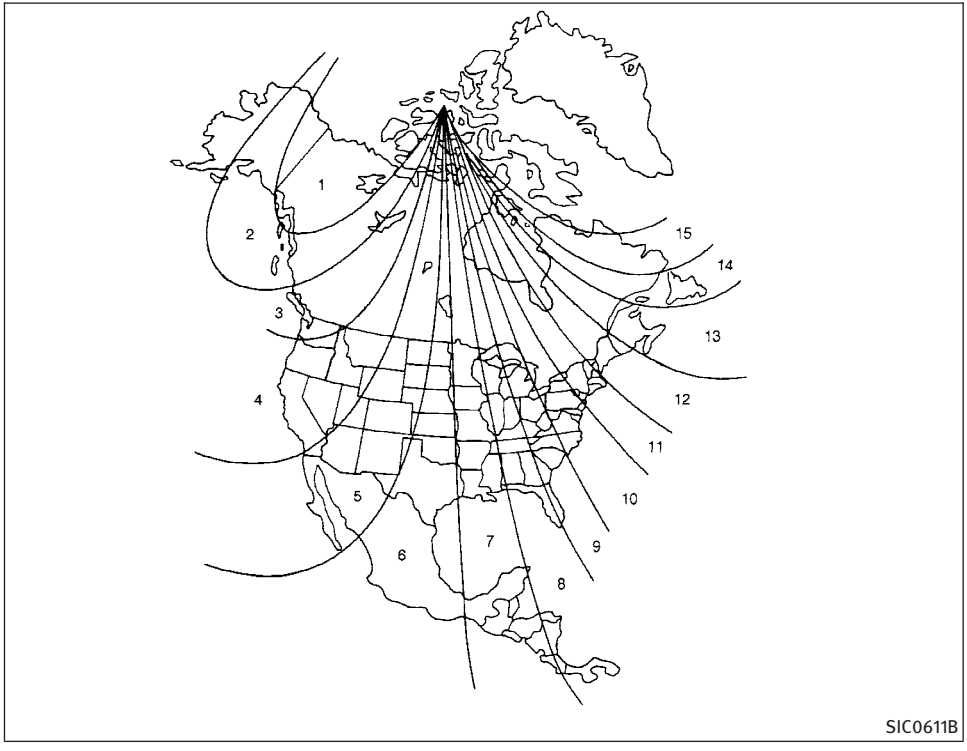

Zone map

ZONE VARIATION CHANGE PROCEDURE

The difference between magnetic north and geographical north is known as variance. In some areas, this difference can sometimes be great enough to cause false compass readings. Follow these instructions to set the variance for your particular location if this happens:

1. Push the N switch for more than 3 seconds. The current zone number will appear in the display.
2. Find your current location and variance number on the zone map.

NOTE:

Use zone number 5 for Hawaii.

3. Push the N switch repeatedly until the new zone number appears in the display, then release the switch. After you release the switch, the display will show a compass direction within a few seconds.

- If the compass deviates from the correct indication soon after repeated adjustment, have the compass checked at an INFINITI retailer.
- The compass may not indicate the correct compass point in tunnels or while driving up

or down a steep hill. (The compass returns to the correct compass point when the vehicle moves to an area where the geomagnetism is stabilized.)

⚠ CAUTION

- **Do not install a ski rack, antenna, etc., which are attached to the vehicle by means of a magnet. They affect the operation of the compass.**
- **When cleaning the mirror, use a paper towel or similar material dampened with glass cleaner. Do not spray glass cleaner directly on the mirror as it may cause the liquid cleaner to enter the mirror housing.**

WARNING/INDICATOR LIGHTS AND AUDIBLE REMINDERS

AWD	All-Wheel Drive (AWD) warning light (AWD models)*		Lane departure warning light (orange)*	SET	Cruise set switch indicator light
ABS	Anti-lock Braking System (ABS) warning light		Low fuel warning light	OFF	Front passenger air bag status light
			Low tire pressure warning light		High beam indicator light
AT CHECK	Automatic Transmission (AT) check warning light		Low washer fluid warning light	CRUISE	Intelligent Cruise Control (ICC) system MAIN switch indicator light (green)*
BRAKE	Brake warning light	CRUISE	Preview Function warning light (orange)*		Lane Departure Prevention (LDP) ON indicator light (green)*
		RAS	Rear Active Steer warning light*	SERVICE ENGINE SOON	Malfunction Indicator Light (MIL)
	Charge warning light		Seat belt warning light	SLIP	Slip indicator light
	Door open warning light		Supplemental air bag warning light		Small light indicator lights
	Engine oil pressure warning light	AFS OFF	Adaptive Front lighting System (AFS) indicator light		Turn signal/hazard indicator lights
CRUISE	Intelligent Cruise Control (ICC) system warning light (orange)*	P/N	Automatic Transmission (AT) position indicator light	VDC OFF	Vehicle Dynamic Control (VDC) off indicator light
KEY	Intelligent Key system warning light	CRUISE	Cruise main switch indicator light (green)		

*: if so equipped

CHECKING BULBS

With all doors closed, apply the parking brake and push the ignition switch to the ON position without starting the engine. The following lights will come on:

, BRAKE or , , SERVICE ENGINE SOON , CRUISE , CRUISE , , AWD , RAS

The following lights come on briefly and then go off (if so equipped):

, ABS or , AT CHECK , SLIP , VDC OFF , , KEY , , AFS OFF

If any light does not come on, it may indicate a burned-out bulb or an open circuit in the electrical system. Have the system checked by an INFINITI retailer.

WARNING LIGHTS

AWD All-Wheel Drive (AWD) warning light (AWD models)

The light comes on when the ignition switch is pushed to the ON position. It turns off soon after the engine is started.

If the All-Wheel Drive (AWD) system malfunctions, or the diameter of the front and the rear wheels are different, the warning light will either remain illuminated or blink. (See “ALL-WHEEL DRIVE (AWD)” in the “5. Starting and driving” section.)

⚠ CAUTION

- **If the warning light comes on while driving there may be a malfunction in the AWD system. Reduce the vehicle speed and have your vehicle checked by an INFINITI retailer as soon as possible.**
- **If the AWD warning light blinks while driving:**
  - **blinks rapidly (about twice a second):**

    Pull off the road in a safe area, and idle the engine. The driving mode will change to 2WD to prevent the AWD system from malfunctioning. If the warning light turns off, you can drive again.
  - **blinks slowly (about once every 2 seconds):**

    Pull off the road in a safe area, and idle the engine. Check that all tire sizes are the same, tire pressure is correct and tires are not worn.
- **If the warning light is still on after the above operations, have your vehicle checked by an INFINITI retailer as soon as possible.**

ABS or (ABS) Anti-lock Braking System (ABS) warning light

When the ignition switch is in the ON position, the Anti-lock Braking System (ABS) warning light illuminates and then turns off. This indicates the ABS is operational.

If the ABS warning light illuminates while the engine is running, or while driving, it may indicate the ABS is not functioning properly. Have the system checked by an INFINITI retailer.

If an ABS malfunction occurs, the anti-lock function is turned off. The brake system then operates normally, but without anti-lock assistance. (See “BRAKE SYSTEM” in the “5. Starting and driving” section.)

AT CHECK Automatic Transmission (AT) check warning light

When the ignition switch is pushed to the ON position, the light comes on for 2 seconds. If the light comes on at any other time, it may indicate the transmission is not functioning properly. Have your INFINITI retailer check and repair the transmission.

BRAKE or Brake warning light

This light functions for both the parking brake and the foot brake systems.

Parking brake indicator :

When the ignition switch is in the ON position, the light comes on when the parking brake is applied.

Low brake fluid warning light :

When the ignition switch is in the ON position, the light warns of a low brake fluid level. If the light comes on while the engine is running with the parking brake not applied, stop the vehicle and perform the following:

1. Check the brake fluid level. Add brake fluid as necessary. (See “BRAKE FLUID” in the “8. Maintenance and do-it-yourself” section.)
2. If the brake fluid level is correct, have the warning system checked by an INFINITI retailer.

Anti-lock Braking System (ABS) warning indicator :

When the parking brake is released and the brake fluid level is sufficient, if both the brake warning light and the Anti-lock Braking System (ABS) warning light illuminate, it may indicate the ABS is not functioning properly. Have the brake system checked, and if necessary repaired, by an INFINITI retailer promptly. (See “Anti-lock Braking System (ABS) warning light” earlier in this section.)

WARNING

- **Your brake system may not be working properly if the warning light is on. Driving could be dangerous. If you judge it to be safe, drive carefully to the nearest service station for repairs. Otherwise, have your vehicle towed because driving it could be dangerous.**
- **Pressing the brake pedal with the engine stopped and/or low brake fluid level may increase your stopping distance and braking will require greater pedal effort as well as pedal travel.**
- **If the brake fluid level is below the minimum or MIN mark on the brake fluid reservoir, do not drive until the brake system has been checked at an INFINITI retailer.**

Charge warning light

If the light comes on while the engine is running, it may indicate the charging system is not functioning properly. Turn the engine off and check the alternator belt. If the belt is loose, broken, missing or if the light remains on, see an INFINITI retailer immediately.

CAUTION

Do not continue driving if the alternator belt is loose, broken or missing.

Door open warning light

This light comes on when any of the doors are not closed securely while the ignition switch is in the ON position.

Engine oil pressure warning light

This light warns of low engine oil pressure. If the light flickers or comes on during normal driving, pull off the road in a safe area, stop the engine **immediately** and call an INFINITI retailer or other authorized repair shop.

The engine oil pressure warning light is not designed to indicate a low oil level. Use the dipstick to check the oil level. (See “ENGINE OIL” in the “8. Maintenance and do-it-yourself” section.)

⚠ CAUTION

Running the engine with the engine oil pressure warning light on could cause serious damage to the engine almost immediately. Such damage is not covered by warranty. Turn off the engine as soon as it is safe to do so.

CRUISE Intelligent Cruise Control (ICC) system warning light (orange; if so equipped)

This light comes on if there is a malfunction in the Intelligent Cruise Control (ICC) system.

If the warning light comes on, park the vehicle in a safe place. Turn the engine off, restart the engine, resume driving and set the ICC system again.

If it is not possible to set the system or the indicator stays on, it may indicate that the system is malfunctioning. Although the vehicle is still driveable under normal conditions, have the vehicle checked at an INFINITI retailer.

See “INTELLIGENT CRUISE CONTROL (ICC) SYSTEM” in the “5. Starting and driving” section.

KEY Intelligent Key system warning light

After the ignition switch is pushed to the ON position, this light comes on for about 2 seconds and then turns off.

This light warns of a malfunction with the electrical steering lock system or the Intelligent Key system.

If the light comes on while the engine is stopped, it may be impossible to free the steering lock or to start the engine. If the light comes on while the engine is running, you can drive the vehicle. However in these cases, contact an INFINITI retailer for repair as soon as possible.

See “INTELLIGENT KEY SYSTEM” in the “3. Pre-driving checks and adjustments” section.

Lane departure warning light (orange; if so equipped)

When the ignition switch is pushed to the ON position, the light will come on in orange, turn green, and then turn off. This indicates that the Lane Departure Warning (LDW) and Lane Departure Prevention (LDP) systems are operational.

While the LDW and/or LDP system is on, the light will blink in orange and a warning chime will sound if the vehicle is traveling close to either the left or the right of a traveling lane with detectable lane markers.

If the light comes on in orange and remains on, it may indicate that the LDW and LDP systems are not functioning properly. Have the systems checked by an INFINITI retailer.

See “LANE DEPARTURE WARNING (LDW) SYSTEM/LANE DEPARTURE PREVENTION (LDP) SYSTEM” in the “5. Starting and driving” section.

Low fuel warning light

This light comes on when the fuel in the tank is getting low. Refuel as soon as it is convenient, preferably before the fuel gauge reaches “E” (Empty).

There will be a small reserve of fuel remaining in the tank when the fuel gauge needle reaches “E” (Empty).

Low tire pressure warning light

Your vehicle is equipped with a Tire Pressure Monitoring System (TPMS) that monitors the tire pressure of all tires except the spare.

The low tire pressure warning light warns of low tire pressure or indicates that the TPMS is not functioning properly.

After the ignition switch is pushed ON, this light illuminates for about 1 second and turns off.

Low tire pressure warning :

If the vehicle is being driven with low tire pressure, the warning light will illuminate. If you select the tire pressure information in the display, the LOW PRESSURE information will be displayed. The tire pressure for each tire will also be displayed.

When the low tire pressure warning light illuminates, you should stop and adjust the tire pressure to the recommended COLD tire pressure shown on the Tire and Loading Information label. The low tire pressure warning light does not automatically turn off when the tire pressure is adjusted. After the tire is inflated to the recommended pressure, the vehicle must be driven at speeds above 16 MPH (25 km/h) to activate the TPMS and turn off the low tire pressure warning light. Use a tire pressure gauge to check the tire pressure.

For additional information, see “TIRE PRESSURE MONITORING SYSTEM (TPMS)” in the “5. Starting and driving” section and “TIRE PRESSURE MONITORING SYSTEM (TPMS)” in the “6. In case of emergency” section. For the tire pressure information display, see “HOW TO USE INFO BUTTON” in the “4. Monitor, climate, audio, phone and voice recognition systems” section.

TPMS malfunction :

If the TPMS is not functioning properly, the low tire pressure warning light will flash for approximately 1 minute when the ignition switch is pushed ON. The light will remain on after 1 minute. Have the system checked by an INFINITI retailer.

For additional information, see “TIRE PRESSURE MONITORING SYSTEM (TPMS)” in the “5. Starting and driving” section.

⚠ WARNING

- **If the light does not illuminate with the ignition switch pushed ON, have the vehicle checked by an INFINITI retailer as soon as possible.**
- **If the light illuminates while driving, avoid sudden steering maneuvers or abrupt braking, reduce vehicle speed, pull off the road to a safe location and stop the vehicle as soon as possible. Driving with under-inflated tires may permanently damage the tires and increase the likelihood of tire failure. Serious vehicle damage could occur and may lead to an accident and could result in serious personal injury. Check the tire pressure for all four tires. Adjust the tire pressure to the recommended COLD tire pressure shown on the Tire and Loading Information label to turn the low tire pressure warning light OFF. If the light stays on after adjusting the tire pressure and driving over 16 MPH (25 km/h), have the system checked by an INFINITI retailer. If you have a flat tire, replace it with a spare tire as soon as possible.**
- **When a spare tire is mounted or a wheel is replaced, tire pressure will not be indicated, the TPMS will not function and the low tire pressure warning light will flash for approximately 1 minute. The light will remain on after 1 minute. Contact your INFINITI retailer as soon as possible for tire replacement and/or system resetting.**

- **Replacing tires with those not originally specified by INFINITI could affect the proper operation of the TPMS.**

⚠ CAUTION

- **The TPMS is not a substitute for the regular tire pressure check. Be sure to check the tire pressure regularly.**
- **If the vehicle is being driven at speeds of less than 16 MPH (25 km/h), the TPMS may not operate correctly.**
- **Be sure to correctly install the specified size of tires to the four wheels.**

Low washer fluid warning light

This light comes on when the washer tank fluid is at a low level. Add washer fluid as necessary. See "WINDOW WASHER FLUID" in the "8. Maintenance and do-it-yourself" section.

CRUISE Preview Function warning light (orange; if so equipped)

The light comes on if there is a malfunction in the Brake Assist (with Preview Function) system.

If the warning light comes on, park the vehicle in a safe place. Turn the engine off, restart the engine, resume driving and set the ICC system again.

If it is not possible to set the system or the indicator stays on, it may indicate that the system is malfunctioning. Although the vehicle is still driveable under normal conditions, have the vehicle checked at an INFINITI retailer.

See "PREVIEW FUNCTION (for Intelligent Cruise Control (ICC) system equipped models)" in the "5. Starting and driving" section.

RAS Rear Active Steer warning light (if so equipped)

If the light comes on while the engine is running, it may indicate that there is a malfunction with the Rear Active Steer portion of the steering system. Have the system checked by an INFINITI retailer.

For further information about the Rear Active Steer system, see "REAR ACTIVE STEER SYSTEM" in the "5. Starting and driving" section.

If a malfunction occurs in the system, the Rear Active Steer function will cease but driving can be continued.

If the light comes on while you are driving, contact an INFINITI retailer for repair.

Seat belt warning light

The light and chime remind you to fasten seat belts. The light illuminates whenever the ignition switch is pushed to the ON position, and will remain illuminated until the driver's seat belt is fastened. At the same time, the chime will sound for about 6 seconds unless the driver's seat belt is securely fastened.

The seat belt warning light for the front passenger will illuminate if the seat belt is not fastened when the front passenger's seat is occupied. For 5 seconds after the ignition switch is in the ON position, the system does not activate the warning light for the front passenger.

See "SEAT BELTS" in the "1. Safety — Seats, seat belts and supplemental restraint system" section for precautions on seat belt usage.

Supplemental air bag warning light

After pushing the ignition switch to the ON position, the supplemental air bag warning light will illuminate. The supplemental air bag warning light will turn off after about 7 seconds if the supplemental front air bag and supplemental side air bag, curtain side-impact air bag systems and/or pretensioner seat belt are operational.

If any of the following conditions occur, the front air bag, side air bag, curtain air bag and pretensioner systems need servicing and your vehicle must be taken to your nearest INFINITI retailer.

- The supplemental air bag warning light remains on after approximately 7 seconds.
- The supplemental air bag warning light flashes intermittently.
- The supplemental air bag warning light does not come on at all.

Unless checked and repaired, the supplemental restraint system (air bag system) and/or the pretensioners may not function properly.

For additional information, see “SUPPLEMENTAL RESTRAINT SYSTEM” in the “1. Safety — Seats, seat belts and supplemental restraint system” section.

⚠ WARNING

If the supplemental air bag warning light is on, it could mean that the front air bag, side air bag, curtain air bag and/or pretensioner systems will not operate in an accident. To help avoid injury to yourself or others, have your vehicle checked by an INFINITI retailer as soon as possible.

INDICATOR LIGHTS

Adaptive Front lighting System (AFS) indicator light

When the ignition switch is pushed to the ON position, the Adaptive Front lighting System (AFS) indicator light will illuminate. The light will turn off in about 1 second if the AFS is operational.

This light also comes on when the AFS is turned off by pushing the OFF side of the AFS switch.

If the AFS indicator light blinks, it may indicate the AFS is not functioning properly. Have the system checked by an INFINITI retailer.

See “Adaptive Front lighting System (AFS)” later in this section.

Automatic Transmission (AT) position indicator light

When the ignition switch is pushed to the ON position, the indicator shows the automatic selector shift position. (See “AUTOMATIC TRANSMISSION” in the “5. Starting and driving” section.)

Cruise main switch indicator light (green)

The light comes on when the cruise control main switch is pushed. The light goes out when the main switch is pushed again. When the cruise control main switch indicator light comes on, the cruise control system is operational.

Cruise set switch indicator light

The light comes on while the vehicle speed is controlled by the cruise control system. If the light blinks while the engine is running, it may indicate the cruise control system is not functioning properly. Have the system checked by an INFINITI retailer.

Front passenger air bag status light

The front passenger air bag status light ( ) will be lit and the passenger front air bag will be OFF depending on how the front passenger seat is being used.

For front passenger air bag status light operation, see “INFINITI ADVANCED AIR BAG SYSTEM (front seats)” in the “1. Safety — Seats, seat belts and supplemental restraint system” section of this manual.

High beam indicator light

This light comes on when the headlight high beam is on and goes out when the low beam is selected.

Intelligent Cruise Control (ICC) system MAIN switch indicator light (green; if so equipped)

The light comes on when the Intelligent Cruise Control (ICC) system MAIN switch is pushed. The light goes out when the MAIN switch is pushed again. While the MAIN switch indicator light comes on, the ICC system is operational.

Lane Departure Prevention (LDP) ON indicator light (green; if so equipped)

The light comes on in green when the Lane Departure Prevention (LDP) system is turned on. The light turns off when the system is turned off.

NOTE:

This light is common with the lane departure warning light (orange). (See "Lane departure warning light" earlier in this section.)

For more details, see "LANE DEPARTURE WARNING (LDW) SYSTEM/LANE DEPARTURE PREVENTION (LDP) SYSTEM" in the "5. Starting and driving" section.

Malfunction Indicator Light (MIL)

If the malfunction indicator light comes on steady or blinks while the engine is running, it may indicate a potential emission control malfunction.

The malfunction indicator light may also come on steady if the fuel-filler cap is loose or missing, or if the vehicle runs out of fuel. Check to make sure the fuel-filler cap is installed and closed tightly, and that the vehicle has at least 3 US gallons (14 liters) of fuel in the fuel tank.

After a few driving trips, the SERVICE ENGINE SOON light should turn off if no other potential emission control system malfunction exists.

If this indicator light remains on for 20 seconds and then blinks for 10 seconds when the engine is not running, it indicates that the vehicle is not ready for an emission control system inspection/maintenance test. (See "READINESS FOR INSPECTION/MAINTENANCE (I/M) TEST" in the "9. Technical and consumer information" section.)

Operation :

The malfunction indicator light will come on in one of two ways:

- Malfunction indicator light on steady — An emission control system malfunction has been detected. Check the fuel-filler cap. If the fuel-filler cap is loose or missing, tighten or install the cap and continue to drive the vehicle. The SERVICE ENGINE SOON light should turn off after a few driving trips. If the SERVICE ENGINE SOON light does not turn off after a few driving trips, have the vehicle inspected by an INFINITI retailer. You do not need to have your vehicle towed to the retailer.
- Malfunction indicator light blinking — An engine misfire has been detected which may damage the emission control system.

  To reduce or avoid emission control system damage:

  a) Do not drive at speeds above 45 MPH (72 km/h).

  b) Avoid hard acceleration or deceleration.

  c) Avoid steep uphill grades.

  d) If possible, reduce the amount of cargo being hauled or towed.

  The malfunction indicator light may stop blinking and remain on.

  Have the vehicle inspected by an INFINITI retailer. You do not need to have your vehicle towed to the retailer.

⚠ CAUTION

Continued vehicle operation without having the emission control system checked and repaired as necessary could lead to poor driveability, reduced fuel economy, and possible damage to the emission control system.

SLIP Slip indicator light

This light will blink when the Vehicle Dynamic Control (VDC) system is operating, thus alerting the driver to the fact that the road surface is slippery and the vehicle is nearing its traction limits.

Small light indicator light

The light comes on when the front park, side marker, tail and license plate lights are on.

Turn signal/hazard indicator lights

The light flashes when the turn signal switch lever or hazard switch is turned on.

VDC OFF Vehicle Dynamic Control (VDC) off indicator light

The light comes on when the Vehicle Dynamic Control (VDC) off switch is pushed to OFF. This indicates that the VDC system is not operating. When the VDC off indicator light and slip indicator light come on with the VDC system turned on, this light alerts the driver to the fact that the VDC system's fail-safe mode is operating, for example the VDC system may not be functioning properly. Have the system checked by an INFINITI retailer. If a malfunction occurs in the system, the VDC system function will be canceled but the vehicle is still driveable. For additional information, see "VEHICLE DYNAMIC CONTROL (VDC) SYSTEM" in the "5. Starting and driving" section of this manual.

AUDIBLE REMINDERS

Key reminder chime

A chime will sound if the driver side door is opened while the ignition switch is pushed to the ACC or LOCK position with the Intelligent Key left in the Intelligent Key port. Make sure the ignition switch is pushed to the LOCK position, and take the Intelligent Key with you when leaving the vehicle.

Light reminder chime

A chime will sound when the driver side door is opened with the light switch in the ≡DC≡ or position, and the ignition switch is pushed to the ACC position.

Turn the light switch off when you leave the vehicle.

Parking brake reminder chime

The chime will sound if the vehicle is driven at more than 4 MPH (7 km/h) with the parking brake applied. Stop the vehicle and release the parking brake.

Seat belt warning chime

The chime will sound for about 6 seconds unless the driver's seat belt is securely fastened.

Brake pad wear warning

The disc brake pads have audible wear warnings. When a brake pad requires replacement, it will make a high pitched scraping sound when the vehicle is in motion. This scraping sound will first occur only when the brake pedal is depressed. After more wear of the brake pad, the sound will always be heard even if the brake

pedal is not depressed. Have the brakes checked as soon as possible if the warning sound is heard.

Lane departure warning chime (if so equipped)

When the Lane Departure Warning (LDW) or Lane Departure Prevention (LDP) system is on, the chime sounds if the vehicle is traveling close to either the left or the right of a traveling lane with detectable lane markers.

See “LANE DEPARTURE WARNING (LDW) SYSTEM/LANE DEPARTURE PREVENTION (LDP) SYSTEM” in the “5. Starting and driving” section for more details.

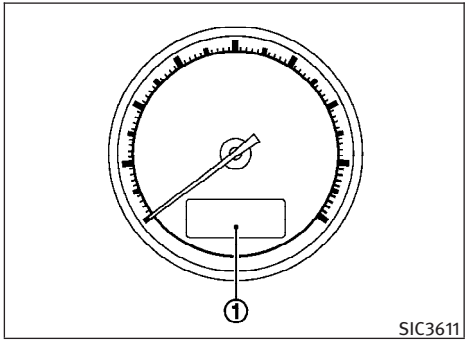

The dot matrix liquid crystal display ① is located under the tachometer, and it displays the Automatic Transmission (AT) position indicator, the Intelligent Cruise Control (ICC) system (if so equipped) information and the Intelligent Key operation information.

For detailed information about each system, see the following sections:

- Automatic Transmission (AT)
  - “WARNING/INDICATOR LIGHTS AND AUDIBLE REMINDERS” earlier in this section.
  - “DRIVING THE VEHICLE” in the “5. Starting and driving” section.
- Intelligent Cruise Control (ICC) system
  - “INTELLIGENT CRUISE CONTROL (ICC) SYSTEM” in the “5. Starting and driving” section.
- Intelligent Key system
  - “INTELLIGENT KEY SYSTEM” in the “3. Pre-driving checks and adjustments” section.
  - “PUSH-BUTTON IGNITION SWITCH” in the “5. Starting and driving” section.

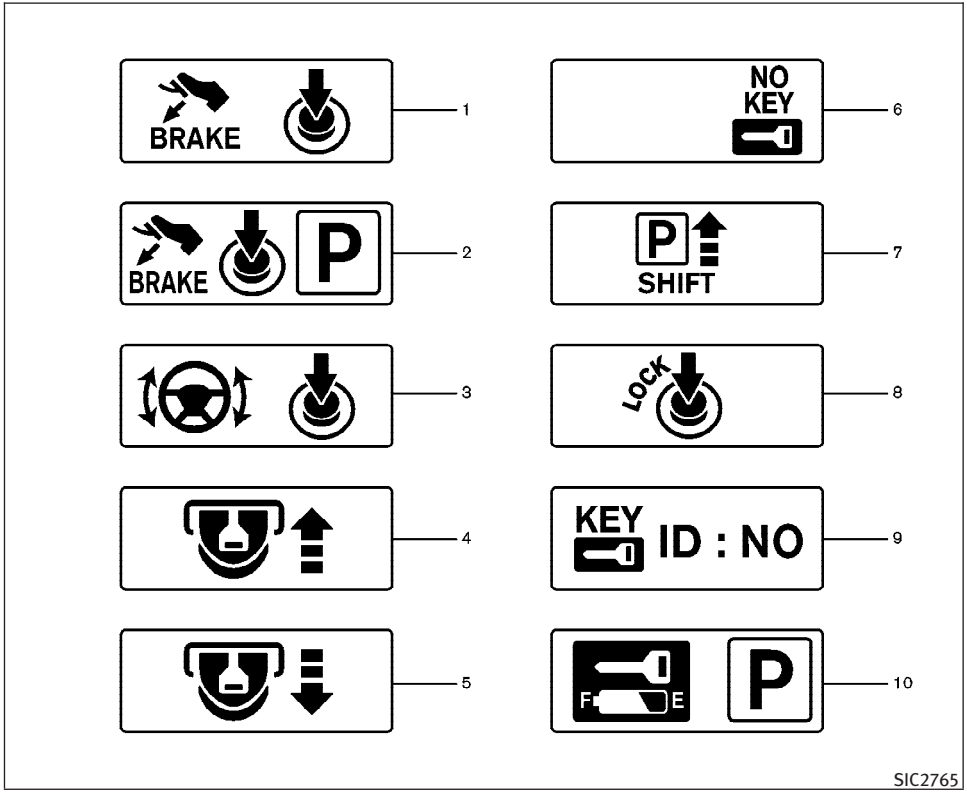

INDICATORS FOR OPERATION

1. Engine start operation indicator (ignition switch in the LOCK or ACC position)

This indicator appears when the selector lever is in the P (Park) position.

This indicator means that the engine will start by pushing the ignition switch with the brake pedal depressed.

2. Engine start operation indicator (ignition switch in the ON position)

This indicator appears when the ignition switch is in the ON position with the selector lever in the P (Park) position.

This indicator means that the engine will start by pushing the ignition switch with the brake pedal depressed.

3. Steering lock release malfunction indicator

This indicator appears when the steering wheel cannot be released from the LOCK position.

If this indicator appears, push the ignition switch while lightly turning the steering wheel right and left.

4. Intelligent Key insertion indicator

This indicator appears when the Intelligent Key needs to be inserted into the Intelligent Key port. (For example, the Intelligent Key battery is discharged.)

If this indicator appears, insert the Intelligent Key into the Intelligent Key port in the correct direction. (See "PUSH-BUTTON IGNITION SWITCH" in the "5. Starting and driving" section.)

5. Intelligent Key removal indicator

This indicator appears when the driver's door is opened with the ignition switch in the LOCK position and the Intelligent Key placed in the Intelligent Key port. A key reminder chime also sounds.

If this indicator appears, remove the Intelligent Key from the Intelligent Key port and take it with you when leaving the vehicle.

6. NO KEY warning

The warning appears when the door is closed with the Intelligent Key left outside the vehicle and the ignition switch in the ACC or ON position. Make sure that the Intelligent Key is inside the vehicle.

When all the doors are closed, an outside chime and inside warning chime will also sound.

See "INTELLIGENT KEY SYSTEM" in the "3. Pre-driving checks and adjustments" section.

7. SHIFT "P" warning

This warning appears when the ignition switch is pushed to stop the engine with the selector lever in any position except the P (Park) position.

If this warning appears, move the selector lever to the P (Park) position or push the ignition switch to the ON position.

An inside warning chime will also sound.

See "INTELLIGENT KEY SYSTEM" in the "3. Pre-driving checks and adjustments" section.

8. "LOCK" warning

This warning appears when the selector lever is moved to the P (Park) position with the ignition switch in the ACC position after the SHIFT "P" warning appears.

To push the ignition switch to the LOCK position, perform the following procedure:

SHIFT "P" warning → (Move the selector lever to "P") → **LOCK warning** → (Push the ignition switch → ignition switch position is turned to ON) → **LOCK warning** → (Push the ignition switch → ignition switch position is turned to LOCK)

9. NO KEY ID indicator

This indicator appears when the ignition switch is pushed and the Intelligent Key cannot be recognized by the system with the ignition switch in the LOCK position.

If this indicator appears, you cannot start the engine. Check for the following causes and perform remedies:

- The battery of the Intelligent Key carried with you is discharged completely. Replace the battery with a new one.
- The Intelligent Key carried with you is not registered to the system. Use the registered Intelligent Key.
- You do not have an Intelligent Key with you. Carry an Intelligent Key with you.

10. Intelligent Key battery discharge indicator

This indicator appears when the Intelligent Key battery is running out of power.

If this indicator appears, replace the battery with a new one. (See “BATTERY REPLACEMENT” in the “8. Maintenance and do-it-yourself” section.)

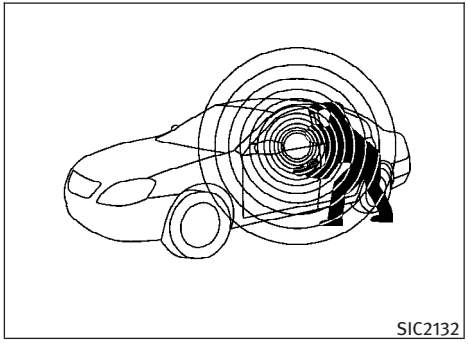

Your vehicle has two types of security systems, as follows:

- Vehicle security system
- INFINITI Vehicle Immobilizer System

The security condition will be shown by the security indicator light.

VEHICLE SECURITY SYSTEM

The vehicle security system provides visual and audio alarm signals if someone opens the doors, hood, or trunk lid when the system is armed. It is not, however, a motion detection type system that activates when a vehicle is moved or when a vibration occurs.

The system helps deter vehicle theft but cannot prevent it, nor can it prevent the theft of interior or exterior vehicle components in all situations. Always secure your vehicle even if parking for a brief period. Never leave your Intelligent Key(s) in the vehicle, and always lock it when unattended. Be aware of your surroundings, and park in secure, well-lit areas whenever possible.

Many devices offering additional protection, such as component locks, identification markers, and tracking systems, are available at auto supply stores and specialty shops. Your INFINITI retailer may also offer such equipment. Check with your insurance company to see if you may be eligible for discounts for various theft protection features.

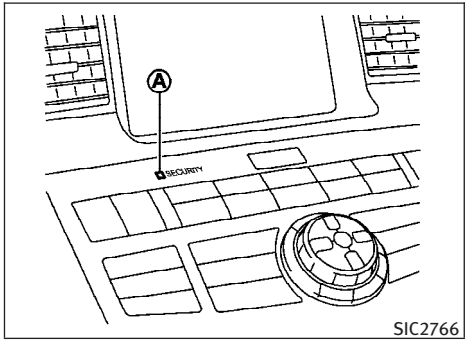

How to arm the vehicle security system

1. Close all windows.

The system can be armed even if the windows are open.

2. Push the ignition switch to the LOCK position.
3. Remove the Intelligent Key from the vehicle.
4. Close all doors, hood and trunk. Lock all doors. The doors can be locked with the Intelligent Key, door handle request switch, power door lock switch or mechanical key.
5. Confirm that the security indicator light Ⓐ comes on. The security indicator light stays on for about 30 seconds. The vehicle security system is now pre-armed. After about 30 seconds the vehicle security system automatically shifts into the armed phase. The security light begins to flash once every approximately 3 seconds. If, during this 30-second pre-arm time period, the door is unlocked, or the ignition switch is pushed to ACC or ON, the system will not arm.

Even when the driver and/or passengers are in the vehicle, the system will activate with all doors, hood, and trunk lid locked with the ignition switch in the LOCK position. When pushing the ignition switch to the ACC or ON position, the system will be released.

Vehicle security system activation

The vehicle security system will give the following alarm:

- The headlights blink and the horn sounds intermittently.
- The alarm automatically turns off after approximately 1 minute. However, the alarm reactivates if the vehicle is tampered with again.

The alarm is activated by:

- Unlocking the door or opening the trunk lid without using the button on the Intelligent Key, the door handle request switch or the mechanical key. (Even if the door is opened by releasing the door inside lock knob, the alarm will activate.)
- Opening the hood.

How to stop an activated alarm

The alarm will stop by unlocking a door by pushing the unlock button on the Intelligent Key, the door handle request switch or using the mechanical key. The alarm will not stop if the ignition switch is pushed to the ACC or ON position.

If the system does not operate as described above, have it checked by an INFINITI retailer.

INFINITI VEHICLE IMMOBILIZER SYSTEM

The INFINITI Vehicle Immobilizer System will not allow the engine to start without the use of the registered Intelligent Key.

Statement related to section 15 of FCC rules for INFINITI Vehicle Immobilizer System (CONT ASSY - CARD SLOT)

This device complies with part 15 of the FCC Rules and RSS-210 of Industry Canada. Operation is subject to the following two conditions;

(1) This device may not cause harmful interference, and (2) this device must accept any interference received, including interference that may cause undesired operation of the device.

CHANGES OR MODIFICATIONS NOT EXPRESSLY APPROVED BY THE PARTY RESPONSIBLE FOR COMPLIANCE COULD VOID THE USER'S AUTHORITY TO OPERATE THE EQUIPMENT.

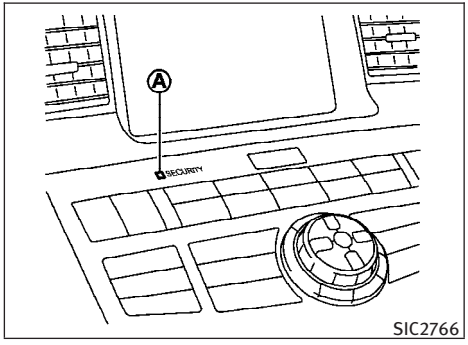

Security indicator light

The security indicator light indicates the status of the INFINITI Vehicle Immobilizer System.

The light Ⓐ blinks when the ignition switch is in the ACC or LOCK position. This function indicates that the security systems equipped on the vehicle are operational.

If the INFINITI Vehicle Immobilizer System is malfunctioning, this light will remain on while the ignition switch is in the ON position.

If the light still remains on and/or the engine will not start, see an INFINITI retailer for INFINITI Vehicle Immobilizer System service as soon as possible. Please bring all registered Intelligent Keys that you have when visiting an INFINITI retailer for service.

⚠ WARNING

In freezing temperatures the washer solution may freeze on the windshield and obscure your vision which may lead to an accident. Warm windshield with the defroster before you wash the windshield.

⚠ CAUTION

- **Do not operate the washer continuously for more than 30 seconds.**
- **Do not operate the washer if the reservoir tank is empty.**
- **Do not fill the window washer reservoir tank with washer fluid concentrates at full strength. Some methyl alcohol based washer fluid concentrates may permanently stain the grille if spilled while filling the window washer reservoir tank.**
- **Pre-mix washer fluid concentrates with water to the manufacturer's recommended levels before pouring the fluid into the window washer reservoir tank. Do not use the window washer reservoir tank to mix the washer fluid concentrate and water.**

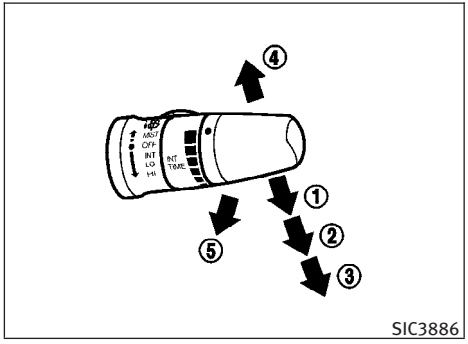

The windshield wiper and washer operates when the ignition switch is in the ON position.

Push the lever down to operate the wiper at the following speed:

① INT (intermittent) — rain-sensing auto wiper system operation (See "RAIN-SENSING AUTO WIPER SYSTEM" later in this section.)

② LO (low) — continuous low speed operation

③ HI (high) — continuous high speed operation

Push the lever up ④ to have one sweep operation of the wiper.

Pull the lever toward you ⑤ to operate the washer. Then the wiper will also operate several times.

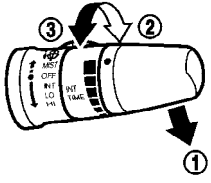

SIC3887

RAIN-SENSING AUTO WIPER SYSTEM

The rain-sensing auto wiper system can automatically turn on the wipers and adjust the wiper speed depending on the rainfall and the vehicle speed by using the rain sensor located on the upper part of the windshield.

To set the rain-sensing auto wiper system, push the lever down to the INT (intermittent) position ①. The wiper will sweep once while the ignition switch is in the ON position.

The rain sensor sensitivity level can be adjusted by turning the knob toward the front ② (High) or toward the rear ③ (Low).

- High — High sensitive operation
- Low — Low sensitive operation

To turn the rain-sensing auto wiper system off, push up the lever to the OFF position, or pull down the lever to the LO or HI position.

⚠ CAUTION

Do not touch the rain sensor and around it when the wiper switch is in the INT position and the ignition switch is in the ON position. The wipers may operate unexpectedly and cause to an injury or a wiper damage.

- **The rain-sensing auto wipers are intended for use during rain. If the switch is left in the INT position, the wipers may operate unexpectedly when dirt, fingerprints, oil film or insects are stuck on or around the sensor. The wipers may also operate when exhaust gas or moisture affect the rain sensor.**
- **The rain-sensing auto wipers may not operate if rain does not hit the rain sensor even if it is raining.**

REAR WINDOW AND OUTSIDE MIRROR DEFROSTER SWITCH

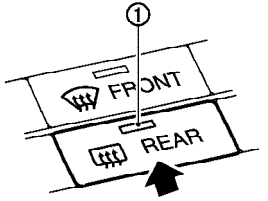

SIC2767B

To defog/defrost the rear window glass and outside mirrors (if so equipped with defroster), start the engine and push the switch on. The indicator light ① will come on. Push the switch again to turn the defroster off.

It will automatically turn off in approximately 15 minutes.

⚠ CAUTION

When cleaning the inner side of the rear window, be careful not to scratch or damage the rear window defroster.

XENON HEADLIGHTS

WARNING

HIGH VOLTAGE

- **When xenon headlights are on, they produce a high voltage. To prevent an electric shock, never attempt to modify or disassemble. Always have your xenon headlights replaced at an INFINITI retailer.**
- **Xenon headlights provide considerably more light than conventional headlights. If they are not correctly aimed, they might temporarily blind an oncoming driver or the driver ahead of you and cause a serious accident. If headlights are not aimed correctly, immediately take your vehicle to an INFINITI retailer and have the headlights adjusted correctly.**

When the xenon headlight is initially turned on, its brightness or color varies slightly. However, the color and brightness will soon stabilize.

- **The life of xenon headlights will be shortened by frequent on-off operation. It is generally desirable not to turn off the headlights for short intervals (for example, when the vehicle stops at a traffic signal). Even when the daytime running lights are active (Canada only), the xenon headlights do not turn on. This way the life of the xenon headlights is not reduced.**
- **If the xenon headlight bulb is close to burning out, the brightness will drastically decrease, the light will start blinking, or the color of the light will become reddish. If one or more of the above signs appear, contact an INFINITI retailer.**

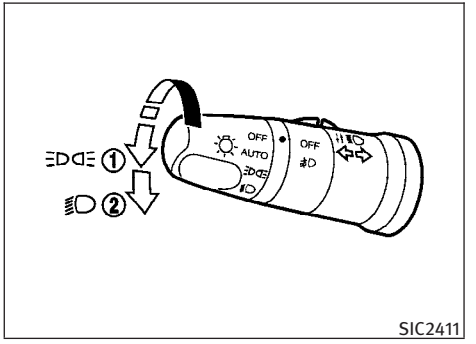

HEADLIGHT SWITCH

Lighting

① Turn the switch to the position: The front park, side marker, tail, license plate and instrument lights will come on.

② Turn the switch to the position: Headlights will come on and all the other lights remain on.

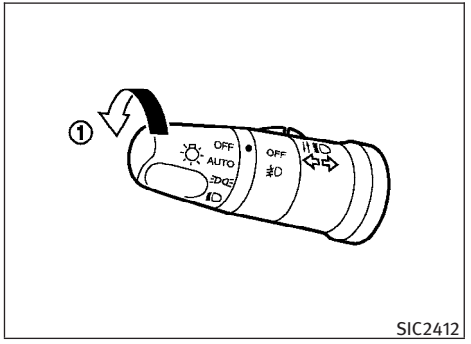

Autolight system

The autolight system allows the headlights to be set so they turn on and off automatically.

To set the autolight system:

1. Make sure the headlight switch is in the AUTO position ①.
2. Push the ignition switch to the ON position.
3. The autolight system automatically turns the headlights on and off.

To turn the autolight system off, turn the switch to the OFF, or position.

The autolight system can turn on the headlights automatically when it is dark and turn off the headlights when it is light.

If the ignition switch is pushed to the LOCK position and one of the doors is opened and this condition is continued, the headlights remain on for 5 minutes.

Automatic headlights off delay :

You can keep the headlights on for up to 180 seconds after you push the ignition switch to LOCK and open any door then close all the doors.

You can adjust the period of the automatic headlights off delay from 0 seconds (OFF) to 180 seconds.

For automatic headlights off delay setting, see “Comfort & Conv. settings” in the “4. Monitor, climate, audio, phone and voice recognition systems” section.

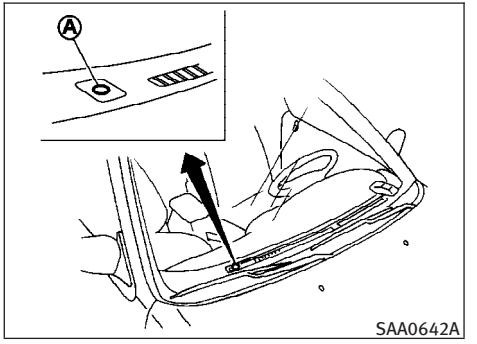

Be sure not to put anything on top of the photo sensor Ⓐ located on the top of the instrument panel. The photo sensor controls the autolight; if it is covered, the photo sensor reacts as if it is dark and the headlights will illuminate.

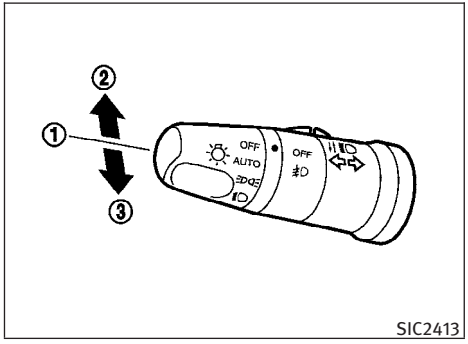

Headlight beam select

① To select the low beam, put the lever in the neutral position as shown.

② To select the high beam, push the lever forward while the switch is in the position. Pull it back to select the low beam.

③ Pulling the lever toward you will flash the headlight high beam even when the headlight switch is in the OFF position.

Battery saver system

- When the headlight switch is in the or position while the ignition switch is in the ON position, the lights will automatically turn off 5 minutes after the ignition switch has been pushed to the LOCK position.
- When the headlight switch remains in the or position after the lights automatically turn off, the lights will turn on when the ignition switch is pushed to the ON position.

CAUTION

- **When you turn on the headlight switch again after the lights automatically turn off, the lights will not turn off automatically. Be sure to turn the light switch to the OFF position when you leave the vehicle for extended periods of time, otherwise the battery will be discharged.**
- **Never leave the light switch on when the engine is not running for extended periods of time even if the headlights turn off automatically.**

Daytime running light system (Canada only)

The daytime running lights automatically illuminate when the engine is started with the parking brake released. The daytime running lights operate with the headlight switch in the OFF position or in the position. Turn the headlight switch to the position for full illumination when driving at night.

If the parking brake is applied before the engine is started, the daytime running lights do not illuminate. The daytime running lights illuminate once the parking brake is released. The daytime running lights will remain on until the ignition switch is pushed to the LOCK position.

WARNING

When the daytime running light system is active, tail lights on your vehicle are not on. It is necessary at dusk to turn on your headlights. Failure to do so could cause an accident injuring yourself and others.

Adaptive Front lighting System (AFS)

The Adaptive Front lighting System (AFS) will automatically adjust the headlights (low beam) toward the turning direction to improve the driver's view. When the headlight switch is ON and the driver operates the steering wheel in a turn, the AFS system will be activated.

The AFS will operate:

- when the headlight switch is ON.

- when the selector lever is in any position other than P (Park) or R (Reverse).
- when the vehicle is driven at above 16 MPH (25 km/h) for the left-side headlight. Note that the right-side low beam headlight will swivel but the left side will not swivel when the vehicle is at a stop and the steering wheel is turned. The vehicle must attain a speed above 16 MPH (25 km/h) before AFS activates the left-side headlight.

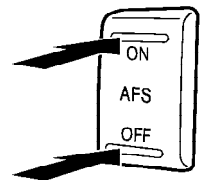

SIC2645

To turn the AFS off, push the OFF side of the AFS switch. (The AFS OFF indicator light will illuminate.) Push the ON side of the switch to turn the system on again.

AFS will also adjust the headlight to a proper axis automatically, depending on the number of occupants in the vehicle, the load the vehicle is carrying and the road conditions.

If the AFS OFF indicator light blinks after the ignition switch has been pushed to the ON position, this may indicate that the AFS is not functioning properly. Have the system checked by an INFINITI retailer. When the engine is started, the headlights will vibrate to check the system condition. This is not a malfunction.

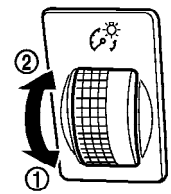

SIC3554

Instrument brightness control

The instrument brightness control operates when the light switch is in the AUTO (when lighting), or position with the ignition switch in the ON position.

Turn the control to the darkening direction ① or the brightening direction ② to adjust the brightness of instrument panel lights.

When the control is turned to the upper end, the light intensity will be at maximum. When the control is turned to the lower end, the light will be turned off.

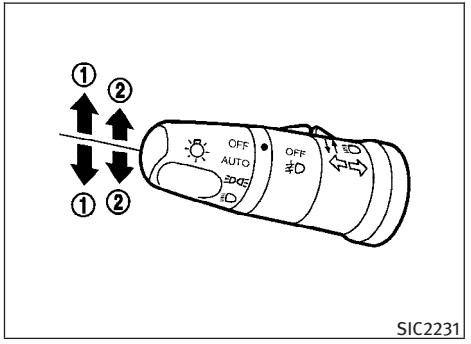

SIC2231

TURN SIGNAL SWITCH

① Turn signal

Move the lever up or down to signal the turning direction. When the turn is completed, the turn signals cancel automatically.

② Lane change signal

To indicate a lane change, move the lever up or down to the point where lights begin flashing.

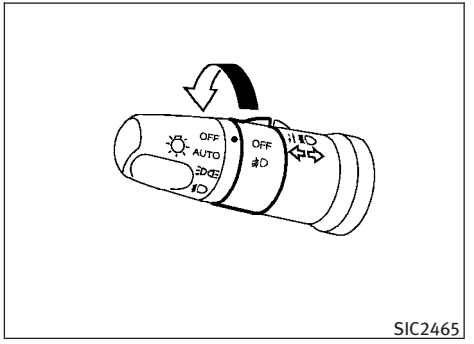

SIC2465

FOG LIGHT SWITCH

To turn the fog lights on, turn the headlight switch to the position, then turn the switch to the position. To turn them off, turn the switch to the OFF position.

The headlights must be on for the fog lights to operate.

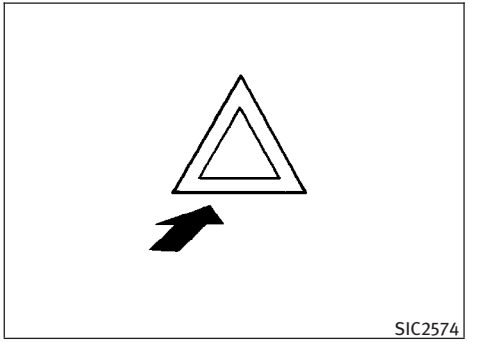
SIC2574

Push the switch on to warn other drivers when you must stop or park under emergency conditions. All turn signal lights will flash.

⚠ WARNING

- **If stopping for an emergency, be sure to move the vehicle well off the road.**
- **Do not use the hazard warning flashers while moving on the highway unless unusual circumstances force you to drive so slowly that your vehicle might become a hazard to other traffic.**
- **Turn signals do not work when the hazard warning flasher lights are on.**

The flasher can be actuated with the ignition switch in any position.

Some state laws may prohibit the use of the hazard warning flasher switch while driving.

HORN

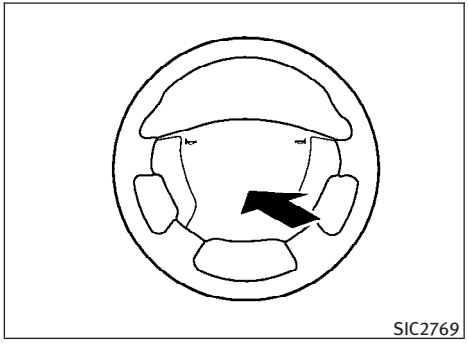

To sound the horn, push the center pad area of the steering wheel.

⚠ WARNING

Do not disassemble the horn. Doing so could affect proper operation of the supplemental front air bag system. Tampering with the supplemental front air bag system may result in serious personal injury.

HEATED SEATS (rear seats) (if so equipped)

⚠ CAUTION

- **The battery could run down if the seat heater is operated while the engine is not running.**
- **Do not use the seat heater for extended periods or when no one is using the seat.**
- **Do not put anything on the seat which insulates heat, such as a blanket, cushion, seat cover, etc. Otherwise, the seat may become overheated.**
- **Do not place anything hard or heavy on the seat or pierce it with a pin or similar object. This may result in damage to the heater.**
- **Any liquid spilled on the heated seat should be removed immediately with a dry cloth.**
- **When cleaning the seat, never use gasoline, thinner, or any similar materials.**
- **If any malfunctions are found or the heated seat does not operate, turn the switch off and have the system checked by an INFINITI retailer.**

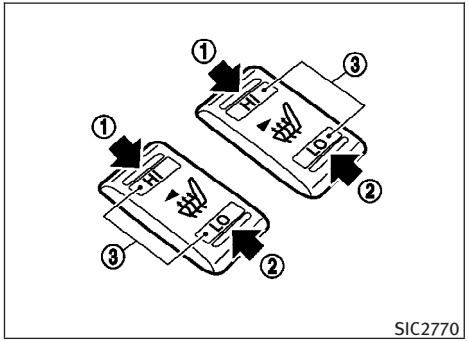

SIC2770

The rear outboard seats are warmed by built-in heaters. The switches located on the inside of the rear center armrest can be operated independently of each other.

1. Start the engine.
2. Select heat range.

   ① For high heat, push the HI (High) side of the switch.

   ② For low heat, push the LO (Low) side of the switch.

   The indicator light in the switch ③ will illuminate when low or high is selected.

3. To turn off the heater, push the HI or LO side (which is selected) of the switch. Make sure the indicator light turns off.

   The heater is controlled by a thermostat, automatically turning the heater on and off. The indicator light will remain on as long as the switch is on.

   When the vehicle's interior is warmed, or before you leave the vehicle, be sure to turn off the switch.

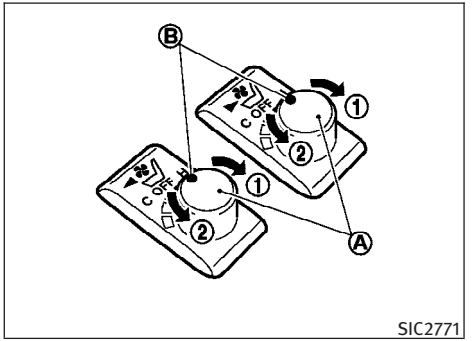

SIC2771

The climate controlled seat warms up or cools down the front seats by blowing warm or cool air from the surface of the seat. The switches located on the center console can be operated independently of each other.

1. Start the engine.
2. Turn the control knob Ⓐ to the H (Heat) side ① or to the C (Cool) side ②. The indicator light Ⓑ on the control knob will illuminate.
3. Adjust the desired amount of the air using the control knob Ⓐ.

   The climate controlled seat blower remains on low speed for approximately 60 seconds after turning the switch on or selecting the desired temperature.

4. When the vehicle's interior is warmed or cooled, and/or before you leave the vehicle, be sure to turn the control knob to the OFF position (center). The indicator light Ⓑ on the control knob goes off at the OFF position.

   To check the air filter for the climate controlled seat, contact an INFINITI retailer.

⚠ CAUTION

- **The battery could run down if the climate controlled seat is operated while the engine is not running.**
- **Do not use the climate controlled seat for extended periods or when no one is using the seat.**
- **Do not put anything on the seat which insulates heat, such as a blanket, cushion, seat cover, etc. Otherwise, the seat may become overheated.**
- **Do not place anything hard or heavy on the seat or pierce it with a pin or similar object. This may result in damage to the climate controlled seat.**
- **Any liquid spilled on the seat should be removed immediately with a dry cloth.**
- **The climate controlled seat has an air filter. Do not operate climate controlled seat without an air filter. This may result in damage to the system.**
- **When cleaning the seat, never use gasoline, thinner, or any similar materials.**
- **If any malfunctions are found or the climate controlled seat does not operate, turn the switch off and have the system checked by an INFINITI retailer.**

LANE DEPARTURE WARNING (LDW) SWITCH (if so equipped)

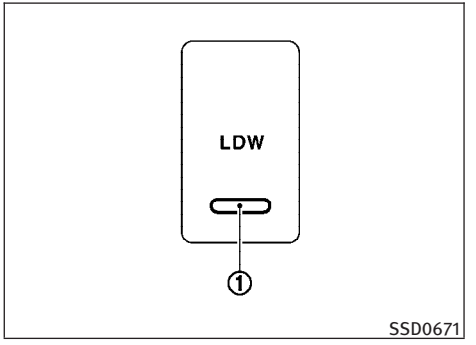

The Lane Departure Warning (LDW) system will sound a warning chime and blink the lane departure warning light (orange) to alert the driver if the vehicle is traveling close to either the left or the right of a traveling lane with detectable lane markers.

The LDW system activates automatically when the ignition switch is pushed to the ON position. (This is the automatic setting mode.) The LDW ON indicator ① on the switch will illuminate.

To cancel the LDW system, push the LDW switch to turn off the system. The LDW ON indicator ① will turn off.

Push the LDW switch again to turn the LDW system on. The LDW automatic setting mode can be changed to the manual setting mode. To change the mode, push and hold the LDW switch for more than 4 seconds when the LDW ON indicator is off. In the manual setting mode, push the LDW switch on and off to turn the LDW system on and off.

See “LANE DEPARTURE WARNING (LDW) SYSTEM/LANE DEPARTURE PREVENTION (LDP) SYSTEM” in the “5. Starting and driving” section for more details.

SNOW MODE SWITCH (if so equipped)

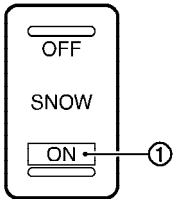

SIC3602

For driving or starting the vehicle on snowy roads or slippery areas, turn on the SNOW mode switch. The indicator light ① on the switch will illuminate. When the SNOW mode is activated, engine output is controlled to avoid wheel spin.

Turn off the SNOW mode for normal driving.

VEHICLE DYNAMIC CONTROL (VDC) OFF SWITCH

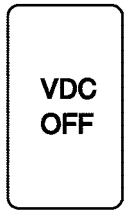

SIC1881

The vehicle should be driven with the Vehicle Dynamic Control (VDC) system on for most driving conditions.

If the vehicle is stuck in mud or snow, the VDC system reduces the engine output to reduce wheel spin. The engine speed will be reduced even if the accelerator is depressed to the floor. If maximum engine power is needed to free a stuck vehicle, turn the VDC system off.

To turn off the VDC system, push the VDC OFF switch. The VDC OFF indicator will illuminate.

Push the VDC OFF switch again or restart the engine to turn on the system. (See “VEHICLE DYNAMIC CONTROL (VDC) SYSTEM” in the “5. Starting and driving” section.)

CLOCK

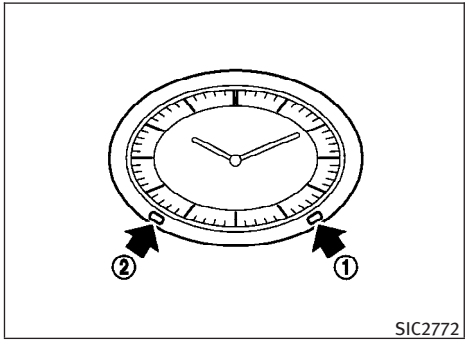

If the power supply is disconnected, the clock will not indicate the correct time. Readjust the time.

ADJUSTING THE TIME

1. To set the clock forward, push the button ①.
2. To set the clock backward, push the button ②.
3. To move forward or backward faster, push and hold the button more than 5 seconds.

For details about display clock adjustment (if so equipped), see “HOW TO USE SETTING BUTTON” in the “4. Monitor, climate, audio, phone and voice recognition systems” section.

POWER OUTLETS

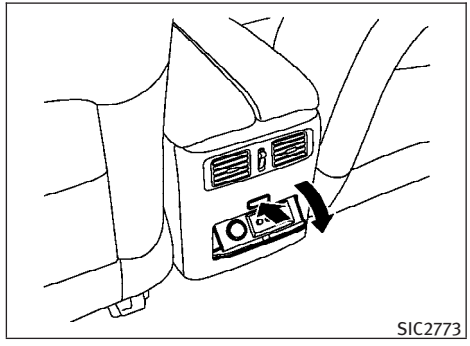

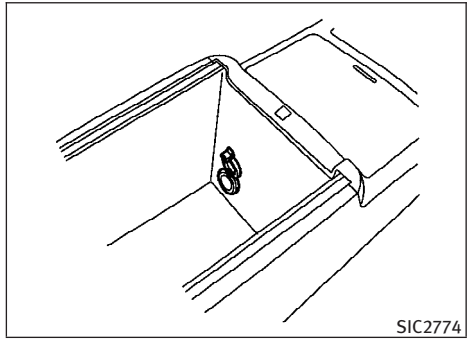

Only for model without DVD player

The power outlets are located on the back side and inside (if equipped) of the center console for powering electrical accessories such as a cellular telephone.

⚠ CAUTION

- **The outlet and plug may be hot during or immediately after use.**
- **Do not use with accessories that exceed a 12 volt, 120W (10A) power draw. Do not use double adapters or more than one electrical accessory.**
- **Use power outlet with the engine running to avoid discharging the vehicle battery.**
- **Avoid using power outlet when the air conditioner, headlights or rear window defroster is on.**
- **This power outlet is not designed for use with a cigarette lighter unit.**
- **Push the plug in as far as it will go. If good contact is not made, the plug may overheat or the internal temperature fuse may open.**
- **Before inserting or disconnecting a plug, be sure the electrical accessory being used is turned OFF.**
- **When not in use, be sure to close the cap. Do not allow water to contact the outlet.**

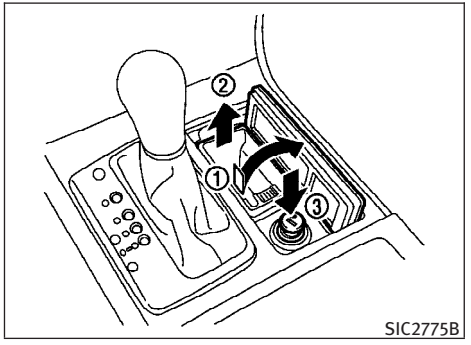

FRONT

To open the ashtray lid, push the lid down and release it ①.

To empty the ashtray, pull out ②.

The cigarette lighter operates when the ignition switch is in the ON position.

Push the lighter in all the way ③, then release it. When the lighter is heated, it will spring out. Return the lighter to its original position after use.

⚠ CAUTION

- **The cigarette lighter socket is a power source for the cigarette lighter element only. The use of the cigarette lighter socket as a power source for any other accessory is not recommended.**
- **Do not use any other power outlet for an accessory lighter.**

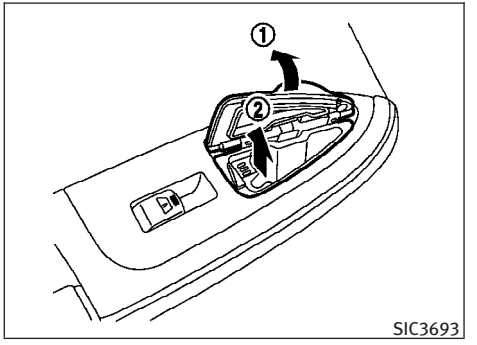

REAR

To open the ashtray lid, pull ①.

To empty the ashtray, and pull out ②.

CUP HOLDERS

⚠ CAUTION

- **Avoid abrupt starting and braking when the cup holder is being used to prevent spilling the drink. If the liquid is hot, it can scald you or your passenger.**
- **Use only soft cups in the cup holder. Hard objects can injure you in an accident.**

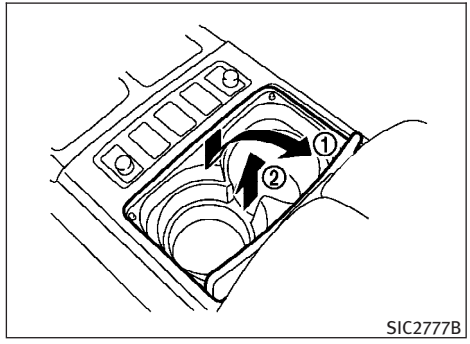

Front

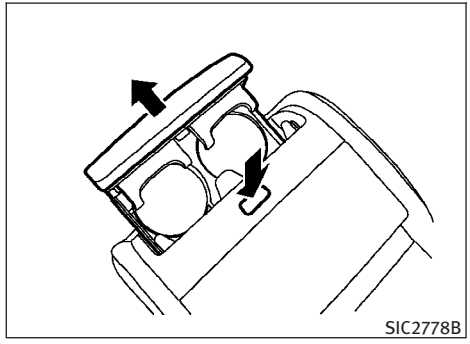

Rear — Type A

Front

To open the cup holder, push the lid down and release it ①.

To remove the inner tray for cleaning, pull it up as illustrated ②.

Rear

Type A :

Push the button as illustrated on the rear center armrest to use the cup holder.

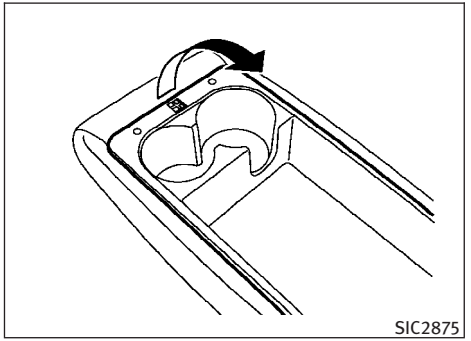

Rear — Type B

Type B :

Open the lid of the rear center armrest to use the cup holder.

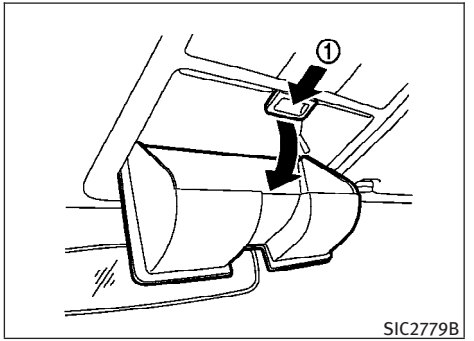

SUNGLASSES HOLDER

⚠ WARNING

Keep the sunglasses holder closed while driving to prevent an accident.

To open the sunglasses holder, push ①.

⚠ CAUTION

- **Do not use for anything other than glasses.**
- **Do not leave glasses in the sunglasses holder while parking in direct sunlight. The heat may damage the glasses.**

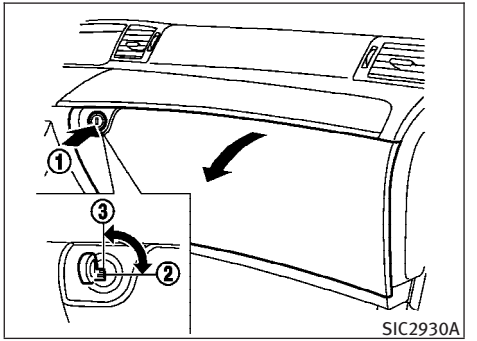

GLOVE BOX

⚠ WARNING

Keep glove box lid closed while driving to help prevent injury in an accident or a sudden stop.

To open the glove box, push the glove box lid release button ①.

To close, push the lid in until the lock latches.

To lock ②/unlock ③ the glove box, use the mechanical key. For the mechanical key usage, see “KEYS” in the “3. Pre-driving checks and adjustments” section.

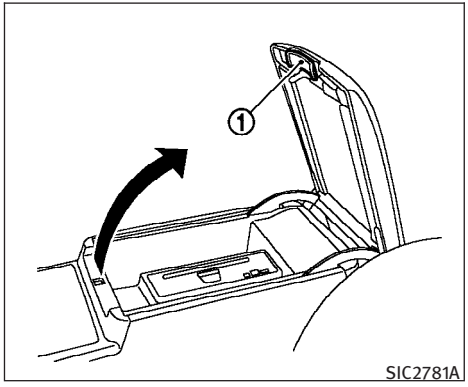

Model with DVD player

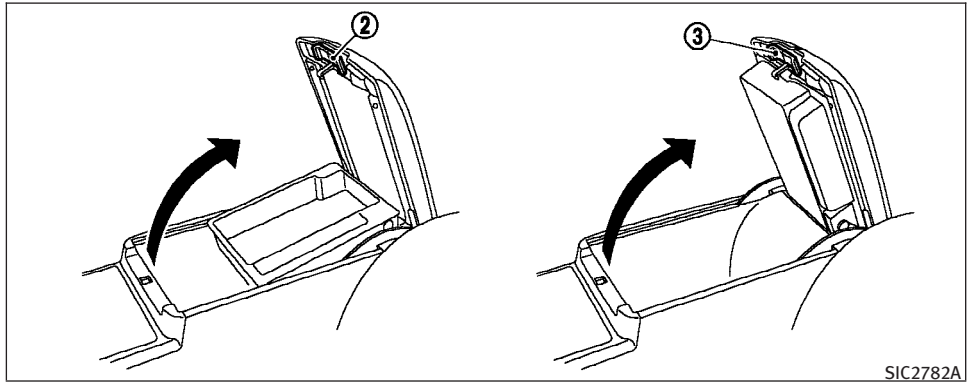

Model without DVD player

CONSOLE BOX

Model with DVD player

To open the console box lid, pull the lever ①.

To close, push the lid down until the lock latches.

Model without DVD player

To open the console box lid, pull the lever ② or ③ and pull up the lid.

When the lever ② (driver's seat side) is pulled, the upper case is available for storing some small items. When the lever ③ (front passenger's seat side) is pulled, the bottom case is available for storing some larger ones.

To close, push the lid down until the lock latches.

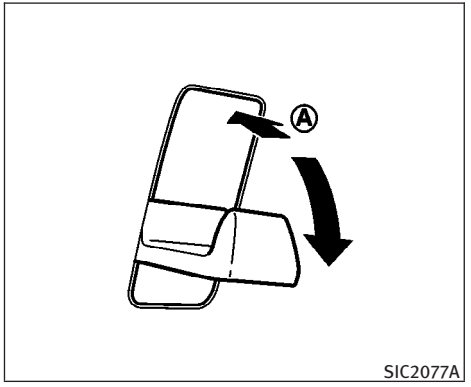

COAT HOOKS

The coat hooks are equipped beside the rear personal lights.

To use the coat hook, push the hook Ⓐ to release.

⚠ CAUTION

Do not place items which are more than 2 lb (1 kg) on the hook.

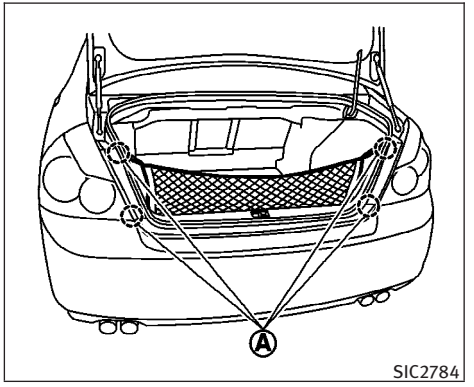

CARGO NET (if so equipped)

The cargo net helps keep packages in the cargo area from moving around while your vehicle is driven.

To install the cargo net, attach the hooks to the retainers Ⓐ.

⚠ CAUTION

Avoid keeping heavy objects in the net.

POWER WINDOWS

⚠ WARNING

- **Make sure that all passengers have their hands, etc. inside the vehicle while it is in motion and before closing the windows. Use the window lock switch to prevent unexpected use of the power windows.**
- **Do not leave children unattended inside the vehicle. They could unknowingly activate switches or controls and become trapped in the window. Unattended children could become involved in serious accidents.**

The power windows operate when the ignition switch is in the ON position or for about 45 seconds after the ignition switch is pushed to the LOCK position. If the driver's or front passenger's door is opened during this period of about 45 seconds, power to the windows is canceled.

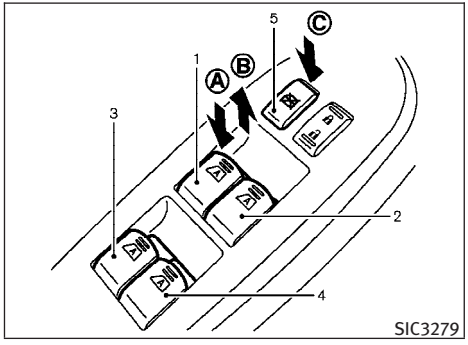

Main power window switch (driver's side)

1. Driver side window
2. Front passenger side window
3. Rear left passenger side window
4. Rear right passenger side window
5. Window lock button

To open or close the window, push down Ⓐ or pull up Ⓑ the switch and hold it. The main switch (driver side switches) will open or close all the windows.

Locking passengers' windows

When the lock button Ⓒ is pushed in, only the driver side window can be opened or closed. Push it in again to cancel.

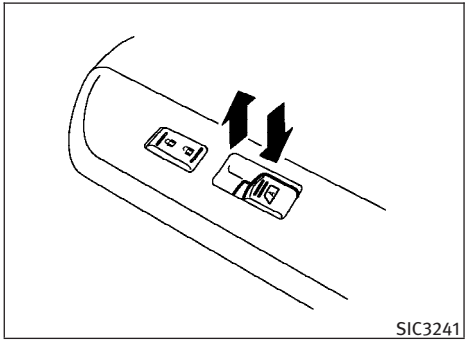

Passenger side power window switch

The passenger side switch will open or close only the corresponding window. To open or close the window, push down or pull up the switch and hold it.

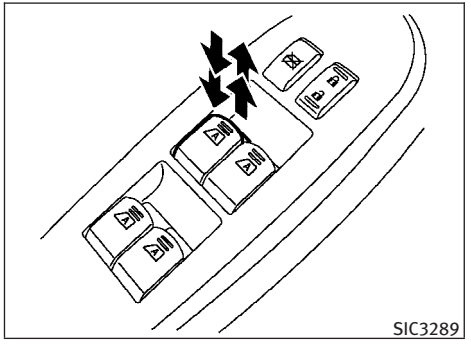

Automatic operation (for all door windows)

To fully open or close the window, completely push down or pull up the switch and release it; it need not be held. The window will automatically open or close all the way. To stop the window, just push or lift the switch in the opposite direction.

A light push or pull on the switch will cause the window to open or close until the switch is released.

Auto reverse function

⚠ WARNING

There are some small distances immediately before the closed position which cannot be detected. Make sure that all passengers have their hands, etc., inside the vehicle before closing the window.

If the control unit detects something caught in the window as it is closing, the window will be immediately lowered.

The auto reverse function can be activated when the window is closed by automatic operation when the ignition switch is in the ON position or for 45 seconds after the ignition switch is pushed to the LOCK position.

Depending on the environment or driving conditions, the auto reverse function may be activated if an impact or load similar to something being caught in the window occurs.

If the windows do not close automatically

If the power window automatic function (closing only) does not operate properly, perform the following procedure to initialize the power window system.

1. Push the ignition switch to the ON position.
2. Close the door.
3. Open the window completely by operating the power window switch.
4. Pull the power window switch and hold it to close the window, and then hold the switch more than 3 seconds after the window is closed completely.
5. Release the power window switch. Operate the window by the automatic function to confirm the initialization is complete.
6. Perform steps 2 through 5 above for other windows.

If the power window automatic function does not operate properly after performing the procedure above, have your vehicle checked by an INFINITI retailer.

⚠ WARNING

- **In an accident you could be thrown from the vehicle through an open moonroof. Always use seat belts and child restraints.**
- **Do not allow anyone to stand up or extend any portion of their body out of the moonroof opening while the vehicle is in motion or while the moonroof is closing.**

⚠ CAUTION

- **Remove water drops, snow, ice or sand from the moonroof before opening.**
- **Do not place any heavy object on the moonroof or surrounding area.**

AUTOMATIC MOONROOF

The moonroof only operates when the ignition switch is in the ON position.

The automatic moonroof is operational for about 45 seconds, even if the ignition switch is pushed to the LOCK position. If the driver's door or the passenger's door is opened during this period of about 45 seconds, power to the moonroof is canceled.

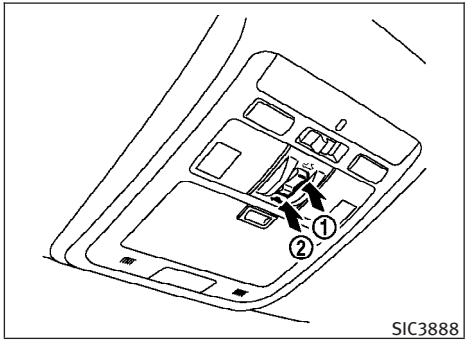

Sunshade

The sunshade will open automatically when the moonroof is opened. However, it must be closed manually.

Tilting the moonroof

To tilt up, first close the moonroof, then push the OPEN ① side of the moonroof switch and release it; it need not be held. To tilt down the moonroof, push the CLOSE ② side.

Sliding the moonroof

To fully open or close the moonroof, push the OPEN ① or CLOSE ② side of the moonroof switch and release it; it need not be held. The roof will automatically open or close all the way.

To stop the roof, push the switch once more while it is opening or closing.

Auto reverse function

⚠ WARNING

There are some small distances immediately before the closed position which cannot be detected. Make sure that all passengers have their hands, etc., inside the vehicle before closing the moonroof.

If the control unit detects something caught in the moonroof when it is closing, the moonroof will be immediately opened.

The auto reverse function can be activated when the moonroof is closed by automatic operation when the ignition switch is in the ON position or for about 45 seconds after the ignition switch is pushed to the LOCK position.

If the moonroof cannot be closed automatically when the auto reverse function activates due to a malfunction, push and hold the CLOSE ② side of the moonroof switch.

Depending on the environment or driving conditions, the auto reverse function may be activated if an impact or load similar to something being caught in the moonroof occurs.

If the moonroof does not operate

If the moonroof does not operate properly, perform the following procedure to initialize the moonroof operation system.

1. If the moonroof is open, close it fully by repeatedly pushing the CLOSE ② side of the moonroof switch.
2. Push and hold the CLOSE ② side of the moonroof switch to tilt the moonroof up.
3. Release the moonroof switch after the moonroof moves slightly up and down.
4. Push and hold the OPEN ① side of the moonroof switch to fully tilt the moonroof down.
5. Check if the moonroof switch operates normally.

If the moonroof does not operate properly after performing the procedure above, have your vehicle checked by an INFINITI retailer.

REAR CONTROL CANCEL SWITCH (if so equipped)

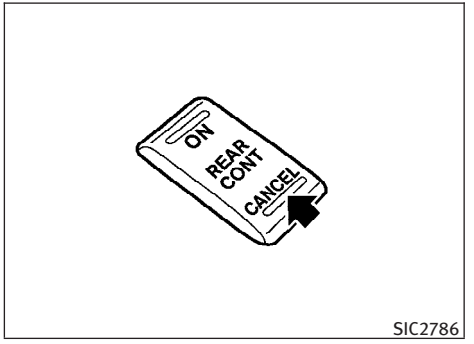

The rear control cancel switch is located on the center console.

Pushing the rear control cancel switch to the cancel side will deactivate the following switches in the rear center armrest.

- Automatic climate control
- Audio

REAR SUNSHADE (if so equipped)

⚠ CAUTION

- **To avoid personal injury, keep your hands, fingers and head away from the sunshade arm, arm rail and screen inlet port.**
- **Do not allow children near the rear sunshade system. They could be injured.**
- **Do not place objects on or near the rear sunshade. This could cause improper operation or damage it.**
- **Do not pull or push the rear sunshade. This could cause improper operation or damage it.**

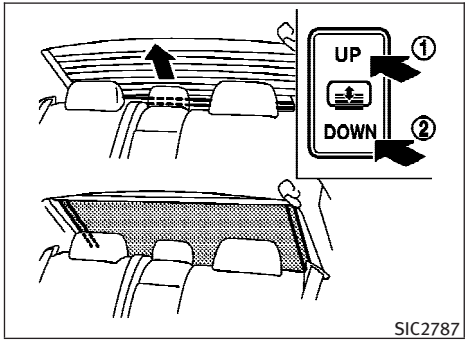

The rear sunshade operates when the ignition switch is in the ON position.

The rear sunshade switches are located on the center console and inside the rear armrest.

To raise the screen, push the UP side of the switch ①.

To lower the screen, push the DOWN side of the switch ②. The switch need not be held.

⚠ CAUTION

- **Do not place objects (such as newspapers, handkerchiefs, etc.) on the screen inlet port. Doing so may entangle these objects in the screen when it is extending or retracting, causing improper operation or damage to the screen.**
- **Do not push the sunshade arm with your hands, etc., as this may deform it. Improper operation or damage to the screen may result.**
- **Do not put any object into the screen inlet port as this may result in improper operation or damage the screen.**
- **Do not hang any object on the arm rail as this may result in improper operation or damage the screen.**
- **Do not forcefully pull the screen. Doing so may elongate the screen. Improper operation or damage to the screen may result.**

⚠ CAUTION

Do not use for extended periods of time with the engine stopped. This could result in a discharged battery.

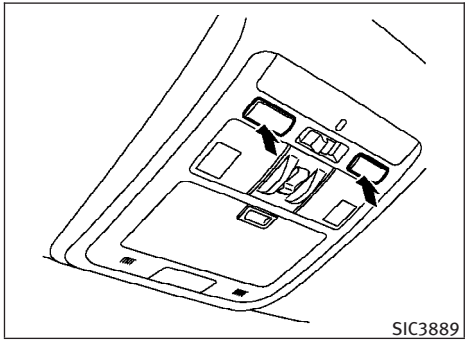

MAP LIGHTS

Push the button as illustrated to turn the light on or off.

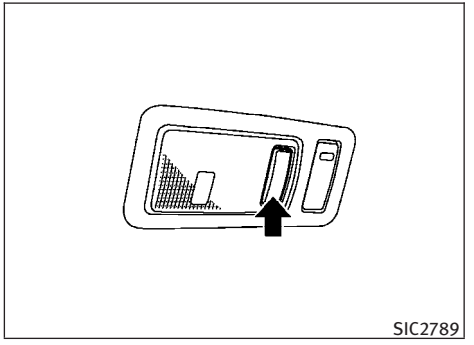

PERSONAL LIGHTS

Rear

Push the button as illustrated to turn the light on or off.

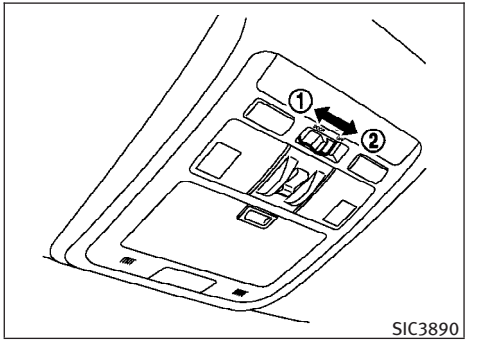

INTERIOR LIGHT CONTROL SWITCH

The interior light control switch has two positions: DOOR and OFF.

DOOR position

When the switch is in the DOOR position ①, the map lights and rear personal lights will illuminate under the following conditions:

- ignition switch is in the LOCK position
  - remain on for about 15 seconds.

- doors are unlocked by pushing the UNLOCK button on the Intelligent Key or door handle request switch with the ignition switch in the LOCK position
  - remain on for about 15 seconds.
- any door is opened and then closed with the ignition switch in the LOCK position
  - remain on for about 15 seconds.
- any door is opened with the ignition switch in the ACC or ON position
  - remain on while the door is opened. When the door is closed, the lights go off.

The lights will turn off after 30 minutes when the lights remain illuminated to prevent the battery from becoming discharged.

When the auto interior illumination is set to the OFF position (see "VEHICLE INFORMATION AND SETTINGS" in the "4. Monitor, climate, audio, phone and voice recognition systems" section), the lights will illuminate under the following condition:

- any door is opened with the ignition switch in any position
  - remain on while the door is opened. When the door is closed, the lights go off.

OFF position

When the switch is in the OFF position ②, the lights will not illuminate, regardless of the condition.

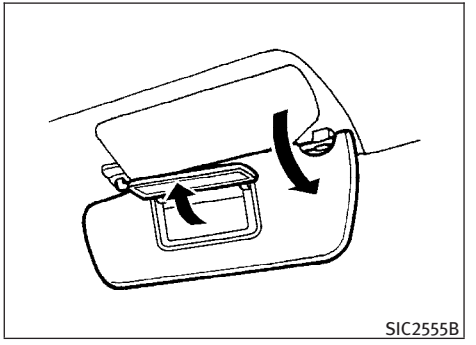

The light on the vanity mirror will turn on when the cover on the vanity mirror is opened.

When the cover is closed, the light will turn off.

The lights will turn off after 30 minutes when the lights remain illuminated to prevent the battery from becoming discharged.

TRUNK LIGHT

The light illuminates when the trunk lid is opened. When the trunk lid is closed, the light will turn off.

The light will turn off after 30 minutes when the light remains illuminated to prevent the battery from becoming discharged.

HOMELINK® UNIVERSAL TRANSCEIVER

HomeLink® Universal Transceiver provides a convenient way to consolidate the functions of up to three individual hand-held transmitters into one built-in device.

HomeLink® Universal Transceiver:

- Will operate most Radio Frequency (RF) devices such as garage doors, gates, home and office lighting, entry door locks and security systems.
- Is powered by your vehicle's battery. No separate batteries are required. If the vehicle's battery is discharged or is disconnected, HomeLink® will retain all programming.

Once HomeLink® Universal Transceiver is programmed, retain the original transmitter for future programming procedures (Example: new vehicle purchases). Upon sale of the vehicle, the programmed HomeLink® Universal Transceiver buttons should be erased for security purposes. For additional information, see "PROGRAMMING HomeLink®" later in this section.

⚠ WARNING

- **Do not use HomeLink® Universal Transceiver with any garage door opener that lacks safety stop and reverse features as required by federal safety standards. (These standards became effective for opener models manufactured after April 1, 1982.) A garage door opener which cannot detect an object in the path of a closing garage door and then automatically stop and reverse, does not meet current federal safety standards. Using a garage door opener without these features increases the risk of serious injury or death.**
- **During programming procedure, your garage door or security gate may open or close. Make sure that people and objects are clear of the garage door, gate, etc. that you are programming.**
- **Your vehicle's engine should be turned off while programming HomeLink® Universal Transceiver.**

PROGRAMMING HOMELINK®

To program your HomeLink® Transceiver to operate a garage door, gate, or entry door opener, home or office lighting, you need to be at the same location as the device. Note: Garage door openers (manufactured after 1996) have "rolling

code protection”. To program a garage door opener equipped with “rolling code protection”; you will need to use a ladder to get up to the garage door opener motor to be able to access the “smart or learn” program button.

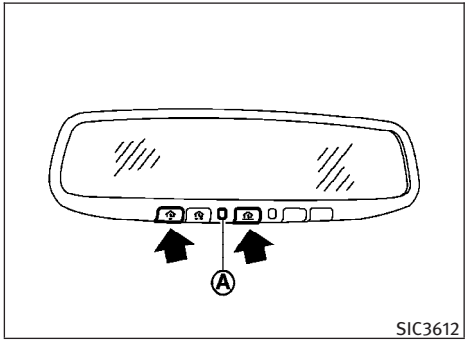

1. To begin, push and hold the 2 outer HomeLink® buttons (to clear the memory) until the indicator light Ⓐ blinks (after 20 seconds). Release both buttons.
2. Position the end of the hand-held transmitter 1 to 3 in (20 to 70 mm) away from the HomeLink® surface.

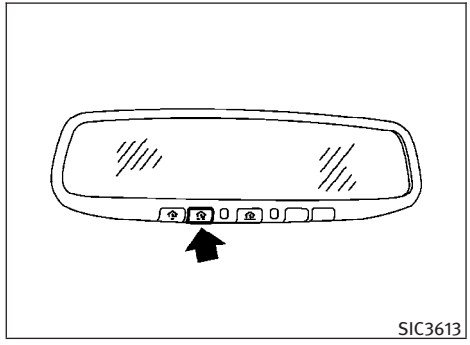

3. Using both hands, simultaneously push and hold both the HomeLink® button you want to program and the hand-held transmitter button.

   DO NOT release the buttons until step 4 has been completed.

4. Hold down both buttons until the indicator light on HomeLink® flashes, changing from a “slow blink” to a “rapid blink”. This could take up to 90 seconds. When the indicator light blinks rapidly, both buttons may be released. The rapidly flashing light indicates successful programming. To activate the garage door or other programmed device, push and hold the programmed HomeLink® button - releasing when the device begins to activate.
5. If the indicator light on HomeLink® blinks rapidly for two seconds and then turns solid, HomeLink® has picked up a “rolling code” garage door opener signal. You will need to proceed with the next steps to train HomeLink®, completing the programming may require a ladder and another person for convenience.
6. Push and release the program button located on the garage door opener’s motor to activate the “training mode”. This button is usually located near the antenna wire that hangs down from the motor. If the wire originates from under a light lens, you will need to remove the lens to access the program button.

NOTE:

Once you have pushed and released the training button on the garage door opener’s motor and the “training light” is lit, you have 30 seconds in which to perform step 7. For convenience, use the help of a second person to assist when performing this step.

7. Quickly (within 30 seconds of pushing and releasing the garage door opener program button) and firmly push and release the HomeLink® button you’ve just programmed. Push and release the HomeLink® button up to three times to complete the training.
8. Your HomeLink® button should now be programmed.

To program the remaining HomeLink® buttons for additional door or gate openers, follow steps 2 through 8 only.

NOTE:

Do not repeat step 1 unless you want to “clear” all previously programmed HomeLink® buttons.

If you have any questions or are having difficulty programming your HomeLink® buttons, please refer to the HomeLink® web site at: www.homelink.com or call 1-800-355-3515.

PROGRAMMING HOMELINK® FOR CANADIAN CUSTOMERS

Prior to 1992, D.O.C. regulations required hand-held transmitters to stop transmitting after 2 seconds. To program your hand-held transmitter to HomeLink®, continue to push and hold the HomeLink® button (note steps 2 through 4 under “Programming HomeLink®”) while you push and re-push (“cycle”) your hand-held transmitter every 2 seconds until the indicator light flashes rapidly (indicating successful programming).

NOTE:

If programming a garage door opener, etc., it is advised to unplug the device during the “cycling” process to prevent possible damage to the garage door opener components.

OPERATING THE HOMELINK® UNIVERSAL TRANSCEIVER

HomeLink® Universal Transceiver (once programmed) may now be used to activate the garage door, etc. To operate, simply push the appropriate programmed HomeLink® Universal Transceiver button. The red indicator light will illuminate while the signal is being transmitted.

PROGRAMMING TROUBLE-DIAGNOSIS

If HomeLink® does not quickly learn the hand-held transmitter information:

- replace the hand-held transmitter batteries with new batteries.
- position the hand-held transmitter with its battery area facing away from the HomeLink® surface.
- push and hold both the HomeLink® and hand-held transmitter buttons without interruption.
- position the hand-held transmitter 2 to 5 in (50 to 127 mm) away from the HomeLink® surface. Hold the transmitter in that position for up to 15 seconds. If HomeLink® is not programmed within that time, try holding the transmitter in another position - keeping the indicator light in view at all times.

If you continue to have programming difficulties, please contact the INFINITI Consumer Affairs Department. The phone numbers are located in the Foreword of this Owner's Manual.

CLEARING THE PROGRAMMED INFORMATION

Individual buttons cannot be cleared, however to clear all programming, push and hold the two outside buttons and release when the indicator light begins to flash (in approximately 20 seconds).

REPROGRAMMING A SINGLE HOMELINK® BUTTON

To reprogram a HomeLink® Universal Transceiver button, complete the following.

1. Push and hold the desired HomeLink® button. **Do not** release the button until step 4 has been completed.
2. When the indicator light begins to flash slowly (after 20 seconds), position the hand-held transmitter 2 to 5 in (50 to 127 mm) away from the HomeLink® surface.
3. Push and hold the hand-held transmitter button.
4. The HomeLink® indicator light will flash, first slowly and then rapidly. When the indicator light begins to flash rapidly, release both buttons.

The HomeLink® Universal Transceiver button has now been reprogrammed. The new device can be activated by pushing the HomeLink® button that was just programmed. This procedure will not affect any other programmed HomeLink® buttons.

IF YOUR VEHICLE IS STOLEN

If your vehicle is stolen, you should change the codes of any non-rolling code device that has been programmed into HomeLink®. Consult the Owner's Manual of each device or call the manufacturer or retailer of those devices for additional information.

When your vehicle is recovered, you will need to reprogram the HomeLink® Universal Transceiver with your new transmitter information.

FCC Notice:

This device complies with FCC rules part 15. Operation is subject to the following two conditions: (1) This device may not cause harmful interference and (2) This device must accept any interference that may be received, including interference that may cause undesired operation.

The transmitter has been tested and complies with FCC and DOC/MDC rules. Changes or modifications not expressly approved by the party responsible for compliance could void the user's authority to operate the device.

DOC: ISTC 1763K1313

FCC I.D.: CB2V67690

3 Pre-driving checks and adjustments

Keys 3-2
Intelligent Key 3-2
Valet hand-off. 3-3
Doors 3-4
Locking with mechanical key 3-4
Opening and closing windows with the mechanical key 3-4
Locking with inside lock knob 3-5
Locking with power door lock switch. 3-5
Automatic door locks 3-5
Child safety rear door lock 3-6
Intelligent Key system 3-6
Intelligent Key operating range 3-8
Door locks/unlocks precaution 3-9
Intelligent Key operation 3-9
Battery saver system 3-11
Warning signals. 3-11
Troubleshooting guide 3-12
How to use remote keyless entry function 3-14
Hood. 3-17
Trunk lid 3-17
Trunk lid release switch. 3-18
Trunk open request switch 3-18
Opening with key 3-18
Trunk open button 3-18
Trunk release power cancel switch. 3-19
Interior trunk lid release 3-19
Fuel-filler door 3-20
Opening the fuel-filler door 3-20
Fuel-filler cap 3-21
Tilt/telescopic steering 3-22
Tilt or telescopic operation. 3-22
Sun visors. 3-22
Mirrors 3-23
Inside mirror. 3-23
Outside mirrors 3-24
Automatic drive positioner 3-26
Entry/exit function 3-26
Memory storage. 3-27
System operation 3-29

A key number plate is supplied with your keys. Record the key number and keep it in a safe place (such as your wallet), not in the vehicle. If you lose your keys, see an INFINITI retailer for duplicates by using the key number. INFINITI does not record any key numbers so it is very important to keep track of your key number plate.

A key number is only necessary when you have lost all keys and do not have one to duplicate from. If you still have a key, this key can be duplicated by an INFINITI retailer.

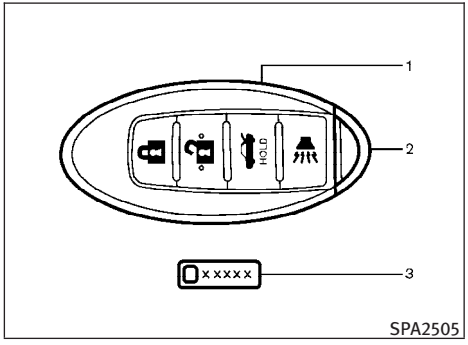

1. Intelligent Key (2)
2. Mechanical key (inside Intelligent Keys) (2)
3. Key number plate (1)

INTELLIGENT KEY

Your vehicle can only be driven with the Intelligent Keys which are registered to your vehicle's Intelligent Key system components and INFINITI Vehicle Immobilizer System components. As many as 4 Intelligent Keys can be registered and used with one vehicle. The new keys must be registered by an INFINITI retailer prior to use with the Intelligent Key system and INFINITI Vehicle Immobilizer System of your vehicle. Since the registration process requires erasing all memory in the Intelligent Key components when registering new keys, be sure to take all Intelligent Keys that you have to the INFINITI retailer.

⚠ CAUTION

- **Be sure to carry the Intelligent Key with you when driving. The Intelligent Key is a precision device with a built-in transmitter. To avoid damaging it, please note the following.**
  - **The Intelligent Key is water resistant; however, wetting may damage the Intelligent Key. If the Intelligent Key gets wet, immediately wipe until it is completely dry.**
  - **Do not bend, drop or strike it against another object.**
  - **Do not place the Intelligent Key for an extended period in a place where temperatures exceed 140°F (60°C).**
  - **Do not change or modify the Intelligent Key.**
  - **Do not use a magnet key holder.**
  - **Do not place the Intelligent Key near an electric appliance such as a television set, personal computer or cellular phone.**

– **Do not allow the Intelligent Key to come into contact with water or salt water, and do not wash it in a washing machine. This could affect the system function.**

- **If an Intelligent Key is lost or stolen, INFINITI recommends erasing the ID code of that Intelligent Key. This will prevent the Intelligent Key from unauthorized use to unlock the vehicle. For information regarding the erasing procedure, please contact an INFINITI retailer.**

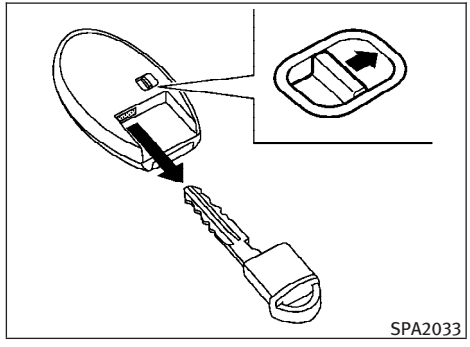

Mechanical key

To remove the mechanical key, release the lock knob at the back of the Intelligent Key.

To install the mechanical key, firmly insert it into the Intelligent Key until the lock knob returns to the lock position.

Use the mechanical key to lock or unlock the doors, trunk lid, glove box and trunk pass-through lid, if they are equipped with a key cylinder.

See “DOORS” later in this section and “TRUNK LID” later in this section, “STORAGE” in the “2. Instruments and controls” section and “SEATS” in the “1. Safety — Seats, seat belts and supplemental restraint system” section.

⚠ CAUTION

Always carry the mechanical key installed in the Intelligent Key.

VALET HAND-OFF

When you have to leave a key with a valet, give them the Intelligent Key itself and keep the mechanical key with you to protect your belongings.

To prevent the glove box and the trunk from being opened during valet hand-off, follow the procedures below.

1. Push the trunk release power cancel switch to the CANCEL side.
2. Remove the mechanical key from the Intelligent Key.
3. Lock the glove box and the trunk pass-through with the mechanical key.
4. Hand the Intelligent Key to the valet, keeping the mechanical key in your pocket or bag for insertion into the Intelligent Key when you retrieve your vehicle.

See “TRUNK LID” later in this section, “STORAGE” in the “2. Instruments and controls” section and “SEATS” in the “1. Safety — Seats, seat belts and supplemental restraint system” section.

WARNING

- **Always have the doors locked while driving. Along with the use of seat belts, this provides greater safety in the event of an accident by helping to prevent persons from being thrown from the vehicle. This also helps keep children and others from unintentionally opening the doors, and will help keep out intruders.**
- **Before opening any door, always look for and avoid oncoming traffic.**
- **Do not leave children unattended inside the vehicle. They could unknowingly activate switches or controls. Unattended children could become involved in serious accidents.**

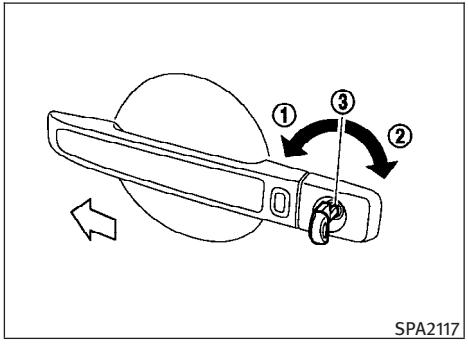

LOCKING WITH MECHANICAL KEY

The power door lock system allows you to lock or unlock all doors simultaneously using the mechanical key.

- Turning the driver's door key cylinder to the front of the vehicle ① will lock all doors.
- Turning the driver's door key cylinder once to the rear of the vehicle ② will unlock the driver's door. After returning the key to the neutral position ③, turning it to the rear again within 5 seconds will unlock all doors.
- You can switch the lock system to the mode that allows you to open all the doors when the key is turned once. (See "HOW TO USE SETTING BUTTON" in the "4. Monitor, climate, audio, phone and voice recognition systems" section.)

OPENING AND CLOSING WINDOWS WITH THE MECHANICAL KEY

The driver's door key operation also allows you to open and close all door windows.

To open the windows, turn the driver's door key cylinder to the rear of the vehicle for **longer than 1 second** . The door is unlocked and the window keeps opening while turning the key.

This function can also be performed by pushing and holding the door UNLOCK button of the Intelligent Key. (See "HOW TO USE REMOTE KEYLESS ENTRY FUNCTION" later in this section.)

To close the windows, turn the driver's door key cylinder to the front of the vehicle for **longer than 1 second** . The door is locked and the window keeps closing while turning the key.

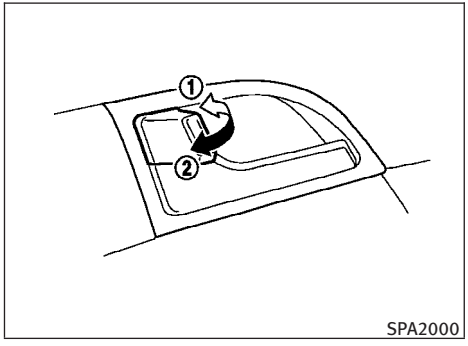

SPA2000

LOCKING WITH INSIDE LOCK KNOB

To lock the door individually, move the inside lock knob to the lock position ① then close the door.

To unlock, move the inside lock knob to the unlock position ②.

When locking the door without an Intelligent Key, be sure not to leave the Intelligent Key inside the vehicle.

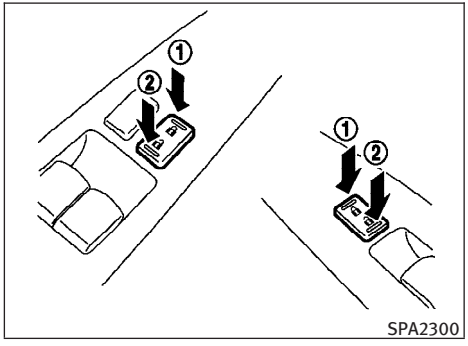

SPA2300

LOCKING WITH POWER DOOR LOCK SWITCH

Operating the power door lock switch will lock or unlock all the doors. The switches are located on the driver's and front passenger's door armrests.

To lock the doors, push the power door lock switch to the lock position ① with the driver's or front passenger's door open, then close the door.

When locking the door this way, be certain not to leave the Intelligent Key inside the vehicle.

To unlock the doors including the fuel-filler door, push the power door lock switch to the unlock position ②.

Lockout protection

When the power door lock switch (driver or front passenger) is moved to the lock position with the Intelligent Key in the port and any door open, all doors will lock and unlock automatically. With the Intelligent Key left in the vehicle (not in the Intelligent Key port) and any door open, all doors will unlock automatically and a chime will sound after the door is closed.

These functions help to prevent the Intelligent Key from being accidentally locked inside the vehicle.

AUTOMATIC DOOR LOCKS

- All doors will be locked automatically when the vehicle speed reaches 15 MPH (24 km/h).
- All doors will be unlocked automatically when the ignition switch is pushed to the OFF position.

The automatic lock and unlock functions can be deactivated or activated independently of each other.

To deactivate or activate the automatic lock or unlock system, perform the following procedure:

1. Close all doors.
2. Push the ignition switch to the "ON" position.

3. Do one of the following within 20 seconds of performing step 2:
   - To change AUTO UNLOCK settings: push and hold the power door lock switch to the 🔓 position (UNLOCK) for more than 5 seconds.
   - To change AUTO LOCK settings: push and hold the power door lock switch to the 🔒 position (LOCK) for more than 5 seconds.
4. When activated, the hazard indicator will flash twice. When deactivated, the hazard indicator will flash once.
5. The ignition must be placed in the OFF and ON position again between each setting change.

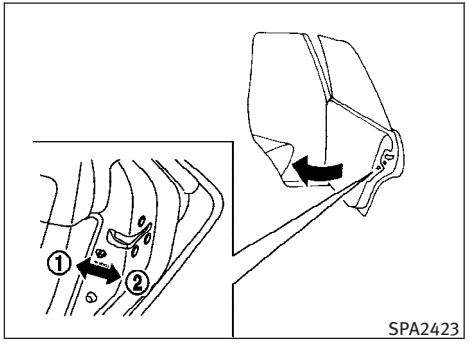

CHILD SAFETY REAR DOOR LOCK

The child safety rear door lock helps prevent doors from being opened accidentally, especially when small children are in the vehicle.

When the levers are in the lock position ①, the rear doors can be opened only from the outside.

To disengage, move the levers to the unlock position ②.

⚠ WARNING

- **Radio waves could adversely affect electric medical equipment. Those who use a pacemaker should contact the electric medical equipment manufacturer for the possible influences before use.**
- **The Intelligent Key transmits radio waves when the buttons are pushed. The FAA advises that the radio waves may affect aircraft navigation and communication systems. Do not operate the Intelligent Key while on an airplane. Make sure the buttons are not operated unintentionally when the unit is stored during a flight.**

The Intelligent Key system can operate all the door locks using the remote controller function or pushing the request switch on the vehicle without taking the key out from a pocket or purse. The operating environment and/or conditions may affect the Intelligent Key system operation.

Be sure to read the following before using the Intelligent Key system.

⚠ CAUTION

- **Be sure to carry the Intelligent Key with you when operating the vehicle.**

- **Never leave the Intelligent Key in the vehicle when you leave the vehicle.**

The Intelligent Key is always communicating with the vehicle as it receives radio waves. The Intelligent Key system transmits weak radio waves. Environmental conditions may interfere with the operation of the Intelligent Key system under the following operating conditions.

- When operating near a location where strong radio waves are transmitted, such as a TV tower, power station and broadcasting station.
- When in possession of wireless equipment, such as a cellular telephone, transceiver, and CB radio.
- When the Intelligent Key is in contact with or covered by metallic materials.
- When any type of radio wave remote control is used nearby.
- When the Intelligent Key is placed near an electric appliance such as a personal computer.
- When the vehicle is parked near a parking meter.

In such cases, correct the operating conditions before using the Intelligent Key function or use the mechanical key.

Although the life of the battery varies depending on the operating conditions, the battery's life is approximately 2 years. If the battery is discharged, replace it with a new one.

Since the Intelligent Key is continuously receiving radio waves, if the key is left near equipment which transmits strong radio waves, such as signals from a TV and personal computer, the battery life may become shorter.

For information regarding replacement of a battery, see "BATTERY REPLACEMENT" in the "8. Maintenance and do-it-yourself" section.

Because the steering wheel is locked electrically, unlocking the steering wheel with the ignition switch in the LOCK position is impossible when the vehicle battery is completely discharged. Pay special attention that the vehicle battery is not completely discharged.

As many as 4 Intelligent Keys can be registered and used with one vehicle. For information about the purchase and use of additional Intelligent Keys, contact an INFINITI retailer.

⚠ CAUTION

- **Do not allow the Intelligent Key, which contains electrical components, to come into contact with water or salt water. This could affect the system function.**
- **Do not drop the Intelligent Key.**
- **Do not strike the Intelligent Key sharply against another object.**
- **Do not change or modify the Intelligent Key.**
- **Wetting may damage the Intelligent Key. If the Intelligent Key gets wet, immediately wipe until it is completely dry.**
- **Do not place the Intelligent Key for an extended period in an area where temperatures exceed 140°F (60°C).**
- **Do not attach the Intelligent Key with a key holder that contains a magnet.**
- **Do not place the Intelligent Key near equipment that produces a magnetic field, such as a TV, audio equipment, personal computers or cellular phones.**

If an Intelligent Key is lost or stolen, INFINITI recommends erasing the ID code of that Intelligent Key from the vehicle. This may prevent the unauthorized use of the Intelligent Key to operate the vehicle. For information regarding the erasing procedure, contact an INFINITI retailer.

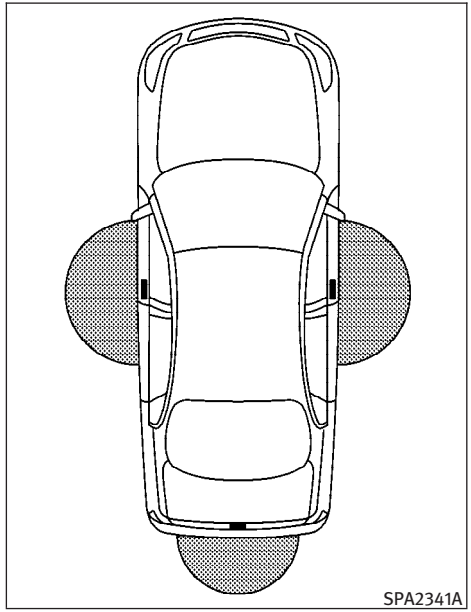

INTELLIGENT KEY OPERATING RANGE

The Intelligent Key functions can only be used when the Intelligent Key is within the specified operating range from the request switch.

When the Intelligent Key battery is discharged or strong radio waves are present near the operating location, the Intelligent Key system's operating range becomes narrower, and the Intelligent Key may not function properly.

The operating range is within 31.50 in (80 cm) from each request switch.

If the Intelligent Key is too close to the door glass, handle or rear bumper the request switches may not function.

When the Intelligent Key is within the operating range, it is possible for anyone who does not carry the Intelligent Key to push the request switch to lock/unlock the doors.

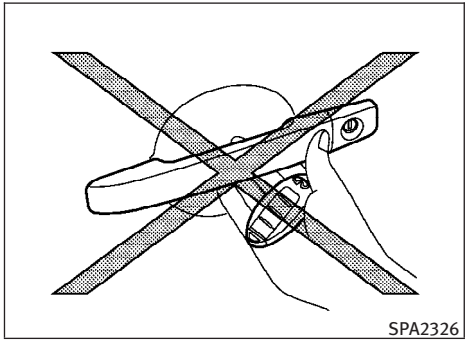
SPA2326

DOOR LOCKS/UNLOCKS PRECAUTION

- Do not push the door handle request switch with the Intelligent Key held in your hand as illustrated. The close distance to the door handle will cause the Intelligent Key system to have difficulty recognizing that the Intelligent Key is outside the vehicle.
- After locking with the door handle request switch, verify the doors are securely locked by testing them.
- To prevent the Intelligent Key from being left inside the vehicle, make sure you carry the key with you and then lock the doors.
- To prevent the Intelligent Key from being left inside the trunk, make sure you carry the key with you and then close the trunk.
- Do not pull the door handle before pushing the door handle request switch. The door will be unlocked but will not open. Release the door handle once and pull it again to open the door.
- The Intelligent Key system (opening/closing doors with the door handle request switch) can be set to remain inactive. (See “VEHICLE INFORMATION AND SETTINGS” in the “4. Monitor, climate, audio, phone and voice recognition systems” section.)

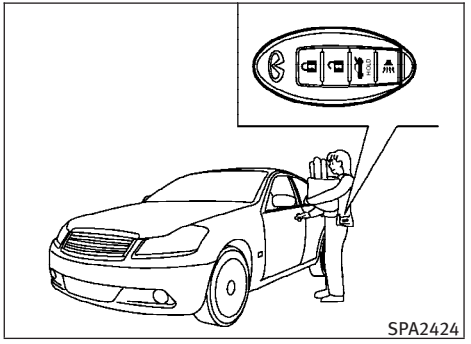
SPA2424

INTELLIGENT KEY OPERATION

You can lock or unlock the doors without taking the key out from your pocket or bag.

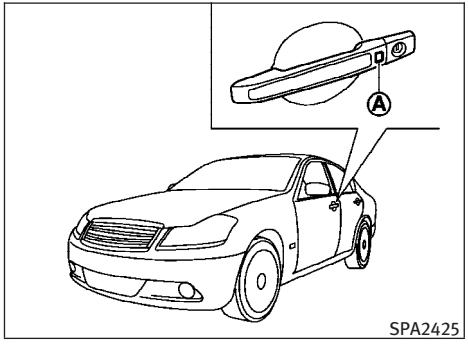

When you carry the Intelligent Key with you, you can lock or unlock all doors by pushing the door handle request switch Ⓐ within the range of operation.

When you lock or unlock the doors or the trunk lid, the hazard indicator will flash and the horn (or the outside chime) will sound as a confirmation. For details, see “Setting hazard indicator and horn mode” later in this section.

Locking doors and fuel-filler door

1. Move the selector lever to the P (Park) position, push the ignition switch to the LOCK position and make sure you carry the Intelligent Key with you.*1
2. Close all the doors.*2
3. Push the driver’s or front passenger’s door handle request switch while carrying the Intelligent Key with you.*3
4. All the doors and fuel-filler door will lock.
5. The hazard indicator flashes twice and the outside chime sounds twice.

*1: Doors will lock with door handle request switch while the ignition switch is in the ACC or ON position.

*2: Doors will not lock with the door handle request switch while any door is open.

*3: Doors will not lock with the door handle request switch when the Intelligent Key is left inside the vehicle.
However, when an Intelligent Key is inside the vehicle, doors can be locked with another registered Intelligent Key.

Unlocking doors and fuel-filler door

1. Push the driver’s or front passenger’s door handle request switch once while carrying the Intelligent Key with you.
2. The hazard indicator flashes once and outside chime sounds once. The corresponding door and the fuel-filler door will unlock.
3. Push the door handle request switch again within 1 minute.
4. The hazard indicator flashes once and outside chime sounds once again. All the doors will unlock.

All doors will be locked automatically unless one of the following operations is performed within 1 minute after pushing the request switch while the doors are locked.

- Opening any doors.
- Pushing the ignition switch.
- Inserting the Intelligent Key into the Intelligent Key port.

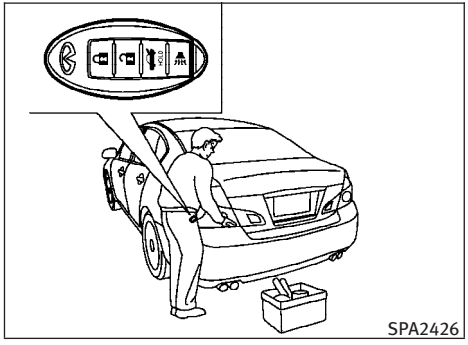

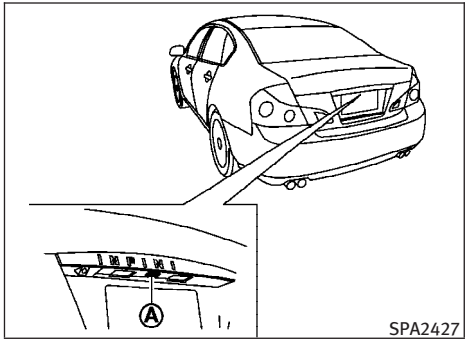

Opening trunk lid

1. Push the trunk open request switch Ⓐ for more than 1 second.
2. The trunk will unlatch. An outside chime will sound four times.
3. Raise the trunk lid to open the trunk.

Lockout protection :

To prevent the Intelligent Key from being accidentally locked in the trunk, lockout protection is equipped with the Intelligent Key system. When the trunk lid is closed with the Intelligent Key inside the trunk, the outside buzzer will sound and the trunk will open.

BATTERY SAVER SYSTEM

When all the following conditions are met for 60 minutes, the battery saver system will cut off the power supply to prevent battery discharge.

- The ignition switch is in the ACC position, and
- All doors are closed, and
- The selector lever is in the P (Park) position.

WARNING SIGNALS

To help prevent the vehicle from moving unexpectedly by erroneous operation of the Intelligent Key listed on the following chart or to help prevent the vehicle from being stolen, chime or beep sounds inside and outside the vehicle and a warning displays in the dot matrix liquid crystal display.

When a chime or beep sounds or the warning displays, be sure to check the vehicle and Intelligent Key.

See “TROUBLESHOOTING GUIDE” later in this section and “DOT MATRIX LIQUID CRYSTAL DISPLAY” in the “2. Instruments and controls” section.

TROUBLESHOOTING GUIDE

Symptom		Possible cause	Action to take
When pushing the ignition switch to stop the engine	The SHIFT P warning appears on the display and the inside warning chime sounds continuously.	The selector lever is not in the P (Park) position.	Shift the selector lever to the P (Park) position.
When opening the driver's door to get out of the vehicle	The inside warning chime sounds continuously.	The ignition switch is in the ACC position.	Push the ignition switch to the LOCK position.
		The Intelligent Key is in the Intelligent Key port.	Remove the Intelligent Key from the Intelligent Key port.
When closing the door after getting out of the vehicle	The NO KEY warning appears on the display, the outside chime sounds 3 times and the inside warning chime sounds for approximately 3 seconds.	The ignition switch is in the ACC or ON position.	Push the ignition switch to the LOCK position.
	The SHIFT P warning appears on the display and the outside chime sounds continuously.	The ignition switch is in the ACC position and the selector lever is not in the P (Park) position.	Move the selector lever to the P (Park) position and push the ignition switch to the LOCK position.
When closing the door with the inside lock knob turned to LOCK	The outside chime sounds for approximately 3 seconds and all the doors unlock.	The Intelligent Key is inside the vehicle or trunk.	Carry the Intelligent Key with you.
When pushing the door handle request switch to lock the door	The outside chime sounds for approximately 2 seconds.	The Intelligent Key is inside the vehicle or trunk.	Carry the Intelligent Key with you.
		A door is not closed securely.	Close the door securely.
		The door handle request switch is pushed before the door is closed.	Push the door handle request switch after the door is closed.

Symptom		Possible cause	Action to take
When closing the trunk lid	The outside chime sounds for approximately 10 seconds and the trunk lid opens.	The Intelligent Key is inside the trunk.	Carry the Intelligent Key with you.

HOW TO USE REMOTE KEYLESS ENTRY FUNCTION

The remote keyless entry function can operate all door locks and open the trunk lid using the remote keyless function of the Intelligent Key. The remote keyless function can operate at a distance of approximately 33 ft (10 m) from the vehicle. (The operating distance depends upon the conditions around the vehicle.)

The remote keyless function will not operate when:

- the distance between the Intelligent Key and the vehicle is over 33 ft (10 m).
- the Intelligent Key battery is discharged.

The LOCK/UNLOCK operating range varies depending on the environment. To securely operate the lock and unlock buttons, approach the vehicle to about 3 ft (1 m) from the door.

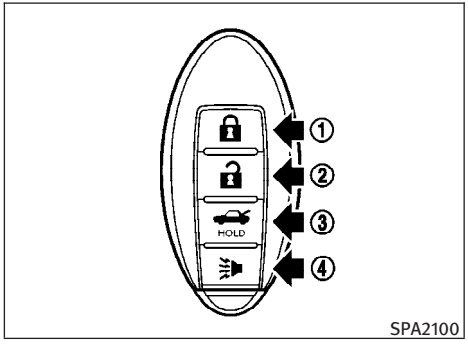

When you lock or unlock the doors or the trunk lid, the hazard indicator will flash and the horn (or the outside chime) will sound as a confirmation. For details, see “Setting hazard indicator and horn mode” later in this section.

Locking doors and fuel-filler door

1. Move the selector lever to the P (Park) position and push the ignition switch to the LOCK position.
2. Carry the Intelligent Key with you.*1
3. Close all the doors.*2
4. Push the LOCK button ① on the Intelligent Key.
5. All the doors and fuel-filler door will lock.
6. The hazard indicator flashes twice and the horn chirps once.

*1: Doors will lock with the Intelligent Key while the ignition switch is in the ACC or ON position.

*2: Doors will not lock with the Intelligent Key while any door is open.

Unlocking doors and fuel-filler door

1. Push the UNLOCK button ② on the Intelligent Key.
2. The hazard indicator flashes once. The driver’s door and fuel-filler door will unlock.
3. Push the UNLOCK button again within 1 minute.
4. The hazard indicator flashes once. All the doors will unlock.

All doors will be locked automatically unless one of the following operations is performed within 1 minute after pushing the UNLOCK button while the doors are locked.

- Opening any doors.
- Pushing the ignition switch.

- Inserting the Intelligent Key into the Intelligent Key port.

During this 1-minute time period, if the UNLOCK button on the Intelligent Key is pushed, all doors will be locked automatically after another 1 minute.

Opening windows

To open the windows, push the door UNLOCK button on the Intelligent Key for **about 3 seconds** after the door is unlocked.

To stop opening, release the UNLOCK button.

Windows cannot be closed using the Intelligent Key.

The windows can be opened or closed by turning the mechanical key in a door lock. (See "DOORS" earlier in this section.)

Opening trunk lid

1. Push the TRUNK HOLD button ③ on the Intelligent Key for **more than 1 second.**
2. The trunk will unlatch.
3. Raise the trunk lid to open the trunk.

Using panic alarm

If you are near your vehicle and feel threatened, you may activate the alarm to call attention as follows:

1. Push the PANIC button ④ on the Intelligent Key for **more than 1 second.**
2. The theft warning alarm and headlights will stay on for 25 seconds.
3. The panic alarm stops when:
   - It has run for 25 seconds, or
   - Any of the buttons on the Intelligent Key is pushed. (Note: the TRUNK or PANIC button must be pushed for more than 1 second.)

Setting hazard indicator and horn mode

This vehicle is set in hazard indicator and horn mode when you first receive the vehicle.

In hazard indicator and horn mode, when the LOCK button ① is pushed, the hazard indicator flashes twice and the horn chirps once. When the UNLOCK button ② is pushed, the hazard indicator flashes once.

If horns are not necessary, the system can be switched to the hazard indicator mode.

In hazard indicator mode, when the LOCK button is pushed, the hazard indicator flashes twice. When the UNLOCK button is pushed, neither the hazard indicator nor the horn operates.

Hazard indicator and horn mode :

Operation	DOOR LOCK	DOOR UNLOCK	TRUNK OPEN
Push door handle request switch or trunk open request switch	HAZARD - **twice** OUTSIDE CHIME - **twice**	HAZARD - **once** OUTSIDE CHIME - **once**	HAZARD - none OUTSIDE CHIME - **4 times**
Push 🔒 , 🔓 or HOLD button	HAZARD - **twice** HORN - **once**	HAZARD - **once** HORN - none	HAZARD - none HORN - none

Hazard indicator mode :

Operation	DOOR LOCK	DOOR UNLOCK	TRUNK OPEN
Push door handle request switch or trunk open request switch	HAZARD - **twice**	HAZARD - none	HAZARD - none
Push 🔒 , 🔓 or HOLD button	HAZARD - **twice**	HAZARD - none	HAZARD - none

Switching procedure :

To switch the hazard indicator and horn operation, push the LOCK 🔒 ① and UNLOCK 🔓 ② buttons on the Intelligent Key simultaneously for more than 2 seconds.

- When the hazard indicator mode is set, the hazard indicator flashes 3 times.
- When the hazard indicator and horn mode is set, the hazard indicator flashes once and the horn chirps once.

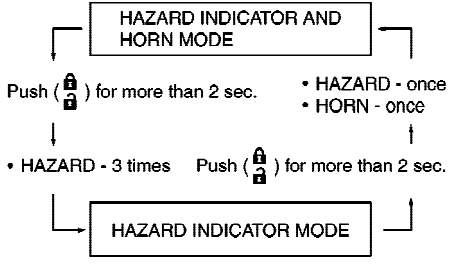

HOOD

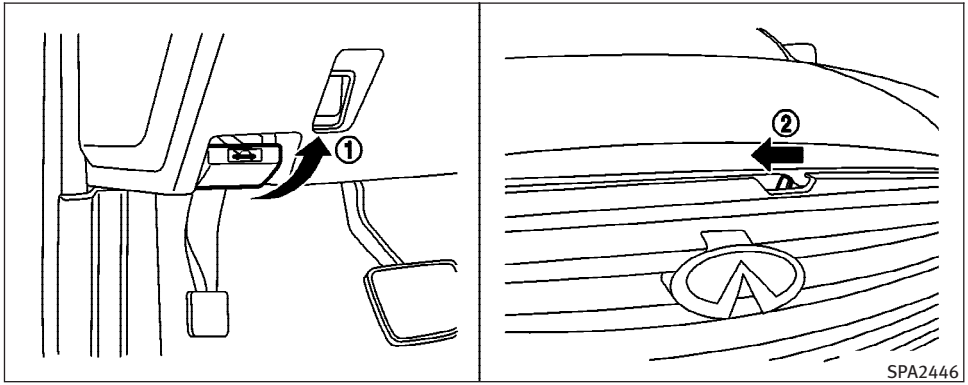

1. Pull the hood lock release handle ① located below the instrument panel; the hood will then spring up slightly.
2. Pull the lever ② at the front of the hood with your fingertips and raise the hood.
3. When closing the hood, slowly close the hood down to latch both the right and left locks. Push the hood down to lock the hood securely into place.

⚠ WARNING

- **Make sure the hood is completely closed and latched before driving. Failure to do so could cause the hood to fly open and result in an accident.**
- **If you see steam or smoke coming from the engine compartment, to avoid injury do not open the hood.**

TRUNK LID

⚠ WARNING

- **Do not drive with the trunk lid open. This could allow dangerous exhaust gases to be drawn into the vehicle. See "EXHAUST GAS (carbon monoxide)" in the "5. Starting and driving" section of this manual.**
- **Closely supervise children when they are around cars to prevent them from playing and becoming locked in the trunk where they could be seriously injured. Keep the car locked, with the trunk closed, when not in use, and prevent children's access to Intelligent Keys.**

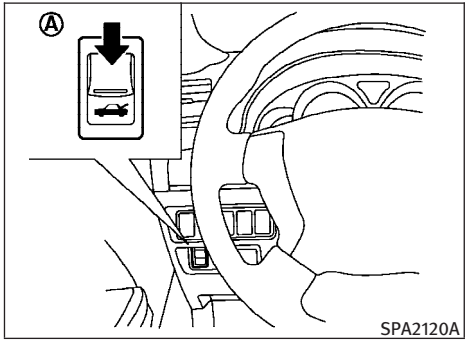

TRUNK LID RELEASE SWITCH

The trunk lid release switch Ⓐ is located on the instrument panel.

To open the trunk lid, push the release switch down as illustrated. To close, push the trunk lid down.

You can open the trunk lid with Intelligent Key. (See “INTELLIGENT KEY SYSTEM” page 3-6.)

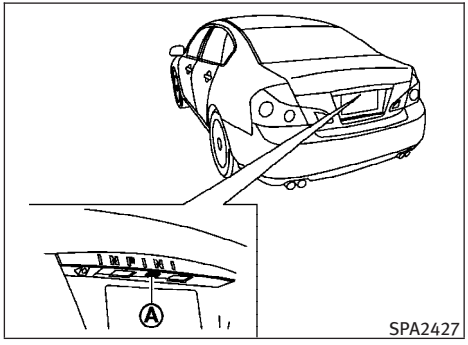

TRUNK OPEN REQUEST SWITCH

The trunk lid can be opened by pushing the trunk open request switch Ⓐ when the Intelligent Key is within the operating range of the trunk lock/unlock function regardless of the inside lock knob position. (See “INTELLIGENT KEY SYSTEM” earlier in this section.)

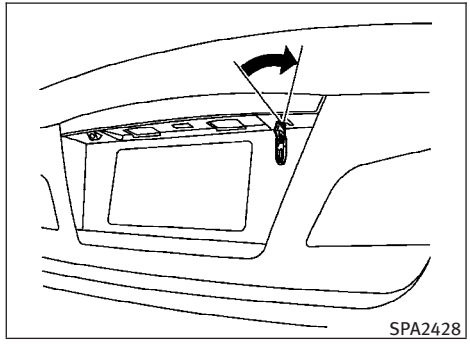

OPENING WITH KEY

To open the trunk lid, insert the mechanical key to the trunk key cylinder and turn the key to the right side of the vehicle. To close, remove the key and push the trunk lid down.

TRUNK OPEN BUTTON

The trunk lid can be opened by pushing the TRUNK OPEN button HOLD on the Intelligent Key for more than 1 second.

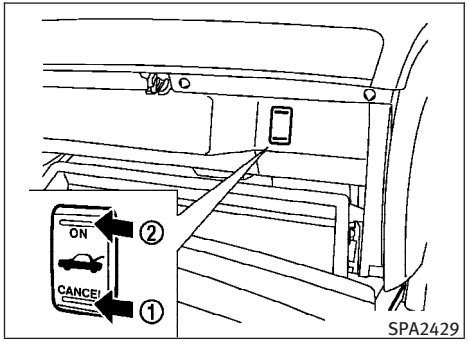

TRUNK RELEASE POWER CANCEL SWITCH

When the switch located inside the glove box is in the CANCEL position ①, the power to the trunk lid will be canceled and the trunk lid cannot be opened by the trunk lid release switch, the trunk open request switch with the Intelligent Key carried with you or the TRUNK button on the Intelligent Key.

When you have to leave the vehicle with a valet and want to keep your belongings safe in the glove box and the trunk, push this switch to CANCEL and lock the glove box with the mechanical key. Then leave the vehicle and the Intelligent Key with the valet and keep the mechanical key with you.

See “KEYS” earlier in this section.

To connect the power to the trunk lid, push the switch to the ON ② position.

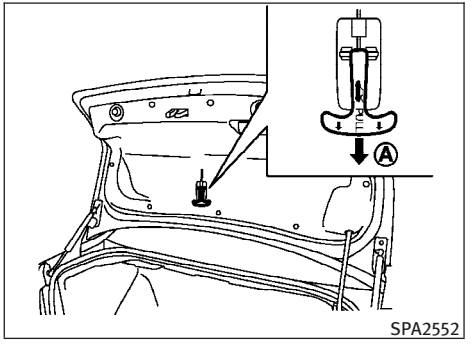

INTERIOR TRUNK LID RELEASE

⚠ WARNING

Closely supervise children when they are around cars to prevent them from playing and becoming locked in the trunk where they could be seriously injured. Keep the car locked, with the trunk lid securely latched, when not in use, and prevent children’s access to Intelligent Keys.

The interior trunk lid release mechanism allows opening of the trunk lid in the event that people become locked inside the trunk or in the event of the loss of electrical power such as a discharged battery.

Releasing inside the trunk

To open the trunk lid from the inside, pull the release handle Ⓐ until the lock releases and push up on the trunk lid. The release lever is made of a material that glows in the dark after a brief exposure to ambient light.

The handle is located on the back of the trunk lid as illustrated.

Releasing from the rear seat

You can also access the release handle through the trunk pass-through (rear seat armrest). (See "ARMREST" in the "1. Safety — Seats, seat belts and supplemental restraint system" section.)

To open the trunk lid from the rear seat, pull the release handle towards front of vehicle until the lock releases.

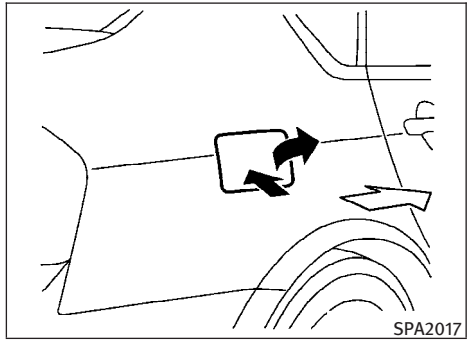

OPENING THE FUEL-FILLER DOOR

To open the fuel-filler door, unlock the fuel-filler door by using one of the following operations, then push the left side of the door.

- Push the door handle request switch with the Intelligent Key carried with you.
- Push the UNLOCK button 🔓 on the Intelligent Key.
- Insert the mechanical key into the door lock cylinder and turn it to the rear of the vehicle.
- Push the power door lock switch to the UNLOCK position.

To lock, close the fuel-filler door securely and lock all doors by operating the door handle request switch, the LOCK button 🔒 on the Intelligent Key, the mechanical key or the power door lock switch.

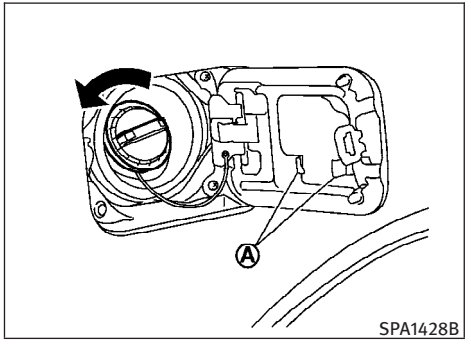

FUEL-FILLER CAP

The fuel-filler cap is a ratcheting type. Turn the cap counterclockwise to remove. To tighten, turn the cap clockwise until ratcheting clicks are heard.

WARNING

- **Gasoline is extremely flammable and highly explosive under certain conditions. You could be burned or seriously injured if it is misused or mishandled. Always stop engine and do not smoke or allow open flames or sparks near the vehicle when refueling.**
- **Do not attempt to top off the fuel tank after the fuel pump nozzle shuts off automatically. Continued refueling may cause fuel overflow, resulting in fuel spray and possibly a fire.**
- **Use only an original equipment type fuel-filler cap as a replacement. It has a built-in safety valve needed for proper operation of the fuel system and emission control system. An incorrect cap can result in a serious malfunction and possible injury. It could also cause the malfunction indicator light to come on.**
- **Never pour fuel into the throttle body to attempt to start your vehicle.**
- **Do not fill a portable fuel container in the vehicle or trailer. Static electricity can cause an explosion of flammable liquid, vapor or gas in any vehicle or trailer. To reduce the risk of serious injury or death when filling portable fuel containers:**
  - **Always place the container on the ground when filling.**
  - **Do not use electronic devices when filling.**
  - **Keep the pump nozzle in contact with the container while you are filling it.**
  - **Use only approved portable fuel containers for flammable liquid.**

CAUTION

- **If fuel is spilled on the vehicle body, flush it away with water to avoid paint damage.**
- **Insert the cap straight into the fuel-filler tube, then tighten until the fuel-filler cap clicks. Failure to tighten the fuel-filler cap properly may cause the SERVICE ENGINE SOON malfunction indicator light (MIL) to illuminate. If the SERVICE ENGINE SOON light illuminates because the fuel-filler cap is loose or missing, tighten or install the cap and continue to drive the vehicle. The SERVICE ENGINE SOON light should turn off after a few driving trips. If the SERVICE ENGINE SOON light does not turn off after a few driving trips, have the vehicle inspected by an INFINITI retailer.**

  For additional information, see “Malfunction Indicator Light (MIL)” in the “2. Instruments and controls” section.

Put the fuel-filler cap on the cap holder Ⓐ while refueling.

⚠ WARNING

- **Do not adjust the steering wheel while driving. You could lose control of your vehicle and cause an accident.**
- **Do not adjust the steering wheel any closer to you than is necessary for proper steering operation and comfort. The driver's air bag inflates with great force. If you are unrestrained, leaning forward, sitting sideways or out of position in any way, you are at greater risk of injury or death in a crash. You may also receive serious or fatal injuries from the air bag if you are up against it when it inflates. Always sit back against the seatback and as far away as practical from the steering wheel. Always use the seat belts.**

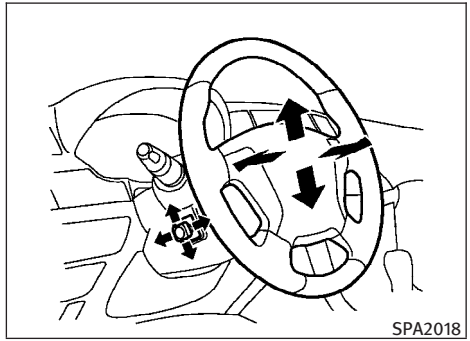

TILT OR TELESCOPIC OPERATION

Move the lever to adjust the steering wheel up or down, forward or rearward to the desired position.

Entry/Exit function operation

The automatic drive positioner system will make the steering wheel move up automatically when the driver's door is opened with the ignition switch in the LOCK position. This lets the driver get into and out of the seat more easily.

For more information, see "AUTOMATIC DRIVE POSITIONER" later in this section.

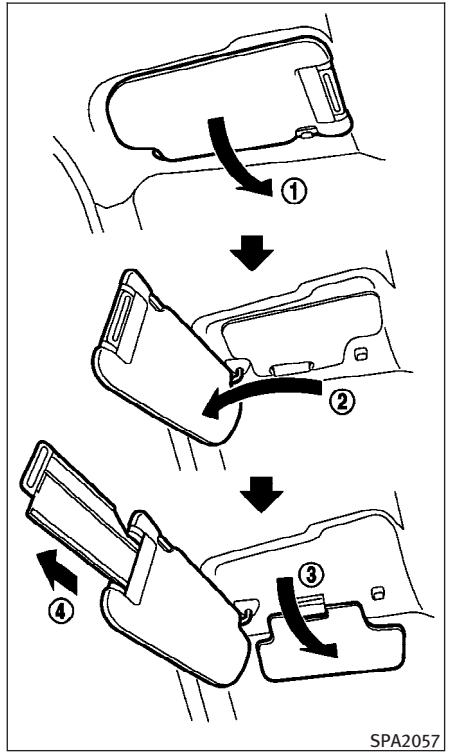

⚠ CAUTION

- **Do not store the main sun visor before storing the sub-sun visor and the extension sun visor.**
- **Do not pull the sub-sun visor and the extension sun visor forcedly downward.**

1. To block out glare from the front, swing down the main sun visor ①.
2. To block glare from the side, remove the main sun visor from the center mount and swing it to the side ②.
3. To block glare from the front, swing down the sub-sun visor ③.
4. Draw out the extension sun visor ④ from the main sun visor to block from further glare.

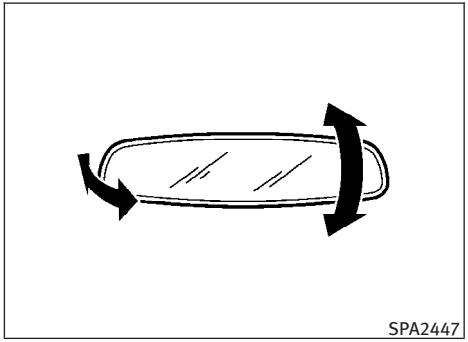

INSIDE MIRROR

Adjust the height and the angle of the inside mirror to the desired position.

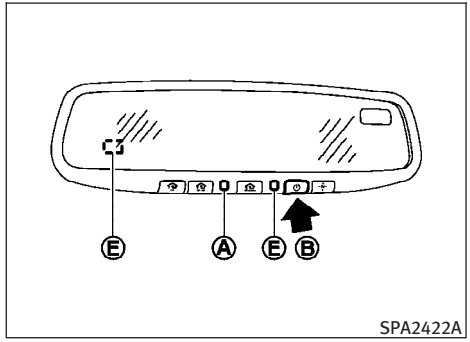

Type A

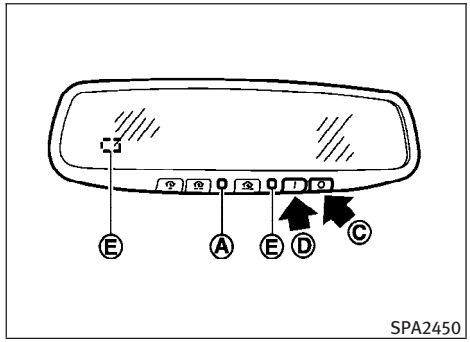

Type B

Automatic anti-glare type

The inside mirror is designed so that it automatically changes reflection according to the intensity of the headlights of the following vehicle.

The anti-glare system will be automatically turned on when the ignition switch is pushed to the ON position.

When the anti-glare system is turned on, the indicator light Ⓐ will illuminate and excessive glare from the headlights of the vehicle behind you will be reduced.

Type A: Push the ⏻ switch Ⓑ to make the inside rearview mirror operate normally and the indicator light will turn off. Push the ⏻ switch again to turn the system on.

Type B: Push the "○" switch Ⓒ to make the inside rearview mirror operate normally. The indicator light will turn off. Push the "I" switch Ⓓ to turn the system on.

Do not allow any object to cover the sensors Ⓔ or apply glass cleaner on them. Doing so will reduce the sensitivity of the sensor, resulting in improper operation.

For the compass (if so equipped) operation, see "COMPASS" in the "2. Instruments and controls" section.

For the HomeLink® Universal Transceiver operation, see "HomeLink® UNIVERSAL TRANSCEIVER" in the "2. Instruments and controls" section.

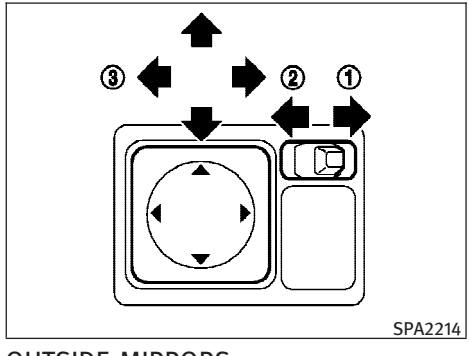

OUTSIDE MIRRORS

⚠ WARNING

Objects viewed in the outside mirror on the passenger side are closer than they appear. Be careful when moving to the right. Using only this mirror could cause an accident. Use the inside mirror or glance over your shoulder to properly judge distances to other objects.

Adjusting outside mirrors

The outside mirror control switch is located at the lower part of the instrument panel.

The outside mirror will operate only when the ignition switch is in the ACC or ON position.

Move the switch right ① or left ② to select the right or left side mirror, then adjust ③ using the control switch.

Defrosting outside mirrors (if so equipped)

The outside mirrors will be heated when the rear window defroster switch is operated. (See "REAR WINDOW AND OUTSIDE MIRROR DEFROSTER SWITCH" in the "2. Instruments and controls" section.)

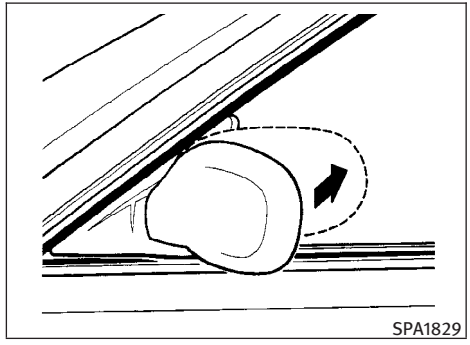

Foldable outside mirrors

Fold the outside mirror by pushing it toward the rear of the vehicle.

Reverse tilt-down feature

When backing up the vehicle, the right or left outside mirror will turn downward automatically to provide better rear visibility.

1. Push the ignition switch to the ON position.
2. Move the selector lever to the R (Reverse) position.
3. Choose the right or left outside mirror by operating the outside mirror control switch.
4. The selected outside mirror surface moves downward.

When one of the following conditions has occurred, the selected outside mirror surface will return to its original position.

- The selector lever is moved to any position other than R (Reverse).
- The outside mirror control switch is set to the center position.
- The ignition switch is pushed to the LOCK position.

For more information regarding this feature and how to save the R (Reverse) mirror tilt-down adjustment in the automatic drive positioner memory, see "Automatic drive positioner" later in this section.

The automatic drive positioner system has the following features:

- Entry/exit function
- Memory storage

ENTRY/EXIT FUNCTION

This system is designed so that the driver's seat and steering column will automatically move when the selector lever is in the P (Park) position. This allows the driver to get into and out of the driver's seat more easily.

The driver's seat will slide backward and the steering wheel will move up when the driver's door is opened with the ignition switch in the LOCK position.

The driver's seat and steering wheel will return to the previous positions when one of the following is operated:

- When the ignition switch is pushed to the ACC position after the driver's door is closed.
- When the ignition switch is pushed to the ON position.
- When the Intelligent Key is inserted into the port after the driver's door is closed.

The driver's seat will not return to the previous positions if the seat or steering adjusting switch is operated when the seat is at the exit position.

Cancel or activate entry/exit function

To cancel or activate the entry/exit function, the selector lever must be in the P (Park) position with the ignition switch in the LOCK position.

Push and hold the SET switch for more than 10 seconds to cancel or activate the entry/exit function.

The indicator lights on the memory switches (1 and 2) will blink once when the function is canceled, and the indicator lights will blink twice when the function is activated.

The entry/exit function can also be canceled or activated if the "Lift Steering Wheel on Exit" key or "Slide Driver Seat Back on Exit" key is turned to ON or OFF in the "Comfort & Conv." settings. (See "VEHICLE INFORMATION AND SETTINGS" in the "4. Monitor, climate, audio, phone and voice recognition systems" section.)

Initialize entry/exit function

If the battery cable is disconnected, or if the fuse opens, the entry/exit function will not work though this function was set on before. In such a case, after connecting the battery or replacing with a new fuse, open and close the driver's door more than two times after the ignition switch is pushed to the ON position once, then pushed to the LOCK position. The entry/exit function will be activated.

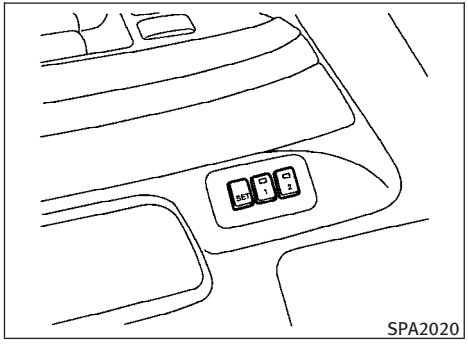

SPA2020

MEMORY STORAGE

Two positions for the driver's seat, steering column and outside mirrors can be stored in the automatic drive positioner memory. Follow these procedures to use the memory system.

1. Move the selector lever to the P (Park) position.
2. Push the ignition switch to the ON position.
3. Adjust the driver's seat, steering column and outside mirrors to the desired positions by manually operating each adjusting switch. For additional information, see "SEATS" in the "1. Safety — Seats, seat belts and supplemental restraint system" section and "TILT/TELESCOPIC STEERING" page 3-22 and "OUTSIDE MIRRORS" earlier in this section.
4. Push the SET switch and, within 5 seconds, push the memory switch (1 or 2) fully for at least 1 second.

   The indicator light for the pushed memory switch will stay on for approximately 5 seconds after pushing the switch.

If memory is stored in the same memory switch, the previous memory will be deleted.

Procedure for storing the outside mirror positions for best visibility at reverse tilt-down feature

Two outside mirror positions for backing up can be stored in the automatic drive positioner memory.

1. Apply the parking brake.
2. Push the ignition switch to the ON position. (Do not start the engine.)
3. Push the memory switch (1 or 2) fully for at least 1 second to operate the automatic drive positioner.
4. Turn the outside mirror control switch to L (left).
5. Depress the brake pedal.
6. Move the selector lever to the R (Reverse) position.
7. Adjust the mirror to the desired viewing position for backing up by operating the outside mirror control switch.
8. Push the SET switch and, within 5 seconds, push the memory switch (1 or 2) selected in step 3 fully for at least 1 second.
   - The indicator light for the pushed memory switch will stay on for approximately 5 seconds after pushing the switch. After the indicator light goes off, the selected mirror position is stored in the selected memory (1 or 2).
9. Turn the outside mirror control switch to R (right).

   Repeat the above procedure to adjust the right mirror position and store in the selected memory.

   - When the driver's seat, outside mirror and steering column are not in the memorized

position, the outside mirror will move with the initial tilt-down angle, if the reverse tilt-down position is stored.

Linking Intelligent Key to a stored memory position

The Intelligent Key can be linked to a stored memory position with the following procedure.

1. Follow the steps for storing a memory position.
2. While the indicator light for the memory switch being set is illuminated for 5 seconds, push the 🔓 button on the Intelligent Key. If the indicator light blinks, the Intelligent Key is linked to that memory setting.

Push the ignition switch to the LOCK position, and push the 🔓 button on the Intelligent Key. The driver's seat, steering wheel and outside mirrors will move to the memorized position.

Confirming memory storage

- Push the ignition switch to the ON position and push the SET switch. If the main memory has not been stored, the indicator light will come on for approximately 0.5 second. When the memory has stored in position, the indicator light will stay on for approximately 5 seconds.
- If the battery cable is disconnected, or if the fuse opens, the memory will be canceled. In this case, reset the desired position using the previous procedure.
- If optional Intelligent Keys are added to your vehicle, perform the memory storage procedure to switch (1 or 2) and linking Intelligent Key procedure to a stored memory position again for each Intelligent Key. For additional Intelligent Key information, see "KEYS" earlier in this section.

Selecting the memorized position

1. Move the selector lever to the P (Park) position.
2. Use one of the following methods to move the driver's seat, steering column and outside mirrors.
   - Push the ignition switch to the ON position and push the memory switch (1 or 2) fully for at least 1 second.
   - Within 45 seconds after opening the driver's door, push the memory switch (1 or 2) fully for at least 1 second.

     The driver's seat, steering column and outside mirrors will move to the memorized position with the indicator light flashing, and then the light will stay on for approximately 5 seconds.

SYSTEM OPERATION

The automatic drive positioner system will not work or will stop operating under the following conditions:

- When the vehicle speed is above 4 MPH (7 km/h).
- When the adjusting switch for the driver's seat and steering column is turned on while the automatic drive positioner is operating.
- When the memory switch (1 or 2) is not pushed for at least 1 second.
- When the seat, steering column and outside mirrors have already been moved to the memorized position.
- When no position is stored in the memory switch.
- When the engine is started while the automatic drive positioner is operating.
- When approximately 45 seconds have passed after the driver's door was opened (ignition switch is not in the ON position).
- When the selector lever is moved from the P (Park) position to any other position. (However, it will not be canceled if the switch is pushed while the seat and steering column are returning to the previous positions (entry/exit function).)

MEMO

4 Monitor, climate, audio, phone and voice recognition systems

Safety note 4-2
Center multi-function control panel 4-2
How to use INFINITI controller 4-4
How to use touch screen (models with navigation system). 4-4
Start-up screen (models with navigation system). 4-6
Start menu (models with navigation system). 4-6
How to select menus on the screen 4-7
Vehicle information and settings. 4-7
How to use STATUS button. 4-7
How to use brightness control and display ON/OFF button 4-7
How to use DISP button (models without navigation system). 4-8
How to use TRIP button (models without navigation system). 4-8
How to use FUEL ECON button (models without navigation system). 4-8
How to use INFO button 4-8
Warning display. 4-14
How to use SETTING button 4-15
How to use AUX button 4-21
How to use DISC button (for models without navigation system). 4-22
Rearview monitor (if so equipped) 4-22
How to read the displayed lines 4-23
How to park with predicted course lines. 4-23
Difference between predicted and actual distances 4-25
How to adjust the screen 4-27
Operating tips 4-27
Ventilators. 4-28
Automatic climate control 4-29
Automatic climate control 4-30
Rear switches for climate control (if so equipped) 4-33
Operating tips 4-33
In-cabin microfilter 4-33
Servicing climate control. 4-33
Audio system 4-34
Audio operation precautions 4-34

FM-AM-SAT radio with Compact Disc (CD) player/changer. 4-43
CompactFlash (CF) player operation (if so equipped) 4-47
iPod® player operation (if so equipped) 4-48
Music box hard-disk drive audio system (models with navigation system). 4-50
CD/CF (CompactFlash) care and cleaning 4-57
Steering-wheel-mounted controls for audio 4-58
Rear control switches for audio (if so equipped) 4-60
Antenna 4-61
Auxiliary input jacks 4-61
INFINITI Mobile Entertainment System (MES) (if so equipped) 4-62
Digital Versatile Disc (DVD) system components 4-62
Before operating the DVD mobile entertainment system. 4-66
Playing a DVD. 4-68
Care and maintenance 4-72
Car phone or CB radio 4-73
Bluetooth® Hands-Free Phone System with navigation system 4-74
Regulatory information. 4-75
Voice commands 4-76
Control buttons 4-76
Pairing procedure 4-76
Phonebook registration 4-77
Making a call 4-79
Receiving a call 4-80
During a call. 4-80
Phone setting 4-81
Troubleshooting guide 4-83
Bluetooth® Hands-Free Phone System without navigation system 4-84
Regulatory information. 4-85
Initialization 4-85
Operating tips 4-85
Giving voice commands. 4-86
Control buttons 4-87
Getting started. 4-87
Choosing a language 4-87

Pairing procedure 4-87
Making a call by entering a phone number 4-88
Receiving a call 4-88
List of voice commands 4-89
Call 4-89
During a call 4-90
Phonebook 4-91
Memo pad 4-93
Setup 4-93
Speaker Adaptation (SA) mode 4-95
Troubleshooting guide 4-97
INFINITI Voice Recognition system
(models with navigation system) 4-98
INFINITI Voice Recognition standard mode 4-98
Using the system 4-101
INFINITI Voice Recognition alternate
command mode 4-109
Using the system 4-116
Troubleshooting guide 4-120

SAFETY NOTE

WARNING

- **Do not disassemble or modify this system. If you do, it may result in accidents, fire, or electric shock.**
- **Do not use this system if you notice any abnormality, such as a frozen screen or lack of sound. Continued use of the system may result in accident, fire or electric shock.**
- **In case you notice any foreign object in the system hardware, spill liquid on it, or notice smoke or smell coming from it, stop using the system immediately and contact your nearest INFINITI retailer. Ignoring such conditions may lead to accidents, fire, or electric shock.**
- **Park the vehicle in a safe location and apply the parking brake to view the images on the front center display screen using devices connected to the auxiliary input jacks.**

Do not attempt to operate the system in extreme temperature conditions [below −4°F (−20°C) and above 158°F (70°C)]. Operating this system under these conditions may result in system malfunctions.

CENTER MULTI-FUNCTION CONTROL PANEL

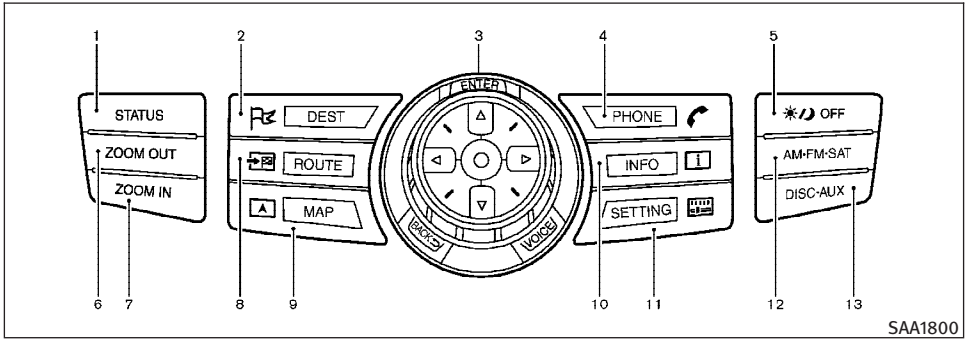

With navigation system

1. **"STATUS "** status display button (P. 4-7)
2, 6, 7, 8, 9. Navigation system control buttons (Refer to the separate Navigation System Owner's Manual.)
3. INFINITI controller (P. 4-4)
4. **"PHONE "** Bluetooth® Hands-Free Phone System button (P. 4-74)
5. **"☀/☽ OFF "** brightness control and display ON/OFF button (P. 4-7)
10. **"INFO "** vehicle and navigation information button (P. 4-8)
11. **"SETTING "** button (P. 4-15)
12. **"AM·FM·SAT "** band selector button (P. 4-34)
13. **"DISC·AUX "** selector button (P. 4-21)

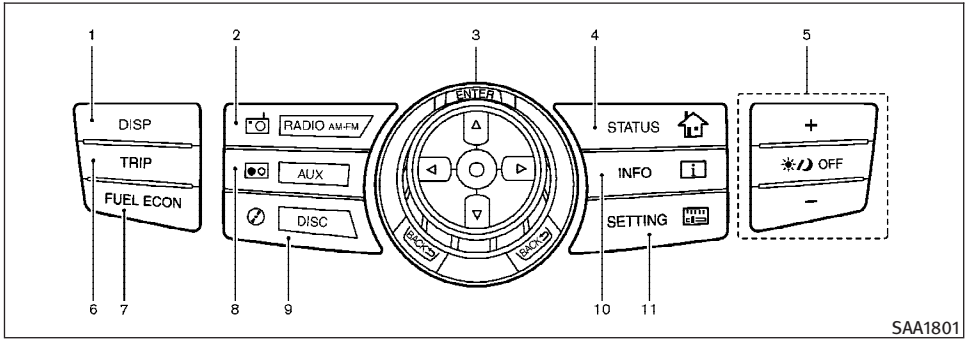

Without navigation system

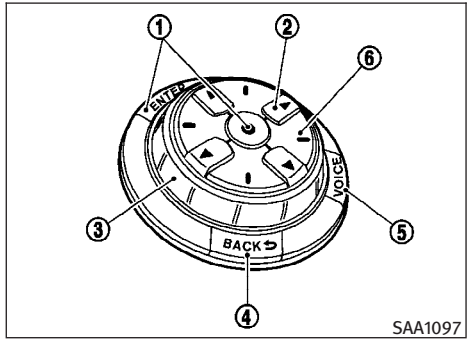

With navigation system

1. **"DISP "** display setting button (P. 4-8, P. 4-16)
2. **"RADIO AM·FM "** band selector button (P. 4-34)
3. INFINITI controller (P. 4-4)
4. **"STATUS "** status display button (P. 4-7)
5. **"☀/☽ OFF "** brightness control and display ON/OFF button (P. 4-7)
6. **"TRIP "** trip computer button (P. 4-8, P. 4-10)
7. **"FUEL ECON "** button (P. 4-8, P. 4-9)
8. **"AUX "** button (P. 4-21)
9. **"DISC "** selector button (P. 4-22)
10. **"INFO "** vehicle information button (P. 4-8)
11. **"SETTING "** button (P. 4-15)

When you use this system, make sure the engine is running.

If you use the system with the engine not running (ignition ON or ACC) for a long time, it will use up all the battery power, and the engine will not start.

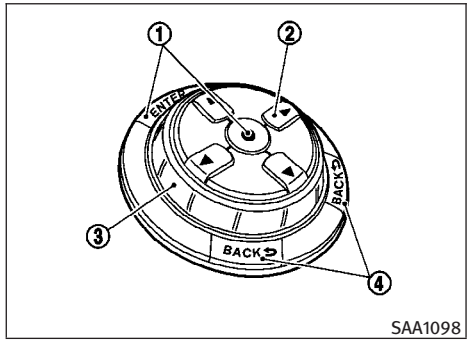

Without navigation system

HOW TO USE INFINITI CONTROLLER

Choose an item on the display using the main directional buttons ② (or additional directional buttons ⑥ with navigation system) or center dial ③, and push the **ENTER** button ① for operation.

If you push the **BACK** button ④ before the setup is completed, the setup will be canceled and/or the display will return to the previous screen. This button can also be used to delete characters that have been input.

After the setup is completed, push the **BACK** button ④ and return to the previous screen.

For the **VOICE** button ⑤ functions, refer to the separate Navigation System Owner's Manual.

HOW TO USE TOUCH SCREEN (models with navigation system)

⚠ CAUTION

- **The glass screen on the liquid crystal display may break if it is hit with a hard or sharp object. If the glass breaks, do not touch the liquid crystalline material, which contains a small amount of mercury. In case of contact with skin, wash immediately with soap and water.**
- **To clean the display, never use a rough cloth, alcohol, benzine, thinner or any kind of solvent or paper towel with a chemical cleaning agent. They will scratch or deteriorate the panel.**
- **Do not splash any liquid such as water or car fragrance on the display. Contact with liquid will cause the system to malfunction.**

To ensure safe driving, some functions cannot be operated while driving.

The on-screen functions that are not available while driving will be "grayed out" or muted.

Park the vehicle in a safe location and then operate the navigation system.

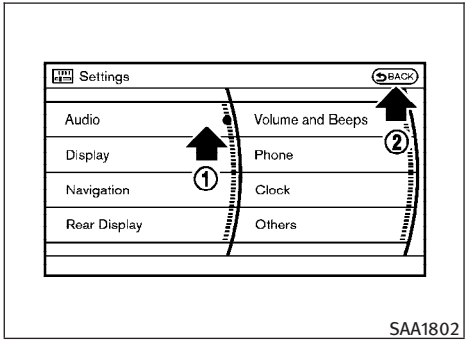

Touch screen operation

With this system, the same operations as those for the INFINITI controller are possible using the touch screen operation.

Selecting the item :

Touch an item to select. To select the "Audio" settings, touch the "Audio" area ① on the screen.

Touch the **BACK** ② button to return the previous screen.

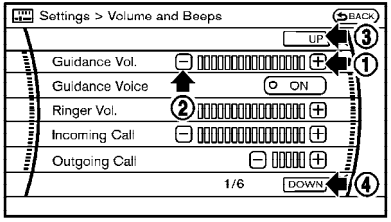

SAA1543

Adjusting an item :

Touch the + ① or − ② button to adjust the settings.

Touch the **UP** ③ or **DOWN** ④ button to move to the previous or next page.

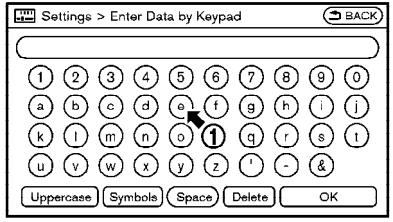

SAA1617

Inputting characters :

Touch the letter or number ①.

There are some options available when inputting characters.

- **Uppercase:**

  Shows uppercase characters.

- **Lowercase:**

  Shows lowercase characters.

- **Space:**

  Inserts a space.

- **Symbols:**

  Shows symbols such as the question mark (?).

- **Delete:**

  Deletes the last character that has been input with one touch. Push and hold the button to delete all of the characters.

- **OK:**

  Completes character inputs.

Touch screen maintenance

If you clean the display screen, use a dry, soft cloth. If additional cleaning is necessary, use a small amount of neutral detergent with a soft cloth. Never spray the screen with water or detergent. Dampen the cloth first, and then wipe the screen.

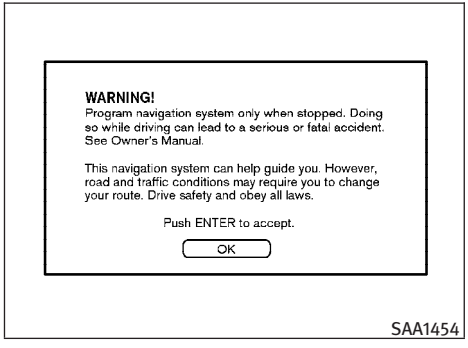

START-UP SCREEN (models with navigation system)

When you push the ignition switch to the ACC or ON position, the SYSTEM START-UP warning is displayed on the screen. When you read and agree with the warning, push the **ENTER** button.

If you do not push the **ENTER** button, you will not be able to use the NAVI system.

To proceed to the NAVI system, refer to the separate Navigation System Owner's Manual.

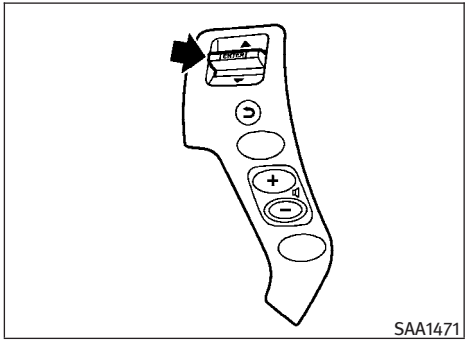

START MENU (models with navigation system)

The start menu can be displayed using the **ENTER** switch on the steering-wheel-mounted controls.

1. While the map (if so equipped) or status screen is displayed, push and hold the **ENTER** switch until the "Menu Options" screen appears.
2. Highlight the preferred item by tilting the **ENTER** switch up or down, and then push the **ENTER** switch to select.

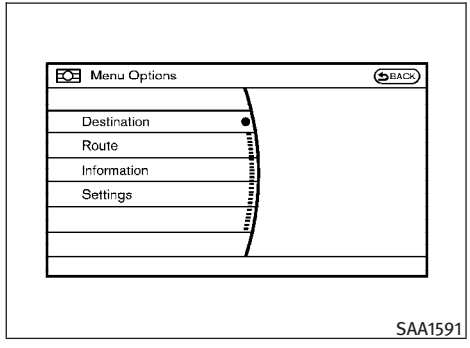

Available items

Destination/Route :

These items are for the navigation system. If your vehicle is equipped with the navigation system, see the separate Navigation System Owner's Manual for details.

Information :

Displays the information screen. It is the same screen that appears when you push the **INFO** button.

Settings :

Displays the settings screen. It is the same screen that appears when you push the **SETTING** button.

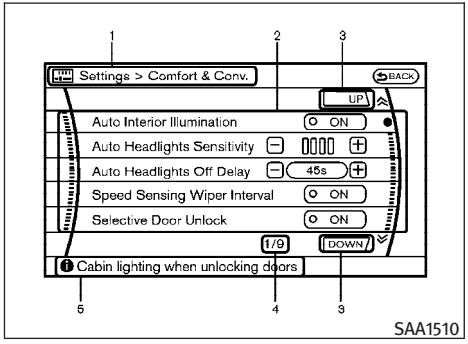

HOW TO SELECT MENUS ON THE SCREEN

Vehicle functions are viewed on the display screen in menus. Whenever a menu selection is made or menu item is highlighted, different areas on the screen provide you with important information. See the following for details.

1. Header:

   Shows the path used to get to the current screen. (i.e. push SETTING button › choose “Comfort & Conv.” menu item.)

2. Menu Selections:

   Shows the options to choose within that menu screen. (i.e. Auto Interior Illumination, etc.)

3. UP/DOWN Movement indicator:

   Shows that the INFINITI controller may be used to move UP/DOWN on the screen and select more options.

4. Screen Count:

   Shows the number of menu selections available for that screen (i.e. 1/9).

5. Footer/Information Line:

   Provides more information (if available) about the menu selection currently highlighted. (i.e. ⓘ Cabin lighting when unlocking doors.)

HOW TO USE STATUS BUTTON

To display the status of the audio, climate control system, fuel consumption and navigation system (if so equipped), push the **STATUS** button. The following information will appear when the **STATUS** button is pushed.

Audio → Audio and Climate control system → Audio and fuel consumption → Audio and Navigation system (if so equipped) → Audio

HOW TO USE BRIGHTNESS CONTROL AND DISPLAY ON/OFF BUTTON

Push the “☀/☽ **OFF** ” button to switch the display brightness to the daytime mode or the nighttime mode, and to adjust the display brightness using the INFINITI controller while the indicator is displayed at the bottom of the screen.

The display brightness can also be adjusted using the brightness UP button (+) or brightness DOWN button (−) (models without navigation system).

Push and hold the “☀/☽ **OFF** ” button for more than 2 seconds to turn the display off. Push the button again to turn the display on.

HOW TO USE DISP BUTTON (models without navigation system)

Push the **DISP** button to show the display setting screen. (See “Display settings” later in this section.)

HOW TO USE TRIP BUTTON (models without navigation system)

Push the **TRIP** button to show the trip computer display. (See “Trip Computer information” later in this section.)

HOW TO USE FUEL ECON BUTTON (models without navigation system)

Push the **FUEL ECON** button to show the fuel economy information. (See “Fuel Economy information” later in this section.)

HOW TO USE INFO BUTTON

The display screen shows vehicle and navigation (if so equipped) information for your convenience.

The information shown on the screen should be a guide to determine the condition of the vehicle. See the following for details.

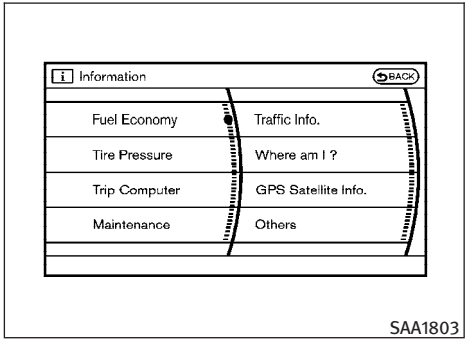

With navigation system

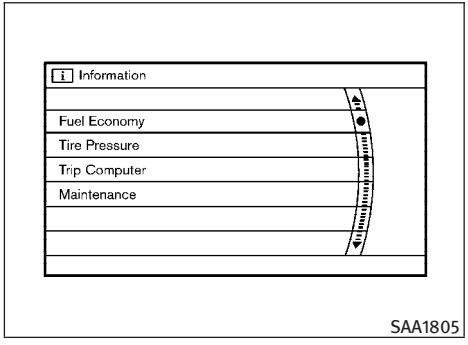

Without navigation system

Vehicle information display

1. Push the **INFO** button on the control panel.
2. Choose an item using the INFINITI controller and push the **ENTER** button.
3. After viewing or adjusting the information on the following screens, push the **BACK** button to return to the INFORMATION menu.

See the separate Navigation System Owner’s Manual for the following items:

- Traffic Info.
- Where am I?
- GPS Satellite Info.

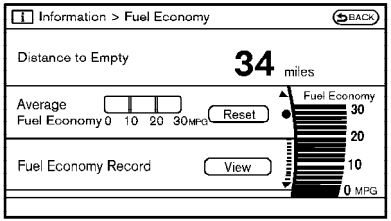

SAA1546

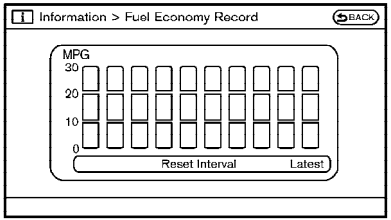

SAA1547

Fuel Economy information

The distance to empty, average fuel economy and current fuel economy (shown on the right side bar) will be displayed for reference.

To reset the Average Fuel Economy, use the INFINITI controller to highlight the **"Reset "** key and push the **ENTER** button.

If the **"View "** key is highlighted with the INFINITI controller and the **ENTER** button is pushed, the average fuel consumption history will be displayed in graph form along with the average for the previous Reset-to-Reset period.

The unit can be converted between "US" and "Metric". (See "HOW TO USE SETTING BUTTON" later in this section.)

For models without the navigation system, the information can be displayed by pushing the **FUEL ECON** button on the control panel.

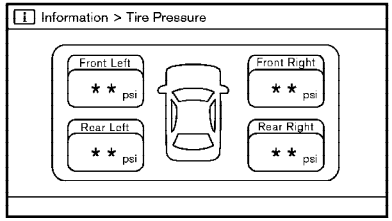

SAA1450

Tire Pressure information

The tire pressure will be displayed for reference.

The pressure indication "** psi" on the screen means that the tire pressure is being measured. After a few driving trips, the pressure for each tire will be displayed.

In case of low tire pressure, LOW PRESSURE information will be displayed on the screen. Check the pressure for all tires.

Tire pressure rises and falls depending on the heat caused by the vehicle's traveling condition and the temperature.

After tire rotation is performed, tire pressure will not be displayed in the actual tire position. Drive the vehicle at over 25 MPH (40 km/h) for approximately 10 minutes to reset the display.

For more details about the Tire Pressure Monitoring System (TPMS), see “TIRE PRESSURE MONITORING SYSTEM (TPMS)” in the “5. Starting and driving” section.

WARNING

- **When a spare tire is mounted or a wheel is replaced, tire pressure will not be indicated, the TPMS will not function and the low tire pressure warning light will flash for approximately 1 minute. The light will remain on after 1 minute. Contact your INFINITI retailer as soon as possible for tire replacement and/or system resetting.**
- **Replacing tires with those not originally specified by INFINITI could affect the proper operation of the TPMS.**

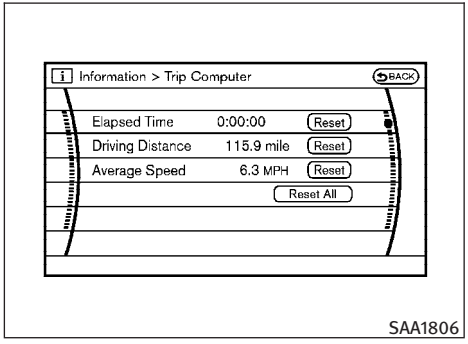

With navigation system

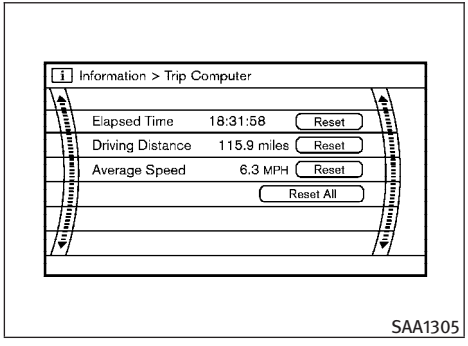

Without navigation system

Trip Computer information

Elapsed Time, Driving Distance and Average Speed will be displayed.

To reset each set of trip computer information, use the INFINITI controller to highlight the “**Reset** ” key and push the **ENTER** button.

The unit can be converted between “US” and “Metric”. (See “HOW TO USE SETTING BUTTON” later in this section.)

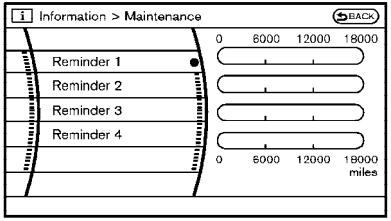

SAA1554

With navigation system

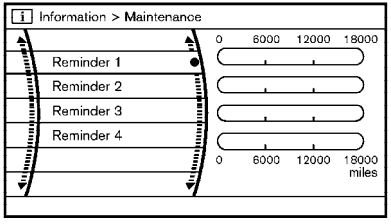

SAA1807

Without navigation system

Maintenance information

The maintenance intervals can be displayed for your desired maintenance items.

To set the maintenance interval for Reminders 1 to 4, choose an item using the INFINITI controller and push the **ENTER** button.

You can also set to display a message to remind you that the maintenance needs to be performed.

The following example shows how to set Reminder 1. Use the same steps to set the other maintenance information.

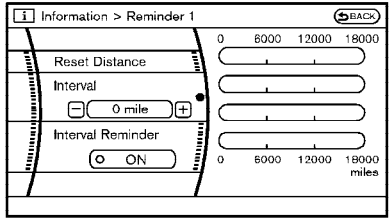

SAA1555

With navigation system

1. Reset the driving distance to the new maintenance schedule.
2. Set the interval (mileage) of the maintenance schedule. To determine the recommended maintenance interval, refer to your “INFINITI Service and Maintenance Guide”.
3. To display the reminder automatically when the set trip distance is reached, highlight the **“Interval Reminder ”** key with the INFINITI controller and push the **ENTER** button.
4. To return the display to MAINTENANCE INFO., push the **BACK** button.

Maintenance information display cannot be operated when the vehicle is moving. Stop the vehicle in a safe place to see the information.

The unit can be converted between “US” and “Metric”. (See “HOW TO USE SETTING BUTTON” later in this section.)

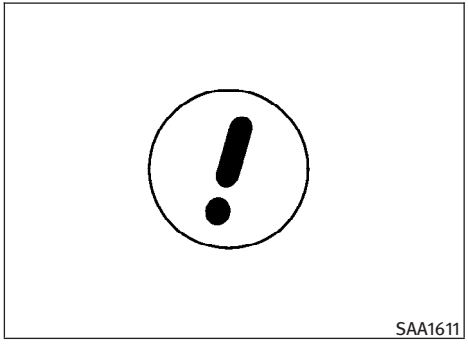

The Reminder will be automatically displayed as shown when both of the following conditions are met:

- the vehicle is driven the set distance and the ignition switch is pushed to the LOCK position.
- the ignition switch is pushed to the ACC or ON position the next time you drive the vehicle after the set value has been reached.

To return to the previous display after the maintenance reminder screen is displayed, push the **BACK** button.

The maintenance reminder screen is displayed each time the ignition switch is pushed to the ON position unless one of the following operations is performed:

- “Reset Distance” is selected.
- “Interval Reminder” is set to OFF.
- the maintenance interval is set again.

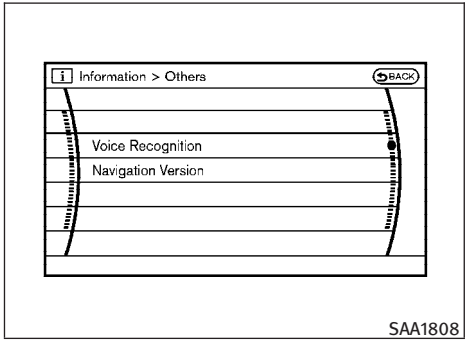

Others information (models with navigation system)

Select the **"Others"** key and push the **ENTER** button to show "Voice Recognition" and "Navigation Version".

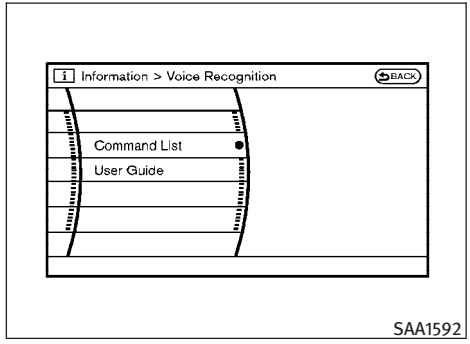

Voice Recognition information (models with navigation system)

When you use the INFINITI Voice Recognition system for the first time or if you do not know how to operate it, you can display the voice command list or user guide for confirmation. (See "INFINITI VOICE RECOGNITION SYSTEM (models with navigation system)" later in this section for the details.)

Command List :

Displays a list of voice commands that the system can recognize.

User Guide :

Displays a simplified operation manual of the voice recognition system and how to use the voice commands.

Navigation Version information (models with navigation system)

The version of the navigation system will be displayed.

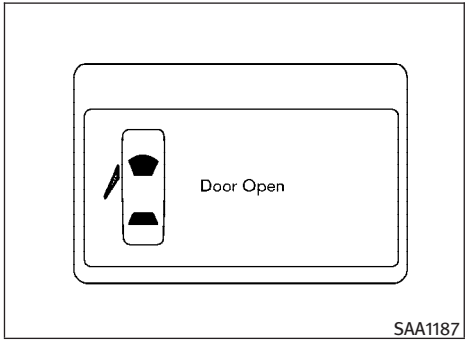

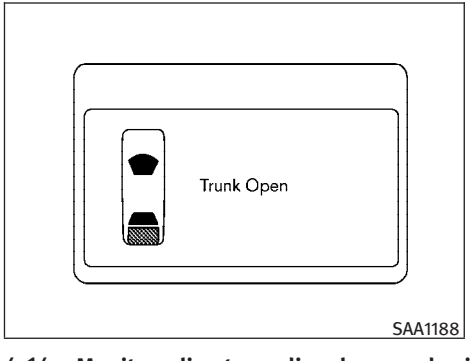

WARNING DISPLAY

The warning display will appear when one of the following conditions occurs while driving at a speed over 3 MPH (5 km/h).

- Any door is not securely closed. (The corresponding door will be indicated on the display.)
- The trunk lid is not securely closed.

The warning display will turn off when the vehicle speed slows down under 3 MPH (5 km/h) even if a door or trunk lid is not securely closed yet.

Make sure to stop the vehicle and close a door or trunk lid securely.

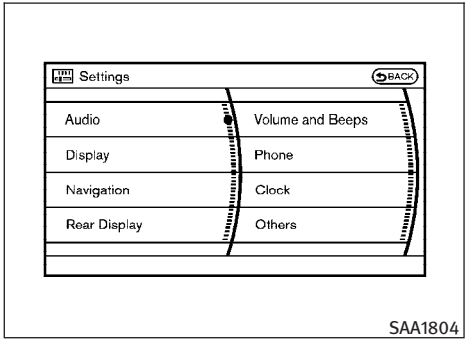

With navigation system

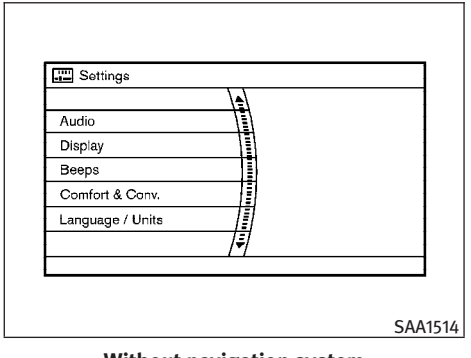

Without navigation system

HOW TO USE SETTING BUTTON

The display for vehicle settings will appear when the **SETTING** button on the control panel is pushed.

For navigation settings, refer to the separate Navigation System Owner's Manual.

For the "Comfort and Conv." settings, the ignition switch must be in the ON position.

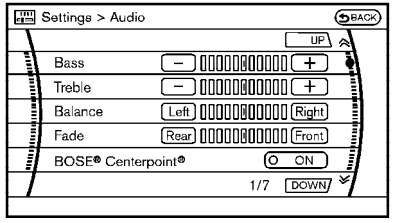

SAA1809

With navigation system

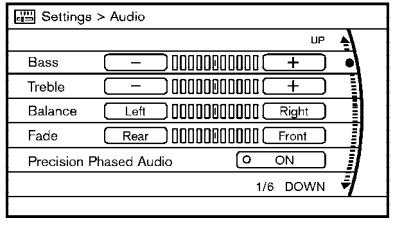

SAA1810

Without navigation system

Audio settings

The following display will appear when pushing the **SETTING** button, selecting the "**Audio** " key with the INFINITI controller and pushing the **ENTER** button.

Bass/Treble/Balance/Fade :

To adjust the speaker tone quality and sound balance, select the "**Bass** ", "**Treble** ", "**Balance** " or "**Fade** " key and adjust it with the INFINITI controller.

These items can also be adjusted by pushing and turning the AUDIO knob.

BOSE® Centerpoint® (if so equipped) :

When this item is turned to ON, an exciting surround sound is generated from a traditional stereo recording.

BOSE® AudioPilot® (if so equipped) :

When this item is turned to ON, AudioPilot® monitors noise in the passenger compartment with a microphone and compensates for any unpleasant noise.

Surround Volume (if so equipped) :

To adjust the surround sound volume, select "Surround Vol." and adjust it with the INFINITI controller.

Precision Phased Audio (if so equipped) :

When this item is turned to ON, super high pitch sound and super low pitch sound are emphasized and midrange sound is played naturally.

Speed Sensitive Vol. (if so equipped) :

Sound volume is increased according to the vehicle speed. Choose the effect level from OFF (0) to 5.

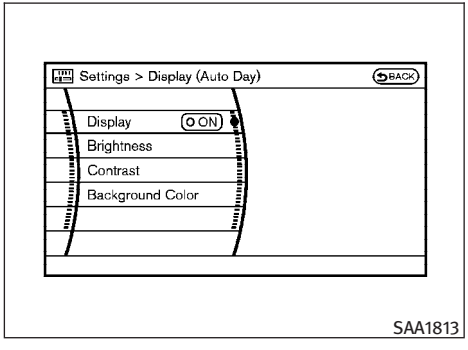

With navigation system

Display settings

The following display will appear when pushing the **SETTING** button, selecting "**Display** " key with the INFINITI controller and pushing the **ENTER** button.

For models without the navigation system, the setting screen can be displayed by pushing the **DISP** button on the control panel.

Display :

To turn off the screen, push the **ENTER** button and turn the "Display" indicator off. The other method is to push and hold the "☀/☽ **OFF** " button for more than 2 seconds.

When any mode button is pushed with the screen off, the screen turns on for further operation. The screen will turn off automatically 5 seconds after the operation is finished.

To turn on the screen, set this item to the ON position, or push the "☀/☽ **OFF** " button.

Brightness/Contrast/Background Color :

To adjust the brightness and contrast of the screen, select the "**Brightness** " or "**Contrast** " key and push the **ENTER** button.

Then, you can adjust the brightness to "Darker" or "Brighter", and the contrast to "Lower" or "Higher" using the INFINITI controller.

For information on the "**Background Color** " key, refer to the separate Navigation System Owner's Manual.

Navigation settings (models with navigation system)

For the details of "Navigation" settings, refer to the separate Navigation System Owner's Manual.

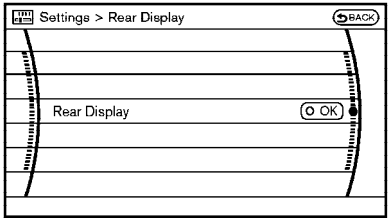

SAA2146

Rear Display settings (if so equipped)

The following display will appear when pushing the **SETTING** button, selecting the **"Rear Display"** key with the INFINITI controller and pushing the **ENTER** button.

Rear Display :

To open the rear display, push the **ENTER** button. The rear display is flipped down automatically. To close the rear display, push the **ENTER** button and turn the "OK" indicator off.

The rear display will be closed automatically when the ignition switch is pushed to the LOCK position.

The rear display can be also opened or closed using the remote controller. (See "INFINITI MOBILE ENTERTAINMENT SYSTEM (MES)" later in this section.)

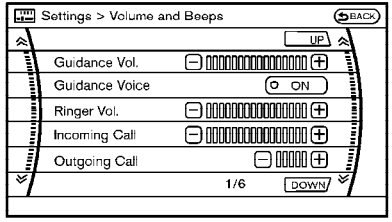

SAA1561

Volume and Beeps settings (models with navigation system)

The following display will appear when pushing the **SETTING** button, selecting the **"Volume and Beeps** " key with the INFINITI controller and pushing the **ENTER** button.

Guidance Vol. :

To adjust the guidance voice volume louder or softer, select the "Guidance Volume" and adjust it with the INFINITI controller.

You can also adjust the guidance voice volume by turning the VOLUME control knob while voice guidance is being announced.

Guidance Voice :

When this item is turned to ON, you will hear voice guidance in the navigation (if so equipped) operation or in other operations.

Ringer Vol./Incoming Call/Outgoing Call :

For the details of these items, see “BLUETOOTH® HANDS-FREE PHONE SYSTEM WITH NAVIGATION SYSTEM” later in this section.

Button Beeps :

When this item is turned to ON, you will hear a beep sound when you use a button.

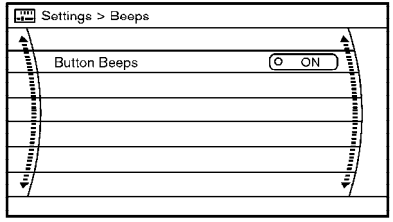

SAA1612

Beeps settings (models without navigation system)

The following display will appear when pushing the **SETTING** button, selecting the “**Beeps** ” key with the INFINITI controller and pushing the **ENTER** button.

Button Beeps :

When this item is turned to ON, you will hear a beep sound when you use a button.

Phone settings (models with navigation system)

For the details of “Phone” settings, see “BLUETOOTH® HANDS-FREE PHONE SYSTEM WITH NAVIGATION SYSTEM” later in this section.

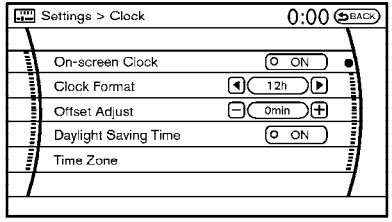

SAA1563

Clock settings (models with navigation system)

The following display will appear when pushing the **SETTING** button, selecting the “**Clock** ” key with the INFINITI controller and pushing the **ENTER** button.

On-screen Clock :

When this item is turned to ON, a clock is always displayed in the upper right corner of the screen.

This clock will indicate the time almost exactly because it is always adjusted by the GPS system.

Clock Format :

Choose either the 12-hour clock display or the 24-hour clock display.

Offset Adjust :

Adjust the time by increasing or decreasing per minute.

Daylight Saving Time :

Turn this item to ON for daylight saving time application.

Time Zone :

Choose the time zone from the following

- Pacific
- Mountain
- Central
- Eastern
- Atlantic
- Newfoundland
- Hawaii
- Aleutian
- Alaska

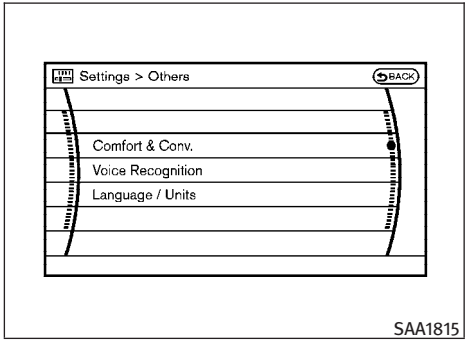

Others settings (models with navigation system)

Select the "**Others** " key and push the **ENTER** button to show "Comfort & Conv.", "Voice Recognition" and "Language/Units".

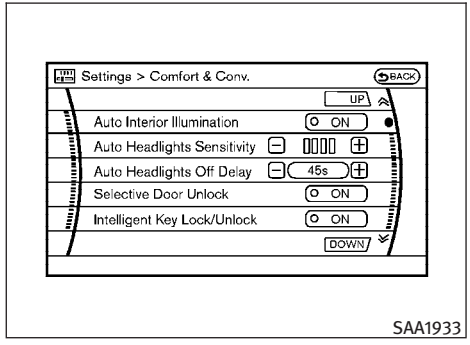

Example

Comfort & Conv. settings

The following display will appear when pushing the **SETTING** button, selecting the "**Comfort & Conv.** " key* with the INFINITI controller and pushing the **ENTER** button. This key does not appear on the display until the ignition switch is pushed to the ON position.

* For models with the navigation system, select the "**Others** " key to show the **Comfort & Conv.** " key.

Auto Interior Illumination :

When this item is turned to ON, the interior lights will illuminate if any door is unlocked.

Auto Headlights Sensitivity (if so equipped) :

Adjust the sensitivity of the automatic headlights higher (right) or lower (left).

Auto Headlights Off Delay (if so equipped) :

Choose the duration of the automatic headlight off timer from 0, 30, 45, 60, 90, 120, 150 and 180 second periods.

Selective Door Unlock :

When this item is turned to ON, only the driver's door is unlocked first after the door unlock operation. When the door handle request switch on the driver's or front passenger's side door is pushed to be unlocked, only the corresponding door is unlocked first. All the doors can be unlocked if the door unlock operation is performed again within 5 seconds.

When this item is turned to OFF, all the doors will be unlocked after the door unlock operation is performed once.

Intelligent Key Lock/Unlock :

When this item is turned to ON, door lock/unlock function by pushing the door handle request switch will be activated.

Lift Steering Wheel on Exit (if so equipped) :

When this item is turned to ON, the steering wheel moves upward for easy exit if the ignition switch is in the LOCK position and the driver's door is opened. After getting into the vehicle and pushing the ignition switch to the ACC position, the steering wheel moves to the previous position.

Slide Driver Seat Back on Exit (if so equipped) :

When this item is turned to ON, the driver's seat moves backward for easy exit if the ignition switch is in the LOCK position and the driver's door is opened. After getting into the vehicle and pushing the ignition switch to the ACC position, the driver's seat moves to the previous position.

Return All Settings to Default :

Select this item, push the **ENTER** button and choose "YES" if you want to return all settings to the default.

Voice Recognition settings (models with navigation system)

For details about the "Voice Recognition" settings, see "INFINITI VOICE RECOGNITION SYSTEM (models with navigation system)" later in this section.

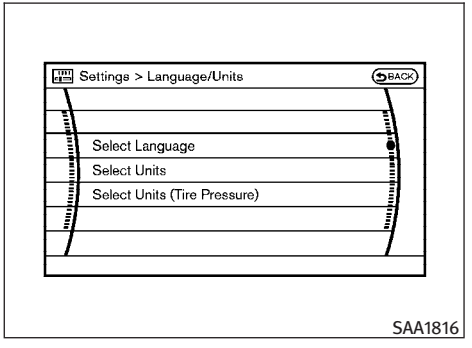

With navigation system

Language/Units settings

The following display will appear when pushing the **SETTING** button, selecting the **"Language/Units "** key* with the INFINITI controller and pushing the **ENTER** button.

* For models with the navigation system, select the **"Others "** key to show the **Language/Units "** key.

Select Language :

Choose the **"Select Language "** key and push the **ENTER** button. From the following display, select "English", "Français" or "Español"* for your favorite display appearance.

NOTE:

If you select the "Français" key, French language will be displayed. For more detail, refer to the French Owner's Manual. To obtain a French Owner's Manual, please see "OWNER'S MANUAL/SERVICE MANUAL ORDER INFORMATION" in the "9. Technical and consumer information" section.

*: For models without navigation system only

Select Units :

Choose the "**Select Units** " key and push the **ENTER** button. From the following display, select "US" (Mile, °F, MPG) or "Metric" (km, °C, L/100 km) for your favorite display appearance.

Select Units (Tire Pressure) :

Choose the "**Select Units (Tire Pressure)** " key and push the **ENTER** button. From the following display, select "kPa" or "psi".

HOW TO USE AUX BUTTON

Images being played can be switched to the center display if NTSC compatible devices are connected to the auxiliary input jacks on the rear side of the center console. (See "AUXILIARY INPUT JACKS" later in this section.)

Push the **DISC·AUX** (with navigation) **AUX** (without navigation) button to perform switching.

Pushing the **DISC·AUX** button (for models with the navigation system) will switch the displays as follows:

CD → CompactFlash* → DVD* → AUX → iPod®* → Music Box* → CD

*: if so equipped

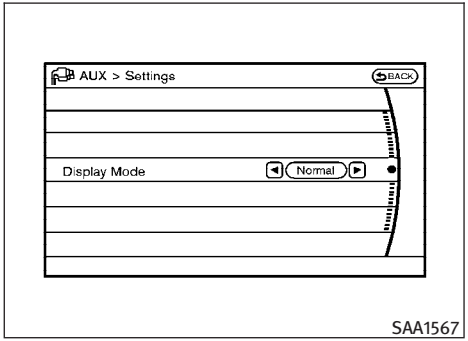

With navigation system

Display Mode

The above display will appear when the "**Settings** " key is selected using the INFINITI controller and pushing the **ENTER** button.

Choose the display mode from the following:

- Normal
- Wide
- Cinema

Images can only be shown on the front display when the vehicle is stopped and the parking brake is applied.

HOW TO USE DISC BUTTON (for models without navigation system)

Push the **DISC** button to play the Compact Disc (CD). See “AUDIO SYSTEM” later in this section.

When the selector lever is shifted into the R (Reverse) position, the monitor display shows the view to the rear of the vehicle.

The system is designed as an aid to the driver in detecting large stationary objects to help avoid damaging the vehicle. The system will not detect small objects below the bumper and may not detect objects close to the bumper or on the ground.

⚠ WARNING

- **The rear view camera is a convenience but it is not a substitute for proper backing up. Always turn and check that it is safe to do so before backing up. Always back up slowly.**
- **Objects viewed in the RearView Monitor differ from actual distance because a wide-angle lens is used. Objects in the RearView Monitor will appear visually opposite like ones viewed in the inside and outside mirrors.**
- **Make sure that the trunk is securely closed when backing up.**
- **Underneath the bumper and the corner areas of the bumper cannot be viewed on the RearView Monitor because of its monitoring range limitation.**
- **Do not put anything on the rear view camera. The rear view camera is installed above the license plate.**
- **When washing the vehicle with high-pressure water, be sure not to spray it around the camera. Otherwise, water may enter the camera unit causing water condensation on the lens, a malfunction, fire or an electric shock.**
- **Do not strike the camera. It is a precision instrument. Otherwise, it may malfunction or cause damage resulting in a fire or an electric shock.**

⚠ CAUTION

There is a plastic cover over the camera. Do not scratch the cover when cleaning dirt or snow from the cover.

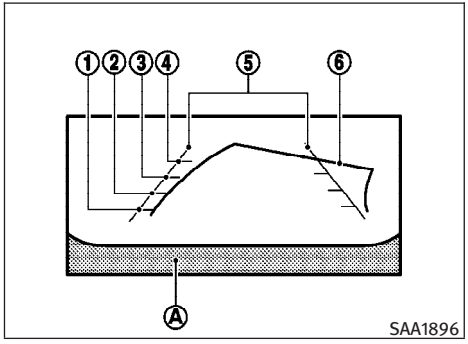

HOW TO READ THE DISPLAYED LINES

Guiding lines which indicate the vehicle width and distances to objects with reference to the bumper line Ⓐ are displayed on the monitor.

Distance guide lines:

Indicate distances from the bumper.

- Red line ①: approx. 1.5 ft (0.5 m)
- Yellow line ②: approx. 3 ft (1 m)
- Green line ③: approx. 7 ft (2 m)
- Green line ④: approx. 10 ft (3 m)

Vehicle width guide lines ⑤:

Indicate the vehicle width when backing up.

Predicted course lines ⑥:

Indicate the predicted course when backing up. The predicted course lines will be displayed on the monitor when the selector lever is in the R (Reverse) position and the steering wheel is turned. The predicted course lines will move depending on how much the steering wheel is turned and will not be displayed while the steering wheel is in the neutral position.

HOW TO PARK WITH PREDICTED COURSE LINES

⚠ WARNING

- **Always turn and check that it is safe to do so before backing up. Always back up slowly.**
- **Use the displayed lines as a reference. The lines are highly affected by the number of occupants, fuel level, vehicle position, road condition and road grade.**
- **If the tires are replaced with different sized tires, the predicted course line may be displayed incorrectly.**
- **On a snow-covered or slippery road, there may be a difference between the predicted course line and the actual course line.**
- **If the battery is disconnected or becomes discharged, the predicted course lines may be displayed incorrectly. If this occurs, drive the vehicle on a straight road for more than 5 minutes.**
- **When the steering wheel is turned with the ignition switch in the ACC position, the predicted course lines may be displayed incorrectly.**
- **The displayed lines will appear slightly off to the right because the rear view camera is not installed in the rear center of the vehicle.**
- **The distance guide line and the vehicle width guide line should be used as a reference only when the vehicle is on a level paved surface. The distance viewed on the monitor is for reference only and may be different than the actual distance between the vehicle and displayed objects.**

- **When backing up the vehicle up a hill, objects viewed in the monitor are further than they appear. When backing up the vehicle down a hill, objects viewed in the monitor are closer than they appear. Use the inside mirror or glance over your shoulder to properly judge distances to other objects.**

The vehicle width and predicted course lines are wider than the actual width and course.

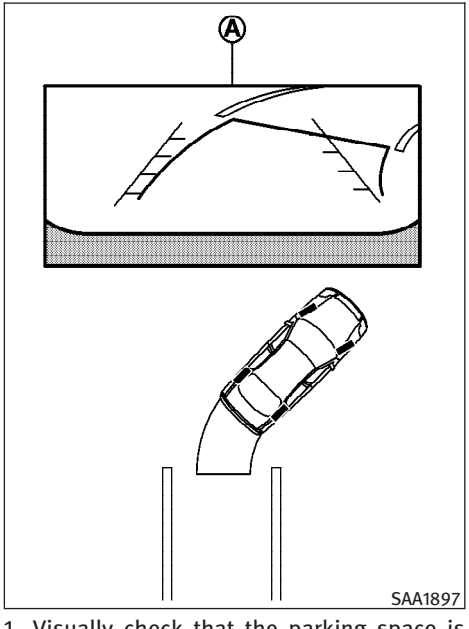

1. Visually check that the parking space is safe before parking your vehicle.
2. The rear view of the vehicle is displayed on the screen Ⓐ when the selector lever is moved to the R (Reverse) position.

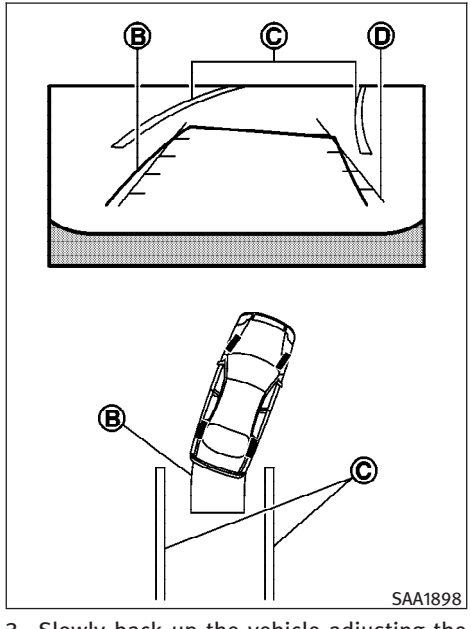

3. Slowly back up the vehicle adjusting the steering wheel so that the predicted course lines Ⓑ enter the parking space Ⓒ.

4. Maneuver the steering wheel to make the vehicle width guide lines Ⓓ parallel to the parking space Ⓒ while referring to the predicted course lines.
5. When the vehicle is parked in the space completely, move the selector lever to the P (Park) position and apply the parking brake.

DIFFERENCE BETWEEN PREDICTED AND ACTUAL DISTANCES

The distance guide line and the vehicle width guide line should be used as a reference only when the vehicle is on a level, paved surface. The distance viewed on the monitor is for reference only and may be different than the actual distance between the vehicle and displayed objects.

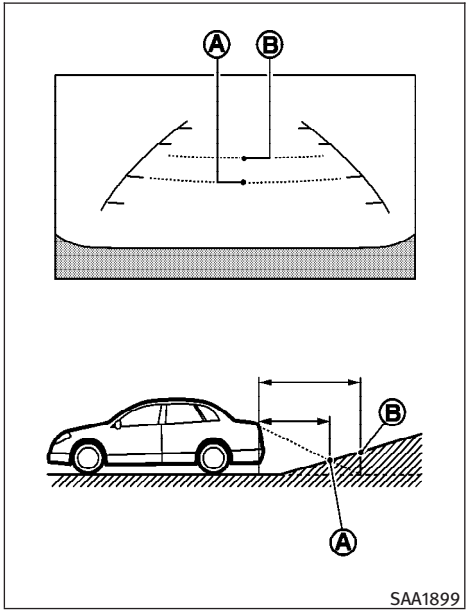

Backing up on a steep uphill

When backing up the vehicle up a hill, the distance guide lines and the vehicle width guide lines are shown closer than the actual distance. For example, the display shows 3 ft (1.0 m) to the place Ⓐ, but the actual 3 ft (1.0 m) distance on the hill is the place Ⓑ. Note that any object on the hill is viewed in the monitor further than it appears.

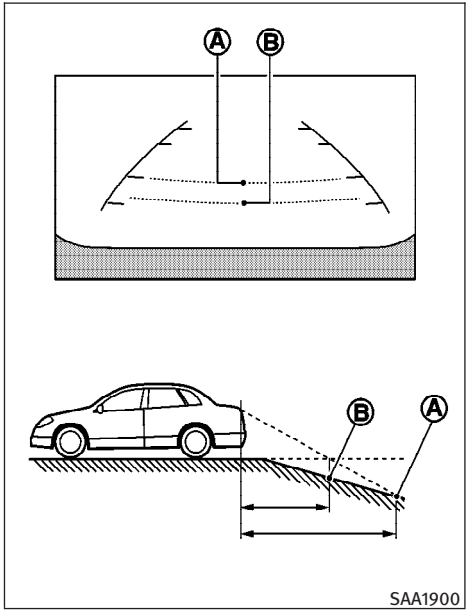

Backing up on a steep downhill

When backing up the vehicle down a hill, the distance guide lines and the vehicle width guide lines are shown further than the actual distance. For example, the display shows 3 ft (1.0 m) to the place Ⓐ, but the actual 3 ft (1.0 m) distance on the hill is the place Ⓑ. Note that any object on the hill is viewed in the monitor closer than it appears.

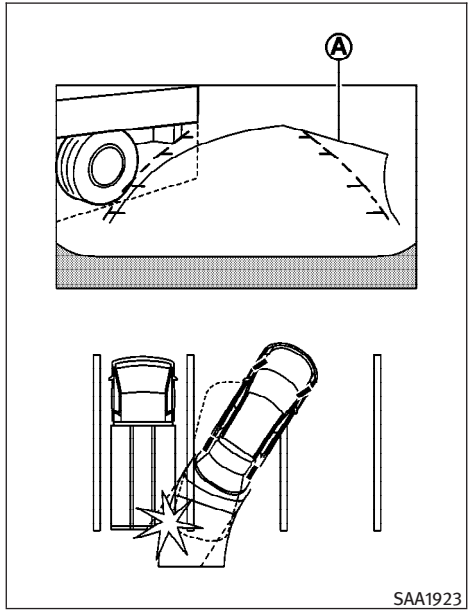

Backing up near a projecting object

The predicted course lines Ⓐ do not touch the object in the display. However, the vehicle may hit the object if it projects over the actual backing up course.

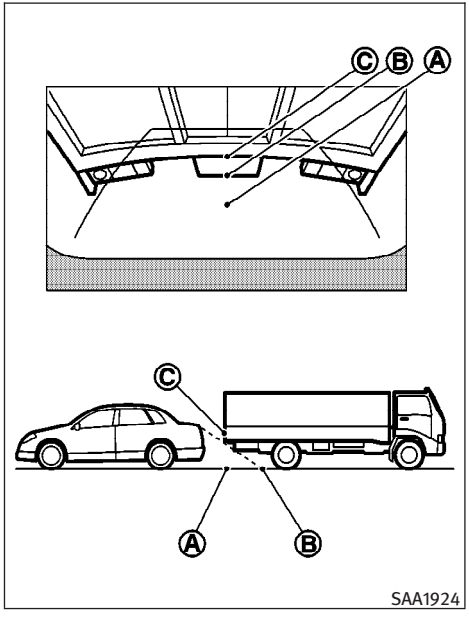

Backing up behind a projecting object

The position Ⓒ is shown further than the position Ⓑ in the display. However, the position Ⓒ is actually at the same distance as the position Ⓐ. The vehicle may hit the object when backing up to the position Ⓐ if the object projects over the actual backing up course.

HOW TO ADJUST THE SCREEN

To adjust the Display ON/OFF, Brightness, Tint, Color, Contrast and Black Level of the RearView Monitor, push the **SETTING** button with the RearView Monitor on, select the item key and adjust the level using the INFINITI controller.

Do not adjust the Brightness, Tint, Color, Contrast and Black Level of the RearView Monitor while the vehicle is moving. Make sure the parking brake is firmly applied and the engine is not running.

OPERATING TIPS

- When the selector lever is shifted to the R (Reverse) position, the monitor screen automatically changes to the RearView Monitor mode. However, the radio can be heard.
- It may take some time until the RearView Monitor or the normal screen is displayed after the selector lever has been shifted to R from another position or to another position from R. Objects may be distorted momentarily until the RearView Monitor screen is displayed completely.
- When the temperature is extremely high or low, the screen may not clearly display objects. This is not a malfunction.
- When strong light directly enters the camera, objects may not be displayed clearly. This is not a malfunction.
- Vertical lines may be seen in objects on the screen. This is due to strong reflected light from the bumper. This is not a malfunction.
- The screen may flicker under fluorescent light. This is not a malfunction.
- The colors of objects on the RearView Monitor may differ somewhat from those of the actual object.
- Objects on the monitor may not be clear in a dark place or at night. This is not a malfunction.
- If dirt, rain or snow attaches to the camera, the RearView Monitor may not clearly display objects. Clean the camera.
- Do not use alcohol, benzine or thinner to clean the camera. This will cause discoloration. To clean the camera, wipe with a cloth dampened with diluted mild cleaning agent and then wipe with a dry cloth.
- Do not damage the camera as the monitor screen may be adversely affected.

- Do not use wax on the camera window. Wipe off any wax with a clean cloth dampened with mild detergent diluted with water.

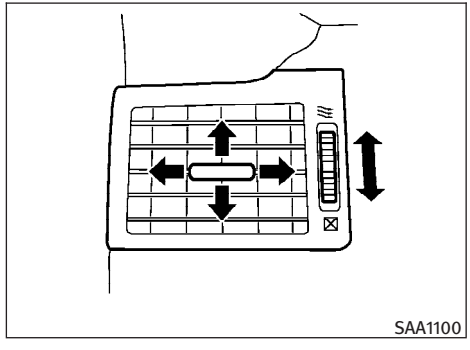

Front

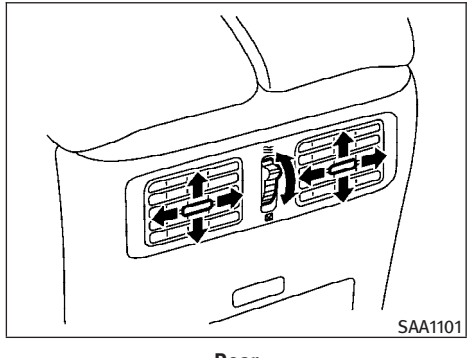

Rear

Open or close, and adjust the air flow direction of ventilators.

☒ : This symbol indicates that the vents are closed.

≋ : This symbol indicates that the vents are open.

WARNING

- **The air conditioner cooling function operates only when the engine is running.**
- **Do not leave children or adults who would normally require the support of others alone in your vehicle. Pets should not be left alone either. On hot, sunny days, temperatures in a closed vehicle could quickly become high enough to cause severe or possibly fatal injuries to people or animals.**
- **Do not use the recirculation mode for long periods as it may cause the interior air to become stale and the windows to fog up.**

Start the engine and operate the automatic climate control system.

When the “STATUS” button is pushed, the automatic climate control status screen will appear. (See “HOW TO USE STATUS BUTTON” earlier in this section.)

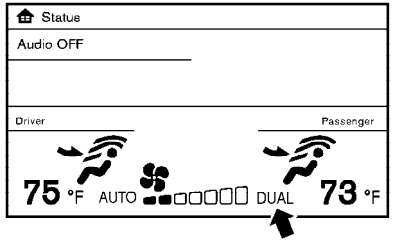

SAA1817

You can individually set the driver and front passenger side temperature and air flow using each temperature control button and manual air flow control button. (DUAL mode)

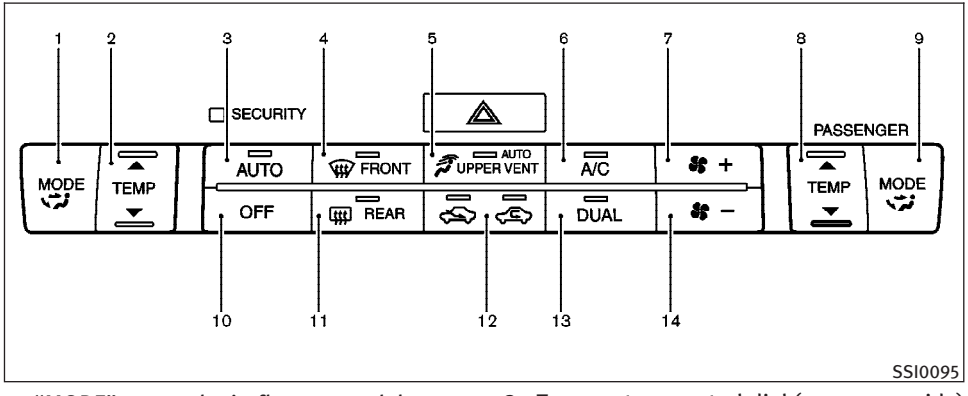

1. “MODE” manual air flow control button (driver side)
2. Temperature control dial (driver side)
3. “AUTO” automatic climate control ON button
4. “ ” front defroster button
5. “ ” automatic upper vent system ON/OFF button
6. “A/C” air conditioner ON/OFF button
7. “ + ” fan speed increase button
8. Temperature control dial (passenger side)
9. “MODE” manual air flow control button (passenger side)
10. “OFF” button for climate control system
11. “ ” rear window defroster button (See “REAR WINDOW AND OUTSIDE MIRROR DEFROSTER SWITCH” in the “2. Instruments and controls” section.)
12. “ ” intake air control button
13. “DUAL” zone control ON/OFF button
14. “ – ” fan speed decrease button

AUTOMATIC CLIMATE CONTROL

Automatic operation

Cooling and/or dehumidified heating (AUTO) :

This mode may be used all year round. The system works automatically to control the inside temperature, air flow distribution and fan speed after the preferred temperature is set manually.

1. Push the “AUTO” button on. (The indicator on the button will illuminate and AUTO will be displayed.)
2. Push the temperature control dial (driver side) to set the desired temperature.

   Adjust the temperature to about 75°F (24°C) for normal operation.

   The temperature of the passenger compartment will be maintained automatically. Air flow distribution and fan speed will also be controlled automatically.
3. You can individually set driver and front passenger side temperature using each temperature control button. When the “DUAL” button or the passenger side temperature control button is pushed, the DUAL indicator will come on.

   To turn off the passenger side temperature control, push the “DUAL” button.

A visible mist may be seen coming from the ventilators in hot, humid conditions as the air is cooled rapidly. This does not indicate a malfunction.

Heating (A/C OFF) :

The air conditioner does not activate in this mode. When you need to heat only, use this mode.

1. Push the "A/C" button. (The A/C indicator will turn off.)
2. Push the temperature control button to set the desired temperature.

- The temperature of the passenger compartment will be maintained automatically. Air flow distribution and fan speed are also controlled automatically.
- Do not set the temperature lower than the outside air temperature. Otherwise the system may not work properly.
- Not recommended if windows fog up.

Dehumidified defrosting or defogging:

1. Push the " " front defroster button. (The indicator light on the button will come on.)
2. Push the temperature control button to set the desired temperature.

- To quickly remove ice from the outside of the windows, push the fan speed increase button " + " and set it to the maximum position.
- As soon as possible after the windshield is clean, push the "AUTO" button to return to the AUTO mode.
- When the " " front defroster button is pushed, the air conditioner will automatically be turned on at outside temperatures above 23°F (−5°C) to defog the windshield, and the air recirculate mode will automatically be turned off.

  Outside air is drawn into the passenger compartment to improve the defogging performance.

To turn the system off :

Push the "OFF" button.

Manual operation

Fan speed control :

Push the fan speed increase " + " or decrease " − " buttons to manually control the fan speed.

Push the "AUTO" button to return to automatic control of the fan speed.

Air recirculation :

Push the intake air control button " " to recirculate interior air inside the vehicle. The indicator light on the " " side will come on.

The air recirculation mode cannot be activated when the air conditioner is in the front defrosting mode " ".

Outside air circulation :

Push the intake air control button " " to draw outside air into the passenger compartment. The indicator light on the " " side will come on.

Automatic intake air control :

In the AUTO mode, the intake air will be controlled automatically. To manually control the intake air, push the intake air control button " ". To return to the automatic control mode, push the intake air control button " " for about 2 seconds. The indicator lights (both air recirculation and outside air circulation sides) will flash twice, and then the intake air will be controlled automatically.

Air flow control :

Pushing the “MODE” manual air flow control button selects the air outlet to:

: Air flows from center and side ventilators.

: Air flows from center and side ventilators and foot outlets.

: Air flows mainly from foot outlets.

: Air flows from defroster and foot outlets.

Automatic upper vent system

When the “ ” automatic upper vent button is pushed, the air flow against the driver’s or passenger’s upper body becomes gentle. The indicator light on the button will come on.

In this mode, air from the center ventilators flows both straight and upward in order to control the cabin temperature without blowing air directly on the occupants.

Distribution between straight and upward flows will be determined automatically by the climate control system.

If you prefer strong air flow against your upper body, push the “ ” button to turn the indicator light off.

To turn the system off :

Push the “OFF” button.

Ambient temperature

The ambient temperature will be displayed.

The ambient temperature sensor is located in front of the radiator. The sensor may be affected by road or engine heat, wind direction and other driving conditions. The display may differ from the actual ambient temperature or the temperature displayed on various signs or billboards.

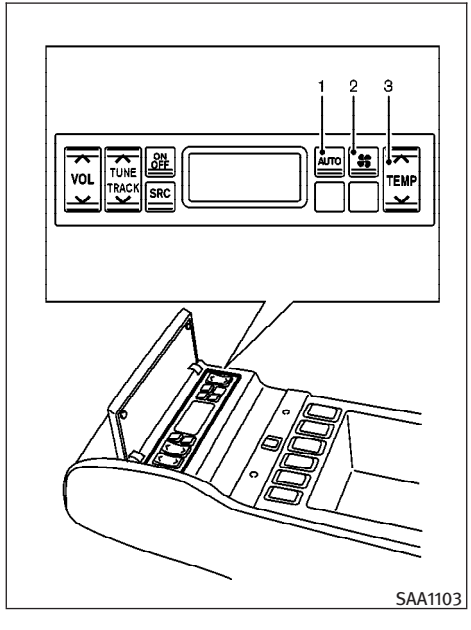

1. AUTO button
2. Fan speed control button
3. Temperature control button

REAR SWITCHES FOR CLIMATE CONTROL (if so equipped)

The rear seat passengers can adjust the climate control system using the climate controls in the rear armrest panel.

"AUTO " button: automatic climate control mode on

" ✿ " button: Fan speed control up (Max fan speed → return to Low fan speed)

" TEMP " button: Temperature control up/down

OPERATING TIPS

When the engine coolant temperature and outside air temperature are low, the air flow from the foot outlets may not operate for a maximum of 150 seconds. This is not a malfunction. After the coolant temperature warms up, air will flow normally from the foot outlets.

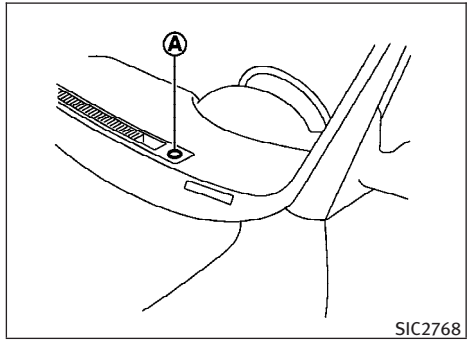

The sunload sensor Ⓐ on the instrument panel helps maintain a constant temperature. Do not put anything on or around this sensor.

IN-CABIN MICROFILTER

The climate control system is equipped with an in-cabin microfilter which collects dirt, pollen, dust, etc. To make sure the air conditioner heats, defogs, and ventilates efficiently, replace the filter in accordance with the maintenance schedule in the INFINITI Service and Maintenance Guide. To replace the filter, contact an INFINITI retailer.

The filter should be replaced if air flow is extremely decreased or when windows fog up easily when operating heater or air conditioning system.

SERVICING CLIMATE CONTROL

The climate control system in your INFINITI is charged with a refrigerant designed with the environment in mind. **This refrigerant will not harm the earth's ozone layer.** However, special charging equipment and lubricant are required when servicing your INFINITI air conditioner. Using improper refrigerants or lubricants will cause severe damage to your climate control system. (See "CAPACITIES AND RECOMMENDED FUEL/LUBRICANTS" in the "9. Technical and consumer information" section for climate control system refrigerant and lubricant recommendations.)

Your INFINITI retailer will be able to service your environmentally friendly climate control system.

⚠ WARNING

The system contains refrigerant under high pressure. To avoid personal injury, any air conditioner service should be done only by an experienced technician with the proper equipment.

AUDIO OPERATION PRECAUTIONS
Radio

Push the ignition switch to the ACC or ON position and push the radio band select button to turn on the radio. If you listen to the radio with the engine not running, the ignition switch should be pushed to the ACC position.

Radio reception is affected by station signal strength, distance from radio transmitter, buildings, bridges, mountains and other external influences. Intermittent changes in reception quality normally are caused by these external influences.

Using a cellular phone in or near the vehicle may influence radio reception quality.

Radio reception :

Your INFINITI radio system is equipped with state-of-the-art electronic circuits to enhance radio reception. These circuits are designed to extend reception range, and to enhance the quality of that reception.

However there are some general characteristics of both FM and AM radio signals that can affect radio reception quality in a moving vehicle, even when the finest equipment is used. These characteristics are completely normal in a given reception area, and do not indicate any malfunction in your INFINITI radio system.

Reception conditions will constantly change because of vehicle movement. Buildings, terrain, signal distance and interference from other vehicles can work against ideal reception. Described below are some of the factors that can affect your radio reception.

Some cellular phones or other devices may cause interference or a buzzing noise to come from the audio system speakers. Storing the device in a different location may reduce or eliminate the noise.

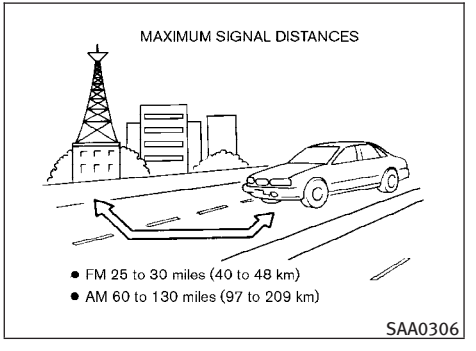

FM radio reception :

Range: FM range is normally limited to 25 to 30 miles (40 to 48 km), with monaural (single channel) FM having slightly more range than stereo FM. External influences may sometimes interfere with FM station reception even if the FM station is within 25 miles (40 km). The strength of the FM signal is directly related to the distance between the transmitter and receiver. FM signals follow a line-of-sight path, exhibiting many of the same characteristics as light. For example they will reflect off objects.

Fade and drift: As your vehicle moves away from a station transmitter, the signals will tend to fade and/or drift.

Static and flutter: During signal interference from buildings, large hills or due to antenna position, usually in conjunction with increased distance from the station transmitter, static or flutter can be heard. This can be reduced by lowering the treble setting to reduce the treble response.

Multipath reception: Because of the reflective characteristics of FM signals, direct and reflected signals reach the receiver at the same time. The signals may cancel each other, resulting in momentary flutter or loss of sound.

AM radio reception :

AM signals, because of their low frequency, can bend around objects and skip along the ground. In addition, the signals can be bounced off the ionosphere and bent back to earth. Because of these characteristics. AM signals are also subject to interference as they travel from transmitter to receiver.

Fading: Occurs while the vehicle is passing through freeway underpasses or in areas with many tall buildings. It can also occur for several seconds during ionospheric turbulence even in areas where no obstacles exist.

Static: Caused by thunderstorms, electrical power lines, electric signs and even traffic lights.

Satellite radio reception :

When the satellite radio (if so equipped) is first installed or the battery has been replaced, the satellite radio may not work properly. This is not a malfunction. Wait more than 10 minutes with satellite radio ON and the vehicle outside of any metal or large building for satellite radio to receive all of the necessary data.

The satellite radio mode will be skipped unless an optional satellite receiver and antenna are installed and an XM® satellite radio service subscription is active. Satellite radio is not available in Alaska, Hawaii and Guam.

Satellite radio performance may be affected if cargo carried on the roof blocks the satellite radio signal.

If possible, do not put cargo near the satellite antenna.

A build up of ice on the satellite radio antenna can affect satellite radio performance. Remove the ice to restore satellite radio reception.

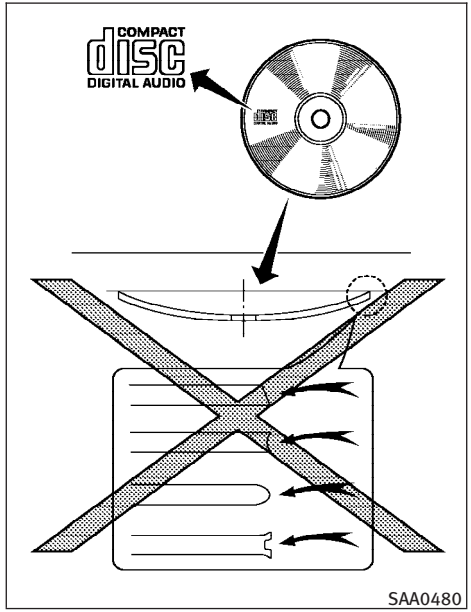

Compact Disc (CD) player

- **Do not force a compact disc into the CD insert slot. This could damage the CD and/or CD changer/player.**
- **Trying to load a CD with the CD door closed could damage the CD and/or CD changer.**

- During cold weather or rainy days, the player may malfunction due to the humidity. If this occurs, remove the CD and dehumidify or ventilate the player completely.
- The player may skip while driving on rough roads.
- The CD player sometimes cannot function when the passenger compartment temperature is extremely high. Decrease the temperature before use.
- Only use high quality 4.7 in (12 cm) round discs that have the "COMPACT disc DIGITAL AUDIO" logo on the disc or packaging.
- Do not expose the CD to direct sunlight.
- CDs that are of poor quality, dirty, scratched, covered with fingerprints, or that have pin holes may not work properly.
- The following CDs may not work properly:
  - Copy control compact discs (CCCD)
  - Recordable compact discs (CD-R)
  - Rewritable compact discs (CD-RW)
- Do not use the following CDs as they may cause the CD player to malfunction.
  - 3.1 in (8 cm) discs
  - CDs that are not round
  - CDs with a paper label
  - CDs that are warped, scratched, or have abnormal edges
- This audio system can only play prerecorded CDs. It has no capabilities to record or burn CDs.
- If the CD cannot be played, one of the following messages will be displayed.

CHECK DISC:

- Confirm that the CD is inserted correctly (the label side is facing up, etc.).
- Confirm that the CD is not bent or warped and it is free of scratches.

PUSH EJECT:

This is an error due to the temperature inside the player is too high. Remove the CD by pushing the EJECT button, and after a short time reinsert the CD. The CD can be played when the temperature of the player returns to normal.

UNPLAYABLE:

The file is unplayable in this audio system (only MP3 or WMA CD).

CompactFlash (CF) player

- Do not force a CF card into the slot. This could damage the CF card and/or player.
- During cold weather or rainy days, the player may malfunction due to the humidity. If this occurs, remove the CF card and dehumidify or ventilate the player completely.
- The CF player sometimes cannot function when the passenger compartment temperature is extremely high. Decrease the temperature before use.
- Do not expose a CF card to direct sunlight.
- Confirm that a CF card is inserted correctly.

iPod® player

- Some characters used in other languages (Chinese, Japanese, etc.) are not displayed properly on the vehicle center screen. We recommend using English language characters with an iPod®.
- Large video podcast files cause slow responses in the iPod®. The vehicle center display may momentarily black out, but it will soon recover.
- If the iPod® automatically selects large video podcast files while in the shuffle mode, the vehicle center display may momentarily black out, but it will soon recover.

- **Improperly plugging in the iPod® may cause a checkmark to be displayed on and off (flickering). Always make sure that the iPod® is connected properly.**
- **The iPod® nano (2nd Generation) will continue to fast forward or rewind if it is disconnected during a seek operation.**
- **An incorrect song title may appear when the Play Mode is changed while using the iPod® nano (2nd Generation).**
- **Audiobooks may not play in the same order as they appear on the iPod®.**
- **The iPod® nano (1st Generation) may remain in fast forward or rewind mode if it is connected during a seek operation. In this case, please manually reset the iPod®.**
- **If you are using an iPod® (3rd Generation with Dock connector), do not use very long names for the song title, album name or artist name to avoid the iPod® from resetting itself.**
- **Be careful not to do the following, or the cable could be damaged and a loss of function may occur.**
  - **Bend the cable excessively (1.6 in (40 mm) radius minimum).**
  - **Twist the cable excessively (more than 180 degrees).**
  - **Pull or drop the cable.**
  - **Close the center console lid on the cable or connectors.**
  - **Store objects with sharp edges in the storage where the cable is stored.**
  - **Spill liquids on the cable and connectors.**
- **Do not connect the cable to the iPod® if the cable and/or connectors are wet. It may damage the iPod®.**
- **If the cable and connectors are exposed to water, allow the cable and/or connectors to dry completely before connecting the cable to the iPod® (wait 24 hours for it to dry).**
- **If the connector is exposed to fluids other than water, evaporative residue may cause a short between the connector pins. In this case, replace the cable, otherwise damage to the iPod® and a loss of function may occur.**
- **If the cable is damaged (insulation cut, connectors cracked, contamination such as liquids, dust, dirt, etc. in the connectors), do not use the cable and contact an INFINITI retailer to replace the cable with a new one.**
- **When not in use for extended periods of time, store the cable in a clean, dust free environment at room temperature and without direct sun exposure.**
- **Do not use the cable for any other purposes other than its intended use in the vehicle.**
- **iPod® charging is only possible for devices that support charging via a FireWire® connection. Devices that can be charged by the iPod player include:**
  - **iPod® Classic - 1st through 6th generation**
  - **iPod® Mini - 1st and 2nd generation**
  - **iPod® Nano - 1st through 3rd generation only**
  - **iPod® Touch - 1st generation only**
  - **iPhone® - 1st generation only**

*** The iPod® Classic and iPod® Touch may not charge properly in some cases.**

*** 12V charging is not possible on the iPhone 3G and later models.**

*** iPod® and FireWire® are trademarks of Apple Inc., registered in the U.S. and other countries.**

Compact Disc (CD)/CompactFlash (CF) with MP3 or WMA

Explanation of terms :

- MP3 — MP3 is short for Moving Pictures Experts Group Audio Layer 3. MP3 is the most well known compressed digital audio file format. This format allows for near “CD

quality" sound, but at a fraction of the size of normal audio files. MP3 conversion of an audio track from CD/CF can reduce the file size by approximately 10:1 ratio (Sampling: 44.1 kHz, Bit rate: 128 kbps) with virtually no perceptible loss in quality. MP3 compression removes the redundant and irrelevant parts of a sound signal that the human ear doesn't hear.

- WMA — Windows Media Audio (WMA) is a compressed audio format created by Microsoft as an alternative to MP3. The WMA codec offers greater file compression than the MP3 codec, enabling storage of more digital audio tracks in the same amount of space when compared to MP3s at the same level of quality.
- Bit rate — Bit rate denotes the number of bits per second used by a digital music files. The size and quality of a compressed digital audio file is determined by the bit rate used when encoding the file.
- Sampling frequency — Sampling frequency is the rate at which the samples of a signal are converted from analog to digital (A/D conversion) per second.
- Multisession — Multisession is one of the methods for writing data to media. Writing data once to the media is called a single session, and writing more than once is called a multisession.
- ID3/WMA Tag — The ID3/WMA tag is the part of the encoded MP3 or WMA file that contains information about the digital music file such as song title, artist, album title, encoding bit rate, track time duration, etc. ID3 tag information is displayed on the Album/Artist/Track title line on the display.

* Windows® and Windows Media® are registered trademarks or trademarks of Microsoft Corporation in the United States of America and/or other countries.

CompactFlash is a trademark of SanDisk Corporation in the United States of America and/or other countries.

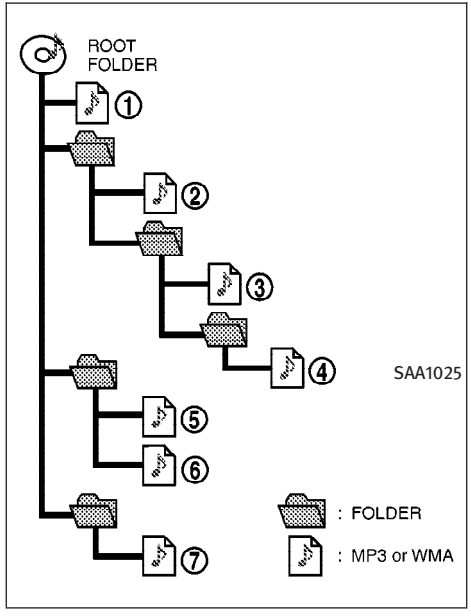

Playback order chart

Playback order :

Music playback order of a CD/CF with MP3 or WMA files is as illustrated.

- The names of folders not containing MP3 or WMA files are not shown in the display.
- If there is a file in the top level of the disc, “Root Folder” is displayed.
- The playback order is the order in which the files were written by the writing software. Therefore the files might not play in the desired order.

Specification chart :

Supported media			CD, CD-R, CD-RW, CF
Supported file systems			CD, CD-R, CD-RW: ISO9660 LEVEL1, ISO9660 LEVEL2, Romeo, Joliet * ISO9660 Level 3 (packet writing) is not supported. * Files saved using the Live File System component (on a Windows Vista-based computer) are not supported.
			CompactFlash card: FAT12, FAT16, FAT32
Supported versions*1	MP3	Version	MPEG1, MPEG2, MPEG2.5
		Sampling frequency	8 kHz - 48 kHz
		Bit rate	8 kbps - 320 kbps, VBR*4
	WMA*2	Version	WMA7, WMA8, WMA9
		Sampling frequency	32 kHz - 48 kHz
		Bit rate	32 kbps - 192 kbps, VBR*4
Tag information (Song title and Artist name)			ID3 tag VER1.0, VER1.1, VER2.2, VER2.3, VER2.4 (MP3 only)
			WMA tag (WMA only)
Folder levels			With navigation system: Folder levels: 8, Folders: 255 (including root folder), Files: 512 (Max. 255 files for one folder) Without navigation system: Folder levels: 8, Folders and files: 999 (Max. 255 files for one folder)
Text character number limitation			With navigation system: 128 characters
			Without navigation system: 64 characters
Displayable character codes*3			01: ASCII, 02: ISO-8859-1, 03: UNICODE (UTF-16 BOM Big Endian), 04: UNICODE (UTF-16 Non-BOM Big Endian), 05: UNICODE (UTF-8), 06: UNICODE (Non-UTF-16 BOM Little Endian)

*1 Files created with a combination of 48 kHz sampling frequency and 64 kbps bit rate cannot be played.
*2 Protected WMA files (DRM) cannot be played.
*3 Available codes depend on what kind of media, versions and information are going to be displayed.
*4 When VBR files are played, the playback time may not be displayed correctly.

Troubleshooting guide :

Symptom	Cause and Countermeasure
Cannot play	Check if the CD/CF was inserted correctly.
	Check if the CD/CF is scratched or dirty.
	Check if there is condensation inside the player, and if there is, wait until the condensation is gone (about 1 hour) before using the player.
	If there is a temperature increase error, the player will play correctly after it returns to the normal temperature.
	If there is a mixture of music CD files (CD-DA data) and MP3/WMA files on a CD, only the music CD files (CD-DA data) will be played.
	Files with extensions other than “.MP3”, “.WMA”, “.mp3” or “.wma” cannot be played. In addition, the character codes and number of characters for folder names and file names should be in compliance with the specifications.
	Check if the disc or the file is generated in an irregular format. This may occur depending on the variation or the setting of MP3/WMA writing applications or other text editing applications.
	Check if the finalization process, such as session close and disc close, is done for the disc.
	Check if the CD/CF is protected by copyright.
Poor sound quality	Check if the CD/CF is scratched or dirty.
It takes a relatively long time before the music starts playing.	If there are many folder or file levels on the MP3/WMA CD/CF, or if it is a multisession disc, some time may be required before the music starts playing.
Music cuts off or skips	The writing software and hardware combination might not match, or the writing speed, writing depth, writing width, etc., might not match the specifications. Try using the slowest writing speed.
Skipping with high bit rate files	Skipping may occur with large quantities of data, such as for high bit rate data.
Move immediately to the next song when playing.	When a non-MP3/WMA file has been given an extension of “.MP3”, “.WMA”, “.mp3” or “.wma”, or when play is prohibited by copyright protection, the player will skip to the next song.
The songs do not play back in the desired order.	The playback order is the order in which the files were written by the writing software, so the files might not play in the desired order.

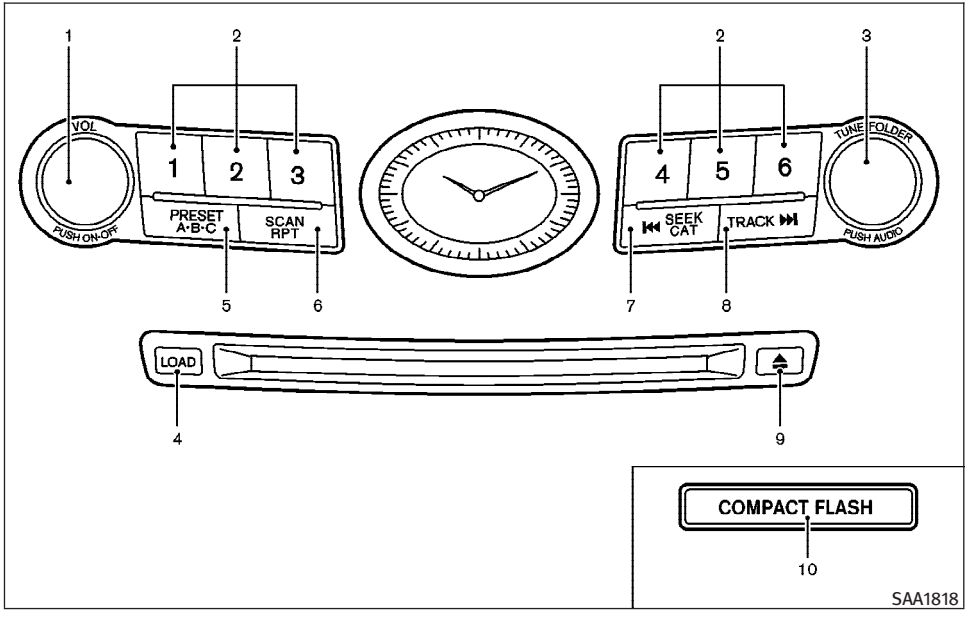

1. ON·OFF/VOLUME control knob
2. Radio station preset and CD selector buttons
3. Radio tuning / MP3/WMA folder selector / AUDIO control knob
4. CD LOAD button (if so equipped)
5. Radio PRESET A-B-C selector button
6. Radio SCAN (tuning)/CD RPT (repeat) play button
7. Radio CAT (category)/REW (rewind) button for SEEK/TRACK
8. FF (fast forward) button for SEEK/TRACK
9. CD EJECT button
10. CompactFlash (CF) card slot (located under the audio unit) (if so equipped)

No satellite radio reception is available unless there is an active XM® satellite radio service subscription.

The audio control buttons are also located on the center multi-function control panel.

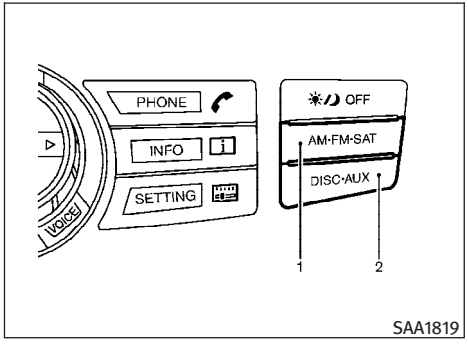

With navigation system

1. AM·FM·SAT band select button
2. DISC·AUX button

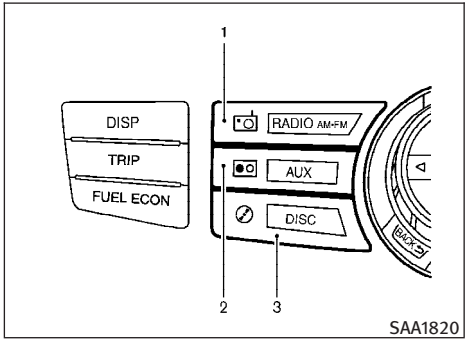

Without navigation system

1. RADIO AM·FM band select button
2. AUX button
3. DISC button

FM-AM-SAT RADIO WITH COMPACT DISC (CD) PLAYER/CHANGER

For all operation precautions, see “AUDIO OPERATION PRECAUTIONS” earlier in this section.

The satellite radio mode requires an active XM® satellite radio service subscription. Satellite radio is not available in Alaska, Hawaii and Guam.

It may take some time to receive the activation signal after subscribing to the XM® satellite radio. After receiving the activation signal, an available station list will be automatically updated in the radio. Push the ignition switch from LOCK to ACC to update the station list.

Audio main operation

Head unit :

The radio has an FM diversity reception system, which employs two antennas printed on the rear window. This system automatically switches to the antenna which is receiving less interference.

The auto loudness circuit enhances the low and high frequency ranges automatically in both radio reception and CD playback.

ON·OFF/Volume control :

Push the ignition switch to the ACC or ON position, and then push the ON·OFF/VOLUME control knob while the system is off to call up the audio mode which was playing immediately before the system was turned off. While the system is on, pushing the ON·OFF/VOLUME control knob turns the system off.

Turn the ON·OFF/VOLUME control knob to adjust the volume.

Adjusting tone quality and speaker balance :

To adjust Bass, Treble, Balance and Fade, push the Audio control knob. When the display shows the setting you want to change (Bass, Treble, Balance and Fade), rotate the Audio control knob to set the desired setting. For the other setting methods, see “HOW TO USE SETTING BUTTON” earlier in this section.

This vehicle has some sound effect functions as follows (if so equipped):

- BOSE® Centerpoint®
- BOSE® AudioPilot®
- Precision Phased Audio
- Speed Sensitive Volume

For more details, see “VEHICLE INFORMATION AND SETTINGS” earlier in this section.

FM-AM-SAT radio operation

RADIO AM·FM or AM · FM SAT **Radio (FM/AM/SAT) band select :**

Pushing the radio band select button will change the band as follows:

AM → FM → XM → AM

When the radio band select button is pushed while the ignition switch is in the ACC or ON position, the radio will come on at the station last played.

The last station played will also come on when the ON·OFF/VOL control knob is pushed to ON.

The satellite radio mode requires an active XM® satellite radio service subscription. Satellite radio is not available in Alaska, Hawaii and Guam.

If another audio source is playing when the radio band select button is turned to ON, the audio source will automatically be turned off and the last radio station played will come on.

When the stereo broadcast signal is weak, the radio will automatically change from stereo to monaural reception.

TUNE (Tuning) :

- For AM and FM radio

  Turn the TUNE/FOLDER knob for manual tuning.

- For satellite radio

  Turn the TUNE/FOLDER knob to seek stations from all of the categories when any CAT is not selected.

TRACK ▶▶| |◀◀ SEEK CAT **SEEK tuning/CATEGORY (CAT) :**

- For AM and FM radio

  Push the SEEK·CAT or TRACK button |◀◀ or ▶▶| to tune from low to high or high to low frequencies and to stop at the next broadcasting station.

- For satellite radio

  Push the SEEK·CAT or TRACK button |◀◀ or ▶▶| to tune to the first station of the next or previous category.

During satellite radio reception, the following notices will be displayed under certain conditions.

- NO SIGNAL (No signal is received while the SAT tuner is connected.)
- OFF AIR (Broadcasting signed off)
- ANTENNA ERROR (Antenna connection error)
- LOADING (When the initial setting is performed)
- UPDATING (When the satellite radio subscription is not active)
- INVALID CH (Invalid station is received.)

SCAN RPT **SCAN tuning :**

Push the SCAN tuning button to tune from low to high frequencies and stop at each broadcasting station for 5 seconds. Pushing the button again during this 5-second period will stop SCAN tuning and the radio will remain tuned to that station.

If the SCAN tuning button is not pushed within 5 seconds, SCAN tuning moves to the next station.

PRESET A·B·C **PRESET select :**

Push the PRESET select button to go to the next PRESET. After choosing from the PRESET A, B or C, you can select the desired station using the INFINITI controller or pushing the station preset buttons **1** to **6** .

1 **to** **6** **Station memory operations :**

6 stations can be set for PRESET A, B and C. The PRESET A, B and C function allows you to store a combination of FM, AM and SAT stations for easy access.

1. Choose preset station A, B or C using the preset select button.
2. Tune to the desired station using the SEEK, SCAN or TUNE button.
3. Select the desired station and push and hold the desired station preset button **1** to **6** until a beep sound is heard. (The radio mutes when the select button is pushed.)
4. The station indicator will then come on and the sound will resume. Memorizing is now complete.
5. Other buttons can be set in the same manner.

If the battery cable is disconnected, or if the fuse opens, the radio memory will be erased. In that case, reset the desired stations.

Text :

When the **"Text "** key is selected with the INFINITI controller on the display and then the **ENTER** button is pushed while the satellite radio is being played, the text information will be displayed on the screen.

- CH Name
- Category
- Name
- Title
- Other

If your vehicle is equipped with the **AUDIO TEXT** " " button on the center multi-function control panel, push this button while the satellite programming is selected to show the text information.

Compact Disc (CD) player/changer operation

Push the ignition switch to the ACC or ON position, push the LOAD button (if so equipped) and insert the Compact Disc (CD) into the slot with the label side facing up. The CD will be guided automatically into the slot and start playing.

After loading the CD, the number of tracks on the CD and the play time will appear on the display.

If the radio is already operating, it will automatically turn off and the CD will play.

If the system has been turned off while the CD was playing, pushing the ON·OFF/VOL control knob will start the CD.

Do not use 3.1 in (8 cm) discs.

LOAD **CD LOAD (if so equipped) :**

To insert a CD in the CD changer, push the LOAD button for less than 1.5 seconds. Select the

loading position by pushing the CD insert select button ① to ⑥, then insert the CD.

To insert 6 CDs to the CD changer in succession, push the LOAD button for more than 1.5 seconds.

The inserted slot numbers will illuminate on the display.

DISC or **DISC AUX** **CD PLAY :**

When the DISC (CD play) button is pushed with the system off and the CD loaded, the system will turn on and the CD will start to play.

When the DISC button is pushed with the CD loaded and the radio playing, the radio will automatically be turned off and the CD will start to play.

When the DISC button is pushed while a CD is loaded and a medium is played using the auxiliary input jacks, you can toggle back and forth between CD and medium.

Text :

When the "**Text** " key is selected in the screen using the INFINITI controller and then the **ENTER** button is pushed while the CD is being played, the music information below will be displayed on the screen.

CD:

- Disc title
- Track title

CD with MP3 or WMA:

- Folder title
- File title
- Song title
- Album title
- Artist

If your vehicle is equipped with the **AUDIO TEXT** " " button on the center multi-function control panel, push this button while the CD is being played to show the music information.

TRACK ▶▶| |◀◀ SEEK CAT **FF (Fast Forward), REW (Rewind)/APS (Automatic Program Search) FF, APS REW :**

When the ▶▶| (fast forward) or |◀◀ (rewind) button is pushed for more than 1.5 seconds while the CD is being played, the CD will play while fast forwarding or rewinding. When the button is released, the CD will return to normal play speed.

When the ▶▶| or |◀◀ button is pushed for less than 1.5 seconds while the CD is being played, the next track or the beginning of the current track on the CD will be played.

The INFINITI controller can also be used to select tracks when a CD is being played.

CD PLAY selection (CD changer only) :

To change to another CD already loaded into the player, push the CD play select buttons **1** to **6** or choose a disc displayed on the screen using the INFINITI controller.

SCAN RPT **REPEAT (RPT) :**

When the SCAN·RPT button is pushed while the CD is played, the play pattern can be changed as follows:

(CD)

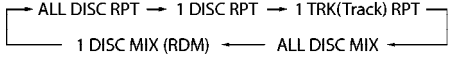

(CD with MP3 or WMA)

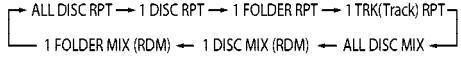

"ALL DISC RPT" and "ALL DISC MIX" are available for CD changer model.

CD EJECT :

When the CD EJECT button is pushed with the CD loaded, the CD will be ejected.

To eject the discs selected by the CD select button, push the EJECT button for less than 1.5 seconds.

To eject all the discs (if so equipped), push the EJECT button for more than 1.5 seconds.

When this button is pushed while the CD is being played, the CD will come out and the system will turn off.

If the CD comes out and is not removed, it will be pulled back into the slot to protect it.

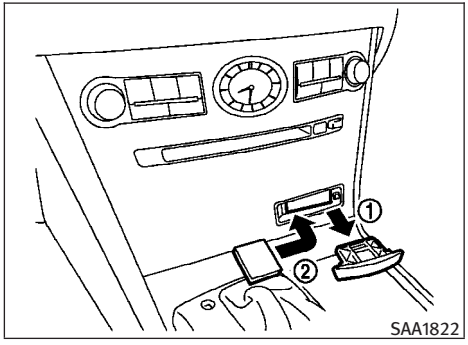

COMPACTFLASH (CF) PLAYER OPERATION (if so equipped)

Audio main operation

Push the ignition switch to the ACC or ON position, remove the cover ① and insert a CF card ② into the slot. Then, push the DISC AUX button repeatedly to switch to the CompactFlash mode.

If the system has been turned off while the CompactFlash card was playing, pushing the ON·OFF/VOL control knob will start the CompactFlash card.

PLAY :

When the **DISC·AUX** button is pushed with the system off and the CF card inserted, the system will turn on.

If another audio source is playing and a CF card is inserted, push the **DISC·AUX** button repeatedly until the center display changes to the CompactFlash mode.

Text :

When the “Text” key is selected on the screen using the INFINITI controller and then the ENTER button is pushed while the CF is being played, the music information below will be displayed on the screen.

- Folder title
- Song title
- Track title
- Album Title
- Artist

FF (Fast Forward), REW (Rewind)/APS (Automatic Program Search) FF, APS REW :

When the ▶▶| (fast forward) or |◀◀ (rewind) button is pushed for more than 1.5 sec-

onds while the CompactFlash (CF) card is being played, the CF card will play while fast forwarding or rewinding. When the button is released, the CF card will return to the normal play speed.

When the ▶▶| or |◀◀ button is pushed for less than 1.5 seconds while the CF card is being played, the next track or the beginning of the current track on the CF will be played.

The INFINITI controller can also be used to select tracks when the CF card is being played.

Folder selection :

To change to another folder in the CF card, turn the MP3/WMA folder selector or choose a folder displayed on the screen using the INFINITI controller.

SCAN RPT **REPEAT (RPT) :**

When the RPT button is pushed while the CF card is played, the play pattern can be changed as follows:

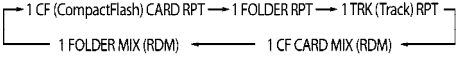

CF EJECT :

When the knob next to the CF slot is pushed with the CF card inserted, the CF card will be ejected.

Messages :

The following messages will be displayed under certain conditions.

- Reading Compact Flash (The system is reading the CF card inserted in the slot.)
- No Compact Flash card (A CF card is not inserted in the slot.)
- Compact Flash read error (The system cannot read a CF card.)
- Unplayable file (The system cannot play a music file.)
- No audio file (The CF card inserted in the slot or its folder does not contain any music files.)

Compatibility with other media :

If a commercially available CF adapter is inserted into the slot, your memory media can also be used.

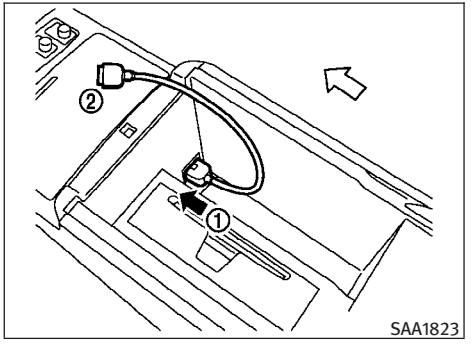

IPOD® PLAYER OPERATION (if so equipped)

Connecting iPod®

Open the console lid and connect the cable ① as illustrated, and then connect the other end of the cable to your iPod® ②. Your vehicle is equipped with the specialized cable for connecting the iPod® to your vehicle audio unit. The battery of your iPod® is charged while it is connected to the vehicle if the iPod® supports charging via a FireWire® connection.

The display on the iPod® shows an INFINITI screen when the connection is completed.

While connecting the iPod® to the vehicle, the iPod® can only be operated by the vehicle audio controls.

To disconnect the cable from the vehicle outlet, fully depress the center connector button to unlatch the connector and pull the connector straight out of the outlet. To disconnect the cable from the iPod®, fully depress the side connector buttons and pull the iPod® connector straight out of the iPod®.

* iPod® is a trademark of Apple Inc., registered in the U.S. and other countries.

Compatibility

The following models are available:

- Third generation iPod® (Firmware version 2.3 or later) (Audiobook and Podcast are not available)
- Fourth generation iPod® (Firmware version 3.1.1 or later)
- Fifth generation iPod® (Firmware version 1.1.2 or later)
- iPod® mini (Firmware version 1.41 or later)
- iPod® photo (Firmware version 1.2.1 or later)
- iPod® nano (Firmware version 1.2 or later)

Make sure that your iPod® firmware is updated.

Audio main operation

Push the ignition switch to the ACC or ON position. Then, push the **DISC·AUX** button repeatedly to switch to the iPod® mode.

If the system has been turned off while the iPod® was playing, pushing the ON·OFF/VOL control knob will start the iPod®.

DISC·AUX button :

When the **DISC·AUX** button is pushed with the system off and the iPod® connected, the system will turn on. If another audio source is playing and the iPod® is connected, push the **DISC·AUX** button repeatedly until the center display changes to the iPod® mode.

Interface :

The interface for iPod® operation shown on the vehicle center display is similar to the iPod® interface. Use the INFINITI controller and the **ENTER** or **BACK** button to play the iPod® with your favorite settings.

The following items can be chosen from the menu list screen. For further information about each item, see the iPod® Owner's Manual.

- Playlists
- Artists
- Albums
- Songs
- Podcasts
- Genres
- Composers
- Audiobooks

The following touch-panel buttons shown on the screen are also available:

- MENU : returns to the previous screen.
- ▶II : plays/pauses the music selected.

FF (Fast Forward), REW (Rewind)/APS (Automatic Program Search) FF, APS REW :

When the ▶▶I or I◀◀ button is pushed for more than 1.5 seconds while the iPod® is playing, the iPod® will play while fast forwarding or rewinding. When the button is released, the iPod® will return to the normal play speed.

When the ▶▶I or I◀◀ button is pushed for less than 1.5 seconds while the iPod® is playing, the next track or the beginning of the current track on the iPod® will be played.

The INFINITI controller can also be used to select tracks when the iPod® is playing.

SCAN RPT **REPEAT (RPT) :**

When the **SCAN·RPT** button is pushed while a track is being played, the play pattern can be changed as follows:

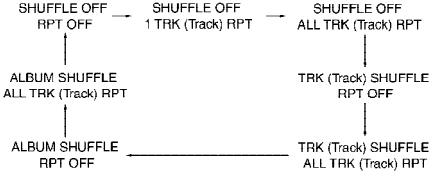

MUSIC BOX HARD-DISK DRIVE AUDIO SYSTEM (models with navigation system)

The “Music Box” hard-disk drive audio system can store songs from CDs being played. The system has a 9.3 gigabyte (GB) storage capacity and can record up to 200 hours (approximately 2,900 songs).

The following CDs can be recorded in the “MUSIC BOX” hard-disk drive audio system.

- CDs without MP3/WMA files
- Hybrid Compact Disc Digital Audio (Hybrid CD-DA) specification in Super Audio CDs
- Compact Disc Digital Audio (CD-DA) specification in CD-Extras
- First session of multisession disc

Extreme temperature conditions [below −4°F (−20°C) and above 158°F (70°C)] could affect the performance of the hard disk.

NOTE:

If the hard disk needs to be replaced due to a malfunction, all stored music data will be erased.

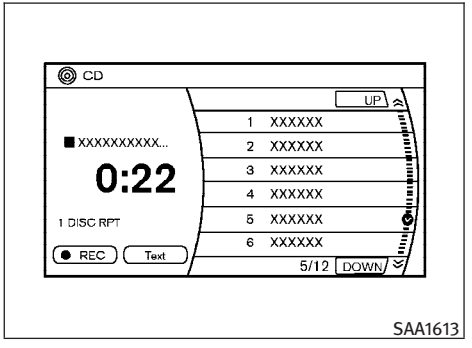

SAA1613

Recording CDs

1. Operate the audio system to play a CD. For the details of playing CDs, see “Compact Disc (CD) player/changer operation” earlier in this section.
2. Select the “**REC** ” key using the INFINITI controller and push the **ENTER** button.

NOTE:

- **The system starts playing and recording the 1st track on the CD when the "REC" key is selected.**
- **Individual tracks from a CD cannot be recorded to the Music Box hard-disk drive.**
- **The skip, fast forward and rewind features are disabled while the CD is recording.**
- **The recording process can be stopped at any time. All tracks that were played before the CD was stopped are stored.**
- **Individual tracks can be deleted from the hard-disk drive after the CD is recorded.**

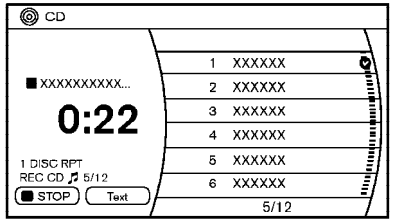

SAA1614

If the title information of the track being recorded is stored either in the hard-disk drive or in the CD, the title is automatically displayed on the screen. For title acquisition from the hard-disk drive, music recognition technology and related data are provided by Gracenote®.

To view the details of the track, select the **Text** key by touching the screen or using the INFINITI controller. The track name and album title are displayed on the screen.

If a track is not recorded successfully due to skipping sounds, the ⊘ mark is displayed behind the track number.

The "Music Box" audio system cannot perform recording under the following conditions.

- There is not enough space in the hard disk
- The number of albums reaches the maximum of 500.
- The number of tracks reaches the maximum of 3,000.

Automatic recording :

If the "Automatic Recording" function is turned to ON, recording starts when a CD is inserted. (See "Music Box settings" later in this section.)

Stopping recording :

To stop the recording, select the **STOP** button by touching the screen or using the INFINITI controller.

If the CD is ejected, the audio system is turned off or the ignition switch is pushed to the LOCK position, the recording also stops.

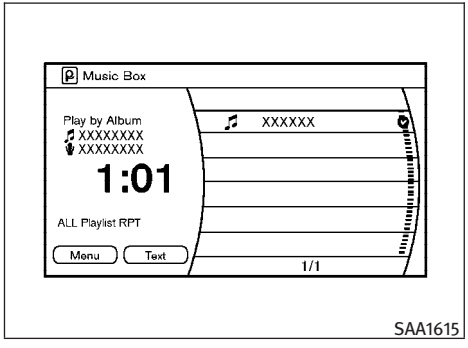

Playing recorded songs

Select the “Music Box” audio system by using one of the following methods.

- Push the source select switch on the steering wheel repeatedly until the center display changes to the Music Box mode. (See “STEERING-WHEEL-MOUNTED CONTROLS FOR AUDIO” later in this section.)
- Push the **AUX·DISC** button repeatedly until the center display changes to the Music Box mode.
- Give voice commands. (See “INFINITI VOICE RECOGNITION SYSTEM (models with navigation system)” later in this section.)

Stopping playback :

The system stops playing when:

a. another mode (radio, CD, CompactFlash or AUX) is selected.

b. the audio system is turned off.

c. the ignition switch is pushed to the LOCK position.

TRACK ▶▶| |◀◀ SEEK CAT **FF (Fast Forward), REW (Rewind)/APS (Automatic Program Search) FF, APS REW :**

When the ▶▶| (fast forward) or |◀◀ (rewind) button is pushed for more than 1.5 seconds while a track is being played, the track will play while fast forwarding or rewinding. When the button is released, the track will return to the normal play speed.

When the ▶▶| or |◀◀ button is pushed for less than 1.5 seconds while a track is being played, the next track or the beginning of the current track will be played.

The INFINITI controller can also be used to select tracks when a track is being played.

Play mode selection :

To change to another album or artist, turn the MP3/WMA folder selector.

SCAN RPT **REPEAT (RPT) :**

When the **SCAN·RPT** button is pushed while a track is being played, the play pattern can be changed as follows:

→ All Playlist RPT → 1 Playlist RPT → 1 TRK (Track) RPT → 1 Playlist MIX (RDM) → All Playlist MIX (RDM) →

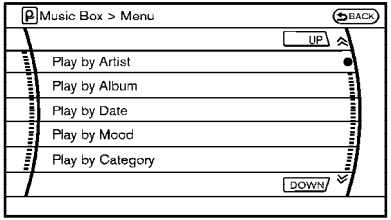

SAA1684

There are some options available during playback. Select one of the following that are displayed on the screen, if necessary.

Menu :

Refer to the following information for each item.

- **Play by Artist**

  Plays songs by an artist whose music is currently being played. The artists are sorted in alphabetical order.

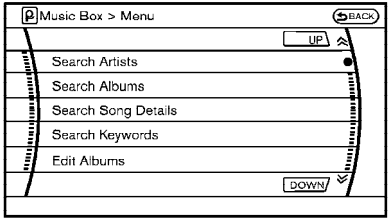

SAA1685

- **Play by Album**

  Plays tracks in each album. The albums are sorted in alphabetical order.

- **Play by Date**

  Plays tracks in each album. The albums are sorted in order of the date when they were stored in the system.

- **Play by Mood**

  Plays music from one of the following moods: Relaxing Music, Lively Music, Slow Music and Upbeat Music.

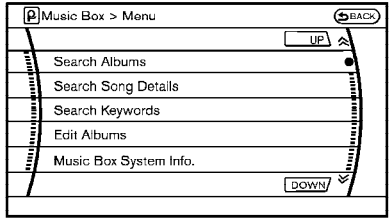

SAA1686

- **Play by Category**

  Plays music from one of the following categories: My Favorites, Hit Songs, Kids' Songs and Rarely Played.

- **Search Artists**

  Displays a list of artists in alphabetical order. Selecting an artist displays all of the tracks by the artist and starts playing the first track.

- **Search Albums**

  Displays a list of albums in order of the date when they were stored in the system. Selecting an album displays all of the tracks on the album and starts playing the first track.

Select the “Sort” key to re-sort albums in one of the following order: Rec. (Recorded) Date, Name, Release Year, Artist.

- **Search Song Details**

  Set the conditions and select the “**Start Song Search** ” key to search for a desired song that is stored in the system. The conditions are as follows:

  Music Tempo (All, Slow, Normal and Fast)

  Decade (All, ’70s, ’80s, ’90s, ’00s and ’10s and After)

  Group (All, Male Artist, Female Artist, Group and Duo)

  Category (Rock, Pop, Latin, Jazz, R&B, Hip Hop, Club/Dance, Punk, Reggae, Folk, Blues, Country, Metal, Easy Listening, New Age, Soundtrack, Gospel & Religious, World, Classical, Children’s and Other)

- **Search Keywords**

  Input a search keyword using the keypad displayed on the screen. (See “HOW TO USE TOUCH SCREEN (models with navigation system)” earlier in this section.)

- **Edit Albums**

  Select a category (Rec. (Recorded) Date, Name, Released Year and Artist) and edit the details using the keypad displayed on the screen. (See “HOW TO USE TOUCH SCREEN (models with navigation system)” earlier in this section.)

- **Music Box System Info.**

  Displays the following information about the “Music Box” audio system:

  a. Music Box Used / Free Space (Information about “Saved Album”, “Saved Track” and “Remaining Time” is displayed.)

  b. Mood Categories (Number of saved tracks and their categories (Relaxing Music, Lively Music, Slow Music, Upbeat Music and Others) are displayed.)

  c. Deleted Items (Information about the deleted tracks is displayed.)

  d. Search Missing Titles

  If titles are not displayed for CDs that have been recorded, titles can be acquired using one of the following methods:

  — Retrieve from HDD
  Searches the title using the database in the hard disk.

  — Retrieve from CF
  Searches the title from the information acquired on the Internet. Visit www.InfinitiUSA.com/music-update for details.

  — Transfer Missing Titles to CF
  Transfers the information of the album recorded without titles to a CompactFlash card. Visit www.InfinitiUSA.com/music-update for details.

  e. Music Box Settings (See “Music Box settings” later in this section.)

  f. CDDB Version (the version of the built-in Gracenote Database is displayed.)

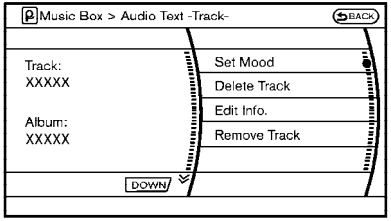

SAA1688

Text :

Refer to the following information for each item.

- **Set Mood**

  Set the mood category of the track to “Relaxing Music”, “Lively Music”, “Slow Music” or “Upbeat Music”.

- **Delete Track**

  Delete the track being played.

- **Edit Info.**

  Edit the name of the track being played and its artist using the keypad displayed on the screen. (See “HOW TO USE TOUCH SCREEN (models with navigation system)” earlier in this section.)

  The category of the track can also be set to Rock, Pop, Latin, Jazz, R&B, Hip Hop, Club/Dance, Punk, Reggae, Folk, Blues, Country, Metal, Easy Listening, New Age, Soundtrack, Gospel & Religious, World, Classical, Children’s and Others.

- **Remove Track**

  Reset the mood setting of a track.

Restoring deleted data

Deleted music data can be restored by performing the following.

1. Select the “**Menu** ” key and then the “**Music Box System Info.** ” key on the screen.
2. Select the “**Deleted Items** ” key and then the “**Album/Track** ” key.
3. Select the “**Restore Album/Track** ” key to restore the deleted music data.

You can also listen to the beginning of each track that has been deleted by performing the following.

1. Select the “**Menu** ” key and then the “**Music Box System Info.** ” key on the screen.
2. Select the “**Deleted Items** ” key and then the “**Play Sample** ” key.

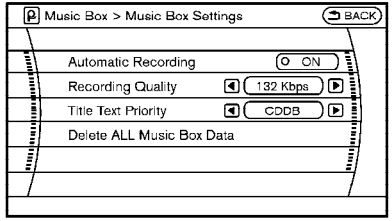

SAA1616

Music Box settings

To set up the “Music box” hard-disk drive audio system to your preferred settings, select the “**Menu** ” key during playback, “**Music Box System Info.** ” key, and “**Music Box Settings** ” key with the INFINITI controller, and then push the **ENTER** button.

Automatic Recording :

When this item is turned to ON, the “Music Box” hard-disk audio system automatically starts recording when a CD is inserted.

Recording Quality :

Set the recording quality of 105 kbps or 132 kbps. The default is set to 132 kbps.

Title Text Priority :

Set the priority to CDDB (Compact Disc Data Base) to acquire track information from the Gracenote Database or set to CD TEXT to acquire the information from CDs.

Delete ALL Music Box Data :

Delete all music data stored on the hard disk.

Gracenote

NOTE:

- The information contained in the Gracenote Database is not fully guaranteed.
- The service of the Gracenote Database on the Internet may be stopped without prior notice for maintenance.

gracenote

End-User License Agreement

USE OF THIS PRODUCT IMPLIES ACCEPTANCE OF THE TERMS BELOW.

Gracenote® MusicID® Terms of Use

This device contains software from Gracenote, Inc. of Emeryville, California (“Gracenote”). The software from Gracenote (the “Gracenote Software”) enables this application to do online disc identification and obtain music-related information, including name, artist, track, and title information (“Gracenote Data”) from online servers (“Gracenote Servers”) and to perform other functions. You may use Gracenote Data only by means of the intended End-User functions of this device.

You agree that you will use Gracenote Data, the Gracenote Software, and Gracenote Servers for your own personal non-commercial use only. You agree not to assign, copy, transfer or transmit the Gracenote Software or any Gracenote Data to any third party. YOU AGREE NOT TO USE OR EXPLOIT GRACENOTE DATA, THE GRACENOTE SOFTWARE, OR GRACENOTE SERVERS, EXCEPT AS EXPRESSLY PERMITTED HEREIN.

You agree that your non-exclusive license to use the Gracenote Data, the Gracenote Software, and Gracenote Servers will terminate if you violate these restrictions. If your license terminates, you agree to cease any and all use of the Gracenote Data, the Gracenote Software, and Gracenote Servers. Gracenote reserves all rights in Gracenote Data, the Gracenote Software, and the Gracenote Servers, including all ownership rights. Under no circumstances will Gracenote become liable for any payment to you for any information that you provide. You agree that Gracenote, Inc. may enforce its rights under this Agreement against you directly in its own name.

The Gracenote MusicID Service uses a unique identifier to track queries for statistical purposes. The purpose of a randomly assigned numeric identifier is to allow the Gracenote MusicID service to count queries without knowing anything about who you are. For more information, see the web page for the Gracenote Privacy Policy for the Gracenote MusicID Service.

The Gracenote Software and each item of Gracenote Data are licensed to you “AS IS.” Gracenote makes no representations or warranties, express or implied, regarding the accuracy of any Gracenote Data from in the Gracenote Servers. Gracenote reserves the right to delete data from the Gracenote Servers or to change data categories for any cause that Gracenote deems sufficient. No warranty is made that the Gracenote Software or Gracenote Servers are error-free or that functioning of Gracenote Software or Gracenote Servers will be uninterrupted. Gracenote is not obligated to provide you with new enhanced or additional data types or categories that Gracenote may provide in the future and is free to discontinue its online services at any time.

GRACENOTE DISCLAIMS ALL WARRANTIES EXPRESS OR IMPLIED, INCLUDING, BUT NOT LIMITED TO, IMPLIED WARRANTIES OF MERCHANTABILITY, FITNESS FOR A PARTICULAR PURPOSE, TITLE, AND NON-INFRINGEMENT. GRACENOTE DOES NOT WARRANT THE RESULTS THAT WILL BE OBTAINED BY YOUR USE OF THE GRACENOTE SOFTWARE OR ANY GRACENOTE SERVER. IN NO CASE WILL GRACENOTE BE LIABLE FOR ANY CONSEQUENTIAL OR INCIDENTAL DAMAGES OR FOR ANY LOST PROFITS OR LOST REVENUES.

Copyright :

Music recognition technology and related data are provided by Gracenote®. Gracenote is the industry standard in music recognition technology and related content delivery. For more information visit www.gracenote.com.

CD and music-related data from Gracenote, Inc., copyright © 2000-2007 Gracenote. Gracenote Software, copyright © 2000-2007 Gracenote. This product and service may practice one or more of the following U.S. Patents: #5,987,525; #6,061,680; #6,154,773, #6,161,132, #6,230,192, #6,230,207, #6,240,459, #6,330,593, and other patents issued or pending. Some services supplied under license from Open Globe, Inc. for U.S. Patent: #6,304,523. Gracenote and CDDB are registered trademarks of Gracenote. The Gracenote logo and logotype, and the “Powered by Gracenote” logo are trademarks of Gracenote.

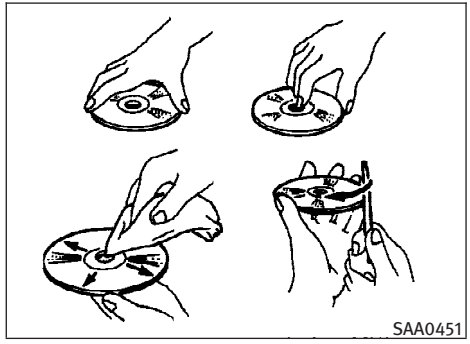

CD/CF (CompactFlash) CARE AND CLEANING

CD

- Handle a CD by its edges. Never touch the surface of the disc. Do not bend the disc.
- Always place the discs in the storage case when they are not being used.
- To clean a disc, wipe the surface from the center to the outer edge using a clean, soft cloth. Do not wipe the disc using a circular motion.

  Do not use a conventional record cleaner or alcohol intended for industrial use.

- A new disc may be rough on the inner and outer edges. Remove the rough edges by rubbing the inner and outer edges with the side of a pen or pencil as illustrated.

CF cards

- Never touch the terminal portion of the CompactFlash cards. Do not bend the cards.
- Always place the cards in the storage case when they are not being used.
- Do not place heavy objects on the cards.
- Do not store the cards in highly humid locations.
- Do not expose the cards to direct sunlight.
- Do not spill any liquids on the cards.

Refer to the CompactFlash card Owner's Manual for the details.

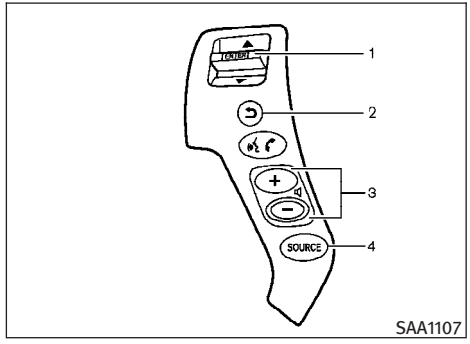

With navigation system

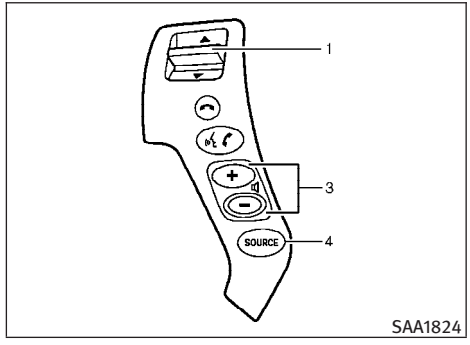

Without navigation system

1. ENTER (models with navigation system) or tuning (models without navigation system) switch
2. BACK switch
3. Volume control switch
4. Source select switch

STEERING-WHEEL-MOUNTED CONTROLS FOR AUDIO

ENTER (models with navigation system) or tuning (models without navigation system) switch

Push the switch upward or downward to select a station, track, CD or folder when they are listed on the display.

Tune/Track :

RADIO

- Pushing DOWN " ▼ "/UP " ▲ " shorter
  Next or previous preset station
- Pushing DOWN " ▼ "/UP " ▲ " longer
  Next or previous station

CD

- Pushing DOWN " ▼ "/UP " ▲ " shorter

  Next track or the beginning of the current track

- Pushing DOWN " ▼ "/UP " ▲ " longer (CD changer - if so equipped)

  Disc change (When only one disc is loaded, the 1st track of the disc will be selected.)

CD/CF (if so equipped) with MP3/WMA

- Pushing DOWN " ▼ "/UP " ▲ " shorter

  Next track or the beginning of the current track

- Pushing DOWN " ▼ "/UP " ▲ " longer

  Folder change (When the last folder on a disc is playing, the next disc will be selected.)

DVD (if so equipped)

- Pushing DOWN " ▼ "/UP " ▲ " shorter

  Next track/chapter or the beginning of the current track/chapter

- Pushing DOWN " ▼ "/UP " ▲ " longer

  Next group/title or the beginning of the current group/title

iPod® (if so equipped)

- Pushing DOWN " ▼ "/UP " ▲ " shorter

  Previous or next track (Start/Pause or Menu can be selected when the ENTER button is pushed.)

- Pushing DOWN " ▼ "/UP " ▲ " longer

  Rewind or fast forward search

"Music Box" hard-disk drive audio system (if so equipped)

- Pushing DOWN " ▼ "/UP " ▲ " shorter

  Next track or the beginning of the current track

- Pushing DOWN " ▼ "/UP " ▲ " longer

  Playlist change (When the last playlist is playing, the next playlist will be selected.)

ENTER switch operation :

You can also use the ENTER switch to select the items on the usual setting menu screen.

After selecting an MP3 folder using the up and down switch, push the ENTER switch to complete the selection.

While the display is in the NAVI, STATUS or Audio setting screen, some audio functions can also be controlled using the ENTER switch. The function varies depending on if you push the switch shorter (less than 1.5 seconds) or longer (more than 1.5 seconds).

BACK switch

Push this switch to go back to the previous screen or cancel the selection if it is not completed.

Volume control switches

Push the upper (+) or lower (−) side switch to increase or decrease the volume.

SOURCE select switch

Push the source select switch to change the mode, Preset A, Preset B, Preset C, "Music Box" (if so equipped), CD, CompactFlash (if so equipped), DVD (if so equipped), AUX and iPod® (if equipped).

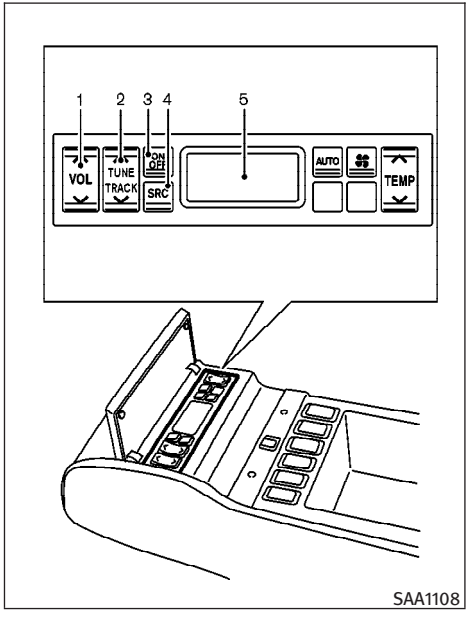

1. Volume control switch
2. Tune/Track switch
3. ON/OFF switch
4. Source (SRC) select switch
5. Display

REAR CONTROL SWITCHES FOR AUDIO (if so equipped)

The audio system can also be operated using the rear controls.

Volume control switch

Push the " ∧ " (front) side or " ∨ " (rear) side of the switch to adjust the volume.

" ∧ " Front side: Volume increases

" ∨ " Rear side: Volume decreases

Tune/Track switch

The function varies depending on if you push the switch shorter (less than 1.5 seconds) or longer (more than 1.5 seconds).

RADIO :

- Pushing DOWN (rear) " ∨ "/UP (front) " ∧ " shorter

  Next or previous preset station

- Pushing DOWN (rear) " ∨ "/UP (front) " ∧ " longer

  Next or previous station

CD :

- Pushing DOWN (rear) " ∨ "/UP (front) " ∧ " shorter

  Next track or the beginning of the current track

- Pushing DOWN (rear) " ∨ "/UP (front) " ∧ " longer

  Disc change (When only one disc is loaded, the 1st track of the disc will be selected.)

CD/CF (if so equipped) with MP3/WMA :

- Pushing DOWN (rear) " ∨ "/UP (front) " ∧ " shorter

  Next track or the beginning of the current track

- Pushing DOWN (rear) " ∨ "/UP (front) " ∧ " longer

  Folder change (When the last folder on a disc is playing, the next disc will be selected.)

DVD (if so equipped) :

- Pushing DOWN (rear) " ∨ "/UP (front) " ∧ " shorter

  Next track/chapter or the beginning of the current track/chapter

- Pushing DOWN (rear) “ ∨ ”/UP (front) “ ∧ ” longer

  Next group/title or the beginning of the current group/title

iPod® (if so equipped) :

- Pushing DOWN (rear) “ ∨ ”/UP (front) “ ∧ ” shorter

  Previous or next track (Start/Pause or Menu can be selected when the ENTER button is pushed.)

- Pushing DOWN (rear) “ ∨ ”/UP (front) “ ∧ ” longer

  Rewind or fast forward search

“Music Box” hard-disk drive audio system (if so equipped) :

- Pushing DOWN (rear) “ ∨ ”/UP (front) “ ∧ ” shorter

  Next track or the beginning of the current track

- Pushing DOWN (rear) “ ∨ ”/UP (front) “ ∧ ” longer

  Playlist change (When the last playlist is playing, the next playlist will be selected.)

“ON/OFF” switch

With the ignition switch pushed to the ACC or ON position, push the **“ON/OFF ”** switch to turn the audio system ON or OFF.

Source select switch

Push the **“SRC ”** select switch to change the audio mode.

ANTENNA

Window antenna

The antenna pattern is printed inside the rear window.

⚠ CAUTION

- **Do not place metalized film near the rear window glass or attach any metal parts to it. This may cause poor reception or noise.**
- **When cleaning the inside of the rear window, be careful not to scratch or damage the rear window antenna. Lightly wipe along the antenna with a dampened soft cloth.**

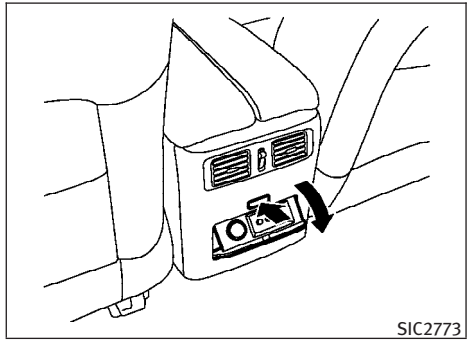

AUXILIARY INPUT JACKS

The auxiliary input jacks are located in the center console. NTSC compatible devices such as video games, camcorders and portable video players can be connected to the auxiliary jacks.

The auxiliary jacks are color coded for identification purposes.

- Yellow - video input
- White - left channel audio input
- Red - right channel audio input

Before connecting a device to a jack, turn off the power of the portable device and the audio system.

INFINITI MOBILE ENTERTAINMENT SYSTEM (MES) (if so equipped)

This vehicle is equipped with the mobile entertainment system, which enables you to play a Digital Versatile Disc (DVD), providing the images and sounds both in the front and rear display screens.

⚠ WARNING

- **The driver must not attempt to operate or view the Mobile Entertainment System (MES) while the vehicle is in motion so that full attention may be given to vehicle operation.**
- **Do not attempt to modify the system to display a movie on the front screen while the vehicle is being driven. Doing so may distract the driver and may cause a collision and serious personal injury or death.**

⚠ CAUTION

- **The glass screen on the liquid crystal display may break if hit with a hard or sharp object. If the glass breaks, do not touch the liquid crystalline material, which contains a small amount of mercury. In case of contact with skin, wash immediately with soap and water.**
- **Use a damp, soft cloth when cleaning the Mobile Entertainment System components. Do not use solvents or cleaning solutions.**
- Do not attempt to use the system in extreme temperature conditions [below −4°F (−20°C) or above 158°F (70°C)].
- To avoid discharging the vehicle battery, do not operate the system more than 15 minutes without starting the engine.

Movies will not be shown on the front display while the vehicle is in any drive position to reduce driver distraction. Audio is available when a movie is played. To view movies in the front display, stop the vehicle in a safe location, move the selector lever to the P (Park) position and apply the parking brake.

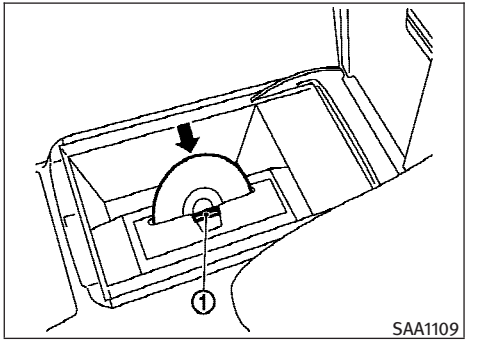

DIGITAL VERSATILE DISC (DVD) SYSTEM COMPONENTS

DVD drive

The DVD drive is located inside of the center console. Insert a DVD into the slot with the label side facing the front passenger's seat side. The DVD will be guided automatically into the slot.

When ejecting the DVD, push the EJECT button ⏏ ①.

⚠ CAUTION

- **Do not force a DVD into the slot. This could cause damage the player.**
- **Do not use 8 cm (3.1 in) discs.**

Displays

⚠ WARNING

Park the vehicle in a safe location and apply the parking brake to view the images on the front center display screen using the DVD drive or other devices connected to the auxiliary input jacks.

⚠ CAUTION

- **The glass screen on the liquid crystal display may break if hit with a hard or sharp object. If the glass breaks, do not touch the liquid crystalline material, which contains a small amount of mercury. In case of contact with skin, wash immediately with soap and water.**
- **Use soft, damp cloth when cleaning the Mobile Entertainment System components. Do not use solvents or cleaning solutions.**
- **Be sure to stow the rear display when it is not used.**

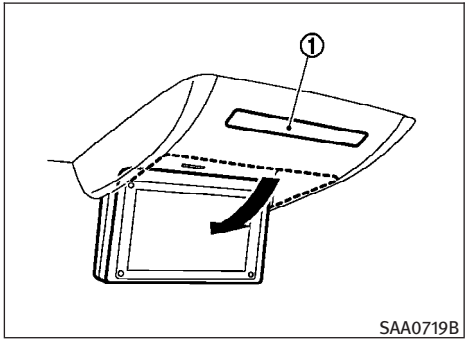

Flip-down screen (rear)

Use the remote controller to operate the motorized flip-down rear display screen.

1. Push the REAR DISPLAY OPEN/CLOSE button on the remote controller to open or close the display.
2. Adjust the display angle by pushing the DISPLAY TILT button ⌃ or ⌄ .

The screen can also be opened using the INFINITI controller. (See “HOW TO USE SETTING BUTTON” earlier in this section.)

Do not block the range of the wireless remote controller receiver and wireless headphones transmitter ①.

⚠ CAUTION

Do not touch the display when it is opening or closing.

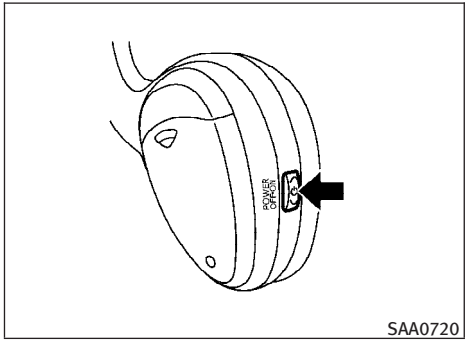

SAA0720

Headphones

Headphones are a wireless type and no cables are necessary. You can use them in almost all the ranges in the rear seat for listening to the sound from DVD or AUX. (It is not possible to use the headphones in the front seat.)

Power ON/OFF :

Push the POWER button to turn the headphones on or off.

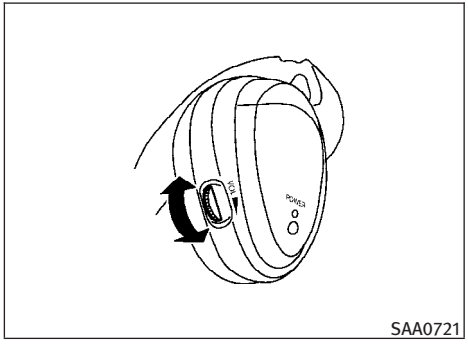

SAA0721

Volume control :

Turn the volume control knob to adjust the volume.

The headphones will automatically be turned off in about 5 minutes if there is no sound during that period. To prevent the battery from being discharged, keep the power turned off when not in use.

If the sound from the headphones is not clear it may be because:

- of an infrared communication device or cellular phone, turn down the headphone volume or stop using the headphones, or
- the headphones maybe out of the range of the transmitter installed in the rear flip-down display screen. This is not a malfunction, or
- the sound may be interrupted temporarily when there is an obstacle between the headphones and the transmitter. Remove the obstacle, such as opaque materials, hands, hair, etc.

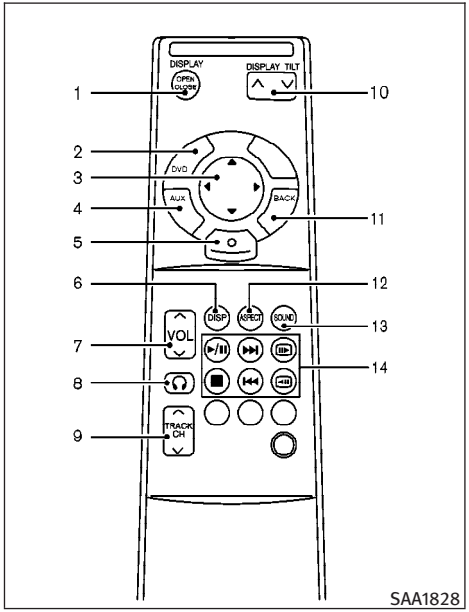

Remote controller

The remote controller has the following controls:

1. REAR DISPLAY OPEN/CLOSE button
2. DVD button
3. Joystick
4. AUX button
5. ENTER button
6. DISP button
7. VOLUME CONTROL button
   (∧ or ∨)
8. Headphones button
9. TRACK/CHANNEL button
   (∧ or ∨)
10. DISPLAY TILT button
    (∧ or ∨)
11. BACK button
12. ASPECT button
13. SOUND button
14. Keypad

See “PLAYING A DVD” later in this section for the function of each buttons.

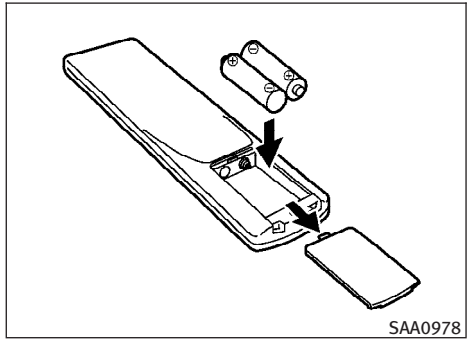

Remote controller

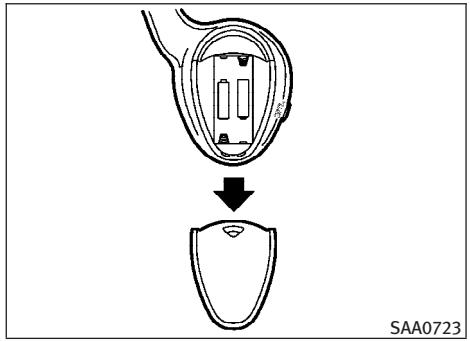

Headphones

Remote controller and headphones battery replacement

Replace the battery as follows:

1. Open the lid.
2. Replace both batteries with new ones.
   - Size AA (remote control)
   - Size AAA (headphones)
   - **Make sure that the ⊕ and ⊖ ends on the batteries match the markings inside the compartment.**
3. Close the lid securely.

   If the battery is removed for any reason other than replacement, close the lid securely.

- If you will not be using the remote control for long periods of time, remove the batteries.
- Replacement of the batteries is needed when the remote control only functions at extremely close distances to the MES or not at all.
- Be careful not to touch the battery terminal.
- An improperly disposed battery can harm the environment. Always confirm local regulations for battery disposal.
- When changing batteries, do not let dust or oil get on the remote control and headphones.

FCC Notice :

Changes or modifications not expressly approved by the party responsible for compliance could void the user's authority to operate the equipment.

This device complies with Part 15 of the FCC Rules and RSS-210 of Industry Canada. Operation is subject to the following two conditions: (1) This device may not cause harmful interference, and (2) this device must accept any interference received, including interference that may cause undesired operation of the device.

BEFORE OPERATING THE DVD MOBILE ENTERTAINMENT SYSTEM

Precautions

Start the engine when using the DVD entertainment system.

⚠ WARNING

The driver must not attempt to operate the DVD system or wear the headphones while the vehicle is in motion so that full attention may be given to vehicle operation.

⚠ CAUTION

- **Only operate the DVD while the vehicle engine is running. Operating the DVD for extended periods of time with the engine OFF can discharge the vehicle battery.**
- **Do not allow the system to get wet. Excessive moisture such as spilled liquids may cause the system to malfunction.**
- **While playing VIDEO-CD media, this DVD player does not guarantee complete functionality of all VIDEO-CD formats.**

Copyright and trademark

- The technology protected by the U.S. patent and other intellectual property rights owned by Macrovision Corporation and other right holders is adopted for this system.
- This copyright protected technology cannot be used without a permit from Macrovision Corporation. It is limited to be personal use, etc., as long as the permit from Macrovision Corporation is not issued.
- Modifying or disassembling is prohibited.
- Dolby digital is manufactured under license from Dolby Laboratories, Inc.

- Dolby and the double D mark "DOLBY DIGITAL" are trademarks of Dolby Laboratories, Inc.
- DTS and DTS Digital Surround "DTS" are registered trademarks of Digital Theater Systems, Inc.

Parental level (parental control)

DVDs with the parental control setting can be played with this system. Please use your own judgement to set the parental control with the system.

Disc selection

You can play the following disc formats with the DVD drive:

- DVD-VIDEO
- DVD-AUDIO
- VIDEO-CD
- CD-DA (Conventional Compact Disc) (CD with MP3/WMA cannot be played.)

Use DVDs with a region code "1", "ALL" or "1 included" for your DVD entertainment system. (The region code is displayed as a small symbol printed on the top of the DVD.) This vehicle-installed DVD player cannot play DVDs with a region code other than "1" or "ALL".

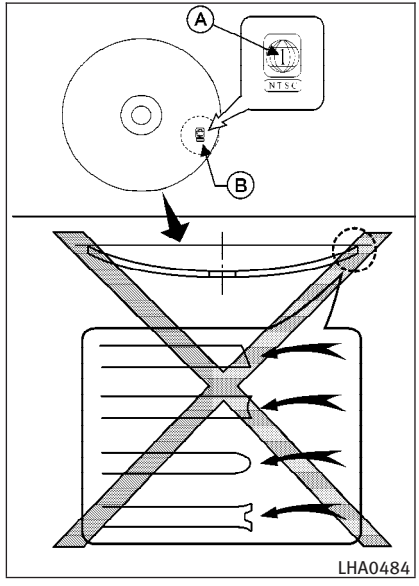

Do not use the following DVD's as they may cause the DVD player to malfunction:

- **3.1 in (8 cm) discs**
- **DVD's with a region code other than "1". The region code Ⓐ is displayed in a small symbol printed on the top of the DVD Ⓑ**
- **DVD's that are not round**
- **DVD's with a paper label**
- **DVD's that are warped, scratched, or have unequal edges**
- **Recordable digital video discs (DVD-R, DVD+R)**
- **Rewritable digital video discs (DVD-RW, DVD+RW, DVD-RAM)**

Display settings

Front display :

To adjust the front display mode, push the **SETTING** button while the DVD is being played, select the "**Display** " key with the INFINITI controller, and then push the **ENTER** button.

To adjust the display ON/OFF, brightness, tint, color and contrast, select each key using the INFINITI controller and push the **ENTER** button.

Then you can adjust each item using the INFINITI controller.

Rear display :

To adjust the rear display mode, push the "DISP" (Display) button on the remote controller.

To adjust the display brightness, tint, color and contrast, select each key using the joystick on the remote controller and tilt the joystick to right or left.

Push the **BACK** button to apply the settings and return to the previous display.

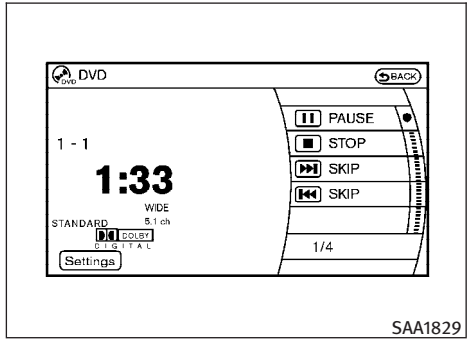

Operation screen — DVD AUDIO

PLAYING A DVD

DISC·AUX button

Park the vehicle in a safe location for the front seat occupants to operate the DVD drive while watching the images.

Push the **DISC·AUX** button on the instrument panel and turn the display to the DVD mode.

When a DVD is loaded, it will be replayed automatically.

The operation screen will be turned on when the **DISC·AUX** button located on the instrument panel is pushed while a DVD is being played, and it will turn off automatically after a period of time. To turn it on again, push the **DISC·AUX** button again.

DVD operation keys

To operate the DVD drive, select the desired key displayed on the operation screen using the INFINITI controller.

PAUSE :

Select the " ❚❚ " key and push the **ENTER** button to pause the DVD. To resume playing the DVD, use the "PLAY" key.

To pause the DVD, it is also possible to push the " ►/❚❚ " button on the keypad of the remote controller.

PLAY :

Select the " ► " key and push the **ENTER** button to start playing the DVD, for example, after pausing the DVD.

To start playing the DVD, it is also possible to push the " ►/❚❚ " button on the keypad of the remote controller.

STOP :

Select the " ■ " key and push the **ENTER** button to stop playing the DVD.

To stop playing the DVD, it is also possible to push the “ ■ ” button on the keypad of the remote controller.

SKIP (FORWARD) :

Select the “ ▶▶| ” key and push the **ENTER** button to skip the chapter(s) of the disc forward. The chapters will advance the number of times the **ENTER** button is pushed.

To skip the chapter(s) forward, it is also possible to push the “ ⏭ ” button on the keypad of the remote controller.

SKIP (REWIND) :

Select the “ |◀◀ ” key and push the **ENTER** button to skip the chapter(s) of the disc backward. The chapters will go back the number of times the **ENTER** button is pushed.

To skip the chapter(s) backward, it is also possible to push the “ ⏮ ” button on the keypad of the remote controller.

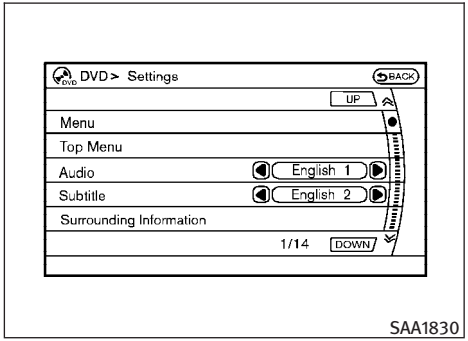

Setting (front) — DVD VIDEO-1

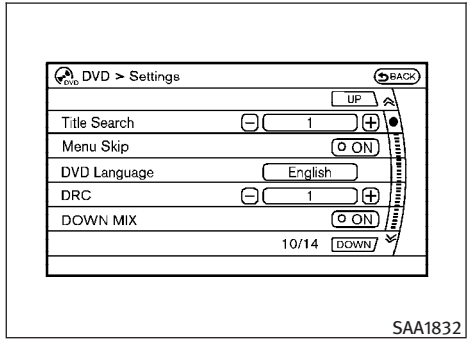

Setting (front) — DVD VIDEO-3

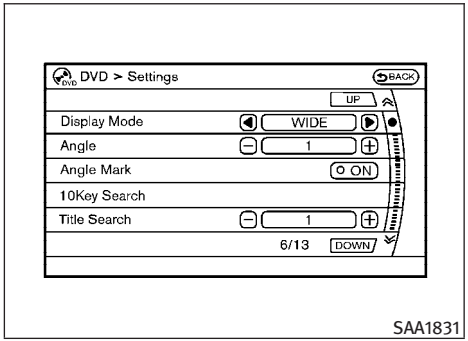

Setting (front) — DVD VIDEO-2

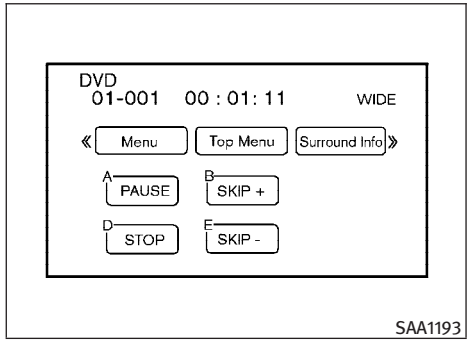

Setting (rear) — DVD VIDEO-1

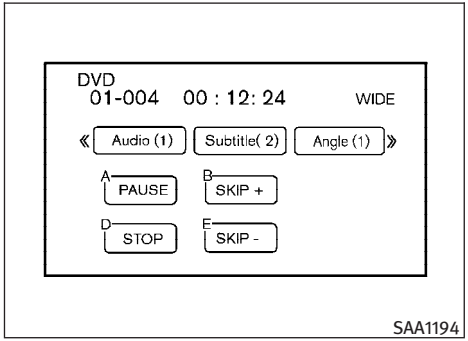

Setting (rear) — DVD VIDEO-2

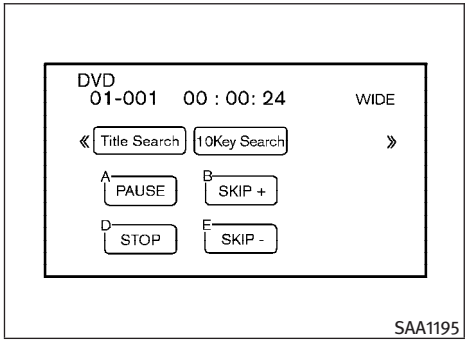

Setting (rear) — DVD VIDEO-3

DVD settings

Select the "**Settings** " key with the INFINITI controller and push the **ENTER** button to adjust the following settings.

The items indicated with "*" can also be set from the rear display. Push the "DVD" button on the remote controller while a DVD is being played. Select the preferred item using the joystick " " on the remote controller and push the **ENTER** " " button.

Menu* (DVD-VIDEO) :

Some menus specific to each disc will be shown. For details, see the instructions attached to the disc.

Top Menu* (DVD-VIDEO, DVD-AUDIO) :

Each title menu in the disc will be shown. For details, see the instructions attached to the disc.

Audio* (DVD-VIDEO, DVD-AUDIO, VIDEO-CD) / Subtitle* (DVD-VIDEO, DVD-AUDIO) :

Choose the preferred language using the INFINITI controller and push the **ENTER** button.

To turn off the subtitle, push and hold the **ENTER** button until a beep sounds.

Surround Information* (DVD-VIDEO, DVD-AUDIO, VIDEO-CD, CD-DA) (Models equipped with BOSE® Surround Sound System) :

Select the "**Surround Information** " key and push the **ENTER** button. The surround information screen will appear.

Push the **BACK** button to return to the previous screen.

Display Mode* (DVD-VIDEO, DVD-AUDIO, VIDEO-CD) :

Choose from the "Full", "Wide", "Normal" or "Cinema" mode using the INFINITI controller and push the **ENTER** button again.

Angle* (DVD-VIDEO, DVD-AUDIO) :

If the DVD contains different angles (such as moving images), the current image angle can be switched to another one.

Select the "**Angle** " key and push the **ENTER** button. When the "+" side or "—" side is selected, the angle will change.

Angle Mark (DVD-VIDEO, DVD-AUDIO) :

When this item is turned on, an angle mark will be shown on the bottom of the screen if the scene can be seen from a different angle.

10 Key Search* (DVD-VIDEO, DVD-AUDIO, VIDEO-CD, CD-DA) :

Select the "**10 Key Search** " key and push the **ENTER** button to open the number entry screen.

Input the number you want to search for and select the "**OK** " key with the INFINITI controller. Then push the **ENTER** button. The specified Title/Chapter or Group/Track will be played.

Title Search* (DVD-VIDEO) :

The scene with the specified title will be displayed the number of times the "+" side or "—" side is selected.

Group Search* (DVD-AUDIO) :

The scene with the specified group will be displayed the number of times the "+" or "—" side is selected.

Select No.* (VIDEO-CD) :

Select the "**Select No.** " key and push the **ENTER** button to open the number entry screen.

Input the number you wish to search for and select the "**OK** " key with the INFINITI controller, and then push the **ENTER** button. The specified scene will be played.

Menu Skip (DVD-VIDEO, DVD-AUDIO) :

DVD menus are automatically configured and the contents will be played directly when the "**Menu Skip** " key is turned on. Note that some discs may not be played directly even if this item is turned on.

DVD Language (DVD-VIDEO, DVD-AUDIO, VIDEO-CD) :

Select the "**DVD Language** " key and push the **ENTER** button to open the number entry screen.

Input the number corresponding to the preferred language and select the "**OK** " key with the INFINITI controller. Then push the **ENTER** button. The DVD top menu language will be changed to the one specified.

DRC (DVD-VIDEO, DVD-AUDIO) :

DRC (Dynamic Range Compression) allows you to tune the dynamic range of the sound recorded in the Dolby Digital format.

DOWN MIX (DVD-VIDEO, DVD-AUDIO) :

Convert a multi-channel recording to a traditional two-channel (stereo) recording.

Remote controller operation

Use the remote controller to adjust the following items.

Rear display open/close :

To open or close the flip-down rear display, push the "OPEN CLOSE " button.

Joystick :

Use the joystick " " to select the items displayed on the rear screen.

ENTER button :

Push the ENTER " " button to make the selected item complete on the rear screen.

BACK button :

Push to go back to the previous screen or cancel the selection.

Display tilt :

Adjust the display angle by pushing the DISPLAY TILT button " ∧ ∨ ".

DVD mode :

To select the DVD mode, push the DVD button.

AUX mode :

To select the AUX (auxiliary input jacks), mode, push the AUX button.

Volume :

To control the volume level, push the VOL button " ∧ ∨ ".

Display :

To adjust the rear display screen (brightness, tint, contrast, etc.), push the DISP button.

Aspect :

To change the display size, push the ASPECT button. Each time the button is pushed, the display size will change to "Cinema", "Wide", "Full" or "Normal".

Sound :

To change the language, push the SOUND button. Each time the button is pushed, the language will change to each language stored in the DVD.

Headphones :

The DVD sound can be heard through the headphones.

Push the headphones " 🎧 " button. Each time the button is pushed, the headphones mode will switch to ON or OFF.

To control the volume of sound from the headphones, use the volume control knob attached to the headphones.

Track/Channel :

To skip to the previous or next DVD scene selection, push the TRACK CH button " ∧ ∨ ".

Keypad :

: PLAY/PAUSE button

: STOP button

: FORWARD button

: REWIND button

: FORWARD button for still images (for DVD-AUDIO)

: REWIND button for still images (for DVD-AUDIO)

CARE AND MAINTENANCE

Use a lightly dampened, lint free cloth to clean the surfaces of your Mobile Entertainment System. (DVD player face, screen, remote controller, etc.)

- Do not attempt to operate the system in extreme temperature conditions [below −4°F (−20°C) and above 158°F (70°C)].
- Do not attempt to operate the system in extreme humidity conditions (less than 10% or more than 75%).

⚠ CAUTION

- **Do not use any solvents or cleaning solutions when cleaning the video system.**
- **Do not use excessive force on the monitor screen.**
- **Avoid touching or scratching the monitor screen as it may become dirty or damaged.**

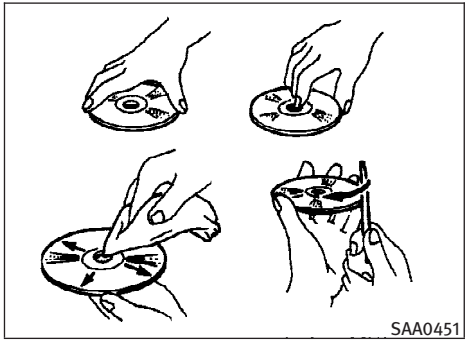

How to handle the DVD

⚠ CAUTION

- **Handle a DVD by its edges. Never touch the surface of the disc.**
- **To clean a disc, wipe the surface from the center to the outer edge using a clean, soft cloth. Do not wipe the disc using a circular motion.**
- **Do not use a conventional record cleaner, benzine, thinner or alcohol intended for industrial use.**
- **A new disc may be rough on its inner and outer edges. Remove the rough edges using the side of a pen or pencil as illustrated.**
- **Never attempt to use a DVD that has been cracked, deformed, or repaired using adhesive. Doing so may cause damage to the equipment.**

- Handle the DVD carefully to avoid contamination or flaws. Otherwise, signals may not be read properly.
- Do not write, draw or attach anything on any side of the DVD.
- Do not store the DVD in locations with direct sunlight or in high temperatures or humidity.
- Always place discs in the storage case when they are not being used.
- Do not put on any sticker or write anything on either surface of the DVD.

When installing a car phone or a CB radio in your INFINITI, be sure to observe the following cautions, otherwise the new equipment may adversely affect the electronic control modules and electronic control system harness.

⚠ WARNING

- **A cellular telephone should not be used while driving so full attention may be given to vehicle operation. Some jurisdictions prohibit the use of cellular telephones while driving.**
- **If you must make a call while your vehicle is in motion, the hands-free cellular phone operational mode (if so equipped) is highly recommended. Exercise extreme caution at all times so full attention may be given to vehicle operation.**
- **If a conversation in a moving vehicle requires you to take notes, pull off the road to a safe location and stop your vehicle before doing so.**

⚠ CAUTION

- **Keep the antenna as far away as possible from the electronic control modules.**

- **Keep the antenna wire more than 8 in (20 cm) away from the electronic control system harness. Do not route the antenna wire next to any harness.**
- **Adjust the antenna standing-wave ratio as recommended by the manufacturer.**
- **Connect the ground wire from the CB radio chassis to the body.**
- **For details, consult an INFINITI retailer.**

⚠ WARNING

- **Use a phone after stopping your vehicle in a safe location. If you have to use a phone while driving, exercise extreme caution at all times so full attention may be given to vehicle operation.**
- **If you find yourself unable to devote full attention to vehicle operation while talking on the phone, pull off the road to a safe location and stop your vehicle before doing so.**

⚠ CAUTION

To avoid draining the vehicle battery, use a phone after starting the engine.

Your INFINITI is equipped with Bluetooth® Hands-Free Phone System. If you are an owner of a compatible Bluetooth® enabled cellular phone, you can set up the wireless connection between your cellular phone and the in-vehicle phone module. With Bluetooth® wireless technology, you can make or receive a telephone call with your cellular phone in your pocket.

Once your cellular phone is paired to the in-vehicle phone module, no phone connecting procedure is required anymore. Your phone is automatically connected with the in-vehicle phone module when the ignition switch is pushed to the ON position with the registered cellular phone turned on and carried in the vehicle.

You can register up to 5 different Bluetooth® cellular phones in the in-vehicle phone module. However, you can talk on only one cellular phone at a time.

The INFINITI Voice Recognition system supports the phone commands, so dialing a phone number using your voice is possible. For more details, see “INFINITI VOICE RECOGNITION SYSTEM (models with navigation system)” later in this section; page 4-98.

Before using the Bluetooth® Hands-Free Phone System, refer to the following notes.

- Set up the wireless connection between a compatible cellular phone and the in-vehicle phone module before using the Bluetooth® Hands-Free Phone System.
- Some Bluetooth® enabled cellular phones may not be recognized by the in-vehicle phone module. Please visit www.InfinitiUSA.com/bluetooth for a recommended phone list.

- You will not be able to use a hands-free phone under the following conditions:
  - Your vehicle is outside of the telephone service area.
  - Your vehicle is in an area where it is difficult to receive radio waves; such as in a tunnel, in an underground parking garage, behind a tall building or in a mountainous area.
  - Your cellular phone is locked in order not to be dialed.
- When the radio wave condition is not ideal or ambient sound is too loud, it may be difficult to hear the other person's voice during a call.
- Immediately after the ignition switch is pushed to the ON position, it may be impossible to receive a call for a short period of time.
- Do not place the cellular phone in an area surrounded by metal or far away from the in-vehicle phone module to prevent tone quality degradation and wireless connection disruption.
- While a cellular phone is connected through the Bluetooth® wireless connection, the battery power of the cellular phone may discharge quicker than usual.
- If the Bluetooth® Hands-Free Phone System seems to be malfunctioning, please visit www.InfinitiUSA.com/bluetooth for troubleshooting help.
- Some cellular phones or other devices may cause interference or a buzzing noise to come from the audio system speakers. Storing the device in a different location may reduce or eliminate the noise.
- Refer to the cellular phone Owner's Manual regarding the telephone pairing procedure specific to your phone, battery charging, cellular phone antenna, etc.
- The antenna display on the monitor will not coincide with the antenna display of some cellular phones.
- Keep the interior of the vehicle as quiet as possible to hear the caller's voice clearly as well as to minimize its echoes.
- If reception between callers is unclear, adjusting the incoming or outgoing call volume may improve the clarity.

REGULATORY INFORMATION

FCC Regulatory information

- CAUTION: To maintain compliance with FCC's RF exposure guidelines, use only the supplied antenna. Unauthorized antenna, modification, or attachments could damage the transmitter and may violate FCC regulations.
- Operation is subject to the following two conditions:
  1. this device may not cause interference and
  2. this device must accept any interference, including interference that may cause undesired operation of the device

IC Regulatory information

- Operation is subject to the following two conditions: (1) this device may not cause interference, and (2) this device must accept any interference, including interference that may cause undesired operation of the device.
- This Class B digital apparatus meets all requirements of the Canadian Interference-Causing Equipment Regulations.

Bluetooth trademark:

BLUETOOTH® is a trademark owned by Bluetooth SIG, Inc., U.S.A.

VOICE COMMANDS

You can use voice commands to operate various Bluetooth® Hands-Free Phone System features using the INFINITI Voice Recognition system.

For more details, see “INFINITI VOICE RECOGNITION SYSTEM (models with navigation system)” later in this section; page 4-98.

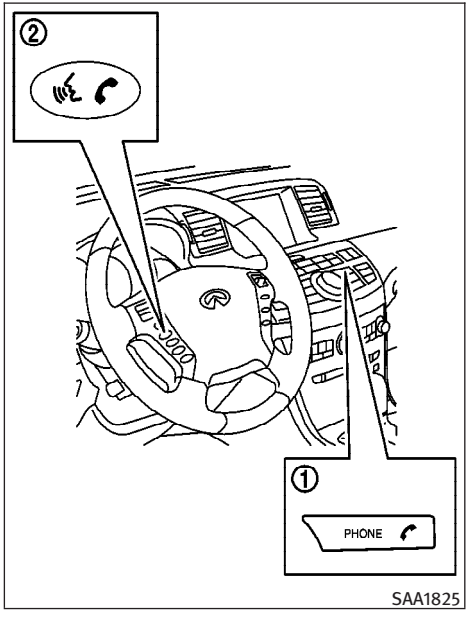

CONTROL BUTTONS

1) PHONE button
2) TALK/PHONE SEND button

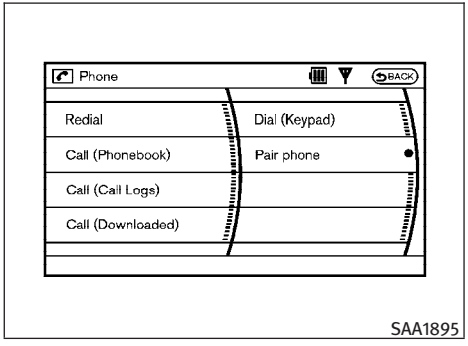

PAIRING PROCEDURE

1. Push the **PHONE** button or push and hold the button, and select the “Pair phone” key on the display using the INFINITI controller. Then push the **ENTER** button.

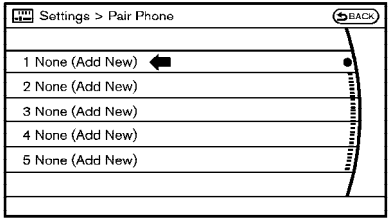

SAA1572

2. Select the “None (Add New)” key from the name list of the phones, and push the **ENTER** button.

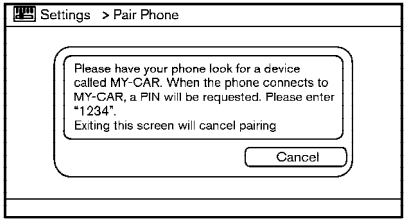

SAA1925

3. When a PIN code appears on the screen, operate the Bluetooth® cellular phone to enter the PIN code.

   The pairing procedure of the cellular phone varies according to each cellular phone. See the cellular phone Owner’s Manual for the details. You can also visit www.InfinitiUSA.com/bluetooth or call INFINITI Consumer Affairs Department for instructions on pairing INFINITI recommended cellular phones.

   When the pairing is completed, the screen will return to the Bluetooth® setup display.

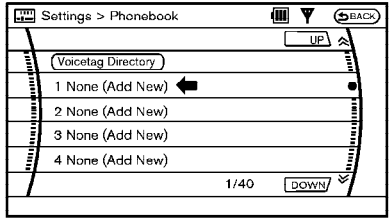

SAA1574

PHONEBOOK REGISTRATION

Up to 40 phone numbers can be stored in the phonebook.

1. Push the **SETTING** button, and select the “PHONE” key on the display using the INFINITI controller. Then push the **ENTER** button.
2. Select the “Phonebook” key, and push the **ENTER** button.
3. Select the “None (Add New)” key from the name list of the phonebook, and push the **ENTER** button.

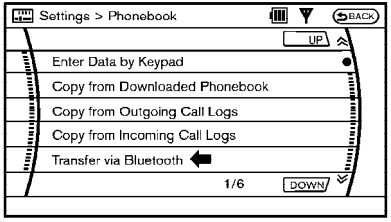

SAA1575

4. Select the “Transfer via Bluetooth” key, and push the **ENTER** button in order to register your cellular phone memory in the phonebook.
5. Operate the cellular phone to send a person’s name and phone number from the memory of the cellular phone. The memory sending procedure from the cellular phone varies according to each cellular phone manufacturer. See the cellular phone Owner’s Manual for more details.

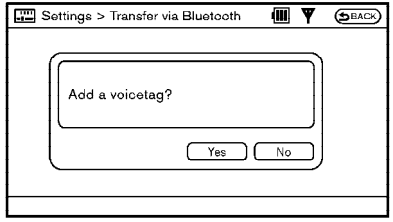

SAA1576

6. After the memory is registered in the phonebook, the system will ask if you want to add a voicetag for it. If you want to add a voicetag, select the “YES” key on the “Add a voicetag?” screen. For example, if the partner’s name is David, speak “David” after a tone. The “David” voicetag is stored in the phonebook. Voicetags allow easy dialing using the INFINITI Voice Recognition system. (See “INFINITI VOICE RECOGNITION SYSTEM (models with navigation system)” later in this section; page 4-98.)
7. When the phonebook registration is completed, the screen will return to the name list of the phonebook.

- To confirm the stored voicetags, select the “Voicetag Directory” key using the INFINITI controller, and push the **ENTER** button.
- There are different methods to input a phone number. Select one of the following options instead of “Transfer via Bluetooth” in step 4 above.

– **Enter Data by Keypad**

Input the name and phone number manually using the keypad displayed on the screen. (See “HOW TO USE TOUCH SCREEN (models with navigation system)” earlier in this section.)

– **Copy from Downloaded Phonebook**

Copy a phonebook from the Bluetooth® cellular phone. The availability of this function depends on each cellular phone. The copying procedure from the cellular phone also varies according to each cellular phone. See cellular phone Owner’s Manual for more details.

– **Copy from Outgoing Call Logs**

Store the name and phone number from the outgoing call list.

– **Copy from Incoming Call Logs**

Store the name and phone number from the incoming call list.

– **Delete**

Delete a contact that is registered in the phonebook.

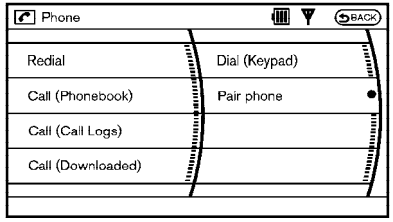

SAA1895

MAKING A CALL

To make a call, follow the procedures below.

1. Push the **PHONE** button on the instrument panel or push and hold the button on the steering wheel. The "PHONE" screen will appear on the display.
2. Select the "Call (Phonebook)" key on the "PHONE" menu, and push the **ENTER** button.
3. Select the registered person's name from the list, and push the **ENTER** button. Dialing will start and the screen will change to the call-in-progress screen.
4. After the call is over, perform one of the following to finish the call.
   a. Select the "Hang up" key and push the **ENTER** button.
   b. Push the button on the steering wheel.
   c. Push the **PHONE** button on the instrument panel.

There are different methods to make a call. Select one of the following options instead of "Call (Phonebook)" in step 2 above.

- **Redial**

  Dial the previously dialed number again.

- **Call (Call Logs)**

  Select the name or phone number from the incoming or outgoing call logs.

- **Call (Downloaded)**

  Select the name or phone number from the downloaded list.

- **Dial (Keypad)**

  Input the phone number manually using the keypad displayed on the screen. (See "HOW TO USE TOUCH SCREEN (models with navigation system)" earlier in this section.)

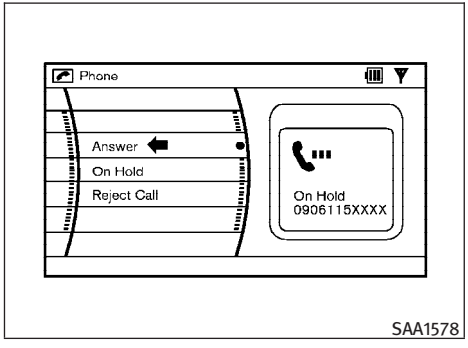

RECEIVING A CALL

When you hear a phone ring, the display will change to the incoming call mode. To receive a call, perform one of the following procedures listed below.

a) Select the “Answer” key on the display and push the **ENTER** button.

b) Push the **PHONE** button on the instrument panel.

c) Push the button on the steering wheel.

There are some options available when receiving a call. Select one of the following displayed on the screen.

- **Answer**

  Accept an incoming call to talk.

- **On Hold**

  Put an incoming call on hold.

- **Reject Call**

  Reject an incoming call.

  To finish the call, perform one of the following procedures listed below.

a) Select the “Hang up” key on the display and push the **ENTER** button.

b) Push the **PHONE** button on the instrument panel.

c) Push the button on the steering wheel.

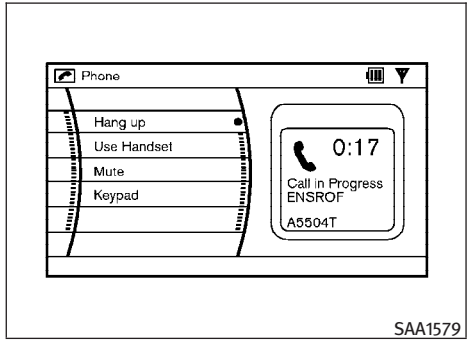

DURING A CALL

There are some options available during a call. Select one of the following displayed on the screen if necessary.

- **Hang up**

  Finish the call.

- **Use Handset**

  Transfer the call to the cellular phone.

- **Mute**

  Mute your voice to the person.

- **Keypad**

  Send a dial tone to the caller for using network services such as voice mail.

- **Cancel Mute**

  This will appear after “Mute” is selected. Mute will be canceled.

To adjust the person’s voice to be louder or quieter, push the volume control switch (+ or −) on the steering wheel or turn the volume control knob on the instrument panel while talking on the phone. This adjustment is also available in the SETTING mode.

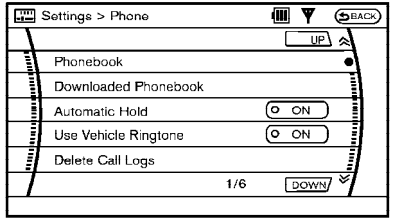

SAA1580

PHONE SETTING

To set up the Bluetooth® Hands-Free Phone System to your preferred settings, push the **SETTING** button on the instrument panel and select the “PHONE” key on the display, and then push the **ENTER** button.

Phonebook

See “PHONEBOOK REGISTRATION” earlier in this section for adding, editing and deleting a contact.

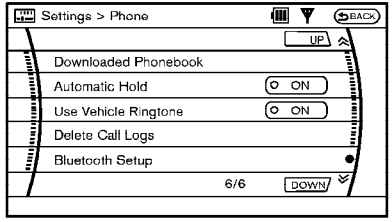

SAA1581

Downloaded Phonebook

Refer to the following information for each item.

- **Download All**

  Download all of the contacts registered in the Bluetooth® cellular phone. Availability of this function depends on each cellular phone. The memory downloading procedure from the cellular phone also varies according to each cellular phone. See cellular phone Owner’s Manual for more details.

- **Delete Downloaded Phonebook**

  Delete a downloaded phonebook.

- **Delete an Entry of Downloaded Phonebook**

  Delete an entry from the downloaded phonebook.

Automatic Hold

If this item is turned on, an incoming call will be placed on hold automatically after several rings.

Use Vehicle Ringtone

If this item is turned on, a specific ringtone that is different from the cellular phone's will sound when receiving a call.

Delete Call Logs

Delete all of the incoming or outgoing call logs from the list.

Bluetooth Setup

See the following information for each item.

- **Bluetooth**

  If this setting is turned off, the connection between the cellular phone and the in-vehicle phone module will be canceled.

- **Bluetooth Info**

  Check information about the device name, device PIN and connection status.

- **Pair Phone**

  See "PAIRING PROCEDURE" later in this section.

- **Priority Change**

  Use this command to change the priority level of the active phone.

  The priority level determines which phone will be connected to the system when more than one paired Bluetooth® phone is in the vehicle.

  The system states the priority level of the active phone and asks for a new priority level (1, 2, 3, 4, 5).

  If the new priority level is already being used for another phone, the two phones will swap priority levels.

  For example, if the current priority levels are:
  Priority Level 1 = Phone A
  Priority Level 2 = Phone B
  Priority Level 3 = Phone C
  and you change the priority level of Phone C to Level 1, then:
  Priority Level 1 = Phone C
  Priority Level 2 = Phone B
  Priority Level 3 = Phone A

- **Remove Paired Phone**

  Delete a registered cellular phone from the paired list.

- **Paired Phone List**

  Up to 5 registered cellular phones are shown on the list. If you select a cellular phone that is different from the one currently being connected, the newly selected phone will be connected to the system.

- **Edit Phone Name**

  Rename the registered cellular phones using the keypad displayed on the screen. (See "HOW TO USE TOUCH SCREEN (models with navigation system)" earlier in this section.)

TROUBLESHOOTING GUIDE

The system should respond correctly to all voice commands without difficulty. If problems are encountered, try the following solutions.

Where the solutions are listed by number, try each solution in turn, starting with number 1, until the problem is resolved.

Symptom	Solution
System fails to interpret the command correctly.	1. Ensure that the command is valid. (See “INFINITI VOICE RECOGNITION SYSTEM (models with navigation system)” later in this section; page 4-98.)
	2. Ensure that the command is spoken after the tone.
	3. Speak clearly without pausing between words and at a level appropriate to the ambient noise level in the vehicle.
	4. Ensure that the ambient noise level is not excessive (for example, windows open or defroster on). NOTE: If it is too noisy to use the phone, it is likely that the voice commands will not be recognized.
	5. If more than one command was said at a time, try saying the commands separately.
The system consistently selects the wrong voicetag.	1. Ensure that the voicetag requested matches what was originally stored. (See “PHONEBOOK REGISTRATION” earlier in this section.)
	2. Replace one of the names being confused with a new name.

BLUETOOTH® HANDS-FREE PHONE SYSTEM WITHOUT NAVIGATION SYSTEM

⚠ WARNING

- **Use a phone after stopping your vehicle in a safe location. If you have to use a phone while driving, exercise extreme caution at all times so full attention may be given to vehicle operation.**
- **If you find yourself unable to devote full attention to vehicle operation while talking on the phone, pull off the road to a safe location and stop your vehicle before doing so.**

⚠ CAUTION

To avoid draining the vehicle battery, use a phone after starting the engine.

Your INFINITI is equipped with Bluetooth® Hands-Free Phone System. If you are an owner of a compatible Bluetooth® enabled cellular phone, you can set up the wireless connection between your cellular phone and the in-vehicle phone module. With Bluetooth® wireless technology, you can make or receive a telephone call with your cellular phone in your pocket.

Once your cellular phone is paired to the in-vehicle phone module, no phone connecting procedure is required anymore. Your phone is automatically connected with the in-vehicle phone module when the ignition switch is pushed to the ON position with the registered cellular phone turned on and carried in the vehicle.

You can register up to 5 different Bluetooth® cellular phones in the in-vehicle phone module. However, you can talk on only one cellular phone at a time.

The INFINITI Voice Recognition system supports the phone commands, so dialing a phone number using your voice is possible.

Before using the Bluetooth® Hands-Free Phone System, refer to the following notes.

- Set up the wireless connection between a compatible cellular phone and the in-vehicle phone module before using the Bluetooth® Hands-Free Phone System.
- Some Bluetooth® enabled cellular phones may not be recognized by the in-vehicle phone module. Please visit www.InfinitiUSA.com/bluetooth for a recommended phone list.
- You will not be able to use a hands-free phone under the following conditions:
  - Your vehicle is outside of the telephone service area.
  - Your vehicle is in an area where it is difficult to receive radio waves; such as in a tunnel, in an underground parking garage, behind a tall building or in a mountainous area.
  - Your cellular phone is locked in order not to be dialed.
- When the radio wave condition is not ideal or ambient sound is too loud, it may be difficult to hear the other person's voice during a call.
- Immediately after the ignition switch is pushed to the ON position, it may be impossible to receive a call for a short period of time.
- Do not place the cellular phone in an area surrounded by metal or far away from the in-vehicle phone module to prevent tone quality degradation and wireless connection disruption.
- While a cellular phone is connected through the Bluetooth® wireless connection, the battery power of the cellular phone may discharge quicker than usual.
- If the Bluetooth® Hands-Free Phone System seems to be malfunctioning, please visit www.InfinitiUSA.com/bluetooth for troubleshooting help.

- Some cellular phones or other devices may cause interference or a buzzing noise to come from the audio system speakers. Storing the device in a different location may reduce or eliminate the noise.
- Refer to the cellular phone Owner's Manual regarding the telephone pairing procedure specific to your phone, battery charging, cellular phone antenna, etc.
- The antenna display on the monitor will not coincide with the antenna display of some cellular phones.
- Keep the interior of the vehicle as quiet as possible to hear the caller's voice clearly as well as to minimize its echoes.
- If reception between callers is unclear, adjusting the incoming or outgoing call volume may improve the clarity.

REGULATORY INFORMATION

FCC Regulatory information

– CAUTION: To maintain compliance with FCC's RF exposure guidelines, use only the supplied antenna. Unauthorized antenna, modification, or attachments could damage the transmitter and may violate FCC regulations.

– Operation is subject to the following two conditions:

1. this device may not cause interference and
2. this device must accept any interference, including interference that may cause undesired operation of the device

IC Regulatory information

– Operation is subject to the following two conditions: (1) this device may not cause interference, and (2) this device must accept any interference, including interference that may cause undesired operation of the device.

– This Class B digital apparatus meets all requirements of the Canadian Interference-Causing Equipment Regulations.

Bluetooth trademark:

Bluetooth®

BLUETOOTH® is a trademark owned by Bluetooth SIG, Inc., U.S.A.

INITIALIZATION

When the ignition switch is pushed to the ON position, INFINITI Voice Recognition is initialized, which takes a few seconds. If the button is pushed before the initialization completes, the system will announce "Hands-free phone system not ready" and will not react to voice commands.

OPERATING TIPS

To get the best performance out of the INFINITI Voice Recognition system, observe the following:

- Keep the interior of the vehicle as quiet as possible. Close the windows to eliminate surrounding noises (traffic noises, vibration sounds, etc.), which may prevent the system from recognizing voice commands correctly.
- Wait until the tone sounds before speaking a command. Otherwise, the command will not be received properly.
- Start speaking a command within 5 seconds after the tone sounds.
- Speak in a natural voice without pausing between words.

GIVING VOICE COMMANDS

To operate INFINITI Voice Recognition, push and release the button located on the steering wheel. After the tone sounds, speak a command.

The command given is picked up by the microphone, and voice feedback is given when the command is accepted.

- If you need to hear the available commands for the current menu again, say “Help” and the system will repeat them.
- If a command is not recognized, the system announces, “Command not recognized. Please try again.” Repeat the command in a clear voice.
- If you want to go back to the previous command, you can say “Go back” or “Correction” anytime the system is waiting for a response.
- You can cancel a command when the system is waiting for a response by saying, “Cancel” or “Quit.” The system announces “Cancel” and ends the Voice Recognition (VR) session. You can also push the button on the steering wheel at any time. Whenever the VR session is canceled, a double beep is played to indicate you have exited the system.
- If you want to adjust the volume of the voice feedback, push the volume control switches (+ or −) on the steering wheel while being provided with feedback. You can also use the radio volume control knob.

NOTE:

The voice command “Help” is available at any time. Please say “Help” to obtain the information about how to use the INFINITI Voice Recognition system.

How to say numbers

INFINITI Voice Recognition requires a certain way to speak numbers in voice commands. Refer to the rules and examples below.

- Either “zero” or “oh” can be used for “0”.

  Example: 1-800-662-6200

  —“One eight oh oh six six two six two oh oh”, or

  —“One eight zero zero six six two six two oh oh”

- Words can be used for the first 4 digits places only.

  Example: 1-800-662-6200

  —“One eight hundred six six two six two oh oh”,

  —NOT “One eight hundred six six two sixty two hundred, and

  —NOT “One eight oh oh six six two sixty two hundred.

- Numbers can be spoken in small groups. The system will prompt you to continuing entering digits, if desired.

  Example: 1-800-662-6200

  —“One eight zero zero”

  The system repeats the numbers and prompts you to enter more.

  —“six six two”

  The system repeats the numbers and prompts you to enter more.

  —“six two zero zero”

- You can say “Star” for * and “Pound” for # at in any position of the phone number. (They are available only when using the “Call International” command.)

  Example: 1-555-1212 *123

  —“One five five five one two one two star one two three”

NOTE:

For best results, say phone numbers as single digits.

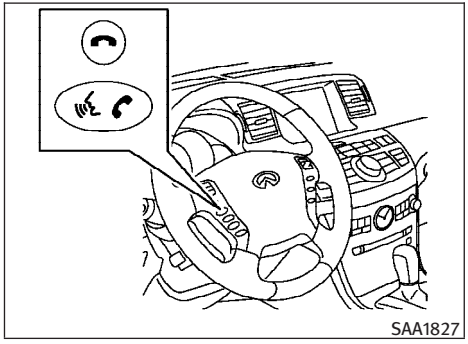

CONTROL BUTTONS

The control buttons for the Bluetooth® Hands-Free Phone System are located on the steering wheel.

TALK/PHONE SEND

Push the button to initiate a VR session or answer an incoming call.

You can also use the button to skip through system feedback and to enter commands during a call. (See "LIST OF VOICE COMMANDS" later in this section and "DURING A CALL" later in this section for more information.)

PHONE END

Push the button to cancel a VR session or end a call.

GETTING STARTED

The following procedures will help you get started using the Bluetooth® Hands-Free Phone System with INFINITI Voice Recognition. For additional command options, see "LIST OF VOICE COMMANDS" later in this section.

CHOOSING A LANGUAGE

You can interact with the Bluetooth® Hands-Free Phone System using English, French or Spanish.

See "HOW TO USE SETTING BUTTON" earlier in this section to change the language.

PAIRING PROCEDURE

Main menu
- "Setup" Ⓐ
  - "Pair Phone" Ⓑ
    - "New Phone" Ⓒ
      - Initiate from handset Ⓓ
      - Name phone Ⓔ
      - Assign priority Ⓕ
      - Choose ringtone Ⓖ

1. Push the button on the steering wheel. The system announces the available commands.
2. Say: "Setup" Ⓐ. The system acknowledges the command and announces the next set of available commands.
3. Say: "Pair phone" Ⓑ. The system acknowledges the command and announces the next set of available commands.
4. Say: "New phone" Ⓒ. The system acknowledges the command and asks you to initiate pairing from the phone handset Ⓓ.

   When you are asked to enter a Pass Key for pairing your Bluetooth® cellular phone, operate it to enter the code "1234".

   The code is always "1234" regardless of the number of phones paired.

   The pairing procedure of the cellular phone varies according to each cellular phone. See the cellular phone Owner's Manual for details. You can also visit www.InfinitiUSA.com/bluetooth for instructions on pairing INFINITI recommended cellular phones.

5. The system asks you to say a name for the phone Ⓔ.

   If the name is too long or too short, the system tells you, then prompts you for a name again.

   Also, if more than one phone is paired and the name sounds too much like a name already used, the system tells you, then prompts you for a name again.

6. The system asks you to assign a priority level Ⓕ. The priority level determines which phone is active when more than one paired Bluetooth® phone is in the vehicle. Follow the instructions provided by the system or see "SETUP" later in this section for more information on changing priorities.
7. The system will ask if you would like to select a custom ringtone Ⓖ. Follow the instructions provided by the system or see "SETUP" later in this section for more information on selecting ringtones.

MAKING A CALL BY ENTERING A PHONE NUMBER

Main menu
"Call" Ⓐ
Number (speak digits) Ⓑ
"Dial" Ⓒ

1. Push the button on steering wheel. A tone will sound.
2. Say: "Call" Ⓐ. The system acknowledges the command and announces the next set of available commands.
3. Say the number you wish to call, starting with the area code in the single digit format Ⓑ. For better recognition results, it is recommended to say the numbers in small groups like, the 3-digits area code, the next 3 digits, then the last 4 digits. For example, 555-121-3354 can be said as "five five five" (1st group), "one two one" (2nd group) and "three three five four" (3rd group). (See "How to say numbers" earlier in this section for more information.)

   Say: "Call International" to dial more than 10 digits or any special characters.

4. When you have finished speaking the phone number, the system repeats it back and announces the available commands.
5. Say: "Dial" Ⓒ. The system acknowledges the command and makes the call.

For additional command options, see "LIST OF VOICE COMMANDS" later in this section.

RECEIVING A CALL

When you hear the ringtone, press the button on the steering wheel.

Once the call has ended, press the button on the steering wheel.

NOTE:

If you do not wish to take the call when you hear the ringtone, press the button on the steering wheel to reject the call.

For additional command options, see "LIST OF VOICE COMMANDS" later in this section.

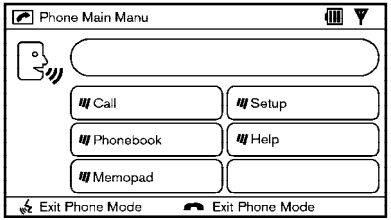

SAA1926

LIST OF VOICE COMMANDS

When you push and release the button on the steering wheel, you can choose from the commands on the Main Menu. The following pages describe these commands and the commands in each sub-menu.

Remember to wait for the tone before speaking.

You can say “Help” to hear the list of commands currently available anytime the system is waiting for a response.

If you want to end an action without completing it, you can say “Cancel” or “Quit” at any time while the system is waiting for a response. The system will end the VR session. Whenever the VR session is canceled, a double beep is played to indicate you have exited the system.

If you want to go back to the previous command, you can say “Go back” or “Correction” anytime the system is waiting for a response.

When you get used to the menus in the system, you can talk ahead by saying more than one command at a time. For example, say, “Call five five five one two one two” or “Memo pad record.”

Also, when you get used to the system responses, you can skip ahead to the tone by pressing the button on the steering wheel. However, if you press the button when the system is waiting for a response from you it will end the VR session.

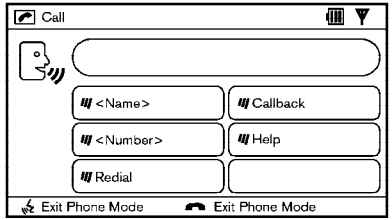

SAA1927

CALL

‹Name› (speak name)

If you have stored entries in the Phonebook, you can dial a number associated with a name and location.

See “PHONEBOOK” later in this section to learn how to store entries.

When prompted by the system, say the name of the phonebook entry you wish to call. The system acknowledges the name.

If there are multiple locations associated with the name, the system asks you to choose the location.

Once you have confirmed the name and location, the system begins the call.

‹Number› (speak digits)

When prompted by the system, say the number you wish to call. (See “How to say numbers” earlier in this section and “MAKING A CALL BY ENTERING A PHONE NUMBER” earlier in this section for more details.)

“Redial”

Use the Redial command to call the last number that was dialed within the vehicle.

NOTE:

The system will not redial the last number dialed by the handset keypad.

The system acknowledges the command, repeats the number and begins dialing.

If a redial number does not exist, the system announces, “There is no number to redial” and ends the VR session.

“Callback”

Use the Call Back command to dial the number of the last incoming call within the vehicle.

The system acknowledges the command, repeats the number and begins dialing. If a call back number does not exist, the system announces, “There is no number to call back” and ends the VR session.

International

For dialing more than 10 digits or any special characters, say “International”. When the system acknowledges the command, the system will prompt you to speak the number.

DURING A CALL

During a call there are several command options available. Press the button on the steering wheel to mute the receiving voice and enter commands.

- “Help” — The system announces the available commands.
- “Go back/Correction” — The system announces “Go back,” ends the VR session and returns to the call.
- “Cancel/Quit” — The system announces “Cancel,” ends the VR session and returns to the call.
- “Send/Enter/Call/Dial” — Use the Send command to enter numbers during a call. For example, if you were directed to dial an extension by an automated system:

  Say: “Send one two three four.”

  The system acknowledges the command and sends the tones associated with the numbers. The system then ends the VR session and returns to the call.
- “Transfer Call” — Use the Transfer Call command to transfer the call from the Bluetooth® Hands-Free Phone System to the cellular phone when privacy is desired.

  The system announces, “Transfer call. Call transferred to privacy mode.” The system then ends the VR session.

  You can also issue the Transfer Call command again to return to a hands-free call through the vehicle.
- “Mute” — Use the Mute command to mute your voice so the other party cannot hear it. Use the mute command again to unmute your voice.

NOTE:

If the other party ends the call or the cellular phone network connection is lost while the Mute feature is on, the Mute feature may need to be reset to “off.”

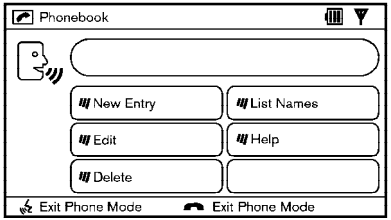

SAA1928

PHONEBOOK

The Phonebook stores up to 40 names for each phone paired with the system. Each name can have up to 4 locations/phone numbers associated with it.

NOTE:

Each phone has its own separate phonebook. You cannot access Phone A's phone book if you are currently connected with Phone B.

"New Entry"

Use the New Entry command to store a new name in the system.

When prompted by the system, say the name you would like to give the new entry.

For example, say: "Mary."

If the name is too long or too short, the system tells you, then prompts you for a name again.

Also, if the name sounds too much like a name already stored, the system tells you, then prompts you for a name again.

Once the system accepts the name and you confirm it is correct, the system asks for a location (Home, Office, Mobile or Other).

For example, say: "Home."

The system acknowledges the location.

The system will ask you to say a phone number or to transfer a phone number stored in the cellular phone's memory.

To enter a phone number by voice command:

For example, say: "five five five one two one two." (See "How to say numbers" earlier in this section for more information.)

To transfer a phone number stored in the cellular phone's memory (if so equipped):

Say "Transfer entry." The system acknowledges the command and asks you to initiate the transfer from the phone handset. The new contact phone number will be transferred from the cellular phone via the Bluetooth® communication link.

The transfer procedure varies according to each cellular phone. See the cellular phone Owner's Manual for details. You can also visit www.InfinitiUSA.com/bluetooth for instructions on transferring phone numbers from INFINITI recommended cellular phones.

The system repeats the number and prompts you for the next command. When you have finished entering numbers, choose "Store."

The system confirms the name, location and number. The system then asks if you would like to store another location for the same name. If you do not wish to store another location, the system ends the VR session.

"Edit"

Use the Edit command to alter an existing phonebook entry or to add a 2nd, 3rd or 4th phone number to an existing entry.

When prompted by the system, say the name of the entry you wish to edit.

The system acknowledges the name and asks you for the location you would like to edit.

Say the name of the location.

The system acknowledges the location.

The system will ask you to say a phone number or to transfer a phone number stored in the cellular phone's memory.

To enter a phone number by voice command:

For example, say: "five five five one two one two." (See "How to say numbers" earlier in this section for more information.)

To transfer a phone number stored in the cellular phone's memory (if so equipped):

Say "Transfer entry." The system acknowledges the command and asks you to initiate the transfer from the phone handset. The new contact phone number will be transferred from the cellular phone via the Bluetooth® communication link.

The transfer procedure varies according to each cellular phone. See the cellular phone Owner's Manual for details. You can also visit www.InfinitiUSA.com/bluetooth for instructions on transferring phone numbers from INFINITI recommended cellular phones.

The system repeats the number and prompts you for the next command. When you have finished entering numbers, choose "Store."

The system confirms the name, location and number, then announces that the entry has been stored. The system then ends the VR session.

"Delete"

Use the Delete command to erase one entry from the phonebook, all entries from the phonebook, the current redial number or the current call back number.

To delete entries from the phonebook, say a name or "All entries" when prompted by the system.

The system acknowledges the command and asks you to confirm the deletion.

To delete the current redial number or call back number, say "redial number" or "call back number" when prompted by the system.

If a redial number or a call back number exists, the system deletes them without asking for confirmation.

If there is no number for the entry you are trying to delete, the system says so and ends the VR session.

"List Names"

Use the List Names command to hear all the names and locations in the phonebook.

The system recites the phonebook entries but does not include the actual phone numbers. When the playback of the list is complete the system ends the VR session.

You can stop the playback of the list at any time by pressing the button on the steering wheel. The system ends the VR session.

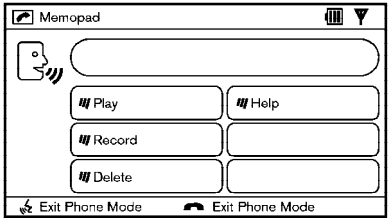

SAA1929

MEMO PAD

The Memo Pad records a maximum of 6 voice memos, each up to 20 seconds long.

“Play”

The system plays back all the memos in the order of newest to oldest. The system ends the VR session.

If there are no memos recorded, the system announces “No messages to play.” The system ends the VR session.

“Record”

The system announces “Recording” and a tone sounds signaling you to begin.

Speak the information you wish to record clearly. When you are done, press the or button on the steering wheel.

A tone sounds and the system announces “Memo recorded.” Another tone sounds to end the VR session.

If the memo pad is full, the system asks if you wish to record over the oldest memo.

“Delete”

The Delete command erases all memos. The system asks you to confirm this action before deleting all memos.

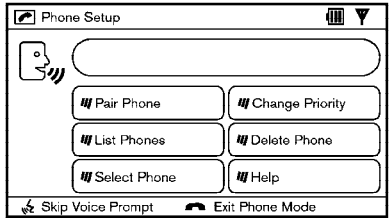

SAA1930

SETUP

Use the Setup command to change options associated with the Bluetooth® Hands-Free Phone System.

“Pair Phone”

Use the Pair Phone command to pair a phone to the Bluetooth® Hands-Free Phone System.

When you are asked to enter a PIN code for pairing your Bluetooth® cellular phone, operate it to enter the code “1234”.

The code is always “1234” regardless of the number of phones paired.

Up to 5 phones can be paired. If you try to pair a sixth phone, the system announces that you must first delete one phone or replace an existing phone.

If you try to pair a phone that has already been paired to your vehicle's system, the system announces the name the phone is already using. The pairing procedure will then be canceled.

When prompted by the system, choose from the following commands:

- "New phone" — see "PAIRING PROCEDURE" earlier in this section.
- "Replace phone" — The system announces the names of the phones already paired and asks which you would like to replace.

  Once you say the name of the phone you wish to replace, the paring procedure will begin. (See "PAIRING PROCEDURE" earlier in this section.)
- "List phone" — See the description below.

"List Phones"

Use the List Phone command to hear the names of the phones currently paired. If no phones are paired, the system announces, "No paired phones to list." The system then ends the VR session.

"Select Phone"

Use the Select Phone command to select a phone of lesser priority when two or more phones paired with Bluetooth® Hands-Free Phone System are in the vehicle at the same time.

The system asks you to name the phone and confirm the selection.

Once the selection is confirmed, the selected phone remains active until the ignition switch is pushed to the LOCK position or you select a new phone.

"Change Priority"

Use the Change Priority command to change the priority level of the active phone.

The priority level determines which phone is active when more than one paired Bluetooth® phone is in the vehicle.

The system states the priority level of the active phone and asks for a new priority level (1, 2, 3, 4, 5).

If the new priority level is already being used for another phone, the two phones will swap priority levels.

For example, if the current priority levels are:

Priority Level 1 = Phone A
Priority Level 2 = Phone B
Priority Level 3 = Phone C

and you change the priority level of Phone C to Level 1, then:

Priority Level 1 = Phone C
Priority Level 2 = Phone B
Priority Level 3 = Phone A

"Delete Phone"

Use the Delete Phone command to delete a specific phone or all phones from the Bluetooth® Hands-Free Phone System.

The system announces the names of the phones already paired with the system and their priority level. The system then gives you the option to delete a specific phone, all phones or listen to the list again.

Once you chose to delete a phone or all phones, the system asks you to confirm this action.

NOTE:

When you delete a phone, the associated phonebook for that phone will also be deleted.

SPEAKER ADAPTATION (SA) MODE

Speaker Adaptation allows up to two out-of dialect users to train the system to improve recognition accuracy. By repeating a number of commands, the users can create a voice model of their own voice that is stored in the system. The system is capable of storing a different speaker adaptation model for memory A and memory B.

If memory A is available, the system will use memory A to store the model. If memory A is in use and memory B is available, the system will use memory B to store the model. If both of the memory locations are in use, the system will ask the user to select which memory location should be overwritten.

Training procedure

The procedure for training a voice is as follows.

1. Position the vehicle in a reasonably quiet outdoor location.
2. Sit in the driver's seat with the engine running, the parking brake on, and the transmission in Park.
3. Press and hold the button for more than 5 seconds.
4. The system announces: "Press the PHONE SEND ( ) button for the hands-free phone system to enter the speaker adaptation mode."
5. Press the button.
6. Voice memory A or memory B is selected automatically. If both memory locations are already in use, the system will prompt you to overwrite one. Follow the instructions provided by the system.
7. When preparation is complete and you are ready to begin, the press the button.
8. The SA mode will be explained. Follow the instructions provided by the system.
9. When training is finished, the system will tell you an adequate number of phrases have been recorded.
10. The system will ask you to say your name. Follow the instructions to register your name.
11. The system will announce that speaker adaptation has been completed and the system is ready.

The SA mode will stop if:

- The button is pressed for more than 5 seconds in SA mode.
- The vehicle is driven during SA mode.
- The ignition switch is pushed to the LOCK position.

Training phrases

During the SA mode, the system instructs you to say the following phrases.

(The system will prompt you for each phrase.)

- phonebook new entry
- dial three oh four two nine
- delete call back number
- setup pair phone
- memo pad play
- eight pause nine three two pause seven
- delete all entries
- call seven two four zero nine
- phonebook delete entry
- memo pad record
- dial star two one seven oh
- Yes

- No
- select ringtone
- dial eight five six nine two
- Bluetooth on
- setup change priority
- call three one nine oh two
- nine seven pause pause three oh eight
- Cancel
- call back number
- call star two zero nine five
- delete phone
- dial eight three zero five one
- Home
- four three pause two nine pause zero
- delete redial number
- phonebook list names
- call eight oh five four one
- Correction
- setup change ringtone
- dial seven four oh one eight
- setup main menu
- Delete
- dial nine seven two six six
- memo pad delete
- call seven six three oh one
- go back
- call five six two eight zero
- dial six six four three seven

TROUBLESHOOTING GUIDE

The system should respond correctly to all voice commands without difficulty. If problems are encountered, try the following solutions.

Where the solutions are listed by number, try each solution in turn, starting with number 1, until the problem is resolved.

Symptom	Solution
System fails to interpret the command correctly.	1. Ensure that the command is valid. (See “LIST OF VOICE COMMANDS” earlier in this section.)
	2. Ensure that the command is spoken after the tone.
	3. Speak clearly without pausing between words and at a level appropriate to the ambient noise level in the vehicle.
	4. Ensure that the ambient noise level is not excessive (for example, windows open or defroster on). NOTE: If it is too noisy to use the phone, it is likely that the voice commands will not be recognized.
	5. If more than one command was said at a time, try saying the commands separately.
	6. If the system consistently fails to recognize commands, the voice training procedure should be carried out to improve the recognition response for the speaker. (See “SPEAKER ADAPTATION (SA) MODE” earlier in this section.)
The system consistently selects the wrong voicetag.	1. Ensure that the voicetag requested matches what was originally stored. This can be confirmed by using the “List Names” command. (See “PHONEBOOK” earlier in this section.)
	2. Replace one of the names being confused with a new name.

INFINITI VOICE RECOGNITION SYSTEM (models with navigation system)

INFINITI Voice Recognition allows hands-free operation of the systems equipped on this vehicle in one of two modes, Standard Mode or Alternate Command Mode.

In Standard Mode, commands that are available are always shown on the display and announced by the system. You can complete your desired operation by simply following the prompts given by the system. (See "INFINITI VOICE RECOGNITION STANDARD MODE" later in this section for details.) In this mode, hands-free operation of Audio, Climate Control and Display is not available through INFINITI Voice Recognition.

For advanced operation, you can use the Alternate Command Mode that enables the operation of the display, audio, and climate control through INFINITI Voice Recognition. (See "INFINITI VOICE RECOGNITION ALTERNATE COMMAND MODE" later in this section for details.) When this mode is active, an expanded list of commands can be spoken after pushing the TALK switch, and the voice command menu prompts are turned off. Note that in this mode the recognition success rate may be affected as the number of available commands and the ways of speaking each command are increased.

For U.S. customers, the Standard Mode is selected by default. For Canadian customers, the Alternate Command Mode is the default mode. To switch one mode to another, see each mode description later in this section.

To improve the recognition success rate when Alternate Command Mode is active, try using the Speaker Adaptation Function available in that mode. Otherwise, it is recommended that Alternate Command Mode be turned off and Standard Mode be used for the best recognition performance.

For the voice commands for the navigation system, refer to the Navigation System Owner's Manual of your vehicle.

INFINITI VOICE RECOGNITION STANDARD MODE

The following section is applicable when the Standard Mode is activated. (This mode is selected by default for U.S. customers.)

The Standard Mode enables you to complete the desired operation by simply following the prompts that appear on the display and also are announced by the system. Hands-free operation of Audio, Climate Control and Display systems is not available in this mode.

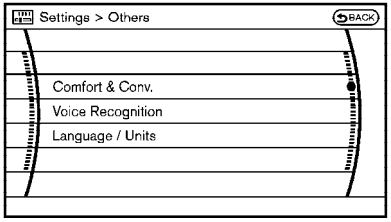

SAA1815

Activating Standard Mode

When the Alternate Command Mode is active, perform the following steps to switch to the Standard Mode.

1. Push the **SETTING** button on the instrument panel.
2. Highlight the “Others” key on the display and then push the **ENTER** button.
3. Highlight the “Voice Recognition” key and then push the **ENTER** button.

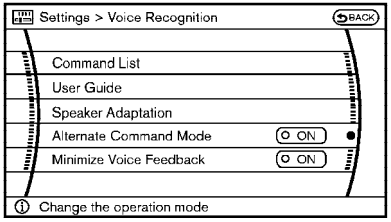

SAA1917

4. Highlight the “Alternate Command Mode” key and push the **ENTER** button.
5. The indicator turns off and the Standard Mode activates.

Displaying user guide

If you use the INFINITI Voice Recognition system for the first time or you do not know how to operate it, you can display the User Guide for confirmation.

You can confirm how to use voice commands by accessing a simplified User Guide, which contains basic instructions and tutorials for several voice commands.

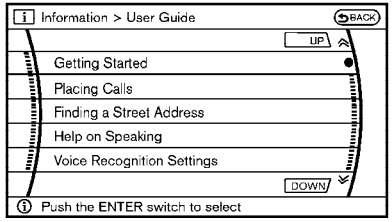

SAA2164

1. Push the **INFO** button on the instrument panel.
2. Highlight the “Others” key using the INFINITI controller and push the **ENTER** button.
3. Highlight the “Voice Recognition” key using the INFINITI controller and push the **ENTER** button.
4. Highlight the “User Guide” key using the INFINITI controller and push the **ENTER** button.
5. Highlight an item using the INFINITI controller and push the **ENTER** button.

You can skip steps 1 to 3 above if you say “Help”.

Available items :

- Getting Started

  Describes the basics of how to operate the INFINITI Voice Recognition system.

- Placing Calls

  Tutorial for making a phone call by voice command operation.

- Finding a Street Address

  Tutorial for entering a destination by street address.

- Help on Speaking

  Displays useful tips of speaking for correct command recognition by the system.

- Voice Recognition Settings

  Describes the available voice recognition settings.

Note that the Command List feature is only available when Alternate Command Mode is active.

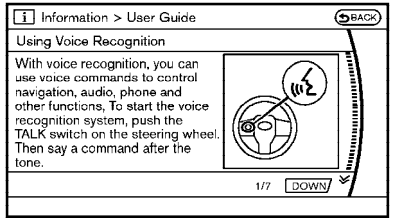

SAA1904

Getting Started

Before using the INFINITI Voice Recognition system for the first time, you can confirm how to use commands by viewing the Getting Started section of the User Guide.

1. Highlight “Getting Started” and push the **ENTER** button.
2. You can confirm the page by scrolling the screen using the INFINITI controller.

Tutorials on the operation of the INFINITI Voice Recognition system

If you choose “Finding a Street Address” or “Placing Calls”, you can view tutorials on how to perform these operations using INFINITI Voice Recognition.

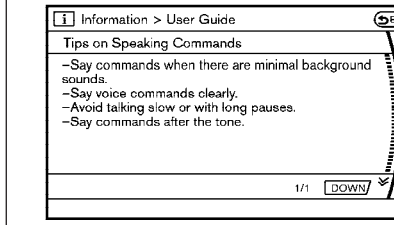

SAA2165

Useful tips for correct operation

You can display useful speaking tips to help the system recognize your voice commands correctly.

Highlight “Help on Speaking” and push the **ENTER** button.

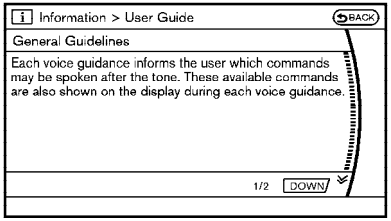

SAA2166

Voice recognition settings

The available settings of the INFINITI Voice Recognition system are described.

1. Highlight “Voice Recognition Settings” and push the **ENTER** button.
2. You can confirm the page by scrolling the screen using the INFINITI controller.

USING THE SYSTEM

Initialization

When the ignition switch is pushed to the ON position, INFINITI Voice Recognition is initialized, which takes a few seconds. When completed, the system is ready to accept voice commands. If the TALK switch is pushed before the initialization completes, the display will show the message: “Phonetic data downloaded. Please wait.” or a beep sounds.

Before starting

To get the best recognition performance from INFINITI Voice Recognition, observe the following:

- The interior of the vehicle should be as quiet as possible. Close the windows to eliminate the surrounding noises (traffic noise and vibration sounds, etc.), which may prevent the system from correctly recognizing the voice commands.
- Wait until the tone sounds before speaking a command.
- Speak in a natural conversational voice without pausing between words.
- If the air conditioner is set to “Auto”, the fan speed is automatically lowered so that your commands can be recognized more easily.

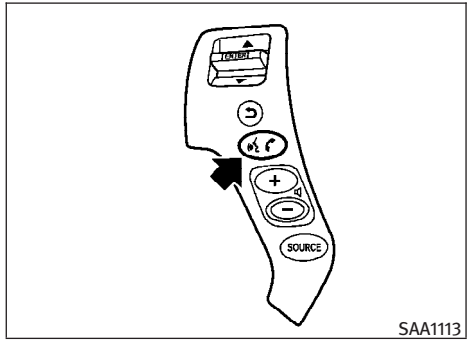

SAA1113

Giving voice commands

1. Push the TALK switch located on the steering wheel.

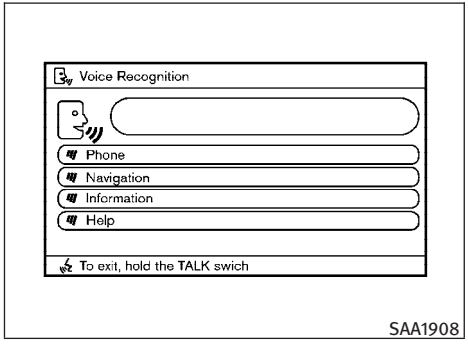

2. A list of commands appears on the screen, and the system announces, “Would you like to access Phone, Navigation, Information or Help?”.
3. After the tone sounds and the icon on the screen changes from to , speak a command.
4. Continue to follow the voice menu prompts and speak after the tone sounds until your desired operation is completed.

Operating tips :

- Say a command after the tone.
- Commands that are available are always shown on the display and spoken through voice menu prompts. Commands other than those that are displayed are not accepted. Please follow the prompts given by the system.
- If the command is not recognized, the system announces, “Please say again”. Repeat the command in a clear voice.
- Push the **BACK** button once to return to the previous screen.
- If you want to cancel the command, push and hold the TALK switch. The message, “Voice cancelled” will be announced.
- Push the TALK switch to pause the operation. Push the TALK switch again to restart the operation.
- If you want to adjust the volume of the system feedback, push the volume control buttons [+] or [−] on the steering switch or use the audio system volume knob while the system is making an announcement.

How to speak numbers :

INFINITI Voice Recognition requires a certain way to speak numbers when giving voice commands. Refer to the following examples.

General rule

Only single digits 0 (zero) to 9 can be used. (For example, if you would like to say 500, “five zero zero” can be used, but “five hundred” cannot.)

Examples

- 1-800-662-6200
  - “One eight zero zero six six two six two zero zero”

Improving Recognition of Phone numbers

You can improve the recognition of phone numbers by saying the phone number in three groups of numbers. For example, when you try to call 800-662-6200, say “eight zero zero” first, and the system will then ask you for the next three digits. Then, say “six six two”. After recognition, the system will then ask for the last four digits. Say, “six two zero zero”. Using this method of phone digit entry can improve recognition performance.

When speaking a house number, speak the number “0” as “zero”. If the letter “o (Oh)” is included in the house number, it will not be recognized as the number “0 (zero)” even if you speak “oh” instead of “zero”. **You can only say “zero” for “0 (zero)”. You can say either “zero” or “ oh” for “o (Oh)”.**

Command List

Category Command:

Command	Action
Phone	Operates Phone function
Navigation	Operates Navigation function
Information	Displays vehicle Information function
Help	Displays User Guide

- Phone Command:

Command	Action
Dial Number	Makes a call to a spoken phone number up to 10 digits.
Redial	Makes a call to the latest dialed number.
Phonebook	Makes a call to a contact that is stored in the Phonebook.
International Call	Makes an international call by allowing more than 10 digits to be spoken.
Change Number	Corrects the phone number when it is not recognized. (Available during phone number entry)

- Navigation Command:

  See the separate Navigation System Owner's Manual.

- Information Command:

Command	Action
Fuel Economy	Displays fuel economy information.
Trip Computer	Displays trip information.
Maintenance	Displays maintenance information.
Traffic Info.	Turns the traffic information system ON and OFF.

Voice command examples

To use the INFINITI Voice Recognition function, speaking one command is sometimes sufficient, but at other times it is necessary to speak two or more commands. As examples, some additional basic operations by voice commands are described here.

For navigation system commands, see the separate Navigation System Owner's Manual.

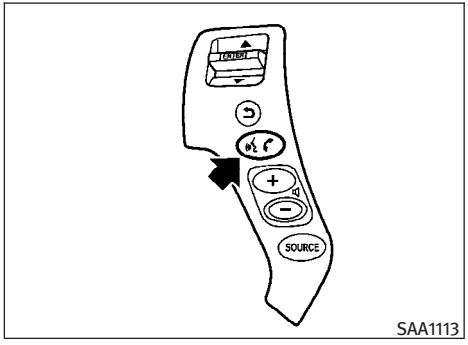

Example 1 - Placing a call to the phone number 800-662-6200:

1. Push the TALK switch located on the steering wheel.

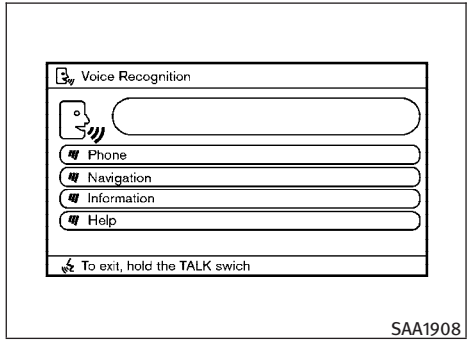

2. The system announces, "Would you like to access Phone, Navigation, Information or Help?"
3. Speak "Phone".

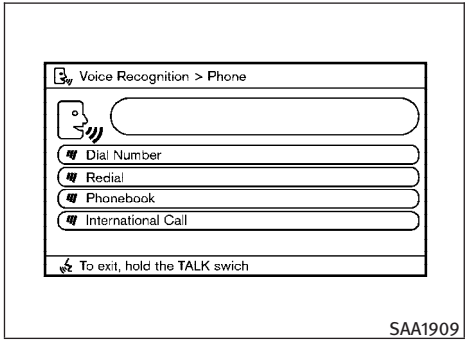

4. Speak “Dial Number”.

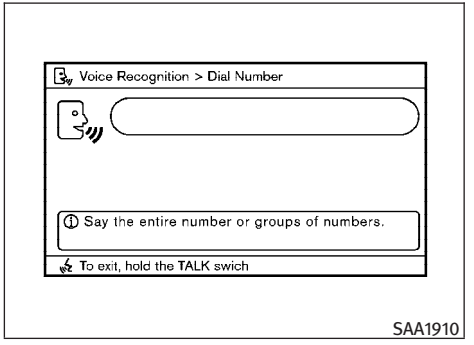

5. Speak “8 0 0”.

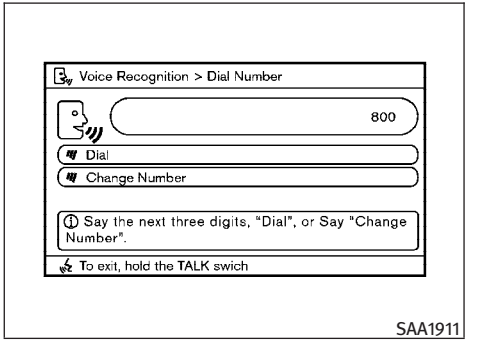

6. The system announces, “Please say the next three digits or dial, or say change number.”
7. Speak “6 6 2”.

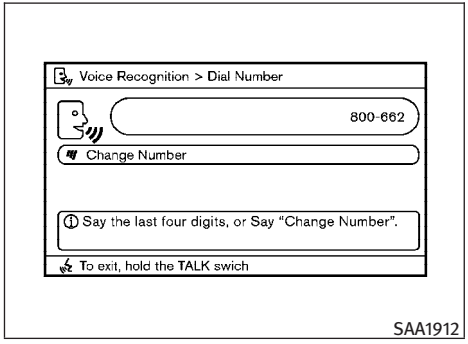

8. The system announces, “Please say the last four digits” or say change number.
9. Speak “6 2 0 0”.

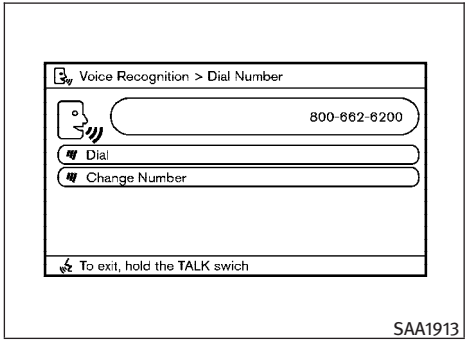

10. The system announces, “Dial or Change Number?”
11. Speak “Dial”.
12. The system makes a call to 800-662-6200.

Note :

- You can also speak “800-662-6200” (10 continuous digits) or “662-6200” (7 continuous digits), if the area code is not necessary. However, the 3-3-4 digit grouping is recommended for improved recognition. (See “How to speak numbers” earlier in this section.)
- You cannot only say a phone number in using the 3-3-4 grouping, 7 digits, and 10 digits using this command. Please use the “International Call” command for all other formats.
- If you say “Change Number” during phone number entry, the system will automatically request that you repeat the number using the 3-3-4 format. In this case please say the area code first and then follow the prompts.
- Do not add a “1” in front of the area code when speaking phone numbers.
- If the system does not recognize your command, please try repeating the command using a natural voice. Speaking too slow or too loudly may further decrease recognition performance.

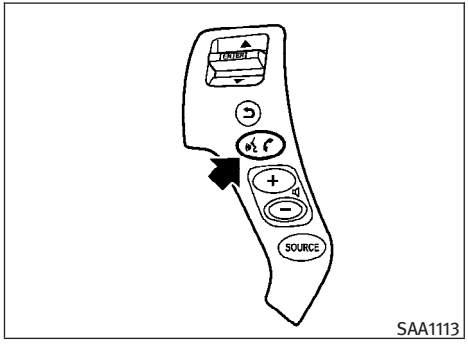

SAA1113

Example 2 - Placing an international call to the phone number 011-81-111-222-3333:

1. Push the TALK switch located on the steering wheel.

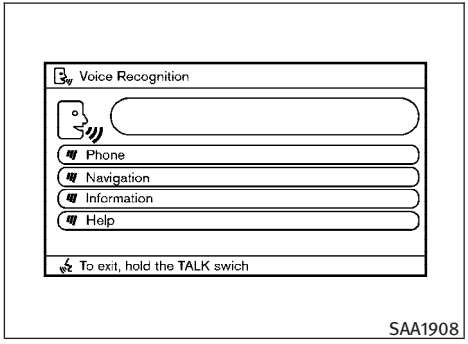

SAA1908

2. The system announces, “Would you like to access Phone, Navigation, Information or Help?”
3. Speak “Phone”.

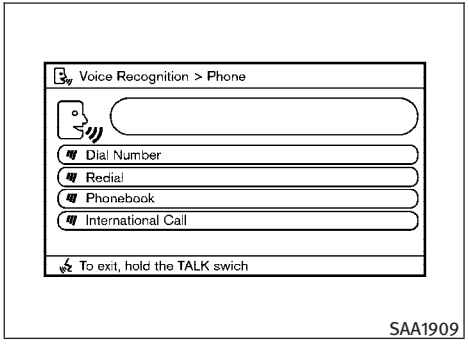

SAA1909

4. Speak “International Call”.

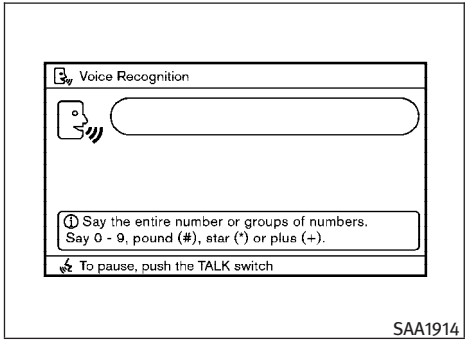

5. Speak “011811112223333”.

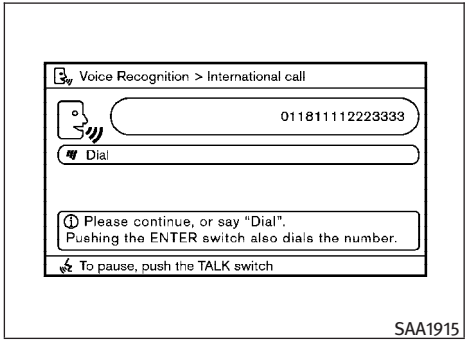

6. Speak “Dial”.
7. System makes a call to 011-81-111-222-3333.

Note :

Any digit input format is available in the International Number input process.

INFINITI VOICE RECOGNITION ALTERNATE COMMAND MODE

The following section is applicable when Alternate Command Mode is activated. (This mode is selected by default for Canadian customers.)

The Alternate Command Mode enables the operation of the display, audio, and climate control through Voice Recognition. When this mode is active, an expanded list of commands can be spoken after pushing the TALK switch, and the voice command menu prompts are turned off.

Please note that in this mode the recognition success rate may be affected as the number of available commands and ways of speaking each command are increased. To improve the recognition success rate, try using the Speaker Adaptation Function available in that mode. (See “Speaker adaptation function” later in this section.)

In the Alternate Command Mode, review the expanded command list for this mode, as some commands available in the Standard Mode are replaced. Please see the examples on the screen.

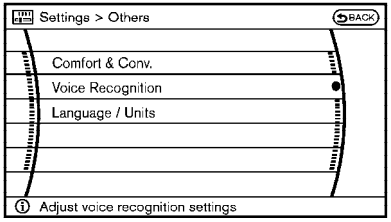

SAA1916

Activating Alternate Command Mode

When the Standard Mode is active, perform the following steps to switch to the Alternate Command Mode.

1. Push the **SETTING** button on the instrument panel.
2. Highlight the “Others” key on the display and then push the **ENTER** button.
3. Highlight the “Voice Recognition” key and then push the **ENTER** button.

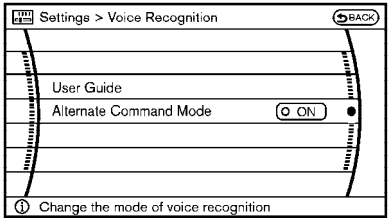

SAA2168

4. Highlight the “Alternate Command Mode” key and push the **ENTER** button.
5. The confirmation message is displayed on the screen. Push the “OK” key to activate the Alternate Command Mode.

Displaying command list

If you are controlling the system by voice commands for the first time or do not know the appropriate voice command, perform the following procedure for displaying the voice command list (available only in Alternate Command Mode).

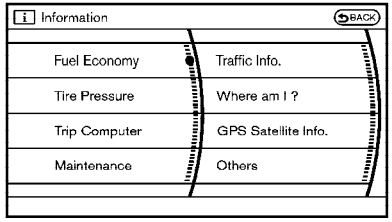

SAA1803

1. Push the **INFO** button on the instrument panel.
2. Highlight the “Others” key using the INFINITI controller and push the **ENTER** button.
3. Highlight the “Voice Recognition” key using the INFINITI controller and push the **ENTER** button.

   You can skip steps 1 to 3 above if you say “Help”.
4. Highlight the “Command List” key using the INFINITI controller and push the **ENTER** button.

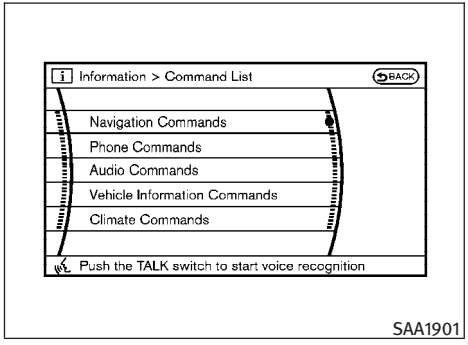

5. Highlight a category using the INFINITI controller and push the **ENTER** button.

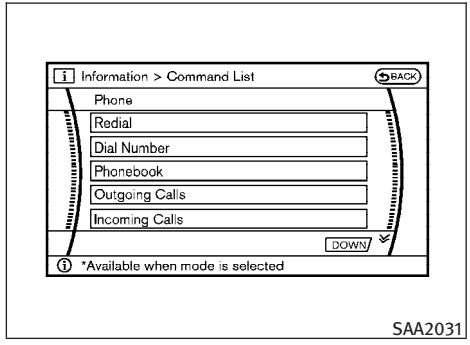

6. Highlight an item using the INFINITI controller and push the **ENTER** button.
7. If necessary, scroll the screen using the INFINITI controller to view the entire list.
8. Press the **BACK** button to return to the previous screen.

List of help commands

Navigation Commands :

See the separate Navigation System Owner's Manual.

Phone Commands:

COMMAND	ACTION
Redial	Redials the phone number last dialed.
Dial Number	Dials the phone number given in the command.
Phonebook	Shows the first page of the "Phonebook" list.
Outgoing Calls	Shows the outgoing call history (1 to 5).
Incoming Calls	Shows the incoming call history (1 to 5).

Audio Commands :

- Music Box

COMMAND	ACTION
Music Box	Turns on the "Music Box" hard-disk drive audio system.

- Radio

COMMAND	ACTION
Radio	Turns the radio on, selecting the station and band last played.
Radio AM	Turns to the AM band, selecting the station last played.
Radio FM	Turns to the FM band, selecting the station last played.

- Satellite

COMMAND	ACTION
Satellite Radio	Turns the SAT radio on, selecting the station and band last played.

- CD

COMMAND	ACTION
CD	Starts to play a CD.

- Audio

COMMAND	ACTION
Audio OFF	Turns the audio system off.

- iPod®

COMMAND	ACTION
iPod®	Turns the iPod® system on.

Vehicle Information Commands:

COMMAND	ACTION
Traffic Info.	Turns the traffic information system ON and OFF.
Fuel Economy	Displays the Fuel Economy screen.
Trip Computer	Displays the Trip Computer screen.
Maintenance	Displays the Maintenance screen.
Tire Pressure	Displays the Tire Pressure screen.

Climate Commands:

COMMAND	ACTION
Climate Control	Turns the climate control system on and operates it in the AUTO mode.
Climate Control OFF	Turns the climate control system off.

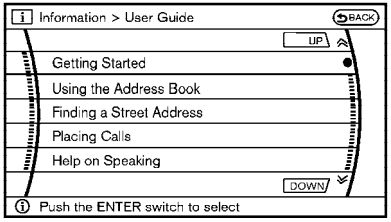

SAA1783

Displaying user guide

You can confirm how to use voice commands by accessing a simplified User Guide, which contains basic instructions and tutorials for several voice commands.

1. Push the **INFO** button on the instrument panel.
2. Highlight the “Others” key using the INFINITI controller and push the **ENTER** button.
3. Highlight the “Voice Recognition” key using the INFINITI controller and push the **ENTER** button.

   You can skip steps 1 to 3 above if you say “Help”.
4. Highlight the “User Guide” key using the INFINITI controller and push the **ENTER** button.

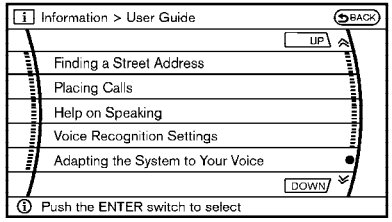

SAA2170

5. Highlight an item using the INFINITI controller and push the **ENTER** button.

Available items :

- Getting Started

  Describe the basics of how to operate the INFINITI Voice Recognition system.
- Using the Address Book

  Refer to Navigation System Owner’s Manual.
- Finding a Street Address (if so equipped)

  Refer to Navigation System Owner’s Manual.
- Placing Calls

  Tutorial for making a phone call by voice command operation.

- Help on Speaking

  Displays useful tips for how to correctly speak commands in order for them to be properly recognized by the system.

- Voice Recognition Settings

  Describes the available voice recognition settings.

- Speaker Adaptation

  Tutorial adapting the system to your voice.

USING THE SYSTEM

Initialization

When the ignition switch is pushed to the ON position, INFINITI Voice Recognition is initialized, which takes a few seconds. When completed, the system is ready to accept voice commands. If the TALK switch is pushed before the initialization completes the display will show the message: “Phonetic data downloaded. Please wait.” or a beep sounds.

Before starting

To get the best performance from INFINITI Voice Recognition, observe the following:

- Keep the interior of the vehicle as quiet as possible. Close the windows to eliminate the surrounding noises (traffic noises, vibration sounds, etc.), which may prevent the system from recognizing the voice commands correctly.
- When the climate control is in the AUTO mode, the fan speed decreases automatically for easy recognition.
- Wait until a tone sounds before speaking a command.
- Speak in a natural voice without pausing between words.

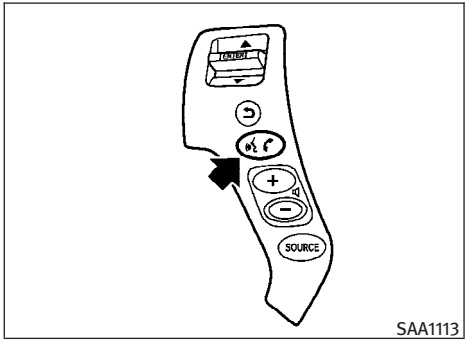

Giving voice command

1. Push and release the TALK switch located on the steering wheel.

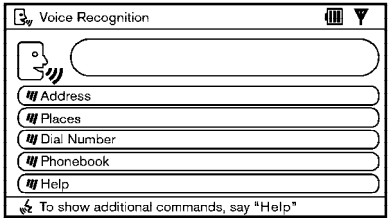

SAA1932

2. A list of commands appears on the screen, and the system announces, “Please say a command”.
3. After the tone sounds and the icon on the screen changes from to , speak a command.

Operating tips :

- Voice commands cannot be accepted when the icon is .
- The list displayed can be scrolled by tilting the ENTER switch on the steering wheel.
- If the command is not recognized, the system announces, “Please say again”. Repeat the command in a clear voice.
- Push the **BACK** button once to return to the previous screen.
- If you want to cancel the command, push and hold the TALK switch for 1 second. The message “Voice canceled” will be announced.
- Push the TALK switch again to pause the operation. Push the TALK switch to restart the operation.
- If you want to adjust the volume of the system feedback, push the volume control buttons (+ or −) on the steering wheel or use the audio system volume knob while the system is making an announcement.

How to speak numbers :

INFINITI Voice Recognition requires a certain way to speak numbers when giving voice commands. Refer to the following examples.

General rule

Only single digits 0 (zero) to 9 can be used. (For example, if you would like to say 500, “five zero zero” can be used, but “five hundred” cannot.

Phone numbers

Speak phone numbers according to the following examples:

- 1-800-662-6200
  - “Dial one eight zero zero six six two six two zero zero.”

Note 1: For the best voice recognition phone dialing results, say phone numbers as single digits.

Note 2: You cannot say 555-6000 as “five five five six thousands”.

Note 3: When speaking a house number, speak the number “0” as “zero”. If the letter “o (Oh)” is included in the house number, it will not be recognized as the number “0 (zero)” even if you speak “oh” instead of “zero”. You can only say “zero” for “0 (Zero)”. You can say either “zero” or “oh” for “o (Oh)”.

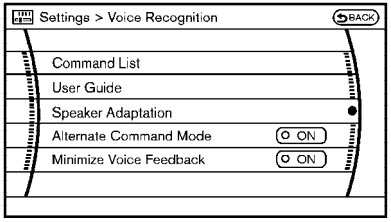

SAA1907

Speaker adaptation function

The voice recognition system has a function to learn the user's voice for better voice recognition performance. The system can memorize the voices of up to three persons.

Having the system learn the user's voice:

1. Push the **SETTING** button on the instrument panel, highlight the "Others" key on the display and then push the **ENTER** button.
2. Highlight the "Voice Recognition" key and then push the **ENTER** button.
3. Highlight the "Speaker Adaptation" key and then push the **ENTER** button.

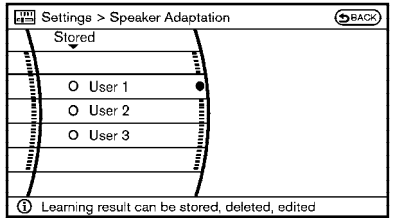

SAA1918

4. Select the user whose voice is memorized by the system and push the **ENTER** button.

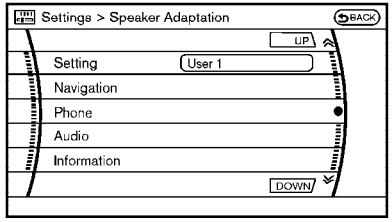

SAA2171

5. Select a category to be learned by the system from the following list and then push the **ENTER** button.

- Navigation
- Phone
- Audio
- Information
- Climate

The voice commands in the category are displayed.

6. Select a voice command and then push the **ENTER** button.

The voice recognition system starts.

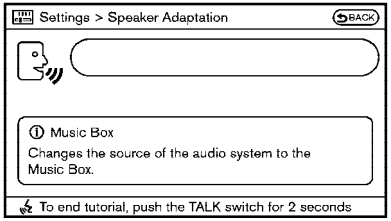

SAA1921

7. The system requests that you repeat a command after a tone.
8. After the tone sounds and the icon on the screen changes from to , speak the command that the system requested.
9. When the system has recognized the voice command, the voice of the user is learned.

Push the switch or **BACK** button to return to the previous screen.

If the system has learned the command correctly, the voice command indicator on the screen turns on.

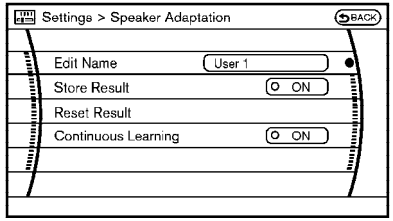

SAA1922

Speaker Adaptation function settings :

Edit Name

Edit the user name using the keypad displayed on the screen.

Store Result

When this item is turned to ON, the voice recognition system can easily recognize the user's voice that it has learned.

Reset Result

Resets the user's voice that the voice recognition system has learned.

Continuous Learning

When this item is turned to ON, you can have the system learn the voice commands in succession, without selecting commands one by one.

Minimize voice feedback

To minimize the voice feedback from the system, perform the following steps.

1. Push the **SETTING** button on the instrument panel.
2. Highlight the "Others" key using the INFINITI controller and push the **ENTER** button.
3. Highlight the "Voice Recognition" key and then push the **ENTER** button.
4. Highlight the "Minimize Voice Feedback" key and push the **ENTER** button.
5. The item is turned to ON and the vocal feedback is reduced if the voice recognition system is activated.

TROUBLESHOOTING GUIDE

The system should respond correctly to all voice commands without difficulty. If problems are encountered, follow the solutions given in this guide for the appropriate error.

Where the solutions are listed by number, try each solution in turn, starting with number one, until the problem is resolved.

Symptom/error message	Solution
Displays “COMMAND NOT RECOGNIZED” or the system fails to interpret the command correctly.	1. Ensure that the command format is valid, see “Command List” earlier in this section.
	2. Speak clearly without pausing between words and at a level appropriate to the ambient noise level.
	3. Ensure that the ambient noise level is not excessive, for example, windows open or defrost on. **NOTE:** **If it is too noisy to use the phone, it is likely that voice commands will not be recognized.**
	4. If optional words of the command have been omitted, then the command should be tried with these in place.
The system consistently selects the wrong voicetag in the phonebook.	1. Ensure that the voicetag requested matches what was originally stored. (See “BLUETOOTH® HANDS-FREE PHONE SYSTEM WITH NAVIGATION SYSTEM” earlier in this section; page 4-74.)
	2. Replace one of the voicetags being confused with a different voicetag.

MEMO

5 Starting and driving

Precautions when starting and driving 5-2
Exhaust gas (carbon monoxide)..... 5-2
Three-way catalyst 5-2
Tire Pressure Monitoring System (TPMS) 5-3
Avoiding collision and rollover..... 5-5
Off-road recovery..... 5-5
Rapid air pressure loss 5-6
Drinking alcohol/drugs and driving 5-7
All-Wheel Drive (AWD) driving safety precautions (for AWD models) 5-7
Push-button ignition switch 5-8
Operating range for engine start function..... 5-8
Push-button ignition switch positions 5-9
Intelligent Key battery discharge..... 5-9
Before starting the engine 5-10
Starting the engine.....5-11
Driving the vehicle 5-11
Automatic transmission.....5-11
Parking brake..... 5-16
Lane Departure Warning (LDW) system/Lane Departure Prevention (LDP) system (if so equipped)..... 5-16
Lane Departure Warning (LDW) system 5-17
Lane Departure Prevention (LDP) system.....5-19
Lane camera unit maintenance 5-23
Cruise control..... 5-23
Precautions on cruise control..... 5-23
Cruise control operations 5-24
Intelligent Cruise Control (ICC) system (if so equipped)..... 5-25
Selecting the vehicle-to-vehicle distance control mode 5-26
Vehicle-to-vehicle distance control mode 5-27
Precautions on vehicle-to-vehicle distance control mode 5-27
Vehicle-to-vehicle distance control mode operation..... 5-29
Conventional (FIXED SPEED) cruise control mode 5-42
Preview function (for Intelligent Cruise Control system equipped models) 5-45
Break-in schedule 5-46
Increasing fuel economy 5-46
All-Wheel Drive (AWD) (if so equipped) 5-47
Parking/parking on hills 5-48
Power steering..... 5-49

Brake system 5-49
Braking precautions 5-49
Parking brake break-in..... 5-50
Brake assist 5-50
Brake assist 5-50
Preview function (for Intelligent Cruise Control (ICC) system equipped models)..... 5-50
Anti-lock Braking System (ABS)..... 5-53
Vehicle Dynamic Control (VDC) system 5-54
Rear active steer system (if so equipped)..... 5-55
Cold weather driving 5-56
Freeing a frozen door lock 5-56
Anti-freeze..... 5-56
Battery 5-56
Draining of coolant water 5-56
Tire equipment..... 5-56
Special winter equipment 5-56
Driving on snow or ice..... 5-56
Engine block heater (if so equipped)..... 5-57

WARNING

- **Do not leave children or adults who would normally require the support of others alone in your vehicle. Pets should not be left alone either. They could accidentally injure themselves or others through inadvertent operation of the vehicle. Also, on hot, sunny days, temperatures in a closed vehicle could quickly become high enough to cause severe or possibly fatal injuries to people or animals.**
- **Closely supervise children when they are around cars to prevent them from playing and becoming locked in the trunk where they could be seriously injured. Keep the car locked, with the rear seatback and trunk lid securely latched when not in use, and prevent children's access to car keys.**

EXHAUST GAS (carbon monoxide)

WARNING

- **Do not breathe exhaust gases; they contain colorless and odorless carbon monoxide. Carbon monoxide is dangerous. It can cause unconsciousness or death.**
- **If you suspect that exhaust fumes are entering the vehicle, drive with all windows fully open, and have the vehicle inspected immediately.**
- **Do not run the engine in closed spaces such as a garage.**
- **Do not park the vehicle with the engine running for any extended length of time.**
- **Keep the trunk lid closed while driving, otherwise exhaust gases could be drawn into the passenger compartment. If you must drive with the trunk lid open, follow these precautions:**
  1. **Open all the windows.**
  2. **Set the air recirculation to off and the fan control to high to circulate the air.**
- **The exhaust system and body should be inspected by a qualified mechanic whenever:**
  - **The vehicle is raised for service.**
  - **You suspect that exhaust fumes are entering into the passenger compartment.**
  - **You notice a change in the sound of the exhaust system.**
  - **You have had an accident involving damage to the exhaust system, underbody, or rear of the vehicle.**

THREE-WAY CATALYST

The three-way catalyst is an emission control device installed in the exhaust system. Exhaust gases in the three-way catalyst are burned at high temperatures to help reduce pollutants.

WARNING

- **The exhaust gas and the exhaust system are very hot. Keep people, animals or flammable materials away from the exhaust system components.**
- **Do not stop or park the vehicle over flammable materials such as dry grass, waste paper or rags. They may ignite and cause a fire.**

CAUTION

- **Do not use leaded gasoline. Deposits from leaded gasoline will seriously reduce the three-way catalyst's ability to help reduce exhaust pollutants.**

- **Keep your engine tuned up. Malfunctions in the ignition, fuel injection, or electrical systems can cause overrich fuel flow into the three-way catalyst, causing it to overheat. Do not keep driving if the engine misfires, or if noticeable loss of performance or other unusual operating conditions are detected. Have the vehicle inspected promptly by an INFINITI retailer.**
- **Avoid driving with an extremely low fuel level. Running out of fuel could cause the engine to misfire, damaging the three-way catalyst.**
- **Do not race the engine while warming it up.**
- **Do not push or tow your vehicle to start the engine.**

TIRE PRESSURE MONITORING SYSTEM (TPMS)

Each tire, including the spare (if provided), should be checked monthly when cold and inflated to the inflation pressure recommended by the vehicle manufacturer on the vehicle placard or tire inflation pressure label. (If your vehicle has tires of a different size than the size indicated on the vehicle placard or tire inflation pressure label, you should determine the proper tire inflation pressure for those tires.)

As an added safety feature, your vehicle has been equipped with a Tire Pressure Monitoring System (TPMS) that illuminates a low tire pressure telltale when one or more of your tires is significantly under-inflated. Accordingly, when the low tire pressure telltale illuminates, you should stop and check your tires as soon as possible, and inflate them to the proper pressure. Driving on a significantly under-inflated tire causes the tire to overheat and can lead to tire failure. Under-inflation also reduces fuel efficiency and tire tread life, and may affect the vehicle's handling and stopping ability.

Please note that the TPMS is not a substitute for proper tire maintenance, and it is the driver's responsibility to maintain correct tire pressure, even if under-inflation has not reached the level to trigger illumination of the TPMS low tire pressure telltale.

Your vehicle has also been equipped with a TPMS malfunction indicator to indicate when the system is not operating properly. The TPMS malfunction indicator is combined with the low tire pressure telltale. When the system detects a malfunction, the telltale will flash for approximately one minute and then remain continuously illuminated. This sequence will continue upon subsequent vehicle start-ups as long as the malfunction exists. When the malfunction indicator is illuminated, the system may not be able to detect or signal low tire pressure as intended. TPMS malfunctions may occur for a variety of reasons, including the installation of replacement or alternate tires or wheels on the vehicle that prevent the TPMS from functioning properly. Always check the TPMS malfunction telltale after replacing one or more tires or wheels on your vehicle to ensure that the replacement or alternate tires and wheels allow the TPMS to continue to function properly.

Additional information

- The TPMS does not monitor the tire pressure of the spare tire.
- The TPMS will activate only when the vehicle is driven at speeds above 16 MPH (25 km/h). Also, this system may not detect a sudden drop in tire pressure (for example a flat tire while driving).
- The low tire pressure warning light does not automatically turn off when the tire pressure is adjusted. After the tire is inflated to the recommended pressure, the vehicle must be driven at speeds above 16 MPH (25 km/h) to activate the TPMS and turn off the low tire pressure warning light. Use a tire pressure gauge to check the tire pressure.
- Tire pressure rises and falls depending on the heat caused by the vehicle's operation and the outside temperature. Low outside temperature can lower the temperature of the air inside the tire which can cause a lower tire inflation pressure. This may cause the low tire pressure warning light to illuminate. If the warning light illuminates in low ambient temperature, check the tire pressure for all four tires.
- You can also check the pressure of all tires (except the spare tire) on the display. (See "HOW TO USE INFO BUTTON" in the "4. Monitor, climate, audio, phone and voice recognition systems" section.)

  After tire rotation is performed, tire pressure will not be displayed in the actual tire position. Drive the vehicle at over 25 MPH (40 km/h) for approximately 10 minutes to reset the display.

For additional information, see "Low tire pressure warning light" in the "2. Instruments and controls" section and "TIRE PRESSURE MONITORING SYSTEM (TPMS)" in the "6. In case of emergency" section.

⚠ WARNING

- **If the low tire pressure warning light illuminates or LOW PRESSURE information is displayed on the monitor screen while driving, avoid sudden steering maneuvers or abrupt braking, reduce vehicle speed, pull off the road to a safe location and stop the vehicle as soon as possible. Driving with underinflated tires may permanently damage the tires and increase the likelihood of tire failure. Serious vehicle damage could occur and may lead to an accident and could result in serious personal injury. Check the tire pressure for all four tires. Adjust the tire pressure to the recommended COLD tire pressure shown on the Tire and Loading Information label to turn the low tire pressure warning light OFF. If you have a flat tire, replace it with a spare tire as soon as possible. (See "FLAT TIRE" in the "6. In case of emergency" section for changing a flat tire.)**
- **When a spare tire is mounted or a wheel is replaced, tire pressure will not be indicated, the TPMS will not function and the low tire pressure warning light will flash for approximately 1 minute. The light will remain on after 1 minute. Contact your INFINITI retailer as soon as possible for tire replacement and/or system resetting.**

- **Replacing tires with those not originally specified by INFINITI could affect the proper operation of the TPMS.**
- **Do not inject any tire liquid or aerosol tire sealant into the tires, as this may cause a malfunction of the tire pressure sensors.**

⚠ CAUTION

- **The TPMS may not function properly when the wheels are equipped with tire chains or the wheels are buried in snow.**
- **Do not place metalized film or any metal parts (antenna, etc.) on the windows. This may cause poor reception of the signals from the tire pressure sensors, and the TPMS will not function properly.**

Some devices and transmitters may temporarily interfere with the operation of the TPMS and cause the low tire pressure warning light to illuminate. Some examples are:

– Facilities or electric devices using similar radio frequencies are near the vehicle.

– If a transmitter set to similar frequencies is being used in or near the vehicle.

– If a computer (or similar equipment) or a DC/AC converter is being used in or near the vehicle.

FCC Notice:

Changes or modifications not expressly approved by the party responsible for compliance could void the user's authority to operate the equipment.

This device complies with Part 15 of the FCC Rules and RSS-210 of Industry Canada.

Operation is subject to the following two conditions: (1) This device may not cause harmful interference, and (2) this device must accept any interference received, including interference that may cause undesired operation of the device.

AVOIDING COLLISION AND ROLLOVER

⚠ WARNING

Failure to operate this vehicle in a safe and prudent manner may result in loss of control or an accident.

Be alert and drive defensively at all times. Obey all traffic regulations. Avoid excessive speed, high speed cornering, or sudden steering maneuvers, because these driving practices could cause you to lose control of your vehicle. **As with any vehicle, a loss of control could result in a collision with other vehicles or objects, or cause the vehicle to rollover, particularly if the loss of control causes the vehicle to slide sideways.** Be attentive at all times, and avoid driving when tired. Never drive when under the influence of alcohol or drugs (including prescription or over-the-counter drugs which may cause drowsiness). Always wear your seat belt as outlined in the "SEAT BELTS" in the "1. Safety — Seats, seat belts and supplemental restraint system" section of this manual, and also instruct your passengers to do so.

Seat belts help reduce the risk of injury in collisions and rollovers. **In a rollover crash, an unbelted or improperly belted person is significantly more likely to be injured or killed than a person properly wearing a seat belt.**

OFF-ROAD RECOVERY

While driving, the right side or left side wheels may unintentionally leave the road surface. If this occurs, maintain control of the vehicle by following the procedure below. Please note that this procedure is only a general guide. The vehicle must be driven as appropriate based on the conditions of the vehicle, road and traffic.

1. Remain calm and do not overreact.
2. Do not apply the brakes.

3. Maintain a firm grip on the steering wheel with both hands and try to hold a straight course.
4. When appropriate, slowly release the accelerator pedal to gradually slow the vehicle.
5. If there is nothing in the way, steer the vehicle to follow the road while the vehicle speed is reduced. Do not attempt to drive the vehicle back onto the road surface until vehicle speed is reduced.
6. When it is safe to do so, gradually turn the steering wheel until both tires return to the road surface. When all tires are on the road surface, steer the vehicle to stay in the appropriate driving lane.

- If you decide that it is not safe to return the vehicle to the road surface based on vehicle, road or traffic conditions, gradually slow the vehicle to a stop in a safe place off the road.

RAPID AIR PRESSURE LOSS

Rapid air pressure loss or a "blow-out" can occur if the tire is punctured or is damaged due to hitting a curb or pothole. Rapid air pressure loss can also be caused by driving on underinflated tires.

Rapid air pressure loss can affect the handling and stability of the vehicle, especially at highway speeds.

Help prevent rapid air pressure loss by maintaining the correct air pressure and visually inspect the tires for wear and damage. See "WHEELS AND TIRES" in the "8. Maintenance and do-it-yourself" section of this manual.

If a tire rapidly loses air pressure or "blows-out" while driving maintain control of the vehicle by following the procedure below. Please note that this procedure is only a general guide. The vehicle must be driven as appropriate based on the conditions of the vehicle, road and traffic.

⚠ WARNING

The following actions can increase the chance of losing control of the vehicle if there is a sudden loss of tire air pressure. Losing control of the vehicle may cause a collision and result in personal injury.

- **The vehicle generally moves or pulls in the direction of the flat tire.**
- **Do not rapidly apply the brakes.**
- **Do not rapidly release the accelerator pedal.**
- **Do not rapidly turn the steering wheel.**

1. Remain calm and do not overreact.
2. Maintain a firm grip on the steering wheel with both hands and try to hold a straight course.
3. When appropriate, slowly release the accelerator pedal to gradually slow the vehicle.
4. Gradually steer the vehicle to a safe location off the road and away from traffic if possible.
5. Lightly apply the brake pedal to gradually stop the vehicle.
6. Turn on the hazard warning flashers and either contact a roadside emergency service to change the tire or see "CHANGING A FLAT TIRE" in the "6. In case of emergency" section of this Owner's Manual.

DRINKING ALCOHOL/DRUGS AND DRIVING

⚠ WARNING

Never drive under the influence of alcohol or drugs. Alcohol in the bloodstream reduces coordination, delays reaction time and impairs judgement. Driving after drinking alcohol increases the likelihood of being involved in an accident injuring yourself and others. Additionally, if you are injured in an accident, alcohol can increase the severity of the injury.

INFINITI is committed to safe driving. However, you must choose not to drive under the influence of alcohol. Every year thousands of people are injured or killed in alcohol-related accidents. Although the local laws vary on what is considered to be legally intoxicated, the fact is that alcohol affects all people differently and most people underestimate the effects of alcohol.

Remember, drinking and driving don't mix! And that is true for drugs, too (over-the-counter, prescription, and illegal drugs). Don't drive if your ability to operate your vehicle is impaired by alcohol, drugs, or some other physical condition.

ALL-WHEEL DRIVE (AWD) DRIVING SAFETY PRECAUTIONS (for AWD models)

Observe the following precautions when you drive an All-Wheel Drive (AWD) vehicle.

⚠ WARNING

- **This vehicle is not designed for off-road (rough road) use. Do not drive on sandy or muddy roads that tires may get stuck in.**
- **Do not drive beyond the performance capability of the tires, even with AWD engaged.**
- **For AWD equipped vehicles, do not attempt to raise two wheels off the ground and shift the transmission to any drive or reverse position with the engine running. Doing so may result in drivetrain damage or unexpected vehicle movement which could result in serious vehicle damage or personal injury.**
- **Do not attempt to test an AWD equipped vehicle on a 2-wheel dynamometer, (such as the dynamometers used by some states for emissions testing), or similar equipment even if the other two wheels are raised off the ground. Make sure you inform test facility personnel that your vehicle is equipped with AWD before it is placed on a dynamometer. Using the wrong test equipment may result in drivetrain damage or unexpected vehicle movement which could result in serious vehicle damage or personal injury.**
- **When a wheel is off the ground due to an unlevel surface, do not spin the wheel excessively.**
- **Accelerating quickly, sharp steering maneuvers or sudden braking may cause loss of control.**
- **Always use tires of the same type, size, brand, construction (bias, bias-belted or radial), and tread pattern on all four wheels. Install tire chains on the rear wheels when driving on slippery roads and drive carefully.**

⚠ WARNING

Do not operate the push-button ignition switch while driving the vehicle except in an emergency. (The engine will stop when the ignition switch is pushed 3 consecutive times or the ignition switch is pushed and held for more than 2 seconds.) If the engine stops while the vehicle is being driven, this could lead to a crash and serious injury.

Before operating the push-button ignition switch, be sure to move the selector lever to the P (Park) position.

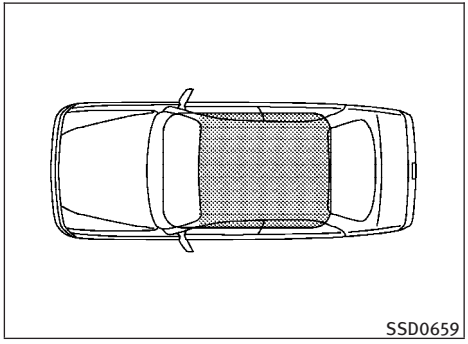

OPERATING RANGE FOR ENGINE START FUNCTION

The operating range for starting the engine inside the vehicle ① is shown in the illustration.

- The trunk area is not included in the operating range of the engine start function.
- If the Intelligent Key is on the instrument panel, rear parcel shelf, inside the glove box or door pocket, it may not be possible to start the engine.
- If the Intelligent Key is near the door or door glass outside the vehicle, it may be possible to start the engine.

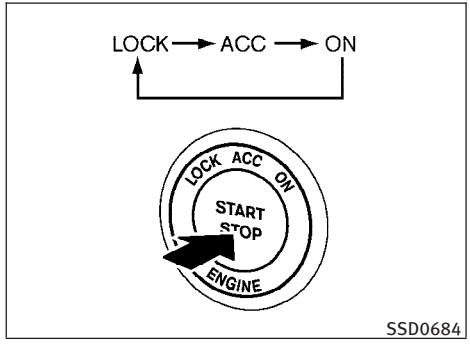

When the ignition switch is pushed without depressing the brake pedal, the ignition switch position will change as follows:

- Push the center once to change to ACC.
- Push the center two times to change to ON.
- Push the center three times to return to LOCK.

The ignition switch is equipped with an anti-theft steering lock device.

The ignition lock is designed so that the ignition switch position cannot be switched to LOCK until the selector lever is moved to the P (Park) position.

When the ignition switch cannot be pushed toward the LOCK position, proceed as follows:

1. Move the selector lever into the P (Park) position.
2. Push the ignition switch. The ignition switch position will change to the ON position.
3. Push the ignition switch again to the LOCK position.

The selector lever can be moved from the P (Park) position if the ignition switch is in the ON position and the brake pedal is depressed.

In order for the steering wheel to be locked, it must be turned about 1/8 of a right or left turn from the straight up position.

To lock the steering wheel, push the ignition switch to the LOCK position. To unlock the steering wheel, push the push-button ignition switch again while lightly turning the steering wheel right and left.

If the battery of the vehicle is discharged, the push-button ignition switch cannot be turned from the LOCK position.

Some indicators and warnings for operation are displayed on the dot matrix liquid crystal display in the tachometer. (See "DOT MATRIX LIQUID CRYSTAL DISPLAY" in the "2. Instruments and controls" section.)

PUSH-BUTTON IGNITION SWITCH POSITIONS

LOCK (Normal parking position)

The ignition switch can only be locked in this position.

The ignition switch will be unlocked when it is pushed to the ACC position while carrying the Intelligent Key or with the Intelligent Key inserted in the port.

ACC (Accessories)

This position activates electrical accessories such as the radio, when the engine is not running.

ON (Normal operating position)

This position turns on the ignition system and electrical accessories.

⚠ CAUTION

Do not leave the vehicle with the push-button ignition switch in ACC or ON positions when the engine is not running for an extended period. This can discharge the battery.

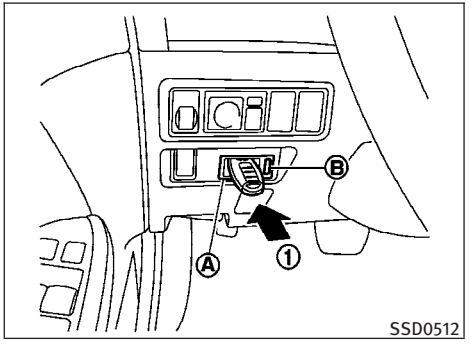

INTELLIGENT KEY BATTERY DISCHARGE

If the battery of the Intelligent Key is almost discharged, the guide light Ⓑ of the Intelligent Key port Ⓐ blinks and the indicator appears on the dot matrix liquid crystal display. (See "DOT MATRIX LIQUID CRYSTAL DISPLAY" in the "2. Instruments and controls" section.)

In this case, inserting the Intelligent Key into the port ① allows you to start the engine. Make sure that the key ring side faces backward as illustrated. Insert the Intelligent Key in the port until it is latched and secured.

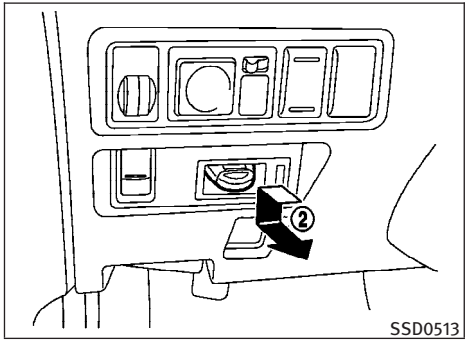

To remove the Intelligent Key from the port, push the ignition switch to the LOCK position and push in the Intelligent Key ②. Then the Intelligent Key will be ejected from the port. Pull the Intelligent Key out.

NOTE:

The Intelligent Key port does not charge the Intelligent Key battery. If you see the low battery indicator in the dot matrix liquid crystal display, replace the battery as soon as possible. (See "BATTERY REPLACEMENT" in the "8. Maintenance and do-it-yourself" section.)

⚠ CAUTION

- **Never place anything except the Intelligent Key in the Intelligent Key port. Doing so may cause damage to the equipment.**
- **Make sure the Intelligent Key is in the correct direction when inserting it to the Intelligent Key port. The engine may not start if it is in the incorrect direction.**
- **Remove the Intelligent Key from the Intelligent Key port after the ignition switch is pushed to the LOCK position.**
- **Do not pull out the Intelligent Key from the Intelligent Key port until the Intelligent Key is ejected to the removal position.**

- Make sure the area around the vehicle is clear.
- Check fluid levels such as engine oil, coolant, brake fluid and window washer fluid as frequently as possible, or at least whenever you refuel.
- Check that all windows and lights are clean.
- Visually inspect tires for their appearance and condition. Also check tires for proper inflation.
- Lock all doors.
- Position seat and adjust head restraints.
- Adjust inside and outside mirrors.
- Fasten seat belts and ask all passengers to do likewise.
- Check the operation of warning lights when the ignition switch is pushed to the ON position. (See "WARNING/INDICATOR LIGHTS AND AUDIBLE REMINDERS" in the "2. Instruments and controls" section.)

1. Apply the parking brake.
2. Move the selector lever to the P (Park) or N (Neutral) position. (P is recommended.)

   The starter is designed not to operate unless the selector lever is in either of the above positions.
3. Push the ignition switch to the ON position. Depress the brake pedal and push the ignition switch to start the engine.

   To start the engine immediately, push and release the ignition switch while depressing the brake pedal with the ignition switch in any position.

   - If the engine is very hard to start in extremely cold weather or when restarting, depress the accelerator pedal a little (approximately 1/3 to the floor) and while holding, crank the engine. Release the accelerator pedal when the engine starts.
   - If the engine is very hard to start because it is flooded, depress the accelerator pedal all the way to the floor and hold it. Push the ignition switch to the ON position for 5 to 6 seconds to start cranking the engine. After cranking the engine, release the accelerator pedal. Crank the engine **with your foot off the accelerator pedal** by depressing the brake pedal and pushing the push-button ignition switch to start the engine. If the engine starts, but fails to run, repeat the above procedure.

⚠ CAUTION

Do not operate the starter for more than 15 seconds at a time. If the engine does not start, push the ignition switch to LOCK and wait 10 seconds before cranking again, otherwise the starter could be damaged.

4. **Warm-up**

   Allow the engine to idle for at least 30 seconds after starting. Do not race the engine while warming it up. Drive at moderate speed for a short distance first, especially in cold weather. In cold weather, keep the engine running for a minimum of 2 - 3 minutes before shutting it off. Starting and stopping the engine over a short period of time may make the vehicle more difficult to start.
5. To stop the engine, shift the selector lever to the P (Park) position, and push the ignition switch to the LOCK position.

AUTOMATIC TRANSMISSION

The automatic transmission in your vehicle is electronically controlled to produce maximum power and smooth operation.

The recommended operating procedures for this transmission are shown on the following page. Follow these procedures for maximum vehicle performance and driving enjoyment.

Starting the vehicle

1. After starting the engine, fully depress the foot brake pedal before moving the selector lever out of the P (Park) position.

This AT is designed so that the foot brake pedal must be depressed before shifting from P (Park) to any driving position while the ignition switch is in the ON position.

The selector lever cannot be moved out of the P (Park) position and into any of the other positions if the ignition switch is pushed to the LOCK or ACC position.

2. Keep the foot brake pedal depressed, push the selector lever button and move the selector lever to a driving position.

3. Release the parking brake and foot brake, then gradually start the vehicle in motion.

WARNING

- **Do not depress the accelerator pedal while shifting from P (Park) or N (Neutral) to R (Reverse), D (Drive), DS (Drive Sport) or manual shift mode. Always depress the brake pedal until shifting is completed. Failure to do so could cause you to lose control and have an accident.**
- **Cold engine idle speed is high, so use caution when shifting into a forward or reverse gear before the engine has warmed up.**
- **Never shift to P (Park) or R (Reverse) while vehicle is moving forward. Never shift to P (Park), D (Drive) or DS (Drive Sport) while vehicle is moving rearward. Failure to do so could cause you to lose control and have an accident.**

CAUTION

- **When stopping the vehicle on an uphill grade, do not hold the vehicle by depressing the accelerator pedal. The foot brake should be used for this purpose.**
- **Do not downshift abruptly on slippery roads. This may cause a loss of control.**

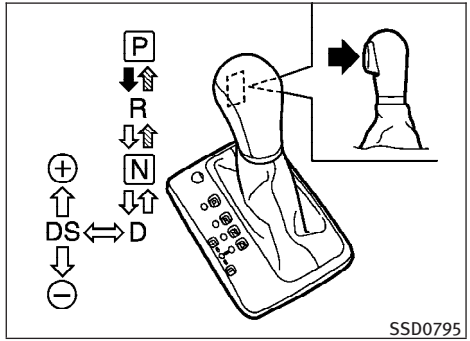

Shifting

To move the selector lever,

➡ : Push the button while depressing the brake pedal,

⇨ : Push the button,

⇨ : Just move the selector lever.

After starting the engine, fully depress the brake pedal and shift the selector lever from P (Park) to any of the desired shift positions.

Push the button to shift into P (Park) or R (Reverse). All other positions can be selected without pushing the button.

⚠ WARNING

Apply the parking brake if the selector lever is in any position while the engine is not running. Failure to do so could cause the vehicle to move unexpectedly or roll away and result in serious personal injury or property damage.

⚠ CAUTION

To prevent automatic transmission damage, move the selector lever to the P (Park) or R (Reverse) position only when the vehicle is completely stopped.

P (Park) position :

Use this selector position when the vehicle is parked or when starting the engine. Make sure the vehicle is completely stopped. **The brake pedal must be depressed and the selector lever button pushed in to move the selector lever from the N (Neutral) position or any drive position to the P (Park) position.** Apply the parking brake. When parking on a hill, apply the parking brake first, then move the selector lever to the P (Park) position.

R (Reverse) :

Use this position to back up. Always be sure the vehicle is completely stopped before selecting the R (Reverse) position. **The brake pedal must be depressed and the selector lever button pushed in to move the selector lever from the P (Park) position, the N (Neutral) position or any drive position to the R (Reverse) position.**

N (Neutral) :

Neither forward nor reverse gear is engaged. The engine can be started in this position. You may shift to the N (Neutral) position and restart a stalled engine while the vehicle is moving.

D (Drive) :

Use this position for all normal forward driving.

DS (Drive Sport) mode

When the selector lever is shifted from the D (Drive) position to the manual shift gate, the transmission enters the DS (Drive Sport) mode. This mode is designed for performance-oriented driving.

In this mode, the transmission automatically shifts to allow smooth acceleration and engine braking on a winding road or on a hilly road.

When canceling the DS mode, return the selector lever to the D (Drive) position. The transmission returns to the normal driving mode.

Manual shift mode

When the selector lever is shifted from the D (Drive) position to the manual shift gate with the vehicle stopped or while driving, the transmission enters the manual shift mode. Shift ranges can be selected manually by moving the selector lever up or down.

- When shifting up, move the selector lever to the + (up) side. The transmission shifts to the higher range.
- When shifting down, move the selector lever to the – (down) side. The transmission shifts to the lower range.
- When canceling the manual shift mode, return the selector lever to the D (Drive) position. The transmission returns to the normal driving mode.

In the manual shift mode, the shift range is displayed on the position indicator in the meter.

5-speed model :

Shift ranges up or down one by one as follows:

$^{M}1 \rightleftarrows {}^{M}2 \rightleftarrows {}^{M}3 \rightleftarrows {}^{M}4 \rightleftarrows {}^{M}5$

$^{M}5$ (5th):

Use this position for all normal forward driving at highway speeds.

$^{M}4$ (4th):

Use this position when driving up long slopes, or for engine braking when driving down long slopes.

$^{M}3$ (3rd) and $^{M}2$ (2nd):

Use these positions for hill climbing or engine braking on downhill grades.

$^{M}1$ (1st):

Use this position when climbing steep hills slowly or driving slowly through deep snow, or for maximum engine braking on steep downhill grades.

7-speed model :

Shift ranges up or down one by one as follows:

$^{M}1 \rightleftarrows {}^{M}2 \rightleftarrows {}^{M}3 \rightleftarrows {}^{M}4 \rightleftarrows {}^{M}5 \rightleftarrows {}^{M}6 \rightleftarrows {}^{M}7$

$^{M}7$ (7th):

Use this position for all normal forward driving at highway speeds.

$^{M}6$ (6th) and $^{M}5$ (5th):

Use these positions when driving up long slopes, or for engine braking when driving down long slopes.

$^{M}4$ (4th), $^{M}3$ (3rd) and $^{M}2$ (2nd):

Use these positions for hill climbing or engine braking on downhill grades.

$^{M}1$ (1st):

Use this position when climbing steep hills slowly or driving slowly through deep snow, or for maximum engine braking on steep downhill grades.

Precaution :

- Remember not to drive at high speeds for extended periods of time in lower than 5th gear (5-speed model) or 7th gear (7-speed model). This reduces fuel economy.
- Moving the selector lever rapidly to the same side twice will shift the ranges in succession.
- **In the manual shift mode, the transmission may not shift to the selected gear. This helps maintain driving performance and reduces the chance of vehicle damage or loss of control.**
- **In the manual shift mode, the transmission automatically shifts down to 1st gear before the vehicle comes to a stop. When accelerating again, it is necessary to shift up to the desired range.**

Accelerator downshift — In D (Drive) position —

For passing or hill climbing, fully depress the accelerator pedal to the floor. This shifts the transmission down into the lower gear, depending on the vehicle speed.

Fail-safe

When the fail-safe operation occurs, note that the transmission will be locked in any of the forward gears according to the condition.

If the vehicle is driven under extreme conditions, such as excessive wheel spinning and subsequent hard braking, the fail-safe system may be activated. This will occur even if all electrical

circuits are functioning properly. In this case, push the switch to the LOCK position and wait for 3 seconds. Then push the ignition switch back to the ON position. The vehicle should return to its normal operating condition. If it does not return to its normal operating condition, have an INFINITI retailer check the transmission and repair if necessary.

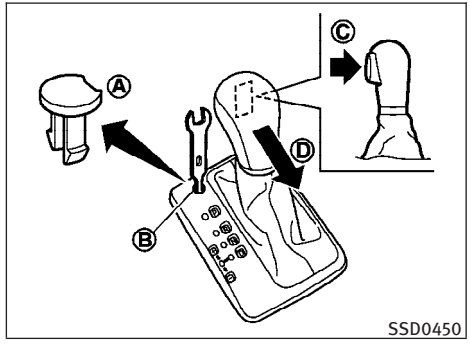

Shift lock release

If the battery charge is low or discharged, the selector lever may not be moved from the P (Park) position even with the brake pedal depressed and the selector lever button pushed.

To move the selector lever, release the shift lock. The selector lever can be moved to the N (Neutral) position. However, the steering wheel will be locked unless the ignition switch is turned to the ON position. This allows the vehicle to be moved if the battery is discharged.

To release the shift lock, perform the following procedure:

1. Push the ignition switch to the LOCK position.
2. Apply the parking brake.
3. Remove the shift lock release cover Ⓐ using a suitable tool.
4. Push down the shift lock release Ⓑ as illustrated.
5. Push the selector lever button Ⓒ and move the selector lever to N (Neutral) position Ⓓ while holding down the shift lock release.

Push the ignition switch to the ON position to unlock the steering wheel. The vehicle may be moved to the desired location.

Replace the removed shift lock release cover after the operation is finished.

If the battery is discharged completely, the steering wheel cannot be unlocked. Do not move the vehicle with the steering wheel locked.

If the selector lever cannot be moved out of P (Park), have an INFINITI retailer check the AT system as soon as possible.

PARKING BRAKE

⚠ WARNING

- **Be sure the parking brake is fully released before driving. Failure to do so can cause brake failure and lead to an accident.**
- **Do not release the parking brake from outside the vehicle.**
- **Do not use the gear shift in place of the parking brake. When parking, be sure the parking brake is fully engaged.**
- **Do not leave children unattended in a vehicle. They could release the parking brake and cause an accident.**

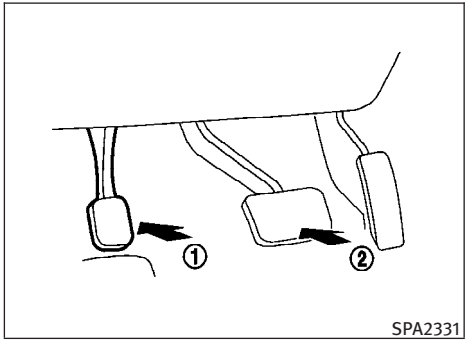

To apply: Fully depress the parking brake pedal ①.

To release:

1. Firmly apply the foot brake ②.
2. Depress the parking brake pedal ① and the parking brake will be released.
3. Before driving, be sure the brake warning light goes out.

LANE DEPARTURE WARNING (LDW) SYSTEM/LANE DEPARTURE PREVENTION (LDP) SYSTEM (if so equipped)

The Lane Departure Warning (LDW) system/Lane Departure Prevention (LDP) system will operate when the vehicle is driven at speeds of approximately 45 MPH (72 km/h) and above, and when it is traveling close to either the left or the right of a traveling lane.

Each system functions as follows:

- Lane Departure Warning (LDW) system — warns the driver by a warning light and chime.
- Lane Departure Prevention (LDP) system — warns the driver by a warning light and chime, and helps assist the driver to return the vehicle to the center direction of the traveling lane by applying brake control to the left or right wheels individually (for a short period of time).

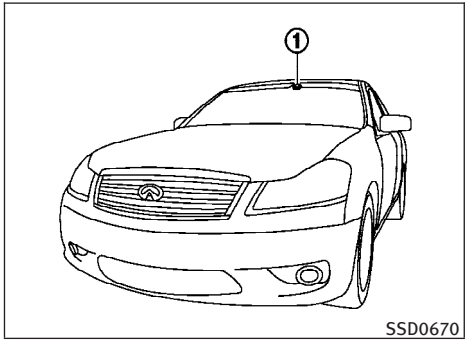

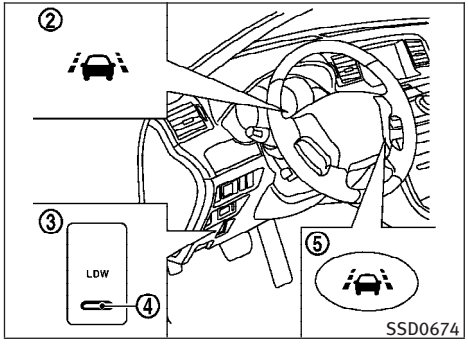

The LDW and LDP systems monitor the lane markers on the traveling lane using the camera unit ① located inside the front map light cover. When the camera unit detects that the vehicle is traveling close to either the left or the right of the traveling lane, the lane departure warning light ② on the instrument panel blinks in orange and a warning chime sounds. When the LDP system is on, it will automatically apply the brakes for a short period of time, using the function of the Vehicle Dynamic Control (VDC) system.

To turn on the LDW system, push the LDW switch ③. The LDW ON indicator light ④ on the switch will illuminate.

To turn on the LDP system, push the LDP switch ⑤. The LDP ON indicator light ② will illuminate in green.

LANE DEPARTURE WARNING (LDW) SYSTEM

Precautions on LDW system

⚠ WARNING

- **This system is only a warning device to inform the driver of a potential unintended lane departure. It will not steer the vehicle or prevent loss of control. It is the driver's responsibility to stay alert, drive safely, keep the vehicle in the traveling lane, and be in control of the vehicle at all times.**
- **The system will not operate at speeds below approximately 45 MPH (72 km/h) or if it cannot detect lane markers.**
- **If the LDW system malfunctions, it will cancel automatically, and the lane departure warning light (orange) will illuminate.**
- **If the lane departure warning light (orange) illuminates, pull off the road to a safe location and stop the vehicle. Turn the engine off and restart the engine. If the lane departure warning light (orange) continues to illuminate, have the system checked by an INFINITI retailer.**

- **Excessive noise will interfere with the warning chime sound, and the chime may not be heard.**

The system may not function properly under the following conditions:

- On roads where there are multiple parallel lane markers; lane markers that are faded or not painted clearly; yellow painted lane markers; non-standard lane markers; or lane markers covered with water, dirt, snow, etc.
- On roads where the discontinued lane markers are still detectable.
- On roads where there are sharp curves.
- On roads where there are sharply contrasting objects, such as shadows, snow, water, wheel ruts, seams or lines remaining after road repairs. (The LDW system could detect these items as lane markers.)
- On roads where the traveling lane merges or separates.
- When the vehicle's traveling direction does not align with the lane marker.
- When traveling close to the vehicle in front of you, which obstructs the lane camera unit detection range.
- When rain, snow or dirt adheres to the windshield in front of the lane camera unit.
- When the headlights are not bright due to dirt on the lens or if the aiming is not adjusted properly.
- When strong light enters the lane camera unit. (For example, the light directly shines on the front of the vehicle at sunrise or sunset.)
- When a sudden change in brightness occurs. (For example, when the vehicle enters or exits a tunnel or under a bridge.)

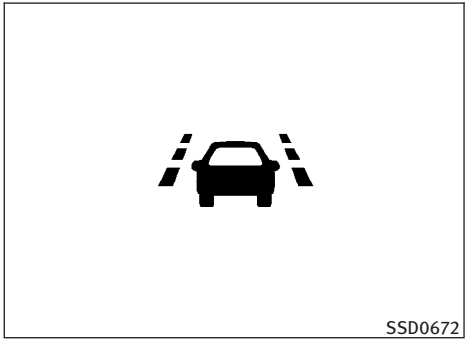

Lane departure warning light (orange)

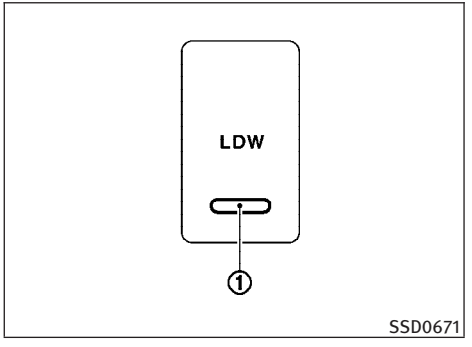

LDW switch

LDW system operation

The LDW system provides a lane departure warning function when the vehicle is driven at speeds of approximately 45 MPH (72 km/h) and above. When the vehicle approaches either the left or the right side of the traveling lane, a warning chime will sound and the lane departure warning light (orange) on the instrument panel will blink to alert the driver.

The warning function will stop when the vehicle returns inside of the lane markers.

When you operate the lane change signal and change traveling lanes in the direction of the signal, the LDW system temporarily suspends operation. It will become operable again approximately 2 seconds after the lane change signal is turned off.

When the vehicle speed lowers to less than approximately 45 MPH (72 km/h), the LDW system will not provide a warning.

The LDW system has an automatic setting mode and a manual setting mode. The setting mode can be changed. In the automatic setting mode, the LDW system is automatically turned on when the ignition switch is pushed to the ON position. When the LDW system is on, the LDW ON indicator ① on the LDW switch illuminates. To cancel the LDW system, push the LDW switch. The LDW ON indicator will turn off. To turn on the system, push the LDW switch again.

In the manual setting mode, you need to push the LDW switch to turn on the system after the ignition switch is pushed to the ON position.

The setting mode can be changed using the LDW switch. To change the setting mode, push and hold the LDW switch for more than 4 seconds when the LDW ON indicator is off. When the mode is changed, a chime sounds and the LDW ON indicator flashes.

Temporary disabled status at high temperature

If the vehicle is parked in direct sunlight under high temperature conditions (over approximately 104°F (40°C) and then started, the LDW system may be deactivated automatically. The LDW ON indicator on the switch will flash.

When the interior temperature is reduced, the LDW system will resume operating automatically and the LDW ON indicator will stop flashing.

LANE DEPARTURE PREVENTION (LDP) SYSTEM

Precautions on LDP system

⚠ WARNING

- **The LDP system will not steer the vehicle or prevent loss of control. It is the driver's responsibility to stay alert, drive safely, keep the vehicle in the traveling lane, and be in control of vehicle at all times.**
- **The LDP system is primarily intended for use on well-developed freeways or highways. It may not detect the lane markers in certain roads, weather or driving conditions.**
- **Using the LDP system under some conditions of road, lane marker or weather, or when you change lanes without using the lane change signal could lead to an unexpected system operation. In such conditions, you need to correct the vehicle's direction with your steering operation to avoid accidents.**
- **When the LDP system is operating, avoid excessive or sudden steering maneuvers. Otherwise, you could lose control of the vehicle.**

- **The LDP system will not operate at speeds below approximately 45 MPH 72 km/h) or if it cannot detect lane markers.**
- **The LDP system may not function properly under the following conditions, and do not use the LDP system:**
  - **During bad weather (rain, fog, snow, wind, etc.).**
  - **When driving on slippery roads, such as on ice or snow, etc.**
  - **When driving on winding or uneven roads.**
  - **When there is a lane closure due to road repairs.**
  - **When driving in a makeshift lane.**
  - **When driving on roads where the lane width is too narrow.**
  - **When driving without normal tire conditions (for example, tire wear, low tire pressure, installation of spare tire, tire chains, non-standard wheels).**
  - **When the vehicle is equipped with non-original brake parts or suspension parts.**
- **If the LDP system malfunctions, it will cancel automatically. The lane departure warning light (orange) on the instrument panel will illuminate.**
- **If the lane departure warning light (orange) illuminates, pull off the road to a safe location and stop the vehicle. Turn the engine off and restart the engine. If the warning light (orange) continues to illuminate, have the LDP system checked by an INFINITI retailer.**
- **Excessive noise will interfere with the warning chime sound, and the chime may not be heard.**

The functions of the LDP system (warning and brake control assist) may or may not operate properly under the following conditions:

- On roads where there are multiple parallel lane markers; lane markers that are faded or not painted clearly; yellow painted lane markers; non-standard lane markers; or lane markers covered with water, dirt, snow, etc.
- On roads where discontinued lane markers are still detectable.
- On roads where there are sharp curves.
- On roads where there are sharply contrasting objects, such as shadows, snow, water, wheel ruts, seams or lines remaining after road repairs. (The LDP system could detect these items as lane markers.)
- On roads where the traveling lane merges or separates.
- When the vehicle's traveling direction does not align with the lane marker.
- When traveling close to the vehicle in front of you, which obstructs the lane camera unit detection range.
- When rain, snow or dirt adheres to the windshield in front of the lane camera unit.
- When the headlights are not bright due to dirt on the lens or if the aiming is not adjusted properly.
- When strong light enters the lane camera unit. (For example, the light directly shines on the front of the vehicle at sunrise or sunset.)
- When a sudden change in brightness occurs. (For example, when the vehicle enters or exits a tunnel or under a bridge.)

While the LDP system is operating, you may hear a sound of brake operation. This is normal and indicates that the LDP system is operating properly.

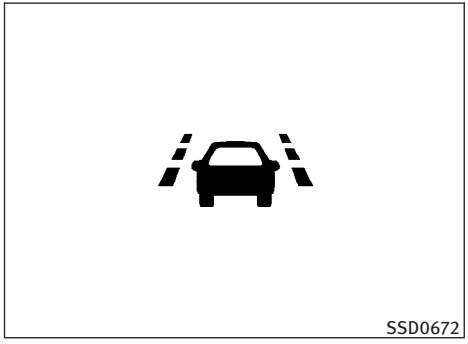

LDP ON indicator light (green)/ Warning light (orange)

LDP system operation

The LDP system provides a lane departure warning and brake control assistance when the vehicle is driven at speeds of approximately 45 MPH (72 km/h) and above. When the vehicle approaches either the left or the right side of the traveling lane, a warning chime will sound and the lane departure warning light (orange) on the instrument panel will blink to alert the driver. Then, the LDP system will automatically apply the brakes for a short period of time to help assist the driver to return the vehicle to the center of the traveling lane.

The warning and assist functions will stop when the vehicle returns to a position inside of the lane marker.

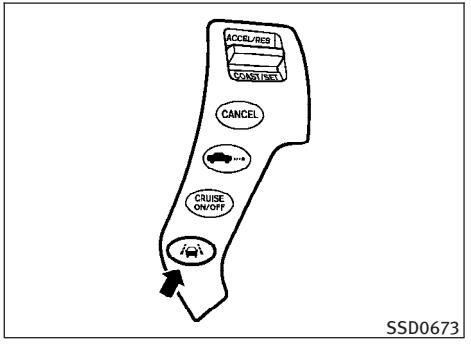

LDP switch

To turn on the LDP system, push the LDP switch on the steering wheel after starting the engine. The LDP ON indicator light (green) on the instrument panel will illuminate. Push the LDP switch again to turn off the LDP system. The LDP ON indicator light will turn off.

Automatic deactivation

Condition A :

The warning and assist functions of the LDP system are not designed to work under the following conditions:

- When you operate the lane change signal and change the traveling lanes in the direction of the signal. (The LDP system will be deactivated for approximately 2 seconds after the lane change signal is turned off.)
- When the vehicle speed lowers to less than approximately 45 MPH (72 km/h).

After the above conditions have finished and the necessary operating conditions are satisfied, the warning and assist functions will resume.

Condition B :

The assist function of the LDP system is not designed to work under the following conditions (warning is still functional):

- When the brake pedal is depressed.
- When the steering wheel is turned as far as necessary for the vehicle to change lanes.
- When the accelerator pedal is depressed while the brake control assist is provided.
- When the Intelligent Cruise Control (ICC) approach warning occurs.
- When the hazard warning flashers are operated.
- When driving on a curve at high speed.

After the above conditions have finished and the necessary operating conditions are satisfied, the LDP brake control assist function will resume.

Condition C :

Under the following conditions, a beep will sound and the LDP system will be canceled automatically. The LDP ON indicator light will blink in green, and the LDP system cannot be activated:

- When the VDC system (except TCS function) or ABS operates.
- When the VDC system is turned off.
- When the SNOW mode switch is turned on.

Action to take:

When the above conditions no longer exist, turn off the LDP system by pushing the LDP switch. Push the LDP switch again to turn the LDP system back on.

Temporary disabled status at high temperature :

If the vehicle is parked in direct sunlight under high temperature conditions (over approximately 104°F (40°C)) and then the LDP system is turned on, the LDP system may be deactivated automatically. The LDP ON indicator (green) will blink.

When the interior temperature is reduced, the system will resume operating automatically and the LDP ON indicator will stop blinking.

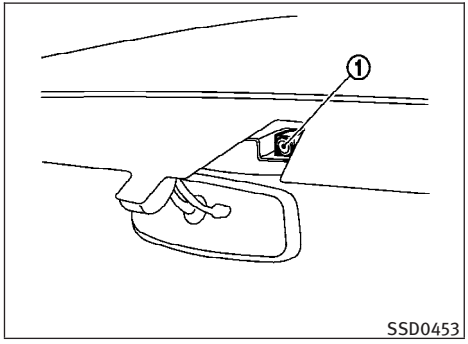

LANE CAMERA UNIT MAINTENANCE

The lane camera unit ① for the LDW/LDP system is located inside the map light cover. To keep the proper operation of the LDW/LDP systems and prevent a system malfunction, be sure to observe the following:

- Always keep the windshield clean.
- Do not attach a sticker (including transparent material) or install an accessory near the camera unit.
- Do not place reflective materials, such as white paper or a mirror, on the instrument panel. The reflection of sunlight may adversely affect the camera unit's capability of detecting the lane markers.
- Do not strike or damage the areas around the camera unit. Do not touch the camera lens or remove the screw located on the camera unit. If the camera unit is damaged due to an accident, contact an INFINITI retailer.

PRECAUTIONS ON CRUISE CONTROL

- If the cruise control system malfunctions, it will cancel automatically. The SET indicator on the dot matrix crystal display will then blink to warn the driver.
- If the engine coolant temperature becomes excessively high, the cruise control system will be canceled automatically.
- If the SET indicator blinks, turn the cruise control main switch off and have the system checked by your INFINITI retailer.
- The SET indicator may sometimes blink when the cruise control main switch is turned ON while pushing the RESUME/ACCELERATE, SET/COAST or CANCEL switch. To properly set the cruise control system, perform the steps below in the order indicated.

⚠ WARNING

Do not use the cruise control when driving under the following conditions:

- **when it is not possible to keep the vehicle at a set speed**
- **in heavy traffic or in traffic that varies in speed**
- **on winding or hilly roads**

- **on slippery roads (rain, snow, ice, etc.)**
- **in very windy areas**

Doing so could cause a loss of vehicle control and result in an accident.

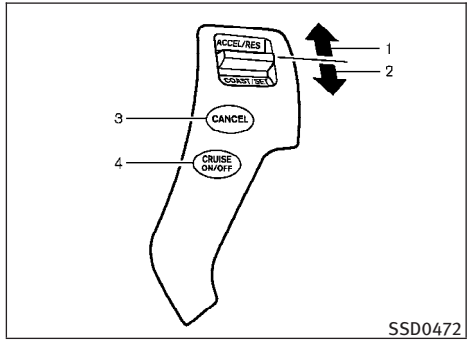

1. RESUME/ACCELERATE switch
2. SET/COAST switch
3. CANCEL switch
4. MAIN (ON·OFF) switch

CRUISE CONTROL OPERATIONS

The cruise control allows driving at a speed between 25 to 89 MPH (40 to 144 km/h) without keeping your foot on the accelerator pedal.

To turn on the cruise control, push the MAIN switch on. The CRUISE indicator light will come on.

To set cruising speed, accelerate the vehicle to the desired speed, push the SET/COAST switch and release it. (The CRUISE SET indicator will illuminate in the instrument panel.) Take your foot off the accelerator pedal. Your vehicle will maintain the set speed.

- **To pass another vehicle,** depress the accelerator pedal. When you release the pedal, the vehicle will return to the previously set speed.
- The vehicle may not maintain the set speed on winding or hilly roads. If this happens, drive without the cruise control.

To cancel the preset speed, use one of the following methods:

a) Push the CANCEL switch. The SET indicator light will turn off.

b) Tap the brake pedal. The SET indicator light will turn off.

c) Turn the MAIN switch off. Both the CRUISE and SET indicator lights will turn off.

- If you depress the brake pedal while pushing the RESUME/ACCELERATE or SET/COAST switch and reset at the cruising speed, the cruise control will disengage. Turn the MAIN switch off once and then turn it on again.
- The cruise control will automatically cancel if the vehicle slows more than 8 MPH (12 km/h) below the set speed.

- If you move the selector lever to the N (Neutral) position, the cruise control will be canceled.

To reset at a faster cruising speed, use one of the following methods:

- Depress the accelerator pedal. When the vehicle attains the desired speed, push and release the SET/COAST switch.
- Push and hold the RESUME/ACCELERATE switch. When the vehicle attains the desired speed, release the switch.
- Push, then quickly release the RESUME/ACCELERATE switch. Each time you do this, the set speed will increase by about 1 MPH (1.6 km/h).

To reset at a slower cruising speed, use one of the following methods:

- Lightly tap the brake pedal. When the vehicle attains the desired speed, push the SET/COAST switch and release it.
- Push and hold the SET/COAST switch. Release the switch when the vehicle slows down to the desired speed.
- Push, then quickly release the SET/COAST switch. Each time you do this, the set speed will decrease by about 1 MPH (1.6 km/h).

To resume the preset speed, push and release the RESUME/ACCELERATE switch. The vehicle will resume the last set cruising speed when the vehicle speed is over 25 MPH (40 km/h).

INTELLIGENT CRUISE CONTROL (ICC) SYSTEM (if so equipped)

The Intelligent Cruise Control (ICC) system automatically maintains a selected distance from the vehicle traveling in front of you according to that vehicle's speed (up to the set speed), or at the set speed when the road ahead is clear.

The ICC function can be set to one of two cruise control modes:

- Vehicle-to-vehicle distance control mode:

  For maintaining a selected distance between your vehicle and the vehicle in front of you up to the preset speed.
- Conventional (fixed speed) cruise control mode:

  For cruising at a preset speed.

⚠ WARNING

- **Always drive carefully and attentively when using either cruise control mode. Read and understand the Owner's Manual thoroughly before using the cruise control. To avoid serious injury or death, do not rely on the system to prevent accidents or to control the vehicle's speed in emergency situations. Do not use cruise control except in appropriate road and traffic conditions.**

- **In the conventional (fixed speed) cruise control mode, a warning chime will not sound to warn you if you are too close to the vehicle ahead. Pay special attention to the distance between your vehicle and the vehicle ahead of you or a collision could occur.**

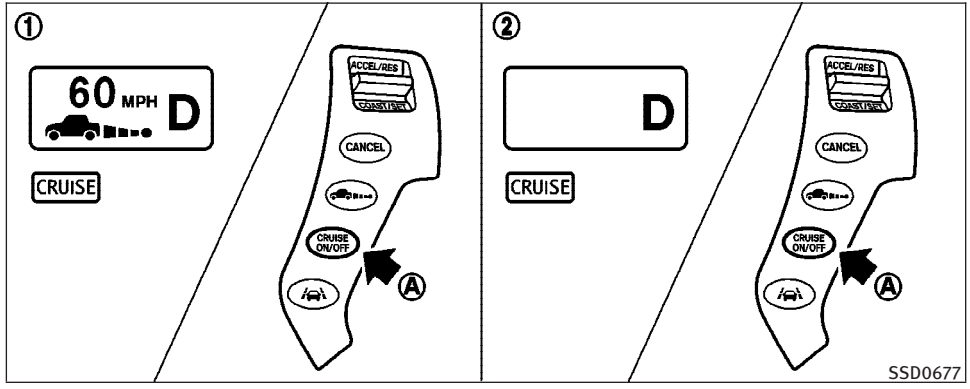

1. Vehicle-to-vehicle distance control mode
2. Conventional (fixed speed) cruise control mode

Push the MAIN switch Ⓐ to choose the cruise control mode between the vehicle-to-vehicle distance control mode ① and the conventional (fixed speed) cruise control mode ②.

Always confirm the setting in the Intelligent Cruise Control system display.

For the vehicle-to-vehicle distance control mode, see the following description. For the conventional (fixed speed) cruise control mode, see page 5-42.

SELECTING THE VEHICLE-TO-VEHICLE DISTANCE CONTROL MODE

To choose the vehicle-to-vehicle distance control mode ①, quickly push and release the MAIN switch Ⓐ.

Once a control mode is activated, it cannot be changed to the other cruise control mode. To change the mode, push the MAIN switch once to turn the system off. Then push the MAIN switch again to turn the system back on and select the desired cruise control mode.

VEHICLE-TO-VEHICLE DISTANCE CONTROL MODE

In the vehicle-to-vehicle distance control mode, the Intelligent Cruise Control (ICC) system automatically maintains a selected distance from the vehicle traveling in front of you according to that vehicle's speed (up to the set speed), or at the set speed when the road ahead is clear.

With ICC, the driver can maintain the same speed as other vehicles without the constant need to adjust the set speed as you would with a normal cruise control system.

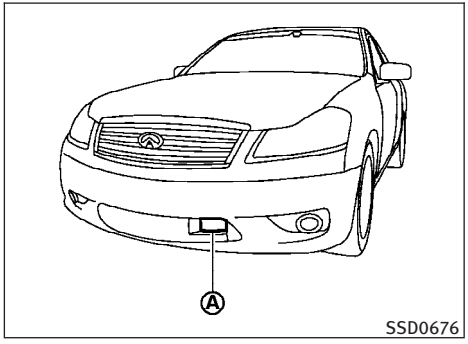

Type A

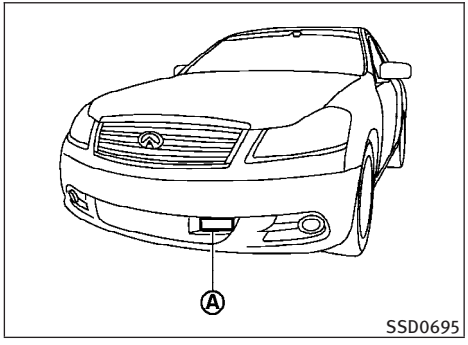

Type B

PRECAUTIONS ON VEHICLE-TO-VEHICLE DISTANCE CONTROL MODE

The system is intended to enhance the operation of the vehicle when following a vehicle traveling in the same lane and direction.

If the distance sensor Ⓐ detects a slower moving vehicle ahead, the system will reduce the vehicle speed so that your vehicle follows the vehicle in front at the selected distance.

The system automatically controls the throttle and applies the brakes (up to 25% of vehicle braking power) if necessary.

The detection range of the sensor is approximately 390 ft (120 m) ahead.

⚠ WARNING

- **This system is only an aid to assist the driver and is not a collision warning or avoidance device. It is the driver's responsibility to stay alert, drive safely and be in control of the vehicle at all times.**
- **The system is primarily intended for use on straight, dry, open roads with light traffic. It is not advisable to use the system in city traffic or congested areas.**

- **This system will not adapt automatically to road conditions. This system should be used in evenly flowing traffic. Do not use the system on roads with sharp curves, or on icy roads, in heavy rain or in fog.**

The distance sensor will not detect under most conditions:

- Stationary and slow moving vehicles
- Pedestrians or objects in the roadway
- Oncoming vehicles in the same lane
- Motorcycles traveling offset in the travel lane

This system will not automatically brake the vehicle to a stop.

⚠ WARNING

- **As there is a performance limit to the distance control function, never rely solely on the Intelligent Cruise Control system. This system does not correct careless, inattentive or absent-minded driving, or overcome poor visibility in rain, fog, or other bad weather. Decelerate the vehicle speed by depressing the brake pedal, depending on the distance to the vehicle ahead and the surrounding circumstances in order to maintain a safe distance between vehicles.**
- **Although the brake operation is controlled by the system, the system does not automatically stop the vehicle. If the vehicle speed falls below approximately 20 MPH (32 km/h), the Intelligent Cruise Control system is automatically canceled and a warning chime sounds. (The brake control is also canceled.)**
- **The system may not detect the vehicle in front of you in certain road or weather conditions. To avoid accidents, never use the Intelligent Cruise Control system under the following conditions:**
  - **On roads where the traffic is heavy or there are sharp curves**
  - **On slippery road surfaces such as on ice or snow, etc.**
  - **During bad weather (rain, fog, snow, etc.)**
  - **When the windshield wiper is operated at the low speed (LO) or high speed (HI) position, the Intelligent Cruise Control system is automatically canceled.**
  - **When strong light (for example, at sunrise or sunset) is directly shining on the front of the vehicle**
  - **When rain, snow or dirt adhere to the system sensor**
  - **On steep downhill roads (the vehicle may go beyond the set vehicle speed and frequent braking may result in overheating the brakes)**
  - **On repeated uphill and downhill roads**
  - **When traffic conditions make it difficult to keep a proper distance between vehicles because of frequent acceleration or deceleration**
- **Do not use the Intelligent Cruise Control system if you are towing a trailer. The system may not detect a vehicle ahead.**

- **In some road or traffic conditions, a vehicle or object can unexpectedly come into the sensor detection zone and cause automatic braking. You may need to control the distance from other vehicles using the accelerator pedal. Always stay alert and avoid using the ICC system when it is not recommended in this section.**

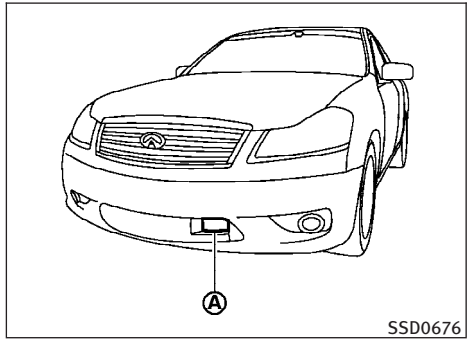

Type A

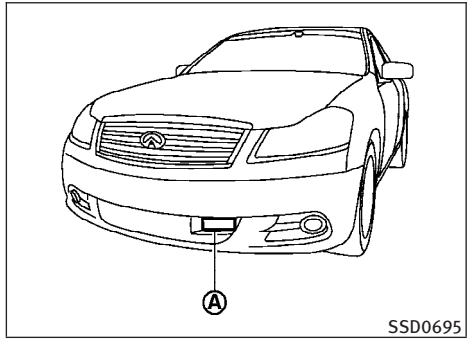

Type B

VEHICLE-TO-VEHICLE DISTANCE CONTROL MODE OPERATION

Always pay attention to the operation of the vehicle and be ready to manually control the proper following distance. The vehicle-to-vehicle distance control mode of the Intelligent Cruise Control (ICC) system may not be able to maintain the selected distance between vehicles (following distance) or selected vehicle speed under some circumstances.

The vehicle-to-vehicle distance control mode uses a sensor Ⓐ located on the front of the vehicle to detect vehicles traveling ahead. The sensor generally detects the signals returned from the reflectors on a vehicle ahead. Therefore, if the sensor cannot detect the reflector on the vehicle ahead, the ICC system may not maintain the selected distance.

The following are some conditions in which the sensor cannot detect the signals:

- When the reflector of the vehicle ahead is positioned high on the vehicle (trailer, etc.)
- When the reflector on the vehicle ahead is missing, damaged or covered
- When the reflector of the vehicle ahead is covered with dirt, snow and road spray

- When the snow or road spray from traveling vehicles reduces the sensor's visibility
- When dense exhaust or other smoke (black smoke) from vehicles reduces the sensor's visibility
- When excessively heavy baggage is loaded in the rear seat or the trunk of your vehicle

The ICC system is designed to automatically check the sensor's operation within the limitations of the system. When the sensor is covered with dirt or obstructs, the system will automatically be canceled. If the sensor is covered with ice, a transparent or translucent vinyl bag, etc., the ICC system may not detect them. In these instances, the vehicle-to-vehicle distance control mode may not cancel and may not be able to maintain the selected following distance from the vehicle ahead. Be sure to check and clean the sensor regularly.

The vehicle-to-vehicle distance control mode is designed to maintain a selected distance and reduce the speed to match the slower vehicle ahead; the system will decelerate the vehicle as necessary. However, the ICC system can only apply up to 25% of the vehicles total braking power. This system should only be used when traffic conditions allow vehicle speeds to remain fairly constant or when vehicle speeds change gradually. If a vehicle moves into the traveling lane ahead or if a vehicle traveling ahead rapidly decelerates, the distance between vehicles may become closer because the ICC system cannot decelerate the vehicle quickly enough. If this occurs, the ICC system will sound a warning chime and blink the system display to notify the driver to take necessary action.

The system will cancel and a warning chime will sound if the speed falls below approximately 20 MPH (32 km/h). The system will also disengage below the 20 MPH (32 km/h) cut-off speed or over the maximum set speed.

See "Approach warning" later in this section.

The following items are controlled in the vehicle-to-vehicle distance control mode:

- When there are no vehicles traveling ahead, the vehicle-to-vehicle distance control mode maintains the speed set by the driver. The set speed range is between approximately 25 and 90 MPH (40 and 144 km/h).
- When there is a vehicle traveling ahead, the vehicle-to-vehicle distance control mode adjusts the speed to maintain the distance, selected by driver, from the vehicle ahead. The adjusting speed range is between approximately 20 MPH (32 km/h) and up to the set speed.
- When the vehicle traveling ahead has moved out from its lane of travel, the vehicle-to-vehicle distance control mode accelerates and maintains vehicle speed up to the set speed.

The ICC system does not control vehicle speed or warn you when you approach stationary and slow moving vehicles. You must pay attention to vehicle operation to maintain proper distance from vehicles ahead when approaching toll gates or traffic congestion.

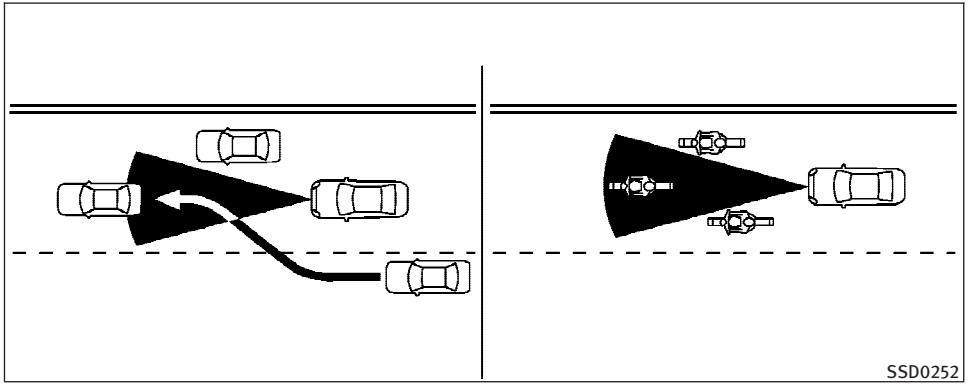

The detection zone of the ICC sensor is limited. A vehicle ahead must be in the detection zone for the vehicle-to-vehicle distance detection mode to maintain the selected distance from the vehicle ahead.

A vehicle ahead may move outside of the detection zone due to its position within the same lane of travel. Motorcycles may not be detected in the same lane ahead if they are traveling offset from the centerline of the lane. A vehicle that is entering the lane ahead may not be detected until the vehicle has completely moved into the lane. **If this occurs, the ICC system may warn you by blinking the system indicator and sounding the chime. The driver may have to manually control the proper distance away from vehicle traveling ahead.**

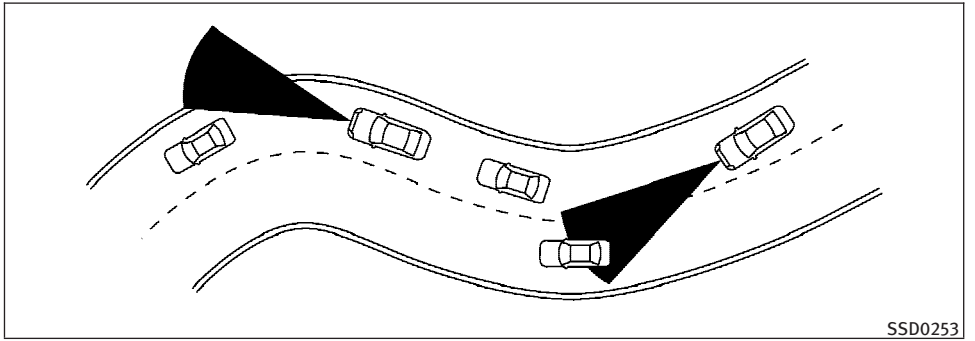

When driving on some roads, such as winding, hilly, curved, narrow roads, or roads which are under construction, the ICC sensor may detect vehicles in a different lane, or may temporarily not detect a vehicle traveling ahead. This may cause the ICC system to decelerate or accelerate the vehicle.

The detection of vehicles may also be affected by vehicle operation (steering maneuver or traveling position in the lane, etc.) or vehicle condition. **If this occurs, the ICC system may warn you by blinking the system indicator and sounding the chime unexpectedly. You will have to manually control the proper distance away from the vehicle traveling ahead.**

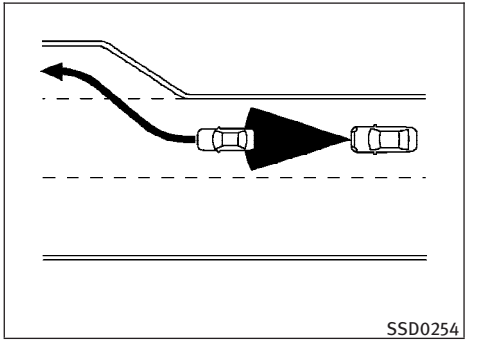

When driving on the freeway at a set speed and approaching a slower traveling vehicle ahead, the ICC system will adjust the speed to maintain the distance, selected by the driver, from the vehicle ahead. If the vehicle ahead changes lanes or exits the freeway, the ICC system will accelerate and maintain the speed up to the set speed. Pay attention to the driving operation to maintain control of the vehicle as it accelerates to the set speed.

The vehicle may not maintain the set speed on winding or hilly roads. If this occurs, you will have to manually control the vehicle speed.

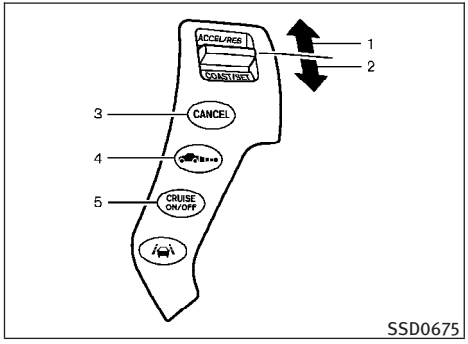

Intelligent cruise control switch

The system is operated by a MAIN switch and four control switches, all mounted on the steering wheel.

1) RESUME/ACCELERATE switch:
   Resumes set speed or increases speed incrementally.
2) SET/COAST switch:
   Sets desired cruise speed, reduces speed incrementally.
3) CANCEL switch:
   Deactivates the system without erasing the set speed.
4) DISTANCE switch:
   Changes the vehicle's following distance:
   - Long
   - Middle
   - Short
5) MAIN switch:
   Master switch to activate the system

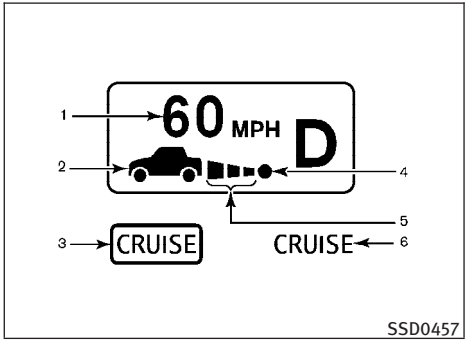

Intelligent cruise control system display and indicators

The display is located under the tachometer.

1) Set vehicle speed indicator:
   Indicates the set vehicle speed.
   For Canadian models, the speed is displayed in km/h.
2) Vehicle ahead detection indicator:
   Indicates whether it detects a vehicle in front of you.
3) MAIN switch indicator light (green):
   Indicates that the MAIN switch is ON.
4) Indicates your vehicle

5) Set distance indicator:
   Displays the selected distance between vehicles set with the DISTANCE switch.
6) Intelligent Cruise Control system warning light (orange):
   The light comes on if there is a malfunction in the ICC system.

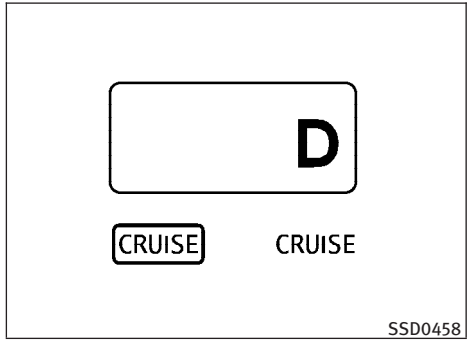

When the ignition switch is pushed to the ON position, the indicators come on as illustrated to check for a burned-out bulb, and it turns off when the engine is started.

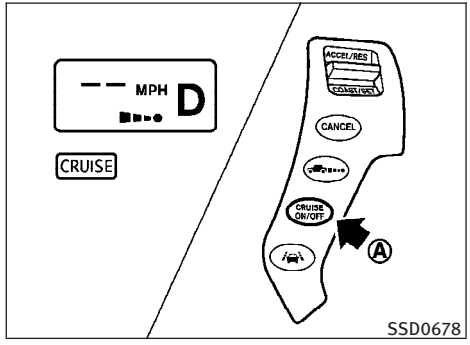

Operating vehicle-to-vehicle distance control mode

To turn on the cruise control, quickly push and release the MAIN switch Ⓐ on. The cruise indicator light, set distance indicator and set vehicle speed indicator come on and in a standby state for setting.

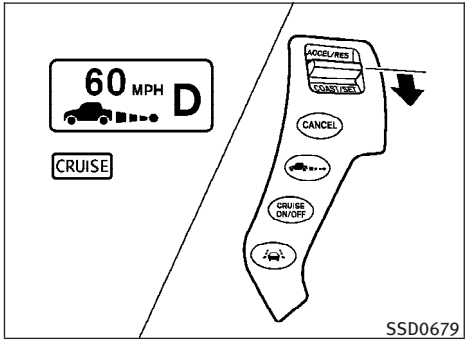

To set cruising speed, accelerate your vehicle to the desired speed, push the SET/COAST switch and release it. (Vehicle ahead detection indicator, set distance indicator and set vehicle speed indicator come on.) Take your foot off the accelerator pedal. Your vehicle will maintain the set speed.

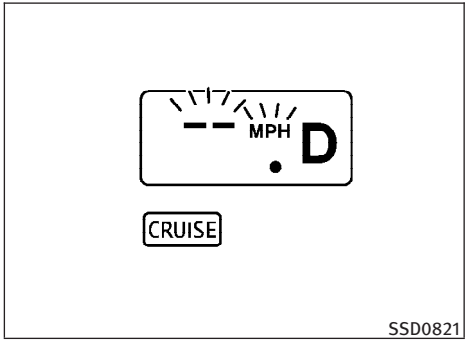

When the SET/COAST switch is pushed under the following conditions, the system cannot be set and the ICC indicators will blink for approximately 2 seconds:

- When traveling below 25 MPH (40 km/h) and the vehicle ahead is not detected
- When the selector lever is not in the D, DS or Manual mode
- When the windshield wipers are operating at low (LO) or high speed (HI). If the vehicle is equipped with a rain-sensing auto wiper, the system may cancel when the wipers are operating at the intermittent (INT) speed.
- When the brakes are operated by the driver

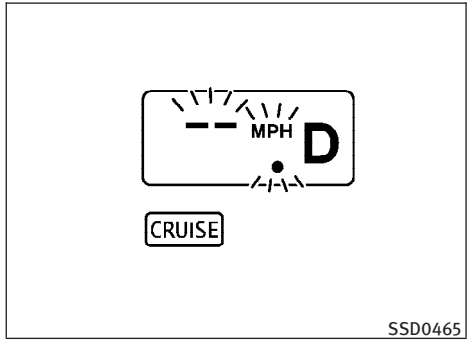

When the SET/COAST switch is pushed under the following conditions, the system cannot be set.

A warning chime will sound and the ICC indicators will blink.

- When the SNOW mode switch is ON (To use the ICC system, turn off the SNOW mode switch, push the MAIN switch to turn off the ICC and reset the ICC switch by pressing the MAIN switch again.)

  For details about the SNOW mode switch, see “SNOW MODE SWITCH” in the “2. Instruments and controls” section.

- When the VDC system is off (To use the ICC system, turn on the VDC system. Push the MAIN switch to turn off the ICC system and reset the ICC switch by pushing the MAIN switch again.)

  For details about the VDC system, see “VEHICLE DYNAMIC CONTROL (VDC) SYSTEM” later in this section.
- When ABS or VDC (including the traction control system) is operating
- When driving into a strong light (i.e., sunlight)
- When a wheel is slipping (To use the ICC system, make sure the wheels are no longer slipping. Push the MAIN switch to turn off the ICC, and reset the ICC system by pushing the MAIN switch again.)

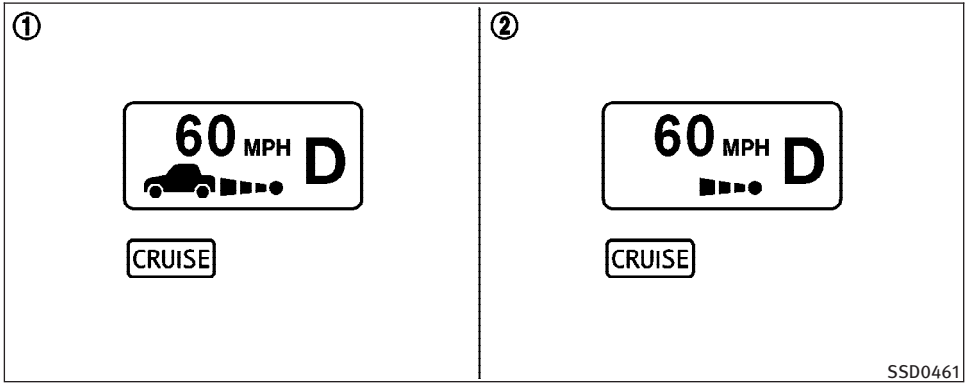

1. System set display with vehicle ahead
2. System set display without vehicle ahead

System operation

⚠ WARNING

Normally when controlling the distance to a vehicle ahead, this system automatically accelerates or decelerates your vehicle according to the speed of the vehicle ahead. Depress the accelerator to properly accelerate your vehicle when acceleration is required for a lane change. Depress the brake pedal when deceleration is required to maintain a safe distance to the vehicle ahead due to its sudden braking or if a vehicle cuts in. Always stay alert when using the ICC system.

The driver sets the desired vehicle speed based on the road conditions. The ICC system maintains the set vehicle speed, similar to standard cruise control, as long as no vehicle is detected in the lane ahead.

The ICC system displays the set speed.

Vehicle detected ahead :

When a vehicle is detected in the lane ahead, the ICC system decelerates the vehicle by controlling the throttle and applying the brakes to match the speed of a slower vehicle ahead. The system then controls the vehicle speed based on the speed of the vehicle ahead to maintain the driver selected distance.

The stop lights of the vehicle come on stop lights when braking is performed by the ICC system.

When the brake operates, a noise may be heard. This is not a malfunction.

When a vehicle ahead is detected, the vehicle ahead detection indicator comes on. The ICC system will also display the set speed and selected distance.

Vehicle ahead not detected :

When a vehicle is no longer detected ahead, the ICC system gradually accelerates your vehicle to resume the previously set vehicle speed. The ICC system then maintains the set speed.

When a vehicle is no longer detected the vehicle ahead detection indicator turns off.

If a vehicle ahead appears during acceleration to the set vehicle speed or any time the ICC system is in operation, the system controls the distance to that vehicle.

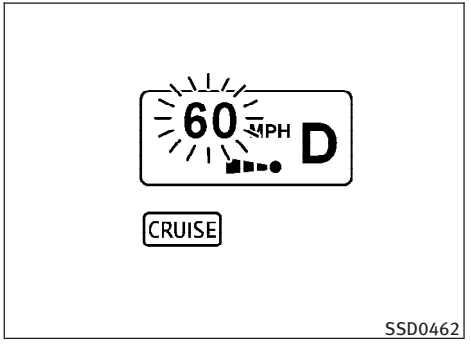

When passing another vehicle, the set speed indicator will flash when the vehicle speed exceeds the set speed. The vehicle detect indicator will turn off when the area ahead of the vehicle is open. When the pedal is released, the vehicle will return to the previously set speed.

Even though your vehicle speed is set in the ICC system, you can depress the accelerator pedal when it is necessary to accelerate your vehicle rapidly.

How to change the set vehicle speed

To cancel the preset speed, use any of these methods:

- Push the CANCEL switch. The set vehicle speed indicator will go out.
- Tap the brake pedal. The set vehicle speed indicator will go out.
- Turn the MAIN switch off. Both the MAIN switch indicator and set vehicle speed indicator will go out.

To reset at a faster cruising speed, use one of the following methods:

- Depress the accelerator pedal. When the vehicle attains the desired speed, push and release the SET/COAST switch.
- Push and hold the RESUME/ACCELERATE switch. The set vehicle speed will increase by approximately 5 MPH (5 km/h for Canada).
- Push, then quickly release the RESUME/ACCELERATE switch. Each time you do this, the set speed will increase by approximately 1 MPH (1 km/h for Canada).

To reset at a slower cruising speed, use one of the following methods:

- Lightly tap the brake pedal. When the vehicle attains the desired speed, push the SET/COAST switch and release it.
- Push and hold the SET/COAST switch. The set vehicle speed will decrease by approximately 5 MPH (5 km/h for Canada).
- Push, then quickly release the SET/COAST switch. Each time you do this, the set speed will decrease by approximately 1 MPH (1 km/h for Canada).

To resume the preset speed, push and release the RESUME/ACCELERATE switch. The vehicle will resume the last set cruising speed when the vehicle speed is over 25 MPH (40 km/h).

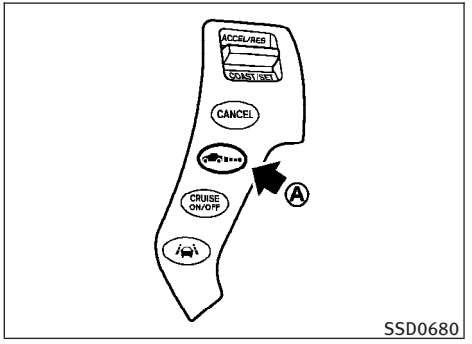

SSD0680

How to change the set distance to the vehicle ahead

The distance to the vehicle ahead can be selected at any time depending on the traffic conditions.

Each time the DISTANCE switch Ⓐ is pushed, the set distance will change to long, middle, short and back to long again in that sequence.

Distance	Display	Approximate distance at 60 MPH (100 km/h) [ft (m)]
Long	60 MPH D CRUISE	195 (60)
Middle	60 MPH D CRUISE	130 (40)
Short	60 MPH D CRUISE	90 (30)

SSD0464

- The distance to the vehicle ahead will change according to the vehicle speed. The higher the vehicle speed, the longer the distance.
- If the engine is stopped, the set distance becomes “long”. (Each time the engine is started, the initial setting becomes “long”.)

Approach warning

If your vehicle comes closer to the vehicle ahead due to rapid deceleration of that vehicle or if another vehicle cuts in, the system warns the driver with the chime and ICC system display. Decelerate by depressing the brake pedal to maintain a safe vehicle distance if:

- The chime sounds.
- The vehicle ahead detection and set distance indicator blink.

The warning chime may not sound in some cases when there is a short distance between vehicles. Some examples are:

- When the vehicles are traveling at the same speed and the distance between vehicles is not changing
- When the vehicle ahead is traveling faster and the distance between vehicles is increasing
- When a vehicle cuts in near your vehicle

The warning chime will not sound in the following cases:

- When your vehicle approaches vehicles that are parked or moving slowly.
- When the accelerator pedal is depressed, overriding the system.

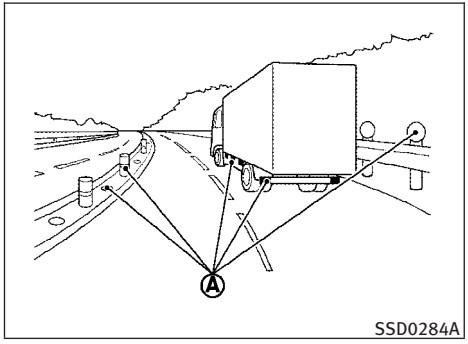

NOTE:

The approach warning chime may sound and the system display may blink when the ICC sensor detects some reflectors Ⓐ which are fitted on vehicles in other lanes or on the side of the road. This may cause the ICC system to decelerate or accelerate the vehicle. The ICC sensor may detect these reflectors when the vehicle is driven on winding roads, hilly roads or when entering or exiting a curve. The ICC sensor may also detect reflectors on narrow roads or in road construction zones. In these cases you will have to manually control the proper distance ahead of your vehicle.

Also, the sensor sensitivity can be affected by vehicle operation (steering maneuver or driving position in the lane) or traffic or vehicle condition (for example, if a vehicle is being driven with some damage).

Automatic cancellation

A chime sounds under the following conditions and the control is automatically canceled.

- When the vehicle speed falls below approximately 20 MPH (32 km/h)
- When the selector lever is not in the D, DS or Manual mode
- When the windshield wipers are operating at low (LO) or high speed (HI). If the vehicle is equipped with a rain sensing auto-wiper, the system may cancel when the wipers are set to intermittent (INT).
- When the SNOW mode switch is turned on
- When the VDC is turned off
- When the VDC operates
- When the engine coolant temperature becomes excessively high

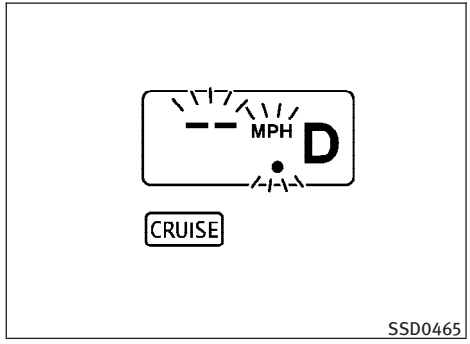

Warning light and display

Condition A :

The chime sounds and the Intelligent Cruise Control system is canceled automatically in the conditions described below. Part of the system display will come on or blink, making it impossible to set.

- When the VDC is turned off
- When the ABS or VDC (including the traction control system) operates
- When a tire slips
- When the SNOW mode switch is turned on
- When strong light (sunlight, etc.) is directly shining on the front of the vehicle

Action to take :

When the conditions listed above are no longer present, turn the system off using the Intelligent Cruise Control MAIN Switch. Turn the ICC system back on to use the system.

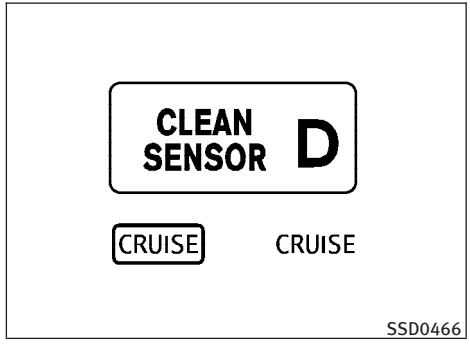

Condition B :

When the sensor window is dirty, making it impossible to detect a vehicle ahead, the ICC system is automatically canceled.

The chime sounds and the ICC system warning light (orange) will come on and the “CLEAN SENSOR” indicator will appear.

Action to take :

If the warning light comes on, park the vehicle in a safe place, turn the engine off. Clean the sensor window with a soft cloth and then perform the settings again.

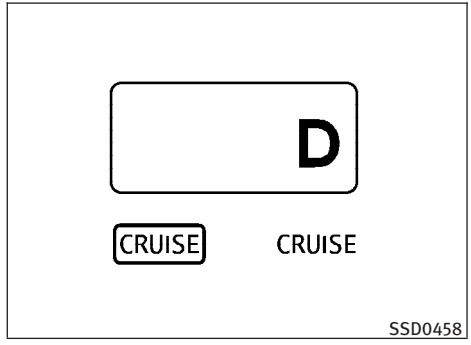

Condition C :

When the ICC system is not operating properly, the chime sounds and the ICC system warning light (orange) will come on.

Action to take :

If the warning light comes on, park the vehicle in a safe place. Turn the engine off, restart the engine, resume driving and set the ICC system again.

If it is not possible to set the system or the indicator stays on, it may indicate that the ICC system is malfunctioning. Although the vehicle is still driveable under normal conditions, have the vehicle checked at an INFINITI retailer.

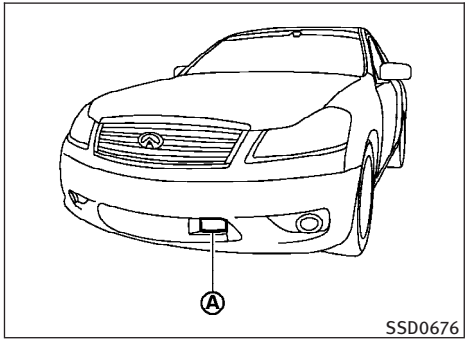

Type A

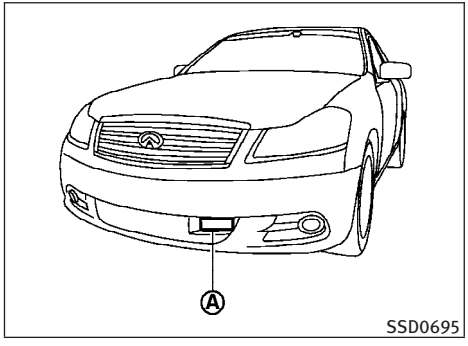

Type B

Sensor maintenance

The sensor for the ICC system Ⓐ is located below the front bumper.

To keep the ICC system operating properly, be sure to observe the following:

- Always keep the sensor clean. Wipe with a soft cloth carefully so as not to damage the sensor.
- Do not strike or damage the areas around the sensor. Do not touch or remove the screw located on the sensor. Doing so could cause failure or malfunction. If the sensor is damaged due to an accident, contact an INFINITI retailer.
- Do not attach a sticker (including transparent material) or install an accessory near the sensor. This could cause failure or malfunction.

CONVENTIONAL (FIXED SPEED) CRUISE CONTROL MODE

This mode allows driving at a speed between 25 to 89 MPH (40 to 144 km/h) without keeping your foot on the accelerator pedal.

⚠ WARNING

- **In the conventional (fixed speed) cruise control mode, a warning chime does not sound to warn you if you are too close to the vehicle ahead, as neither the presence of the vehicle ahead nor the vehicle-to-vehicle distance is detected.**
- **Pay special attention to the distance between your vehicle and the vehicle ahead of you or a collision could occur.**
- **Always confirm the setting in the Intelligent Cruise Control system display.**
- **Do not use the conventional (fixed speed) cruise control mode when driving under the following conditions:**
  - **when it is not possible to keep the vehicle at a set speed**
  - **in heavy traffic or in traffic that varies in speed**
  - **on winding or hilly roads**
  - **on slippery roads (rain, snow, ice, etc.)**
  - **in very windy areas**
- **Doing so could cause a loss of vehicle control and result in an accident.**

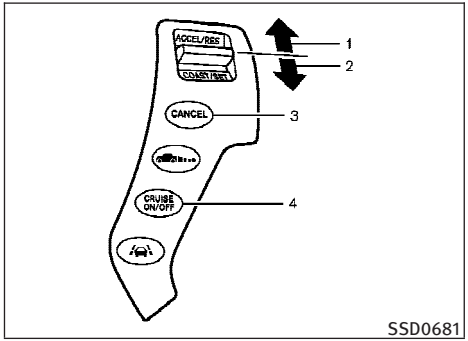

Conventional (fixed speed) cruise control switch

1) RESUME/ACCELERATE switch:

   Resumes set speed or increases speed incrementally.

2) SET/COAST switch:

   Sets the desired cruise speed, reduces speed incrementally.

3) CANCEL switch:

   Deactivates the system without erasing the set speed.

4) MAIN switch:

   Master switch to activate the system.

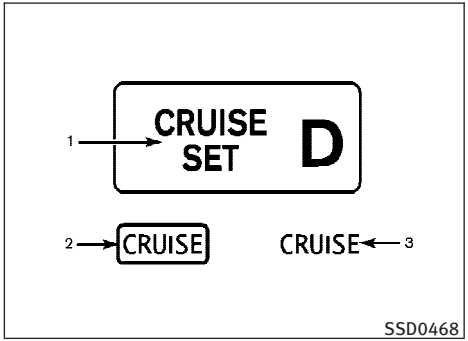

Conventional (fixed speed) cruise control mode display and indicators

The display is located under the tachometer.

1) Cruise set switch indicator:

   Displays while the vehicle speed is controlled by the conventional (fixed speed) cruise control mode of the ICC system.

2) MAIN switch indicator light:

   Indicates that the MAIN switch is ON.

3) Cruise control system warning light:

   Comes on if there is a malfunction in the cruise control system.

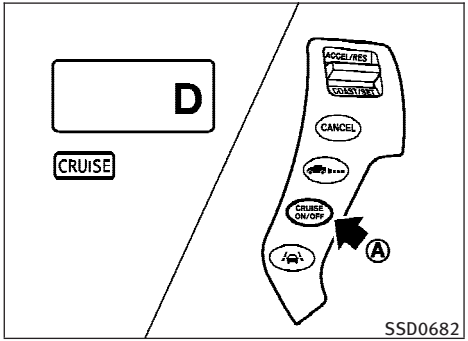

Operating conventional (fixed speed) cruise control mode

To turn on the conventional (fixed speed) cruise control mode, push and hold the MAIN switch Ⓐ for longer than about 1.5 seconds.

When pushing the MAIN switch on, the Intelligent Cruise Control system display and the CRUISE indicator light (green) in the instrument cluster illuminate. After you hold the MAIN switch on for longer than about 1.5 seconds, the Intelligent Cruise Control system display turns off. The CRUISE indicator light stays lit. You can now set your desired cruising speed. Pushing the MAIN switch again will turn the system completely off.

When the ignition switch is pushed to the LOCK position, the system is also automatically turned off. To use the Intelligent Cruise Control again, quickly push and release the MAIN switch (vehicle-to-vehicle distance control mode) or push and hold it (conventional cruise control mode) again to turn it on.

⚠ CAUTION

To avoid accidentally engaging cruise control, make sure to turn the MAIN switch off when not using the Intelligent Cruise Control system.

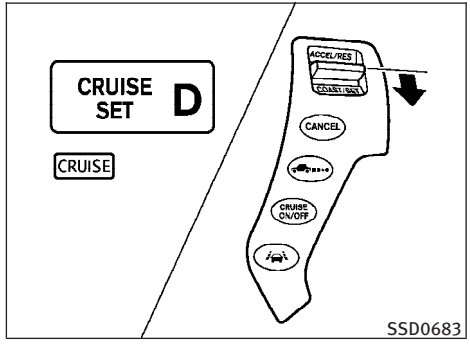

To set cruising speed, accelerate your vehicle to the desired speed, push the SET/COAST switch and release it. (The CRUISE SET indicator will come on in the display.) Take your foot off the accelerator pedal. Your vehicle will maintain the set speed.

- **To pass another vehicle,** depress the accelerator pedal. When you release the pedal, the vehicle will return to the previously set speed.
- The vehicle may not maintain the set speed when going up or down steep hills. If this happens, manually maintain vehicle speed.

To cancel the preset speed, use one of the following methods:

a) Push the CANCEL button. The CRUISE SET indicator will turn off.

b) Tap the brake pedal. The CRUISE SET indicator will turn off.

c) Turn the MAIN switch off. Both the CRUISE indicator light and CRUISE SET indicator will turn off.

To reset at a faster cruising speed, use one of the following three methods:

a) Depress the accelerator pedal. When the vehicle attains the desired speed, push and release the SET/COAST switch.

b) Push and hold the RESUME/ACCELERATE set switch. When the vehicle attains the desired speed, release the switch.

c) Push, then quickly release the RESUME/ACCELERATE switch. Each time you do this, the set speed will increase by about 1 MPH (1.6 km/h).

To reset at a slower cruising speed, use one of the following three methods:

a) Lightly tap the brake pedal. When the vehicle attains the desired speed, push the SET/COAST switch and release it.

b) Push and hold the SET/COAST switch. Release the switch when the vehicle slows down to the desired speed.

c) Push, then quickly release the SET/COAST switch. Each time you do this, the set speed will decrease by about 1 MPH (1.6 km/h).

To resume the preset speed, push and release the RESUME/ACCELERATE switch. The vehicle will resume the last set cruising speed when the vehicle speed is over 25 MPH (40 km/h).

Automatic cancellation

A chime sounds under the following conditions and the control is automatically canceled.

- When the vehicle slows down more than 8 MPH (13 km/h) below the set speed
- When the vehicle speed falls below approximately 20 MPH (32 km/h)
- When the selector lever is not in the D, DS or Manual mode
- When the VDC (including the traction control system) operates
- When a wheel slips

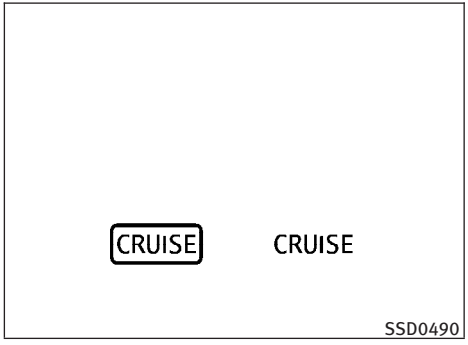

Warning light

When the system is not operating properly, the chime sounds and the system warning light (orange) will come on.

Action to take :

If the warning light comes on, park the vehicle in a safe place. Turn the engine off, restart the engine, resume driving and then perform the setting again.

If it is not possible to set or the indicator stays on, it may indicate that the system is malfunctioning. Although the vehicle is still driveable under normal conditions, have the vehicle checked at an INFINITI retailer.

PREVIEW FUNCTION (for Intelligent Cruise Control system equipped models)

The ICC system with the preview function identifies the need to apply emergency braking by sensing the vehicle ahead in the same lane and the distance to the vehicle ahead and relative speed from it, it applies the brake pre-pressure before the driver depresses the brake pedal and helps improve brake response by reducing pedal free play.

For more details, see “BRAKE ASSIST” later in this section.

BREAK-IN SCHEDULE

⚠ CAUTION

During the first 1,200 miles (2,000 km), follow these recommendations to obtain maximum engine performance and ensure the future reliability and economy of your new vehicle. Failure to follow these recommendations may result in shortened engine life and reduced engine performance.

- Avoid driving for long periods at constant speed, either fast or slow. Do not run the engine over 4,000 rpm.
- Do not accelerate at full throttle in any gear.
- Avoid quick starts.
- Avoid hard braking as much as possible.

INCREASING FUEL ECONOMY

- Accelerate slowly and smoothly. Maintain cruising speeds with a constant accelerator position.
- Drive at moderate speeds on the highway. Driving at high speed lowers fuel economy.
- Avoid unnecessary stopping and braking. Keep a safe distance behind other vehicles.
- Select a gear range suitable to road conditions.
- Avoid unnecessary engine idling.
- Keep your engine tuned up.
- Follow the recommended periodic maintenance schedule.
- Keep the tires inflated to the correct pressure. Low tire pressure increases tire wear and lowers fuel economy.
- Keep the wheels in correct alignment. Improper alignment increases tire wear and lowers fuel economy.
- Climate control operation lowers fuel economy. Use the air conditioner only when necessary.
- When cruising at highway speeds, it is more economical to use the air conditioner and leave the windows closed to reduce drag.
- Use the recommended viscosity engine oil. (See “ENGINE OIL AND OIL FILTER RECOMMENDATION” in the “9. Technical and consumer information” section.)

⚠ WARNING

- **For AWD equipped vehicles, do not attempt to raise two wheels off the ground and shift the transmission to any drive or reverse position with the engine running. Doing so may result in drivetrain damage or unexpected vehicle movement which could result in serious vehicle damage or personal injury.**
- **Do not attempt to test an AWD equipped vehicle on a 2-wheel dynamometer (such as the dynamometers used by some states for emissions testing) or similar equipment even if the other two wheels are raised off the ground. Make sure that you inform the test facility personnel that your vehicle is equipped with AWD before it is placed on a dynamometer. Using the wrong test equipment may result in drivetrain damage or unexpected vehicle movement which could result in serious vehicle damage or personal injury.**

Your vehicle is equipped with full-time All-Wheel Drive (AWD).

Switching the driving mode is not necessary.

Warning light	Comes on or blinks when
AWD Comes on	There is a malfunction in the All-Wheel Drive (AWD) system.
AWD Blinks rapidly	The powertrain oil temperature rises extremely.
AWD Blinks slowly	The difference in wheel rotation is large.

SSD0336B

The AWD warning light is located in the meter.

The AWD warning light comes on when the ignition switch is pushed to the ON position. It turns off soon after the engine is started.

If any malfunction occurs in the AWD system while the engine is running, the warning light will come on.

The warning light may blink rapidly (about twice per second) while trying to free a stuck vehicle due to high powertrain oil temperature. The driving mode may change to two-wheel drive. If the warning light blinks rapidly during operation, stop the vehicle with the engine idling in a safe place immediately. Then if the light turns off after a while, you can continue driving.

A large difference between the diameters of front and rear wheels will make the warning light blink slowly (about once per two seconds). Pull off the road in a safe area, and idle the engine. Check that all tire sizes are the same, tire pressure is correct and tires are not worn.

⚠ CAUTION

- **If the warning light remains on after the above operation, have your vehicle checked by an INFINITI retailer as soon as possible.**
- **If the warning light comes on while driving there may be a malfunction in the AWD system. Reduce the vehicle speed and have your vehicle checked by an INFINITI retailer as soon as possible.**

- **The powertrain may be damaged if you continue driving with the warning light blinking rapidly.**

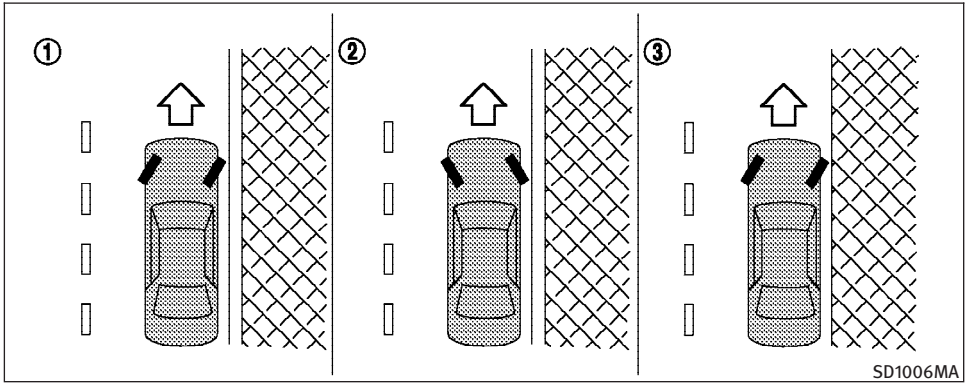

⚠ WARNING

- **Do not stop or park the vehicle over flammable materials such as dry grass, waste paper or rags. They may ignite and cause a fire.**
- **Never leave the engine running while the vehicle is unattended.**
- **Do not leave children unattended inside the vehicle. They could unknowingly activate switches or controls. Unattended children could become involved in serious accidents.**

- **Safe parking procedures require that both the parking brake be applied and the transmission placed into P (Park). Failure to do so could cause the vehicle to move unexpectedly or roll away and result in an accident.**
- **Make sure the automatic transmission selector lever has been pushed as far forward as it can go and cannot be moved without depressing the foot brake pedal.**

1. Firmly apply the parking brake.
2. Move the selector lever to the P (Park) position.

3. To help prevent the vehicle from rolling into the street when parked on a sloping drive way, it is a good practice to turn the wheels as illustrated.
   - HEADED DOWNHILL WITH CURB: ①

     Turn the wheels into the curb and move the vehicle forward until the curb side wheel gently touches the curb.
   - HEADED UPHILL WITH CURB: ②

     Turn the wheels away from the curb and move the vehicle back until the curb side wheel gently touches the curb.
   - HEADED UPHILL OR DOWNHILL, NO CURB: ③

     Turn the wheels toward the side of the road so the vehicle will move away from the center of the road if it moves.
4. Push the ignition switch to the LOCK position.

POWER STEERING

⚠ WARNING

If the engine is not running or is turned off while driving, the power assist for the steering will not work. Steering will be harder to operate.

The power assisted steering uses a hydraulic pump, driven by the engine, to assist steering.

If the engine stops or the drive belt breaks, you will still have control of the vehicle. However, much greater steering effort is needed, especially in sharp turns and at low speeds.

BRAKE SYSTEM

BRAKING PRECAUTIONS

The brake system has two separate hydraulic circuits. If one circuit malfunctions, you will still have braking at two wheels.

You may feel a small click and hear a sound when the brake pedal is fully depressed slowly. This is not a malfunction and indicates that the brake assist mechanism is operating properly.

Vacuum assisted brakes

The brake booster aids braking by using engine vacuum. If the engine stops, you can stop the vehicle by depressing the brake pedal. However, greater foot pressure on the brake pedal will be required to stop the vehicle and the stopping distance will be longer.

Wet brakes

When the vehicle is washed or driven through water, the brakes may get wet. As a result, your braking distance will be longer and the vehicle may pull to one side during braking.

To dry brakes, drive the vehicle at a safe speed while lightly tapping the brake pedal to heat-up the brakes. Do this until the brakes return to normal. Avoid driving the vehicle at high speeds until the brakes function correctly.

Using the brakes

Avoid resting your foot on the brake pedal while driving. This will cause overheating of the brakes, wearing out the brake and pads faster and reduce gas mileage.

To help reduce brake wear and to prevent the brakes from overheating, reduce speed and downshift to a lower gear before going down a slope or long grade. Overheated brakes may reduce braking performance and could result in loss of vehicle control.

⚠ WARNING

- **While driving on a slippery surface, be careful when braking, accelerating or downshifting. Abrupt braking or accelerating could cause the wheels to skid and result in an accident.**
- **If the engine is not running or is turned off while driving, the power assist for the brakes will not work. Braking will be harder.**

PARKING BRAKE BREAK-IN

Break in the parking brake shoes whenever the stopping effect of the parking brake is weakened or whenever the parking brake shoes and/or drums/rotors are replaced, in order to assure the best braking performance.

This procedure is described in the vehicle service manual and can be performed by an INFINITI retailer.

BRAKE ASSIST

When the force applied to the brake pedal exceeds a certain level, the Brake Assist is activated generating greater braking force than a conventional brake booster even with light pedal force.

⚠ WARNING

The Brake Assist is only an aid to assist braking operation and is not a collision warning or avoidance device. It is the driver's responsibility to stay alert, drive safely and be in control of the vehicle at all times.

PREVIEW FUNCTION (for Intelligent Cruise Control (ICC) system equipped models)

When the Preview Function identifies the need to apply emergency braking by sensing a vehicle ahead in the same lane and the distance and relative speed from it, it applies the brake pre-pressure before the driver depresses the brake pedal and helps improve brake response by reducing pedal free play.

- This system will not operate when the vehicle is moving at approximately 20 MPH (32 km/h) or less.

- The pre-pressure function ceases when the following conditions are met:
  a) When the driver depresses the accelerator pedal or the brake pedal.
  b) If the driver does not operate the accelerator or brake pedal within approximately 1 second.

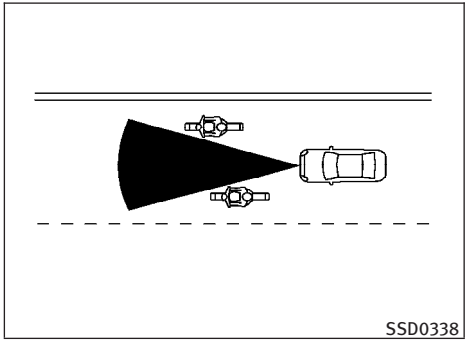

- The sensor will not detect:
  a) Pedestrians or objects in the roadway
  b) Oncoming vehicles in the same lane
  c) Motorcycles traveling offset in the travel lane as illustrated

⚠ WARNING

- **This system is only an aid to assist braking operation and is not a collision warning or avoidance device. It is the driver's responsibility to stay alert, drive safely and be in control of the vehicle at all times.**

- **As there is a performance limit to the Preview Function, never rely solely on this system. This system does not correct careless inattentive or absent-minded driving, or overcome poor visibility in rain, fog, or other bad weather. Reduce vehicle speed by depressing the brake pedal, in order to maintain a safe distance between vehicles.**
- **The system may not detect the vehicle in front of you in certain road or weather conditions. The Preview Function may not operate properly under the following conditions. The vehicle is still driveable under normal conditions and the Brake Assist will operate.**
  - **When rain, snow or dirt adhere to the system sensor**
  - **When strong light (for example, at sunrise or sunset) is directly shining on the front of the vehicle**
  - **Winding or hilly roads may cause the sensor to temporarily not detect a vehicle in the same lane or may detect objects or vehicles in other lanes.**
  - **Vehicle position in the lane may cause the sensor to temporarily not detect a vehicle in the same lane or may detect objects or vehicles in other lanes.**

- **When the Preview Function operates, the brake pedal may move slightly and may make a small noise. This is not a system malfunction.**

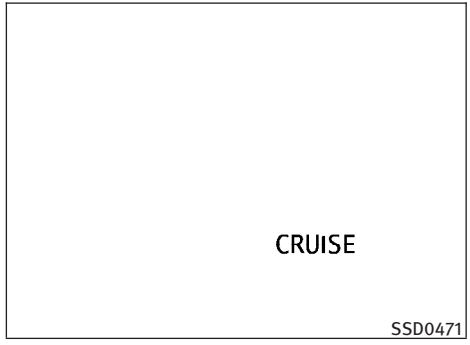

Warning light and display

When the Preview Function is not operating properly, the buzzer sounds and the system warning light (orange) will come on.

Action to take :

If the warning light comes on, park the vehicle in a safe place. Turn the engine off, restart the engine and resume driving.

If the indicator stays on, it may indicate that the Preview Function is malfunctioning (the brake is operative). Although the Vehicle is still driveable under normal conditions, have the vehicle checked at an INFINITI retailer.

How to handle the sensor

The sensor for the Preview Function is common with Intelligent Cruise Control and is located below the front bumper.

To keep the Preview Function operating properly, be sure to observe the following:

- Always keep the sensor clean. Wipe with a soft cloth carefully so as not to damage the sensor.
- Do not strike or damage the areas around the sensor. Do not touch or remove the screw located on the sensor. Doing so could cause failure or malfunction. If the sensor is damaged due to an accident, contact an INFINITI retailer.
- Do not attach a sticker (including transparent material) or install an accessory near the sensor. This could cause failure or malfunction.

ANTI-LOCK BRAKING SYSTEM (ABS)

⚠ WARNING

- **The Anti-lock Braking System (ABS) is a sophisticated device, but it cannot prevent accidents resulting from careless or dangerous driving techniques. It can help maintain vehicle control during braking on slippery surfaces. Remember that stopping distances on slippery surfaces will be longer than on normal surfaces even with ABS. Stopping distances may also be longer on rough, gravel or snow covered roads, or if you are using tire chains. Always maintain a safe distance from the vehicle in front of you. Ultimately, the driver is responsible for safety.**
- **Tire type and condition may also affect braking effectiveness.**
  - **When replacing tires, install the specified size of tires on all four wheels.**
  - **When installing a spare tire, make sure that it is the proper size and type as specified on the Tire and Loading Information label. See "TIRE AND LOADING INFORMATION LABEL" in the "9. Technical and consumer information" section of this manual.**
  - **For detailed information, see "WHEELS AND TIRES" in the "8. Maintenance and do-it-yourself" section of this manual.**

The Anti-lock Braking System (ABS) controls the brakes so the wheels do not lock during hard braking or when braking on slippery surfaces. The system detects the rotation speed at each wheel and varies the brake fluid pressure to prevent each wheel from locking and sliding. By preventing each wheel from locking, the system helps the driver maintain steering control and helps to minimize swerving and spinning on slippery surfaces.

Using the system

Depress the brake pedal and hold it down. Depress the brake pedal with firm steady pressure, but do not pump the brakes. The ABS will operate to prevent the wheels from locking up. Steer the vehicle to avoid obstacles.

⚠ WARNING

Do not pump the brake pedal. Doing so may result in increased stopping distances.

Self-test feature

The ABS includes electronic sensors, electric pumps, hydraulic solenoids and a computer. The computer has a built-in diagnostic feature that tests the system each time you start the engine and move the vehicle at a low speed in forward or reverse. When the self-test occurs, you may hear a "clunk" noise and/or feel a pulsation in the brake pedal. This is normal and does not indicate a malfunction. If the computer senses a malfunction, it switches the ABS off and illuminates the ABS warning light on the instrument panel. The brake system then operates normally, but without anti-lock assistance.

If the ABS warning light illuminates during the self-test or while driving, have the vehicle checked by an INFINITI retailer.

Normal operation

The ABS operates at speeds above 3 to 6 MPH (5 to 10 km/h). The speed varies according to road conditions.

When the ABS senses that one or more wheels are close to locking up, the actuator rapidly applies and releases hydraulic pressure. This action is similar to pumping the brakes very quickly. You may feel a pulsation in the brake pedal and hear a noise from under the hood or feel a vibration from the actuator when it is operating. This is normal and indicates that the ABS is operating properly. However, the pulsation may indicate that road conditions are hazardous and extra care is required while driving.

When accelerating or driving on slippery surfaces, the tires may spin or slide. With the Vehicle Dynamic Control (VDC) system, sensors detect these movements and control the braking and engine output to help improve vehicle stability.

- When the VDC system is operating, the “SLIP” indicator in the instrument panel blinks.
- If the “SLIP” indicator blinks, the road conditions are slippery. Be sure to adjust your speed and driving to these conditions. Be sure to drive carefully. (See “Slip indicator light” in the “2. Instruments and controls” section, and “Vehicle Dynamic Control (VDC) off indicator light” in the “2. Instruments and controls” section.)
- Indicator light

  If a malfunction occurs in the system, the “SLIP” and “VDC OFF” indicator lights illuminate in the instrument panel. As long as these indicators are illuminated, the VDC system function is canceled.

The VDC system uses an Active Brake Limited Slip (ABLS) function to improve vehicle traction. The ABLS system works when one of the driving wheels is spinning on a slippery surface. The ABLS system brakes the spinning wheel, which distributes the driving power to the other drive wheel. If the vehicle is operated with the VDC OFF switch pushed and the VDC system turned off, all VDC systems will be turned off. The ABLS system and ABS will still operate with the VDC system off. If the ABLS system is activated, the “SLIP” indicator will blink and you may hear a clunk noise and/or feel a pulsation in the brake pedal. This is normal and is not an indication of a malfunction.

While the VDC system is operating, you may feel a pulsation in the brake pedal and hear a noise or feel a vibration from under the hood. This is normal and indicates that the VDC system is working properly.

The VDC system computer has a built-in diagnostic feature that tests the system each time you start the engine and move the vehicle at a low speed forward or backward. When the self-test occurs, you may hear a “clunk” noise and/or feel a pulsation in the brake pedal. This is normal and is not an indication of a malfunction.

⚠ WARNING

- **The VDC system is designed to help improve driving stability but does not prevent accidents due to abrupt steering operation at high speeds or due to careless or dangerous driving techniques. Reduce vehicle speed and be especially careful when driving and cornering on slippery surfaces and always drive carefully.**
- **Do not modify the vehicle's suspension. If suspension parts such as shock absorbers, struts, springs, stabilizer bars and bushings and wheels are not INFINITI approved or are extremely deteriorated the VDC system may not operate properly. This could adversely affect vehicle handling performance, and the "VDC OFF" indicator or "SLIP" indicator or both indicator lights may illuminate.**
- **If brake related parts such as brake pads, rotors and calipers are not standard equipment or are extremely deteriorated, the "VDC OFF" indicator or "SLIP" indicator or both indicator lights may illuminate.**
- **If engine related parts such as muffler are not standard equipment or are extremely deteriorated, the "VDC OFF" indicator or "SLIP" indicator or both indicator lights may illuminate.**
- **When driving on extremely inclined surfaces such as higher banked corners, the VDC system may not operate properly and the "VDC OFF" indicator or "SLIP" indicator or both indicator lights may illuminate. Do not drive on these types of roads.**
- **When driving on unstable surfaces such as a turntable, ferry, elevator or ramp, the "VDC OFF" indicator or "SLIP" indicator or both indicator lights may illuminate. This is not a malfunction. Restart the engine after driving onto a stable surface.**
- **If wheels or tires other than those recommended are used, the VDC system may not operate properly and "VDC OFF" indicator or "SLIP" indicator or both indicator lights may illuminate.**
- **The VDC system is not a substitute for winter tires or tire chains on a snow covered road.**

REAR ACTIVE STEER SYSTEM (if so equipped)

The Rear Active Steer system is an electronically controlled four-wheel steering system.

The angle of the rear wheels are adjusted by the Rear Active Steer system, depending on the vehicle speed and steering angle. The rear wheels are designed to turn momentarily in the opposite direction and then change to the same direction as the front wheels.

At low speeds, the rear wheels will not turn and the system functions as a two-wheel steering system.

If a malfunction occurs in the system, the Rear Active Steer function will stop but the ordinary two-wheel steering system will operate normally. The "RAS" warning light will illuminate. If the light illuminates while driving, contact an INFINITI retailer for repair.

⚠ WARNING

The Rear Active Steer system, although a sophisticated device, cannot prevent accidents resulting from careless or dangerous driving techniques. Ultimately the responsibility for safety of self and others rests in the hands of the driver. Therefore only through attentive and careful driving methods can the Rear Active Steer system be fully appreciated and safety assured.

FREEING A FROZEN DOOR LOCK

To prevent a door lock from freezing, apply deicer through the key hole. If the lock becomes frozen, heat the key before inserting it into the key hole or use the Intelligent Key system.

ANTI-FREEZE

In the winter when it is anticipated that the outside temperature will drop below 32°F (0°C), check antifreeze to assure proper winter protection. For additional information, see "ENGINE COOLING SYSTEM" in the "8. Maintenance and do-it-yourself" section.

BATTERY

If the battery is not fully charged during extremely cold weather conditions, the battery fluid may freeze and damage the battery. To maintain maximum efficiency, the battery should be checked regularly. For additional information, see "BATTERY" in the "8. Maintenance and do-it-yourself" section.

DRAINING OF COOLANT WATER

If the vehicle is to be left outside without antifreeze, drain the cooling system, including the engine block. Refill before operating the vehicle. For details, see "ENGINE COOLING SYSTEM" in the "8. Maintenance and do-it-yourself" section.

TIRE EQUIPMENT

SUMMER tires have a tread designed to provide superior performance on dry pavement. However, the performance of these tires will be substantially reduced in snowy and icy conditions. If you operate your vehicle on snowy or icy roads, INFINITI recommends the use of MUD & SNOW or ALL SEASON tires on all four wheels. Consult an INFINITI retailer for the tire type, size, speed rating and availability information.

For additional traction on icy roads, studded tires may be used. However, some U.S. states and Canadian provinces prohibit their use. Check local, state and provincial laws before installing studded tires.

Skid and traction capabilities of studded snow tires, on wet or dry surfaces, may be poorer than that of non-studded snow tires.

Tire chains may be used. For details, see "TIRE CHAINS" in the "8. Maintenance and do-it-yourself" section of this manual.

All-Wheel Drive (AWD) model

If you install snow tires, they must also be the same size, brand, construction and tread pattern on all four wheels.

SPECIAL WINTER EQUIPMENT

It is recommended that the following items be carried in the vehicle during winter:

- A scraper and stiff-bristled brush to remove ice and snow from the windows and wiper blades.
- A sturdy, flat board to be placed under the jack to give it firm support.
- A shovel to dig the vehicle out of snowdrifts.
- Extra window washer fluid to refill the reservoir tank.

DRIVING ON SNOW OR ICE

⚠ WARNING

- **Wet ice (32°F, 0°C and freezing rain), very cold snow or ice can be slick and very hard to drive on. The vehicle will have much less traction or "grip" under these conditions. Try to avoid driving on wet ice until the road is salted or sanded.**
- **Whatever the condition, drive with caution. Accelerate and slow down with care. If accelerating or downshifting too fast, the drive wheels will lose even more traction.**

- **Allow more stopping distance under these conditions. Braking should be started sooner than on dry pavement.**
- **Allow greater following distances on slippery roads.**
- **Watch for slippery spots (glare ice). These may appear on an otherwise clear road in shaded areas. If a patch of ice is seen ahead, brake before reaching it. Try not to brake while on the ice, and avoid any sudden steering maneuvers.**
- **Do not use the cruise control on slippery roads.**
- **Snow can trap dangerous exhaust gases under your vehicle. Keep snow clear of the exhaust pipe and from around your vehicle.**

ENGINE BLOCK HEATER (if so equipped)

Engine block heaters are used to assist in cold temperature starting.

The engine block heater should be used when the outside temperature is 20°F (−7°C) or lower.

To use the engine block heater

1. Turn the engine off.
2. Open the hood and unwrap the engine block heater cord.
3. Plug the engine block heater cord into a grounded 3-wire, 3-pronged extension cord.
4. Plug the extension cord into a Ground Fault Interrupt (GFI) protected, grounded 110-volt AC (VAC) outlet.
5. The engine block heater must be plugged in for at least 2 - 4 hours, depending on outside temperatures, to properly warm the engine coolant. Use an appropriate timer to turn the engine block heater on.
6. Before starting the engine, unplug and properly store the cord to keep it away from moving parts.

⚠ WARNING

- **Do not use your engine block heater with an ungrounded electrical system or a 2-pronged adapter. You can be seriously injured by an electrical shock if you use an ungrounded connection.**
- **Disconnect and properly store the engine block heater cord before starting the engine. Damage to the cord could result in an electrical shock and can cause serious injury.**
- **Use a heavy-duty 3-wire, 3-pronged extension cord rated for at least 10A. Plug the extension cord into a Ground Fault Interrupt (GFI) protected, grounded 110-VAC outlet. Failure to use the proper extension cord or a grounded outlet can result in a fire or electrical shock and cause serious personal injury.**

MEMO

6 In case of emergency

Roadside assistance program 6-2
Flat tire..... 6-2
Tire Pressure Monitoring System (TPMS) 6-2
Changing a flat tire..... 6-3
Jump starting 6-7
Push starting 6-10
If your vehicle overheats..... 6-10
Towing your vehicle 6-11
Towing recommended by INFINITI 6-12
Vehicle recovery (freeing a stuck vehicle)..... 6-14

ROADSIDE ASSISTANCE PROGRAM

Every new INFINITI comes with a 4 year, unlimited mileage Roadside Assistance plan. In the event of a roadside emergency, Roadside Assistance Service is available to you. Please refer to your Warranty Information Booklet (U.S.) or Warranty & Roadside Assistance Information Booklet (Canada) for details. Both the Warranty Information Booklet and Roadside Assistance Calling Card in your Owner's Literature Portfolio provide the Toll-Free Number to call for assistance. Roadside Assistance is provided 24 hours a day, 365 days a year, for 4 years from the date sold to give emergency roadside help, in the event of mechanical or nonmechanical trouble(s) such as flat tires, out-of-gas, dead battery, lost keys, mechanical breakdown, accident, etc.

FLAT TIRE

TIRE PRESSURE MONITORING SYSTEM (TPMS)

This vehicle is equipped with the Tire Pressure Monitoring System (TPMS). It monitors tire pressure of all tires except the spare. When the low tire pressure warning light is lit, one or more of your tires is significantly underinflated. If the vehicle is being driven with low tire pressure, the TPMS will activate and warn you of it by the low tire pressure warning light (in the instrument panel) or the LOW PRESSURE information screen (on the display). This system will activate only when the vehicle is driven at speeds above 16 MPH (25 km/h). For more details, see "WARNING/INDICATOR LIGHTS AND AUDIBLE REMINDERS" in the "2. Instruments and controls" section and "TIRE PRESSURE MONITORING SYSTEM (TPMS)" in the "5. Starting and driving" section.

For information about the tire pressure information display, see "HOW TO USE INFO BUTTON" in the "4. Monitor, climate, audio, phone and voice recognition systems" section.

⚠ WARNING

- **If the low tire pressure warning light illuminates or LOW PRESSURE information is displayed on the monitor screen while driving, avoid sudden steering maneuvers or abrupt braking, reduce vehicle speed, pull off the road to a safe location and stop the vehicle as soon as possible. Driving with underinflated tires may permanently damage the tires and increase the likelihood of tire failure. Serious vehicle damage could occur and may lead to an accident and could result in serious personal injury. Check the tire pressure for all four tires. Adjust the tire pressure to the recommended COLD tire pressure shown on the Tire and Loading Information label to turn the low tire pressure warning light OFF. If the light still illuminates while driving after adjusting the tire pressure, a tire may be flat. If you have a flat tire, replace it with a spare tire as soon as possible.**
- **When a spare tire is mounted or a wheel is replaced, tire pressure will not be indicated, the TPMS will not function and the low tire pressure warning light will flash for approximately 1 minute. The light will remain on after 1 minute. Contact your INFINITI retailer as soon as possible for tire replacement and/or system resetting.**

- **Replacing tires with those not originally specified by INFINITI could affect the proper operation of the TPMS.**
- **Do not inject any tire liquid or aerosol tire sealant into the tires, as this may cause a malfunction of the tire pressure sensors.**

CHANGING A FLAT TIRE

If you have a flat tire, follow the instructions below.

Stopping the vehicle

1. Safely move the vehicle off the road and away from traffic.
2. Turn on the hazard warning flashers.
3. Park on a level surface and apply the parking brake. Move the selector lever to the P (Park) position.
4. Turn off the engine.
5. Raise the hood to warn other traffic, and to signal professional road assistance personnel that you need assistance.
6. Have all passengers get out of the vehicle and stand in a safe place, away from traffic and clear of the vehicle.

⚠ WARNING

- **Make sure the parking brake is securely applied and the transmission is shifted into the P (Park) position.**
- **Never change tires when the vehicle is on a slope, ice or slippery areas. This is hazardous.**
- **Never change tires if oncoming traffic is close to your vehicle. Wait for professional road assistance.**

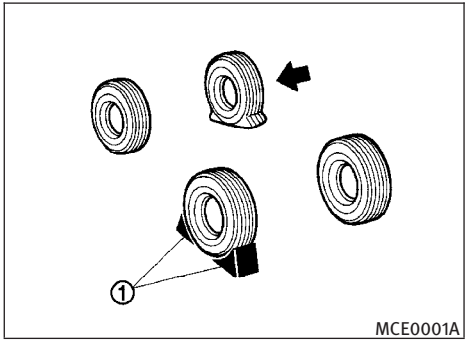

Blocking wheels

Place suitable blocks ① at both the front and back of the wheel diagonally opposite the flat tire to prevent the vehicle from moving when it is jacked up.

⚠ WARNING

Be sure to block the wheel as the vehicle may move and result in personal injury.

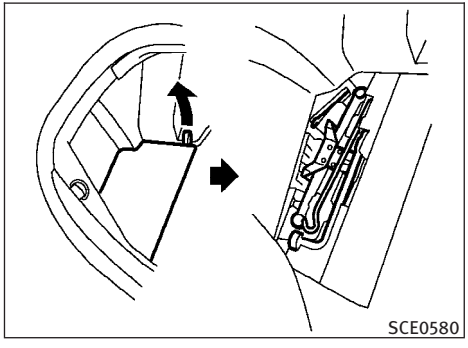

Jacking tools — T-type spare tire model

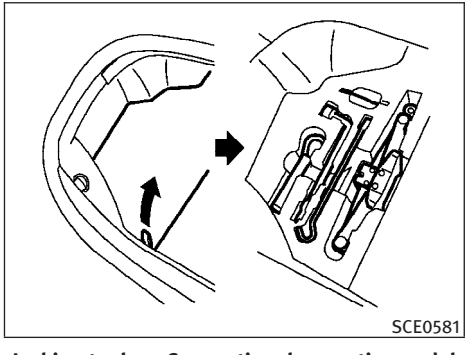

Jacking tools — Conventional spare tire model

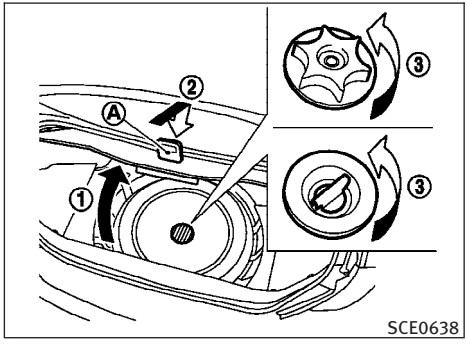

Spare tire

Getting the spare tire and tools

Remove jacking tools and spare tire from the storage area located inside the trunk as illustrated.

Raise the trunk floor cover ① using the handle Ⓐ, then hang it on the edge of the trunk opening ②. Remove the clamp ③ holding the spare tire.

Jacking up the vehicle and removing the damaged tire

⚠ WARNING

- **Never get under the vehicle while it is supported only by the jack. If it is necessary to work under the vehicle, support it with safety stands.**
- **Use only the jack provided with your vehicle to lift the vehicle. Do not use the jack provided with your vehicle on other vehicles. The jack is designed for lifting only your vehicle during a tire change.**
- **Use the correct jack-up points. Never use any other part of the vehicle for jack support.**
- **Never jack up the vehicle more than necessary.**
- **Never use blocks on or under the jack.**
- **Do not start or run the engine while vehicle is on the jack, as it may cause the vehicle to move. This is especially true for vehicles with limited slip differentials.**
- **Do not allow passengers to stay in the vehicle while it is on the jack.**

Carefully read the caution label attached to the jack body and the following instructions.

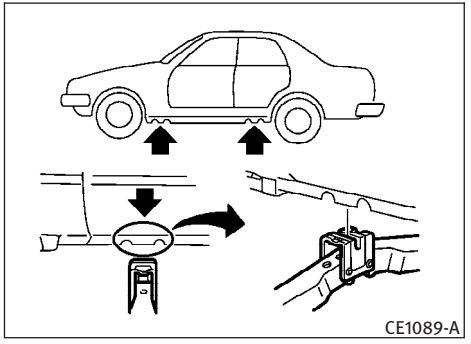

Jack-up point

1. Place the jack directly under the jack-up point as illustrated so the top of the jack contacts the vehicle at the jack-up point. Align the jack head between the two notches in the front or the rear as shown. Also fit the groove of the jack head between the notches as shown.

   The jack should be used on level firm ground.

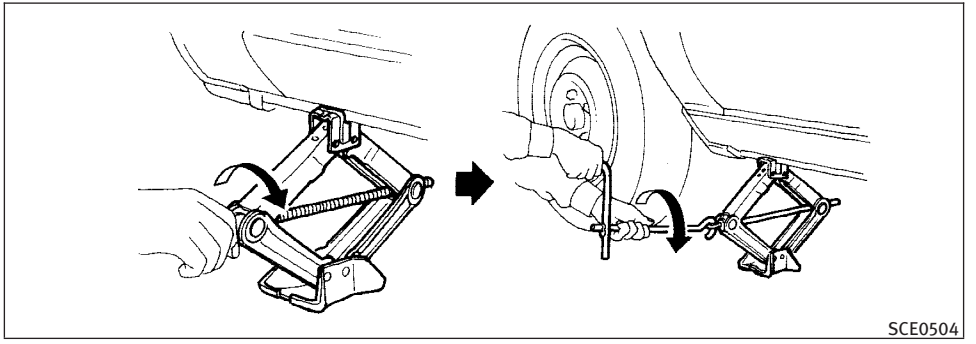

2. Loosen each wheel nut one or two turns by turning counterclockwise with the wheel nut wrench. **Do not remove the wheel nuts until the tire is off the ground.**
3. Carefully raise the vehicle until the tire clears the ground. To lift the vehicle, securely hold the jack lever and rod with both hands as shown above. Remove the wheel nuts, and then remove the tire.

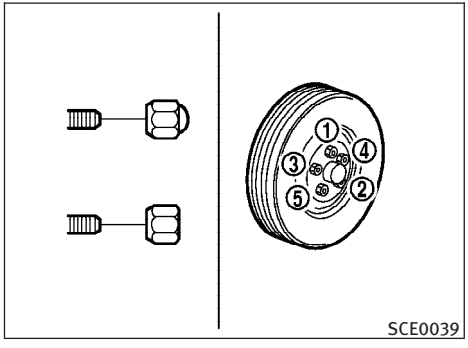

Installing the spare tire

The spare tire is designed for emergency use. (See specific instructions under the heading "WHEELS AND TIRES" in the "8. Maintenance and do-it-yourself" section.)

1. Clean any mud or dirt from the surface between the wheel and hub.
2. Carefully put the spare tire on and tighten the wheel nuts finger tight. Check that all the wheel nuts contact the wheel surface horizontally.
3. With the wheel nut wrench, tighten wheel nuts alternately and evenly in the sequence as illustrated (①, ②, ③, ④, ⑤), more than 2 times, until they are tight.
4. Lower the vehicle slowly until the tire touches the ground. Then, with the wheel nut wrench, tighten the wheel nuts securely in the sequence as illustrated. Lower the vehicle completely.

⚠ WARNING

- **Incorrect wheel nuts or improperly tightened wheel nuts can cause the wheel to become loose or come off. This could cause an accident.**
- **Do not use oil or grease on the wheel studs or nuts. This could cause the nuts to become loose.**
- **Retighten the wheel nuts when the vehicle has been driven for 600 miles (1,000 km) (also in cases of a flat tire, etc.).**

- **As soon as possible, tighten the wheel nuts to the specified torque with a torque wrench.**

  Wheel nut tightening torque:
  80 ft-lb (108 N·m)

The wheel nuts must be kept tightened to specification at all times. It is recommended that wheel nuts be tightened to specifications at each lubrication interval.

- **Adjust tire pressure to the COLD pressure.**

  COLD pressure:

  After the vehicle has been parked for three hours or more or driven less than 1 mile (1.6 km).

  COLD tire pressures are shown on the Tire and Loading Information label affixed to the driver side center pillar.

After adjusting tire pressure to the COLD tire pressure, the display of the tire pressure information may show higher pressure than the COLD tire pressure after the vehicle has been driven more than 1 mile (1.6 km). This is because the tire pressurizes as the tire temperature rises. This does not indicate a system malfunction.

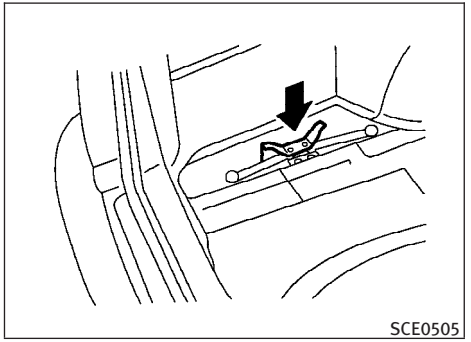

5. Securely store the flat tire and jacking equipment in the vehicle.
6. Place the spare tire cover and the trunk floor carpeting over the damaged tire.
7. Close the trunk.

⚠ WARNING

- **Always make sure that the spare tire and jacking equipment are properly secured after use. Such items can become dangerous projectiles in an accident or sudden stop.**
- **The T-type spare tire and small size spare tire are designed for emergency use. See specific instructions under the heading "WHEELS AND TIRES" in the "8. Maintenance and do-it-yourself" section.**

If needed, Roadside Assistance is available. Please see your Warranty Information Booklet or Roadside Assistance I.D. Card for the toll-free number to call (U.S.) or Warranty Information Booklet (Canada).

To start your engine with a booster battery, the instructions and precautions below must be followed.

⚠ WARNING

- **If done incorrectly, jump starting can lead to a battery explosion, resulting in severe injury or death. It could also damage your vehicle.**
- **Explosive hydrogen gas is always present in the vicinity of the battery. Keep all sparks and flames away from the battery.**
- **Do not allow battery fluid to come into contact with eyes, skin, clothing or painted surfaces. Battery fluid is a corrosive sulfuric acid solution which can cause severe burns. If the fluid should come into contact with anything, immediately flush the contacted area with water.**
- **Keep the battery out of the reach of children.**
- **The booster battery must be rated at 12 volts. Use of an improperly rated battery can damage your vehicle.**

- **Whenever working on or near a battery, always wear suitable eye protectors (for example, goggles or industrial safety spectacles) and remove rings, metal bands, or any other jewelry. Do not lean over the battery when jump starting.**
- **Do not attempt to jump start a frozen battery. It could explode and cause serious injury.**
- **Your vehicle has an automatic engine cooling fan. It could come on at any time. Keep hands and other objects away from it.**

If needed, Roadside Assistance is available. Please see your Warranty Information Booklet or Roadside Assistance I.D. Card for the toll-free number to call (U.S.) or Warranty Information Booklet (Canada).

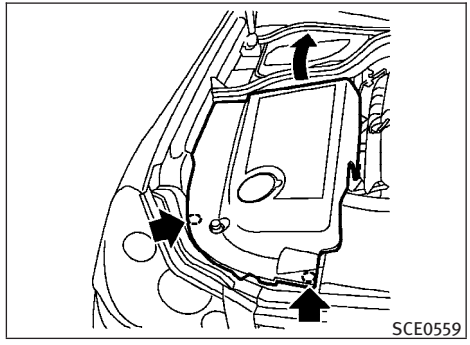

1. Remove the battery cover and the engine compartment cover. To remove the engine compartment cover, unhook the clips as illustrated.

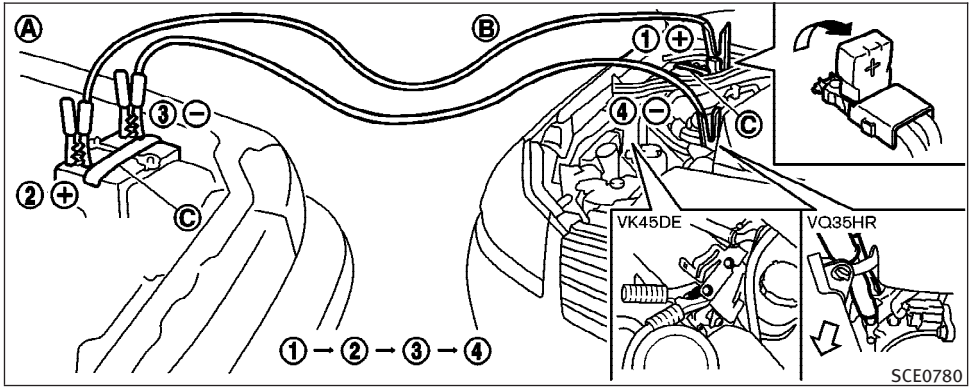

⚠ WARNING

Always follow the instructions below. Failure to do so could result in damage to the charging system and cause personal injury.

2. If the booster battery is in another vehicle Ⓐ, position the two vehicles (Ⓐ and Ⓑ) to bring their batteries into close proximity to each other.

   Do not allow the two vehicles to touch.

3. Apply the parking brake. Move the selector lever to the P (Park) position. Switch off all unnecessary electrical systems (light, heater, air conditioner, etc.).
4. Remove vent caps on the battery (if so equipped). Cover the battery with a firmly wrung out moist cloth Ⓒ to reduce explosion hazard.
5. Connect jumper cables in the sequence as illustrated (① → ② → ③ → ④).

   If the battery is discharged, the ignition switch cannot be moved from the LOCK position and, if the steering lock is engaged, the steering wheel cannot be moved. Connect the jumper cables to the booster vehicle Ⓑ before pushing the ignition switch and disengaging the steering lock.

⚠ CAUTION

- **Always connect positive (+) to positive (+) and negative (−) to body ground (as illustrated) — not to the battery.**
- **Make sure the jumper cables do not touch moving parts in the engine compartment and that the cable clamps do not contact any other metal.**

6. Start the engine of the booster vehicle Ⓐ and let it run for a few minutes.
7. Keep the engine speed of the booster vehicle Ⓐ at about 2,000 rpm, and start the engine of the vehicle being jump started Ⓑ.

⚠ CAUTION

Do not keep the starter motor engaged for more than 10 seconds. If the engine does not start right away, push the ignition switch to the LOCK position and wait 10 seconds before trying again.

8. After starting your engine, carefully disconnect the negative cable and then the positive cable (④ → ③ → ② → ①).
9. Replace the vent caps (if so equipped). Be sure to dispose of the cloth used to cover the vent holes as it may be contaminated with corrosive acid.
10. Put the battery cover and the engine compartment cover on.

PUSH STARTING

Do not attempt to start the engine by pushing.

⚠ CAUTION

Automatic transmission models cannot be push-started or tow-started. Attempting to do so may cause transmission damage.

If needed, Roadside Assistance is available. Please see your Warranty Information Booklet or Roadside Assistance I.D. Card for the toll-free number to call (U.S.) or Warranty & Roadside Assistance Information Booklet (Canada).

IF YOUR VEHICLE OVERHEATS

⚠ CAUTION

- **Do not continue to drive if your vehicle overheats. Doing so could cause engine damage or a vehicle fire.**
- **To avoid the danger of being scalded, never remove the radiator cap while the engine is still hot. When the radiator cap is removed, pressurized hot water will spurt out, possibly causing serious injury.**
- **Do not open the hood if steam is coming out.**

If your vehicle is overheating (indicated by an extremely high temperature gauge reading), or if you feel a lack of engine power, detect abnormal noise, etc., take the following steps:

1. Move the vehicle safely off the road, apply the parking brake and move the selector lever to the P (Park) position.

   Do not stop the engine.
2. Turn off the climate control. Open all the windows, move the heater or air conditioner temperature control to maximum hot and fan control to high speed.

3. If engine overheating is caused by climbing a long hill on a hot day, run the engine at a fast idle (approximately 1,500 rpm) until the temperature gauge indication returns to normal.
4. Get out of the vehicle. Look and listen for steam or coolant escaping from the radiator before opening the hood. (If steam or coolant is escaping, turn off the engine.) Do not open the hood further until no steam or coolant can be seen.
5. Open the engine hood.

WARNING

If steam or water is coming from the engine, stand clear to prevent getting burned.

6. Visually check drive belts for damage or looseness. Also check if the cooling fan is running. The radiator hoses and radiator should not leak water. If coolant is leaking, the drive belts are missing or loose, or the cooling fan does not run, stop the engine.

WARNING

Be careful not to allow your hands, hair, jewelry or clothing to come into contact with, or get caught in, engine belts or the engine cooling fan. The engine cooling fan can start at any time.

7. After the engine cools down, check the coolant level in the reservoir tank with the engine running. Add coolant to the reservoir tank if necessary. Have your vehicle repaired at the nearest INFINITI retailer.

If needed, Roadside Assistance is available. Please see your Warranty Information Booklet or Roadside Assistance I.D. Card for the toll-free number to call (U.S.) or Warranty & Roadside Assistance Information Booklet (Canada).

When towing your vehicle, all State (Provincial in Canada) and local regulations for towing must be followed. Incorrect towing equipment could damage your vehicle. Towing instructions are available from an INFINITI retailer. Local service operators are familiar with the applicable laws and procedures for towing. To assure proper towing and to prevent accidental damage to your vehicle, INFINITI recommends that you have a service operator tow your vehicle. It is advisable to have the service operator carefully read the following precautions.

WARNING

- **Never ride in a vehicle that is being towed.**
- **Never get under your vehicle after it has been lifted by a tow truck.**

CAUTION

- **When towing, make sure that the transmission, axles, steering system and powertrain are in working condition. If any unit is damaged, dollies must be used.**
- **Always attach safety chains before towing.**

For information about towing your vehicle behind a recreational vehicle (RV), see “FLAT TOWING” in the “9. Technical and consumer information” section of this manual.

If needed, Roadside Assistance is available. Please see your Warranty Information Booklet or Roadside Assistance I.D. Card for the toll-free number to call (U.S.) or Warranty & Roadside Assistance Information Booklet (Canada).

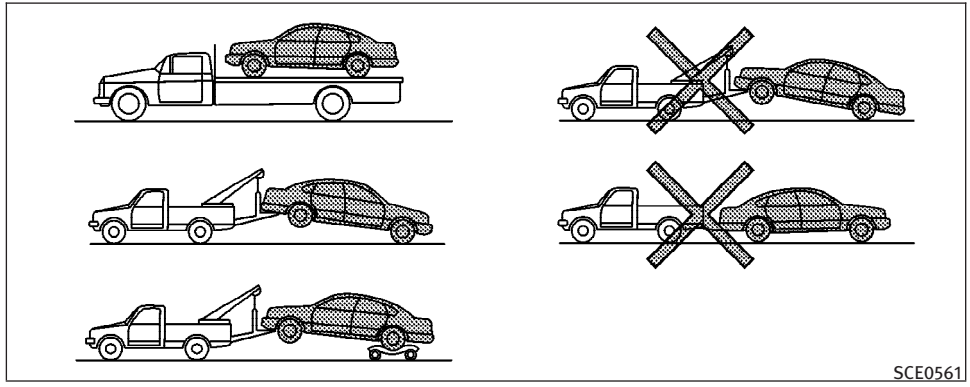

Two-Wheel Drive (2WD) models

TOWING RECOMMENDED BY INFINITI

Two-Wheel Drive (2WD) models

INFINITI recommends that your vehicle be towed with the driving (rear) wheels off the ground or place the vehicle on a flat bed truck as illustrated.

CAUTION

- **Never tow automatic transmission models with the rear wheels on the ground or four wheels on the ground (forward or backward), as this may cause serious and expensive damage to the transmission. If it is necessary to tow the vehicle with the front wheels raised, always use towing dollies under the rear wheels.**

- **When towing rear wheel drive models with the front wheels on the ground or on towing dollies: Push the ignition switch to the ACC or ON position, and secure the steering wheel in a straight-ahead position with a rope or similar device. Never secure the steering wheel by selecting the LOCK position. This may damage the steering lock mechanism.**

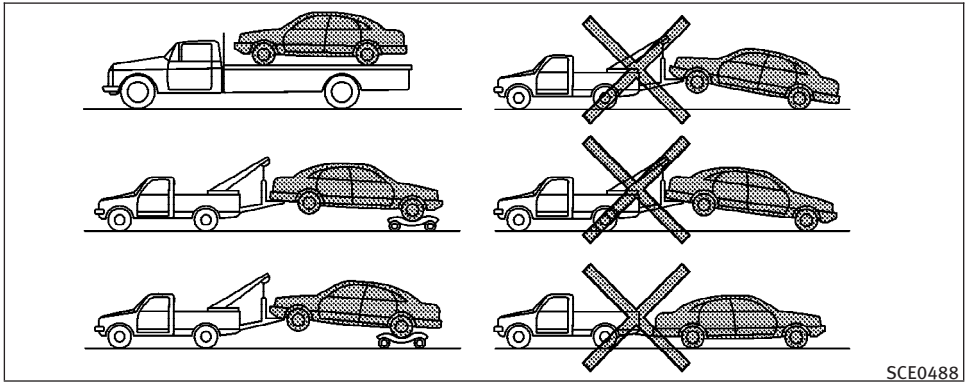

All-Wheel Drive (AWD) models

All-Wheel Drive (AWD) models

INFINITI recommends that towing dollies be used when towing your vehicle or place the vehicle on a flatbed truck as illustrated.

⚠ CAUTION

Never tow AWD models with any of the wheels on the ground as this may cause serious and expensive damage to the powertrain.

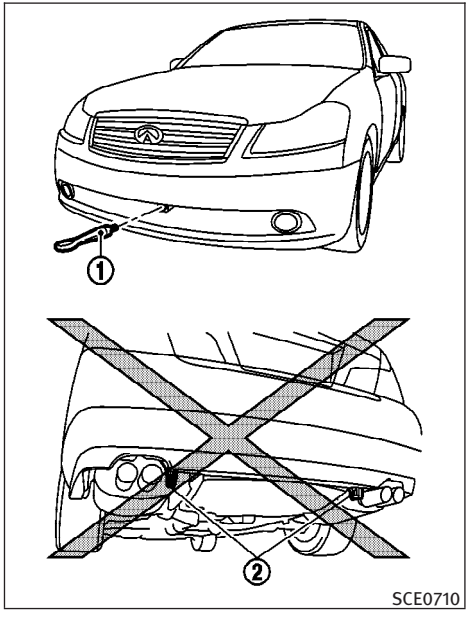

VEHICLE RECOVERY (freeing a stuck vehicle)

⚠ WARNING

- **Stand clear of a stuck vehicle.**
- **Do not spin your tires at high speed. This could cause them to explode and result in serious injury. Parts of your vehicle could also overheat and be damaged.**

Pulling a stuck vehicle

If your vehicle is stuck in sand, snow, mud, etc., use a tow strap or other device designed specifically for vehicle recovery. Always follow the manufacturer's instructions for the recovery device.

Do not use the tie down hooks for towing or vehicle recovery.

Front :

Open the hook cover on the front bumper.

Securely install the vehicle recovery hook ① stored with jacking tools as illustrated. Attach the tow strap to the recovery hook. Make sure that the hook is properly secured in the original place after use.

Rear :

Do not use the tie down hook ② to pull the vehicle.

⚠ CAUTION

- **Tow chains or cables must be attached only to the vehicle recovery hooks or main structural members of the vehicle. Otherwise, the vehicle body will be damaged.**
- **Do not use the vehicle tie down hooks to free a vehicle stuck in sand, snow, mud, etc. Never tow a vehicle using the vehicle tie down hooks.**
- **Always pull the cable straight out from the front of the vehicle. Never pull on the vehicle at an angle.**
- **Pulling devices should be routed so they do not touch any part of the suspension, steering, brake or cooling systems.**
- **Pulling devices such as ropes or canvas straps are not recommended for use in vehicle towing or recovery.**

Rocking a stuck vehicle

If your vehicle is stuck in sand, snow, mud, etc., use the following procedure:

1. Turn off the Vehicle Dynamic Control (VDC) system.
2. Make sure the area in front and behind the vehicle is clear of obstructions.
3. Turn the steering wheel right and left to clear an area around the front tires.
4. Slowly rock the vehicle forward and backward.
   - Shift back and forth between R (Reverse) and D (Drive).
   - Apply the accelerator as little as possible to maintain the rocking motion.
   - Release the accelerator pedal before shifting between R and D.
   - Do not spin the tires above 35 MPH (55 km/h).
5. If the vehicle cannot be freed after a few tries, contact a professional towing service to remove the vehicle.

MEMO

7 Appearance and care

Cleaning exterior 7-2
Washing 7-2
Waxing 7-2
Removing spots 7-3
Underbody 7-3
Glass 7-3
Aluminum alloy wheels 7-3
Chrome parts 7-3
Tire dressing 7-3
Cleaning interior 7-4
Air fresheners 7-4
Floor mats 7-4
Seat belts 7-5
Rear sunshade (if so equipped) 7-5
Corrosion protection 7-6
Most common factors contributing to vehicle corrosion 7-6
Environmental factors influence the rate of corrosion 7-6
To protect your vehicle from corrosion 7-6

In order to maintain the appearance of your vehicle, it is important to take proper care of it.

To protect the paint surfaces, wash your vehicle as soon as you can:

- after a rainfall to prevent possible damage from acid rain
- after driving on coastal roads
- when contaminants such as soot, bird droppings, tree sap, metal particles or bugs get on the paint surface
- when dust or mud builds up on the surface

Whenever possible, store or park your vehicle inside a garage or in a covered area.

When it is necessary to park outside, park in a shady area or protect the vehicle with a body cover.

Be careful not to scratch the paint surface when putting on or removing the body cover.

WASHING

Wash dirt off the vehicle with a wet sponge and plenty of water. Clean the vehicle thoroughly using a mild soap, a special vehicle soap or general purpose dishwashing liquid mixed with clean, lukewarm (never hot) water.

⚠ CAUTION

- **Do not use car washes that use acid in the detergent. Some car washes, especially brushless ones, use some acid for cleaning. The acid may react with some plastic vehicle components, causing them to crack. This could affect their appearance, and also could cause them not to function properly. Always check with your car wash to confirm that acid is not used.**
- **Do not wash the vehicle with strong household soap, strong chemical detergents, gasoline or solvents.**
- **Do not wash the vehicle in direct sunlight or while the vehicle body is hot, as the surface may become water-spotted.**
- **Avoid using tight-napped or rough cloths, such as washing mitts. Care must be taken when removing caked-on dirt or other foreign substances so the paint surface is not scratched or damaged.**

Rinse the vehicle thoroughly with plenty of clean water.

Inside flanges, seams and folds on the doors, hatches and hood are particularly vulnerable to the effects of road salt. Therefore, these areas must be regularly cleaned. Take care that the drain holes in the lower edge of the door are open. Spray water under the body and in the wheel wells to loosen the dirt and wash away road salt.

Avoid leaving water spots on the paint surface by using a damp chamois to dry the vehicle.

WAXING

Regular waxing protects the paint surface and helps retain new vehicle appearance. Polishing is recommended to remove built-up wax residue and to avoid a weathered appearance before reapplying wax.

An INFINITI retailer can assist you in choosing the proper product.

- Wax your vehicle only after a thorough washing. Follow the instructions supplied with the wax.
- Do not use a wax containing any abrasives, cutting compounds or cleaners that may damage the vehicle finish.

Machine compound or aggressive polishing on a base coat/clear coat paint finish may dull the finish or leave swirl marks.

REMOVING SPOTS

Remove tar and oil spots, industrial dust, insects, and tree sap as quickly as possible from the paint surface to avoid lasting damage or staining. Special cleaning products are available at an INFINITI retailer or any automotive accessory stores.

UNDERBODY

In areas where road salt is used in winter, the underbody must be cleaned regularly. This will prevent dirt and salt from building up and causing the acceleration of corrosion on the underbody and suspension. Before the winter period and again in the spring, the underseal must be checked and, if necessary, re-treated.

GLASS

Use glass cleaner to remove smoke and dust film from the glass surfaces. It is normal for glass to become coated with a film after the vehicle is parked in the hot sun. Glass cleaner and a soft cloth will easily remove this film.

⚠ CAUTION

When cleaning the inside of the windows, do not use sharp-edged tools, abrasive cleaners or chlorine-based disinfectant cleaners. They could damage the electrical conductors, radio antenna elements or rear window defroster elements.

ALUMINUM ALLOY WHEELS

Wash regularly with a sponge dampened in a mild soap solution, especially during winter months in areas where road salt is used. Salt could discolor the wheels if not removed.

⚠ CAUTION

Follow the directions below to avoid staining or discoloring the wheels:

- **Do not use a cleaner that uses strong acid or alkali contents to clean the wheels.**
- **Do not apply wheel cleaners to the wheels when they are hot. The wheel temperature should be the same as ambient temperature.**
- **Rinse the wheel to completely remove the cleaner within 15 minutes after the cleaner is applied.**

CHROME PARTS

Clean chrome parts regularly with a non- abrasive chrome polish to maintain the finish.

TIRE DRESSING

INFINITI does not recommend the use of tire dressings. Tire manufacturers apply a coating to the tires to help reduce discoloration of the rubber. If a tire dressing is applied to the tires, it may react with the coating and form a compound. This compound may come off the tire while driving and stain the vehicle paint.

If you choose to use a tire dressing, take the following precautions:

- Use a water-based tire dressing. The coating on the tire dissolves more easily with an oil-based tire dressing.
- Apply a light coat of tire dressing to help prevent it from entering the tire tread/grooves (where it would be difficult to remove).
- Wipe off excess tire dressing using a dry towel. Make sure the tire dressing is completely removed from the tire tread/grooves.
- Allow the tire dressing to dry as recommended by tire dressing manufacturer.

Occasionally remove loose dust from the interior trim, plastic parts and seats using a vacuum cleaner or soft bristled brush. Wipe the vinyl and leather surfaces with a clean, soft cloth dampened in mild soap solution, then wipe clean with a dry soft cloth.

Regular care and cleaning is required in order to maintain the appearance of the leather.

Before using any fabric protector, read the manufacturer's recommendations. Some fabric protectors contain chemicals that may stain or bleach the seat material.

Use a cloth dampened only with water, to clean the meter and gauge lens.

⚠ WARNING

Do not use water or acidic cleaners (hot steam cleaners) on the seat. This can damage the seat or occupant classification sensor. This can also affect the operation of the air bag system and result in serious personal injury.

⚠ CAUTION

- **Never use benzine, thinner, or any similar material.**
- **Small dirt particles can be abrasive and damaging to the leather surfaces and should be removed promptly. Do not use saddle soap, car waxes, polishes, oils, cleaning fluids, solvents, detergents or ammonia-based cleaners as they may damage the leather's natural finish.**
- **Never use fabric protectors unless recommended by the manufacturer.**
- **Do not use glass or plastic cleaner on meter or gauge lens covers. It may damage the lens cover.**

AIR FRESHENERS

Most air fresheners use a solvent that could affect the vehicle interior. If you use an air freshener, take the following precautions:

- Hanging-type air fresheners can cause permanent discoloration when they contact vehicle interior surfaces. Place the air freshener in a location that allows it to hang free and not contact an interior surface.
- Liquid-type air fresheners typically clip on the vents. These products can cause immediate damage and discoloration when spilled on interior surfaces.

Carefully read and follow the manufacturer's instructions before using air fresheners.

FLOOR MATS

The use of INFINITI floor mats can extend the life of your vehicle carpet and make it easier to clean the interior. **No matter what mats are used, be sure they are fitted for your vehicle and are properly positioned in the footwell to prevent interference with pedal operation.** Mats should be maintained with regular cleaning and replaced if they become excessively worn.

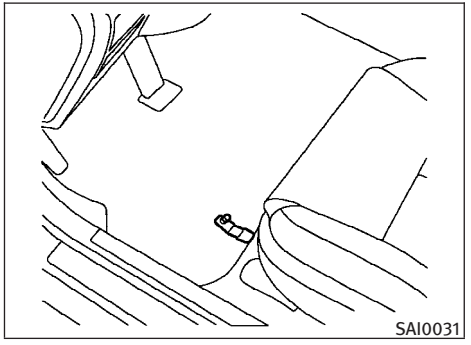

Floor mat positioning aid

This vehicle includes front floor mat brackets to act as floor mat positioning aid. INFINITI floor mats have been specially designed for your vehicle model. The front floor mats have grommet holes in them. To install, position the mat by placing the floor mat bracket hook through the floor mat grommet hole while centering the mat in the footwell.

Periodically check to make certain that the mats are properly positioned.

SEAT BELTS

The seat belts can be cleaned by wiping them with a sponge dampened in a mild soap solution. Allow the belts to dry completely in the shade before using them.

See “SEAT BELTS” in the “1. Safety — Seats, seat belts and supplemental restraint system” section.

⚠ WARNING

Do not allow wet seat belts to roll up in the retractor. NEVER use bleach, dye, or chemical solvents to clean the seat belts, since these materials may severely weaken the seat belt webbing.

REAR SUNSHADE (if so equipped)

Screen

To clean, fully extend the rear sunshade screen and clean dust or dirt off using a vacuum cleaner from the inside of the compartment. See “REAR SUNSHADE” in the “2. Instruments and controls” section for rear sunshade operation.

⚠ CAUTION

Be careful not to damage the screen while cleaning.

Cover

Wipe the rear sunshade cover with a clean, dry cloth.

⚠ CAUTION

Never use benzine, thinner or any other neutral detergent as this may deform the cover.

MOST COMMON FACTORS CONTRIBUTING TO VEHICLE CORROSION

- The accumulation of moisture-retaining dirt and debris in body panel sections, cavities, and other areas.
- Damage to paint and other protective coatings caused by gravel and stone chips or minor traffic accidents.

ENVIRONMENTAL FACTORS INFLUENCE THE RATE OF CORROSION

Moisture

Accumulation of sand, dirt and water on the vehicle body underside can accelerate corrosion. Wet floor coverings will not dry completely inside the vehicle, and should be removed for drying to avoid floor panel corrosion.

Relative humidity

Corrosion will be accelerated in areas of high relative humidity, especially those areas where the temperatures stay above freezing where atmospheric pollution exists, or where road salt is used.

Temperature

A temperature increase will accelerate the rate of corrosion to those parts which are not well ventilated.

Air pollution

Industrial pollution, the presence of salt in the air in coastal areas, or heavy road salt use will accelerate the corrosion process. Road salt will also accelerate the disintegration of paint surfaces.

TO PROTECT YOUR VEHICLE FROM CORROSION

- Wash and wax your vehicle often to keep the vehicle clean.
- Always check for minor damage to the paint and repair it as soon as possible.
- Keep drain holes at the bottom of the doors open to avoid water accumulation.
- Check the underbody for accumulation of sand, dirt or salt. If present, wash with water as soon as possible.

⚠ CAUTION

- **NEVER remove dirt, sand or other debris from the passenger compartment by washing it out with a hose. Remove dirt with a vacuum cleaner.**
- **Never allow water or other liquids to come in contact with electronic components inside the vehicle as this may damage them.**

Chemicals used for road surface deicing are extremely corrosive. They accelerate corrosion and deterioration of underbody components such as the exhaust system, fuel and brake lines, brake cables, floor pan and fenders.

In winter, the underbody must be cleaned periodically.

For additional protection against rust and corrosion, which may be required in some areas, consult an INFINITI retailer.

8 Maintenance and do-it-yourself

Maintenance requirement 8-2
Scheduled maintenance 8-2
General maintenance 8-2
Where to go for service 8-2
General maintenance 8-2
Explanation of maintenance items 8-2
Maintenance precautions 8-5
Engine compartment check locations 8-6
VK45DE engine 8-6
VQ35HR engine 8-8
Engine cooling system 8-10
Checking engine coolant level 8-11
Changing engine coolant 8-11
Engine oil 8-12
Checking engine oil level 8-12
Changing engine oil and filter 8-12
Automatic transmission fluid 8-15
5-speed automatic transmission 8-15
7-speed automatic transmission 8-15
Power steering fluid 8-16
Brake fluid 8-16
Brake fluid 8-16
Window washer fluid 8-17
Battery 8-17
Jump starting 8-19
Variable voltage control system (if so equipped) 8-19
Drive belts 8-19
Spark plugs 8-20
Replacing spark plugs 8-21
Air cleaner 8-21
Windshield wiper blades 8-22
Cleaning 8-22
Replacing 8-23
Brakes 8-24
Self-adjusting brakes 8-24
Brake pad wear warnings 8-24
Fuses 8-25
Engine compartment 8-25
Passenger compartment 8-27
Battery replacement 8-28
Intelligent Key 8-28
Lights 8-30
Headlights 8-31
Exterior and interior lights 8-32
Wheels and tires 8-34
Tire pressure 8-34
Tire labeling 8-38
Types of tires 8-40
Tire chains 8-41
Changing wheels and tires 8-41

Your new INFINITI has been designed to have minimum maintenance requirements with long service intervals to save you both time and money. However, some day-to-day and regular maintenance is essential to maintain your INFINITI's fine mechanical condition, as well as its emission and engine performance.

It is the owner's responsibility to make sure that the scheduled maintenance, as well as general maintenance, is performed.

As the vehicle owner, you are the only one who can ensure that your vehicle receives the proper maintenance. You are a vital link in the maintenance chain.

SCHEDULED MAINTENANCE

For your convenience, both required and optional scheduled maintenance items are described and listed in your "INFINITI Service and Maintenance Guide". You must refer to that guide to ensure that necessary maintenance is performed on your INFINITI at regular intervals.

GENERAL MAINTENANCE

General maintenance includes those items which should be checked during normal day-to-day operation. They are essential for proper vehicle operation. It is your responsibility to perform these procedures regularly as prescribed.

Performing general maintenance checks requires minimal mechanical skill and only a few general automotive tools.

These checks or inspections can be done by yourself, a qualified technician or, if you prefer, an INFINITI retailer.

WHERE TO GO FOR SERVICE

If maintenance service is required or your vehicle appears to malfunction, have the systems checked and serviced by an INFINITI retailer.

INFINITI technicians are well-trained specialists and are kept up-to-date with the latest service information through technical bulletins, service tips, and in-retailer information systems. They are completely qualified to work on INFINITI vehicles **before** work begins.

You can be confident that an INFINITI retailer's service department performs the best job to meet the maintenance requirements on your vehicle — in a reliable and economical way.

During the normal day-to-day operation of the vehicle, general maintenance should be performed regularly as prescribed in this section. If you detect any unusual sounds, vibrations or smell, be sure to check for the cause or have an INFINITI retailer do it promptly. In addition, you should notify an INFINITI retailer if you think that repairs are required.

When performing any checks or maintenance work, see "MAINTENANCE PRECAUTIONS" later in this section.

EXPLANATION OF MAINTENANCE ITEMS

Additional information on the following items with "*" is found later in this section.

Outside the vehicle

The maintenance items listed here should be performed from time to time, unless otherwise specified.

Doors and engine hood: Check that all doors and the engine hood operate properly. Also ensure that all latches lock securely. Lubricate hinges, latches, latch pins, rollers and links if necessary. Make sure that the secondary latch keeps the hood from opening when the primary latch is released.

When driving in areas using road salt or other corrosive materials, check lubrication frequently.

Lights*: Clean the headlights on a regular basis. Make sure that the headlights, stop lights, tail lights, turn signal lights, and other lights are all operating properly and installed securely. Also check headlight aim.

Road wheel nuts (lug nuts)*: When checking the tires, make sure no wheel nuts are missing, and check for any loose wheel nuts. Tighten if necessary.

Tire rotation*: Tires should be rotated every 7,500 miles (12,000 km).

Tires*: Check the pressure with a gauge often and always prior to long distance trips. If necessary, adjust the pressure in all tires, including the spare, to the pressure specified. Check carefully for damage, cuts or excessive wear.

Tire Pressure Monitoring System (TPMS) transmitter components: Replace the TPMS transmitter grommet seal, valve core and cap when the tires are replaced due to wear or age.

Wheel alignment and balance: If the vehicle should pull to either side while driving on a straight and level road, or if you detect uneven or abnormal tire wear, there may be a need for wheel alignment.

If the steering wheel or seat vibrates at normal highway speeds, wheel balancing may be needed.

For additional information regarding tires, refer to “Important Tire Safety Information” (US) or “Tire Safety Information” (Canada) in the INFINITI Warranty Information Booklet.

Windshield: Clean the windshield on a regular basis. Check the windshield at least every six months for cracks or other damage. Have a damaged windshield repaired by a qualified repair facility.

Windshield wiper blades*: Check for cracks or wear if they do not wipe properly.

Inside the vehicle

The maintenance items listed here should be checked on a regular basis, such as when performing scheduled maintenance, cleaning the vehicle, etc.

Accelerator pedal: Check the pedal for smooth operation and make sure the pedal does not catch or require uneven effort. Keep the floor mat away from the pedal.

Automatic transmission P (Park) position mechanism: On a fairly steep hill, check that the vehicle is held securely with the selector lever in the P (Park) position without applying any brakes.

Brake pedal: Check the pedal for smooth operation. If the brake pedal suddenly goes down further than normal, the pedal feels spongy or the vehicle seems to take longer to stop, see an INFINITI retailer immediately. Keep the floor mat away from the pedal.

Brakes: Check that the brakes do not pull the vehicle to one side when applied.

Parking brake: Check the parking brake operation regularly. The vehicle should be securely held on a fairly steep hill with only the parking brake applied. If the parking brake needs adjustment, see an INFINITI retailer.

Seat belts: Check that all parts of the seat belt system (for example, buckles, anchors, adjusters and retractors) operate properly and smoothly, and are installed securely. Check the belt webbing for cuts, fraying, wear or damage.

Seats: Check seat position controls such as seat adjusters, seatback recliner, etc. to ensure they operate smoothly and that all latches lock securely in every position. Check that the head restraints move up and down smoothly and that the locks (if so equipped) hold securely in all latched positions.

Steering wheel: Check for changes in the steering conditions, such as excessive free play, hard steering or strange noises.

Warning lights and chimes: Make sure that all warning lights and chimes are operating properly.

Windshield defroster: Check that the air comes out of the defroster outlets properly and in sufficient quantity when operating the heater or air conditioner.

Windshield wiper and washer*: Check that the wipers and washer operate properly and that the wipers do not streak.

Under the hood and vehicle

The maintenance items listed here should be checked periodically (for example, each time you check the engine oil or refuel).

Battery*: Check the fluid level in each cell. It should be between the MAX and MIN lines. Vehicles operated in high temperatures or under severe condition require frequent checks of the battery fluid level.

Brake fluid level*: Make sure that the brake fluid level is between the MAX and MIN lines on the reservoir.

Engine coolant level*: Check the coolant level when the engine is cold.

Engine drive belts*: Make sure that the drive belts are not frayed, worn, cracked or oily.

Engine oil level*: Check the level after parking the vehicle on a level surface and turning off the engine. Wait more than 10 or 15 minutes for the oil to drain back into the oil pan.

Exhaust system: Make sure there are no loose supports, cracks or holes. If the sound of the exhaust seems unusual or there is a smell of exhaust fumes, immediately have the exhaust system inspected by an INFINITI retailer. (See "PRECAUTIONS WHEN STARTING AND DRIVING" in the "5. Starting and driving" section for exhaust gas (carbon monoxide).)

Fluid leaks: Check under the vehicle for fuel, oil, water or other fluid leaks after the vehicle has been parked for a while. Water dripping from the air conditioner after use is normal. If you should notice any leaks or if gasoline fumes are evident, check for the cause and have it corrected immediately.

Power steering fluid level* and lines: Check the level when the fluid is cold, with the engine off. Check the lines for proper attachment, leaks, cracks, etc.

Radiator and hoses: Check the front of the radiator and clean off any dirt, insects, leaves, etc., that may have accumulated. Make sure the hoses have no cracks, deformation, rot or loose connections.

Underbody: The underbody is frequently exposed to corrosive substances such as those used on icy roads or to control dust. It is very important to remove these substances, otherwise rust will form on the floor pan, frame, fuel lines and around the exhaust system. At the end of winter, the underbody should be thoroughly flushed with plain water, being careful to clean those areas where mud and dirt may accumulate. For additional information, see "CLEANING EXTERIOR" in the "7. Appearance and care" section.

Windshield washer fluid*: Check that there is adequate fluid in the reservoir.

MAINTENANCE PRECAUTIONS

When performing any inspection or maintenance work on your vehicle, always take care to prevent serious accidental injury to yourself or damage to the vehicle. The following are general precautions which should be closely observed.

⚠ WARNING

- **Park the vehicle on a level surface, apply the parking brake securely and block the wheels to prevent the vehicle from moving. Move the selector lever to P (Park).**
- **Be sure the ignition switch is in the LOCK position when performing any parts replacement or repairs.**
- **If you must work with the engine running, keep your hands, clothing, hair and tools away from moving fans, belts and any other moving parts.**
- **It is advisable to secure or remove any loose clothing and remove any jewelry, such as rings, watches, etc. before working on your vehicle.**
- **Always wear eye protection whenever you work on your vehicle.**
- **If you must run the engine in an enclosed space such as a garage, be sure there is proper ventilation for exhaust gases to escape.**
- **Never get under the vehicle while it is supported only by a jack. If it is necessary to work under the vehicle, support it with safety stands.**
- **Keep smoking materials, flame and sparks away from fuel tank and the battery.**
- **Your vehicle is equipped with an automatic engine cooling fan. It may come on at any time without warning, even if the ignition key is in the OFF position and the engine is not running. To avoid injury, always disconnect the negative battery cable before working near the fan.**
- **The fuel filter or fuel lines should be serviced by an INFINITI retailer because the fuel lines are under high pressure even when the engine is off.**

⚠ CAUTION

- **Do not work under the hood while the engine is hot. Turn the engine off and wait until it cools down.**
- **Avoid direct contact with used engine oil and coolant. Improperly disposed engine oil, engine coolant and/or other vehicle fluids can damage the environment. Always conform to local regulations for disposal of vehicle fluid.**
- **Never connect or disconnect the battery or any transistorized component while the ignition switch is in the ON position.**
- **Never leave the engine or automatic transmission related component harnesses disconnected while the ignition switch is in the ON position.**

This “8. Maintenance and do-it-yourself” section gives instructions regarding only those items which are relatively easy for an owner to perform.

A genuine INFINITI Service Manual is also available. (See “OWNER’S MANUAL/SERVICE MANUAL ORDER INFORMATION” in the “9. Technical and consumer information” section.)

You should be aware that incomplete or improper servicing may result in operating difficulties or excessive emissions, and could affect warranty coverage. **If in doubt about any servicing, we recommend that it be done by an INFINITI retailer.**

ENGINE COMPARTMENT CHECK LOCATIONS

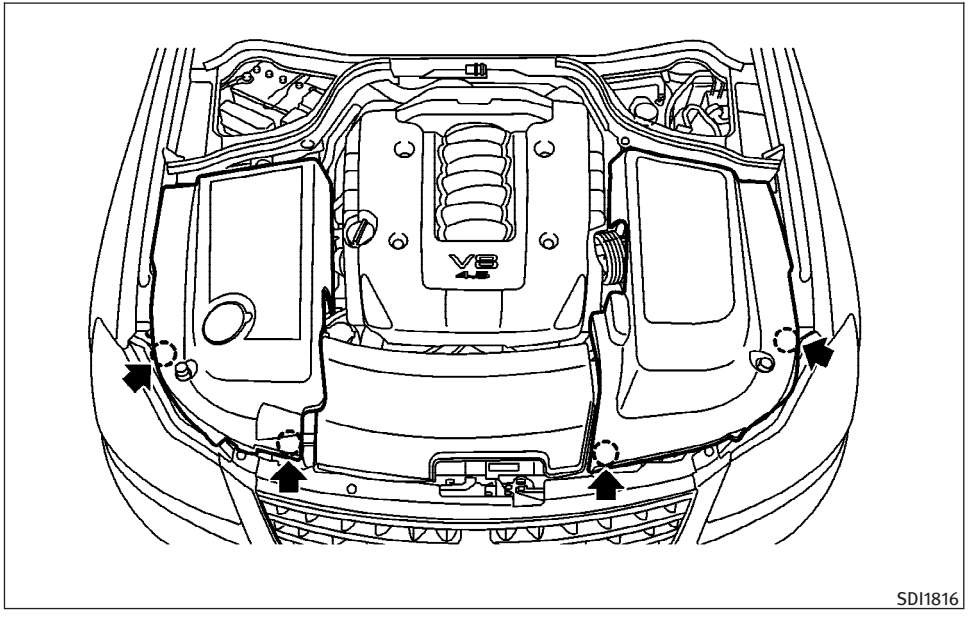

VK45DE ENGINE

To remove the engine compartment cover, unhook the clips located as illustrated.

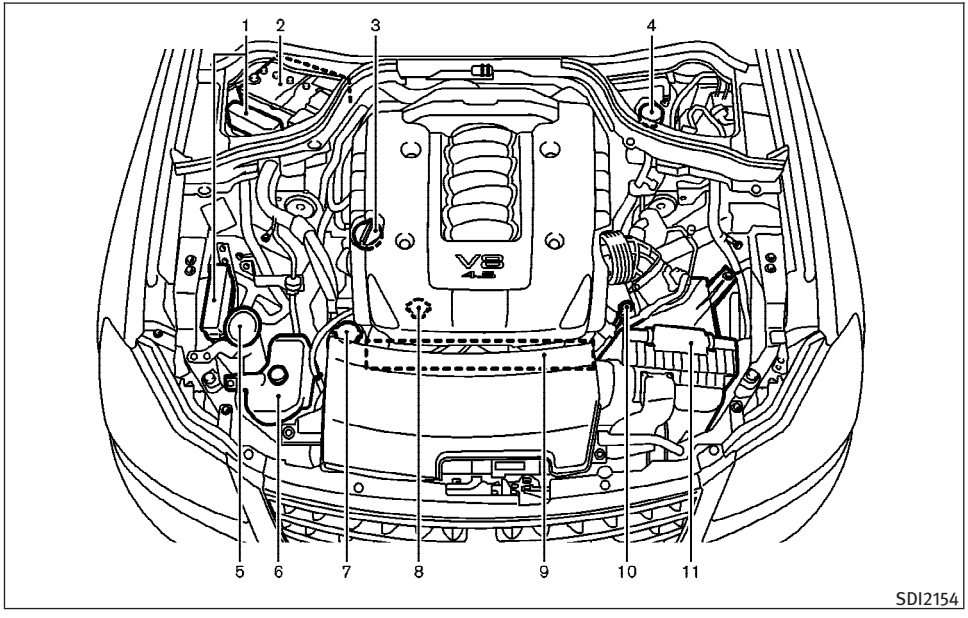

1. Fuse/fusible link holder
2. Battery
3. Engine oil filler cap
4. Brake fluid reservoir
5. Window washer fluid reservoir
6. Engine coolant reservoir
7. Power steering fluid reservoir
8. Radiator filler cap
9. Engine drive belt location
10. Engine oil dipstick
11. Air cleaner

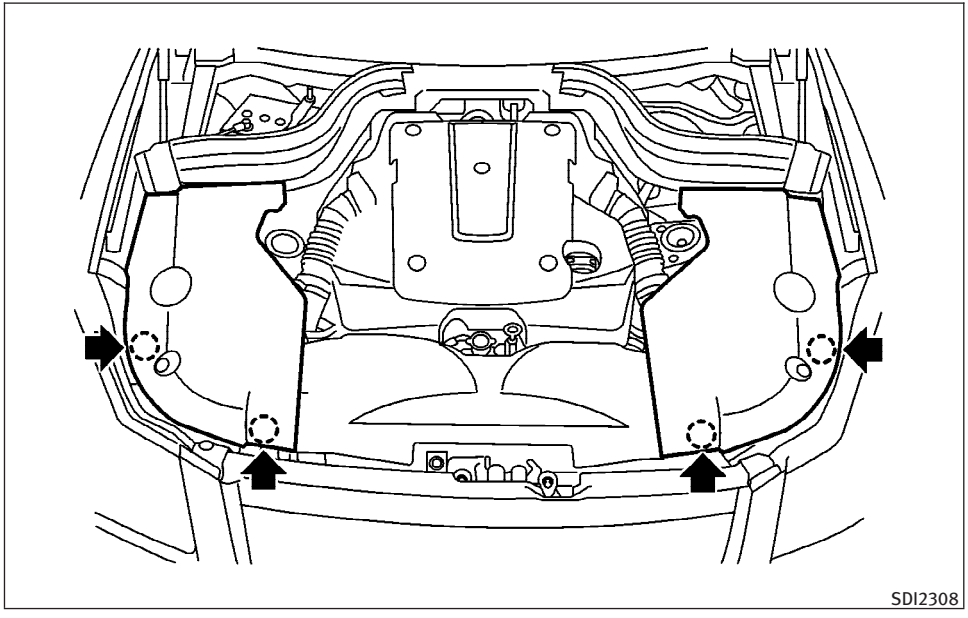

VQ35HR ENGINE

To remove the engine compartment cover, unhook the clips located as illustrated.

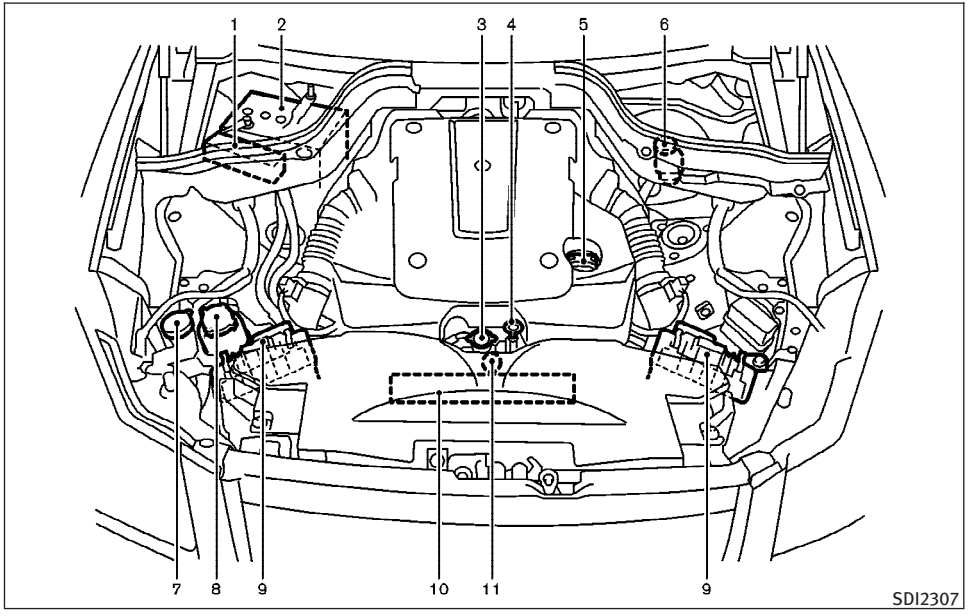

1. Fuse/fusible link holder
2. Battery
3. Radiator filler cap
4. Engine oil dipstick
5. Engine oil filler cap
6. Brake fluid reservoir
7. Window washer fluid reservoir
8. Power steering fluid reservoir
9. Air cleaner
10. Engine drive belt location
11. Engine coolant reservoir

The engine cooling system is filled at the factory with a high-quality, year-round, anti-freeze coolant solution. The antifreeze solution contains rust and corrosion inhibitors, therefore additional cooling system additives are not necessary.

⚠ WARNING

- **Never remove the radiator or coolant reservoir cap when the engine is hot. Wait until the engine and radiator cool down. Serious burns could be caused by high pressure fluid escaping from the radiator. See precautions in "IF YOUR VEHICLE OVERHEATS" in the "6. In case of emergency" section of this manual.**
- **The radiator is equipped with a pressure type radiator cap. To prevent engine damage, use only a genuine NISSAN radiator cap.**

⚠ CAUTION

When adding or replacing coolant, be sure to use only a Genuine NISSAN Long Life Antifreeze/Coolant (green) or equivalent with the proper mixture ratio of 50% antifreeze and 50% demineralized or distilled water. The use of other types of coolant solutions may damage the engine cooling system.

Outside temperature down to		Anti-freeze	Demineralized water or distilled water
°F	°C		
−30	−35	50%	50%

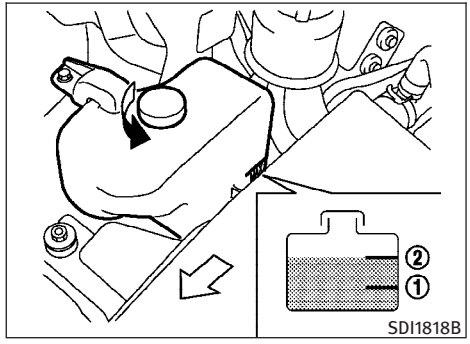

VK45DE engine

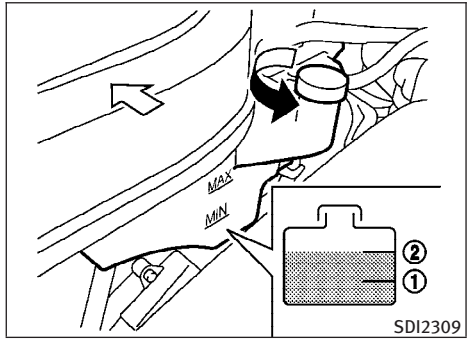

VQ35HR engine

CHECKING ENGINE COOLANT LEVEL

Check the coolant level **in the reservoir when the engine is cold.** If the coolant level is below the MIN level ①, open the reservoir cap and add coolant up to the MAX level ②. If the reservoir is empty, check the coolant level in the radiator **when the engine is cold.**

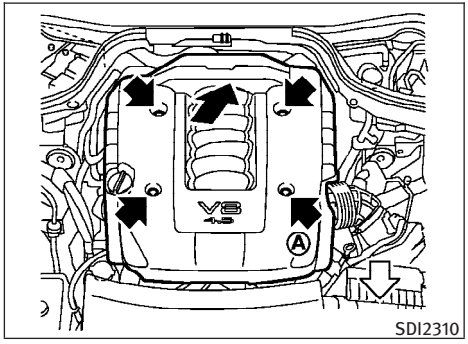

For VK45DE engine model, remove the engine cover by removing the 4 clips Ⓐ.

If there is insufficient coolant in the radiator, fill the radiator with coolant up to the filler opening and also add it to the reservoir up to the MAX level ②.

If the cooling system frequently requires coolant, have it checked by an INFINITI retailer.

CHANGING ENGINE COOLANT

Major cooling system repairs should be performed by an INFINITI retailer. The service procedures can be found in the appropriate INFINITI Service Manual.

Improper servicing can result in reduced heater performance and engine overheating.

⚠ WARNING

- **To avoid the danger of being scalded, never change the coolant when the engine is hot.**
- **Never remove the radiator cap when the engine is hot. Serious burns could be caused by high pressure fluid escaping from the radiator.**
- **Avoid direct skin contact with used coolant. If skin contact is made, wash thoroughly with soap or hand cleaner as soon as possible.**
- **Keep coolant out of reach of children and pets.**

Engine coolant must be disposed of properly. Check your local regulations.

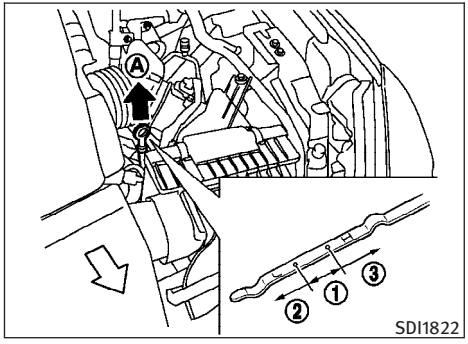

VK45DE engine

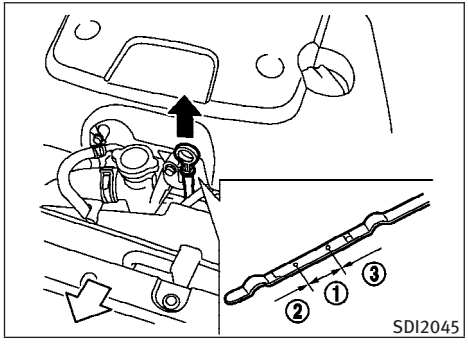

VQ35HR engine

CHECKING ENGINE OIL LEVEL

1. Park the vehicle on a level surface and apply the parking brake.
2. Run the engine until it reaches operating temperature.
3. Turn off the engine. **Wait more than 15 minutes for the oil to drain back into the oil pan.**
4. Remove the dipstick and wipe it clean. Reinsert it all the way.
5. Remove the dipstick again and check the oil level. It should be within the range ①. If the oil level is below ②, remove the oil filler cap and pour recommended oil through the opening. **Do not overfill ③.**
6. Recheck oil level with the dipstick.

It is normal to add some oil between oil maintenance intervals or during the break-in period, depending on the severity of operating conditions.

⚠ CAUTION

Oil level should be checked regularly. Operating the engine with an insufficient amount of oil can damage the engine, and such damage is not covered by warranty.

CHANGING ENGINE OIL AND FILTER

Change the engine oil and filter according to the maintenance intervals shown in the INFINITI Service and Maintenance Guide.

Vehicle set-up

1. Park the vehicle on a level surface and apply the parking brake.
2. Run the engine until it reaches operating temperature.
3. Turn the engine off and wait more than 15 minutes.
4. Raise and support the vehicle using a suitable floor jack and safety jack stands.
   - Place the safety jack stands under the vehicle jack-up points.
   - A suitable adapter should be attached to the jack stand saddle.
5. Remove the plastic engine undercover.
   a. Remove the small plastic clip at the center point of the undercover.
   b. Then remove the other bolts that hold the undercover in place.

⚠ CAUTION

Make sure the correct lifting and support points are used to avoid vehicle damage.

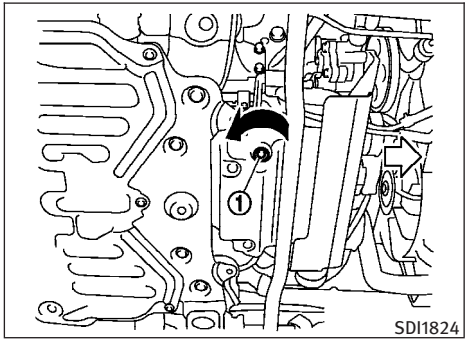

VK45DE engine-1

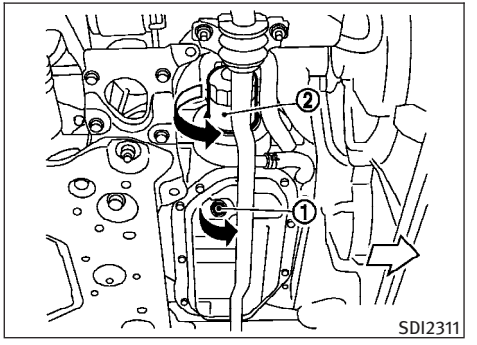

VQ35HR engine (2WD models)

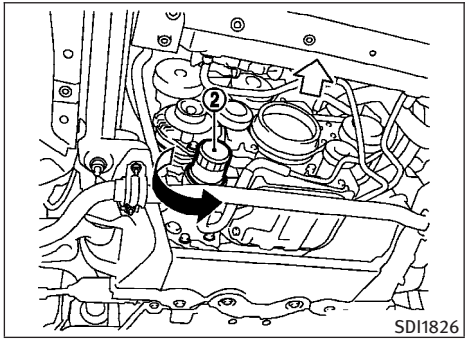

VK45DE engine-2

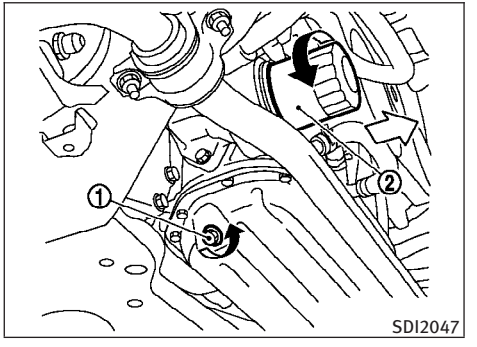

VQ35HR engine (AWD models)

Engine oil and filter

1. Place a large drain pan under the drain plug.
2. Remove the oil filler cap.
3. Remove the drain plug ① with a wrench and completely drain the oil.

⚠ CAUTION

Be careful not to burn yourself, as the engine oil is hot.

- **Waste oil must be disposed of properly.**
- **Check your local regulations.**

Perform steps 4 to 7 only when the engine oil filter change is needed.

4. Loosen the oil filter ② with an oil filter wrench. Remove the oil filter by turning it by hand.
5. Wipe the engine oil filter mounting surface with a clean rag.

⚠ CAUTION

Be sure to remove any old rubber gasket remaining on the mounting surface of the engine. Failure to do so could lead to engine failure.

6. Coat the gasket on the new filter with clean engine oil.
7. Screw in the oil filter clockwise until a slight resistance is felt, then tighten additionally more than 2/3 turn.

   Oil filter tightening torque:
   11 to 15 ft-lb
   (14.7 to 20.5 N·m)

8. Clean and re-install the drain plug with a new washer. Securely tighten the drain plug with a wrench.

   Drain plug tightening torque:
   22 to 29 ft-lb
   (29 to 39 N·m)

   Do not use excessive force.

9. Refill engine with recommended oil and install the oil filler cap securely.

⚠ CAUTION

The dipstick must be inserted in place to prevent oil spillage from the dipstick hole while filling the engine with oil.

See “CAPACITIES AND RECOMMENDED FUEL/LUBRICANTS” in the “9. Technical and consumer information” section for drain and refill capacity. The drain and refill capacity depends on the oil temperature and drain time. Use these specifications for reference only. Always use the dipstick to determine the proper amount of oil in the engine.

10. Start the engine and check for leakage around the drain plug and the oil filter. Correct as required.
11. Turn the engine off and wait more than 15 minutes. Check the oil level with the dipstick. Add engine oil if necessary.

After the operation

1. Install the engine undercover into position as the following steps.
   a. Pull the center of the small plastic clip out.
   b. Hold the engine undercover into position.
   c. Insert the clip through the undercover into the hole in the frame, then push the center of the clip in to lock the clip in place.
   d. Install the other bolts that hold the undercover in place. Be careful not to strip the bolts or over-tighten them.
2. Lower the vehicle carefully to the ground.
3. Dispose of waste oil and filter properly.

WARNING

- **Prolonged and repeated contact with used engine oil may cause skin cancer.**
- **Try to avoid direct skin contact with used oil. If skin contact is made, wash thoroughly with soap or hand cleaner as soon as possible.**
- **Keep used engine oil out of reach of children.**

5-SPEED AUTOMATIC TRANSMISSION

When checking or replacement is required, we recommend an INFINITI retailer for servicing.

CAUTION

- **Use Genuine NISSAN Matic S ATF. If Genuine NISSAN Matic S ATF is not available, Genuine NISSAN Matic J ATF may also be used.**
- **Using automatic transmission fluid other than Genuine NISSAN Matic S ATF or Matic J ATF will cause deterioration in driveability and automatic transmission durability, and may damage the automatic transmission, which is not covered by the INFINITI new vehicle limited warranty.**

7-SPEED AUTOMATIC TRANSMISSION

Contact an INFINITI retailer if replacement is required.

CAUTION

- **Use only Genuine NISSAN Matic S ATF. Do not mix with other fluids.**
- **Using automatic transmission fluid other than Genuine NISSAN Matic S ATF will cause deterioration in driveability and automatic transmission durability, and may damage the automatic transmission, which is not covered by the INFINITI new vehicle limited warranty.**

POWER STEERING FLUID

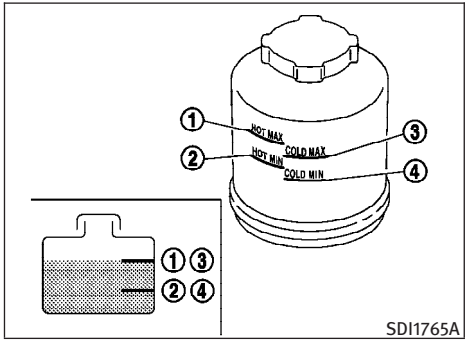

Check the fluid level in the reservoir.

The fluid level should be checked using the HOT range (①: HOT MAX., ②: HOT MIN.) at fluid temperatures of 122 to 176°F (50 to 80°C) or using the COLD range (③: COLD MAX., ④: COLD MIN.) at fluid temperatures of 32 to 86°F (0 to 30°C).

If the fluid is below the MIN line, add Genuine NISSAN PSF or equivalent. Remove the cap and fill through the opening.

⚠ CAUTION

- **Do not overfill.**
- **Use Genuine NISSAN PSF or equivalent.**

BRAKE FLUID

For further brake fluid information, see "CAPACITIES AND RECOMMENDED FUEL/LUBRICANTS" in the "9. Technical and consumer information" section of this manual.

⚠ WARNING

- **Use only new fluid from a sealed container. Old, inferior or contaminated fluid may damage the brake system. The use of improper fluids can damage the brake system and affect the vehicle's stopping ability.**
- **Clean the filler cap before removing.**
- **Brake fluid is poisonous and should be stored carefully in marked containers out of the reach of children.**

⚠ CAUTION

Do not spill the fluid on any painted surfaces. This will damage the paint. If fluid is spilled, wash the surface with water.

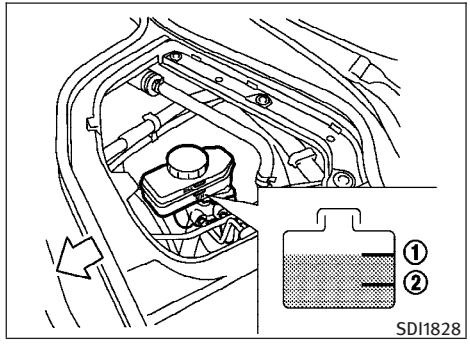

BRAKE FLUID

Check the fluid level in the reservoir. If the fluid is below the MIN line ② or the brake warning light comes on, add Genuine NISSAN Super Heavy Duty Brake Fluid or equivalent **DOT 3** fluid up to the MAX line ①. If fluid must be added frequently, the system should be checked by an INFINITI retailer.

WINDOW WASHER FLUID

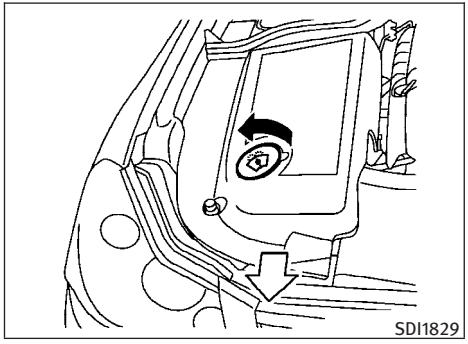

Fill the window washer fluid reservoir periodically. Add window washer fluid when the low window washer fluid warning light comes on.

To fill the window washer fluid reservoir, lift the cap off the reservoir tank and pour the window washer fluid into the tank opening.

Add a washer solvent to the washer for better cleaning. In the winter season, add a windshield washer antifreeze. Follow the manufacturer's instructions for the mixture ratio.

Refill the reservoir more frequently when driving conditions require an increased amount of window washer fluid.

Recommended fluid is Genuine NISSAN Windshield Washer Concentrate Cleaner & Antifreeze or equivalent.

⚠ CAUTION

- **Do not substitute engine anti-freeze coolant for window washer solution. This may result in damage to the paint.**
- **Do not fill the window washer reservoir tank with washer fluid concentrates at full strength. Some methyl alcohol based washer fluid concentrates may permanently stain the grille if spilled while filling the window washer reservoir tank.**
- **Pre-mix washer fluid concentrates with water to the manufacturer's recommended levels before pouring the fluid into the window washer reservoir tank. Do not use the window washer reservoir tank to mix the washer fluid concentrate and water.**

BATTERY

- Keep the battery surface clean and dry. Clean the battery with a solution of baking soda and water.
- Make certain the terminal connections are clean and securely tightened.
- If the vehicle is not to be used for 30 days or longer, disconnect the negative (−) battery terminal cable to prevent discharging it.

⚠ WARNING

- **Do not expose the battery to flames or electrical sparks. Hydrogen gas generated by the battery is explosive. Do not allow battery fluid to contact your skin, eyes, fabrics, or painted surfaces. After touching a battery or battery cap, do not touch or rub your eyes. Thoroughly wash your hands. If the acid contacts your eyes, skin or clothing, immediately flush with water for at least 15 minutes and seek medical attention.**
- **Do not operate the vehicle if the fluid in the battery is low. Low battery fluid can cause a higher load on the battery which can generate heat, reduce battery life, and in some cases lead to an explosion.**
- **When working on or near a battery, always wear suitable eye protection and remove all jewelry.**

- **Battery posts, terminals and related accessories contain lead and lead compounds. Wash hands after handling.**
- **Keep the battery out of the reach of children.**

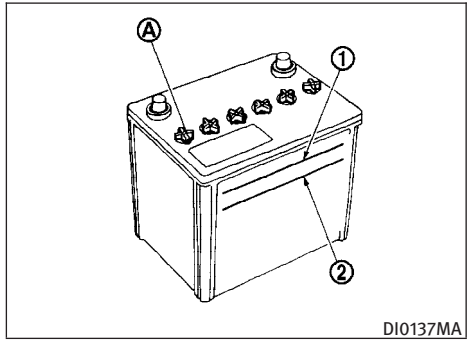

Check the fluid level in each cell. (Remove the battery cover if it is necessary.) It should be between the UPER LEVEL ① and LOWER LEVEL ② lines.

If it is necessary to add fluid, add only distilled water to bring the level to the indicator in each filler opening. **Do not overfill.**

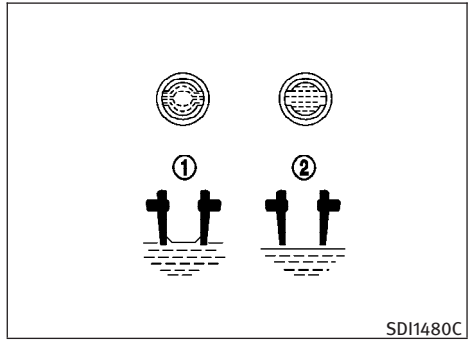

1. Remove the cell plugs Ⓐ.
2. Add distilled water up to the UPER LEVEL ① line.

   If the side of the battery is not clear, check the distilled water level by looking directly above the cell; the condition ① indicates OK and the conditions ② needs more to be added.
3. Tighten cell plugs Ⓐ.

Vehicles operated in high temperatures or under severe conditions require frequent checks of the battery fluid level.

JUMP STARTING

If jump starting is necessary, see “JUMP STARTING” in the “6. In case of emergency” section. If the engine does not start by jump starting, the battery may have to be replaced. Contact an INFINITI retailer.

VARIABLE VOLTAGE CONTROL SYSTEM (if so equipped)

⚠ CAUTION

- **Do not ground accessories directly to the battery terminal. Doing so will bypass the variable voltage control system and the vehicle battery may not charge completely.**
- **Use electrical accessories with the engine running to avoid discharging the vehicle battery.**

The variable voltage control system measures the amount of electrical discharge from the battery and controls voltage generated by the generator.

DRIVE BELTS

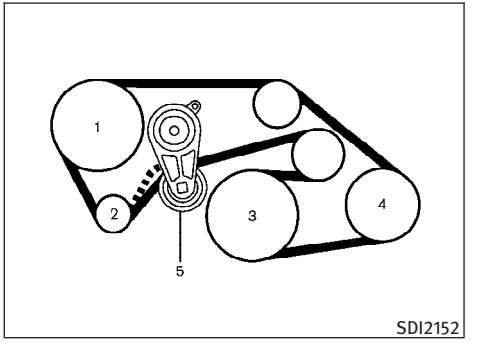

VQ35HR engine

1. Power steering fluid pump
2. Alternator
3. Crankshaft pulley
4. Air conditioner compressor
5. Drive belt auto-tensioner

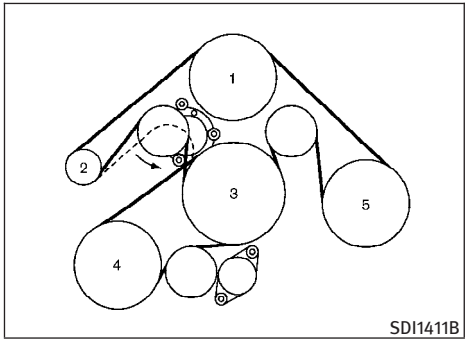

VK45DE engine

1. Water pump
2. Alternator
3. Crankshaft pulley
4. Power steering fluid pump
5. Air conditioner compressor

⚠ WARNING

Be sure the ignition switch is in the LOCK position before servicing drive belts. The engine could rotate unexpectedly.

1. Visually inspect each belt for signs of unusual wear, cuts, fraying or looseness. If the belt is in poor condition or loose, have it replaced or adjusted by an INFINITI retailer.
2. Have the belts checked regularly for condition and tension.

⚠ WARNING

Be sure the engine and the ignition switch are off and that the parking brake is engaged securely.

⚠ CAUTION

Be sure to use the correct socket to remove the spark plugs. An incorrect socket can damage the spark plugs.

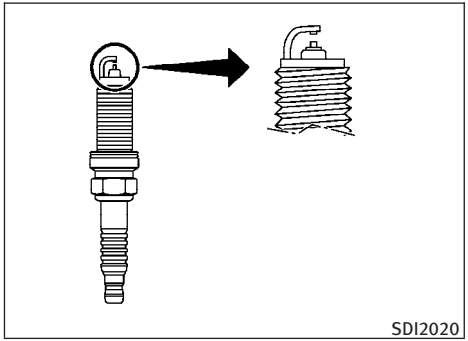

REPLACING SPARK PLUGS

If replacement is required, see an INFINITI retailer for servicing.

Platinum-tipped spark plugs (for VK45DE engine model)

It is not necessary to replace the iridium-tipped spark plugs as frequently as the conventional type spark plugs since they will last much longer. Follow the maintenance log shown in the “INFINITI Service and Maintenance Guide”. Do not reuse the spark plugs by cleaning or regapping.

Always replace spark plugs with recommended or equivalent ones.

Iridium-tipped spark plugs (for VQ35HR engine model)

It is not necessary to replace the iridium-tipped spark plugs as frequently as the conventional type spark plugs since they will last much longer. Follow the maintenance schedule in “INFINITI Service and Maintenance Guide”, but do not reuse them by cleaning or regapping.

Always replace spark plugs with recommended or equivalent ones.

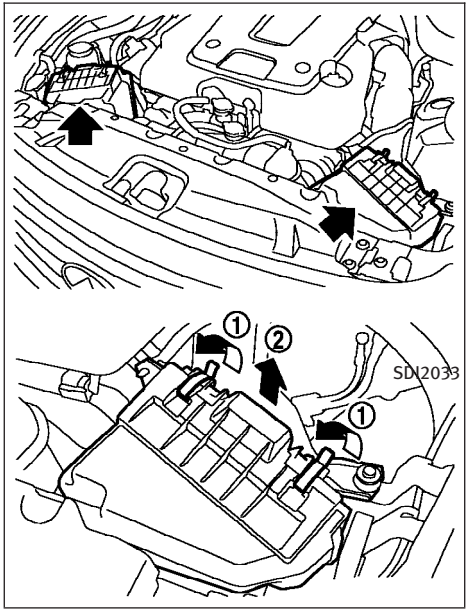

VQ35HR engine

Remove the retainers ① as illustrated and pull out the filter element ②.

The filter element should not be cleaned and reused. Replace it according to the mainte-

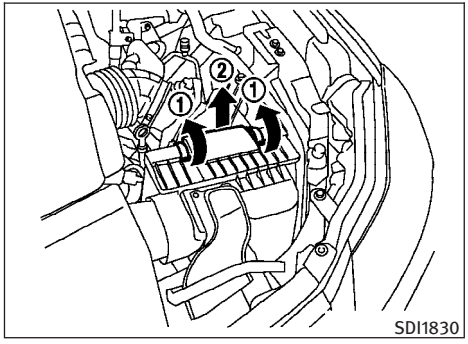

VK45DE engine

nance log shown in the “INFINITI Service and Maintenance Guide”. When replacing the filter, wipe the inside of the air cleaner housing and the cover with a damp cloth.

WARNING

- **Operating the engine with the air cleaner removed can cause you or others to be burned. The air cleaner not only cleans the air, it stops flame if the engine backfires. If it isn’t there, and the engine backfires, you could be burned. Do not drive with the air cleaner removed, and be careful when working on the engine with the air cleaner removed.**
- **Never pour fuel into the throttle body or attempt to start the engine with the air cleaner removed. Doing so could result in serious injury.**

CLEANING

If your windshield is not clear after using the windshield washer or if a wiper blade chatters when running, wax or other material may be on the blade or windshield.

Clean the outside of the windshield with a washer solution or a mild detergent. Your windshield is clean if beads do not form when rinsing with clear water.

Clean each blade by wiping it with a cloth soaked in a washer solution or a mild detergent. Then rinse the blade with clear water. If your windshield is still not clear after cleaning the blades and using the wiper, replace the blades.

CAUTION

Worn windshield wiper blades can damage the windshield and impair driver vision.

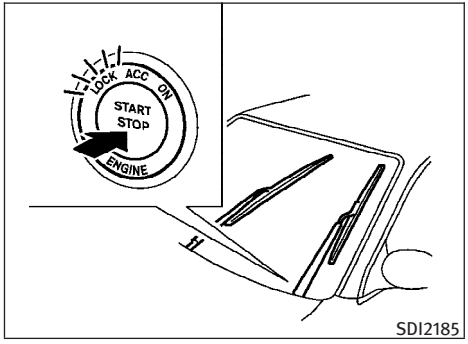

SDI2185

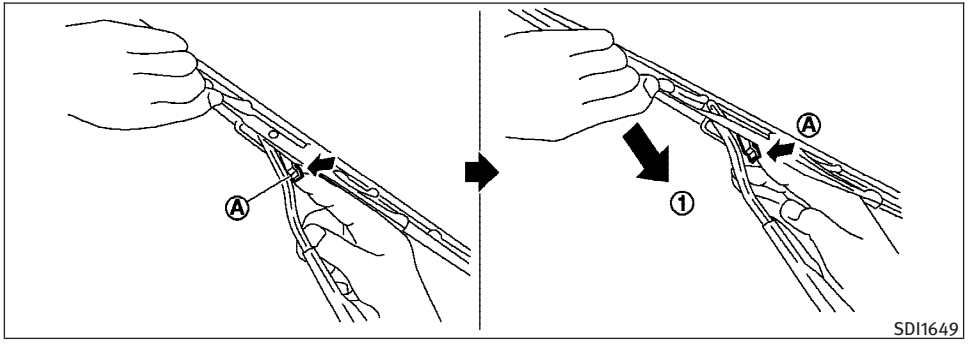

SDI1649

REPLACING

Replace the wiper blades if they are worn.

1. Push the ignition switch to the ON position and turn the windshield wiper switch on. Push the ignition switch to the LOCK position when the wiper is in the fully up position. The wiper will stop as illustrated.

   The wiper should be in the fully up position to avoid scratching the engine hood or wiper arm.

2. Pull the wiper arm.
3. Push the release tab Ⓐ, and then move the wiper blade down the wiper arm ① while pushing the release tab to remove.
4. Insert the new wiper blade onto the wiper arm until a click sounds.
5. Rotate the wiper blade so the dimple is in the groove.

⚠ CAUTION

- **After wiper blade replacement, return the wiper arm to its original position;**

  otherwise it may be damaged when the hood is opened.

- **Make sure the wiper blades contact the glass; otherwise the arm may be damaged from wind pressure.**

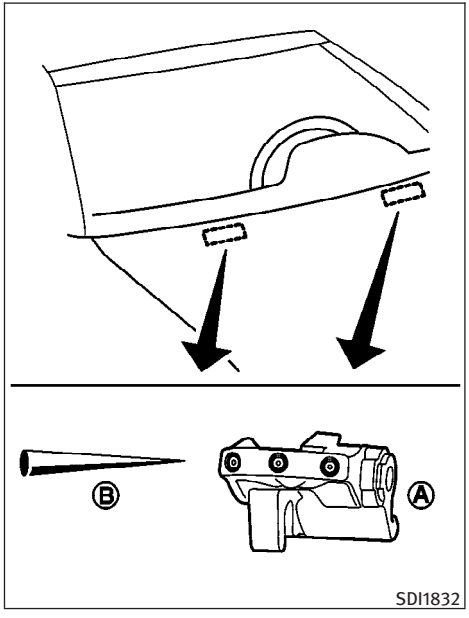

If you wax the surface of the hood, be careful not to let wax get into the washer nozzle Ⓐ. This may cause clogging or improper windshield washer operation. If wax gets into the nozzle, remove it with a needle or small pin Ⓑ.

If the brakes do not operate properly, have the brakes checked by an INFINITI retailer.

SELF-ADJUSTING BRAKES

Your vehicle is equipped with self-adjusting brakes.

The disc-type brakes self-adjust every time the brake pedal is applied.

⚠ WARNING

See an INFINITI retailer for a brake system check if the brake pedal height does not return to normal.

BRAKE PAD WEAR WARNINGS

The disc brake pads have audible wear warnings. When a brake pad requires replacement, it will make a high pitched scraping sound when the vehicle is in motion. This scraping sound will first occur only when the brake pedal is depressed. After more wear of the brake pad, the sound will always be heard even if the brake pedal is not depressed. Have the brakes checked as soon as possible if the wear warning sound is heard.

Under some driving or climate conditions, occasional brake squeak, squeal or other noise may be heard. Occasional brake noise during light to moderate stops is normal and does not affect the function or performance of the brake system.

Proper brake inspection intervals should be followed. For additional information, see the maintenance log section of your “INFINITI Service and Maintenance Guide”.

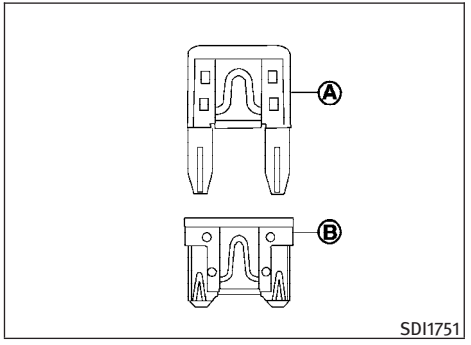

SDI1751

Some vehicles are equipped with engine compartment and passenger compartment fuse boxes that use only type Ⓐ fuses. Other vehicles are equipped with type Ⓐ fuses in the engine compartment fuse box and type Ⓑ fuses in the passenger compartment fuse box.

Type Ⓐ fuses are provided as spare fuses. They are stored in the passenger compartment fuse box.

Type Ⓐ fuses can be installed in the engine compartment and passenger compartment fuse boxes.

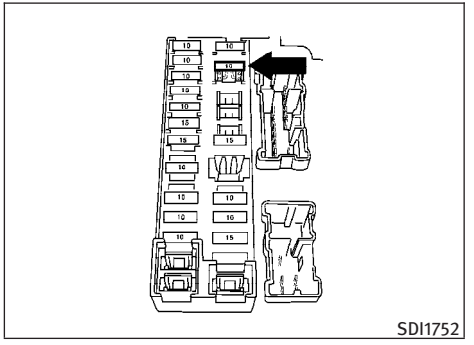
SDI1752

If a type Ⓐ fuse is used to replace a type Ⓑ fuse, the type Ⓐ fuse will not be level with the fuse pocket as shown in the illustration. This will not affect the performance of the fuse. Make sure the fuse is installed in the fuse box securely.

Type Ⓑ fuses cannot be installed in the underhood fuse boxes. Only use type Ⓐ fuses in the underhood fuse boxes.

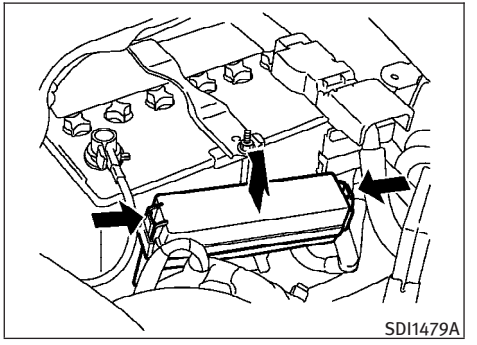
SDI1479A

ENGINE COMPARTMENT

⚠ CAUTION

Never use a fuse of a higher or lower amperage rating than that specified on the fuse box cover. This could damage the electrical system or cause a fire.

If any electrical equipment does not operate, check for an open fuse.

1. Be sure the ignition switch is pushed to the LOCK position and the headlight switch is turned off.

2. Open the engine hood and remove the cover on the battery and the fuse/fusible link holder.
3. Remove the fuse/fusible link holder cover.
4. Remove the fuse with the fuse puller.

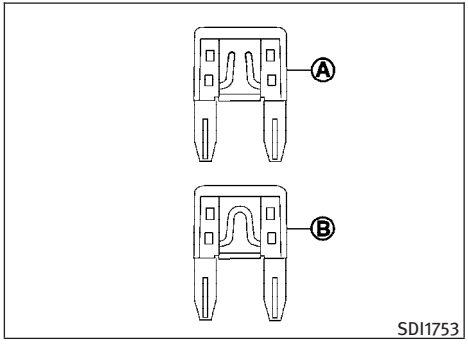

5. If the fuse is open Ⓐ, replace it with a new fuse Ⓑ. Spare fuses are stored in the passenger compartment fuse box.
6. If a new fuse also opens, have the electrical system checked and repaired by an INFINITI retailer.

Fusible links

If any electrical equipment does not operate and fuses are in good condition, check the fusible links. If any of these fusible links are melted, replace only with genuine INFINITI parts.

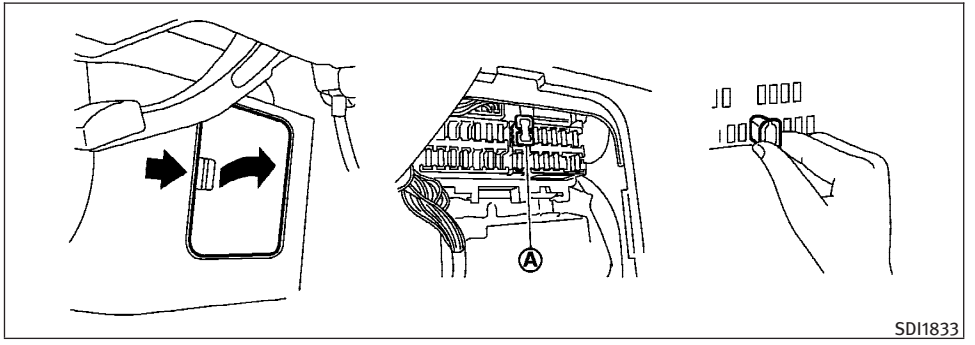

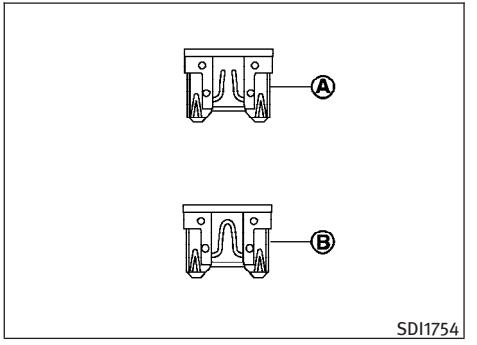

PASSENGER COMPARTMENT

⚠ CAUTION

Never use a fuse of a higher or lower amperage rating than that specified on the fuse box cover. This could damage the electrical system or cause a fire.

If any electrical equipment does not operate, check for an open fuse.

1. Be sure the ignition switch is pushed to the LOCK position and the headlight switch is turned off.
2. Open the fuse box lid.
3. Remove the fuse with the fuse puller Ⓐ.
4. If the fuse is open Ⓐ, replace it with a new fuse Ⓑ. Spare fuses are stored in the fuse box.
5. If a new fuse also opens, have the electrical system checked and repaired by an INFINITI retailer.

⚠ CAUTION

Be careful not to allow children to swallow the battery and removed parts.

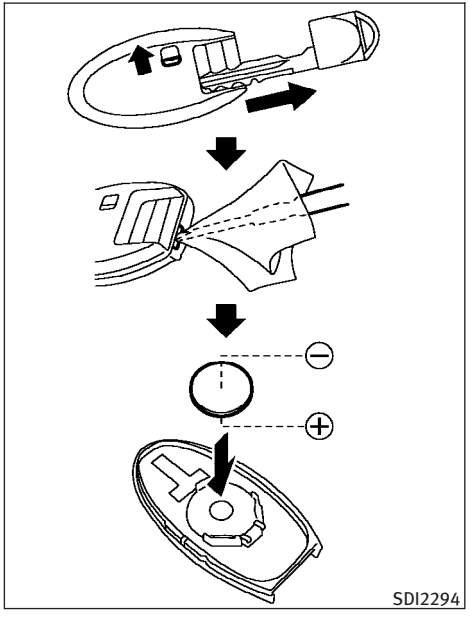

INTELLIGENT KEY

To replace the battery:

1. Release the lock knob at the back of the Intelligent Key and remove the mechanical key.
2. Insert a flat-blade screwdriver Ⓐ wrapped with a cloth into the slit Ⓑ of the corner and twist it to separate the upper part from the lower part.
3. Replace the battery with a new one.

   Recommended battery:
   CR2025 or equivalent

   - Do not touch the internal circuit and electric terminals as it could cause a malfunction.
   - Hold the battery by the edges. Holding the battery across the contact points will seriously deplete the storage capacity.
   - Make sure that the + side faces the bottom of the case.

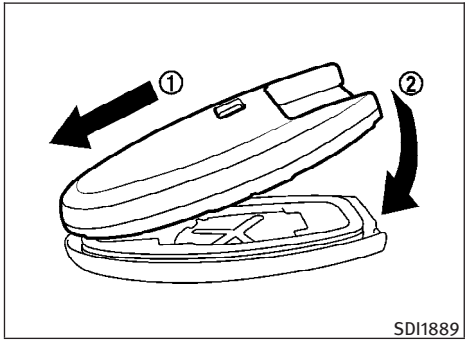

4. Align the tips of the upper and lower parts, and then push them together until it is securely closed.
5. Operate the buttons to check its operation.

See an INFINITI retailer if you need any assistance for replacement.

FCC Notice:

This equipment has been tested and found to comply with the limits for a Class B digital device pursuant to part 15 of the FCC Rules. These limits are designed to provide reasonable protection against harmful interference in a residential installation. This equipment generates, uses and can radiate radio frequency energy and, if not installed and used in accordance with the instructions, may cause harmful interference to radio communications. However, there is no guarantee that interference will not occur in a particular installation. If this equipment does cause harmful interference to radio or television reception, which can be determined by turning the equipment off and on, the user is encouraged to try to correct the interference by one or more of the following measures:

- **Reorient or relocate the receiving antenna**
- **Increase the separation between the equipment and the receiver**
- **Connect the equipment into an outlet on a circuit different from that to which the receiver is connected.**
- **Consult the retailer or an experienced radio/TV technician for help.**

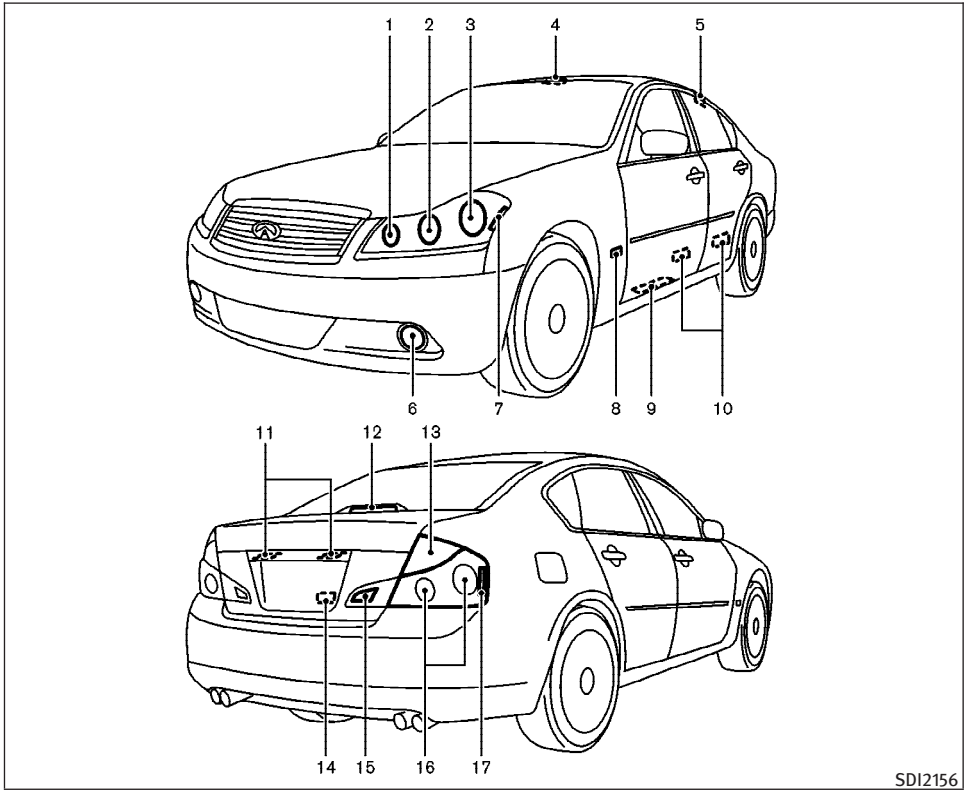

1. Front turn signal light
2. Front park light/Headlight (high-beam)
3. Headlight (low-beam)
4. Map light
5. Rear personal light
6. Front fog light
7. Front side marker light
8. Front side turn signal light
9. Front sill plate light
10. Step light
11. License plate light
12. High-mounted stop light
13. Rear turn signal light
14. Trunk light
15. Back-up light
16. Tail/stop light
17. Rear side marker light

HEADLIGHTS

Fog may temporarily form inside the lens of the exterior lights in the rain or in a car wash. A temperature difference between the inside and the outside of the lens causes the fog. This is not a malfunction. If large drops of water collect inside the lens, contact an INFINITI retailer.

Replacing

Xenon headlight model :

WARNING

HIGH VOLTAGE

When xenon headlights are on, they produce a high voltage. To prevent an electric shock, never attempt to modify or disassemble. Always have your xenon headlights replaced at an INFINITI retailer. For additional information, see "HEADLIGHT AND TURN SIGNAL SWITCH" in the "2. Instruments and controls" section.

Use the same number and wattage as originally installed:

Low beam (Xenon):
Wattage: 35
Bulb no.: D2S

High beam (Halogen):
Wattage: 60
Bulb no.: HB3

If replacement is required, see an INFINITI retailer.

EXTERIOR AND INTERIOR LIGHTS

Item	Wattage (W)	Bulb No.
Front turn signal light*	21	WY21W
Front fog light*	55	H11
Front park light*	5	W5W
Front side turn signal light*	5	W5W
Rear combination light*		
back-up	18	W16W
turn signal	21	WY21W
stop/tail/side marker	LED	—
License plate light*	5	W5W
Map light	8	—
Rear personal light	8	—
Vanity mirror light	1.8	—
Step light*	3.4	—
Front sill plate light*		
Trunk light*	5	—
High-mounted stop light*	LED	—

*: See an INFINITI retailer for replacement.

NOTE: Always check with the Parts Department at an INFINITI retailer for the latest information about parts.

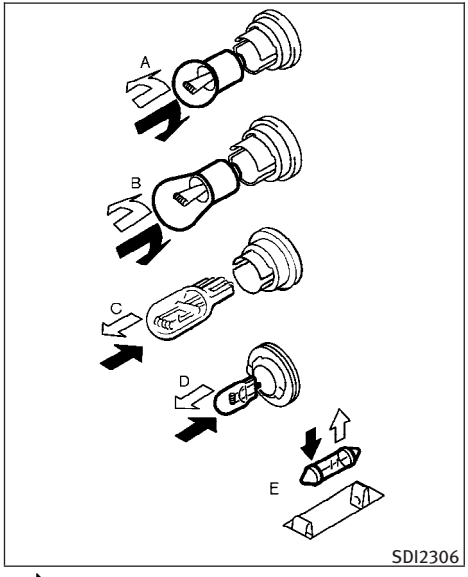

⇨ : REMOVE

➡ : INSTALL

Replacement procedures

All other lights are either type A, B, C, D or E. When replacing a bulb, first remove the lens and/or cover.

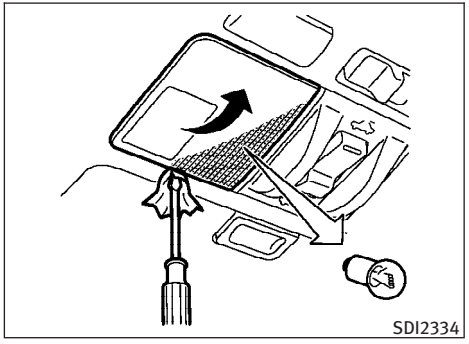

Map light

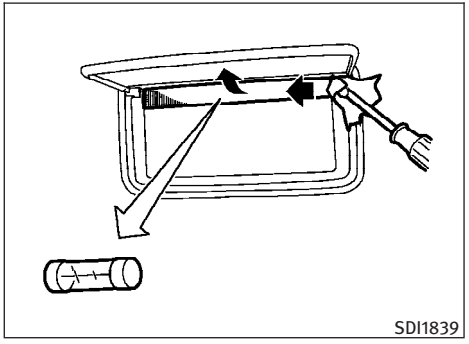

Vanity mirror light

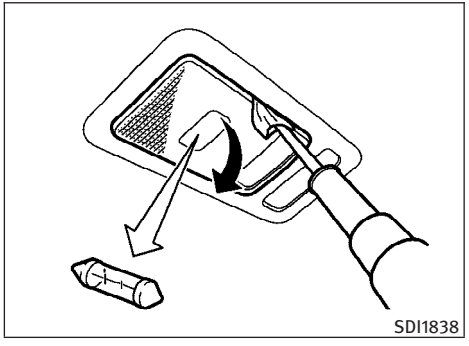

Rear personal light

If you have a flat tire, see "FLAT TIRE" in the "6. In case of emergency" section.

TIRE PRESSURE

Tire Pressure Monitoring System (TPMS)

This vehicle is equipped with the Tire Pressure Monitoring System (TPMS). It monitors tire pressure of all tires except the spare. When the low tire pressure warning light is lit, one or more of your tires is significantly under-inflated.

The TPMS will activate only when the vehicle is driven at speeds above 16 MPH (25 km/h). Also, this system may not detect a sudden drop in tire pressure (for example a flat tire while driving).

For more details, see "Low tire pressure warning light" in the "2. Instruments and controls" section, "Tire Pressure information" in the "4. Monitor, climate, audio, phone and voice recognition systems" section, "TIRE PRESSURE MONITORING SYSTEM (TPMS)" in the "5. Starting and driving" section and "TIRE PRESSURE MONITORING SYSTEM (TPMS)" in the "6. In case of emergency" section.

Tire inflation pressure

Check the pressure of the tires (including the spare) often and always prior to long distance trips. The recommended tire pressure specifications are shown on the Tire and Loading Information label under the "Cold Tire Pressure" heading. The Tire and Loading Information label is affixed to the driver side center pillar. Tire pressures should be checked regularly because:

- Most tires naturally lose air over time.
- Tires can lose air suddenly when driven over potholes or other objects or if the vehicle strikes a curb while parking.

The tire pressures should be checked when the tires are cold. The tires are considered COLD after the vehicle has been parked for 3 or more hours, or driven less than 1 mile (1.6 km) at moderate speeds.

Incorrect tire pressure, including under inflation, may adversely affect tire life and vehicle handling.

⚠ WARNING

- **Improperly inflated tires can fail suddenly and cause an accident.**
- **The Gross Vehicle Weight rating (GVWR) is located on the F.M.V.S.S./C.M.V.S.S. certification label. The vehicle weight capacity is indicated on the Tire and Loading Information label. Do not load your vehicle beyond this capacity. Overloading your vehicle may result in reduced tire life, unsafe operating conditions due to premature tire failure, or unfavorable handling characteristics and could also lead to a serious accident. Loading beyond the specified capacity may also result in failure of other vehicle components.**

- **Before taking a long trip, or whenever you heavily load your vehicle, use a tire pressure gauge to ensure that the tire pressures are at the specified level.**
- **For additional information regarding tires, refer to "Important Tire Safety Information" (US) or "Tire Safety Information" (Canada) in the Warranty Information Booklet.**

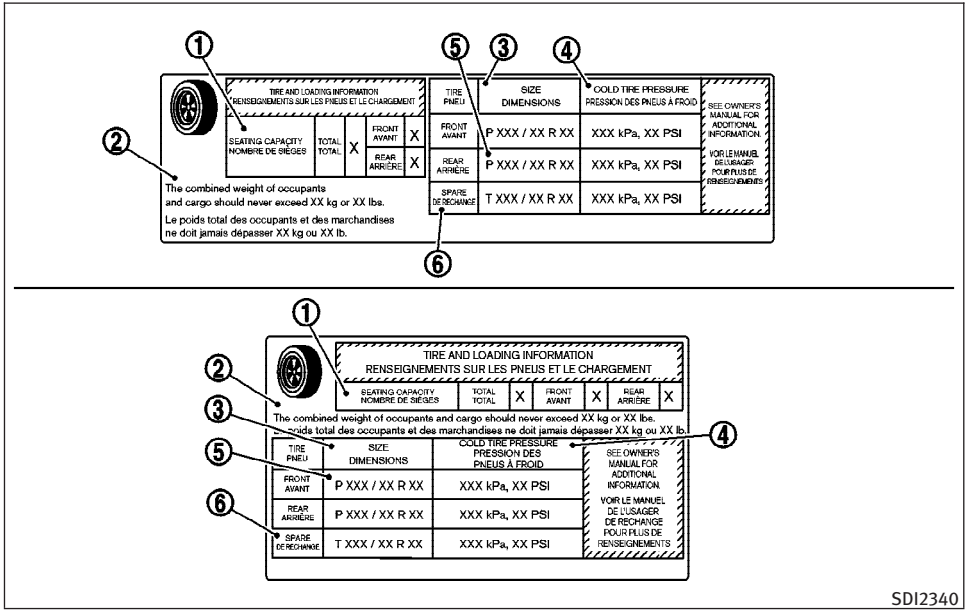

Tire and Loading Information label

① Seating capacity: The maximum number of occupants that can be seated in the vehicle.

② Vehicle load limit: See “VEHICLE LOADING INFORMATION” in the “9. Technical and consumer information” section.

③ Original size: The size of the tires originally installed on the vehicle at the factory.

④ Cold tire pressure: Inflate the tires to this pressure when the tires are cold. Tires are considered COLD after the vehicle has been parked for 3 or more hours, or driven less than 1 mile (1.6 km) at moderate speeds. The recommended cold tire inflation is set by the manufacturer to provide the best balance of tire wear, vehicle handling, driveability, tire noise, etc., up to the vehicle’s GVWR.

⑤ Tire size — see “TIRE LABELING” later in this section.

⑥ Spare tire size or compact spare tire size (if so equipped)

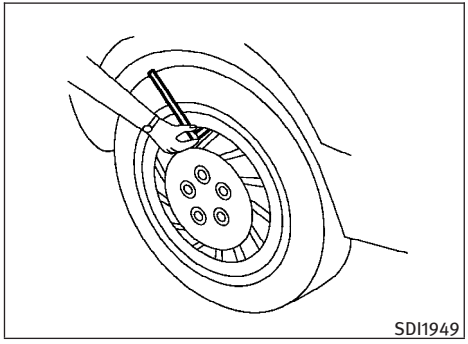

Checking the tire pressure

1. Remove the valve stem cap from the tire.
2. Press the pressure gauge squarely onto the valve stem. Do not press too hard or force the valve stem sideways, or air will escape. If the hissing sound of air escaping from the tire is heard while checking the pressure, reposition the gauge to eliminate this leakage.
3. Remove the gauge.
4. Read the tire pressure on the gauge stem and compare it to the specification shown on the Tire and Loading Information label.
5. Add air to the tire as needed. If too much air is added, press the core of the valve stem briefly with the tip of the gauge stem to release pressure. Recheck the pressure and add or release air as needed.
6. Install the valve stem cap.
7. Check the pressure of all other tires, including the spare.

	SIZE	COLD TIRE INFLATION PRESSURE
FRONT ORIGINAL TIRE	P245/ 45R18 96V	230 kPa, 33 PSI
	245/ 40R19 94W	230 kPa, 33 PSI
REAR ORIGINAL TIRE	P245/ 45R18 96V	230 kPa, 33 PSI
	245/ 40R19 94W	230 kPa, 33 PSI
SPARE TIRE	T145/ 80D17	420 kPa, 60 PSI

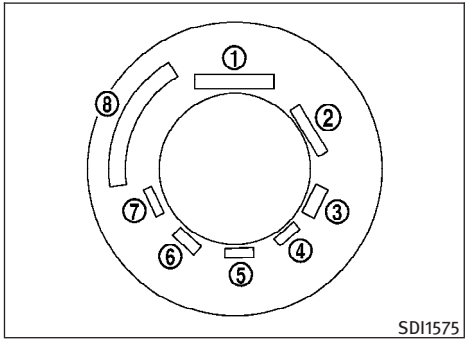

Example

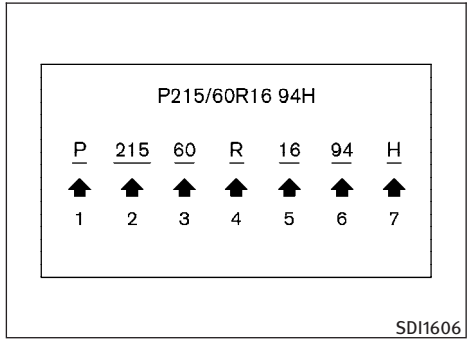

Example

TIRE LABELING

Federal law requires tire manufacturers to place standardized information on the sidewall of all tires. This information identifies and describes the fundamental characteristics of the tire and also provides the tire identification number (TIN) for safety standard certification. The TIN can be used to identify the tire in case of a recall.

① Tire size (example: P215/60R16 94H)

1. P: The “P” indicates the tire is designed for passenger vehicles. (Not all tires have this information.)
2. Three-digit number (215): This number gives the width in millimeters of the tire from sidewall edge to sidewall edge.
3. Two-digit number (60): This number, known as the aspect ratio, gives the tire’s ratio of height to width.
4. R: The “R” stands for radial.
5. Two-digit number (16): This number is the wheel or rim diameter in inches.
6. Two- or three-digit number (94): This number is the tire’s load index. It is a measurement of how much weight each tire can support. You may not find this information on all tires because it is not required by law.
7. H: Tire speed rating. You should not drive the vehicle faster than the tire speed rating.

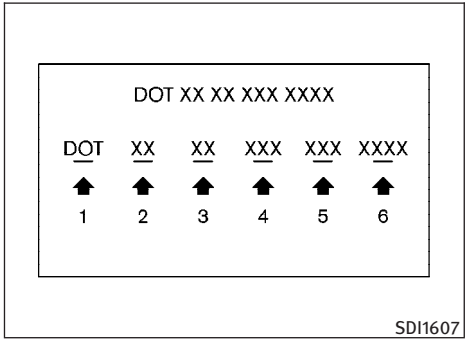

Example

② TIN (Tire Identification Number) for a new tire (example: DOT XX XX XXX XXXX)

1. DOT: Abbreviation for the "Department of Transportation". The symbol can be placed above, below or to the left or right of the Tire Identification Number.
2. Two-digit code: Manufacturer's identification mark
3. Two-digit code: Tire size
4. Three-digit code: Tire type code (Optional)
5. Three-digit code: Date of Manufacture
6. Four numbers represent the week and year the tire was built. For example, the numbers 3103 means the 31st week of 2003. If these numbers are missing, then look on the other sidewall of the tire.

③ Tire ply composition and material
The number of layers or plies of rubber-coated fabric in the tire.
Tire manufacturers also must indicate the materials in the tire, which include steel, nylon, polyester, and others.

④ Maximum permissible inflation pressure
This number is the greatest amount of air pressure that should be put in the tire. Do not exceed the maximum permissible inflation pressure.

⑤ Maximum load rating
This number indicates the maximum load in kilograms and pounds that can be carried by the tire. When replacing the tires on the vehicle, always use a tire that has the same load rating as the factory installed tire.

⑥ Term of "tubeless" or "tube type"
Indicates whether the tire requires an inner tube ("tube type") or not ("tubeless").

⑦ The word "radial"
The word "radial" is shown, if the tire has radial structure.

⑧ Manufacturer or brand name
Manufacturer or brand name is shown.

Other tire-related terminology:

In addition to the many terms that are defined throughout this section, Intended Outboard Sidewall is (1) the sidewall that contains a whitewall, bears

white lettering or bears manufacturer, brand and/or model name molding that is higher or deeper than the same molding on the other sidewall of the tire, or (2) the outward facing sidewall of an asymmetrical tire that has a particular side that must always face outward when mounted on a vehicle.

TYPES OF TIRES

⚠ WARNING

- **When changing or replacing tires, be sure all four tires are of the same type (Example: Summer, All Season or Snow) and construction. An INFINITI retailer may be able to help you with information about tire type, size, speed rating and availability.**
- **Replacement tires may have a lower speed rating than the factory equipped tires, and may not match the potential maximum vehicle speed. Never exceed the maximum speed rating of the tire.**
- **Replacing tires with those not originally specified by INFINITI could affect the proper operation of the TPMS.**
- **For additional information regarding tires, refer to "Important Tire Safety Information" (US) or "Tire Safety Information" (Canada) in the Warranty Information Booklet.**

All season tires

INFINITI specifies all season tires on some models to provide good performance all year, including snowy and icy road conditions. All Season tires are identified by ALL SEASON and/or M&S (Mud and Snow) on the tire sidewall. Snow tires have better snow traction than All Season tires and may be more appropriate in some areas.

Summer tires

INFINITI specifies summer tires on some models to provide superior performance on dry roads. Summer tire performance is substantially reduced in snow and ice. Summer tires do not have the tire traction rating M&S on the tire sidewall.

If you plan to operate your vehicle in snowy or icy conditions, INFINITI recommends the use of SNOW tires or ALL SEASON tires on all four wheels.

Snow tires

If snow tires are needed, it is necessary to select tires equivalent in size and load rating to the original equipment tires. If you do not, it can adversely affect the safety and handling of your vehicle.

Generally, snow tires will have lower speed ratings than factory equipped tires and may not match the potential maximum vehicle speed. Never exceed the maximum speed rating of the tire.

If you install snow tires, they must be the same size, brand, construction and tread pattern on all four wheels.

For additional traction on icy roads, studded tires may be used. However, some U.S. states and Canadian provinces prohibit their use. Check local, state and provincial laws before installing studded tires. Skid and traction capabilities of studded snow tires, on wet or dry surfaces, may be poorer than that of non-studded snow tires.

TIRE CHAINS

Use of tire chains may be prohibited according to location. Check the local laws before installing tire chains. When installing tire chains, make sure they are the proper size for the tires on your vehicle and are installed according to the chain manufacturer's suggestions. **Use only SAE Class S chains.** Class "S" chains are used on vehicles with restricted tire to vehicle clearance. Vehicles that can use Class "S" chains are designed to meet the SAE standard minimum clearances between the tire and the closest vehicle suspension or body component required to accommodate the use of a winter traction device (tire chains or cables). The minimum clearances are determined using the factory equipped tire size. Other types may damage your vehicle. Use chain tensioners when recommended by the tire chain manufacturer to ensure a tight fit. Loose end links of the tire chain must be secured or removed to prevent the possibility of whipping action damage to the fenders or underbody. If possible, avoid fully loading your vehicle when using tire chains. In addition, drive at a reduced speed. Otherwise, your vehicle may be damaged and/or vehicle handling and performance may be adversely affected.

Tire chains must be installed only on the rear wheels and not on the front wheels.

Never install tire chains on a TEMPORARY USE ONLY spare tire.

Do not use tire chains on dry roads. Driving with tire chains in such conditions can cause damage to the various mechanisms of the vehicle due to some overstress.

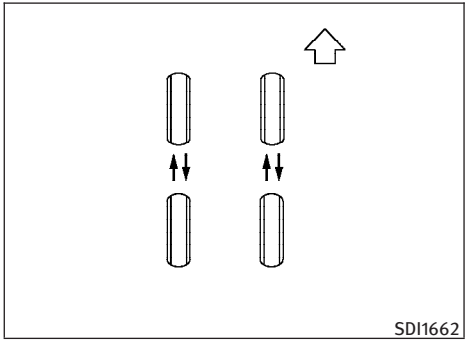

CHANGING WHEELS AND TIRES

Tire rotation

INFINITI recommends rotating the tires every 7,500 miles (12,000 km). (See "FLAT TIRE" in the "6. In case of emergency" section for tire replacing procedures.)

As soon as possible, tighten the wheel nuts to the specified torque with a torque wrench.

Wheel nut tightening torque:
80 ft-lb (108 N·m)

The wheel nuts must be kept tightened to the specification at all times. It is recommended that wheel nuts be tightened to the specification at each tire rotation interval.

WARNING

- **After rotating the tires, check and adjust the tire pressure.**
- **Retighten the wheel nuts when the vehicle has been driven for 600 miles (1,000 km) (also in cases of a flat tire, etc.).**
- **Do not include the spare tire or any other small size spare tire in the tire rotation.**

- **For additional information regarding tires, refer to "Important Tire Safety Information" (US) or "Tire Safety Information" (Canada) in the Warranty Information Booklet.**

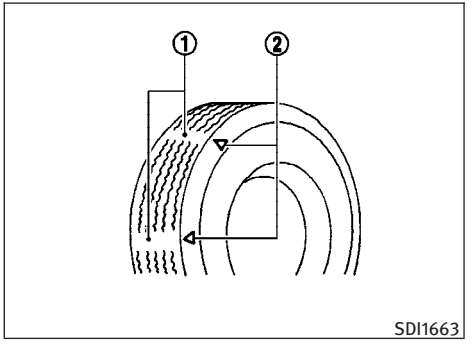

1. Wear indicator
2. Wear indicator location mark

Tire wear and damage

WARNING

- **Tires should be periodically inspected for wear, cracking, bulging or objects caught in the tread. If excessive wear, cracks, bulging or deep cuts are found, the tire(s) should be replaced.**

- **The original tires have built-in tread wear indicators. When wear indicators are visible, the tire(s) should be replaced.**
- **Tires degrade with age and use. Have tires, including the spare, over 6 years old checked by a qualified technician, because some tire damage may not be obvious. Replace the tires as necessary to prevent tire failure and possible personal injury.**
- **Improper service of the spare tire may result in serious personal injury. If it is necessary to repair the spare tire, contact an INFINITI retailer.**
- **For additional information regarding tires, refer to "Important Tire Safety Information" (US) or "Tire Safety Information" (Canada) in the Warranty Information Booklet.**

Replacing wheels and tires

When replacing a tire, use the same size, tread design, speed rating and load carrying capacity as originally equipped. (See "SPECIFICATIONS" in the "9. Technical and consumer information" section for recommended types and sizes of tires and wheels.)

⚠ WARNING

- **The use of tires other than those recommended or the mixed use of tires of different brands, construction (bias, bias-belted or radial), or tread patterns can adversely affect the ride, braking, handling, ground clearance, body-to-tire clearance, tire chain clearance, speedometer calibration, headlight aim and bumper height. Some of these effects may lead to accidents and could result in serious personal injury.**
- **If the wheels are changed for any reason, always replace with wheels which have the same off-set dimension. Wheels of a different off-set could cause premature tire wear, degrade vehicle handling characteristics and/or interference with the brake discs/drums. Such interference can lead to decreased braking efficiency and/or early brake pad/shoe wear. See "WHEELS AND TIRES" in the "9. Technical and consumer information" section of this manual for wheel off-set dimensions.**
- **When a spare tire is mounted or a wheel is replaced, tire pressure will not be indicated, the TPMS will not function and the low tire pressure warning light will flash for approximately 1 minute. The light will remain on after 1 minute. Contact your INFINITI retailer as soon as possible for tire replacement and/or system resetting.**
- **Replacing tires with those not originally specified by INFINITI could affect the proper operation of the TPMS.**
- **Do not install a damaged or deformed wheel or tire even if it has been repaired. Such wheels or tires could have structural damage and could fail without warning.**
- **The use of retread tire is not recommended.**

- **For additional information regarding tires, refer to "Important Tire Safety Information" (US) or "Tire Safety Information" (Canada) in the Warranty Information Booklet.**

All-Wheel Drive (AWD) models

⚠ CAUTION

- **Always use tires of the same type, size, brand, construction (bias, bias-belted or radial), and tread pattern on all four wheels. Failure to do so may result in a circumference difference between tires on the front and rear axles which will cause excessive tire wear and may damage the transmission, transfer case and differential gears.**
- **ONLY use spare tires specified for the AWD model.**

If excessive tire wear is found, it is recommended that all four tires be replaced with tires of the same size, brand, construction and tread pattern. The tire pressure and wheel alignment should also be checked and corrected as necessary. Contact an INFINITI retailer.

Wheel balance

Unbalanced wheels may affect vehicle handling and tire life. Even with regular use, wheels can get out of balance. Therefore, they should be balanced as required.

Wheel balance service should be performed with the wheels off the vehicle. Spin balancing the wheels on the vehicle could lead to mechanical damage.

For additional information regarding tires, refer to "Important Tire Safety Information" (US) or "Tire Safety Information" (Canada) in the INFINITI Warranty Information Booklet.

Care of wheels

- Wash the wheels when washing the vehicle to maintain their appearance.
- Clean the inner side of the wheels when the wheel is changed or the underside of the vehicle is washed.
- Do not use abrasive cleaners when washing the wheels.
- Inspect wheel rims regularly for dents or corrosion. Such damage may cause loss of pressure or poor seal at the tire bead.
- INFINITI recommends that the road wheels be waxed to protect against road salt in areas where it is used during winter.

Spare tire (TEMPORARY USE ONLY spare tire)

Observe the following precautions if the TEMPORARY USE ONLY spare tire must be used, otherwise your vehicle could be damaged or involved in an accident.

⚠ WARNING

- **The TEMPORARY USE ONLY spare tire should be used for emergency use. It should be replaced with the standard tire at the first opportunity to avoid possible tire or differential damage.**
- **Drive carefully while the TEMPORARY USE ONLY spare tire is installed. Avoid sharp turns and abrupt braking while driving.**
- **Periodically check spare tire inflation pressure. Always keep the pressure of the TEMPORARY USE ONLY spare tire at 60 psi (420 kPa, 4.2 bar). Always keep the pressure of the full size spare tire (if so equipped) at the recommended pressure for standard tires, as indicated on the Tire and Loading Information label.**

- With the TEMPORARY USE ONLY spare tire installed do not drive your vehicle at speeds faster than 50 MPH (80 km/h).
- When driving on roads covered with snow or ice, the TEMPORARY USE ONLY spare tire should be used on the front wheels and original tire used on the rear wheels (drive wheels). Use tire chains only on the two rear original tires.
- Tire tread of the TEMPORARY USE ONLY spare tire will wear at a faster rate than the standard tire. Replace the spare tire as soon as the tread wear indicators appear.
- Do not use the spare tire on other vehicles.
- Do not use more than one spare tire at the same time.

⚠ CAUTION

- Do not use tire chains on a TEMPORARY USE ONLY spare tire. Tire chains will not fit properly and may cause damage to the vehicle.
- Because the TEMPORARY USE ONLY spare tire is smaller than the original tire, ground clearance is reduced. To avoid damage to the vehicle, do not drive over obstacles. Also do not drive the vehicle through an automatic car wash since it may get caught.

MEMO

9 Technical and consumer information

Capacities and recommended fuel/lubricants 9-2
Fuel recommendation 9-4
Engine oil and oil filter recommendation 9-6
Air conditioning system refrigerant and lubricant recommendations 9-7
Specifications 9-8
Engine 9-8
Wheels and tires 9-9
Dimensions and weights 9-10
When traveling or registering your vehicle in another country 9-10
Vehicle identification 9-11
Vehicle Identification Number (VIN) plate 9-11
Vehicle identification number (chassis number) 9-11
Engine serial number 9-12
F.M.V.S.S./C.M.V.S.S. certification label 9-12
Emission control information label 9-12
Tire and loading information label 9-13
Air conditioner specification label 9-13
Installing front license plate 9-14
Vehicle loading information 9-15
Terms 9-15
Vehicle load capacity 9-16
Loading tips 9-17
Measurement of weights 9-18
Towing a trailer 9-18
Flat towing 9-19
Automatic transmission 9-19
Uniform tire quality grading 9-19
Treadwear 9-19
Traction AA, A, B and C 9-20
Temperature A, B and C 9-20
Emission control system warranty 9-20
Reporting safety defects (US only) 9-21
Readiness for Inspection/Maintenance (I/M) test 9-22
Event Data Recorders (EDR) 9-23
Owner's Manual/Service Manual order information 9-23
In the event of a collision 9-24

CAPACITIES AND RECOMMENDED FUEL/LUBRICANTS

The following are approximate capacities. The actual refill capacities may be a little different. When refilling, follow the procedure instructed in the "8. Maintenance and do-it-yourself" section to determine the proper refill capacity.

			Capacity (Approximate)			Recommended specifications
			US measure	Imp measure	Liter	
Fuel			20 gal	16-5/8 gal	76	See "FUEL RECOMMENDATION" later in this section.
Engine oil*1						
Drain and refill						
With oil filter change	VK45DE	AWD	6-1/8 qt	5-1/8 qt	5.8	•Engine oil with API Certification Mark*2, *3 •Viscosity SAE 5W-30*2, *3
		2WD	5-7/8 qt	4-7/8 qt	5.5	
	VQ35HR	AWD/2WD	5-1/8 qt	4-3/8 qt	4.9	
Without oil filter change	VK45DE	AWD	5-1/2 qt	4-5/8 qt	5.2	
		2WD	5-1/8 qt	4-3/8 qt	4.9	
	VQ35HR	AWD/2WD	4-7/8 qt	4 qt	4.6	
Cooling system						
With reservoir	VK45DE		11 qt	9-1/8 qt	10.4	50% Genuine NISSAN Long Life Antifreeze/Coolant or equivalent 50% Demineralized or distilled water
	VQ35HR		9-3/4 qt	8-1/8 qt	9.2	
Reservoir			7/8 qt	3/4 qt	0.8	
Automatic Transmission Fluid (ATF)			—	—	—	Genuine NISSAN Matic S ATF*4
Differential gear oil			—	—	—	Genuine NISSAN Differential Oil Hypoid Super GL-5, 80W-90 or API GL-5, Viscosity SAE 80W-90*5
Transfer fluid			—	—	—	Genuine NISSAN Matic J ATF*6
Power Steering Fluid (PSF)			Refill to the proper oil level according to the instructions in the "8. Maintenance and do-it-yourself" section.			Genuine NISSAN PSF or equivalent*7
Brake fluid						Genuine NISSAN Super Heavy Duty Brake Fluid*8 or equivalent DOT 3

	Capacity (Approximate)			Recommended specifications
	US measure	Imp measure	Liter	
Multi-purpose grease				NLGI No. 2 (Lithium soap base)
Air conditioning system refrigerant	—	—	—	HFC-134a (R-134a)*9
Air conditioning system lubricants	—	—	—	NISSAN A/C System Oil Type S or exact equivalent
Window washer fluid	—	—	—	Genuine NISSAN Windshield Washer Concentrate Cleaner & Anti-freeze or equivalent

*1: For additional information, see “ENGINE OIL” in the “8. Maintenance and do-it-yourself” section for changing engine oil.
*2: For additional information, see “ENGINE OIL AND OIL FILTER RECOMMENDATION” later in this section.
*3: **INFINITI recommends Genuine NISSAN Ester Oil available at your INFINITI retailer.**
*4: For 5-speed AT: **If Genuine NISSAN Matic S ATF is not available, Genuine NISSAN Matic J ATF may also be used. Using automatic transmission fluid other than Genuine NISSAN Matic S ATF or Matic J ATF will cause deterioration in driveability and automatic transmission durability, and may damage the automatic transmission, which is not covered by the INFINITI new vehicle limited warranty.**
For 7-speed AT: **Using automatic transmission fluid other than Genuine NISSAN Matic S ATF will cause deterioration in driveability and automatic transmission durability, and may damage the automatic transmission, which is not covered by the INFINITI new vehicle limited warranty.**
*5: For hot climates, viscosity SAE 90 is suitable for ambient temperatures above 32°F (0°C).
*6: If Genuine NISSAN Matic J ATF is not available, Genuine NISSAN Matic D ATF or Canada NISSAN Automatic Transmission Fluid or equivalent (if available) may also be used.
*7: DEXRON™VI type ATF or Canada NISSAN Automatic Transmission Fluid may also be used.
*8: Available in mainland US through an INFINITI retailer.
*9: For additional information, see “VEHICLE IDENTIFICATION” later in this section for air conditioner specification label.

FUEL RECOMMENDATION

VK45DE engine

Use unleaded premium gasoline with an octane rating of at least 91 AKI (Anti-Knock Index) number (Research octane number 96).

If premium gasoline is not available, unleaded regular gasoline with an octane rating of 87 AKI number (Research octane number 91) may be temporarily used, but only under the following precautions:

- Have the fuel tank filled only partially with unleaded regular gasoline, and fill up with unleaded premium gasoline as soon as possible.
- Avoid full throttle driving and abrupt acceleration.

However, for maximum vehicle performance, the use of unleaded premium gasoline is recommended.

VQ35HR engine

INFINITI recommends the use of unleaded premium gasoline with an octane rating of at least 91 AKI (Anti-Knock Index) number (Research octane number 96).

If unleaded premium gasoline is not available, you may use unleaded regular gasoline with an octane rating of at least 87 AKI number (Research octane number 91), but you may notice a decrease in performance.

⚠ CAUTION

- **Using a fuel other than that specified could adversely affect the emission control system, and may also affect warranty coverage.**
- **Under no circumstances should a leaded gasoline be used, because this will damage the three-way catalyst.**
- **Do not use E-85 fuel in your vehicle. Your vehicle is not designed to run on E-85 fuel. Using E-85 fuel can damage the fuel system components and is not covered by the INFINITI new vehicle limited warranty.**

Gasoline specifications

INFINITI recommends using gasoline that meets the World-Wide Fuel Charter (WWFC) specifications where it is available. Many of the automobile manufacturers developed this specification to improve the emission control system and vehicle performance. Ask your service station manager if the gasoline meets the WWFC specifications.

Reformulated gasoline

Some fuel suppliers are now producing reformulated gasolines. These gasolines are specially designed to reduce vehicle emissions. INFINITI supports efforts towards cleaner air and suggests that you use reformulated gasoline when available.

Gasoline containing oxygenates

Some fuel suppliers sell gasoline containing oxygenates such as ethanol, MTBE and methanol with or without advertising their presence. INFINITI does not recommend the use of fuels of which the oxygenate content and the fuel compatibility for your INFINITI cannot be readily determined. If in doubt, ask your service station manager.

If you use oxygenate-blend gasoline, please take the following precautions as the usage of such fuels may cause vehicle performance problems and/or fuel system damage.

- **The fuel should be unleaded and have an octane rating no lower than that recommended for unleaded gasoline.**
- **If an oxygenate-blend other than methanol blend is used, it should contain no more than 10% oxygenate. (MTBE may, however, be added up to 15%.)**

- **If a methanol blend is used, it should contain no more than 5% methanol (methyl alcohol, wood alcohol). It should also contain a suitable amount of appropriate cosolvents and corrosion inhibitors. If not properly formulated with appropriate cosolvents and corrosion inhibitors, such methanol blends may cause fuel system damage and/or vehicle performance problems. At this time, sufficient data is not available to ensure that all methanol blends are suitable for use in INFINITI vehicles.**

If any driveability problems such as engine stalling and difficult hot-starting are experienced after using oxygenate-blend fuels, immediately change to a non-oxygenate fuel or a fuel with a low blend of MTBE.

Take care not to spill gasoline during refueling. Gasoline containing oxygenates can cause paint damage.

E-85 fuel

E-85 fuel is a mixture of approximately 85% fuel ethanol and 15% unleaded gasoline. E-85 can only be used in a Flexible Fuel Vehicle (FFV). Do not use E-85 fuel in your vehicle. U.S. government regulations require fuel ethanol dispensing pumps to be identified by a small, square, orange and black label with the common abbreviation or the appropriate percentage for that region.

Aftermarket fuel additives

INFINITI does not recommend the use of any aftermarket fuel additives (for example, fuel injector cleaner, octane booster, intake valve deposit removers, etc.) which are sold commercially. Many of these additives intended for gum, varnish or deposit removal may contain active solvent or similar ingredients that can be harmful to the fuel system and engine.

Octane rating tips

Using unleaded gasoline with an octane rating lower than recommended can cause persistent, heavy "spark knock". (Spark knock is a metallic rapping noise.) If severe, this can lead to engine damage. If you detect a persistent heavy spark knock even when using gasoline of the stated octane rating, or if you hear steady spark knock while holding a steady speed on level roads, have an INFINITI retailer correct the condition. Failure to correct the condition is misuse of the vehicle, for which INFINITI is not responsible.

Incorrect ignition timing will result in spark knock, after-run and/or overheating, which may cause excessive fuel consumption or engine damage. If any of the above symptoms are encountered, have your vehicle checked at an INFINITI retailer.

However, now and then you may notice light spark knock for a short time while accelerating or driving up hills. This is not a cause for concern, because you get the greatest fuel benefit when there is light spark knock for a short time under heavy engine load.

⚠ CAUTION

- **Your vehicle is not designed to run on E-85 fuel. Using E-85 fuel in a vehicle not specifically designed for E-85 fuel can damage fuel system components and is not covered by the INFINITI new vehicle limited warranty.**
- **E-85 is a mixture of approximately 85% fuel ethanol and 15% unleaded gasoline.**
- **U.S. government regulations require ethanol dispensing pumps to be identified by a small, square, orange and black label with the common abbreviation or the appropriate percentage for that region.**

1. API certification mark
2. API service symbol

ENGINE OIL AND OIL FILTER RECOMMENDATION

Selecting the correct oil

It is essential to choose the correct grade, quality, and viscosity engine oil to ensure satisfactory engine life and performance, see “CAPACITIES AND RECOMMENDED FUEL/LUBRICANTS” earlier in this section. INFINITI recommends the use of an energy conserving oil in order to improve fuel economy.

Select only engine oils that meet the American Petroleum Institute (API) certification or International Lubricant Standardization and Approval Committee (ILSAC) certification and SAE viscosity standard. These oils have the API certification mark on the front of the container. Oils which do not have the specified quality label should not be used as they could cause engine damage.

Oil additives

INFINITI does not recommend the use of oil additives. The use of an oil additive is not necessary when the proper oil type is used and maintenance intervals are followed.

Oil which may contain foreign matter or has been previously used should not be used.

Oil viscosity

The engine oil viscosity or thickness changes with temperature. Because of this, it is important to select the engine oil viscosity based on the temperatures at which the vehicle will be operated before the next oil change. Choosing an oil viscosity other than that recommended could cause serious engine damage.

Selecting the correct oil filter

Your new vehicle is equipped with a high-quality genuine NISSAN oil filter. When replacing, use the genuine oil filter or its equivalent for the reason described in “Change intervals”.

Change intervals

The oil and oil filter change intervals for your engine are based on the use of the specified quality oils and filters. Using engine oil and a filter other than the specified quality, or exceeding recommended oil and filter change intervals could reduce engine life. Damage to the engine caused by improper maintenance or use of incorrect oil and filter quality and/or viscosity is not covered by the INFINITI new vehicle limited warranty.

Your engine was filled with a high quality engine oil when it was built. You do not have to change the oil before the first recommended change interval. Oil and filter change intervals depend upon how you use your vehicle.

Operation under the following conditions may require more frequent oil and filter changes.

- repeated short distance driving at cold outside temperatures,
- driving in dusty conditions,
- extensive idling,
- stop and go commuting

Refer to the "INFINITI Service and Maintenance Guide" for the maintenance schedule.

AIR CONDITIONING SYSTEM REFRIGERANT AND LUBRICANT RECOMMENDATIONS

The air conditioning system in your INFINITI vehicle must be charged with the refrigerant HFC-134a (R-134a) and the oil, NISSAN A/C system oil Type S or the exact equivalents.

⚠ CAUTION

The use of any other refrigerant or oil will cause severe damage to the air conditioning system and will require the replacement of all air conditioner system components.

The refrigerant HFC-134a (R-134a) in your INFINITI vehicle will not harm the earth's ozone layer. Although this refrigerant does not affect the earth's atmosphere, certain governmental regulations require the recovery and recycling of any refrigerant during automotive air conditioning system service. Your INFINITI retailer has the trained technicians and equipment needed to recover and recycle your air conditioning system refrigerant.

Contact an INFINITI retailer when servicing your air conditioning system.

ENGINE

Model			VK45DE	VQ35HR
Type			Gasoline, 4-cycle	Gasoline, 4-cycle
Cylinder arrangement			8-cylinder, V-slanted at 90°	6-cylinder, V-slanted at 60°
Bore × Stroke	in (mm)		3.661 × 3.256 (93.0 × 82.7)	3.760 × 3.205 (95.5 × 81.4)
Displacement	cu in (cm^3)		274.2 (4,494)	213.45 (3,498)
Firing order			1-8-7-3-6-5-4-2	1-2-3-4-5-6
Idle speed	rpm		No adjustment is necessary.	
Ignition timing (B.T.D.C.)	degree/rpm			
Spark plug	Standard		PLFR5A-11	FXE22HR-11
	Service operation	Hot	PLFR4A-11	FXE20HR-11
		Cold	PLFR6A-11	FXE24HR-11
Spark plug gap (Normal)	in (mm)		0.043 (1.1)	0.043 (1.1)
Camshaft operation			Timing chain	Timing chain

This spark ignition system complies with the Canadian standard ICES-002.

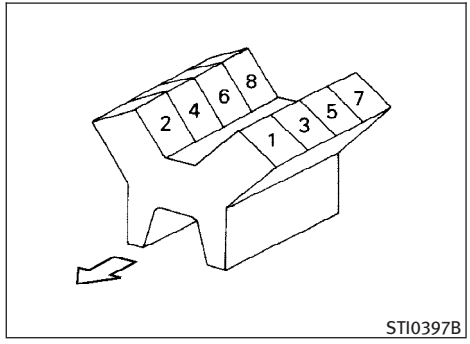

VK45DE engine

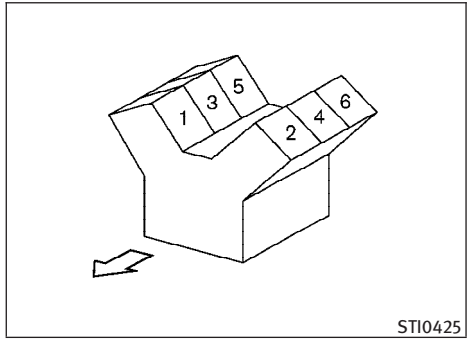

VQ35HR engine

WHEELS AND TIRES

Road wheel

Type	Size	Offset in (mm)
Conventional (Aluminum)	18 × 8J	1.85 (47)
	19 × 8-1/2J	1.97 (50)
Spare	Conventional T-type: 17 × 4T	Conventional 1.18 (30)

Tire

Type	Size	Pressure PSI (kPa) [Cold]
Conventional	P245/45R18	33 (230)
	245/40R19	
Spare	Conventional T-type: T145/80D17	Conventional 60 (420)

DIMENSIONS AND WEIGHTS

Overall length		
(without front license plate)	in (mm)	194.0 (4,928)
(with front license plate)	in (mm)	194.3 (4,935)
Overall width	in (mm)	71.1 (1,805)
Overall height	in (mm)	59.4 (1,510)*1 60.1 (1,523)*2
Front tread	in (mm)	60.5 (1,537)*1, *3 60.3 (1,532)*1, *4 61.1 (1,551)*2
Rear tread	in (mm)	61.0 (1,550)*1, *3 60.8 (1,545)*1, *4 60.7 (1,543)*2
Wheelbase	in (mm)	114.2 (2,900)
Gross Vehicle Weight Rating (GVWR)	lb (kg)	See the F.M.V.S.S. or C.M.V.S.S. certification label on the driver's side center pillar.
Gross Axle Weight Rating (GAWR)		
Front	lb (kg)	
Rear	lb (kg)	

*1: Two-Wheel Drive (2WD) model
*2: All-Wheel Drive (AWD) model
*3: P245/45R18 tire equipped model
*4: 245/40R19 tire equipped model

WHEN TRAVELING OR REGISTERING YOUR VEHICLE IN ANOTHER COUNTRY

When planning to travel in another country, you should first find out if the fuel available is suitable for your vehicle's engine.

Using fuel with an octane rating that is too low may cause engine damage. All gasoline vehicles must be operated with unleaded gasoline. Therefore, avoid taking your vehicle to areas where appropriate fuel is not available.

When transferring the registration of your vehicle to another country, state, province or district, it may be necessary to modify the vehicle to meet local laws and regulations.

The laws and regulations for motor vehicle emission control and safety standards vary according to the country, state, province or district; therefore, vehicle specifications may differ.

When any vehicle is to be taken into another country, state, province or district and registered, its modifications, transportation, and registration are the responsibility of the user. INFINITI is not responsible for any inconvenience that may result.

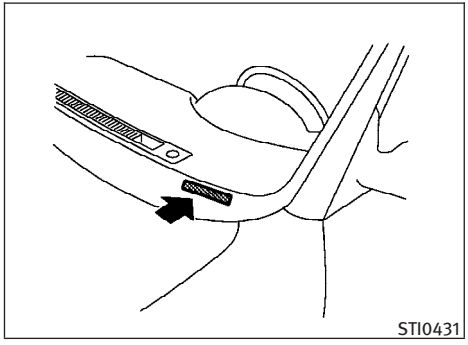

VEHICLE IDENTIFICATION NUMBER (VIN) PLATE

The vehicle identification number plate is attached as shown. This number is the identification for your vehicle and is used in the vehicle registration.

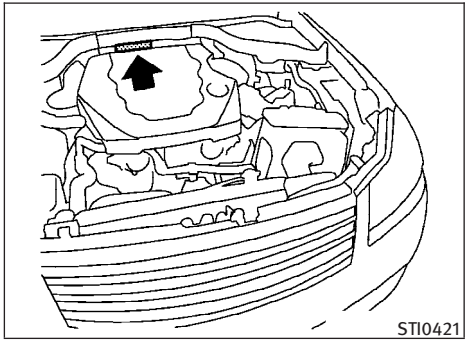

VEHICLE IDENTIFICATION NUMBER (chassis number)

The number is stamped as shown in the engine compartment.

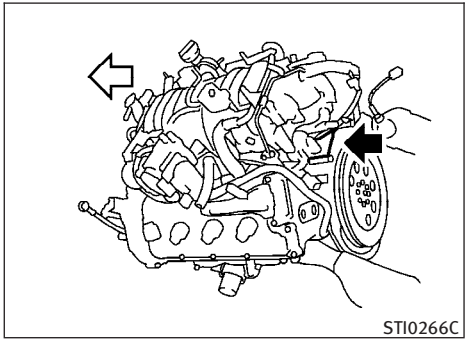

VK45DE engine

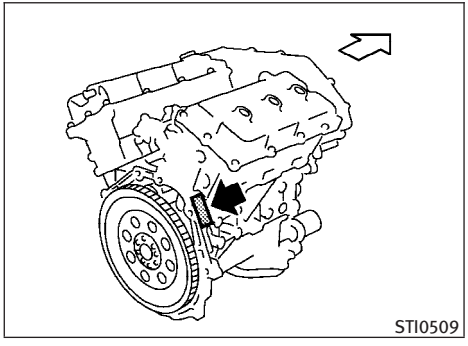

VQ35HR engine

ENGINE SERIAL NUMBER

The number is stamped on the engine as shown.

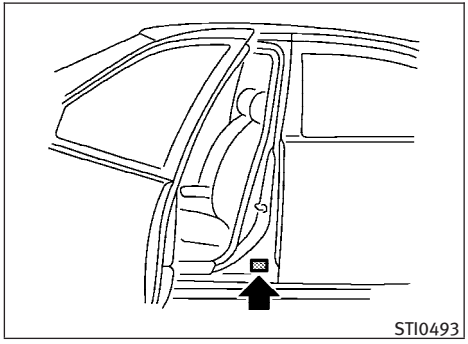

F.M.V.S.S./C.M.V.S.S. CERTIFICATION LABEL

The Federal/Canadian Motor Vehicle Safety Standards (F.M.V.S.S./C.M.V.S.S.) certification label is affixed as shown. This label contains valuable vehicle information, such as: Gross Vehicle Weight Ratings (GVWR), Gross Axle Weight Rating (GAWR), month and year of manufacture, Vehicle Identification Number (VIN), etc. Review it carefully.

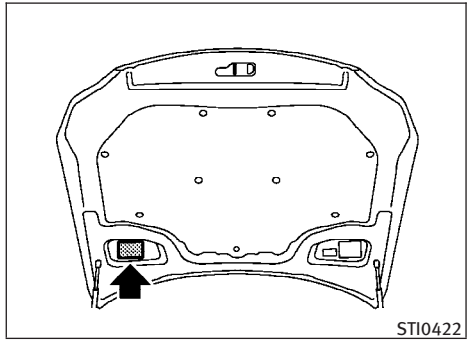

EMISSION CONTROL INFORMATION LABEL

The emission control information label is attached as shown.

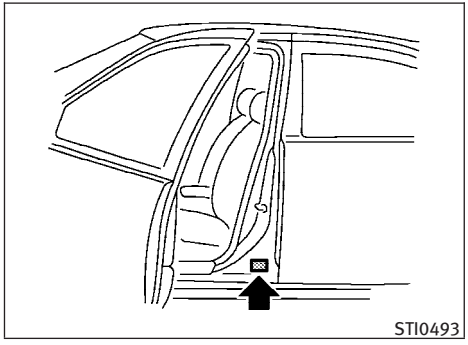

TIRE AND LOADING INFORMATION LABEL

The cold tire pressure is shown on the Tire and Loading Information label affixed to the pillar as illustrated.

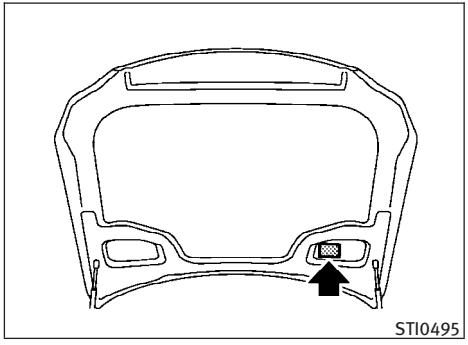

AIR CONDITIONER SPECIFICATION LABEL

The air conditioner specification label is attached as shown.

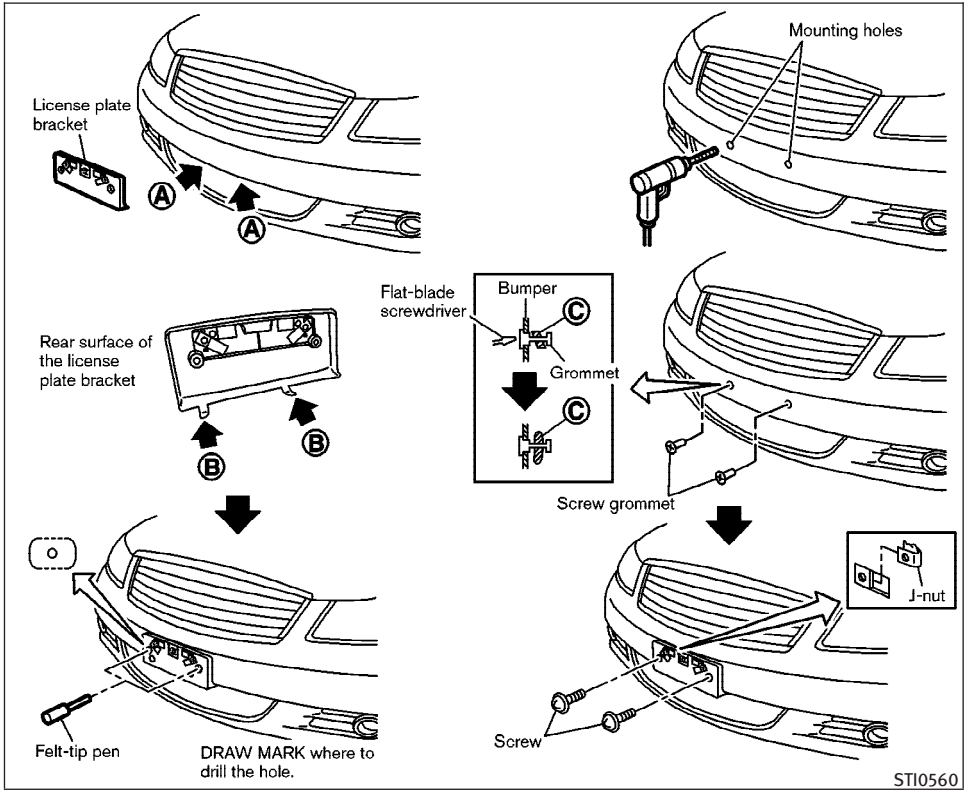

Use the following steps to mount the license plate:

Before mounting the license plate, confirm that the following parts are enclosed in the plastic bag.

Only use the recommended mounting position, otherwise the Intelligent Cruise Control (ICC) sensor obstruction (if so equipped) may occur.

- License plate bracket
- J-nut × 2
- Screw × 2
- Screw grommet × 2

1. Temporarily place the license plate bracket while aligning part Ⓐ behind the top of the front bumper opening with part Ⓑ of the rear surface of the license plate bracket.
2. To determine where to drill the hole, mark along both sides of the mounting hole by using a felt-tip pen.
3. Remove the license plate bracket and connect the arcs to form ovals. Mark the point in the center of each oval. These are the pilot drilling locations.

4. Carefully drill two pilot holes using a 0.39 in (10 mm) drill bit at the marked locations. **(Be sure that the drill only goes through the fascia, or damage to the nut may occur.)**
5. Insert grommets into the hole on the fascia.
6. Insert a flat-blade screwdriver into the grommet hole to add 90° turn onto the part Ⓒ.
7. Insert a J-nut into the license plate bracket before placing the license plate bracket on the fascia.
8. Install the license plate bracket with screws.
9. Install the license plate with bolts that are no longer than 0.55 in (14 mm).

⚠ WARNING

- **It is extremely dangerous to ride in a cargo area inside the vehicle. In a collision, people riding in these areas are more likely to be seriously injured or killed.**
- **Do not allow people to ride in any area of vehicle that is not equipped with seats and seat belts.**
- **Be sure everyone in your vehicle is in a seat and using a seat belt properly.**

TERMS

It is important to familiarize yourself with the following terms before loading your vehicle:

- Curb Weight (actual weight of your vehicle) - vehicle weight including: standard and optional equipment, fluids, emergency tools, and spare tire assembly. This weight **does not** include passengers and cargo.
- GVW (Gross Vehicle Weight) - curb weight plus the combined weight of passengers and cargo.
- GVWR (Gross Vehicle Weight Rating) - maximum total combined weight of the unloaded vehicle, passengers, luggage, hitch, trailer tongue load and any other optional equipment. This information is located on the F.M.V.S.S./C.M.V.S.S. label.
- GAWR (Gross Axle Weight Rating) - maximum weight (load) limit specified for the front or rear axle. This information is located on the F.M.V.S.S./C.M.V.S.S. label.
- GCWR (Gross Combined Weight Rating) - The maximum total weight rating of the vehicle, passengers, cargo, and trailer.
- Vehicle Capacity Weight, Load limit, Total load capacity - maximum total weight limit specified of the load (passengers and cargo) for the vehicle. This is the maximum combined

weight of occupants and cargo that can be loaded into the vehicle. If the vehicle is used to tow a trailer, the trailer tongue weight must be included as part of the cargo load. This information is located on the Tire and Loading Information label.

- Cargo capacity - permissible weight of cargo, the subtracted weight of occupants from the load limit.

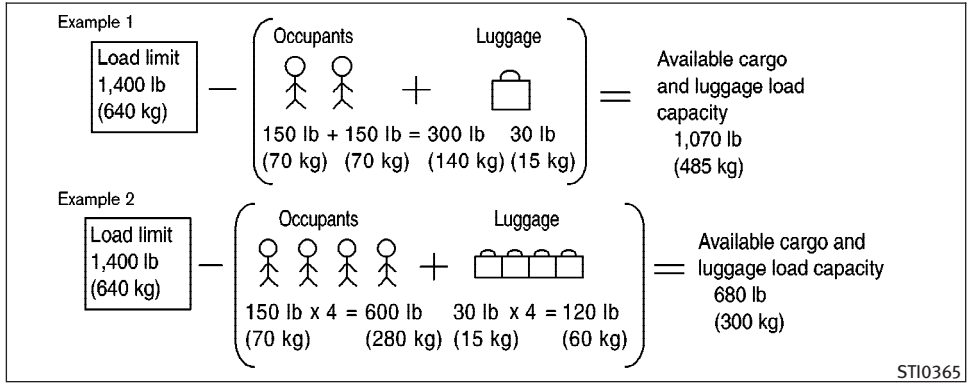

VEHICLE LOAD CAPACITY

Do not exceed the load limit of your vehicle shown as “The combined weight of occupants and cargo” on the Tire and Loading Information label. Do not exceed the number of occupants shown as “Seating Capacity” on the Tire and Loading Information label.

To get “the combined weight of occupants and cargo”, add the weight of all occupants, then add the total luggage weight. Examples are shown in the illustration.

Steps for determining correct load limit

1. Locate the statement “The combined weight of occupants and cargo should never exceed XXX kg or XXX lbs” on your vehicle’s placard.
2. Determine the combined weight of the driver and passengers that will be riding in your vehicle.

3. Subtract the combined weight of the driver and passengers from XXX kg or XXX lbs.
4. The resulting figure equals the available amount of cargo and luggage load capacity. For example, if the XXX amount equals 1400 lbs. and there will be five 150 lb. passengers in your vehicle, the amount of available cargo and luggage load capacity is 650 lbs. (1400 − 750 (5 x 150) = 650 lbs) or 640 − 340 (5 x 70) = 300 kg.)
5. Determine the combined weight of luggage and cargo being loaded on the vehicle. That weight may not safely exceed the available cargo and luggage load capacity calculated in Step 4.
6. If your vehicle will be towing a trailer, load from your trailer will be transferred to your vehicle. Consult this manual to determine how this reduces the available cargo and luggage load capacity of your vehicle.

Before driving a loaded vehicle, confirm that you do not exceed the Gross Vehicle Weight Rating (GVWR) or the Gross Axle Weight Rating (GAWR) for your vehicle. (See “MEASUREMENT OF WEIGHTS” later in this section.)

Also check tires for proper inflation pressures. See the Tire and Loading Information label.

LOADING TIPS

- The GVW must not exceed GVWR or GAWR as specified on the F.M.V.S.S./C.M.V.S.S. certification label.
- Do not load the front and rear axle to the GAWR. Doing so will exceed the GVWR.

⚠ WARNING

- **Properly secure all cargo with ropes or straps to help prevent it from sliding or shifting. Do not place cargo higher than the seatbacks. In a sudden stop or collision, unsecured cargo could cause personal injury.**
- **Do not load your vehicle any heavier than the GVWR or the maximum front and rear GAWRs. If you do, parts of your vehicle can break, tire damage could occur, or it can change the way your vehicle handles. This could result in loss of control and cause personal injury.**

- **Overloading not only can shorten the life of your vehicle and the tire, but can also cause unsafe vehicle handling and longer braking distances. This may cause a premature tire failure which could result in a serious accident and personal injury. Failures caused by overloading are not covered by the vehicle's warranty.**

MEASUREMENT OF WEIGHTS

Secure loose items to prevent weight shifts that could affect the balance of your vehicle. When the vehicle is loaded, drive to a scale and weigh the front and the rear wheels separately to determine axle loads. Individual axle loads should not exceed either of the gross axle weight ratings (GAWR). The total of the axle loads should not exceed the gross vehicle weight rating (GVWR). These ratings are given on the vehicle certification label. If weight ratings are exceeded, move or remove items to bring all weights below the ratings.

TOWING A TRAILER

Do not tow a trailer with your vehicle.

Towing your vehicle with all four wheels on the ground is sometimes called flat towing. This method is sometimes used when towing a vehicle behind a recreational vehicle, such as a motor home.

⚠ CAUTION

- **Failure to follow these guidelines can result in severe transmission damage.**
- **Whenever flat towing your vehicle, always tow forward, never backward.**
- **DO NOT tow any automatic transmission vehicle with all four wheels on the ground (flat towing). Doing so WILL DAMAGE internal transmission parts due to lack of transmission lubrication.**
- **DO NOT tow an All-Wheel Drive (AWD) vehicle with any of the wheels on the ground. Doing so may cause serious and expensive damage to the powertrain.**
- **For emergency towing procedures refer to "TOWING RECOMMENDED BY INFINITI" in the "6. In case of emergency" section of this manual.**

AUTOMATIC TRANSMISSION

All-Wheel Drive (AWD) models

Do not tow an AWD vehicle with any of the wheels on the ground.

Two-Wheel Drive (2WD) models

To tow a vehicle equipped with an automatic transmission, an appropriate vehicle dolly **MUST** be placed under the towed vehicle's drive wheels. **Always** follow the dolly manufacturer's recommendations when using their product.

DOT (Department Of Transportation) Quality Grades: All passenger car tires must conform to federal safety requirements in addition to these grades.

Quality grades can be found where applicable on the tire sidewall between tread shoulder and maximum section width. For example:

Treadwear 200 Traction AA Temperature A

TREADWEAR

The treadwear grade is a comparative rating based on the wear rate of the tire when tested under controlled conditions on a specified government test course. For example, a tire graded 150 would wear one and one-half (1 1/2) times as well on the government course as a tire graded 100. The relative performance of tires depends upon actual conditions of their use, however, and may depart significantly from the norm due to variations in driving habits, service practices and differences in road characteristics and climate.

TRACTION AA, A, B AND C

The traction grades, from highest to lowest, are AA, A, B and C. Those grades represent the tire's ability to stop on wet pavement as measured under controlled conditions on specified government test surfaces of asphalt and concrete. A tire marked C may have poor traction performance.

⚠ WARNING

The traction grade assigned to this tire is based on straight-ahead braking traction tests, and does not include acceleration, cornering, hydroplaning, or peak traction characteristics.

TEMPERATURE A, B AND C

The temperature grades A (the highest), B, and C, representing the tire's resistance to the generation of heat and its ability to dissipate heat when tested under controlled conditions on a specified indoor laboratory test wheel. Sustained high temperature can cause the material of the tire to degenerate and reduce tire life, and excessive temperature can lead to sudden tire failure. The grade C corresponds to a level of performance which all passenger car tires must meet under the Federal Motor Vehicle Safety Standard No. 109. Grades B and A represent higher levels of performance on the laboratory test wheel than the minimum required by law.

⚠ WARNING

The temperature grade for this tire is established for a tire that is properly inflated and not overloaded. Excessive speed, under-inflation, or excessive loading, either separately or in combination, can cause heat build-up and possible tire failure.

Your INFINITI is covered by the following emission warranties.

For US:

- Emission Defects Warranty
- Emissions Performance Warranty

Details of these warranties may be found with other vehicle warranties in your Warranty Information Booklet that comes with your INFINITI. If you did not receive a Warranty Information Booklet, or it has become lost, you may obtain a replacement by writing to:

- INFINITI Division
  Nissan North America, Inc.
  Consumer Affairs Department
  P.O. Box 685003
  Franklin, TN 37068-5003

For Canada:

Emission Control System Warranty

Details of these warranties may be found with other vehicle warranties in your Warranty and Roadside Assistance Information that comes with your INFINITI. If you did not receive a Warranty and Roadside Assistance Information, or it has become lost, you may obtain a replacement by writing to:

- Nissan Canada Inc.
  5290 Orbitor Drive
  Mississauga, Ontario,
  L4W 4Z5

If you believe that your vehicle has a defect which could cause a crash or could cause injury or death, you should immediately inform the National Highway Traffic Safety Administration (NHTSA) in addition to notifying INFINITI.

If NHTSA receives similar complaints, it may open an investigation, and if it finds that a safety defect exists in a group of vehicles, it may order a recall and remedy campaign. However, NHTSA cannot become involved in individual problems between you, your retailer, or INFINITI.

To contact NHTSA, you may call the Vehicle Safety Hotline toll-free at 1-888-327-4236 (TTY: 1-800-424-9153); go to http://www.safercar.gov; or write to: Administrator, NHTSA, 400 Seventh Street, SW., Washington DC 20590. You can also obtain other information about motor vehicle safety from http://www.safercar.gov.

You may notify INFINITI by contacting our Consumer Affairs Department, toll-free, at 1-800-662-6200.

READINESS FOR INSPECTION/ MAINTENANCE (I/M) TEST

A vehicle equipped with All-Wheel Drive (AWD) should never be tested using a two wheel dynamometer (such as the dynamometers used by some states for emissions testing), or similar equipment. Make sure you inform test facility personnel that your vehicle is equipped with AWD before it is placed on a dynamometer. Using the wrong test equipment may result in transmission damage or unexpected vehicle movement which could result in serious vehicle damage or personal injury.

Due to legal requirements in some states/ areas or provinces, your vehicle may be required to be in what is called the "ready condition" for an Inspection/Maintenance (I/M) test of the emission control system.

The vehicle is set to the "ready condition" when it is driven through certain driving patterns. Usually, the "ready condition" can be obtained by ordinary usage of the vehicle.

If a powertrain system component is repaired or the battery is disconnected, the vehicle may be reset to a "not ready condition". Before taking the I/M test, check the vehicle's inspection/maintenance test readiness condition. Push the ignition switch to the ON position without starting the engine. If the Malfunction Indicator Light (MIL) comes on steady for 20 seconds and then blinks for 10 seconds, the I/M test condition is "not ready". If the MIL does not blink after 20 seconds, the I/M test condition is "ready".

If the MIL indicates the vehicle is in a "not ready" condition, drive the vehicle through the following pattern to set the vehicle to the "ready condition". If you cannot or do not want to perform the driving pattern, an INFINITI retailer can conduct it for you.

⚠ WARNING

Always drive the vehicle in a safe and prudent manner according to traffic conditions and obey all traffic laws.

1. Start the engine. Allow the engine to idle until the engine coolant temperature gauge needle points between the C and H (normal operating temperature).
2. Accelerate the vehicle to 55 MPH (88 km/h), then quickly release the accelerator pedal completely and keep it released for at least 10 seconds.
3. Quickly depress the accelerator pedal for a moment, then drive the vehicle at a speed of 53 to 60 MPH (86 to 96 km/h) for at least 9 minutes.
4. Stop the vehicle. Leave the engine running.
5. Accelerate the vehicle to 35 MPH (55 km/h) and maintain the speed for 20 seconds.
6. Repeat steps 4 and 5 at least 10 times.
7. Accelerate the vehicle to 55 MPH (88 km/h) and maintain the speed for at least 3 minutes.
8. Stop the vehicle. Place the transmission selector lever in the P (Park) or N (Neutral) position.
9. Turn the engine off.
10. Repeat steps 1 through 8 at least one more time.

If step 1 through 7 is interrupted, repeat the preceding step. Any safe driving mode is acceptable between steps. Do not stop the engine until step 7 is completed.

EVENT DATA RECORDERS (EDR)

This vehicle is equipped with an Event Data Recorder (EDR). The main purpose of an EDR is to record, in certain crash or near crash-like situations, such as an air bag deployment or hitting a road obstacle, data that will assist in understanding how a vehicle's systems performed. The EDR is designed to record data related to vehicle dynamics and safety systems for a short period of time, typically 30 seconds or less. The EDR in this vehicle is designed to record such data as:

- How various systems in your vehicle were operating;
- Whether or not the driver and passenger safety belts were buckled/fastened;
- How far (if at all) the driver was depressing the accelerator and/or brake pedal; and,
- How fast the vehicle was traveling.
- Sounds are not recorded.

These data can help provide a better understanding of the circumstances in which crashes and injuries occur.

NOTE: EDR data are recorded by your vehicle only if a nontrivial crash situation occurs; no data are recorded by the EDR under normal driving conditions and no personal data (e.g. name, gender, age and crash location) are recorded. However, other parties, such as law enforcement, could combine the EDR data with the type of personally identifying data routinely acquired during a crash investigation.

To read data recorded by an EDR, special equipment is required and access to the vehicle or the EDR is needed. In addition to the vehicle manufacturer and INFINITI retailer, other parties, such as law enforcement, that have the special equipment, can read the information if they have access to the vehicle or the EDR. EDR data will only be accessed with the consent of the vehicle owner or lessee or as otherwise required or permitted by law.

OWNER'S MANUAL/SERVICE MANUAL ORDER INFORMATION

A genuine INFINITI Service Manual is the best source of service and repair information for your vehicle. Filled with wiring diagrams, illustrations and step-by-step diagnostic and adjustment procedures, this manual is the same one used by the factory trained technicians working at an INFINITI retailer. Also available are genuine INFINITI Owner's Manuals, and genuine INFINITI Service and Owner's Manuals for older INFINITI models.

In the USA:

For current pricing and availability of genuine **INFINITI Service Manuals** for the 2000 model year and later, contact:

1-800-450-9491
www.infiniti-techinfo.com

For current pricing and availability of genuine **INFINITI Service Manuals** for the 1999 model year and prior, see an INFINITI retailer, or contact:

1-800-247-5321

For current pricing and availability of genuine **INFINITI Owner's Manuals** for this model year and prior, see an INFINITI retailer, or contact:

1-800-247-5321

In Canada:

To purchase a copy of a genuine INFINITI Service Manual or Owner's Manual please contact an INFINITI retailer. For the phone number and location of an INFINITI retailer in your area call the INFINITI Satisfaction Center at 1-800-361-4792 and a bilingual INFINITI representative will assist you.

Also available are genuine INFINITI Service and Owner's Manuals for older INFINITI models.

IN THE EVENT OF A COLLISION

Unfortunately, accidents do occur. In this unlikely event, there is some important information you should know. Many insurance companies routinely authorize the use of non-genuine collision parts in order to cut costs, among other reasons.

Insist on the use of Genuine INFINITI Collision Parts!

If you want your vehicle to be restored using parts made to INFINITI's original exacting specifications — if you want to help it to last and hold its resale value, the solution is simple. **Tell your insurance agent and your repair shop to only use Genuine INFINITI Collision Parts.** INFINITI does not warrant non-INFINITI parts, nor does INFINITI's warranty apply to damage caused by a non-genuine part.

Using Genuine INFINITI Parts can help protect your personal safety, preserve your warranty protection and maintain the resale value of your vehicle. And if your vehicle was leased, using Genuine INFINITI Parts may prevent or limit unnecessary excess wear and tear expenses at the end of your lease.

INFINITI designs its hoods with crumple zones to minimize the risk that the hood will penetrate the windshield of your vehicle in an accident. Non-genuine (imitation) parts may not provide such built in safeguards. Also, non-genuine parts often show premature wear, rust and corrosion.

Why should you take a chance?

In over 40 states, the law says you must be advised if non-genuine parts are used to repair your vehicle. And some states have enacted laws that restrict insurance companies from authorizing the use of non-genuine collision parts during the new vehicle warranty. These laws help protect you, so you can take action to protect yourself.

It's your right!

If you should need further information visit us at:

www.infinitiUSA.com (for U.S. customers) or **www.infiniti.ca** (for Canadian customers)

10 Index

A

ABS (Anti-lock Braking System) 5-53
Adaptive front lighting system (AFS) 2-31
Advanced air bag system 1-45
Aiming control, Adaptive front lighting system (AFS) 2-31
Air bag system
- Advanced air bag system 1-45
- Front passenger air bag and status light 1-47
- Front-seat mounted side-impact supplemental air bag system 1-50
- Roof-mounted curtain side-impact supplemental air bag system 1-50

Air bag warning labels 1-52
Air bag warning light . . . . . .1-53 , 2-17
Air cleaner housing filter 8-21
Air conditioner
- Air conditioner service 4-33
- Air conditioner specification label 9-13
- Air conditioning system refrigerant and lubricant recommendations 4-33
- Automatic climate control 4-29
- In-cabin microfilter 4-33
- Operation (See automatic climate control) 4-29

Alarm, How to stop alarm (see vehicle security system) 2-25
Alcohol, drugs and driving 5-7
All-wheel drive (AWD) 5-47
All-wheel drive (AWD) warning light 2-13
Ambient temperature, Air conditioner 4-32
Antenna 4-61
Anti-lock Braking System (ABS) 5-53
Anti-lock braking system (ABS) warning light 2-13
Appearance care
- Exterior appearance care 7-2
- Interior appearance care 7-4

Armrest 1-11
Ashtrays (See cigarette lighter and ashtrays) 2-39
Audible reminders 2-20
Audio control rear switch 4-60
Audio operation precautions 4-34
Audio system 4-34
Audio system, Steering wheel audio controls 4-58
Audion system, Hard-disk drive audio system (Music Box) 4-50
Autolight system 2-30
Automatic
- Automatic transmission fluid (ATF) 8-15
- Climate control 4-29
- Driving with automatic transmission . . . 5-11

Automatic door locks 3-5
Automatic drive positioner 3-26
Automatic seat positioner 3-26
AUX button 4-21
Avoiding collision and rollover 5-5

B

Battery 8-17
Battery
- Battery saver system 2-31
- Keyfob battery replacement 8-28
- Variable voltage control system 8-19

Battery, Battery replacement, Intelligent Key 8-28
Before starting the engine 5-10
Belts (See drive belts) 8-19
Bluetooth® Hands-Free Phone System (with navigation system) 4-74
Bluetooth® Hands-Free Phone System (without navigation system) 4-84
Booster seats 1-35
Brake
- Anti-lock Braking System (ABS) 5-53
- Brake fluid 8-16
- Brake system 5-49
- Parking brake operation 5-16

Brake warning light 2-14
Break-in schedule 5-46
Brightness control and display ON/OFF button 4-7
Brightness control, Instrument panel 2-32
Bulb check/instrument panel 2-13
Bulb replacement 8-30

C

Cabin air filter 4-33
Capacities and recommended fuel/lubricants 9-2
Car phone or CB radio 4-73
Cargo (See vehicle loading information) . . .2-43
Cargo net 2-43
Catalytic converter, Three way catalyst 5-2
CD/CF care and cleaning 4-57
Center multi-function control panel 4-2
Child restraints 1-19
Child restraints
  Booster seats 1-35
  Installation using LATCH 1-24
  Installation using the seat belts 1-28
  LATCH system 1-21
  Precautions on child restraints 1-19
  Top tether strap 1-23
Child safety 1-14
Child safety rear door lock 3-6
Chimes, Audible reminders 2-20
Cigarette lighter and ashtrays 2-39
Circuit breaker, Fusible link 8-26
Cleaning exterior and interior . . . . . .7-2 , 7-4
Climate control
  Automatic climate control 4-29
Climate control rear switch 4-33
Climate controlled seats 2-35
Clock 2-38
Coat hooks 2-43
Cockpit 2-2
Cold weather driving 5-56
Command (See Bluetooth® Hands-Free Phone System) . . . . . .4-76 , 4-89
Compact Disc (CD) player/changer 4-45
Compact spare tire 8-44
CompactFlash (CF) player 4-47
Compass 2-9
Console box 2-42
Controller, Center multi-function control panel 4-4
Controls
  Control panel button (display) 4-2
  Heater and air conditioner controls (See automatic climate control) 4-29
  Coolant
  Capacities and recommended fuel/lubricants 9-2
  Changing engine coolant 8-11
  Checking engine coolant level 8-11
Corrosion protection 7-6
Cruise control 5-23
Cruise control
  Fixed speed cruise control (on ICC system) 5-42
  Intelligent cruise control (ICC) system . . 5-25
Cup holders 2-40

D

Daytime running light system 2-31
Defroster switch, Rear window and outside mirror defroster switch 2-28
Dimensions and weights 9-10
Display cleaning 4-5
Display controls (See center multi-function control panel) 4-2
Door open warning light 2-14
Dot matrix liquid crystal display 2-21
Drive belts 8-19
Drive positioner 3-26
Driving
  All-wheel drive (AWD) 5-47
  All-wheel drive (AWD) safety precautions 5-7
  Cold weather driving 5-56
  Driving with automatic transmission . . . 5-11
  Precautions when starting and driving . . 5-2
DS (Drive Sport) mode 5-13
DVD player, INFINITI mobile entertainment system 4-62

E

Economy, Fuel 5-46
Emission control information label 9-12
Emission control system warranty 9-20
Engine
  Before starting the engine 5-10
  Break-in schedule 5-46
  Capacities and recommended fuel/lubricants 9-2
  Changing engine coolant 8-11
  Changing engine oil and filter 8-12
  Checking engine coolant level 8-11
  Checking engine oil level 8-12
  Engine block heater 5-57
  Engine compartment check locations . . . 8-6
  Engine cooling system 8-10
  Engine oil 8-12
  Engine oil and oil filter recommendation 9-6
  Engine oil viscosity 9-6
  Engine serial number 9-12

Engine specifications 9-8
If your vehicle overheats 6-10
Starting the engine 5-11
Engine coolant temperature gauge 2-7
Entry/exit function, Automatic drive positioner 3-26
Event Data Recorders (EDR) 9-23
Exhaust gas (carbon monoxide) 5-2

F

F.M.V.S.S./C.M.V.S.S. certification label . . .9-12
Filter
Air cleaner housing filter 8-21
Changing engine oil and filter 8-12
Flashers (See hazard warning flasher switch) 2-33
Flat tire 6-2
Flat towing 9-19
Floor mat cleaning 7-4
Fluid
Automatic transmission fluid (ATF) 8-15
Brake fluid 8-16
Capacities and recommended fuel/ lubricants 9-2
Engine coolant 8-10
Engine oil 8-12
Power steering fluid 8-16
Window washer fluid 8-17
FM-AM-SAT radio with Compact Disc (CD) player/changer 4-43
Fog light switch 2-33
Front passenger air bag and status light . .1-47
Front power seat adjustment 1-2
Front seat, Front seat adjustment 1-2
Front-seat active head restraints 1-8
Fuel
Capacities and recommended fuel/ lubricants 9-2
Fuel economy 5-46
Fuel economy information (display) 4-9
Fuel octane rating 9-4
Fuel recommendation 9-4
Fuel-filler cap 3-20
Fuel-filler door 3-20
Gauge 2-7
Fuses 8-25
Fusible links 8-26

G

Garage door opener, HomeLink® Universal Transceiver 2-51
Gas cap 3-20
Gauge 2-5
Gauge
Engine coolant temperature gauge 2-7
Fuel gauge 2-7
Odometer 2-6
Speedometer 2-6
Tachometer 2-6
General maintenance 8-2
Glove box 2-41
Hands-free phone system
Bluetooth® (with navigation system) . . .4-74
Bluetooth® (without navigation system) 4-84

H

Hard-disk drive audio system (Music Box) 4-50
Hazard warning flasher switch 2-33
Head restraints 1-5
Headlights
Aiming control (See adaptive front lighting system (AFS)) 2-31
Bulb replacement 8-31
Headlight switch 2-29
Xenon headlights 2-29
Headphones (See INFINITI mobile entertainment system) . . . . . .4-64 , 4-72
Heated seats 2-34
Heater
Automatic climate control 4-29
Engine block heater 5-57
HomeLink® Universal Transceiver 2-51
Hood release 3-17
Hook, Coat hooks 2-43
Horn 2-34

I

Ignition switch (Push-button) 5-8
Ignition switch, Automatic transmission models 5-11
Immobilizer system 2-25
In-cabin microfilter 4-33
Indicator lights 2-18
Indicator, Dot matrix display 2-21
INFINITI mobile entertainment system (MES) 4-62

INFINITI Vehicle Immobilizer System 2-25
INFINITI voice recognition standard mode . .4-98
INFINITI voice recognition system 4-98
INFO button 4-8
Inside mirror 3-23
Inspection/maintenance (I/M) test 9-22
Instrument brightness control 2-32
Instrument panel 2-3
Intelligent cruise control (ICC) system 5-25
Intelligent Cruise Control (ICC) system warning light 2-15
Intelligent cruise control (ICC) system, Preview function 5-45
Intelligent Key 3-2
Intelligent Key system 3-6
Intelligent Key system
  Intelligent Key system warning light . . .2-15
  Key operating range 3-8
  Key operation 3-9
  Remote keyless operation 3-14
  Warning signals 3-11
Interior light control switch 2-49
Interior light replacement 8-32
Interior lights 2-48
Interior trunk lid release 3-19
iPod® player operation 4-48
ISOFIX child restraint 1-21

J

Jump starting 6-7

K

Keyless entry, With Intelligent Key system (See Intelligent Key system) 3-14
Keys 3-2
Keys, For Intelligent Key system 3-6
Labels
  Air bag warning labels 1-52
  Air conditioner specification label 9-13
  Emission control information label . . . 9-12
  Engine serial number 9-12
  F.M.V.S.S./C.M.V.S.S. certification label 9-12
  Tire and Loading information label . . . 9-13
  Vehicle identification number (VIN) . . . 9-11

L

Lane Departure Prevention (LDP) ON indicator light 2-19
Lane Departure Prevention (LDP) system . . .5-19
Lane departure warning (LDW) switch 2-36
Lane departure warning (LDW) system 5-17
Lane Departure Warning (LDW) system/Lane Departure Prevention (LDP) system 5-16
Lane departure warning chime 2-21
Lane departure warning light 2-15
LATCH system 1-21
License plate, Installing front license plate 9-14
Light
  Air bag warning light 1-53
  Bulb replacement 8-30
  Fog light switch 2-33
  Headlight switch 2-29
  Headlights bulb replacement 8-31
  Indicator lights 2-18
  Interior light control switch 2-49
  Interior lights 2-48
  Map lights 2-49
  Personal lights 2-49
  Trunk light 2-51
  Vanity mirror lights 2-50
  Warning/indicator lights and audible reminders 2-13
  Xenon headlights 2-29
Light replacement 8-30
Lights, Exterior and interior light replacement 8-32
Loading information (See vehicle loading information) 9-15
Lock
  Automatic door locks 3-5
  Door locks 3-4
  Power door lock 3-4
  Trunk lid 3-17
Locking with mechanical key 3-4
Low fuel warning light 2-15
Low tire pressure warning light 2-15
Low tire pressure warning system (See tire pressure monitoring system (TPMS)) 5-3
Maintenance
  Battery 8-17
  General maintenance 8-2
  Inside the vehicle 8-3
  Maintenance precautions 8-5
  Maintenance requirements 8-2
  Outside the vehicle 8-2
  Seat belt maintenance 1-19

M

Malfunction indicator light (MIL) 2-19
Map lights 2-49
Mechanical key (Intelligent Key system) . . .3-3
Memory storage, Automatic drive positioner 3-27
Meters and gauges 2-5
Meters and gauges, Instrument brightness control 2-32
Mirror
  Inside mirror 3-23
  Outside mirrors 3-24
Mobile entertainment system (MES) 4-62
Monitor, Rearview monitor 4-22
Moonroof 2-46
Music box hard-disk drive audio system . .4-50

N

Net, Cargo net 2-43
New vehicle break-in 5-46

O

Odometer 2-6
Off-road recovery. 5-5
Oil
  Capacities and recommended fuel/lubricants 9-2
  Changing engine oil and filter 8-12
  Checking engine oil level 8-12
  Engine oil 8-12
  Engine oil viscosity 9-6
Operation, Indicators for operation (dot matrix) 2-22
Outside mirrors 3-24
Owner's Manual/Service Manual order information 9-23

P

Panic alarm 3-15
Parking
  Parking brake operation 5-16
  Parking on hills 5-48
Parking brake break-in 5-50
Personal lights 2-49
Phone
  Bluetooth® Hands-Free Phone System (with navigation system) 4-74
  Bluetooth® Hands-Free Phone System (without navigation system) 4-84
  Car phone or CB radio 4-73
  Power
  Power door lock 3-4
  Power outlet 2-38
  Power steering fluid 8-16
  Power steering system 5-49
  Power windows 2-43
Power front seat adjustment 1-2
Pre-crash seat belts 1-15
Precautions
  All-wheel drive (AWD) driving safety 5-7
  Audio operation 4-34
  Braking precautions 5-49
  Child restraints 1-19
  Cruise control 5-23
  Maintenance 8-5
  Seat belt usage 1-12
  Supplemental restraint system 1-40
  When starting and driving 5-2
Preview function (for Intelligent cruise control system) 5-45
Preview Function warning light 2-17
Push starting 6-10
Push-button ignition switch 5-8

R

Radio . . . . . .4-34 , 4-60
Radio
  Car phone or CB radio 4-73
  FM-AM-SAT radio with Compact Disc (CD) player/changer 4-43
Rain-sensing auto wiper system 2-28
Rapid air pressure loss 5-6
Readiness for inspection/maintenance (I/M) test 9-22
Rear Active Steer system 5-55
Rear Active Steer warning light 2-17
Rear door lock, Child safety rear door lock . .3-6
Rear seat adjustment 1-4
Rear seats 1-4
Rear sunshade 2-47
Rear window and outside mirror defroster switch 2-28
Rearview monitor 4-22
Recorders, Event data 9-23
Registering your vehicle in another country 9-10
Remote controller (DVD) 4-71

Remote keyless entry function, For Intelligent Key system 3-14
Reporting safety defects (US only) 9-21
Roadside assistance program 6-2
Rollover 5-5
Roof, Moonroof 2-46
Safety
Child seat belts 1-14
Reporting safety defects (US only) 9-21

S

Satellite radio operation 4-44
Seat adjustment
Front power seat adjustment 1-2
Front seats 1-2
Rear seat adjustment 1-4
Seat belt(s)
Child safety 1-14
Infants 1-14
Injured persons 1-15
Larger children 1-15
Pre-crash seat belts 1-15
Precautions on seat belt usage 1-12
Pregnant women 1-15
Seat belt cleaning 7-5
Seat belt extenders 1-18
Seat belt maintenance 1-19
Seat belt warning light 2-17
Seat belts 1-12
Seat belts with pretensioners 1-51
Shoulder belt height adjustment 1-18
Small children 1-15
Three-point type 1-16
Seat(s)
Driver-side memory 3-26
Front climate controlled seats 2-35
Rear heated seats 2-34
Seats 1-2
Security system (INFINITI Vehicle Immobilizer System), Engine start 2-25
Security system, Vehicle security system . .2-24
Selector lever
Shift lock release 5-15
Servicing air conditioner (See automatic climate control) . . . . . .4-29 , 4-30
Servicing climate control 4-33
SETTING button 4-15
Shift lock release
Transmission 5-15
Shifting, Automatic transmission 5-11
Shoulder belt height adjustment 1-18
Small light indicator light 2-20
Snow mode switch 2-37
Spare tire 9-9
Spark plugs 8-20
Speedometer 2-6
Starting
Before starting the engine 5-10
Precautions when starting and driving . . 5-2
Starting the engine 5-11
STATUS button 4-7
Status light, Front passenger air bag 1-47
Steering
Power steering fluid 8-16
Power steering system 5-49
Rear Active Steer system 5-55
Steering-wheel-mounted controls for audio 4-58
Tilt/telescopic steering 3-22
Storage 2-40
Sun visors 3-22
Sunglasses holder 2-41
Sunshade (rear) 2-47
Supplemental air bag warning labels 1-52
Supplemental air bag warning light . .1-53 , 2-17
Supplemental restraint system 1-40
Supplemental restraint system, Precautions on supplemental restraint system 1-40
Switch
Audio control rear switch 4-60
Autolight switch 2-30
Fog light switch 2-33
Hazard warning flasher switch 2-33
Headlight switch 2-29
Ignition switch automatic transmission models 5-11
Lane departure warning (LDW) system . 2-36
Power door lock switch 3-5
Rear window and outside mirror defroster switch 2-28
Snow mode switch 2-37
Turn signal switch 2-33
Vehicle dynamic control (VDC) off switch 2-37
Switch, climate control rear switch 4-33

T

Tachometer 2-6
Temperature gauge, Engine coolant temperature gauge 2-7
Theft (INFINITI Vehicle Immobilizer System), Engine start 2-25
Three-way catalyst 5-2
Tilt/telescopic steering 3-22

Tire pressure, Low tire pressure warning light 2-15
Tires
Flat tire 6-2
Low tire pressure warning system 5-3
Spare tire 8-44
Tire and Loading information label . . . 8-36
Tire chains 8-41
Tire dressing 7-3
Tire pressure 8-34
Tire pressure monitoring system (TPMS) 5-3
Tire rotation 8-41
Types of tires 8-40
Uniform tire quality grading 9-19
Wheel/tire size 9-9
Wheels and tires 8-34
Top tether strap child restraints 1-23
Touch screen system 4-4
Towing
Flat towing 9-19
Tow truck towing 6-11
Towing a trailer 9-18
TPMS, Tire pressure monitoring system 5-3
TPMS, Tire pressure warning system 6-2
Trailer towing 9-18
Transceiver, HomeLink® Universal Transceiver 2-51
Transmission
Automatic transmission fluid (ATF) 8-15
Driving with automatic transmission . . . 5-11
Transmission selector lever lock release 5-15
Transmitter, With Intelligent Key system (See Intelligent Key system) 3-14
Traveling or registering your vehicle in another country 9-10
Trip computer information (display) 4-10
Trunk
Interior trunk lid release 3-19
Trunk lid 3-17
Trunk lid release switch 3-18
Trunk open request switch 3-18
Trunk release power cancel switch . . . 3-19
Trunk light 2-51
Trunk pass-through 1-11
Turn signal switch 2-33

U

Underbody cleaning 7-3
Uniform tire quality grading 9-19

V

Vanity mirror lights 2-50
Variable voltage control system 8-19
Vehicle
Dimensions and weights 9-10
Recovery (freeing a stuck vehicle) 6-14
Vehicle dynamic control (VDC) off switch 2-37
Vehicle dynamic control (VDC) system 5-54
Vehicle information and settings (display) 4-7
Vehicle identification number (VIN) 9-11
Vehicle loading information 9-15
Vehicle security system 2-24
Ventilators 4-28
Voice command (See Bluetooth® Hands-Free Phone System) . . . . . .4-76 , 4-89
Voice recognition system 4-98
Voice recognition, Alternate command mode 4-109
Warning
Dot matrix display 2-21
Hazard warning flasher switch 2-33
Lane departure warning (LDW) system . . 5-17
Tire pressure monitoring system (TPMS) 5-3
Warning/indicator lights and audible reminders 2-12

W

Warning labels, Air bag warning labels . . .1-52
Warning light
Air bag warning light 1-53
All-wheel drive (AWD) warning light . . . 2-13
Anti-lock braking system (ABS) warning light 2-13
Brake warning light 2-14
Door open warning light 2-14
Intelligent Key system warning light . . . 2-15
Lane departure warning light 2-15
Low fuel warning light 2-15
Low tire pressure warning light 2-15
Rear Active Steer warning light 2-17
Seat belt warning light 2-17
Warning lights 2-13
Warranty, Emission control system warranty 9-20

Washer switch, Windshield wiper and washer switch 2-27
Washing 7-2
Waxing 7-2
Weights (See dimensions and weights) . . .9-10
Wheel/tire size 9-9
Wheels and tires 8-34
Wheels and tires, Cleaning aluminum alloy wheels 7-3
Wheels, Rear Active Steer system 5-55
Window washer fluid 8-17
Window(s)
    Cleaning 7-3
    Power windows 2-43
Windshield wiper and washer switch 2-27
Wiper
    Rain-sensing auto wiper system 2-28
    Windshield wiper and washer switch . . 2-27
    Wiper blades 8-22

X

Xenon headlights 2-29

FUEL RECOMMENDATION:

VK45DE engine

Use unleaded premium gasoline with an octane rating of at least 91 AKI (Anti-Knock Index) number (Research octane number 96).

If premium gasoline is not available, unleaded regular gasoline with an octane rating of 87 AKI number (Research octane number 91) may be temporarily used, but only under the following precautions:

- Have the fuel tank filled only partially with unleaded regular gasoline, and fill up with unleaded premium gasoline as soon as possible.
- Avoid full throttle driving and abrupt acceleration.

However, for maximum vehicle performance, the use of unleaded premium gasoline is recommended.

VQ35HR engine

INFINITI recommends the use of unleaded premium gasoline with an octane rating of at least 91 AKI (Anti-Knock Index) number (Research octane number 96).

If unleaded premium gasoline is not available, you may use unleaded regular gasoline with an octane rating of at least 87 AKI number (Research octane number 91), but you may notice a decrease in performance.

⚠ CAUTION

- **Using a fuel other than that specified could adversely affect the emission control systems, and may also affect warranty coverage.**
- **Under no circumstances should a leaded gasoline be used, since this will damage the three way catalyst.**
- **Do not use E-85 fuel in your vehicle. Your vehicle is not designed to run on E-85 fuel. Using E-85 fuel can damage the fuel system components and is not covered by the INFINITI new vehicle limited warranty.**

For additional information, see “CAPACITIES AND RECOMMENDED FUEL/LUBRICANTS” in the “9. Technical and consumer information” section.

ENGINE OIL RECOMMENDATION:

- Engine oil with API Certification Mark
- Viscosity SAE 5W-30

See “CAPACITIES AND RECOMMENDED FUEL/LUBRICANTS” in the “9. Technical and consumer information” section for engine oil and oil filter recommendation.

COLD TIRE PRESSURES:

The label is typically located on the driver side center pillar or on the driver’s door. For additional information, see “WHEELS AND TIRES” in the “8. Maintenance and do-it-yourself” section.

NEW VEHICLE BREAK-IN PROCEDURES RECOMMENDATION:

During the first 1,200 miles (2,000 km) of vehicle use, follow the recommendations outlined in the “BREAK-IN SCHEDULE” in the “5. Starting and driving” section of this Owner’s Manual. Follow these recommendations for the future reliability and economy of your new vehicle.

Printing: June 2009 (13) / OM0E-0Y50U0 / Printed in U.S.A.

INFINITI®