Table of Contents

ENGINES

Subject **Page**

M52TU 3

Introduction. 4

Overview. 5

Technical Data. 6

Crankcase. 8

Crankshaft. 8

Pistons and Connecting Rods. 9

Flywheel and Self Adjusting Clutch (SAC). 10

Oil Pump. 11

Valve Train/VANOS. 12

VANOS Components. 13

Double Vanos Operation. 14

Cylinder Head. 15

Cooling System. 16

Map Cooling Thermostat. 17

Resonance/Turbulence Intake System. 18

Idle Control Valve and Turbulence Bores. 19

Exhaust Manifolds. 20

cardiagn.com

Subject **Page**

M54. 21

Introduction. 22

Mechanical Changes. 23

Technical Data. 25

Review Questions. 27

cardiagn.com

M52TU B25 AND B28 ENGINES

Model: E46, 323i and 328i

Production Date: M52TU B28: 6/98-6/00 M52TU B25: 6/98-9/00

Objectives

After completing this module you should be able to:

- List the changes made to the M52TU from the previous M52 engine.
- Describe the advantages offered by the use of Double Vanos valve control.
- Understand the Mechanical, Hydraulic and Electronic controls used in Double Vanos operation.
- Explain the cooling system of the M52TU.
- Describe the operation and advantages of the Turbulence Intake System.

cardiagn.com

Introduction

The M52 TU (*Technically Updated*) engine, is a further development of the M52 engine used in E36 and E39 vehicles. It is available in two displacement versions, the 2.8 liter and the 2.5 liter.

The development objectives were to reduce the fuel consumption and emission levels, while increasing the power output and performance characteristics of the previous M52.

The engine management system, Siemens MS42.0, was developed, in conjunction with the mechanical changes, to provide the needed electronic control to allow the engine to comply with the Low Emission Vehicle (LEV) standards.

During development, particular importance was given to improving quality, engine acoustics and comfort. Further development criteria was placed on increasing power achieved by an improved torque curve.

Overview

The following changes were made to the M52 engine to achieve the development goals:

- Re-designed crankcase
- Modified crankshaft
- Modified pistons
- Oil pump/oil pressure regulator integrated into the oil sump deflector
- Double VANOS for the camshaft drive
- Re-designed cooling system
- Map controlled thermostat
- Quick disconnect hoses for cooling system
- Motor driven throttle valve
- Catalytic converters mounted in the exhaust manifold

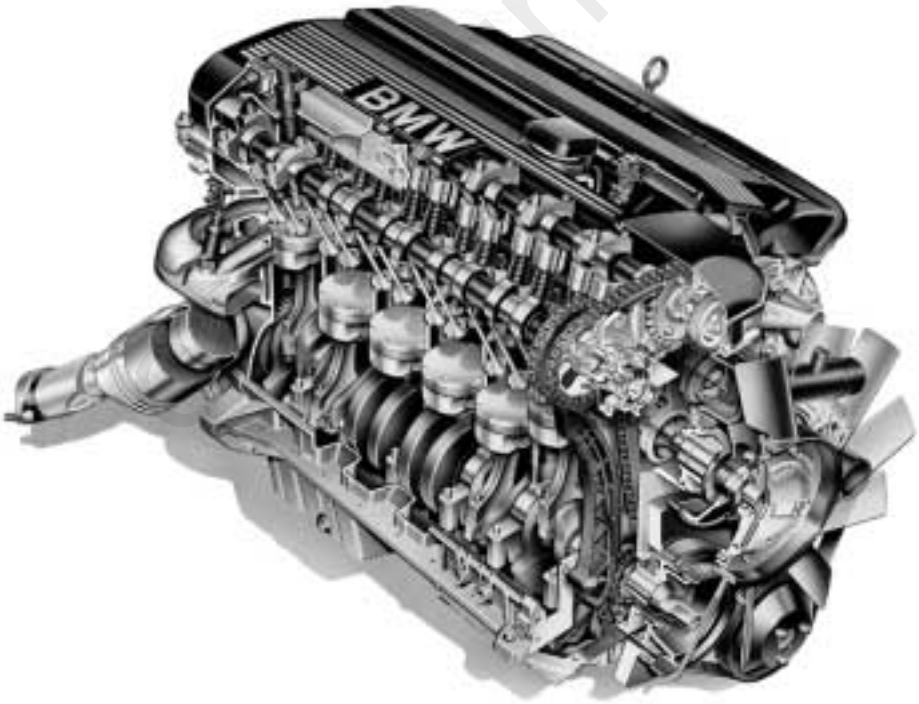

Torque/Power M52TUB25 vs. M52B25

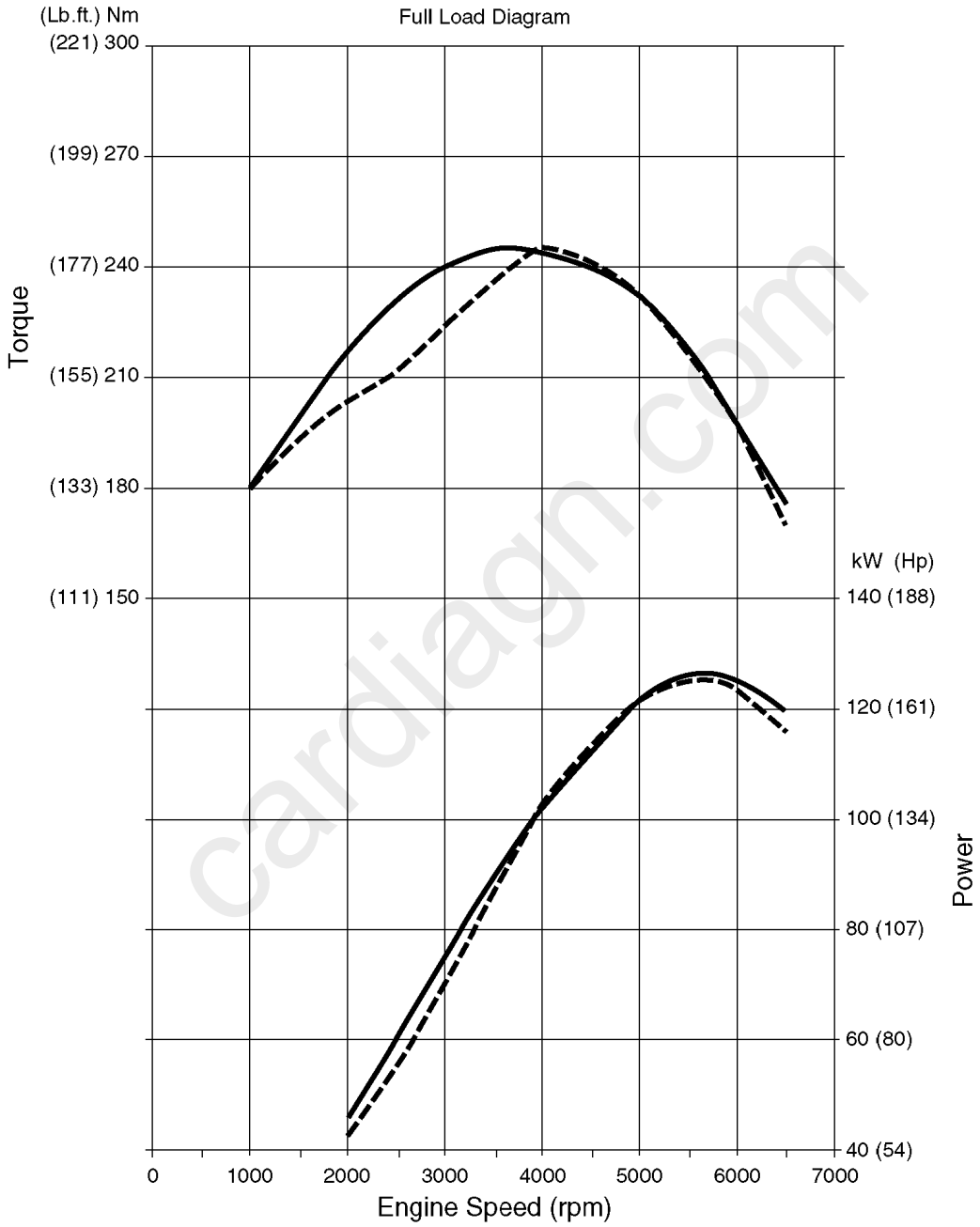

M52TUB25
245 Nm(181 Lb.ft) / 3500 rpm 126 kW(170 Hp) / 5500 rpm

M52B25
245 Nm(181 Lb.ft) / 3950 rpm 125 kW(168 Hp) / 5500 rpm

cardiagn.com

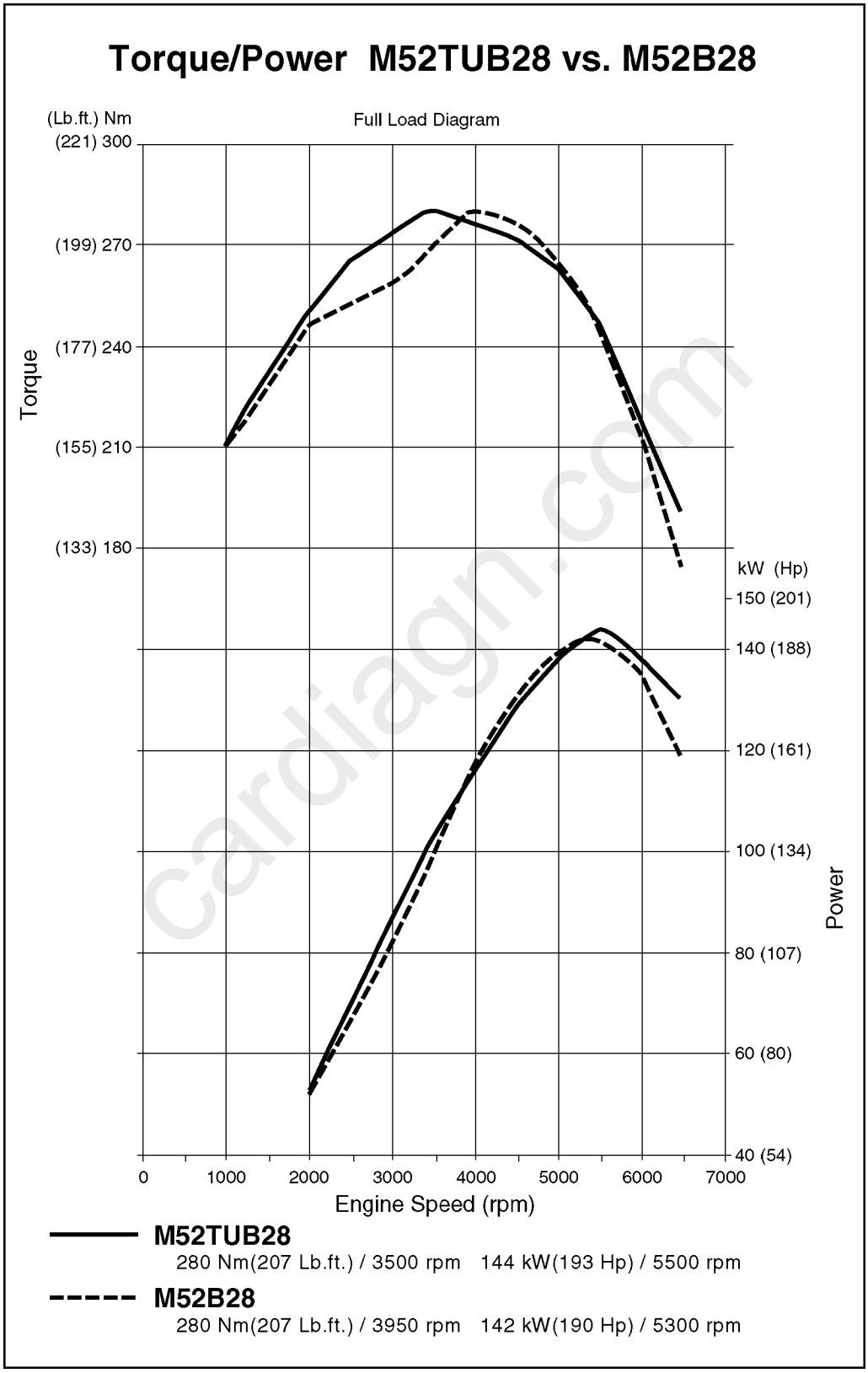

cardiagn.com

Crankcase

The crankcase of the M52 TU engine is a new design. It is made from the same aluminum alloy as the crankcase for the Z3 Roadster 2.8 liter M52 engine.

- The aluminum crankcase is 51lbs lighter than the cast iron block of the M52.
- The engine has cast iron liners as the M52 engine in the Z3.
- There is the possibility for boring the cylinders once (+.25mm).

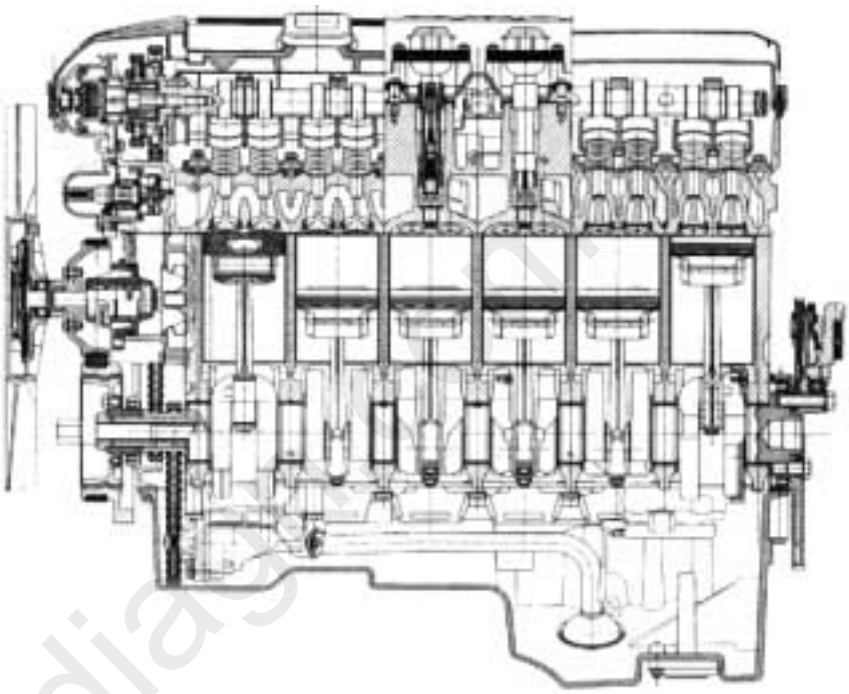

Crankshaft

The crankshaft of the 2.5 liter displacement engine is made from cast iron. The 2.8 liter engine uses a forged steel crankshaft due to the “higher torque”. Both crankshafts are mass balanced. The crankshafts feature seven main bearings with the thrust bearing located at the #6 main journal area.

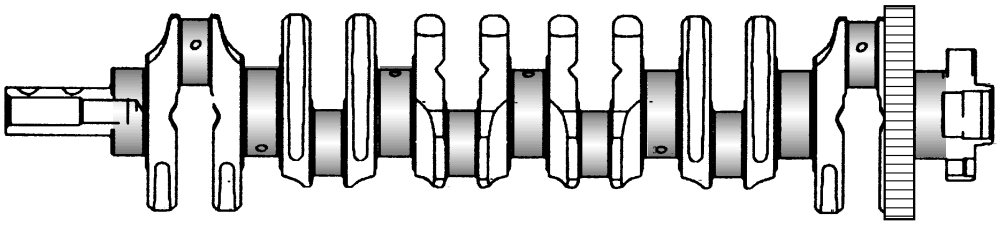

Pistons and Connecting Rods

The piston design is carried over from the M52 engine. The 2.8 liter uses a graphite coating on the skirts to reduce friction and noise characteristics. The connecting rods are forged steel.

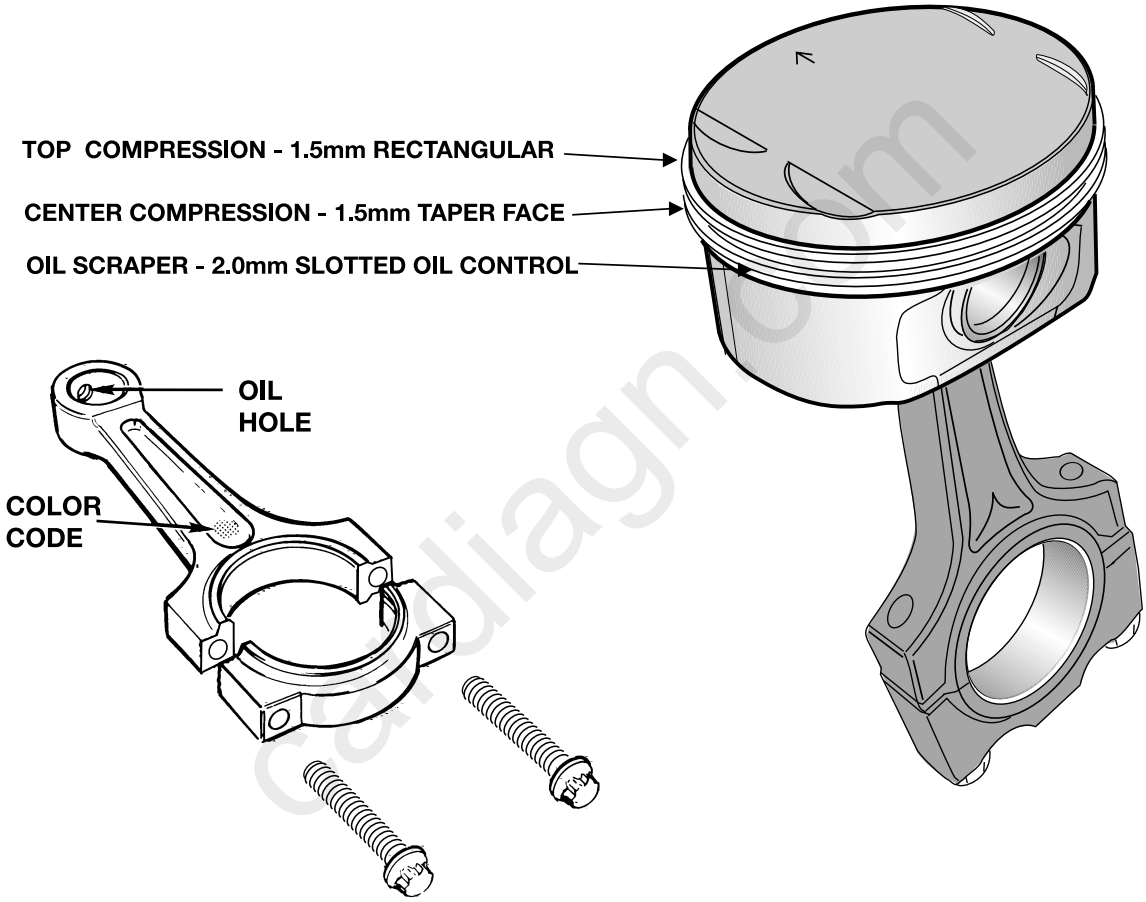

cardiagn.com

Flywheel and Self Adjusting Clutch (SAC)

The M52 TU uses the dual mass flywheel with the self adjusting clutch introduced on the E39.

The SAC is designed to extend the service life of the clutch disc while keeping the pivot range of the diaphragm spring consistent throughout its service life.

To check the clutch disc thickness the clutch must be removed. The pressure plate of the SAC configuration incorporates an additional “wedge” ring that rotates as the disc wears. As the ring rotates (1/2” total rotation distance) its wedges push the pressure plate disc forward to compensate for the wear of the clutch disc.

When a SAC pressure plate is removed it must be reset to the “new” position before installing it into the vehicle. Using a new special tool, the wedge ring (1) is rotated back under the pressure of the spring (2) to the “new” reference line on the pressure plate.

CAUTION: A replacement pressure plate is received with a shipping “star lock”. This is to be removed after installation. SAC service and replacement procedures are different and require new special tools. Refer to the repair manual in TIS for complete procedures.

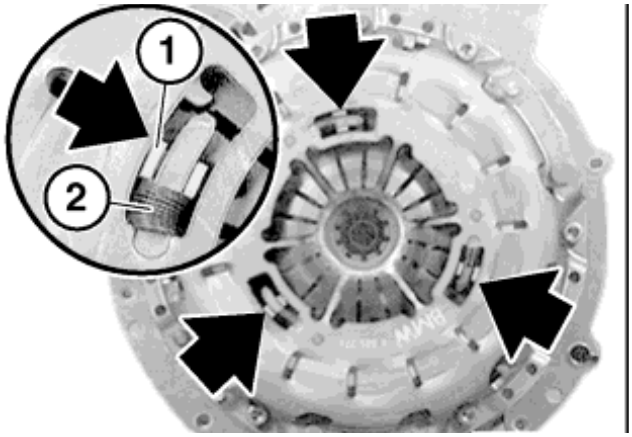

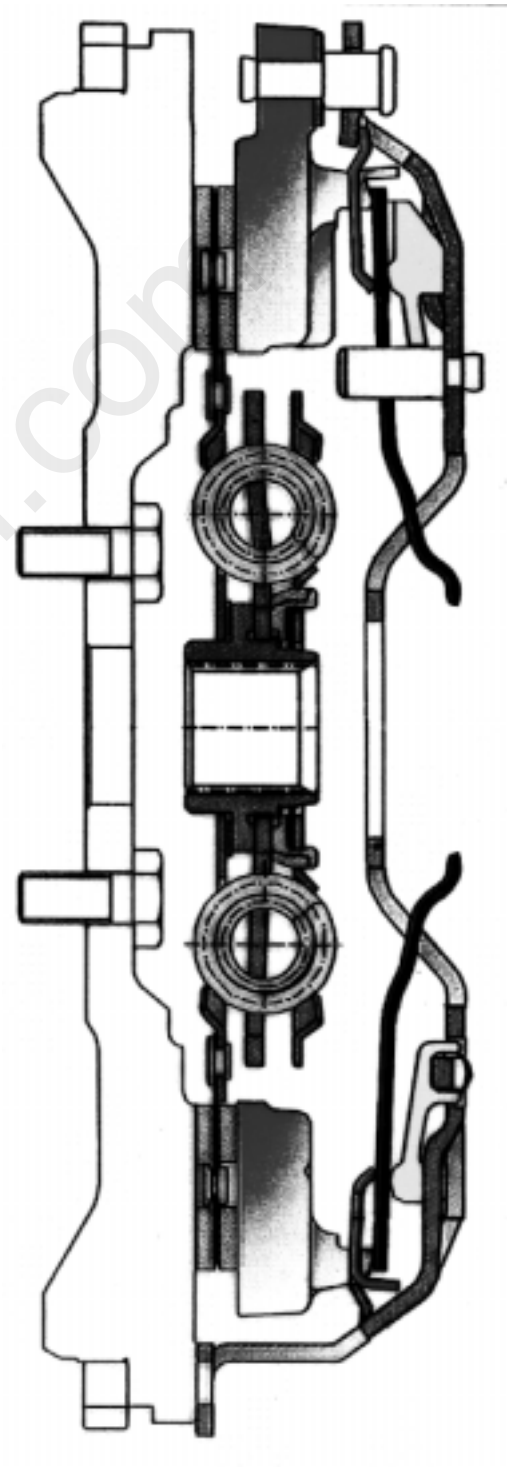

Oil Pump

The duocentric oil pump with oil pressure regulator for the M52 TU engine is integrated into the oil deflector in the sump.

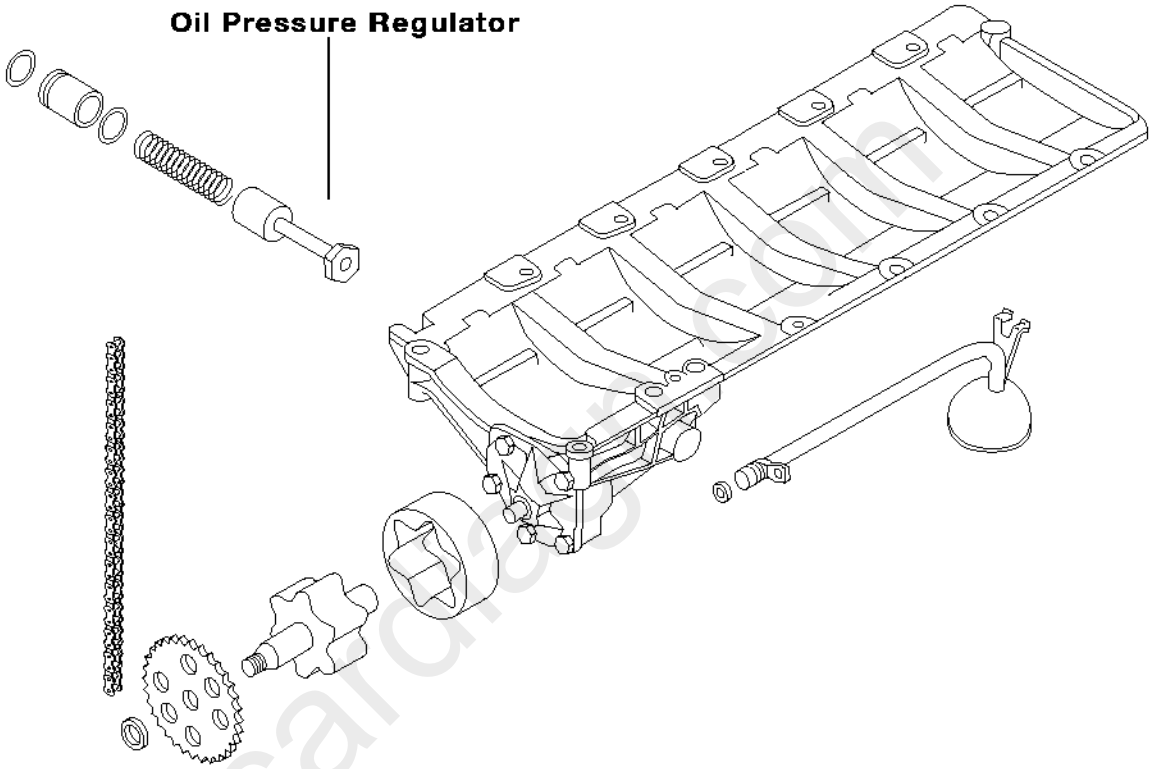

cardata.com

VANOS

The double VANOS system is used on the M52 TU engine. Double VANOS was originally introduced on the European M3 engine, however, the system for the M52 TU engine is designed specifically for series production engines.

The single VANOS system of the M52 engine is a simple ON/OFF system. With the double VANOS system, true variable timing for both the intake and exhaust camshafts is possible.

In addition to offering increased power, the double VANOS system offers the following advantages:

- Increase torque in the lower and medium RPM ranges - without a loss of power in the upper RPM ranges
- Less un-burned gas when idling due to less camshaft overlap
- Improved idling characteristics due to less overlap
- Internal exhaust gas recirculation in the part load range for lower NOx emissions
- Quicker warm up cycle for the catalytic converter for faster reduction in emissions
- Improved fuel economy

cardiagn.com

VANOS Components

The VANOS system consists of the following components:

- Intake and Exhaust camshafts with helical gear inserts
- Adjustable camshaft drive gears
- Double VANOS actuator
- 2 - three way solenoid valves
- Two camshaft trigger wheels
- Two camshaft position sensors

Engine oil pressure is used to position the VANOS actuators. The oil pressure is fed from the pump up to the three way solenoids and drains back to the sump as the camshafts are adjusted during engine operation.

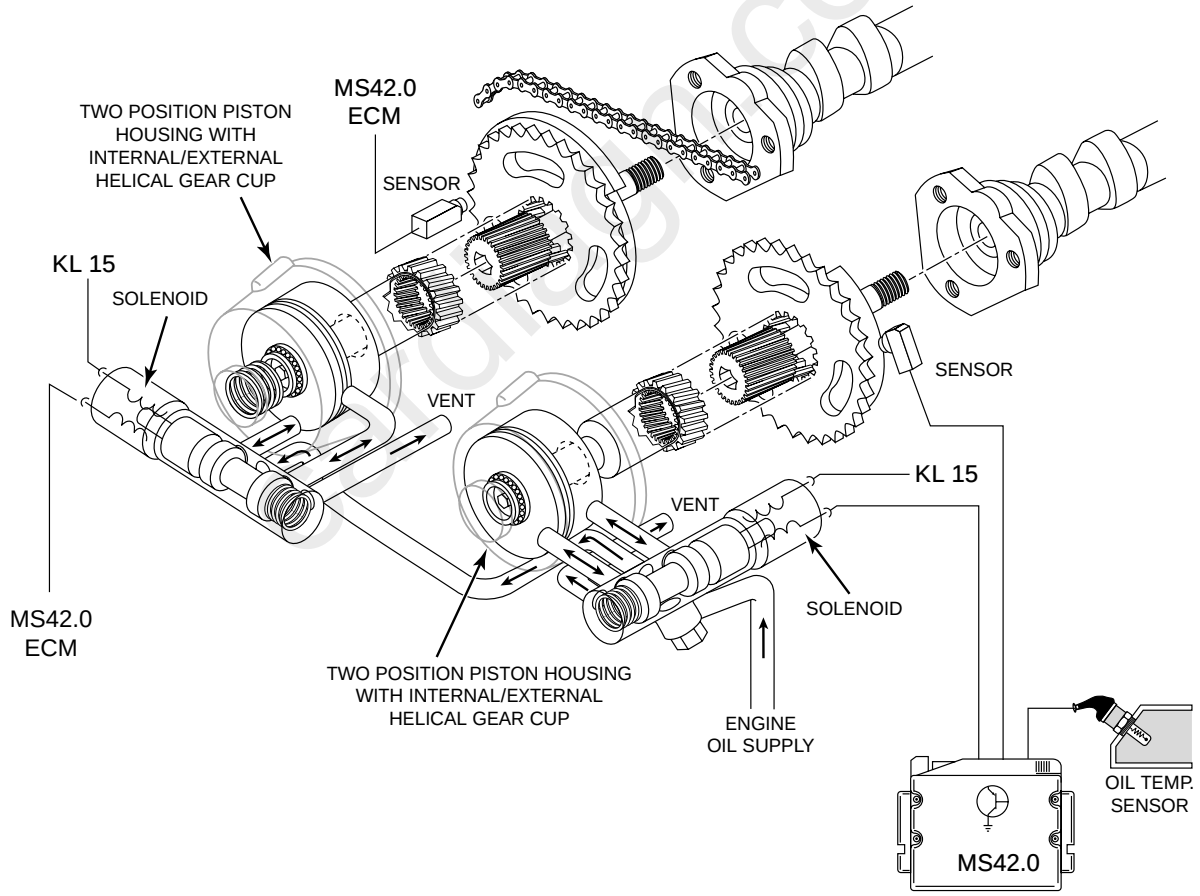

With the double VANOS system, the camshafts are infinitely adjustable within the mechanical travel limits of the cam drive gears.

Double VANOS Operation

The MS42.0 engine control module (ECM) controls the operation of the Double VANOS system. The base setting of the camshafts with the engine off:

- Intake cam - retarded
- Exhaust cam - advanced

This is also the "fail safe" position in the event of an electronic control failure. Both camshafts are held in these positions by oil pressure from the engine oil pump. The exhaust camshaft is held additionally by a spring in the VANOS actuator.

When the engine is started, the camshafts will remain in these positions until the ECM detects the positions of the camshafts from the camshaft sensors (approximately 50 revolutions or 2- 5 seconds).

Once the cam positions are recognized, the ECM will make an initial cam timing adjustment based on RPM and throttle position. Following this initial setting, the intake air and engine coolant temperature are used to adjust the timing.

When the ECM detects that the cams are in the desired position, the solenoids are modulated (100 - 220 Hz) maintaining oil pressure on both sides of the actuators to maintain the camshaft timing.

cardiagn.com

Cylinder Head

The cylinder head has been redesigned in the area of the cooling passages. The coolant circulation through the head has been optimized, allowing the head to operate at cooler temperatures.

The front of the cylinder head has been redesigned for the double VANOS system.

The air intake ports have been redesigned in conjunction with the redesigned intake manifold.

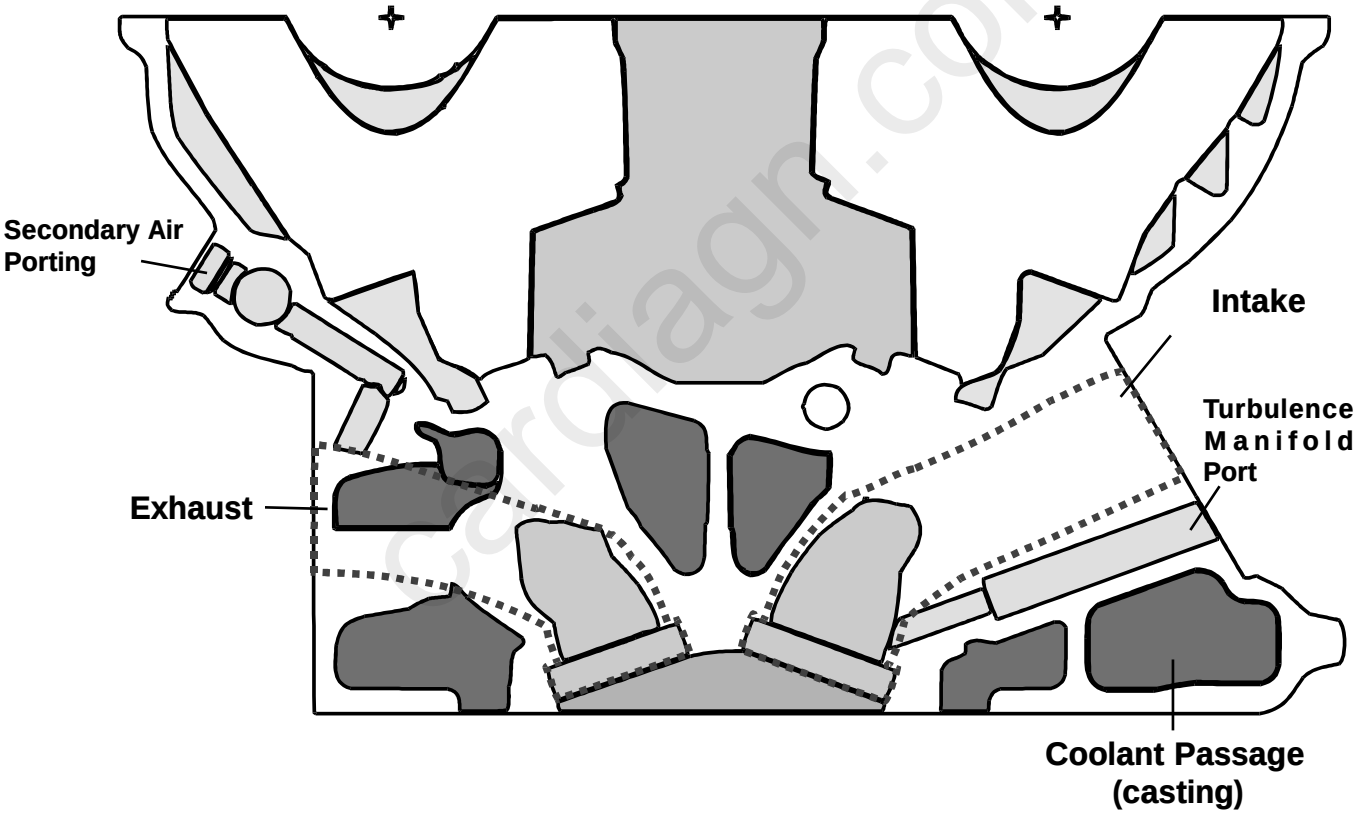

cardiagn.com

Cooling System

The cooling system of the M52 TU engine has been completely redesigned. The objective in redesigning the system was to optimize the operating temperatures in both cylinder head and block. The cooling system is designed to:

- Reduce the operating temperatures of the cylinder head. This has a positive effect on torque because the lower temperatures improve the volumetric efficiency of the engine.

- Increase the operating temperature of the cylinder block (crankcase). This design change reduces the friction and thereby reduces fuel consumption.

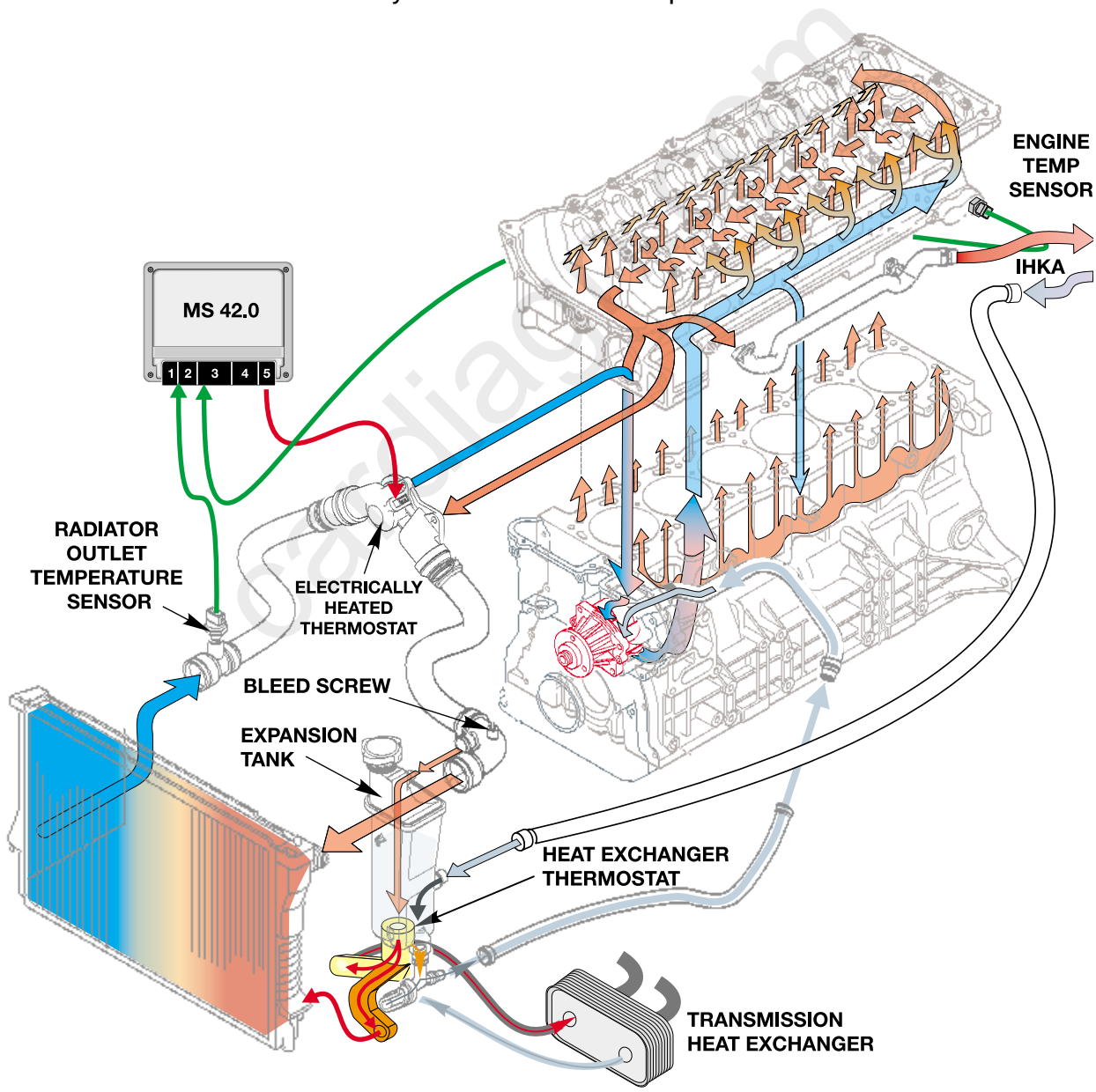

These two changes were achieved in the M52 TU by having the coolant flow directly to the cylinder head from the water pump. The system is referred to as a partial engine cooling concept (MTK).

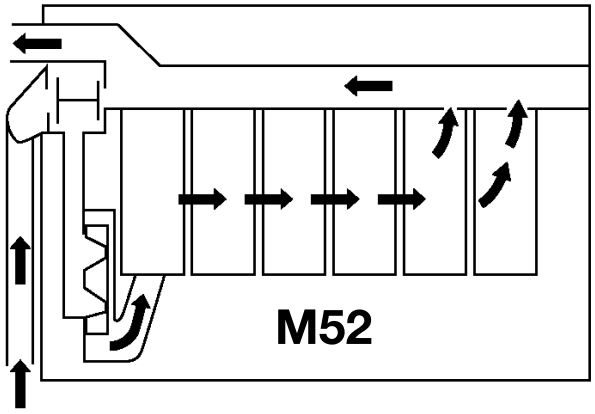

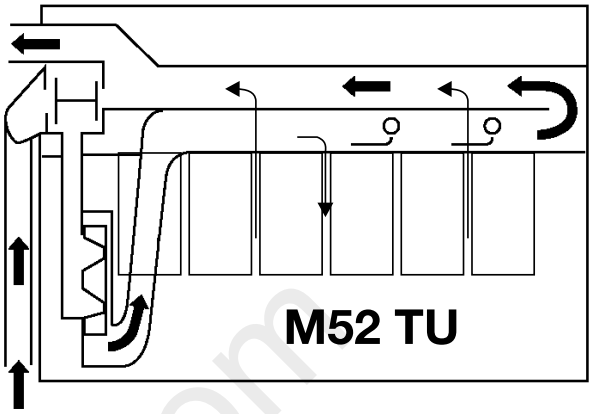

The coolant is fed by the water pump through a cast coolant feed passage in the cylinder head to the rear of the cylinder head. From there it flows forward to the thermostat housing, radiator and output to the controlled inlet of the heater core.

The water passages in the cylinder block are only connected to the coolant supply and metered through the holes in the head gasket. A reduced volume of the coolant flows through the cylinder block.

Map Cooling Thermostat

As a further measure for controlling the engine's operating temperature, the heated thermostat, introduced on the M62 engine, is carried over to the M52 TU engine. The heated thermostat allows the engine to be operated at higher controlled temperatures during low and part throttle conditions which reduces the fuel consumption of the engine.

The thermostat heating which opens or closed the thermostat to control the engine temperature is controlled by the DME. Any problems will be diagnosed as part of the DME system using the DIS or MoDiC.

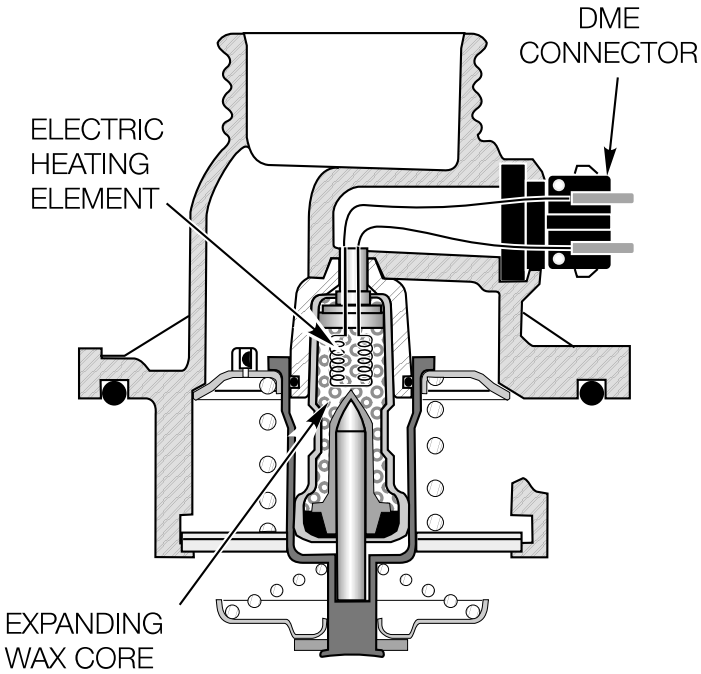

cardiagn.com

Resonance/Turbulence Intake System

The intake manifold for the M52 TU engine was completely redesigned. Manufactured from molded plastic, it contained several new innovations and features.

Resonance Charging

The principle of resonance charging is carried over from the M42 engine. The design of the manifold and the use of the resonance charging flap allow the manifold to operate with the dynamic effect of long intake runners at low to mid range RPM. Then, when the resonance flap opens during higher RPM, the dynamic effect is to have six short intake runners for greater air volume.

The overall effect is to achieve an optimum torque progression throughout the entire RPM range.

The resonance system consists of:

- The intake manifold
- Resonance manifold and tubes
- Main manifold with six ram tubes
- The resonance flap and controls
- Vacuum actuator and vacuum reservoir
- Turbulence manifold and idle control valve

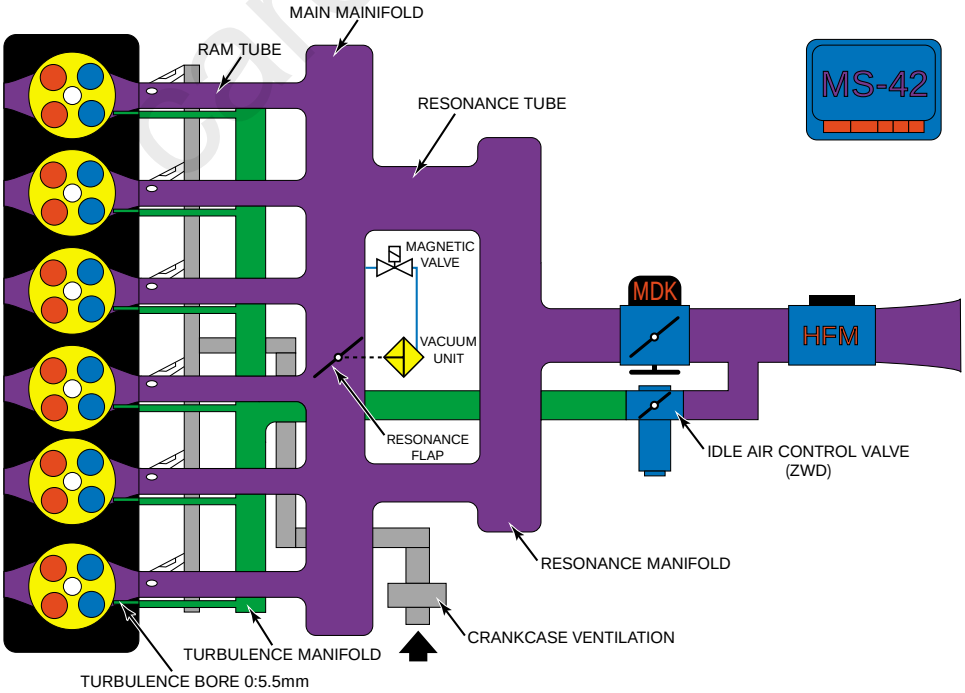

cardiagn.com

Idle Control Valve and Turbulence Bores

The intake manifold incorporates six separate (internal) turbulence bores that channel the idle and low engine speed air directly into the cylinder head. The turbulence bores mate up to matching 5.5mm bores in the cylinder head.

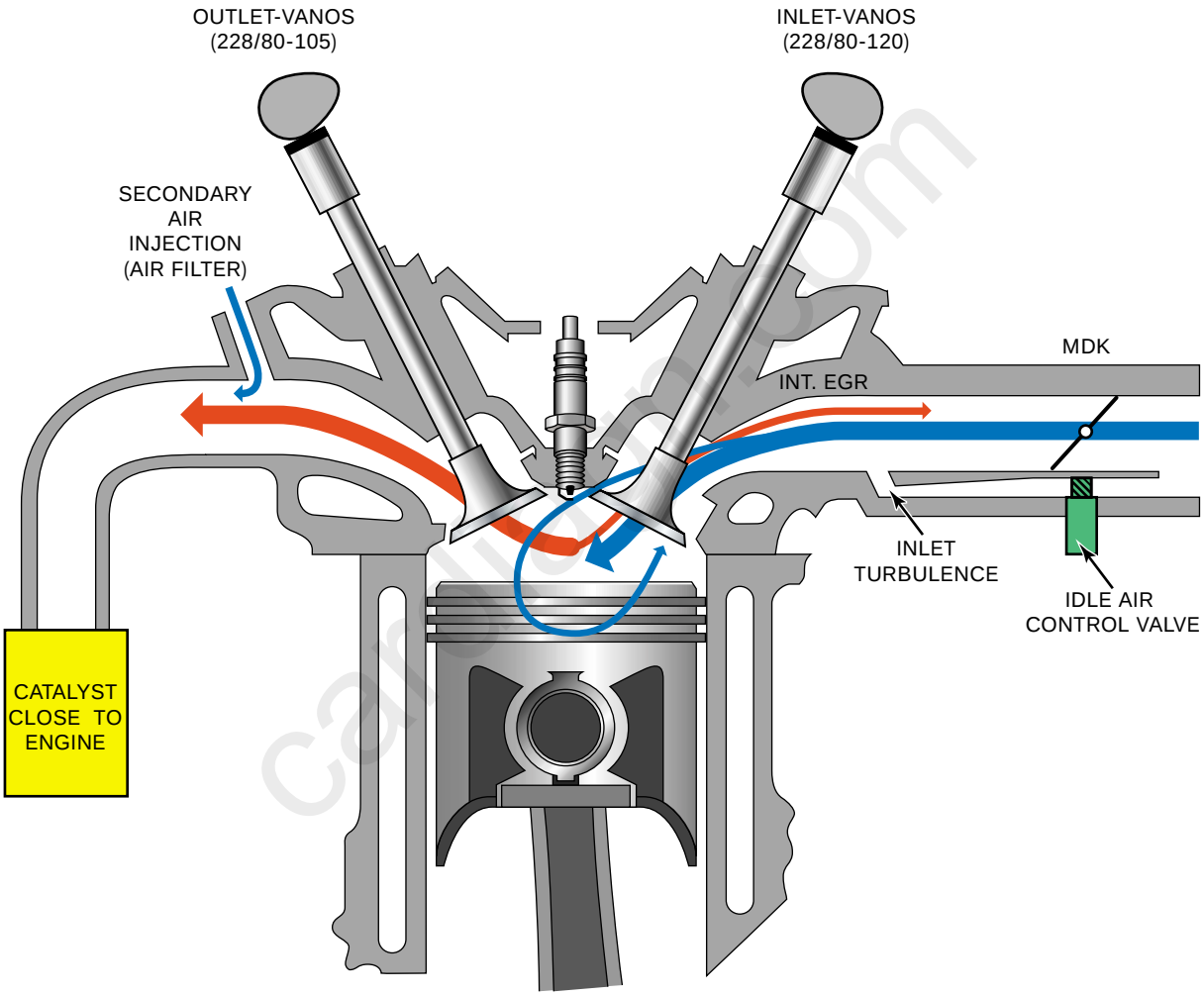

Exhaust Manifolds

The exhaust manifolds incorporate the catalytic converters. Mounting the catalytic converters close to the engine allows them to come up to operating temperature quicker.

The two pre and two post catalytic oxygen sensors are also mounted in the exhaust manifold.

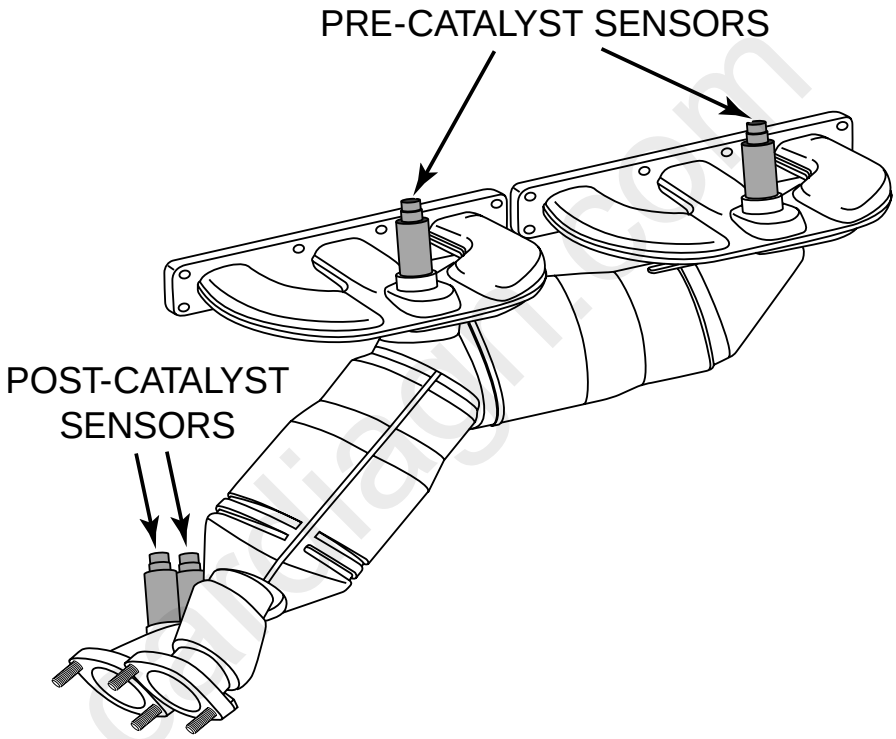

M54 B25 AND B30 ENGINES

Model: E46, 325i and 330i

Production Date: M54 B30: From 6/00 M54 B25: From 9/00

Objectives

After completing this module you should be able to:

- Identify the changes to the M54 engines over the M52 TU engine.
- List the design objectives for the M54 engine.

cardiagn.com

Introduction

The M54 - 6 cylinder engine was introduced with the 2001 Model Year E46 330i. The displacement of the new engine is 3 liters and the engine replaced the 2.8 liter engine in the E46 in 6/2000. A 2.5 liter version of the M54 engine was introduced starting with 9/2000 production in the E46, Z3 and E39 vehicles.

The M54 - 3 liter displacement engine meets ULEV compliancy for emission standards. The 2.5 liter version of the M54 engine is LEV compliant.

Design objectives for the M54 engine were to provide:

- Lower Emissions
- Maintain Fuel Economy
- Maintain Power and Performance levels

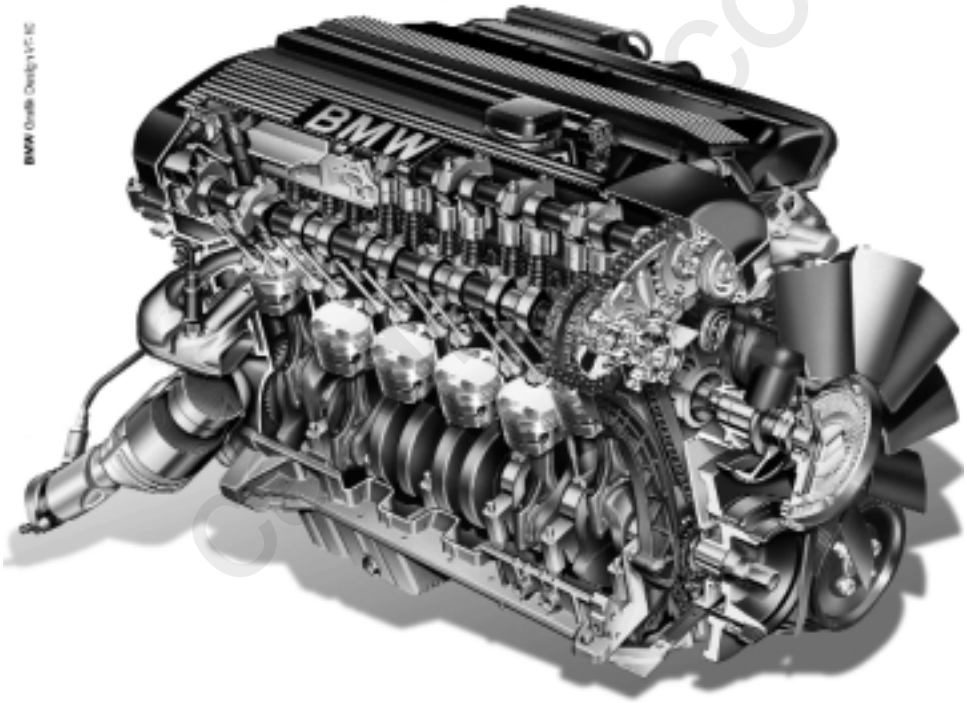

	M54B30	M54B25
HORSE POWER	**231@5900RPM**	**192@6000RPM**
TORQUE	**300Nm@3500RPM**	**245Nm@3500RPM**
BORE	**84mm**	**84mm**
STROKE	**89.6mm**	**75mm**
COMPRESSION	**10.2:1**	**10.5:1**

Mechanical Changes

In addition to the increased displacement of the M54B30 engine, several mechanical changes were incorporated into the engine for reduced emissions and increased fuel economy. These changes include:

- NEW PISTONS - The pistons have a shorter skirt compared to the M52TU and continue with the graphite coating for friction and emission reducing measures. The piston rings have been modified to reduce friction.

- CRANKSHAFT - The crankshaft for the 3 liter M54 is adopted from the S52B32 - M3 engine. The crankshaft for the 2.5 liter is carried over from M52TU.

- CAMSHAFT - The camshaft for the 3 liter M54 is modified with more lift (9.7 mm) and new valve springs to accommodate the increased lift. The camshaft of the 2.5 liter M54 is carried over from the M52TU engine.

- INTAKE MANIFOLD - The intake manifold is modified with shorter ram tubes (20mm shorter on 3 liter/10mm shorter on 2.5 liter). The diameter of the tubes is increased slightly.

- INJECTION VALVES - The diameter of the injection pintle has increased slightly for the increased displacement of the 3 liter engine. The injectors for the 2.5 liter engine carry over from the M52TU.

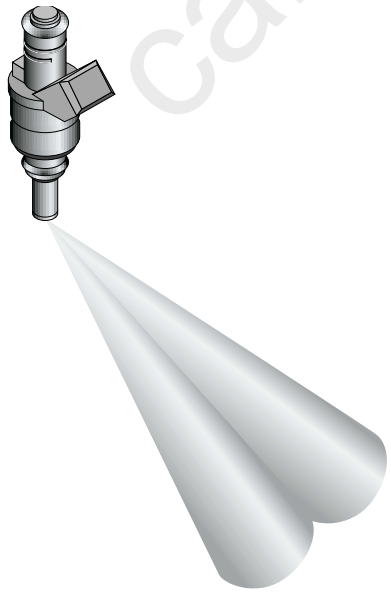

cardiagn.com

Non-return Fuel Rail system

The M54 engine with MS 43.0 control uses the non return fuel rail system introduced on the M62 TU engine. The system meets running loss compliance without the use of the 3/2-way (running losses) solenoid valve used on the M52TU engine.

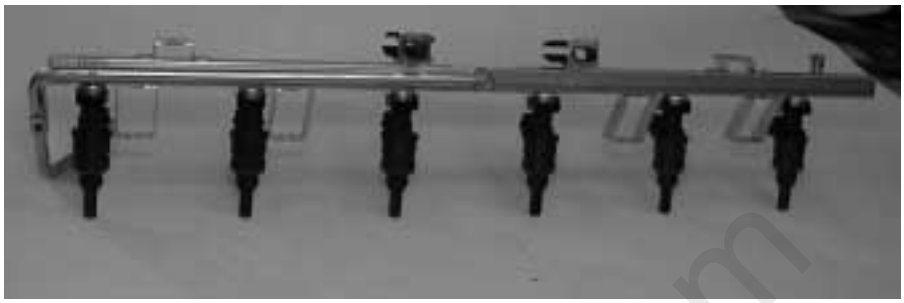

The regulated fuel supply is controlled by the fuel pressure regulator integrated in the fuel filter. The fuel return line is also located on the filter.

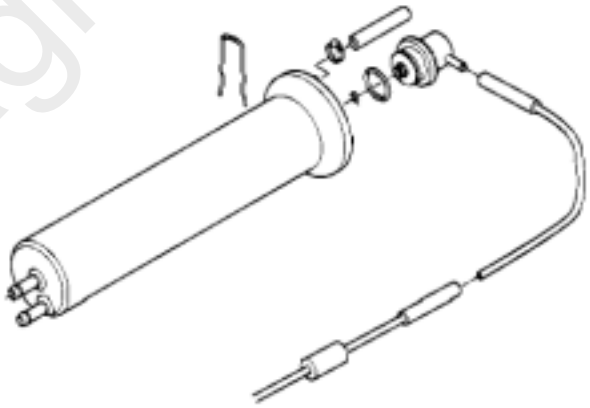

The M54 engine uses an Electronic Controlled Throttle Valve (EDK) for intake air control. The idle control valve and turbulence function of the intake manifold carries over from the M52TU engine.

cardiagn.com

M54B30 ENGINE

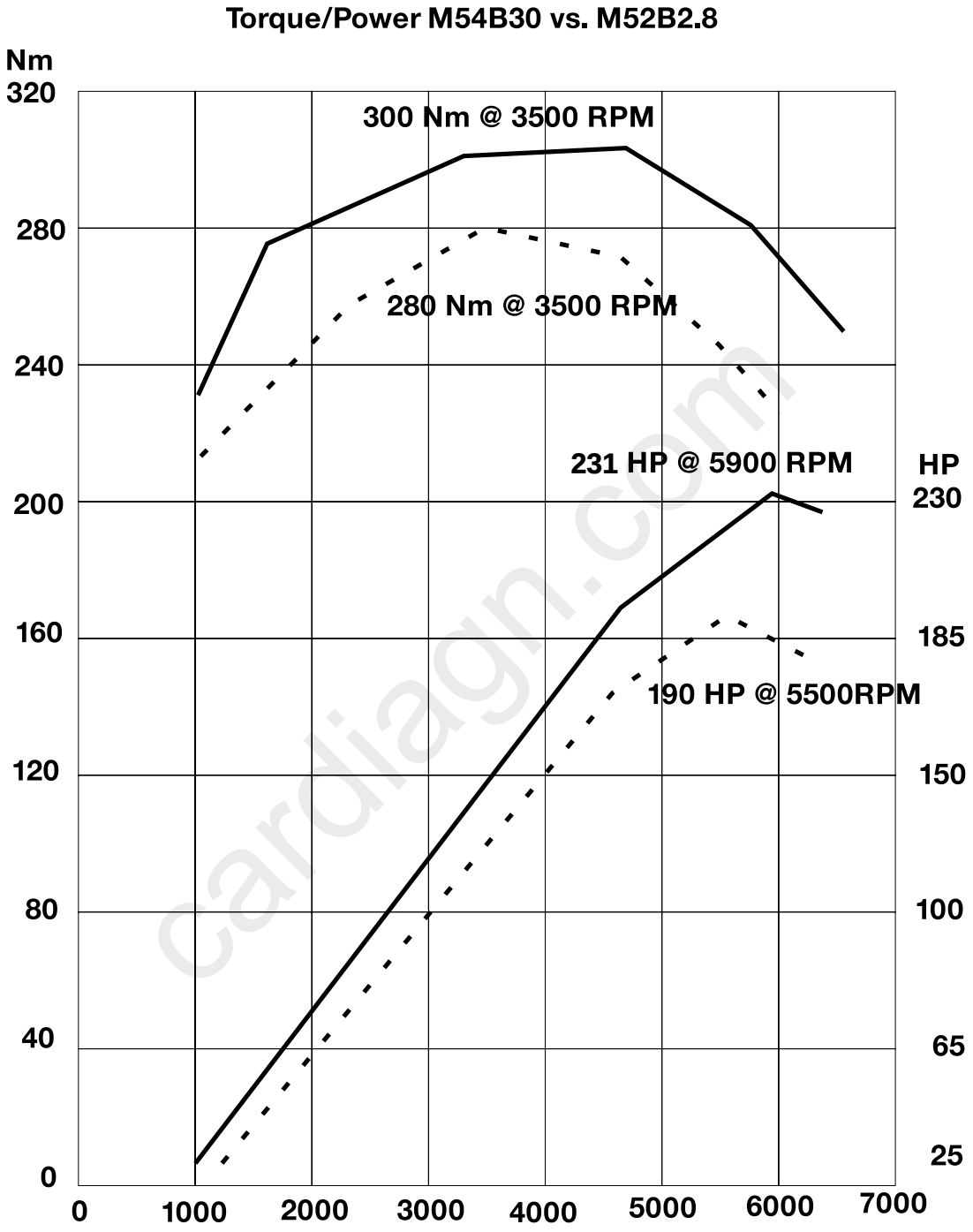

cardiagn.com

——— 3.0 Liter

- - - - 2.8 Liter

M54B25 ENGINE

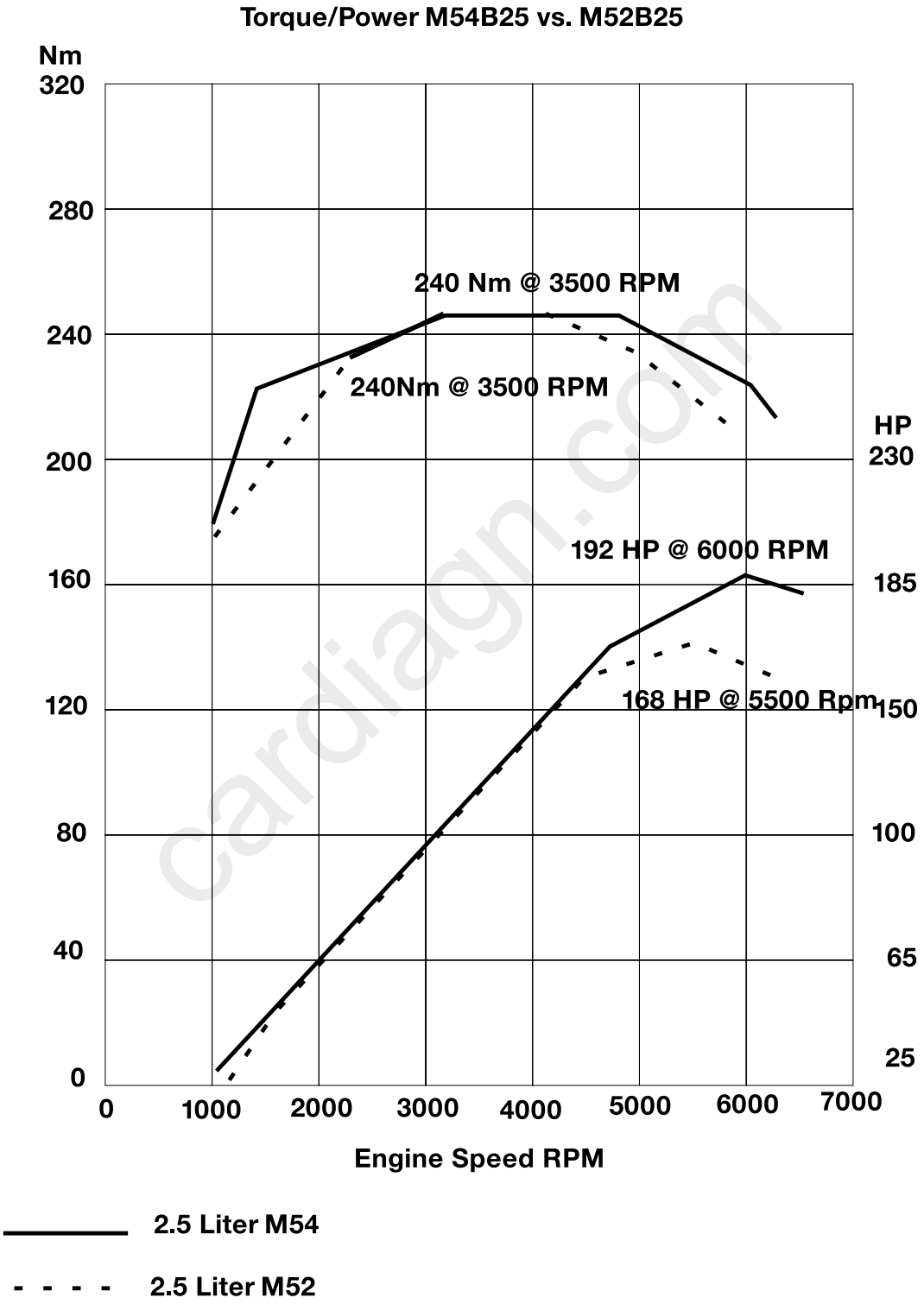

cardiagn.com

Review Questions

1. What position are the camshafts in when the engine is first started? What advantages does this position make possible? _____

_____

2. How much mechanical movement does the Vanos assembly provide?

_____

3. Why is it advantages to maintain a warm crankcase but continue to keep the cylinder head cool? What is the purpose of the transmission heat exchanger?

_____

_____

_____

4. What effect is caused by the turbulence bores in the combustion chamber?

_____

_____

_____

5. How does the M52TU/M54 achieve EGR without using a separate valve?

_____

_____

_____

6. Why are the Catalytic Converters mounted so close to the engine?

_____

_____

_____

7. What change was made to the fuel delivery system of the M54?

_____

_____

_____

cardiagn.com