SECTION VTL
VENTILATION SYSTEM

CONTENTS

SYSTEM DESCRIPTION 2

VENTILATION SYSTEM 2
System Description 2

PRECAUTION 3

PRECAUTIONS 3
Precaution for Supplemental Restraint System (SRS) "AIR BAG" and "SEAT BELT PRE-TENSIONER" 3
Precautions for Removing of Battery Terminal 3
Precaution for Procedure without Cowl Top Cover..... 4

PREPARATION 5

PREPARATION 5
Commercial Service Tool 5

PERIODIC MAINTENANCE 6

IN-CABIN MICROFILTER 6
Exploded View 6
Removal and Installation 6
Replacement 6

REMOVAL AND INSTALLATION 7

DUCT AND GRILLE 7
Exploded View 7

CENTER VENTILATOR GRILLE 8
CENTER VENTILATOR GRILLE : Removal and Installation 8

SIDE VENTILATOR GRILLE 8
SIDE VENTILATOR GRILLE : Removal and Installation 8

CENTER VENTILATOR DUCT 9
CENTER VENTILATOR DUCT : Removal and Installation 9

SIDE VENTILATOR DUCT 9
SIDE VENTILATOR DUCT : Removal and Installation 9

FRONT DEFROSTER NOZZLE 9
FRONT DEFROSTER NOZZLE : Removal and Installation 9

SIDE DEFROSTER NOZZLE 10
SIDE DEFROSTER NOZZLE : Removal and Installation 10

REAR FOOT DUCT 1 10
REAR FOOT DUCT 1 : Removal and Installation.... 10

REAR FOOT DUCT 2 10
REAR FOOT DUCT 2 : Removal and Installation.... 11

FOOT DUCT 11
FOOT DUCT : Removal and Installation 11

BLOWER MOTOR 13
Exploded View 13
Removal and Installation 13

SYSTEM DESCRIPTION

VENTILATION SYSTEM

System Description

INFOID:0000000009946826

OUTLINE

Ventilation system is controlled by A/C auto amp. (AUTOMATIC AIR CONDITIONING) or A/C control (MANUAL AIR CONDITIONING). For details of air conditioning system, refer to HAC-15, "System Description" (AUTOMATIC AIR CONDITIONING), HAC-141, "System Description" (MANUAL AIR CONDITIONING).

AIR FLOW

Front

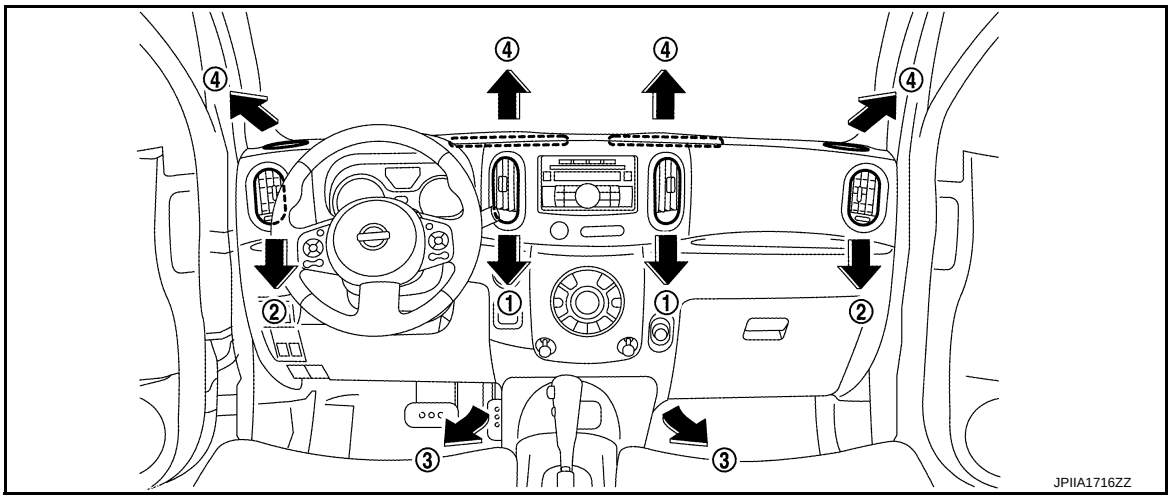

Rear

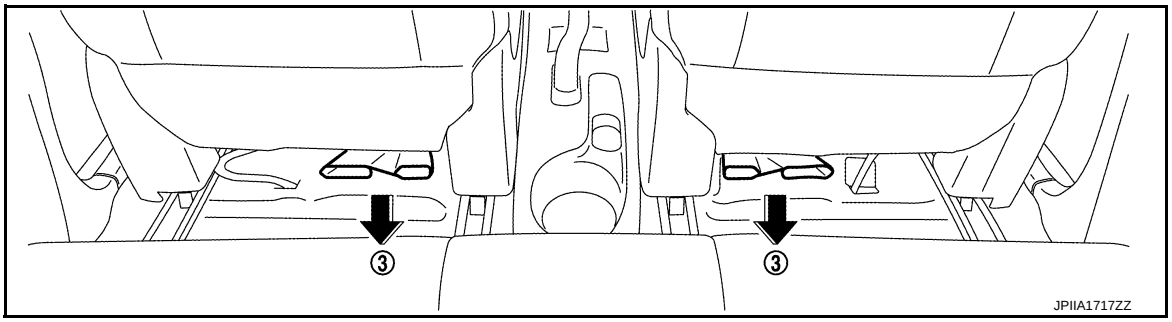

×: Applicable

MODE/DEF position indication	AIR OUTLET			
	Ventilator (1)	Ventilator (2)	Foot (3)	Defroster (4)
	×	×	—	—
	×	×	×	—
	—	×	×	×
	—	×	×	×
	—	×	—	×

PRECAUTION

PRECAUTIONS

Precaution for Supplemental Restraint System (SRS) "AIR BAG" and "SEAT BELT PRE-TENSIONER"

INFOID:0000000009946827

The Supplemental Restraint System such as “AIR BAG” and “SEAT BELT PRE-TENSIONER”, used along with a front seat belt, helps to reduce the risk or severity of injury to the driver and front passenger for certain types of collision. This system includes seat belt switch inputs and dual stage front air bag modules. The SRS system uses the seat belt switches to determine the front air bag deployment, and may only deploy one front air bag, depending on the severity of a collision and whether the front occupants are belted or unbelted.
Information necessary to service the system safely is included in the “SRS AIR BAG” and “SEAT BELT” of this Service Manual.

WARNING:
Always observe the following items for preventing accidental activation.
- **To avoid rendering the SRS inoperative, which could increase the risk of personal injury or death in the event of a collision that would result in air bag inflation, all maintenance must be performed by an authorized NISSAN/INFINITI dealer.**
- **Improper maintenance, including incorrect removal and installation of the SRS, can lead to personal injury caused by unintentional activation of the system. For removal of Spiral Cable and Air Bag Module, see “SRS AIR BAG”.**
- **Never use electrical test equipment on any circuit related to the SRS unless instructed to in this Service Manual. SRS wiring harnesses can be identified by yellow and/or orange harnesses or harness connectors.**

PRECAUTIONS WHEN USING POWER TOOLS (AIR OR ELECTRIC) AND HAMMERS

WARNING:
Always observe the following items for preventing accidental activation.
- **When working near the Air Bag Diagnosis Sensor Unit or other Air Bag System sensors with the ignition ON or engine running, never use air or electric power tools or strike near the sensor(s) with a hammer. Heavy vibration could activate the sensor(s) and deploy the air bag(s), possibly causing serious injury.**
- **When using air or electric power tools or hammers, always switch the ignition OFF, disconnect the battery, and wait at least 3 minutes before performing any service.**

Precautions for Removing of Battery Terminal

INFOID:0000000010138604

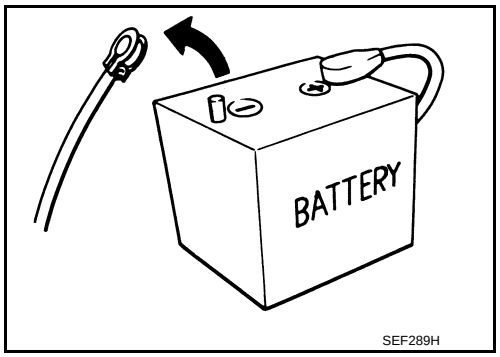

- When removing the 12V battery terminal, turn OFF the ignition switch and wait at least 30 seconds.
  NOTE:
  ECU may be active for several tens of seconds after the ignition switch is turned OFF. If the battery terminal is removed before ECU stops, then a DTC detection error or ECU data corruption may occur.
- For vehicles with the 2-batteries, be sure to connect the main battery and the sub battery before turning ON the ignition switch.
  NOTE:
  If the ignition switch is turned ON with any one of the terminals of main battery and sub battery disconnected, then DTC may be detected.
- After installing the 12V battery, always check "Self Diagnosis Result" of all ECUs and erase DTC.
  NOTE:
  The removal of 12V battery may cause a DTC detection error.

Precaution for Procedure without Cowl Top Cover

INFOID:0000000010138607

When performing the procedure after removing cowl top cover, cover the lower end of windshield with urethane, etc to prevent damage to windshield.

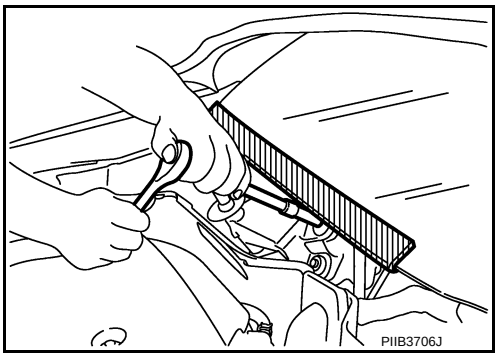

PREPARATION

PREPARATION

Commercial Service Tool

INFOID:0000000009946829

Tool name		Description
Remover tool	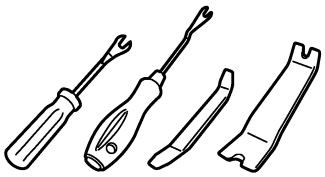 JMKIA3050ZZ	Remove clips, pawls and metal clips

PERIODIC MAINTENANCE

IN-CABIN MICROFILTER

Exploded View

INFOID:0000000009946830

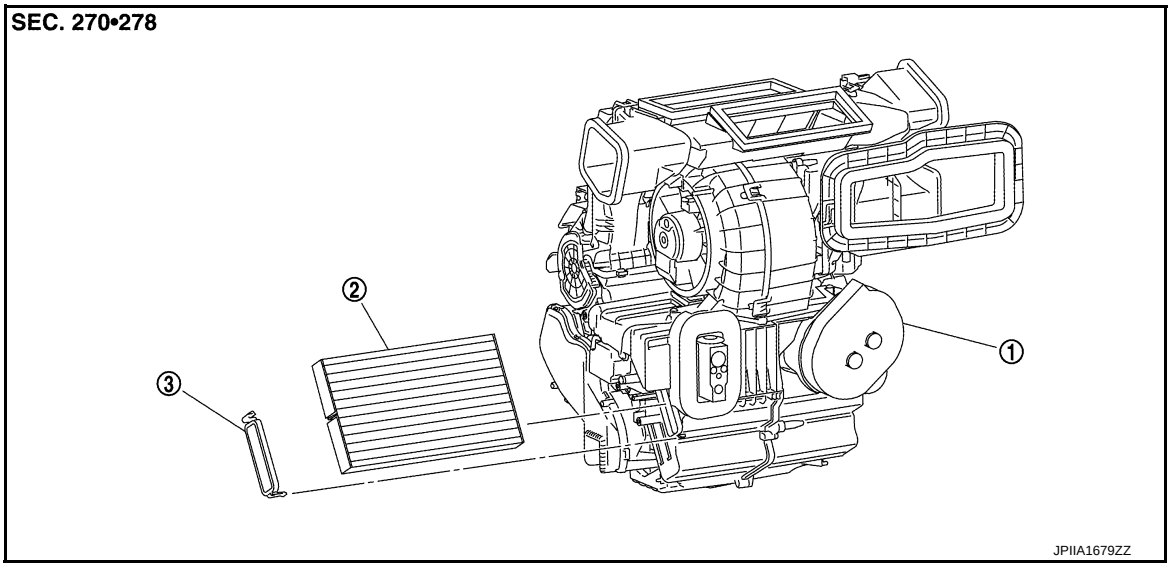

1. A/C unit assembly
2. In-cabin microfilter
3. Filter cover

Removal and Installation

INFOID:0000000009946831

REMOVAL

1. Remove globe box assembly. Refer to IP-13, "Exploded View".
2. Remove filter cover (1) from the RH side of A/C unit assembly, and then remove in-cabin microfilter (2).
   CAUTION:
   If the filter is deformed/damaged when removing, replace it with a new one. Deformed/damaged filter may deteriorate the dust collecting performance.

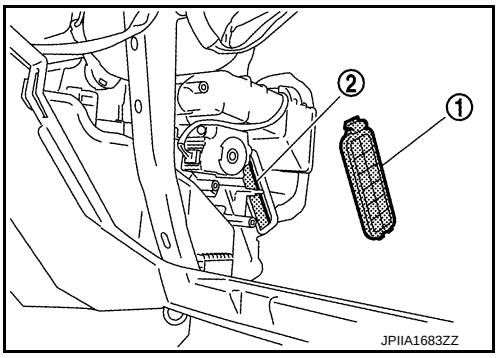

INSTALLATION

Installation is basically the reverse order of removal.

CAUTION:

When installing, handle the filter with extreme care to avoid deforming/damaging.

Replacement

INFOID:0000000009946832

Replace in-cabin microfilter.
Refer to MA-6, "Introduction of Periodic Maintenance".
Affix a caution label inside the glove box when replacing filter.

REMOVAL AND INSTALLATION

DUCT AND GRILLE

Exploded View

INFOID:0000000009946833

FRONT

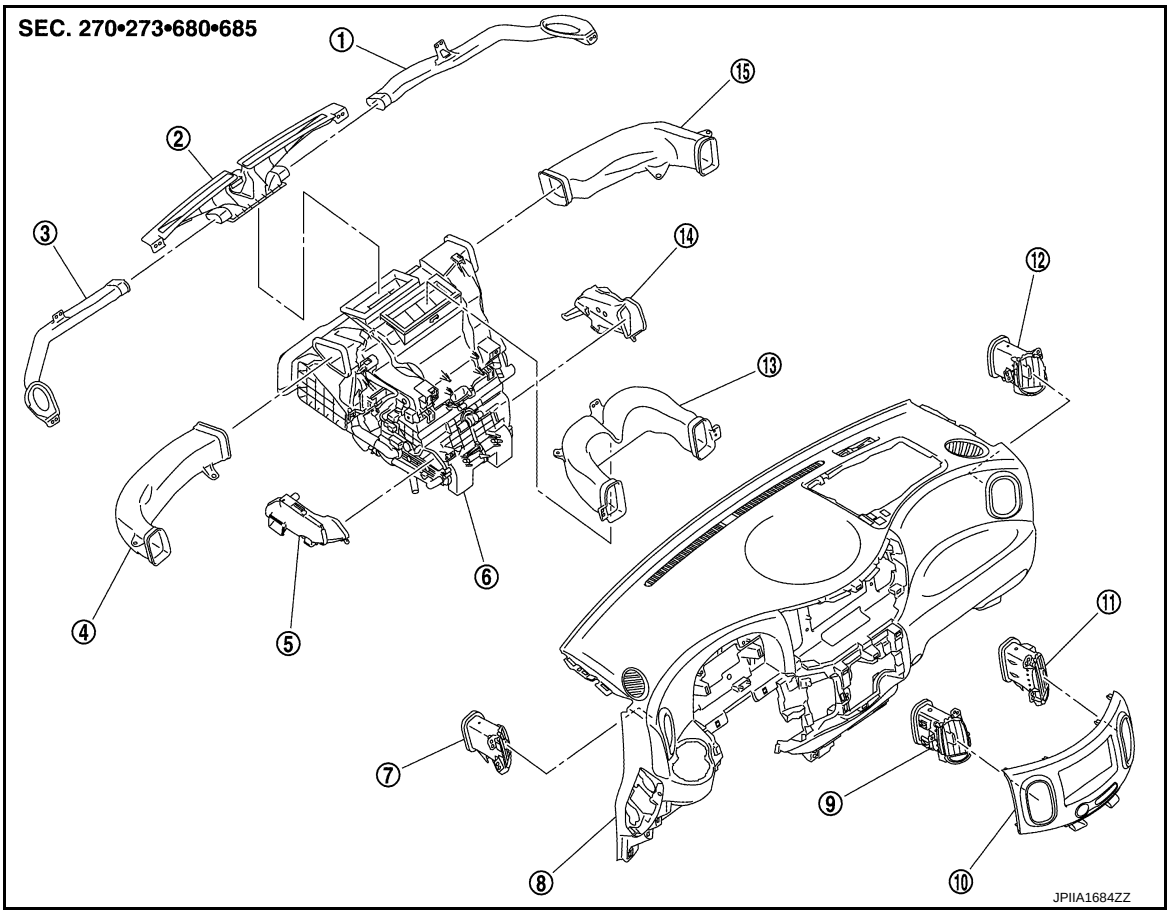

1. Side defroster nozzle RH
2. Front defroster nozzle
3. Side defroster nozzle LH
4. Side ventilator duct LH
5. Foot duct LH
6. A/C unit assembly
7. Side ventilator grille LH
8. Instrument panel assembly
9. Center ventilator grille LH
10. Cluster lid C
11. Center ventilator grille RH
12. Side ventilator grille RH
13. Center ventilator duct
14. Foot duct RH
15. Side ventilator duct RH

REAR

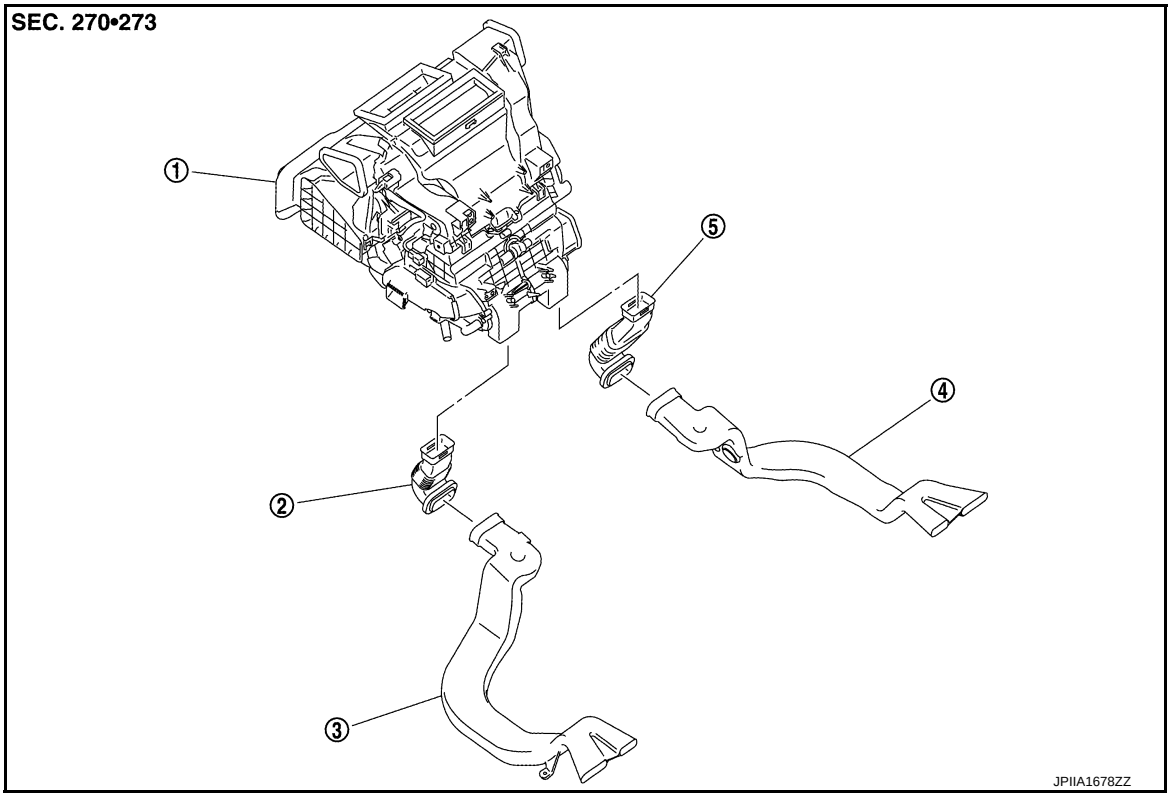

1. A/C unit assembly
2. Rear foot duct 1 LH
3. Rear foot duct 2 LH
4. Rear foot duct 2 RH
5. Rear foot duct 1 RH

CENTER VENTILATOR GRILLE

CENTER VENTILATOR GRILLE : Removal and Installation

INFOID:0000000009946834

REMOVAL

1. Remove cluster lid C. Refer to IP-13, "Exploded View".
2. Remove mounting screws, and then remove center ventilator grille from cluster lid C.

INSTALLATION

Installation is basically the reverse order of removal.

SIDE VENTILATOR GRILLE

SIDE VENTILATOR GRILLE : Removal and Installation

INFOID:0000000009946835

REMOVAL

1. Remove instrument panel assembly. Refer to IP-13, "Exploded View".
2. Remove mounting screws (A), and then remove side ventilator grille (1) from instrument panel assembly.

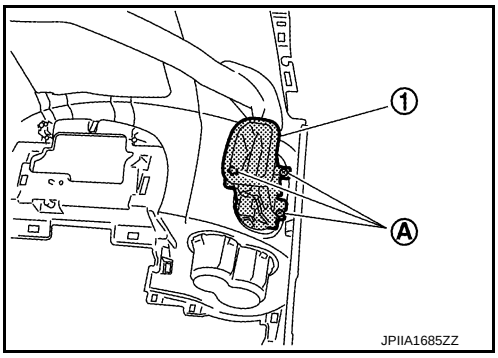

INSTALLATION

Installation is basically the reverse order of removal.

CENTER VENTILATOR DUCT

CENTER VENTILATOR DUCT : Removal and Installation

INFOID:0000000009946836

REMOVAL

1. Remove front defroster nozzle. Refer to VTL-7, "Exploded View".
2. Remove mounting screws (A), and then remove center ventilator duct (1) from instrument panel assembly.

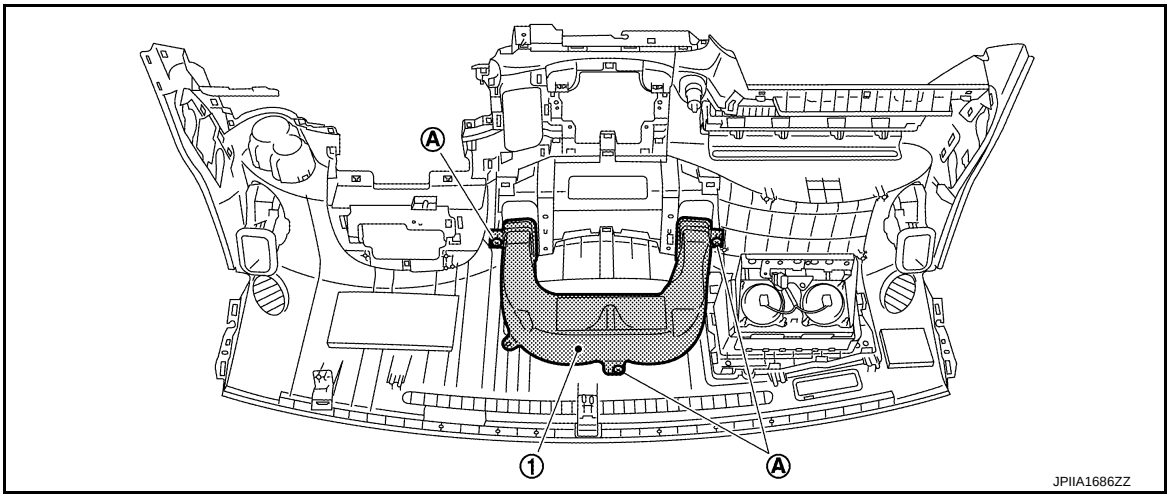

INSTALLATION

Installation is basically the reverse order of removal.

SIDE VENTILATOR DUCT

SIDE VENTILATOR DUCT : Removal and Installation

INFOID:0000000009946837

REMOVAL

1. Remove instrument panel assembly. Refer to IP-13, "Exploded View".
2. Remove mounting screws (A), and then remove side ventilator duct (1) from the vehicle.

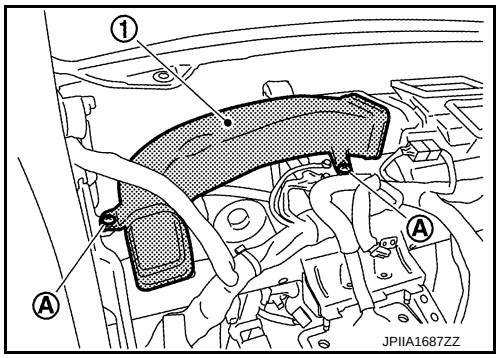

INSTALLATION

Installation is basically the reverse order of removal.

FRONT DEFROSTER NOZZLE

FRONT DEFROSTER NOZZLE : Removal and Installation

INFOID:0000000009946838

REMOVAL

1. Remove side defroster nozzles. Refer to VTL-7, "Exploded View".

2. Remove mounting screw (A), and then remove front defroster nozzle (1) from instrument panel assembly.

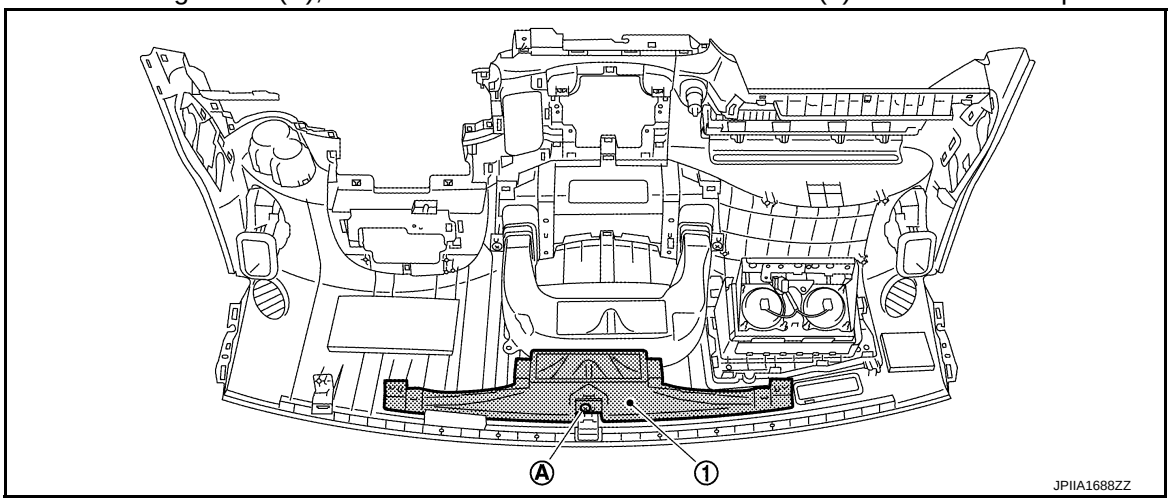

INSTALLATION

Installation is basically the reverse order of removal.

SIDE DEFROSTER NOZZLE

SIDE DEFROSTER NOZZLE : Removal and Installation

INFOID:0000000009946839

REMOVAL

1. Remove instrument panel assembly. Refer to IP-13, "Exploded View".
2. Remove mounting screws (A), and then remove bracket (1).

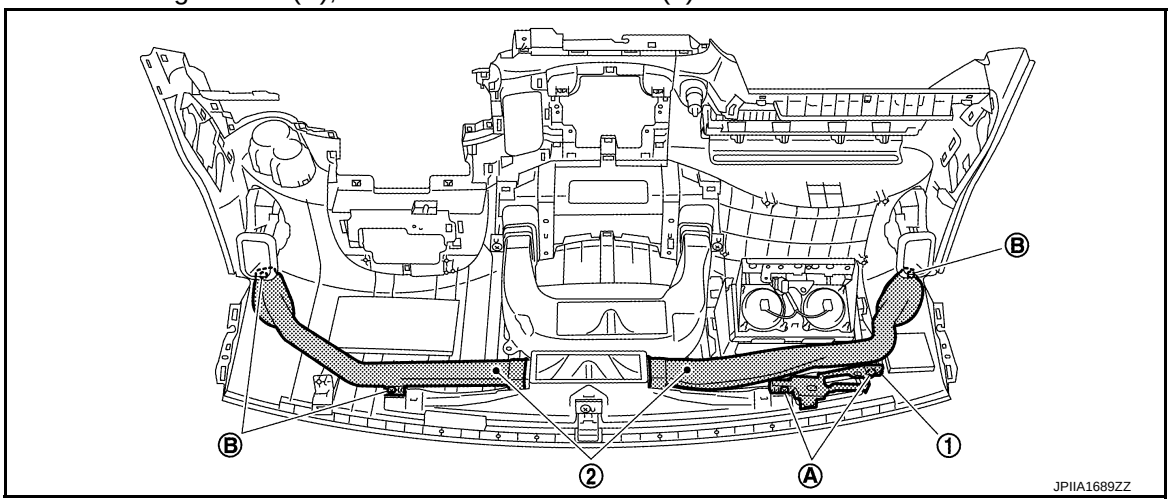

3. Remove mounting screws (B), and then remove side defroster nozzle (2) from instrument panel assembly.

INSTALLATION

Installation is basically the reverse order of removal.

REAR FOOT DUCT 1

REAR FOOT DUCT 1 : Removal and Installation

INFOID:0000000009946840

REMOVAL

1. Remove instrument lower cover. Refer to IP-13, "Exploded View".
2. Remove rear foot duct 1 from the vehicle.

INSTALLATION

Installation is basically the reverse order of removal.

REAR FOOT DUCT 2

REAR FOOT DUCT 2 : Removal and Installation

INFOID:0000000009946841

REMOVAL

Driver side

1. Remove center console assembly. Refer to IP-23, "Exploded View".
2. Remove harness clip (A) from rear foot duct 2 LH (1).

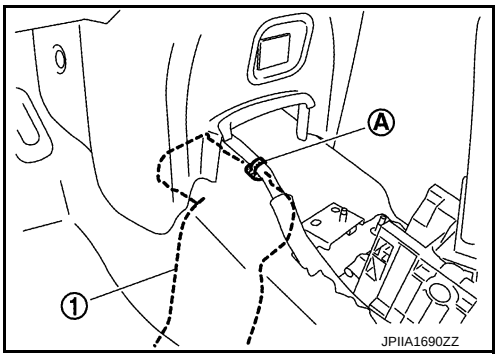

3. Remove front floor spacer LH. Refer to INT-19, "Exploded View".
4. Remove clip, and then remove rear foot duct 2 LH from the vehicle.

Passenger side

1. Remove center console assembly. Refer to IP-23, "Exploded View".
2. Remove front floor spacer RH. Refer to INT-19, "Exploded View".
3. Remove clip, and then remove rear foot duct 2 RH from the vehicle.

INSTALLATION

Installation is basically the reverse order of removal.

FOOT DUCT

FOOT DUCT : Removal and Installation

INFOID:0000000009946842

REMOVAL

Driver side

1. Remove steering column lower cover. Refer to IP-13, "Exploded View".
2. Remove mounting nuts (A), and then remove knee protector upper (1).

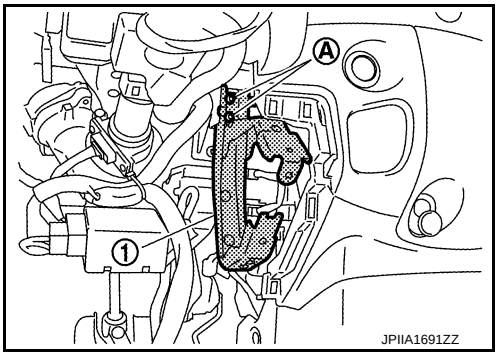

3. Remove mounting screws (A), and then remove foot duct LH (1).

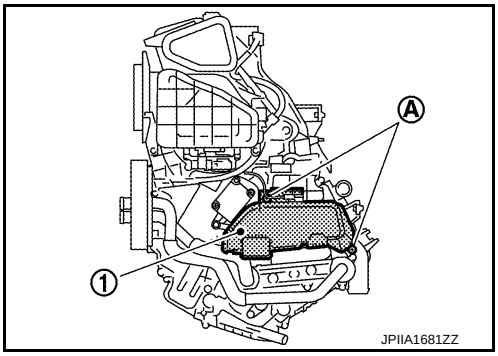

Passenger side

1. Remove instrument panel assembly. Refer to IP-13, "Exploded View".
2. Remove mounting screws (A), and then remove foot duct RH (1).

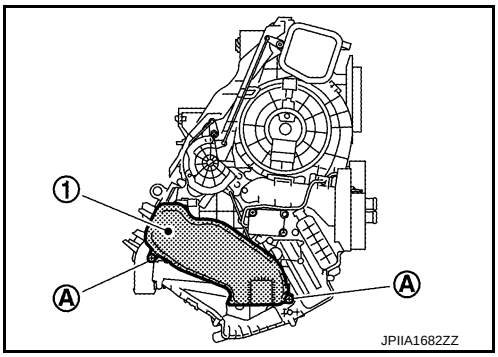

INSTALLATION

Installation is basically the reverse order of removal.

BLOWER MOTOR

Exploded View

INFOID:0000000009946843

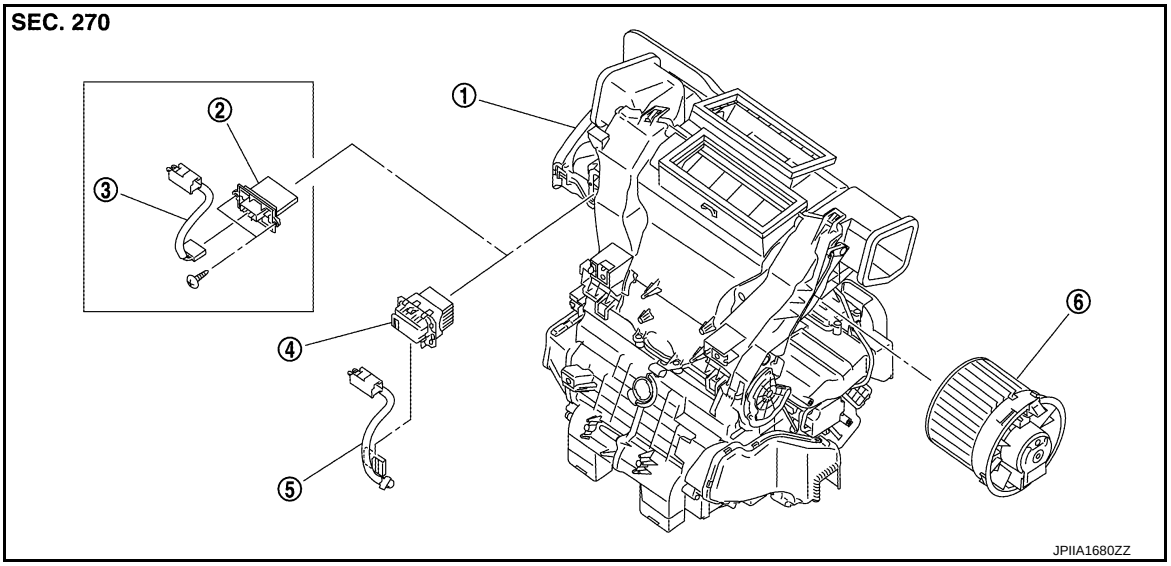

1. A/C unit assembly	2. Blower fan resistor*1	3. Sub harness*1
4. Power transistor*2	5. Sub harness*2	6. Blower motor

- *1: Manual air conditioner
- *2: Automatic air conditioner

Removal and Installation

INFOID:0000000009946844

REMOVAL

1. Remove remote keyless entry receiver. Refer to DLK-229, "Exploded View" (WITH I-KEY) or DLK-379, "Exploded View" (WITHOUT I-KEY).
2. Disconnect blower motor connector.
3. Press flange holding hook (A), and then turn blower motor (1) clockwise.
4. Pull outside, and then remove blower motor.

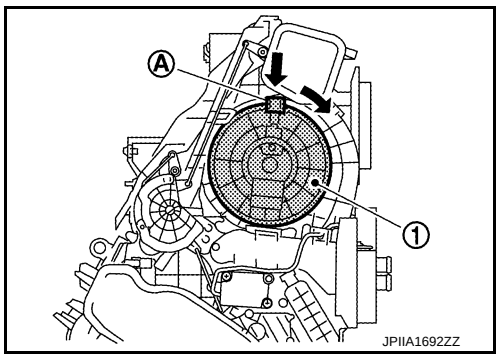

INSTALLATION

Installation is basically the reverse order of removal.