SECTION BR
BRAKE SYSTEM

CONTENTS

PRECAUTION 3

PRECAUTIONS 3
Precaution for Supplemental Restraint System (SRS) "AIR BAG" and "SEAT BELT PRE-TENSIONER" 3
Precaution for Brake System 3

PREPARATION 4

PREPARATION 4
Special Service Tool 4
Commercial Service Tool 4

SYSTEM DESCRIPTION 5

NOISE, VIBRATION, AND HARSHNESS (NVH) TROUBLESHOOTING 5
NVH Troubleshooting Chart 5

BASIC INSPECTION 6

FRONT DISC BRAKE 6

BRAKE PAD 6
BRAKE PAD : Inspection 6

DISC ROTOR 6
DISC ROTOR : Inspection 6

REAR DISC BRAKE 8

BRAKE PAD 8
BRAKE PAD : Inspection 8

DISC ROTOR 8
DISC ROTOR : Inspection 8

BRAKE BOOSTER 9
Inspection 9

VACUUM LINES 10
Inspection 10

BRAKE MASTER CYLINDER 11
On Board Inspection 11

BRAKE TUBE AND HOSE 12
Hydraulic Circuit 12

FRONT BRAKE 14
FRONT BRAKE : Inspection 14

REAR BRAKE 15
REAR BRAKE : Inspection 15

PERIODIC MAINTENANCE 16

BRAKE PEDAL 16
Inspection and Adjustment 16

BRAKE FLUID 18
On Board Inspection 18
Drain and Refill 18
Bleeding Brake System 18

REMOVAL AND INSTALLATION 20

BRAKE PEDAL 20
Exploded View 20
Removal and Installation 20

BRAKE TUBE AND HOSE 22
Hydraulic Circuit 22
Removal and Installation of Front Brake Piping and Brake Hose 24
Removal and Installation of Rear Brake Piping and Brake Hose 25
Inspection After Installation 26

BRAKE MASTER CYLINDER 28
Removal and Installation 28

BRAKE BOOSTER 30
Removal and Installation 30

VACUUM LINES 32

Removal and Installation 32

FRONT DISC BRAKE 33
Exploded View of Brake Pads 33
Removal and Installation of Brake Pad 33
Brake Burnishing 34
Exploded View of Brake Caliper 35
Removal and Installation of Brake Caliper and Disc Rotor 35

REAR DISC BRAKE 38
Exploded View of Brake Pad 38
Removal and Installation of Brake Pad 38
Brake Burnishing 39
Exploded View of Brake Caliper 40
Removal and Installation of Brake Caliper and Disc Rotor 40

UNIT DISASSEMBLY AND ASSEMBLY ... 43

BRAKE MASTER CYLINDER 43
Disassembly and Assembly 43

FRONT DISC BRAKE 45
Exploded View of Brake Caliper 45
Disassembly and Assembly 45

REAR DISC BRAKE 48
Exploded View of Brake Caliper 48
Disassembly and Assembly 48

SERVICE DATA AND SPECIFICATIONS (SDS) 51

SERVICE DATA AND SPECIFICATIONS (SDS) 51
General Specification 51
Brake Pedal 51
Brake Booster 52
Check Valve 52
Front Disc Brake 52
Rear Disc Brake 52

PRECAUTION

PRECAUTIONS

Precaution for Supplemental Restraint System (SRS) "AIR BAG" and "SEAT BELT PRE-TENSIONER"

INFOID:0000000008792106

The Supplemental Restraint System such as “AIR BAG” and “SEAT BELT PRE-TENSIONER”, used along with a front seat belt, helps to reduce the risk or severity of injury to the driver and front passenger for certain types of collision. This system includes seat belt switch inputs and dual stage front air bag modules. The SRS system uses the seat belt switches to determine the front air bag deployment, and may only deploy one front air bag, depending on the severity of a collision and whether the front occupants are belted or unbelted.
Information necessary to service the system safely is included in the SR and SB section of this Service Manual.

WARNING:

- **To avoid rendering the SRS inoperative, which could increase the risk of personal injury or death in the event of a collision which would result in air bag inflation, all maintenance must be performed by an authorized NISSAN/INFINITI dealer.**
- **Improper maintenance, including incorrect removal and installation of the SRS, can lead to personal injury caused by unintentional activation of the system. For removal of Spiral Cable and Air Bag Module, see the SR section.**
- **Do not use electrical test equipment on any circuit related to the SRS unless instructed to in this Service Manual. SRS wiring harnesses can be identified by yellow and/or orange harnesses or harness connectors.**

PRECAUTIONS WHEN USING POWER TOOLS (AIR OR ELECTRIC) AND HAMMERS

WARNING:

- **When working near the Airbag Diagnosis Sensor Unit or other Airbag System sensors with the Ignition ON or engine running, DO NOT use air or electric power tools or strike near the sensor(s) with a hammer. Heavy vibration could activate the sensor(s) and deploy the air bag(s), possibly causing serious injury.**
- **When using air or electric power tools or hammers, always switch the Ignition OFF, disconnect the battery, and wait at least 3 minutes before performing any service.**

Precaution for Brake System

INFOID:0000000008792107

- Recommended fluid is Genuine NISSAN Super Heavy Duty Brake Fluid or equivalent. Refer to MA-17, "FOR USA AND CANADA : Fluids and Lubricants". (United States and Canada) and MA-19, "FOR MEXICO : Fluids and Lubricants" (Mexico).
- Do not reuse drained brake fluid.
- Be careful not to splash brake fluid on painted areas.
- To clean or wash all parts of master cylinder, disc brake caliper and wheel cylinder, use clean brake fluid.
- Do not use mineral oils such as gasoline or kerosene. They will ruin rubber parts of the hydraulic system.
- Use flare nut wrench when removing and installing brake tube.
- Always check tightening torque when installing brake lines.
- Before working, turn ignition switch to OFF and disconnect connectors for ABS actuator and electric unit (control unit) or battery negative terminal.
- Burnish the brake contact surfaces after refinishing or replacing drums or rotors, after replacing pads or linings, or if a soft pedal occurs at very low mileage.

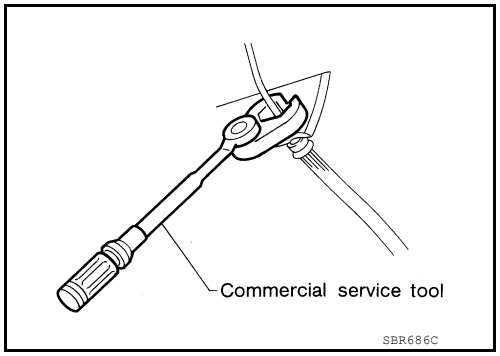

WARNING:

- **Clean dust on caliper and brake pad with a vacuum dust collector to minimize the hazard of airborne particles or other materials.**

PREPARATION

PREPARATION

Special Service Tool

INFOID:0000000008792108

The actual shapes of Kent-Moore tools may differ from those of special service tools illustrated here.

Tool number (Kent-Moore No.) Tool name	Description
— (J-46532) Brake and clutch pedal height measurement tool 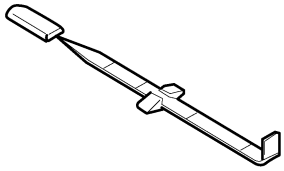 LFIA0227E	Measuring brake pedal height
38-PFM90.5 (—) Pro-Cut PFM 90 On-Car Brake Lathe 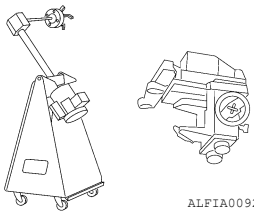 ALFIA0092ZZ	Refinishing rotors

Commercial Service Tool

INFOID:0000000008792109

Tool name	Description
1. Flare nut crowfoot 2. Torque wrench 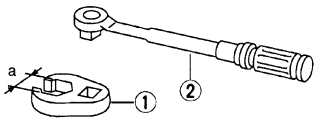 S-NT360	Removing and installing brake piping **a: 10 mm (0.39 in) / 12 mm (0.47 in)**
Power tool 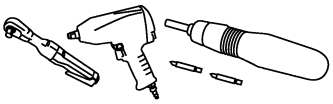 PIIB1407E	Loosening nuts, screws and bolts

SYSTEM DESCRIPTION

NOISE, VIBRATION, AND HARSHNESS (NVH) TROUBLESHOOTING

NVH Troubleshooting Chart

INFOID:0000000008792110

Use the chart below to help you find the cause of the symptom. If necessary, repair or replace these parts.

Possible cause and SUSPECTED PARTS		Pads - damaged	Pads - uneven wear	Shims damaged	Rotor imbalance	Rotor damage	Rotor runout	Rotor deformation	Rotor deflection	Rotor rust	Rotor thickness variation	PROPELLER SHAFT	FRONT FINAL DRIVE	REAR FINAL DRIVE	DRIVE SHAFT	SUSPENSION	TIRES AND ROAD WHEEL	STEERING
Reference page		BR-33, BR-38	BR-33, BR-38	BR-33, BR-38	BR-35, BR-40	BR-35, BR-40	BR-35, BR-40	BR-35, BR-40	BR-35, BR-40	BR-35, BR-40	BR-35, BR-40	DLN-133, "NVH Troubleshooting Chart" (2F1310), DLN-142, "NVH Troubleshooting Chart" (2S1330), DLN-151, "NVH Troubleshooting Chart" (3S1310), DLN-162, "NVH Troubleshooting Chart" (3S1330), DLN-173, "NVH Troubleshooting Chart" (3S1330-2BJ100)	DLN-185, "NVH Troubleshooting Chart"	DLN-219, "NVH Troubleshooting Chart" (C200), DLN-251, "NVH Troubleshooting Chart" (M226) DLN-275, "NVH Troubleshooting Chart" (M226 w/ ELD)	FAX-4, "NVH Troubleshooting Chart" (FAX), RAX-5, "NVH Troubleshooting Chart" (RAX C200) RAX-17, "NVH Troubleshooting Chart" (RAX M226)	FSU-5, "NVH Troubleshooting Chart" (FSU), RSU-4, "NVH Troubleshooting Chart" (RSU)	WT-44, "NVH Troubleshooting Chart"	ST-5, "NVH Troubleshooting Chart"
Symp-tom	Noise	×	×	×								×	×	×	×	×	×	×
	Shake				×							×			×	×	×	×
	Shimmy, Shudder				×	×	×	×	×	×	×				×	×	×	×

×: Applicable

BASIC INSPECTION

FRONT DISC BRAKE

BRAKE PAD

BRAKE PAD : Inspection

INFOID:0000000008792111

PAD WEAR

Check pad thickness from the inspection holes on cylinder body. Check using a scale if necessary.

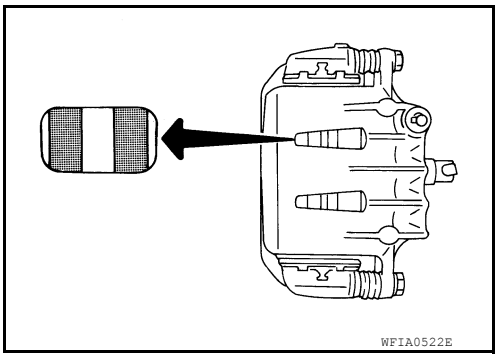

Standard thickness (new) : **Refer to BR-52, "Front Disc Brake".**

Repair limit thickness : **Refer to BR-52, "Front Disc Brake".**

DISC ROTOR

DISC ROTOR : Inspection

INFOID:0000000008792112

VISUAL

Check surface of disc rotor for uneven wear, cracks, and serious damage. Replace as necessary.

RUNOUT

1. Attach disc rotor to wheel hub using wheel nuts at two or more positions.
2. Inspect runout using a dial gauge placed at 10 mm (0.39 in) inside the disc edge.

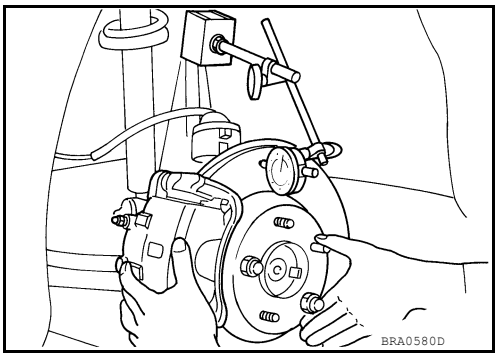

Runout limit : **Refer to BR-52, "Front Disc Brake".**

(with it attached to the vehicle)

NOTE:
Before measuring, make sure that wheel bearing axial end play is within the specification. Refer to FAX-5, "On-Vehicle Inspection and Service".

3. When runout exceeds limit value, displace mounting positions of disc rotor by one hole. And then find a position of the minimum value for runout.
4. If runout is outside the specified value after performing the above operation, refinish disc rotor using Tool.

Tool number : **38-PFM90.5 (—)**

THICKNESS

Check thickness of the disc rotor using a micrometer. Replace disc rotor if thickness is less then the repair limit thickness.

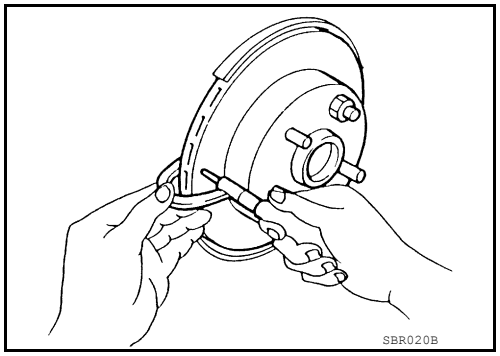

Standard thickness (new)	**: Refer to BR-52, "Front Disc Brake".**
Repair limit thickness	**: Refer to BR-52, "Front Disc Brake".**
Maximum uneven wear (measured at 8 positions)	**: Refer to BR-52, "Front Disc Brake".**

REAR DISC BRAKE

BRAKE PAD

BRAKE PAD : Inspection

INFOID:0000000008792113

PAD WEAR

Check pad thickness from an inspection hole on cylinder body. Check using a scale if necessary.

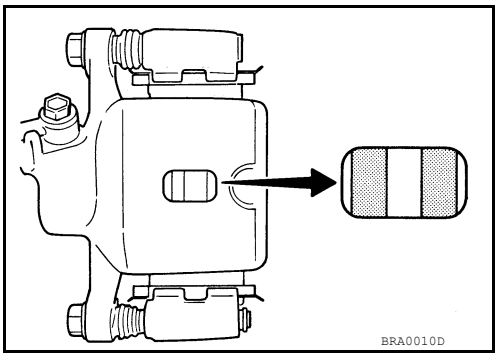

Standard thickness (new)	**: Refer to BR-52, "Rear Disc Brake".**
Repair limit thickness	**: Refer to BR-52, "Rear Disc Brake".**

DISC ROTOR

DISC ROTOR : Inspection

INFOID:0000000008792114

VISUAL

Check surface of disc rotor for uneven wear, cracks, and serious damage. Replace as necessary.

RUNOUT

1. Attach disc rotor to wheel hub using wheel nuts at two or more positions.
2. Inspect runout using dial gauge placed at 10 mm (0.39 in) inside disc edge as shown.

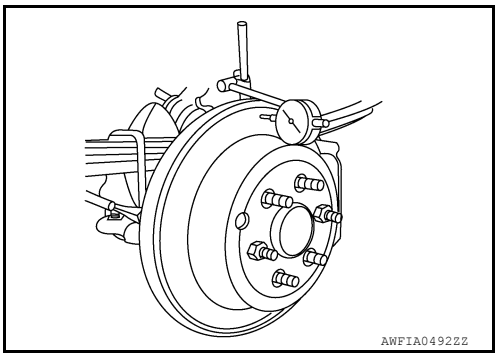

Runout limit (with it attached to the vehicle) **: Refer to BR-52, "Rear Disc Brake".**

NOTE:
Before measuring, make sure that wheel bearing axial end play is within the specification. Refer to RAX-6, "Rear Axle Bearing" (C200), RAX-18, "Rear Axle Bearing" (M226).

3. When runout exceeds limit value, displace mounting positions of disc rotor by one hole. And then find a position of the minimum value for runout.
4. If runout is outside the specified value after performing the above operation, refinish disc rotor using Tool.

Tool number : 38-PFM90.5 (—)

THICKNESS

Check the thickness of the disc rotor using a micrometer. Replace disc rotor if the thickness is less then the repair limit thickness.

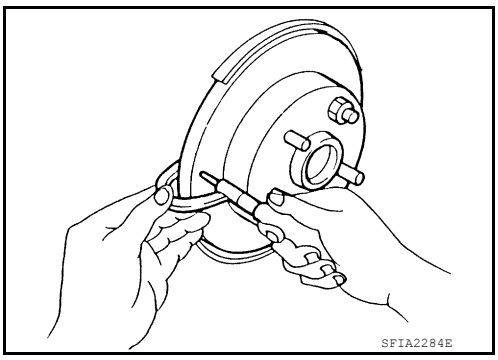

Standard thickness (new)	**: Refer to BR-52, "Rear Disc Brake".**
Repair limit thickness	**: Refer to BR-52, "Rear Disc Brake".**
Maximum uneven wear (measured at 8 positions)	**: Refer to BR-52, "Rear Disc Brake".**

BRAKE BOOSTER

Inspection

INFOID:0000000008792115

OPERATION

With engine stopped, change vacuum to atmospheric pressure by depressing brake pedal several times. Then with brake pedal fully depressed, start engine and when vacuum pressure reaches the standard, make sure that clearance between brake pedal and floor panel decreases.

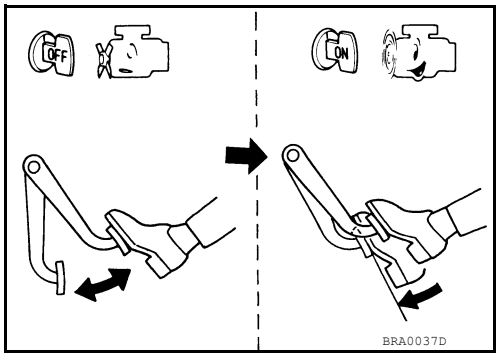

AIR TIGHT

- Run engine at idle for approximately 1 minute, and stop it after applying vacuum to booster. Depress brake pedal normally to change vacuum to atmospheric pressure. Make sure that distance at intervals of 5 seconds between brake pedal and floor panel gradually increases.

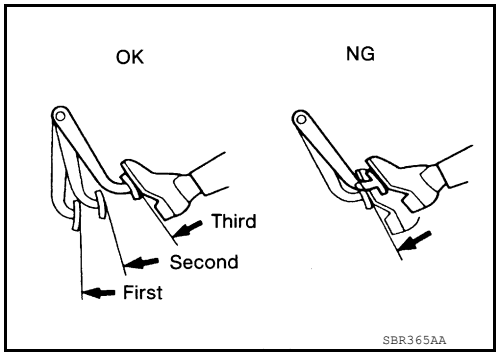

- Depress brake pedal while engine is running, and stop engine with pedal depressed. The pedal stroke should not change after holding pedal down for 30 seconds.

VACUUM LINES

Inspection

INFOID:0000000008792116

VISUAL INSPECTION

Check for improper assembly, damage and deterioration. Replace as necessary.

CHECK VALVE INSPECTION

Airtightness Inspection

Use a suitable tool to test brake booster vacuum check valve. Connect to brake booster side of check valve.

Check valve specification : **Refer to BR-52, "Check Valve".**

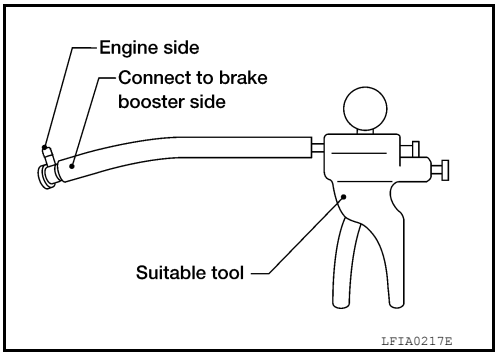

BRAKE MASTER CYLINDER

On Board Inspection

INFOID:0000000008792117

LEAK INSPECTION

Check for leaks at master cylinder to brake booster attachment point, reservoir tank, and brake tube connections.

BRAKE TUBE AND HOSE

Hydraulic Circuit

INFOID:0000000008792118

Type 1 and Type 2 - Four Channel Hydraulic System

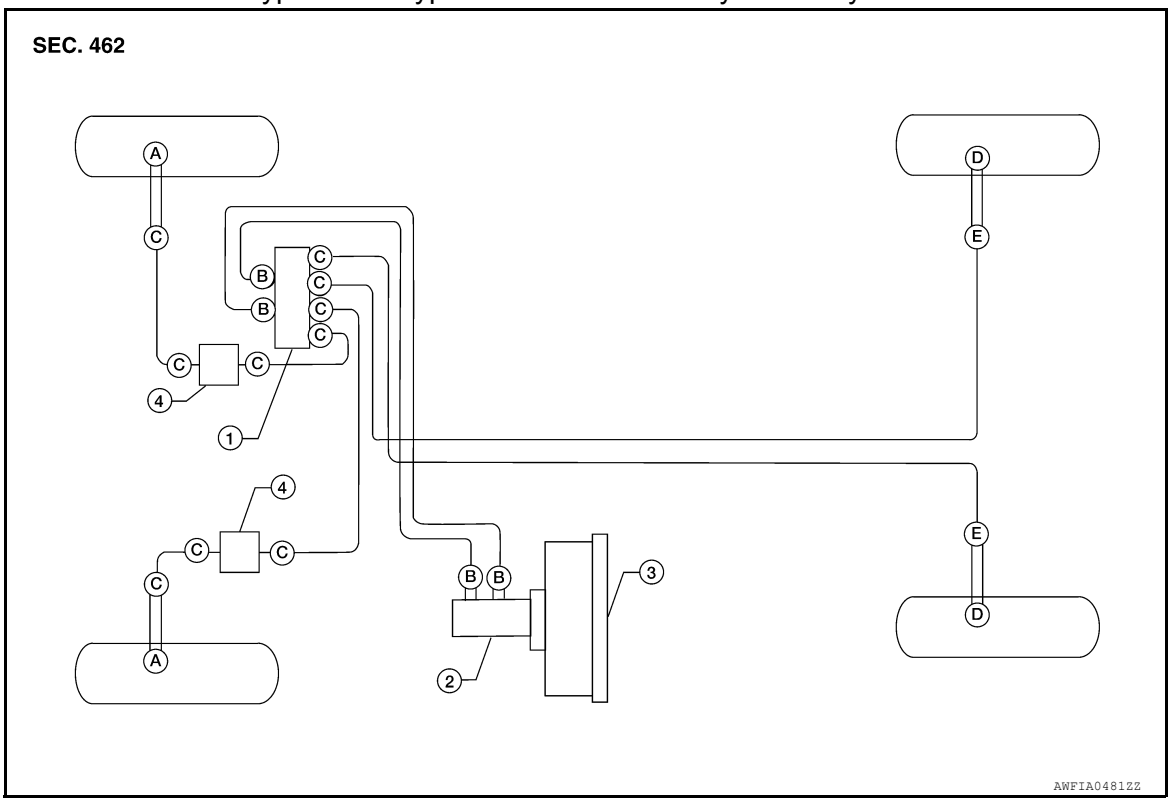

1. Actuator	2. Master cylinder	3. Brake booster
4. Connector	A. Union bolt (front caliper) 18.2 N·m (1.9 kg-m, 13 ft-lb)	B. Flare nut M12 26.0 N·m (2.7 kg-m, 19 ft-lb)
C. Flare nut M10 16.2 N·m (1.7 kg-m, 12 ft-lb)	D. Union bolt (rear caliper) 18.2 N·m (1.9 kg-m, 13 ft-lb)	E. Flare nut to rear hose 16.2 N·m (1.7 kg-m, 12 ft-lb)

Type 1

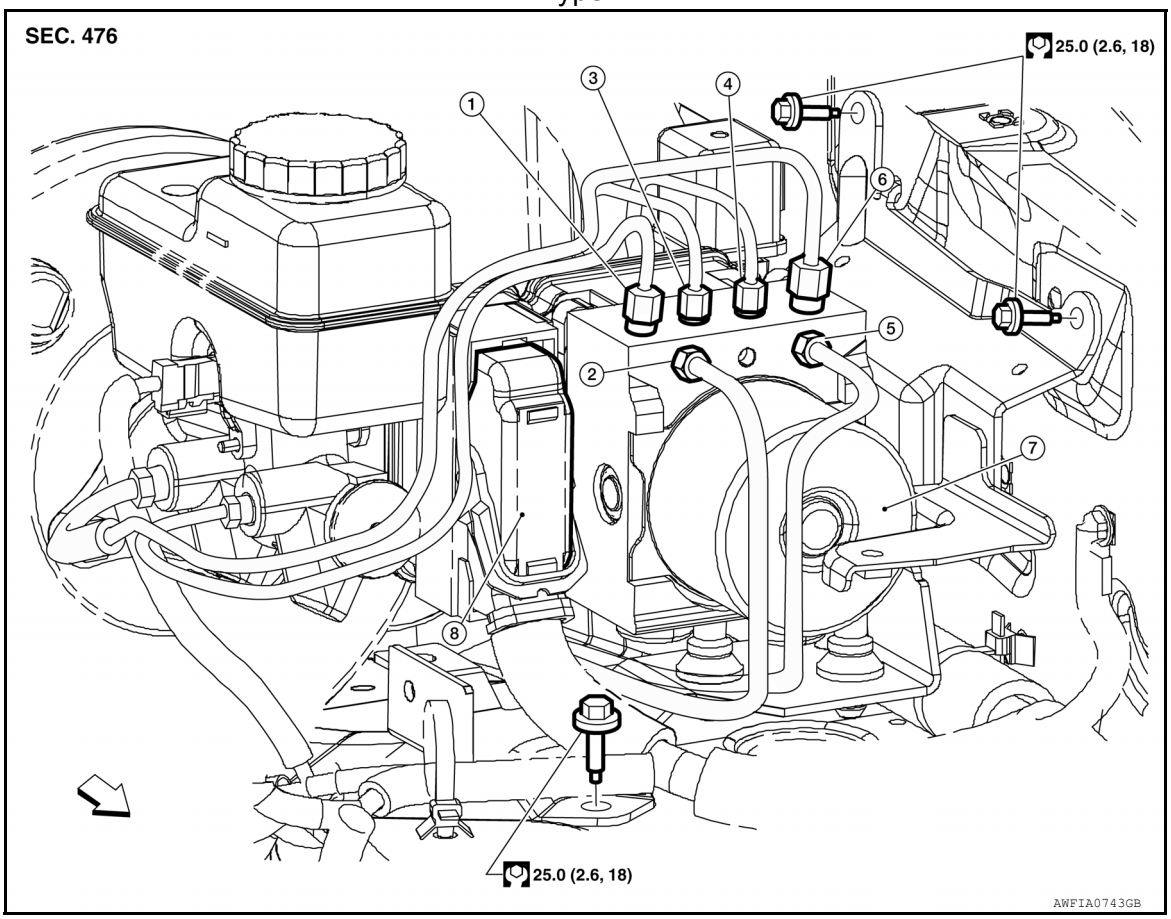

1. From the master cylinder secondary side 18.2 N·m (1.9 kg-m, 13 ft-lb)
2. To rear right disc brake 13.0 N·m (1.3 kg-m, 10 ft-lb)
3. To rear left disc brake 13.0 N·m (1.3 kg-m, 10 ft-lb)
4. To front right disc brake 13.0 N·m (1.3 kg-m, 10 ft-lb)
5. To front left disc brake 13.0 N·m (1.3 kg-m, 10 ft-lb)
6. From the master cylinder primary side 18.2 N·m (1.9 kg-m, 13 ft-lb)
7. ABS actuator and electric unit (control unit)
8. Harness connector

⇦ Front

Type 2

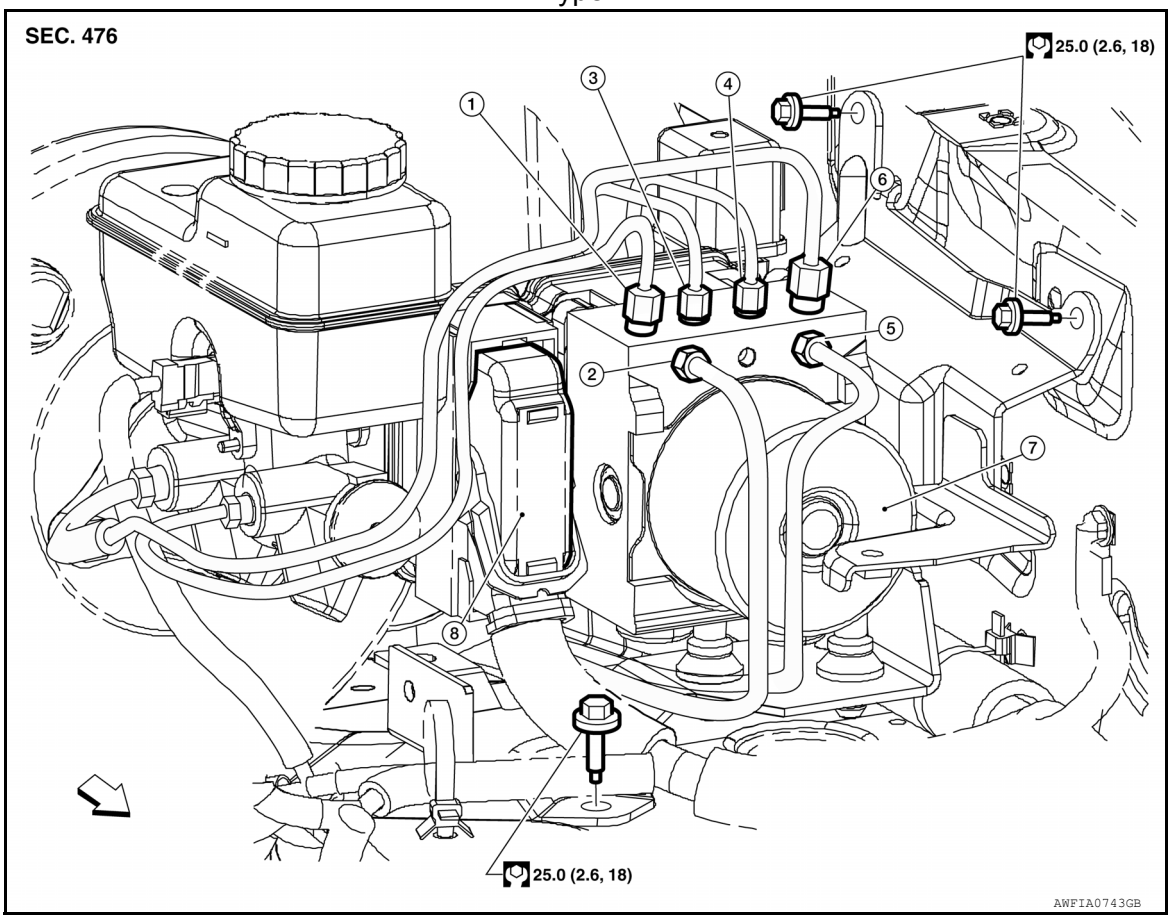

1. From master cylinder secondary side 18.2 N·m (1.9 kg-m, 13 ft-lb)	2. To rear right disc brake 13.0 N·m (1.3 kg-m, 10 ft-lb)	3. To rear left disc brake 13.0 N·m (1.3 kg-m, 10 ft-lb)
4. To front right disc brake 13.0 N·m (1.3 kg-m, 10 ft-lb)	5. To front left disc brake 13.0 N·m (1.3 kg-m, 10 ft-lb)	6. From master cylinder primary side 18.2 N·m (1.9 kg-m, 13 ft-lb)
7. ABS actuator and electric unit (control unit)	8. Harness connector	⇦ Front

CAUTION:
- **All hoses and piping (tubes) must be free from excessive bending, twisting and pulling.**
- **Make sure there is no interference with other parts when turning steering both clockwise and counterclockwise.**
- **The brake piping is an important safety part. If a brake fluid leak is detected, always disassemble the parts. Replace applicable part with a new one, if necessary.**
- **Be careful not to splash brake fluid on painted areas; it way cause paint damage. If brake fluid is splashed on painted areas, wash it away with water immediately.**
- **Do not bend or twist brake hose sharply, or strongly pull it.**
- **When removing components, cover connections so that no dirt, dust, or other foreign matter gets in.**
- **Do not reuse drained brake fluid.**
- **After installation of the ABS actuator and electric unit (control unit), refill brake system with new brake fluid. Then bleed the air from the system. Refer to BR-18, "Bleeding Brake System".**

FRONT BRAKE

FRONT BRAKE : Inspection

INFOID:0000000008792119

INSPECTION AFTER REMOVAL

CAUTION:

Brake tubes and hoses are important safety parts. Always disassemble the parts and retighten their fittings, if a brake fluid leak is detected. Replace applicable part with a new one, if damaged part is detected.

1. Check brake lines (tubes and hoses) and connections for fluid leaks, damage, twists, deformation, contact with other parts, and loose connections. Replace any parts as necessary. Refer to BR-12, "Hydraulic Circuit".
2. While depressing brake pedal under a force of 785 N (80 kg-f, 177 lb-f) with engine running for approximately 5 seconds, check each part for fluid leaks.

REAR BRAKE

REAR BRAKE : Inspection

INFOID:0000000008792120

INSPECTION AFTER REMOVAL

CAUTION:

Brake tubes and hoses are important safety parts. Always disassemble the parts and retighten their fittings, if a brake fluid leak is detected. Replace applicable part with a new one, if damaged part is detected.

1. Check brake lines (tubes and hoses) and connections for fluid leaks, damage, twists, deformation, contact with other parts, and loose connections. Replace any parts as necessary. Refer to BR-12, "Hydraulic Circuit".
2. While depressing brake pedal under a force of 785 N (80 kg-f, 177 lb-f) with engine running for approximately 5 seconds, check each part for fluid leaks.

PERIODIC MAINTENANCE

BRAKE PEDAL

Inspection and Adjustment

INFOID:0000000008792121

INSPECTION

1. Inspect the brake pedal free height (H) from the floor using Tool at a 90° angle to the floor as shown.

Tool number : — (J-46532)

2. Adjust the brake pedal height to specifications.

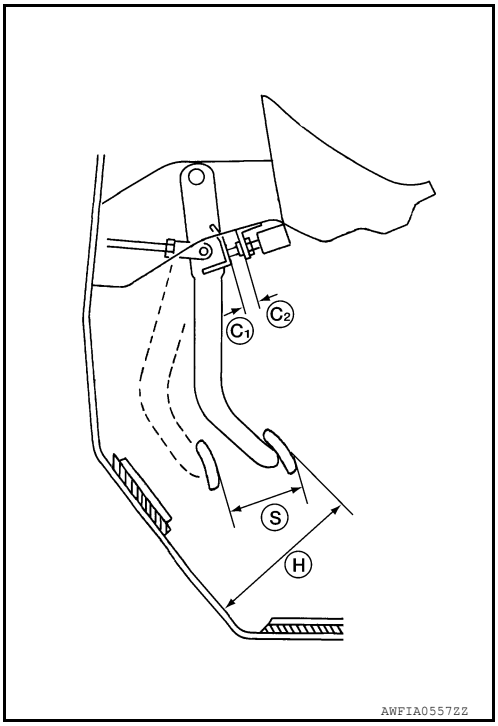

Brake Pedal Specifications		
Pedal free height (H)	M/T	Refer to BR-51, "Brake Pedal".
	A/T	Refer to BR-51, "Brake Pedal".
Pedal full stroke (S)		Refer to BR-51, "Brake Pedal".
Clearance between pedal bracket (C_1) and threaded end of stop lamp switch and ASCD cancel switch (C_2) (if equipped)		Refer to BR-51, "Brake Pedal".

ADJUSTMENT

1. Loosen the stop lamp switch and ASCD cancel switch (if equipped) by turning 45° counterclockwise.

2. Loosen lock nut (A) on the input rod, then turn input rod to adjust the brake pedal to specified height. When finished adjusting, tighten lock nut (A) to specification.

   Lock nut (A) : 18.7 N·m (1.9 kg-m, 14 ft-lb)

   CAUTION:
   Make sure that the screw portion of the end of input rod is located inside the clevis.

3. With the brake pedal pulled up and held by hand, press the stop lamp switch and the ASCD cancel switch (if equipped), in until threaded ends contact the brake pedal bracket.
4. With the threaded ends of the stop lamp switch and ASCD cancel switch (if equipped) contacting the pedal bracket, turn the switches 45° clockwise to lock in place. Check that the stop lamp switch and ASCD cancel switch (if equipped) threaded end to brake pedal bracket gap (C) is within specifications.
   CAUTION:
   Make sure that the gap (C) between the brake pedal bracket and stop lamp switch and ASCD cancel switch (if equipped) threaded ends are within specification.
5. Check the brake pedal for smooth operation.
   CAUTION:
   Make sure that the stop lamp goes off when the brake pedal is released.

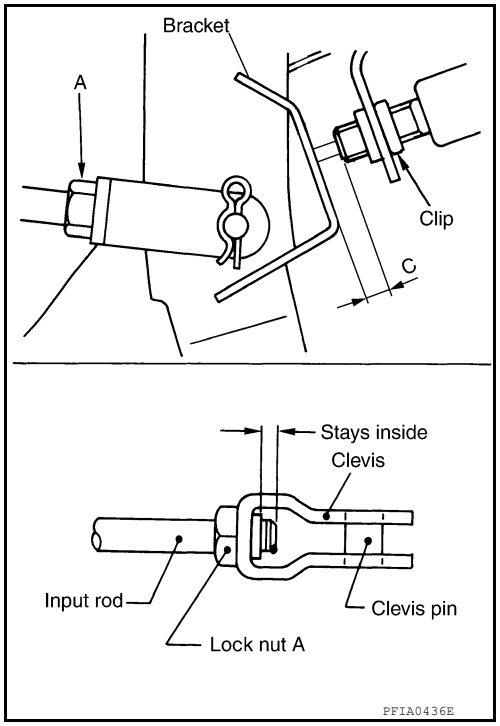

BRAKE FLUID

On Board Inspection

INFOID:0000000008792122

LEVEL CHECK

- Check that the brake fluid level in the reservoir tank is within specification, between the MAX and MIN lines as shown.
- Visually check around reservoir tank for fluid leaks.
- If fluid level is excessively low, check brake system for leaks.
- If brake warning lamp remains illuminated after the parking brake pedal is released, check the brake system for any brake fluid leaks.

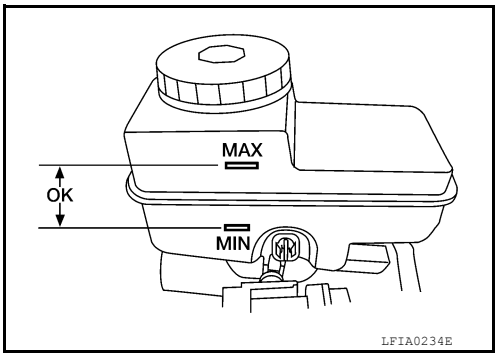

Drain and Refill

INFOID:0000000008792123

CAUTION:

- **Refill with new brake fluid. Refer to MA-17, "FOR USA AND CANADA : Fluids and Lubricants" (United States and Canada) and MA-19, "FOR MEXICO : Fluids and Lubricants" (Mexico).**
- **Do not reuse drained brake fluid.**
- **Be careful not to splash brake fluid on painted areas; it may cause paint damage. If brake fluid is splashed on painted areas, wash it away with water immediately.**
- **Before servicing, disconnect ABS actuator and electric unit (control unit) connector or battery negative terminal.**

1. Turn ignition switch OFF and disconnect ABS actuator and electric unit (control unit) connector or battery negative terminal.
2. Connect a vinyl tube to each bleed valve.
3. Depress brake pedal, loosen each bleed valve, and gradually remove brake fluid.

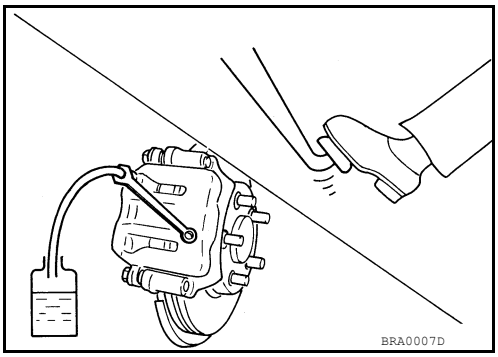

4. Make sure there is no foreign material in reservoir tank, and refill with new brake fluid.
5. Rest foot on brake pedal. Loosen bleed valve. Slowly depress brake pedal until it stops. Tighten bleed valve. Release brake pedal. Repeat the process a few times, then pause to add new brake fluid to master cylinder. Continue until the new brake fluid flows out of the bleed valve.
   Bleed the air out of the brake hydraulic system. Refer to BR-18, "Bleeding Brake System".

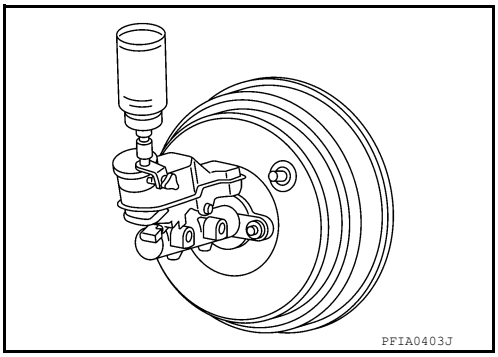

Bleeding Brake System

INFOID:0000000008792124

CAUTION:

- **Refill with new brake fluid. Refer to MA-17, "FOR USA AND CANADA : Fluids and Lubricants" (United States and Canada) and MA-19, "FOR MEXICO : Fluids and Lubricants" (Mexico).**

- **Do not reuse drained brake fluid.**
- **Do not let brake fluid splash on the painted surfaces of the body. This might damage the paint, so when splashing it, immediately wipe off the area and wash away with water.**
- **Before servicing, disconnect ABS actuator and electric unit (control unit) connector or battery negative terminal.**

1. Turn ignition switch OFF and disconnect ABS actuator and electric unit (control unit) connector or battery negative terminal.
2. Connect a vinyl tube to the rear right bleed valve.
3. Fully depress brake pedal 4 to 5 times.
4. With brake pedal depressed, loosen bleed valve to let the air out, and then tighten it immediately.
5. Repeat steps 3 and 4 until no more air comes out.
6. Tighten bleed valve to the specified torque. Refer to BR-35, "Exploded View of Brake Caliper" (front disc brake), BR-40, "Exploded View of Brake Caliper" (rear disc brake).
7. Perform steps 2 to 6 at each wheel, with master cylinder reservoir tank filled at least half way, bleed air from the front left, rear left, and front right bleed valve, in that order.

REMOVAL AND INSTALLATION

BRAKE PEDAL

Exploded View

INFOID:0000000008792125

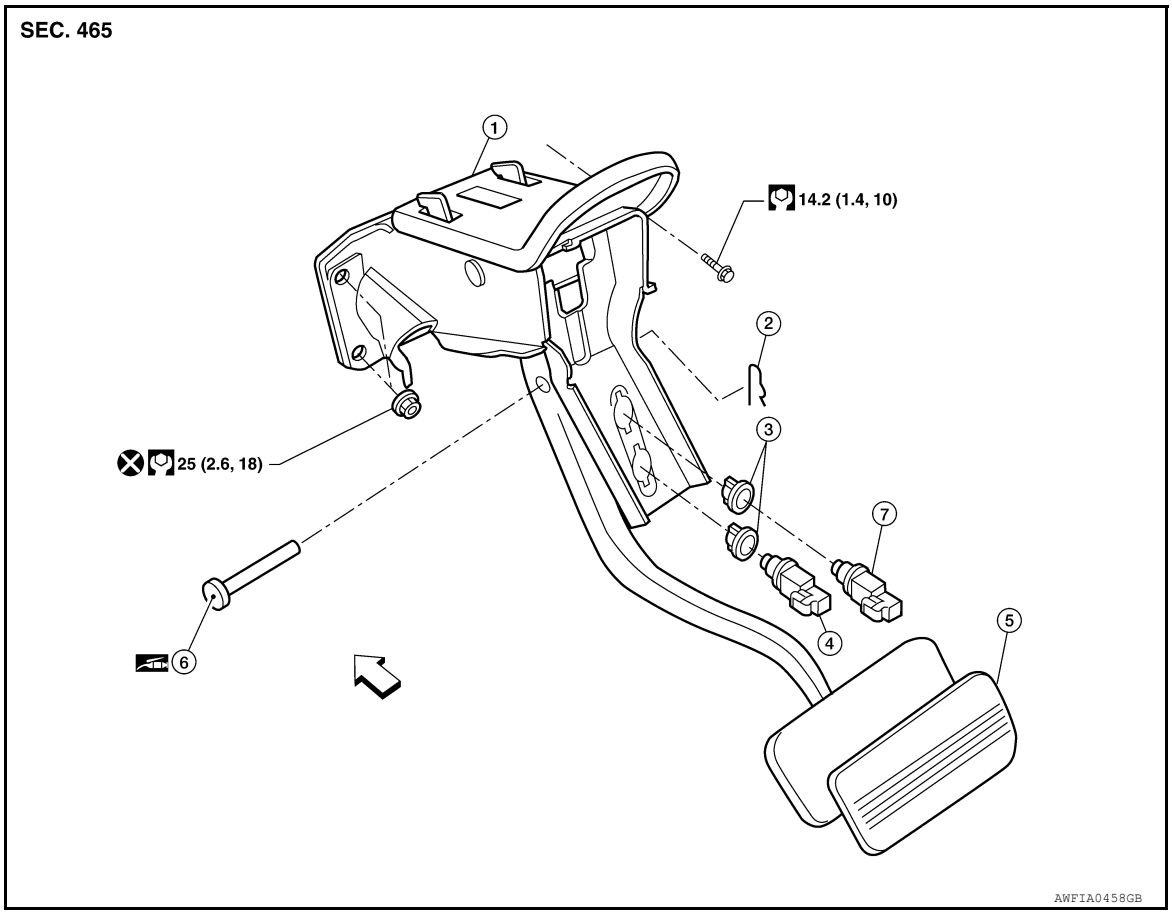

1. Brake pedal assembly
2. Snap pin
3. Clip
4. Stop lamp switch
5. Pedal pad
6. Clevis pin
7. ASCD cancel switch (if equipped)

⇦ Front

NOTE:
The clevis pin may be installed from either direction.

Removal and Installation

INFOID:0000000008792126

REMOVAL

WARNING:
Do not deform the brake tube.
CAUTION:
- **Do not disassemble the brake pedal assembly.**
- **Avoid damage from dropping the brake pedal assembly during handling.**
- **Keep the brake pedal assembly away from water.**

1. Remove the instrument lower panel LH. Refer to IP-18, "Removal and Installation".
2. Remove the stop lamp switch and ASCD cancel switch (if equipped) from the pedal assembly.
3. Remove snap pin and clevis pin from the clevis of the brake booster.
4. Remove the brake pedal assembly bolt.
5. Remove the pedal assembly nuts and discard, then remove the pedal assembly.
   - Temporarily install the nuts by hand to support the booster.

CAUTION:
Do not reuse the nuts for installation.

INSPECTION AFTER REMOVAL

Check brake pedal for following items.
- Cracking or deformation of the clevis pin stopper
- Clevis pin deformation
- Crack of any welded portion
- Brake pedal bent or deformed

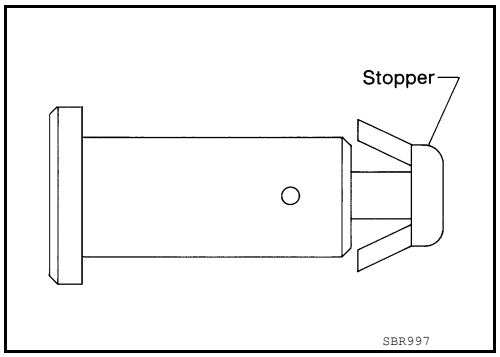

INSTALLATION

Installation is in the reverse order of removal.
- Check the brake pedal for smooth operation. There should be no binding or sticking when applying or releasing the brake pedal.
- After installing the brake pedal assembly, adjust it as necessary. Refer to BR-16, "Inspection and Adjustment".

CAUTION:
Do not reuse the nuts for installation, discard and install with new lock nuts.

BRAKE TUBE AND HOSE

Hydraulic Circuit

INFOID:0000000008792127

Type 1 and Type 2 - Four Channel Hydraulic System

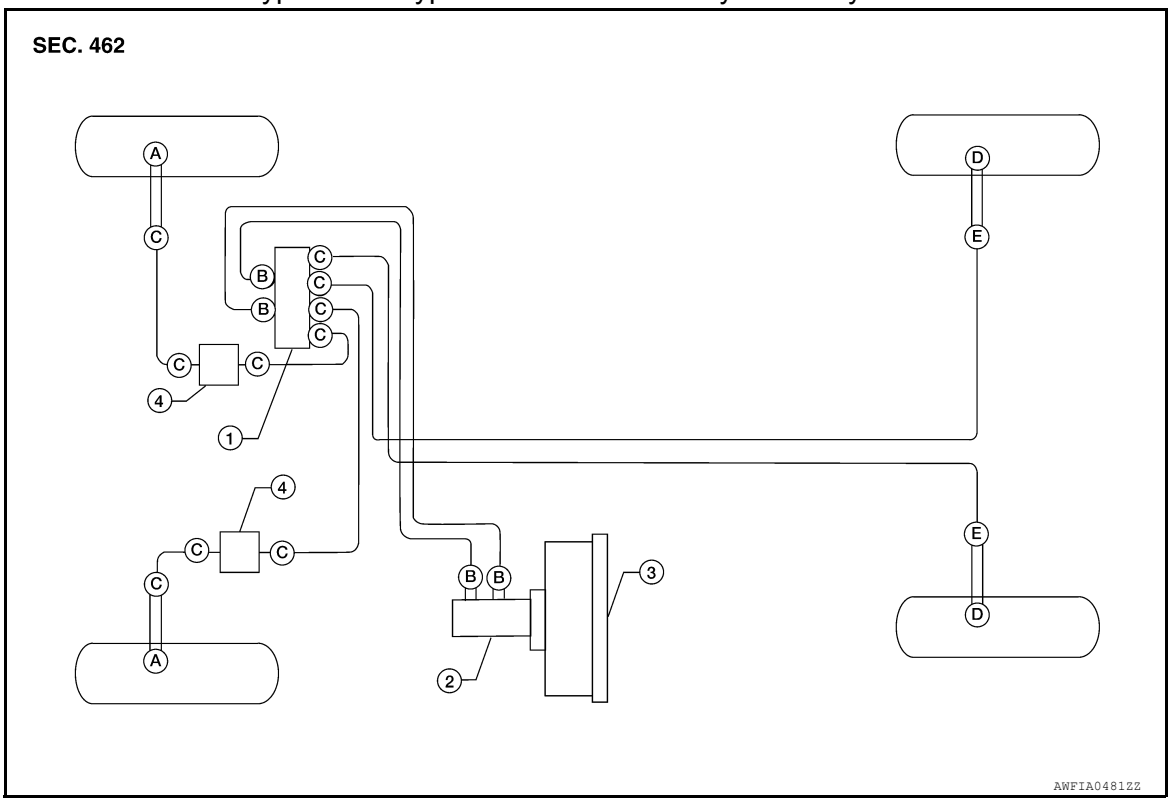

1. Actuator	2. Master cylinder	3. Brake booster
4. Connector	A. Union bolt (front caliper) 18.2 N·m (1.9 kg-m, 13 ft-lb)	B. Flare nut M12 26.0 N·m (2.7 kg-m, 19 ft-lb)
C. Flare nut M10 16.2 N·m (1.7 kg-m, 12 ft-lb)	D. Union bolt (rear caliper) 18.2 N·m (1.9 kg-m, 13 ft-lb)	E. Flare nut to rear hose 16.2 N·m (1.7 kg-m, 12 ft-lb)

Type 1

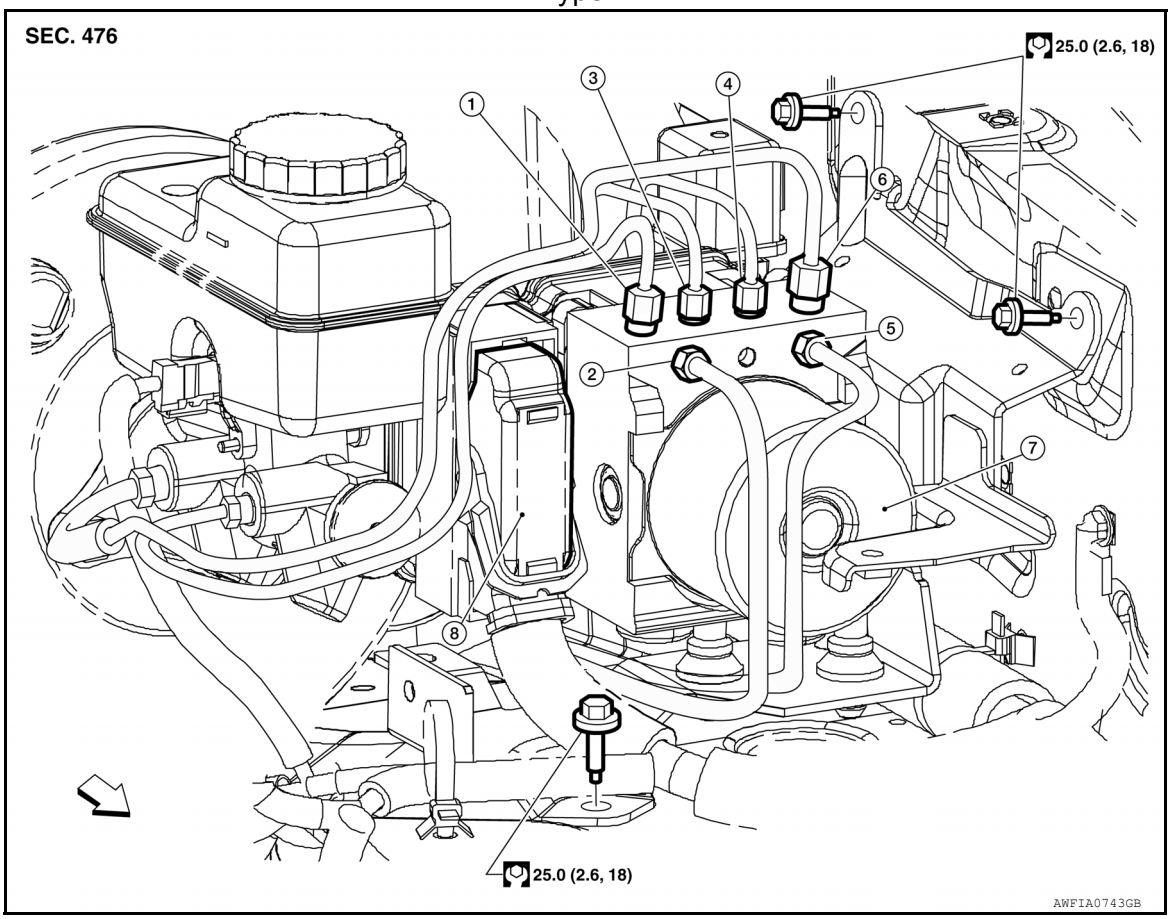

1. From master cylinder secondary side 18.2 N·m (1.9 kg-m, 13 ft-lb)
2. To rear right disc brake 13.0 N·m (1.3 kg-m, 10 ft-lb)
3. To rear left disc brake 13.0 N·m (1.3 kg-m, 10 ft-lb)
4. To front right disc brake 13.0 N·m (1.3 kg-m, 10 ft-lb)
5. To front left disc brake 13.0 N·m (1.3 kg-m, 10 ft-lb)
6. From master cylinder primary side 18.2 N·m (1.9 kg-m, 13 ft-lb)
7. ABS actuator and electric unit (control unit)
8. Harness connector

⇦ Front

Type 2

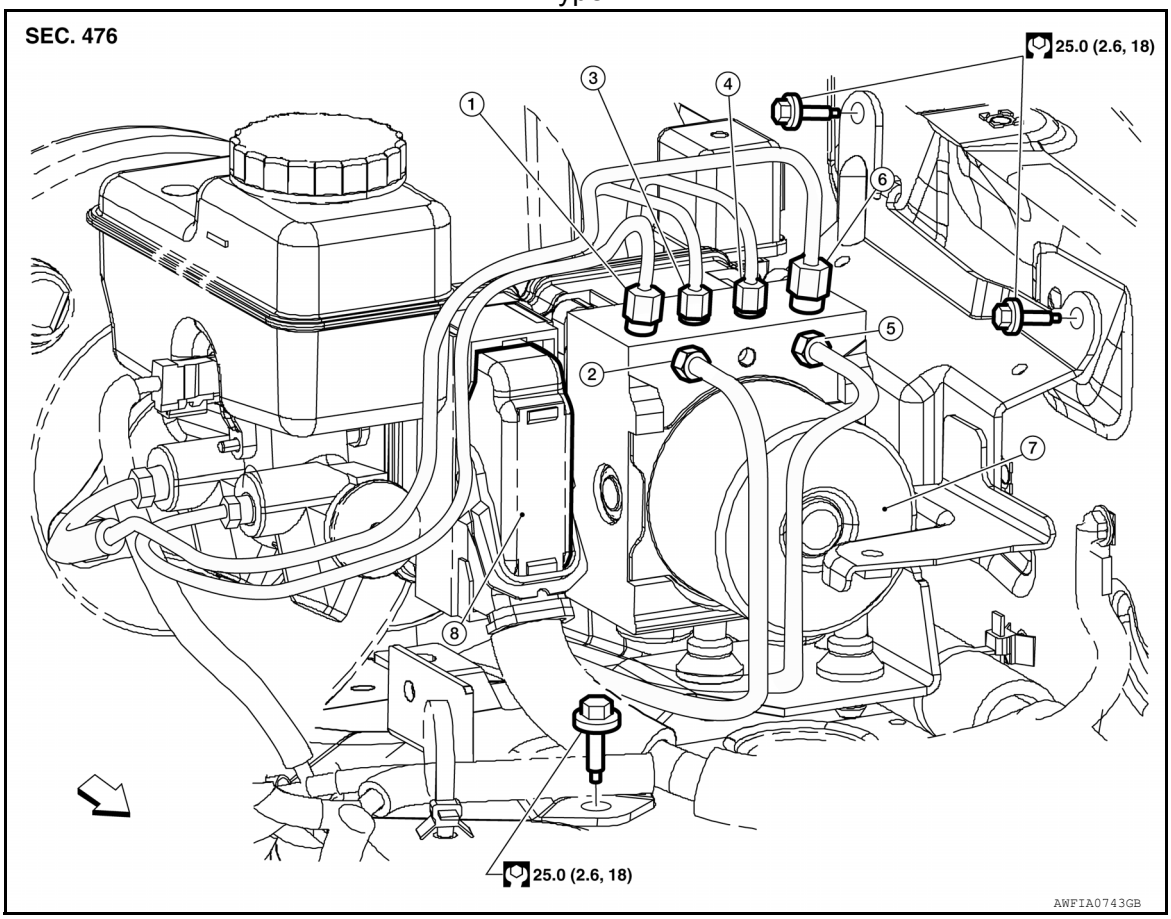

1. From master cylinder secondary side 18.2 N·m (1.9 kg-m, 13 ft-lb)	2. To rear right disc brake 13.0 N·m (1.3 kg-m, 10 ft-lb)	3. To rear left disc brake 13.0 N·m (1.3 kg-m, 10 ft-lb)
4. To front right disc brake 13.0 N·m (1.3 kg-m, 10 ft-lb)	5. To front left disc brake 13.0 N·m (1.3 kg-m, 10 ft-lb)	6. From master cylinder primary side 18.2 N·m (1.9 kg-m, 13 ft-lb)
7. ABS actuator and electric unit (control unit)	8. Harness connector	⇦ Front

CAUTION:
- **All hoses and piping (tubes) must be free from excessive bending, twisting and pulling.**
- **Make sure there is no interference with other parts when turning steering both clockwise and counterclockwise.**
- **The brake piping is an important safety part. If a brake fluid leak is detected, always disassemble the parts. Replace applicable part with a new one, if necessary.**
- **Be careful not to splash brake fluid on painted areas; it may cause paint damage. If brake fluid is splashed on painted areas, wash it away with water immediately.**
- **Do not bend or twist brake hose sharply, or strongly pull it.**
- **When removing components, cover connections so that no dirt, dust, or other foreign matter gets in.**
- **Do not reuse drained brake fluid.**
- **After installation of the ABS actuator and electric unit (control unit), refill brake system with new brake fluid. Then bleed the air from the system. Refer to BR-18, "Bleeding Brake System".**

Removal and Installation of Front Brake Piping and Brake Hose

INFOID:0000000008792128

NOTE:
When removing components such as hoses, tubes/lines, etc., cap or plug openings to prevent fluid from spilling.

REMOVAL

1. Remove front wheel and tire using power tool. Refer to WT-48, "Adjustment".
2. Remove master cylinder reservoir cap.

3. Remove brake tube from brake hose, using a suitable tool.
4. Remove lock plate and brake hose from bracket.

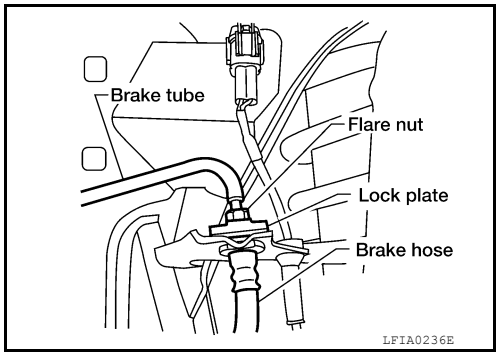

5. Remove union bolt, copper sealing washers, and brake hose from caliper assembly.
CAUTION:
Do not reuse copper sealing washers.

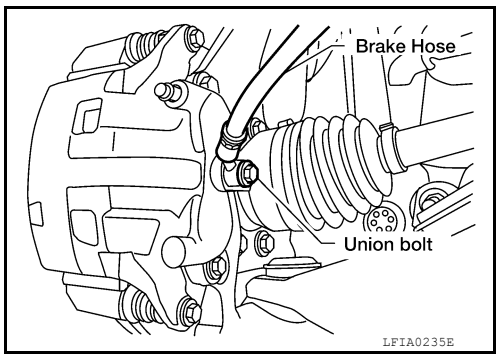

INSTALLATION

1. Install brake hose by aligning with the protrusion on caliper assembly, then install new copper sealing washers (1) and union bolt (A). Tighten union bolt (A) to specified torque. Refer to BR-12, "Hydraulic Circuit".
CAUTION:
Do not reuse copper sealing washers.

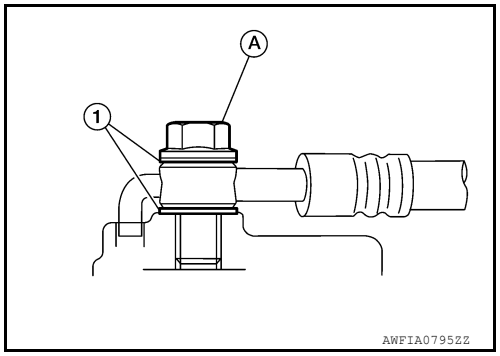

2. Insert brake hose end through bracket, then secure it to bracket with lock plate.
3. Install brake tube to brake hose, then tighten flare nut to the specified torque using a suitable tool. Refer to BR-12, "Hydraulic Circuit".

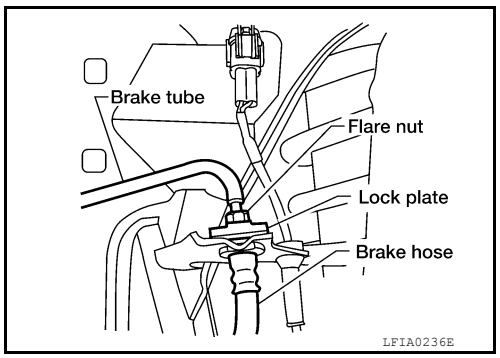

4. Refill brake fluid and bleed air. Refer to BR-18, "Bleeding Brake System".
5. Install the front wheel and tire. Refer to WT-48, "Adjustment".

Removal and Installation of Rear Brake Piping and Brake Hose

INFOID:0000000008792129

NOTE:
When removing components such as hoses, tubes/lines, etc., cap or plug openings to prevent fluid from spilling.

REMOVAL

1. Remove rear wheel and tire using power tool. Refer to WT-48, "Adjustment".

2. Remove master cylinder reservoir cap.
3. Remove brake tube from brake hose, using a suitable tool.
4. Remove lock plate and brake hose from bracket.

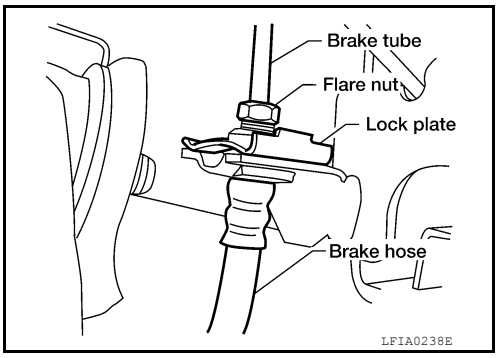

5. Remove union bolt (A) and copper sealing washers, then remove brake hose from caliper assembly.
   CAUTION:
   Do not reuse copper sealing washers.

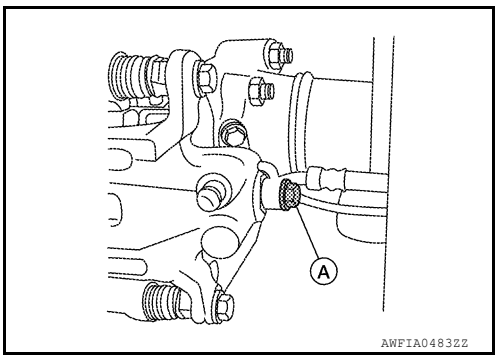

INSTALLATION

1. Install brake hose by aligning with the protrusion on caliper assembly, then install new copper sealing washers (1) and union bolt (A). Tighten union bolt (A) to specified torque. Refer to BR-12, "Hydraulic Circuit".
   CAUTION:
   Do not reuse copper sealing washers.

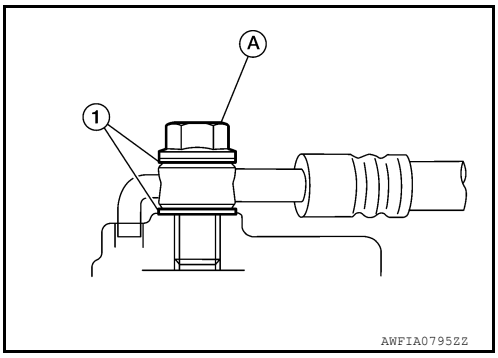

2. Insert brake hose end through bracket, then secure it to bracket with lock plate.
3. Install brake tube to brake hose, then tighten flare nut to the specified torque using a suitable tool.

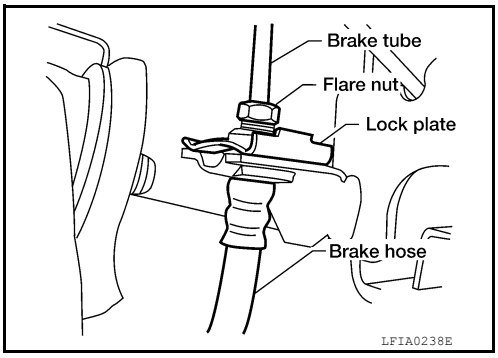

4. Refill brake fluid and bleed brake system. Refer to BR-18, "Bleeding Brake System".
5. Install the rear wheel and tire. Refer to WT-48, "Adjustment".

Inspection After Installation

INFOID:0000000008792130

CAUTION:
Brake pipes and hoses are important safety parts. Always disassemble the parts and retighten their fittings if a brake fluid leak is detected. Replace applicable part with a new one, if a damaged part is detected.

1. Check brake pipes and hoses, and connections for fluid leaks, damage, twist, deformation, contact with other parts, and loose connections. Replace any parts as necessary. Refer to BR-12, "Hydraulic Circuit".
2. While depressing brake pedal under a force of 785 N (80 kg-f, 177 lb-f) with engine running for approximately 5 seconds, check each part for fluid leaks.

BRAKE MASTER CYLINDER

Removal and Installation

INFOID:0000000008792131

Brake Master Cylinder

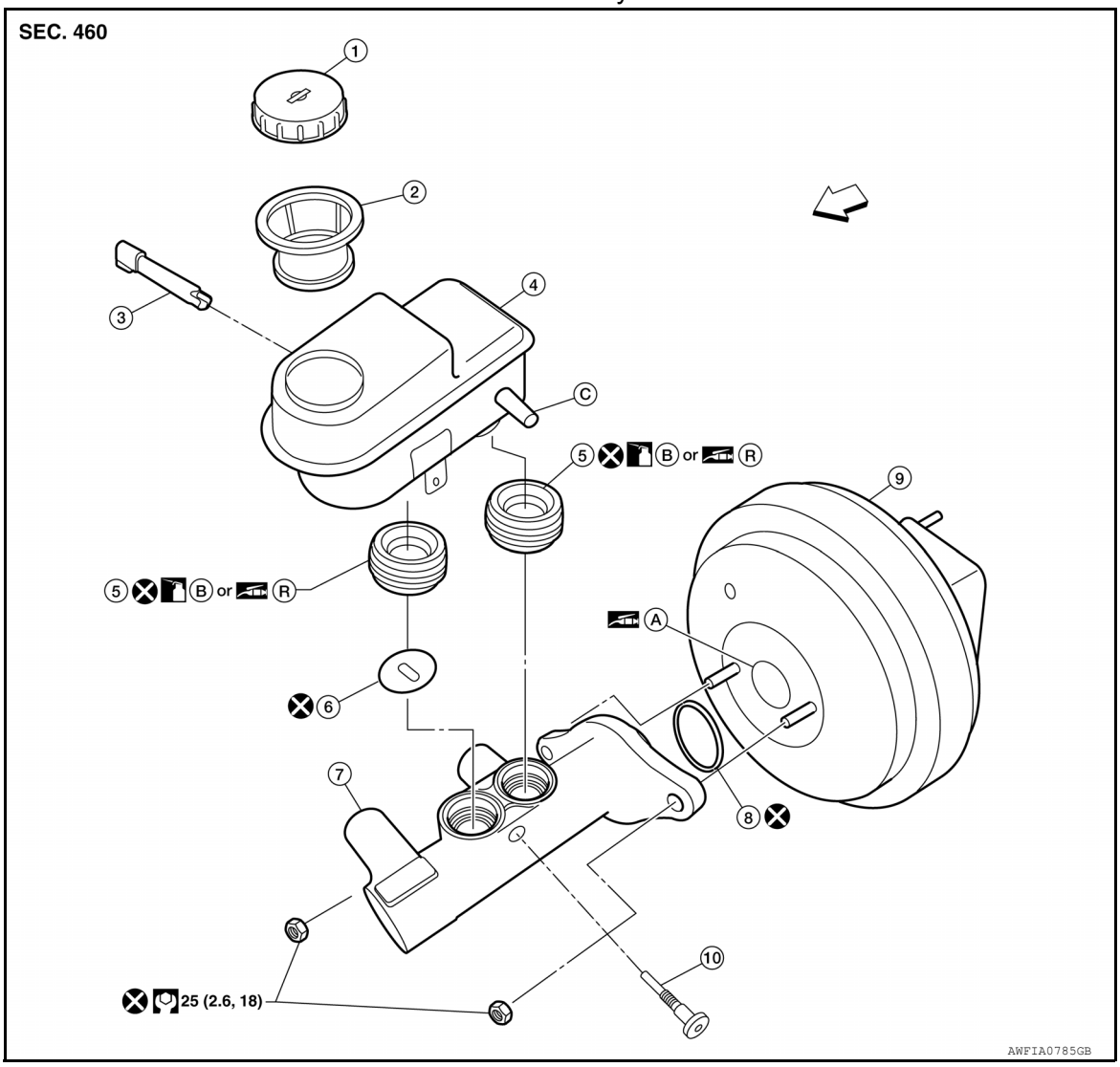

1.	Reservoir cap	2.	Strainer	3.	Fluid level sensor
4.	Reservoir tank	5.	Grommet	6.	Restriction washer
7.	Master cylinder sub-assembly	8.	O-ring	9.	Brake booster
A.	PBC (Poly Butyl Cuprysil) grease or silicone based grease	B.	Brake fluid	C.	M/T models only
R.	Rubber grease	⇦	Front		

CAUTION:
Be careful not to splash brake fluid on painted areas; it may cause paint damage. If brake fluid is splashed on painted areas, wash it away with water immediately.
NOTE:
When removing components such as hoses, tubes/lines, etc., cap or plug openings to prevent fluid from spilling.

REMOVAL

1. Remove master cylinder reservoir cap.
2. Disconnect the harness connector from the fluid level sensor.

3. Disconnect the brake pipes from the master cylinder assembly.
4. Remove brake pipes from the ABS actuator and electric unit (control unit).
5. Remove the master cylinder assembly nuts and discard.
   CAUTION:
   Discard the nuts, do not reuse.
6. Remove the master cylinder assembly and O-ring.
   CAUTION:
   Do not reuse O-ring.

INSTALLATION

Installation is in the reverse order of removal.

- Apply silicone grease to the brake booster at position (A) as shown, be sure the O-ring is in proper position when installing the master cylinder assembly to the brake booster.
  CAUTION:
  Do not reuse O-ring.
- Use new master cylinder assembly nuts for installation.
  CAUTION:
  Do not reuse the master cylinder assembly nuts.
- Refill the brake fluid and bleed the air. Refer to BR-18, "Bleeding Brake System".
  CAUTION:
  - **Refill using recommended brake fluid. Refer to BR-18, "Drain and Refill".**
  - **Do not reuse drained brake fluid.**
- Adjust the brake pedal. Refer to BR-16, "Inspection and Adjustment".

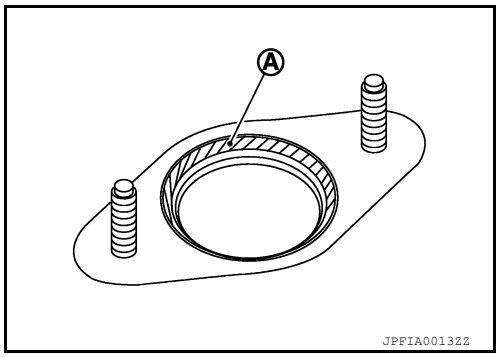

BRAKE BOOSTER

Removal and Installation

INFOID:0000000008792132

Brake Booster and Vacuum Hose

SEC. 470

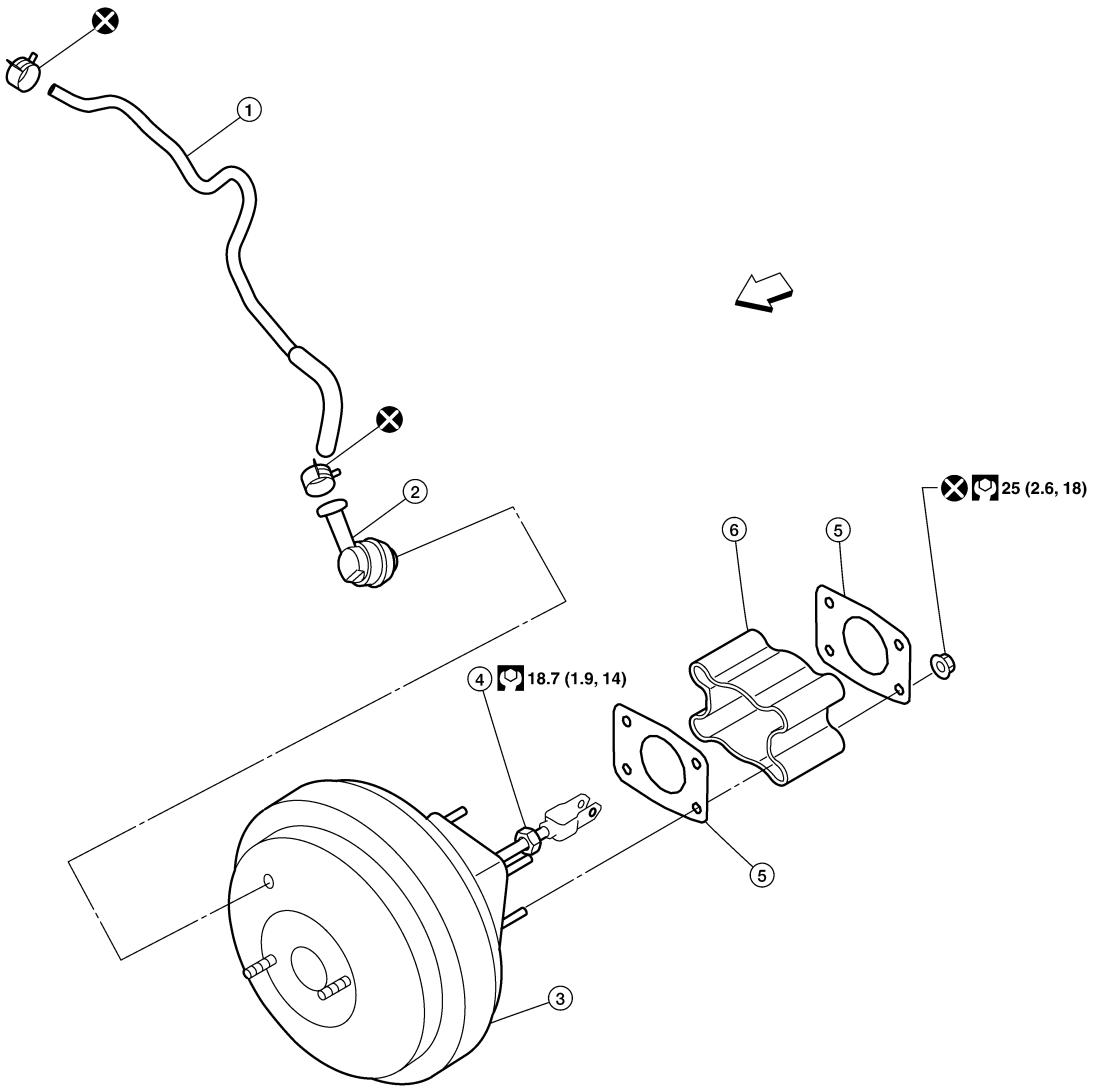

1. Brake booster vacuum hose	2. Brake booster vacuum check valve	3. Brake booster
4. Lock nut	5. Gasket	6. Spacer block
⇦ Front		

REMOVAL

CAUTION:

- **Be careful not to deform or bend brake piping while removing and installing brake booster.**
- **Replace clevis pin if it is damaged.**
- **Be careful not to damage brake booster stud bolt threads. If brake booster is tilted or inclined during installation, dash panel may damage the threads.**
- **Attach the check valve in the correct direction.**

1. Remove the ABS actuator and electric unit (control unit). Refer to BRC-113, "Removal and Installation" (type 1), BRC-233, "Removal and Installation" (type 2).

2. Remove the brake master cylinder. Refer to BR-28, "Removal and Installation".
3. Remove brake booster vacuum hose from the brake booster. Refer to BR-32, "Removal and Installation".
4. Remove instrument lower panel LH. Refer to IP-27, "Exploded View".
5. Remove the brake pedal clevis pin (2) and snap pin (1) from inside the vehicle.

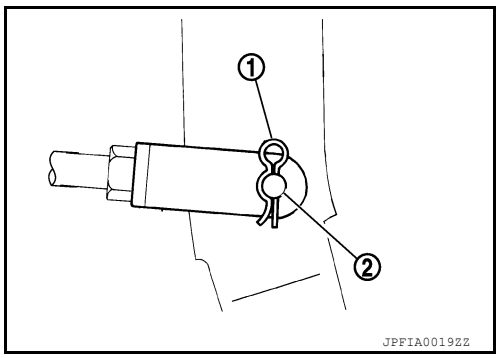

6. Remove the brake booster and brake pedal assembly nuts and discard.
   CAUTION:
   Discard the nuts, do not reuse.
7. Remove brake booster assembly from dash panel.

INSTALLATION

1. Loosen the lock nut (1) to adjust the input rod (2) so that length (A) without the spacer block is within the specified value.

   Input rod (2) with lock nut (1) length (A) standard dimension : Refer to BR-52, "Brake Booster".

2. After adjusting input rod length (A), temporarily tighten the lock nut (1) and install the booster assembly to the dash panel.
   - Install gaskets and spacer block between the booster assembly and the dash panel.

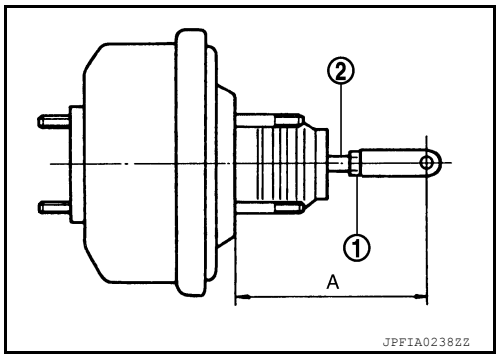

3. Connect the input rod using the brake pedal clevis pin (2) and snap pin (1) from inside the vehicle.

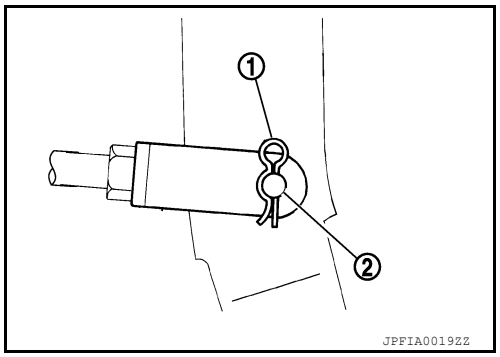

4. Install the brake booster using new nuts.
   CAUTION:
   Do not reuse the brake booster and brake pedal assembly nuts.
5. Install the brake master cylinder. Refer to BR-28, "Removal and Installation".
6. Connect the brake booster vacuum hose and check valve to the brake booster.
7. Adjust the brake pedal height. Refer to BR-16, "Inspection and Adjustment".
8. Install instrument lower panel LH. Refer to IP-27, "Exploded View".
9. Install dash side finisher. Refer to INT-23, "Removal and Installation".
10. Tighten the input rod lock nut to specification.
11. Install the ABS actuator and electric unit (control unit). Refer to BRC-113, "Removal and Installation" (type 1), BRC-233, "Removal and Installation" (type 2).
12. Refill with new brake fluid and bleed the brake system. Refer to BR-18, "Bleeding Brake System".

VACUUM LINES

Removal and Installation

INFOID:0000000008792133

Brake Booster Vacuum Hose

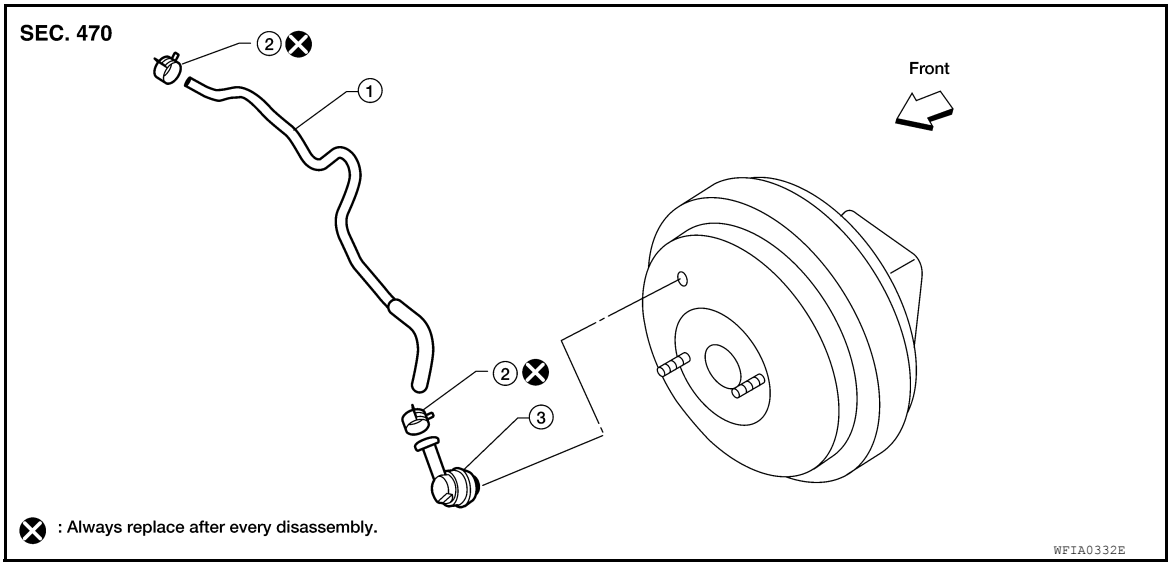

1. Brake booster hose
2. Brake booster hose clamp
3. Brake booster vacuum check valve

REMOVAL

1. Disconnect brake booster hose from hose clip bracket.
2. Release the brake booster hose clamps and remove the brake booster hose.
3. Remove the check valve from the brake booster.

INSTALLATION

Installation is in the reverse order of removal.

- Insert vacuum hose onto tube and brake booster vacuum check valve for a minimum length (A) before installing the brake booster hose clamps.

Vacuum hose length (A) : 24 mm (0.94 in) or more

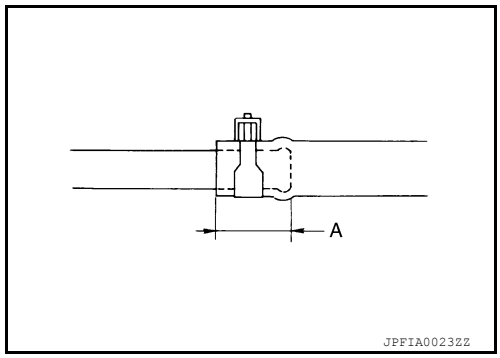

CAUTION:

Do not use lubricating oil during installation.

FRONT DISC BRAKE

Exploded View of Brake Pads

INFOID:0000000008792134

Front Brake Pads, Shims and Retainers

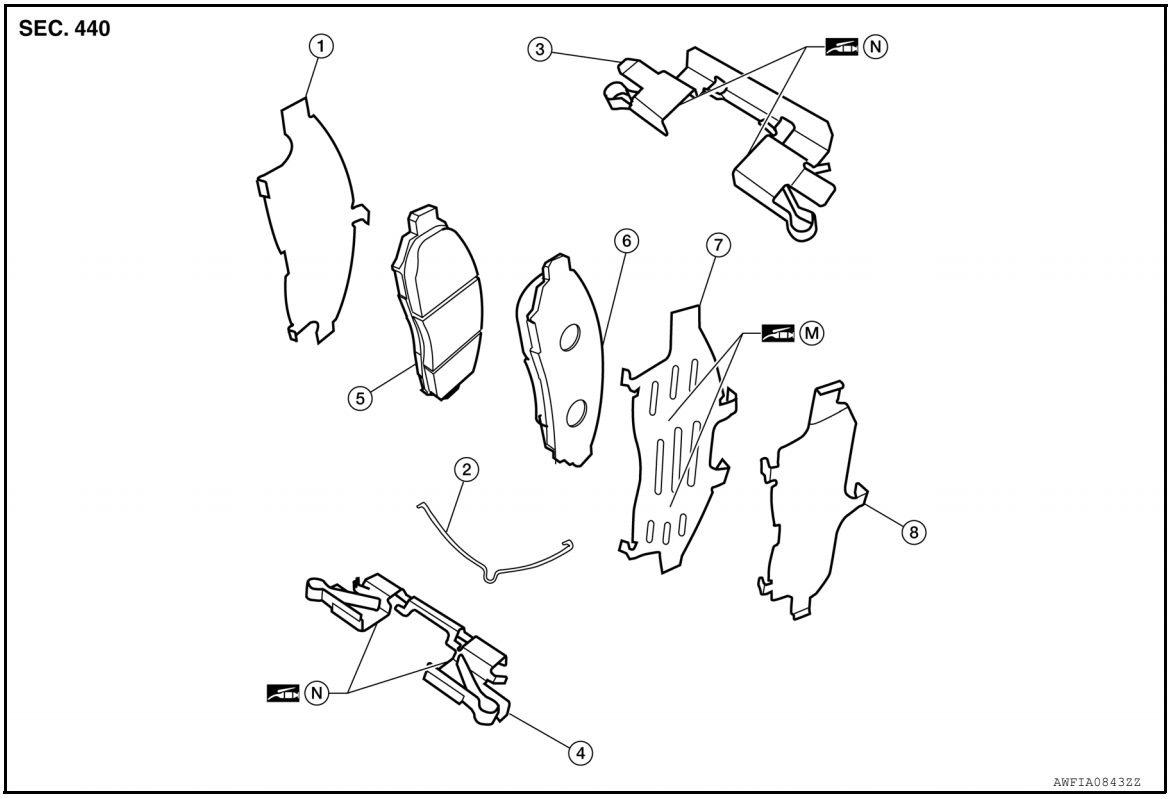

1.	Inner shim	2.	Pad return spring	3.	Upper pad retainer
4.	Lower pad retainer	5.	Inner brake pad	6.	Outer brake pad
7.	Outer shim	8.	Outer shim cover	M.	Molykote AS-880N grease
N.	Molykote 7439 grease				

WARNING:
Clean dust on caliper and brake pad with a vacuum dust collector to minimize the hazard of airborne particles or other materials.

CAUTION:
- **While removing brake pads, do not depress brake pedal because piston will pop out.**
- **It is not necessary to remove bolts on torque member and brake hose except for disassembly or replacement of caliper body. In this case, hang caliper body with a wire so as not to stretch the brake hose.**
- **Do not damage the piston boot.**
- **If any shim is subject to serious corrosion, replace it with a new one.**
- **Always replace shim and shim cover as a set when replacing brake pads.**
- **Keep rotors and pads free from grease and brake fluid.**
- **Burnish the brake contact surface after refinishing or replacing rotors, after replacing pads, or if a soft pedal occurs at very low mileage. Refer to BR-34, "Brake Burnishing".**

Removal and Installation of Brake Pad

INFOID:0000000008792135

REMOVAL

1. Remove the front wheel and tire using power tool. Refer to WT-48, "Adjustment".
2. Remove master cylinder reservoir cap.
3. Remove lower sliding pin bolt using power tool and swing the caliper body up to access the brake pads.
4. Support the caliper body with a suitable wire to avoid pulling on the front brake hose.

5. Remove the front inner and outer brake pads, shims, shim cover, pad return spring and retainers from the torque member.

INSTALLATION

1. Apply Molykote AS-880N grease between outer brake pad shim and shim cover, then attach shim and shim cover to brake pads.
2. Apply Molykote 7439 grease (A) to the pad retainers as shown.

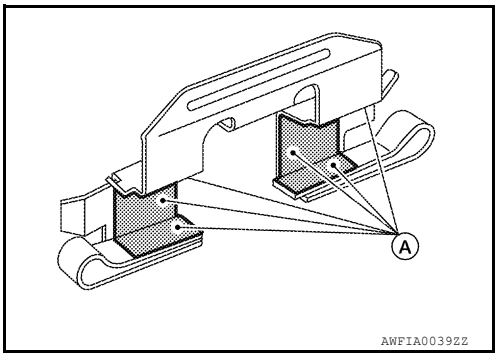

3. Attach pad retainers to torque member. then install the brake pads, shims and shim cover to the torque member.
   CAUTION:
   When attaching pad retainer, attach it firmly so that it is flush with torque member, as shown.

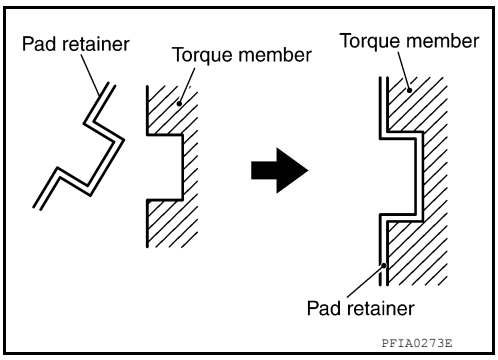

4. Using a suitable tool push pistons into caliper body.
   CAUTION:
   When pushing in piston, brake fluid returns to master cylinder reservoir tank. Watch the level of the brake fluid in the reservoir tank.
5. Install pad return spring to bottom edge of the brake pads in the holes provided.
6. Remove the suitable wire, then swing caliper body down over pad assemblies.
7. Install the lower sliding pin bolt and tighten to specification. Refer to BR-35, "Exploded View of Brake Caliper".
8. Check the brakes for drag.
9. Inspect the brake fluid level, then install the master cylinder reservoir cap.
10. Install the front wheel and tire. Refer to WT-48, "Adjustment".

Brake Burnishing

INFOID:0000000008792136

Burnish brake contact surface according to the following procedure after refinishing or replacing rotors, after replacing pads, or if a soft pedal occurs at very low mileage.

CAUTION:

Only perform this procedure under safe road and traffic conditions. Use extreme caution.

1. Drive the vehicle on a straight smooth road at 50 km/h (31 MPH).
2. Use medium brake pedal/foot effort to bring the vehicle to a complete stop from 50 km/h (31 MPH). Adjust brake pedal/foot pressure such that vehicle stopping time equals 3 to 5 seconds.
3. To cool brake system, drive the vehicle at 50 km/h (31 MPH) for 1 minute without stopping.
4. Repeat steps 1 to 3, 10 times or more to complete the burnishing procedure.

Exploded View of Brake Caliper

INFOID:0000000008792137

Front Disc Brake Caliper

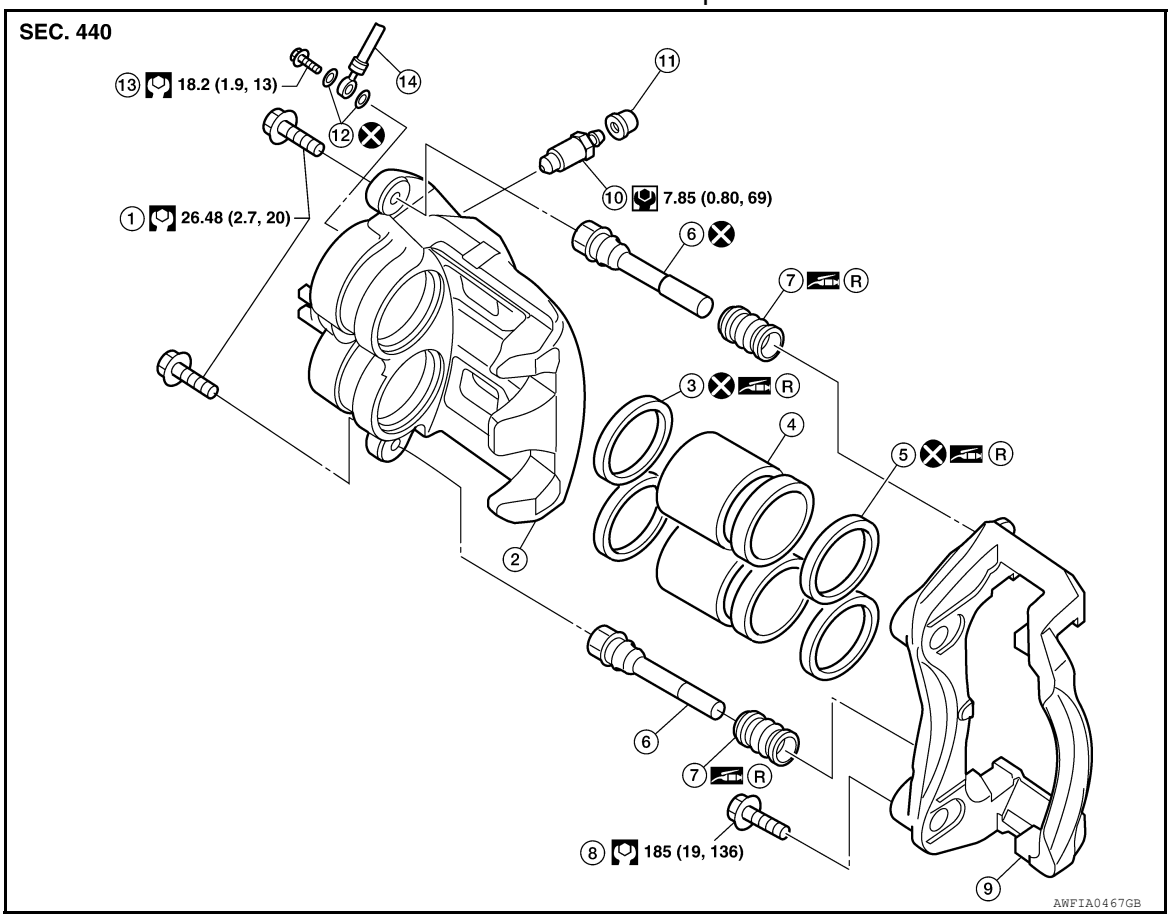

1.	Sliding pin bolt	2.	Caliper body	3.	Piston seal
4.	Piston	5.	Piston boot	6.	Sliding pin
7.	Sliding pin boot	8.	Torque member bolt	9.	Torque member
10.	Bleed valve	11.	Cap	12.	Copper sealing washers
13.	Union bolt	14.	Front brake hose	R.	Rubber grease

WARNING:
Clean dust on caliper and brake pad with a vacuum dust collector to minimize the hazard of airborne particles or other materials.

CAUTION:
- **While removing caliper body, do not depress brake pedal because piston will pop out.**
- **Do not damage the piston boot.**
- **If any shim is subject to serious corrosion, replace it with a new one.**
- **Always replace shim and shim cover as a set when replacing brake pads.**
- **Keep rotors free from grease and brake fluid.**
- **Burnish the brake contact surface after refinishing or replacing rotors, after replacing pads, or if a soft pedal occurs at very low mileage. Refer to BR-34, "Brake Burnishing".**

Removal and Installation of Brake Caliper and Disc Rotor

INFOID:0000000008792138

NOTE:
When removing components such as hoses, tubes/lines, etc., cap or plug openings to prevent fluid from spilling.

REMOVAL

1. Remove the front wheel and tire using power tool. Refer to WT-48, "Adjustment".

2. Remove the union bolt then disconnect the brake hose and discard the copper sealing washers.
   CAUTION:
   Do not reuse copper sealing washers.

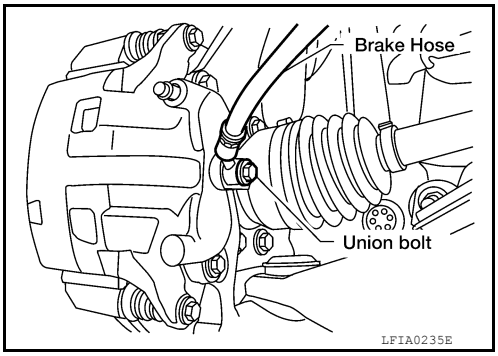

3. Remove the sliding pin bolts and remove the caliper body from the torque member.

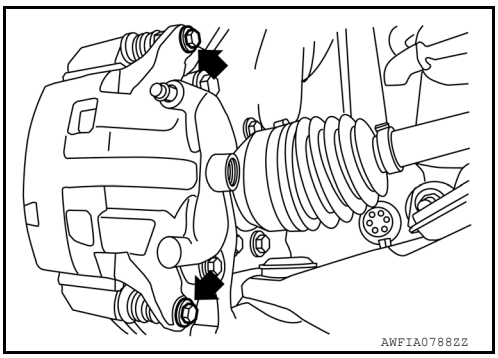

4. Remove the brake pads, shims, shim cover and retainers from the torque member.
5. Remove the torque member bolts and remove the torque member.
6. Remove the disc rotor. If reusing the disc rotor, apply a matching mark as shown for installation.
   CAUTION:
   Put matching marks on the wheel hub assembly and disc rotor, if reusing the disc rotor.

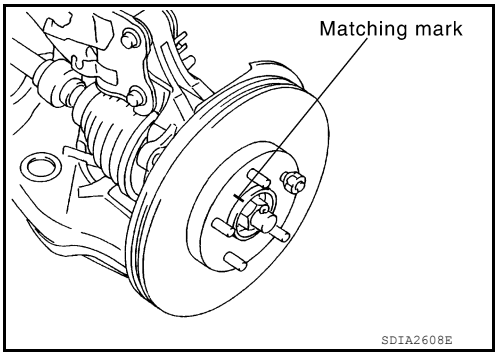

INSTALLATION

1. Install the disc rotor. If reusing the disc rotor, align the matching marks as shown for installation.
   CAUTION:
   Align the matching marks on the wheel hub assembly and disc rotor, if reusing the disc rotor.

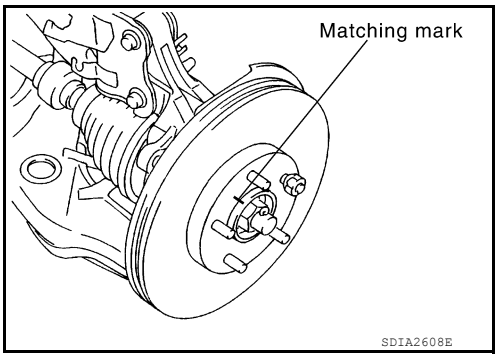

2. Install torque member and tighten the torque member bolts to specification. Refer to BR-35, "Exploded View of Brake Caliper".
3. Install the brake pads, shims, shim covers and retainers on the torque member. Refer to BR-33, "Exploded View of Brake Pads".

4. Install caliper body and sliding pins, then tighten the sliding pin bolts to the specified torque. Refer to BR-35, "Exploded View of Brake Caliper".
CAUTION:
When installing the caliper body to the torque member, wipe any oil off of the knuckle, washers and caliper body attachment surfaces.

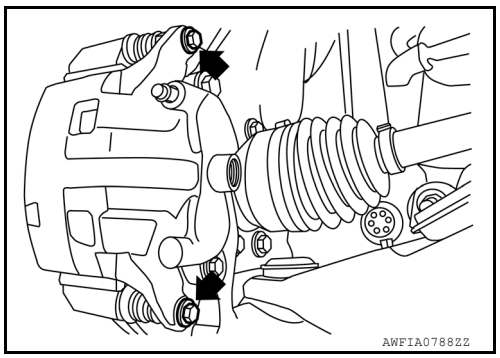

5. Install brake hose by aligning with the protrusion on caliper body, then install new copper sealing washers (1) and union bolt (A). Tighten union bolt (A) to specified torque. Refer to BR-35, "Exploded View of Brake Caliper".
CAUTION:
Do not reuse copper sealing washers.

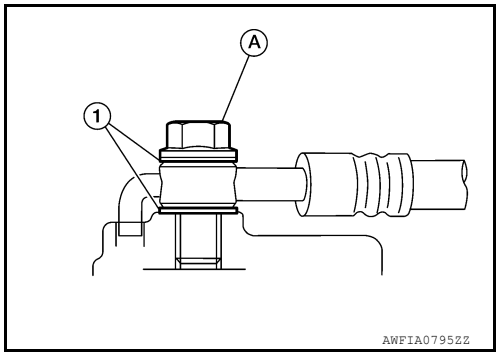

6. Refill with new brake fluid as necessary and bleed the brake system. Refer to BR-18, "Bleeding Brake System".
CAUTION:
- **Refill with new brake fluid.**
- **Do not reuse drained brake fluid.**
7. Install the front wheel and tire. Refer to WT-48, "Adjustment".

REAR DISC BRAKE

Exploded View of Brake Pad

INFOID:0000000008792139

Rear Brake Pads, Shims and Retainers

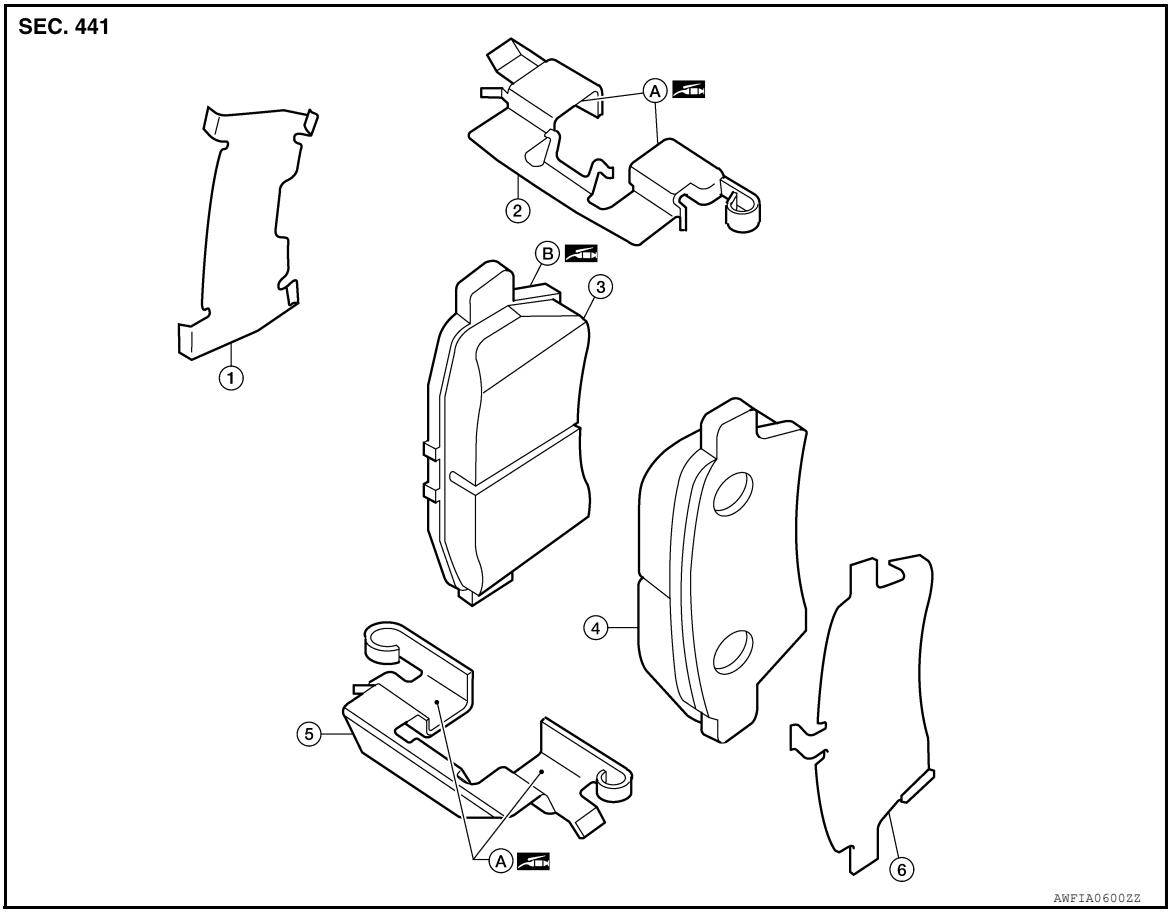

1.	Inner shim	2.	Upper pad retainer	3.	Inner brake pad
4.	Outer brake pad	5.	Lower pad retainer	6.	Outer shim
A.	Molykote 7439 grease	B.	Molykote AS-880N grease		

WARNING:
Clean dust on caliper and brake pad with a vacuum dust collector to minimize the hazard of airborne particles or other materials.

CAUTION:
- **While removing brake pads, do not depress brake pedal because piston will pop out.**
- **Do not damage the piston boot.**
- **If any shim is subject to serious corrosion, replace it with a new one.**
- **Always replace inner and outer shims as a set when replacing brake pads.**
- **Keep rotors and pads free from grease and brake fluid.**
- **Burnish the brake contact surface after refinishing or replacing rotors, after replacing pads, or if a soft pedal occurs at very low mileage. Refer to BR-39, "Brake Burnishing".**

Removal and Installation of Brake Pad

INFOID:0000000008792140

REMOVAL

1. Remove the rear wheel and tire using power tool. Refer to WT-48, "Adjustment".
2. Remove master cylinder reservoir cap.
3. Remove the lower caliper sliding pin bolt using power tool and swing the caliper body up to access the brake pads.
4. Support the caliper body with a suitable wire to avoid pulling on the rear brake hose.

5. Remove the rear inner and outer brake pads, shims and retainers from the torque member.

INSTALLATION

1. Apply Molykote AS-880N grease between the inner brake pad back plate and shim, then attach the shims to the brake pads.
2. Apply Molykote 7439 grease (A) to the pad retainers as shown

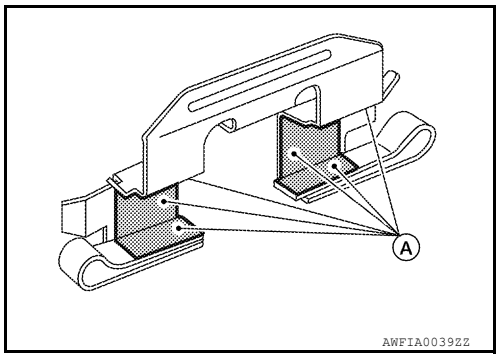

3. Attach pad retainer to torque member, then install brake pad and shim assemblies.
   CAUTION:
   When attaching pad retainer, attach it firmly so that it is flush with torque member, as shown.

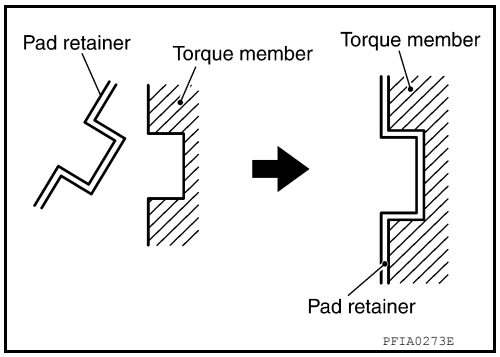

4. Using a suitable tool push piston into caliper body.
   CAUTION:
   By pushing in piston, brake fluid returns to master cylinder reservoir tank. Watch the level of the surface of reservoir tank.
5. Remove suitable wire then swing caliper body down over the brake pad assemblies.
6. Install the sliding pin bolts and tighten to specification. Refer to BR-40, "Exploded View of Brake Caliper".
7. Check the brakes for drag.
8. Inspect the brake fluid level, then install the master cylinder reservoir cap.
9. Install the rear wheel and tire. Refer to WT-48, "Adjustment".

Brake Burnishing

INFOID:0000000008792141

Burnish brake contact surface according to the following procedure after refinishing or replacing rotors, after replacing pads, or if a soft pedal occurs at very low mileage.

CAUTION:
Only perform this procedure under safe road and traffic conditions. Use extreme caution.

1. Drive the vehicle on a straight smooth road at 50 km/h (31 MPH).
2. Use medium brake pedal/foot effort to bring the vehicle to a complete stop from 50 km/h (31 MPH). Adjust brake pedal/foot pressure such that vehicle stopping time equals 3 to 5 seconds.
3. To cool brake system, drive the vehicle at 50 km/h (31 MPH) for 1 minute without stopping.
4. Repeat steps 1 to 3, 10 times or more to complete the burnishing procedure.

Exploded View of Brake Caliper

INFOID:0000000008792142

Rear Disc Brake Caliper

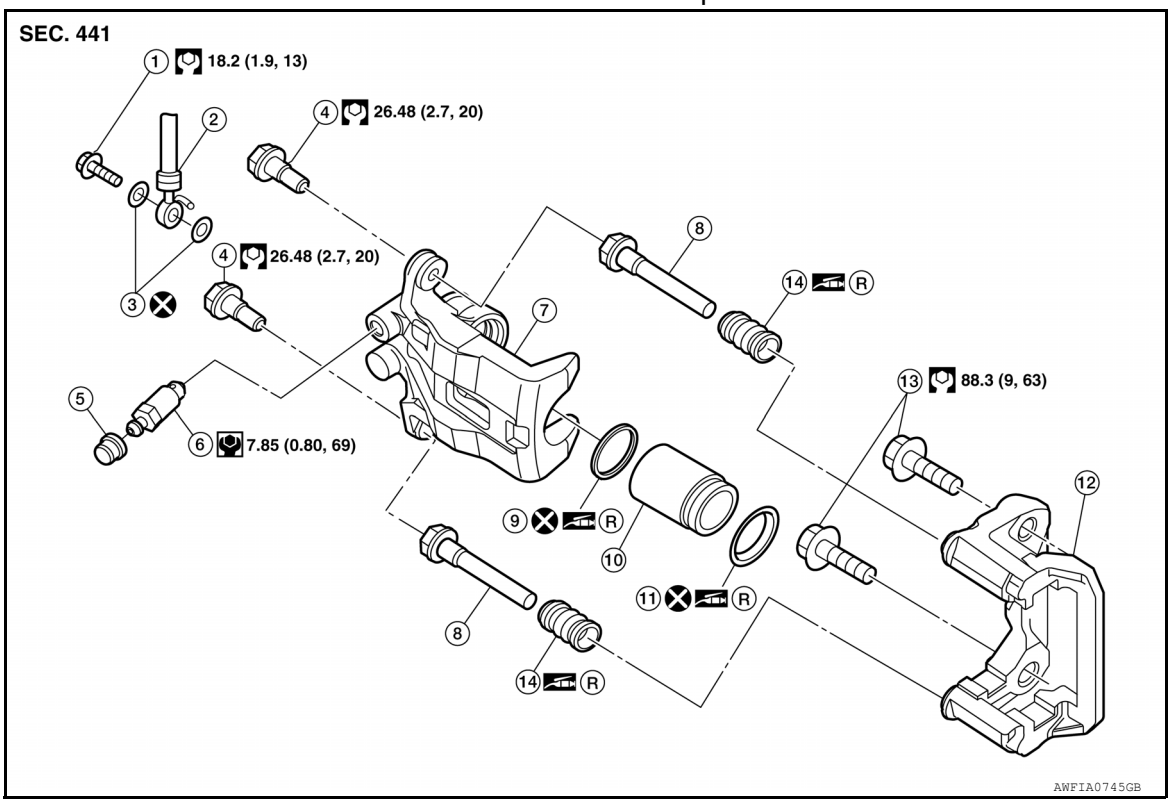

1.	Union bolt	2.	Brake hose	3.	Copper sealing washers
4.	Sliding pin bolt	5.	Cap	6.	Bleed valve
7.	Caliper body	8.	Sliding pin	9.	Piston seal
10.	Piston	11.	Piston boot	12.	Torque member
13.	Torque member bolt	14.	Sliding pin boot	R.	Rubber grease

WARNING:
Clean dust on caliper and brake pad with a vacuum dust collector to minimize the hazard of airborne particles or other materials.

CAUTION:
- **While removing caliper body, do not depress brake pedal because piston will pop out.**
- **It is not necessary to remove bolts on torque member and brake hose except for disassembly or replacement of caliper body. In this case, hang caliper body with a wire so as not to stretch the brake hose.**
- **Do not damage the piston boot.**
- **If any shim is subject to serious corrosion, replace it with a new one.**
- **Always replace shim and shim cover as a set when replacing brake pads.**
- **Keep rotors free from grease and brake fluid.**
- **Burnish the brake contact surface after refinishing or replacing rotors, after replacing pads, or if a soft pedal occurs at very low mileage. Refer to BR-39, "Brake Burnishing".**

Removal and Installation of Brake Caliper and Disc Rotor

INFOID:0000000008792143

NOTE:
When removing components such as hoses, tubes/lines, etc., cap or plug openings to prevent fluid from spilling.

REMOVAL

1. Remove the rear wheel and tire using power tool. Refer to WT-48, "Adjustment".

2. Remove the union bolt (A) then disconnect the brake hose and discard the copper sealing washers.
CAUTION:
Do not reuse copper sealing washers.

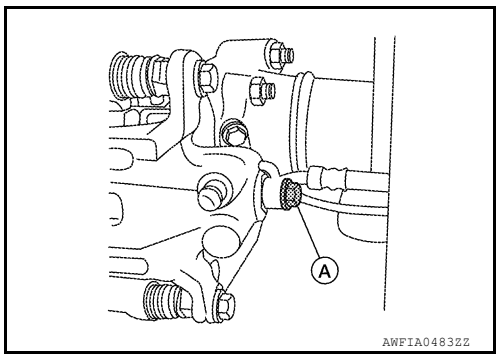

3. Remove the sliding pin bolts (A) and remove the caliper body from torque member.

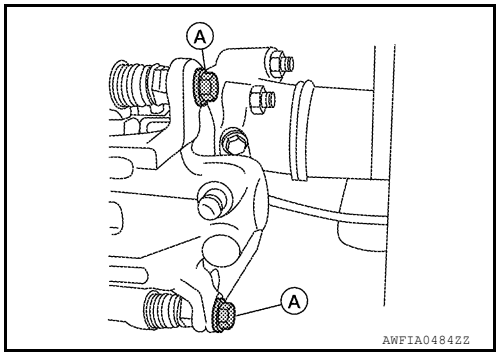

4. Remove the brake pads, shims and retainers from the torque member.
5. Remove the torque member bolts and remove the torque member.
6. Remove the disc rotor. If reusing the disc rotor, apply a matching mark (A) as shown for installation.
CAUTION:
Put matching marks on the wheel hub assembly and disc rotor, if reusing the disc rotor.

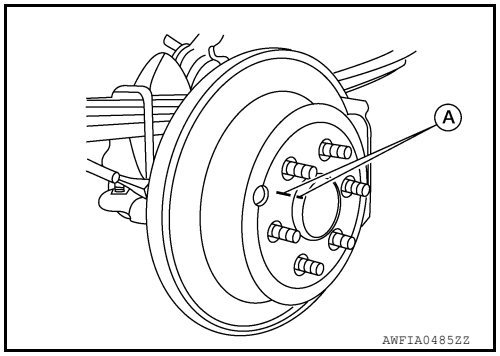

INSTALLATION

1. Install the disc rotor. If reusing the disc rotor, align the matching marks (A) as shown for installation.
CAUTION:
Align the matching marks on the wheel hub assembly and disc rotor, if reusing the disc rotor.

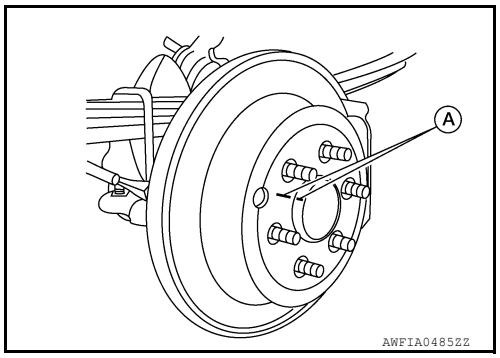

2. Install torque member and tighten the torque member bolts to specification. Refer to BR-40, "Exploded View of Brake Caliper".
3. Install the brake pads, shims and retainers on the torque member. Refer to BR-38, "Exploded View of Brake Pad".

4. Install caliper body and sliding pins, then tighten the sliding pin bolts (A) to the specified torque. Refer to BR-40, "Exploded View of Brake Caliper".
   CAUTION:
   When installing the caliper body to the torque member, wipe any oil off of the washers and caliper body attachment surfaces.

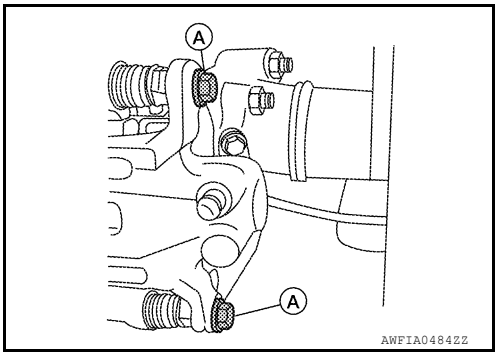

5. Install brake hose by aligning with the protrusion on caliper body, then install new copper sealing washers (1) and union bolt (A). Tighten union bolt (A) to specified torque. Refer to BR-12, "Hydraulic Circuit".
   CAUTION:
   Do not reuse copper sealing washers.

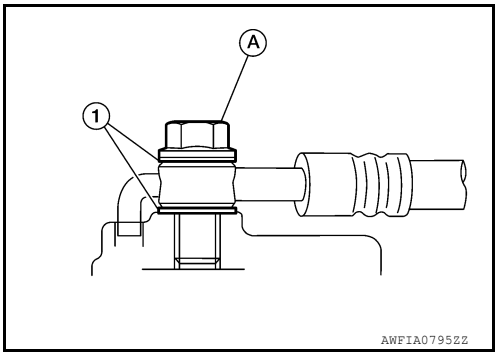

6. Refill with new brake fluid as necessary and bleed the brake system. Refer to BR-18, "Bleeding Brake System".
   CAUTION:
   - **Refill with new brake fluid.**
   - **Do not reuse drained brake fluid.**
7. Install the rear wheel and tire. Refer to WT-48, "Adjustment".

UNIT DISASSEMBLY AND ASSEMBLY

BRAKE MASTER CYLINDER

Disassembly and Assembly

INFOID:0000000008792144

Brake Master Cylinder

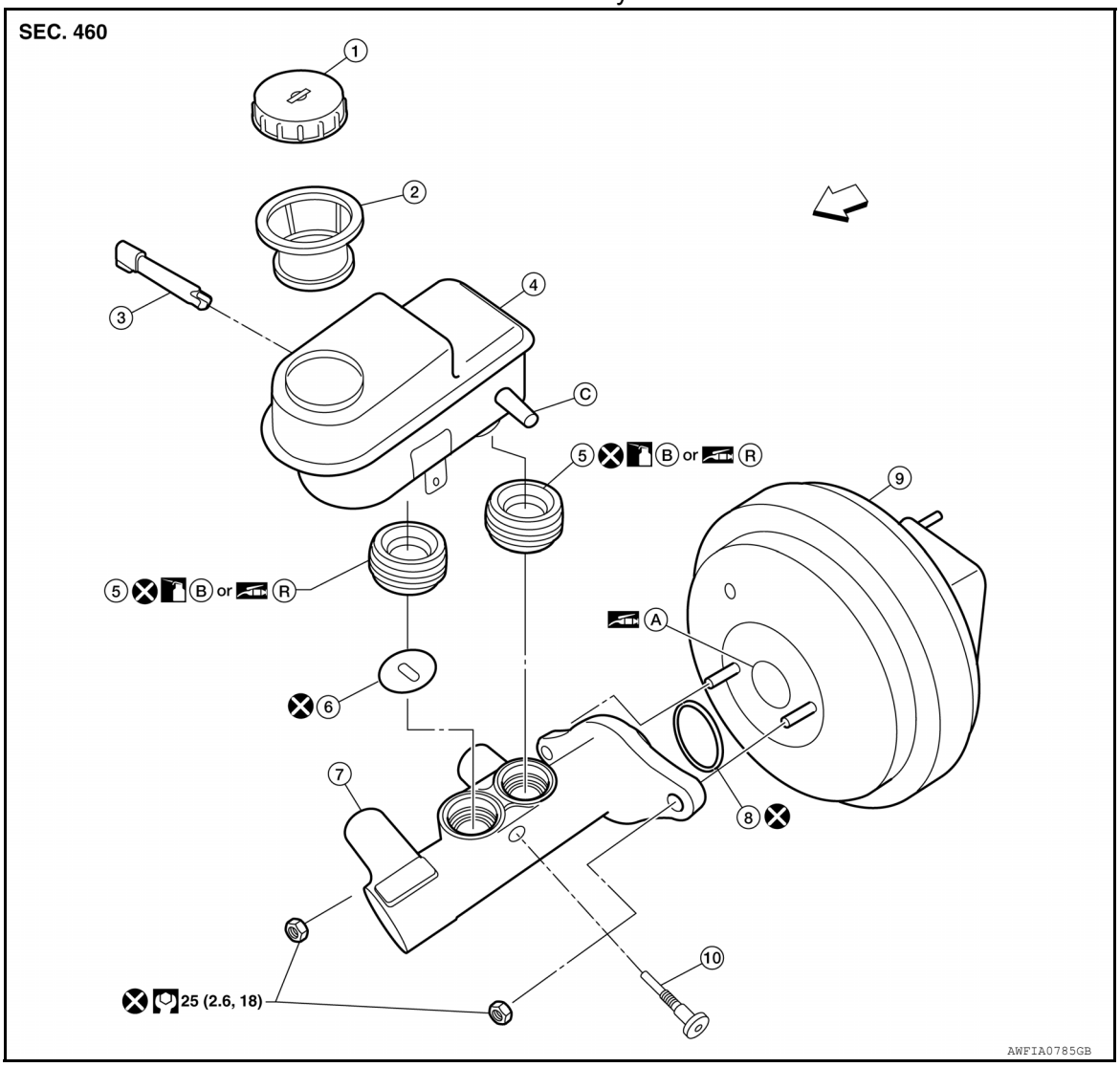

1.	Reservoir cap	2.	Strainer	3.	Fluid level sensor
4.	Reservoir tank	5.	Grommet	6.	Restriction washer
7.	Master cylinder sub-assembly	8.	O-ring	9.	Brake booster
10.	Pin	A.	PBC (Poly Butyl Cuprysil) grease or silicone based grease	B.	Brake fluid
C.	M/T models only	R.	Rubber grease	⇦	Front

DISASSEMBLY

CAUTION:

- **Master cylinder sub-assembly cannot be disassembled.**
- **Remove reservoir tank only when absolutely necessary.**
- **While working, cover the primary piston rod with a cloth to prevent it from being damaged.**
- **Do not use mineral oils such as kerosene, gasoline during the cleaning and assembly process.**
- **Do not drop parts. If a part is dropped, do not use it.**

1. Secure the flange of the master cylinder sub-assembly in a vise.
   CAUTION:
   - **Use copper plates or a cloth to cover the flange before securing it in the vise.**
   - **When securing the master cylinder sub-assembly in a vise, be sure not to over-tighten the vise.**

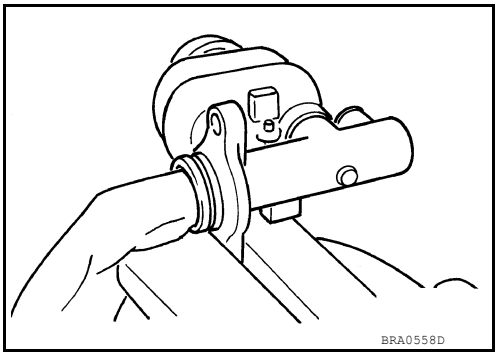

2. Remove the pin and pull the reservoir tank off of the master cylinder sub-assembly.
3. Remove the grommets from the master cylinder sub-assembly body.
   CAUTION:
   Do not reuse grommets.
4. Remove the restriction washer from the master cylinder sub-assembly body.
   CAUTION:
   Do not reuse restriction washer.
5. Remove the fluid level sensor.

ASSEMBLY

Assembly is in the reverse order of disassembly.

CAUTION:
- **Master cylinder sub-assembly cannot be disassembled.**
- **Remove reservoir tank only when absolutely necessary.**
- **While working, cover the primary piston rod with a cloth to prevent it from being damaged.**
- **Do not use mineral oils such as kerosene, gasoline during the cleaning and assembly process.**
- **Do not drop parts. If a part is dropped, do not use it.**

FRONT DISC BRAKE

Exploded View of Brake Caliper

INFOID:0000000008792145

Front Disc Brake Caliper

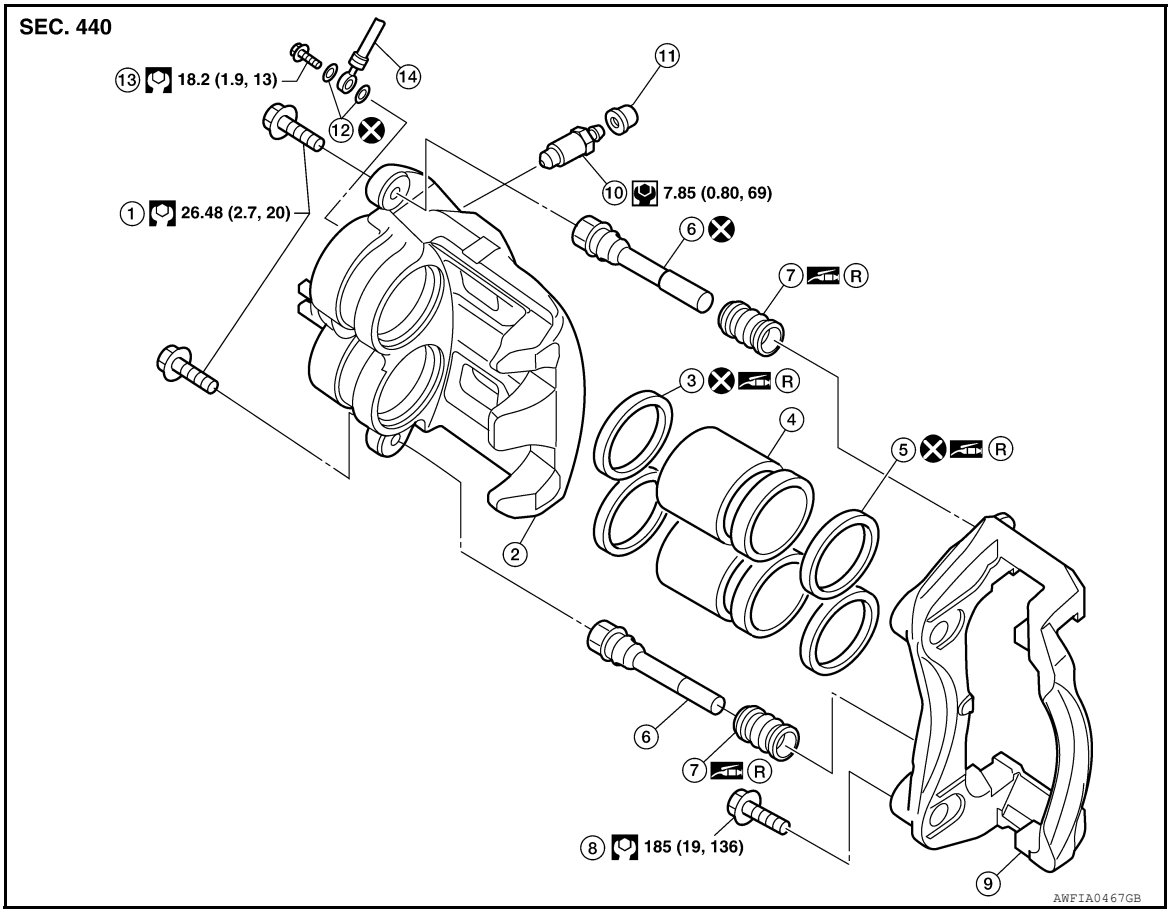

1.	Sliding pin bolt	2.	Caliper body	3.	Piston seal
4.	Piston	5.	Piston boot	6.	Sliding pin
7.	Sliding pin boot	8.	Torque member bolt	9.	Torque member
10.	Bleed valve	11.	Cap	12.	Copper sealing washers
13.	Union bolt	14.	Front brake hose	R.	Rubber grease

WARNING:
Clean dust on caliper and brake pad with a vacuum dust collector to minimize the hazard of airborne particles or other materials.

CAUTION:
- **While removing caliper body, do not depress brake pedal because piston will pop out.**
- **It is not necessary to remove bolts on torque member and brake hose except for disassembly or replacement of caliper body. In this case, hang caliper body with a wire so as not to stretch the brake hose.**
- **Do not damage the piston boot.**
- **If any shim is subject to serious corrosion, replace it with a new one.**
- **Always replace shim and shim cover as a set when replacing brake pads.**
- **Keep rotors free from grease and brake fluid.**
- **Burnish the brake contact surface after refinishing or replacing rotors, after replacing pads, or if a soft pedal occurs at very low mileage. Refer to BR-34, "Brake Burnishing".**

Disassembly and Assembly

INFOID:0000000008792146

DISASSEMBLY

1. Remove the caliper body from the torque member. Refer to BR-35, "Removal and Installation of Brake Caliper and Disc Rotor".
2. Remove the upper sliding pin, lower sliding pin, and sliding pin boots from the torque member.
   CAUTION:
   Upper sliding pin must be replaced at each service.
3. Place a wooden block as shown, and then blow air from the union bolt hole to remove the pistons and piston boots.
   WARNING:
   Do not get your fingers caught between the pistons and wooden block.

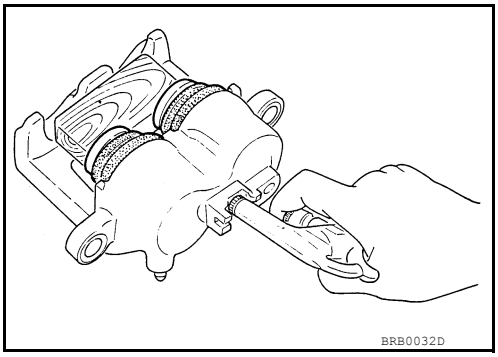

4. Remove the piston boots from the pistons.
   CAUTION:
   Do not reuse piston boot.
5. Remove piston seals from cylinder body, using a suitable tool.
   CAUTION:
   - **Be careful not to damage cylinder body inner wall.**
   - **Do not reuse piston seal.**

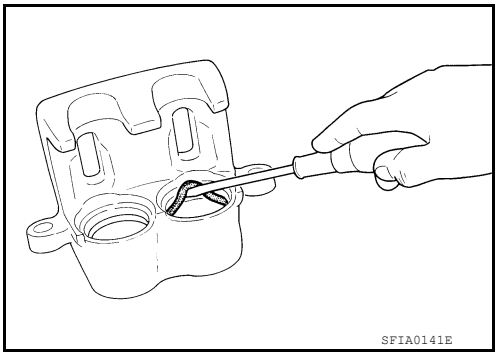

6. Remove the bleed valve and cap.

CALIPER INSPECTION

Cylinder Body

- Check the inside surface of the cylinder body for score, rust, wear, damage or foreign materials. If any of the above conditions are observed, replace the cylinder body.
- Minor damage from rust or foreign materials may be eliminated by polishing surface with a fine emery paper. Replace cylinder body if necessary.

CAUTION:
- **Use new brake fluid for cleaning. Do not use mineral oils such as gasoline or kerosene.**

Torque Member

Check the torque member for wear, cracks, and damage. If damage or deformation is present, replace the torque member.

Piston

Check the pistons for score, rust, wear, damage or presence of foreign materials. Replace if any of these conditions are observed.

CAUTION:
Piston sliding surface is plated, do not polish with emery paper even if rust or foreign materials are stuck to sliding surface.

Sliding Pins, and Sliding Pin Boots

Check the sliding pins and sliding pin boots for wear, damage, and cracks. If damage or deformation is present, replace the affected part.

CAUTION:
Upper sliding pin must be replaced at each service.

ASSEMBLY

CAUTION:
Use NISSAN Rubber Grease when assembling.

1. Install the bleed valve and cap.
2. Apply rubber grease to the new piston seals (1) and insert the new piston seals (1) into the groove on the cylinder body.
   CAUTION:
   Do not reuse piston seals.

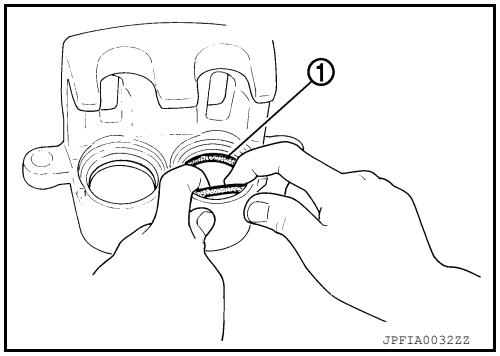

3. Apply rubber grease to the new piston boots (1). Cover the piston end (2) with the piston boot (1), and then install the cylinder side lip on the piston boot (1) securely into the groove on the cylinder body.
   CAUTION:
   - **Do not reuse piston boot.**
   - **Press pistons in evenly and vary the pressing points to prevent the cylinder inner wall from being damaged.**

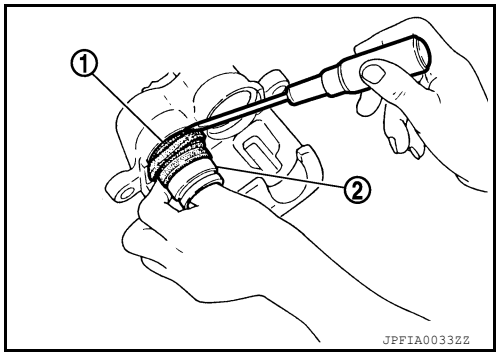

4. Install the pistons (1) into the cylinder body and insert the piston boots (2) side lip into the piston groove as shown.
   CAUTION:
   Press pistons in evenly and vary the pressing points to prevent the cylinder inner wall from being damaged.

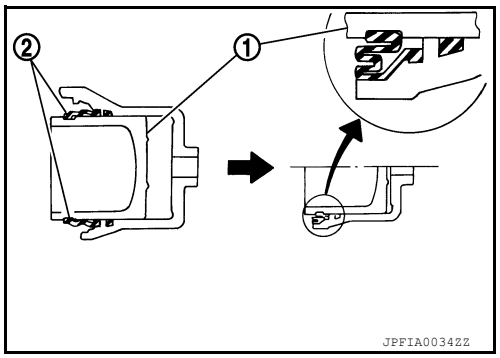

5. Apply rubber grease to the sliding pin boots, then install the new upper sliding pin, lower sliding pin, and sliding pin boots on the torque member.
   CAUTION:
   Upper sliding pin must be replaced at each service.
6. Install the caliper body on the torque member. Refer to BR-35, "Removal and Installation of Brake Caliper and Disc Rotor".

REAR DISC BRAKE

Exploded View of Brake Caliper

INFOID:0000000008792147

Rear Disc Brake Caliper

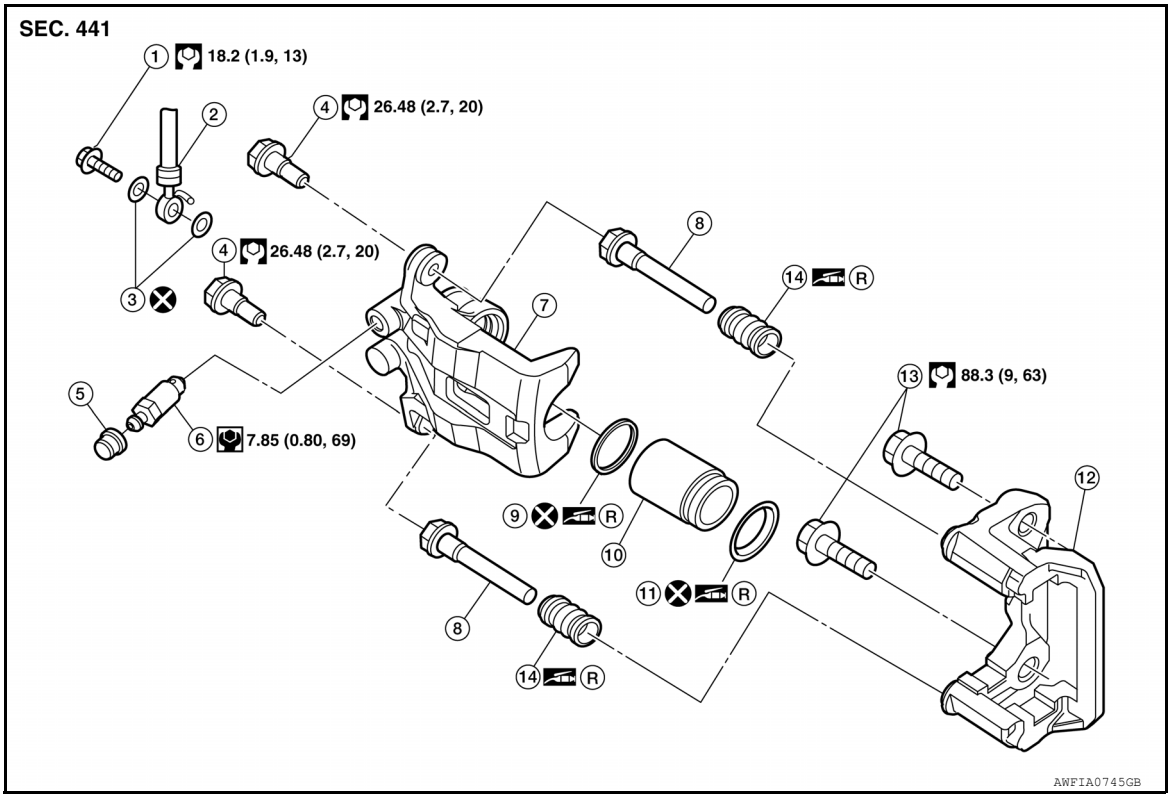

1.	Union bolt	2.	Brake hose	3.	Copper sealing washers
4.	Sliding pin bolt	5.	Cap	6.	Bleed valve
7.	Caliper body	8.	Sliding pin	9.	Piston seal
10.	Piston	11.	Piston boot	12.	Torque member
13.	Torque member bolt	14.	Sliding pin boot	R.	Rubber grease

WARNING:

Clean dust on caliper and brake pad with a vacuum dust collector to minimize the hazard of airborne particles or other materials.

CAUTION:

- **While removing caliper body, do not depress brake pedal because piston will pop out.**
- **It is not necessary to remove bolts on torque member and brake hose except for disassembly or replacement of caliper body. In this case, hang caliper body with a wire so as not to stretch the brake hose.**
- **Do not damage the piston boot.**
- **If any shim is subject to serious corrosion, replace it with a new one.**
- **Always replace shim and shim cover as a set when replacing brake pads.**
- **Keep rotors free from grease and brake fluid.**
- **Burnish the brake contact surface after refinishing or replacing rotors, after replacing pads, or if a soft pedal occurs at very low mileage. Refer to BR-39, "Brake Burnishing".**

Disassembly and Assembly

INFOID:0000000008792148

DISASSEMBLY

1. Remove the caliper body from the torque member. Refer to BR-40, "Removal and Installation of Brake Caliper and Disc Rotor".
2. Remove the sliding pins and boots from the torque member.

3. Place a wooden block in the cylinder body and blow air into the union bolt hole to remove the piston and piston boot as shown.

   WARNING:
   Do not get your fingers caught between the piston and wooden block.

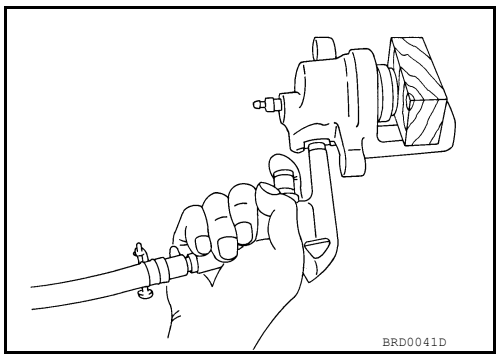

4. Remove the piston boot from the piston.
   CAUTION:
   Do not reuse piston boot.
5. Remove piston seal from cylinder body, using a suitable tool.
   CAUTION:
   Be careful not to damage cylinder body inner wall.

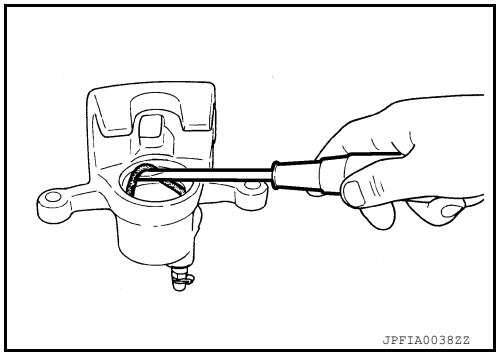

6. Remove the bleed valve and cap.

CALIPER INSPECTION

Cylinder Body

- Check inside surface of cylinder for score, rust wear, damage or foreign materials. If any of the above conditions are observed, replace cylinder body.
- Minor damage from rust or foreign materials may be eliminated by polishing surface with a fine emery paper. Replace cylinder body if necessary.

CAUTION:
- **Use new brake fluid for cleaning. Do not use mineral oils such as gasoline or kerosene.**

Torque Member

Check the torque member for wear, cracks, and damage. If damage or deformation is present, replace the torque member.

Piston

Check the piston for score, rust, wear, damage or presence of foreign materials. Replace if any of the above conditions are observed.

CAUTION:
Piston sliding surface is plated, do not polish with emery paper even if rust or foreign materials are stuck to sliding surface.

Sliding Pin Bolts and Sliding Pin Boots

Check the sliding pins and sliding pin boots for wear, damage, and cracks. If damage or deformation is present, replace the affected part.

ASSEMBLY

CAUTION:
Use NISSAN Rubber Grease when assembling.

1. Install the bleed valve and cap.

2. Apply rubber grease to the new piston seal (1) and insert the new piston seal (1) into the groove on the cylinder body.
   CAUTION:
   Do not reuse piston seal.

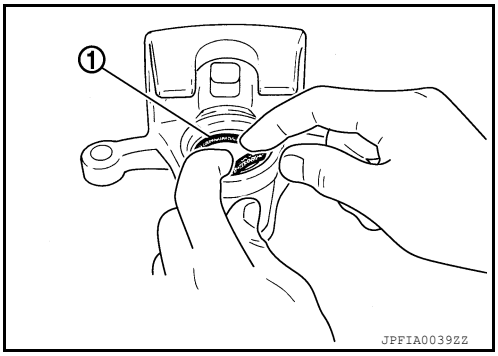

3. Apply rubber grease to the new piston boot (1). Cover the piston end (2) with the piston boot (1), and then install the cylinder side lip on the piston boot (1) securely into the groove on the cylinder body.
   CAUTION:
   - **Do not reuse piston boot.**
   - **Press pistons in evenly and vary the pressing points to prevent the cylinder inner wall from being damaged.**

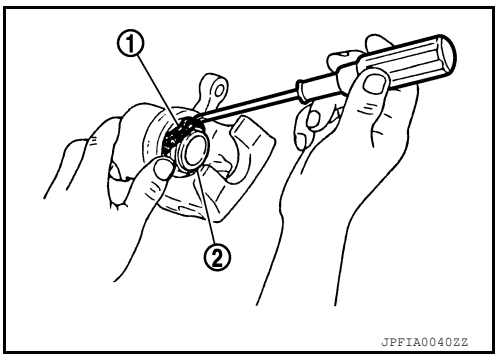

4. Install the piston (1) into the cylinder body and insert the piston boot (2) side lip into the piston groove as shown.
   CAUTION:
   Press pistons in evenly and vary the pressing points to prevent the cylinder inner wall from being damaged.

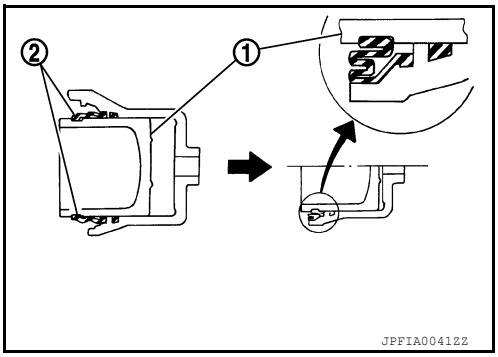

5. Apply rubber grease to the sliding pin boots, then install sliding pins and sliding pin boots on the torque member.
6. Install the caliper body on the torque member. Refer to BR-40, "Removal and Installation of Brake Caliper and Disc Rotor".

SERVICE DATA AND SPECIFICATIONS (SDS)

SERVICE DATA AND SPECIFICATIONS (SDS)

General Specification

INFOID:0000000008792149

Unit: mm (in)

Engine Type		QR25DE	VQ40DE
Front brake	Brake model	CLZ33VA	
	Rotor outer diameter × thickness	283 × 28 (11.142 × 1.102)	296 × 28 (11.654 × 1.102)
	Pad Length × width × thickness	140 × 50.5 × 10 (5.51 × 1.99 × 0.39)	
	Cylinder bore diameter (each)	46.4 (1.83)	
Rear brake	Brake model	CLZ14VA	
	Rotor outer diameter × thickness	286 × 18 (11.260 × 0.709)	
	Pad length × width × thickness	87.6 × 35.5 × 11.0 (3.449 × 1.398 × 0.433)	
	Cylinder bore diameter	38.1 (1.50)	
Control valve	Valve model	Electric brake force distribution	
Brake booster	Booster model	C215T	
	Diaphragm diameter	215 (8.465)	
Recommended brake fluid		Refer to MA-17, "FOR USA AND CANADA : Fluids and Lubricants" (United States and Canada) and MA-19, "FOR MEXICO : Fluids and Lubricants" (Mexico).	

Brake Pedal

INFOID:0000000008792150

Unit: mm (in)

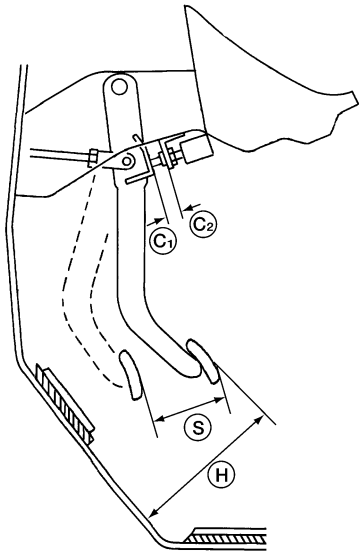

AWFIA0557ZZ

Pedal free height (H)	M/T	174.7 +10/-0 (6.88 +0.39/-0)
	A/T	182.1 +10/-0 (7.17 +0.39/-0)
Pedal full stroke (S)		153 (6.02)
Clearance between pedal stopper(C_1) and threaded end of stop lamp switch and ASCD cancel switch (C_2) (if equipped)		0.74 - 1.96 (0.029 - 0.077)

Brake Booster

INFOID:0000000008792151

Unit: mm (in)

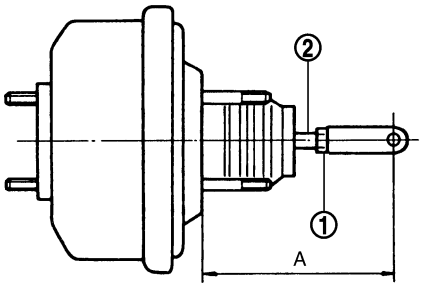

JPFIA0238ZZ

Input rod (2) with lock nut (1) length (A) standard dimension (without spacer block)	211 ± 0.5 (8.31 ± 0.02)

Check Valve

INFOID:0000000008792152

Vacuum leakage [at vacuum of -66.7 kPa (-500 mmHg, -19.69 inHg)]	Within 1.3 kPa (10 mmHg, 0.39 inHg) of vacuum for 15 seconds

Front Disc Brake

INFOID:0000000008792153

Unit: mm (in)

Engine type		QR25DE / VQ40DE
Brake model		CLZ33VA
Brake pad	Standard thickness (new)	10.0 (0.394)
	Minimum thickness	2.0 (0.079)
Disc rotor	Standard thickness (new)	28.0 (1.102)
	Minimum thickness	26.0 (1.024)
	Maximum uneven wear (measured at 8 positions)	0.015 (0.0006)
	Runout limit (with it attached to the vehicle)	0.05 (0.0020)

Rear Disc Brake

INFOID:0000000008792154

Unit: mm (in)

Engine type		QR25DE / VQ40DE
Brake model		CLZ14VA
Brake pad	Standard thickness (new)	11.0 (0.433)
	Minimum thickness	2.0 (0.079)
Disc rotor	Standard thickness (new)	18.0 (0.709)
	Minimum thickness	16.0 (0.630)
	Maximum uneven wear (measured at 8 positions)	0.015 (0.0006)
	Runout limit (with it attached to the vehicle)	0.05 (0.0020)