Service and Warranty Information

2007
X5
3.0i, 4.8i

The Ultimate Driving Machine®

CarManuals2.com

Owner/Driver Information:

Name _____

Address _____

_____

_____

_____

Owner/Driver Telephones:

Business _____

Home _____

Model X5 _____ Year 2007 _____

VIN | | | | | | | | | | | | | | | | |

Retail/In-Service Date _____

Trim Code _____ Color Code _____

Production Date _____

License Plate Number _____

BMW Center Telephone Numbers:

Offices _____

CarManuals2.com

Services _____

CarManuals2.com

Table of Contents

Page

The BMW Maintenance Program - 2007 X5 3.0i and 4.8i 1
Coverage 1
Maintenance Intervals 1
Exclusions from coverage 1
Maintenance Upgrade Option 1

Maintenance Program 2

The BMW Maintenance Program 2
Condition Based Service (CBS) 2

Service Interval Display 2
Info Display screen contents 2
Control Display screen contents 3
Symbols 3
Quality Certification I 4
Special Note 4

Maintenance summary 4
Standard operations 5
Engine oil 5
Microfilter (not shown in CBS display) 5
Front brake 5
Rear brake 5
Vehicle Check 5
Brake fluid 6
Spark plugs (not shown in CBS display) 6
Automatic Transmission (not shown in CBS display) 6

Evidence of maintenance work 7

Emission Control Maintenance Schedule 15

Battery Care 15

Corrosion Protection 15
Restoring corrosion protection 15
Underbody maintenance 16

Body Inspection 17

Customer Assistance Information 23

Customer Assistance - Notification 23

BBB Auto Line 24
California Residents 24

Special Programs 26

BMW Roadside Assistance 26
Owner's Eligibility 26
Getting Started 26
Calling For Assistance 27

Page

Services 27
Dispatch Service 27
On-Site Assistance 27
Lock-Out 27
Towing Service 28
Sign-and-Drive 28
Trip Interruption Benefits 28
Car Rental Discounts 28
Exclusions 28

Summary of BMW Limited Warranties 29

New SAV Limited Warranty - 2007 X5 (Valid only in the U.S.A. and Puerto Rico) 30
Warrantor 30
Warranty Period 30
Warranty Begins 30
Warranty Coverage 30
Safety Belt Warranty - Kansas 30
Towing/Other Owner Benefits 30
Other Items 30
General 31

Limited Warranty - Rust Perforation 2007 X5 31
REQUIRED MAINTENANCE: 31

Federal Emissions System Defect Warranty
(Valid only in the U.S.A. and Puerto Rico) 32
What is not covered 33
General 34

Federal Emissions Performance Warranty
(Valid only in the U.S.A. and Puerto Rico) 34

California Emission Control Warranty Statement*
Your Warranty Rights and Obligations 36
Manufacturer's Warranty Coverage: 36
Owner's Warranty Responsibilities: 36

California Emission Control System Limited Warranty* 37
What is not covered 38
General 38
California Emission Warranty
Parts List 39

Notice 39

Tire Warranty Statement 39

CarManuals2.com

The BMW Maintenance Program - 2007 X5 3.0i and 4.8i

The BMW Maintenance Program is a benefit designed to help reduce the cost of scheduled and unscheduled maintenance.

Every 2007 X5 purchased from an authorized BMW SAV center in the United States or Puerto Rico is covered by the BMW Maintenance Program for 48 months or 50,000 miles, whichever occurs first. Coverage begins on the date of first retail sale or the date the vehicle is first placed in service as a demonstrator or company vehicle, whichever is earlier.

Any authorized BMW SAV center in the United States or Puerto Rico will perform the scheduled or additional maintenance services on your vehicle at no expense to you. The maintenance schedule intervals are based on normal driving conditions and operation. **Should you request more frequent maintenance service, the cost of these services will not be covered by the Maintenance Program.**

Coverage

CarManuals2.com

The BMW Maintenance Program covers all factory-recommended maintenance, as determined by the Condition Based Service (CBS) system. Additional items that need replacement due to normal wear and tear, and that are not covered by the original New SAV Limited Warranty - such as brake pads, brake rotors and wiper blade inserts - are included, provided wear and tear exceeds BMW specifications. Any adjustments required due to normal operating conditions are also included. See pages 4 - 6 of this booklet for additional information.

Maintenance Intervals

Time intervals should be followed using the Conditioned Based Service (CBS) data.

This BMW X5 Service and Warranty Information Booklet should be presented to your authorized BMW SAV center when maintenance is required. Your authorized BMW SAV center will stamp this book documenting the services or maintenance performed.

Exclusions from coverage

- Items reimbursable under your New BMW SAV Limited Warranty.
- Gasoline and gasoline additive.
- Windshield washer additive (except when in conjunction with scheduled maintenance).
- Tires, wheel alignment, tire balance and rotation.
- Wear and tear of soft trim items, such as: seats, carpets, moldings, headliner, door panels and all chrome trim.
- Damage detected when performing the rust perforation inspection.
- Damage which results from negligence, improper operation of the vehicle, wear and tear or deterioration due to driving habits or conditions, improper repair, environmental influences, flood, accident or fire damage, road salt corrosion, alteration, installation of non-BMW accessories, or use of improper, poor quality or contaminated fuel.
- Altered or unreadable Vehicle Identification Number (VIN) or odometer irregularities or vehicles where the true mileage cannot be determined.
- Maintenance or repair after the vehicle is deemed a total loss.
- Maintenance or repairs performed by other than an authorized BMW SAV center within the United States or Puerto Rico.
- Vehicles used in competitive events.
- Oil changes performed outside the recommended maintenance intervals as indicated by the Service Interval Indicator.

Maintenance Upgrade Option

Please contact your authorized BMW SAV center for information regarding an optional 6 year 100,000 mile maintenance upgrade.

Maintenance Program

The BMW Maintenance Program has been devised with the following objectives: to maximize vehicle safety, reliability, and resale value by minimizing breakdowns resulting from wear, and minimizing cost and inconvenience by computing maintenance intervals based upon the specific manner in which each individual vehicle is driven.

Maintenance intervals on motor vehicles have conventionally been specified based upon accumulated mileage. However, driving conditions have a major influence on routine maintenance requirements; distance traveled is only one of the significant factors. A vehicle driven for 50,000 miles of short trips in the city with numerous cold starts, prolonged periods of idling, stop-and-go driving, and high engine speeds during acceleration requires more frequent maintenance intervals than a vehicle driven for 50,000 miles for long distances at low engine speeds primarily at operating temperature.

The advanced technologies at BMW have led to the development of the unique BMW Condition Based Service (CBS) system which computes the actual optimum maintenance requirements based not only upon the accumulated mileage, but taking into account important factors such as high or low engine speeds, short or long trip driving, and condition of the engine oil and brake pads.

The BMW Maintenance Program

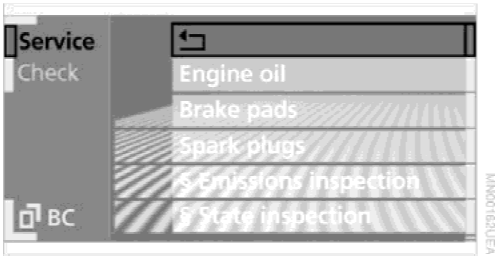

Condition Based Service (CBS)

CBS is a further development of the Service Interval Indicator System. Sensors and sophisticated algorithms take even more detailed account of the various conditions of vehicle use.

The remaining times for selected maintenance tasks as well as any legally prescribed dates are displayed to you individually:

▷ Engine oil

▷ Brakes - front and rear separately

▷ Brake fluid

▷ Vehicle check

▷ Required State Inspection(s)

CBS thus determines the current and future maintenance requirements. This data can also be read from the vehicle key by your BMW Service Advisor and used to propose the optimum scope of maintenance.

Have maintenance and repair work performed by your BMW center. Make sure that the maintenance work is stamped in this Service and Warranty Information Statement. These entries are the evidence of regular maintenance of your vehicle and a requirement for warranty claims.

⚠ Disconnecting the battery during periods of long-term storage will interrupt the calculation of time-based services. Have all items requiring time-based maintenance, such as brake fluid and coolant, and possibly also the engine oil brought up to date by your BMW center. Also see the section on battery care on page 15 of this statement.

Service Interval Display

Info Display screen contents

The distance remaining until your next service briefly appears when you switch on the ignition.

▷ The Info Display immediately switches to its compute mode when you press one of the two buttons in the turn signal indicator lever.

CarManuals2.com

Control Display screen contents

The current Status of Service items determined by the CBS are shown in the Control Display.

You can also view additional information on the service and maintenance requirements.

1. Open the start menu.
2. Press the controller to select the i-menu.
3. Select “Info sources” and press the controller.
4. Select “Service” and press the controller.
5. Change to the upper field if necessary. Turn the controller until “Service requirements” is selected and press the controller.

6. Select “Status” and press the controller.

Symbols

No service is currently required.

The service deadline has already passed.

The deadline for service or a state inspection is approaching. Please contact your SAV center for an appointment.

You can request more detailed information on every entry.

Turn the controller to scroll through the list, then confirm the selected entry.

Confirm to exit the list.

The vehicles current service status is automatically saved in the vehicles ignition key. The Service Advisor at your SAV center has a device called a key reader. When your Service Advisor inserts your key into the key reader, all pertinent vehicle and servicing data will be available, and a customized maintenance checklist is printed out based on the specific operations called for by the Condition Based Service.

The performance of certain subsequent maintenance elements, as required by the SAV New Vehicle Limited Warranty, will be specified at intervals computed by the BMW Service Interval Indicator as follows:

– Oil Service: Engine oil should be changed with the engine at operating temperature.

Note: Change oil at least once a year.

All 2007 model year X5s are factory-filled with BMW High Performance Synthetic oils. At the time of the printing of this booklet, the following oils are strongly recommended and approved by BMW:

- BMW High Performance 5W-30 Synthetic Oil (BMW part number 07 51 0 017 866)
- Mobil 1 5W-30
- Mobil 1 5W-40

CarManuals2.com

BMW is evaluating various synthetic oils for inclusion in our list of recommended engine oils. For the most current list of synthetic oils, please contact your SAV center, or call BMW of North America, LLC. at 1 800 831-1117. You can also obtain this information from our website, www.bmwusa.com/.

BMW recommends that you check your engine oil level whenever you add fuel to your vehicle. If you need to add oil between oil changes and are unable to obtain BMW High Performance Synthetic Oil, Mobil 1 or another special oil on the list, use a synthetic oil with an API rating of SH or higher.

The following maintenance elements must be performed at the mileage/time stated (time intervals begin from the vehicle's production date):

- Brake Fluid Service: Change brake fluid every two years, or when specified by CBS.
- Oxygen Sensor Service: The oxygen sensor deteriorates strictly on a mileage basis and must therefore be replaced at the following intervals to maximize vehicle fuel economy and minimize exhaust pollution.

  120,000 miles.
- Spark Plug Service: Replace at 100,000 miles, or as determined by CBS.
- The engine coolant has a lifetime rating and does not need to be changed.

For your convenience, you may also wish to have your SAV center perform any necessary operations to fulfill any state inspection requirements in your area concurrent with the maintenance elements specified above during other repairs.

Make sure that confirmation of maintenance work is always entered in this Service and Warranty Information Statement. You may need this for any warranty claims that become necessary, and later on as evidence that your car has been given the correct and regular maintenance that justifies its resale or trade-in value.

BMW has applied the most modern technological advances not only to the design and production of your vehicle, but also to computing of the optimum maintenance interval for your type of operations and driving style. Your SAV center has made a substantial investment in unique BMW special service tools to enable his BMW factory trained service technicians to perform quality repairs on your X5 in minimal time. Your service technician looks forward to serving your every service need and to help maximize your satisfaction with your X5, its longevity, and resale value.

Quality Certification I

Quality Certification I

Performed by (selling BMW center/Stamp with Code)

FREE OF CHARGE

Date _____ Mileage _____

Authorized
Signature of Service Manager _____

For a detailed list of items inspected, refer to the Quality Certification I form provided to the Owner at time of delivery. A copy of the form is on file at the selling SAV center.

Special Note

The maintenance requirements for your vehicle are determined dynamically by the Condition Based Service (CBS) system . The maintenance items stated herein reflect the latest information available at the time of the printing of this statement, and are subject to change. The most current maintenance recommendations are available from your authorized SAV center.

Maintenance summary

The Condition Based Service (CBS) system will determine the requirement for performance of the maintenance services described on this and the following page. These services may be required either individually or in conjunction with other maintenance services.

Depending on the vehicle's use, CBS may calculate service intervals which are different from the guidelines listed.

CarManuals2.com

CarManuals2.com

Standard operations

Maintenance work

- Brief diagnostic test
- Verify Check Control messages
- Check indicator and warning lights
- Reset CBS display

Engine oil

Maintenance work

- Change the engine oil and oil filter. We recommend BMW High Performance 5W-30 Synthetic Oil P/N 07 51 0 017 866.
- After every 3rd engine oil change: Intake air cleaner: replace air filter element (reduce replacement interval in dusty operating conditions).
- Parking brake: check function

Microfilter (not shown in CBS display)

Maintenance work

- Replace ventilation microfilter

Front brake

Maintenance work

- Replace brake pads, clean brake pad contact points in calipers.
- Brake discs: Check surface and thickness, if necessary replace at extra charge*

Rear brake

Maintenance work

- Replace brake pads, clean brake pad contact points in calipers.
- Brake discs: Check surface and thickness, if necessary replace at extra charge*
- Parking brake: Check condition, brake lining thickness and function, if necessary replace at extra charge*.

*Unless covered by Maintenance Program

Vehicle Check

Maintenance work

- Check operation of horn, headlight flasher and hazard warning flashers.
- Check instrument and control lighting and heater/air-conditioning blower.
- Check lighting system: turn signals, back-up, license plate, interior (incl. map, reading lights), glovebox, flashlight, luggage area lights.
- Safety belts: check condition and function.
- Check windshield wiper and washer jet positions.
- Body: check for corrosion (except cavities).
- Tires: check tread depth, wear pattern, outer condition, inflation pressure (also spare tire). If necessary, correct pressure (also spare).
- Battery: check state of charge (magic eye) and charge if required.
- Power steering reservoir: Check fluid level.
- Visually inspect all SRS airbag units for torn covers, obvious damage or attachment of stickers.
- Rear-view mirrors, optional rear-view camera
- Coolant: check fluid level and concentration.
- Windshield washer and intensive cleaning system: check protection level, fluid level, top if necessary.
- Brake system connections and lines: check for leaks, damage and correct positioning
- Underbody, incl. all visible parts (i.e. transmission, rear axle, fuel lines, exhaust system), check for damage, leaks and corrosion
- Steering components: check for clearance, leaks, damage and wear
- Final Inspection: Road test with check of
  - Brakes
  - Steering
  - Shock absorbers (visual)
  - Transmission

CarManuals2.com

Brake fluid

Maintenance work

- Replace brake fluid

Spark plugs (not shown in CBS display)

Maintenance work

- Replace spark plugs at intervals of 100,000 miles

Automatic Transmission (not shown in CBS display)

Maintenance work

- Replace ATF at intervals of 100,000 miles

Evidence of maintenance work

yes	no		yes	no		
		Engine Oil			**Vehicle check**	
		Front Brake			**Brake fluid**	Distance reading
		Rear Brake			**State inspection(s)**	
		Microfilter			**Air cleaner element**	
		Spark plugs				Date, stamp and signature

yes	no		yes	no		
		Engine Oil			**Vehicle check**	
		Front Brake			**Brake fluid**	Distance reading
		Rear Brake			**State inspection(s)**	
		Microfilter			**Air cleaner element**	
		Spark plugs				Date, stamp and signature

CarManuals2.com

yes	no		yes	no		
		Engine Oil			**Vehicle check**	
		Front Brake			**Brake fluid**	Distance reading
		Rear Brake			**State inspection(s)**	
		Microfilter			**Air cleaner element**	
		Spark plugs				Date, stamp and signature

yes	no		yes	no		
		Engine Oil			**Vehicle check**	
		Front Brake			**Brake fluid**	Distance reading
		Rear Brake			**State inspection(s)**	
		Microfilter			**Air cleaner element**	
		Spark plugs				Date, stamp and signature

yes	no		yes	no		
		Engine Oil			**Vehicle check**	
		Front Brake			**Brake fluid**	Distance reading
		Rear Brake			**State inspection(s)**	
		Microfilter			**Air cleaner element**	
		Spark plugs				Date, stamp and signature

yes	no		yes	no		
		Engine Oil			**Vehicle check**	
		Front Brake			**Brake fluid**	Distance reading
		Rear Brake			**State inspection(s)**	
		Microfilter			**Air cleaner element**	
		Spark plugs				Date, stamp and signature

CarManuals2.com

yes	no		yes	no		
		Engine Oil			**Vehicle check**	
		Front Brake			**Brake fluid**	Distance reading
		Rear Brake			**State inspection(s)**	
		Microfilter			**Air cleaner element**	
		Spark plugs				Date, stamp and signature

yes	no		yes	no		
		Engine Oil			**Vehicle check**	
		Front Brake			**Brake fluid**	Distance reading
		Rear Brake			**State inspection(s)**	
		Microfilter			**Air cleaner element**	
		Spark plugs				Date, stamp and signature

yes	no		yes	no		
		Engine Oil			**Vehicle check**	
		Front Brake			**Brake fluid**	Distance reading
		Rear Brake			**State inspection(s)**	
		Microfilter			**Air cleaner element**	
		Spark plugs				Date, stamp and signature

CarManuals2.com

CarManuals2.com

yes	no		yes	no		
		Engine Oil			**Vehicle check**	
		Front Brake			**Brake fluid**	Distance reading
		Rear Brake			**State inspection(s)**	
		Microfilter			**Air cleaner element**	
		Spark plugs				Date, stamp and signature

yes	no		yes	no		
		Engine Oil			**Vehicle check**	
		Front Brake			**Brake fluid**	Distance reading
		Rear Brake			**State inspection(s)**	
		Microfilter			**Air cleaner element**	
		Spark plugs				Date, stamp and signature

yes	no		yes	no		
		Engine Oil			**Vehicle check**	
		Front Brake			**Brake fluid**	Distance reading
		Rear Brake			**State inspection(s)**	
		Microfilter			**Air cleaner element**	
		Spark plugs				Date, stamp and signature

yes	no		yes	no		
		Engine Oil			**Vehicle check**	
		Front Brake			**Brake fluid**	Distance reading
		Rear Brake			**State inspection(s)**	
		Microfilter			**Air cleaner element**	
		Spark plugs				Date, stamp and signature

yes	no		yes	no		
		Engine Oil			**Vehicle check**	
		Front Brake			**Brake fluid**	Distance reading
		Rear Brake			**State inspection(s)**	
		Microfilter			**Air cleaner element**	
		Spark plugs				Date, stamp and signature

yes	no		yes	no		
		Engine Oil			**Vehicle check**	
		Front Brake			**Brake fluid**	Distance reading
		Rear Brake			**State inspection(s)**	
		Microfilter			**Air cleaner element**	
		Spark plugs				Date, stamp and signature

CarManuals2.com

yes	no		yes	no		
		Engine Oil			**Vehicle check**	
		Front Brake			**Brake fluid**	Distance reading
		Rear Brake			**State inspection(s)**	
		Microfilter			**Air cleaner element**	
		Spark plugs				Date, stamp and signature

yes	no		yes	no		
		Engine Oil			**Vehicle check**	
		Front Brake			**Brake fluid**	Distance reading
		Rear Brake			**State inspection(s)**	
		Microfilter			**Air cleaner element**	
		Spark plugs				Date, stamp and signature

yes	no		yes	no		
		Engine Oil			**Vehicle check**	
		Front Brake			**Brake fluid**	Distance reading
		Rear Brake			**State inspection(s)**	
		Microfilter			**Air cleaner element**	
		Spark plugs				Date, stamp and signature

CarManuals2.com

CarManuals2.com

yes	no		yes	no		
		Engine Oil			**Vehicle check**	
		Front Brake			**Brake fluid**	Distance reading
		Rear Brake			**State inspection(s)**	
		Microfilter			**Air cleaner element**	
		Spark plugs				Date, stamp and signature

yes	no		yes	no		
		Engine Oil			**Vehicle check**	
		Front Brake			**Brake fluid**	Distance reading
		Rear Brake			**State inspection(s)**	
		Microfilter			**Air cleaner element**	
		Spark plugs				Date, stamp and signature

yes	no		yes	no		
		Engine Oil			**Vehicle check**	
		Front Brake			**Brake fluid**	Distance reading
		Rear Brake			**State inspection(s)**	
		Microfilter			**Air cleaner element**	
		Spark plugs				Date, stamp and signature

yes	no		yes	no		
		Engine Oil			**Vehicle check**	
		Front Brake			**Brake fluid**	Distance reading
		Rear Brake			**State inspection(s)**	
		Microfilter			**Air cleaner element**	
		Spark plugs				Date, stamp and signature

yes	no		yes	no		
		Engine Oil			**Vehicle check**	
		Front Brake			**Brake fluid**	Distance reading
		Rear Brake			**State inspection(s)**	
		Microfilter			**Air cleaner element**	
		Spark plugs				Date, stamp and signature

CarManuals2.com

yes	no		yes	no		
		Engine Oil			**Vehicle check**	
		Front Brake			**Brake fluid**	Distance reading
		Rear Brake			**State inspection(s)**	
		Microfilter			**Air cleaner element**	
		Spark plugs				Date, stamp and signature

Emission Control Maintenance Schedule

The maintenance schedule as shown is required for the proper functioning of the emission control systems for optimum vehicle performance and fuel economy.

Basic Engine	
Engine oil	As specified by CBS
Engine oil filter	As specified by CBS
Fuel System	
Air filter	As determined by CBS
Ignition System	
Spark plugs	As determined by CBS
Emission Control Components	
Oxygen sensor	120,000 miles

Battery Care

If your X5 is driven only for short distances of less than 10 miles over a prolonged period of time, without an occasional drive at highway speeds, the engine's charging system will not maintain the battery. Insufficient use of the SAV could result in short term starting problems and in the long term could damage the battery.

In case your X5 is not operated for more than four weeks it is advisable to:

a. consider using a proper trickle charger, following the charger manufacturer's instructions, to maintain the battery's state of charge; or

b. consult your BMW SAV center regarding battery removal. Once removed, the battery must be charged and stored in a cool, dry place where it can be protected from freezing. If the battery will be stored for over 3 months, it must be recharged every 3 months, or else it will become damaged and useless.

Please consult with your BMW SAV center for further guidance and information.

Corrosion Protection

Extensive corrosion protection measures implemented by BMW now make it possible to offer a twelve-year limited mileage anti-corrosion warranty against rust perforation on your SAV provided that the SAV is maintained in accordance with the provisions of the New SAV Limited Warranty as outlined in the Warranty Section of this Statement (page 30).

The major degree of corrosion protection is due to the electrophoretic dip painting process which cathodically deposits paint particles on all body parts, attracting paint particles into the minutest cavities or seams. Body parts are designed to provide optimum corrosion protection.

During manufacture, exterior body parts receive an additional corrosion protection coat. Hood, trunk, doors and other body parts with metal folds are coated with PVC and sealed from the outside.

All floor panels receive a resilient coating of PVC for maximum protection against damage due to stones, etc.

Corrosion protection materials tested over many years are applied to the surfaces of cavities and to the entire underside of the vehicle during and after assembly.

Requirements for maintaining the twelve-year unlimited mileage anti-corrosion warranty are outlined in the Warranty Section of this Booklet (page 31).

Restoring corrosion protection

Please take care that anti-corrosion material is replaced when your car is repaired after body or chassis damage.

BMW will not accept any liability for any parts and accessories not approved by BMW.

CarManuals2.com

CarManuals2.com

Underbody maintenance

The underbody has to be cleaned at least once a year, in spring, with plain water in order to remove mud, chemical sediments and other deposits. If those materials are not removed, corrosion (rust) will occur.

Your BMW SAV center will do this anti-corrosion service for you.

WARNING

Do not apply additional undercoating or rust-proofing on or near the exhaust manifold, exhaust pipes, catalytic converter or heat shields. During driving, the substance used for undercoating could overheat and cause a fire.

Body Inspection

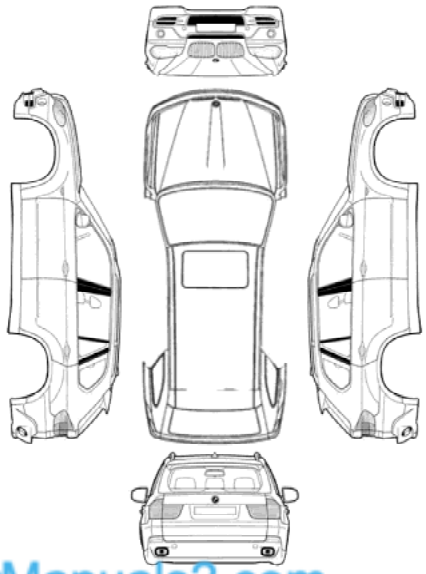

CarManuals2.com

Show damage location above with codes:

X Stone damage O Dent

△ Scratch ▨ Collision damage

❑ Undercoating damage (explain in remarks)

SAV inspected and repaired if necessary to BMW standards required by BMW twelve year unlimited mileage anti-corrosion warranty

☐ Yes

☐ No

☐ Partially*

*Remarks–explain (use repair order if necessary)

The undersigned herewith confirms that this inspection has been carried out by the authorized BMW SAV center below and this BMW center has given notification of any body repairs necessary.

Customer's signature _____ Date _____

Performed by BMW SAV center/Stamp with Code

BMW center authorized signature _____

Body Inspection

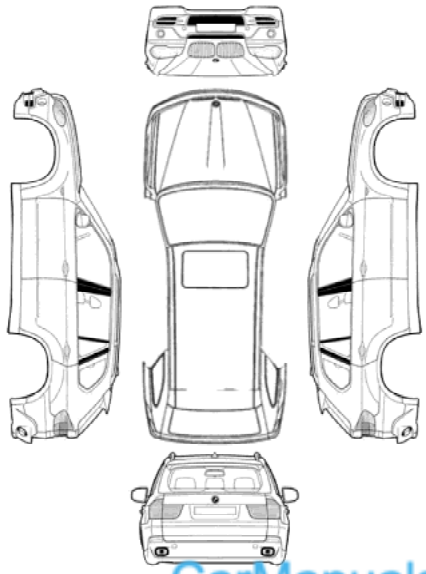

CarManuals2.com

Show damage location above with codes:

X Stone damage O Dent

△ Scratch ▨ Collision damage

❑ Undercoating damage (explain in remarks)

SAV inspected and repaired if necessary to BMW standards required by BMW twelve year unlimited mileage anti-corrosion warranty

☐ Yes

☐ No

☐ Partially*

*Remarks–explain (use repair order if necessary)

The undersigned herewith confirms that this inspection has been carried out by the authorized BMW SAV center below and this BMW center has given notification of any body repairs necessary.

Customer's signature _____ Date _____

Performed by BMW SAV center/Stamp with Code

BMW center authorized signature _____

Body Inspection

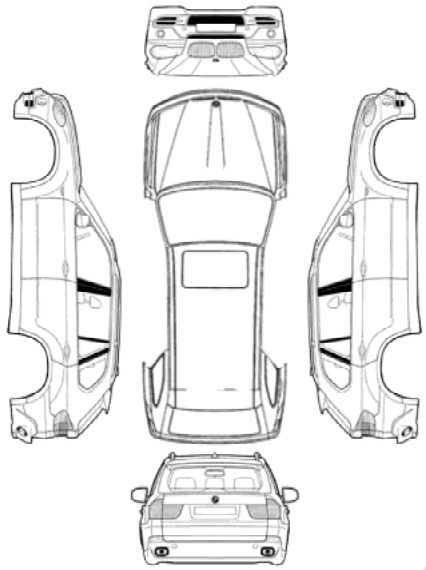

Show damage location above with codes:

X Stone damage O Dent

△ Scratch ▨ Collision damage

❑ Undercoating damage (explain in remarks)

SAV inspected and repaired if necessary to BMW standards required by BMW twelve year unlimited mileage anti-corrosion warranty

☐ Yes

☐ No

☐ Partially*

*Remarks–explain (use repair order if necessary)

CarManuals2.com

The undersigned herewith confirms that this inspection has been carried out by the authorized BMW SAV center below and this BMW center has given notification of any body repairs necessary.

Customer's signature _____ Date _____

Performed by BMW SAV center/Stamp with Code

BMW center authorized signature _____

CarManuals2.com

Body Inspection

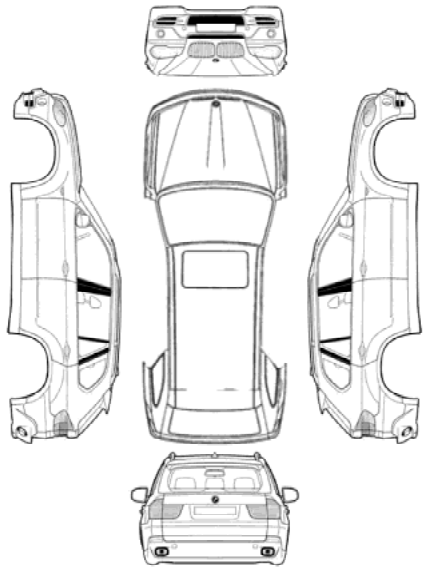

Show damage location above with codes:

X Stone damage O Dent

△ Scratch ▨ Collision damage

❑ Undercoating damage (explain in remarks)

SAV inspected and repaired if necessary to BMW standards required by BMW twelve year unlimited mileage anti-corrosion warranty

☐ Yes

☐ No

☐ Partially*

*Remarks–explain (use repair order if necessary)

The undersigned herewith confirms that this inspection has been carried out by the authorized BMW SAV center below and this BMW center has given notification of any body repairs necessary.

Customer's signature _____ Date _____

Performed by BMW SAV center/Stamp with Code

BMW center authorized signature _____

Body Inspection

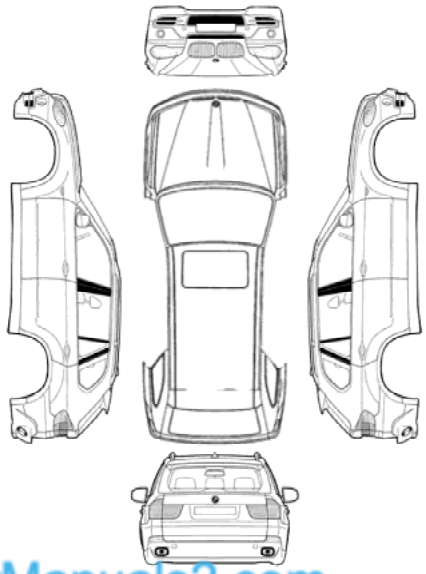

CarManuals2.com

Show damage location above with codes:

X Stone damage O Dent

△ Scratch ▨ Collision damage

❑ Undercoating damage (explain in remarks)

SAV inspected and repaired if necessary to BMW standards required by BMW twelve year unlimited mileage anti-corrosion warranty

☐ Yes

☐ No

☐ Partially*

*Remarks–explain (use repair order if necessary)

The undersigned herewith confirms that this inspection has been carried out by the authorized BMW SAV center below and this BMW center has given notification of any body repairs necessary.

Customer's signature _____ Date _____

Performed by BMW SAV center/Stamp with Code

BMW center authorized signature _____

CarManuals2.com

Body Inspection

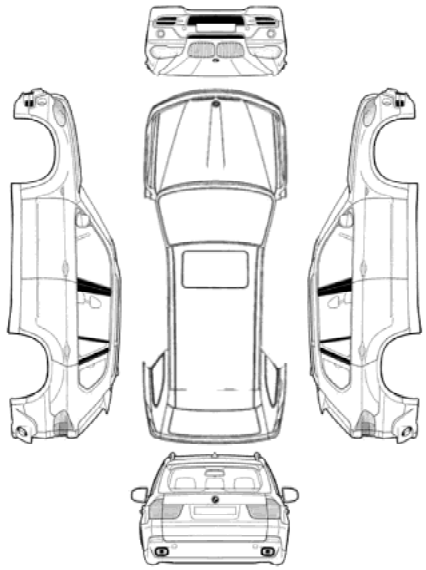

Show damage location above with codes:

X Stone damage O Dent

△ Scratch ▨ Collision damage

❑ Undercoating damage (explain in remarks)

SAV inspected and repaired if necessary to BMW standards required by BMW twelve year unlimited mileage anti-corrosion warranty

☐ Yes

☐ No

☐ Partially*

*Remarks–explain (use repair order if necessary)

The undersigned herewith confirms that this inspection has been carried out by the authorized BMW SAV center below and this BMW center has given notification of any body repairs necessary.

Customer's signature _____ Date _____

Performed by BMW SAV center/Stamp with Code

BMW center authorized signature _____

CarManuals2.com

Customer Assistance Information

Your satisfaction with our product and the services provided by authorized BMW SAV centers is of great importance to us. We take pride in our product, as does the BMW SAV center who services it. If you should ever have a question regarding your BMW SAV center's service or your BMW's performance, we recommend that you contact your authorized BMW SAV center. Should you travel to an unfamiliar area, the BMW center directory provided at the time of delivery will help you locate the nearest authorized BMW SAV center. The centers listed are equipped to help you with matters related to your BMW vehicle.

When contacting an authorized BMW SAV center, we suggest that depending upon the nature of your contact, you discuss it with either the Sales, Service, or Parts Manager.

As all matters are resolved at the BMW SAV center level, it is important that they be given the opportunity to provide a solution. Should you feel that you were not provided with the proper response, we urge you to contact the General Manager or BMW Center Operator.

Despite the best intentions of all parties, a misunderstanding may occur between you and your BMW SAV center. Should this occur and you require further assistance, please contact the BMW NA Customer Relations Department at 1 800 831-1117 or through our website at www.bmwusa.com. When contacting us, we ask that you provide the following information:

1. Your name, address and telephone number.
2. SAV Identification Number (last seven digits).
3. SAV's delivery date.
4. SAV mileage.
5. Selling BMW SAV center's name.
6. Servicing BMW SAV center's name.
7. Description of the problem.

A BMW NA Customer Relations Representative will carefully review all the facts involved and let you know what further action will be taken in conjunction with your BMW SAV center. Please remember: the first step in resolving a complaint is to contact the authorized BMW SAV center that performed the work on your vehicle. They have the necessary equipment and the personnel to achieve this goal.

We are confident that every effort will be made to ensure your satisfaction.

Customer Assistance - Notification

During a specific period (the earlier of 12 months or 12,000 miles, though this period varies by state), some states require us or our authorized BMW SAV center, to repair in a reasonable number of attempts, any defect or condition which substantially impairs the use, value, or safety of a new SAV sold, leased or registered in that state.

A "reasonable number of attempts" is generally defined as (i) four or more attempts to repair the same defect (the number of attempts vary by state) or (ii) the SAV is out of service by reason of one or more repair(s) for more than a cumulative total of 30 days (this period varies by state), except for delays created by conditions beyond our control.

If we are unable to correct a defect or condition covered by these statutes in a reasonable number of attempts, we may be obligated either to replace the SAV or reimburse the owner/lessee in an amount equal to the purchase price or lease payments paid by the owner/lessee, less the amount directly attributable to use of the SAV by the owner/lessee.

YOU SHOULD SEND WRITTEN NOTIFICATION DIRECTLY TO BMW OF NORTH AMERICA OF THE EXISTENCE OF AN ALLEGED DEFECT. SEND WRITTEN COMMUNICATION TO THE CUSTOMER RELATIONS AND SERVICES DEPARTMENT ADDRESS LISTED BELOW.

BMW OF NORTH AMERICA, LLC
CUSTOMER RELATIONS AND SERVICES DEPARTMENT
P.O. BOX 1227
WESTWOOD, NEW JERSEY 07675-1227

Telephone: 1 800 831-1117

BBB Auto Line

If your concern is still not resolved to your satisfaction, BMW offers additional assistance through BBB AUTO LINE in ARKANSAS, CALIFORNIA, GEORGIA, IDAHO, IOWA, KENTUCKY, MARYLAND, MASSACHUSETTS, MINNESOTA, PENNSYLVANIA, OHIO, and VIRGINIA. BBB AUTO LINE is a dispute resolution program administered by the Council of Better Business Bureaus. BBB AUTO LINE resolves disputes through mediation or arbitration. Mediation is an informal proceeding whereby a neutral third party (mediator) helps the parties to find an acceptable resolution. Arbitration is also an informal proceeding in which an impartial third party renders a decision after a hearing at which both parties have an opportunity to be heard. You can select mediation or arbitration or both.

The program is free of charge to you, the consumer but there are some minimum requirements for participation in the program. Please contact BBB AUTO LINE at the address or phone number listed below for more details:

BBB AUTO LINE
4200 Wilson Boulevard, Suite 800
Arlington, VA 22203
1 800 955-5100

If you wish to use the program and you qualify for participation, you will be required to provide the following information:

▷ Your name and address

▷ The vehicle identification number (VIN)

▷ The make, model and year of your vehicle

▷ A description of the problem with your vehicle.

BBB AUTO LINE will also ask you for other information that may help resolve your concerns, such as the purchase price of your vehicle, any mileage at the time of purchase, the current mileage, and copies of repair orders.

BBB AUTO LINE will notify you when your claim has been filed. If you decide to arbitrate you may attend the hearing in person or by telephone. You may bring witnesses and give supporting evidence. You may also submit your claim in writing and ask for a decision on the documents you submit, without attending a hearing. BBB AUTO LINE will usually render a decision within 40 days from the time you file your complaint. The decision is binding on BMW if you decide to accept it. BMW must comply with the decision within the time frame specified by the arbitrator.

Important: You must use BBB AUTO LINE before asserting in court any rights or remedies created by the Magnuson Moss Warranty Act, ("The Act") 15 U.S.C. Sec. 2301, et seq. You may also be required to use BBB AUTO LINE before seeking remedies under your state's "Lemon Law". If you choose to seek redress by pursuing rights and remedies not created by Title 1 of Magnuson Moss Warranty Act, prior resort to the BBB AUTO LINE is not required by any provision of the Act.

California Residents

1. BMW OF NORTH AMERICA, LLC ("BMW") participates in **BBB** AUTO LINE, a mediation/arbitration program administered by the Council of Better Business Bureaus [4200 Wilson Boulevard, Arlington, Virginia 22203] through local Better Business Bureaus. The Arbitration Certification Program of the California Department of Consumer Affairs has certified **BBB** AUTO LINE and BMW.
2. If you have a problem arising under a BMW written warranty, we encourage you to bring it to our attention. If we are unable to resolve it, you may file a claim with **BBB** AUTO LINE. Claims must be filed with **BBB** AUTO LINE within six (6) months after the expiration of the warranty.
3. To file a claim with **BBB** AUTO LINE, call 1 800 955-5100. There is no charge for the call.
4. In order to file a claim with **BBB** AUTO LINE, you will have to provide your name and address, the brand name and vehicle identification number (VIN) of your vehicle, and a statement of the nature of your problem or complaint. You will also be asked to provide: the approximate date of your acquisition of the vehicle, the vehicle's current mileage, the approximate date and mileage at the time any problem(s) were first brought to the attention of BMW or one of our dealers, and a statement of the relief you are seeking.

CarManuals2.com

5. **BBB** AUTO LINE staff may try to help resolve your dispute through mediation. If mediation is not successful, or if you do not wish to participate in mediation, claims within the program's jurisdiction may be presented to an arbitrator at an informal hearing. The arbitrator's decision should ordinarily be issued within 40 days from the time your complaint is filed; there may be a delay of 7 days if you did not first contact BMW about your problem, or a delay of up to 30 days if the arbitrator requests an inspection/report by an impartial technical expert or further investigation and report by **BBB** AUTO LINE.

6. You are required to use **BBB** AUTO LINE before asserting in court any rights or remedies conferred by California Civil Code Section 1793.22. You are not required to use BBB AUTO LINE before pursuing rights and remedies under any other state or federal law. "You are also required to use **BBB** AUTO LINE before exercising rights or seeking remedies created by Title I of the Magnuson-Moss Warranty Act, 15 U.S.C. sec. 2301 et seq. If you choose to seek redress by pursuing rights and remedies not created by California Civil Code Section 1793.22 or Title I of the Magnuson-Moss Warranty Act, resort to **BBB** AUTO LINE is not required by those statutes."

7. California Civil Code Section 1793.2(d) requires that, if BMW or its representative is unable to repair a new motor vehicle to conform to the vehicle's applicable express warranty after a reasonable number of attempts, BMW may be required to replace or repurchase the vehicle. California Civil Code Section 1793.22(b) creates a presumption that BMW has had a reasonable number of attempts to conform the vehicle to its applicable express warranties if, within 18 months from delivery to the buyer or 18,000 miles on the vehicle's odometer, whichever occurs first, *one or more of the following occurs:*
   - The same nonconformity [a failure to conform to the written warranty that substantially impairs the use, value or safety of the vehicle] results in a condition that is likely to cause death or serious bodily injury if the vehicle is driven AND the nonconformity has been subject to repair two or more times by BMW or its agents AND the buyer or lessee has directly notified BMW of the need for the repair of the nonconformity; OR
   - The same nonconformity has been subject to repair 4 or more times by BMW or its agents AND the buyer has notified BMW of the need for the repair of the nonconformity; OR
   - The vehicle is out of service by reason of repair of nonconformities by BMW or its agents for a cumulative total of more than 30 calendar days after delivery of the vehicle to the buyer.

NOTICE TO BMW AS REQUIRED ABOVE SHALL BE SENT TO THE FOLLOWING ADDRESS:

BMW of North America, LLC
Customer Relations and Services
Department
P.O. Box 1227
Westwood, New Jersey 07675-1227
1 800 831-1117

CarManuals2.com

8. The following remedies may be sought in BBB AUTO LINE: repairs, reimbursement for money paid to repair a vehicle or other expenses incurred as a result of a vehicle nonconformity, repurchase or replacement of your vehicle and compensation for damages and remedies available under BMW's written warranty or applicable law.

9. The following remedies may not be sought in **BBB** AUTO LINE: punitive or multiple damages, attorneys' fees, or consequential damages other than as provided in California Civil Code Section 1794(a) and (b).

10. You may reject the decision issued by a **BBB** AUTO LINE arbitrator. If you reject the decision, you will be free to pursue further legal action. The arbitrator's decision and any findings will be admissible in a court action.

11. If you accept the arbitrator's decision, BMW will be bound by the decision, and will comply with the decision within a reasonable time not to exceed 30 days after we receive notice of your acceptance of the decision.

12. Please call **BBB** AUTO LINE at 1 800 955-5100 for further details about the program. IDAHO Residents IMPORTANT: IF THIS VEHICLE IS DEFECTIVE, YOU MAY BE ENTITLED UNDER THE STATE'S LEMON LAW TO REPLACEMENT OF IT OR A REFUND OF ITS PURCHASE PRICE OR YOUR LEASE PAYMENTS. HOWEVER, TO BE ENTITLED TO REFUND OR REPLACEMENT, YOU MUST FIRST NOTIFY THE MANUFACTURER, ITS AGENT, OR ITS AUTHORIZED DEALER OF THE PROBLEM IN WRITING AND GIVE THEM AN OPPORTUNITY TO REPAIR THE VEHICLE. YOU ALSO HAVE A RIGHT TO SUBMIT YOUR CASE TO THE CONSUMER ARBITRATION PROGRAM WHICH THE MANUFACTURER MUST OFFER IN THIS STATE.

CarManuals2.com

Special Programs

SOMETIMES BMW OF NORTH AMERICA OFFERS A SPECIAL ADJUSTMENT PROGRAM TO PAY ALL OR PART OF THE COST OF CERTAIN REPAIRS BEYOND THE TERMS OF THE WARRANTY. CHECK WITH YOUR AUTHORIZED BMW SAV CENTER TO DETERMINE WHETHER ANY ADJUSTMENT PROGRAM IS APPLICABLE TO YOUR SAV.

BMW Roadside Assistance

The BMW Roadside Assistance Program reflects BMW's commitment to your complete satisfaction with the BMW ownership experience.

It is available for U.S. version BMWs in all 50 states, Canada, and Puerto Rico 24 hours a day, 365 days a year.

It is a valuable benefit provided to you at no additional cost. (Subject to certain limitations and exclusions noted on page 28).

Owner's Eligibility

You are covered if your SAV is:

– A new BMW SAV, distributed by BMW NA, and purchased at an authorized BMW SAV center, OR;

– A new BMW SAV, purchased under the BMW NA European Delivery Plan, OR;

– A new, U.S. version, BMW SAV purchased under the Diplomatic or Military Sales programs, operated in any of the 50 states, Canada and Puerto Rico.

Coverage is provided for the vehicle itself, regardless of the driver.

Protection:
New BMWs — Protection is provided for 4 years/unlimited miles. NOTE: This does not affect warranty coverage which remains at 4 years/50,000 miles.
Certified Pre-Owned BMWs — 6 years/unlimited miles from the in-service date.

Getting Started

A temporary Roadside Assistance card can be found inside your vehicle portfolio. It contains the 24-hour toll-free number for Roadside Assistance.

For your convenience a decal which shows the same information as the Roadside Assistance card, has been affixed to the tool kit cover on the trunk lid.

In a few weeks you will receive a permanent Roadside Assistance card by mail. Your date of purchase and vehicle identification number (VIN) are embossed on the card.

This card should be carried by the driver of your BMW.

Calling For Assistance

The toll-free BMW Roadside Assistance number (1 800 332-4269) is answered by a BMW Roadside Assistance service representative. In order for you to receive quick and reliable services, it is essential that you provide detailed and accurate information to the service representative.

Be prepared to give:

1. Your name and address.
2. Your complete SAV Identification Number (found on your SAVe registration, your permanent Roadside Assistance card or on the bottom drivers side of your windshield).
3. Model description of your vehicle.
4. Date of purchase.
5. License plate number of your SAV.
6. SAV location (including nearby crossroads/intersections, highway mile markers, street numbers, landmarks, etc.).
7. Location you are calling from (including a telephone number where you can be reached). If you are calling from a public phone wait there for the return call. Do not leave this location without informing the Roadside Assistance service representative.
8. A description of your SAV's problem. Specific and accurate information will enable the Roadside Assistance service representative to provide the proper help.

Emergency Valet Service. Should there be a need beyond BMW Roadside Assistance, Emergency Valet will provide a personal assistant who will help in every way to get you to your final destination. Emergency Valet will help you locate a rental car or taxi agency, hotel or even help procure airline reservations. In the event of an emergency, this service will assist you in getting information out to the proper party whether it is business or personal. If we are unable to contact one of your party, the message relay service will document the information, and will make reasonable efforts to deliver the message to the message recipient.

Personal Trip Routing. Leave the planning to us. Simply give one of our Roadside Assistance service representatives a call, and well provide you with detailed, easy to read, computerized trip itinerary and companion map package. Please allow two weeks to process your request.

Services

From the information you provide, the BMW Roadside Assistance service representative will determine the type of help required.

Dispatch Service

A service provider will be dispatched to the site of your disabled vehicle.

On-Site Assistance

On-site service for vehicle disablements such as flat tires, dead batteries, and out of fuel conditions is provided up to a maximum of $100.00 per incident by BMW Roadside Assistance.

The cost for parts and fuel, when used on-site, are the responsibility of the owner/driver. The New SAV Limited Warranty does not cover any of the above on-site services.

Lock-Out

Your BMW is equipped with an advanced entry system, which cannot be bypassed by traditional locksmith methods without significant damage to your vehicle. BMW encourages you to always carry your spare wallet key separately from your other keys. However, in the even that you find yourself locked out, a simple telephone call to Roadside Assistance will help you get back on the road. A representative will help you find transportation or arrange towing service to the nearest BMW center. Related towing costs will be compensated up to $100 per incident. You, or the person driving your vehicle, are responsible for any expenses related to replacement keys.

CarManuals2.com

CarManuals2.com

Towing Service

In the event of a mechanical breakdown normally covered under the New SAV Limited Warranty, your SAV will be transported (at no cost) to the nearest authorized BMW SAV center. Your SAV is also covered in the event of an accident or collision.

If a breakdown occurs after normal business hours, your SAV will be transported to a secure location and transported to the nearest authorized BMW SAV center on the next business day.

If you request that the SAV be taken to a location other than the nearest authorized BMW SAV center, any additional expense will be your responsibility.

However, you may request (at no cost) to be taken to a different BMW SAV center as long as it is within 50 additional miles of the "nearest" BMW SAV center.

Towing requests for SAV disabled because of casualty, fire, act of God, or violation of law (federal, state or local) are provided at the expense of the owner/driver.

If it is necessary for you to have your SAV towed through your own arrangements, **you must contact BMW Roadside Assistance for prior authorization and instructions on claim procedures.** All claims must be submitted within sixty (60) days of the disablement or occurrence, accompanied by the original receipts. Claims received after that time period may be dishonored and are subject to the full discretion of BMW Roadside Assistance. If BMW Roadside Assistance is not contacted for "prior" authorization, the maximum coverage for towing is $100.00.

Sign-and-Drive

Typically, if you are within the terms of your warranty, the services you receive under the BMW Roadside Assistance program will not require payment. In most cases, you will simply sign a receipt from the provider of services.

Trip Interruption Benefits

Trip interruption benefits are provided for mechanical breakdowns as follows:

– Breakdowns that are warranty related, and;
– Must occur in excess of 100 miles from the driver's residence, and;
– Repairs cannot be completed during normal business hours on the same day of breakdown.

Reimbursements will be made for meals, lodging, car rentals, and alternate transportation to bring the driver and the BMW SAV together after the SAV has been repaired by an authorized BMW SAV center. Original receipts must accompany all reimbursement requests.

Trip interruption coverage is limited to $750.00 per incident, for maximum of five days per incident.

Always contact BMW Roadside Assistance for trip interruption benefits. They will assist in making all the necessary arrangements.

Car Rental Discounts

Discounts are available from Hertz and Enterprise car rental companies. Benefits may vary with each company and location, and are subject to change without notice.

Simply display your Roadside Assistance card (showing the applicable Plan number) during reservation and at the time of rental to secure your discount.

Exclusions

Specifically excluded from coverage are:

– Fines, taxes, or impound towing fees caused by a violation of local or state law.
– Expenses related to hazardous weather conditions (removal from snow, ice, etc.).
– Expenses for the removal of snow tires, and mounting or removal of snow chains.

Services provided by AAA and its affiliated clubs, Heathrow, Florida 32746.

The BMW Roadside Assistance Program is not a warranty and does not affect your rights under the New SAV Limited Warranty.

Summary of BMW Limited Warranties

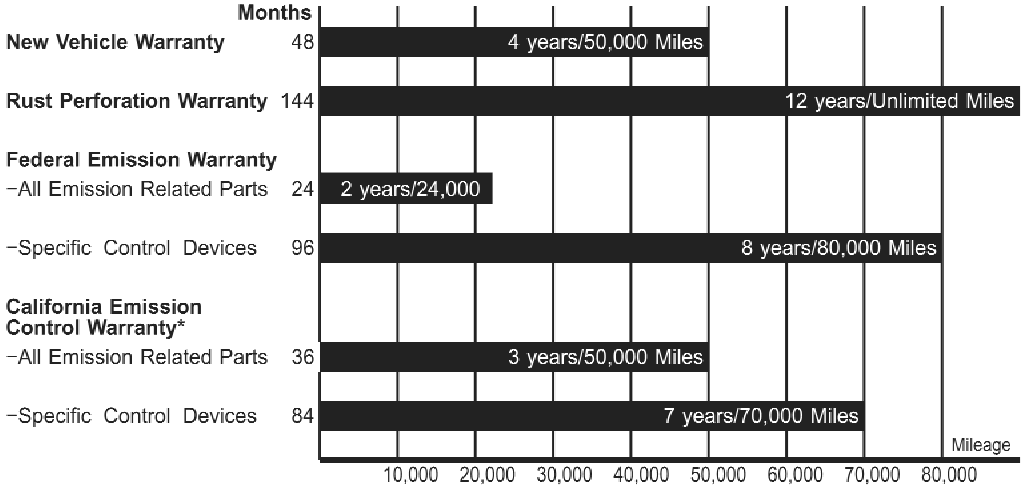

* The California Emissions Control System Limited Warranty applies to all 2007 U.S. specification BMW X5 SAVs sold, leased, and/or registered in California, Maine, Massachusetts or Vermont.

CarManuals2.com

New SAV Limited Warranty - 2007 X5 (Valid only in the U.S.A. and Puerto Rico)

Warrantor

BMW NA warrants 2007 U.S. specification X5 SAVs distributed by BMW NA or sold through the BMW NA European Delivery Program against defects in materials or workmanship to the first retail purchaser, and each subsequent purchaser.

Warranty Period

The warranty period is 48 months or 50,000 miles, whichever occurs first.

Warranty Begins

This warranty begins on the date of first retail sale, or the date the SAV is first placed in service as a demonstrator or company vehicle, whichever is earlier.

Warranty Coverage

To obtain service under this limited warranty, the SAV must be brought, upon discovery of a defect in material or workmanship, to the workshop of any authorized BMW SAV center, during normal business hours. The authorized BMW SAV center will, without charge for parts or labor, either repair or replace the defective part(s) using new or authorized remanufactured parts. The decision to repair or replace said part(s) is solely the prerogative of BMW NA. Parts for which replacements are made become the property of BMW NA.

In all cases, a reasonable time must be allowed for warranty repairs to be completed after the SAV is received by the authorized BMW SAV center.

Safety Belt Warranty - Kansas

Safety belts are covered under the BMW New SAV Limited Warranty for defects in material or workmanship for a period of 10 years, unlimited mileage from the date of purchase. In order to be eligible for this coverage, the SAV must be a new SAV retailed in the State of Kansas and the repair performed by an authorized BMW SAV center in Kansas.

Towing/Other Owner Benefits

A 24-hour Roadside Assistance Program is available to every BMW owner during the New SAV Limited Warranty period.

Roadside assistance and other owner benefits are available by calling:

1 800 332-4269

For additional details on towing and other owner benefits please refer to the BMW Roadside Assistance section of this Statement (page 26).

Other Items

Wheel alignment, balancing and wiper blade inserts are covered up to 2,000 miles.

Items which are subject to wear and tear or deterioration due to driving habits or conditions, such as brake pads/linings, brake discs, clutch disc, pressure plate, filters, upholstery, trim and chrome items, paint finish, drive belts, glass, and similar items, are specifically limited to defects in material or workmanship.

This warranty does not apply to the following:

Damage which results from negligence, improper operation of the SAV, improper repair, lack of or improper maintenance, environmental influences, flood, accident or fire damage, road salt corrosion, or use of improper or contaminated fuel.

Damage to the engine, transmission or any related component caused by improper shifting of the transmission.

Maintenance services and parts when replaced during maintenance such as spark plugs, lubricants, fluids, engine tuneup parts, replacement of filters, coolant, and refrigerant.

Failure to maintain the SAV properly in accordance with the instructions in the X5 Owner's Manual or the Service section of this Statement, that results in the failure of any part of the SAV.

CarManuals2.com

CarManuals2.com

Modification of the SAV or installation of any performance accessories or components attached to the SAV which alters the original engineering and/or operating specifications or which result in damage to the other original components, electrical interference, electrical short, radio static, water leaks and wind noise.

Tires are warranted by their respective manufacturer as detailed in the applicable tire manufacturer's warranty statements. Instructions for proper tire care and maintenance are contained in the X5 Owner's Manual. Should you experience difficulty in obtaining warranty service from a tire manufacturer, your authorized BMW SAV center will assist you in resolving the difficulty.

Non-BMW Parts - While you may elect to use non-genuine BMW parts for maintenance or repair services, BMW NA is not obligated to pay for repairs that include non-genuine BMW parts or for any damage resulting from the use of non-genuine parts.

BMW will not accept any liability for any parts and accessories not approved by BMW.

This warranty shall be null and void if the vehicle identification number has been altered or cannot be read, if the odometer has been replaced or altered and the true mileage cannot be determined, if the vehicle has been declared a total loss or sold for salvage purposes, or if the vehicle has been used in any competitive event.

General

These warranties give you specific legal rights, and you may also have other rights which vary from state to state.

THE DURATION OF ANY IMPLIED WARRANTIES, INCLUDING THE IMPLIED WARRANTY OF MERCHANTABILITY, IS LIMITED TO THE DURATION OF THE EXPRESS WARRANTIES HEREIN. BMW NA HEREBY EXCLUDES INCIDENTAL AND CONSEQUENTIAL DAMAGES, INCLUDING LOSS OF TIME, INCONVENIENCE, OR LOSS OF USE OF THE VEHICLE, FOR ANY BREACH OF ANY EXPRESS OR IMPLIED WARRANTY, INCLUDING THE IMPLIED WARRANTY OF MERCHANTABILITY, APPLICABLE TO THIS PRODUCT.

Some states do not allow limitations on how long an implied warranty lasts, or the exclusion or limitation of incidental or consequential damages, so the above limitations and exclusions may not apply to you.

Limited Warranty - Rust Perforation 2007 X5

BMW NA warrants this original SAV against defects in materials or workmanship which will result in rust perforation of the SAV body for a period of twelve years unlimited mileage, commencing on the date of first retail sale, or the date the vehicle is first placed in service as a demonstrator or company vehicle, whichever is earlier.

To obtain service under this warranty, the SAV must be brought, upon discovery of any rust perforation, to the workshop of any authorized BMW SAV center. This authorized BMW SAV center will, without charge for parts or labor, either repair or replace the defective part(s). The decision to repair or replace said part(s) is solely the prerogative of BMW of North America. Parts for which replacements are made become the property of BMW of North America.

REQUIRED MAINTENANCE:

In order to keep this warranty in effect, the SAV must be inspected at every BMW Inspection II (at least every two years). Any areas requiring preventative maintenance must be repaired.

The Inspection/Maintenance consists of:

a. Washing the chassis before inspection, if necessary, due to dirt accumulation.

b. Repairing any damages to undercoating or paint due to stone chips, gravel erosion, scratches, or other external influences.

BMW of North America makes no other express warranty on this product except the New SAV Limited Warranty or the warranty as to the emission control system. THE DURATION OF ANY IMPLIED WARRANTIES, INCLUDING THE IMPLIED WARRANTY OF MERCHANTABILITY, IS LIMITED TO THE DURATION OF THE EXPRESS WARRANTIES HEREIN.

CarManuals2.com

BMW OF NORTH AMERICA HEREBY EXCLUDES INCIDENTAL AND CONSEQUENTIAL DAMAGES, INCLUDING LOSS OF TIME, INCONVENIENCE, OR LOSS OF USE OF THE SAV, FOR ANY BREACH OF ANY EXPRESS OR IMPLIED WARRANTY, INCLUDING THE IMPLIED WARRANTY OF MERCHANTABILITY, APPLICABLE TO THIS PRODUCT.

Some states do not allow limitations on how long an implied warranty lasts, or the exclusion or limitation of incidental or consequential damages, so the above limitations and exclusions may not apply to you.

This warranty gives you specific legal rights, and you may also have other rights which vary from state to state. Any legal claim or action arising from any express or implied warranty contained herein must be brought within 12 months of the date it arises.

This warranty does not apply to the following:

a. Damage caused by negligence, improper accident damage repairs, or improper use.

b. Damage attributable to failure to perform required inspections/maintenance at the specified intervals or in accordance with the BMW rust inspection/maintenance program instructions. Proof must be provided by a paid invoice or filling in the appropriate boxes in the Service Section of this Statement.

BMW will not accept any liability for any parts and accessories not approved by BMW.

This warranty shall be null and void if the SAV identification number has been altered or cannot be read, if the odometer has been replaced or altered and the true mileage cannot be determined, if the SAV has been declared a total loss or sold for salvage purposes, or if the SAV has been used in any competitive event.

Federal Emissions System Defect Warranty (Valid only in the U.S.A. and Puerto Rico)

This warranty applies only to U.S. specification SAVs distributed by BMW of North America (BMW NA) or sold through the BMW NA European Delivery Program.

In accordance with the defect warranty provisions of section 207(b) of the Clean Air Act, BMW NA warrants to the first retail purchaser, and each subsequent purchaser, that the SAV (a) was designed, built and equipped so as to conform, at the time of sale, with all regulations of the U.S. Environmental Protection Agency applicable at the time of manufacture and (b) is free from defects in materials and workmanship which would cause it to fail to conform with applicable regulations for a period of 2 years or 24,000 miles, whichever occurs first, except for specific emission control components (as listed on page 35), for which the warranty period is 8 years or 80,000 miles, whichever occurs first.

This warranty begins on the date of first retail sale, or the date the SAV is first placed in service as a demonstrator or company vehicle, whichever is earlier.

Warranty claims must be made as soon as reasonably possible after a defect is discovered. To make a claim, the SAV must be brought to any authorized BMW SAV center during normal business hours.

The authorized BMW SAV center will, without charge for parts or labor (including diagnosis), either repair or replace the defective part, if any. The decision whether to repair or replace said parts is solely the prerogative of BMW NA and must be expected to correct the failure of the warranted part. Parts for which replacements are made become the property of BMW NA. In all cases, a reasonable time must be allowed for warranty repairs to be completed after the SAV is received by the authorized BMW SAV center.

For assistance in determining which specific parts or components of your vehicle are covered under this warranty, please contact your authorized BMW SAV center.

CarManuals2.com

It is the owner's responsibility to have all scheduled inspection and maintenance services performed (at the owner's expense), as prescribed in the maintenance schedule for the BMW Emission Control System. Service intervals are computed by the onboard BMW service interval indicator and displayed on the instrument panel. The instructions for proper maintenance and use can be found in the X5 Owner's Manual. It is strongly recommended that any replacement parts used for maintenance, repair or replacement of emission control systems be certified BMW Service Parts or BMW Authorized Remanufactured Parts. Without invalidating this warranty, the owner may elect to have maintenance, repair or replacement of the emission control systems performed by any automotive repair establishment, or elect to use parts other than certified BMW Service Parts. However, the cost of such service or parts will not be covered under this warranty, except in emergency situations. In an emergency situation, where an authorized BMW SAV center or a warranty replacement part is not reasonably available (within 30 days), repairs may be performed at any available service establishment using any equivalent part. BMW NA will reimburse the owner for such emergency repairs (including labor, parts and diagnosis not to exceed BMW NA rates for labor, parts, and diagnosis in said area) that are covered under this warranty. Replaced parts and paid invoices must be presented at an authorized BMW SAV center as a condition of reimbursement for emergency repairs not performed by an authorized BMW SAV center.

The use of replacement parts, which are not of equivalent quality, may impair the effectiveness of the emission control system. If other than certified BMW Service Parts or Authorized Remanufactured Parts are used for maintenance, repair or replacement of components affecting emission control, the owner should obtain assurances that such parts are warranted by their manufacturer to be equivalent to genuine BMW parts in performance and durability. BMW NA assumes no liability under this warranty with respect to parts other than genuine BMW parts.

However, the use of non-BMW replacement parts or non-EPA certified parts does not invalidate the warranty on other components, unless non-BMW parts or non-EPA certified parts cause damage to warranted parts.

What is not covered

This warranty does not cover malfunctions caused by any of the following: accident, flood, misuse, improper adjustment, modification, alteration, tampering, disconnection, improper or inadequate maintenance, use of leaded fuel or fuels containing more than 10% ethanol, or other oxygenates with more than 2.8% oxygen by weight (i.e., more than 15% MTBE or more than 3% methanol plus an equivalent amount of co-solvent).

The replacement of maintenance parts, such as spark plugs, filters and similar items used in required maintenance services, the repair or replacement of maintenance parts beyond the first required inspection/maintenance, or if the part has been replaced earlier for reasons other than it being defective.

The SAV or any part of the SAV unless a failure causes the SAV to fail to conform to applicable emission regulations.

Any SAV on which the odometer has been replaced or altered and the true mileage cannot be determined.

The SAV, if the vehicle identification number is altered or cannot be read, or if the SAV has been declared a total loss or sold for salvage purposes.

CarManuals2.com

General

These warranties give you specific legal rights, and you may also have other rights which vary from state to state.

THE DURATION OF ANY IMPLIED WARRANTIES, INCLUDING THE IMPLIED WARRANTY OF MERCHANTABILITY, IS LIMITED TO THE DURATION OF THE EXPRESS WARRANTIES HEREIN.

BMW NA HEREBY EXCLUDES INCIDENTAL AND CONSEQUENTIAL DAMAGES, INCLUDING LOSS OF TIME, INCONVENIENCE, OR LOSS OF USE OF THE SAV, FOR ANY BREACH OF ANY EXPRESS OR IMPLIED WARRANTY, INCLUDING THE IMPLIED WARRANTY OF MERCHANTABILITY, APPLICABLE TO THIS PRODUCT.

Some states do not allow limitations on how long an implied warranty lasts, or the exclusion or limitation of incidental or consequential damages, so the above limitations and exclusions may not apply to you. Additionally, if you are a California, Maine, Massachusetts or Vermont resident and your vehicle is registered in that state, your vehicle is eligible for California Emissions Warranty coverage.

Federal Emissions Performance Warranty (Valid only in the U.S.A. and Puerto Rico)

In those states and jurisdictions that have established periodic vehicle emissions tests to encourage proper vehicle maintenance and require the car to pass an emissions test approved by the U.S. Environmental Protection Agency and:

1. The SAV was distributed by BMW of North America (BMW NA), or sold through the BMW NA European Delivery Program; and
2. The SAV has been maintained and operated in accordance with the instructions for proper maintenance and use set forth in the X5 Owner's Manual supplied with the SAV; and
3. The SAV fails to conform to the applicable emissions standards of the EPA as judged by an EPA approved emissions test; and
4. The failure to conform results or will result in the owner of the SAV having to bear a penalty or other sanction (including the denial of the right to use the car) under local state or federal law if the non-conformity is not remedied within a specified period of time.

Then, in accordance with the provisions of section 207(b) of the Clean Air Act, BMW NA warrants that if the SAV is eligible for coverage under this warranty, any non-conformities in the SAV, which cause it to fail an EPA-approved emissions test will, without charge for parts or labor (including diagnosis), be adjusted, repaired, or replaced, at the option of BMW NA to proper specifications, in order to make the SAV comply with applicable emissions standards. The decision to adjust, repair or replace parts is solely the prerogative of BMW NA and must reasonably be expected to correct the failure of the warranted part.

This warranty begins on the date of first retail sale, or the date the SAV is first placed in service as a demonstrator or company vehicle, whichever is earlier. This warranty continues for a period of 2 years or 24,000 miles, whichever occurs first, except for specific emissions control components (as listed on page 35), for which the warranty period is 8 years or 80,000 miles whichever occurs first.

This warranty is made subject to the terms and conditions that apply to the Emission Control System Warranty and the New SAV Limited Warranty.

No claim under this warranty will be denied on the basis of use of a properly installed EPA certified emission part for maintenance and repair.

A SAV manufacturer may deny an emission performance warranty claim on the basis of an uncertified replacement part used in the maintenance or repair of an SAV only if the SAV manufacturer presents evidence that the uncertified replacement part is either defective in materials or workmanship or not equivalent from an emission standpoint to the original equipment part.

Maintenance, replacement, or repair of emission control devices and systems may be performed by any automotive repair establishment or individual using any certified part.

Immediately after the SAV has failed an EPA approved emission short test, your claim can be made at any authorized BMW SAV center. The authorized BMW SAV center will honor or deny your claim within the time period specified by local or state laws (not to exceed 30 days), to avoid further penalties or sanctions. If the claim is denied, the authorized BMW SAV center will notify you in writing of the reason(s). The authorized BMW SAV center is required by law to honor the claim if notice of denial is not received by the owner within the specified time period.

You may obtain further information concerning the emission warranties, or report violations of warranty terms, by contacting the Director, Field Operations and Support Division (6406J), Environmental Protection Agency, 401 “M” Street, SW, Washington, D.C. 20460.

The following systems are covered by the Federal Emission Performance Warranty for a period of two years or 24,000 miles, whichever occurs first. The specific systems may vary according to model, therefore, all of the systems listed may not be used on your SAV. For assistance in determining which systems and specific components within these systems apply to your SAV, please contact your authorized BMW SAV center.

AIR INDUCTION SYSTEM

FUEL METERING SYSTEM

IGNITION SYSTEM

POSITIVE CRANKCASE VENTILATION SYSTEM (PCV)

FUEL EVAPORATIVE CONTROL SYSTEM

EXHAUST SYSTEM

ENGINE EMISSION CONTROL SYSTEM

SENSORS/DEVICES

ON BOARD DIAGNOSTIC SYSTEM (OBD)

RELATED PARTS ASSOCIATED WITH THE ABOVE SYSTEMS

The following components and/or system are/is covered under the Federal Emission Warranty for a period of 8 years or 80,000 miles, whichever occurs first.

CATALYTIC CONVERTER

ENGINE CONTROL MODULE (INCLUDING ON-BOARD DIAGNOSTIC SYSTEM)

For assistance in determining coverage of the specific components of the on-board diagnostic system, please contact your authorized BMW SAV center.

CarManuals2.com

California Emission Control Warranty Statement* Your Warranty Rights and Obligations

The California Air Resources Board and BMW of North America (BMW NA) are pleased to explain the emission control system warranty on your 2007 SAV. In California, new motor vehicles must be designed, built and equipped to meet the State's stringent anti-smog standards. BMW NA must warrant the emission control system on your SAV for the periods of time listed below provided there has been no abuse, neglect or improper maintenance of your SAV.

Your emission control system may include parts such as the fuel injection system, the ignition system, catalytic converter, and engine computer. Also included may be hoses, belts, connectors and other emission-related assemblies.

Where a warrantable condition exists, BMW NA will repair your SAV at no cost to you including diagnosis, parts and labor.

Manufacturer's Warranty Coverage:

– For 3 years or 50,000 miles whichever occurs first:

1. If your SAV fails a Smog Check inspection, all necessary repairs and adjustments will be made by BMW NA to ensure that your SAV passes the inspection. This is your emission control system PERFORMANCE WARRANTY.
2. If any emission-related part on your SAV is defective, the part will be repaired or replaced by BMW NA. This is your short-term emission control system DEFECTS WARRANTY.

For 7 years or 70,000 miles whichever occurs first:

If an emission-related part specially noted on page 39 as having coverage for 7 years or 70,000 miles is defective, the part will be repaired or replaced by BMW NA. This is your long-term emission control system DEFECTS WARRANTY.

Owner's Warranty Responsibilities:

– As the SAV owner, you are responsible for the performance of the required maintenance listed in your Owner's Manual. BMW NA recommends that you retain all receipts covering maintenance on your SAV, but BMW NA cannot deny warranty solely for the lack of receipts or for your failure to ensure the performance of all scheduled maintenance.

– You are responsible for presenting your SAV to an authorized BMW SAV center as soon as a problem exists. The warranty repairs should be completed in a reasonable amount of time, not to exceed 30 days.

– As the SAV owner, you should also be aware that BMW NA may deny your warranty coverage if your SAV or part has failed due to abuse, neglect, improper maintenance or unapproved modifications.

If you have any questions regarding your warranty rights and responsibilities, you should contact:

BMW of North America, LLC
Customer Relations and Services Department
PO. Box 1227
Westwood, N.J. 07675-1227

Telephone: 1 800 831-1117
Website: www.bmwusa.com

or the

California Air Resources Board
9528 Telstar Avenue
El Monte, CA 91731

*The California Emissions Control System Limited Warranty applies to all 2007 U.S. specification BMW SAVs sold, leased, and/or registered in California, Maine, Massachusetts or Vermont.

CarManuals2.com

California Emission Control System Limited Warranty*

This warranty applies to California certified SAVs distributed by BMW of North America (BMW NA) or sold through the BMW NA European Delivery Program, registered and operated primarily in California.

BMW NA warrants to the original purchaser and each subsequent owner that the SAV is:

a. designed, built and equipped so as to conform with the applicable California Air Resources Board emission standards.

b. free from defects in materials and workmanship which cause any part that can affect emissions to fail to conform with applicable requirements or to fail a California Smog Check test or EPA approved short test for a period of 3 years or 50,000 miles, whichever occurs first.

c. free from defects in materials and workmanship in emission related parts, which are contained in the California Emission Warranty Parts List on page 39, for a period of 7 years or 70,000 miles, whichever occurs first.

This warranty begins on the date of first retail sale, or the date the SAV is first placed in service as a demonstrator or company vehicle, whichever is earlier.

To obtain service under this warranty, the SAV must be brought, upon failure of a Smog Check test or upon discovery of the defect, to the workshop of any authorized BMW SAV center, during normal business hours. The authorized BMW SAV center will honor or deny your claim within 30 days. If the claim is denied, the authorized BMW SAV center will notify you in writing of the reason(s). The authorized BMW SAV center is required by law to honor the claim if notice is not given to the owner within 30 days.

The authorized BMW SAV center will, without charge for parts or labor (including diagnosis), either adjust, repair or replace the defective part and other parts affected by the failure of the warranted part, if any. If your SAV failed the California Smog Check test or an EPA approved short test, then BMW NA will repair your SAV so that it will pass this test. Items that require scheduled replacement are warranted up to the replacement interval specified in the Service section of this Statement. BMW NA may repair a part in lieu of replacing it when performing warranty repairs. Parts for which replacements are made become the property of BMW NA. After 3 years or 50,000 miles, and in accordance with paragraph (c) above, such repairs are limited to the repair or replacement of those parts identified in the California Emissions Warranty List.

If your California registered SAV is between 7 and 8 years old and has been driven less than 80,000 miles, then your SAV is eligible for additional warranty coverage under the Federal Emissions Warranty.

A repair performed as the result of a smog check test failure due to a defect in a part, which is warranted for 7 years/70,000 miles, is covered.

In all cases, a reasonable time, not to exceed 30 days, must be allowed for a warranty repair to be completed, after the SAV is received by the authorized BMW SAV center.

It is the owner's responsibility to have all required maintenance services performed (at the owner's expense), as prescribed in the maintenance schedule for the BMW Emission Control System. Service intervals are computed by the service interval indicator and displayed on the instrument panel.

*The California Emissions Control System Limited Warranty applies to all 2007 U.S. specification BMW SAVs sold, leased, and/or registered in California, Maine, Massachusetts or Vermont.

CarManuals2.com

However, BMW NA will not deny your warranty repair claims solely because you do not have maintenance records or you did not perform the required maintenance unless BMW NA demonstrates that such lack of required maintenance is a direct cause of the emission control system failure. The instructions for required maintenance and use can be found in the X5 Owner's Manual and in the Service section of this Statement.

It is strongly recommended that any replacement parts used for maintenance, repair or replacement of emission control systems be genuine BMW Service Parts or BMW Authorized Remanufactured Parts. Without invalidating this warranty, the owner may elect to have maintenance, repair or replacement of the emission control systems performed by any automotive repair establishment, or elect to use parts other than BMW Authorized Remanufactured or genuine BMW Service Parts. However, the cost of such service or parts will not be covered under this warranty, except in emergency situations. In an emergency situation, where an authorized BMW SAV center is not reasonably available or a warranty replacement part is not available within 30 days, repairs may be performed at any available service establishment or by any individual using any replacement part.

CarManuals2.com

A repair not completed within 30 days constitutes an emergency. BMW NA will reimburse the owner for such emergency repairs (including labor, parts and diagnosis not to exceed BMW suggested retail price for all warranted parts replaced and labor charges based on the manufacturer's recommended time allowance for the warranty repair and the geographically appropriate hourly labor rate) that are covered under this warranty. Replaced parts and paid invoices must be presented to an authorized BMW SAV center as a condition of reimbursement for emergency repairs not performed by an authorized BMW SAV center.

The use of replacement parts, which are not of equivalent quality, may impair the effectiveness of emission control systems. If other than genuine BMW Service Parts or Authorized Remanufactured Parts are used for maintenance, repair or replacement of components affecting emission control, the owner should obtain assurances that such parts are warranted by their manufacturer to be equivalent to genuine BMW parts in performance and durability. BMW NA assumes no liability under this warranty with respect to parts other than genuine BMW parts.

However, the use of non-BMW replacement parts does not invalidate the warranty on other components, unless non-BMW parts cause damage to warranted parts.

What is not covered

This warranty does not cover malfunctions caused by any of the following: accident, flood, misuse, modification, alteration, tampering, disconnection, improper or inadequate maintenance, except if performed by an authorized BMW SAV center doing warranty repair work, use of leaded fuel or fuel other than as specified in the Owner's Manual.

The replacement of maintenance parts, such as spark plugs, filters and similar items used in required maintenance services or the repair or replacement of maintenance parts beyond the first replacement interval.

Any SAV on which the odometer has been replaced or altered and the true mileage cannot be determined.

The SAV, if the SAV identification number is altered or cannot be determined, or if the SAV has been declared a total loss or sold for salvage purposes.

General

The warranty gives you specific legal rights, and you may also have other rights which vary from state to state.

THE DURATION OF ANY IMPLIED WARRANTIES, INCLUDING THE IMPLIED WARRANTY OF MERCHANTABILITY, IS LIMITED TO THE DURATION OF THE EXPRESS WARRANTIES HEREIN. BMW OF NORTH AMERICA HEREBY EXCLUDES INCIDENTAL AND CONSEQUENTIAL DAMAGES, INCLUDING LOSS OF TIME, INCONVENIENCE, OR LOSS OF USE OF THE VEHICLE, FOR ANY BREACH OF ANY EXPRESS OR IMPLIED WARRANTY, INCLUDING THE IMPLIED WARRANTY OF MERCHANTABILITY, APPLICABLE TO THIS PRODUCT.

For assistance in determining which parts are covered by this warranty, please contact your authorized BMW SAV center or the BMW NA Customer Relations Department at 1 800 831-1117 or through our website at www.bmwusa.com. You may obtain further information concerning the emissions warranty or report violations of warranty terms, by contacting Air Resources Board (ARB), Mobile Source Division, 9528 Telstar Avenue, El Monte, CA 91731. Please include the title of the BMW service department head and telephone number.

California Emission Warranty Parts List

The following components are covered for defects by the California Emission Control System Limited Warranty for a period of 7 years or 70,000 miles, whichever comes first.

Component	X5 3.0i	X5 4.8i
Catalytic Converter	•	•
Cylinder Head Cover Gasket	•	•
Engine Control Module	•	•
Exhaust Manifold Gasket	•	•
Exhaust Manifold		•
Exhaust Manifold W. Catalyst	•	
Fuel Tank	•	•
Intake Drive Unit		•
Intake Manifold	•	•
Intake Manifold Gasket	•	•
Transmission Control Module	•	•
Valvetronic Control Unit	•	•
Valvetronic Sensor	•	•
VANOS Camshaft Position Controller	•	•

Notice

The “National Traffic & Motor Vehicle Safety Act of 1966” requires manufacturers to be in a position to contact the vehicle owners when a correction of a product defect becomes necessary. Please fill in the attached postcard if you change your address or purchase a used BMW.

Tire Warranty Statement

Tires are warranted by their respective manufacturer as detailed in the applicable tire manufacturer’s warranty statements. Instructions for proper tire care and maintenance are contained in the Owner’s Manual. Should you experience difficulty in obtaining warranty service from a tire manufacturer, your authorized BMW center will assist you in resolving the difficulty.

CarManuals2.com

CarManuals2.com

Notes:

CarManuals2.com

Notes:

Notes:

CarManuals2.com

Notes:

CarManuals2.com

Notes:

CarManuals2.com

Notes:

CarManuals2.com

Notes:

CarManuals2.com

For immediate updates or if there are no cards left, please contact the BMW Customer Relations Center at: 1-800-831-1117.

NO POSTAGE NECESSARY IF MAILED IN THE UNITED STATES

CarManuals2.com

BUSINESS REPLY MAIL
FIRST CLASS MAIL PERMIT NO. 131 WESTWOOD, NJ

BMW of North America, LLC
P.O. Box 1227
Westwood, NJ 07675-9868

Attn: Customer Satisfaction

For immediate updates or if there are no cards left, please contact the BMW Customer Relations Center at: 1-800-831-1117.

NO POSTAGE NECESSARY IF MAILED IN THE UNITED STATES

BUSINESS REPLY MAIL
FIRST CLASS MAIL PERMIT NO. 131 WESTWOOD, NJ

BMW of North America, LLC
P.O. Box 1227
Westwood, NJ 07675-9868

Attn: Customer Satisfaction

Information Change Card

Please print new owner or update your customer information

For immediate updates please contact the BMW Customer Relations Center at 1-800-831-1117

Please Check One: ❑ Address Change ❑ Ownership Change

❑ Mr. ❑ Mrs. ❑ Ms. Last Name First Name Middle Initial

Address: Number Street Apt./Suite

City State Zip AM Phone PM Phone

Email Cell Phone

Comments

VIN

Current Date: ____ / ____ / ____

Date of Change of Status: ____ / ____ / ____

Sold Privately ❑ (Print name & address of new owner above, if known)

The information provided by you will be used by BMW to update new owner and customer information. Rest assured that we will not rent or sell your personal information to anyone. To see our privacy policy please go to www.bmwusa.com/about/privacy.html or call 800-831-1117 to request a copy.

Purchased Privately	❑	Exported	❑
Traded	❑	Destroyed	❑
Lease Ended	❑	Stolen	❑
Gifted	❑	Never Owned	❑

CarManuals2.com

Information Change Card

Please print new owner or update your customer information

For immediate updates please contact the BMW Customer Relations Center at 1-800-831-1117

Please Check One: ❑ Address Change ❑ Ownership Change

❑ Mr. ❑ Mrs. ❑ Ms. Last Name First Name Middle Initial

Address: Number Street Apt./Suite

City State Zip AM Phone PM Phone

Email Cell Phone

Comments

VIN

Current Date: ____ / ____ / ____

Date of Change of Status: ____ / ____ / ____

Sold Privately ❑ (Print name & address of new owner above, if known)

The information provided by you will be used by BMW to update new owner and customer information. Rest assured that we will not rent or sell your personal information to anyone. To see our privacy policy please go to www.bmwusa.com/about/privacy.html or call 800-831-1117 to request a copy.

Purchased Privately	❑	Exported	❑
Traded	❑	Destroyed	❑
Lease Ended	❑	Stolen	❑
Gifted	❑	Never Owned	❑

CarManuals2.com

Service and Warranty Information

2007
X5
3.0i, 4.8i

The Ultimate Driving Machine®

CarManuals2.com

© 2006 BMW of North America, LLC
Woodcliff Lake, New Jersey 07677
Printed in U.S.A. 9/06

07X5SW

SD-330