SECTION PG

POWER SUPPLY, GROUND & CIRCUIT ELEMENTS

CONTENTS

PRECAUTIONS 3
Precautions for Supplemental Restraint System (SRS) “AIR BAG” and “SEAT BELT PRE-TENSIONER” 3
POWER SUPPLY ROUTING CIRCUIT 4
Schematic 4
Wiring Diagram — POWER — 6
BATTERY POWER SUPPLY — IGNITION SW. IN ANY POSITION 6
ACCESSORY POWER SUPPLY — IGNITION SW. IN ACC OR ON 10
IGNITION POWER SUPPLY — IGNITION SW. IN ON 11
IGNITION POWER SUPPLY — IGNITION SW. IN ON AND/OR START 12
Fuse 15
Fusible Link 15
Circuit Breaker (Built Into BCM) 15
IPDM E/R (INTELLIGENT POWER DISTRIBUTION MODULE ENGINE ROOM) 16
System Description 16
SYSTEMS CONTROLLED BY IPDM E/R 16
CAN COMMUNICATION LINE CONTROL 16
IPDM E/R STATUS CONTROL 17
CAN Communication System Description 17
Function of Detecting Ignition Relay Malfunction ... 17
CONSULT-II Function (IPDM E/R) 18
CONSULT-II BASIC OPERATION 18
SELF-DIAGNOSTIC RESULTS 19
DATA MONITOR 19
ACTIVE TEST 21
Auto Active Test 22
DESCRIPTION 22
OPERATION PROCEDURE 22
INSPECTION IN AUTO ACTIVE TEST MODE... 22
Schematic 24
IPDM E/R TERMINAL ARRANGEMENT 25
IPDM E/R Power/Ground Circuit Inspection 26
Inspection with CONSULT-II (Self-Diagnosis) 27
Removal and Installation of IPDM E/R 28
REMOVAL 28
INSTALLATION 28
GROUND CIRCUIT 29
Ground Distribution 29
MAIN HARNESS 29
ENGINE ROOM HARNESS 31
ENGINE CONTROL HARNESS (QR25DE) 33
ENGINE CONTROL HARNESS (VQ35DE) 35
BODY HARNESS 37
BODY NO. 2 HARNESS 38
HARNESS 40
Harness Layout 40
HOW TO READ HARNESS LAYOUT 40
OUTLINE 41
MAIN HARNESS 42
ENGINE ROOM HARNESS LH VIEW (ENGINE COMPARTMENT) 44
ENGINE ROOM HARNESS RH VIEW (ENGINE COMPARTMENT) 47
ENGINE CONTROL HARNESS (QR25DE) 49
ENGINE CONTROL HARNESS (VQ35DE) 51
BODY HARNESS 53
BODY NO. 2 HARNESS 55
ROOM LAMP HARNESS 57
FRONT DOOR LH HARNESS 58
FRONT DOOR RH HARNESS 58
REAR DOOR LH HARNESS 59
REAR DOOR RH HARNESS 59
Wiring Diagram Codes (Cell Codes) 60
ELECTRICAL UNITS LOCATION 63
Electrical Units Location 63
ENGINE COMPARTMENT 63
PASSENGER COMPARTMENT 64
HARNESS CONNECTOR 66
Description 66
HARNESS CONNECTOR (TAB-LOCKING TYPE) 66
HARNESS CONNECTOR (SLIDE-LOCKING

TYPE) 67
HARNESS CONNECTOR (DIRECT-CONNECT SRS COMPONENT TYPE) 68
ELECTRICAL UNITS 69
Terminal Arrangement 69
STANDARDIZED RELAY 70
Description 70
NORMAL OPEN, NORMAL CLOSED AND MIXED TYPE RELAYS 70
TYPE OF STANDARDIZED RELAYS 70
FUSE BLOCK-JUNCTION BOX(J/B) 72
Terminal Arrangement 72
FUSE AND FUSIBLE LINK BOX 73
Terminal Arrangement 73

PRECAUTIONS

PFP:00011

Precautions for Supplemental Restraint System (SRS) “AIR BAG” and “SEAT BELT PRE-TENSIONER”

EKS008UA

The Supplemental Restraint System such as “AIR BAG” and “SEAT BELT PRE-TENSIONER”, used along with a front seat belt, helps to reduce the risk or severity of injury to the driver and front passenger for certain types of collision. This system includes seat belt switch inputs and dual stage front air bag modules. The SRS system uses the seat belt switches to determine the front air bag deployment, and may only deploy one front air bag, depending on the severity of a collision and whether the front occupants are belted or unbelted.
Information necessary to service the system safely is included in the SRS and SB section of this Service Manual.

WARNING:

- **To avoid rendering the SRS inoperative, which could increase the risk of personal injury or death in the event of a collision which would result in air bag inflation, all maintenance must be performed by an authorized NISSAN/INFINITI dealer.**
- **Improper maintenance, including incorrect removal and installation of the SRS, can lead to personal injury caused by unintentional activation of the system. For removal of Spiral Cable and Air Bag Module, see the SRS section.**
- **Do not use electrical test equipment on any circuit related to the SRS unless instructed to in this Service Manual. SRS wiring harnesses can be identified by yellow and/or orange harnesses or harness connectors.**

POWER SUPPLY ROUTING CIRCUIT

PFP:24110

Schematic

EKS008UC

For detailed ground distribution, refer to PG-29, "Ground Distribution" .

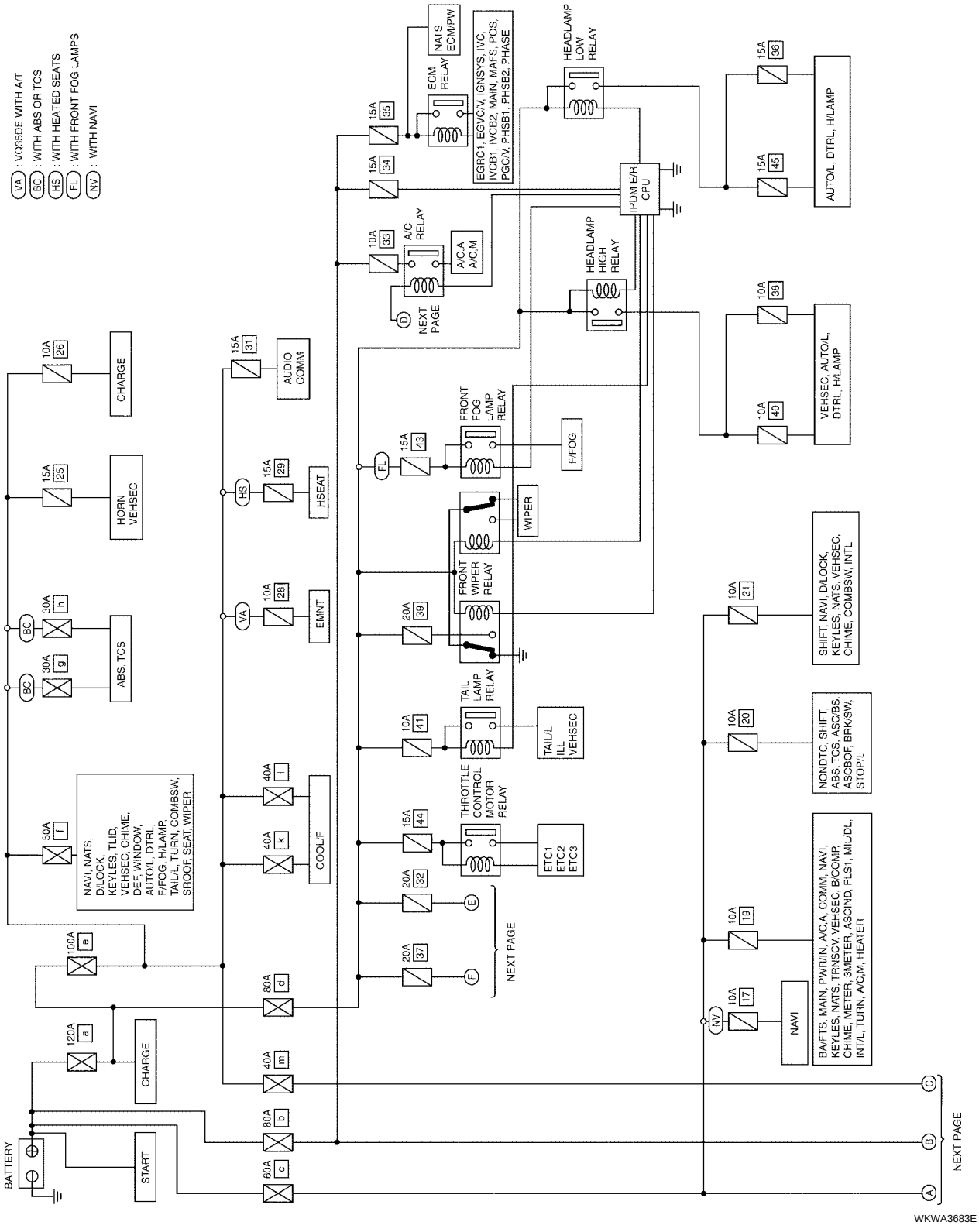

WKWA3683E

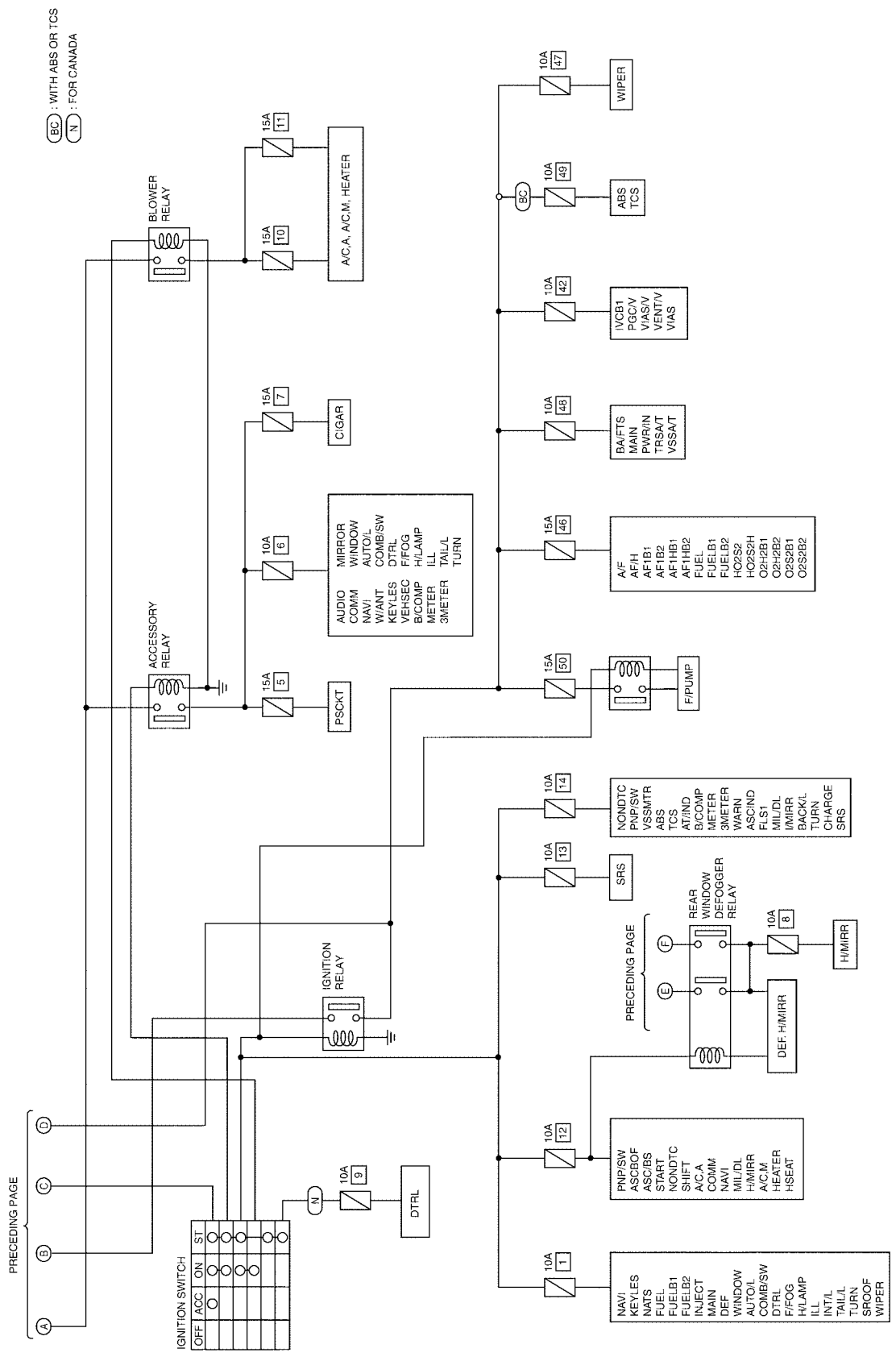
BC : WITH ABS OR TCS
N : FOR CANADA
BLOWER RELAY
ACCESSORY RELAY
IGNITION RELAY
REAR WINDOW DEFOGGER RELAY
IGNITION SWITCH
OFF
ACC
ON
ST
PRECEDING PAGE
A/C.A, A/C.M, HEATER
CIGAR
PSCKT
MIRROR
WINDOW
AUTO/L
COMB/SW
DTRL
F/FOG
H/LAMP
ILL
TAIL/L
TURN
AUDIO
COMM
NAVI
W/ANT
KEYLES
VEHSEC
B/COMP
METER
3METER
WIPER
ABS
TCS
IVCB1
PGC/V
VIAS/V
VENT/V
VIAS
BA/FTS
MAIN
PWR/IN
TRSA/T
VSSA/T
A/F
AF/H
AF1B1
AF1B2
AF1HB1
AF1HB2
FUEL
FUELB1
FUELB2
HO2S2
HO2S2H
O2H2B1
O2H2B2
O2S2B1
O2S2B2
F/PUMP
NONDTC
PNP/SW
VSSMTR
ABS
TCS
AT/IND
B/COMP
METER
3METER
WARN
ASC/IND
FLS1
MIL/DL
I/MIRR
BACK/L
TURN
CHARGE
SRS
H/MIRR
DEF, H/MIRR
DTRL
PNP/SW
ASCBOF
ASC/BS
START
NONDTC
SHIFT
A/C.A
COMM
NAVI
MIL/DL
H/MIRR
A/C.M
HEATER
HSEAT
NAVI
KEYLES
NATS
FUEL
FUELB1
FUELB2
INJECT
MAIN
DEF
WINDOW
AUTO/L
COMB/SW
DTRL
F/FOG
H/LAMP
ILL
INT/L
TAIL/L
TURN
SROOF
WIPER

WKWA3684E

Wiring Diagram — POWER —

EKS008UD

BATTERY POWER SUPPLY — IGNITION SW. IN ANY POSITION

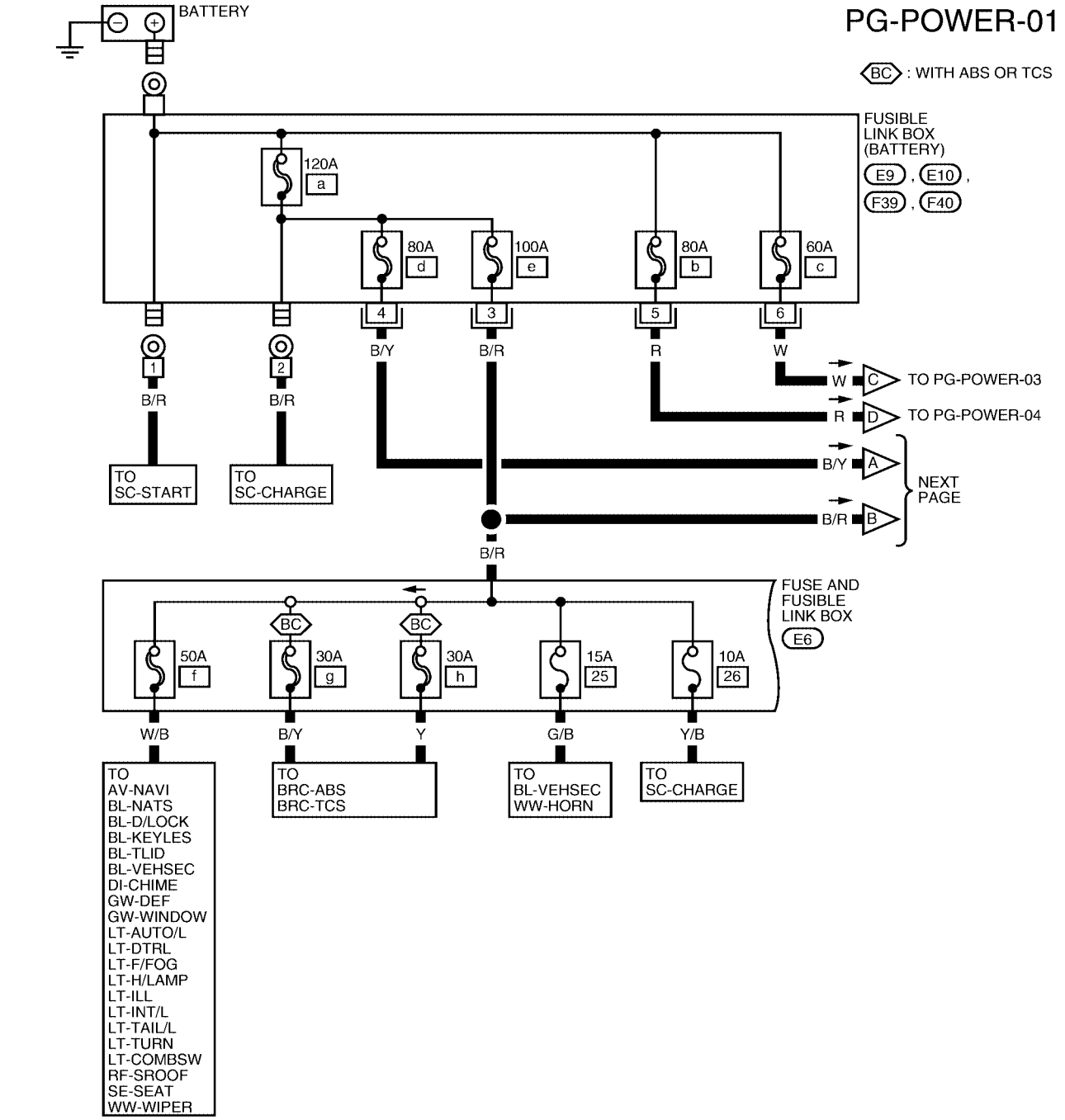

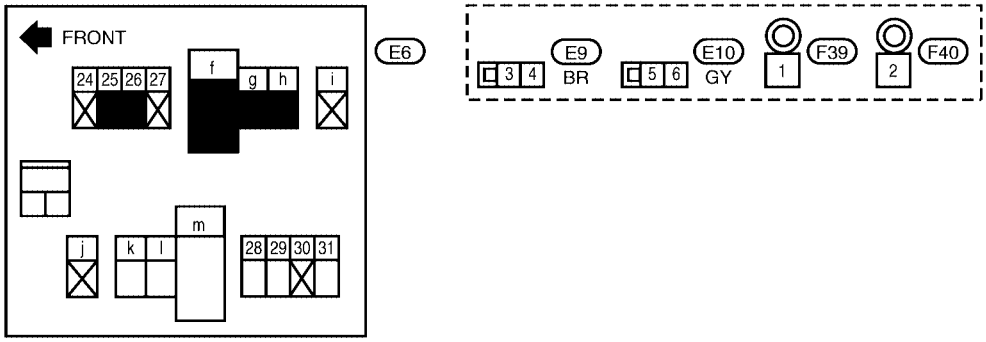

WKWA3685E

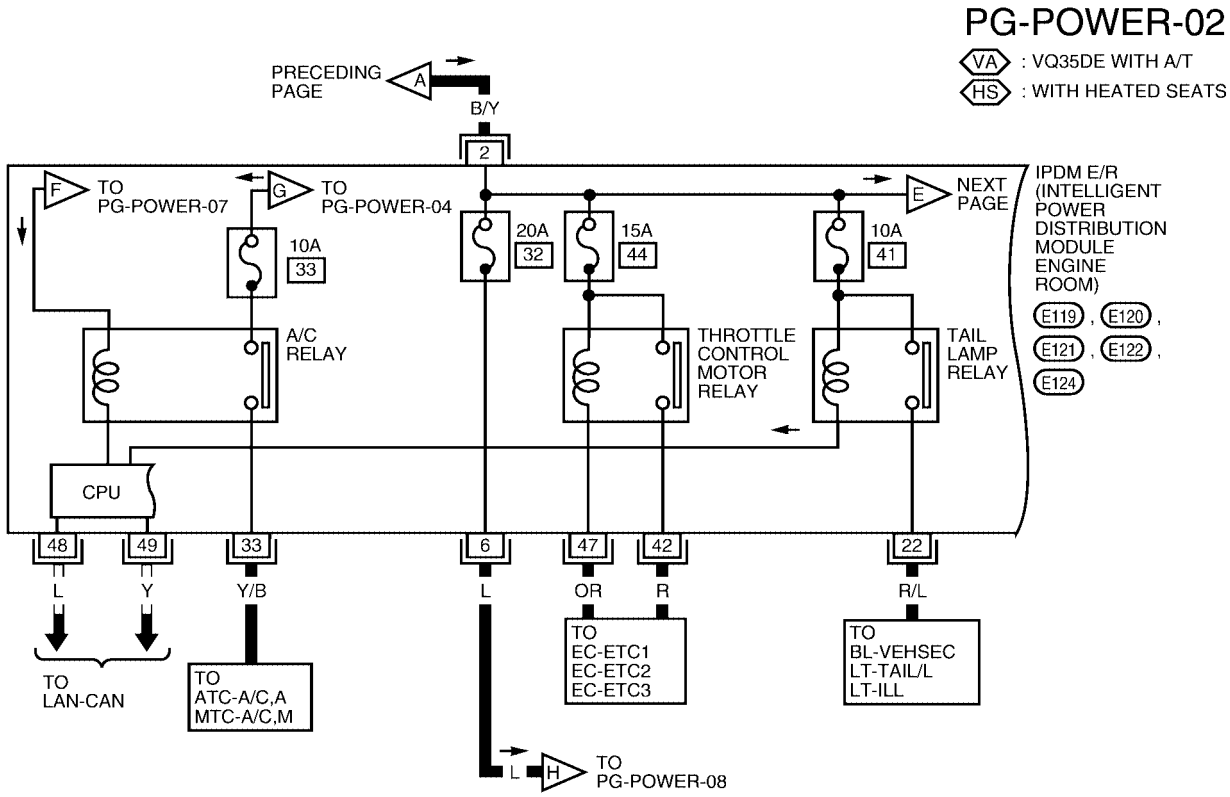
PG-POWER-02
VA : VQ35DE WITH A/T
HS : WITH HEATED SEATS
PRECEDING PAGE
A
B/Y
2
F
TO PG-POWER-07
G
TO PG-POWER-04
E
NEXT PAGE
IPDM E/R (INTELLIGENT POWER DISTRIBUTION MODULE ENGINE ROOM)
E119, E120, E121, E122, E124
10A 33
20A 32
15A 44
10A 41
A/C RELAY
THROTTLE CONTROL MOTOR RELAY
TAIL LAMP RELAY
CPU
48
49
33
6
47
42
22
L
Y
Y/B
L
OR
R
R/L
TO LAN-CAN
TO ATC-A/C,A MTC-A/C,M
TO EC-ETC1 EC-ETC2 EC-ETC3
TO BL-VEHSEC LT-TAIL/L LT-ILL
L
H
TO PG-POWER-08

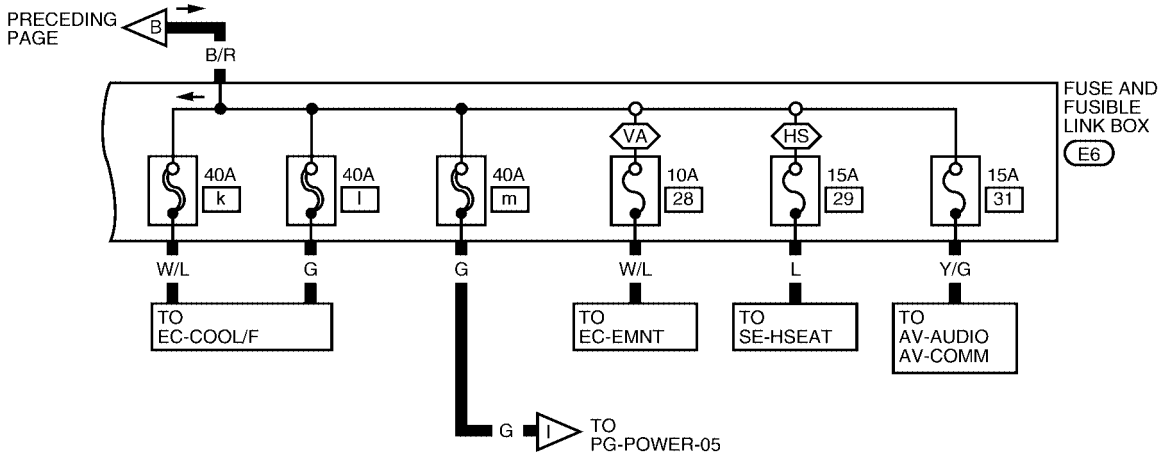
PRECEDING PAGE
B
B/R
FUSE AND FUSIBLE LINK BOX
E6
VA
HS
40A k
40A l
40A m
10A 28
15A 29
15A 31
W/L
G
G
W/L
L
Y/G
TO EC-COOL/F
TO EC-EMNT
TO SE-HSEAT
TO AV-AUDIO AV-COMM
G
I
TO PG-POWER-05

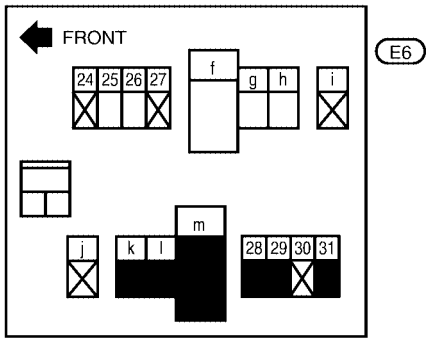
FRONT
E6
24 25 26 27
f
g h
i
j
k l
m
28 29 30 31

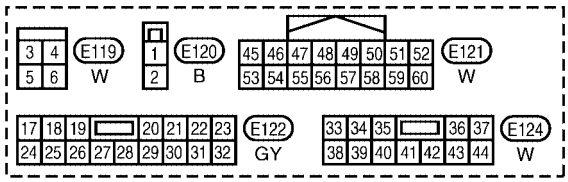
3 4 5 6
E119
W
1 2
E120
B
45 46 47 48 49 50 51 52 53 54 55 56 57 58 59 60
E121
W
17 18 19 20 21 22 23 24 25 26 27 28 29 30 31 32
E122
GY
33 34 35 36 37 38 39 40 41 42 43 44
E124
W

WKWA3686E

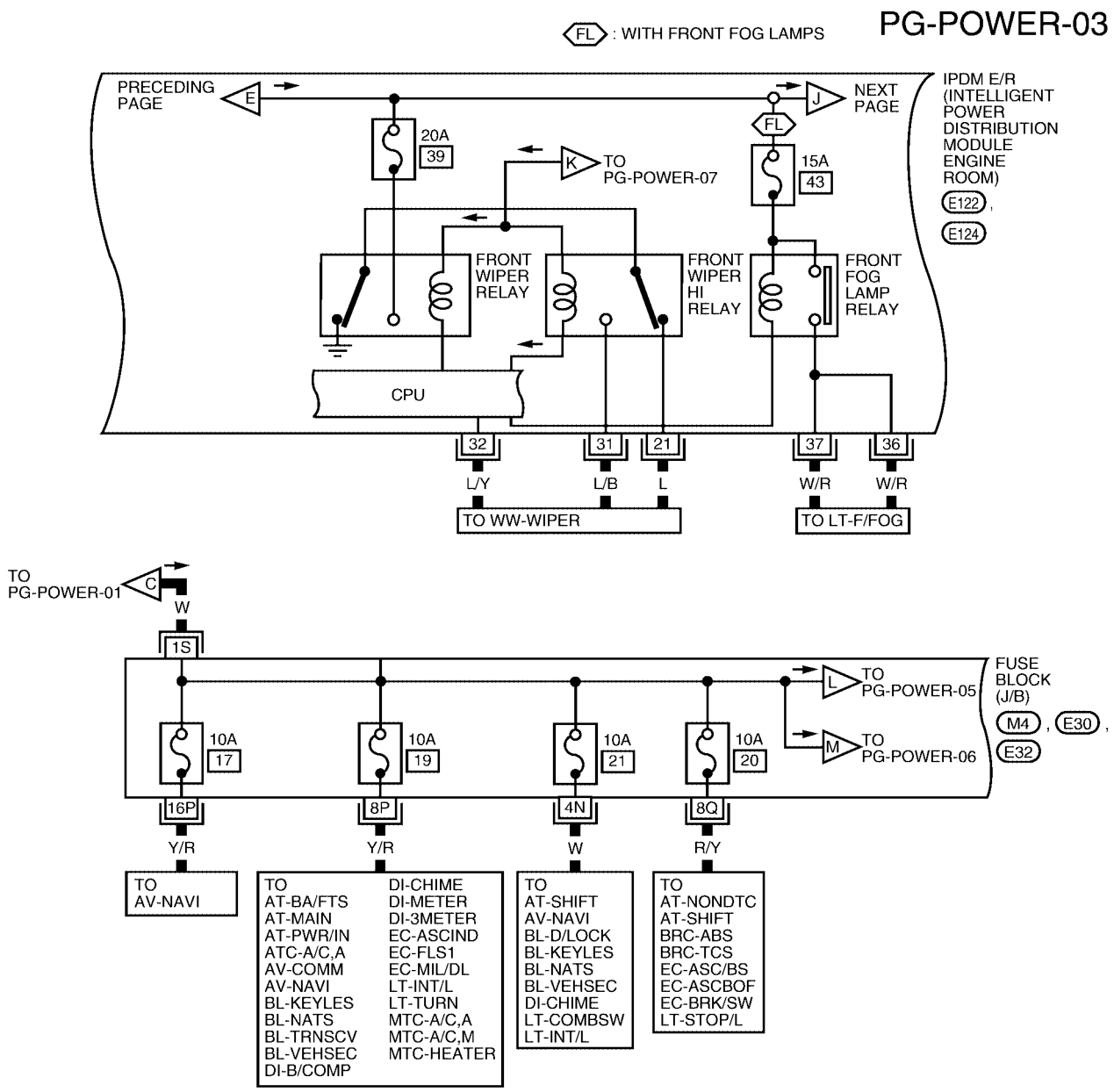
PG-POWER-03
FL : WITH FRONT FOG LAMPS
PRECEDING PAGE
E
J
NEXT PAGE
IPDM E/R (INTELLIGENT POWER DISTRIBUTION MODULE ENGINE ROOM)
E122 , E124
20A
39
K
TO PG-POWER-07
FL
15A
43
FRONT WIPER RELAY
FRONT WIPER HI RELAY
FRONT FOG LAMP RELAY
CPU
32
31
21
37
36
L/Y
L/B
L
W/R
W/R
TO WW-WIPER
TO LT-F/FOG
TO PG-POWER-01
C
W
1S
L
TO PG-POWER-05
FUSE BLOCK (J/B)
M4 , E30 , E32
M
TO PG-POWER-06
10A
17
10A
19
10A
21
10A
20
16P
8P
4N
8Q
Y/R
Y/R
W
R/Y
TO AV-NAVI
TO
AT-BA/FTS
AT-MAIN
AT-PWR/IN
ATC-A/C,A
AV-COMM
AV-NAVI
BL-KEYLES
BL-NATS
BL-TRNSCV
BL-VEHSEC
DI-B/COMP
DI-CHIME
DI-METER
DI-3METER
EC-ASCIND
EC-FLS1
EC-MIL/DL
LT-INT/L
LT-TURN
MTC-A/C,A
MTC-A/C,M
MTC-HEATER
TO
AT-SHIFT
AV-NAVI
BL-D/LOCK
BL-KEYLES
BL-NATS
BL-VEHSEC
DI-CHIME
LT-COMBSW
LT-INT/L
TO
AT-NONDTC
AT-SHIFT
BRC-ABS
BRC-TCS
EC-ASC/BS
EC-ASCBOF
EC-BRK/SW
LT-STOP/L

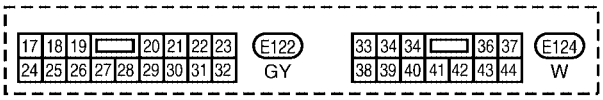
17 18 19 20 21 22 23
24 25 26 27 28 29 30 31 32
E122
GY
33 34 34 36 37
38 39 40 41 42 43 44
E124
W

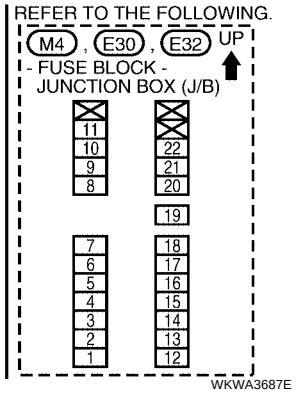
REFER TO THE FOLLOWING.
M4 , E30 , E32
UP
- FUSE BLOCK - JUNCTION BOX (J/B)
11
10
9
8
22
21
20
19
7
6
5
4
3
2
1
18
17
16
15
14
13
12
WKWA3687E

PG-POWER-04

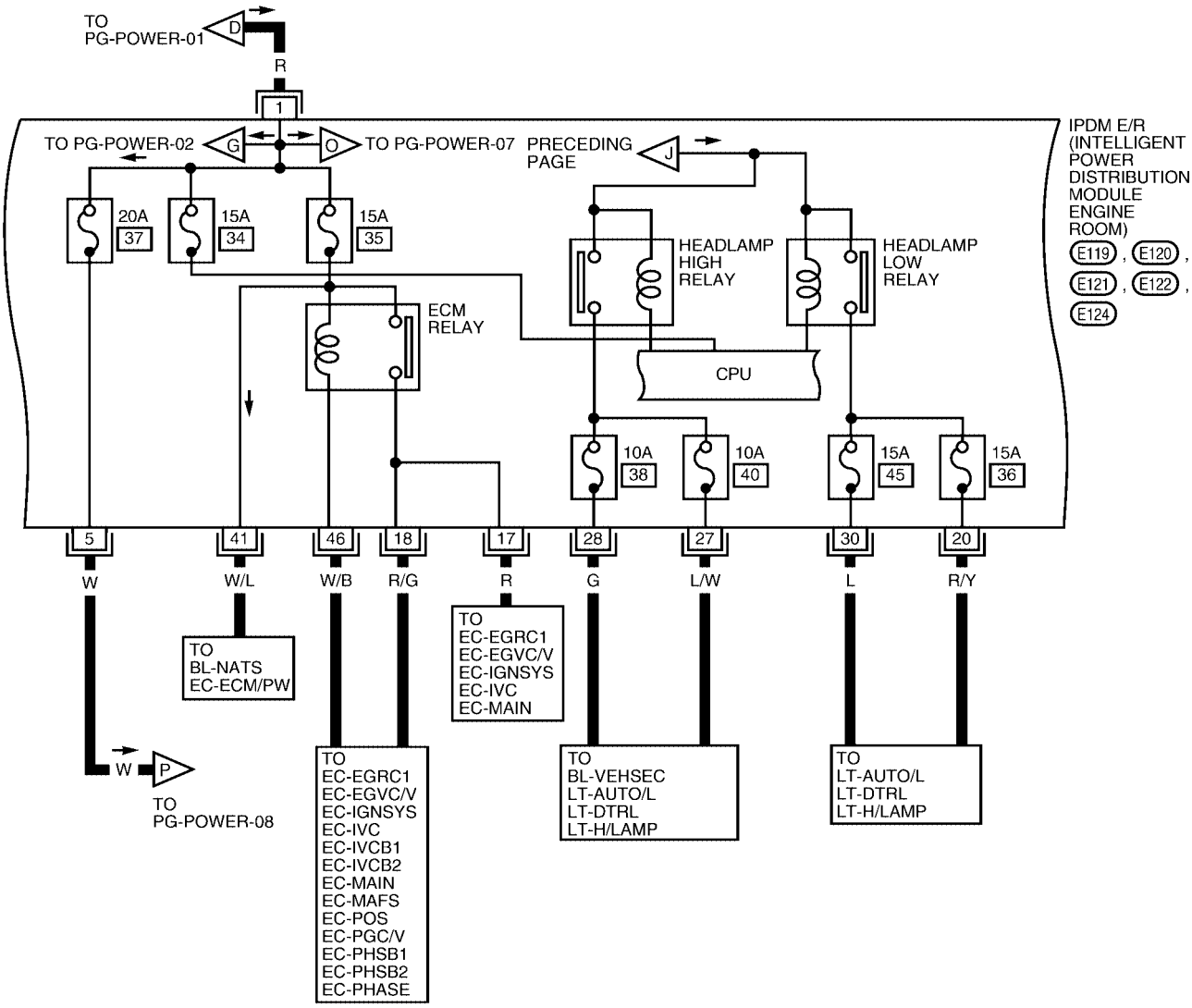

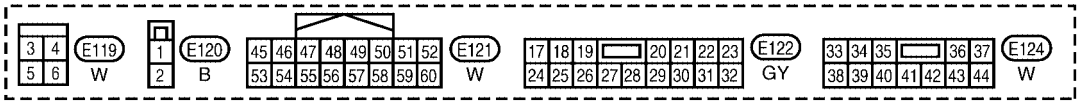

WKWA3688E

ACCESSORY POWER SUPPLY — IGNITION SW. IN ACC OR ON

PG-POWER-05

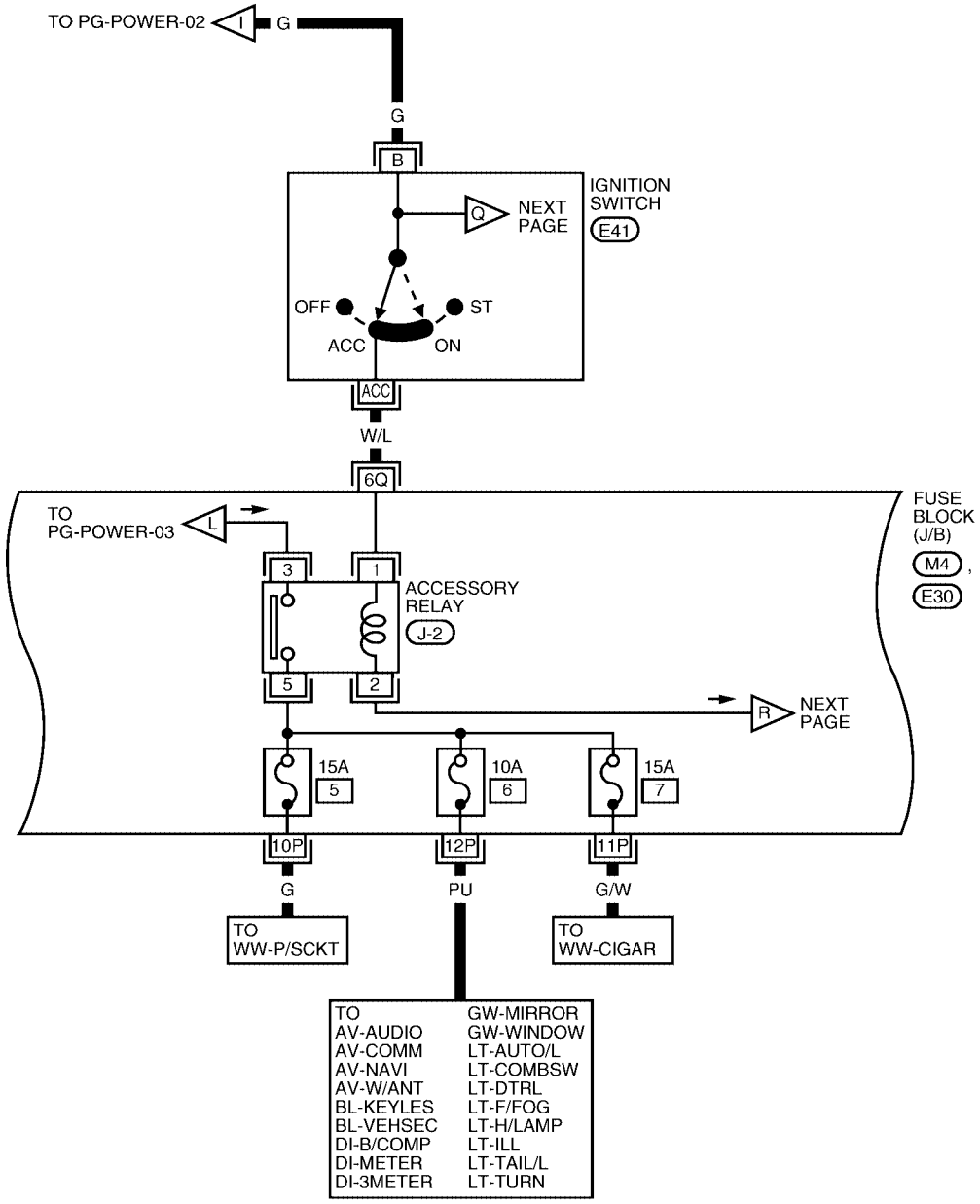

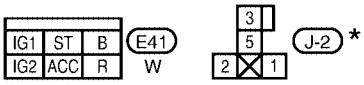

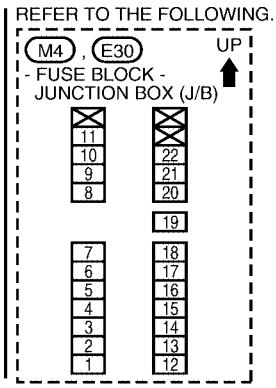

*: THIS CONNECTOR IS NOT SHOWN IN "HARNESS LAYOUT".

WKWA3689E

IGNITION POWER SUPPLY — IGNITION SW. IN ON

PG-POWER-06

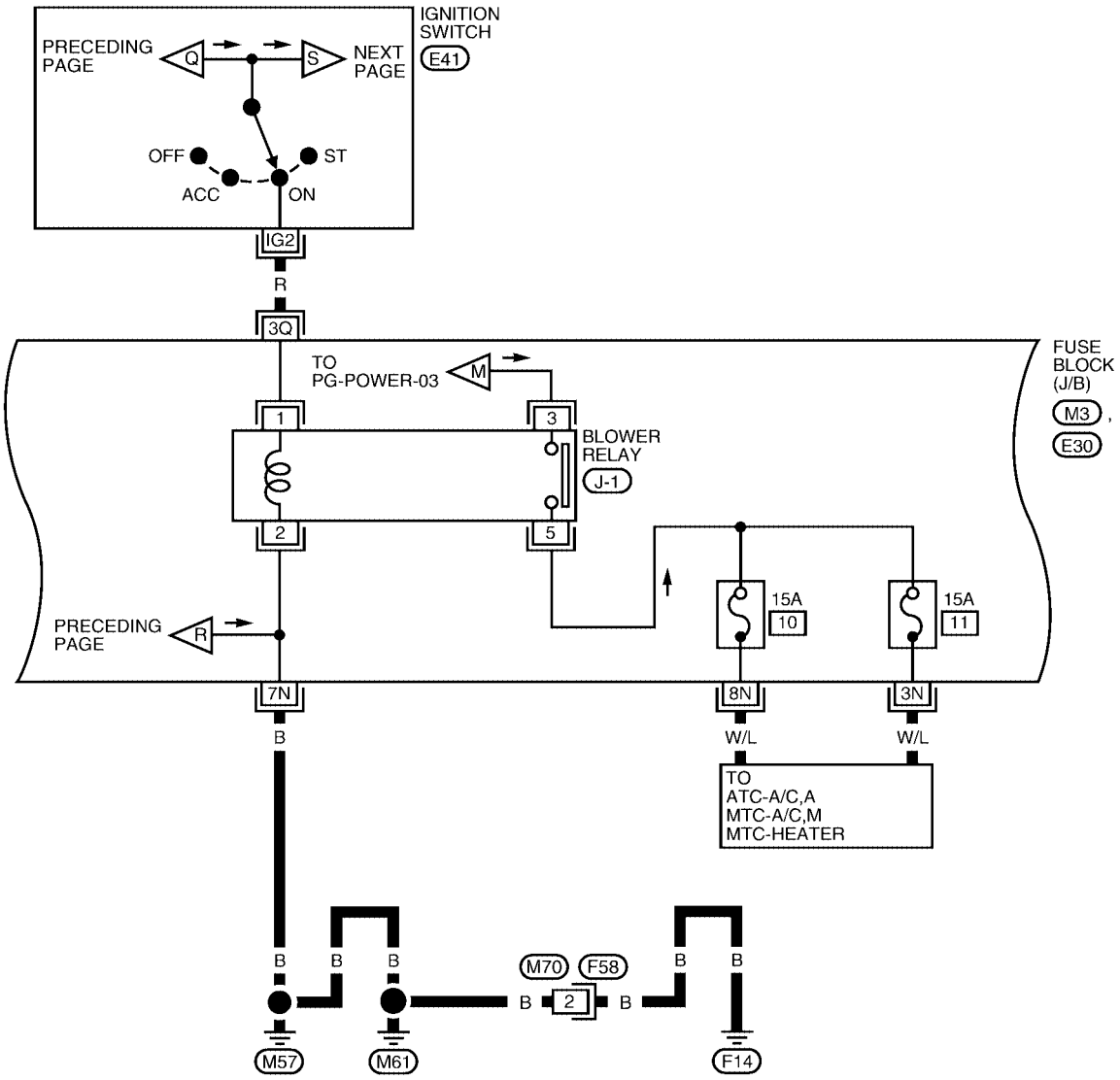

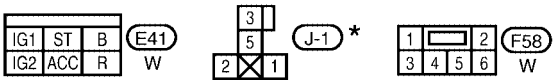

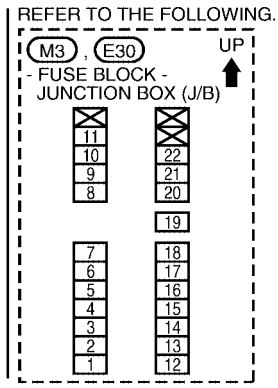

★: THIS CONNECTOR IS NOT SHOWN IN “HARNESS LAYOUT”.

WKWA3690E

IGNITION POWER SUPPLY — IGNITION SW. IN ON AND/OR START

PG-POWER-07

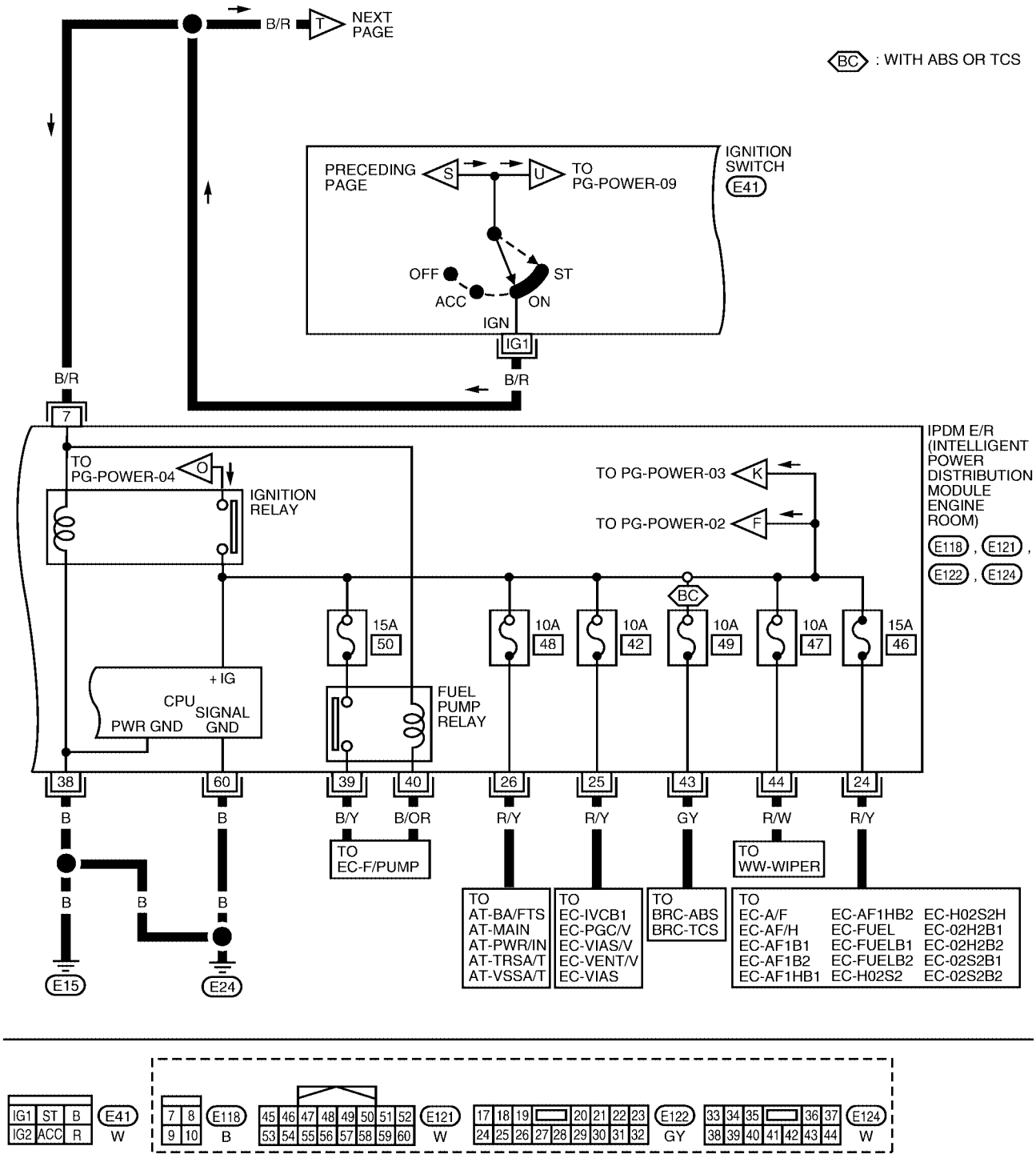

WKWA3691E

PG-POWER-08

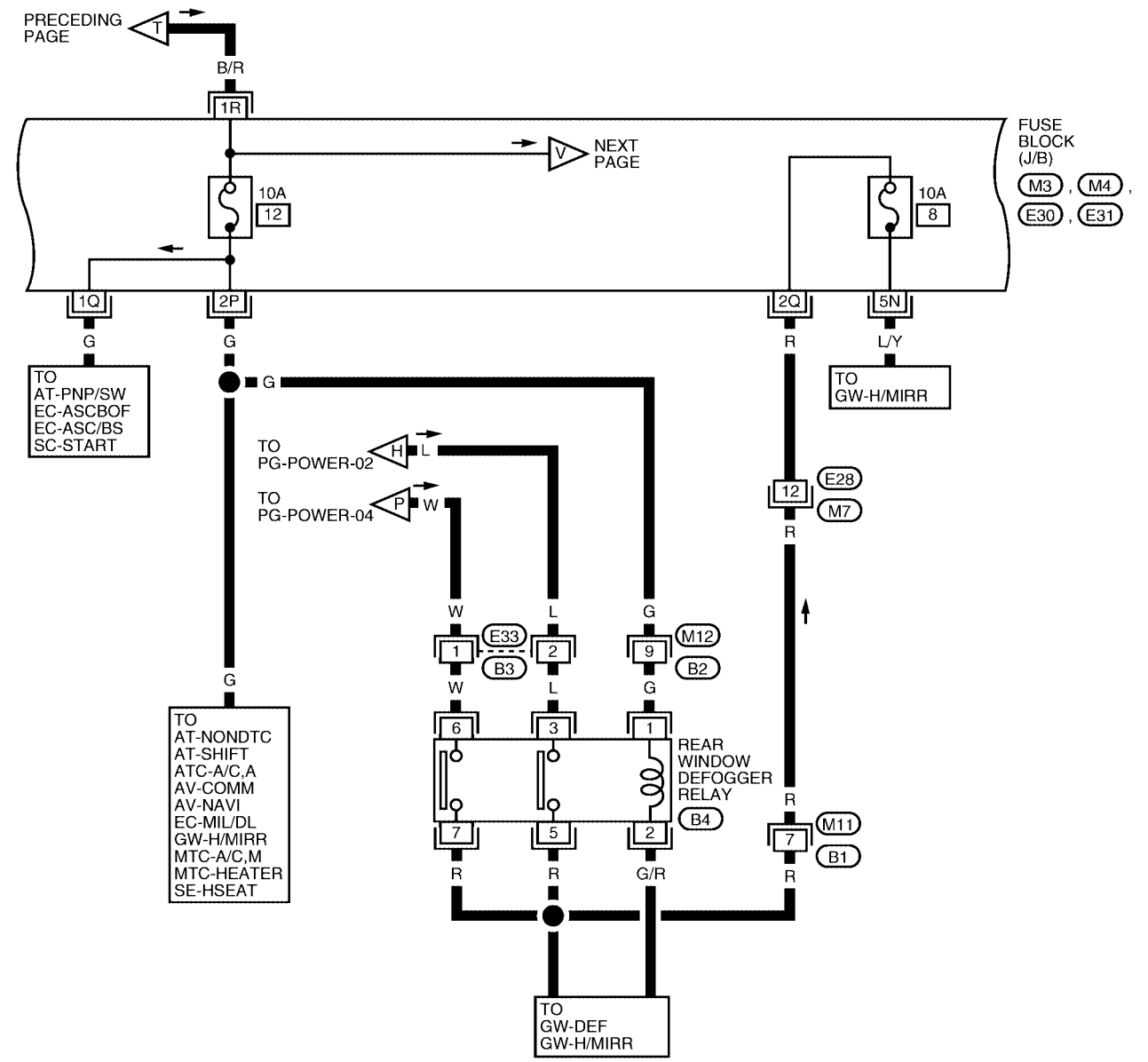
PRECEDING PAGE
T
B/R
1R
NEXT PAGE
V
FUSE BLOCK (J/B)
M3 , M4 ,
E30 , E31
10A
12
10A
8
1Q
2P
2Q
5N
G
G
R
L/Y
TO AT-PNP/SW EC-ASCBOF EC-ASC/BS SC-START
TO GW-H/MIRR
TO PG-POWER-02
H
L
TO PG-POWER-04
P
W
12
E28
M7
R
W
L
G
E33
B3
M12
B2
TO AT-NONDTC AT-SHIFT ATC-A/C,A AV-COMM AV-NAVI EC-MIL/DL GW-H/MIRR MTC-A/C,M MTC-HEATER SE-HSEAT
REAR WINDOW DEFOGGER RELAY
B4
M11
B1
R
R
G/R
TO GW-DEF GW-H/MIRR

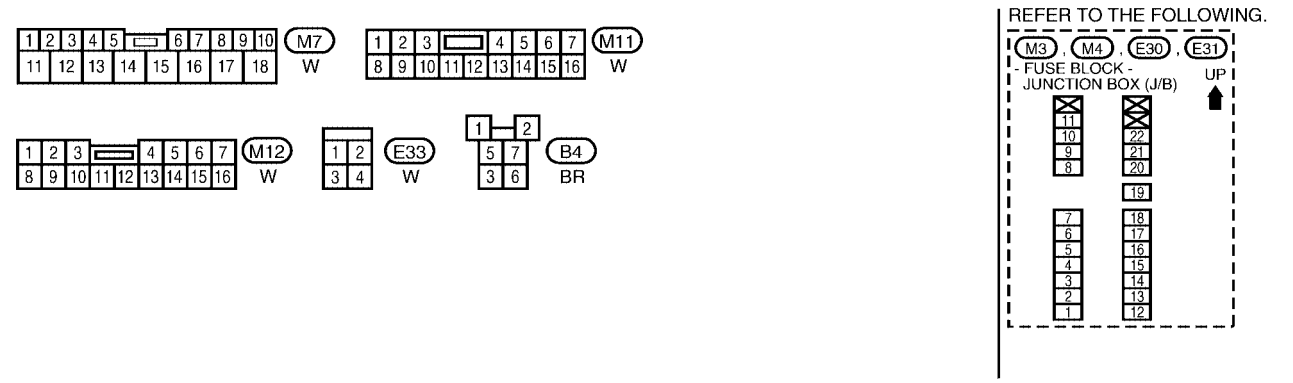
M7
W
M11
W
M12
W
E33
W
B4
BR
REFER TO THE FOLLOWING.
M3 , M4 , E30 , E31
- FUSE BLOCK - JUNCTION BOX (J/B)
UP
WKWA3692E

PG-POWER-09

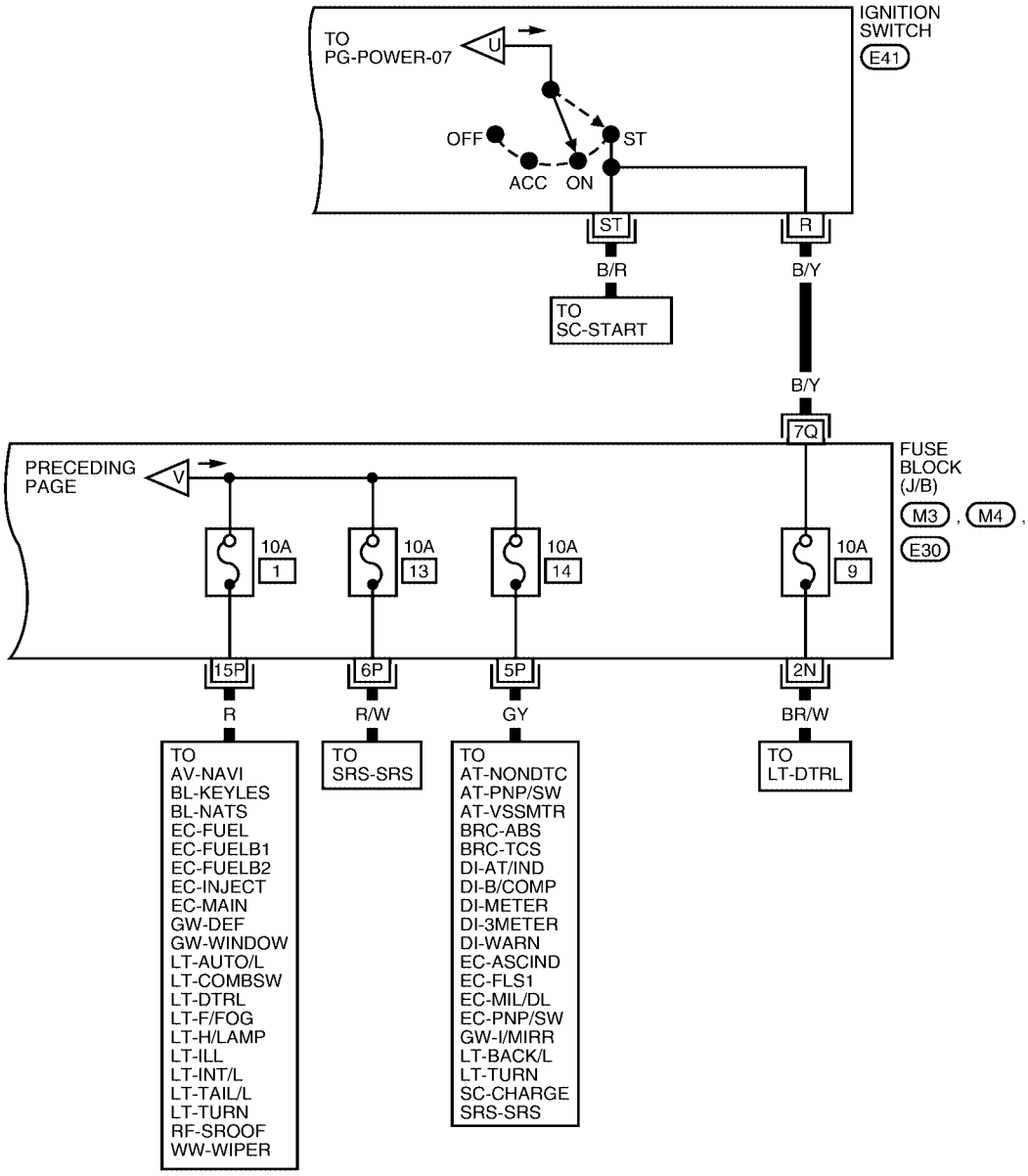

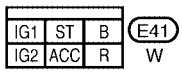

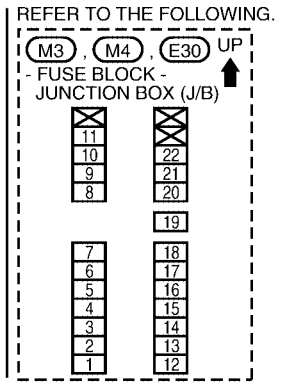

WKWA3693E

Fuse

EKS00GDM

- If fuse is blown, be sure to eliminate cause of incident before installing new fuse.
- Use fuse of specified rating. Never use fuse of more than specified rating.
- Do not partially install fuse; always insert it into fuse holder properly.
- Remove fuse for “ELECTRICAL PARTS (BAT)” if vehicle is not used for a long period of time.

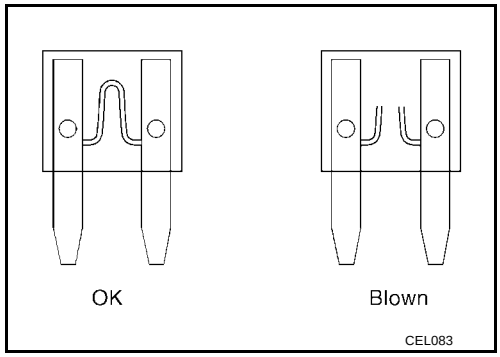

Fusible Link

EKS00GDN

A melted fusible link can be detected either by visual inspection or by feeling with finger tip. If its condition is questionable, use circuit tester or test lamp.

CAUTION:

- **If fusible link should melt, it is possible that critical circuit (power supply or large current carrying circuit) is shorted. In such a case, carefully check and eliminate cause of incident.**
- **Never wrap outside of fusible link with vinyl tape. Important: Never let fusible link touch any other wiring harness, vinyl or rubber parts.**

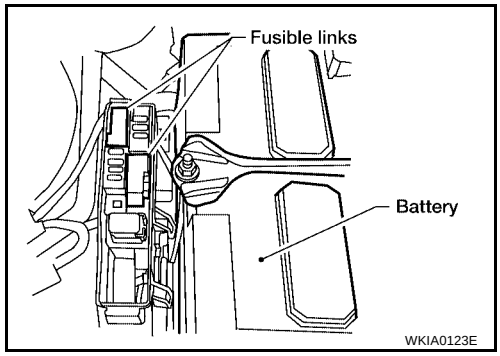

Circuit Breaker (Built Into BCM)

EKS00GDO

For example, when current is 30A, the circuit is broken within 8 to 20 seconds.
A circuit breaker is used for the following systems:

- Power seat
- Power windows
- Power door locks
- Remote keyless entry system

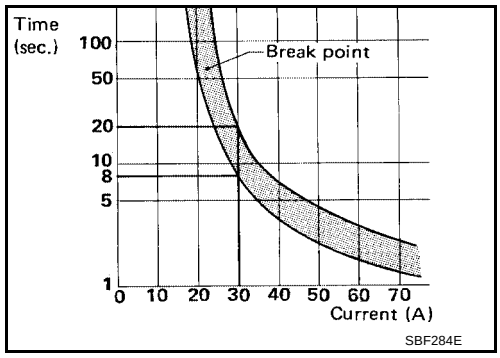

IPDM E/R (INTELLIGENT POWER DISTRIBUTION MODULE ENGINE ROOM)

PFP:284B7

System Description

EKS008UE

- IPDM E/R (Intelligent Power Distribution Module Engine Room) integrates the relay box and fuse block which were originally placed in engine compartment. It controls integrated relays via IPDM E/R control circuits.
- IPDM E/R-integrated control circuits perform ON-OFF operation of relays, CAN communication control, oil pressure switch signal reception, etc.
- It controls operation of each electrical component via BCM and CAN communication lines.

CAUTION:

None of the IPDM E/R-integrated relays can be individually removed.

SYSTEMS CONTROLLED BY IPDM E/R

1. Lamp control

Using CAN communication lines, it receives signals from the BCM and controls the following lamps:

- Headlamps (Hi, Lo)
- Parking lamps
- Tail lamps
- Front fog lamps

2. Wiper control

Using CAN communication lines, it receives signals from the BCM and controls the front wipers.

3. Rear window defogger relay control

Using CAN communication lines, it receives signals from the BCM and controls the rear window defogger relay.

4. A/C compressor control

Using CAN communication lines, it receives signals from the ECM and controls the A/C compressor magnetic clutch).

5. Cooling fan control

Using CAN communication lines, it receives signals from the ECM and controls the cooling fan relays.

6. Horn control

Using CAN communication lines, it receives signals from the BCM and controls the horn relay.

CAN COMMUNICATION LINE CONTROL

With CAN communication, by connecting each control unit using two communication lines (CAN L-line, CAN H-line), it is possible to transmit maximum amount of information with minimum wiring. Each control unit can transmit and receive data, and read necessary information only.

1. Fail-safe control
   - When CAN communication with other control units is impossible, IPDM E/R performs fail-safe control. After CAN communication recovers normally, it also returns to normal control.
   - Operation of control parts by IPDM E/R during fail-safe mode is as follows:

Controlled system	Fail-safe mode
Headlamp	● With the ignition switch ON, the headlamp (low) is ON. ● With the ignition switch OFF, the headlamp (low) is OFF.
Tail and parking lamps	● With the ignition switch ON, the tail and parking lamps are ON. ● With the ignition switch OFF, the tail and parking lamps are OFF.
Cooling fan	● With the ignition switch ON, the cooling fan HI operates. ● With the ignition switch OFF, the cooling fan stops.
Front wiper	Until the ignition switch is turned off, the front wiper LO and HI remains in the same status it was in just before fail–safe control was initiated.
Rear window defogger	Rear window defogger relay OFF
A/C compressor	A/C compressor OFF
Front fog lamps	Front fog lamp relay OFF

IPDM E/R STATUS CONTROL

In order to save power, IPDM E/R switches status by itself based on each operating condition.

1. CAN communication status
   - CAN communication is normally performed with other control units.
   - Individual unit control by IPDM E/R is normally performed.
   - When sleep request signal is received from BCM, mode is switched to sleep waiting status.
2. Sleep waiting status
   - Process to stop CAN communication is activated.
   - All systems controlled by IPDM E/R are stopped. When 1 second has elapsed after CAN communication with other control units is stopped, mode switches to sleep status.
3. Sleep status
   - IPDM E/R operates in low current-consumption mode.
   - CAN communication is stopped.
   - When a change in CAN communication signal is detected, mode switches to CAN communication status.
   - When a change in ignition switch signal is detected, mode switches to CAN communication status.

CAN Communication System Description

EKS008UF

Refer to LAN-20, "CAN COMMUNICATION" .

Function of Detecting Ignition Relay Malfunction

EKS008UG

- When the integrated ignition relay is stuck in a "closed contact" position and cannot be turned OFF, IPDM E/R turns ON tail and parking lamps for 10 minutes to indicate IPDM E/R malfunction.
- When the state of the integrated ignition relay does not agree with the state of the ignition switch signal received via CAN communication, the IPDM E/R activates the tail lamp relay.

Ignition switch signal	Ignition relay status	Tail lamp relay
ON	ON	—
OFF	OFF	—
ON	OFF	—
OFF	ON	ON (10 minutes)

NOTE:
When the ignition switch is turned ON, the tail lamps are OFF.

CONSULT-II Function (IPDM E/R)

EKS008UH

CONSULT-II can display each diagnostic item using the diagnostic test modes shown following.

IPDM E/R diagnostic Mode	Description
SELF-DIAG RESULTS	Displays IPDM E/R self-diagnosis results.
DATA MONITOR	Displays IPDM E/R input/output data in real time.
CAN DIAG SUPPORT MNTR	The result of transmit/receive diagnosis of CAN communication can be read.
ACTIVE TEST	Operation of electrical loads can be checked by sending drive signal to them.

CONSULT-II BASIC OPERATION

CAUTION:

If CONSULT-II is used with no connection of CONSULT-II CONVERTER, malfunctions might be detected in self-diagnosis depending on control unit which carries out CAN communication.

1. With the ignition switch OFF, connect CONSULT-II and CONSULT-II CONVERTER to the data link connector, then turn ignition switch ON.

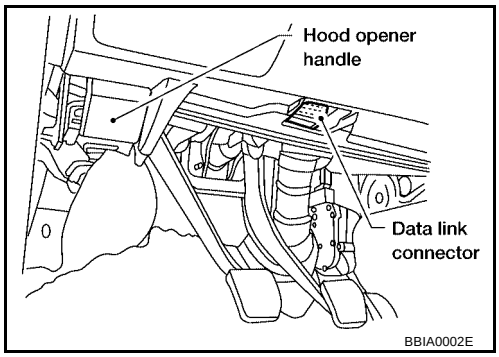

2. Touch “START (NISSAN BASED VHCL)”.

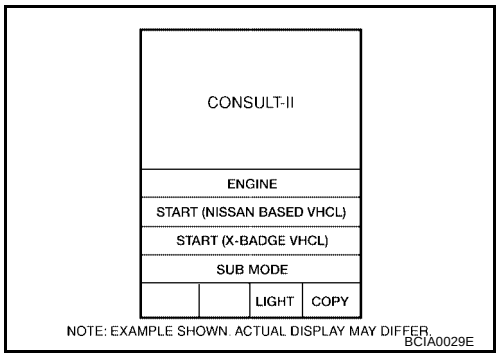

3. Touch “IPDM E/R” on “SELECT SYSTEM” screen.
   - If “IPDM E/R” is not displayed then refer to GI-39, "Consult-II Data Link Connector (DLC) Circuit" .

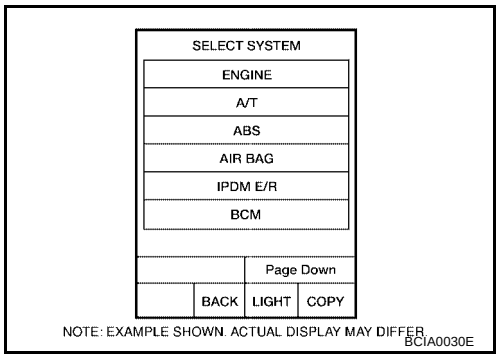

4. Select the desired part to be diagnosed on the “SELECT DIAG MODE” screen.

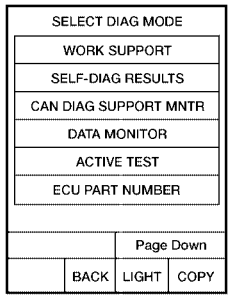

NOTE: EXAMPLE SHOWN. ACTUAL DISPLAY MAY DIFFER.
BCIA0031E

SELF-DIAGNOSTIC RESULTS

Operation Procedure

1. Touch “SELF-DIAG RESULTS” on “SELECT DIAG MODE” screen.
2. Self-diagnosis results are displayed.

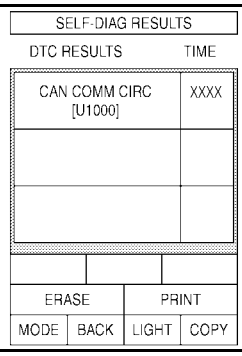

WKIA1264E

Display Item List

Display items	CONSULT-II display code	Malfunction detection	TIME		Possible causes
			CRNT	PAST	
NO DTC IS DETECTED. FURTHER TESTING MAY BE REQUIRED.	—	—	—	—	—
CAN COMM CIRC	U1000	● If CAN communication reception/transmission data has a malfunction, or if any of the control units fail, data reception/transmission cannot be confirmed. ● When the data in CAN communication is not received before the specified time.	X	X	Any of items listed below have errors: ● TRANSMIT DIAG ● ECM ● BCM/SEC

NOTE:
The details for display of the period are as follows:

- CRNT: Error currently detected with IPDM E/R.
- PAST: Error detected in the past and placed in IPDM E/R memory.

DATA MONITOR

Operation Procedure

1. Touch “DATA MONITOR” on “SELECT DIAG MODE” screen.
2. Touch "ALL SIGNALS”, “MAIN SIGNALS” or “SELECTION FROM MENU” on the “DATA MONITOR” screen.

ALL SIGNALS	All signals will be monitored.
MAIN SIGNALS	Monitors the predetermined item(s).
SELECTION FROM MENU	Selects and monitors individual signal(s).

3. Touch “START”.
4. When "SELECTION FROM MENU" is selected, touch items to be monitored. When "ALL SIGNALS" is selected, all the items will be monitored. When "MAIN SIGNALS" is selected, predetermined items are monitored.

5. Touch “RECORD” while monitoring to record the status of the item being monitored. To stop recording, touch “STOP”.

All Signals, Main Signals, Select From Menu

Item name	CONSULT-II screen display	Display or unit	Monitor item selection			Description
			ALL SIGNALS	MAIN SIGNALS	SELECTION FROM MENU	
Cooling fan request	MOTOR FAN REQ	1/2/3/4	X	X	X	Signal status input from ECM
Compressor request	AC COMP REQ	ON/OFF	X	X	X	Signal status input from ECM
Parking, license, and tail lamp request	TAIL & CLR REQ	ON/OFF	X	X	X	Signal status input from BCM
Headlamp low beam request	HL LO REQ	ON/OFF	X	X	X	Signal status input from BCM
Headlamp high beam request	HL HI REQ	ON/OFF	X	X	X	Signal status input from BCM
Front fog request	FR FOG REQ	ON/OFF	X	X	X	Signal status input from BCM
FR wiper request	FR WIP REQ	STOP/1LOW/ LOW/HI	X	X	X	Signal status input from BCM
Wiper auto stop	WIP AUTO STOP	ACT P/STOP P	X	X	X	Output status of IPDM E/R
Wiper protection	WIP PROT	OFF/LS/HS/Block	X	X	X	Control status of IPDM E/R
Starter request	ST RLY REQ	ON/OFF	X		X	Status of input signal NOTE
Ignition relay status	IGN RLY	ON/OFF	X	X	X	Ignition relay status monitored with IPDM E/R
Rear defogger request	RR DEF REQ	ON/OFF	X	X	X	Signal status input from BCM
Oil pressure switch	OIL P SW	OPEN/CLOSE	X		X	Signal status input from IPDM E/R
Hood switch	HOOD SW (*1)	OFF	X			Signal status input from IPDM E/R (function is not enabled)
Theft warning horn request	THFT HRN REQ	ON/OFF	X		X	Signal status input from BCM
Horn chirp	HORN CHIRP	ON/OFF	X		X	Output status of IPDM E/R

NOTE:
- Perform monitoring of IPDM E/R data with the ignition switch ON. When the ignition switch is in ACC position, display may not be correct.
- (*1) This item is displayed, but does not function.

ACTIVE TEST

Operation Procedure

1. Touch “ACTIVE TEST” on “SELECT DIAG-MODE” screen.
2. Touch item to be tested, and check operation.
3. Touch “START”.
4. Touch "STOP" while testing to stop the operation.

Test name	CONSULT-II screen display	Description
Tail lamp output	TAIL LAMP	With a certain ON-OFF operation, the tail lamp relay can be operated.
Rear defogger output	REAR DEFOGGER	With a certain ON-OFF operation, the rear defogger relay can be operated.
Front wiper (HI, LO) output	FRONT WIPER	With a certain operation (OFF, HI ON, LO ON), the front wiper relay (Lo, Hi) can be operated.
Cooling fan output	MOTOR FAN	With a certain operation (1, 2, 3, 4), the cooling fan can be operated.

Test name	CONSULT-II screen display	Description
Lamp (HI, LO, FOG) output	LAMPS	With a certain operation (OFF, HI ON, LO ON, FOG ON), the lamp relay (Lo, Hi, Fog) can be operated.
Horn output	HORN	With a certain ON-OFF operation, the horn relay can be operated.

Auto Active Test

EKS008UI

DESCRIPTION

- In auto active test mode, operation inspection can be performed when IPDM E/R sends a drive signal to the following systems:
  - Rear window defogger
  - Front wipers
  - Tail, license and parking lamps
  - Front fog lamps
  - Headlamps (Hi, Lo)
  - A/C compressor (magnetic clutch)
  - Cooling fan

OPERATION PROCEDURE

1. Close hood and front door RH, and lift wiper arms away from windshield (to prevent glass damage by wiper operation).

   NOTE:
   When auto active test is performed with hood opened, sprinkle water on windshield beforehand.
2. Turn ignition switch OFF.
3. Turn ignition switch ON and, within 20 seconds, press front door switch LH 10 times. Then turn ignition switch OFF.
4. Turn ignition switch ON within 10 seconds after ignition switch OFF.
5. When auto active test mode is actuated, horn chirps once.
6. After a series of operations is repeated three times, auto active test is completed.

   NOTE:
   When auto active test mode has to be cancelled halfway, turn ignition switch OFF.

   CAUTION:
   Be sure to perform BL-31, "Door Switch Check" when the auto active test cannot be performed.

INSPECTION IN AUTO ACTIVE TEST MODE

- When auto active test mode is actuated, the following eight steps are repeated three times.

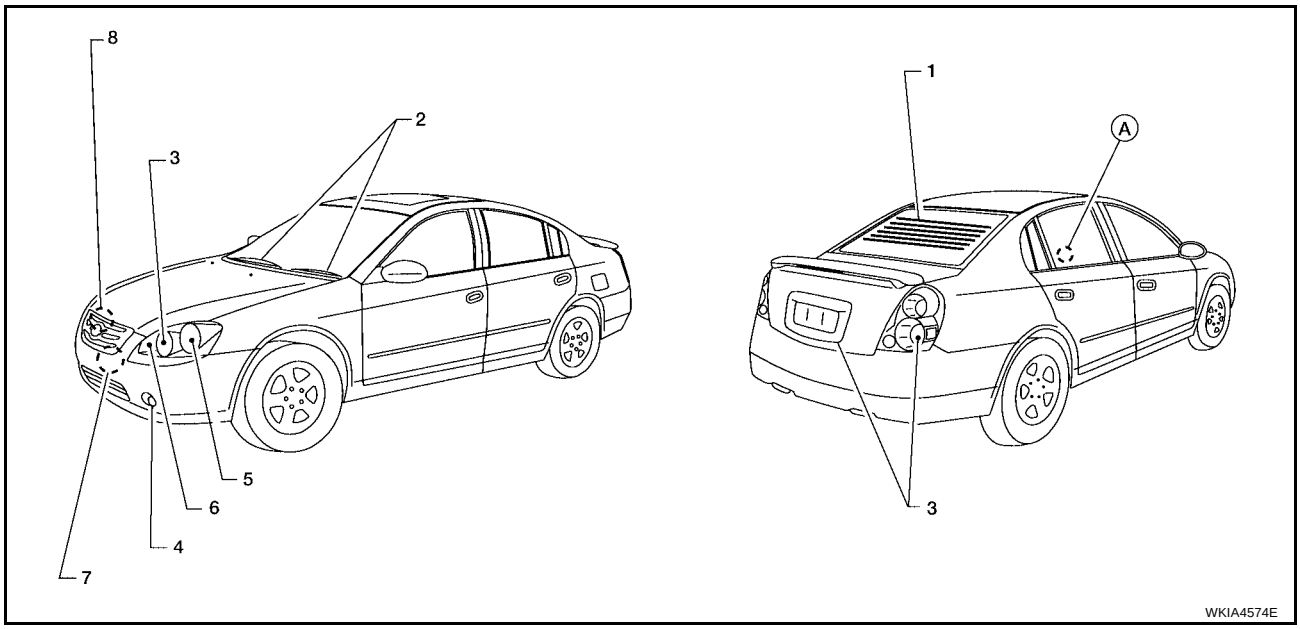

(A): Oil pressure warning lamp is blinking when the auto active test is operating.

Item Number	Test Item	Operation Time/Frequency
1	Rear window defogger	10 seconds
2	Front wipers	LOW 5 seconds then HIGH 5 seconds
3	Tail, license, and parking lamps	10 seconds
4	Front fog lamps	10 seconds
5	Headlamps (low)	10 seconds
6	Headlamps (high)	ON-OFF 5 times
7	A/C compressor (magnetic clutch)	ON-OFF 5 times
8	Cooling fan	LOW 2 seconds → MID 2 seconds → HIGH 2 seconds → MID 2 seconds → LOW 2 seconds

Concept of Auto Active Test

- IPDM E/R actuates auto active test mode when it receives door switch signal from BCM via CAN communication line. Therefore, when auto active test mode is activated successfully, CAN communication between IPDM E/R and BCM is normal.
- If any of systems controlled by IPDM E/R cannot be operated, possible cause can be easily diagnosed using auto active test.

Diagnosis chart in auto active test mode

Symptom	Inspection contents		Possible cause
Rear window defogger does not operate.	Perform auto active test. Does rear window defogger operate?	YES	● BCM signal input circuit
		NO	● Rear window defogger relay ● Open circuit of rear window defogger ● IPDM E/R malfunction ● Harness or connector malfunction between IPDM E/R and rear window defogger
Any of front wipers, tail and parking lamps, front fog lamps, and headlamps (Hi, Lo) do not operate.	Perform auto active test. Does system in question operate?	YES	● BCM signal input system
		NO	● Lamp/wiper motor malfunction ● Lamp/wiper motor ground circuit malfunction ● Harness/connector malfunction between IPDM E/R and system in question ● IPDM E/R (integrated relay) malfunction
A/C compressor does not operate.	Perform auto active test. Does magnetic clutch operate?	YES	● BCM signal input circuit ● CAN communication signal between BCM and ECM. ● CAN communication signal between ECM and IPDM E/R
		NO	● Magnetic clutch malfunction ● Harness/connector malfunction between IPDM E/R and magnetic clutch ● IPDM E/R (integrated relay) malfunction
Cooling fan does not operate.	Perform auto active test. Does cooling fan operate?	YES	● ECM signal input circuit ● CAN communication signal between ECM and IPDM E/R
		NO	● Cooling fan motor malfunction ● Harness/connector malfunction between IPDM E/R and cooling fan motor ● IPDM E/R (integrated relay) malfunction
Oil pressure warning lamp does not operate.	Perform auto active test. Does oil pressure warning lamp blink?	YES	● Harness/connector malfunction between IPDM E/R and oil pressure switch ● Oil pressure switch malfunction ● IPDM E/R
		NO	● CAN communication signal between BCM and Combination Meter ● Combination meter

Schematic

EKS008UJ

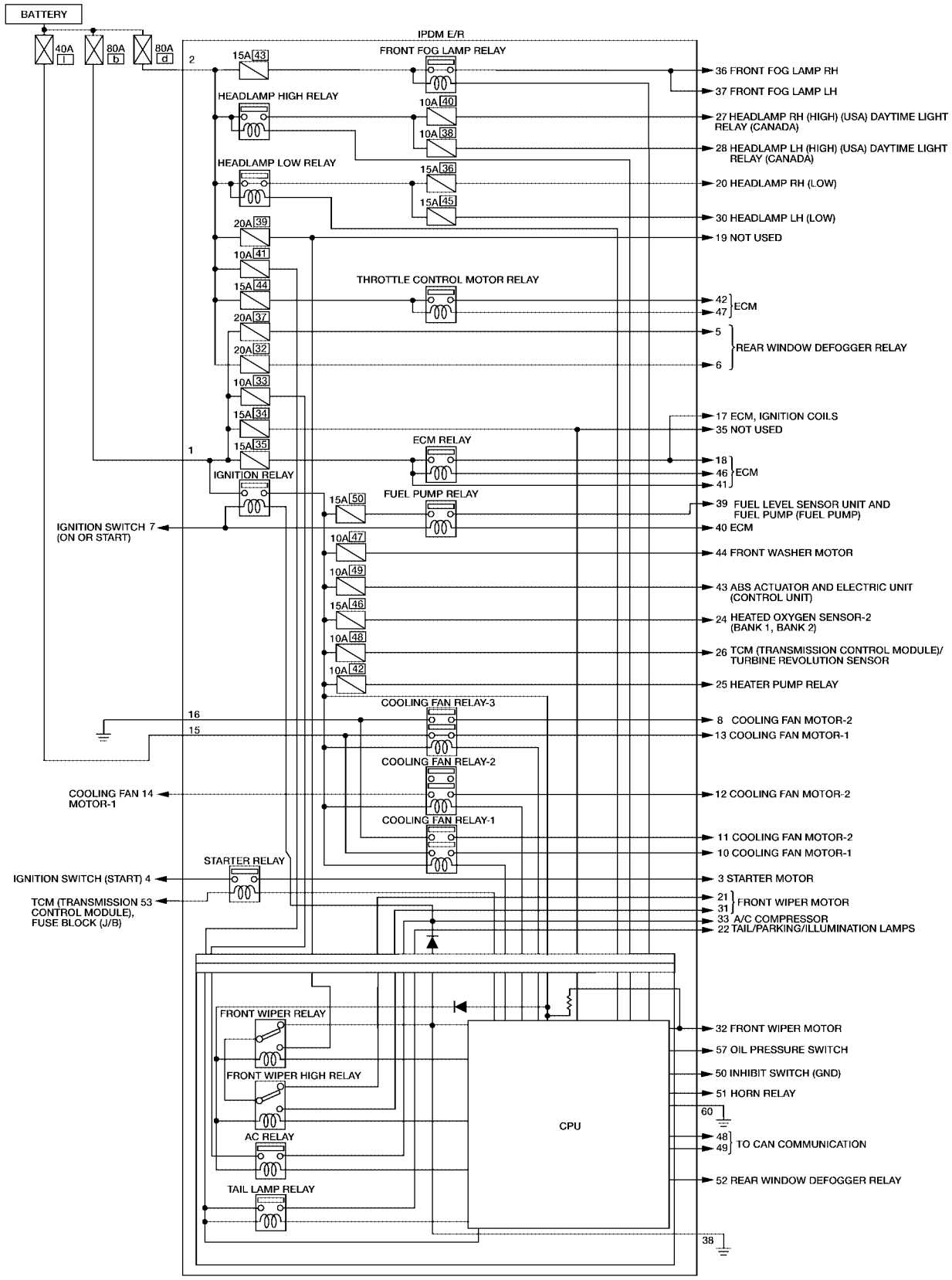

IPDM E/R TERMINAL ARRANGEMENT

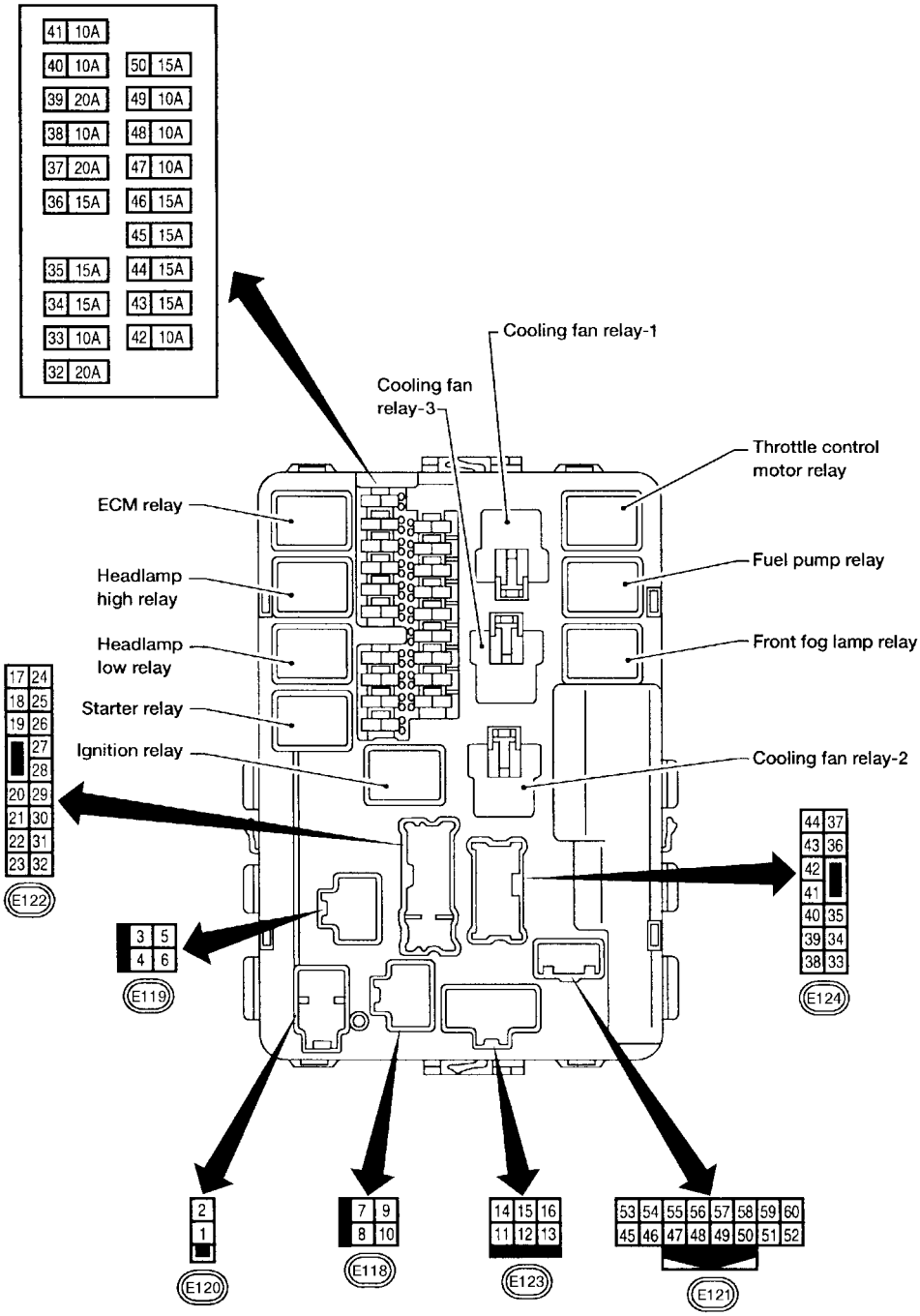

WKIA1609E

IPDM E/R Power/Ground Circuit Inspection

EKS008UK

1. FUSE AND FUSIBLE LINK INSPECTION

Check that the following fusible links or IPDM E/R fuses are not blown.

Terminal No.	Signal name	Fuse, fusible link No.
1, 2	Battery power	a, b, d,

OK or NG

OK >> GO TO 2.
NG >> Replace fuse or fusible link.

2. POWER CIRCUIT INSPECTION

1. Turn ignition switch OFF.
2. Disconnect IPDM E/R harness connector E120.
3. Check voltage between IPDM E/R harness connector E120 terminals 1 (R), 2 (B/Y) and ground.

Battery voltage should exist.

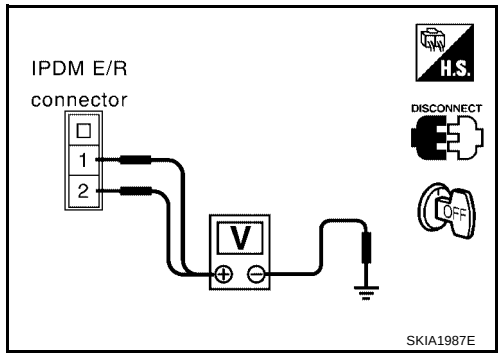

OK or NG

OK >> GO TO 3.
NG >> Repair or replace IPDM E/R power circuit harness.

3. GROUND CIRCUIT INSPECTION

1. Disconnect IPDM E/R harness connectors E121 and E124.
2. Check continuity between IPDM E/R harness connector (A) E121 terminal 60, (B) E124 terminal 38 and ground.

Continuity should exist.

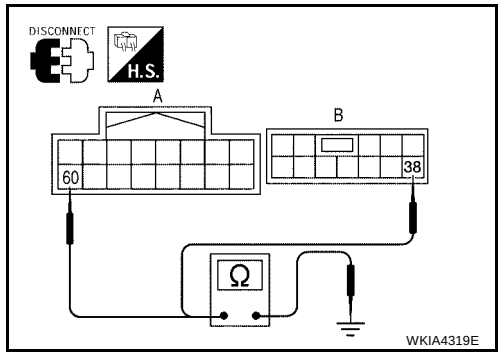

OK or NG

OK >> Inspection End.
NG >> Repair or replace IPDM E/R ground circuit harness.

Inspection with CONSULT-II (Self-Diagnosis)

EKS008UL

CAUTION:

If a CONSULT-II is used with no connection of CONSULT-II CONVERTER, malfunctions might be detected in self-diagnosis depending on which control unit(s) carry out CAN communication.

1. SELF-DIAGNOSIS RESULT CHECK

1. Connect CONSULT-II and select "IPDM E/R" on the Diagnosis System Selection screen.
2. Select "SELF-DIAG RESULTS" on the diagnosis mode selection screen.
3. Check display content in self-diagnosis results.

CONSULT-II Display	CONSULT-II display code	TIME		Details of diagnosis result
		CRNT	PAST	
NO DTC IS DETECTED. FURTHER TESTING MAY BE REQUIRED.	—	—	—	No malfunction
CAN COMM CIRC	U1000	X	X	Any of items listed below have errors: ● TRANSMIT DIAG ● ECM ● BCM/SEC

NOTE:

The Details for Display for the Period are as follows:

- CRNT: Error currently detected by IPDM E/R.
- PAST: Error detected in the past and stored in IPDM E/R memory.

Contents displayed

NO DTC DETECTED. FURTHER TESTING MAY BE REQUIRED.>>INSPECTION END.
CAN COMM CIRC>>Print out the self-diagnosis result and refer to LAN-20, "CAN COMMUNICATION" .

Removal and Installation of IPDM E/R

EKS008UM

REMOVAL

1. Disconnect the negative battery cable.
2. Remove 2 bolts and position coolant reservoir aside.
3. Remove IPDM E/R upper cover.
4. Remove IPDM E/R harness cover.

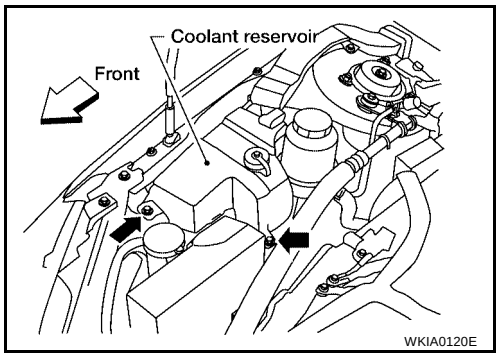

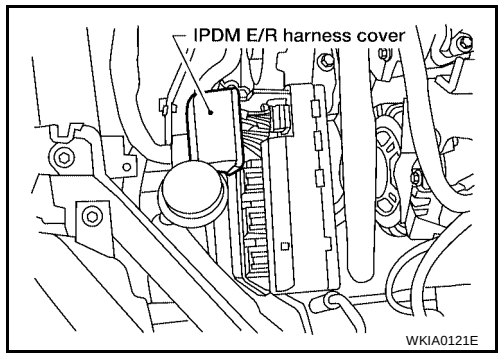

5. Release 2 clips and pull IPDM E/R up from case.
6. Disconnect IPDM E/R connectors and remove the IPDM E/R.

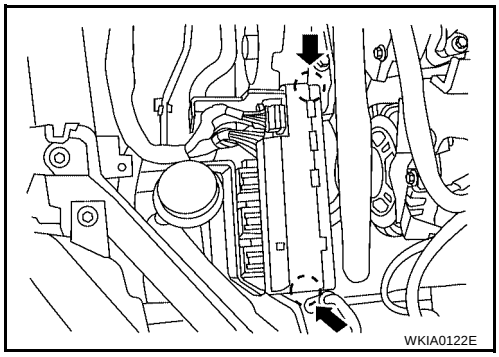

INSTALLATION

Installation is in the reverse order of removal.

GROUND CIRCUIT

PFP:24080

Ground Distribution

EKS008UN

MAIN HARNESS

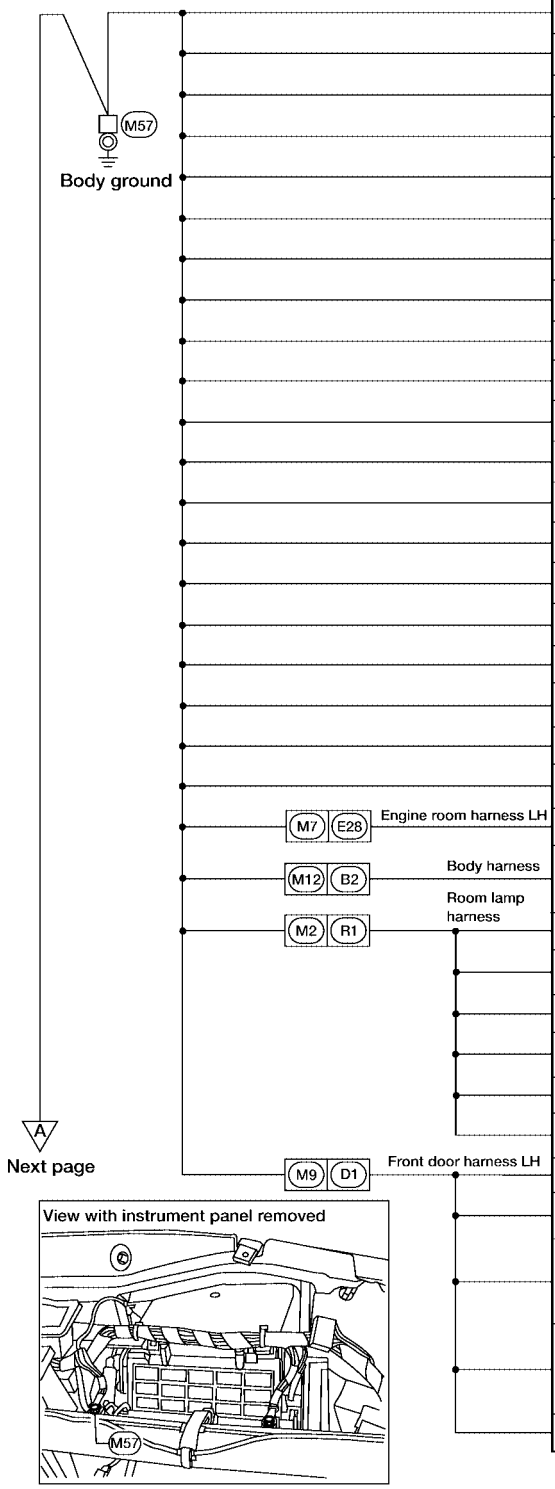

CONNECTOR NUMBER	CONNECT TO
M3	Fuse box (J/B) (Terminal No. 7N)
M5	Illumination control switch
M6	TCS OFF switch
M13	Heated seat relay
M16	Trunk lid opener switch
M20	BCM (body control module) (Terminal No. 67)
M22	Data link connector (Terminal No. 4)
M22	Data link connector (Terminal No. 5)
M24	Combination meter (Terminal No. 23)
M24	Combination meter (Terminal No. 25)
M24	Combination meter (Terminal No. 28)
M24	Combination meter (Terminal No. 30)
M27	NATS antenna amp. (Terminal No. 3)
M28	Combination switch
M31	Shift lock control unit (Terminal No. 8)
M39	Air mix door motor
M40	Mode door motor
M94	Display control unit (Terminal No. 3)
M99	Triple meter (Terminal No. 3)
M99	Triple meter (Terminal No. 4)
E1	Ambient sensor
B16	Fuel level sensor unit and fuel pump (fuel level sensor, fuel tank temperature sensor) (Terminal No. 5)
R2	Vanity mirror lamp LH
R2	HOMELINK® universal transceiver
R3	Spot lamp
R5	Sunroof motor assembly
R6	Auto anti-dazzling inside mirror
R7	Vanity mirror lamp RH
D4	Door mirror LH
D5	Door mirror remote control switch (Terminal No. 1)
D6	Main power window and door lock/unlock switch (Terminal No. 19) (with left front only power window anti-pinch system)
D7	Main power window and door lock/unlock switch (Terminal No. 11) (with left and right front power window anti-pinch system)
D50	Front door lock assembly LH (key cylinder switch)

WKIA4575E

View with instrument panel removed

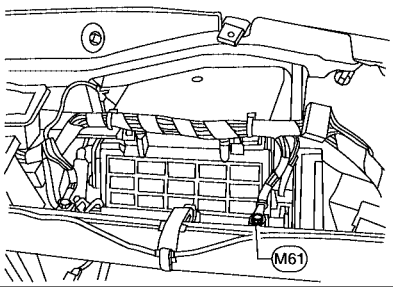

QR : WITH QR25DE
VQ : WITH VQ35DE

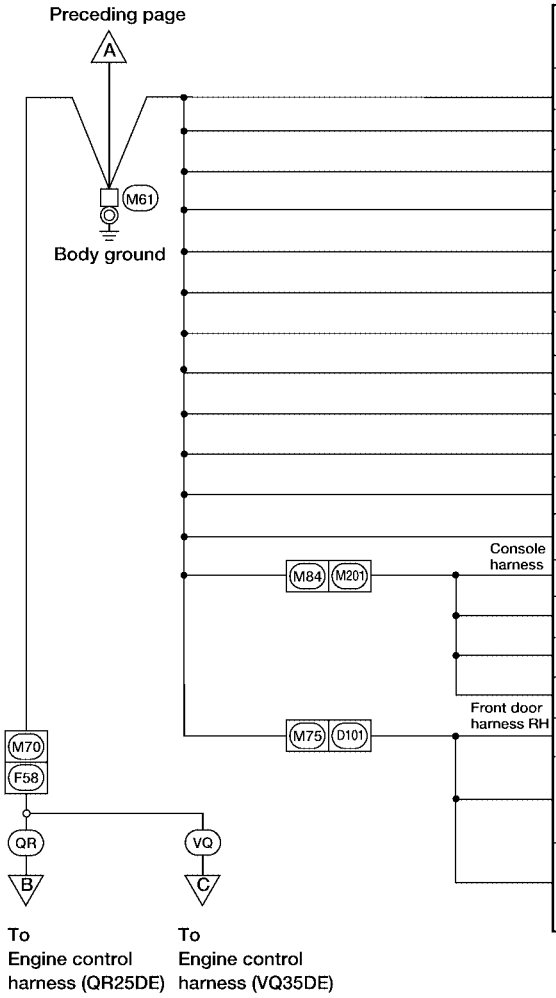

CONNECTOR NUMBER	CONNECT TO
M34	A/T device (Terminal No. 2) (3 position switch) (4A/T)
M34	A/T device (Manual mode switch) (Terminal No. 11) (5A/T)
M35	Air bag diagnosis sensor unit (Terminal No. 2)
M38	Power socket
M43	Audio unit (with NAVI)
M49	Front air control (Terminal No. 3)
M58	Intake door motor
M59	Glove box lamp
M64	Fan control amp.
M81	Front passenger air bag off indicator
M93	Display unit (Terminal No. 1)
M98	AV switch
M203	Hazard switch
M204	Heated seat switch LH
M205	Heated seat switch RH
M206	Power socket (for cigarette lighter)
D104	Door mirror RH
D105	Power window and door lock/unlock switch RH (Terminal No. 9) (with left front only power window anti-pinch system)
D106	Power window and door lock/unlock switch RH (Terminal No. 7) (with left and right front power window anti-pinch system)

WKIA4576E

ENGINE ROOM HARNESS

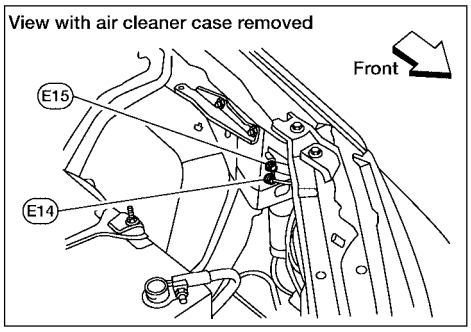

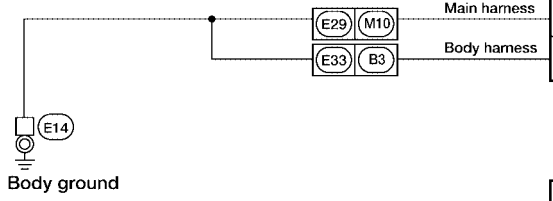

CONNECTOR NUMBER	CONNECT TO
M35	Air bag diagnosis sensor unit (shield wire) (Terminal No.16)
B16	Fuel level sensor unit and fuel pump (fuel pump)

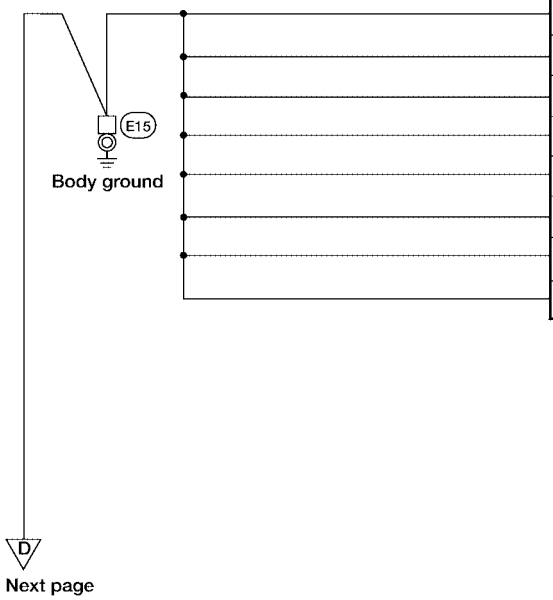

CONNECTOR NUMBER	CONNECT TO
E2	Front fog lamp LH
E11	Headlamp LH (high)
E12	Front combination lamp LH
E13	Headlamp LH (low)
E16	Brake fluid level switch
E23	Front wiper motor
E34	Clutch interlock switch (with M/T)
E124	IPDM E/R (Terminal No. 38)

WKIA4577E

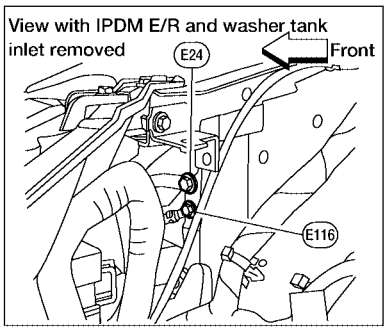

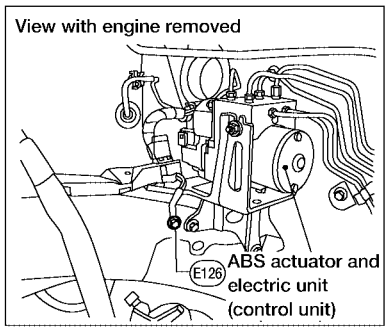

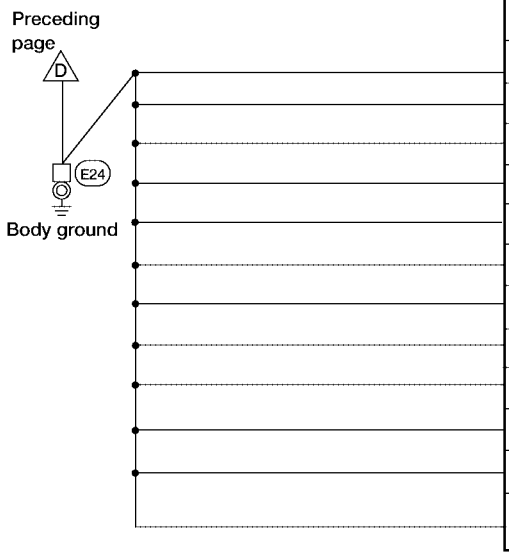

CONNECTOR NUMBER	CONNECT TO
E101	Front fog lamp RH
E103	Daytime light control unit (Canada only) (Terminal No. 14)
E104	Daytime light control unit (Canada only) (Terminal No. 13)
E104	Daytime light control unit (Canada only) (Terminal No. 16)
E106	Washer fluid level sensor
E107	Headlamp RH (Low)
E109	Front combination lamp RH
E110	Headlamp RH (High)
E113	Cooling fan motor 1 (Terminal No. 3)
E113	Cooling fan motor 1 (Terminal No. 4)
E121	IPDM E/R (Terminal No. 60)
E123	IPDM E/R (Cooling fan relay-1, cooling fan relay-3) (Terminal No. 16)

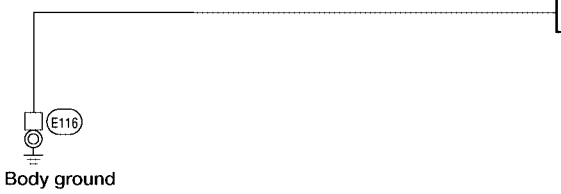

CONNECTOR NUMBER	CONNECT TO
E112	Generator

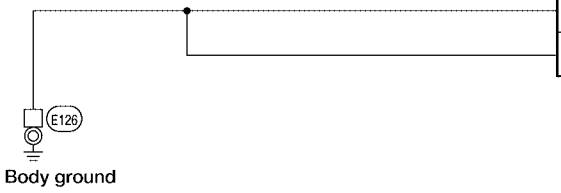

CONNECTOR NUMBER	CONNECT TO
E125	ABS actuator and electric unit (control unit) (Terminal No. 16)
E125	ABS actuator and electric unit (control unit) (Terminal No. 19)

WKIA2755E

ENGINE CONTROL HARNESS (QR25DE)

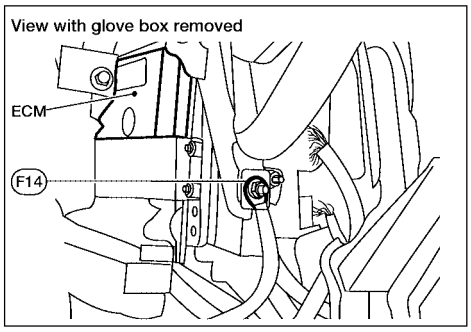

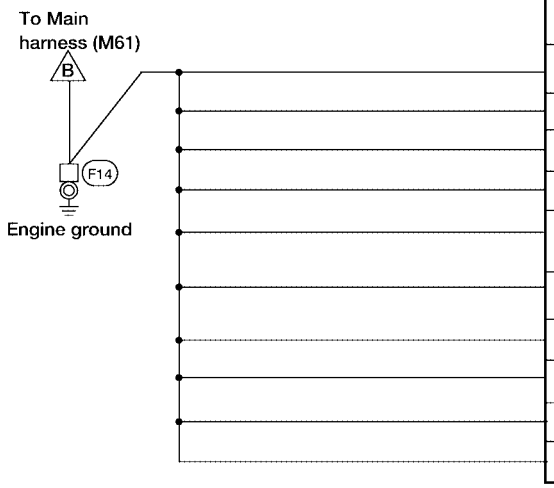

CONNECTOR NUMBER	CONNECT TO
F9	Camshaft position sensor (PHASE)
F11	Crankshaft position sensor (POS)
F18	Knock sensor (shield wire)
F42	Park/Neutral position (PNP) switch (Terminal No. 2) (M/T)
F50	Electric throttle control actuator (throttle position sensor, throttle control motor) (shield wire)
F54	ECM (Terminal No. 1)
F54	ECM (Terminal No. 115)
F54	ECM (Terminal No. 116)
F57	TCM (Terminal No. 25)
F57	TCM (Terminal No. 48)

WKIA4578E

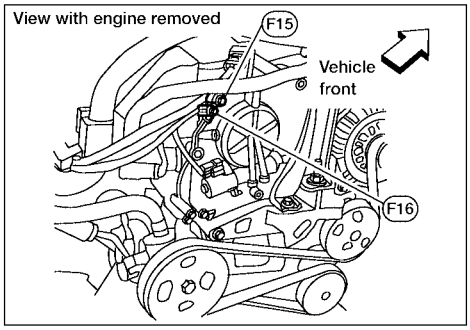

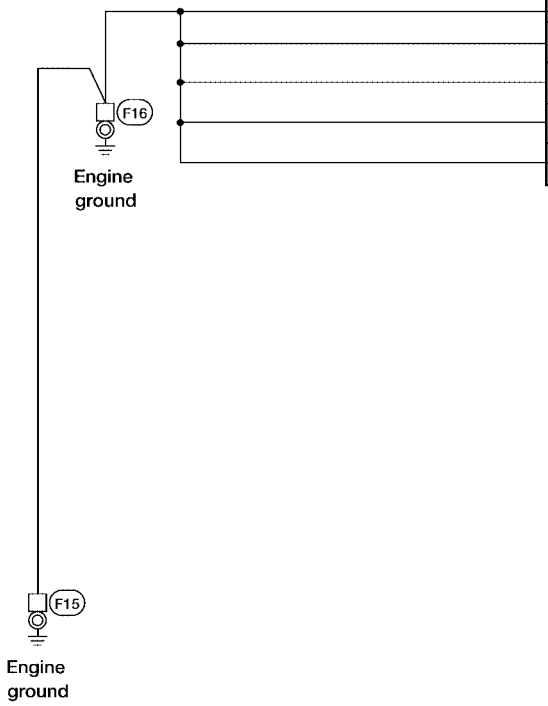

CONNECTOR NUMBER	CONNECT TO
F5	Ignition coil No. 1 (with power transistor)
F6	Ignition coil No. 2 (with power transistor)
F7	Ignition coil No. 4 (with power transistor)
F8	Ignition coil No. 3 (with power transistor)
F21	Condenser-2

WKIA4579E

ENGINE CONTROL HARNESS (VQ35DE)

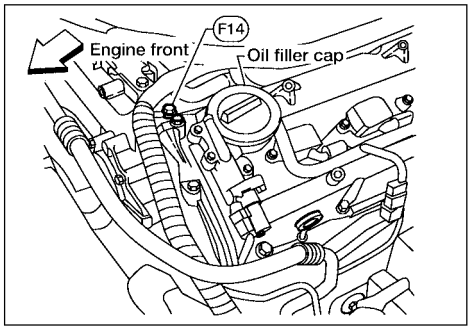

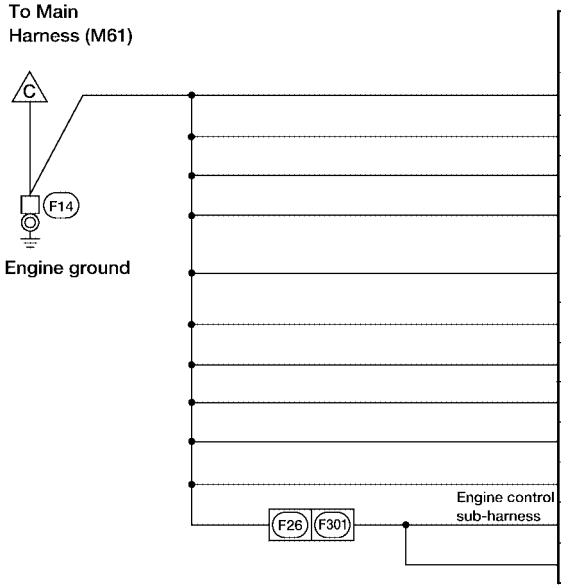

CONNECTOR NUMBER	CONNECT TO
F11	Crankshaft position sensor (POS)
F23	Camshaft position sensor (PHASE) (Bank 2)
F29	Park/Neutral Position (PNP) switch (Terminal No. 6)
F42	Park/Neutral Position (PNP) switch (M/T)
F50	Electric throttle control actuator (Throttle control motor, throttle position sensor) (Shield wire)
F54	ECM (Terminal No. 1)
F54	ECM (Terminal No. 115)
F54	ECM (Terminal No. 116)
F56	TCM (Terminal No. 14)
F57	TCM (Terminal No. 48)
F302	Knock sensor (Shield wire)
F303	Camshaft position sensor (PHASE) (Bank 1)

WKIA3347E

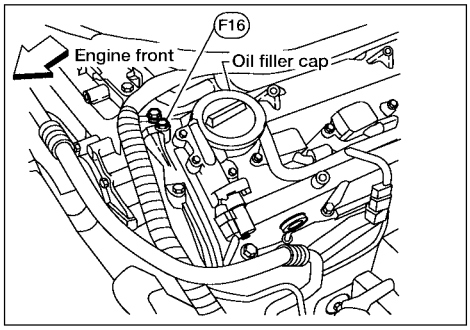

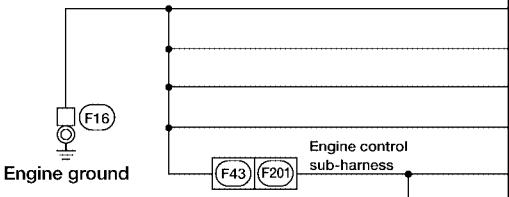

CONNECTOR NUMBER	CONNECT TO
F6	Ignition coil No. 2 (With power transistor)
F7	Ignition coil No. 4 (With power transistor)
F8	Ignition coil No. 6 (With power transistor)
F21	Condenser-2
F202	Ignition coil No. 1 (With power transistor)
F203	Ignition coil No. 3 (With power transistor)
F204	Ignition coil No. 5 (With power transistor)

WKIA2759E

BODY HARNESS

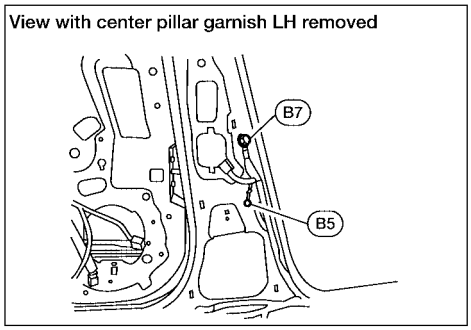

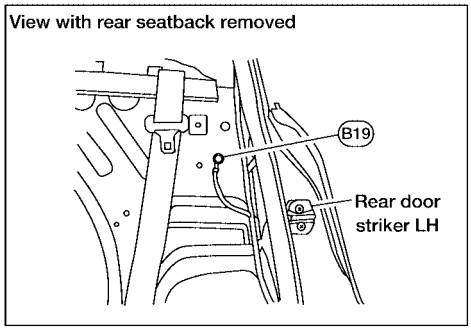

CONNECTOR NUMBER	CONNECT TO
B9	Air bag diagnosis sensor unit (shield wire) (Terminal No. 44) (with side air bags)

B5
Body ground

CONNECTOR NUMBER	CONNECT TO
B11	Power seat
B24	High mounted stop lamp (without rear air spoiler and without BOSE audio)
B30	High mounted stop lamp (with rear air spoiler)
B31	License lamp LH
B32	Trunk lamp switch and trunk release solenoid
B33	License lamp RH
B34	Trunk key cylinder switch (unlock switch)
B35	Rear combination lamp LH (turn signal, tail, back-up and stop lamp) (Terminal No. 5)
B36	Rear combination lamp RH (turn signal, tail, back-up and stop lamp) (Terminal No. 5)
B40	NAVI control unit (Terminal No. 1) (with NAVI)
D203	Rear power window switch LH
P2	Seat belt buckle switch LH
P7	Heated seat LH

B7
Body ground

B6 D201 Rear door harness LH
B42 P1 Seat harness LH

CONNECTOR NUMBER	CONNECT TO
B17	Condenser-1 (fuel pump)

B19
Body ground

WKIA4580E

BODY NO. 2 HARNESS

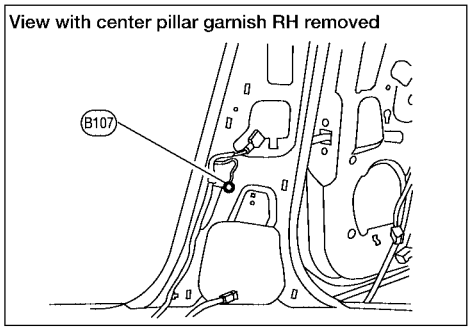

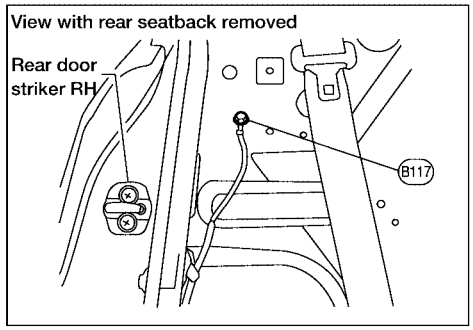

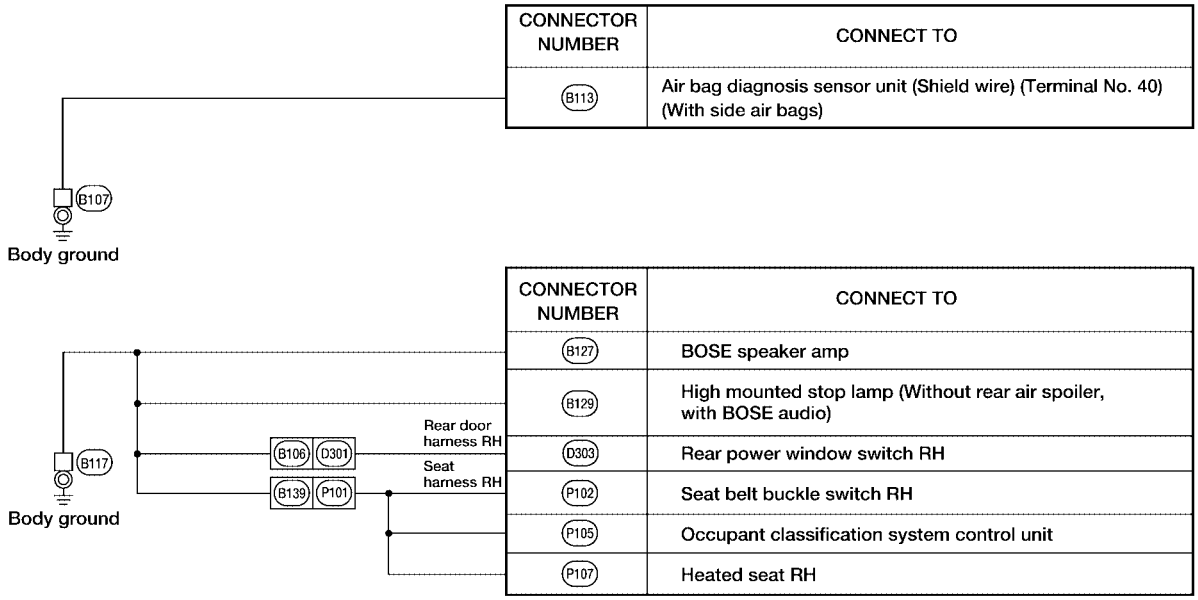

CONNECTOR NUMBER	CONNECT TO
B113	Air bag diagnosis sensor unit (Shield wire) (Terminal No. 40) (With side air bags)

CONNECTOR NUMBER	CONNECT TO
B127	BOSE speaker amp
B129	High mounted stop lamp (Without rear air spoiler, with BOSE audio)
D303	Rear power window switch RH
P102	Seat belt buckle switch RH
P105	Occupant classification system control unit
P107	Heated seat RH

WKIA3146E

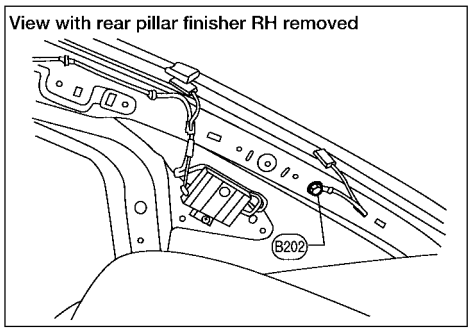

CONNECTOR NUMBER	CONNECT TO
B201	Rear window defogger (-)

WKIA2762E

HARNESS

PFP:24010

Harness Layout

EKS008UO

HOW TO READ HARNESS LAYOUT

The following Harness Layouts use a map style grid to help locate connectors on the drawings:

- Main Harness
- Engine Room Harness LH View (Engine Compartment)
- Engine Room Harness RH View (Engine Compartment)
- Engine Control Harness (QR25DE)
- Engine Control Harness (VQ35DE)
- Body Harness
- Body No. 2 Harness

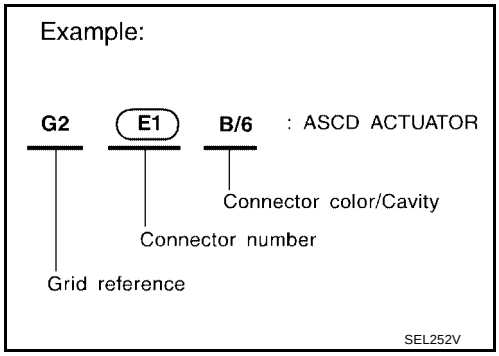

To use the grid reference

1. Find the desired connector number on the connector list.
2. Find the grid reference.
3. On the drawing, find the crossing of the grid reference letter column and number row.
4. Find the connector number in the crossing zone.
5. Follow the line (if used) to the connector.

CONNECTOR SYMBOL

Main symbols of connector (in Harness Layout) are indicated below.

Connector type	Water proof type		Standard type	
	Male	Female	Male	Female
● Cavity: 4 or Less ● Relay connector				
● Cavity: From 5 to 8				
● Cavity: 9 or More				
● Ground terminal etc.	—			

OUTLINE

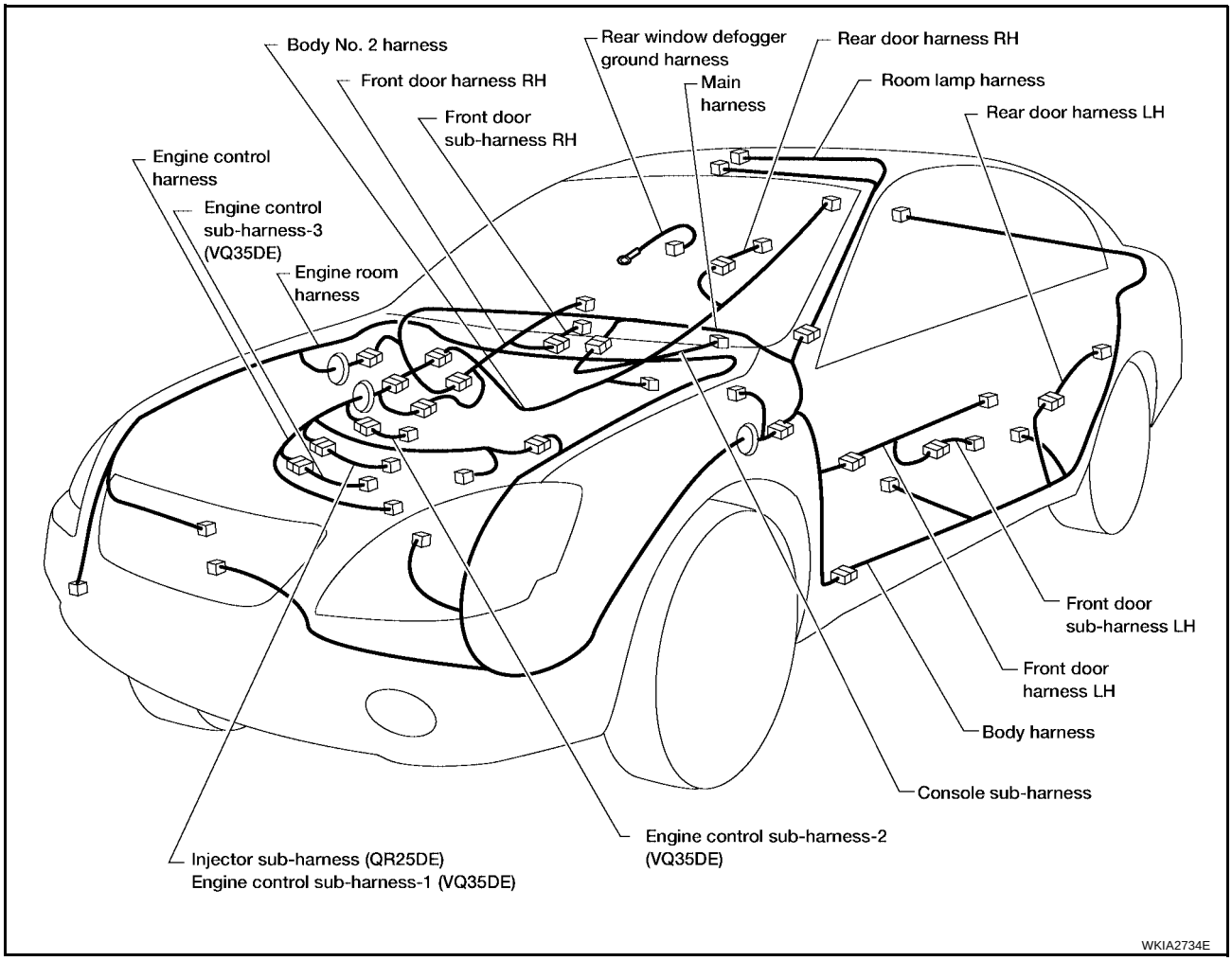
Body No. 2 harness
Front door harness RH
Front door sub-harness RH
Rear window defogger ground harness
Main harness
Rear door harness RH
Room lamp harness
Rear door harness LH
Engine control harness
Engine control sub-harness-3 (VQ35DE)
Engine room harness
Front door sub-harness LH
Front door harness LH
Body harness
Console sub-harness
Engine control sub-harness-2 (VQ35DE)
Injector sub-harness (QR25DE)
Engine control sub-harness-1 (VQ35DE)
WKIA2734E

MAIN HARNESS

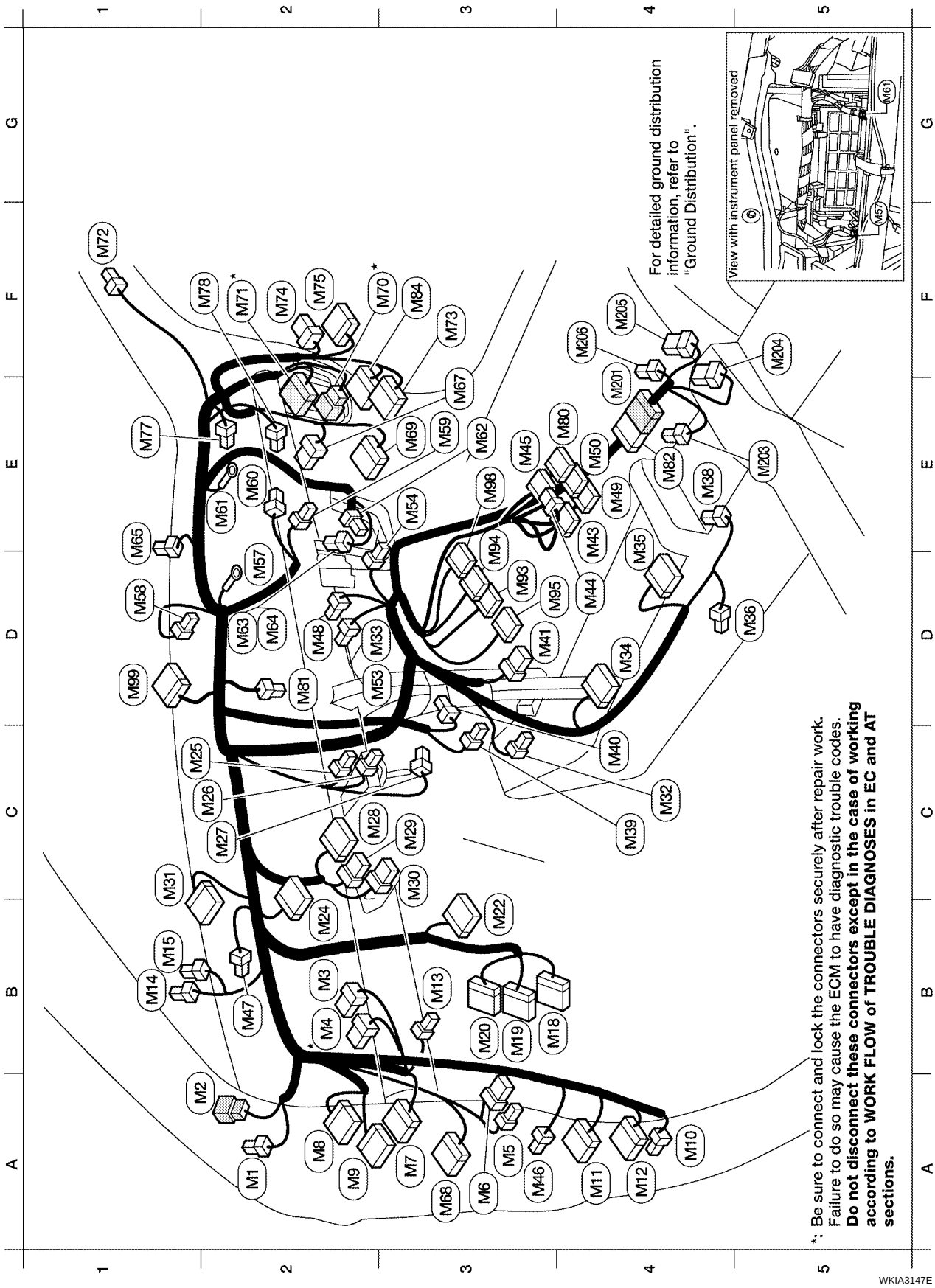

A2	M1	BR/2	: Tweeter LH
A2	M2	W/6	: To R1 (without vanity mirror lamps)
A2	M2	W/8	: To R1 (with vanity mirror lamps)
B2	M3	W/8	: Fuse block (J/B)
B2 *	M4	W/16	: Fuse block (J/B)
A3	M5	W/3	: Illumination control switch
A3	M6	GY/6	: TCS OFF switch
A3	M7	W/18	: To E28
A2	M8	W/16	: To D2
A2	M9	W/12	: To D1
A4	M10	Y/4	: To E29
A4	M11	W/16	: To B1
A4	M12	W/16	: To B2
B3	M13	L/4	: Heated seat relay
B1	M14	BR/2	: Security indicator lamp
B1	M15	W/3	: Auto light sensor (with auto lamps)
B3	M18	W/40	: BCM (Body control module)
B3	M19	W/15	: BCM (Body control module)
B3	M20	B/15	: BCM (Body control module)
B3	M22	W/16	: Data link connector
B2	M24	W/40	: Combination meter
C2	M25	W/2	: Ignition key illumination
C2	M26	W/4	: Key switch and key lock solenoid
C2	M27	W/4	: NATS antenna amp
C2	M28	W/16	: Combination switch
C3	M29	Y/6	: Combination switch
C3	M30	GY/8	: Combination switch
C1	M31	GY/10	: Shift lock control unit (with A/T)
C4	M32	W/2	: In-vehicle sensor (with auto A/C)
D2	M33	W/2	: Intake sensor (with auto A/C)
D4	M34	W/16	: A/T device
E4	M35	Y/28	: Air bag diagnosis sensor unit
D5	M36	B/1	: Parking brake switch
E4	M38	B/2	: Power socket
C4	M39	W/3	: Air mix door motor (with auto A/C)
C4	M40	W/3	: Mode door motor
D3	M41	W/6	: Fan switch (with manual A/C or heater only)
E4	M43	W/10	: Audio unit
D4	M44	W/6	: Audio unit
E3	M45	W/16	: Audio unit
A3	M46	B/2	: To E7
B2	M47	W/4	: Remote keyless entry receiver
D2	M48	W/2	: Antenna amplifier
E4	M49	GY/20	: Front air control
E4	M50	GY/16	: Front air control
D2	M53	W/2	: Intake sensor (with manual A/C)
E3	M54	W/2	: Trunk lid opener cancel switch
D2	M57	-	: Body ground
D1	M58	W/3	: Intake door motor
E3	M59	BR/2	: Glove box lamp
E2	M60	Y/4	: Front passenger air bag service replacement connector
E2	M61	-	: Body ground
E3	M62	W/2	: Blower motor
D2	M63	BR/2	: To B132
D2	M64	W/4	: Fan control amp. (with auto A/C)
E1	M65	B/2	: Sunload sensor (with auto A/C)
E3	M67	W/8	: To E131
A3	M68	BR/16	: To B38
E3	M69	W/16	: To B104
F3 *	M70	W/6	: To F58
F2 *	M71	W/24	: To F59
F1	M72	BR/2	: Tweeter RH
E3	M73	W/12	: To B103
F2	M74	W/8	: To D102
F2	M75	W/10	: To D101
E1	M77	Y/2	: Front passenger air bag module
F1	M78	OR/2	: Front passenger air bag module
E4	M80	W/12	: Audio unit
D2	M81	W/3	: Front passenger air bag off indicator
F3	M82	W/10	: To M201
E4	M84	W/12	: To B133
D3	M93	W/24	: Display unit
E3	M94	W/24	: Display control unit (with NAVI)
D3	M95	W/32	: Display control unit (with NAVI)
E3	M98	W/16	: AV switch
D1	M99	W/12	: Triple meter

Console sub-harness

E4	M201	W/12	: To M84
E5	M203	W/4	: Hazard switch
F5	M204	W/6	: Heated seat switch LH
F4	M205	BR/6	: Heated seat switch RH
F4	M206	B/2	: Power socket (for cigarette lighter)

*: Be sure to connect and lock the connectors securely after repair work. Failure to do so may cause the ECM to have diagnostic trouble codes. **Do not disconnect these connectors except in the case of working according to WORK FLOW of TROUBLE DIAGNOSES in EC and AT sections.**

WKIA4581E

ENGINE ROOM HARNESS LH VIEW (ENGINE COMPARTMENT)

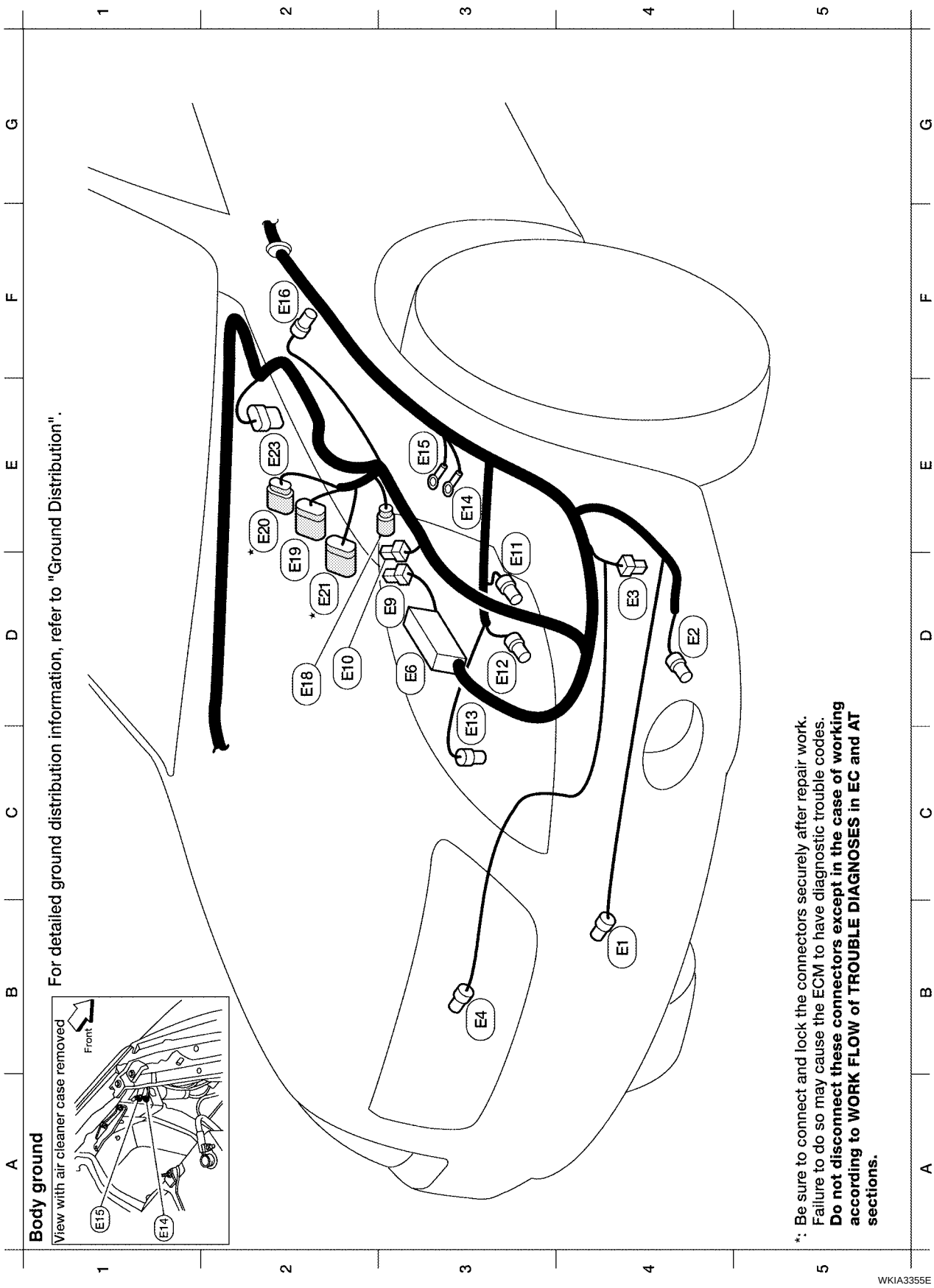

Refer to PG-47, "ENGINE ROOM HARNESS RH VIEW (ENGINE COMPARTMENT)" for continuation of engine room harness.

B4	E1	B/2	: Ambient sensor
D4	E2	B/2	: Front fog lamp LH
D4	E3	B/1	: Horn (low)
B3	E4	Y/2	: Crash zone sensor
D3	E6	-	: Fuse and fusible link box
	H-1	W/3	: Horn relay (inside fuse and fusible link box)
D3	E9	BR/2	: Fusible link box (battery)
D2	E10	GY/2	: Fusible link box (battery)
E3	E11	B/2	: Headlamp LH (high)
D3	E12	B/3	: Front combination lamp LH
D3	E13	B/2	: Headlamp LH (low) (conventional type)
D3	E13	BR/2	: Headlamp LH (low) (xenon type)
E3	E14	-	: Body ground
E3	E15	-	: Body ground
F2	E16	GY/2	: Brake fluid level switch
D2	E18	BR/2	: Front wheel sensor LH
D2	*E19	GY/9	: To F33
E2	*E20	B/8	: To F32
D2	*E21	B/12	: To F34
E2	E23	GY/6	: Wiper motor

*: Be sure to connect and lock the connectors securely after repair work. Failure to do so may cause the ECM to have diagnostic trouble codes. **Do not disconnect these connectors except in the case of working according to WORK FLOW of TROUBLE DIAGNOSES in EC and AT sections.**

WKIA2738E

PASSENGER COMPARTMENT

E7	B/2	: To M46
* E28	W/18	: To M7
E29	Y/4	: To M10
E30	W/8	: Fuse block J/B
E31	B/2	: Fuse block J/B
E32	B/1	: Fuse block J/B
E33	W/4	: To B3
E34	L/2	: Clutch interlock switch (with M/T)
E35	L/2	: ASCD clutch switch (with M/T and ASCD)
E36	B/3	: Diode-1 (with DTRL)
E37	BR/2	: ASCD brake switch
E38	B/2	: Stop lamp switch
* E40	B/6	: Accelerator pedal position sensor
E41	W/6	: Ignition switch
E102	GY/4	: Daytime light control unit (for Canada)
E103	GY/6	: Daytime light control unit (for Canada)
E104	GY/8	: Daytime light control unit (for Canada)

* : Be sure to connect and lock the connectors securely after repair work. Failure to do so may cause the ECM to have diagnostic trouble codes.
Do not disconnect these connectors except in the case of working according to WORK FLOW of TROUBLE DIAGNOSES in EC and AT sections.

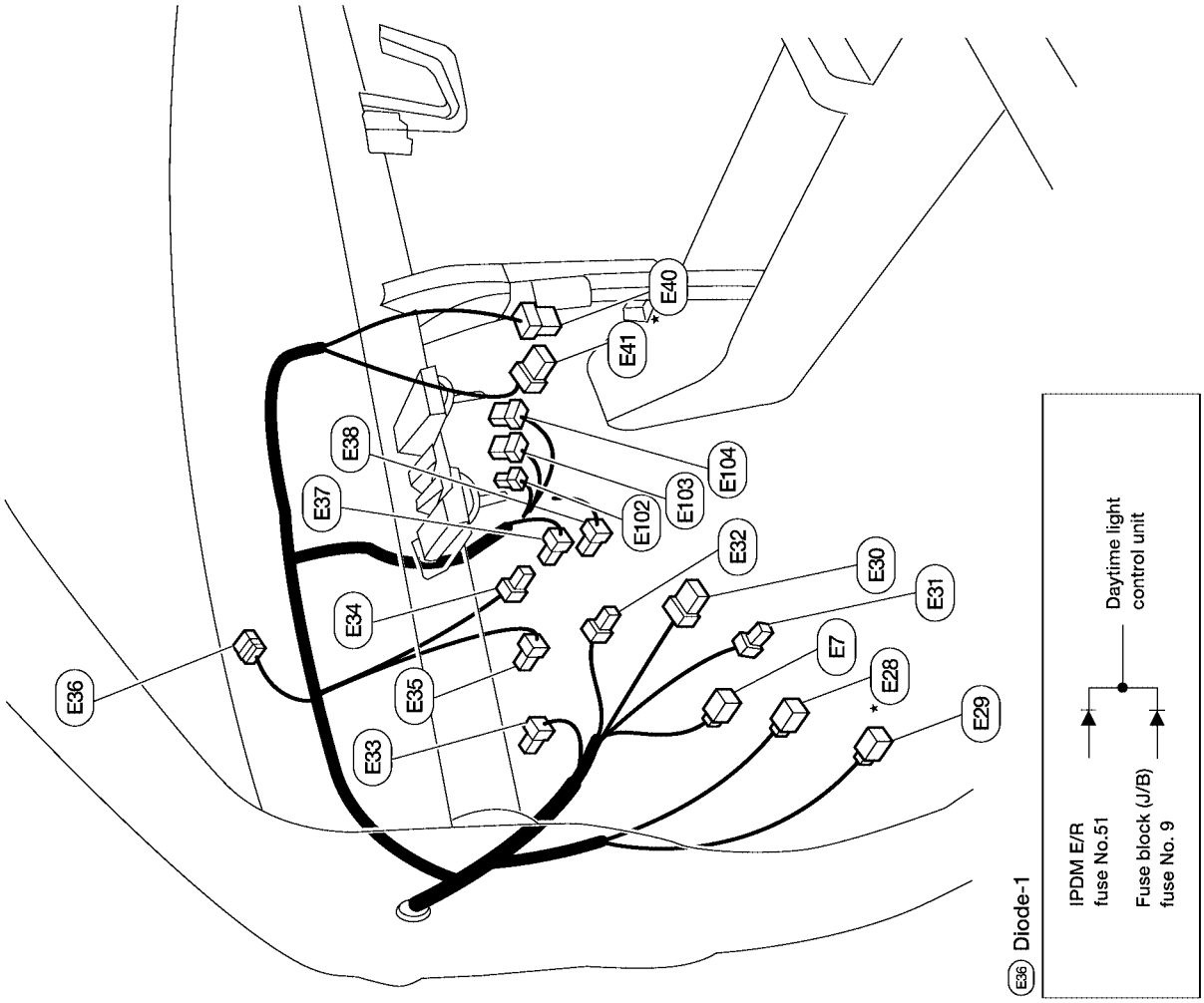

WKIA4582E

ENGINE ROOM HARNESS RH VIEW (ENGINE COMPARTMENT)

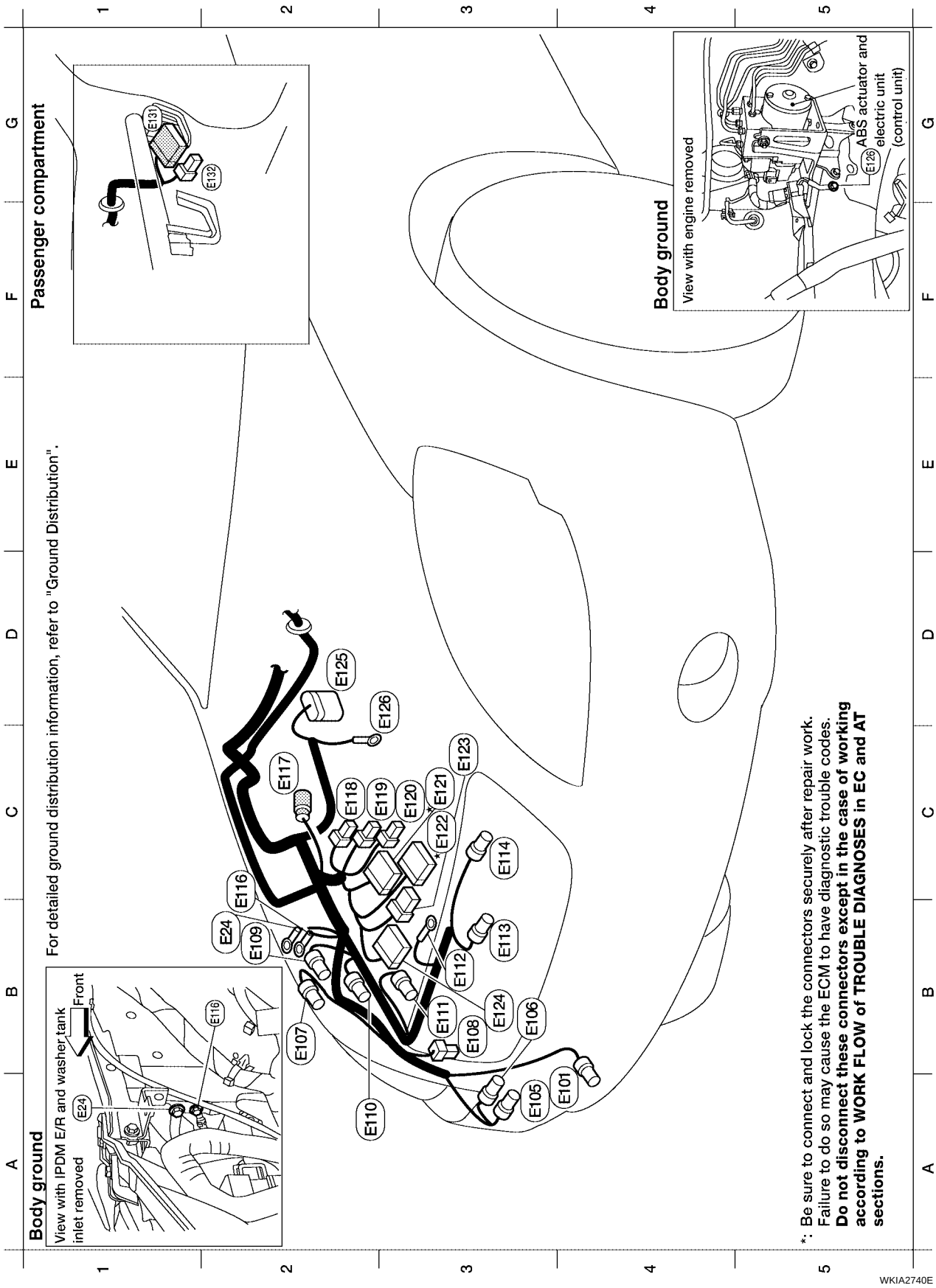

Refer to PG-44, "ENGINE ROOM HARNESS LH VIEW (ENGINE COMPARTMENT)" for continuation of engine room harness.

B2	E24	-	: Body ground
A4	E101	B/2	: Front fog lamp RH
A3	E105	GY/2	: Front washer motor
B3	E106	BR/2	: Washer fluid level sensor
B2	E107	B/2	: Headlamp RH (low) (conventional type)
B2	E107	BR/2	: Headlamp RH (low) (xenon type)
B3	E108	B/1	: Horn (high)
B2	E109	B/3	: Front combination lamp RH
A2	E110	B/2	: Headlamp RH (high)
B3	E111	B/3	: Refrigerant pressure sensor
B3	E112	-	: Generator (ground)
B3	E113	GY/4	: Cooling fan motor-1
C3	E114	GY/4	: Cooling fan motor-2
C2	E116	-	: Body ground
C2	E117	GY/2	: Front wheel sensor RH
C2	E118	B/4	: IPDM E/R (Intelligent Power Distribution Module Engine Room)
C3	E119	W/4	: IPDM E/R (Intelligent Power Distribution Module Engine Room)
C3	E120	B/2	: IPDM E/R (Intelligent Power Distribution Module Engine Room)
C3	* E121	W/16	: IPDM E/R (Intelligent Power Distribution Module Engine Room)
C3	* E122	GY/16	: IPDM E/R (Intelligent Power Distribution Module Engine Room)
C3	E123	W/6	: IPDM E/R (Intelligent Power Distribution Module Engine Room)
B3	E124	W/12	: IPDM E/R (Intelligent Power Distribution Module Engine Room)
D2	E125	B/31	: ABS actuator and electric unit (with ABS or TCS)
D3	E126	-	: Body ground
G1	E131	W/8	: To M67 (With ABS or TCS)
G2	E132	W/4	: To B101 (With ABS or TCS)

*: Be sure to connect and lock the connectors securely after repair work. Failure to do so may cause the ECM to have diagnostic trouble codes. **Do not disconnect these connectors except in the case of working according to WORK FLOW of TROUBLE DIAGNOSES in EC and AT sections.**

WKIA3356E

ENGINE CONTROL HARNESS (QR25DE)

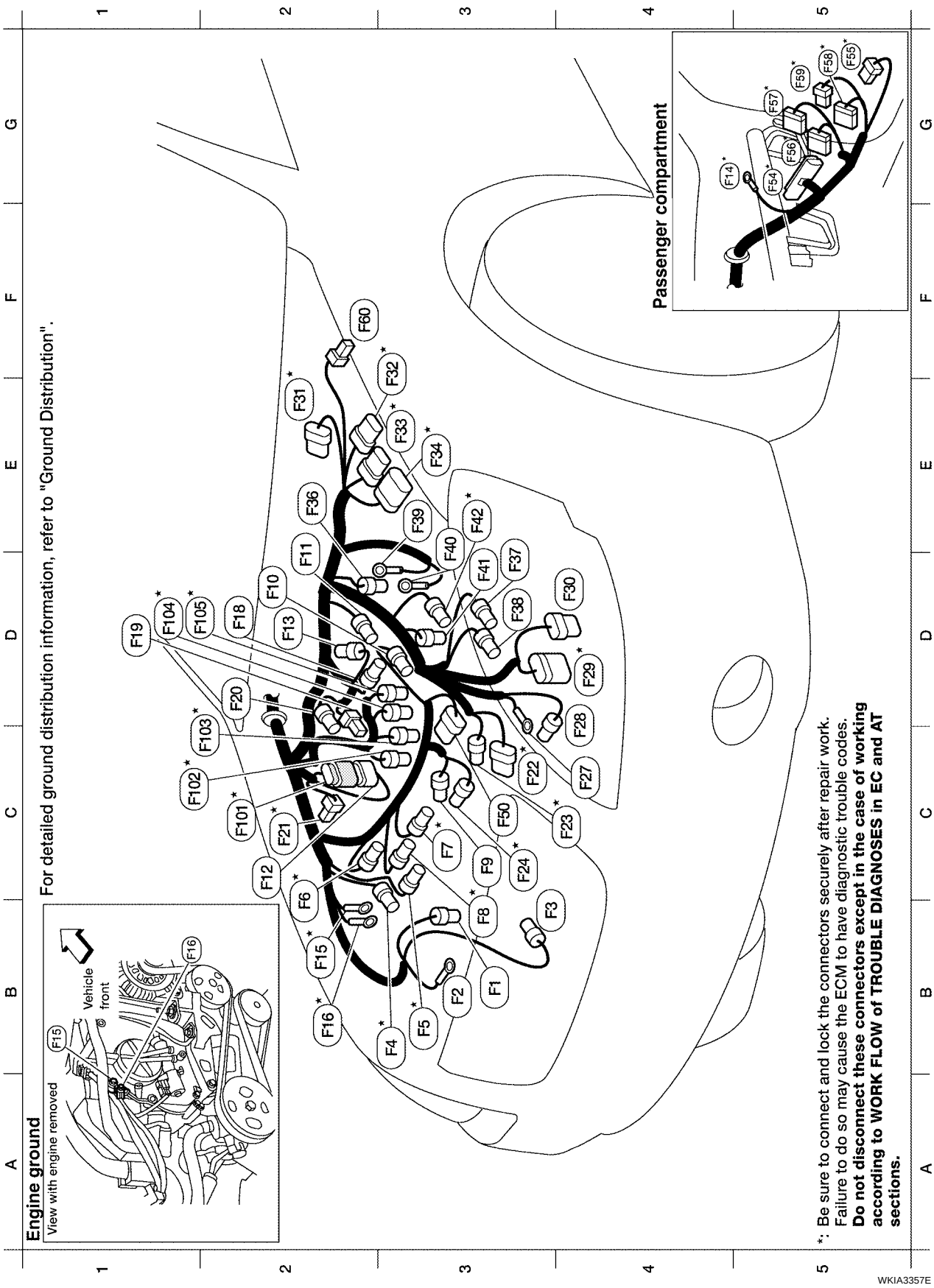

B3	F1	GY/2	: Generator
B3	F2	-	: Generator
B4	F3	B/1	: A/C compressor
B3	*F4	G/2	: Intake valve timing control solenoid valve
B3	*F5	GY/3	: Ignition coil No. 1 (with power transistor)
C2	*F6	GY/3	: Ignition coil No. 2 (with power transistor)
C3	*F7	GY/3	: Ignition coil No. 4 (with power transistor)
C3	*F8	GY/3	: Ignition coil No. 3 (with power transistor)
C3	*F9	B/3	: Camshaft position sensor (PHASE)
D2	*F10	L/2	: EVAP canister purge volume control solenoid valve
D2	*F11	B/3	: Crankshaft position sensor
C2	*F12	B/6	: To F101
D2	F13	BR/2	: VIAS control solenoid valve
G4	*F14	-	: Engine ground
B2	*F15	-	: Engine ground
B2	*F16	-	: Engine ground
D2	F18	B/2	: Knock sensor
D1	F19	GY/1	: Oil pressure switch
D2	F20	B/3	: Power steering pressure sensor
C2	*F21	W/2	: Condenser-2
C3	*F22	G/6	: Air fuel ratio (A/F) sensor
C3	*F23	G/4	: Heated oxygen sensor 2 (Rear)
C3	*F24	GY/2	: Engine coolant temperature sensor
C4	F27	-	: Starter motor
C4	F28	GY/1	: Starter motor
D4	*F29	B/10	: Park/neutral position (PNP) switch (with A/T)
D4	F30	B/8	: Terminal cord assembly (with A/T)
E2	*F31	B/6	: Mass air flow sensor
F3	*F32	B/8	: To E20
E3	*F33	GY/9	: To E19
E3	*F34	B/12	: To E21
E2	F36	GY/2	: Vehicle speed sensor
D3	F37	B/3	: Turbine revolution sensor (with A/T)
D3	F38	B/3	: Revolution sensor (with A/T)
E2	F39	-	: Fusible link box (battery)
D3	F40	-	: Fusible link box (battery)
D3	F41	B/2	: Back-up lamp switch (with M/T)
E3	*F42	B/2	: Park/neutral position (PNP) switch (with M/T)
C3	*F50	G/6	: Electric throttle control actuator
G5	*F54	SMJ	: ECM
G5	*F55	BR/8	: To B105
G5	*F56	W/24	: TCM (transmission control module) (with A/T)
G5	*F57	GY/24	: TCM (transmission control module) (with A/T)
G5	*F58	W/6	: To M70
G5	*F59	W/24	: To M71
F2	F60	GY/2	: Dropping resistor

Engine control sub-harness

C2	*F101	B/6	: To F12
C2	*F102	GY/2	: Fuel injector No. 1
C2	*F103	GY/2	: Fuel injector No. 2
D1	*F104	GY/2	: Fuel injector No. 3
D2	*F105	GY/2	: Fuel injector No. 4

*: Be sure to connect and lock the connectors securely after repair work. Failure to do so may cause the ECM to have diagnostic trouble codes. **Do not disconnect these connectors except in the case of working according to WORK FLOW of TROUBLE DIAGNOSES in EC and AT sections.**

WKIA4583E

ENGINE CONTROL HARNESS (VQ35DE)

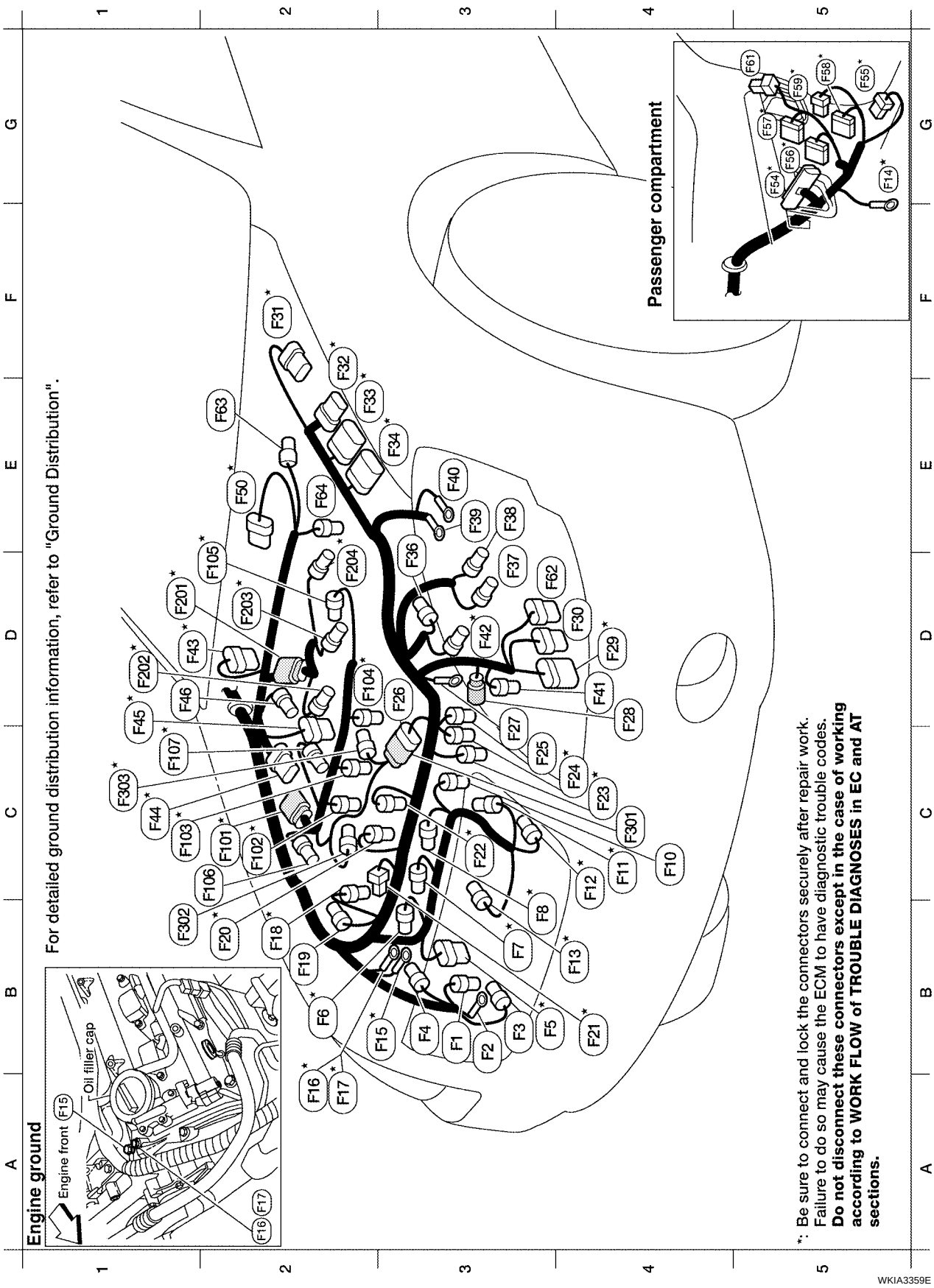

B3	F1	GY/2	: Generator
B3	F2	-	: Generator
B3	F3	B/1	: A/C compressor
B3*	F4	G/2	: Intake valve timing control solenoid valve (Bank 2)
B3*	F5	B/6	: Air fuel ratio (A/F) sensor (Bank 2)
B2*	F6	GY/3	: Ignition coil No. 2 (with power transistor)
B4*	F7	GY/3	: Ignition coil No. 4 (with power transistor)
C3*	F8	GY/3	: Ignition coil No. 6 (with power transistor)
C4	F10	BR/3	: Front electronic controlled engine mount
C4*	F11	B/3	: Crankshaft position sensor
C3*	F12	G/4	: Heated oxygen sensor 2 (Rear) (Bank 2) (with M/T)
	F12	L/4	: Heated oxygen sensor 2 (Rear) (Bank 2) (with A/T)
B3*	F13	G/4	: Heated oxygen sensor 2 (Rear) (Bank 1)
G5*	F14	-	: Engine ground
B3*	F15	-	: Engine ground
A2*	F16	-	: Engine ground
A2*	F17	-	: Engine ground
B2*	F18	GY/2	: Fuel injector No. 2
B2	F19	B/2	: VIAS control solenoid valve
B2*	F20	GY/2	: Fuel injector No. 4
B4*	F21	GY/2	: Condenser 2
C3*	F22	GY/2	: Fuel injector No. 6
C4*	F23	B/3	: Camshaft position sensor (PHASE) (Bank 2)
C4*	F24	GY/2	: Engine coolant temperature sensor
D3	F25	BR/3	: Rear electronic controlled engine mount
C3	F26	GY/6	: To F301
C3	F27	-	: Starter motor
D4	F28	GY/1	: Starter motor
D4	*F29	GY/10	: Park/neutral position (PNP) switch (with A/T)
D4	F30	BR/8	: Terminal cord assembly (with A/T)
F2	*F31	B/6	: Mass air flow sensor
F2	*F32	B/8	: To E20
E2	*F33	GY/9	: To E19
E3	*F34	B/12	: To E21
D3	F36	GY/2	: Vehicle speed sensor (with M/T)
D3	F37	B/3	: Turbine revolution sensor (with A/T)
E3	F38	B/3	: Revolution sensor (with A/T)
D3	F39	-	: Battery (positive)
E3	F40	-	: Fusible link box (battery)
D4	F41	B/2	: Back-up lamp switch (with M/T)
D3	*F42	B/2	: Park/neutral position (PNP) switch (with M/T)
D2	*F43	G/6	: To F201
C1	*F44	G/8	: To F101
C2	*F45	G/6	: Air fuel ratio (A/F) sensor (Bank 1)
C1	F46	B/3	: Power steering oil pressure sensor
E2	*F50	G/6	: Electric throttle control actuator
G5	*F54	SMJ	: ECM
G5	*F55	BR/8	: To B105
G5	*F56	W/20	: TCM (transmission control module) (with A/T)
G5	*F57	GY/28	: TCM (transmission control module) (with A/T)
G5	*F58	W/6	: To M70
G5	*F59	W/24	: To M71
G5	F61	W/3	: A/T PV IGN relay
D3	F62	GY/8	: Terminal cord assembly (with A/T)
E2	F63	GY/6	: EGR volume control valve
E2	F64	GY/2	: EGR Temperature sensor

Engine control sub-harness-1

C2	*F101	G/8	: To F44
C2	*F102	GY/2	: Fuel injector No. 1
C2	*F103	GY/2	: Fuel injector No. 3
D2	*F104	GY/2	: Fuel injector No. 5
D2	*F105	L/2	: EVAP canister purge volume control solenoid valve
C2	F106	B/1	: Oil pressure switch
C2	*F107	G/2	: Intake valve timing control solenoid valve (Bank 1)

Engine control sub-harness-2

D1	*F201	G/6	: To F43
C1	*F202	GY/3	: Ignition coil No. 1 (with power transistor)
D2	*F203	GY/3	: Ignition coil No. 3 (with power transistor)
D2	*F204	GY/3	: Ignition coil No. 5 (with power transistor)

Engine control sub-harness-3

C4	F301	GY/6	: To F26
C1	F302	GY/2	: Knock sensor
C2	F303	G/3	: Camshaft position sensor (PHASE) (Bank 1)

*: Be sure to connect and lock the connectors securely after repair work. Failure to do so may cause the ECM to have diagnostic trouble codes.
Do not disconnect these connectors except in the case of working according to WORK FLOW of TROUBLE DIAGNOSES in EC and AT sections.

WKIA4584E

BODY HARNESS

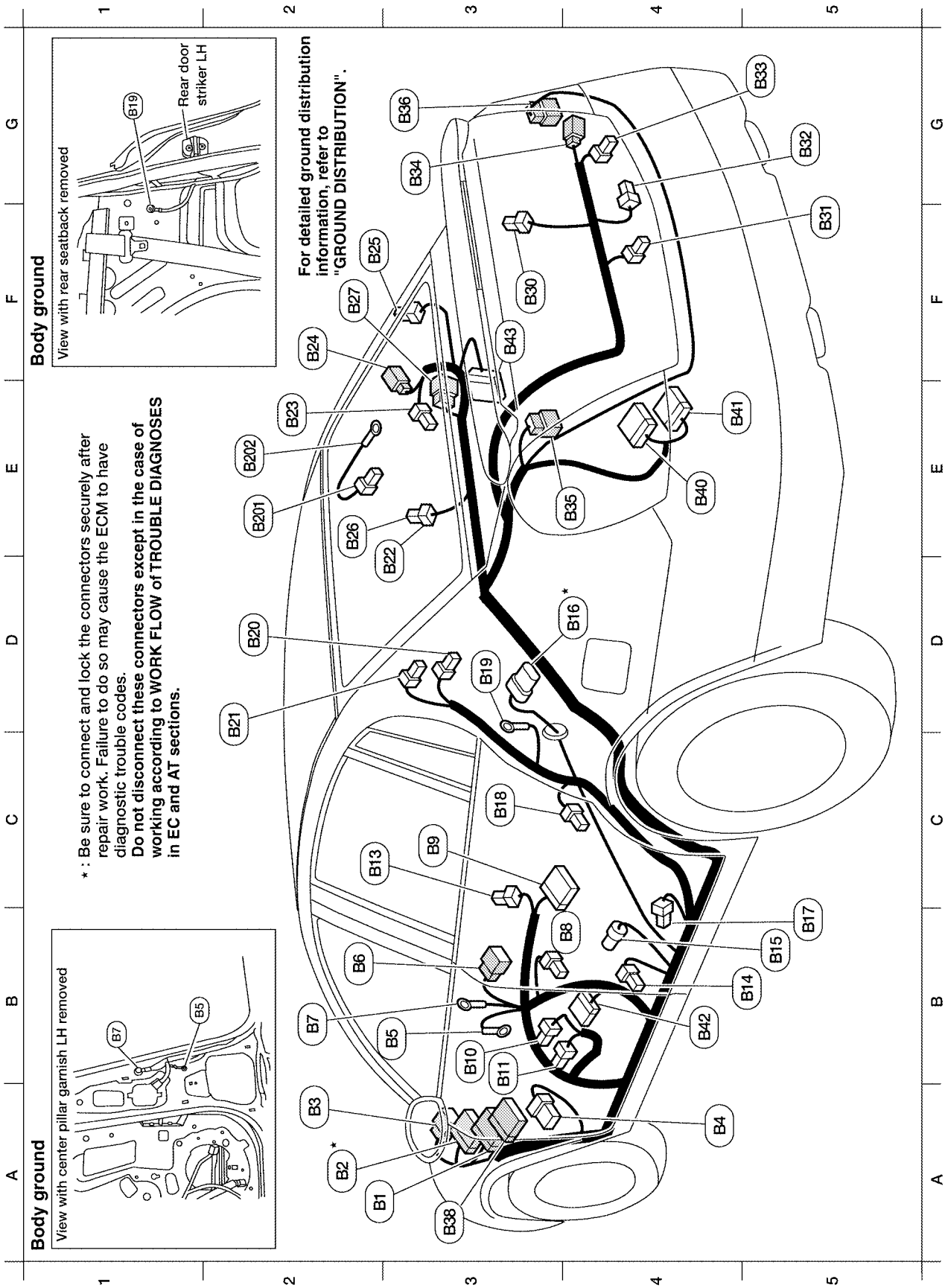

WKIA4585E

A2	B1	W/16	: To M11
A2 ★	B2	W/16	: To M12
A2	B3	W/6	: To E33
A4	B4	BR/6	: Rear window defogger relay
B3	B5	-	: Body ground
B2	B6	W/8	: To D201
B2	B7	-	: Body ground
B4	B8	W/3	: Front door switch LH
C3	B9	Y/12	: Air bag diagnosis sensor unit
B3	B10	Y/2	: Front LH side air bag module
B3	B11	W/2	: Power seat
C2	B13	W/3	: Heated seat switch
B5	B14	Y/2	: Front LH seat belt pre-tensioner
B5	B15	Y/2	: LH side airbag (satellite) sensor
D4 ★	B16	GY/5	: Fuel level sensor unit and fuel pump
B5	B17	W/2	: Condenser-1
C3	B18	W/1	: Rear door switch LH
D3	B19	-	: Body ground
D2	B20	Y/2	: LH side curtain air bag module
D2	B21	W/1	: Rear window defogger condenser
D3	B22	BR/2	: Rear speaker LH (without Bose audio system)
E2	B23	W/2	: Trunk room lamp (without Bose audio system)
F2	B24	W/2	: High mounted stop lamp (without rear spoiler and without Bose audio system)
F2	B25	BR/2	: Rear speaker RH (without Bose audio system)
E2	B26	W/2	: Subwoofer LH (with Bose audio system)
F2	B27	W/8	: To B131 (with Bose audio system)
F3	B30	BR/2	: High mounted stop lamp (with rear spoiler)
F5	B31	BR/2	: License lamp LH
G5	B32	W/4	: Trunk lamp switch and trunk release solenoid
G5	B33	BR/2	: License lamp RH
G3	B34	W/2	: Trunk key cylinder switch
E4	B35	W/6	: Rear combination lamp LH
G3	B36	W/6	: Rear combination lamp RH
A3	B38	BR/16	: To M68
E4	B40	W/40	: NAVI control unit (with NAVI)
E4	B41	W/32	: NAVI control unit (with NAVI)
B4	B42	W/8	: To P1
F3	B43	GY/2	: NAVI control unit (GPS antenna) (with NAVI)
E2	B201	B/1	: Rear window defogger
E2	B202	-	: Body ground

★ : Be sure to connect and lock the connectors securely after repair work. Failure to do so may cause the ECM to have diagnostic trouble codes.
Do not disconnect these connectors except in the case of working according to WORK FLOW of TROUBLE DIAGNOSES in EC and AT sections.

WKIA4586E

BODY NO. 2 HARNESS

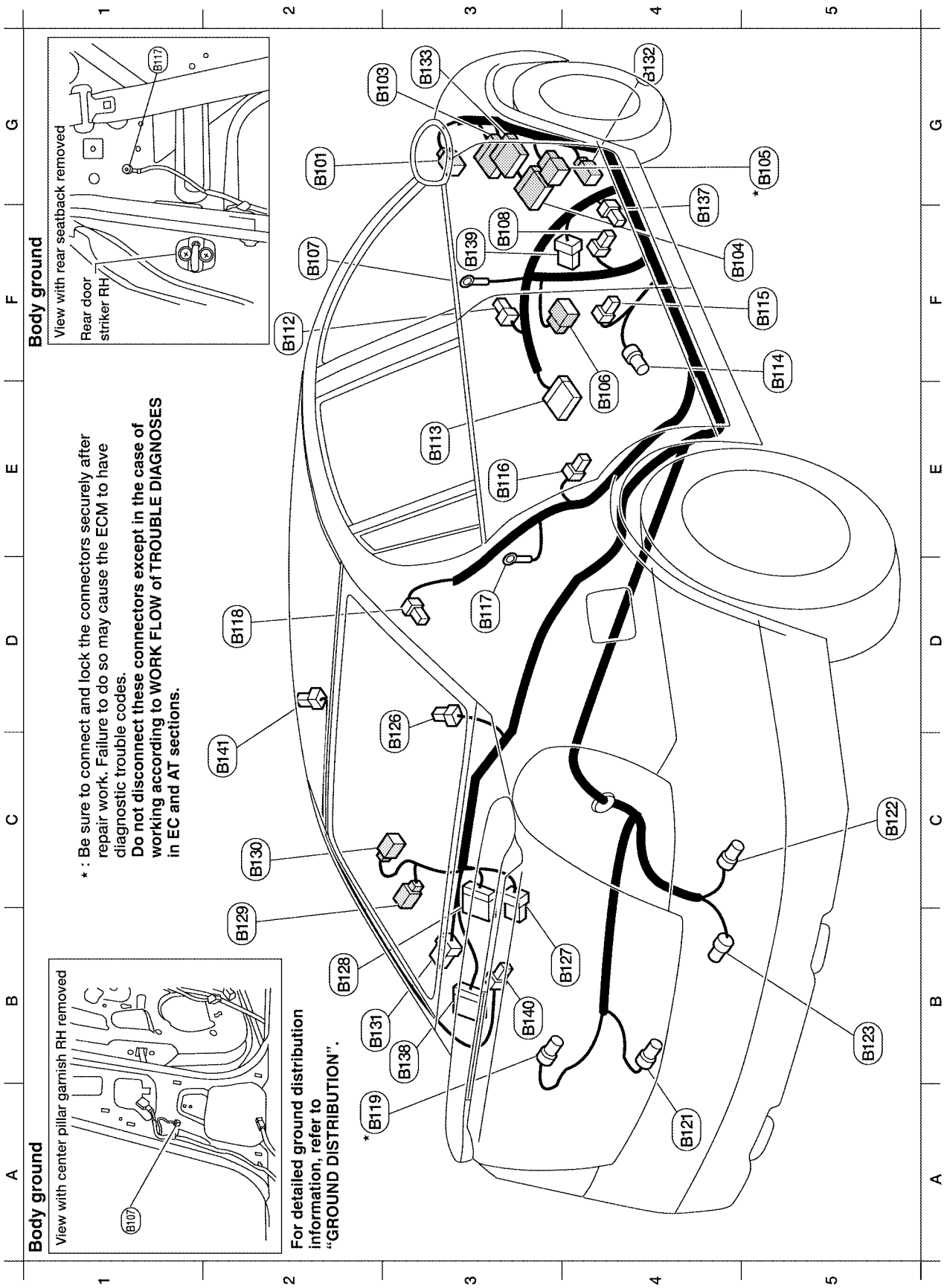

G2	B101	W/4	: To E132
G2	B103	W/12	: To M73
F4	B104	W/16	: To M69
G5 ★	B105	BR/8	: To F55
F4	B106	W/8	: To D301
F2	B107	-	: Body ground
F3	B108	W/3	: Heated seat switch RH
F2	B112	Y/2	: Front RH side air bag module
E3	B113	Y/12	: Air bag diagnosis sensor unit
F5	B114	Y/2	: RH side air bag (satellite) sensor
F5	B115	Y/2	: Front RH seat belt pre-tensioner
E3	B116	W/1	: Rear door switch RH
D3	B117	-	: Body ground
D2	B118	Y/2	: RH side curtain air bag module
A2 ★	B119	GY/3	: EVAP control system pressure sensor
A4	B121	B/2	: EVAP canister vent control valve
C5 ★	B122	GY/2	: Rear wheel sensor RH
B5 ★	B123	W/2	: Rear wheel sensor LH
C3	B126	W/2	: Subwoofer RH (with Bose audio system)
B4	B127	GY/8	: Bose Speaker Amp.
B2	B128	B/24	: Bose Speaker Amp.
B2	B129	W/2	: High mounted stop lamp (without rear spoiler and with Bose audio system)
C2	B130	W/2	: Trunk room lamp (with Bose audio system)
B2	B131	W/8	: To B27 (with Bose audio system)
G4	B132	BR/2	: To M63
G3	B133	W/10	: To M82
F4	B137	B/3	: Belt tension sensor
B3	B138	W/16	: Satellite radio tuner or pre-wiring for satallite radio tuner
F3	B139	W/6	: To P101
B3	B140	BR/1	: Satellite radio tuner (with Sirius satellite tuner)
B3	B140	V/1	: Satellite radio tuner (with XM satellite tuner)
D2	B141	GR/1	: Satallite radio tuner antenna (with Sirius satellite tuner)
D2	B141	BR/1	: Satallite radio tuner antenna (with XM satellite tuner)

★ : Be sure to connect and lock the connectors securely after repair work. Failure to do so may cause the ECM to have diagnostic trouble codes.
Do not disconnect these connectors except in the case of working according to WORK FLOW of TROUBLE DIAGNOSES in EC and AT sections.

WKIA4588E

ROOM LAMP HARNESS

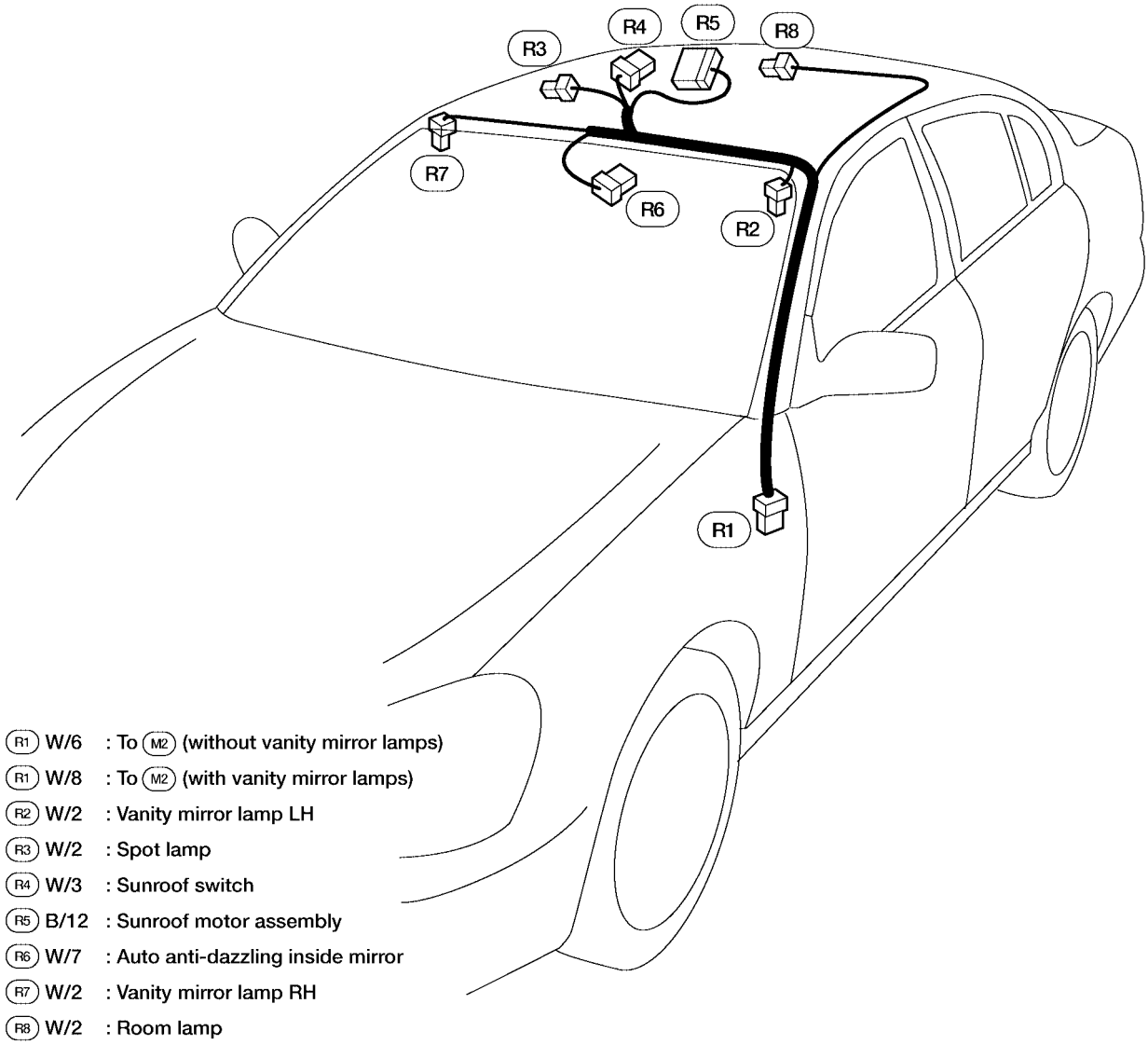

WKIA2748E

FRONT DOOR LH HARNESS

D1 W/12 : To M9
D2 W/16 : To M8
D3 W/2 : Front door speaker LH (without BOSE)
D3 BR/2 : Front door speaker LH (with BOSE)
D4 W/8 : Door mirror LH
D5 W/10 : Door mirror switch
D6 W/3 : Main power window and door lock/unlock switch
D7 W/16 : Main power window and door lock/unlock switch (With left front only power window anti-pinch system)
D7 BR/16 : Main power window and door lock/unlock switch (With left and right front power window anti-pinch system)
D8 W or BR/6 : Front power window motor LH
D10 W/6 : To D50
D11 W/2 : Step lamp LH

Front door LH sub-harness

D50 W/6 : To D10
D51 GY/4 : Front door lock actuator LH

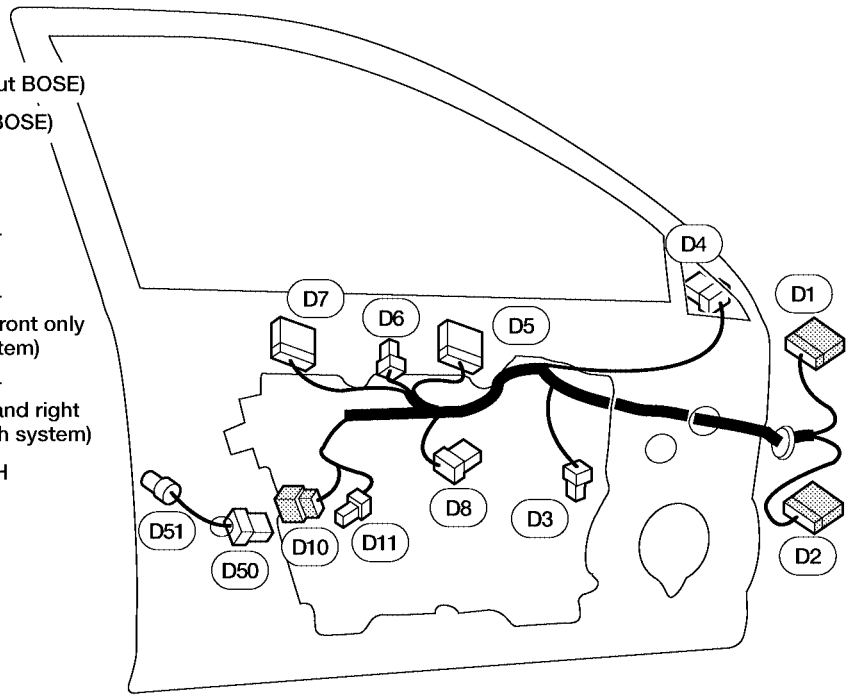

WKIA2749E

FRONT DOOR RH HARNESS

D101 W/10 : To M75
D102 W/8 : To M74
D103 W/2 : Front door speaker RH (without BOSE)
D103 BR/2 : Front door speaker (with BOSE)
D104 W/8 : Door mirror RH
D105 W/12 : Front power window switch RH
D106 BR/8 : Front power window switch RH (With left front only power window anti-pinch system)
D106 W/8 : Front power window switch RH (With left and right power window anti-pinch system)
D107 W or BR/6 : Front power window motor RH (With left and front only power window anti-pinch system)
D107 W/2 : Front power window switch RH (With left and right front power window anti-pinch system)
D108 W/2 : To D150
D109 W/2 : Step lamp RH

Front door RH sub-harness

D150 W/6 :To D108
D151 GY/4 :Front door lock actuator RH

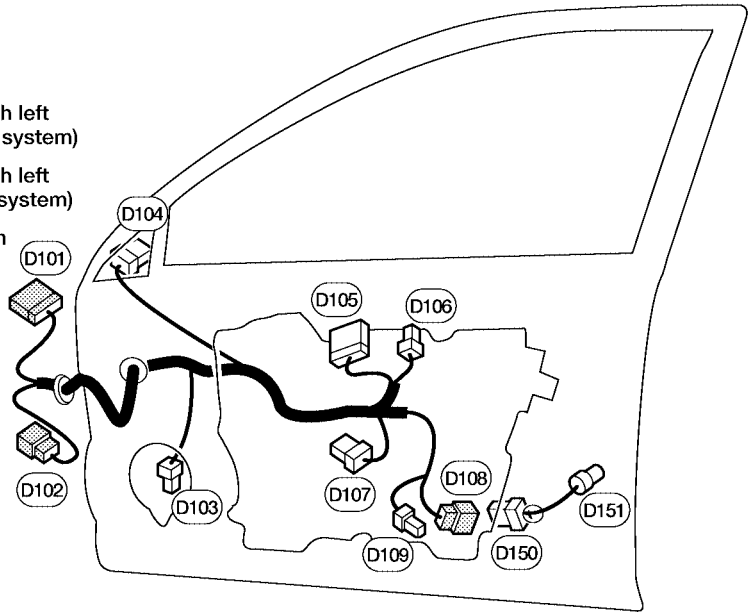

WKIA2750E

REAR DOOR LH HARNESS

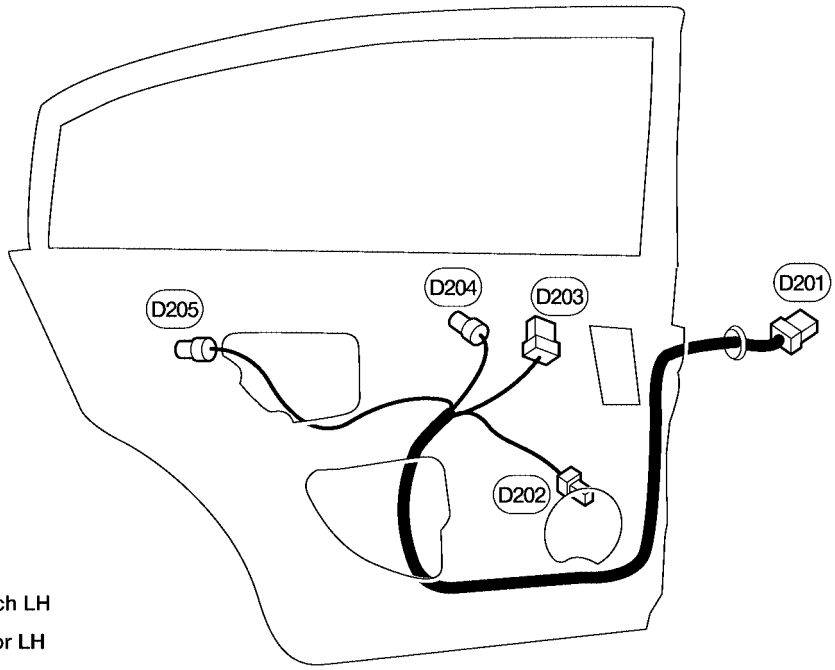

D201 W/8 : To B6
D202 BR/2 : Rear door speaker LH
D203 W/8 : Rear power window switch LH
D204 BR/2 : Rear power window motor LH
D205 GY/4 : Rear door lock actuator LH

WKIA0095E

REAR DOOR RH HARNESS

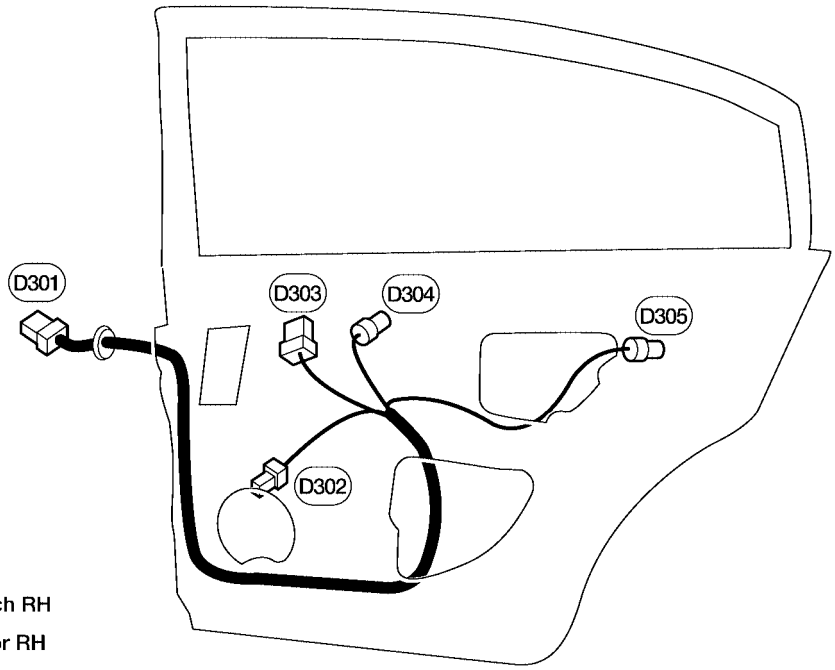

D301 W/8 : To B106
D302 BR/2 : Rear door speaker RH
D303 W/8 : Rear power window switch RH
D304 BR/2 : Rear power window motor RH
D305 GY/4 : Rear door lock actuator RH

WKIA0096E

Wiring Diagram Codes (Cell Codes)

EKS008UP

Use the chart below to find out what each wiring diagram code stands for.
Refer to the wiring diagram code in the alphabetical index to find the location (page number) of each wiring diagram.

Code	Section	Wiring Diagram Name
1STSIG	AT	A/T 1st Signal
2NDSIG	AT	A/T 2nd Signal
3METER	DI	Triple Meter
3RDSIG	AT	A/T 3rd Signal
4THSIG	AT	A/T 4th Signal
5THSIG	AT	A/T 5th Signal
A/C,A	ATC	Auto Air Conditioner
A/C,M	MTC	Manual Air Conditioner
A/F	EC	Air Fuel Ratio Sensor
AF/FH	EC	Air Fuel Ratio Sensor
AF1B1	EC	Air Fuel Ratio Sensor 1 Bank 1
AF1B2	EC	Air Fuel Ratio Sensor 1 Bank 2
AF1HB1	EC	Air Fuel Ratio Sensor 1 Heater Bank 1
AF1HB2	EC	Air Fuel Ratio Sensor 1 Heater Bank 2
ABS	BRC	Anti-Lock Brake System
APPS1	EC	Accelerator Pedal Position Sensor
APPS2	EC	Accelerator Pedal Position Sensor
APPS3	EC	Accelerator Pedal Position Sensor
ASCBOF	EC	ASCD Brake Switch
ASC/BS	EC	ASCD Brake Switch
ASCIND	EC	ASCD Indicator
ASC/SW	EC	ASCD Steering Switch
AT/IND	DI	A/T Indicator Lamp
AUDIO	AV	Audio
AUTO/L	LT	Auto Light System
B/COMP	DI	Board Computer
BA/FTS	AT	A/T Fluid Temperature Sensor and TCM Power Supply
BACK/L	LT	Back-up Lamp
BRK/SW	EC	Brake Switch
CAN	AT	CAN Communication Line
CAN	EC	CAN Communication Line
CAN	LAN	CAN System
CHARGE	SC	Charging System
COMBSW	LT	Combination Switch
COMM	AV	Audio Visual Communication System
CHIME	DI	Warning Chime
CIGAR	WW	Cigarette Lighter
COOL/F	EC	Cooling Fan Control
D/LOCK	BL	Power Door Lock
DEF	GW	Rear Window Defogger
DTRL	LT	Headlamp - With Daytime Light System
ECM/PW	EC	ECM Power Supply for Back-Up
ECTS	EC	Engine Coolant Temperature Sensor
ENGSS	AT	Engine Speed Signal
EGRC1	EC	EGR Function
EGR/TS	EC	EGR Temperature Sensor
EGVC/V	EC	EGR Volume Control Valve

EMNT	EC	Engine Mount
ETC1	EC	Electric Throttle Control Function
ETC2	EC	Throttle Control Motor Relay
ETC3	EC	Throttle Control Motor
F/FOG	LT	Front Fog Lamp
F/PUMP	EC	Fuel Pump
FLS1	EC	Fuel Level Sensor Function (SLOSH)
FTS	AT	A/T Fluid Temperature Sensor
FTSP	AT	A/T Fluid Temperature Sensor Failure
FTTS	EC	Fuel Tank Temperature Sensor
FUEL	EC	Fuel Injection System Function
FUELB1	EC	Fuel Injection System Function (Bank 1)
FUELB2	EC	Fuel Injection System Function (Bank 2)
H/LAMP	LT	Headlamp
H/MIRR	GW	Door Mirror with Heated Mirror
HEATER	MTC	Heater System
HO2S2	EC	Heated Oxygen Sensor 2 (Rear)
HO2S2H	EC	Heated Oxygen Sensor 2 (Rear) Heater
HORN	WW	Horn
HSEAT	SE	Heated Seat
I/MIRR	GW	Inside Mirror (Auto-Anti Dazzling Mirror)
IATS	EC	Intake Air Temperature Sensor
IGNSYS	EC	Ignition System
ILL	LT	Illumination
INJECT	EC	Injector
INT/L	LT	Spot, Vanity Mirror and Trunk Room Lamps
IVC	EC	Intake Valve Timing Control Solenoid Valve
IVCB1	EC	Intake Valve Timing Control Solenoid Valve Bank 1
IVCB2	EC	Intake Valve Timing Control Solenoid Valve Bank 2
KEYLES	BL	Remote Keyless Entry System
KS	EC	Knock Sensor
LPSV	AT	Line Pressure Solenoid Valve
MAFS	EC	Mass Air Flow Sensor
MAIN	AT	Main Power Supply and Ground Circuit
MAIN	EC	Main Power Supply and Ground Circuit
METER	DI	Speedometer, Tachometer, Temp., Oil and Fuel Gauges
MIL/DL	EC	Malfunction Indicator Lamp
MIRROR	GW	Door Mirror
MMSW	AT	Manual Mode Switch
NATS	BL	Nissan Anti-Theft System
NAVI	AV	Navigation System
NONDTC	AT	Non-detective Items
O2H2B1	EC	Rear Heated Oxygen Sensor 2 (Rear) Heater Bank 1
O2H2B2	EC	Rear Heated Oxygen Sensor 2 (Rear) Heater Bank 2
O2S2B1	EC	Heated Oxygen Sensor 2 (Rear) Bank 1
O2S2B2	EC	Heated Oxygen Sensor 2 (Rear) Bank 2
PC/A	AT	Line Pressure Solenoid Valve
PC/B	AT	Shift Pressure Solenoid Valve
PC/C	AT	Pressure Control Solenoid Valve Failure
PC/CS	AT	Line Pressure Solenoid Valve
OVRCSV	AT	Over Run Clutch Solenoid Valve
P/SCKT	WW	Power Socket

PGC/V	EC	EVAP Canister Purge Volume Control Solenoid Valve
PHASE	EC	Camshaft Position Sensor (PHASE)
PHSB1	EC	Camshaft Position Sensor (PHASE) (Bank 1)
PHSB2	EC	Camshaft Position Sensor (PHASE) (Bank 2)
PNP/SW	AT	Park/Neutral Position Switch
PNP/SW	EC	Park/Neutral Position Switch
POS	EC	Crankshaft Position Sensor (CKPS) (POS)
POWER	PG	Power Supply Routing
PRE/SE	EC	EVAP Control System Pressure Sensor
PS/SEN	EC	Power Steering Oil Pressure Sensor
PWR/IN	AT	TCM Ignition Power
RP/SEN	EC	Refrigerant Pressure Sensor
SEAT	SE	Power Seat
SEN/PW	EC	Sensor Power Supply
SFTFNC	AT	Unusual Shifting
SHIFT	AT	A/T Shift Lock System
SROOF	RF	Sunroof
SRS	SRS	Supplemental Restraint System
SSV/A	AT	Shift Solenoid Valve A
SSV/B	AT	Shift Solenoid Valve B
SSV/C	AT	Shift Solenoid Valve C
SSV/CS	AT	Shift Solenoid Valve Failure
SSV/D	AT	Shift Solenoid Valve D
SSV/E	AT	Shift Solenoid Valve E
START	SC	Starting System
STOP/L	LT	Stop Lamp
TLID	BL	Trunk Lid Opener
TAIL/L	LT	Parking, License and Tail Lamps
TCCSIG	AT	A/T TCC Signal (Lock Up)
TCS	BRC	Traction Control System
TCV	AT	Torque Converter Clutch Solenoid Valve
TPS1	EC	Throttle Position Sensor
TPS2	EC	Throttle Position Sensor
TPS3	EC	Throttle Position Sensor
TRNSCV	BL	HOMELINK® Universal Transceiver
TRSA/T	AT	Turbine Revolution Sensor
TRSC	AT	Turbine Revolution Sensor
TURN	LT	Turn Signal and Hazard Warning Lamps
VEHSEC	BL	Vehicle Security System
VENT/V	EC	EVAP Canister Vent Control Valve
VIAS	EC	Variable Air Induction Control System
VIAS/V	EC	Variable Air Induction Control System Valve
VSSA/T	AT	Vehicle Speed Sensor A/T (Revolution Sensor)
VSSATC	AT	Revolution Sensor
VSSMTR	AT	Vehicle Speed Sensor Meter
W/ANT	AV	Audio Antenna
WARN	DI	Warning Lamps
WINDOW	GW	Power Window
WIPER	WW	Front Wiper and Washer

ELECTRICAL UNITS LOCATION

PFP:25230

Electrical Units Location

EKS008UQ

ENGINE COMPARTMENT

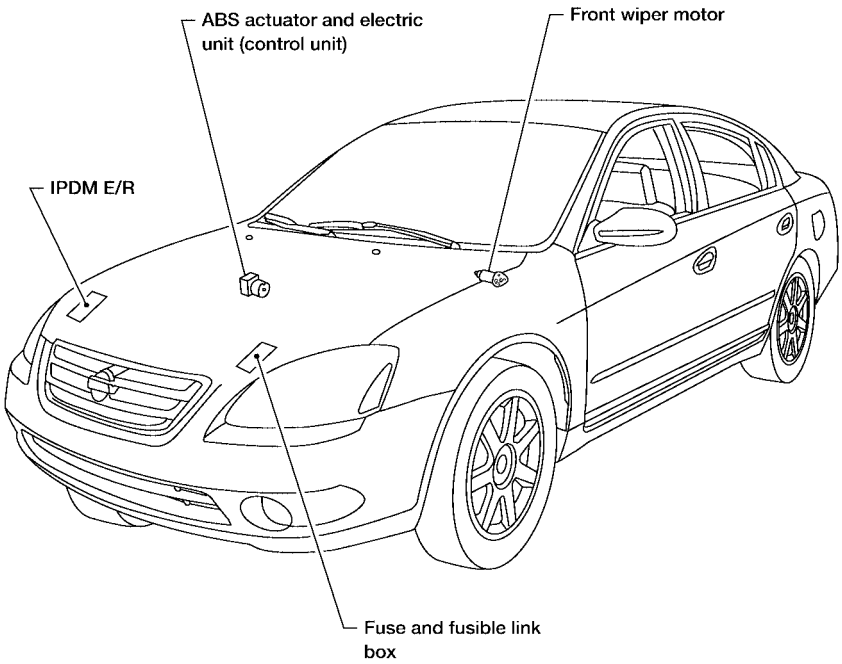

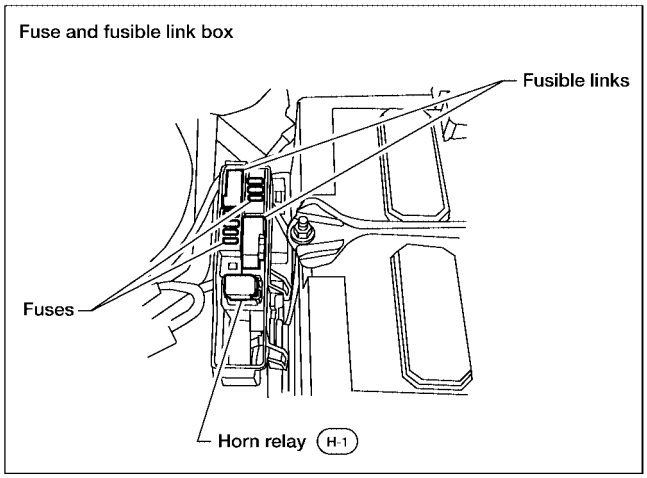

WKIA4589E

PASSENGER COMPARTMENT

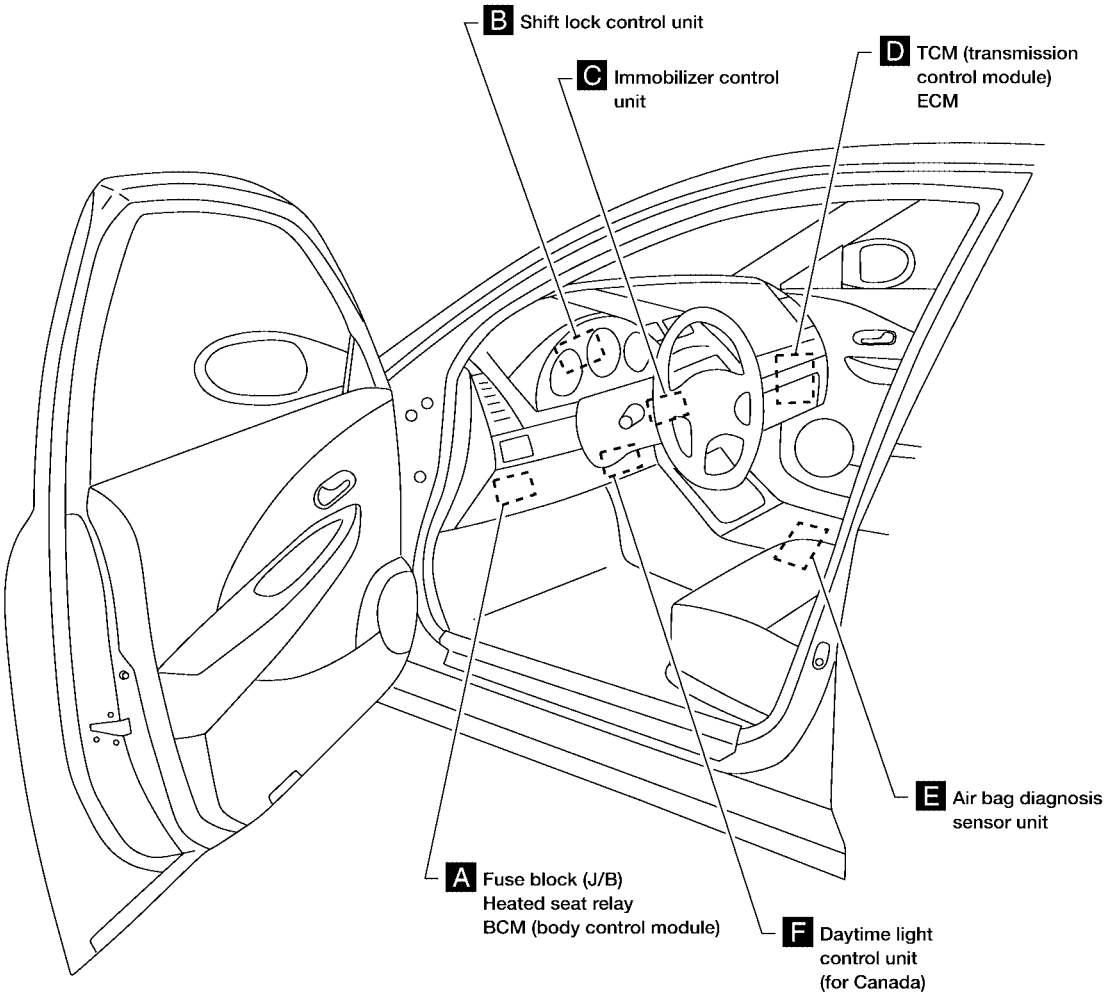

A Instrument panel side LH

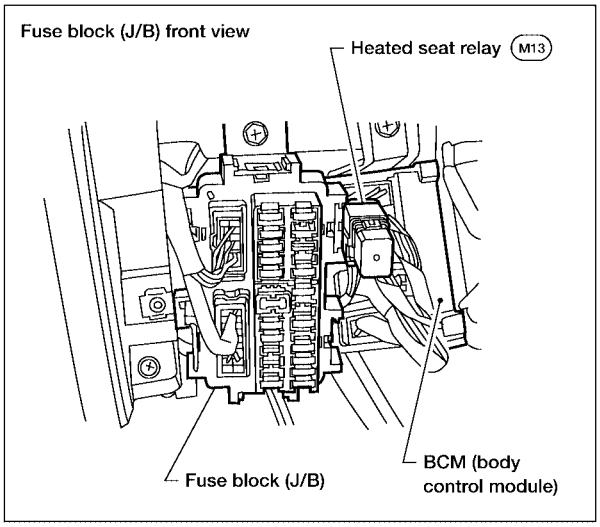

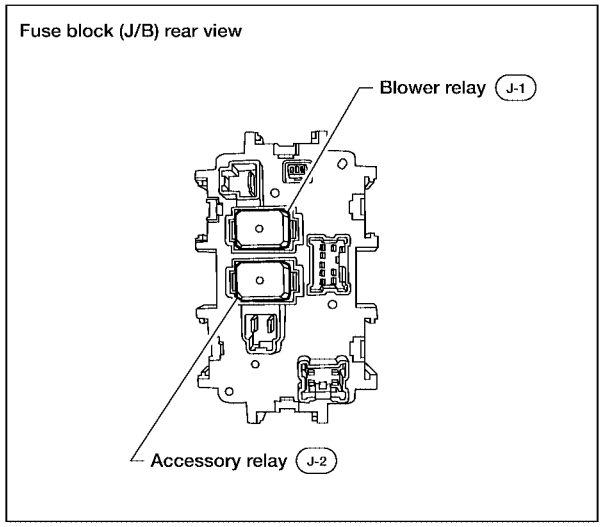

WKIA4590E

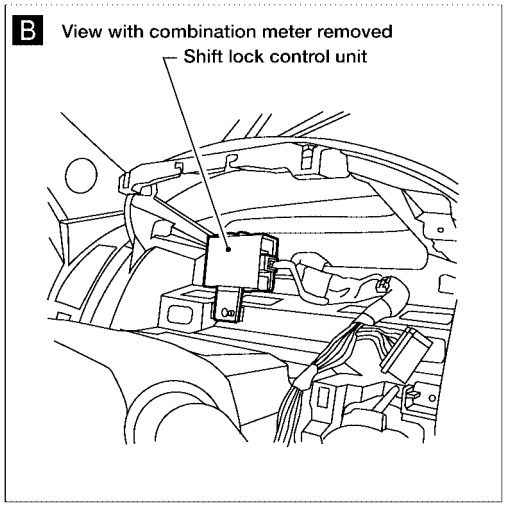
B View with combination meter removed
Shift lock control unit

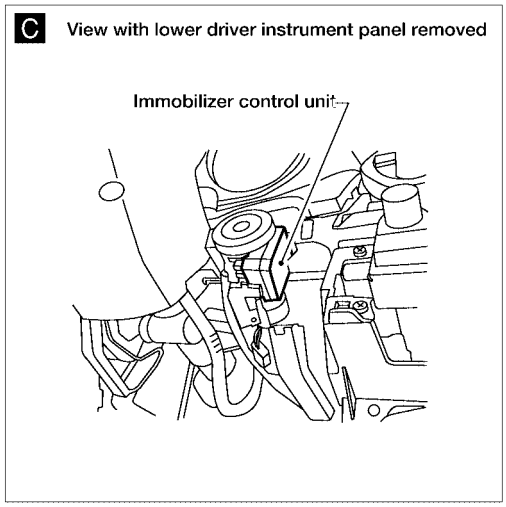
C View with lower driver instrument panel removed
Immobilizer control unit

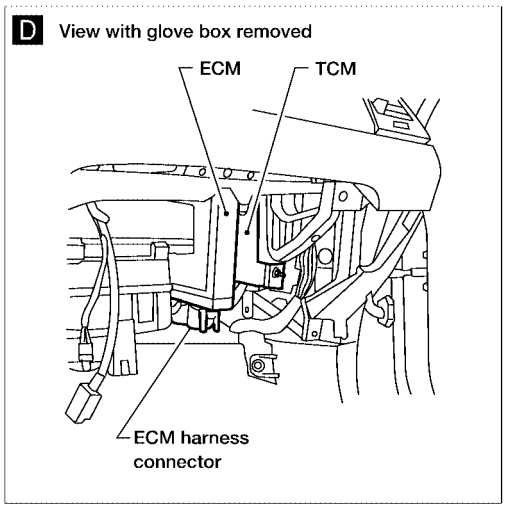
D View with glove box removed
ECM
TCM
ECM harness connector

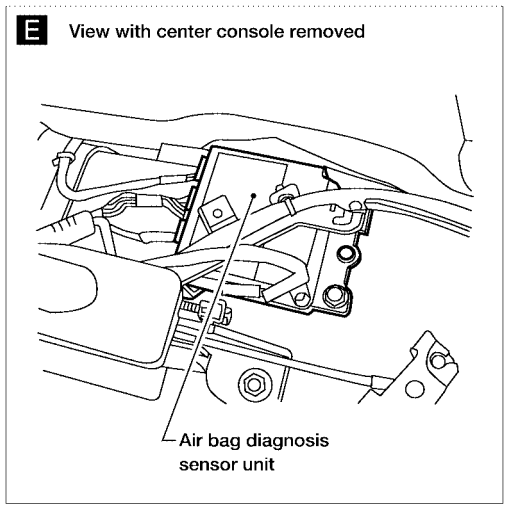
E View with center console removed
Air bag diagnosis sensor unit

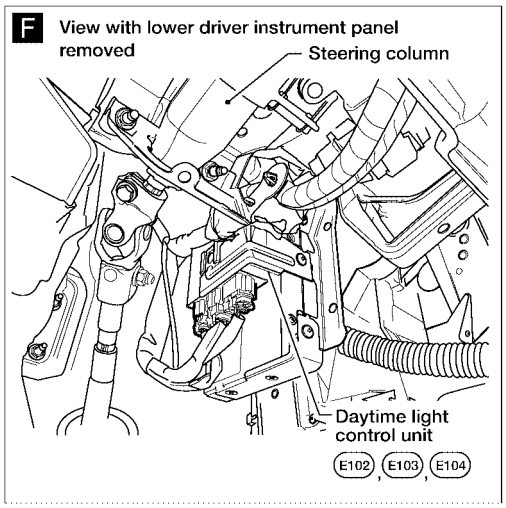
F View with lower driver instrument panel removed
Steering column
Daytime light control unit
E102, E103, E104

WKIA2765E

HARNESS CONNECTOR

PFP:B4341

Description

EKS008UU

HARNESS CONNECTOR (TAB-LOCKING TYPE)

- The tab-locking type connectors help prevent accidental looseness or disconnection.
- The tab-locking type connectors are disconnected by pushing or lifting the locking tab(s). Refer to the illustration below.

Refer to the next page for description of the slide-locking type connector.

CAUTION:

Do not pull the harness or wires when disconnecting the connector.

[Example]

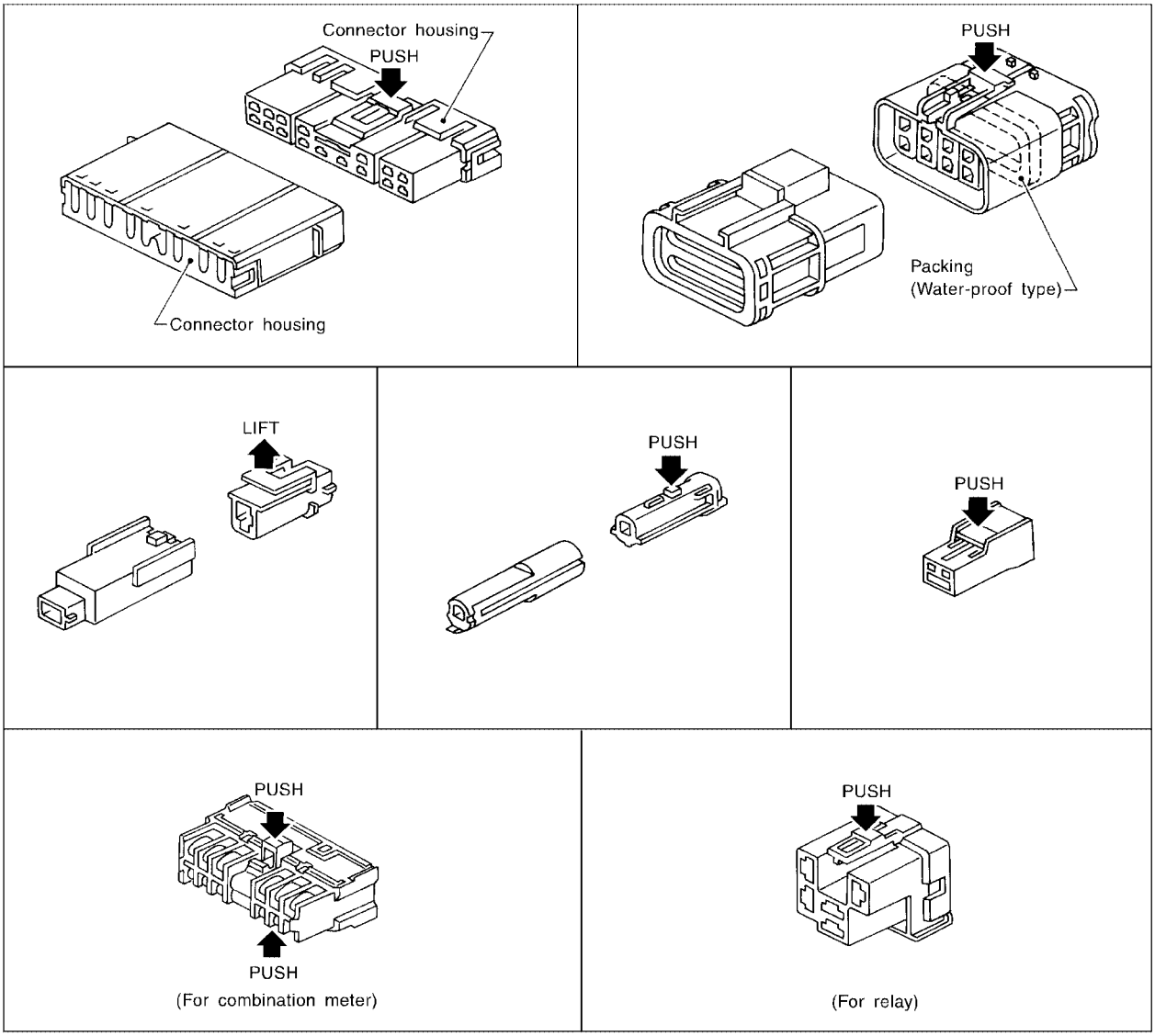

SEL769DA

HARNESS CONNECTOR (SLIDE-LOCKING TYPE)

- A new style slide-locking type connector is used on certain systems and components, especially those related to OBD.
- The slide-locking type connectors help prevent incomplete locking and accidental looseness or disconnection.
- The slide-locking type connectors are disconnected by pushing or pulling the slider. Refer to the illustration below.

CAUTION:

- **Do not pull the harness or wires when disconnecting the connector.**
- **Be careful not to damage the connector support bracket when disconnecting the connector.**

[Example]

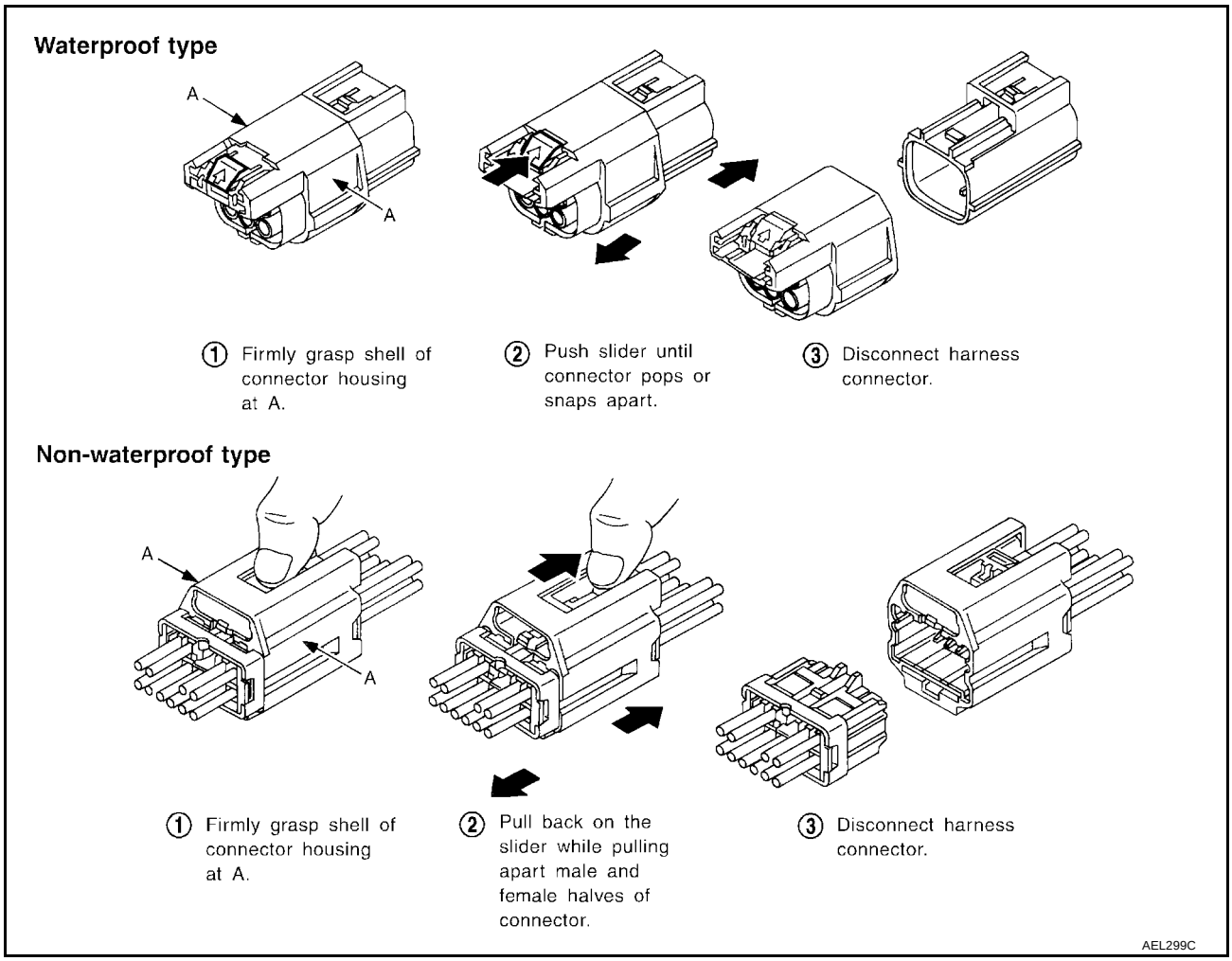

HARNESS CONNECTOR (DIRECT-CONNECT SRS COMPONENT TYPE)

- SRS direct-connect type harness connectors are used on certain SRS components such as air bag modules and seat belt pre-tensioners.
- Always pull up to release black locking tab prior to removing connector from SRS component.
- Always push down to lock black locking tab after installing connector to SRS component. When locked, the black locking tab is level with the connector housing.

CAUTION:

- **Do not pull the harness or wires when removing connectors from SRS components.**

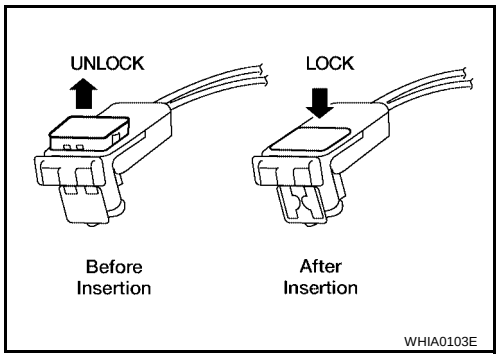

ELECTRICAL UNITS

PFP:23710

Terminal Arrangement

EKS008UV

A4 : WITH 4-SPEED A/T
A5 : WITH 5-SPEED A/T

BCM (BODY CONTROL MODULE)

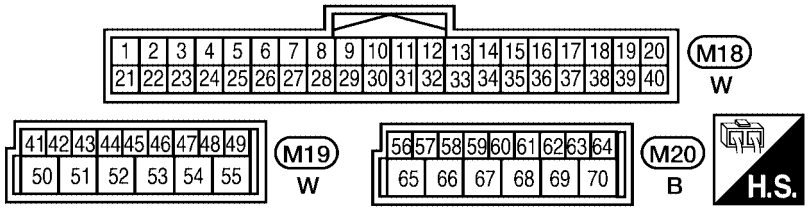

ABS ACTUATOR AND ELECTRIC UNIT (CONTROL UNIT)

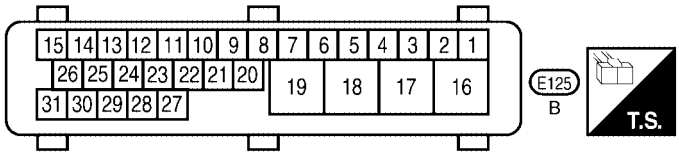

ECM

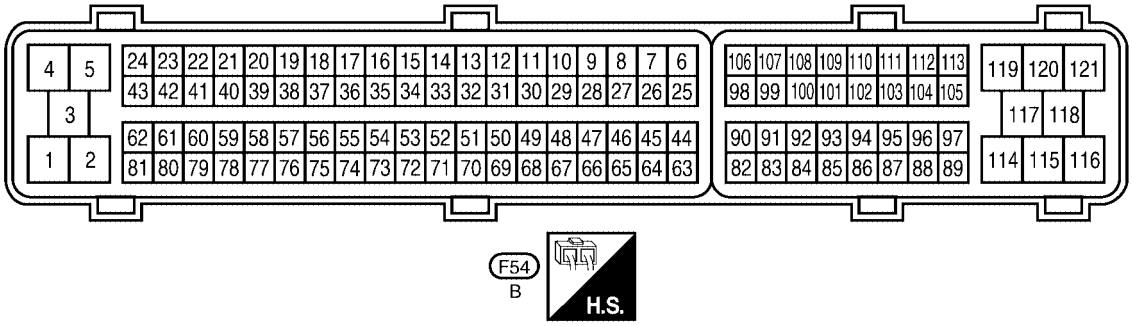

TCM (TRANSMISSION CONTROL MODULE)

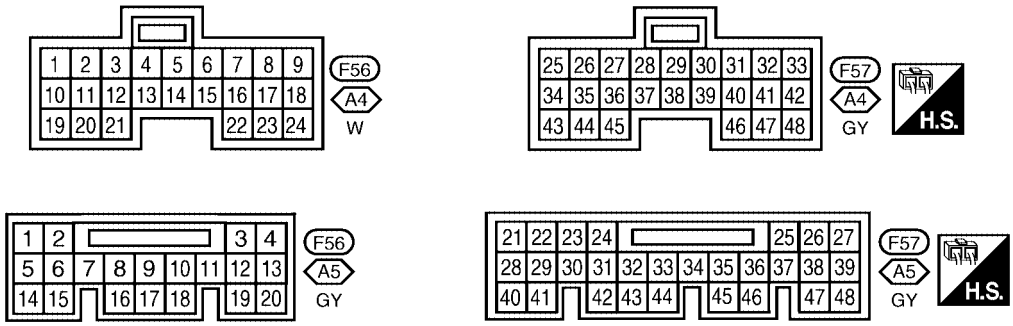

WKIA3348E

STANDARDIZED RELAY

PFP:25230

Description

EKS008UW

NORMAL OPEN, NORMAL CLOSED AND MIXED TYPE RELAYS

Relays can mainly be divided into three types: normal open, normal closed and mixed type relays.

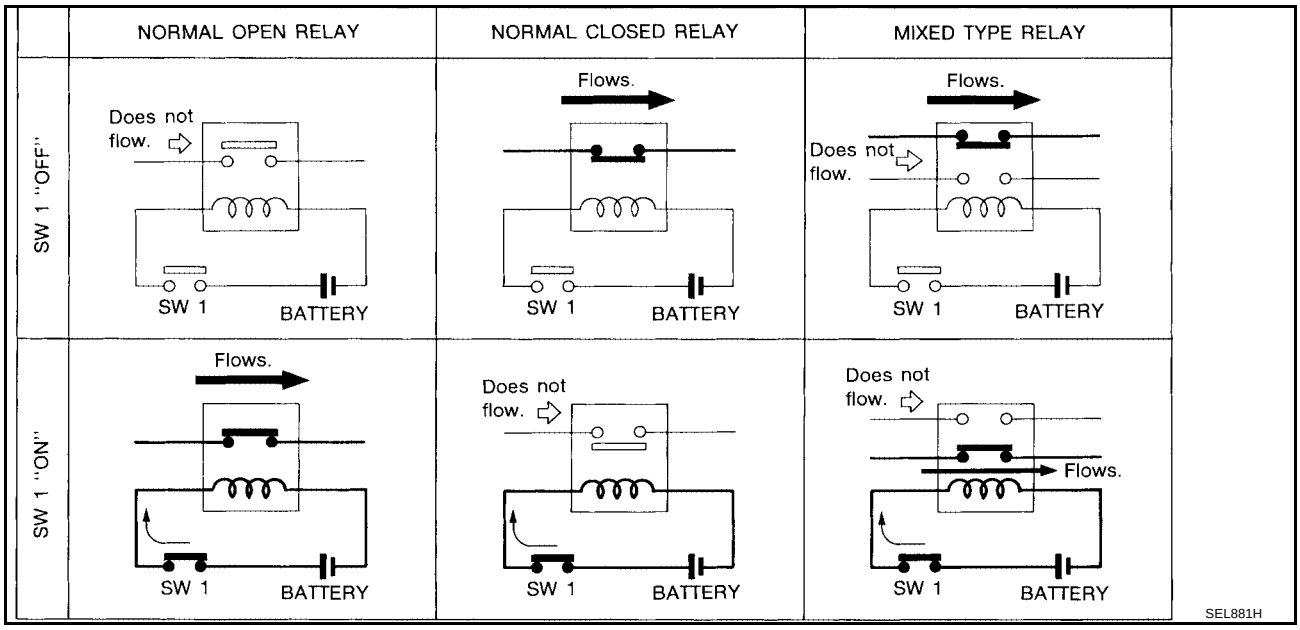

TYPE OF STANDARDIZED RELAYS

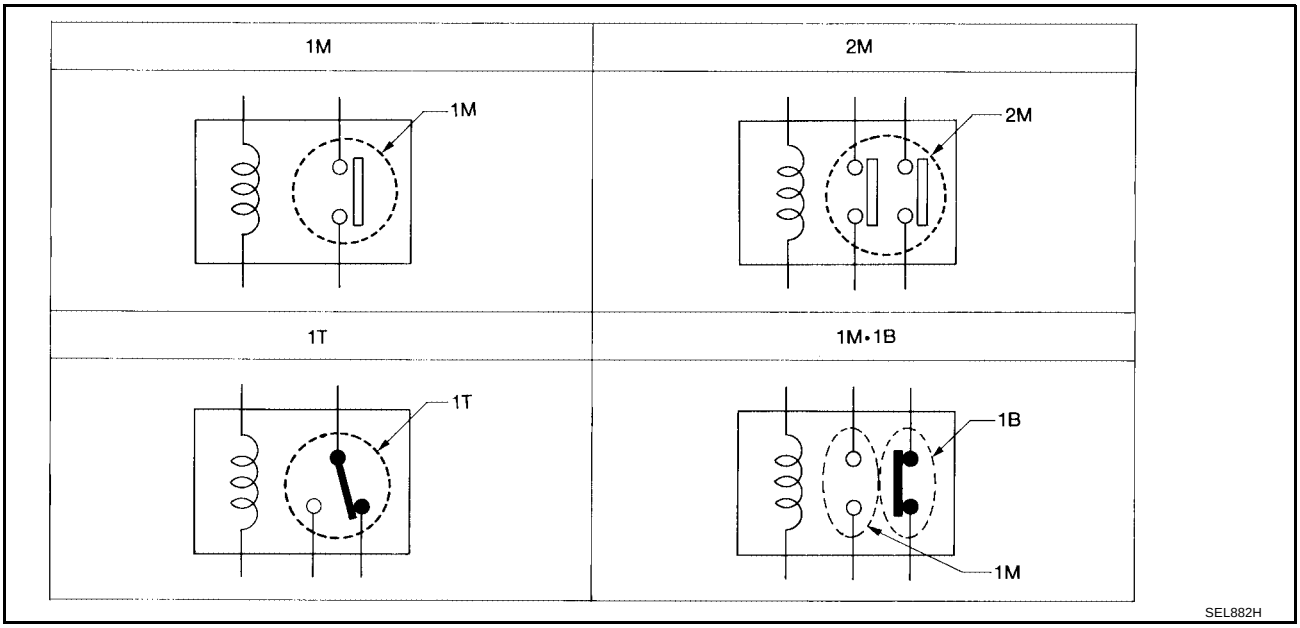

1M	1 Make	2M	2 Make
1T	1 Transfer	1M·1B	1 Make 1 Break

Type	Outer view	Circuit	Connector Symbol and connection	Case color
1T	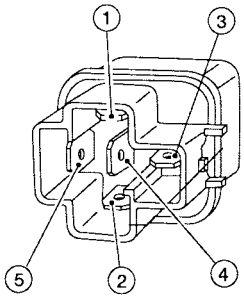	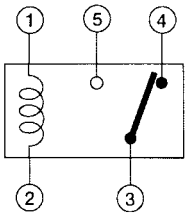	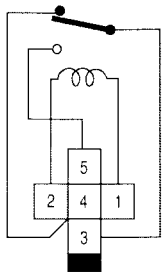	BLACK
2M	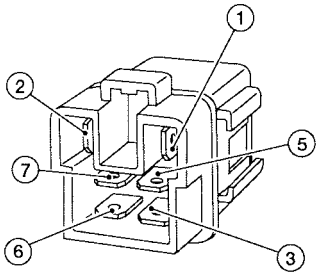	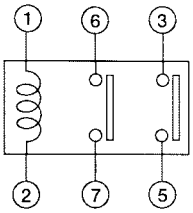	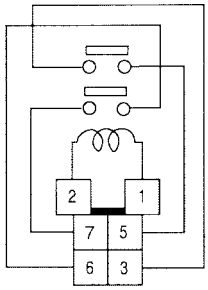	BROWN
1M ·1B	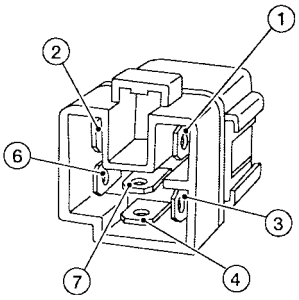	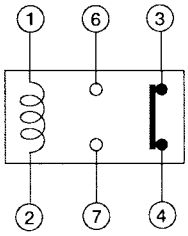	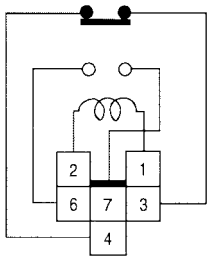	GRAY
1M	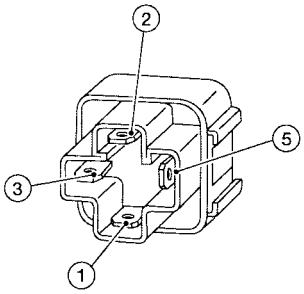	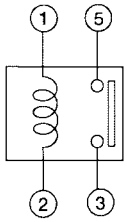	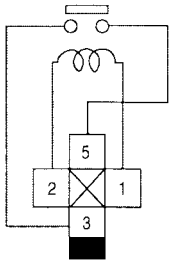	BLUE OR GRAY
	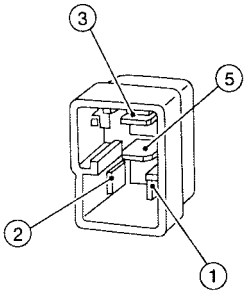		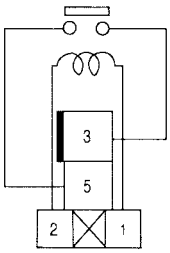	

The arrangement of terminal numbers on the actual relays may differ from those shown above.

LEL638

FUSE BLOCK-JUNCTION BOX(J/B)

PFP:24350

Terminal Arrangement

EKS008UX

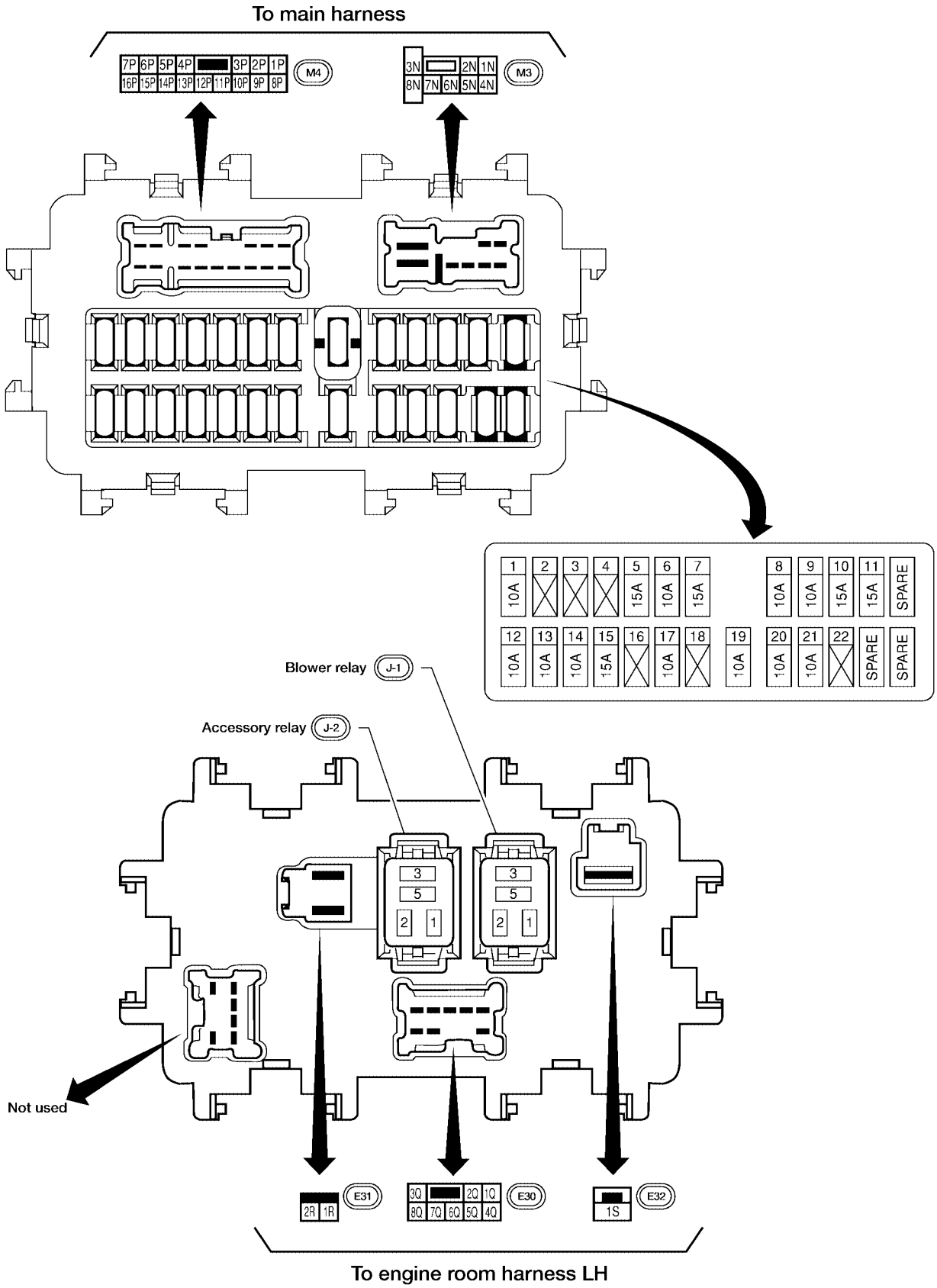

WKIA2767E

FUSE AND FUSIBLE LINK BOX

PFP:24381

Terminal Arrangement

EKS008UY

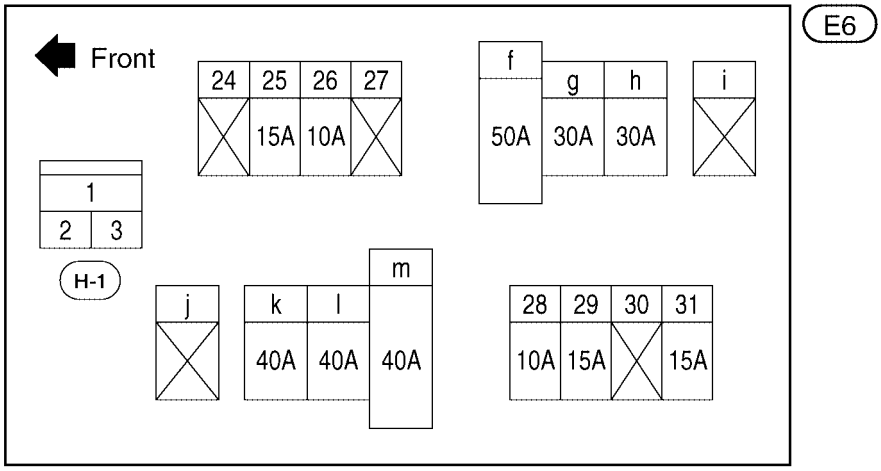

24 - 31: FUSE f - m: FUSIBLE LINK

WKIA2768E