Table of Contents

MED 9.2.1 Engine Management System - Workbook

Subject **Page**

MED 9.2.1
Objectives of the Module....2
Purpose of the System....3
System Components....4
Principle of Operation....7

Power Supply
Integrated Voltage Supply Module....8
Local-CAN bus....10

Air Management
Auxiliary Air Flaps....12
Intake Manifold Pressure Sensors....12

Fuel Management
Fuel Supply....14
High Pressure Injection System....16
Direct Injection System Control....25

Emissions Management
Bosch LSU Planar Wideband Oxygen Sensor....27

Performance Controls
Exhaust Flap....29

cardiagn.com

MED 9.2.1 Engine Management System

Model: E66 - 760Li

Production Date: MY 2003

Manufacturer: Bosch

Pin Connector: 134 Pins - 5 Modular Connectors per Control Module

This intent of this workbook is to assist you with diagnosis and testing in addition to the detailed information found in the the latest Diagnosis and TIS of the DISplus/GT1.

This section will be instructor led for a brief review of the MED 9.2.1 Engine Management System. You are encouraged to use this workbook with the latest Diagnosis and TIS information to make notes during diagnosis and testing of the *new/unique components of the MED 9.2.1 system.* This will be valuable to you as supplementary information or a memory refresher when performing diagnosis in the future.

Note: For more in depth and detailed information about the MED 9.2.1 Engine Management System, refer to the ST047 2003 Systems Diagnosis training manual.

For additional and updated information, always refer to:

www.bmwcenternet.com
- Diagnosis and TIS information/updates
- Service Information Bulletins
- DCS messages

Objectives:

After completion of this module you will be able to test and diagnose the following:

- Integrated Voltage Supply Module
- Local-CAN bus
- Auxiliary Air Flaps
- Intake Manifold Pressure Sensors
- High Pressure Injection System
- Direct Injection System Control
- Bosch LSU Planar Wideband Oxygen Sensor
- Exhaust Flap

cardiagn.com

MED 9.2.1

Purpose of the System

The MED 9.2.1 system manages the following functions:

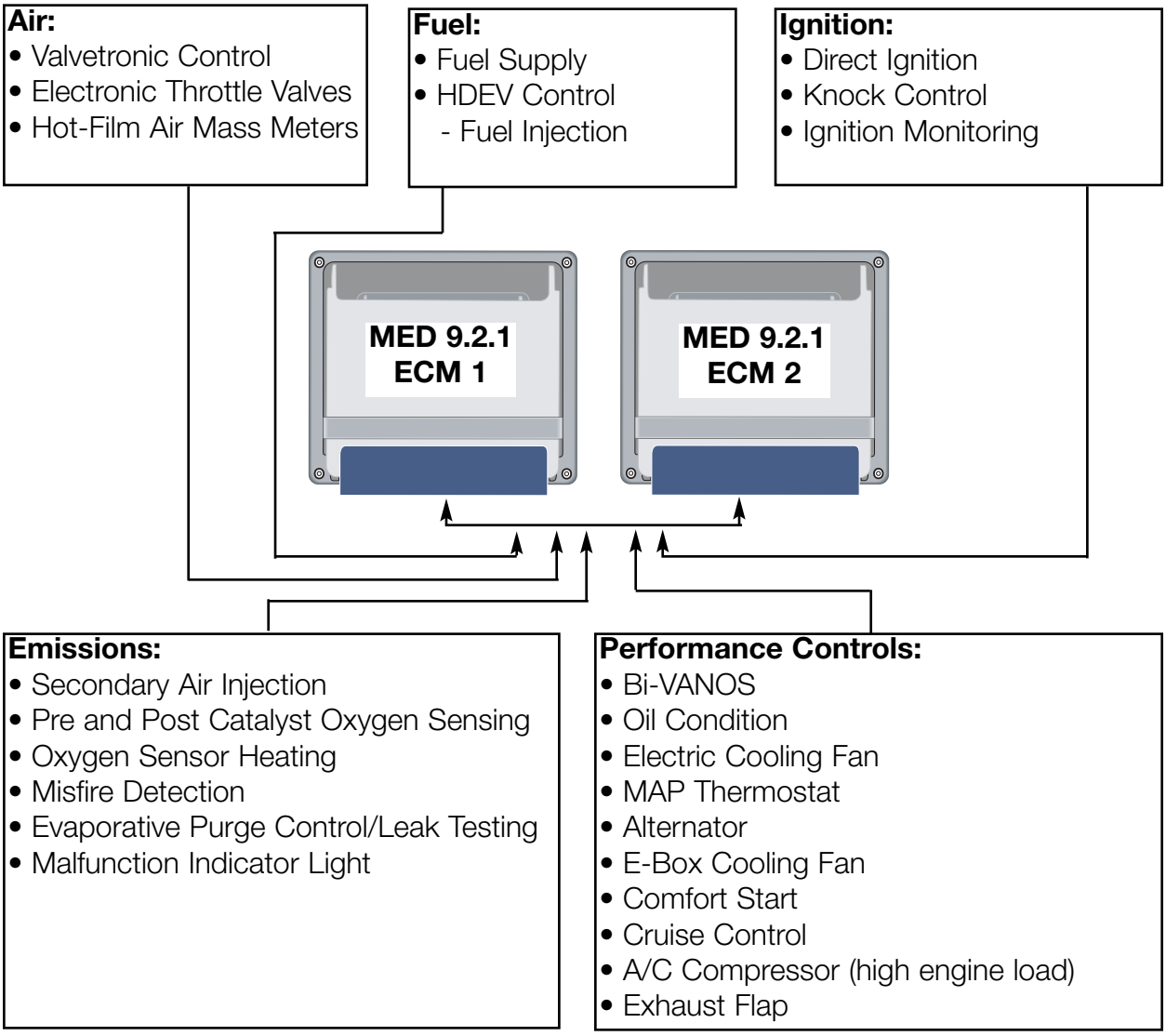

The basic engine management inputs, processes and outputs are not included in this workbook because they have not changed, refer to the ST055 Engine Electronics hand out for details. Some components and functions are the same as the ME 9.2 Engine Management System found in the E65/E66. Refer to the ST042 E65 Part 2 hand out for details.

cardiagn.com

System Components

MED 9.2.1 Engine Control Modules - New Features: This Bosch Engine Management System is introduced for more stringent emission requirements as well as reducing fuel consumption and increasing driving performance. Flash EEPROMs (additional 1 MB flash memory) are used as the storage medium for program data, fault code memory as well as the adaptation values.

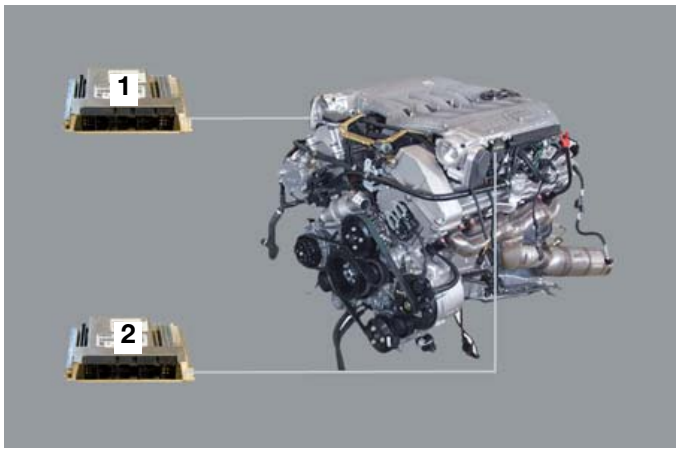

The 134 pin MED 9.2.1ECMs are manufactured by Bosch to BMW specifications. The ECM is the SKE (standard shell construction) housing and uses 5 modular connectors.

For testing, use the Universal Adapter Set (break-out box) Special Tool: *# 90 88 6 121 300*

The ECMs work in combination with the Valvetronic Control Module. The N73 engine has a total of 5 control modules to manage the engine functions:

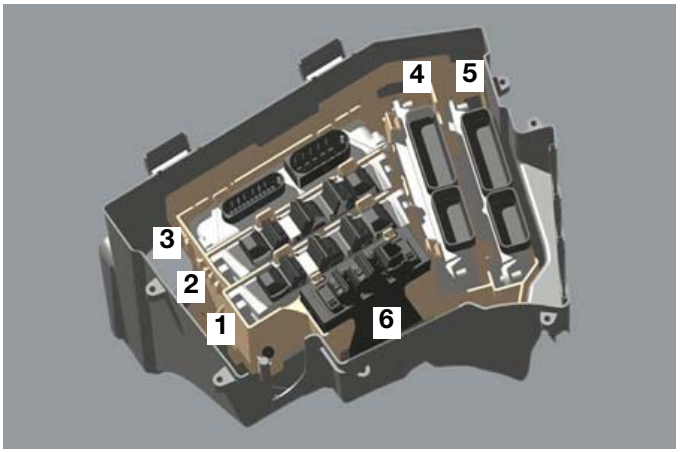

1. MED 9.2.1 ECM 2 - overall engine management
2. MED 9.2.1 ECM 1 - overall engine management
3. Valvetronic Control Module - intake valve lift
4. High pressure fuel injector control module (HDEV) - activates injector group for one bank
5. High pressure fuel injector control module (HDEV) - activates injector group for one bank

These modules are located in the electronic box in the engine compartment together with the Integrated Voltage Supply Module (6).

The ECM controls an electric cooling fan in the base of the electronic box to draw in cool air from the passenger compartment.

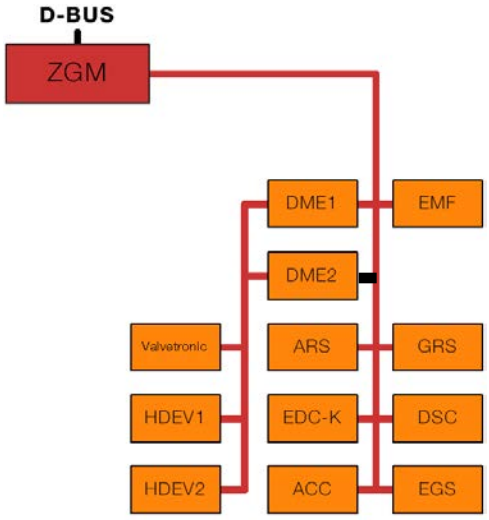

cardiagn.com

MED 9.2.1 ECM 1 Inputs - Processing - Outputs

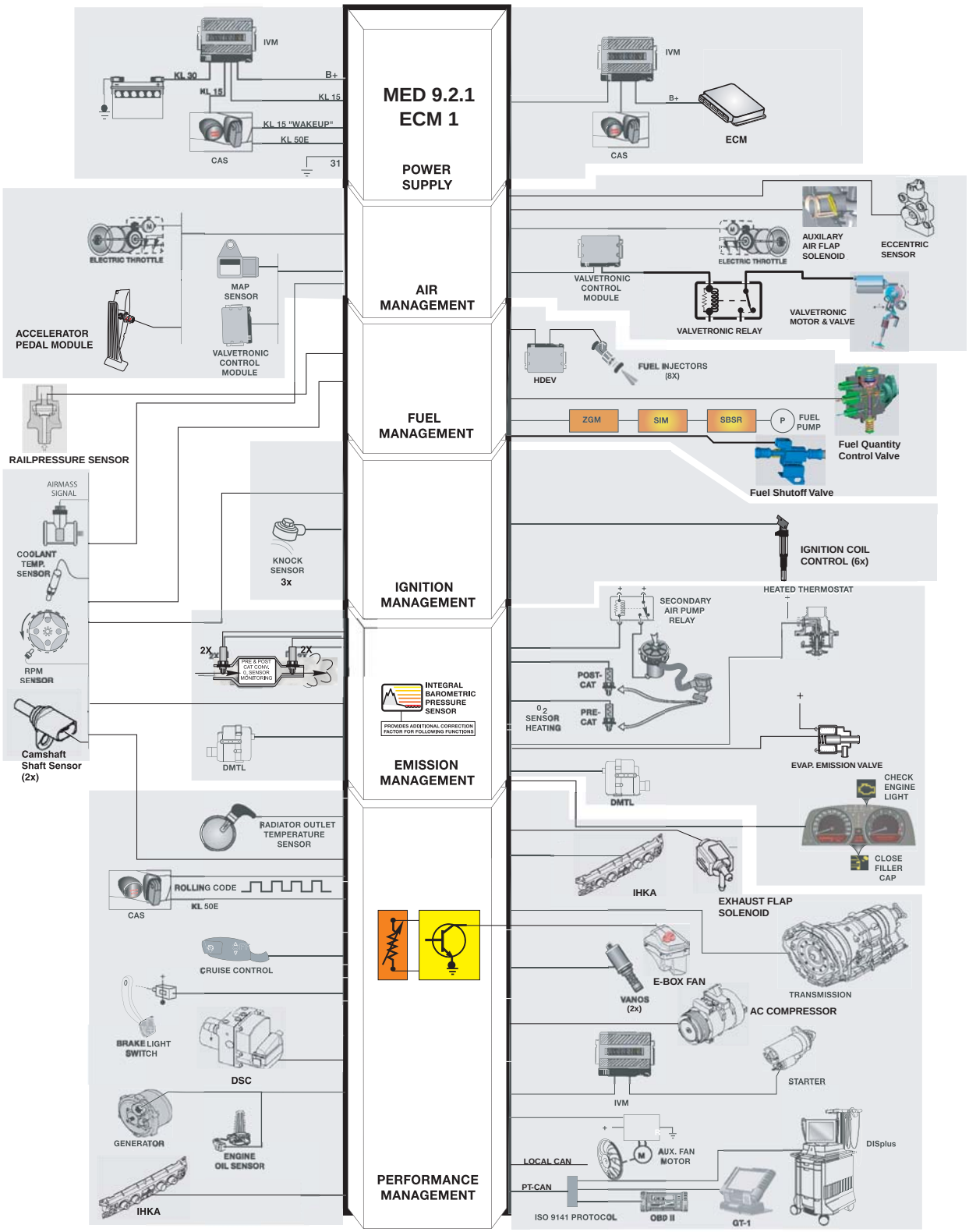

cardiagn.com

MED 9.2.1 ECM 2 Inputs - Processing - Outputs

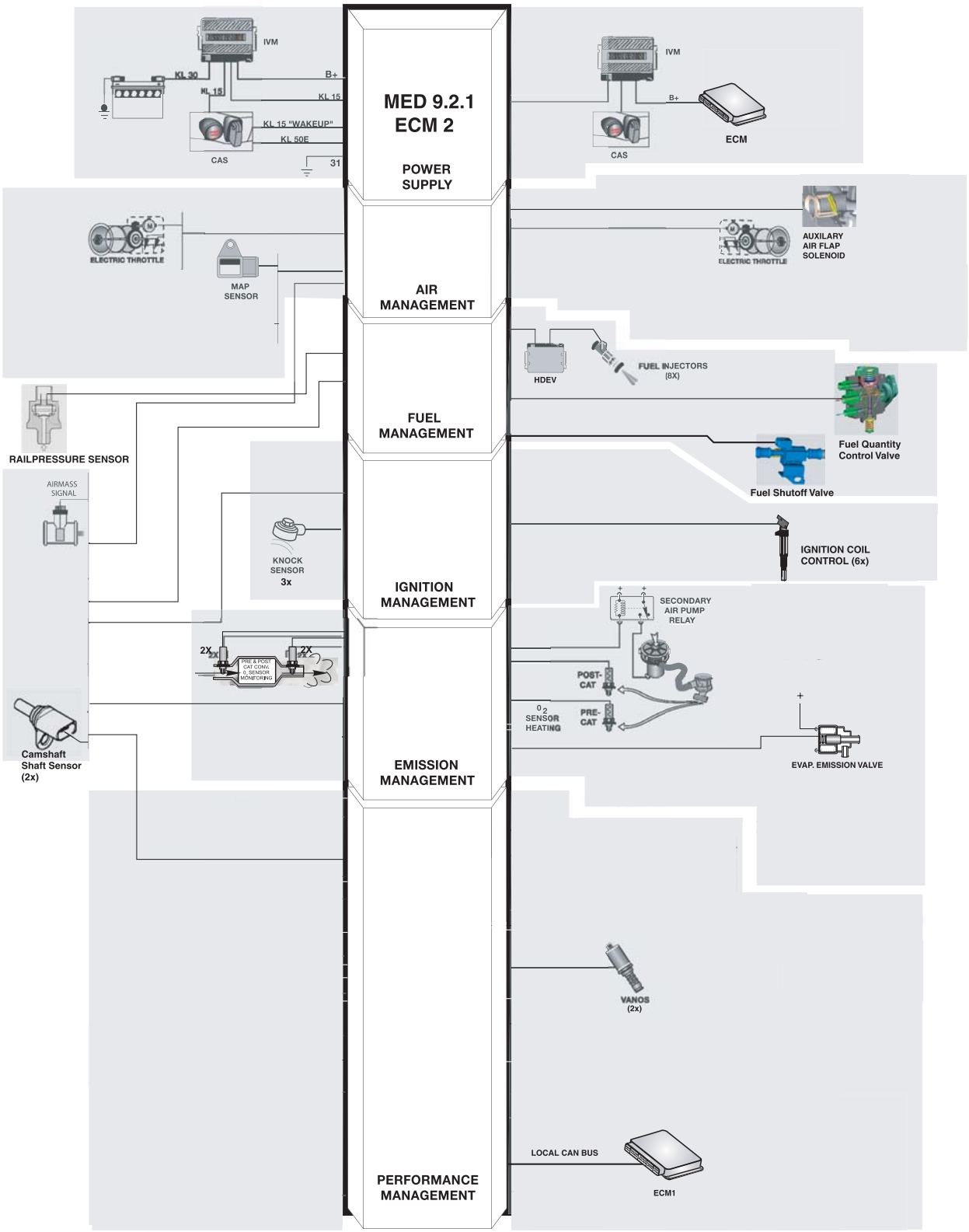

cardiagn.com

Principle of Operation

The ME 9.2 Engine Management System from the N62 engine provides the basis for the MED 9.2.1 Engine Management System.

The main distinguishing features of the MED 9.2.1 are:

- Extended computer capacity (additional 1 MB flash)
- Modified oxygen sensor chip which permits detailed diagnosis of the oxygen sensors
- One MED 9.2.1 control module for each cylinder bank
- Power is supplied to the high pressure fuel injectors for each cylinder bank by a high pressure fuel injector control module (HDEV)
- Omission of DISA and variable intake manifold activation (N62)
- Three knock sensors for each cylinder bank
- Activation of the auxiliary air flaps in the air cleaner housing
- Rail pressure sensor
- Fuel quantity control valve

An MED 9.2.1 control module is used for each cylinder bank. Both control modules are the same design and are classified into ECM 1 and ECM 2 by the programming. ECM 1 receives the input signals from a sensor or switch:

- Accelerator pedal module
- Oil condition sensor
- Alternator
- Coolant temperature
- Oil pressure

ECM 1 transmits these signals via the Local-CAN bus to ECM 2. All further input signals are transmitted directly to the control module responsible for the relevant cylinder bank (see overview pages 5 and 6).

Output signals which relate to not just one cylinder bank (e.g. electric fuel pump or exhaust flap) are transmitted by ECM 1 to the corresponding actuators. The crankshaft sensor signal is transmitted simultaneously to both control modules.

The MED 9.2.1 regulates the injected fuel quantity. For this purpose, the MED 9.2.1 receives the rail pressure sensor signals and regulates this pressure with the fuel quantity control valve according to the value defined by the program map. This ensures that a defined quantity of fuel is injected over the injection period.

cardiagn.com

Integrated Voltage Supply Module (IVM)

The IVM contains integral relays, replaceable fuses and offers a convenient splice point for harness connections. The IVM serves as a central power supply for Engine Management (including Valvetronic), Electronic Transmission and DSC. This diagram is a partial representation of the IVM for Engine Electronics.

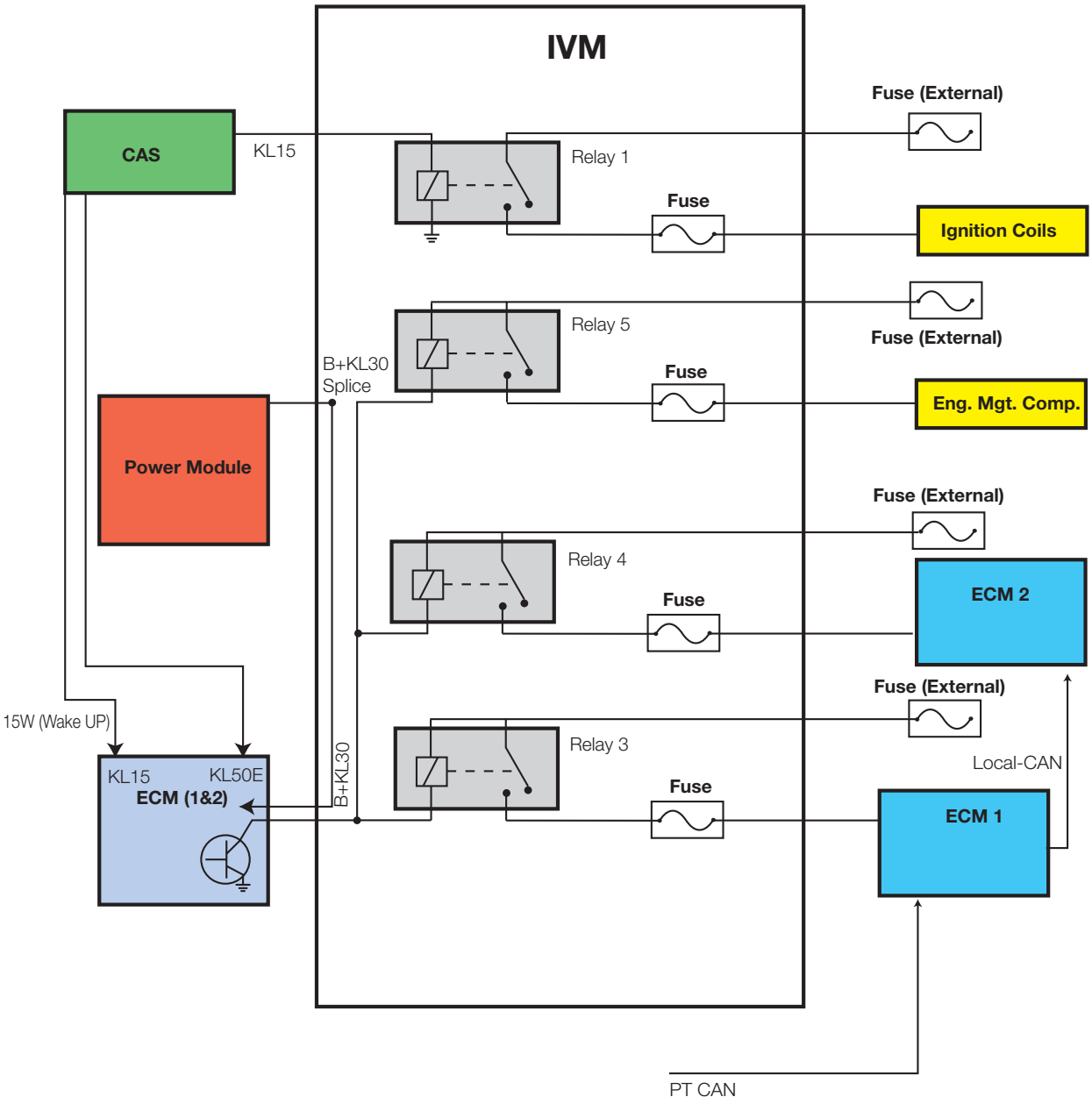

47-04-04

cardiagn.com

1. *What pin and connector number of ECM 1 and ECM 2 supplies ground to the ECM (main) relays?*

   ECM 1 _____ *ECM 2* _____

2. *What fuse(s) (numbers) supply operating voltage from relay 1 to the ignition coils of:*

   Cylinder bank 1-6 _____ *Cylinder bank 7-12* _____

3. *If fuse 005 from relay 3 were defective, what control modules would be affected?*

   _____

   _____

4. *Relay 5 supplies operating voltage to what components?*

   _____ _____

   _____ _____

   _____ _____

   _____ _____

5. *What type of signal is found on pin 26 (X60204) of ECM 2?* _____

   Is this signal an input or output? _____

   Where does this signal originate? _____

   What is the voltage value? _____

   Does ECM 1 receive this signal? _____

6. *What type of signal is found on pin 7 (X60201) of ECM 2?* _____

   Is this signal an input or output? _____

   Where does this signal originate? _____

   What is the voltage value? _____

   Does ECM 1 receive this signal? _____

cardiagn.com

Indirect Signals and Wiring

The ECMs are not directly connected to the OBD diagnostic connector. The OBD diagnostic connector is connected to the ZGM. Both ECMs are connected to the ZGM (central gateway module) by the PT-CAN bus. ECM 2 is also connected via the Local-CAN bus to ECM1. The ECMs are also connected to the Valvetronic control module and HDEV control modules by the Local-CAN bus. Valvetronic faults are stored in the ECMs.

The ECMs are classified into ECM 1 and ECM 2 by the wire harness connections (color coded) and location. ECM 1 receives the input signals from a sensor or switch and transmits these signals via the Local-CAN bus to ECM 2. All further input signals are transmitted directly (via hardwire harness) to the control module responsible for the relevant cylinder bank.

Output signals which are required for both cylinder banks are transmitted by ECM 1 to the corresponding actuators. The crankshaft sensor signal is transmitted simultaneously to both control modules.

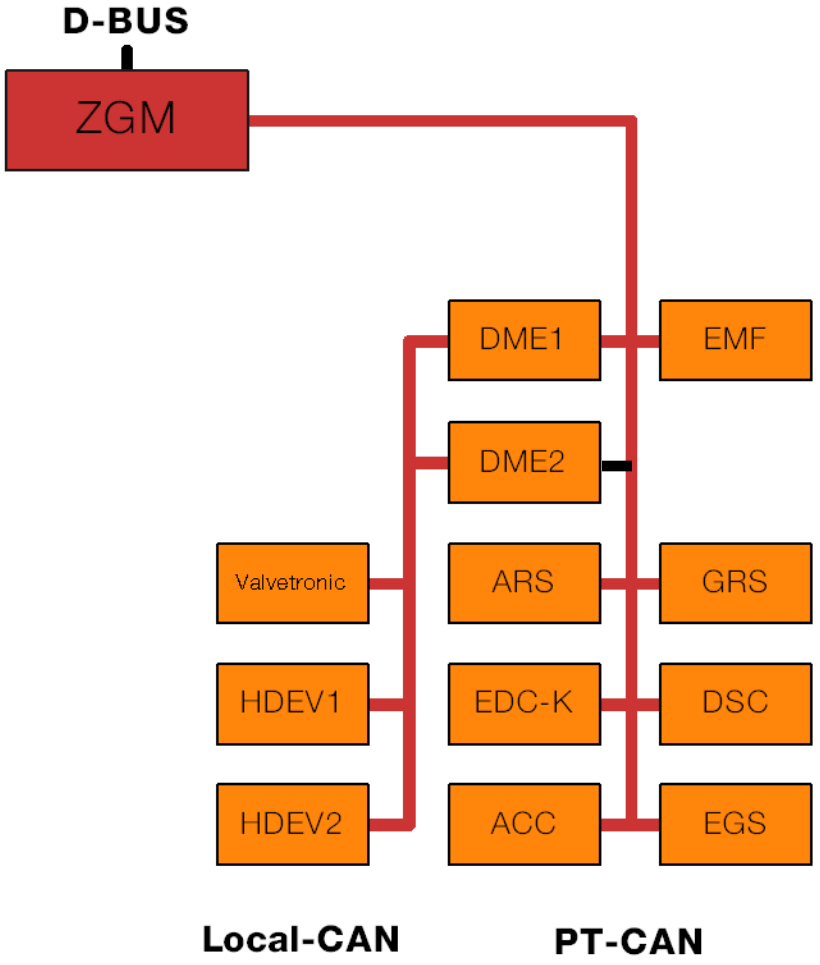

KT-9715

cardiagn.com

PT-CAN

1. What are the circuit descriptions of the three wires that make up the PT-CAN bus?

_____ _____ _____

2. Record the voltage levels on the PT-CAN bus (high and low) using the DISplus scope as shown - when the bus is:

Inactive - high _____ *low* _____ *Active - high* _____ *low* _____

Notes on setup: _____

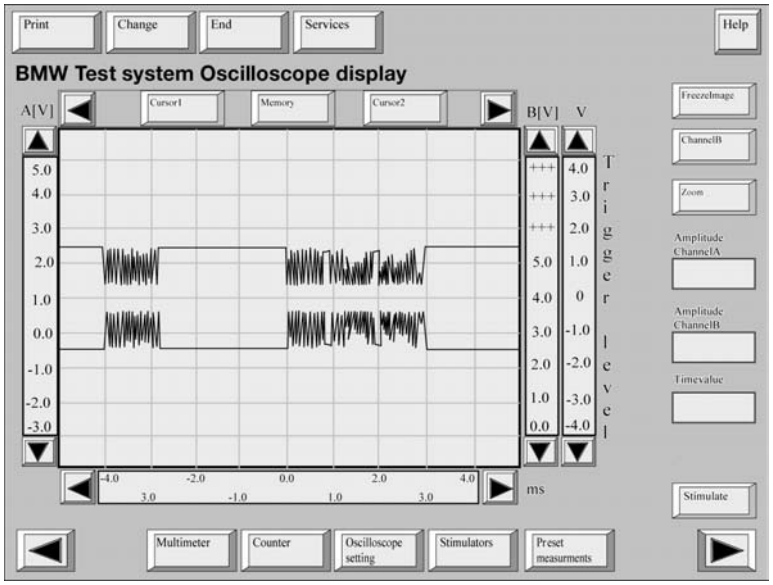

47 002

Local-CAN

1. What are the circuit descriptions of the two wires that make up the Local-CAN bus?

_____ _____

2. Record the voltage levels on the Local-CAN bus (high and low) using the DISplus scope - when the bus is:

Inactive - high _____ *low* _____ *Active - high* _____ *low* _____

3. What pin and connector numbers did you test the Local-CAN bus circuit on ECM 1?

Pins _____ *Connector* _____

4. Are you able to test the Local-CAN bus for resistance? _____ *Value:* _____

cardiagn.com

Air Management

Auxiliary Air Flaps: Each air cleaner housing incorporates an auxiliary air flap in its side wall. The auxiliary air flaps supply the engine with enough air volume to attain the maximum performance. The auxiliary air flaps are closed in the lower rpm ranges so that only cooler ambient air is drawn in for hot idling and stop and go driving.

The auxiliary air flaps are actuated by vacuum diaphragms which are located inside the air cleaner housings. Both diaphragms are supplied with vacuum from a common solenoid valve.

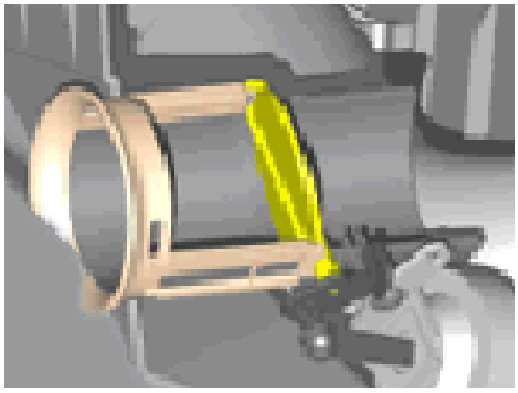

The auxiliary air flaps are fully opened by the ECM:

- In driving position “D” with kickdown operation from 3500 rpm
- In driving position “S” from 3000 rpm and simultaneous full load recognition.

10-15% additional air is drawn in from the engine compartment when the auxiliary air flaps are open. It is not necessary to draw in additional cold air from outside the engine compartment since the engine compartment is adequately ventilated at full load.

Intake Manifold Pressure Sensors: The pressure sensors (one per bank) are located in the back of intake manifold (1 peizo-electric). The voltage supply from the ECMs is 5 V. The varying resistance of the sensors is dependent on manifold pressure. The output voltage signal is processed by the ECMs. The intake manifold pressure is calculated by the ECMs and is compared with the ambient pressure (internally measured in ECM 1).

A minimum intake manifold vacuum of 50 mbar is required for the fuel tank evaporative purge function.

This vacuum is set by the electronic throttle valves (4) and monitoring with the intake manifold pressure sensors.

Shown to the right is the intake manifold (upside down) with both sensors (1).

cardiagn.com

Auxiliary Air Flaps

1. *What are the pin and connector numbers at the ECM (1 or 2) for the auxiliary air flap vacuum solenoid?* _____

2. *Is there a Test Plan available for the auxiliary air flaps?* _____

3. *Select Control Unit Functions (MED 9.2.1), Diagnosis Requests. Is there a status under the "Part Functions" column for observing the "Messages and Results"?* _____

   Is there a "Component Activation" feature for the auxiliary air flaps? _____

Intake Manifold Pressure Sensors

1. *What are the pin and connector numbers at the ECM (1 or 2) for the pressure sensors?*

   Pins _____ *Connector* _____

2. *Is there a Test Plan available for the pressure sensors?* _____

3. *Select Control Unit Functions (MED 9.2.1), Diagnosis Requests. Is there a status under the "Part Functions" column for observing the "Messages and Results"?* _____

4. *What is the value at idle speed?* _____ *mbar*

5. *What is the voltage value at pin 2 (X60103) of ECM 1 at:*

   Idle speed _____ *2000 rpm* _____

6. *With the ignition off, unplug the electronic throttle valve (on the bank you are testing). Restart the engine and check the value at idle speed.* _____ *mbar*

cardiagn.com

Fuel Management

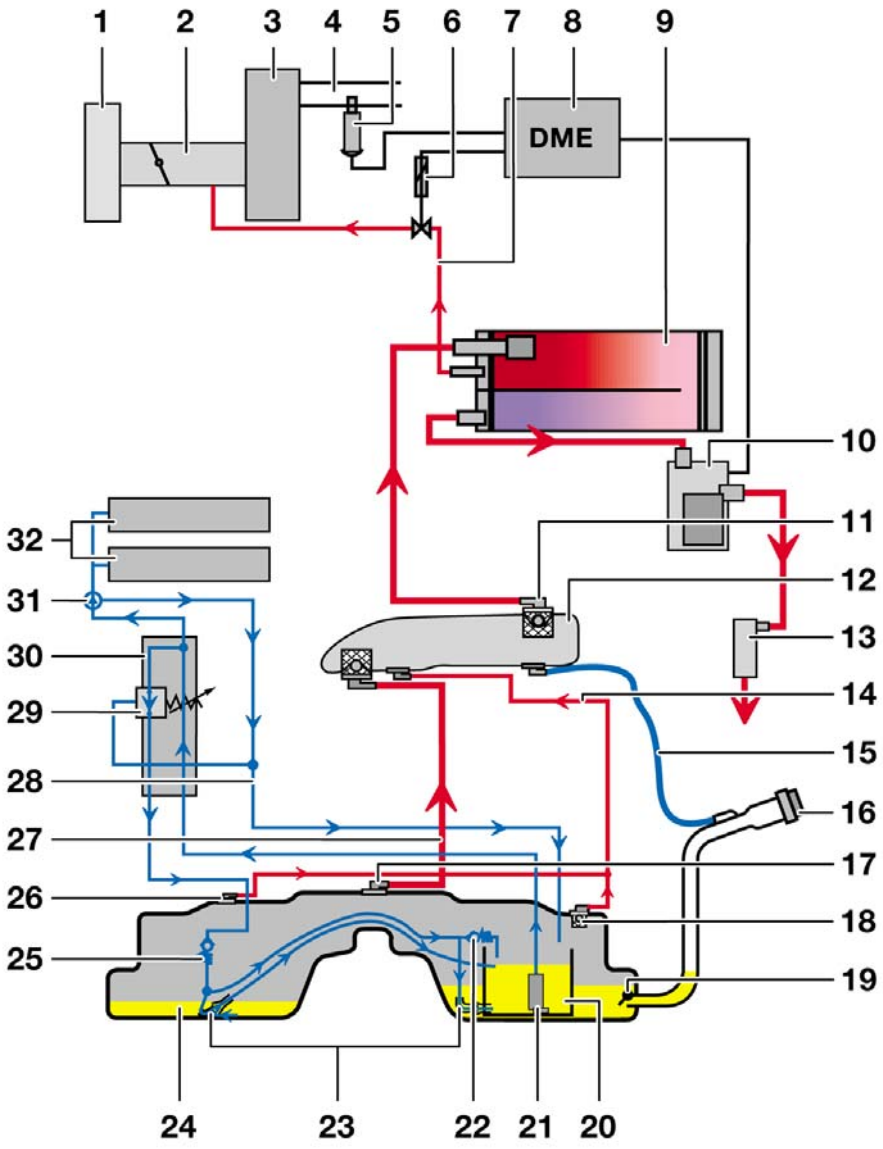

KT-9780

1. Air cleaner
2. Intake manifold
3. Engine
4. Exhaust system
5. Oxygen sensor
6. Evaporative emission valve (TEV)
7. Purge vapors
8. MED 9.2.1 ECM
9. Carbon Canister
10. Fuel tank leak diagnostic module (DM TL)
11. Roll-over valve
12. Liquid/vapor expansion tank
13. Dust filter
14. Service ventilation
15. Pressure test lead
16. Fuel tank filler cap
17. Filler vent valve
18. Service vent valve (float valve)
19. Anti-spitback flap
20. Surge chamber (fuel pump baffling)
21. Electric fuel pump (EKP)
22. Pressure relief valve
23. Suction jet pumps
24. Fuel Tank
25. Outlet protection valve
26. Service vent valve (float valve)
27. Refueling breather
28. Leakage line
29. Fuel pressure regulator (6 bar)
30. Fuel filter
31. High pressure fuel pump (HDP)
32. Fuel rails

cardiagn.com

Fuel Supply System: For the N73 engine, minor modifications have been made to the fuel supply system to adapt it to the direct injection system. The additional features are:

- Leakage line
- Electric fuel pump with increased delivery

The N73 in tank electric fuel pump is a roller cell type (EKP Bosch 3.1) with an increased delivery pressure of *6 bar*. This pressure is required to adequately supply the high pressure fuel pumps.

Fuel Supply System Components:

- Fuel tank (24)
- Surge chamber (20)
- Fuel pump (21)
- Two suction jet pumps (23)
- Outlet protection valve (25)
- Pressure relief valve (22)
- Internal tank fuel lines
- Fuel filter with fuel pressure regulator (30&29)
- High pressure fuel pump (HDP)
- Fuel rails with injection valves (32)

Internal Tank Fuel Circuit Operation

The fuel pump supplies fuel from the surge chamber via the fuel filter (located next to the frame rail under the driver's floor) to the high pressure fuel pumps (HDP). The fuel pump always pumps more fuel than the engine requires in all operating conditions. The fuel pressure regulator built into the fuel filter adjusts the pressure to *6 bar* and feeds the excess fuel in the return flow back into the tank.

The pressure regulator valve in the return flow sets a return pressure of 1.0 - 1.5 bar. This pressure prevents fuel vapor locks in the return flow and also ensures operation of the two suction jet pumps.

The fuel flows from the pressure regulator valve on to an intersection point where the fuel return flow is split. Some of the fuel flows through the suction jet pump in the left half of the tank via the internal fuel line to the surge chamber. The suction jet pump acts like a venturi tube which draws the fuel from the left half of the tank into the right half.

The other amount of diverted fuel flows via the second internal fuel supply directly to the right half of the tank and to *the second suction jet pump. This pumps the fuel from the right half of the tank into the surge chamber to ensure that the surge chamber is always filled with enough fuel in all driving conditions and takes full advantage of the reserve capacity.*

cardiagn.com

High Pressure Injection System: A BMW gasoline direct injection system is used for the first time in the N73 engine series. Each fuel rail is supplied with fuel by a high pressure pump (HDP), which is driven via a bucket tappet by a triple lobe cam on the exhaust camshaft.

The two high pressure pumps are supplied with fuel by the electric fuel pump (EKP), which is located in the fuel tank. The high pressure fuel injectors are connected to a pressure rail (accumulator) for each cylinder bank. The two rails are not interconnected.

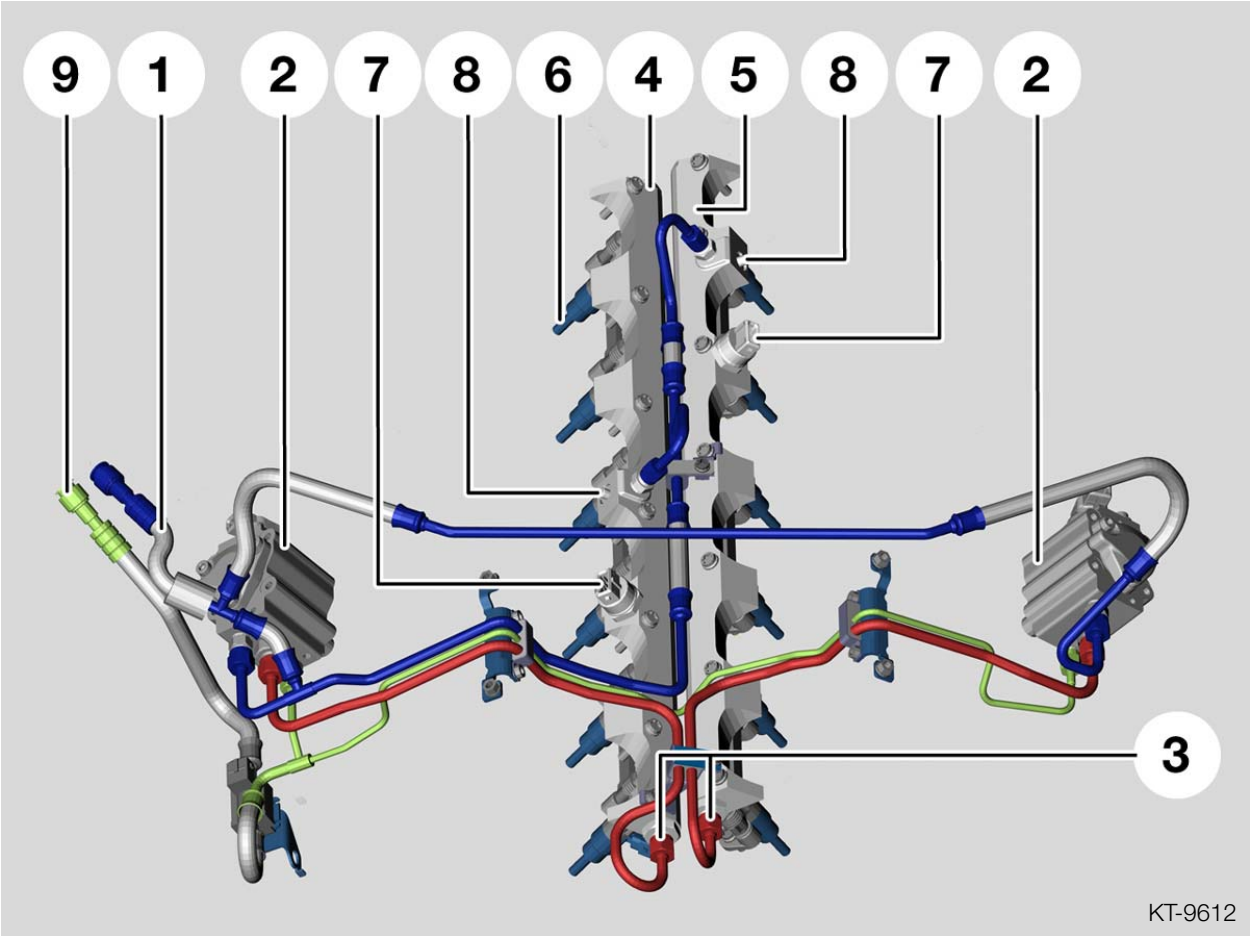

1. Supply line
2. High pressure pumps
3. High pressure lines
4. Fuel rail (7-12)
5. Fuel rail (1-6)
6. High pressure fuel injectors
7. Rail pressure sensors
8. Pressure limiting valves
9. Leakage line

cardiagn.com

High Pressure Pumps: A single cylinder high pressure pump is used for each cylinder bank. The pumps are mounted on the cylinder heads and driven via bucket tappets by triple cam lobes on the exhaust camshafts. Each pump has three connecting lines: feed line, high pressure line and leakage line.

1. Feed line
2. Inlet valve
3. High pressure chamber
4. Outlet valve
5. High pressure line
6. Pump plunger
7. Annular plunger groove
8. Feed area channel
9. Sealing ring
10. Fuel quantity control valve
11. Diaphragm
12. Pressure attenuator
13. Mounting flange
14. Leakage line

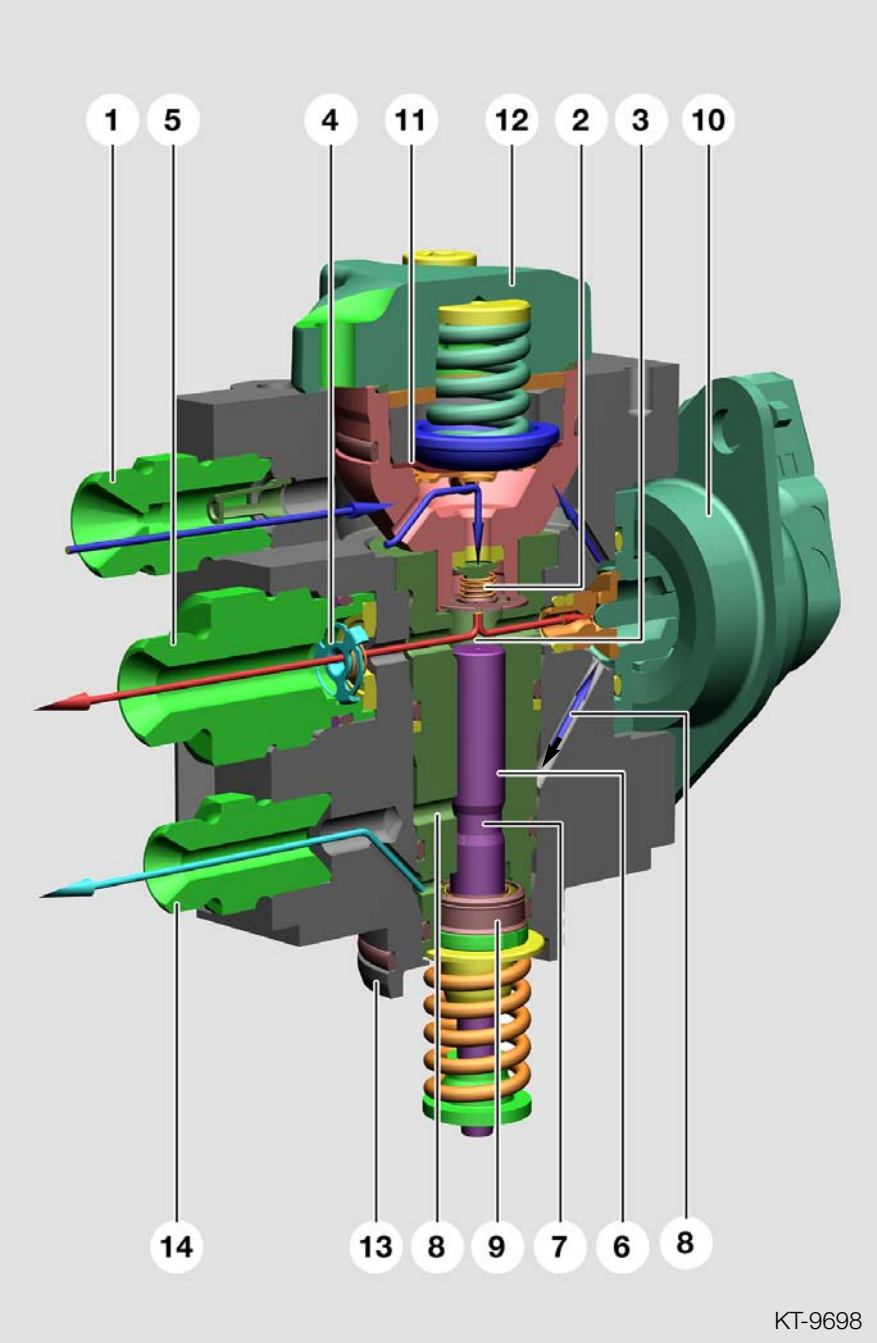

cardiagn.com

Fuel is delivered to each high pressure pump through the feed line at a pressure of 6 bar from the electric in tank fuel pump via a T-branch. In the pump, the fuel passes through the inlet valve (2) into the high pressure area (3).

As the pump plunger is forced up by the camshaft, the fuel is pressurized *(up to 120 bar)* in this area. The pressurized fuel is then forced out through the high pressure line to the fuel rail. The outlet valve (4) prevents back flow from the rail into the high pressure pump.

Due to the extreme pressure on and around the plunger shaft, a small amount of fuel (max. 1 litre per hour) flows past the plunger shaft against the sealing ring (9). This also serves as lubrication for the plunger shaft. The sealing ring provides a seal between the fuel side of the pump and the engine oil at the pump drive.

To relieve the pump pressure (up to 120 bar) at the sealing ring, the pressure is reduced in two stages, at which point the fuel returns through the leakage line to the tank. The pump pressure is reduced down to 6 bar at the annular groove (7) because it is connected by a channel (8) to the feed area of the pump. The fuel flow from this channel is regulated by the fuel quantity control valve (MSV).

Below the annular groove, some fuel flows past the pump plunger against the sealing ring. At this point the fuel pressure is virtually reduced to atmosheric pressure, which is sufficient to return the fuel through the leakage line to the tank.

Fuel Quantity Control Valves (MSV): The fuel quantity control valve (10) is installed in the high pressure pump to regulate the fuel delivery rate as required based on load and engine rpm. This valve opens a channel from the high pressure chamber (3) to the feed area allowing excess fuel to return to the feed area.

When the pump plunger is at it's lowest position, the valve is energized closed by the ECM. The valve is de-energized as soon as the injection pressure calculated by the ECM is reached during the upwards travel of the pump plunger. The valve is now opened to allow excess fuel to return to the feed area. This switching is repeated three times per camshaft revolution because the drive cam for the pump has three lobes.

The pulsations generated in the pump during the process are absorbed by the pressure attenuator spring (12). The pressure attenuator is sealed by a diaphragm (11) from the pump feed area.

cardiagn.com

In Tank Electric Fuel Pump

1. *Request the Test Plan for the in tank electric fuel pump. What can cause faults in the fuel supply control?* _____ _____

   _____ _____

   _____

2. *Select #4 "Fault in electric fuel pump". When the Test Plan requests you to check the wires and power supply to the fuel pump, can you find a quicker way to confirm this?*

   _____

3. *Is there a "Component activation" for the in tank electric fuel pump?* _____

   If yes, how can you confirm that it is operating? _____

High Pressure Pump with Fuel Quantity (volume) Control Valve

1. *Is there a Test Plan available for the high pressure pump/fuel volume control valve?* ____

2. *Select Control Unit Functions (MED 9.2.1), Diagnosis Requests. Is there a status under the "Part Functions" column for observing the fuel volume control valve?* _____

3. *What are the pin and connector numbers at the ECM (1 or 2) for the fuel volume control valve? Pin* _____ *Connector* _____

4. *Record the voltage value at this pin with the engine not running (ignition on).* _____ *V*
   Engine running at idle speed. _____ *V*

5. *Record the frequency at this pin with the engine running at idle speed.* _____ *Hz*
   at 2000 rpm. _____ *Hz*

6. *Use the MFK 2 cable to observe a scope pattern from the same pin and record that pattern on the right (engine at idle speed).*

   Hint: Start out with a scope setting of 10Hz at 50 V for MFK 2 (Channel B).

   Increase the engine speed to 2000 rpm and observe pattern.

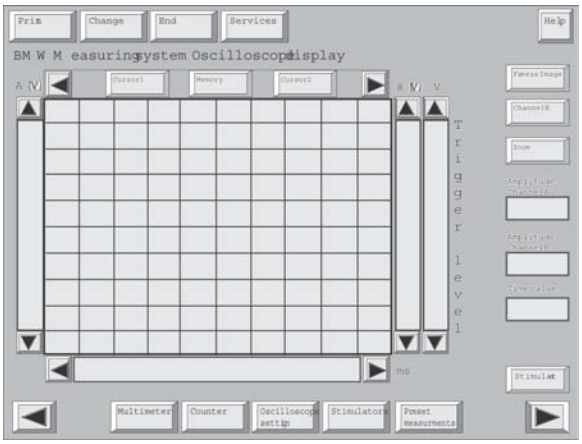

cardiagn.com

Fuel Rails (pressure accumulator): The fuel is stored in the fuel rail at a pressure between 50 and 120 bar for distribution to the fuel injectors. The fuel rail connects to the injectors through brass coupling connections.

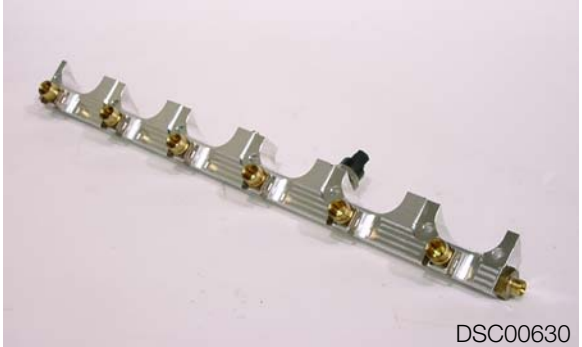
DSC00630

Due to length and position compensation between the rail and the fuel injectors, brass coupling connections are used in order that the fuel injector O-ring can float inside this coupling.

Pressure Limiting Valves: Each fuel rail contains an integral pressure limiting valve (1 below). This valve opens from a pressure of 125 bar to prevent damage to the injection system. The outlet of this valve is connected by a line to the high pressure pump fuel feed line. The valve can open briefly:

- When no fuel is required by the fuel injectors (fuel cutoff when vehicle is coasting)

or

- During the afterheating (hot soak) phase when the hot engine is turned off.

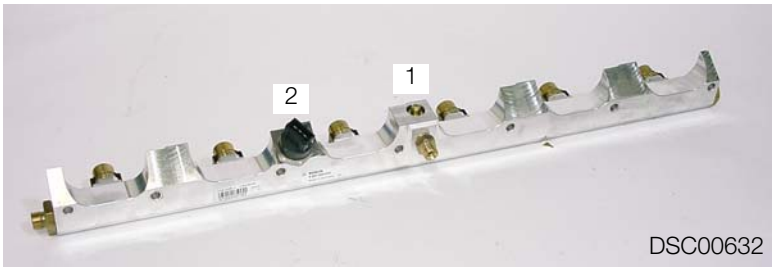

DSC00632

Rail Pressure Sensors: Each fuel rail incorporates a rail pressure sensor (2 above). The sensor is a pressure dependent resistor and the voltage (5 V) is supplied by the ECM. The increasing system pressure alters the sensor resistance.

According to the fuel pressure applied, the rail pressure sensor outputs a varying voltage signal as the rail pressure increases from 0.5 V (0 bar) to 4.5 V (140 bar). If the rail pressure sensor malfunctions, the fuel quantity control valve (on the HDP) is activated with a back up function (set value) by the ECM.

cardiagn.com

Fuel (rail) Pressure Sensor

1. What type of sensor is this? _____

2. Is there a Test Plan available for the fuel pressure sensor? _____

3. Select Control Unit Functions (MED 9.2.1), Diagnosis Requests. Is there a status under the "Part Functions" column for observing the fuel pressure sensor? _____

4. What are the pin and connector numbers at the ECM (1 or 2) for the fuel pressure sensor? Pin _____ *Connector* _____

5. Record the voltage value at this pin with the engine not running (ignition on). _____ *V*
Engine running at idle speed. _____ *V*
Engine speed at 2000 rpm. _____ *V*

6. Shut the engine off and turn the ignition back on "KL15" (engine not running). Observe the voltage value at this pin for approximately one minute. What did you observe?

_____

7. If the pressure limiting valve is defective, could the answers to questions 5 and 6 (above) indicate this? _____

Additional notes:

cardiagn.com

Return Shut-off Valve: The return shut-off valve prevents a pressure drop in the system while the engine is stopped and is located in the leakage line. When the engine is started, the valve is energized after a slight delay to prevent a pressure drop in the feed area of the high pressure pump (cavitation).

While the engine is running, this valve is supplied with system voltage (from the ECM Main Relay) and activated by the ECM providing a ground path which allows leakage fuel to return to the tank.

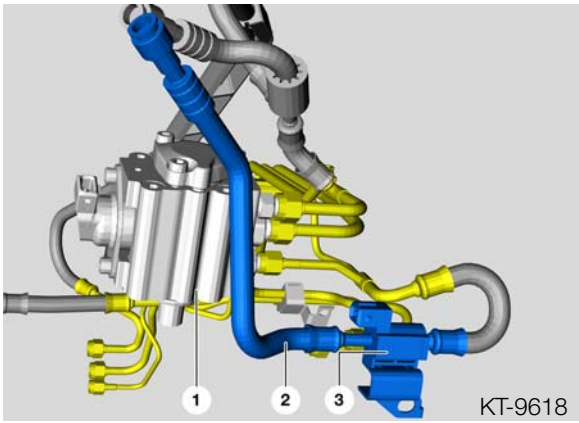

1. High pressure pump
2. Leakage line
3. Return shut-off valve

Pressure Damper Vent Valve: The Pressure Damper Vent Valve provides a controlled outlet for fuel/vapors that accumulate in the Pressure Attenuator (damper) chamber in the top of each High Pressure Pump. This is a 3/2 way electrically controlled valve (KL15 from the IVM, ground path provided by ECM 1) that provides:

- A circuit for fuel to return to the fuel tank when energized (KL15 on) *or*
- A circuit for fuel vapors to vent into the evaporative system when de-energized (KL15 off)

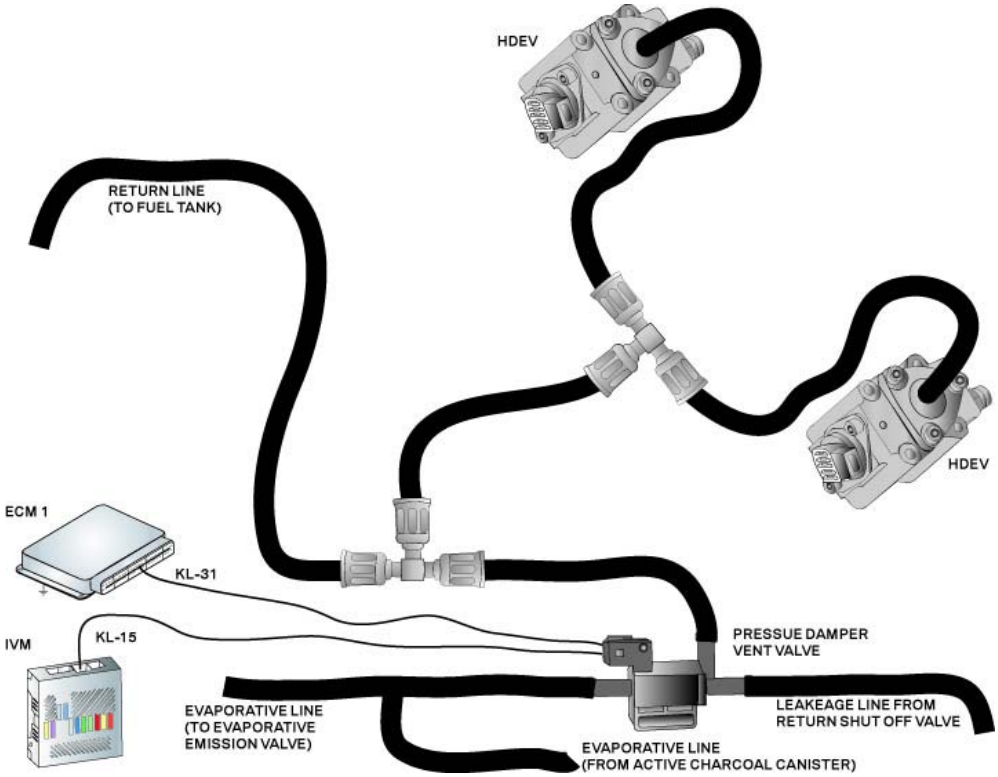

cardiagn.com

When the engine is running, a slight amount of fuel may accumulate in the Pressure Attenuator upper chambers due to natural leakage through the internal diaphram (extreme pressure). This fuel (circuit) is returned to the fuel tank by combining with the Leakage Line of the Return Shut-off Valve. The Pressure Damper Vent Valve provides a passage to combine these two circuits when the ignition is switched on (KL15) and isolates the Evaporative Emission circuit.

When the engine is not running, fuel vapors remain in these chambers and is routed into the Evaporative Emission circuit. This is accomplished by Pressure Damper Vent Valve blocking the passage from the Return Shut-off Valve (KL15 off) and opening a passage to the circuit leading from the Active Charcoal Canister to the Evaporative Emission Valve.

High Pressure Fuel Injectors (HDEV): The high pressure fuel injectors are designed essentially the same as conventional fuel injectors. They are secured by a taper in the cylinder head and sealed by a Teflon ring against the combustion chamber.

The O-ring seals the top of the injector and floats inside the brass coupling connections on the fuel rail. Each fuel injector incorporates a single hole nozzle with a spray angle of 70º to the piston crown.

1. Electrical connection
2. **Solenoid coil**
3. Fuel inlet port
4. Pressure spring
5. Nozzle needle
6. Single hole nozzle

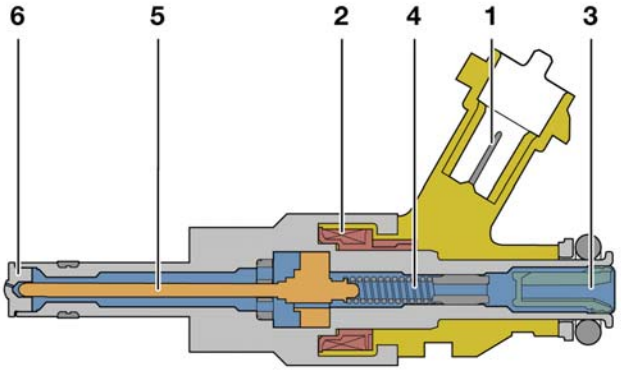

KT-9744

To open the high pressure fuel injector, the nozzle needle is lifted off its seat when the solenoid coil is energized. Due to the high injection pressure (up to 120 bar), the pressure spring is designed to accommodate a pressure force of 30 newtons (5 newtons for conventional fuel injectors). The pressure spring forces the nozzle needle onto its seat during closing with sufficient contact pressure.

cardiagn.com

Return (flow) Shut-off Valve

1. Is there a Test Plan available for the return flow shut off valve? _____

2. Select Control Unit Functions (MED 9.2.1), Diagnosis Requests. Is there a status under the "Part Functions" column for observing the return flow shut off valve? _____

3. What are the pin and connector numbers at the ECM (1 or 2) for the return flow shut off valve? Pin _____ *Connector* _____

4. Measure and record the resistance value of this valve. _____*ohms*

5. Record the voltage value at this pin with the engine not running (ignition on). _____*V*
Engine running at idle speed. _____*V*
Engine speed at 2000 rpm. _____*V*

6. Shut the engine off. Wait ten seconds and restart the engine. Observe the voltage value at this pin while the engine cranks and starts. What did you observe? _____

_____

High Pressure Fuel Injectors (HDEV)

1. What is the resistance value of a high pressure fuel injector? _____*ohms*

Visual identification of the high pressure fuel injector:

1. Teflon ring (combustion chamber seal)
2. Taper (seats against cylinder head)
3. O-ring (brass coupling seal in fuel rail)

KT-9637

Additional notes:

cardiagn.com

Direct Injection System Control

A high pressure fuel injector control module (HDEV) is used for each cylinder bank and is located in the engine compartment E box. The HDEV control module is supplied with system voltage from the ECM main relay (in the IVM). Data is transmitted from the ECMs to the HDEV control modules for each high pressure fuel injector via the Local-Can bus. The HDEVs activate the injectors individually.

Note: The high pressure fuel injectors are activated by the HDEV control modules with a voltage of 100 V and energized during the opening period with approx. 85 V.

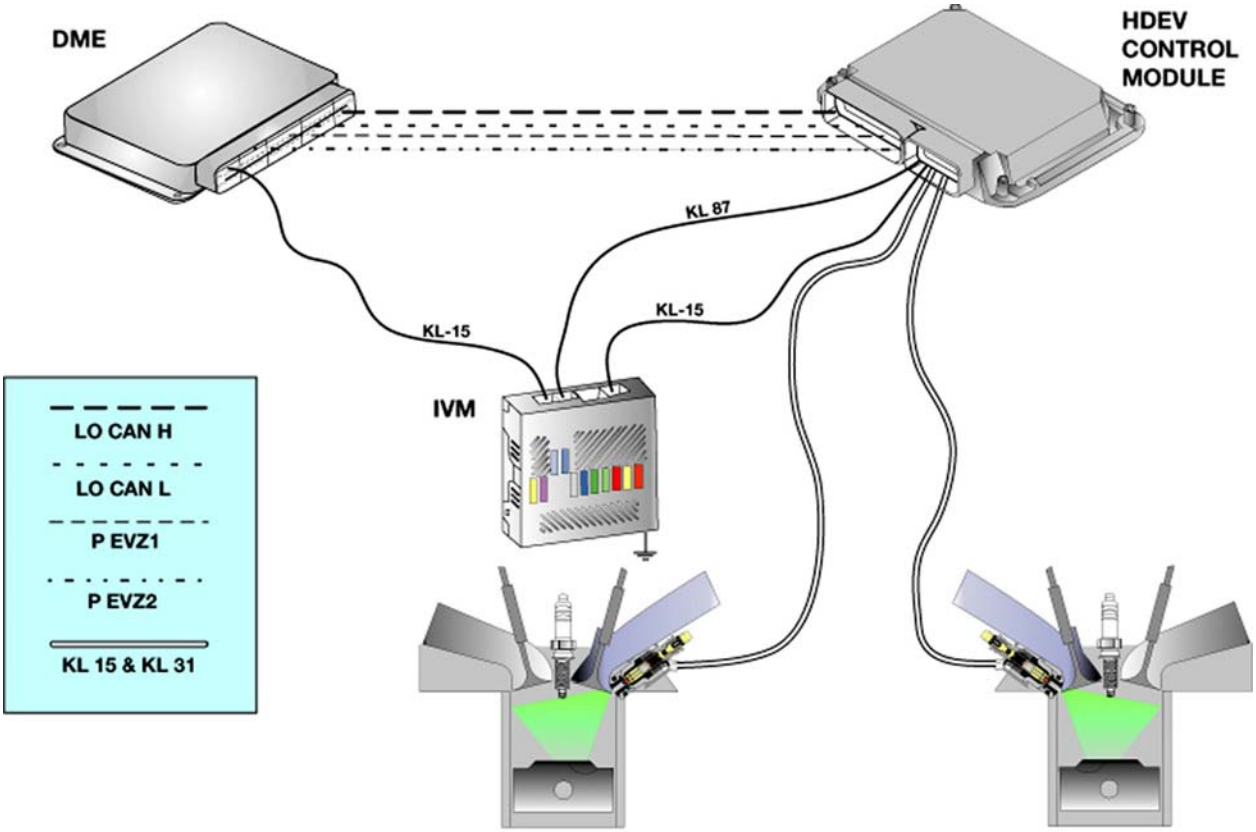

Partial circuit of ECM (DME) 1 with two injectors shown

HDEV Control Modules: The HDEV control modules contain pulse width modulated final output stages with high performance capacitors to transform the system voltage up to 85 to 100 volts. Current flows in the output stages up to a specific cutoff value. This cutoff creates an induced voltage, e.g. 85 V, which is then charged to the high performance capacitors (boosters). The high pressure fuel injectors are actuated by this capacitor with 2.8 to 16 amps of current.

cardiagn.com

High Pressure Fuel Injector Control Module (HDEV)

1. Is there a Test Plan available for the HDEV? _____

2. Select Control Unit Functions (MED 9.2.1), Diagnosis Requests. Is there a status under the "Part Functions" column for observing the HDEV injector output? _____

3. What are the pin and connector numbers at the ECM (1 or 2) for the fuel injector output request? Connector _____ *Pins* _____ _____

_____ _____

_____ _____

4. Record the voltage value at one of these pins with:

The engine not running (ignition on). ____ *V*
Engine running at idle speed. ____ *V*
Rev engine up to 2000 rpm. ____ *V*

5. What are the pin and connector numbers at the HDEV (1 or 2) for the output control of <u>one</u> of the fuel injectors? Connector _____ *Pins* _____ _____

voltage ground

<u>Ask the Instructor for assistance:</u>

6. Using the <u>ground</u> pin of this fuel injector at the HDEV, record the voltage value with:

The engine not running (ignition on). ____ *V*
Engine running at idle speed. ____ *V*
Rev engine up to 2000 rpm. ____ *V*

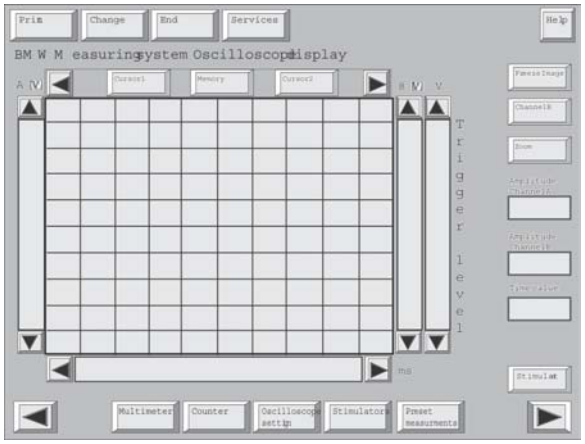

7. Use the MFK 2 cable to observe a scope pattern from the same pin and record that pattern on the right (engine at idle speed).

Hint: Start out with a scope setting of 10Hz at 100 V for MFK 2 (Channel B).

Increase the engine speed to 2000 rpm and observe pattern.

HDEV activation (sample shown to the right):

1. Premagnetization time
2. Booster phase
3. Starting current phase
4. Holding current phase

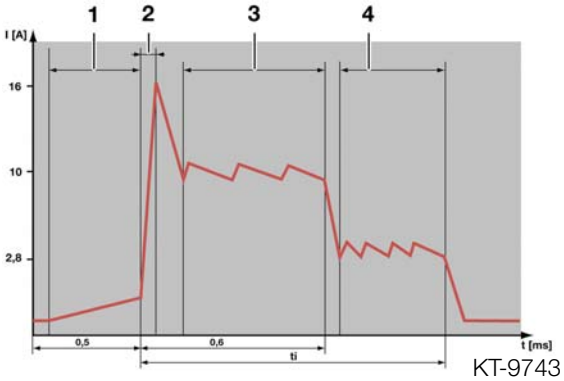

KT-9743

cardiagn.com

Emissions Management - N73B60 Low Emission Vehicle (LEV)

Oxygen Sensors: The N73 engine is fitted with a total of four oxygen sensors. One planar broadband oxygen sensor (constant characteristic curve), which regulates the fuel-air mixture, is located upstream of each of the two catalytic converters. The catalytic converter assemblies are integral with the exhaust manifolds.

There is a post catalytic converter sensor (Bosch LSH25) for each cylinder bank positioned downstream of the catalytic converter which monitors the catalyst efficiency.

This monitoring means that if the exhaust gas concentration is too high, a fault code is stored. The post catalyst sensors can also detect an emission relevant fault in a pre-catalyst oxygen sensor.

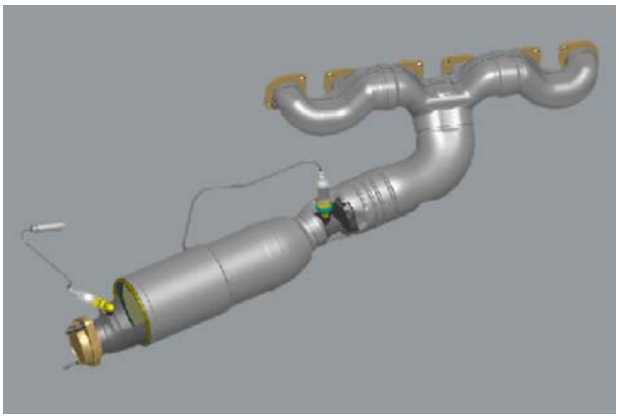

N73 Oxygen Sensors

Bosch LSU Planar Wideband Oxygen Sensor: The N73 engine is equipped with planar wideband oxygen sensors (pre-catalyst). The sensor is planar shaped (type of construction) which is more compact and is made up of thin layers of zirconium dioxide (ZrO_2) ceramic films. This modular lamination structure enables the integration of several functions including the heating element which ensures the minimum operating temperature (750 ºC) is reached rapidly.

In contrast to conventional oxygen sensors, the wideband features can measure not only at Lambda=1, but also in the rich and extremely lean range (Lambda=0.7 to complete atmospheric oxygen) very rapidly.

The pump cell and reference cell are made of zirconium dioxide and each coated with two porous platinum electrodes. They are arranged so that there is a measuring gap between them. This measuring gap is connected by an inlet opening to the exhaust gas. The pump cell is controlled by the ECMs applying voltage to the electrodes to initiate oxygen ion pumping across the porous membrane of the reference cell, providing a quicker response time.

The pump current flow is proportional to the oxygen concentration (lean) or the oxygen requirement (rich). The pump is constantly working to maintain that the gas composition in the measuring gap is constantly at Lambda=1.

cardiagn.com

Bosch LSU Planar Wideband Oxygen Sensor

1. *Is there a Test Plan available for the LSU oxygen sensor?* _____

2. *Select Control Unit Functions (MED 9.2.1), Diagnosis Requests. Is there a status under the "Part Functions" column for observing the LSU oxygen sensor?* _____

   List the status that apply to the oxygen sensor:

   _____ _____ _____

   _____ _____ _____

3. *Using the DISplus voltmeter, connect MFK2 to the full circuit of the oxygen sensor. (for example: pin 13 to pin 20 at ECM 1 of LSU bank 1). Start engine and allow warmup.*

   Select Control Unit Functions (MED 9.2.1), Diagnosis Requests. Under the "Part Functions" column for the LSU oxygen sensor, select: Oxygen-sensor control, Oxygen-sensor controller, Lambda value, Additive lambda adaptation and Multiplicative lambda adaptation - now select "Display".

Ask the Instructor for assistance:

4. *With the engine running and the voltmeter displayed, introduce a vacuum leak.*

   With the Minimum/Maximum feature selected, observe the voltage value and reconnect the hose.

   What is the minimum? _____*V* *maximum?* _____*V*

5. *Slowly disconnect the hose and allow the engine to run for approximately 1 - 2 minutes. Under the "Part Functions" column for the LSU oxygen sensor, record the values for:*

   Oxygen-sensor control _____ *Additive lambda adaptation* _____
   Oxygen-sensor controller _____ *Multiplicative lambda adaptation* _____
   Lambda value _____

Caution: Do not conduct this test for longer than 5 minutes! (allow engine to cool)

6. *What do the values from question 5 indicate?* _____

_____

_____

cardiagn.com

Performance Controls

Exhaust Flap: The 12.6 liter rear silencer (4) is fitted with an exhaust flap to keep noise to a minimum at engine idle speed and low rpm. The flap provides exhaust efficiency based on two effects:

- Minimization of the cross section (slight back pressure) and the outlet noise level at low exhaust flow rates
- Large cross-section with low backpressure at high speeds and loads

The exhaust flap is *opened* allowing additional flow when:

- The transmission gear is engaged *and*
- The engine speed is approximately above 1,500 rpm

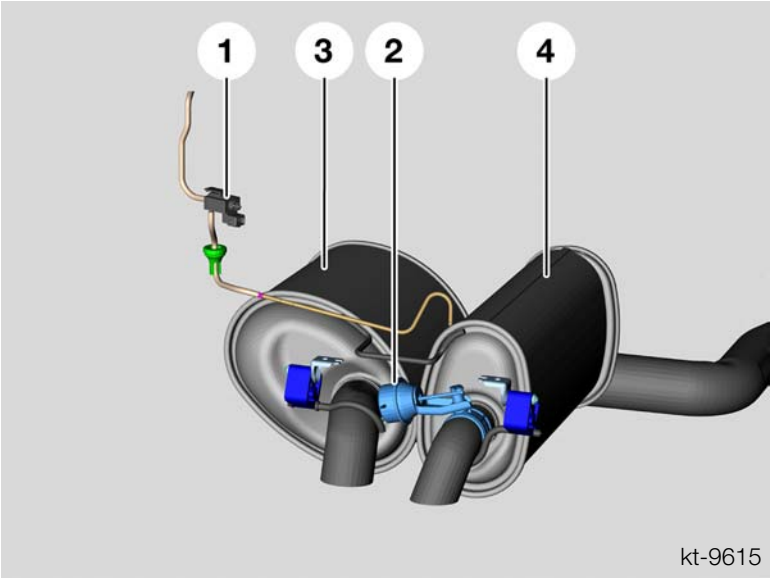

A vacuum controlled diaphragm (2 - actuator mounted on the silencer) opens and closes the exhaust gas flap. The vacuum is supplied from the camshaft driven vacuum pump.

The exhaust flap is opened with vacuum, and is sprung closed by the actuator (when vacuum is not present). The procedure is carried out using a solenoid valve (1) which is electrically controlled by the ECM and located in the left rear luggage compartment (below the light assembly).

cardiagn.com

Exhaust Flap

1. *Select Control Unit Functions (MED 9.2.1), Diagnosis Requests. Is there a status under the "Part Functions" column for observing the "Messages and Results"?* _____

   Is there a "Component Activation" feature for the exhaust flap? _____

2. *Is there a Test Plan available for the exhaust flap?* _____

3. *If so, does the engine need to be run?* _____ *Why?* _____

_____

4. *What are the pin and connector numbers at the ECM for the exhaust flap solenoid activation?*

   Pin _____ *Connector* _____

5. *Which ECM controls the exhaust flap (1 or 2)?* _____

Additional notes:

cardiagn.com