Adjustment Data

MAZDA - 323 - 1.5i 16V - Z5

Engine (general)

Item	Values	Units
Engine code	Z5	
Capacity	1489	(cc)
Idle speed	700 - 800	(rpm)
Valve clearance		
Hydraulic		
Compression pressure		
Normal	12.8	(bar)
Minimum	10.1	(bar)
Oil pressure	3.4 - 4.4/3000	(bar / rpm)
Fuel system (make & type)	Mazda EGI	
Firing order	1-3-4-2	
Timing stroboscopic (before TDC)	5 ± 1/700 - 800	(° / rpm)
Ignition-coil resistance, primary	0.49 - 0.73	(ohms)
Ignition-coil resistance, secondary	20000 - 31000	(ohms)
Spark plugs (make & type)	NGK BKR5E11 Champion RC9YCC4	
Spark-plug gap	1.0 - 1.1	(mm)
Injection pressure / system pressure	2.7 - 3.2	(bar)
CO exhaust gas	< 0.5	(%)
CO2	14.5 - 16.0	(%)
HC	100	(ppm)
O2	0.1 - 0.5	(%)
Lambda	0.97 - 1.03	
Lambda change (Delta Lambda)	0.03	
Oil temperature during test	60	(°C)
Fast-idle speed	2500 - 2800	(rpm)
CO at fast-idle speed	< 0.3	(%)

Cooling system

Item	Values	Units
Cap pressure	0.75 - 1.05	(bar)
Thermostat opens at	84 - 89	(°C)
Fan on at	97	(°C)

Electrical

Item	Values	Units
Battery	80	(Ah)
Alternator	55	(A)

Brakes

Item	Values	Units
Disc thickness, front, min.	20	(mm)
Drum diameter, rear, max.	201.5	(mm)
Disc thickness, rear, min.	8.0	(mm)

Steering and wheel alignment

Item	Values	Units
Toe-in, front	2 ± 4	(mm)
Camber, front	-44' ± 1°	(°)
Castor, front	1° 55' ± 1°	(°)
K.P.I., front	13° 22'	(°)
Toe-in, rear	2 ± 4	(mm)
Camber, rear	49' ± 1°	(°)

Wheels and tyres

Item	Values	Units
Tyre size	175/70R13	
Front tyre pressure	2.0	(bar)
Rear tyre pressure	1.8	(bar)

Capacities

Item	Values	Units
Engine sump, incl. filter	3.4	(l)
Manual transmission		
Gearbox refill	2.7	(l)
Automatic transmission		
Gearbox refill	5.7	(l)
Differential	0.8	(l)
Cooling system	5.0 (Auto 6.0)	(l)
Air-conditioner refrigerant	700 - 750	(g)
Air-conditioner compressor oil	150	(ml)

Torque settings

Item	Values	Units
Cylinder head		

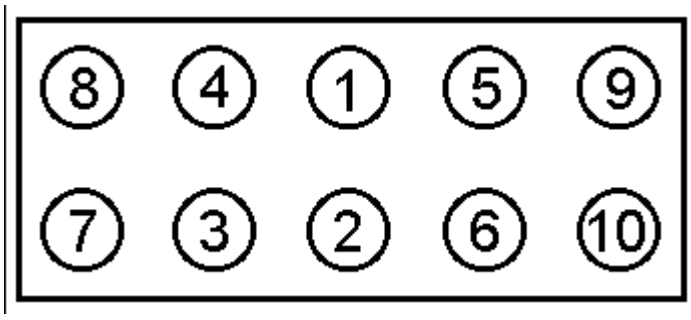

Stage 1	17 - 22	(Nm)
Stage 2	90°	(°)
Stage 3	90°	(°)

Refer to Extra Info

Front hub	235 - 319	(Nm)
Rear hub	177 - 235	(Nm)
Wheel nuts	118	(Nm)
Spark plugs	15 - 23	(Nm)

© Copyright, Wessels + Mьller AG

43. air temperature sensor

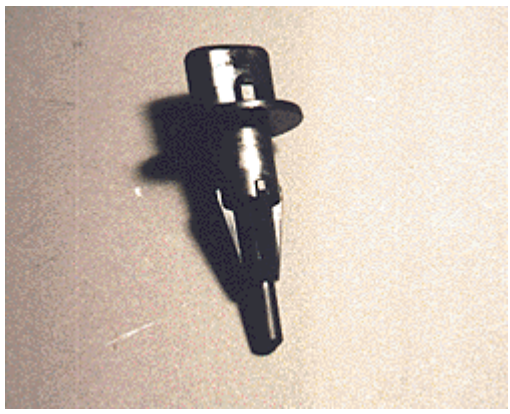

Function

The air temperature sensor is a temperature-sensitive resistor. Low temperature causes high resistance while high temperature causes low resistance. The control unit determines the temperature by monitoring the voltage across the sensor.

Specifications

supply voltage: 5 V (connector disconnected)
resistance: 2,000 - 3,000 ohms / 20°C
resistance: 200 - 300 ohms / 90°C

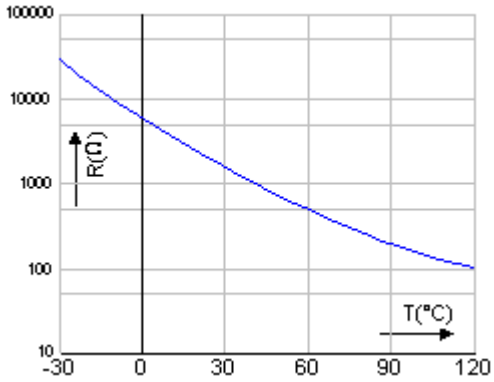

WorkshopCD© Electude NL, The Netherlands

Overhaul data - Cylinder block

MAZDA - Z5

General cylinder block data

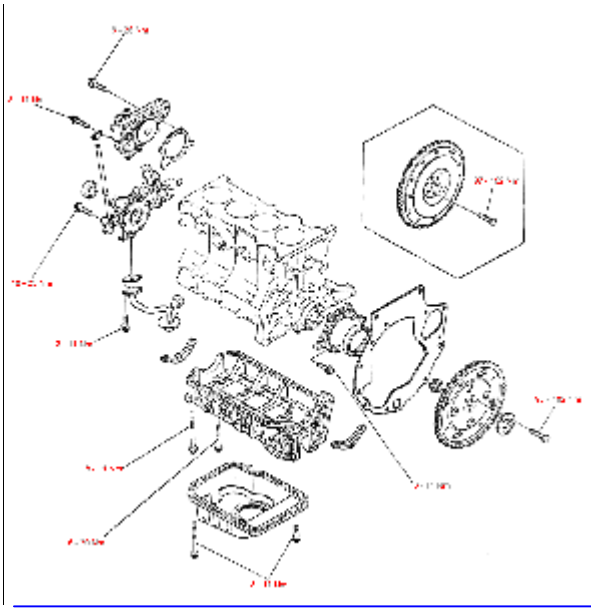

Cylinder block height	221.5	mm
Cylinder bore		
Bore		
Standard	75.300 - 75.319	mm
1st Oversize	75.550 - 75.569	mm
2nd Oversize	75.800 - 75.819	mm
Taper		
Standard	< 0.15	mm
Limit	0.15	mm

Pistons

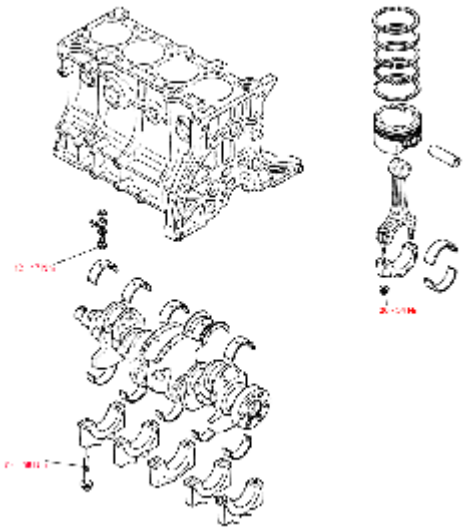

✱ Data from secondary source; No manufacturer's information

© Copyright, Wessels + Mьller AG

Overhaul data - Cylinder block

MAZDA - Z5

Piston diameter		
Standard	75.263 - 75.283	mm
1st Oversize	75.513 - 75.533	mm
2nd Oversize	75.763 - 75.783	mm
Piston pin bore diameter	19.988 - 20.000	mm
1st Compression ring gap	0.15 - 0.30	mm
Limit	1.0	mm
2nd Compression ring gap	0.25 - 0.40	mm
Limit	1.0	mm
3rd Compression ring gap	0.20 - 0.70	mm
Limit	1.0	mm
Side clearance 1st compression ring	0.035 - 0.065	mm
Limit	0.15	mm
Side clearance 2nd compression ring	0.035 - 0.065	mm
Limit	0.15	mm
Side clearance oil scraper ring	0.07 - 0.16	mm
Limit	0.15	mm
Connecting rod		

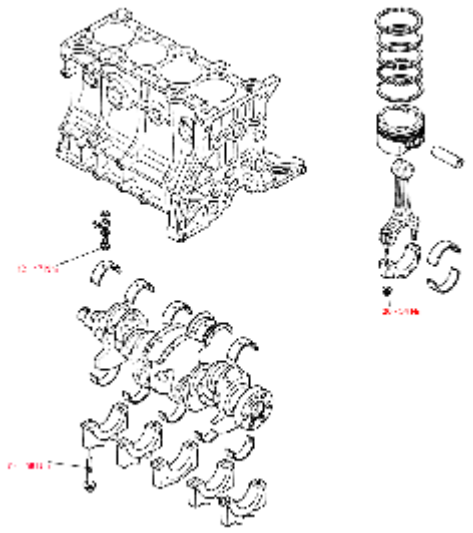

Center distance of big and small end bore	135.95 - 136.05	mm
Big end bearing radial clearance	0.028 - 0.048	mm
Limit	0.10	mm
Big end, end play	0.110 - 0.262	mm
Limit	0.3	mm
Small end bore	19.943 - 19.961	mm

✱ Data from secondary source; No manufacturer's information

© Copyright, Wessels + Mьller AG

Overhaul data - Cylinder block

MAZDA - Z5

Crankshaft

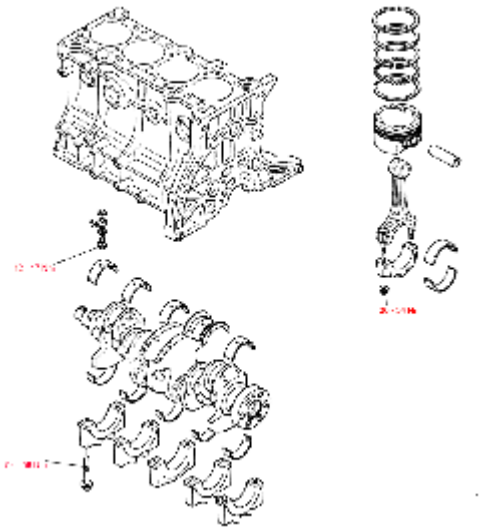

Max. crankshaft swing	< 0.04	mm
Limit	0.04	mm
Main journal diameter, standard	49.938 - 49.956	mm
Limit	49.904	mm
Main journal diameter, 1st Undersize	49.688 - 49.706	mm
Main journal diameter, 2nd Undersize	49.438 - 49.456	mm
Main journal diameter, 3rd Undersize	49.188 - 49.206	mm
Main journal width		
Standard	24.07 - 24.12	mm
1st Oversize	24.32 - 24.37	mm
2nd Oversize	24.57 - 24.62	mm
3rd Oversize	24.82 - 24.87	mm
Max. main journal ovality	< 0.05	mm
Limit	0.05	mm
Main bearing clearance	0.018 - 0.036	mm
Limit	0.1	mm
Crankshaft end play	0.080 - 0.282	mm
Limit	0.3	mm
Crank-pin diameter		
Standard	39.940 - 39.956	mm
Limit	39.908	mm
1st Undersize	39.690 - 39.706	mm
2nd Undersize	39.440 - 39.456	mm

✱ Data from secondary source; No manufacturer's information

© Copyright, Wessels + Mьller AG

Overhaul data - Cylinder block

MAZDA - Z5

3rd Undersize	39.190 - 39.206	mm	
Max. pin journal ovality	< 0.05	mm	
Limit	0.05	mm	
Oil pump			
Type			**rotor**
Clearance inside rotor - outside rotor	0.02 - 0.16	mm	
Limit	0.20	mm	
Clearance outside rotor - pump housing	0.090 - 0.180	mm	
Limit	0.22	mm	
Axial play outside rotor - pump housing	0.03 - 0.11	mm	
Limit	0.14	mm	

✱ Data from secondary source; No manufacturer's information

© Copyright, Wessels + Mьller AG

2. canister purge solenoid

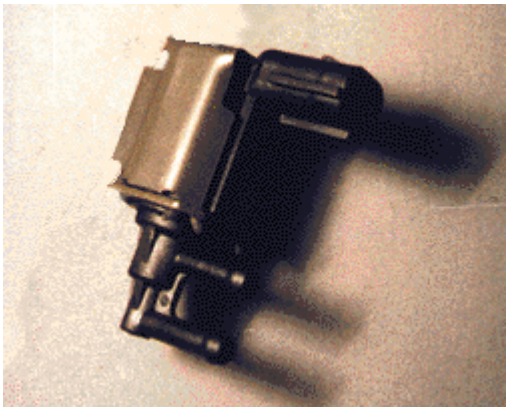

Extra Info

Function

The evaporative canister is equipped with a purge solenoid valve. The control unit switches the solenoid on or off. This controls the amount of vapour purged into the inlet manifold.

Specifications

supply voltage: 12 V
resistance: 25 - 35 ohms

Diagnosis

Check connector(s): Inspect the connector(s) and if necessary clean or fix them to make sure the connection is good.
Check resistance:
Turn ignition off. Remove connector from solenoid.
Measure resistance between the two pins of the solenoid. Compare with specified resistance. Alternatively, check solenoid function by applying battery voltage to its pins. The solenoid should "click".
Check supply voltage:
Turn ignition off. Remove connector from solenoid.
Start the engine and measure voltage between one connector terminal and the negative terminal of the battery. Check the second terminal. One of the two should equal battery voltage. If not check wiring and, if present, fuse(s) and relay.

Check connection to ECU:
Turn ignition off. Remove connector from solenoid and ECU.
Measure the resistance between one of the two connector terminals and the corresponding terminal in the ECU connector. Check the other terminal. One of the two should be < 1 ohm. If not check wiring.

WorkshopCD© Electude NL, The Netherlands

CANISTER PURGE SOLENOID

Function

The evaporative gases produced in the fuel tank are absorbed by the activated charcoal in the carbon canister. As The purge control solenoid valve opens these gases are delivered to the intake manifold for combustion purposes. The purge control solenoid valve is controlled by the control unit. The control unit operates this valve during the time the lambda control loop is active.

Specifications

RESISTANCE:

resistance:	± 50 ohms
supply voltage:	12 Volts
current:	± 250 mA

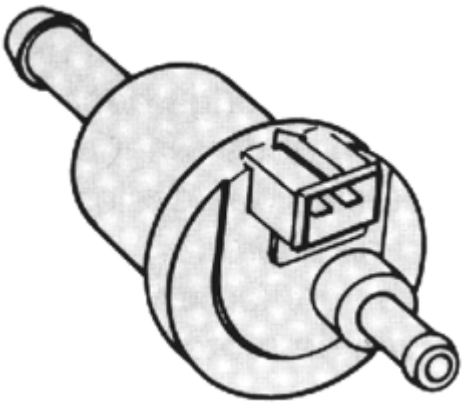

Electrical control

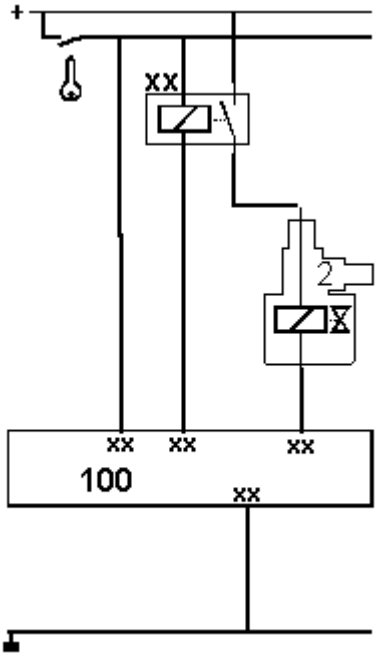

Most solenoids are normally closed. This means that the connection between the canister and the intake manifold is closed. The solenoid has a connector with two terminals. On one of those terminals is connected to the battery voltage. This supply-voltage is often switched with a relay. The other terminal leads directly to the control unit. The current through the solenoid is switched on during the time the control unit connects this terminal to ground. The voltage on this terminal is during this time 0 Volts. During the time the solenoid is switched off, the voltage on this terminal is 12 Volts. Some motormanagement systems control the amount gases delivered to the intake manifold switching the solenoid on and of with a certain duty cycle. In this case the duty-cycle depends on engine RPM and engine load.

Electrical diagnosis

STATIC

General

- To perform this measurements the relay switching the power to the solenoid should be closed. Short circuit the switch in the relay if necessary.

Measurements

- Measure the voltage on the control unit. Use the pin which switches the solenoid.

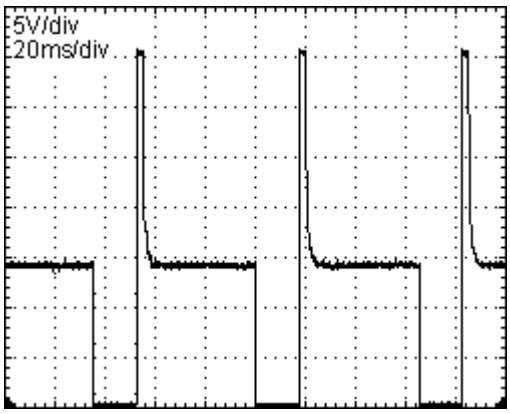

result: **12 V**

- solenoid and wiring are electrically OK

0 V

- check the relay switching the power to the solenoid
- check the wiring between the relay and the solenoid
- check the solenoid resistance
- check the wiring between the solenoid and the control unit
- check the control unit

Capacities

MAZDA - 323 - 1.5i 16V - Z5

Item	Values	Units
Engine sump, incl. filter	3.4	(l)
Manual transmission		
Gearbox refill	2.7	(l)
Automatic transmission		
Gearbox refill	5.7	(l)
Differential	0.8	(l)
Cooling system	5.0 (Auto 6.0)	(l)
Air-conditioner refrigerant	700 - 750	(g)
Air-conditioner compressor oil	150	(ml)

© Copyright, Wessels + Mьller AG

100. control unit

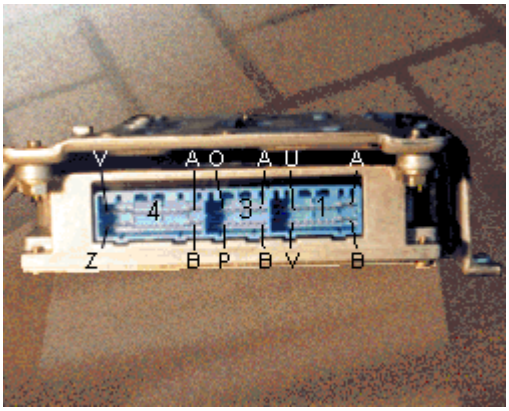

Function

The control unit receives signals from sensors that monitor various engine operating parameters. The control unit generates output signals to provide optimal air/fuel ratio, idle speed control and ignition timing.

Diagnosis

Check connector(s): Inspect the connector(s) and if necessary clean or fix them to make sure the connection is good. When you suspect the control unit is faulty, make sure all sensors and actuators function properly, and that signals from other control unit(s) are received properly. Next check the supply voltage and ground connections of the control unit:
Turn ignition off. Remove ECU connector.
Locate the supply voltage connections. Turn ignition on. Measure voltage between corresponding connector terminal(s) and the negative terminal of the battery. They should equal battery voltage. If not check wiring and fuse.
Turn ignition off. Locate the ground connections. Measure resistance between corresponding connector terminal(s) and the negative terminal of the battery. They should be < 1 ohm.

WorkshopCD© Electude NL, The Netherlands

42. coolant temperature sensor

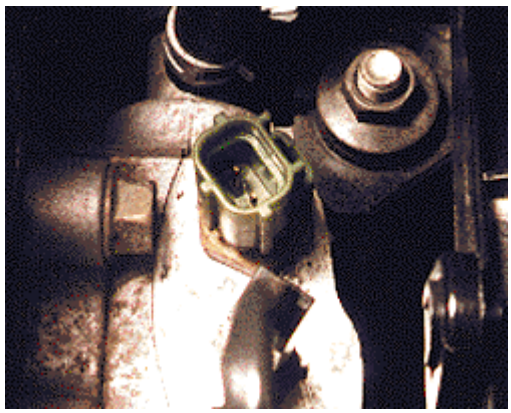

Function

The coolant temperature sensor is a temperature-sensitive resistor. Low temperature causes high resistance while high temperature causes low resistance. The control unit determines the temperature by monitoring the voltage across the sensor.

Specifications

supply voltage: 5 V (connector disconnected)
resistance: 2,000 - 3,000 ohms / 20°C
resistance: 200 - 300 ohms / 90°C

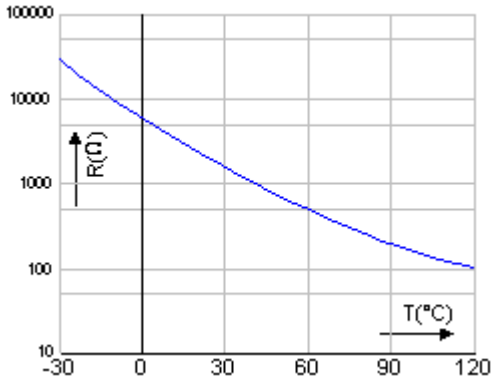

WorkshopCD© Electude NL, The Netherlands

83. diagnostic connector

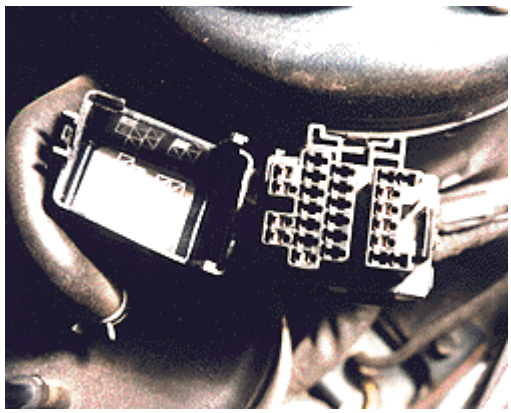

Function

This connector is used to communicate with the control unit.

Specifications

For more information on reading error codes click the error codes button on the toolbar.

WorkshopCD© Electude NL, The Netherlands

187. EGR position sensor

Function

The EGR position sensor measures the position of the EGR valve by means of a potentiometer, which returns a signal proportional to the position of the valve.

Specifications

supply voltage: 5 V

WorkshopCD© Electude NL, The Netherlands

23. EGR purge solenoid

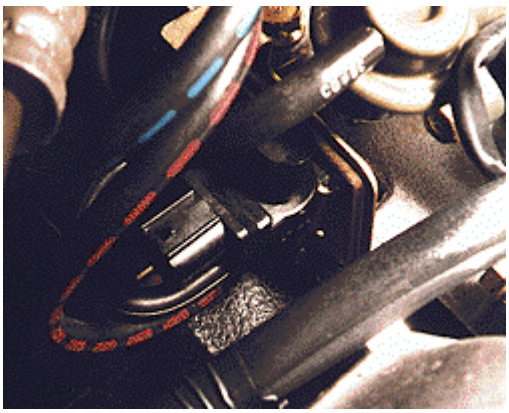

Function

The EGR purge solenoid controls the vacuum at the EGR valve. The EGR purge solenoid is controlled by the control unit.

Specifications

supply voltage: 12 V

Diagnosis

Check connector(s): Inspect the connector(s) and if necessary clean or fix them to make sure the connection is good.
Check functioning:
Turn ignition off. Remove connector from solenoid.
Check solenoid function by applying battery voltage to its pins. The solenoid should "click".
Check supply voltage:
Turn ignition off. Remove connector from solenoid.
Start the engine and measure voltage between one connector terminal and the negative terminal of the battery. Check the second terminal. One of the two should equal battery voltage. If not check wiring and, if present, relay and fuse(s).

Check connection to ECU:
Turn ignition off. Remove connectors from solenoid and ECU.
Measure the resistance between one of the two connector terminals and the corresponding terminal in the ECU connector. Check the other terminal. One of the two should be < 1 ohm. If not check wiring.

WorkshopCD© Electude NL, The Netherlands

Engine code Z5

MAZDA - Z5

Compression			
Compression pressure	12.8*	bar	
Limit	10.1*	bar	
Idle speed	700 - 800*	/ min	
Exhaust gas emissions			
CO content at idle speed	< 0.5*	vol. %	
CO2 content at idle speed	14.5 - 16.0*	vol. %	
HC content at idle speed	100*	ppm	
Oil pressure		bar	
At rated power	3.4 - 4.4 (3000)*	bar (/min)	
Thermostat opening temperature	84 - 89*	°C	
Valve clearance			
Condition			**cold**
Intake	0.25 - 0.31	mm	
Outlet	0.25 - 0.31	mm	
Firing order	1-3-4-2		
Ignition timing, static / dynamic	5 ± 1 (700 - 800)*	° (/min)	

✱ Data from secondary source; No manufacturer's information

© Copyright, Wessels + Mьller AG

Environmental Data

MAZDA - 323 - 1.5i 16V - Z5

Item	Values	Units
Engine code	Z5	
Idle speed	700 - 800	(rpm)
Fuel system (make & type)	Mazda EGI	
Timing stroboscopic (before TDC)	5 ± 1/700 - 800	(° / rpm)
Injection pressure / system pressure	2.7 - 3.2	(bar)
CO exhaust gas	< 0.5	(%)
CO2	14.5 - 16.0	(%)
HC	100	(ppm)
O2	0.1 - 0.5	(%)
Lambda	0.97 - 1.03	
Lambda change (Delta Lambda)	0.03	
Oil temperature during test	60	(°C)
Fast-idle speed	2500 - 2800	(rpm)
CO at fast-idle speed	< 0.3	(%)

© Copyright, Wessels + Mьller AG

3. fuel pump

Extra Info

Function

The fuel pump consists of an impeller driven by a DC motor. The fuel pump and the fuel pressure regulator maintain constant pressure at the injectors.

Specifications

supply voltage: 12 V
maximum pump pressure: 4.5 - 6.5 bar
system pressure (vacuum disconnected): 2.8 - 3.2 bar
system pressure (vacuum connected): 2.3 - 2.7 bar

WorkshopCD© Electude NL, The Netherlands

FUEL PUMP

Function

The fuel pump is an electrically operated pump which lifts the fuel from the fuel tank and pumps it under pressure through a filter to the fuel rail or throttle body. The fuel runs along the injector(s) and returns to the tank via the fuel pressure regulator. Some systems use two pumps. The fuel lift pump inside the tank and the fuel pressure pump outside the tank.

Specifications

pump pressure:	± 0,25 - 6 bars
system pressure:	± 0,6 - 1,1 bar (single-point) ± 2 - 3,5 bar (multi-point)
flow:	± 50 - 100 l/h
supply voltage:	12 Volts
current:	± 5A

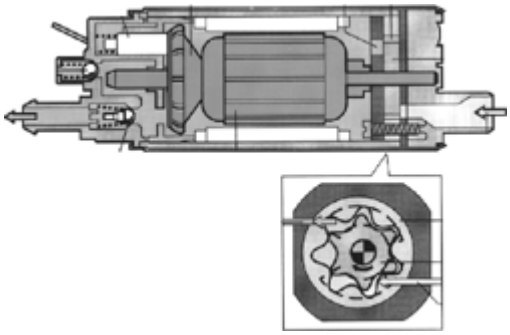

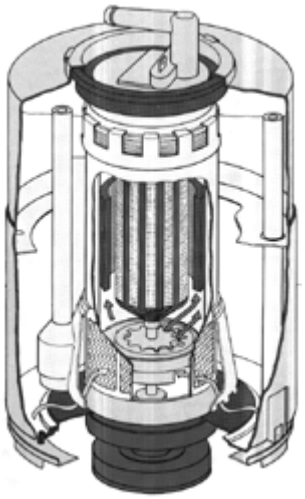

Electrical control

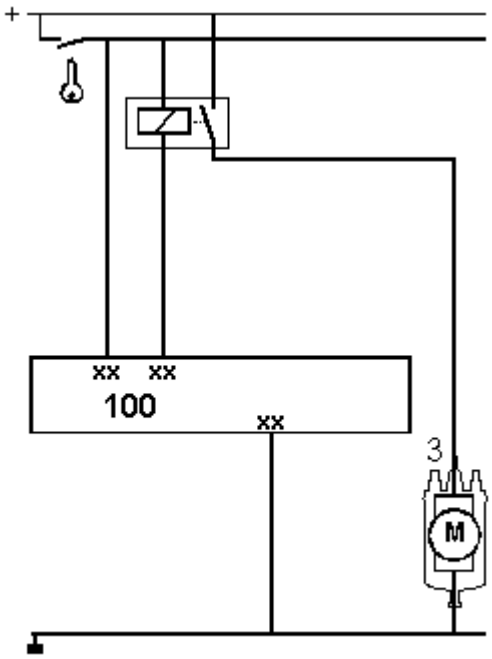

The fuel pump is operated by a relay. The conditions the relay is closed are.

- during several seconds after switching on the ignition
- during the time the system receives RPM pulses.

The fuel pump relay is often controlled by the control unit.

The relay coil has two terminals. On one of those terminals is connected with the battery voltage. The other terminal leads directly to the control unit.

The current through the relay coil is switched on during the time the control unit connects this pin to ground. The voltage on this pin is during this time 0 Volts. During the time the relay is not switched on, the voltage on the pin is 12 Volts.

Electrical diagnosis

STATIC

General

- Turn the ignition switch "on"
- Listen to the fuel pump operating sound. The fuel pump should operate for several seconds after the ignition switch is turned "on"

Power supply

- To perform this measurements the relay switching the power to the fuel-pump should be closed. Short circuit the switch in the relay if necessary.

Measurements

- Disconnect the fuel pump connector. Measure the voltage over the fuel pump terminals in the connector. The voltage should be 12 Volts.

result: **12 V**

- replace the fuel pump

0 V

- check ground circuit
- check the wiring between the relay and the pump
- check the relay switching the power to the pump

Mechanical diagnosis

Measurements

- To perform this measurements the relay switching the power to the fuel-pump should be closed. Short circuit the switch in the relay if necessary.
- check the fuel system pressure

result:

- check the fuel level in the tank
- check the fuel pressure regulator
- check the fuel filters
- check the fuel pump
- check the fuel return circuit to the tank

91. fuel pump relay

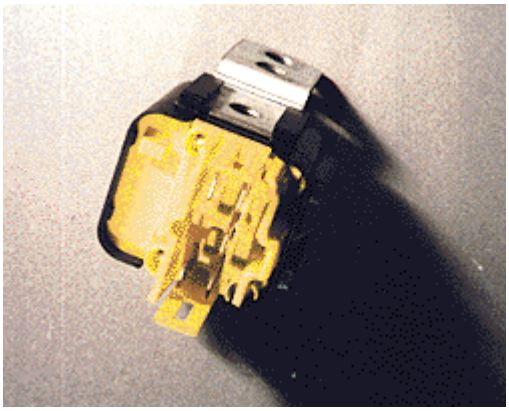

Function

The fuel pump relay switches power to the fuel pump.

Specifications

single normally opened relay with two coils.

WorkshopCD© Electude NL, The Netherlands

40. Hall / MRE sensor on camshaft

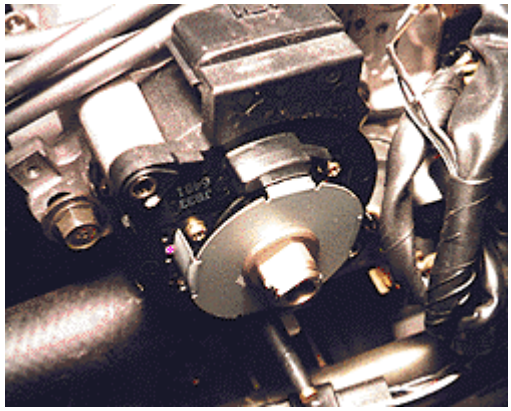

Function

The shutter blades mounted on the rotor pass through the Hall sensor, which detects the change in magnetic field and sends a signal to the control unit.

Specifications

supply voltage: 12 V
waveform information: engine running at idle

WorkshopCD© Electude NL, The Netherlands

Overhaul data - Cylinder head

MAZDA - Z5

General cylinder head data

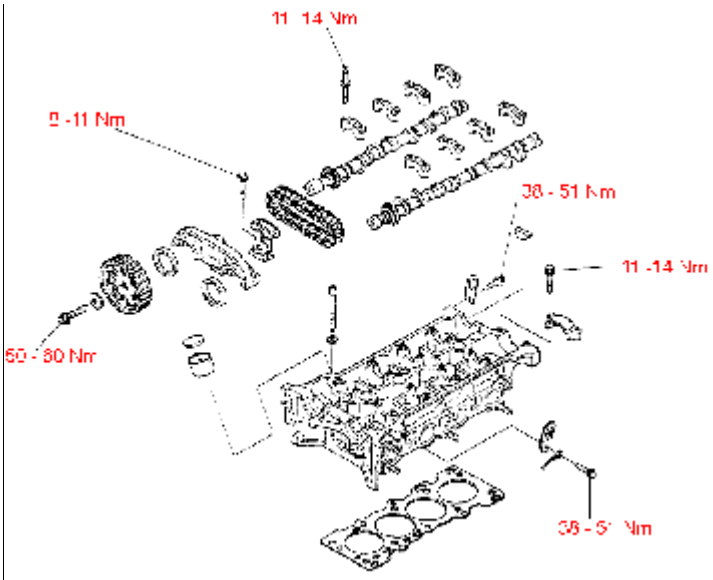

Cylinder head height	120.23 - 120.43	mm
Warpage cylinder head fitting face		
Standard	< 0.15	mm
Limit	0.15	mm
Max. grinding allowance	< 0.20	mm

Valves

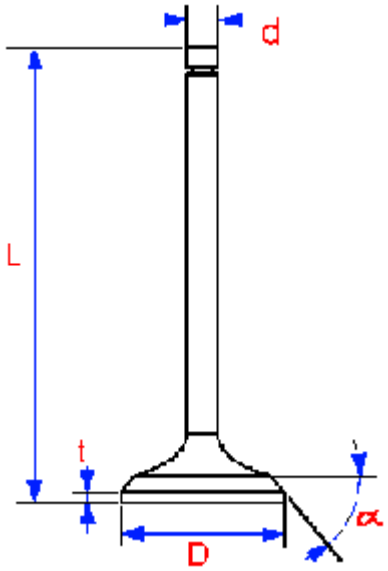

✱ Data from secondary source; No manufacturer's information

© Copyright, Wessels + Mьller AG

Overhaul data - Cylinder head

MAZDA - Z5

Fitting position

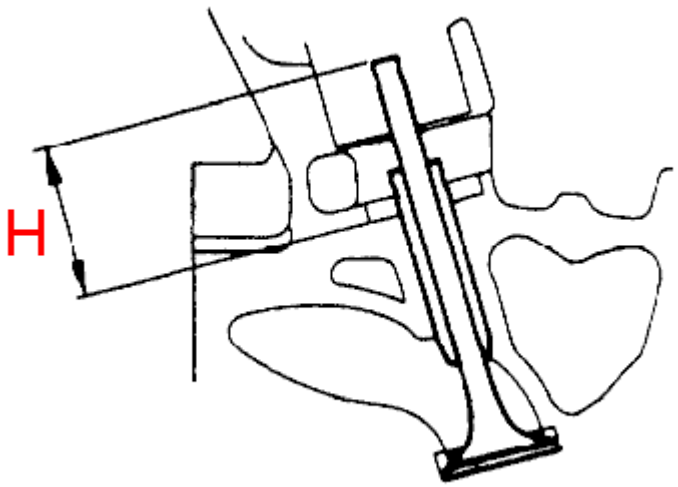

Standard	H = 33.6 - 34.1
Limit	H = 34.2

Valve length (L)

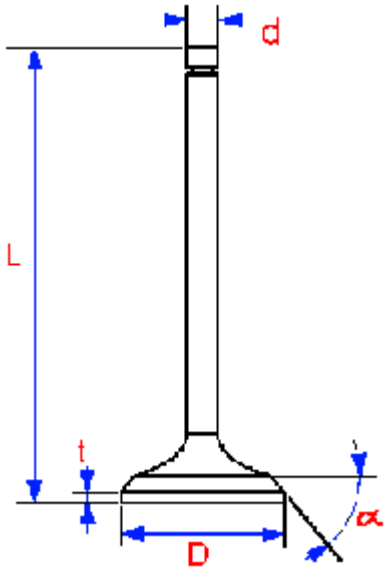

Intake new	91.99 - 92.59	mm
Limit	91.79	mm
Outlet new	92.41 - 93.01	mm
Limit	92.21	mm

✱ Data from secondary source; No manufacturer's information

© Copyright, Wessels + Mьller AG

Overhaul data - Cylinder head

MAZDA - Z5

Valve stem diameter (d) intake

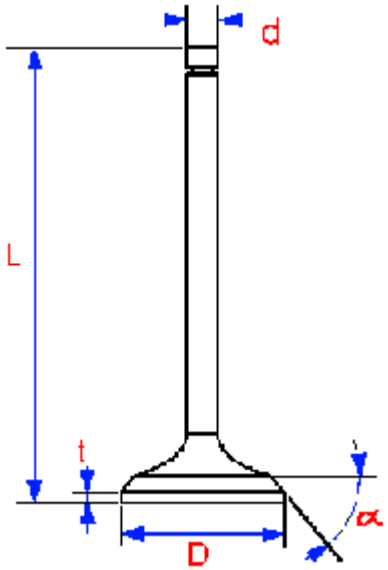

Standard	5.470 - 5.485	mm
Limit	5.420	mm

Valve stem diameter (d) outlet

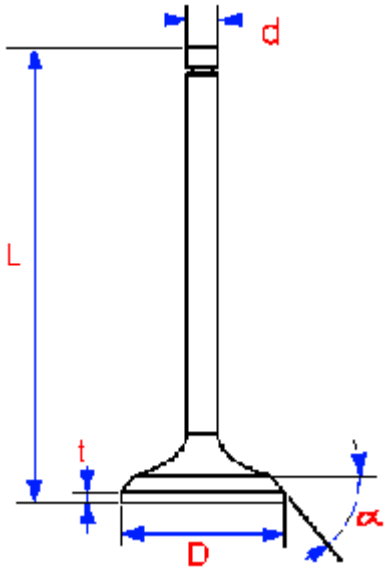

Standard	5.465 - 5.480	mm
Limit	5.415	mm

✱ Data from secondary source; No manufacturer's information

© Copyright, Wessels + Mьller AG

Overhaul data - Cylinder head

MAZDA - Z5

Valve seat angle

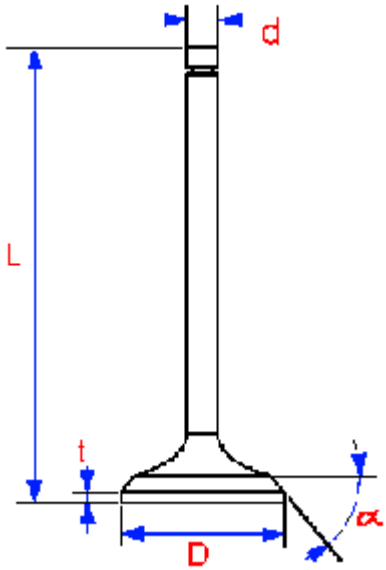

Intake	45	°
Outlet	45	°

Valve dish thickness (t)

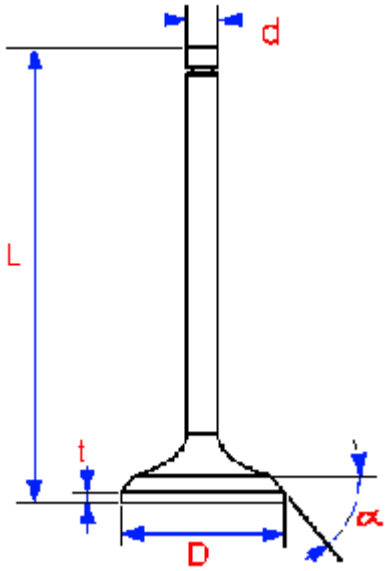

Intake	>= 1.1	mm
Outlet	>= 1.2	mm

Valve springs

Min. force at prescribed length 1	31.5 mm: 126.7 - 143.3	N

✱ Data from secondary source; No manufacturer's information

© Copyright, Wessels + Mьller AG

Inclination(s)	< 1.33	mm

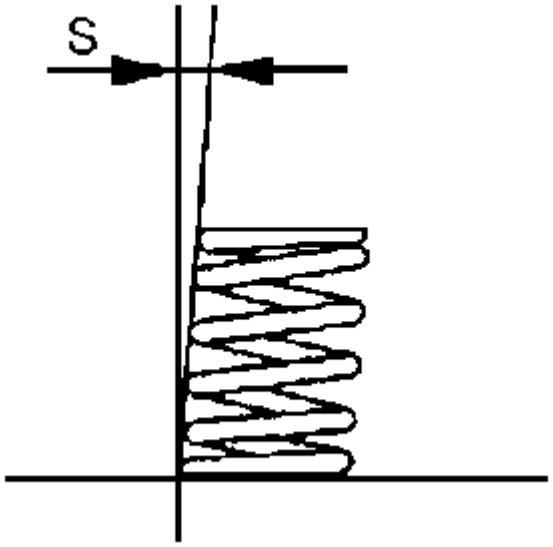

Valve guides

Fitting height

Intake	A = 9.22 - 9.82	mm

✱ Data from secondary source; No manufacturer's information

© Copyright, Wessels + Mыller AG

Overhaul data - Cylinder head

MAZDA - Z5

Outlet	A = 9.22 - 9.82	mm
Inner diameter, standard	5.51 - 5.53	mm
Inner diameter, 1st oversize	5.52 - 5.54	mm
Clearance between valve stem and guide		
Intake	0.025 - 0.060	mm
Limit	0.2	mm
Outlet	0.030 - 0.065	mm
Limit	0.2	mm
Valve seal		
Intake	H = 10.82	mm

✱ Data from secondary source; No manufacturer's information

© Copyright, Wessels + Mыller AG

Overhaul data - Cylinder head

MAZDA - Z5

Outlet H = 10.82 mm

Valve seats

✱ Data from secondary source; No manufacturer's information

© Copyright, Wessels + Mыller AG

Overhaul data - Cylinder head

MAZDA - Z5

Seating angle (Я)

Intake	45	°
Outlet	45	°

Correction angle (Я1)

Intake	70	°
Outlet	70	°

✱ Data from secondary source; No manufacturer's information

© Copyright, Wessels + Mьller AG

Overhaul data - Cylinder head

MAZDA - Z5

Correction angle (Я2)		
Intake	35	°
Outlet	30	°
Seating size (A)	0.8 - 1.4	mm
Valve lifter		
Valve lifter diameter		
Standard	29.959 - 29.975	mm
Valve lifter bore diameter		
Standard	30.000 - 30.025	mm
Valve lifter radial play	0.025 - 0.066	mm
Limit	0.180	mm
Camshaft		
Camshaft journal diameter, standard	25.940 - 25.965	mm
Limit	25.910	mm
Camshaft bearing radial clearance	0.035 - 0.085	mm
Camshaft end play	0.07 - 0.19	mm
Limit	0.20	mm
Max. camshaft swing	=< 0.02	mm
Limit	0.02	mm
Total camheight		
Intake new	40.900	mm
Intake min.	40.700	mm
Outlet new	40.900	mm
Outlet min.	40.700	mm

✱ Data from secondary source; No manufacturer's information

© Copyright, Wessels + Mьller AG

ID Location

MAZDA - 323 - 1.5i 16V - Z5

1 Identification plate
2 VIN

3 Engine code B3 / B5 / B6 / PN
4 Engine code BP / FP / FS

5 Manual transmission code

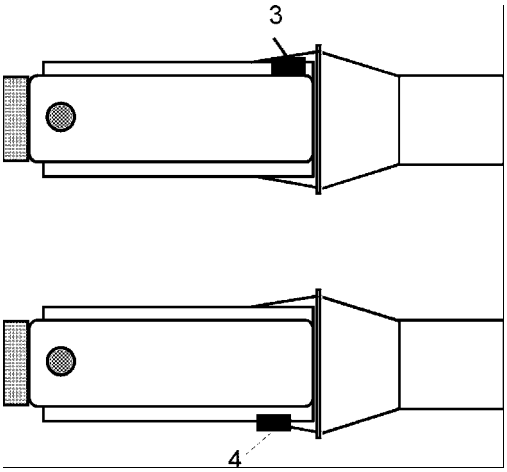

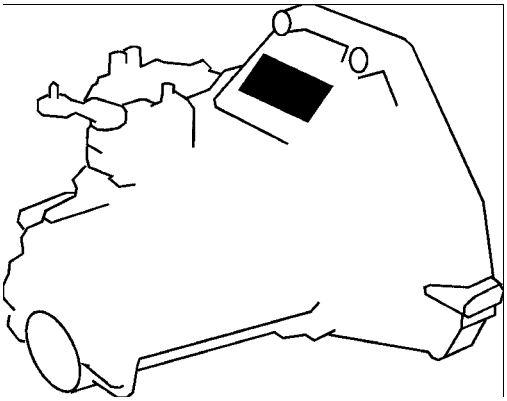

© Copyright, Wessels + Mьller AG

53. idle switch

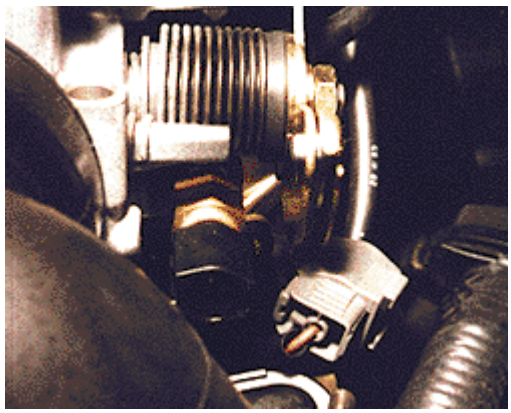

Function

The idle switch returns a signal to the control unit when the throttle is closed.

Specifications

supply voltage: 12 V

WorkshopCD© Electude NL, The Netherlands

11. ignition coil

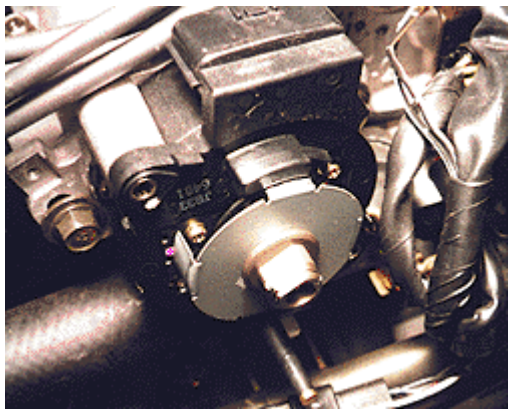

Extra Info

Function

The ignition coil stores energy when current is passed through the coil primary. When the current is switched off a high voltage is induced in the coil secondary.

Specifications

supply voltage: 12 V

WorkshopCD© Electude NL, The Netherlands

IGNITION COIL

Function

The ignition coil transforms the battery voltage into the high voltage needed to create a spark.

The ignition coil consists of an electromagnet (the primary coil) and a high voltage coil (secondary coil).

By switching the current through the primary coil on, a magnetic field is induced. The moment the current is switched of, the magnetic field suddenly disappears.

This change of magnetic field creates an induction voltage in the secondary coil, high enough to ionise the mixture. The ionised mixture is a conductor and a current flows through the spark plug.

Specifications

RESISTANCE:	
primary:	± 0,3 - 2 ohms
secondary	± 5k - 20k ohms
supply voltage:	12 V
current limited at:	± 7A

Systems with a distributor

Ignition coils used in combination with a distributor consists of one primary and one secondary coil.

The high voltage, induced in the secondary coil is connected to one of the spark plugs

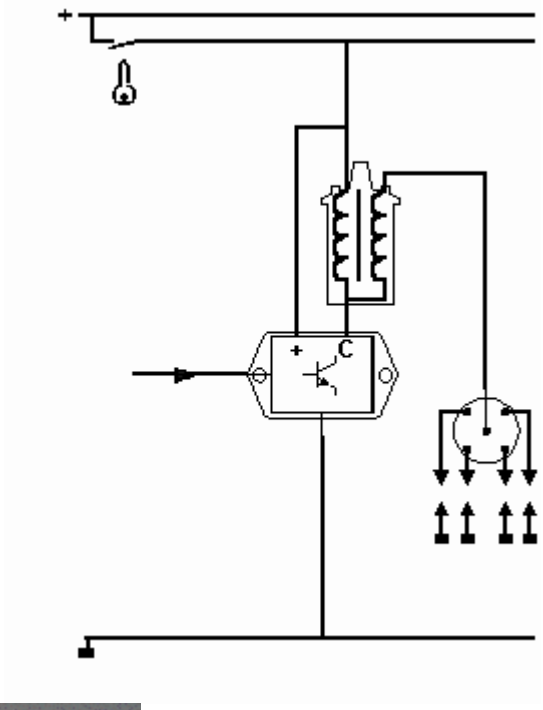

selected by the distributor.

Wasted spark ignition coils

The secondary coil has two ends. In a normal ignition coil one of those ends delivers the high
The other end is connected to either the positive (15) or the negative (1) terminal of the prir
In a wasted spark ignition coil both ends are connected to a spark plug. Therefore both spark
will spark at the same time.

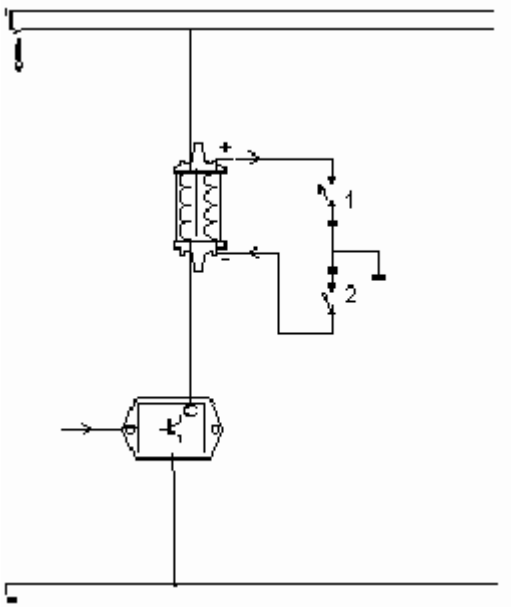

wasted spark ignition coil on 2- cylinder 4-stroke engine

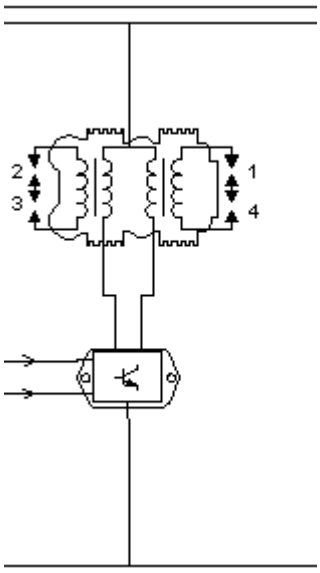

a wasted spark ignition coil on a 4- cylinder 4-str

To supply the four spark plugs of an 4 cylinder engine, two ignition coils are needed. The pic
below (left) shows an ignition coil for two spark plugs. The ignition coil in the right picture
incorporates two of those. This ignition coil supplies four spark plugs.

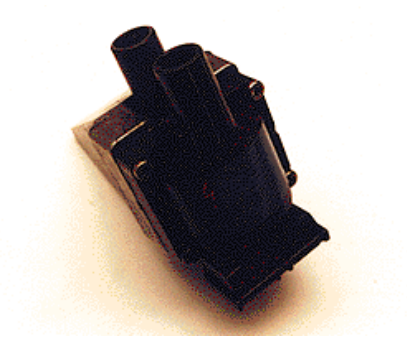

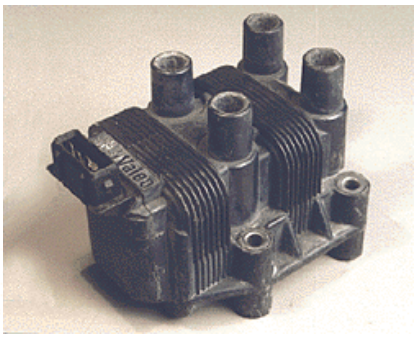

Sequential ignition

Sequential ignition systems are distributor less ignition systems using one ignition coil per
cylinder.

Each ignition coil is controlled by the control unit individually.

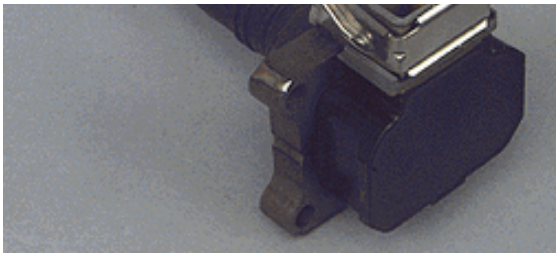

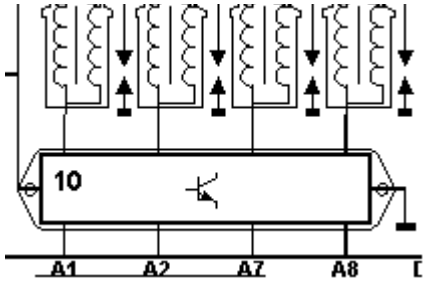

Electrical control

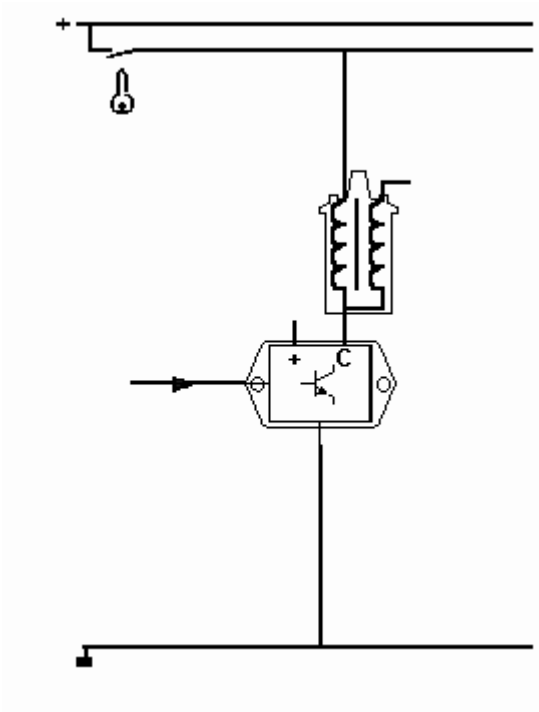

A current through the primary coil induces a magnetic field. The moment the current is switched of, the magnetic field suddenly disappears. This change of magnetic field induces an induction voltage and causes a spark.

The amperage before switching the current off should be high enough to create a high change of magnetic field the moment the current is switched off.

Therefore the current through the primary coil is controlled electronically.

The ignition module is supplied with a current limited circuit. Using this in combination with a low resistance ignition coil the amperage does not depend on the battery voltage.

During the time the current is switched off, the voltage over the ignition module is 12 Volts. The moment the current is switched on, the voltage drops to 0 Volts. From this moment on the current increases until the limiting value is reached.

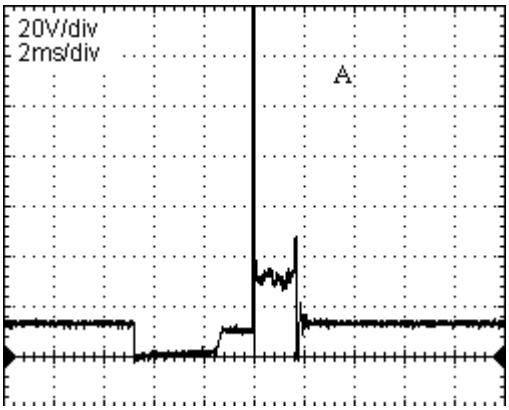

The oscilloscope images A and B gives you an example of the primary voltage measured on two different current limiting circuits.

By increasing the voltage over the ignition module, the voltage over the primary coil decreases. This causes a limited current in oscilloscope image A.

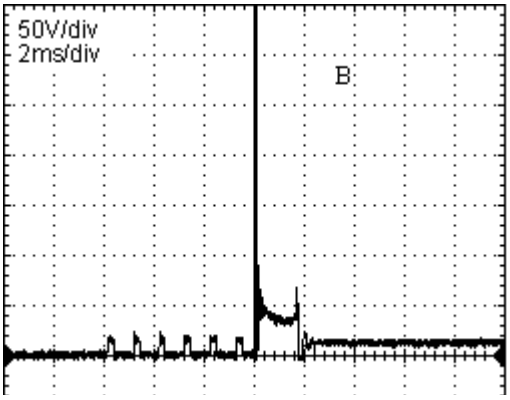

The ignition module in oscilloscope image B switches the current on and off to limit the current.

Electrical diagnosis

STATIC

To perform this measurements the ignition should be switched on.

Measurements:

- Measure the primary and secondary resistance of the ignition coil.
- Measure the voltage on the positive terminal of the ignition module.

The voltage should be equal to the battery voltage.

result: **Voltage is lower than battery voltage.**

- disconnect positive terminal and repeat measurement

result: **Voltage is equal to battery voltage.**

- check primary resistance of the ignition coil
- check ignition module
- check wiring between ignition module and ignition module.

result **Voltage is still lower than battery voltage.**

- check ignition lock
- check wiring between ignition lock and ignition coil

DYNAMIC

Start the engine and measure the primary voltage using an oscilloscope.

result: **0 V**

- check power supply.

12 V

- check ignition module

Mechanical diagnosis

Not available for this subject !

10. ignition module

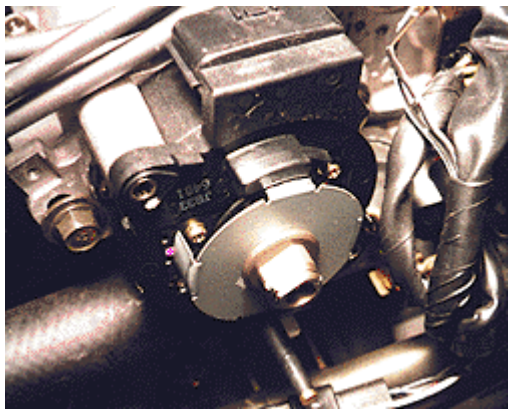

Extra Info

Function

The ignition module receives its input signal(s) from the control unit and switches the current through the coil primary circuit on and off.

Scope image 1

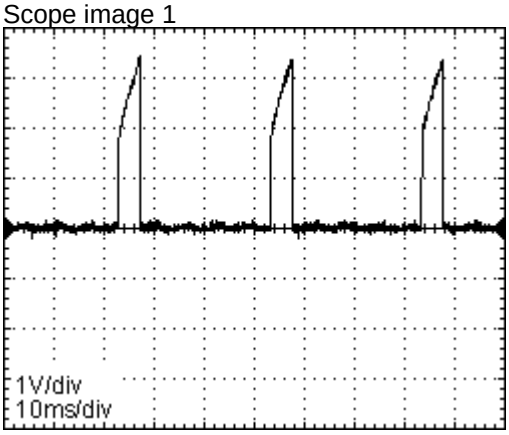

Pins to ground: 4N

WorkshopCD© Electude NL, The Netherlands

IGNITION MODULE

Function

The ignition module switches the current through the primary ignition coil on and off. The ignition module charges the ignition coil during the time the current is switched on. The moment the ignition module switches the current 'off' the ignition coil induces an induction voltage which causes the spark.

An ignition module switches the current on and off according to an input signal. This input is delivered by the control unit. On older systems the input signal is delivered by an inductive, Hall or opto-coupled sensor mounted in the distributor.

Specifications

resistance	-
supply voltage	-

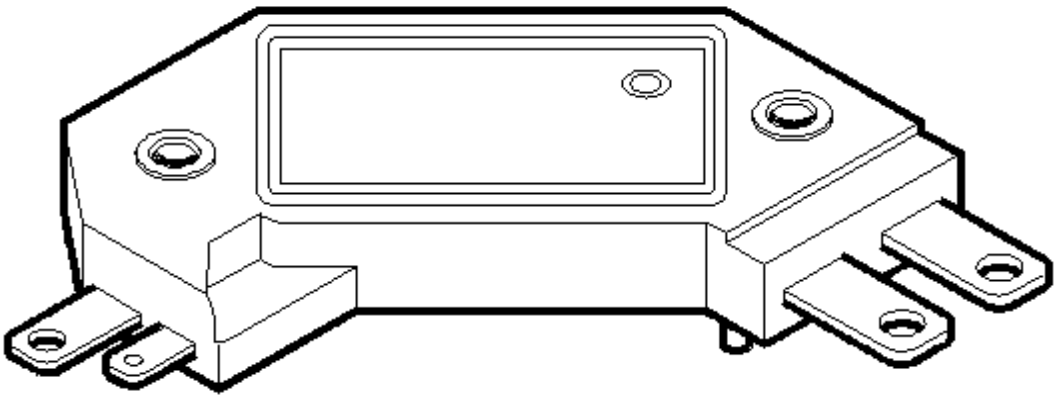

Electrical control

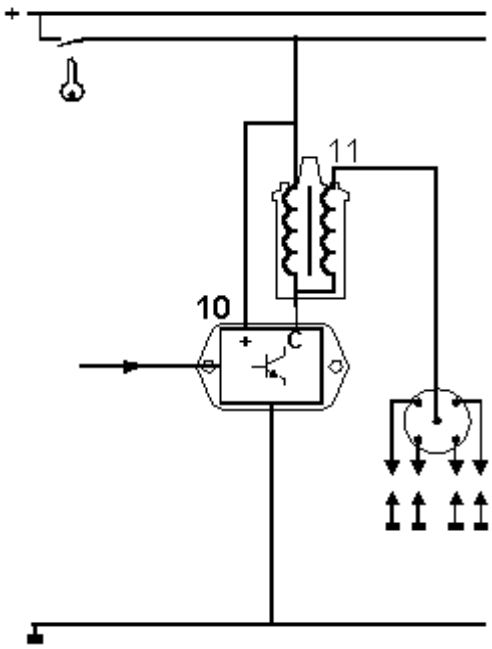

The connector of the ignition module has several terminals. The following terminals are used on common ignition modules.

- a terminal connected with the ignition coil. By this terminal the current through the ignition coil is switched on and of.
- a terminal connected with the supply voltage (12 Volts)
- a terminal connected with ground.
- terminal(s) to receive the input signal. If the input signal is delivered by an inductive sensor two terminals are needed.

The output voltage of an inductive sensor is delivered by an internal coil. This coil induces an almost sine wave output voltage. If the input signal is delivered by an Hall-sensor or opto-coupler three terminals are needed. Two of those three terminals are used to supply the sensor. The supply voltage is either 5 or 12 Volts. The third terminal receives the output signal from the sensor. The output voltage of these sensors is a square wave signal.

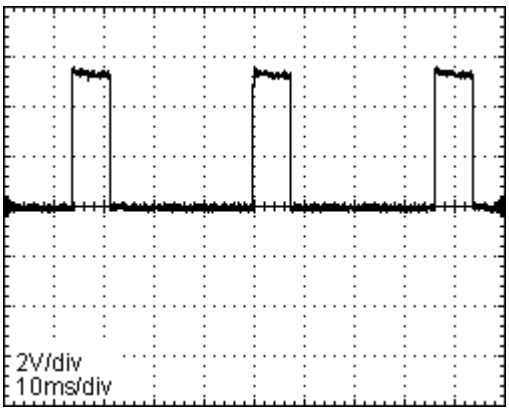

Addition terminals are possible. For example to send out a RPM signal to the revolution counter. Sometimes the input signal is delivered by a sensor while the ignition timing is controlled by the control unit. In this case the received input signal from the sensor is converted into a square wave signal by the ignition module and send out to the control unit. The control unit receiving this signal computes this input information and other input information from various engine parameters and sends out a new square wave signal to the ignition module. This signal is used by the ignition module to switch the current through the primary ignition coil on and off.

During the time the input signal for the ignition module is 'high' the current is switched 'on'. The moments this input signals falls to 'low' the current is switched 'off'. This moment the spark will appear

Electrical diagnosis

- Start the engine and measure (using an oscilloscope) the input signal delivered by the control unit or input sensor. The square wave signal or sine wave signal from a inductive sensor should be visible.

signal not OK:

- Disconnect the ignition module's connector and check the wiring between the ignition module and the control unit or input sensor.
- replace the ignition module if the signal appears on the disconnected connector and disappears on the connected connector.

If the output signal remains invisible the failure is not in the component.

signal OK:

- check the power supply of the ignition module.
- check the primary voltage using an ignition oscilloscope or normal oscilloscope with a suitable probe.
- check the wiring between the ignition module and the ignition coil.

The voltage should be nearly 0 Volt during the period the ignition module receives an 'high' input voltage from the sensor or control unit.

Mechanical diagnosis

- Remove the auxiliary air valve without disconnecting the connector.
- Turn the ignition on and make sure that the valve closes as the heating element heats-up the bi-metallic strip.

167. increased fuel pressure solenoid

Function

The vacuum solenoid (P.R.C.) regulates the connection between the fuel pressure regulator and the inlet manifold vacuum. The vacuum solenoid is activated by the control unit at air temperatures above 20°C, at engine speeds below 1500 rpm, and with the idle switch closed.

Specifications

supply voltage: 12 V
resistance: 35 - 45 ohms

WorkshopCD© Electude NL, The Netherlands

1. injector

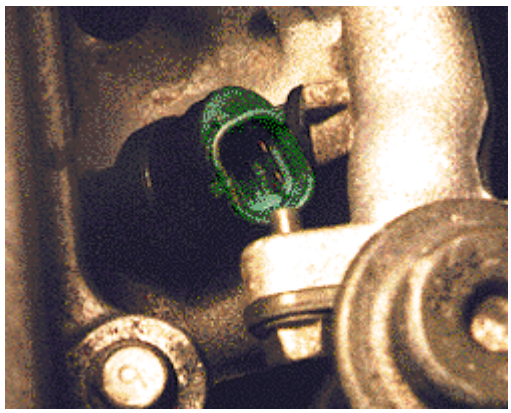

Extra Info

Function

A fuel injector is an electrically operated solenoid valve which is powered by the control unit. The fuel injector injects fuel into the inlet manifold.

Specifications

supply voltage: 12 V
resistance: 12 - 18 ohms
waveform information: engine running at idle

Scope image 1

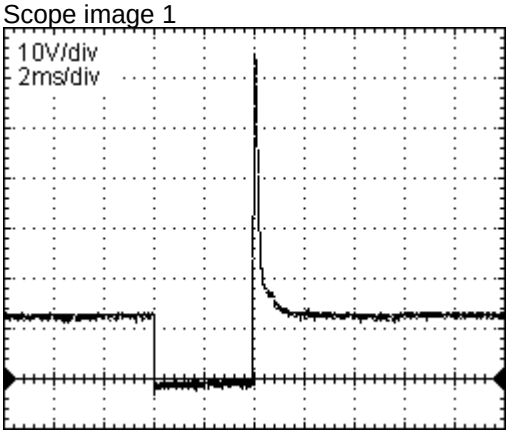

Pins to ground: 4U, 4V, 4W, 4X

Diagnosis

Check connector(s): Inspect the connector(s) and if necessary clean or fix them to make sure the connection is good.
Check resistance:
Turn ignition off. Remove connector(s) from injector(s). Measure resistance between the two pins of the injector. Compare with specified resistance.
Check supply voltage:
Turn ignition off. Remove connector(s) from injector(s). Crank the engine and measure voltage between one connector terminal and the negative terminal of the battery. Check the second terminal, one of the two should equal battery voltage. If not check wiring and, if present, fuse(s) and relay or power supply control unit.
Check connection to ECU:
Turn ignition off. Remove connector(s) from injector(s) and ECU. Measure the resistance between one of the two connector terminals and the corresponding terminal in the ECU connector. Check the other terminal. One of the two should be < 1 ohm. If not check wiring.
Check injector activation:
Connect oscilloscope to one of the signal wire pin(s) of the ECU and ground. Start or crank the engine and compare to the scope image shown.

WorkshopCD© Electude NL, The Netherlands

INJECTOR

Function

Injectors are electronically operated electromagnetic valves. Using the injectors the control unit is able to inject an exact quantity of fuel. Adding this quantity of fuel to the air, a mixture with the demanded air/fuel ratio is created. Depending on the kind of motormanagement system either one injector per cylinder (multipoint systems) or one injector for all cylinders (singlepoint systems) are used.

Specifications

RESISTANCE:	
high impedance:	± 15 ohms
low impedance:	± 0,5 - 2,5 ohm
flow:	± 50 - 200
gr/minsupply voltage:	1- 12 Volts
current:	± 0,75Amps

Single-point systems

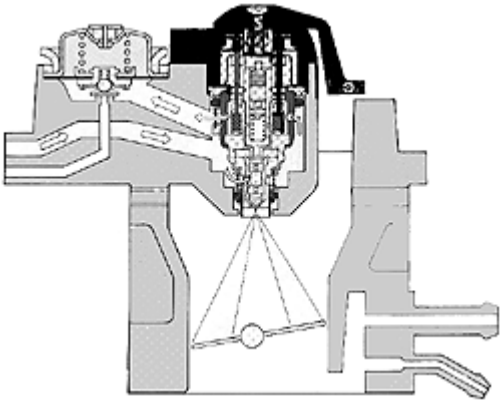

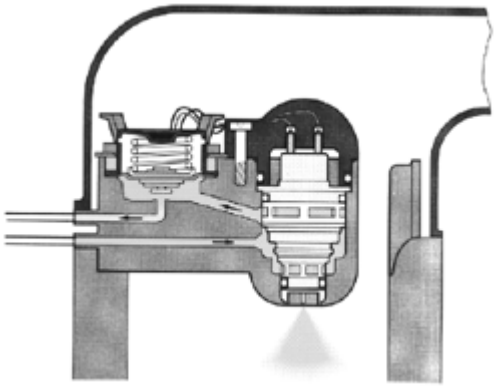

Single-point fuel injection systems use one central placed injector to create the required air/fuel ratio. The injector is mounted in the throttle-body and injects the fuel on top of the throttle. The fuel is delivered by a fuel pump and kept at a constant level by the fuel pressure regulator mounted on the throttle body. The fuel pressure on single-point systems is usually between 0,6 and 1,2 bars.

Multipoint systems

Multipoint fuel injection systems use one injector for each cylinder. The injectors are mounted in the intake manifold. The fuel is injected in the direction of the inlet valves. The fuel is delivered by a fuel pump. The pressure difference between the air pressure in the intake manifold and the fuel pressure is kept at a constant level by the fuel pressure regulator. Therefore the fuel pressure regulator increases the fuel pressure as the intake manifold pressure increases. The fuel pressure on multipoint systems is usually between 2 and 3 bars. The fuel pressure regulator is mounted on the fuel rail.

Sequential fuel injection

Sequential fuel injection is a method used by multipoint systems to control the air/fuel ratio and the injection timing per cylinder. Each injector of a sequential injection system is controlled by the control unit individually..

Bottom- and top-feed injectors

The injector fuel inlet can be at the

top or at the bottom. Bottom-feed injectors are often used on singlepoint injection systems while top-feed injectors more often are used as multipoint injectors.

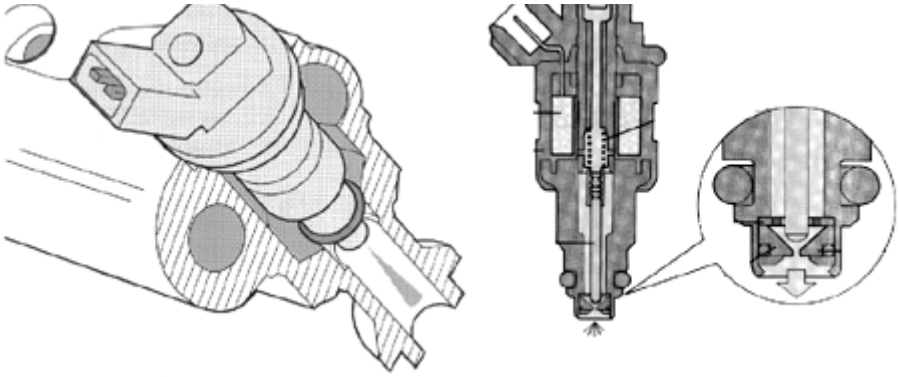

Electrical control

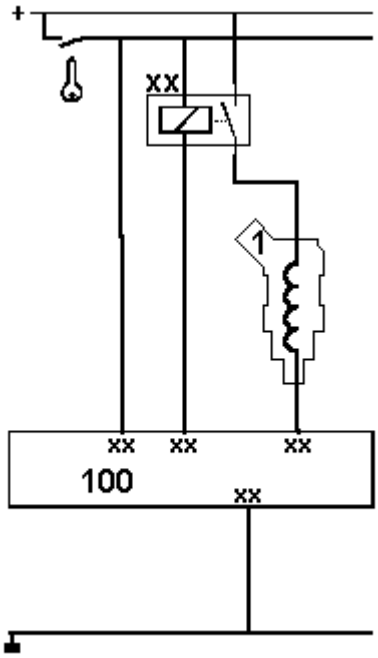

The electrical behaviour of an injector is determined by the coil inside. As a current flows through the coil the injector needle is pulled up against the spring force which courses the fuel to be injected. Two types of injector coils are used. The resistance of a normal coil is approximate 15 ohms. Other injection systems use low resistance coils (approximate 1-2,5 ohms).

Low impedance injector can be switched on in two different ways:

- using an extra external resistance to limit the current
- using a current limiting circuit inside the control unit.

An injector has an electrical connector with two pins. On one of those pins is connected with the battery voltage. This supply-voltage is often switched to the injector using a relay. The other pin leads directly to the control unit. The current through the injector is switched on during the period the control unit connects this pin to ground. The voltage on this pin is during this time 0 Volts. During the period the injector is not switched on, the voltage on the pin is 12 Volts

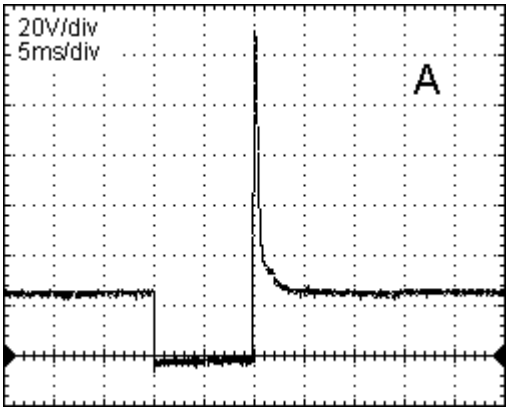

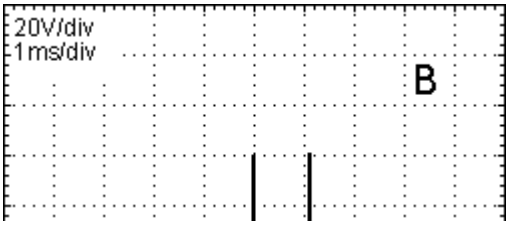

Oscilloscope image A shows the voltage signal measured on an high impedance injector or low impedance injector with external resistance.

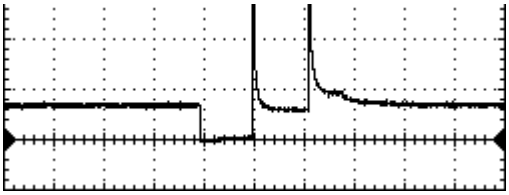

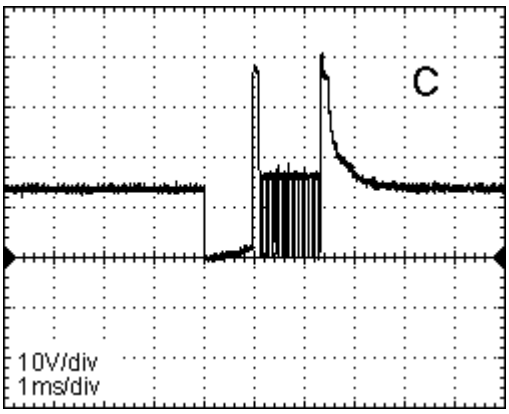

Oscilloscope images B and C show two different current limiting circuits used on low impedance injectors.

Electrical diagnosis

STATIC

- To perform this measurements the relay switching the power to the injector(s) should be closed. Short circuit the switch in the relay if necessary. Perform the tests on one injector at the time. Disconnect parallel switched injectors.

  Measurements

  Measure the voltage on the control unit. Use the pin which switches the injector current.

result: **12 V**

- injector and wiring are electrically OK

0 V

- check the relay switching the power to the injector(s)
- check the wiring between the relay and the injector
- check the injector resistance
- check the wiring between the injector and the control unit
- check the control unit

DYNAMIC

- Connect all injectors. Start the engine and measure using an oscilloscope the voltage on the control unit's pin switching the injector current.

result: **0 V**

- perform static tests.

12 V

- control unit does not switch the injector(s).

Mechanical diagnosis

- check fuel system pressure
- check injectors on leakage and pollution
- bottom-feed injectors: check the seal between the injector and the throttle body
- multipoint systems: disconnect the hose between the fuel pressure regulator and the intake manifold. No fuel should leak out of the fuel pressure regulator.

Lubricants and Fluids

MAZDA - 323 - 1.5i 16V - Z5

Engine		
Motor oil API SG	Below 0 °C	SAE 5W-30
Motor oil API SG	From -25 °C to 30 °C	SAE 10W-30
Motor oil API SG	Above -25 °C	SAE 10W-40
Motor oil API SG	Above -25 °C	SAE 10W-60
Motor oil API SG	Above -10 °C	SAE 20W-40
Motor oil API SG	Above -10 °C	SAE 20W-50
Cooling system		
Coolant	All temperatures	
Manual transmission (2WD)		
Gear oil API GL-4	All temperatures	SAE 75W-90
Gear oil API GL-5	All temperatures	SAE 75W-90
Manual transmission (4WD)		
Gear oil API GL-4	All temperatures	SAE 75W-90
Gear oil API GL-5	All temperatures	SAE 75W-90
ATF Dexron II	All temperatures	
Automatic transmission		
ATF Dexron II	All temperatures	
ATF M-III	All temperatures	
Transfer box		
Gear oil API GL-5	Above -15 °C	SAE 90
Gear oil API GL-5	Below -1 °C	SAE 80W
Differential, rear (4WD)		
Gear oil API GL-5	Above -15 °C	SAE 90
Gear oil API GL-5	Below -1 °C	SAE 80W
Power steering		
ATF Dexron II	All temperatures	
ATF M-III	All temperatures	
Brakes system		
Brake fluid DOT 3	All temperatures	
Air conditioning		
Refrigerant R134a		
Compressor oil PAG, ISO 46		

© Copyright, Wessels + Mыller AG

90. main relay

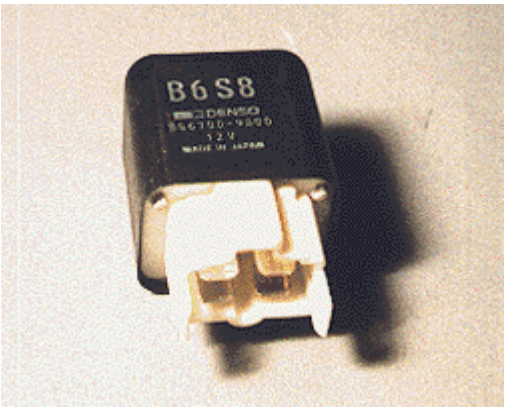

Function

Switches power to sensors, actuators and / or control unit.

Specifications

single normally opened relay.

Diagnosis

Check connector(s): Inspect the connector(s) and if necessary clean or fix them to make sure the connection is good.
Check relay:
Turn ignition off. Remove relay from relay box.
Connect the input of the coil to battery voltage and the output of the coil to ground. The relay should click. If not replace relay.
Check the switch of the relay. Measure the resistance between the input of the switch and the output(s). When coil connected the resistance should be < 1 ohm. When coil disconnected resistance should be infinite. If not replace relay.
Check supply voltage:
Turn ignition off. Remove relay from relay box.
Turn ignition on. Connect a circuit tester between the input terminal of the coil or between the input terminal of the switch in the relay box and the negative terminal of the battery. The tester should light up. If not check wiring and, if present, fuse(s) and second relay.
Check connection to ECU:
Turn ignition off. Remove relay from relay box and remove connector from ECU.
Measure the resistance between the output terminal(s) of the switch in the relay box and the corresponding terminal(s) in the ECU connector. It should be < 1 ohm. If not check wiring.
Check connection to ground:
Turn ignition off. Remove relay from relay box. Measure the resistance between the output terminal of the coil and the negative battery terminal. It should be < 1 ohm. If not check wiring.

WorkshopCD© Electude NL, The Netherlands

31. mass airflow meter

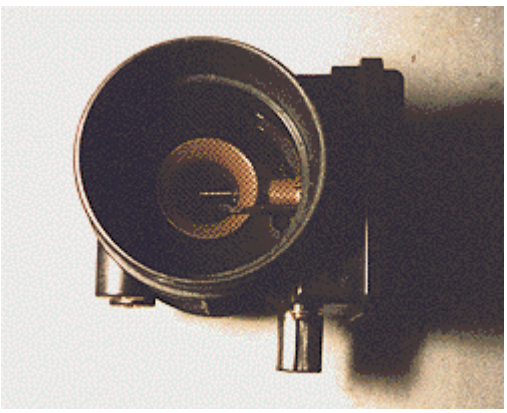

Function

The mass airflow meter uses a wire filament kept at constant temperature to measure the air mass entering the engine inlet system.

Specifications

supply voltage: 12 V
output voltage: 0 - 5 V
waveform information: during acceleration

Scope image 1

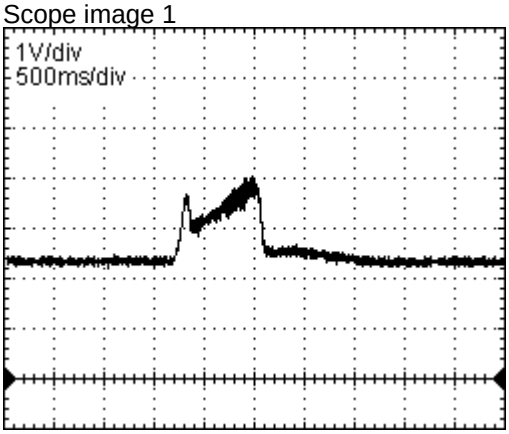

Pins to ground: 3B

WorkshopCD© Electude NL, The Netherlands

37. oxygen sensor

Function

The oxygen sensor is exposed to exhaust gas flow. It monitors the oxygen content of the exhaust gases. A low oxygen content (rich mixture) increases the output voltage of the sensor. In this way a constantly updated air/fuel ratio is returned to the control unit.

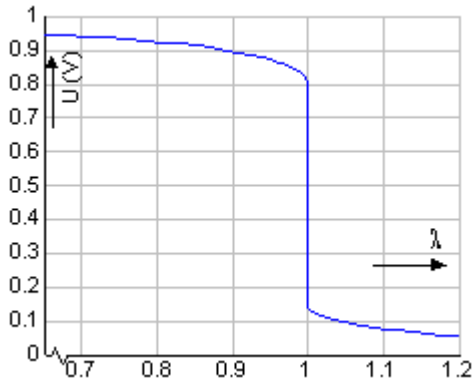

Scope image 1

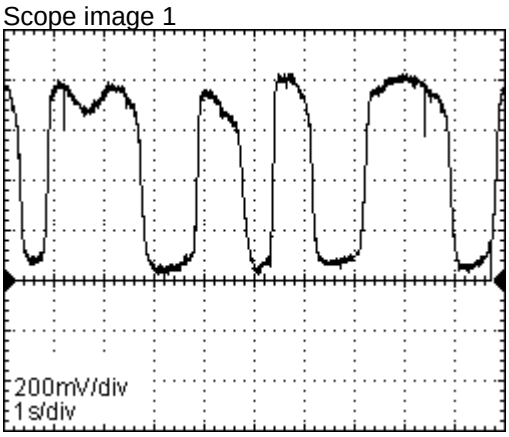

Pins to ground: 3c

WorkshopCD© Electude NL, The Netherlands

92. relay

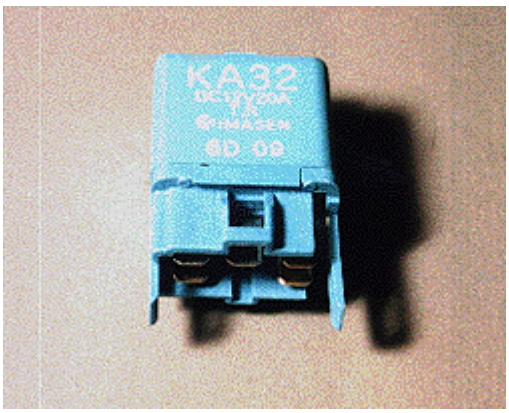

Function

A relay is an electrically operated power supply switch, switching supply voltage to the component(s) of the engine management system.

Specifications

single normally opened relay.

Diagnosis

Check connector(s): Inspect the connector(s) and if necessary clean or fix them to make sure the connection is good.
Check relay:
Turn ignition off. Remove relay from relay box.
Connect the input of the coil to battery voltage and the output of the coil to ground. The relay should click. If not replace relay.
Check the switch of the relay. Measure the resistance between the input of the switch and the output. When switch is closed the resistance should be < 1 ohm. When switch is open, the resistance should be infinite. If not replace relay.
Check supply voltage:
Turn ignition off. Remove relay from relay box.
Turn ignition on. Connect a circuit tester between the input terminal of the coil or the input terminal of the switch in the relay box and the negative terminal of the battery. Both times the tester should light up. If not check wiring and if present fuse(s), second relay and inertia switch.
Check connection to ECU:
Turn ignition off. Remove relay from relay box and remove connector from ECU.
Measure the resistance between the output terminal of the coil in the relay box and the corresponding terminal in the ECU connector. It should be < 1 ohm. If not check wiring.
Check signal from ECU:
Measure voltage between the output terminal of the coil and the positive terminal of the battery. Crank the engine. It should equal battery voltage. If not check ECU.

WorkshopCD© Electude NL, The Netherlands

Timing

MAZDA - 323 - 1.5i 16V - Z5

General

Item	Note
Before disconnecting the battery cable, check the audio system security code	
Always check the timing marks before timing belt removal	

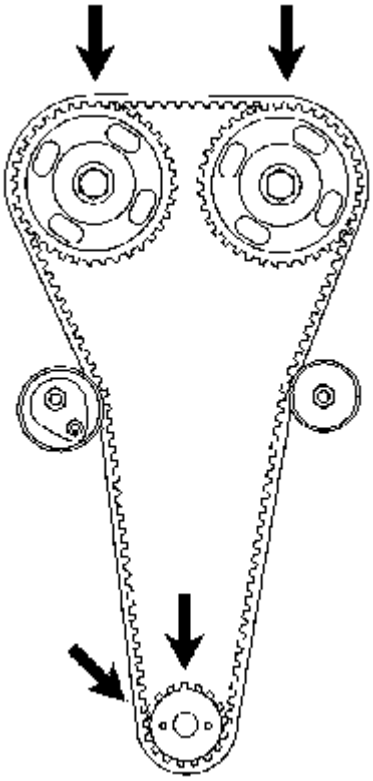

Removal

Item	Note
Disconnect the battery	
Remove the right front wheel	
Remove the cover from inside the right wheel arch	
Remove the ancillary drive belt	
Remove the water pump pulley	
Remove the crankshaft pulley	
Disconnect the spark-plug leads	
Remove the camshaft cover	
Remove the dipstick	
Remove the upper timing cover	
Note: Use a hoist to support the engine	49 G017 5A0

Remove the engine mount

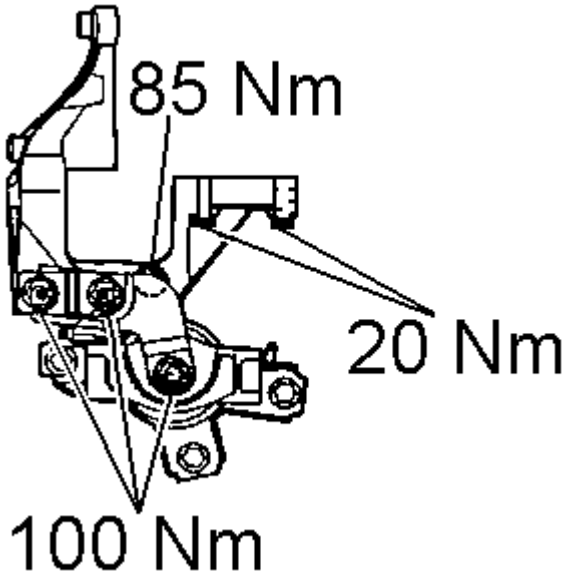

Remove the middle timing cover

Remove the lower timing cover

Remove the gearwheel

Use a special tool: 49 D011 102

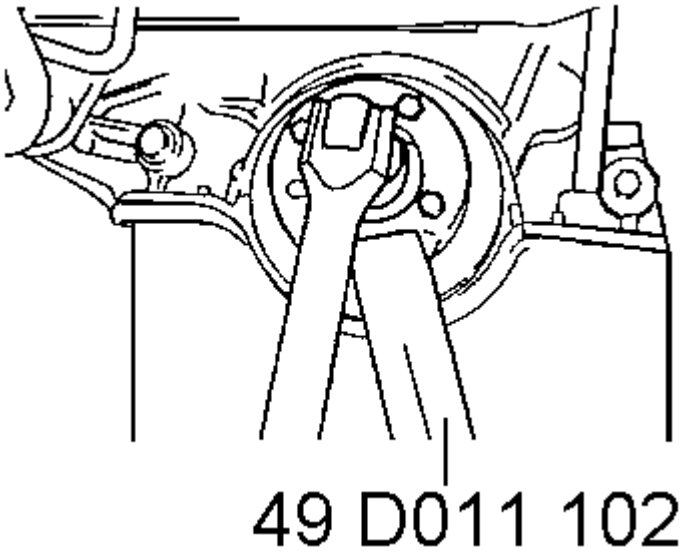

Align the timing marks

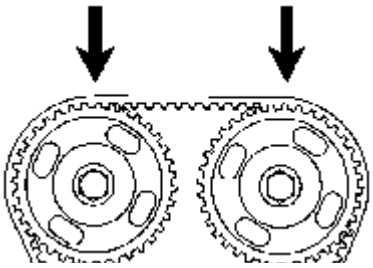

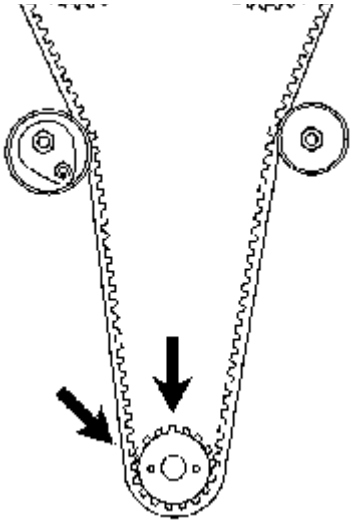

Loosen the tensioner

Push the tensioner pulley away from the timing belt

Tighten the tensioner

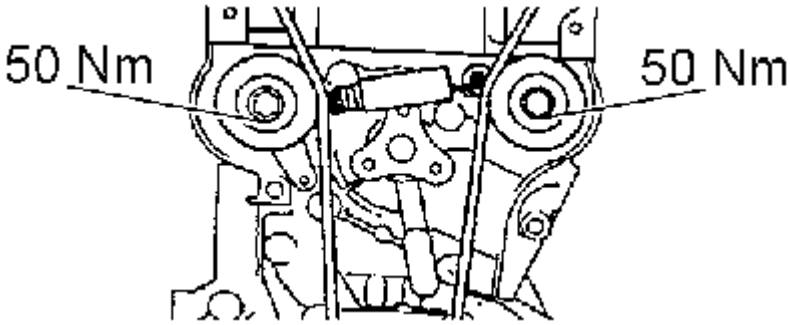

Remove the timing belt

Remove the tensioner

Check the free length of the spring

If out of specification, replace with a new one 61.8 mm

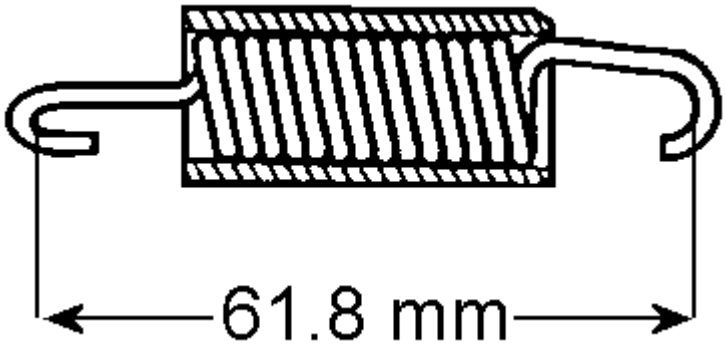

Refit the tensioner

Push the tensioner pulley away from the timing belt

Tighten the tensioner

Installation

Item	**Note**
Check the timing marks	

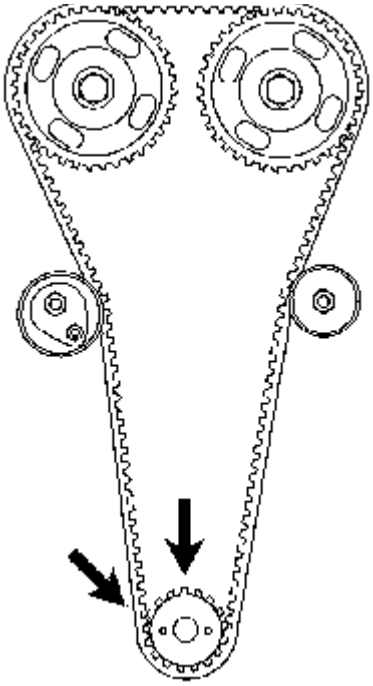

Fit the timing belt anti-clockwise, starting at the crankshaft gearwheel

Refit the gearwheel

Use a special tool: 49 D011 102

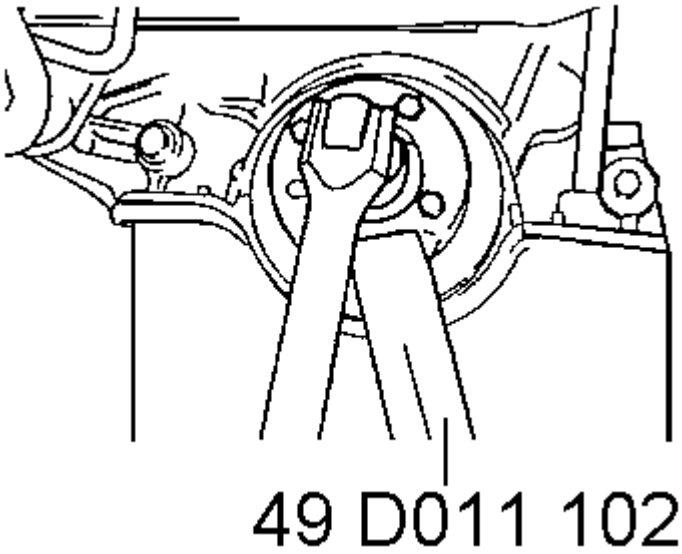

Loosen the tensioner

Turn the engine 1 5/6 times by hand

Check if the position is correct as shown

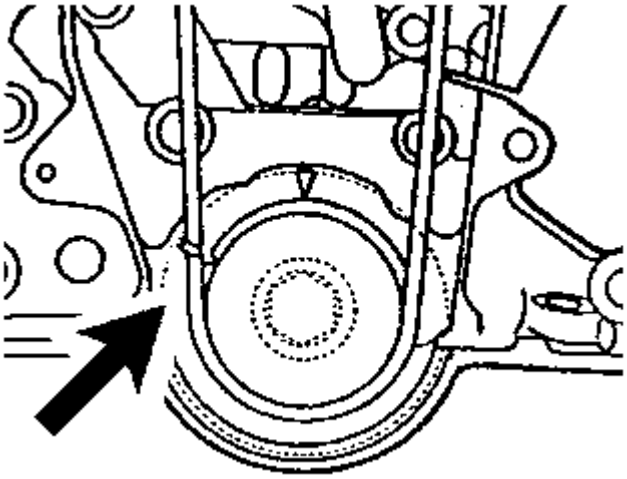

Tighten the tensioner

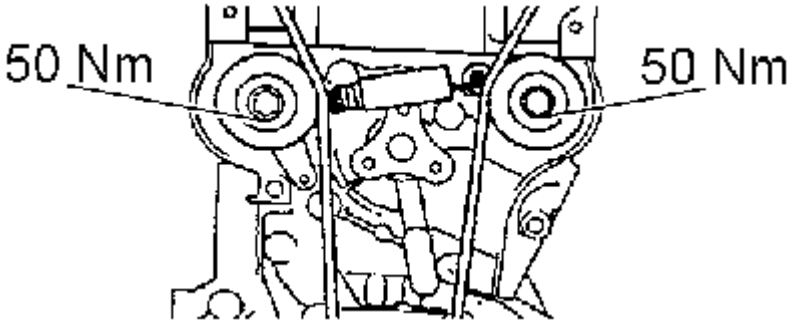

Rotate the engine 2 1/6 rotations by hand

Check the timing marks

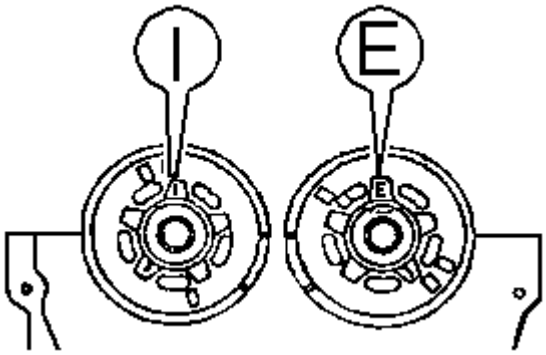

Measure the timing belt deflection 6.0 - 7.5 mm

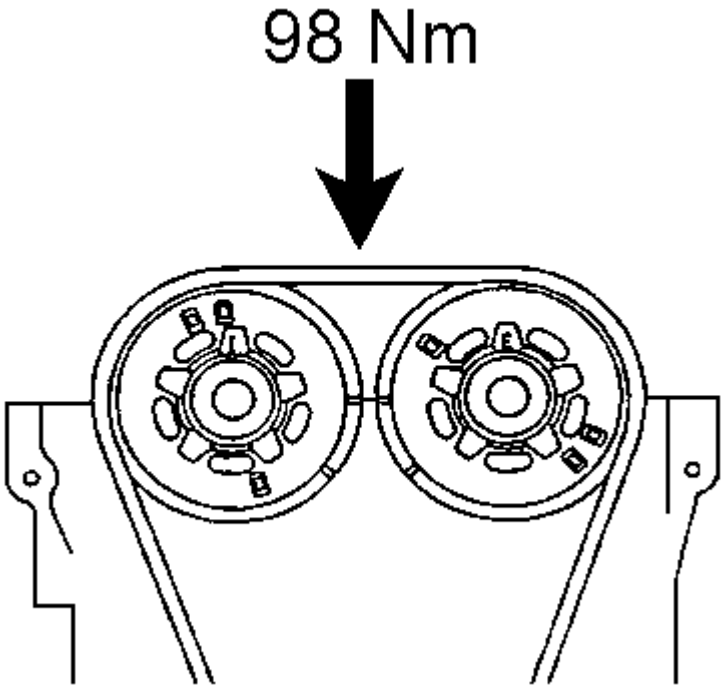

Refit the rear timing cover

Refit the engine mount

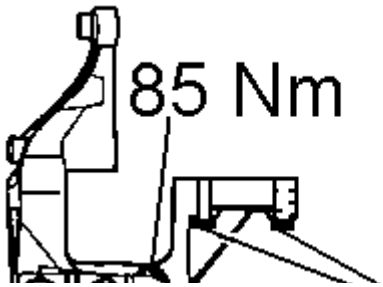

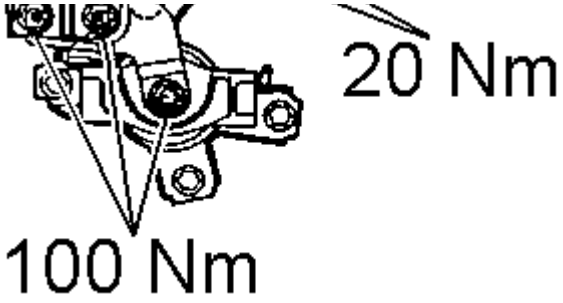

Remove the hoist

Refit:

Dipstick

Camshaft cover:

Spark plug leads

Crankshaft pulley:

Water-pump pulley:

Ancillary drive belt

Refit the cover

Refit the front wheels

Reconnect the battery earth cable

Torque settings

Item	Note
Gearwheel	160 Nm
Crankshaft pulley:	15 Nm
Water-pump pulley:	10 Nm
Dipstick guide	10 Nm
Camshaft cover:	10 Nm
Wheel nuts / bolts:	118 Nm

Special tools

Item	Note
Engine hoist:	49 G017 5A0
Gearwheel	49 D011 102

© Copyright, Wessels + Mьller AG

33. throttle position sensor

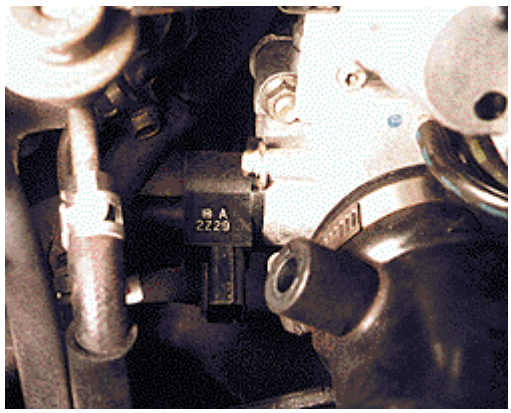

Function

The throttle position sensor measures the angle of the throttle shaft using a potentiometer. The sensor returns a signal proportional to the throttle shaft angle.

Specifications

supply voltage: 5 V
output voltage: 0 - 5 V
waveform information: output signal while opening throttle.

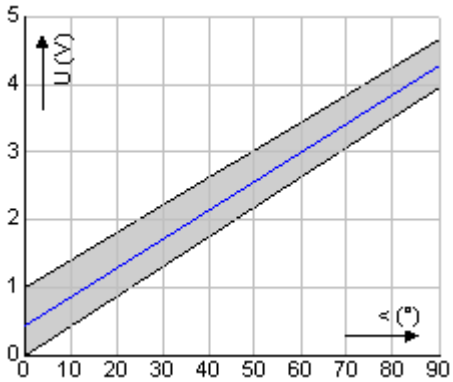

Scope image 1

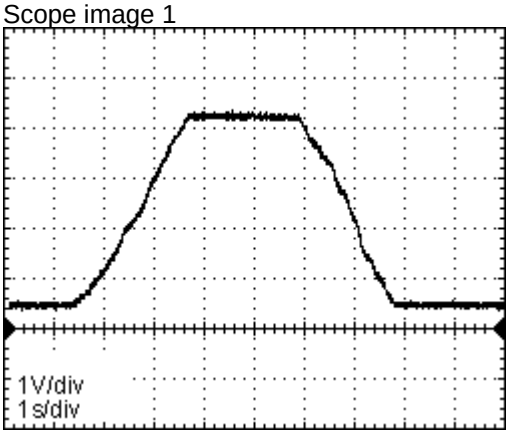

Pins to ground: 3F

WorkshopCD© Electude NL, The Netherlands

General information

- Electronic control unit (ECU) incorporates self-diagnosis function.
- ABS warning lamp will illuminate in the event of system failure.
- Trouble codes can be accessed with suitable code reader or a voltmeter connected to the data link connector (DLC) or diagnostic socket **Fig. 1** .
- For DLC or diagnostic socket location refer to System layout and components.

Accessing trouble codes

- Ensure ignition switched OFF.
- Bridge data link connector (DLC) terminals TBS and GND **Fig. 2** .
- Connect analogue voltmeter between data link connector (DLC) terminal FBS and vehicle battery **Fig. 2** .
- Switch ignition ON.
- Voltmeter needle will deflect to indicate trouble code(s).
- After a 3 second deflection the voltmeter indicates trouble code(s).
- A 1,2 second deflection indicates the 'tens' of the trouble code **Fig. 3** [A].
- A 0,4 second deflection indicates the 'units' of the trouble code **Fig. 3** [D].
- A 0,4 second pause separates each deflection **Fig. 3** [B].
- A 1 second pause separates the 'tens' and 'units' **Fig. 3** [C].
- A 4 second pause separates each trouble code **Fig. 3** [E].
- For example: Trouble code 22 displayed **Fig. 3** .
- Count voltmeter needle deflections.
- Compare with trouble code table.
- Switch ignition OFF.
- Remove bridge wire and voltmeter.

Erasing trouble codes

- Ensure ignition switched OFF.
- Bridge data link connector (DLC) terminals TBS and GND **Fig. 2** .
- Connect analogue voltmeter between data link connector (DLC) terminal FBS and vehicle battery **Fig. 2** .
- Switch ignition ON.
- Any stored trouble codes should be indicated.
- Depress and release brake pedal 10 times within 10 seconds.
- Warning lamp will illuminate for 2-3 seconds.
- Lamp extinguishes.
- Switch ignition OFF.
- Remove bridge wire and voltmeter.

Trouble code identification

Trouble code	Fault location
11	Wheel speed sensor, right front
12	Wheel speed sensor, left front
13	Wheel speed sensor, right rear
14	Wheel speed sensor, left rear
15	Wheel speed sensors
22	Solenoid valve, RH front
24	Solenoid valve, LH front
26	Solenoid valve, RH rear
28	Solenoid valve, LH rear
51	System relay
53	Pump motor
53	Pump motor relay
	Electronic control unit (ECU)

ABS warning lamp

Correct operating sequence

- Switch ignition ON.
- Lamp illuminates.
- Start engine.
- Lamp extinguishes after 3 seconds.

General test procedures

NOTE: Due to small size of ECU harness multi-plug pins it is advisable to use a breakout box.

Warning lamp circuit

Checking - Fig. 4

- Switch ignition ON.
- Check warning lamp illuminates.
- If not: Switch ignition OFF.
- Check fuses.
- Remove relay module.
- Disconnect ECU multi-plugs.
- Connect breakout box to 18-pin harness multi-plug.
- Bridge breakout box terminal 2L and earth.
- Switch ignition ON.
- Check warning lamp illuminates.
- If not: Switch ignition OFF.
- Check wiring and bulb.

Wheel speed sensors

Preparatory conditions

- Check wheel bearings for excessive play. Adjust or replace as necessary.
- Check wheel speed sensors for mechanical security.
- Inspect wheel speed sensor toothed rings visually for damaged teeth and cleanliness.

Checking

Technical Data	
Air gap	Not specified
Tightening torque	19-25 Nm

- No adjustment of wheel speed sensor air gaps is possible.
- If removed or replaced: Tighten fixing to specified torque.

Checking resistance - front - Fig. 5 & Fig. 6

Technical Data		
Terminals	Wheel speed sensor	Resistance
2O & 2P	Left hand	1600-2000 Ω
2N & 2M	Right hand	1600-2000 Ω

- Ensure ignition switched OFF.
- Disconnect ECU multi-plugs.
- Connect breakout box to 18-pin harness multi-plug.
- Check resistance between breakout box terminals Fig. 5 .
- If resistance not as specified:
- Disconnect relevant wheel speed sensor multi-plug.
- Check resistance between wheel speed sensor terminals Fig. 6 .
- If resistance as specified: Check wiring.
- If resistance not as specified: Suspect faulty wheel speed sensor.
- Repeat test for other wheel speed sensor.

Checking resistance - rear - Fig. 5 & Fig. 6

Technical Data		
Terminals	**Wheel speed sensor**	**Resistance**
2R & 2Q	Left hand	1600-2000 Ω
2S & 2T	Right hand	1600-2000 Ω

- Ensure ignition switched OFF.
- Disconnect ECU multi-plugs.
- Connect breakout box to 18-pin harness multi-plug.
- Check resistance between breakout box terminals Fig. 5 .
- If resistance not as specified:
- Disconnect relevant wheel speed sensor multi-plug.
- Check resistance between wheel speed sensor terminals Fig. 6 .
- If resistance as specified: Check wiring.
- If resistance not as specified: Suspect faulty wheel speed sensor.
- Repeat test for other wheel speed sensor.

Checking voltage - front - Fig. 7 & Fig. 8

Technical Data		
Terminals	**Wheel speed sensor**	**Voltage**
2O & 2P	Left hand	0,25-3,0 V ac
2N & 2M	Right hand	0,25-3,0 V ac

- Ensure ignition switched OFF.
- Raise vehicle.
- Disconnect ECU multi-plugs.
- Connect breakout box to 18-pin harness multi-plug.
- Adjust voltmeter to measure alternating current.
- Turn road wheel at 60 rpm.
- Check voltage between breakout box terminals Fig. 7 .
- If voltage not as specified:
- Disconnect relevant wheel speed sensor multi-plug.
- Turn road wheel at 60 rpm.
- Check voltage between wheel speed sensor terminals Fig. 8 .
- If voltage as specified: Check wiring.
- If voltage not as specified: Suspect faulty wheel speed sensor.
- Repeat test for other wheel speed sensor.

Checking voltage - rear - Fig. 7 & Fig. 8

Technical Data		
Terminals	Wheel speed sensor	Voltage
2R & 2Q	Left hand	0,25-3,0 V ac
2S & 2T	Right hand	0,25-3,0 V ac

- Ensure ignition switched OFF.
- Raise vehicle.
- Disconnect ECU multi-plugs.
- Connect breakout box to 18-pin harness multi-plug.
- Adjust voltmeter to measure alternating current.
- Turn road wheel at 60 rpm.
- Check voltage between breakout box terminals Fig. 7 .
- If voltage not as specified:
- Disconnect relevant wheel speed sensor multi-plug.
- Turn road wheel at 60 rpm.
- Check voltage between wheel speed sensor terminals Fig. 8 .
- If voltage as specified: Check wiring.
- If voltage not as specified: Suspect faulty wheel speed sensor.
- Repeat test for other wheel speed sensor.

Checking wave form - front - Fig. 9

Technical Data	
Terminals	Wheel speed sensor
2O & 2P	Left hand
2N & 2M	Right hand

- Ensure ignition switched OFF.
- Raise vehicle.
- Disconnect ECU multi-plugs.
- Connect breakout box to 18-pin harness multi-plug.
- Connect oscilloscope between breakout box terminals.
- Turn road wheel at approximately 60 rpm.
- Check wave form of wheel speed sensor.
- If wave form not as specified:
- Disconnect relevant wheel speed sensor multi-plug.
- Turn road wheel at approximately 60 rpm.
- Check wave form between wheel speed sensor terminals.
- If wave form as specified: Check wiring.
- If wave form not as specified: Suspect faulty wheel speed sensor.
- Repeat test for other wheel speed sensor.

Checking wave form - rear - Fig. 9

Technical Data	
Terminals	Wheel speed sensor
2R & 2Q	Left hand
2S & 2T	Right hand

- Ensure ignition switched OFF.
- Raise vehicle.
- Disconnect ECU multi-plugs.
- Connect breakout box to 18-pin harness multi-plug.
- Connect oscilloscope between breakout box terminals.
- Turn road wheel at approximately 60 rpm.

- Check wave form of wheel speed sensor.
- If wave form not as specified:
- Disconnect relevant wheel speed sensor multi-plug.
- Turn road wheel at approximately 60 rpm.
- Check wave form between wheel speed sensor terminals.
- If wave form as specified: Check wiring.
- If wave form not as specified: Suspect faulty wheel speed sensor.
- Repeat test for other wheel speed sensor.

Relay module

NOTE: Relay module incorporates system relay and pump motor relay.

Checking supply voltage - Fig. 10

Technical Data		
Terminals	**Condition**	**Voltage**
B & earth	Ignition OFF	Battery voltage
D & earth	Ignition ON	Battery voltage

- Ensure ignition switched OFF.
- Remove relay module.
- Check voltage between relay module base terminal and earth.
- Switch ignition ON.
- Check voltage between relay module base terminal and earth.
- If voltage not as specified: Check wiring and fuses.

Checking earth connection - Fig. 10

Technical Data	
Terminals	**Resistance**
A & earth	Zero

- Ensure ignition switched OFF.
- Remove relay module.
- Check resistance between relay module base terminal and earth.
- If resistance not as specified: Check wiring.

Checking operation - system relay contacts - Fig. 11

Technical Data		
Terminals	**Condition**	**Resistance**
A & E	Battery voltage disconnected	Zero
B & E	Battery voltage disconnected	∞
A & E	Battery voltage connected	∞
B & E	Battery voltage connected	Zero
Battery + to terminal D		
Battery - to terminal C		

NOTE: Ensure battery voltage supply is connected correctly. Otherwise relay module could be damaged.

- Ensure ignition switched OFF.
- Remove relay module.
- Check resistance between relay module terminals.
- Connect battery voltage supply to specified relay module terminals.
- Check resistance between relay module terminals.

Checking resistance - system relay contacts - Fig. 11

Technical Data	
Terminals	Resistance
C & D	60-100 Ω

- Ensure ignition switched OFF.
- Remove relay module.
- Check resistance between relay module terminals.

Checking operation - pump motor relay contacts - Fig. 12

Technical Data		
Terminals	Condition	Resistance
B & F	Battery voltage disconnected	∞
B & F	Battery voltage connected	Zero
Battery + to terminal E		
Battery - to terminal H		

NOTE: Ensure battery voltage supply is connected correctly. Otherwise relay module could be damaged.

- Ensure ignition switched OFF.
- Remove relay module.
- Check resistance between relay module terminals.
- Connect battery voltage supply to specified relay module terminals.
- Check resistance between relay module terminals.

Checking resistance - pump motor relay contacts - Fig. 12

Technical Data	
Terminals	Resistance
E & H	50-90 Ω

- Ensure ignition switched OFF.
- Remove relay module.
- Check resistance between relay module terminals.

Electronic control unit (ECU)

Checking supply voltage - Fig. 13

Technical Data	
Terminals	**Voltage**
1H & earth	Battery voltage

- Ensure ignition switched OFF.
- Disconnect ECU multi-plugs.
- Connect breakout box to ECU harness multi-plugs.
- Switch ignition ON.
- Check voltage between breakout box terminal and earth.

Checking earth connection - Fig. 13

Technical Data	
Terminals	**Resistance**
1E & earth	Zero
1F & earth	Zero

- Ensure ignition switched OFF.
- Disconnect ECU multi-plugs.
- Connect breakout box to ECU harness multi-plugs.
- Check resistance between breakout box terminals and earth.
- If resistance not as specified: Check wiring.

Hydraulic modulator solenoid valves

Checking - Fig. 14

Technical Data		
Terminals	**Solenoid valve**	**Resistance**
C & G	LH front	3 Ω approx.
D & H	RH front	3 Ω approx.
A & E	LH rear	3 Ω approx.
B & F	RH rear	3 Ω approx.

- Ensure ignition switched OFF.
- Disconnect hydraulic modulator 8-pin multi-plug.
- Check resistance between hydraulic modulator terminals.

Checking supply voltage - Fig. 15

Technical Data	
Terminals	**Voltage**
E & earth	Battery voltage
F & earth	Battery voltage
G & earth	Battery voltage
H & earth	Battery voltage

- Ensure ignition switched OFF.
- Disconnect hydraulic modulator 8-pin multi-plug.

- Switch ignition ON.
- Check voltage between harness multi-plug terminals and earth.

Pump motor

Checking resistance - Fig. 16

Technical Data	
Terminals	Resistance
A & B	1 Ω max.

- Ensure ignition switched OFF.
- Disconnect hydraulic modulator 2-pin multi-plug.
- Check resistance between hydraulic modulator terminals.

Checking operation - Fig. 17

NOTE: DO NOT allow pump motor to run for more than 2 seconds.

- Ensure ignition switched OFF.
- Disconnect ECU multi-plugs.
- Remove relay module.
- Bridge relay module base terminals B and F with a switched lead.
- Operate switch.
- Pump motor should run.
- If not: Suspect faulty pump motor.

Brake pedal position (BPP) switch

Checking - Fig. 18

Technical Data		
Terminals	Condition	Voltage
1M & earth	Pedal released	Zero
1M & earth	Pedal depressed	Battery voltage

- Ensure ignition switched OFF.
- Disconnect ECU multi-plugs.
- Connect breakout box to 12-pin harness multi-plug.
- Check voltage between breakout box terminal and earth.
- Depress brake pedal.
- Check voltage between breakout box terminal and earth.
- If voltage not as specified: Check wiring and fuses.

Hydraulic system

Bleeding

- Ensure ignition switched OFF.
- Ensure reservoir topped up to MAX.
- Bleed in sequence: RH rear, LH rear, RH front, LH front.
- Connect tube to bleed screw and immerse end in jar of clean fluid.
- Depress brake pedal firmly two or three times.
- Open bleed screw.
- Depress brake pedal fully.
- Close bleed screw. Tightening torque: 6,9-9,8 Nm (front), 5,9-8,8 Nm (rear).

- Allow brake pedal to return.
- Repeat process until fluid is air free.
- Maintain fluid level in reservoir during bleeding procedure.
- Top up reservoir to MAX.

1

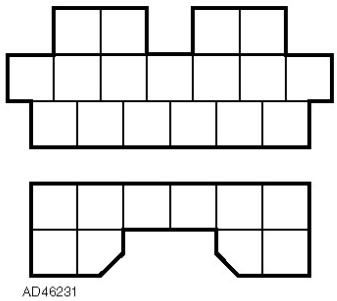

2

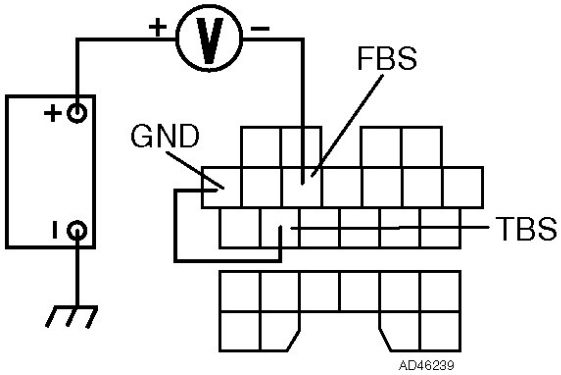

3

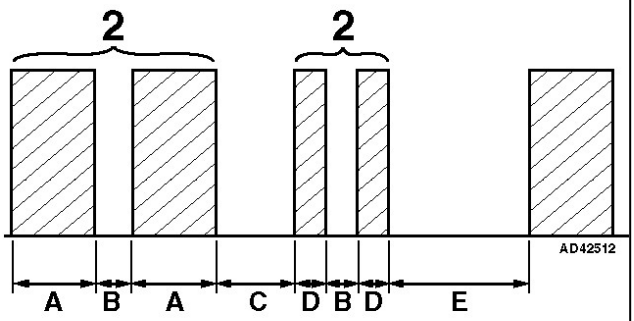

3

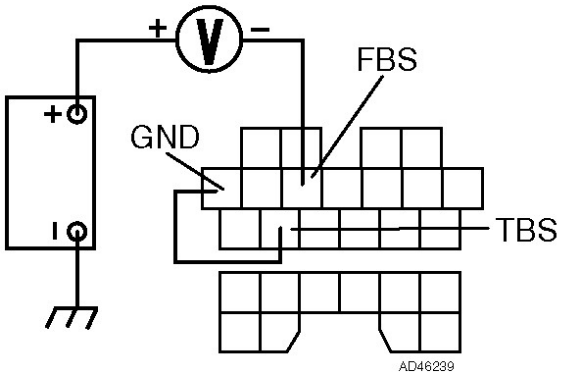

4

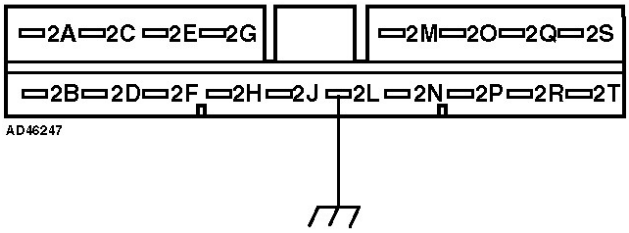

5

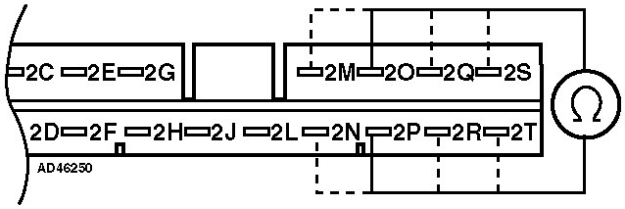

6

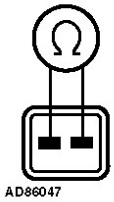
AD86047

6

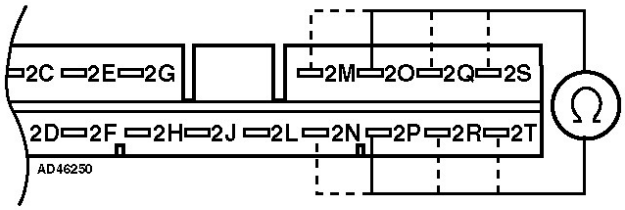
2C 2E 2G
2M 2O 2Q 2S
2D 2F 2H 2J 2L 2N 2P 2R 2T
AD46250

7

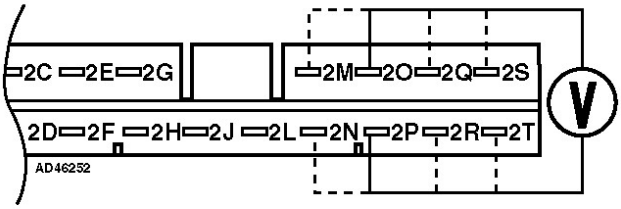
2C 2E 2G
2M 2O 2Q 2S
2D 2F 2H 2J 2L 2N 2P 2R 2T
AD46252

8

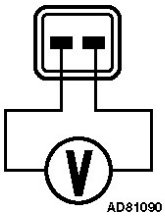
AD81090

8

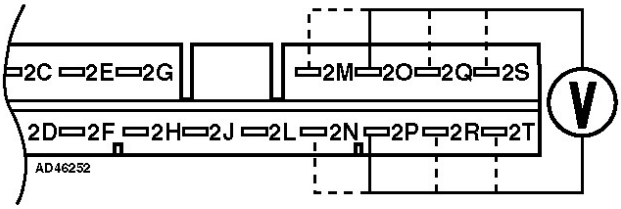
2C 2E 2G
2M 2O 2Q 2S
2D 2F 2H 2J 2L 2N 2P 2R 2T
AD46252

9

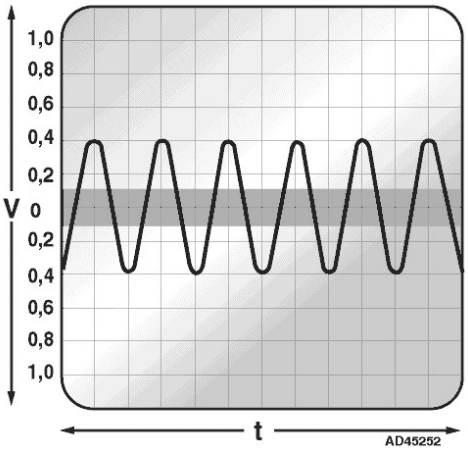
1,0
0,8
0,6
0,4
0,2
V 0
0,2
0,4
0,6
0,8
1,0
t
AD45252

10

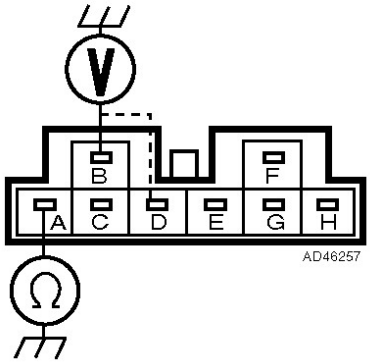
B
F
A C D E G H
AD46257

11

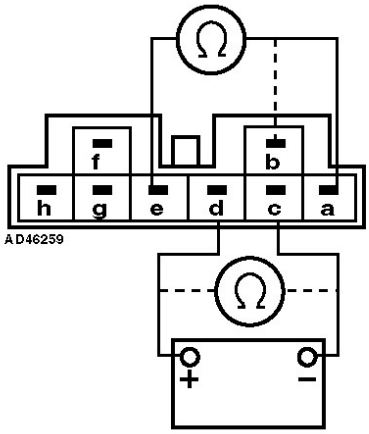
f
b
h g e d c a
AD46259
+
−

12

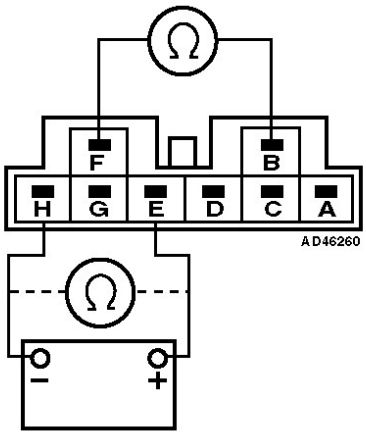

13

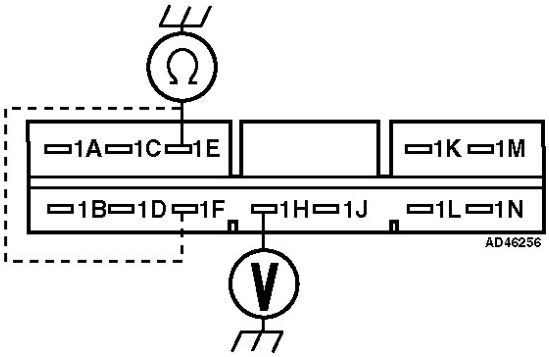

14

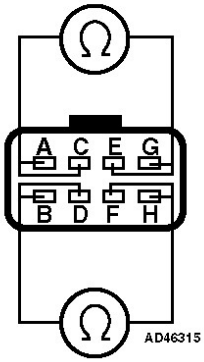

15

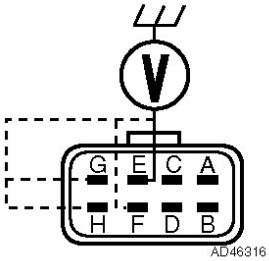

16

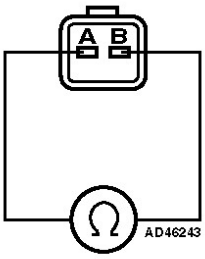

17

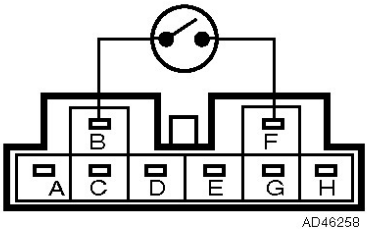

18

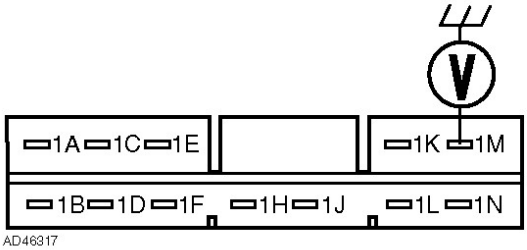

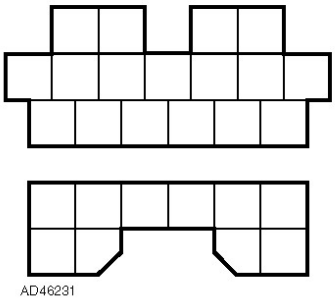

© Autodata Limited 2004

System description

- Optional driver's and front passenger's airbags.
- Airbag locations identified by the inscription 'SRS'.
- SRS control module mounted separately.
- Optional pyrotechnic pretensioners on front seat belts.

Special attention

- To prevent personal injury, expansion area of all airbags MUST remain clear.
- Steering wheel spiral cable has limited rotary movement.
- Centralise steering before disconnecting steering column. To prevent damage, ensure steering wheel and spiral cable DO NOT rotate before or during reassembly.
- Pyrotechnic pretensioners are electrically triggered by SRS control module.

SRS warning lamp

Operation

- Switch ignition ON.
- SRS warning lamp illuminates.
- If warning lamp does not illuminate: Suspect wiring or SRS warning lamp.
- Lamp extinguishes after approximately 4-8 seconds.
- If not: Suspect wiring or SRS control module.
- If warning lamp flashes:
- 3 flashes: Suspect open/short circuit or SRS control module.
- 6 flashes: Suspect driver's airbag.
- 7 flashes: Suspect passenger's airbag.

Disarm the system

When

- Fascia/instrument panel removal or replacement.
- Front seat belt removal or replacement.
- Front seat repair or replacement.
- Repair work around SRS components, especially airbags and pretensioners.
- SRS component removal or replacement.
- Steering wheel/column repair or replacement.
- Welding operations.

How

- Ensure ignition switched OFF.
- Disconnect battery earth lead. Make sure accidental reconnection is not possible.
- Disconnect SRS control module.
- Disconnect pyrotechnic pretensioners.

Arm the system

How

- Ensure ignition switched OFF.
- Reconnect SRS control module.

- Reconnect pyrotechnic pretensioners.
- Ensure vehicle interior is unoccupied.
- Reconnect battery earth lead.
- Switch ignition ON.
- Check SRS warning lamp operation.

After deployment

Check

- All mounting brackets for SRS components.
- Fascia/instrument panel.
- Seat assemblies.
- Seat belts, including buckles and anchorage points.
- Steering wheel and column.
- Surrounding components and trims.
- SRS wiring harness and multi-plugs for charred or damaged areas.

Renew

- All airbags.
- Fascia/instrument panel, if damaged.
- Front seat belts.
- Mounting brackets, if damaged.
- Seat components, if damaged.
- Spiral cable, if damaged or noisy.
- Steering column, if damaged.
- Steering wheel, if damaged.
- Surrounding components and trims, if damaged.
- SRS control module.
- SRS wiring harness and multi-plugs, if charred or damaged areas found.

Disposal

- Vehicle manufacturer suggests that deployed SRS components are sealed in a plastic bag and disposed of in accordance with local regulations.

Steering wheel removal and installation

Special attention

- Disarm system and remove driver's airbag.
- Centralise steering and disconnect spiral cable multi-plug before removing steering wheel.
- Spiral cable should not be allowed to rotate once steering wheel removed.
- To centralise spiral cable, slowly rotate clockwise until resistance is felt and then rotate approximately 2turns anti-clockwise until alignment marks aligned.
- Ensure spiral cable remains centralised during reassembly.

Steering wheel and airbag assembly **Fig. 1**
Spiral cable alignment marks **Fig. 2**

Tightening torques

Driver's airbag	8-12 Nm
Front passenger's airbag	16-22 Nm
Front seat	39-63 Nm
Front seat belt inertia reel	38-78 Nm
Front seat belt inertia reel bracket	18-26 Nm
Front seat belt buckle	39-78 Nm
Front seat belt upper anchorage point	38-78 Nm
Steering wheel	40-49 Nm
SRS control module	7-10 Nm

1

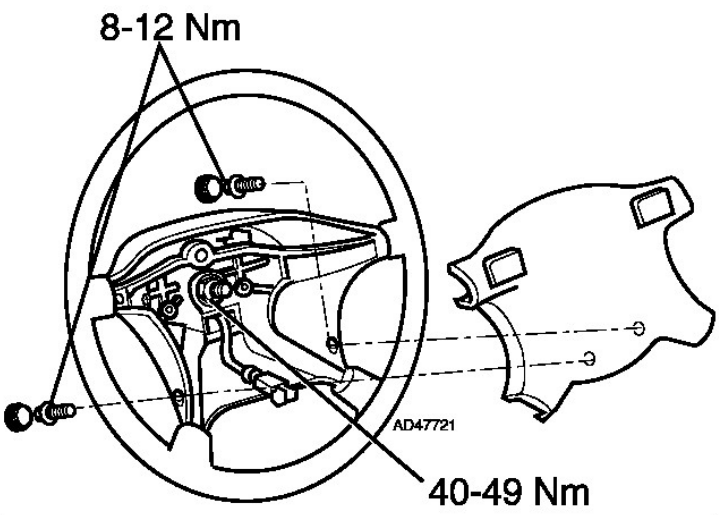

2

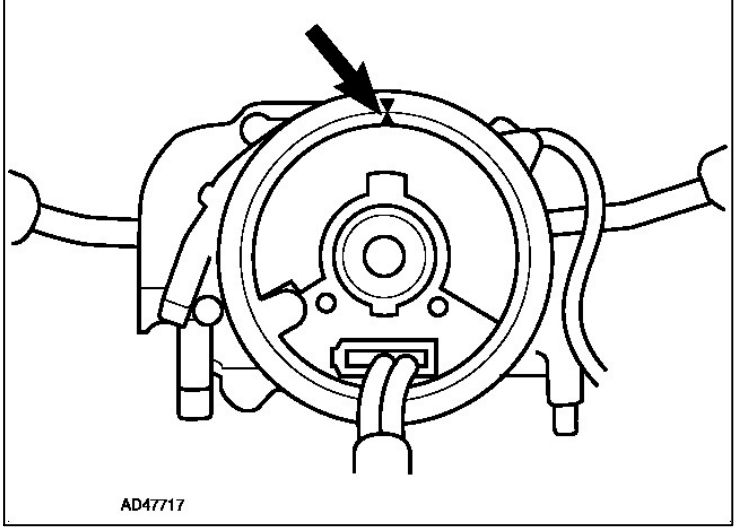

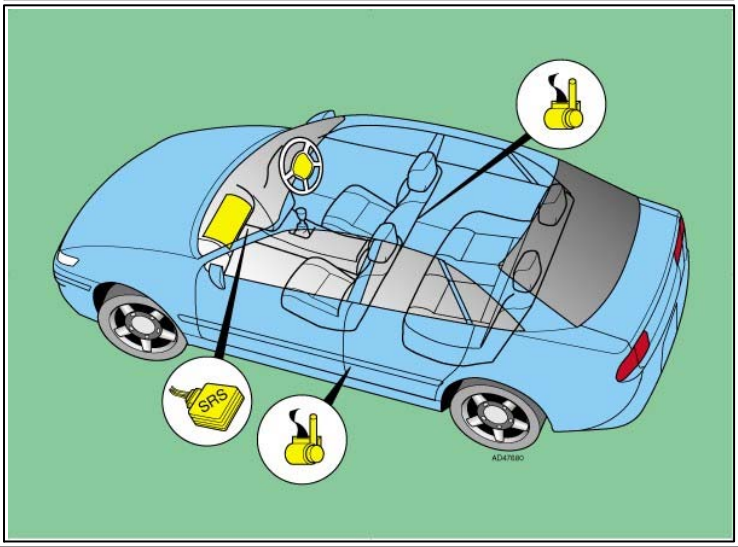

System information

Control system	Manual temperature control
System layout	Single evaporator - single zone
Refrigerant circuit type	Expansion valve

General information

Self-diagnosis

- No AC self-diagnosis function applicable to this model range.

System control

- Compressor operation controlled by refrigerant pressure switch.
- Compressor will not operate if refrigerant level is low.
- System incorporates an AC evaporator temperature sensor.

System repairs

- Access to evaporator housing from vehicle interior. Removal of fascia panel not required.
- Access to AC/heater blower motor from vehicle interior. Removal of fascia panel not required.

System service

- Refrigerant sight glass located in receiver/drier.
- Renew pollen filter every 36,000 miles or 48 months, whichever occurs first. Fig. 1

Refrigerant charging

NOTE: Running the engine with the high pressure service connector valve open is dangerous.

- Charging with vapour:
- Ensure refrigerant circuit is evacuated for a minimum of 15 minutes prior to charging.
- Charge via high pressure service connector.
- After 50% of refrigerant has entered system:
- Charge via low pressure service connector.
- Start engine.
- Air conditioning switched ON.
- Continue to charge until recommended quantity has entered system.

System fault diagnosis

- For information regarding system and component diagnosis refer to 'General test procedures' in the front section of this manual.

Fuse box/relay plates

Fascia Fig. 2

5-door

Fuse (Amps)	Circuit
F9 (10A) - 1,5	AC condenser blower motor relay, AC compressor clutch relay
F15 (10A) - except 2,0	AC amplifier, AC/heater function control panel, heater blower relay, AC/heater recirculation flap motor
F15 (10A) - 2,0	AC condenser blower motor relay, AC compressor clutch relay, AC amplifier, AC/heater function control panel, heater blower relay, AC/heater recirculation flap motor
F23 (40A) - ➡ 10/96	AC/heater blower motor
F29 (15A)	AC/heater function control panel

➡ 10/96 3/4-door

Fuse (Amps)	Circuit
F9 (10A)	AC condenser blower motor relay, AC compressor clutch relay
F15 (10A)	AC amplifier, AC/heater function control panel, heater blower relay, AC/heater recirculation flap motor
F23 (40A)	AC/heater blower motor

Fascia - 11/96 ➡ 3/4-door Fig. 3

Fuse (Amps)	Circuit
F4 (15A)	AC amplifier, AC/heater function control panel, heater blower relay
F10 (10A)	AC condenser blower motor relay, AC compressor clutch relay
F11 (10A)	AC compressor clutch relay
F14 (15A) - 2,0TD	AC condenser blower motor relay II

Underbonnet Fig. 4

Fuse (Amps)	Circuit	
F4 (40A) - 11/96 ➡	AC/heater blower motor	
F4 (30A) - 5-door ➡ 10/96	AC condenser blower motor relay I	
F9 (10A) - ➡ 10/96	AC compressor clutch relay	
F9 (30A) - 11/96 ➡	AC condenser blower motor relay I	
F10 (30A) - 3/4-door ➡ 10/96	AC condenser blower motor relay I	
F14 (30A) - 2,0TD	AC condenser blower motor relay II	
Location	**Component**	**Circuit diagram code**
2 - 11/96 ➡	Engine coolant blower motor relay	K12

Refrigerant pressures

Preparatory conditions

- Engine at normal operating temperature.
- Pollen filter installed and in good condition.

- All windows and doors closed.
- Ambient temperature above 15°C.
- Engine idling.
- Air conditioning switched ON.
- AC/heater blower motor switch set to position 4.
- AC/heater recirculation flap set to recirculation position.
- AC/heater temperature control(s) set to maximum cold position.
- Fascia ventilation outlets fully open.

Checking

- Run engine at 1500 rpm.

Ambient temperature	High pressure	Low pressure
15°C	10,3-11,4 bar	1,3-1,5 bar
20°C	11,7-12,7 bar	1,4-1,6 bar
25°C	13,1-14,9 bar	1,45-1,65 bar
30°C	15-17 bar	1,5-1,8 bar
35°C	16,5-19 bar	1,6-1,9 bar

Delivery temperature

Preparatory conditions

- Engine at normal operating temperature.
- Pollen filter installed and in good condition.
- Doors open.
- Engine idling.
- Air conditioning switched ON.
- Passenger compartment air temperature 15-40°C.
- Fascia ventilation outlets fully open.
- AC/heater blower motor switch set to position 4.
- AC/heater recirculation flap set to recirculation position.
- AC/heater temperature control(s) set to maximum cold position.

Checking

- Run engine at 1500 rpm.
- Measure ambient temperature in passenger footwell.
- Position temperature probe in fascia ventilation centre outlet.
- Wait for delivery temperature to stabilise.
- Measure temperature.

At 50% relative humidity

Ambient temperature	Delivery temperature
25°C	0-2°C
30°C	3-7°C
35°C	8-12°C
40°C	13-17°C

At 70% relative humidity

Ambient temperature	Delivery temperature
25°C	4-8°C
30°C	9-13°C
35°C	14-18°C
40°C	19-23°C

Technical data

Refrigerant	
Type	R134a
Type	Refer to engine bay label
Quantity - except 3HB/4SD 11/96 ➡	750 grams
Quantity - 3HB/4SD 11/96 ➡	700 grams

Refrigerant oil	
Type	Atmos GU10
Viscosity	ISO 46
Quantities:	
Compressor	Replace quantity drained + 10-20 ml
Condenser - 3/4-door	15 ml
Condenser - 5-door	30 ml
Evaporator - 3/4-door	50 ml
Evaporator - 5-door	60 ml
Line (general)	10 ml
Receiver/drier	10 ml
System - ➡ 10/96	175 ml
System - 11/96 ➡	150 ml

Compressor clutch	
Adjustment type	Shim
Clearance	0,4-0,6 mm
Resistance	Not specified

AC evaporator temperature sensor	
Resistance	Not specified

© Autodata Limited 2004
26.03.2007
V5.500-
Autodata

1

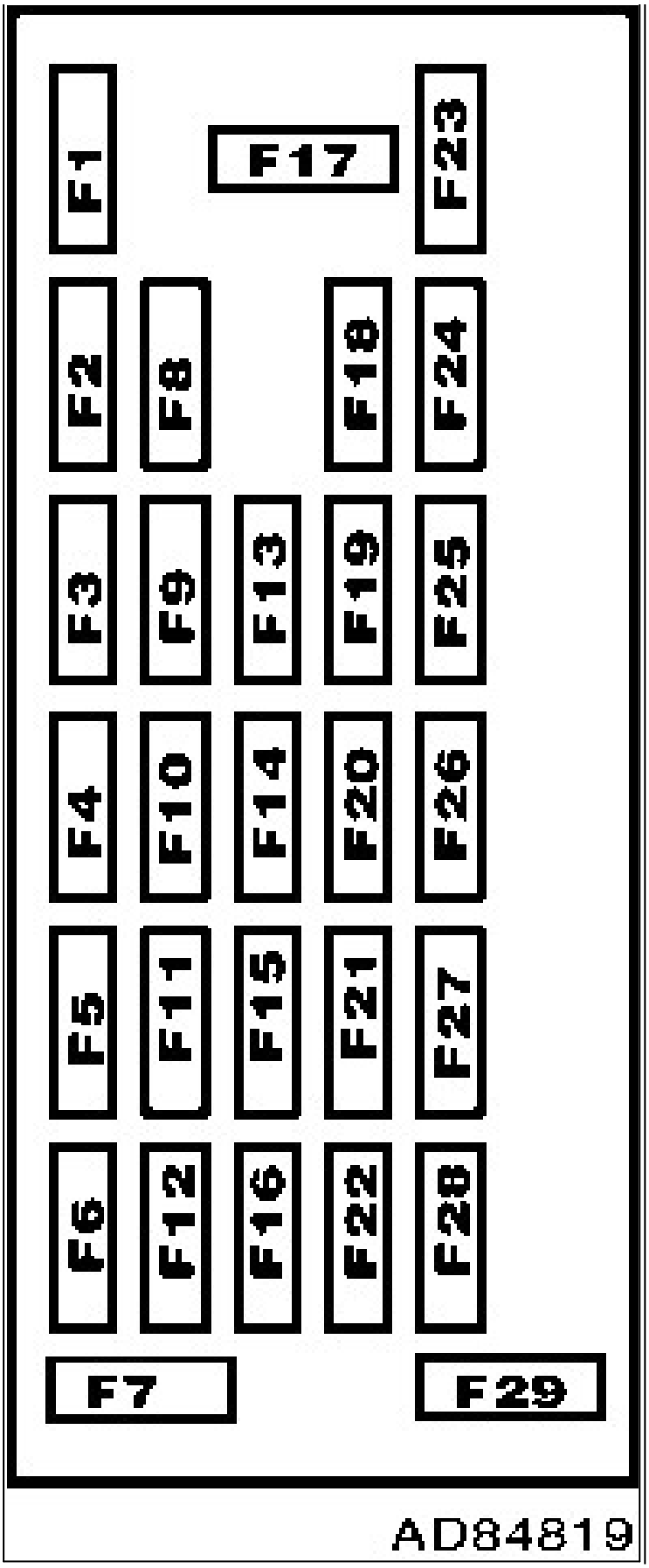

© Autodata Limited 2004
26.03.2007
Autodata

3

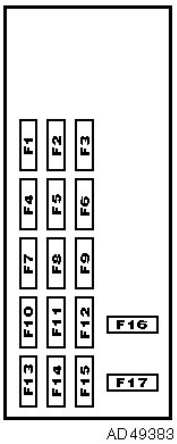

4

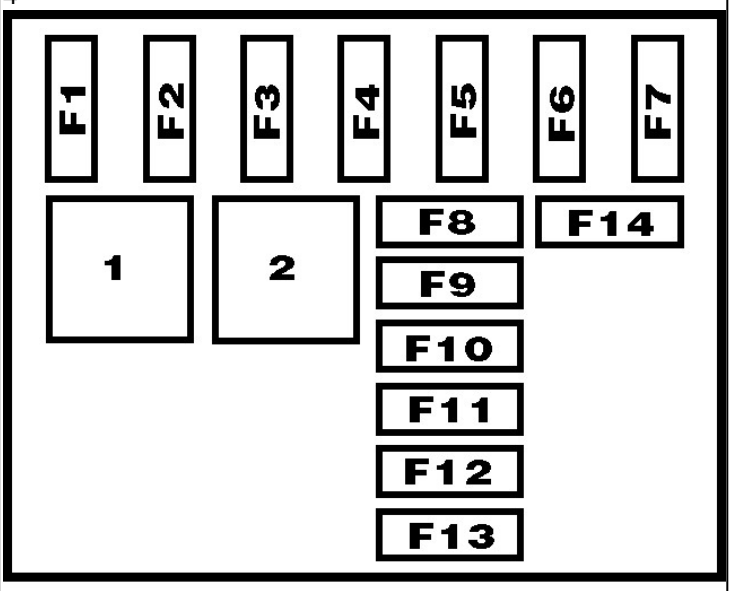

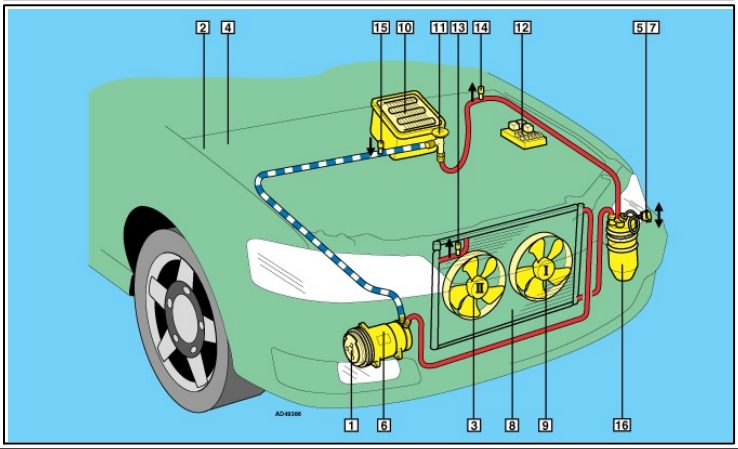

© Autodata Limited 2004

Setting data - Four wheels				
Notes			**Specified value**	**Measured value**
	Load positioning		**unladen**	
	Fuel tank - percentage full	%	**100**	
	Toe-in (N = negative, toe-out)	mm	**1±3**	
	Toe-in	deg	**0°12'±24'**	
	Toe-in	deg-1/100	**0,20±0,40**	
	Camber	deg	**0°52'N±1°**	
	Camber	deg-1/100	**0,87N±1**	
	Tolerance left/right	deg	**1°30'**	
	Tolerance left/right	deg-1/100	**1,50**	
	Camber adjustment		**$ADJ**	
	Castor	deg	**2°4'±1°**	
	Castor	deg-1/100	**2,07±1**	
	Tolerance left/right	deg	**1°30'**	
	Tolerance left/right	deg-1/100	**1,50**	
	Castor adjustment		**Not adjustable**	
	KPI (SAI)	deg	**13°22'**	
	KPI (SAI)	deg-1/100	**13,37**	
	Included angle	deg	**12°30'**	
	Included angle	deg-1/100	**12,50**	
	Lock angles - max. inner	deg	**38°±3°**	
	Lock angles - max. inner	deg-1/100	**38±3**	
	Lock angles - max. outer	deg	**32°±3°**	
	Lock angles - max. outer	deg-1/100	**32±3**	
	Rear toe-in	mm	**1±3**	
	Rear toe-in	deg	**0°12'±24'**	
	Rear toe-in	deg-1/100	**0,20±0,40**	
	Rear toe-in adjustment		**$ADJ**	
	Rear camber	deg	**0°56'N±1°**	
	Rear camber	deg-1/100	**0,93N±1**	
	Rear tolerance left/right	deg	**1°30'**	
	Rear tolerance left/right	deg-1/100	**1,50**	
	Rear camber adjustment		**Not adjustable**	

Camber adjustment

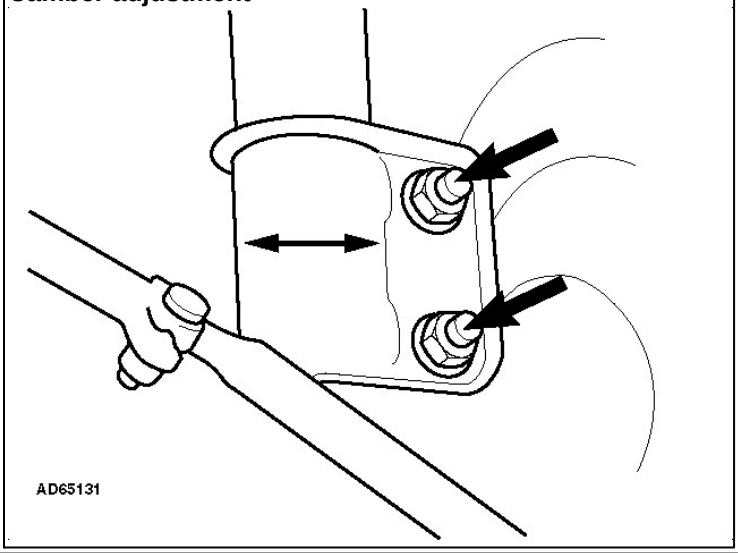

Rear toe-in adjustment

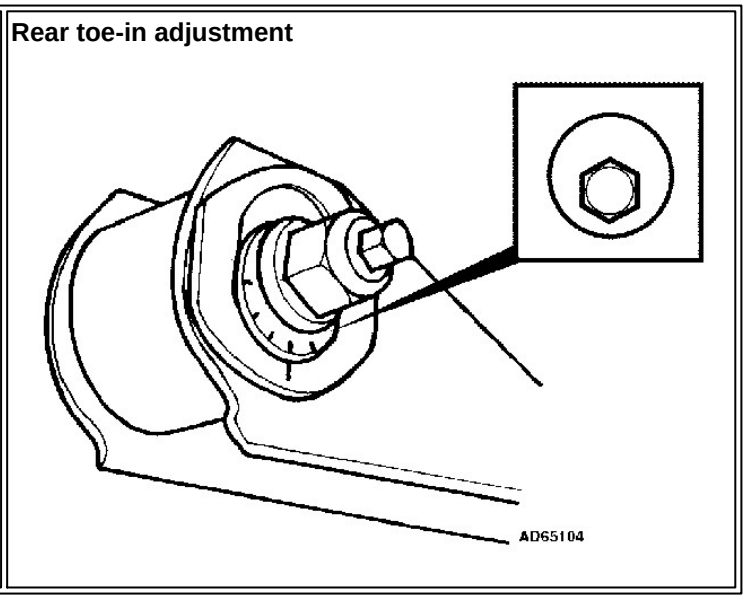

Accessing trouble codes

- Ensure ignition switched OFF.
- Bridge data link connector (DLC) terminals GND and TEN Fig. 1 .
- Connect LED test lamp between terminals FEN and B+ Fig. 1 .

NOTE: Connect LED test lamp positive connection to DLC terminal B+.

- Switch ignition ON.
- Count LED flashes. Note trouble codes. Compare with trouble code table.
- Long flashes indicate the LH digit.
- Short flashes indicate the RH digit.
- Switch ignition OFF.
- The ECM fault memory can also be checked using suitable diagnostic equipment connected to the data link connector (DLC).

Erasing trouble codes

- Ensure ignition switched OFF.
- Disconnect battery earth lead.
- Depress brake pedal for 3 seconds.
- Reconnect battery earth lead.
- Repeat checking procedure to ensure no data remains in ECM fault memory.

WARNING: Disconnecting the battery may erase memory from electronic units (e.g. radio, clock).

Trouble code identification

Trouble code	Fault location
01	Ignition pulse
02	Engine speed (RPM) sensor/crankshaft position (CKP) sensor - Ne-signal
03	Camshaft position (CMP) sensor - G-signal
04	Camshaft position (CMP) sensor - G-signal
05	Knock sensor (KS)
06	Vehicle speed sensor (VSS)
08	Mass air flow (MAF) sensor/volume air flow (VAF) sensor
09	Engine coolant temperature (ECT) sensor
10	Intake air temperature (IAT) sensor
11	Intake air temperature (IAT) sensor
12	Throttle position (TP) sensor
14	Barometric pressure (BARO) sensor
15	Heated oxygen sensor (HO2S) - LH
16	Exhaust gas recirculation (EGR) sensor
17	Oxygen sensor (O2S)/heated oxygen sensor (HO2S)
23	Heated oxygen sensor (HO2S) - RH
24	Heated oxygen sensor (HO2S) - RH
25	Fuel pressure regulator control solenoid
26	Evaporative emission (EVAP) canister purge valve
28	Exhaust gas recirculation (EGR) solenoid - vacuum
29	Exhaust gas recirculation (EGR) solenoid - vent
34	Idle air control (IAC) valve
35	Fuel pressure regulator control solenoid 2

© Autodata Limited 2004
26.03.2007
V5.500-
Autodata

41	Intake manifold air control solenoid 1
46	Intake manifold air control solenoid 2
55	Speed sensor - AT torque converter
56	Temperature sensor - AT
60	Solenoid valve - 1-2 shift AT
61	Solenoid valve - 2-3 shift AT
62	Solenoid valve - 3-4 shift AT
63	Solenoid valve - lock-up AT
64	Solenoid valve - 3-2 shift AT
64	Engine coolant blower motor relay - K8-DOHC
65	Lock-up control solenoid valve (AT)
66	Line pressure solenoid (AT)
67	Engine coolant blower motor relay - 1/low temperature
68	Engine coolant blower motor relay - high temperature
69	Engine coolant blower motor temperature sensor

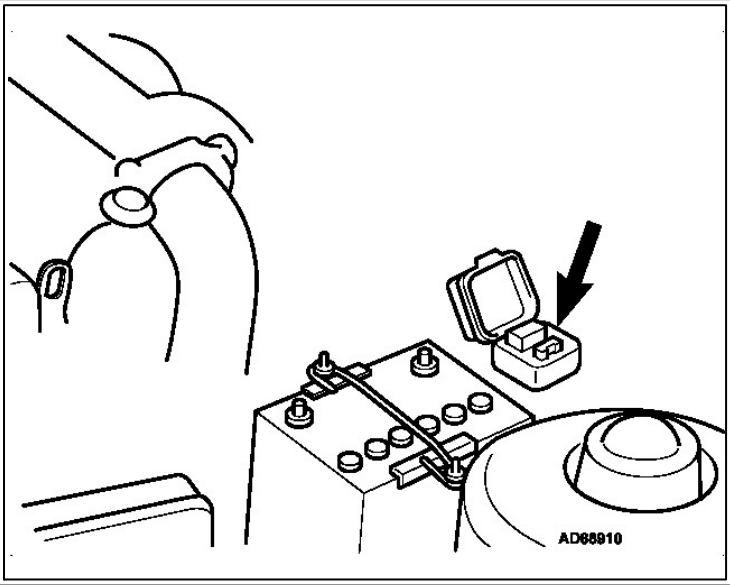
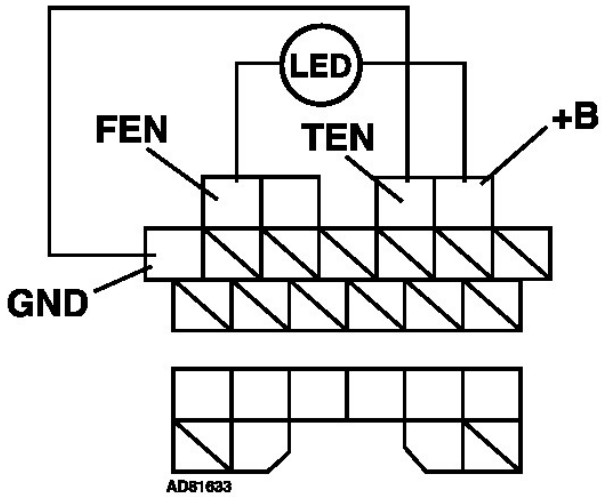
1