CHRYSLER

2010

300

OWNER'S MANUAL

Downloaded from www.Manualslib.com manuals search engine

TABLE OF CONTENTS

SECTION		PAGE	
1	INTRODUCTION	3	1
2	THINGS TO KNOW BEFORE STARTING YOUR VEHICLE	9	2
3	UNDERSTANDING THE FEATURES OF YOUR VEHICLE	85	3
4	UNDERSTANDING YOUR INSTRUMENT PANEL	209	4
5	STARTING AND OPERATING	305	5
6	WHAT TO DO IN EMERGENCIES	399	6
7	MAINTAINING YOUR VEHICLE	421	7
8	MAINTENANCE SCHEDULES	485	8
9	IF YOU NEED CONSUMER ASSISTANCE	505	9
10	INDEX	515	10

Downloaded from www.Manualslib.com manuals search engine

Downloaded from www.Manualslib.com manuals search engine

INTRODUCTION

CONTENTS

■ Introduction 4
■ How To Use This Manual 4
■ Warnings And Cautions 6
■ Vehicle Identification Number 6
■ Vehicle Modifications/Alterations 7

Downloaded from www.Manualslib.com manuals search engine

INTRODUCTION

Congratulations on selecting your new Chrysler Group LLC vehicle. Be assured that it represents precision workmanship, distinctive styling, and high quality - all essentials that are traditional to our vehicles.

This Owner's Manual has been prepared with the assistance of service and engineering specialists to acquaint you with the operation and maintenance of your vehicle. It is supplemented by a Warranty Information Booklet, located on the DVD, and various customer-oriented documents. Please take the time to read these publications carefully. Following the instructions and recommendations in this manual will help assure safe and enjoyable operation of your vehicle.

NOTE: After you read the manual, it should be stored in the vehicle for convenient referencing and remain with the vehicle when sold, so that the new owner will be aware of all safety warnings.

When it comes to service, remember that your authorized dealer knows your vehicle best, has factory-trained technicians and genuine MOPAR® parts, and cares about your satisfaction.

HOW TO USE THIS MANUAL

Consult the Table of Contents to determine which section contains the information you desire.

Since the specification of your vehicle depends on the items of equipment ordered, certain descriptions and illustrations may differ from your vehicle's equipment

The detailed index at the back of this Owner's Manual contains a complete listing of all subjects.

Consult the following table for a description of the symbols that may be used on your vehicle or throughout this Owner's Manual:

Downloaded from www.Manualslib.com manuals search engine

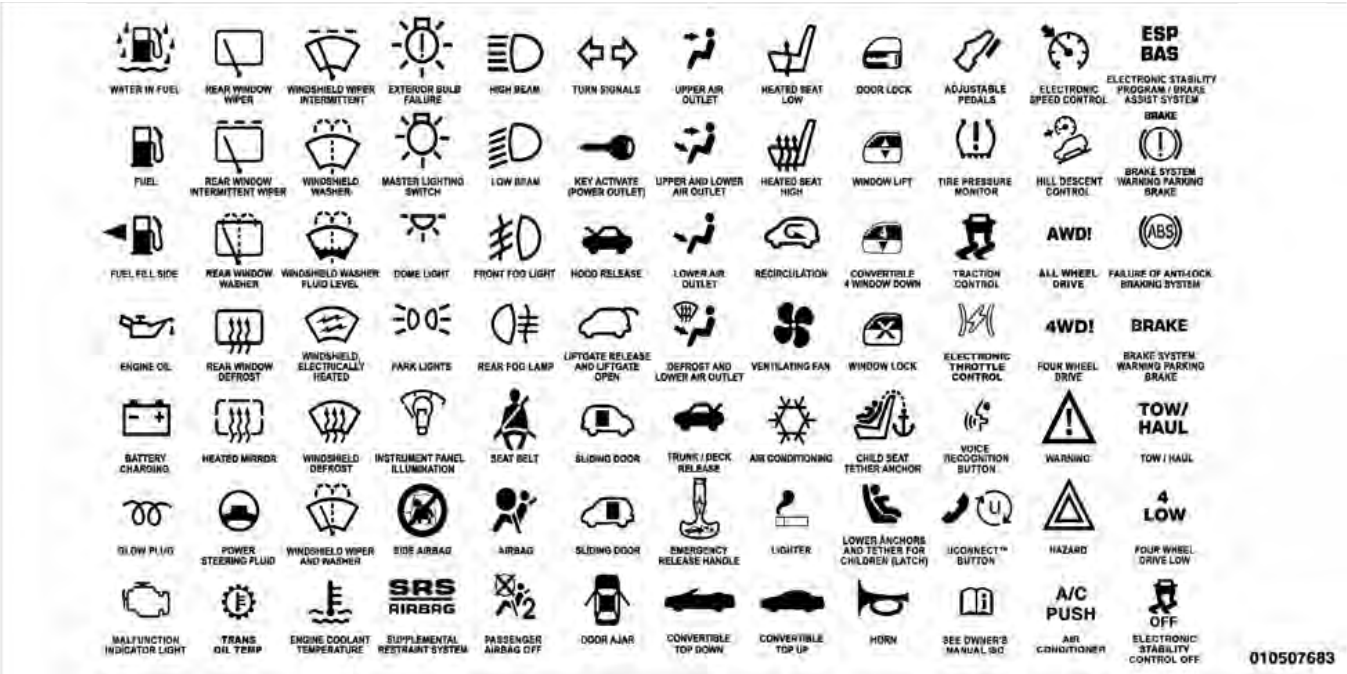

Downloaded from www.Manualslib.com manuals search engine

WARNINGS AND CAUTIONS

This Owner's Manual contains **WARNINGS** against operating procedures that could result in an accident or bodily injury. It also contains **CAUTIONS** against procedures that could result in damage to your vehicle. If you do not read this entire manual, you may miss important information. Observe all Warnings and Cautions.

VEHICLE IDENTIFICATION NUMBER

The Vehicle Identification Number (VIN) is on the left front corner of the instrument panel. The VIN is visible from outside of the vehicle through the windshield. This number also appears on the Automobile Information Disclosure Label affixed to a window on your vehicle, the vehicle registration, and the title.

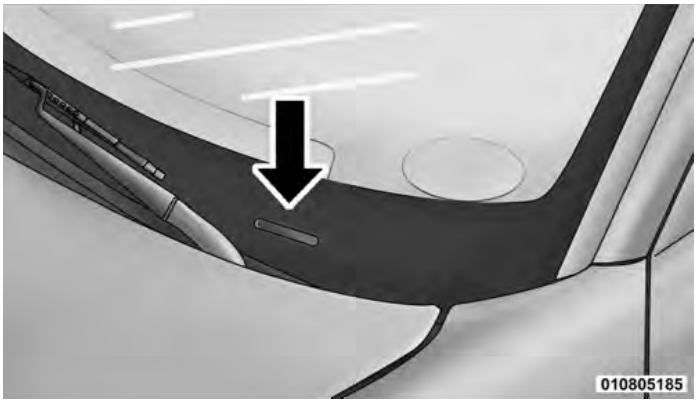

VIN Location

NOTE: It is illegal to remove or alter the VIN.

Downloaded from www.Manualslib.com manuals search engine

VEHICLE MODIFICATIONS/ALTERATIONS

WARNING!

Any modifications or alterations to this vehicle could seriously affect its roadworthiness and safety and may lead to an accident resulting in serious injury or death.

Downloaded from www.Manualslib.com manuals search engine

Downloaded from www.Manualslib.com manuals search engine

THINGS TO KNOW BEFORE STARTING YOUR VEHICLE

CONTENTS

- A Word About Your Keys 12
  - Wireless Ignition Node (WIN) 12
  - Key FOB 13
  - Removing Key FOB From Ignition 14
  - Key-In-Ignition Reminder 15
- Sentry Key® 16
  - Replacement Keys 17
  - Customer Key Programming 17
  - General Information 17
- Vehicle Security Alarm — If Equipped 18
  - Rearming Of The System 18
  - To Arm The System 18
  - To Disarm The System 19
- Illuminated Entry — If Equipped 20
- Remote Keyless Entry (RKE) 20
  - To Unlock The Doors 21
  - To Lock The Doors 24
  - To Unlatch The Trunk 25

Downloaded from www.Manualslib.com manuals search engine

- ◻ Using The Panic Alarm 25
- ◻ Programming Additional Transmitters 25
- ◻ Transmitter Battery Replacement 26
- ◻ General Information 27

■ Remote Starting System — If Equipped 27
- ◻ How To Use Remote Start 28

■ Door Locks 30
- ◻ Manual Door Locks 30
- ◻ Power Door Locks 32
- ◻ Passive Entry System — If Equipped 35
- ◻ Child Protection Door Lock 37

■ Windows 40
- ◻ Power Windows 40
- ◻ Wind Buffeting 43

■ Trunk Lock And Release 43

■ Trunk Safety Warning 44
- ◻ Trunk Emergency Release 44

■ Occupant Restraints 45
- ◻ Lap/Shoulder Belts 46
- ◻ Lap/Shoulder Belt Untwisting Procedure 52
- ◻ Automatic Locking Retractors (ALR) Mode — If Equipped 52
- ◻ Seat Belt Pretensioners — If Equipped 53
- ◻ Enhanced Seat Belt Use Reminder System (BeltAlert®) 53
- ◻ Seat Belts And Pregnant Women 55
- ◻ Seat Belt Extender 55

Downloaded from www.Manualslib.com manuals search engine

□ Supplemental Restraint System (SRS) — Airbags 56
□ Airbag Deployment Sensors And Controls . . . 62
□ Event Data Recorder (EDR) 69
□ Child Restraints 71
■ Engine Break-In Recommendations 80
■ Safety Tips 81
□ Transporting Passengers 81
□ Exhaust Gas 81
□ Safety Checks You Should Make Inside The Vehicle 82
□ Periodic Safety Checks You Should Make Outside The Vehicle 84

Downloaded from www.Manualslib.com manuals search engine

A WORD ABOUT YOUR KEYS

Your vehicle uses a keyless ignition system. This system consists of a Key Fob with Remote Keyless Entry (RKE) transmitter and a Wireless Ignition Node (WIN) with integral ignition switch. You can insert the Key Fob into the ignition switch with either side up.

Keyless Go Feature

This vehicle may be equipped with the Keyless Go feature, refer to "Starting Procedure" in "Starting And Operating" for further information.

Wireless Ignition Node (WIN)

The Wireless Ignition Node (WIN) operates similar to an ignition switch. It has four operating positions, three with detents and one that is spring-loaded. The detent positions are OFF, ACC, and RUN. The START position is a spring-loaded momentary contact position. When released from the START position, the switch automatically returns to the RUN position.

NOTE: If your vehicle is equipped with Keyless Go, the Electronic Vehicle Information Center (EVIC) will display the ignition switch position (OFF/ACC/RUN). Refer to "Electronic Vehicle Information Center (EVIC) — If Equipped" in "Understanding Your Instrument Panel" for further information.

Downloaded from www.Manualslib.com manuals search engine

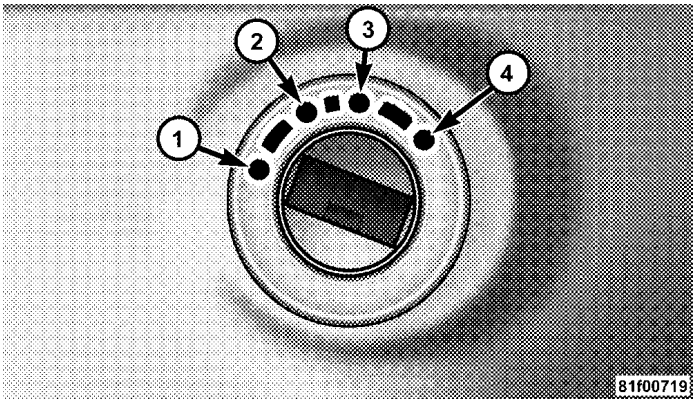

Wireless Ignition Node (WIN)

1 — OFF
2 — ACC (ACCESSORY)
3 — RUN
4 — START

Key Fob

The Key Fob operates the ignition switch. It also contains the Remote Keyless Entry (RKE) transmitter and an emergency key, which stores in the rear of the Key Fob.

NOTE: If your vehicle is equipped with Passive Entry/Keyless Go (PEKG), the Key Fob will also contain a special receiver that communicates with the vehicle. Passive Entry/Keyless Go Key Fobs can only be used with Passive Entry/Keyless Go equipped vehicles. Non-Passive Entry/Keyless Go Key Fobs can only be used with Non-Passive Entry/Keyless Go vehicles.

The emergency key allows for entry into the vehicle should the battery in the vehicle or the RKE transmitter go dead. The emergency key is also for locking the glove box. You can keep the emergency key with you when valet parking.

Downloaded from www.Manualslib.com manuals search engine

To remove the emergency key, slide the mechanical latch at the top of the Key Fob sideways with your thumb and then pull the key out with your other hand.

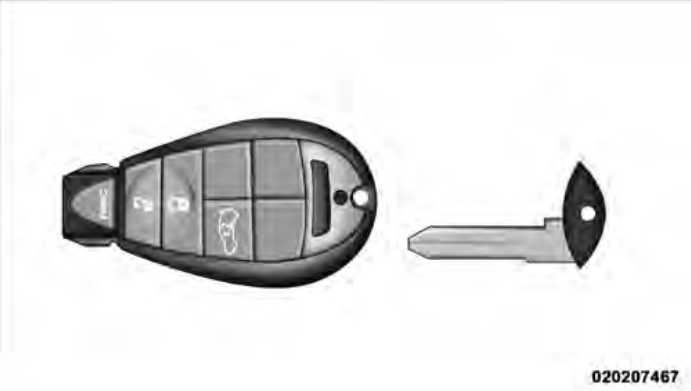

Emergency Key Removal

NOTE: You can insert the double-sided emergency key into the lock cylinders with either side up.

Removing Key Fob From Ignition

Place the shift lever in PARK. Turn the Key Fob to the OFF position and then remove the Key Fob.

With the Passive Entry/Keyless Go system, the EVIC will display the ignition switch position "OFF/ACC/RUN". Refer to "Electronic Vehicle Information Center (EVIC) — If Equipped" in "Understanding Your Instrument Panel" for further information.

NOTE:

- For vehicles not equipped with the Electronic Vehicle Information Center (EVIC), the power window switches, radio, power sunroof (if equipped), and power outlets will remain active for 10 minutes after the ignition switch is placed in the OFF position. Opening either front door will cancel this feature.
- For vehicles equipped with the EVIC, the power window switches, radio, power sunroof (if equipped),

Downloaded from www.Manualslib.com manuals search engine

and power outlets will remain active for up to 60 minutes after the ignition switch is placed in the OFF position. Opening either front door will cancel this feature. The time for this feature is programmable. Refer to "Electronic Vehicle Information Center (EVIC) — If Equipped/Personal Settings (Customer-Programmable Features)" in "Understanding Your Instrument Panel" for further information.

WARNING!

Never leave children alone in a vehicle. Leaving unattended children in a vehicle is dangerous for a number of reasons. A child or others could be seriously or fatally injured. Do not leave the Key Fob in the ignition or a vehicle equipped with Keyless Go in the ACC or RUN mode. A child could operate power windows, other controls, or move the vehicle.

CAUTION!

An unlocked car is an invitation to thieves. Always remove the Key Fob from the ignition and lock all doors when leaving the vehicle unattended.

Key-In-Ignition Reminder

Opening the driver's door when the Key Fob is in the ignition and the ignition switch position is OFF or ACC, sounds a signal to remind you to remove the Key Fob.

NOTE: The Key-In-Ignition reminder only sounds when the Key Fob is placed in the OFF or ACC ignition position.

If your vehicle is equipped with Keyless Go, opening the driver's door when the vehicle's ignition switch is placed in ACC or RUN (engine stopped) will cause the reminder chime to sound. Refer to "Starting Procedures" in "Starting And Operating" for further information.

Downloaded from www.Manualslib.com manuals search engine

SENTRY KEY®

The Sentry Key® Immobilizer System prevents unauthorized vehicle operation by disabling the engine. The system does not need to be armed or activated. Operation is automatic, regardless of whether the vehicle is locked or unlocked.

The system uses Key Fob with factory-mated Remote Keyless Entry (RKE) transmitter and Wireless Ignition Node (WIN) to prevent unauthorized vehicle operation. Therefore, only Key Fobs that are programmed to the vehicle can be used to start and operate the vehicle. The system will not allow the engine to crank if an invalid Key Fob is used to start and operate the vehicle.

After placing the ignition switch in the RUN position, the Vehicle Security Light will turn on for three seconds for a bulb check. If the light remains on after the bulb check, it indicates that there is a problem with the electronics. This condition will result in the engine being shut off after two seconds.

If the Vehicle Security Light turns on during normal vehicle operation (vehicle running for longer than 10 seconds), it indicates that there is a fault in the electronics. Should this occur, have the vehicle serviced as soon as possible by an authorized dealer.

NOTE: The Sentry Key® Immobilizer System is not compatible with aftermarket remote starting systems. Use of these systems may result in vehicle starting problems and loss of security protection.

All of the Key Fobs provided with your new vehicle have been programmed to the vehicle electronics.

Downloaded from www.Manualslib.com manuals search engine

Replacement Keys

NOTE: Only Key Fobs that are programmed to the vehicle electronics can be used to start and operate the vehicle. Once a Key Fob is programmed to a vehicle, it cannot be programmed to any other vehicle.

CAUTION!

- **Always remove the Key Fobs from the vehicle and lock all doors when leaving the vehicle unattended.**
- **For vehicles equipped with Keyless Go, always remember to place the ignition in OFF.**

At the time of purchase, the original owner is provided with a four-digit Personal Identification Number (PIN). Keep the PIN in a secure location. This number is required for authorized dealer replacement of Key Fobs.

Duplication of Key Fobs may be performed at an authorized dealer, this procedure consists of programming a blank Key Fob to the vehicle electronics. A blank Key Fob is one that has never been programmed.

NOTE: When having the Sentry Key® Immobilizer System serviced, bring all vehicle Key Fobs with you to the authorized dealer.

Customer Key Programming

Programming Key Fobs or RKE transmitters may be performed at an authorized dealer.

General Information

The Sentry Key® system complies with FCC rules Part 15 and with RSS-210 of Industry Canada. Operation is subject to the following conditions:

- This device may not cause harmful interference.

Downloaded from www.Manualslib.com manuals search engine

- This device must accept any interference that may be received, including interference that may cause undesired operation.

VEHICLE SECURITY ALARM — IF EQUIPPED

The Vehicle Security Alarm monitors the vehicle doors for unauthorized entry and the ignition switch (and Keyless Go Start/Stop button) for unauthorized operation. If something triggers the alarm, the Vehicle Security Alarm will prevent the vehicle from starting and provide the following audible and visible signals: the horn will pulse, the headlights, park lamps and/or turn signals will flash, and the Vehicle Security Light in the instrument cluster will flash.

Rearming of the System

If something triggers the alarm, and no action is taken to disarm it, the Vehicle Security Alarm will turn the horn off after three minutes, turn all of the visual signals off after 15 minutes, and then the Vehicle Security Alarm will rearm itself.

To Arm the System

Vehicles Not Equipped with Keyless Go

Remove the key from the ignition switch and either press a power door LOCK switch while the driver or passenger door is open or press the LOCK button on the Remote Keyless Entry (RKE) transmitter. After the last door is closed, or if all doors are closed, the Vehicle Security Alarm will arm itself in about 16 seconds. During that time, the Vehicle Security Light will flash. If it does not illuminate, the Vehicle Security Alarm is not arming. In addition, if you open a door during the arming period, the Vehicle Security Alarm will cancel the arming process. If you wish to rearm the Vehicle Security Alarm after closing the door, you must repeat one of the previously-described arming sequences.

Vehicles Equipped with Keyless Go

Press the Keyless Go Start/Stop button until the Electronic Vehicle Information Center (EVIC) indicates that

Downloaded from www.Manualslib.com manuals search engine

the vehicle ignition is "OFF" (refer to "Starting Procedures" in "Starting And Operating" for further information). Then either press the power door LOCK switch while the driver or passenger door is open, press the Remote Keyless Entry (RKE) transmitter LOCK button or press the Passive Entry Door Handle LOCK button (refer to "Door Locks" in "Things To Know Before Starting" for further information).

To Disarm the System

Vehicles Not Equipped with Keyless Go

Either press the UNLOCK button on the RKE transmitter or insert a valid ignition key into the ignition switch and turn the key to the ON position.

NOTE:

- The driver's door key cylinder and the trunk button on the RKE transmitter cannot arm or disarm the Vehicle Security Alarm.
- The Vehicle Security Alarm remains armed during trunk entry. Pressing the TRUNK button will not disarm the Vehicle Security Alarm. If someone enters the vehicle through the trunk, and opens any door, the alarm will sound.
- When the Vehicle Security Alarm is armed, the interior power door lock switches will not unlock the doors.

The Vehicle Security Alarm is designed to protect your vehicle; however, you can create conditions where the Vehicle Security Alarm will give you a false alarm. If one of the previously-described arming sequences has occurred, the Vehicle Security Alarm will arm regardless of whether you are in the vehicle or not. If you remain in the vehicle and open a door, the alarm will sound. If this occurs, disarm the Vehicle Security Alarm.

If the Vehicle Security Alarm is armed and the battery becomes disconnected the Vehicle Security Alarm will remain armed when the battery is reconnected. The

Downloaded from www.Manualslib.com manuals search engine

exterior lights will flash, the horn will sound, and the ignition will not start the vehicle. If this occurs, disarm the Vehicle Security Alarm.

Vehicles Equipped with Keyless Go

Either press the UNLOCK button on the RKE transmitter or grasp the Passive Entry Unlock Door Handle (refer to "Door Locks" in "Things To Know Before Starting" for further information), press the Keyless Go Start/Stop button (requires at least one valid Key Fob in the vehicle), or insert a valid Key Fob into the ignition switch (if the Start/Stop button is removed) and rotate it to the RUN position.

Tamper Alert

If something has triggered the Vehicle Security Alarm in your absence, the horn will sound three times when you disarm the Vehicle Security Alarm. Check the vehicle for tampering.

ILLUMINATED ENTRY — IF EQUIPPED

The courtesy lights will turn on when you use the Remote Keyless Entry (RKE) transmitter or unlock any door.

The lights will fade to off after approximately 30 seconds or they will immediately fade to off once the ignition switch is turned ON from the LOCK position.

NOTE: None of the courtesy lights will operate if the dimmer control is in the "defeat" position (extreme downward position), unless the overhead map/reading lights are turned on manually.

REMOTE KEYLESS ENTRY (RKE)

The RKE system allows you to lock or unlock the doors, open the trunk, or activate the Panic Alarm from distances up to approximately 66 ft (20 m) using a hand-held Key Fob with RKE transmitter. The RKE transmitter does not need to be pointed at the vehicle to activate the system.

Downloaded from www.Manualslib.com manuals search engine

NOTE: Inserting the Key Fob with RKE transmitter into the ignition switch disables all buttons on that RKE transmitter; however, the buttons on the remaining RKE transmitters will continue to work. Driving at speeds 5 mph (8 km/h) and above disables all RKE transmitter buttons for all RKE transmitters.

Key Fob with RKE Transmitter

To Unlock the Doors

Press and release the UNLOCK button on the RKE transmitter once to unlock the driver's door or twice within five seconds to unlock all doors. The turn signal lights will flash to acknowledge the unlock signal. The illuminated entry system will also turn on.

If your vehicle is equipped with Passive Entry, refer to "Passive Entry System — If Equipped" under "Door Locks" for further information.

Remote Key Unlock, Driver Door/All Doors 1st Press

This feature lets you program the system to unlock either the driver's door or all doors on the first press of the UNLOCK button on the RKE transmitter. To change the current setting, proceed as follows:

- For vehicles equipped with the Electronic Vehicle Information Center (EVIC), refer to "Electronic Vehicle Information Center (EVIC) — If Equipped/Personal

Downloaded from www.Manualslib.com manuals search engine

Settings (Customer-Programmable Features)" in "Understanding Your Instrument Panel" for further information.

- For vehicles not equipped with the EVIC, perform the following procedure:

1. Press and hold the LOCK button on a programmed RKE transmitter for at least 4 seconds, but no longer than 10 seconds. Then, press and hold the UNLOCK button while still holding the LOCK button.

2. Release both buttons at the same time.

3. Test the feature while outside of the vehicle by pressing the LOCK/UNLOCK buttons on the RKE transmitter with the ignition switch in the OFF position and the key removed.

4. Repeat these steps if you want to return this feature to its previous setting.

NOTE: Pressing the LOCK button on the RKE transmitter while you are inside the vehicle will activate the security alarm. Opening a door with the Vehicle Security Alarm armed will cause the alarm to sound. Press the UNLOCK button to deactivate the security alarm.

Flash Lights with Remote Key Lock

This feature will cause the turn signal lights to flash when the doors are locked with the RKE transmitter. When this feature is turned on and the vehicle is equipped with the Passive Entry system, using the Passive Entry system to LOCK the vehicle will cause the parking lights to flash. This feature can be turned on or turned off. To change the current setting, proceed as follows:

- For vehicles equipped with the EVIC, refer to "Electronic Vehicle Information Center (EVIC) — If Equipped/Personal Settings (Customer-Programmable Features)" in "Understanding Your Instrument Panel" for further information.

Downloaded from www.Manualslib.com manuals search engine

- For vehicles not equipped with the EVIC, perform the following procedure:

1. Press and hold the UNLOCK button on a programmed RKE transmitter for at least 4 seconds, but no longer than 10 seconds. Then, press and hold the LOCK button while still holding the UNLOCK button.

2. Release both buttons at the same time.

3. Test the feature while outside of the vehicle by pressing the LOCK/UNLOCK buttons on the RKE transmitter with the ignition switch in the OFF position and the key removed.

4. Repeat these steps if you want to return this feature to its previous setting.

NOTE: Pressing the LOCK button on the RKE transmitter while you are in the vehicle will activate the security alarm. Opening a door with the security alarm activated will cause the alarm to sound. Press the UNLOCK button to deactivate the security alarm.

Turn Headlights On with Remote Key Unlock

This feature activates the headlights for up to 90 seconds when the doors are unlocked with the RKE transmitter. When this feature is turned on and the vehicle is equipped with the Passive Entry system, using the Passive Entry system to UNLOCK the vehicle will cause the parking lights to flash.

The time for this feature is programmable on vehicles equipped with the EVIC. Refer to "Electronic Vehicle Information Center (EVIC) — If Equipped/Personal Settings (Customer-Programmable Features)" in "Understanding Your Instrument Panel" for further information.

Downloaded from www.Manualslib.com manuals search engine

To Lock the Doors

Press and release the LOCK button on the RKE transmitter to lock all doors. The turn signal lights will flash and the horn will chirp to acknowledge the signal.

If the vehicle is equipped with Passive Entry, refer to "Passive Entry System — If Equipped" under "Door Locks" for further information.

Sound Horn with Remote Key Lock

This feature will cause the horn to chirp when the doors are locked with the RKE transmitter, or locked using the Passive Entry door handle lock button (if equipped). This feature can be turned on or turned off. To change the current setting, proceed as follows:

- For vehicles equipped with the EVIC, refer to "Electronic Vehicle Information Center (EVIC) — If Equipped/Personal Settings (Customer-Programmable Features)" in "Understanding Your Instrument Panel" for further information.
- For vehicles not equipped with the EVIC, perform the following procedure:

1. Press the LOCK button on a programmed RKE transmitter for at least 4 seconds, but no longer than 10 seconds. Then, press the PANIC button while still holding the LOCK button.

2. Release both buttons at the same time.

3. Test the feature while outside of the vehicle by pressing the LOCK button on the RKE transmitter with the ignition switch in the LOCK position and the key removed.

4. Repeat these steps if you want to return this feature to its previous setting.

NOTE: Pressing the LOCK button on the RKE transmitter while you are in the vehicle will activate the security

Downloaded from www.Manualslib.com manuals search engine

alarm. Opening a door with the security alarm activated will cause the alarm to sound. Press the UNLOCK button to deactivate the security alarm.

To Unlatch the Trunk

Press the TRUNK button on the RKE transmitter two times within five seconds to unlatch the trunk.

If the vehicle is equipped with Passive Entry, refer to "Passive Entry System — If Equipped" under "Door Locks" for further information.

Using the Panic Alarm

To turn the Panic Alarm feature on or off, press and hold the PANIC button on the RKE transmitter for at least one second and release. When the Panic Alarm is on, the headlights and park lights will flash, the horn will pulse on and off, and the interior lights will turn on.

The Panic Alarm will stay on for three minutes unless you turn it off by either pressing the PANIC button a second time or drive the vehicle at a speed of 15 mph (24 km/h) or greater.

NOTE:

- The interior lights will turn off if you place the ignition switch in the ACC or RUN position while the Panic Alarm is activated. However, the exterior lights and horn will remain on.
- You may need to be less than 35 ft (11 m) from the vehicle when using the RKE transmitter to turn off the Panic Alarm due to the radio frequency noises emitted by the system.

Programming Additional Transmitters

Programming Key Fobs or RKE transmitters may be performed at an authorized dealer.

Downloaded from www.Manualslib.com manuals search engine

Transmitter Battery Replacement

The recommended replacement battery is one CR2032 battery.

NOTE:

- Do not touch the battery terminals that are on the back housing or the printed circuit board.

1. Battery access is through a door located on the rear of the RKE transmitter. Insert a small, flat blade screwdriver into the slot and gently pry open the access door.

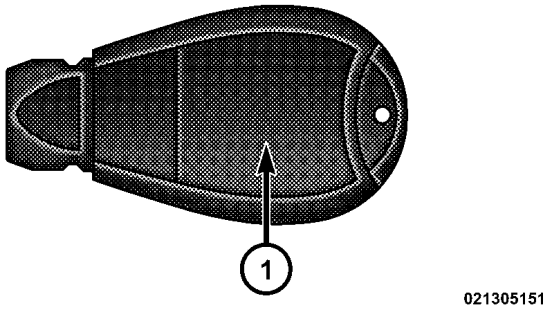

Battery Replacement

1— Battery Access Door

2. Remove and replace the battery. Avoid touching the new battery with your fingers. Skin oils may cause battery deterioration. If you touch a battery, clean it with rubbing alcohol.

Downloaded from www.Manualslib.com manuals search engine

3. Reposition the access door panel over the battery opening and snap into place.

General Information

This device complies with Part 15 of the FCC rules and RSS 210 of Industry Canada. Operation is subject to the following conditions:

- This device may not cause harmful interference.
- This device must accept any interference received, including interference that may cause undesired operation.

NOTE: Changes or modifications not expressly approved by the party responsible for compliance could void the user's authority to operate the equipment.

If your RKE transmitter fails to operate from a normal distance, check for these two conditions:

1. A weak battery in the RKE transmitter. The expected life of the battery is a minimum of three years.

2. Closeness to a radio transmitter such as a radio station tower, airport transmitter, and some mobile or CB radios.

REMOTE STARTING SYSTEM — IF EQUIPPED

This system uses the Key Fob Remote Keyless Entry (RKE) transmitter to start the engine conveniently from outside the vehicle while still maintaining security. The system has a range of approximately 300 ft (91 m).

NOTE:

- The vehicle must be equipped with an automatic transmission to be equipped with Remote Start.
- Obstructions between the vehicle and the Key Fob may reduce this range.

Downloaded from www.Manualslib.com manuals search engine

How to Use Remote Start

All of the following conditions must be met before the engine will remote start:

- Shift lever in PARK
- Doors closed
- Hood closed
- Trunk closed
- Hazard switch off
- Brake switch inactive (brake pedal not pressed)
- Ignition key removed from ignition switch
- Battery at an acceptable charge level
- RKE PANIC button not pressed

NOTE: For vehicles equipped with Keyless Go, the remote start feature will operate with the Start/Stop button installed in the ignition switch.

WARNING!

- **Do not start or run an engine in a closed garage or confined area. Exhaust gas contains Carbon Monoxide (CO) which is odorless and colorless. Carbon Monoxide is poisonous and can cause serious injury or death when inhaled.**
- **Keep Remote Keyless Entry (RKE) transmitters away from children. Operation of the Remote Start System, windows, door locks or other controls could cause serious injury or death.**

Downloaded from www.Manualslib.com manuals search engine

To Enter Remote Start Mode

Press and release the REMOTE START button on the RKE transmitter twice, within five seconds. The parking lights will flash and the horn will chirp twice (if programmed). Then, the engine will start and the vehicle will remain in the Remote Start mode for a 15-minute cycle.

NOTE:

- The park lamps will turn on and remain on during Remote Start mode.
- For security, power window and power sunroof operation (if equipped) are disabled when the vehicle is in the Remote Start mode.
- The engine can be started two consecutive times (two 15-minute cycles) with the RKE transmitter. However, the ignition switch must be cycled to the RUN position before you can repeat the start sequence for a third cycle.

To Exit Remote Start Mode without Driving the Vehicle

Press and release the REMOTE START button one time, or allow the engine to run for the entire 15-minute cycle.

NOTE: To avoid unintentional shut downs, the system will disable the one time press of the REMOTE START button for two seconds after receiving a valid Remote Start request.

To Exit Remote Start Mode and Drive the Vehicle

Before the end of the 15-minute cycle, press and release the UNLOCK button on the RKE transmitter to unlock the doors and disarm the Vehicle Security Alarm (if equipped). Then, prior to the end of the 15-minute cycle, insert the Key Fob into the ignition switch and turn the switch to the RUN position.

Vehicles Equipped with Passive Entry

Use the Passive Entry feature to unlock the vehicle, press the Start/Stop button one time if the Keyless Go Start/

Downloaded from www.Manualslib.com manuals search engine

Stop button is installed in the ignition switch, otherwise, insert the Key Fob into the ignition switch and turn to the RUN position. Refer to the "Passive Entry System — If Equipped" under "Door Locks" for more information.

NOTE:

- For vehicles not equipped with Keyless Go feature, the ignition switch must be in the ON position in order to drive the vehicle.
- For vehicles not equipped with Keyless Go feature, the message "Insert Key/Turn To On" will display in the EVIC until you insert the Key Fob. Once inserted, the message "Turn To On" will display in the EVIC until you turn the Key Fob to ON.
- For vehicles equipped with Keyless Go feature, the message "Push Button/Insert Key" will display in the EVIC until you push the START button.

DOOR LOCKS

Manual Door Locks

To lock each door, push the door lock plunger on each door trim panel downward. To unlock each door, pull the door lock plunger on each door trim panel upward.

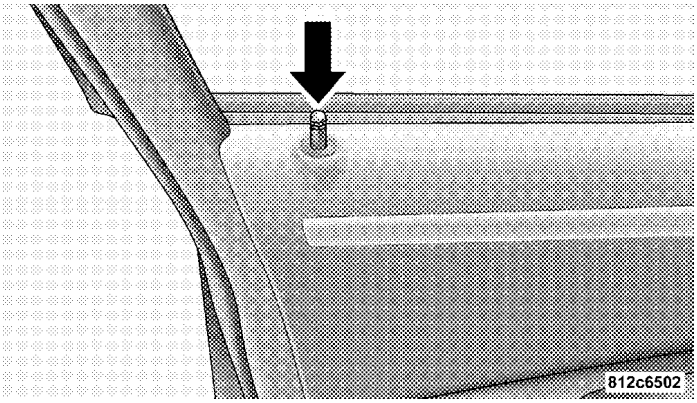

Door Lock Plunger

Downloaded from www.Manualslib.com manuals search engine

If the door lock plunger is down when you shut the door, the door will lock. Make sure the key is not inside the vehicle before closing the door.

WARNING!

- **For personal security and safety in the event of an accident, lock the vehicle doors before you drive as well as when you park and leave the vehicle.**
- **When leaving the vehicle, always remove the key from the ignition and lock your vehicle. Unsupervised use of vehicle equipment may cause severe personal injuries and death.**

(Continued)

WARNING! (Continued)

- **Never leave children alone in a vehicle. Leaving unattended children in a vehicle is dangerous for a number of reasons. A child or others could be seriously or fatally injured. Don't leave the key in the ignition or leave a vehicle with Keyless Go in the ACC or RUN position. A child could operate power windows, other controls, or move the vehicle.**

Downloaded from www.Manualslib.com manuals search engine

Power Door Locks

A power door lock switch is on each front door trim panel. Use this switch to lock or unlock the doors.

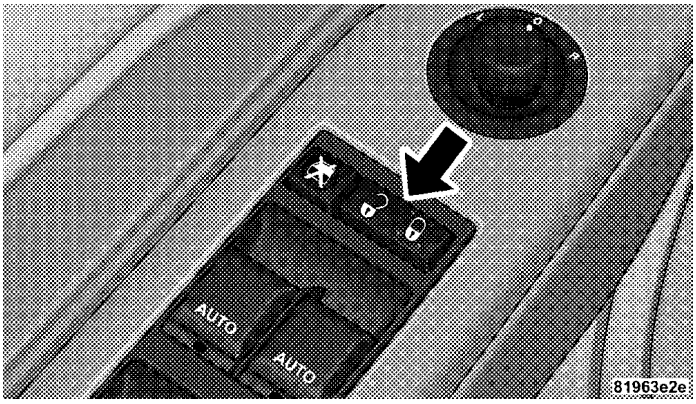

Power Door Lock Switch

If you press the power door lock switch while the Key Fob is in the ignition, ACC or RUN position and any front door is open, the power locks will not operate. This prevents you from accidentally locking the Key Fob in the vehicle. Removing the Key Fob, returning the ignition mode to the OFF position, or closing the door will allow the locks to operate. If a door is open, the Key Fob is in the ignition OFF or ACC position, a chime will sound as a reminder to remove the Key Fob.

If your vehicle is equipped with Keyless Go, opening the driver's door when the vehicle's ignition switch is placed in ACC or RUN (engine stopped) will cause the reminder chime to sound. Refer to "Starting Procedures" in "Starting And Operating" for further details.

Automatic Door Locks

The doors will lock automatically on vehicles with power door locks if all of the following conditions are met:

1. The Automatic Door Locks feature is enabled.
2. The transmission is in gear.
3. All doors are closed.

Downloaded from www.Manualslib.com manuals search engine

4. The throttle is pressed.

5. The vehicle speed is above 15 mph (24 km/h).

6. The doors were not previously locked using the power door lock switch or Remote Keyless Entry (RKE) transmitter.

Automatic Door Locks Programming

The Automatic Door Locks feature can be enabled or disabled as follows:

- For vehicles equipped with the Electronic Vehicle Information Center (EVIC), refer to "Electronic Vehicle Information Center (EVIC)/Personal Settings (Customer-Programmable Features)" in "Understanding Your Instrument Panel" for further information.
- For vehicles not equipped with the EVIC, perform the following procedure:

1. Close all doors and place the Key Fob in the ignition switch.

2. Cycle the ignition switch between OFF and RUN and then back to OFF four times ending up in the OFF position (do not start engine).

3. Press the power door LOCK switch to lock the doors.

4. A single chime will indicate the completion of the programming.

5. Cycle the ignition after performing steps one to four for the feature to be enabled or disabled.

6. Repeat these steps if you want to return this feature to its previous setting.

NOTE: Use the Automatic Door Locks feature in accordance with local laws.

Downloaded from www.Manualslib.com manuals search engine

Automatic Unlock Doors on Exit

The doors will unlock automatically on vehicles with power door locks if:

1. The Automatic Unlock Doors On Exit feature is enabled.

2. The transmission was in gear and the vehicle speed returned to 0 mph (0 km/h).

3. The transmission is in NEUTRAL or PARK.

4. The driver door is opened.

5. The doors were not previously unlocked.

6. The vehicle speed is 0 mph (0 km/h).

Automatic Unlock Doors on Exit Programming

The Automatic Unlock Doors On Exit feature can be enabled or disabled as follows:

- For vehicles equipped with the EVIC, refer to "Electronic Vehicle Information Center (EVIC)/Personal Settings (Customer-Programmable Features)" in "Understanding Your Instrument Panel" for further information.
- For vehicles not equipped with the EVIC, perform the following procedure:

1. Close all doors and place the Key Fob in the ignition.

2. Cycle the ignition switch between OFF and RUN and then back to OFF four times ending up in the OFF position (do not start engine).

3. Press the power door UNLOCK switch to unlock the doors.

4. A single chime will indicate the completion of the programming.

Downloaded from www.Manualslib.com manuals search engine

5. Repeat these steps if you want to return this feature to its previous setting.

NOTE: Use the Automatic Unlock Doors On Exit feature in accordance with local laws.

Passive Entry System — If Equipped

The Passive Entry system is an enhancement to the vehicle's Remote Keyless Entry (RKE) system. This feature allows you to lock and unlock the vehicle's door(s) without having to press the RKE transmitter lock or unlock buttons.

NOTE:

- Passive Entry may be programmed ON/OFF, refer to "Electronic Vehicle Information Center (EVIC)/ Personal Settings (Customer-Programmable Features)" in "Understanding Your Instrument Panel" for further information.
- If a passive entry door handle has not been used for 72 hours the passive entry feature for that handle may time out. Also, if it has been raining on a passive entry door handle for 24 hours, that door handle's passive entry feature may be deactivated. Pulling the deactivated front door handle will reactivate that door handle's passive entry feature.
- If wearing hand gloves, the Passive Entry door handle unlock sensitivity can be affected, resulting in a slower response time.

To Unlock From The Driver's Side:

With a valid Passive Entry RKE transmitter within 5 ft (1.5 m) of the driver's side of the vehicle, grab the front driver door handle to unlock the driver's door automatically.

NOTE: If "Unlock All Doors 1st Press" is programmed all doors will unlock when you grab hold of the front driver's door handle. To select between "Unlock Driver

Downloaded from www.Manualslib.com manuals search engine

Door 1st Press" and "Unlock All Doors 1st Press", refer to "Electronic Vehicle Information Center (EVIC)/Personal Settings (Customer-Programmable Features)" in "Understanding Your Instrument Panel" for further information.

To Unlock From The Passenger Side:
With a valid Passive Entry RKE transmitter within 5 ft (1.5 m) of the passenger side of the vehicle, grab the front passenger door handle to unlock all four doors automatically.

NOTE: All doors will unlock when the front passenger door handle is grabbed regardless of the driver's door unlock preference setting ("Unlock Driver Door 1st Press" or "Unlock All Doors 1st Press").

Preventing Inadvertent Locking Of Passive Entry RKE Transmitter In Vehicle

To minimize the possibility of unintentionally locking a Passive Entry RKE transmitter inside your vehicle, the Passive Entry system is equipped with an automatic door unlock feature. If one of the vehicle doors is open and the door panel switch is used to lock the vehicle, once all open doors have been closed, the vehicle checks the passenger compartment for any valid Passive Entry RKE transmitters. If one of the vehicle's Passive Entry RKE transmitters is detected, the Passive Entry System automatically unlocks ALL vehicle doors and chirps the horn three times (on the third attempt ALL doors will lock and the Passive Entry RKE transmitter can be locked in the vehicle).

To Enter the Trunk
With a valid Passive Entry RKE transmitter within 3 ft (1.0 m) of the deck lid, press the button on the left side of CHMSL, (Center High Mounted Stop Light) which is located on the deck lid.

NOTE: If you inadvertently leave your vehicle's Passive Entry RKE transmitter in the trunk and try to close the

Downloaded from www.Manualslib.com manuals search engine

deck lid, the deck lid will automatically unlatch, unless another one of the vehicle's Passive Entry RKE transmitters is outside the vehicle and within 3 ft (1.0 m) of the deck lid.

To Lock the Vehicle's Doors

The front door handles have LOCK buttons located on the outside of the handle, with one of the vehicle's Passive Entry RKE transmitters within 5 ft (1.5 m) of the driver's side, press the driver's door handle LOCK button to lock all four doors.

With one of the vehicle's Passive Entry RKE transmitters within 5 ft (1.5 m) of the passenger side, press the passenger's door handle LOCK button to lock all four doors.

NOTE:

- After an outside handle lock cycle, the system will not allow a passive entry to unlock the same door for two seconds. However, the RKE unlock function will work during this time period.
- The passive entry system will not operate if the RKE transmitter battery is dead.

The vehicle doors can also be locked by using the RKE transmitter lock button or the lock button located on the vehicle's interior door panel.

Child Protection Door Lock

To provide a safer environment for small children riding in the rear seats, the rear doors are equipped with a Child Protection Door Lock system.

To Engage the Child Protection Door Lock System

1. Open the rear door.

2. Insert the tip of the emergency key (or similar object) into the child lock control and pull it upward.

Downloaded from www.Manualslib.com manuals search engine

NOTE: For emergency key information, refer to "A Word About Your Keys".

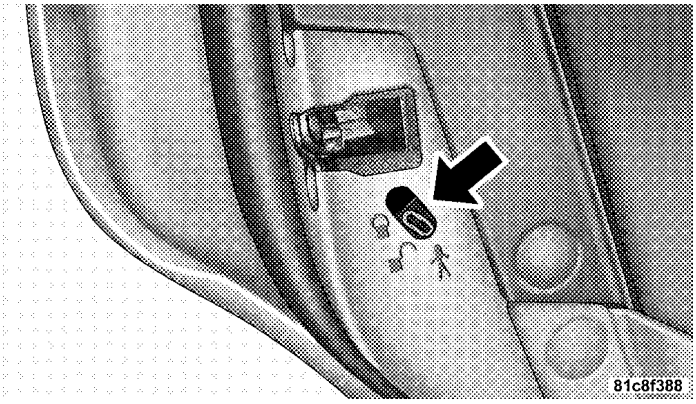

Child Lock Control

3. Repeat Steps 1 and 2 for the opposite rear door.

NOTE: When the Child Protection Door Lock system is engaged, the door can be opened only by using the outside door handle even though the inside door lock is in the unlocked position.

WARNING!

Avoid trapping anyone in a vehicle in a collision. Remember that the rear doors can only be opened from the outside when the child protection locks are engaged. Failure to follow this warning may result in serious injury or death.

NOTE:

- After engaging the Child Protection Door Lock system, always test the door from the inside to make certain it is in the desired position.

Downloaded from www.Manualslib.com manuals search engine

- For emergency exit with the system engaged, move the door lock plunger to the UNLOCK position, roll down the window and open the door with the outside door handle.

To Disengage the Child Protection Door Lock System

1. Open the rear door.

2. Insert the tip of the emergency key (or similar object) into the child lock control and pull it downward.

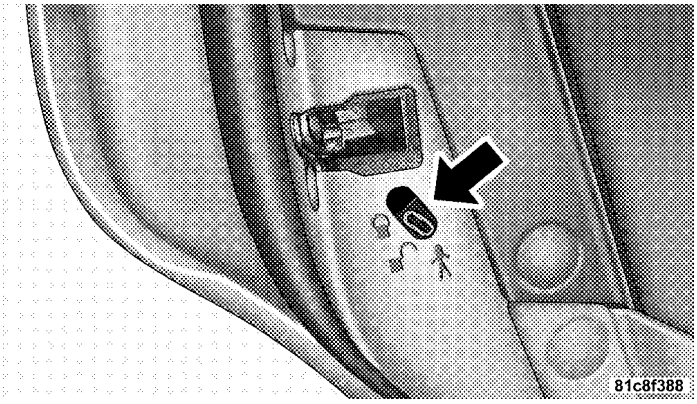

Child Lock Control

3. Repeat Steps 1 and 2 for the opposite rear door.

NOTE: After disengaging the Child Protection Door Lock system, always test the door from the inside to make certain it is in the desired position.

Downloaded from www.Manualslib.com manuals search engine

WINDOWS

Power Windows

The window controls on the driver's door control all the door windows.

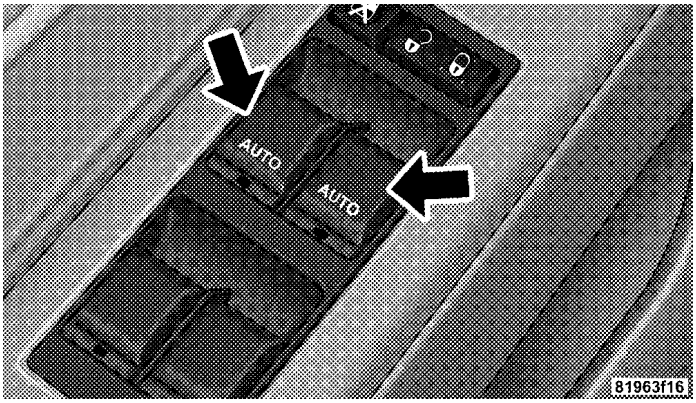

Power Window Switches

There are single window controls on each passenger door trim panel, which operate the passenger door windows. The window controls will operate only when the ignition switch is in the ACC or RUN position.

NOTE:

- For vehicles not equipped with the Electronic Vehicle Information Center (EVIC), the power window switches will remain active for 10 minutes after the ignition switch is turned to the OFF position. Opening either front door will cancel this feature.
- For vehicles equipped with the EVIC, the power window switches will remain active for up to 60 minutes after the ignition switch is turned to the OFF position. Opening either front door will cancel this feature. The time is programmable. Refer to "Electronic Vehicle Information Center (EVIC)/Personal Settings (Customer-Programmable Features)" in "Understanding Your Instrument Panel" for further information.

Downloaded from www.Manualslib.com manuals search engine

WARNING!

Never leave children in a vehicle with the key in the ignition switch or leave a vehicle with Keyless Go in the ACC or RUN position. Occupants, particularly unattended children, can become entrapped by the windows while operating the power window switches. Such entrapment may result in serious injury or death.

AUTO-Down Feature

The driver door power window switch and some model passenger door power window switches have an AUTO-down feature. Press the window switch to the second detent, release, and the window will go down automatically.

To open the window part way, press the window switch to the first detent and release it when you want the window to stop.

To stop the window from going all the way down during the AUTO-down operation, pull up on the switch briefly.

AUTO-Up Feature with Anti–Pinch Protection — If Equipped

Lift the window switch to the second detent, release, and the window will go up automatically.

To stop the window from going all the way up during the AUTO-up operation, push down on the switch briefly.

To close the window part way, lift the window switch to the first detent and release it when you want the window to stop.

NOTE:

- If the window runs into any obstacle during auto-closure, it will reverse direction and then go back down. Remove the obstacle and use the window switch again to close the window.

Downloaded from www.Manualslib.com manuals search engine

- Any impact due to rough road conditions may trigger the auto-reverse function unexpectedly during auto-closure. If this happens, pull the switch lightly to the first detent and hold to close the window manually.

WARNING!

There is no anti-pinch protection when the window is almost closed. Be sure to clear all objects from the window before closing.

Window Lockout Switch

The window lockout switch on the driver's door trim panel allows you to disable the window controls on the passenger doors. To disable the window controls, press and release the window lockout button (setting it in the DOWN position). To enable the window controls, press and release the window lockout button again (setting it in the UP position).

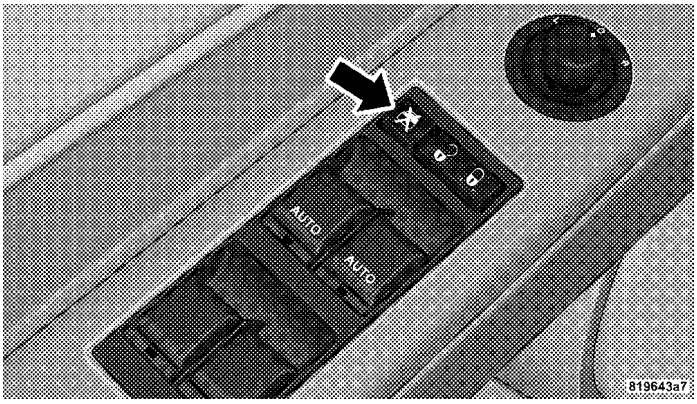

Window Lockout Switch

Reset

Anytime the vehicle battery is disconnected or goes dead, the AUTO-up function will be disabled. To reactivate the AUTO-up feature, perform the following procedure after vehicle power is restored:

Downloaded from www.Manualslib.com manuals search engine

1. Pull the window switch up to close window completely and continue to hold the switch up for an additional two seconds after the window is closed.

Wind Buffeting

Wind buffeting can be described as the perception of pressure on the ears or a helicopter-type sound in the ears. Your vehicle may exhibit wind buffeting with the windows down, or the sunroof (if equipped) in certain open or partially open positions. This is a normal occurrence and can be minimized. If the buffeting occurs with the rear windows open, then open the front and rear windows together to minimize the buffeting. If the buffeting occurs with the sunroof open, then adjust the sunroof opening to minimize the buffeting.

TRUNK LOCK AND RELEASE

The trunk lid can be released from inside the vehicle by pressing the TRUNK RELEASE button located on the instrument panel to the left of the steering wheel.

NOTE: The transmission must be in PARK before the button will operate.

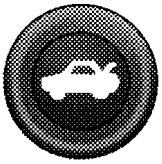

81ac2fd7

Trunk Release Button

The trunk lid can be released from outside the vehicle by pressing the TRUNK button on the Remote Keyless Entry (RKE) transmitter twice within five seconds.

With the ignition switch in the RUN position, the Trunk Open symbol will display in the instrument cluster indicating that the trunk is open. The odometer display will reappear once the trunk is closed.

Downloaded from www.Manualslib.com manuals search engine

With the ignition switch in the OFF position or the key removed from the ignition switch, the Trunk Open symbol will display until the trunk is closed.

Refer to "Passive Entry — If Equipped" under "Door Locks" in this section for more information on trunk operation with the Passive Entry feature.

TRUNK SAFETY WARNING

WARNING!

Do not allow children to have access to the trunk, either by climbing into the trunk from outside, or through the inside of the vehicle. Always close the trunk lid when your vehicle is unattended. Once in the trunk, young children may not be able to escape, even if they entered through the rear seat. If trapped in the trunk, children can die from suffocation or heat stroke.

Trunk Emergency Release

The trunk of your vehicle is equipped with an emergency release handle. It is located on the inside of the trunk lid, near the latch, and is coated so that it glows in a darkened trunk. Pull on the handle to open the trunk.

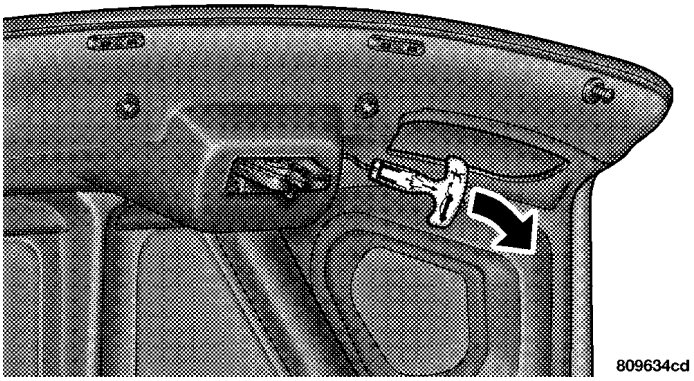

Trunk Emergency Release

Downloaded from www.Manualslib.com manuals search engine

OCCUPANT RESTRAINTS

Some of the most important safety features in your vehicle are the restraint systems:

- Three-point lap and shoulder belts for the driver and all passengers
- Advanced Front Airbags for driver and front passenger
- Supplemental Side Airbag Inflatable Curtains (SABIC) for the driver and passengers seated next to a window — if equipped
- An energy-absorbing steering column and steering wheel
- Knee bolsters/blockers for front seat occupants
- Front seat belts incorporate pretensioners to enhance occupant protection by managing occupant energy during an impact event — if equipped

If you will be carrying children too small for adult-sized seat belts, the seat belts or the Lower Anchors and Tether for CHildren (LATCH) feature can be used to hold infant and child restraint systems. For more information on LATCH, see Lower Anchors and Tether for CHildren (LATCH).

NOTE: The Advanced Front Airbags have a multistage inflator design. This allows the airbag to have different rates of inflation based on the severity and type of collision.

Please pay close attention to the information in this section. It tells you how to use your restraint system properly, to keep you and your passengers as safe as possible.

Downloaded from www.Manualslib.com manuals search engine

WARNING!

In a collision, you and your passengers can suffer much greater injuries if you are not properly buckled up. You can strike the interior of your vehicle or other passengers, or you can be thrown out of the vehicle. Always be sure you and others in your vehicle are buckled up properly.

Buckle up even though you are an excellent driver, even on short trips. Someone on the road may be a poor driver and cause a collision that includes you. This can happen far away from home or on your own street.

Research has shown that seat belts save lives, and they can reduce the seriousness of injuries in a collision. Some of the worst injuries happen when people are thrown from the vehicle. Seat belts reduce the possibility of ejection and the risk of injury caused by striking the inside of the vehicle. **Everyone in a motor vehicle should be belted at all times.**

Lap/Shoulder Belts

All seating positions in your vehicle are equipped with lap/shoulder belts.

The belt webbing retractor is designed to lock during very sudden stops or impacts. This feature allows the shoulder part of the belt to move freely with you under normal conditions. However, in a collision, the belt will lock and reduce your risk of striking the inside of the vehicle or being thrown out.

Downloaded from www.Manualslib.com manuals search engine

WARNING!

- It is dangerous to ride in a cargo area, inside or outside of a vehicle. In a collision, people riding in these areas are more likely to be seriously injured or killed.
- Do not allow people to ride in any area of your vehicle that is not equipped with seats and seat belts.
- Be sure everyone in your vehicle is in a seat and using a seat belt properly.
- Wearing a seat belt incorrectly is dangerous. Seat belts are designed to go around the large bones of your body. These are the strongest parts of your body and can take the forces of a collision best.

(Continued)

WARNING! (Continued)

- Wearing your belt in the wrong place could make your injuries in a collision much worse. You might suffer internal injuries, or you could even slide out of part of the belt. Follow these instructions to wear your seat belt safely and to keep your passengers safe, too.
- Two people should never be belted into a single seat belt. People belted together can crash into one another in a collision, hurting one another badly. Never use a lap/shoulder belt or a lap belt for more than one person, no matter what their size.

Downloaded from www.Manualslib.com manuals search engine

Lap/Shoulder Belt Operating Instructions

1. Enter the vehicle and close the door. Sit back and adjust the front seat.

Pulling Out the Lap/Shoulder Belt Latch Plate

2. The seat belt latch plate is above the back of your seat. Grasp the latch plate and pull out the belt. Slide the latch plate up the webbing as far as necessary to make the belt go around your lap.

3. When the belt is long enough to fit, insert the latch plate into the buckle until you hear a "click."

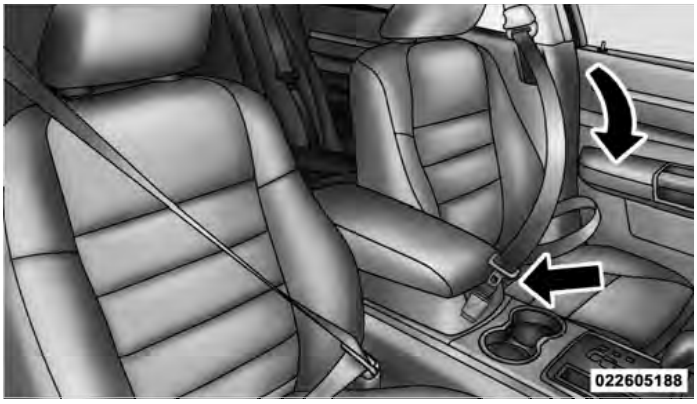

Inserting Latch Plate into Buckle

Downloaded from www.Manualslib.com manuals search engine

WARNING!

- **A belt that is buckled into the wrong buckle will not protect you properly. The lap portion could ride too high on your body, possibly causing internal injuries. Always buckle your belt into the buckle nearest you.**
- **A belt that is too loose will not protect you properly. In a sudden stop, you could move too far forward, increasing the possibility of injury. Wear your seat belt snugly.**

(Continued)

WARNING! (Continued)

- **A belt that is worn under your arm is dangerous. Your body could strike the inside surfaces of the vehicle in a collision, increasing head and neck injury. A belt worn under the arm can cause internal injuries. Ribs aren't as strong as shoulder bones. Wear the belt over your shoulder so that your strongest bones will take the force in a collision.**
- **A shoulder belt placed behind you will not protect you from injury during a collision. You are more likely to hit your head in a collision if you do not wear your shoulder belt. The lap and shoulder belt are meant to be used together.**

Downloaded from www.Manualslib.com manuals search engine

4. Position the lap belt across your thighs, below your abdomen. To remove slack in the lap belt portion, pull up a bit on the shoulder belt. To loosen the lap belt if it is too tight, tilt the latch plate and pull on the lap belt. A snug belt reduces the risk of sliding under the belt in a collision.

Removing Slack from Belt

WARNING!

- **A lap belt worn too high can increase the risk of internal injury in a collision. The belt forces won't be at the strong hip and pelvic bones, but across your abdomen. Always wear the lap belt as low as possible and keep it snug.**
- **A twisted belt can't do its job properly. In a collision, it could even cut into you. Be sure the belt is straight. If you can't straighten a belt in your vehicle, take it to your authorized dealer immediately and have it fixed.**

5. Position the shoulder belt on your chest so that it is comfortable and not resting on your neck. The retractor will withdraw any slack in the belt.

Downloaded from www.Manualslib.com manuals search engine

6. To release the belt, push the red button on the buckle. The belt will automatically retract to its stowed position. If necessary, slide the latch plate down the webbing to allow the belt to retract fully.

WARNING!

A frayed or torn belt could rip apart in a collision and leave you with no protection. Inspect the belt system periodically, checking for cuts, frays, or loose parts. Damaged parts must be replaced immediately. Do not disassemble or modify the system. Seat belt assemblies must be replaced after a collision if they have been damaged (bent retractor, torn webbing, etc.).

Adjustable Upper Shoulder Belt Anchorage

In the driver and front passenger seats, the shoulder belt can be adjusted upward or downward to position the belt away from your neck. Push and fully depress the button above the webbing to release the anchorage, then move it up or down to the position that fits you best.

Adjusting Upper Shoulder Belt

As a guide, if you are shorter than average you will prefer a lower position, and if you are taller than average

Downloaded from www.Manualslib.com manuals search engine

you will prefer a higher position. When you release the anchorage try to move it up and down to make sure that it is locked in position.

In the rear seat, move toward the center of the seat to position the belt away from your neck.

Lap/Shoulder Belt Untwisting Procedure

Use the following procedure to untwist a twisted lap/shoulder belt.

1. Position the latch plate as close as possible to the anchor point.

2. At about 6 to 12 in (15 to 30 cm) above the latch plate, grasp and twist the belt webbing 180 degrees to create a fold that begins immediately above the latch plate.

3. Slide the latch plate upward over the folded webbing. The folded webbing must enter the slot at the top of the latch plate.

4. Continue to slide the latch plate up until it clears the folded webbing.

Automatic Locking Retractors (ALR) Mode — If Equipped

In this mode, the shoulder belt is automatically pre-locked. The belt will still retract to remove any slack in the shoulder belt. The Automatic Locking Mode is available on all passenger-seating positions with a combination lap/shoulder belt.

When To Use The Automatic Locking Mode

Use the Automatic Locking Mode anytime a child safety seat is installed in a seating position that has a belt with this feature. Children 12 years old and younger should always be properly restrained in the rear seat.

How To Engage The Automatic Locking Mode

1. Buckle the combination lap and shoulder belt.

Downloaded from www.Manualslib.com manuals search engine

2. Grasp the shoulder portion and pull downward until the entire belt is extracted.

3. Allow the belt to retract. As the belt retracts, you will hear a clicking sound. This indicates the safety belt is now in the Automatic Locking Mode.

How To Disengage The Automatic Locking Mode
Unbuckle the combination lap/shoulder belt and allow it to retract completely to disengage the Automatic Locking Mode and activate the vehicle sensitive (emergency) locking mode.

Seat Belt Pretensioners — If Equipped

The seat belts for both front seating positions may be equipped with pretensioning devices that are designed to remove slack from the seat belt in the event of a collision. These devices improve the performance of the seat belt by assuring that the belt is tight about the occupant early in a collision. Pretensioners work for all size occupants, including those in child restraints.

NOTE: These devices are not a substitute for proper seat belt placement by the occupant. The seat belt still must be worn snugly and positioned properly.

The pretensioners are triggered by the Occupant Restraint Controller (ORC). Like the airbags, the pretensioners are single use items. A deployed pretensioner or a deployed airbag, must be replaced immediately.

Enhanced Seat Belt Use Reminder System (BeltAlert®)

If the driver's or front passenger's (if equipped with belt alert) seat belt has not been buckled within 60 seconds of starting the vehicle and if the vehicle speed is greater than 5 mph (8 km/h), the Enhanced Warning System (BeltAlert®) will alert the driver or front passenger to buckle the seat belt. The driver should also instruct all other occupants to buckle their seat belts. Once the warning is triggered, BeltAlert® will continue to chime and flash the Seat Belt Reminder Light for 96 seconds or

Downloaded from www.Manualslib.com manuals search engine

until the driver's or front passenger's seat belt is buckled. BeltAlert® will be reactivated if the driver's or passenger's seat belt is unbuckled for more than 10 seconds and the vehicle speed is greater than 5 mph (8 km/h).

For front passenger seats equipped with BeltAlert, your vehicle is equipped to detect when it is occupied. The BeltAlert® warning system is not activated when the front passenger seat is unoccupied. The BeltAlert® warning system may be triggered when an animal or heavy object is on the front passenger seat or when the seat is folded flat (if equipped). It is recommended that pets be restrained in the rear seat in pet harnesses or pet carriers that are secured by seat belts and cargo is properly stowed.

BeltAlert® Programming

The BeltAlert® can be enabled or disabled by your authorized dealer or by performing the following steps:

NOTE: Chrysler Group LLC does not recommend deactivating the BeltAlert®.

1. With all doors closed, and the ignition switch in any position except RUN or START, buckle the driver's seat belt.

2. Turn the ignition switch to the RUN position, but do not start the engine. Wait for the Seat Belt Reminder Light to turn off and then proceed to the next step.

NOTE: You must perform the following steps within 60 seconds of turning the ignition switch to the RUN position.

3. Within 60 seconds of turning the ignition switch to the RUN position, unbuckle and then re-buckle the driver's seat belt at least three times within 10 seconds, ending with the seat belt buckled.

Downloaded from www.Manualslib.com manuals search engine

NOTE: Watch for the Seat Belt Reminder Light to turn on while unbuckling the seat belt and turn off while re-buckling the seat belt. It may be necessary to retract the seat belt.

4. Turn the ignition switch to the OFF position. A single chime will sound to signify that you have successfully completed the programming.

BeltAlert® can be reactivated by repeating this procedure.

NOTE: Although BeltAlert® has been deactivated, the Seat Belt Reminder Light will continue to illuminate as long as the driver's seat belt is unbuckled.

Seat Belts and Pregnant Women

We recommend that pregnant women use the seat belts throughout their pregnancy. Keeping the mother safe is the best way to keep the baby safe.

Pregnant women should wear the lap part of the belt across the thighs and as snug across the hips as possible. Keep the belt low so that it does not come across the abdomen. That way the strong bones of the hips will take the force if there is a collision.

Seat Belt Extender

If a seat belt is too short even when fully extended and when the adjustable upper shoulder belt anchorage (if so equipped) is in its lowest position, your authorized dealer can provide you with a seat belt extender. This extender should be used only if the existing belt is not long enough. When it is not required, remove the extender and store it.

Downloaded from www.Manualslib.com manuals search engine

WARNING!

Using a seat belt extender when not needed can increase the risk of injury in a collision. Only use when the seat belt is not long enough when it is worn low and snug and in the recommended seating positions. Remove and store the extender when not needed.

Supplemental Restraint System (SRS) — Airbags

This vehicle has Advanced Front Airbags for both the driver and front passenger as a supplement to the seat belt restraint systems. The driver's Advanced Front Airbag is mounted in the center of the steering wheel. The passenger's Advanced Front Airbag is mounted in the instrument panel, above the glove compartment. The words SRS AIRBAG are embossed on the airbag covers.

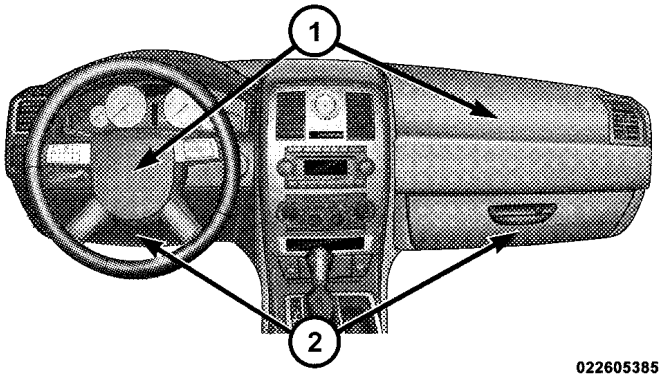

Front Airbag Components

1 — Airbags
2 — Knee Bolsters

NOTE: These airbags are certified to the new Federal regulations for Advanced Airbags.

Downloaded from www.Manualslib.com manuals search engine

The Advanced Front Airbags have a multistage inflator design. This allows the airbag to have different rates of inflation based on the severity and type of collision.

This vehicle may be equipped with driver and/or front passenger seat track position sensors that may adjust the inflation rate of the Advanced Front Airbags based upon seat position.

This vehicle may be equipped with a driver and/or front passenger seat belt buckle switch that detects whether the driver or front passenger seat belt is fastened. The seat belt buckle switch may adjust the inflation rate of the Advanced Front Airbags.

This vehicle may also be equipped with Supplemental Side Airbag Inflatable Curtains (SABIC) to protect the driver, front, and rear passengers sitting next to a window. If the vehicle is equipped with SABIC airbags, they are located above the side windows and their covers are also labeled: SRS AIRBAG.

NOTE:

- Airbag covers may not be obvious in the interior trim; but they will open during airbag deployment.
- After any collision, the vehicle should be taken to an authorized dealer immediately.

Airbag System Components

Your vehicle may be equipped with the following airbag system components:

- Occupant Restraint Controller (ORC)
- Airbag Warning Light
- Steering Wheel and Column
- Instrument Panel
- Knee Impact Bolster
- Driver Advanced Front Airbag
- Passenger Advanced Front Airbag

Downloaded from www.Manualslib.com manuals search engine

- Supplemental Side Airbag Inflatable Curtains (SABIC)
- Front and Side Impact Sensors
- Front Seat Belt Pretensioners, Seat Belt Buckle Switch, and Seat Track Position Sensors

Advanced Front Airbag Features

The Advanced Front Airbag system has multistage driver and front passenger airbags. This system provides output appropriate to the severity and type of collision as determined by the Occupant Restraint Controller (ORC), which may receive information from the front impact sensors.

The first stage inflator is triggered immediately during an impact that requires airbag deployment. The timing of the second stage determines whether the output force is low, medium, or high. If a low output is sufficient to meet the need, the remaining gas in the inflator is expended.

WARNING!

- **No objects should be placed over or near the airbag on the instrument panel, because any such objects could cause harm if the vehicle is in a collision severe enough to cause the airbag to inflate.**
- **Do not put anything on or around the airbag covers or attempt to open them manually. You may damage the airbags and you could be injured because the airbags may no longer be functional. The protective covers for the airbag cushions are designed to open only when the airbags are inflating.**
- **Do not drill, cut or tamper with the knee bolster in any way.**

(Continued)

Downloaded from www.Manualslib.com manuals search engine

WARNING! (Continued)

- **Do not mount any accessories to the knee bolster such as alarm lights, stereos, citizen band radios, etc.**

Supplemental Side Airbag Inflatable Curtain (SABIC) — If Equipped

SABIC airbags may offer side-impact and vehicle rollover protection to front and rear seat outboard occupants in addition to that provided by the body structure. Each airbag features inflated chambers placed adjacent to the head of each outboard occupant that reduce the potential for side-impact head injuries. The curtains deploy downward, covering both windows on the impact side.

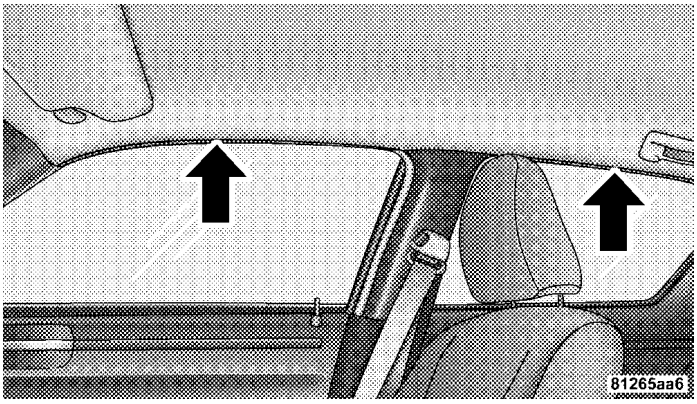

Supplemental Side Airbag Inflatable Curtains (SABIC)

NOTE:

- Should a vehicle rollover occur, the pretensioners and/or SABIC airbags on both sides of the vehicle may deploy.
- Airbag covers may not be obvious in the interior trim; but they will open during airbag deployment.

Downloaded from www.Manualslib.com manuals search engine

The system includes side impact sensors adjacent to both front and rear seat occupants that are calibrated to deploy the SABIC airbags during impacts that require airbag occupant protection.

WARNING!

- **If your vehicle is equipped with left and right Supplemental Side Airbag Inflatable Curtain (SABIC), do not stack luggage or other cargo up high enough to block the location of the SABIC. The area where the side curtain airbag is located should remain free from any obstructions.**
- **Do not use accessory seat covers or place objects between you and the side airbags; the performance could be adversely affected and/or objects could be pushed into you, causing serious injury.**

Knee Impact Bolsters

The Knee Impact Bolsters help protect the knees of the driver and the front passenger, and position front occupants for the best interaction with the Advanced Front Airbags.

Along with seat belts and pretensioners, Advanced Front Airbags work with the knee bolsters to provide improved protection for the driver and front passenger. Side airbags also work with seat belts to improve occupant protection.

Here are some simple steps you can take to minimize the risk of harm from a deploying airbag:

Children 12 years old and younger should always ride buckled up in a rear seat.

Downloaded from www.Manualslib.com manuals search engine

WARNING!

Infants in rear-facing child restraints should NEVER ride in the front seat of a vehicle with a passenger Advanced Front Airbag. An airbag deployment can cause severe injury or death to infants in that position.

Children that are not big enough to wear the vehicle seat belt properly (see Section on Child Restraints) should be secured in the rear seat in child restraints or belt-positioning booster seats. Older children who do not use child restraints or belt-positioning booster seats should ride properly buckled up in the rear seat. Never allow children to slide the shoulder belt behind them or under their arm.

If a child from 1 to 12 years old (not in a rear facing child seat) must ride in the front passenger seat, move the seat as far back as possible and use the proper child restraint. (Refer to "Child Restraints")

You should read the instructions provided with your child restraint to make sure that you are using it properly.

All occupants should ALWAYS wear their lap and shoulder belts properly.

The driver and front passenger seats should be moved back as far as practical to allow the Advanced Front Airbags room to inflate.

Do not lean against the door or window. If your vehicle has side airbags, and deployment occurs, the side airbags will inflate forcefully into the space between you and the door.

Downloaded from www.Manualslib.com manuals search engine

If the airbag system in this vehicle needs to be modified to accommodate a disabled person, contact the Customer Center. Phone numbers are provided under "If You Need Assistance".

WARNING!

- **Relying on the airbags alone could lead to more severe injuries in a collision. The airbags work with your seat belt to restrain you properly. In some collisions, the airbags won't deploy at all. Always wear your seat belts even though you have airbags.**

(Continued)

WARNING! (Continued)

- **Being too close to the steering wheel or instrument panel during Advanced Front Airbag deployment could cause serious injury, including death. Airbags need room to inflate. Sit back, comfortably extending your arms to reach the steering wheel or instrument panel.**
- **Side airbags also need room to inflate. Do not lean against the door or window. Sit upright in the center of the seat.**

Airbag Deployment Sensors and Controls

Occupant Restraint Controller (ORC)

The **ORC** is part of a Federally regulated safety system required for this vehicle.

The ORC determines if deployment of the front and/or side airbags in a frontal or side collision is required. Based on the impact sensors signals, a central electronic

Downloaded from www.Manualslib.com manuals search engine

ORC deploys the Advanced Front Airbags, SABIC airbags — if equipped, and front seat belt pretensioners — if equipped, as required, depending on the severity and type of impact.

Advanced Front Airbags are designed to provide additional protection by supplementing the seat belts in certain frontal collisions depending on the severity and type of collision. Advanced Front Airbags are not expected to reduce the risk of injury in rear, side, or rollover collisions.

The Advanced Front Airbags will not deploy in all frontal collisions, including some that may produce substantial vehicle damage — for example, some pole collisions, truck underrides, and angle offset collisions. On the other hand, depending on the type and location of impact, Advanced Front Airbags may deploy in crashes with little vehicle front-end damage but that produce a severe initial deceleration.

The side airbags will not deploy in all side collisions. Side airbag deployment will depend on the severity and type of collision.

Because airbag sensors measure vehicle deceleration over time, vehicle speed and damage by themselves are not good indicators of whether or not an airbag should have deployed.

Seat belts are necessary for your protection in all collisions, and also are needed to help keep you in position, away from an inflating airbag.

The ORC monitors the readiness of the electronic parts of the airbag system whenever the ignition switch is in the START or RUN position. If the key is in the OFF position, in the ACC position, or not in the ignition, the airbag system is not on and the airbags will not inflate.

Downloaded from www.Manualslib.com manuals search engine

The ORC contains a backup power supply system that may deploy the airbags even if the battery loses power or it becomes disconnected prior to deployment.

Also, the ORC turns on the Airbag Warning Light in the instrument panel for approximately six to eight seconds for a self-check when the ignition is first turned on. After the self-check, the Airbag Warning Light will turn off. If the ORC detects a malfunction in any part of the system, it turns on the Airbag Warning Light, either momentarily or continuously. A single chime will sound if the light comes on again after initial startup.

It also includes diagnostics that will illuminate the instrument cluster Airbag Warning Light if a malfunction is noted that could affect the airbag system. The diagnostics also record the nature of the malfunction.

WARNING!

Ignoring the Airbag Warning Light in your instrument panel could mean you won't have the airbags to protect you in a collision. If the light does not come on, stays on after you start the vehicle, or if it comes on as you drive, have the airbag system checked right away by an authorized dealer.

Driver and Passenger Airbag Inflator Units

The Driver and Passenger Airbag Inflator Units are located in the center of the steering wheel and the right side of the instrument panel. When the ORC detects a collision requiring the Advanced Front Airbags, it signals the inflator units. A large quantity of non-toxic gas is generated to inflate the Advanced Front Airbags. Different airbag inflation rates are possible, based on the collision type and severity. The steering wheel hub trim cover and the upper right side of the instrument panel

Downloaded from www.Manualslib.com manuals search engine

separate and fold out of the way as the airbags inflate to their full size. The airbags fully inflate in about 50 to 70 milliseconds. This is about half of the time it takes to blink your eyes. The airbags then quickly deflate while helping to restrain the driver and front passenger.

The Advanced Front Airbag gas is vented through the vent holes in the sides of the airbag. In this way, the airbags do not interfere with your control of the vehicle.

Supplemental Side Airbag Inflatable Curtain (SABIC) Inflator Units — If Equipped

During collisions where the impact is confined to a particular area of the side of the vehicle, the ORC may deploy the SABIC airbags, depending on the severity and type of collision. In these events, the ORC will deploy the SABIC only on the impact side of the vehicle.

A quantity of non-toxic gas is generated to inflate the side curtain airbag. The inflating side curtain airbag pushes the outside edge of the headliner out of the way and covers the window. The airbag inflates in about 30 ms (about one-quarter of the time that it takes to blink your eyes) with enough force to injure you if you are not belted and seated properly, or if items are positioned in the area where the side curtain airbag inflates. This especially applies to children. The side curtain airbag is only about 3-1/2 in (9 cm) thick when it is inflated.

Because airbag sensors estimate deceleration over time, vehicle speed and damage are not good indicators of whether or not an airbag should have deployed.

NOTE: In a rollover the pretensioners and/or SABIC airbags may deploy on both sides of the vehicle.

Front and Side Impact Sensors

In front and side impacts, impact sensors can aid the ORC in determining appropriate response to impact events. Additional sensors in the ORC determine the level of airbag deployment and provide verification.

Downloaded from www.Manualslib.com manuals search engine

Enhanced Accident Response System

In the event of an impact causing airbag deployment, if the communication network remains intact, and the power remains intact, depending on the nature of the event the ORC will determine whether to have the Enhanced Accident Response System perform the following functions:

- Cut off fuel to the engine.
- Flash hazard lights as long as the battery has power or until the ignition key is turned off.
- Turn on the interior lights, which remain on as long as the battery has power, until the ignition key is removed or the ignition switch is changed to OFF using the Keyless Go Start/Stop button.
- Unlock the doors automatically.

If a Deployment Occurs

The front airbags are designed to deflate immediately after deployment.

NOTE: Front and/or side airbags will not deploy in all collisions. This does not mean something is wrong with the airbag system.

If you do have a collision which deploys the airbags, any or all of the following may occur:

- The nylon airbag material may sometimes cause abrasions and/or skin reddening to the driver and front passenger as the airbags deploy and unfold. The abrasions are similar to friction rope burns or those you might get sliding along a carpet or gymnasium floor. They are not caused by contact with chemicals. They are not permanent and normally heal quickly. However, if you haven't healed significantly within a few days, or if you have any blistering, see your doctor immediately.

Downloaded from www.Manualslib.com manuals search engine

- As the airbags deflate, you may see some smoke-like particles. The particles are a normal by-product of the process that generates the non-toxic gas used for airbag inflation. These airborne particles may irritate the skin, eyes, nose, or throat. If you have skin or eye irritation, rinse the area with cool water. For nose or throat irritation, move to fresh air. If the irritation continues, see your doctor. If these particles settle on your clothing, follow the garment manufacturer's instructions for cleaning.

Do not drive your vehicle after the airbags have deployed. If you are involved in another collision, the airbags will not be in place to protect you.

WARNING!

Deployed airbags and seat belt pretensioners cannot protect you in another collision. Have the airbags, seat belt pretensioners, and the front passenger seat belt retractor assembly replaced by an authorized dealer immediately. Also, have the Occupant Restraint Controller (ORC) system serviced as well.

Downloaded from www.Manualslib.com manuals search engine

Maintaining Your Airbag System

WARNING!

- **Modifications to any part of the airbag system could cause it to fail when you need it. You could be injured if the airbag system is not there to protect you. Do not modify the components or wiring, including adding any kind of badges or stickers to the steering wheel hub trim cover or the upper right side of the instrument panel. Do not modify the front bumper, vehicle body structure, or add aftermarket side steps or running boards.**
- **It is dangerous to try to repair any part of the airbag system yourself. Be sure to tell anyone who works on your vehicle that it has an airbag system.**

(Continued)

WARNING! (Continued)

- **Do not attempt to modify any part of your advanced airbag system. The airbag may inflate accidentally or may not function properly if modifications are made. Take your vehicle to an authorized dealer for any advanced airbag system service. If your seat, including your trim cover and cushion, needs to be serviced in any way (including removal or loosening/tightening of seat attachment bolts), take the vehicle to your authorized dealer. Only manufacturer approved seat accessories may be used. If it is necessary to modify the airbag system for persons with disabilities, contact your authorized dealer.**

Downloaded from www.Manualslib.com manuals search engine

Airbag Warning Light

You will want to have the airbags ready to inflate for your protection in a collision. While the airbag system is designed to be maintenance free, if any of the following occurs, have an authorized dealer service the system immediately.

- The Airbag Warning Light does not come on for approximately six to eight seconds when the ignition switch is first placed into the RUN position.
- The Airbag Warning Light remains on after the approximate six to eight-second interval.
- The Airbag Warning Light comes on intermittently or remains on while driving.

NOTE: If the speedometer, tachometer, or any engine related gauges are not working, the Occupant Restraint Controller (ORC) may also be disabled. The airbags may not be ready to inflate for your protection. Promptly check the fuse block for blown fuses. Refer to the label located on the inside of the fuse block cover for the proper airbag fuses. See your authorized dealer if the fuse is good.

Event Data Recorder (EDR)

In the event of a collision, your vehicle is designed to record up to five seconds of specific vehicle data parameters (see list below) in an event data recorder prior to the moment of airbag deployment, or near deployment (if applicable), and up to a quarter second of either high-speed deceleration data or change in velocity during and/or after airbag deployment or near-deployment. EDR data is ONLY recorded if an airbag deploys, or nearly deploys, and is otherwise unavailable.

NOTE:

1. A near-deployment event occurs when the airbag sensor detects severe vehicle deceleration usually indicative of a crash, but not severe enough to warrant airbag deployment.

Downloaded from www.Manualslib.com manuals search engine

2. Under certain circumstances, EDR data may not be recorded (e.g., loss of battery power).

In conjunction with other data gathered during a complete accident investigation, the electronic data may be used by Chrysler Group LLC and others to learn more about the possible causes of crashes and associated injuries in order to assess and improve vehicle performance. In addition to crash investigations initiated by Chrysler Group LLC, such investigations may be requested by customers, insurance carriers, government officials, and professional crash researchers, such as those associated with universities, and with hospital and insurance organizations.

In the event that an investigation is undertaken by Chrysler Group LLC (regardless of initiative), the company or its designated representative will first obtain permission of the appropriate custodial entity for the vehicle (usually the vehicle owner or lessee) before accessing the electronic data stored, unless ordered to image the data by a court with legal jurisdiction (i.e., pursuant to a warrant). A copy of the data will be provided to the custodial entity upon request. General data that does not identify particular vehicles or crashes may be released for incorporation in aggregate crash databases, such as those maintained by the U.S. government and various states. Data of a potentially sensitive nature, such as would identify a particular driver, vehicle, or crash, will be treated confidentially. Confidential data will not be disclosed by Chrysler Group LLC to any third party except when:

1. Used for research purposes, such as to match data with a particular crash record in an aggregate database, provided confidentiality of personal data is thereafter preserved.

2. Used in defense of litigation involving a Chrysler Group LLC product.

Downloaded from www.Manualslib.com manuals search engine

3. Requested by police under a legal warrant.
4. Otherwise required by law.

Data parameters that are recorded:

- Diagnostic trouble code(s) and warning light status for electronically-controlled safety systems, including the airbag system
- Vehicle speed
- Engine RPM
- Brake switch status
- Pedal position
- And other parameters depending on vehicle configuration

Child Restraints

Everyone in your vehicle needs to be buckled up all the time, including babies and children. Every state in the United States and all Canadian provinces require that small children ride in proper restraint systems. This is the law, and you can be prosecuted for ignoring it.

Children 12 years and younger should ride properly buckled up in a rear seat, if available. According to crash statistics, children are safer when properly restrained in the rear seats rather than in the front.

WARNING!

In a collision, an unrestrained child, even a tiny baby, can become a projectile inside the vehicle. The force required to hold even an infant on your lap could become so great that you could not hold the child, no matter how strong you are. The child and others could be badly injured. Any child riding in your vehicle should be in a proper restraint for the child's size.

Downloaded from www.Manualslib.com manuals search engine

There are different sizes and types of restraints for children from newborn size to the child almost large enough for an adult safety belt. Always check the child seat Owner's Manual to ensure you have the correct seat for your child. Use the restraint that is correct for your child.

Infants and Child Restraints

- Safety experts recommend that children ride rearward-facing in the vehicle until they are at least one year old **and** weigh at least 20 lbs (9 kg). Two types of child restraints can be used rearward-facing, infant carriers and convertible child seats.
- The infant carrier is only used rearward-facing in the vehicle. It is recommended for children who weigh up to about 20 lbs (9 kg). Convertible child seats can be used either rearward-facing or forward-facing in the vehicle. Convertible child seats often have a higher weight limit in the rearward-facing direction than infant carriers do, so they can be used rearward-facing by children who weigh more than 20 lbs (9 kg) but are less than one year old. Both types of child restraints are held in the vehicle by the lap/shoulder belt or the LATCH child restraint anchorage system. Refer to "LATCH — Child Seat Anchorage System (Lower Anchors and Tether for CHildren)".

WARNING!

Rearward-facing child seats must NEVER be used in the front seat of a vehicle with the front passenger airbag unless the airbag is turned off. An airbag deployment could cause severe injury or death to infants in this position.

Older Children and Child Restraints

Children who weigh more than 20 lbs (9 kg) and who are older than one year can ride forward-facing in the vehicle. Forward-facing child seats and convertible child

Downloaded from www.Manualslib.com manuals search engine

seats used in the forward-facing direction are for children who weigh 20 to 40 lbs (9 to 18 kg) and who are older than one year. These child seats are also held in the vehicle by the lap/shoulder belt or the LATCH child restraint anchorage system. Refer to "LATCH — Child Seat Anchorage System (Lower Anchors and Tether for CHildren)".

The belt-positioning booster seat is for children weighing more than 40 lbs (18 kg), but who are still too small to fit the vehicle's seat belts properly. If the child cannot sit with knees bent over the vehicle's seat cushion while the child's back is against the seatback, they should use a belt-positioning booster seat. The child and belt-positioning booster seat are held in the vehicle by the lap/shoulder belt.

Children Too Large for Booster Seats

Children who are large enough to wear the shoulder belt comfortably and whose legs are long enough to bend over the front of the seat when their back is against the seatback should use the lap/shoulder belt in a rear seat.

- Make sure that the child is upright in the seat.
- The lap portion should be low on the hips and as snug as possible.
- Check belt fit periodically. A child's squirming or slouching can move the belt out of position.
- If the shoulder belt contacts the face or neck, move the child closer to the center of the vehicle. Never allow a child to put the shoulder belt under an arm or behind their back.

NOTE: For additional information, refer to www.seatcheck.org or call 1–866–SEATCHECK. Canadian residents, should refer to Transport Canada's website for additional information. http://www.tc.gc.ca/roadsafety/safedrivers/childsafety/index.htm

Downloaded from www.Manualslib.com manuals search engine

WARNING!

- **Improper installation can lead to failure of an infant or child restraint. It could come loose in a collision. The child could be badly injured or killed. Follow the manufacturer's directions exactly when installing an infant or child restraint.**
- **A rearward-facing child restraint should only be used in a rear seat. A rearward-facing child restraint in the front seat may be struck by a deploying passenger airbag, which may cause severe or fatal injury to the infant.**

Here are some tips on getting the most out of your child restraint:

- Before buying any restraint system, make sure that it has a label certifying that it meets all applicable Safety Standards. We also recommend that you make sure that you can install the child restraint in the vehicle where you will use it before you buy it.
- The restraint must be appropriate for your child's weight and height. Check the label on the restraint for weight and height limits.
- Carefully follow the instructions that come with the restraint. If you install the restraint improperly, it may not work when you need it.
- Buckle the child into the seat according to the child restraint manufacturer's directions.
- When your child restraint is not in use, secure it in the vehicle with the seat belt or remove it from the vehicle. Do not leave it loose in the vehicle. In a sudden stop or collision, it could strike the occupants or seatbacks and cause serious personal injury.

LATCH — Child Seat Anchorage System (Lower Anchors and Tether for CHildren)

Your vehicle's rear seat is equipped with the child restraint anchorage system called LATCH. The LATCH

Downloaded from www.Manualslib.com manuals search engine

system provides for the installation of the child restraint without using the vehicle's seat belts, instead securing the child restraint using lower anchorages and upper tether straps from the child restraint to the vehicle structure.

LATCH-compatible child restraint systems are now available. However, because the lower anchorages are to be introduced over a period of years, child restraint systems having attachments for those anchorages will continue to have features for installation using the vehicle's seat belts. Child restraints having tether straps and hooks for connection to the top tether anchorages, have been available for some time. For some older child restraints, many child restraint manufacturers offer add-on tether strap kits or retrofit kits. You are urged to take advantage of all the available attachments provided with your child restraint in any vehicle.

All three rear-seating positions have lower anchorages that are capable of accommodating LATCH-compatible child seats. You should **NEVER** install LATCH-compatible child seats so that two seats share a common lower anchorage. If installing child seats in adjacent rear-seating positions, or if your child restraints are not LATCH-compatible, install the restraints using the vehicle's seat belts.

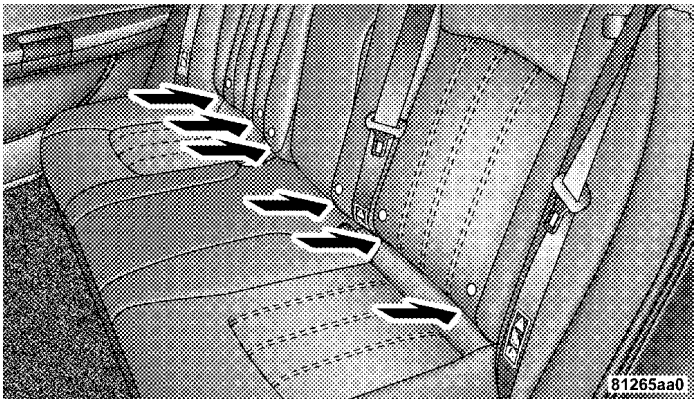

LATCH Anchorages

Downloaded from www.Manualslib.com manuals search engine

Installing the LATCH-Compatible Child Restraint System

We urge you to follow the manufacturer's directions carefully when installing your child restraint. Not all child restraint systems will be installed as described here. Again, carefully follow the installation instructions that are provided with the child restraint system.

The rear seat lower anchorages are round bars located at the rear of the seat cushion where it meets the seatback and are just visible when you lean into the rear seat to install the child restraint. You will easily feel them if you run your finger along the intersection of the seatback and seat cushion surfaces.

In addition, there are tether strap anchorages behind each rear seating position located in the panel between the rear seatback and the rear window. These tether strap anchorages are under a plastic cover with this symbol on it.

Many, but not all restraint systems will be equipped with separate straps on each side, with each having a hook or connector for attachment to the lower anchorage and a means of adjusting the tension in the strap. Forward-facing toddler restraints and some rear-facing infant restraints will also be equipped with a tether strap, a hook for attachment to the tether strap anchorage and a means of adjusting the tension of the strap.

You will first loosen the adjusters on the lower straps and on the tether strap so that you can more easily attach the hooks or connectors to the vehicle anchorages. Next, attach the lower hooks or connectors over the top of the seat cover material. Then rotate the tether anchorage cover directly behind the seat where you are placing the child restraint and attach the tether strap to the anchorage, being careful to route the tether strap to provide the most direct path between the anchor and the child restraint. Finally, tighten all three straps as you push the

Downloaded from www.Manualslib.com manuals search engine

child restraint rearward and downward into the seat, removing slack in the straps according to the child restraint manufacturer's instructions.

NOTE:

- Ensure that the tether strap does not slip into the opening between the seatbacks as you remove slack in the strap.
- When using the LATCH attaching system to install a child restraint, please ensure that all seat belts not being used for occupant restraints are stowed and out of reach of children. It is recommended that before installing the child restraint, buckle the seat belt so the seat belt is tucked behind the child restraint and out of reach. If the buckled seat belt interferes with the child restraint installation, instead of tucking the seat belt behind the child restraint, route the seat belt through the child restraint belt path and then buckle it. This should stow the seat belt out of the reach of an inquisitive child. Remind all children in the vehicle that the seat belts are not toys and should not be played with, and never leave your child unattended in the vehicle.

WARNING!

Improper installation of a child restraint to the LATCH anchorages can lead to failure of an infant or child restraint. The child could be badly injured or killed. Follow the manufacturer's directions exactly when installing an infant or child restraint.

Installing Child Restraints Using the Vehicle Seat Belts

The passenger seat belts are equipped with either cinching latch plates or Automatic Locking Retractors (ALRs), which are designed to keep the lap portion tight around the child restraint so that it is not necessary to use a locking clip. Pulling up on the shoulder portion of the

Downloaded from www.Manualslib.com manuals search engine

lap/shoulder belt will tighten the belt. The cinching latch plate will keep the belt tight; however, any seat belt system will loosen with time, so check the belt occasionally and pull it tight if necessary.

The seat belt must be in the Automatic Locking Mode in order to enable a child restraint to be tightly installed. Refer to "Automatic Locking Mode". A locking clip should not be necessary once the automatic locking feature is enabled. Position the shoulder and lap belt on the child restraint. The automatic locking retractor is activated by first attaching the child seat, then pulling all of the webbing out of the retractor, then allowing the webbing to retract back into the retractor. Tighten webbing. To release, simply unbuckle the seat belt by depressing the button, allowing the webbing to retract into the retractor.

In the rear seat, you may have trouble tightening the lap/shoulder belt on the child restraint because the buckle or latch plate is too close to the belt path opening on the restraint. Disconnect the latch plate from the buckle and twist the short buckle end belt several times to shorten it. Insert the latch plate into the buckle with the release button facing out.

If the belt still can't be tightened, or if pulling and pushing on the restraint loosens the belt, you may need to do something more. Disconnect the latch plate from the buckle, turn the buckle around, and insert the latch plate into the buckle again. If you still can't make the child restraint secure, try a different seating position.

To attach a child restraint tether strap:

1. Rotate the cover over the anchor directly behind the seat where you are placing the child restraint.

Downloaded from www.Manualslib.com manuals search engine

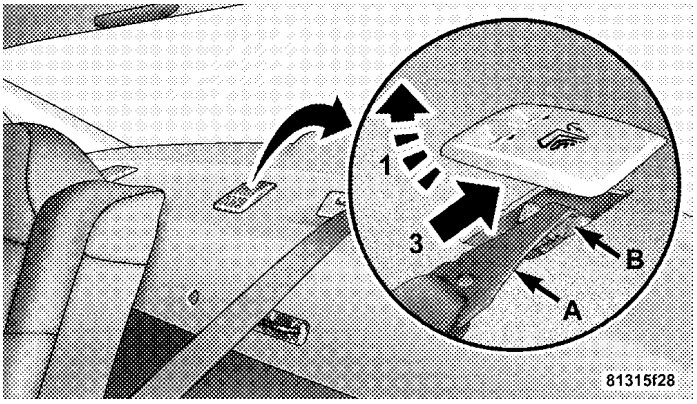

Tether Strap Mounting

1 — Cover	A — Tether Strap Hook
3 — Attaching Strap	B — Tether Anchor

2. Route the tether strap to provide the most direct path for the strap between the anchor and the child seat.

3. Attach the tether strap hook (A) of the child restraint to the anchor (B) and remove slack in the tether strap according to the child restraint manufacturer's instructions.

NOTE: Ensure that the tether strap does not slip into the opening between the seatbacks as you remove slack in the strap.

WARNING!

An incorrectly anchored tether strap could lead to increased head motion and possible injury to the child. Use only the anchor positions directly behind the child seat to secure a child restraint top tether strap.

Downloaded from www.Manualslib.com manuals search engine

Transporting Pets

Airbags deploying in the front seat could harm your pet. An unrestrained pet will be thrown about and possibly injured, or injure a passenger during panic braking or in a collision.

Pets should be restrained in the rear seat in pet harnesses or pet carriers that are secured by seat belts.

ENGINE BREAK-IN RECOMMENDATIONS

A long break-in period is not required for the engine and drivetrain (transmission and axle) in your vehicle.

Drive moderately during the first 300 miles (500 km). After the initial 60 miles (100 km), speeds up to 50 or 55 mph (80 or 90 km/h) are desirable.

While cruising, brief full-throttle acceleration within the limits of local traffic laws, contributes to a good break-in. Wide-open throttle acceleration in low gear can be detrimental and should be avoided.

The engine oil installed in the engine at the factory is a high-quality energy conserving type lubricant. Oil changes should be consistent with anticipated climate conditions under which vehicle operations will occur. For the recommended viscosity and quality grades refer to "Maintenance Procedures" in "Maintaining Your Vehicle". NON-DETERGENT OR STRAIGHT MINERAL OILS MUST NEVER BE USED.

A new engine may consume some oil during its first few thousand miles (kilometers) of operation. This should be considered a normal part of the break-in and not interpreted as an indication of difficulty.

Downloaded from www.Manualslib.com manuals search engine

SAFETY TIPS

Transporting Passengers

NEVER TRANSPORT PASSENGERS IN THE CARGO AREA.

WARNING!

- **Do not leave children or animals inside parked vehicles in hot weather. Interior heat build-up may cause serious injury or death.**
- **It is extremely dangerous to ride in a cargo area, inside or outside of a vehicle. In a collision, people riding in these areas are more likely to be seriously injured or killed.**
- **Do not allow people to ride in any area of your vehicle that is not equipped with seats and seat belts.**

(Continued)

WARNING! (Continued)

- **Be sure everyone in your vehicle is in a seat and using a seat belt properly.**

Exhaust Gas

WARNING!

Exhaust gases can injure or kill. They contain carbon monoxide (CO), which is colorless and odorless. Breathing it can make you unconscious and can eventually poison you. To avoid breathing (CO) follow these safety tips:

Do not run the engine in a closed garage or in confined areas any longer than needed to move your vehicle in or out of the area.

Downloaded from www.Manualslib.com manuals search engine

If it is necessary to sit in a parked vehicle with the engine running, adjust your heating or cooling controls to force outside air into the vehicle. Set the blower at high speed.

If you are required to drive with the trunk/liftgate open, make sure that all windows are closed and the climate control BLOWER switch is set at high speed. DO NOT use the recirculation mode.

The best protection against carbon monoxide entry into the vehicle body is a properly maintained engine exhaust system.

Whenever a change is noticed in the sound of the exhaust system, when exhaust fumes can be detected inside the vehicle, or when the underside or rear of the vehicle is damaged, have a competent mechanic inspect the complete exhaust system and adjacent body areas for broken, damaged, deteriorated, or mispositioned parts. Open seams or loose connections could permit exhaust fumes to seep into the passenger compartment. In addition, inspect the exhaust system each time the vehicle is raised for lubrication or oil change. Replace as required.

Safety Checks You Should Make Inside the Vehicle

Seat Belts

Inspect the belt system periodically, checking for cuts, frays, and loose parts. Damaged parts must be replaced immediately. Do not disassemble or modify the system.

Front seat belt assemblies must be replaced after a collision. Rear seat belt assemblies must be replaced after a collision if they have been damaged (i.e., bent retractor, torn webbing, etc.). If there is any question regarding belt or retractor condition, replace the belt.

Airbag Warning Light

The light should come on and remain on for four to eight seconds as a bulb check when the ignition switch is first turned ON. If the light is not lit during starting, see your

Downloaded from www.Manualslib.com manuals search engine

authorized dealer. If the light stays on, flickers, or comes on while driving, have the system checked by an authorized dealer.

Defroster

Check operation by selecting the defrost mode and place the blower control on high speed. You should be able to feel the air directed against the windshield. See your authorized dealer for service if your defroster is inoperable.

Floor Mat Safety Information

Always use floor mats designed to fit the foot well of your vehicle. Use only floor mats that leave the pedal area unobstructed and that are firmly secured so that they cannot slip out of position and interfere with the pedals or impair safe operation of your vehicle in other ways.

WARNING!

Pedals that cannot move freely can cause loss of vehicle control and increase the risk of serious personal injury.

- **Always make sure that floor mats are properly attached to the floor mat fasteners.**
- **Never place or install floor mats or other floor coverings in the vehicle that cannot be properly secured to prevent them from moving and interfering with the pedals or the ability to control the vehicle.**
- **Never put floor mats or other floor coverings on top of already installed floor mats. Additional floor mats and other coverings will reduce the size of the pedal area and interfere with the pedals.**
- **Check mounting of mats on a regular basis. Always properly reinstall and secure floor mats that have been removed for cleaning.**

(Continued)

Downloaded from www.Manualslib.com manuals search engine

WARNING! (Continued)

- **Always make sure that objects cannot fall into the driver foot well while the vehicle is moving. Objects can become trapped under the brake pedal and accelerator pedal causing a loss of vehicle control.**
- **If required, mounting posts must be properly installed, if not equipped from the factory.**

  Failure to properly follow floor mat installation or mounting can cause interference with the brake pedal and accelerator pedal operation causing loss of control of the vehicle.

Periodic Safety Checks You Should Make Outside the Vehicle

Tires

Examine tires for excessive tread wear and uneven wear patterns. Check for stones, nails, glass, or other objects lodged in the tread. Inspect the tread and sidewall for cuts and cracks. Check the wheel nuts for tightness. Check the tires (including spare) for proper pressure.

Lights

Have someone observe the operation of exterior lights while you work the controls. Check turn signal and high beam indicator lights on the instrument panel.

Door Latches

Check for positive closing, latching, and locking.

Fluid Leaks

Check area under vehicle after overnight parking for fuel, engine coolant, oil, or other fluid leaks. Also, if gasoline fumes are detected or if fuel, power steering fluid, or brake fluid leaks are suspected, the cause should be located and corrected immediately.

Downloaded from www.Manualslib.com manuals search engine

UNDERSTANDING THE FEATURES OF YOUR VEHICLE

CONTENTS

3

■ Mirrors 91
- □ Inside Day/Night Mirror 91
- □ Automatic Dimming Mirror — If Equipped . . . 92
- □ Outside Mirrors 92
- □ Outside Mirrors Folding Feature — If Equipped 93
- □ Driver's Automatic Dimming Mirror — If Equipped 93
- □ Outside Mirrors With Turn Signal And Approach Lighting — If Equipped 93
- □ Tilt Mirrors In Reverse — If Equipped 94
- □ Power Mirrors 94
- □ Heated Mirrors — If Equipped 95
- □ Illuminated Vanity Mirrors — If Equipped . . . 96

■ Uconnect™ Phone — If Equipped 96
- □ Operation 98
- □ Phone Call Features 106
- □ Uconnect™ Phone Features 109
- □ Advanced Phone Connectivity 114

Downloaded from www.Manualslib.com manuals search engine

- Things You Should Know About Your Uconnect™ Phone 116
- General Information 124

■ Voice Command — If Equipped 124
- Voice Command System Operation 124
- Commands 126
- Voice Training 129

■ Seats 129
- Power Seats 130
- Power Reclining Seats 131
- Lumbar Support 132
- Head Restraints 132
- Heated Seats — If Equipped 134
- Folding Rear Seat 136

■ Driver Memory Seat — If Equipped 138
- Programming The Memory Feature 139
- Linking And Unlinking The Remote Keyless Entry Transmitter To Memory 139
- Memory Position Recall 140
- Easy Entry/Exit Seat (Available With Memory Seat Only) 141

■ To Open And Close The Hood 142

■ Lights 144
- Headlight Switch 144
- Automatic Headlights — If Equipped 145
- Headlights On With Wipers (Available With Automatic Headlights Only) 145

Downloaded from www.Manualslib.com manuals search engine

- Headlight Time Delay 145
- Smartbeam™ — If Equipped 146
- Daytime Running Lights — If Equipped 147
- Lights-On Reminder 147
- Fog Lights — If Equipped 147
- Multifunction Lever 148
- Turn Signals 148
- Lane Change Assist 148
- High/Low Beam Switch 149
- Flash-To-Pass 149
- Overhead Console Map/Reading Lights 149
- Interior Lights 149

■ Windshield Wipers And Washers 150
- Intermittent Wiper System 151
- Mist Feature 152
- Windshield Washers 152
- Headlights On With Wipers (Available With Automatic Headlights Only) 152
- Rain Sensing Wipers — If Equipped 153

■ Tilt/Telescoping Steering Column 154

■ Power Tilt/Telescoping Steering Column — If Equipped 155

■ Adjustable Pedals — If Equipped 156

■ Electronic Speed Control 158
- To Activate 159
- To Set At A Desired Speed 159
- To Deactivate 160

Downloaded from www.Manualslib.com manuals search engine

- To Resume Speed 160
- To Vary The Speed Setting 160
- To Accelerate For Passing 161

■ Adaptive Cruise Control (ACC) — If Equipped 162
- Adaptive Cruise Control (ACC) Operation . . 164
- Activating Adaptive Cruise Control (ACC) . . 164
- To Activate 165
- To Set a Desired ACC Speed 166
- To Cancel 167
- To Turn Off 168
- To Resume Speed 168
- To Vary The Speed Setting 168
- Setting The Following Distance In ACC 170
- Adaptive Cruise Control (ACC) Menu 172
- Display Warnings And Maintenance 175
- Precautions While Driving With ACC 178
- General Information 181
- Normal (Fixed Speed) Cruise Control Mode 182

■ Parksense® Rear Park Assist 184
- Parksense® System Usage Precautions 186

■ Overhead Console 189
- Courtesy/Reading Lights 189
- Sunglasses Storage 189

Downloaded from www.Manualslib.com manuals search engine

■ Garage Door Opener — If Equipped 190
□ Programming HomeLink® 191
□ Gate Operator/Canadian Programming 194
□ Using HomeLink® 194
□ Reprogramming A Single HomeLink® Button 195
□ Security 195
□ Troubleshooting Tips 195
□ General Information 196
■ Power Sunroof — If Equipped 196
□ Opening Sunroof — Express 197
□ Closing Sunroof — Express 197
□ Pinch Protect Feature 198
□ Pinch Protect Override 198
□ Venting Sunroof — Express 198
□ Sunshade Operation 198
□ Wind Buffeting 199
□ Sunroof Maintenance 199
□ Ignition Off Operation 199
□ Sunroof Fully Closed 199
■ Electrical Power Outlets 200
■ Cupholders 203
□ Front Seat Cupholders 203
□ Rear Seat Cupholders 203
■ Storage 204
□ Console Features 204

Downloaded from www.Manualslib.com manuals search engine

□ Cargo Area 205
■ Cargo Area Features 206
□ Trunk Mat — If Equipped 206
■ Rear Window Features 206
□ Rear Window Defroster 206
■ Load Leveling System — If Equipped 207

Downloaded from www.Manualslib.com manuals search engine

MIRRORS

Inside Day/Night Mirror

A two-point pivot system allows for horizontal and vertical mirror adjustment. Adjust the mirror to center on the view through the rear window. The mirror should be adjusted while set in the day position (toward the windshield).

Headlight glare can be reduced by moving the small control under the mirror to the night position (toward the rear of the vehicle).

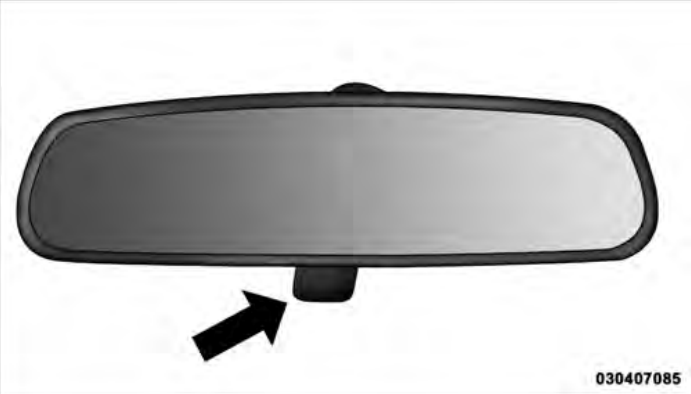

Adjusting Rearview Mirror

Downloaded from www.Manualslib.com manuals search engine

Automatic Dimming Mirror — If Equipped

This mirror automatically adjusts for headlight glare from vehicles behind you. You can turn the feature on or off by pressing the button at the base of the mirror. A light next to the button will illuminate to indicate when the dimming feature is activated.

Automatic Dimming Mirror

CAUTION!

To avoid damage to the mirror during cleaning, never spray any cleaning solution directly onto the mirror. Apply the solution onto a clean cloth and wipe the mirror clean.

Outside Mirrors

To receive maximum benefit, adjust the outside mirror(s) to center on the adjacent lane of traffic and a slight overlap of the view obtained from the inside mirror.

NOTE: The passenger side convex outside mirror will give a much wider view to the rear, and especially of the lane next to your vehicle.

Downloaded from www.Manualslib.com manuals search engine

WARNING!

Vehicles and other objects seen in the passenger side convex mirror will look smaller and farther away than they really are. Relying too much on your passenger side convex mirror could cause you to collide with another vehicle or other object. Use your inside mirror when judging the size or distance of a vehicle seen in the passenger side convex mirror.

Outside Mirrors Folding Feature — If Equipped

Some models have outside mirrors that are hinged. The hinge allows the mirror to pivot forward and rearward to resist damage. The hinge has three detent positions: full forward, full rearward and normal.

Driver's Automatic Dimming Mirror — If Equipped

The driver's outside mirror will automatically adjust for glare from vehicles behind you. This feature is controlled by the inside automatic dimming mirror and can be turned on or off by pressing the button at the base of the inside mirror. The mirror will automatically adjust for headlight glare when the inside mirror adjusts.

NOTE: This feature is also available on the passenger's side when equipped with turn signal and approach lighting.

Outside Mirrors with Turn Signal and Approach Lighting — If Equipped

Driver and passenger outside mirrors with turn signal and approach lighting contain four LEDs, which are located in the upper outer corner of each mirror.

Three of the LEDs are turn signal indicators, which flash with the corresponding turn signal lights in the front and rear of the vehicle. Turning on the Hazard Warning flashers will also activate these LEDs.

The fourth (uppermost) LED supplies illuminated entry lighting, which turns on in both mirrors when you use

Downloaded from www.Manualslib.com manuals search engine

the Remote Keyless Entry (RKE) transmitter or open any door. This LED shines outward to illuminate the front and rear door handles. It also shines downward to illuminate the area in front of the doors.

The Illuminated Entry lighting fades to off after about 30 seconds or it will fade to off immediately once the ignition is placed into the RUN position.

NOTE: The approach lighting will not function when the shift lever is moved out of the PARK position.

Tilt Mirrors in Reverse — If Equipped

Tilt Mirrors in Reverse provides automatic outside mirror positioning which will aid the driver's view of the ground rearward of the front doors. The outside mirrors will move slightly downward from the present position when the vehicle is shifted into REVERSE. The outside mirrors will then return to the original position when the vehicle is shifted out of the REVERSE position. Each stored memory setting will have an associated Tilt Mirrors in Reverse position.

NOTE: The Tilt Mirrors in Reverse feature is not enabled when delivered from the factory. The Tilt Mirrors in Reverse feature can be enabled or disabled through the customer-programmable features in the Electronic Vehicle Information Center (EVIC), Refer to "Electronic Vehicle Information Center (EVIC)/Customer-Programmable Features" in "Understanding Your Instrument Panel" for further information.

Power Mirrors

The power mirror switch is located on the driver's door trim panel, next to the power door lock switch. A rotary knob selects the left mirror, right mirror or off position.

Downloaded from www.Manualslib.com manuals search engine

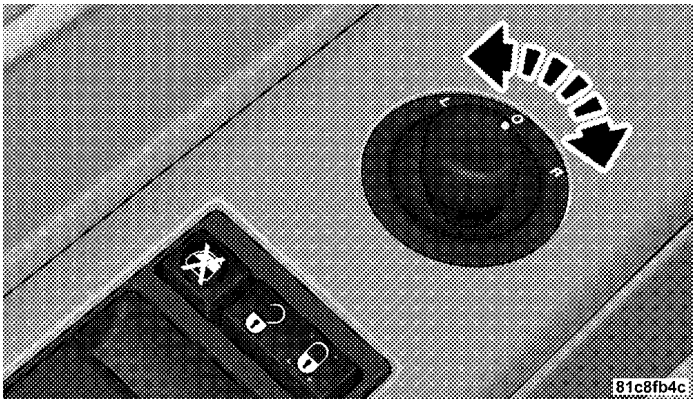

Power Mirror Control

After selecting a mirror, move the knob in the same direction you want the mirror to move. Use the center off position to guard against accidentally moving a mirror position.

NOTE: For vehicles equipped with Driver Memory Seat, you can use your Remote Keyless Entry (RKE) transmitter or the memory switch on the driver's door trim panel to return the power mirrors to pre-programmed positions. Refer to "Driver Memory Seat" in "Understanding the Features of Your Vehicle" for further information.

Heated Mirrors — If Equipped

These mirrors are heated to melt frost or ice. This feature is activated whenever you turn on the rear window defroster. Refer to "Rear Window Features" in "Understanding the Features of Your Vehicle" for further information.

Downloaded from www.Manualslib.com manuals search engine

Illuminated Vanity Mirrors — If Equipped

An illuminated vanity mirror is located on the sun visor. To use the mirror, rotate the sun visor downward and swing the mirror cover upward. The light turns on automatically. Closing the mirror cover turns off the light.

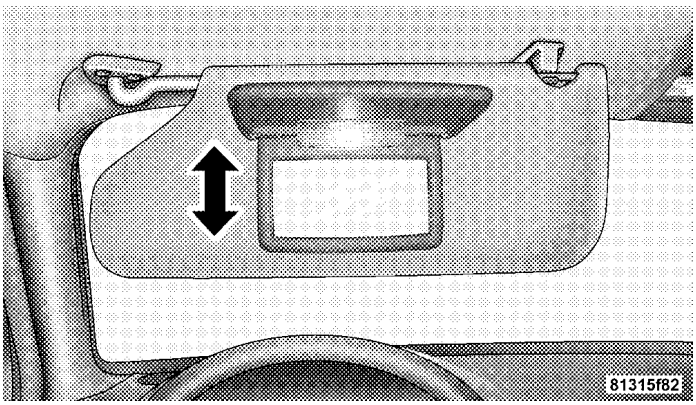

Illuminated Vanity Mirror

Uconnect™ Phone — IF EQUIPPED

Uconnect™ Phone is a voice-activated, hands-free, in-vehicle communications system. Uconnect™ Phone allows you to dial a phone number with your cellular phone using simple voice commands (e.g., "Call" ... "Mike" ..."Work" or "Dial" ... "248-555-1212"). Your cellular phone's audio is transmitted through your vehicle's audio system; the system will automatically mute your radio when using the Uconnect™ Phone.

NOTE: The Uconnect™ Phone requires a cellular phone equipped with the Bluetooth® "Hands-Free Profile," Version 0.96 or higher. See the Uconnect™ website for supported phones.

For Uconnect™ customer support, visit the following websites:

- www.chrysler.com/uconnect
- www.dodge.com/uconnect

Downloaded from www.Manualslib.com manuals search engine

- www.jeep.com/uconnect
- or call 1–877–855–8400

Uconnect™ Phone allows you to transfer calls between the system and your cellular phone as you enter or exit your vehicle and enables you to mute the system's microphone for private conversation.

The Uconnect™ Phone is driven through your Bluetooth® "Hands-Free Profile" cellular phone. Uconnect™ features Bluetooth® technology - the global standard that enables different electronic devices to connect to each other without wires or a docking station, so Uconnect™ Phone works no matter where you stow your cellular phone (be it your purse, pocket, or briefcase), as long as your phone is turned on and has been paired to the vehicle's Uconnect™ Phone. The Uconnect™ Phone allows up to seven cellular phones to be linked to the system. Only one linked (or paired) cellular phone can be used with the system at a time. The system is available in English, Spanish, or French languages.

WARNING!

Any voice commanded system should be used only in safe driving conditions following local laws and phone use. All attention should be kept on the roadway ahead. Failure to do so may result in an accident causing serious injury or death.

3

Uconnect™ Phone Button

Depending on the vehicle options, either the radio or the mirror will contain the two control buttons (Uconnect™ Phone button) and VR (Voice Command button) that will enable you to access the system.

Downloaded from www.Manualslib.com manuals search engine

Voice Command Button

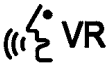

Actual button location may vary with the radio. The individual buttons are described in the "Operation" section.

The Uconnect™ Phone can be used with any Hands-Free Profile certified Bluetooth® cellular phone. See the Uconnect™ website for supported phones. If your cellular phone supports a different profile (e.g., Headset Profile) you may not be able to use any Uconnect™ Phone features. Refer to your cellular service provider or the phone manufacturer for details.

The Uconnect™ Phone is fully integrated with the vehicle's audio system. The volume of the Uconnect™ Phone can be adjusted either from the radio volume control knob or from the steering wheel radio control (right switch), if so equipped.

The radio display will be used for visual prompts from the Uconnect™ Phone such as "CELL" or caller ID on certain radios.

Operation

Voice commands can be used to operate the Uconnect™ Phone and to navigate through the Uconnect™ Phone menu structure. Voice commands are required after most Uconnect™ Phone prompts. You will be prompted for a specific command and then guided through the available options.

- Prior to giving a voice command, one must wait for the beep, which follows the "Ready" prompt or another prompt.
- For certain operations, compound commands can be used. For example, instead of saying "Setup" and then "Phone Pairing," the following compound command can be said: "Setup Phone Pairing."

Downloaded from www.Manualslib.com manuals search engine

- For each feature explanation in this section, only the combined form of the voice command is given. You can also break the commands into parts and say each part of the command when you are asked for it. For example, you can use the combined form voice command "Phonebook New Entry," or you can break the combined form command into two voice commands: "Phonebook" and "New Entry." Please remember, the Uconnect™ Phone works best when you talk in a normal conversational tone, as if speaking to someone sitting a few feet/meters away from you.

Voice Command Tree
Refer to "Voice Tree" in this section.

Help Command
If you need assistance at any prompt, or if you want to know your options at any prompt, say "Help" following the beep. The Uconnect™ Phone will play all the options at any prompt if you ask for help.

To activate the Uconnect™ Phone from idle, simply press the button and follow the audible prompts for directions. All Uconnect™ Phone sessions begin with a press of the button on the radio control head.

Cancel Command
At any prompt, after the beep, you can say "Cancel" and you will be returned to the main menu. However, in a few instances the system will take you back to the previous menu.

Pair (Link) Uconnect™ Phone to a Cellular Phone
To begin using your Uconnect™ Phone, you must pair your compatible Bluetooth® enabled cellular phone.

To complete the pairing process, you will need to reference your cellular phone Owner's Manual. The Uconnect™ website may also provide detailed instructions for pairing.

Downloaded from www.Manualslib.com manuals search engine

The following are general phone to Uconnect™ Phone pairing instructions:

- Press the button to begin.
- After the "Ready" prompt and the following beep, say "Setup Phone Pairing."
- When prompted, after the beep, say "Pair a Phone" and follow the audible prompts.
- You will be asked to say a four-digit Personal Identification Number (PIN), which you will later need to enter into your cellular phone. You can enter any four-digit PIN. You will not need to remember this PIN after the initial pairing process.
- For identification purposes, you will be prompted to give the Uconnect™ Phone a name for your cellular phone. Each cellular phone that is paired should be given a unique phone name.
- You will then be asked to give your cellular phone a priority level between one and seven, with one being the highest priority. You can pair up to seven cellular phones to your Uconnect™ Phone. However, at any given time, only one cellular phone can be in use, connected to your Uconnect™ Phone. The priority allows the Uconnect™ Phone to know which cellular phone to use if multiple cellular phones are in the vehicle at the same time. For example, if priority three and priority five phones are present in the vehicle, the Uconnect™ Phone will use the priority three cellular phone when you make a call. You can select to use a lower priority cellular phone at any time (refer to "Advanced Phone Connectivity" in this section).

Dial by Saying a Number

- Press the button to begin.
- After the "Ready" prompt and the following beep, say "Dial."

Downloaded from www.Manualslib.com manuals search engine

- The system will prompt you to say the number you want to call.
- For example, you can say "234-567-8901".
- The Uconnect™ Phone will confirm the phone number and then dial. The number will appear in the display of certain radios.

Call by Saying a Name

- Press the button to begin.
- After the "Ready" prompt and the following beep, say "Call."
- The system will prompt you to say the name of the person you want to call.
- After the "Ready" prompt and the following beep, say the name of the person you want to call. For example, you can say "John Doe," where John Doe is a previously stored name entry in the Uconnect™ phonebook or downloaded phonebook. To learn how to store a name in the phonebook, refer to "Add Names to Your Uconnect™ Phonebook," in the phonebook.
- The Uconnect™ system will confirm the name and then dial the corresponding phone number, which may appear in the display of certain radios.

Add Names to Your Uconnect™ Phonebook

NOTE: Adding names to the Uconnect™ Phonebook is recommended when the vehicle is not in motion.

- Press the button to begin.
- After the "Ready" prompt and the following beep, say "Phonebook New Entry."
- When prompted, say the name of the new entry. Use of long names helps the Voice Command and it is recommended. For example, say "Robert Smith" or "Robert" instead of "Bob."

Downloaded from www.Manualslib.com manuals search engine

- When prompted, enter the number designation (e.g., "Home," "Work," "Mobile," or "Pager"). This will allow you to store multiple numbers for each phonebook entry, if desired.
- When prompted, recite the phone number for the phonebook entry that you are adding.

After you are finished adding an entry into the phonebook, you will be given the opportunity to add more phone numbers to the current entry or to return to the main menu.

The Uconnect™ Phone will allow you to enter up to 32 names in the phonebook with each name having up to four associated phone numbers and designations. Each language has a separate 32-name phonebook accessible only in that language. In addition, if equipped and supported by your phone, Uconnect™ Phone automatically downloads your cellular phone's phonebook.

Phonebook Download – Automatic Phonebook Transfer From Cellular Phone

If equipped and specifically supported by your phone, Uconnect™ Phone automatically downloads names (text names) and number entries from the cellular phone's phonebook. Specific Bluetooth® Phones with Phone Book Access Profile may support this feature. See Uconnect™ website for supported phones.

- To call a name from downloaded (or Uconnect™) Phonebook, follow the procedure in "Call by Saying a Name" section.
- Automatic download and update, if supported, begins as soon as the Bluetooth® wireless phone connection is made to the Uconnect™ Phone, for example, after you start the vehicle.
- A maximum of 1000 entries per phone will be downloaded and updated every time a phone is connected to the Uconnect™ Phone.

Downloaded from www.Manualslib.com manuals search engine

- Depending on the maximum number of entries downloaded, there may be a short delay before the latest downloaded names can be used. Until then, if available, the previous downloaded phonebook is available for use.
- Only the phonebook of the currently connected cellular phone is accessible.
- Only the cellular phone's phonebook is downloaded. SIM card phonebook is not part of the Mobile phonebook.
- This downloaded phonebook cannot be edited or deleted on the Uconnect™ Phone. These can only be edited on the cellular phone. The changes are transferred and updated to Uconnect™ Phone on the next phone connection.

Phonebook Download — Single Entry

If equipped and supported by your phone, Uconnect™ Phone allows the user to download entries from their phone via Bluetooth®. To use this feature, press the button and say "Phonebook Download." The system prompts, "Ready to accept "V" card entry via Bluetooth®…" The system is now ready to accept phonebook entries from your phone using the Bluetooth® Object Exchange Profile (OBEX). Please see your phone Owner's Manual for specific instructions on how to send these entries from your phone.

NOTE:

- The phone handset must support Bluetooth® OBEX transfers of phonebook entries to use this feature.
- Some phones cannot send phonebook entries if they are already connected to any system via Bluetooth®, and you may see a message on the phone display that the Bluetooth® link is busy. In this case, the user must

Downloaded from www.Manualslib.com manuals search engine

first disconnect or drop the Bluetooth® connection to the Uconnect™ Phone, and then send the address book entry via Bluetooth®. Please see your phone Owner's Manual for specific instructions on how to drop the Bluetooth® connection.

- If the phonebook entry is longer than 24 characters, it will only use the first 24 characters.

Edit Uconnect™ Phonebook Entries

NOTE:

- Editing names in the phonebook is recommended when the vehicle is not in motion.
- Automatic downloaded phonebook entries cannot be deleted or edited.
- Press the button to begin.
- After the "Ready" prompt and the following beep, say "Phonebook Edit."
- You will then be asked for the name of the phonebook entry that you wish to edit.
- Next, choose the number designation (home, work, cellular, or pager) that you wish to edit.
- When prompted, recite the new phone number for the phonebook entry that you are editing.

After you are finished editing an entry in the phonebook, you will be given the opportunity to edit another entry in the phonebook, call the number you just edited, or return to the main menu.

"Phonebook Edit" can be used to add another phone number to a name entry that already exists in the phonebook. For example, the entry John Doe may have a cellular and a home number, but you can add "John Doe's" work number later using the "Phonebook Edit" feature.

Downloaded from www.Manualslib.com manuals search engine

Delete Uconnect™ Phonebook Entry

NOTE: Editing phonebook entries is recommended when the vehicle is not in motion.

- Press the button to begin.
- After the "Ready" prompt and the following beep, say "Phonebook Delete."
- After you enter the Phonebook Delete menu, you will then be asked for the name of the entry that you wish to delete. You can either say the name of a phonebook entry that you wish to delete or you can say "List Names" to hear a list of the entries in the phonebook from which you choose. To select one of the entries from the list, press the VR button while the Uconnect™ Phone is playing the desired entry and say "Delete."
- After you enter the name, the Uconnect™ Phone will ask you which designation you wish to delete: home, work, cellular, pager, or all. Say the designation you wish to delete.
- Note that only the phonebook entry in the current language is deleted.
- Automatic downloaded phonebook entries cannot be deleted or edited.

Delete/Erase "All" Uconnect™ Phonebook Entries

- Press the button to begin.
- After the "Ready" prompt and the following beep, say "Phonebook Erase All."
- The Uconnect™ Phone will ask you to verify that you wish to delete all the entries from the phonebook.
- After confirmation, the phonebook entries will be deleted.

Downloaded from www.Manualslib.com manuals search engine

- Note that only the phonebook in the current language is deleted.
- Automatic downloaded phonebook entries cannot be deleted or edited.

List All Names in the Uconnect™ Phonebook

- Press the button to begin.
- After the "Ready" prompt and the following beep, say "Phonebook List Names."
- The Uconnect™ Phone will play the names of all the phonebook entries, including the downloaded phonebook entries, if available.
- To call one of the names in the list, press the VR button during the playing of the desired name, and say "Call."

NOTE: The user can also exercise "Edit" or "Delete" operations at this point.

- The Uconnect™ Phone will then prompt you as to the number designation you wish to call.
- The selected number will be dialed.

Phone Call Features

The following features can be accessed through the Uconnect™ Phone if the feature(s) are available on your cellular service plan. For example, if your cellular service plan provides three-way calling, this feature can be accessed through the Uconnect™ Phone. Check with your cellular service provider for the features that you have.

Answer or Reject an Incoming Call - No Call Currently in Progress

When you receive a call on your cellular phone, the Uconnect™ Phone will interrupt the vehicle audio system, if on, and will ask if you would like to answer the call. Press the button to accept the call. To reject the

Downloaded from www.Manualslib.com manuals search engine

call, press and hold the button until you hear a single beep, indicating that the incoming call was rejected.

Answer or Reject an Incoming Call - Call Currently in Progress

If a call is currently in progress and you have another incoming call, you will hear the same network tones for call waiting that you normally hear when using your cellular phone. Press the button to place the current call on hold and answer the incoming call.

NOTE: The Uconnect™ Phone compatible phones in the market today do not support rejecting an incoming call when another call is in progress. Therefore, the user can only answer an incoming call or ignore it.

Making a Second Call While Current Call is in Progress

To make a second call while you are currently on a call, press the VR button and say "Dial" or "Call" followed by the phone number or phonebook entry you wish to call. The first call will be on hold while the second call is in progress. To go back to the first call, refer to "Toggling Between Calls" in this section. To combine two calls, refer to "Conference Call" in this section.

Place/Retrieve a Call From Hold

To put a call on hold, press the button until you hear a single beep. This indicates that the call is on hold. To bring the call back from hold, press and hold the button until you hear a single beep.

Toggling Between Calls

If two calls are in progress (one active and one on hold), press the button until you hear a single beep, indicating that the active and hold status of the two calls have switched. Only one call can be placed on hold at a time.

Downloaded from www.Manualslib.com manuals search engine

Conference Call

When two calls are in progress (one active and one on hold), press and hold the button until you hear a double beep indicating that the two calls have been joined into one conference call.

Three-Way Calling

To initiate three-way calling, press the button while a call is in progress, and make a second phone call, as described under "Making a Second Call While Current Call is in Progress." After the second call has established, press and hold the button until you hear a double beep, indicating that the two calls have been joined into one conference call.

Call Termination

To end a call in progress, momentarily press the button. Only the active call(s) will be terminated and if there is a call on hold, it will become the new active call. If the active call is terminated by the phone far end, a call on hold may not become active automatically. This is cell phone-dependent. To bring the call back from hold, press and hold the button until you hear a single beep.

Redial

- Press the button to begin.
- After the "Ready" prompt and the following beep, say "Redial."
- The Uconnect™ Phone will call the last number that was dialed from your cellular phone.

NOTE: This may not be the last number dialed from the Uconnect™ Phone.

Call Continuation

Call continuation is the progression of a phone call on the Uconnect™ Phone after the vehicle ignition key has been switched to OFF. Call continuation functionality available on the vehicle can be any one of three types:

Downloaded from www.Manualslib.com manuals search engine

- After the ignition key is switched to OFF, a call can continue on the Uconnect™ Phone either until the call ends, or until the vehicle battery condition dictates cessation of the call on the Uconnect™ Phone and transfer of the call to the cellular phone.
- After the ignition key is switched to OFF, a call can continue on the Uconnect™ Phone for a certain duration, after which the call is automatically transferred from the Uconnect™ Phone to the cellular phone.
- An active call is automatically transferred to the cellular phone after the ignition key is switched to OFF.

Uconnect™ Phone Features

Language Selection

To change the language that the Uconnect™ Phone is using:

- Press the button to begin.
- After the "Ready" prompt and the following beep, say the name of the language you wish to switch to English, Espanol, or Francais.
- Continue to follow the system prompts to complete the language selection.

After selecting one of the languages, all prompts and voice commands will be in that language.

NOTE: After every Uconnect™ Phone language change operation, only the language-specific 32-name phonebook is usable. The paired phone name is not language-specific and usable across all languages.

Emergency Assistance

If you are in an emergency and the cellular phone is reachable:

- Pick up the phone and manually dial the emergency number for your area.

Downloaded from www.Manualslib.com manuals search engine

If the phone is not reachable and the Uconnect™ Phone is operational, you may reach the emergency number as follows:

- Press the button to begin.
- After the "Ready" prompt and the following beep, say "Emergency" and the Uconnect™ Phone will instruct the paired cellular phone to call the emergency number. This feature is supported in the U.S., Canada, and Mexico.

NOTE:

- The emergency number dialed is based on the country where the vehicle is purchased (911 for the U.S. and Canada and 060 for Mexico). The number dialed may not be applicable with the available cellular service and area.
- If supported, this number may be programmable on some systems. To do this, press the button and say 'Setup', followed by 'Emergency'.
- The Uconnect™ Phone does slightly lower your chances of successfully making a phone call as to that for the cellular phone directly.

WARNING!

Your phone must be turned on and paired to the Uconnect™ Phone System to allow use of this vehicle feature in emergency situations, when the cellular phone has network coverage and stays paired to the Uconnect™ Phone System.

Towing Assistance

If you need towing assistance:

- Press the button to begin.

Downloaded from www.Manualslib.com manuals search engine

- After the "Ready" prompt and the following beep, say "Towing Assistance."

NOTE:

- The towing assistance number dialed is based on the country where the vehicle is purchased (1-800-528-2069 for the U.S., 1-877-213-4525 for Canada, 55-14-3454 for Mexico City and 1-800-712-3040 for outside Mexico City in Mexico). Please refer to the 24-Hour "Towing Assistance" coverage details on the DVD in the Warranty Information Booklet and the 24-Hour Towing Assistance references.
- If supported, this number may be programmable on some systems. To do this, press the button and say "Setup", followed by "Towing Assistance".

Paging

To learn how to page, refer to "Working with Automated Systems." Paging works properly except for pagers of certain companies, which time out a little too soon to work properly with the Uconnect™ Phone.

Voice Mail Calling

To learn how to access your voice mail, refer to "Working with Automated Systems."

Working with Automated Systems

This method is used in instances where one generally has to press numbers on the cellular phone keypad while navigating through an automated telephone system.

You can use your Uconnect™ Phone to access a voice mail system or an automated service, such as a paging service or automated customer service line. Some services require immediate response selection. In some instances, that may be too quick for use of the Uconnect™ Phone.

When calling a number with your Uconnect™ Phone that normally requires you to enter in a touch-tone sequence

Downloaded from www.Manualslib.com manuals search engine

on your cellular phone keypad, you can press the VR button and say the sequence you wish to enter, followed by the word "Send." For example, if required to enter your PIN followed with a pound, (3 7 4 6 #), you can press the VR button and say, "3 7 4 6 # Send." Saying a number, or sequence of numbers, followed by "Send," is also to be used for navigating through an automated customer service center menu structure, and to leave a number on a pager.

You can also send stored Uconnect™ phonebook entries as tones for fast and easy access to voice mail and pager entries. To use this feature, dial the number you wish to call and then press the VR button and say, "Send." The system will prompt you to enter the name or number and say the name of the phonebook entry you wish to send. The Uconnect™ Phone will then send the corresponding phone number associated with the phonebook entry, as tones over the phone.

NOTE:

- You may not hear all of the tones due to cellular phone network configurations. This is normal.
- Some paging and voice mail systems have system time out settings that are too short and may not allow the use of this feature.

Barge In - Overriding Prompts

The "Voice Command" button can be used when you wish to skip part of a prompt and issue your voice command immediately. For example, if a prompt is asking "Would you like to pair a phone, clear a...," you could press the VR button and say, "Pair a Phone" to select that option without having to listen to the rest of the voice prompt.

Turning Confirmation Prompts ON/OFF

Turning confirmation prompts off will stop the system from confirming your choices (e.g., the Uconnect™ Phone will not repeat a phone number before you dial it).

Downloaded from www.Manualslib.com manuals search engine

- Press the button to begin.
- After the "Ready" prompt and the following beep, say "Setup Confirmations." The Uconnect™ Phone will play the current confirmation prompt status and you will be given the choice to change it.

Phone and Network Status Indicators

If available on the radio and/or on a premium display such as the instrument panel cluster, and supported by your cellular phone, the Uconnect™ Phone will provide notification to inform you of your phone and network status when you are attempting to make a phone call using Uconnect™ Phone. The status is given for roaming, network signal strength, phone battery strength, etc.

Dialing Using the Cellular Phone Keypad

You can dial a phone number with your cellular phone keypad and still use the Uconnect™ Phone (while dialing via the cellular phone keypad, the user must exercise caution and take precautionary safety measures). By dialing a number with your paired Bluetooth® cellular phone, the audio will be played through your vehicle's audio system. The Uconnect™ Phone will work the same as if you dial the number using Voice Command.

NOTE: Certain brands of cellular phones do not send the dial ring to the Uconnect™ Phone to play it on the vehicle audio system, so you will not hear it. Under this situation, after successfully dialing a number the user may feel that the call did not go through even though the call is in progress. Once your call is answered, you will hear the audio.

Mute/Un-Mute (Mute OFF)

When you mute the Uconnect™ Phone, you will still be able to hear the conversation coming from the other party, but the other party will not be able to hear you. In order to mute the Uconnect™ Phone:

- Press the VR button.

Downloaded from www.Manualslib.com manuals search engine

- Following the beep, say "Mute."

In order to un-mute the Uconnect™ Phone:

- Press the VR button.
- Following the beep, say "Mute off."

Advanced Phone Connectivity

Transfer Call to and from Cellular Phone

The Uconnect™ Phone allows ongoing calls to be transferred from your cellular phone to the Uconnect™ Phone without terminating the call. To transfer an ongoing call from your Uconnect™ Phone paired cellular phone to the Uconnect™ Phone or vice versa, press the VR button and say "Transfer Call."

Connect or Disconnect Link Between the Uconnect™ Phone and Cellular Phone

Your cellular phone can be paired with many different electronic devices, but can only be actively "connected" with one electronic device at a time.

If you would like to connect or disconnect the Bluetooth® connection between a Uconnect™ Phone paired cellular phone and the Uconnect™ Phone, follow the instructions described in your cellular phone User's Manual.

List Paired Cellular Phone Names

- Press the button to begin.
- After the "Ready" prompt and the following beep, say "Setup Phone Pairing."
- When prompted, say "List Phones."

Downloaded from www.Manualslib.com manuals search engine

- The Uconnect™ Phone will play the phone names of all paired cellular phones in order from the highest to the lowest priority. To "select" or "delete" a paired phone being announced, press the VR button and say "Select" or "Delete." Also, see the next two sections for an alternate way to "select" or "delete" a paired phone.

Select Another Cellular Phone

This feature allows you to select and start using another phone paired with the Uconnect™ Phone.

- Press the button to begin.
- After the "Ready" prompt and the following beep, say "Setup Select Phone" and follow the prompts.
- You can also press the button at any time while the list is being played, and then choose the phone that you wish to select.
- The selected phone will be used for the next phone call. If the selected phone is not available, the Uconnect™ Phone will return to using the highest priority phone present in or near (approximately within 30 ft (9 m)) the vehicle.

Delete Uconnect™ Phone Paired Cellular Phones

- Press the button to begin.
- After the "Ready" prompt and the following beep, say "Setup Phone Pairing."
- At the next prompt, say "Delete" and follow the prompts.
- You can also press the button at any time while the list is being played, and then choose the phone you wish to delete.

Downloaded from www.Manualslib.com manuals search engine

Things You Should Know About Your Uconnect™ Phone

Uconnect™ Phone Tutorial

To hear a brief tutorial of the system features, press the button and say "Uconnect™ Tutorial."

Voice Training

For users experiencing difficulty with the system recognizing their voice commands or numbers, the Uconnect™ Phone Voice Training feature may be used. To enter this training mode, follow one of the two following procedures:

From outside the Uconnect™ Phone mode (e.g., from radio mode):

- Press and hold the VR button for five seconds until the session begins, or,
- Press the VR button and say the "Setup, Voice Training" command.

Repeat the words and phrases when prompted by the Uconnect™ Phone. For best results, the Voice Training session should be completed when the vehicle is parked with the engine running, all windows closed, and the blower fan switched off.

This procedure may be repeated with a new user. The system will adapt to the last trained voice only.

To restore the Voice Command system to factory default settings, enter the Voice Training session via the above procedure and follow the prompts.

Voice Command

- For best performance, adjust the rearview mirror to provide at least ½ in (1 cm) gap between the overhead console (if equipped) and the mirror.
- Always wait for the beep before speaking.

Downloaded from www.Manualslib.com manuals search engine

- Speak normally, without pausing, just as you would speak to a person sitting a few feet/meters away from you.
- Make sure that no one other than you is speaking during a Voice Command period.
- Performance is maximized under:
  - low-to-medium blower setting,
  - low-to-medium vehicle speed,
  - low road noise,
  - smooth road surface,
  - fully closed windows,
  - dry weather condition.
- Even though the system is designed for users speaking in North American English, French, and Spanish accents, the system may not always work for some.
- When navigating through an automated system such as voice mail, or when sending a page, at the end of speaking the digit string, make sure to say "Send."
- Storing names in the phonebook when the vehicle is not in motion is recommended.
- It is not recommended to store similar sounding names in the Uconnect™ Phonebook.
- Phonebook (Downloaded and Uconnect™ Phone Local) name recognition rate is optimized when the entries are not similar.
- Numbers must be spoken in single digits. "800" must be spoken "eight-zero-zero" not "eight hundred".
- You can say "O" (letter "O") for "0" (zero).
- Even though international dialing for most number combinations is supported, some shortcut dialing number combinations may not be supported.

Downloaded from www.Manualslib.com manuals search engine

- In a convertible vehicle, system performance may be compromised with the convertible top down.

Phone Far End Audio Performance

- Audio quality is maximized under:
  - low-to-medium blower setting,
  - low-to-medium vehicle speed,
  - low road noise,
  - smooth road surface,
  - fully closed windows,
  - dry weather conditions, and
  - operation from the driver's seat.
- Performance, such as audio clarity, echo, and loudness to a large degree rely on the phone and network, and not the Uconnect™ Phone.
- Echo at the phone far end can sometimes be reduced by lowering the in-vehicle audio volume.
- In a convertible vehicle, system performance may be compromised with the convertible top down.

Bluetooth® Communication Link

Cellular phones have been found to lose connection to the Uconnect™ Phone. When this happens, the connection can generally be reestablished by switching the phone off/on. Your cellular phone is recommended to remain in Bluetooth® ON mode.

Power-Up

After switching the ignition key from OFF to either the ON or ACC position, or after a language change, you must wait at least five seconds prior to using the system.

Downloaded from www.Manualslib.com manuals search engine

Voice Tree

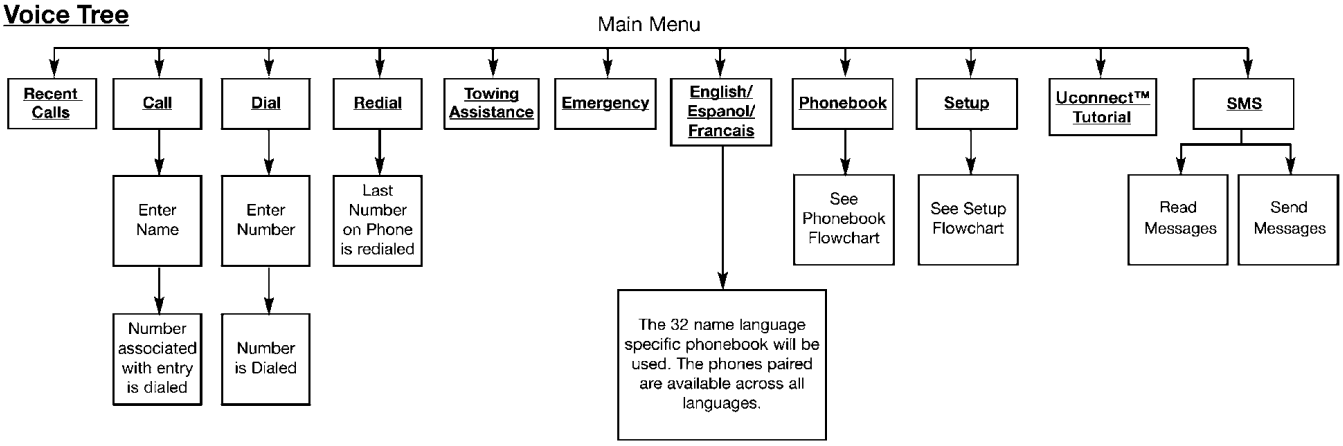

Note: **Available Voice commands are shown in bold face and are underlined.**

030607515

3

Downloaded from www.Manualslib.com manuals search engine

Voice Tree – Phonebook

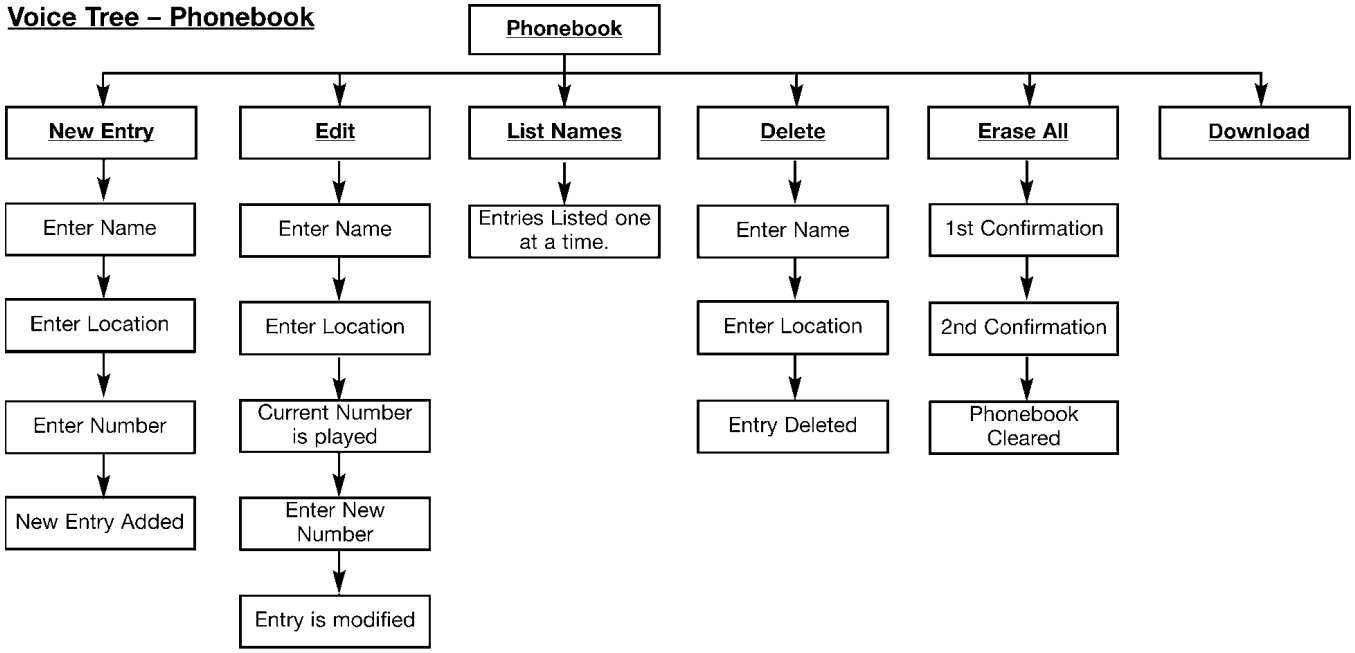

Note: **Available Voice commands are shown in bold face and are underlined.**

81c6bf80

Downloaded from www.Manualslib.com manuals search engine

Voice Tree – Setup

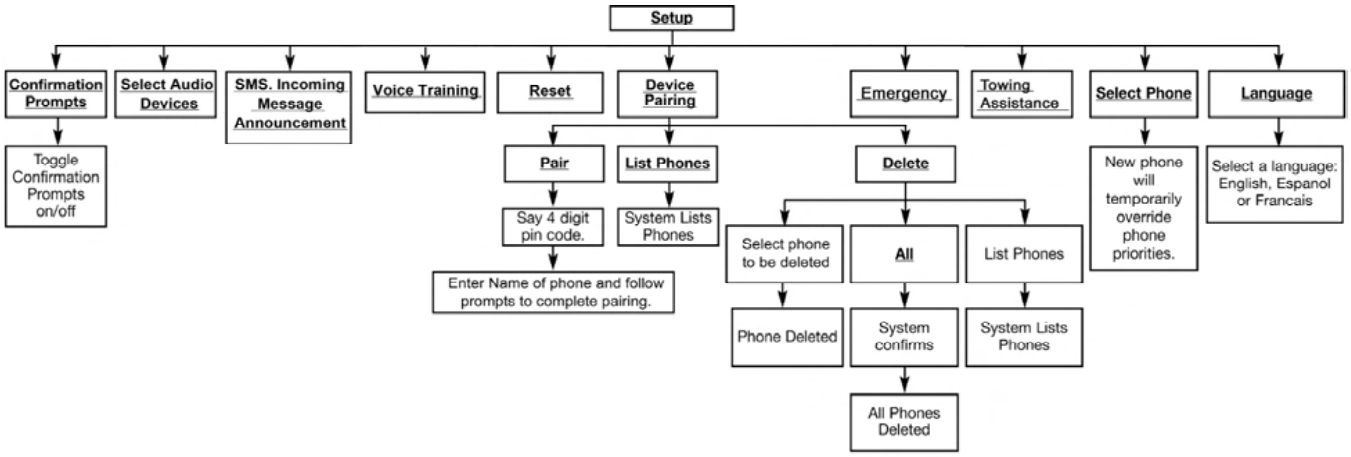

Note: Available Voice commands are shown in bold face and are underlined. 030605540

Downloaded from www.Manualslib.com manuals search engine

Voice Commands	
Primary	Alternate(s)
zero	
one	
two	
three	
four	
five	
six	
seven	
eight	
nine	
star (*)	
plus (+)	
pound (#)	
add location	
all	

Voice Commands	
Primary	Alternate(s)
call	
cancel	
confirmation prompts	
continue	
delete	
dial	
download	
edit	
emergency	
English	
erase all	
Espanol	
Francais	
help	
home	

Downloaded from www.Manualslib.com manuals search engine

Voice Commands	
Primary	Alternate(s)
language	
list names	
list phones	
mobile	
mute	
mute off	
new entry	
no	
pager	
pair a phone	
phone pairing	pairing
phonebook	phone book
previous	
record again	
redial	

Voice Commands	
Primary	Alternate(s)
return to main menu	return or main menu
select phone	select
send	
set up	phone settings or phone set up
towing assistance	
transfer call	
Uconnect™ Tutorial	
try again	
voice training	
work	
yes	

Downloaded from www.Manualslib.com manuals search engine

General Information

This device complies with Part 15 of the FCC rules and RSS 210 of Industry Canada. Operation is subject to the following conditions:

- Changes or modifications not expressly approved by the party responsible for compliance could void the user's authority to operate the equipment.
- This device may not cause harmful interference.
- This device must accept any interference received, including interference that may cause undesired operation.

VOICE COMMAND — IF EQUIPPED

Voice Command System Operation

This Voice Command system allows you to control your AM, FM radio, satellite radio, disc player, and a memo recorder.

NOTE: Take care to speak into the Voice Interface System as calmly and normally as possible. The ability of the Voice Interface System to recognize user voice commands may be negatively affected by rapid speaking or a raised voice level.

WARNING!

Any voice commanded system should be used only in safe driving conditions following local laws and phone use. All attention should be kept on the roadway ahead. Failure to do so may result in an accident causing serious injury or death.

When you press the Voice Command button, you will hear a beep. The beep is your signal to give a command.

Downloaded from www.Manualslib.com manuals search engine

NOTE: If you do not say a command within a few seconds, the system will present you with a list of options.

If you ever wish to interrupt the system while it lists options, press the Voice Command button, listen for the beep, and say your command.

Pressing the Voice Command button while the system is speaking is known as "barging in." The system will be interrupted, and after the beep, you can add or change commands. This will become helpful once you start to learn the options.

NOTE: At any time, you can say the words "Cancel", "Help" or "Main Menu".

These commands are universal and can be used from any menu. All other commands can be used depending upon the active application.

For example, if you are in the disc menu and you are listening to FM radio, you can speak commands from the disc menu or from the FM radio menu.

When using this system, you should speak clearly and at a normal speaking volume.

The system will best recognize your speech if the windows are closed, and the heater/air conditioning fan is set to low.

At any point, if the system does not recognize one of your commands, you will be prompted to repeat it.

To hear the first available Menu, press the Voice Command button and say "Help" or "Main Menu".

Downloaded from www.Manualslib.com manuals search engine

Commands

The Voice Command system understands two types of commands. Universal commands are available at all times. Local commands are available if the supported radio mode is active.

Changing the Volume

1. Start a dialogue by pressing the Voice Command VR button.

2. Say a command (e.g., "Help").

3. Use the ON/OFF VOLUME rotary knob to adjust the volume to a comfortable level while the Voice Command system is speaking. Please note the volume setting for Voice Command is different than the audio system.

Main Menu

Start a dialogue by pressing the Voice Command VR button. You may say "Main Menu" to switch to the main menu.

In this mode, you can say the following commands:

- "Radio" (to switch to the radio mode)
- "Disc" (to switch to the disc mode)
- "Memo" (to switch to the memo recorder)
- "System Setup" (to switch to system setup)

Radio AM (or Radio Long Wave or Radio Medium Wave — If Equipped)

To switch to the AM band, say "AM" or "Radio AM". In this mode, you may say the following commands:

- "Frequency" (to change the frequency)
- "Next Station" (to select the next station)
- "Previous Station" (to select the previous station)
- "Radio Menu" (to switch to the radio menu)
- "Main Menu" (to switch to the main menu)

Downloaded from www.Manualslib.com manuals search engine

Radio FM
To switch to the FM band, say "FM" or "Radio FM". In this mode, you may say the following commands:

- "Frequency" (to change the frequency)
- "Next Station" (to select the next station)
- "Previous Station" (to select the previous station)
- "Radio Menu" (to switch to the radio menu)
- "Main Menu" (to switch to the main menu)

Satellite Radio
To switch to satellite radio mode, say "Sat" or "Satellite Radio". In this mode, you may say the following commands:

- "Channel Number" (to change the channel by its spoken number)
- "Next Channel" (to select the next channel)
- "Previous Channel" (to select the previous channel)
- "List Channel" (to hear a list of available channels)
- "Select Name" (to say the name of a channel)
- "Radio Menu" (to switch to the radio menu)
- "Main Menu" (to switch to the main menu)

Disc
To switch to the disc mode, say "Disc". In this mode, you may say the following commands:

- "Track" (#) (to change the track)
- "Next Track" (to play the next track)
- "Previous Track" (to play the previous track)
- "Main Menu" (to switch to the main menu)

Downloaded from www.Manualslib.com manuals search engine

Memo

To switch to the voice recorder mode, say "Memo". In this mode, you may say the following commands:

- "New Memo" (to record a new memo) — During the recording, you may press the Voice Command VR button to stop recording. You proceed by saying one of the following commands:
  - "Save" (to save the memo)
  - "Continue" (to continue recording)
  - "Delete" (to delete the recording)
- "Play Memos" (to play previously recorded memos) — During the playback you may press the Voice Command VR button to stop playing memos. You proceed by saying one of the following commands:
  - "Repeat" (to repeat a memo)
  - "Next" (to play the next memo)
  - "Previous" (to play the previous memo)
  - "Delete" (to delete a memo)
- "Delete All" (to delete all memos)

System Setup

To switch to system setup, say "Setup". In this mode, you may say the following commands:

- "Language German"
- "Language Dutch"
- "Language Italian"
- "Language English"
- "Language French"
- "Language Spanish"
- "Tutorial"
- "Voice Training"

Downloaded from www.Manualslib.com manuals search engine

NOTE: Keep in mind that you have to press the Voice Command button first and wait for the beep before speaking the "Barge In" commands.

Voice Training

For users experiencing difficulty with the system recognizing their voice commands or numbers the Uconnect™ Voice "Voice Training" feature may be used.

1. Press the Voice Command button, say "System Setup" and once you are in that menu then say "Voice Training." This will train your own voice to the system and will improve recognition.

2. Repeat the words and phrases when prompted by Uconnect™ Voice. For best results, the "Voice Training" session should be completed when the vehicle is parked, engine running, all windows closed, and the blower fan switched off. This procedure may be repeated with a new user. The system will adapt to the last trained voice only.

SEATS

Seats are a primary part of the Occupant Restraint System of the vehicle. They need to be used properly for safe operation of the vehicle.

WARNING!

- **DO NOT allow people to ride in any area of your vehicle that is not equipped with seats and seat belts. In a collision, people riding in these areas are more likely to be seriously injured or killed.**
- **Be sure everyone in your vehicle is in a seat and using a seat belt properly.**

Downloaded from www.Manualslib.com manuals search engine

Power Seats

The power seat switch is located on the outboard side of the seat near the floor. Use this switch to move the driver's seat up or down, forward or rearward or to recline the seat. The passenger's seat will move up or down, forward or rearward.

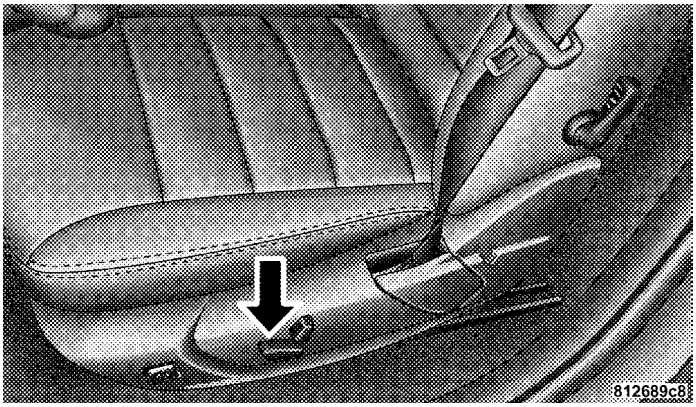

Power Seat Switch

WARNING!

Adjusting a seat while the vehicle is moving is dangerous. The sudden movement of the seat could cause you to lose control. The seat belt might not be properly adjusted and you could be injured. Adjust the seat only while the vehicle is parked.

CAUTION!

DO NOT place any article under a power seat or impede its ability to move as it may cause damage to the seat controls. Seat travel may become limited if movement is stopped by an obstruction in the seat's path.

Downloaded from www.Manualslib.com manuals search engine

Power Reclining Seats

The recline control is used to adjust the position of the seatback. To adjust the seatback forward, move the control toward the front of the vehicle. To move the seatback rearward, move the control toward the rear of the vehicle.

The recliner control is located on the outboard side of the seat.

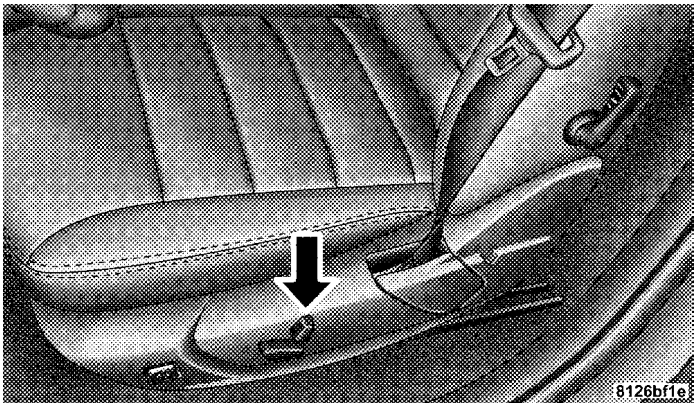

Power Seat Recline Switch

Downloaded from www.Manualslib.com manuals search engine

WARNING!

Do not ride with the seatback reclined so that the shoulder belt is no longer resting against your chest. In a collision you could slide under the seat belt and be seriously or even fatally injured. Use the recliner only when the vehicle is parked.

Lumbar Support

This feature allows you to increase or decrease the amount of lumbar support. Turn the control lever forward to increase and rearward to decrease the desired amount of lumbar support.

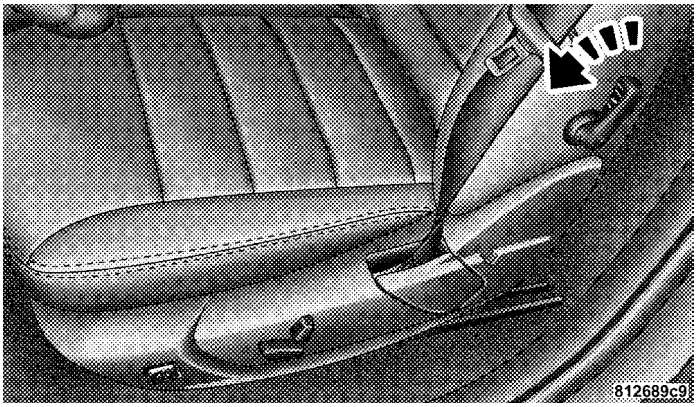

Lumbar Support Control Lever

Head Restraints

Head restraints can reduce the risk of injury in the event of a rear impact. The head restraint should be adjusted so the top of the head restraint is located above the top of your ear.

Downloaded from www.Manualslib.com manuals search engine

To raise the head restraint, pull upward on the head restraint. To lower the head restraint, press the large button, located on the base of the head restraint, and push downward on the head restraint.

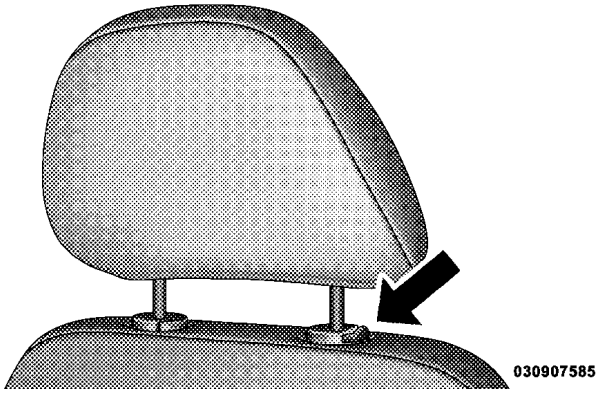

Adjustable Head Restraints

NOTE: The rear head restraints are not adjustable.

To remove the head restraint, pull upward on the head restraint to it's highest position, push in both buttons at the base of each head restraint rod, and simultaneously pull up on the head restraint.

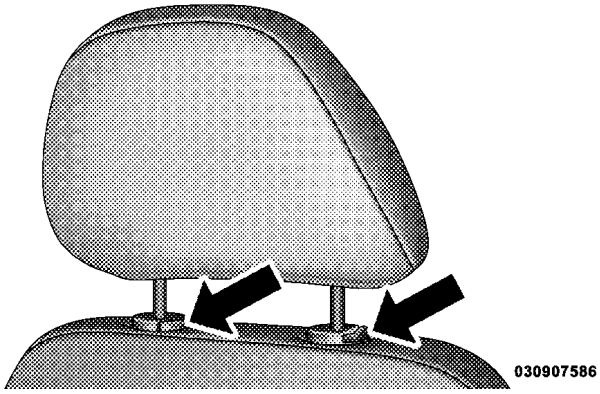

Removing Head Restraint

Downloaded from www.Manualslib.com manuals search engine

To install the head restraint, insert the head restraint rods into each guide, apply pressure down on the headrest until the head restraint reaches the first lock position, push the large button in and push down and adjust head restraint to desired position.

NOTE: Ensure that the front of the head restraint is facing toward the front of the vehicle.

WARNING!

Driving a vehicle with the head restraints removed or improperly adjusted could cause serious injury or death in the event of a collision. The head restraints should always be checked prior to operating the vehicle and never adjusted while the vehicle is in motion. Always adjust the head restraints when the vehicle is in PARK.

Heated Seats — If Equipped

This feature heats the front driver and passenger seats. The controls for each front seat are located near the bottom center of the instrument panel.

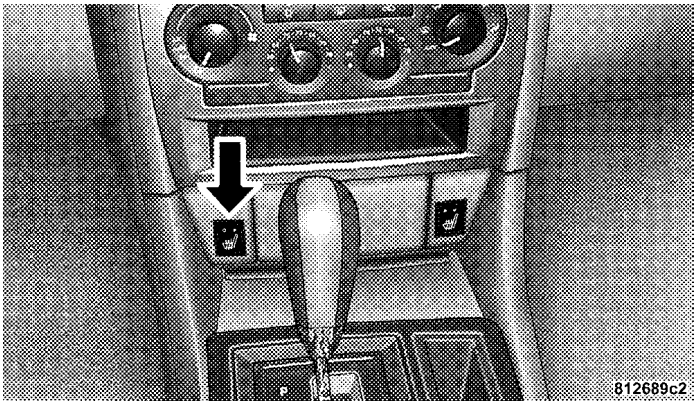

Front Heated Seat Switch

Downloaded from www.Manualslib.com manuals search engine

On vehicles equipped with rear heated seats, the seats closest to the doors are heated. The controls for these seats are located on the rear of the center console.

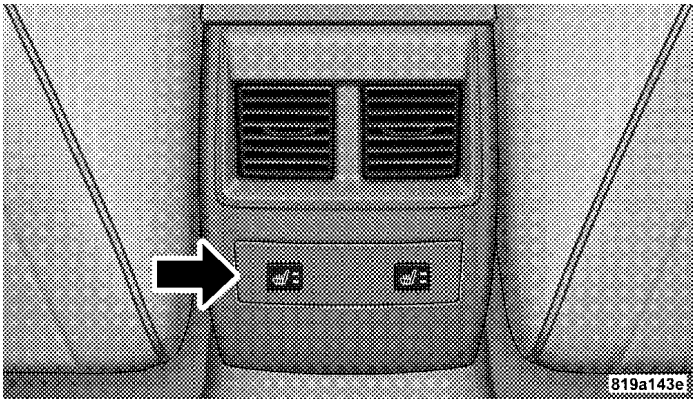

Rear Heated Seat Switch

After turning the ignition to RUN, you can choose from a High or Low heat setting. Amber indicator lights in each switch indicate the level of heat in use. Two indicators will illuminate for High, one for Low and none for Off.

Press the switch once to select High-level heating. Press the switch a second time to select Low-level heating. Press the switch a third time to shut the heating elements Off.

If the High-level heating is selected, the system will automatically switch to Low-level heating after approximately 30 minutes of continuous operation. At that time, the number of indicators illuminated changes from two to one, indicating the change. Operation on the Low-level setting also turns Off automatically after approximately 30 minutes.

NOTE: Once a heat setting is selected, heat will be felt within two to five minutes.

Downloaded from www.Manualslib.com manuals search engine

WARNING!

- **Persons who are unable to feel pain to the skin because of advanced age, chronic illness, diabetes, spinal cord injury, medication, alcohol use, exhaustion or other physical condition must exercise care when using the seat heater. It may cause burns even at low temperatures, especially if used for long periods of time.**
- **Do not place anything on the seat that insulates against heat, such as a blanket or cushion. This may cause the seat heater to overheat. Sitting in a seat that has been overheated could cause serious burns due to the increased surface temperature of the seat.**

CAUTION!

Repeated overheating of the seat could damage the heating element and/or degrade the material of the seat.

Folding Rear Seat

The rear seatbacks can be folded forward to provide an additional storage area. Pull on the loops shown in the illustration to fold down either or both seatbacks. These loops can be tucked away when not in use.

Downloaded from www.Manualslib.com manuals search engine

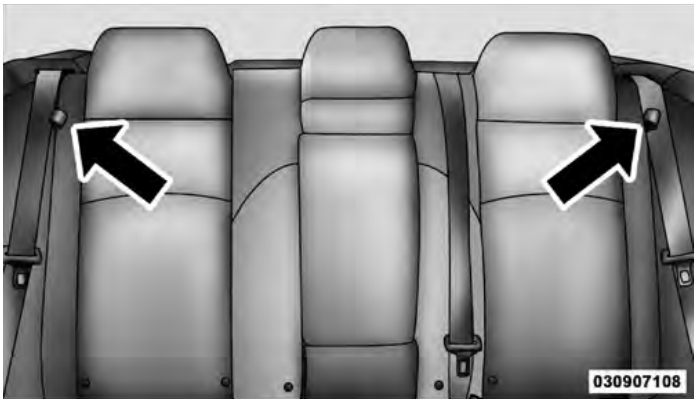

Folding Rear Seats

When the seatback is folded to the upright position, make sure it is latched by strongly pulling on the top of the seatback above the seat strap.

WARNING!

- **Be certain that the seatback is securely locked into position. If the seatback is not securely locked into position, the seat will not provide the proper stability for child seats and/or passengers. An improperly latched seat could cause serious injury.**
- **The cargo area in the rear of the vehicle (with the rear seatbacks in the locked-up or folded down position) should not be used as a play area by children when the vehicle is in motion. They could be seriously injured in an accident. Children should be seated and using the proper restraint system.**

Downloaded from www.Manualslib.com manuals search engine

DRIVER MEMORY SEAT — IF EQUIPPED

This feature allows the driver to store up to two different memory profiles for easy recall through a memory switch. Each memory profile contains desired position settings for the driver seat, side mirrors, adjustable pedals (if equipped), and power tilt and telescopic steering column (if equipped) and a set of desired radio station presets. Your Remote Keyless Entry (RKE) transmitter can also be programmed to recall the same positions when the UNLOCK button is pressed.

NOTE:

- Only one RKE transmitter can be linked to each of the memory positions.
- Passive Entry door handles cannot be linked to the memory function. Use either the memory recall switch or the RKE transmitter (if linked to the memory feature) to recall memory positions 1 or 2.

The memory switch is located on the driver's door trim panel. The switch contains an (S) button to activate the memory save function. It also contains a rocker switch labeled with the number (1) and the number (2). The rocker switch allows the driver to recall either of two pre-programmed memory profiles by pressing the appropriate side of the switch.

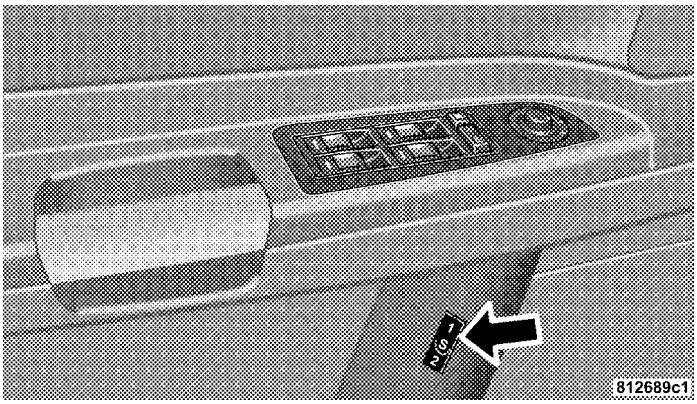

Memory Switch

Downloaded from www.Manualslib.com manuals search engine

Programming The Memory Feature

NOTE: Saving a new memory profile will erase an existing profile from memory.

To create a new memory profile, perform the following:

1. Place the ignition into the RUN position.

2. Adjust all memory profile settings to desired preferences (i.e., seat, side mirror, adjustable pedals [if equipped], power tilt and telescopic steering column [if equipped], and radio station presets).

3. Press and release the SET (S) button on the memory switch.

4. Within five seconds, press and release the MEMORY button 1 or 2. The Electronic Vehicle Information Center (EVIC) (if equipped) will display which memory position has been set.

NOTE:

- Memory profiles can be set without the vehicle in PARK, but the vehicle must be in PARK to recall a memory profile.
- The Recall Memory with Remote Key Unlock feature can be enabled through the EVIC (if equipped). Refer to "Electronic Vehicle Information Center (EVIC)/ Personal Settings (Customer-Programmable Features)" in "Understanding Your Instrument Panel" for further information.

Linking and Unlinking the Remote Keyless Entry Transmitter to Memory

Your RKE transmitters can be programmed to recall one of two pre-programmed memory profiles by pressing the UNLOCK button on the RKE transmitter.

Downloaded from www.Manualslib.com manuals search engine

To program your RKE transmitters, perform the following:

1. Remove the Key Fob from the ignition (or change the ignition to OFF, for vehicles equipped with Keyless Go™).

2. Select desired memory profile 1 or 2.

3. Once the profile has been recalled, press and release the SET (S) button on the memory switch, then press and release the side of the rocker switch labeled 1 or 2 accordingly. "Memory Profile Set" (1 or 2) will display in the instrument cluster on vehicles equipped with the EVIC.

4. Press and release the LOCK button on the RKE transmitter within 10 seconds.

NOTE: Your RKE transmitters can be unlinked to your memory settings by pressing the SET (S) button followed by the UNLOCK button on the RKE transmitter in Step 4 above.

Memory Position Recall

NOTE:

- The vehicle must be in PARK to recall memory positions. If a recall is attempted when the vehicle is not in PARK, a message will display in the EVIC (if equipped).
- The driver's seat belt must be unbuckled to recall memory positions.

To recall the memory settings for driver one, press MEMORY button number 1 on the driver's door or the UNLOCK button on the RKE transmitter linked to memory position 1.

Downloaded from www.Manualslib.com manuals search engine

To recall the memory setting for driver two, press MEMORY button number 2 on the driver's door or the UNLOCK button on the RKE transmitter linked to memory position 2.

A recall can be cancelled by pressing any of the MEMORY buttons (S, 1, or 2) on the driver's door during a recall. When a recall is cancelled, the driver seat, side mirror, adjustable pedals (if equipped), and power tilt and telescopic steering column (if equipped) stop moving. A delay of one second will occur before another recall can be selected.

Easy Entry/Exit Seat (Available with Memory Seat Only)

This feature provides automatic driver seat positioning to enhance driver mobility when entering and exiting the vehicle.

The distance the driver seat moves depends on where you have the driver seat positioned when you remove the Key Fob from the ignition (or change the ignition to OFF, for vehicles equipped with Keyless Go™).

- When you remove the Key Fob from the ignition (or change the ignition to OFF, for vehicles equipped with Keyless Go™), the driver seat will move about 2.4 in (60 mm) rearward if the driver seat position is greater than or equal to 2.7 in (67.7 mm) forward of the rear stop. The seat will return to its previously set position when you place the ignition into the ACC or RUN position.
- When you remove the Key Fob from the ignition (or change the ignition to OFF, for vehicles equipped with Keyless Go™), the driver seat will move to a position 0.3 in (7.7 mm) forward of the rear stop if the driver seat position is between 0.9 in and 2.7 in (22.7 mm and 67.7 mm) forward of the rear stop. The seat will return to its previously set position when you place the ignition to the ACC or RUN position.

Downloaded from www.Manualslib.com manuals search engine

- The Easy Entry/Easy Exit feature is disabled when the driver seat position is less than 0.9 in (22.7 mm) forward of the rear stop. At this position, there is no benefit to the driver by moving the seat for Easy Exit or Easy Entry.

Each stored memory setting will have an associated Easy Entry and Easy Exit position.

NOTE: The Easy Entry/Easy Exit feature can be enabled or disabled through the programmable features in the EVIC. Refer to "Electronic Vehicle Information Center (EVIC)/Personal Settings (Customer-Programmable Features)" in "Understanding Your Instrument Panel" for further information.

TO OPEN AND CLOSE THE HOOD

Two latches must be released to open the hood.

1. Pull the hood release lever located under the left side of the instrument panel.

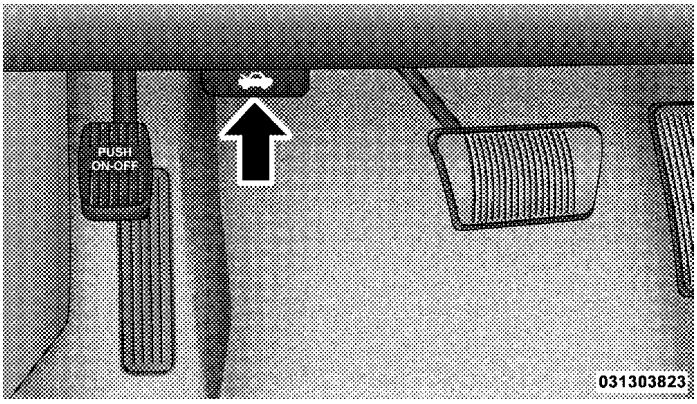

Hood Release Lever

2. Move to the outside of the vehicle and push the safety catch to the left. The safety catch is located under the center front edge of the hood.

Downloaded from www.Manualslib.com manuals search engine

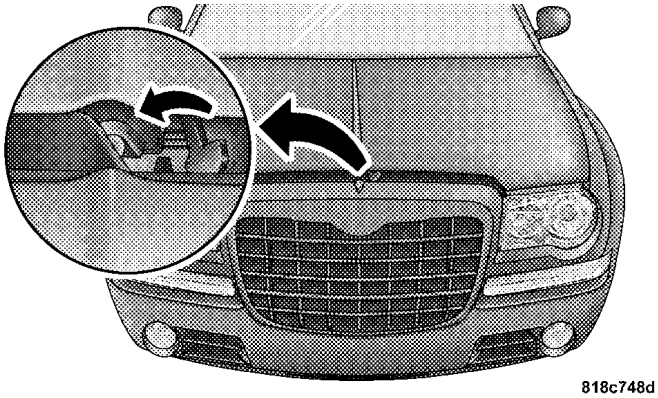

Hood Safety Catch

Use the hood prop rod (if equipped) to secure the hood in the open position.

CAUTION!

To prevent possible damage, do not slam the hood to close it. Lower the hood, until it is open approximately 6 in (15 cm), and then drop it. This should secure both latches. Never drive your vehicle unless the hood is fully closed, with both latches engaged.

WARNING!

Be sure the hood is fully latched before driving your vehicle. If the hood is not fully latched, it could open when the vehicle is in motion and block your vision. Failure to follow this warning could result in serious injury or death.

Downloaded from www.Manualslib.com manuals search engine

LIGHTS

Headlight Switch

The headlight switch is located on the left side of the instrument panel. This switch controls the operation of the headlights, parking lights, instrument panel lights, instrument panel light dimming, interior lights and fog lights.

Headlight Switch

Rotate the headlight switch clockwise to the first detent for parking light and instrument panel light operation. Rotate the headlight switch to the second detent for headlight, parking light and instrument panel light operation.

Downloaded from www.Manualslib.com manuals search engine

Automatic Headlights — If Equipped

This system automatically turns the headlights on or off according to ambient light levels. To turn the system on, rotate the headlight switch counterclockwise to the A (AUTO) position. When the system is on, the headlight time delay feature is also on. This means the headlights will stay on for up to 90 seconds after you place the ignition into the OFF position. To turn the automatic system off, move the headlight switch out of the AUTO position.

NOTE: The engine must be running before the headlights will come on in the automatic mode.

Headlights On with Wipers (Available with Automatic Headlights Only)

When this feature is active, the headlights will turn on approximately 10 seconds after the wipers are turned on if the headlight switch is placed in the AUTO position. In addition, the headlights will turn off when the wipers are turned off if they were turned on by this feature.

The Headlights On with Wipers feature can be turned on or off through the Electronic Vehicle Information Center (EVIC) (if equipped). Refer to "Electronic Vehicle Information Center (EVIC)/Customer-Programmable Features" in "Understanding Your Instrument Panel" for further information.

Headlight Time Delay

This feature provides the safety of headlight illumination for up to 90 seconds (programmable) when leaving your vehicle in an unlit area.

To activate the delay feature, place the ignition in the OFF position while the headlights are still on. Then, turn off the headlights within 45 seconds. The delay interval begins when the headlight switch is turned off.

If you turn the headlights or parking lights on, or place the ignition in ACC or RUN, the system will cancel the delay.

Downloaded from www.Manualslib.com manuals search engine

If you turn the headlights off before the ignition, they will turn off in the normal manner.

NOTE: The lights must be turned off within 45 seconds of placing the ignition in the OFF position to activate this feature.

The headlight delay time is programmable on vehicles equipped with the EVIC. Refer to "Electronic Vehicle Information Center (EVIC)/Customer-Programmable Features" in "Understanding Your Instrument Panel" for further information.

SmartBeam™ — If Equipped

The SmartBeam™ system provides increased forward lighting at night by automating high beam control through the use of a digital camera mounted on the inside rearview mirror. This camera detects vehicle specific light and automatically switches from high beams to low beams until the approaching vehicle is out of view.

To Activate

1. Select "Automatic High Beams — ON" through the EVIC. Refer to "Electronic Vehicle Information Center (EVIC)/Customer-Programmable Features" in "Understanding Your Instrument Panel" for further information.

2. Rotate the headlight switch counterclockwise to the A (AUTO) position.

3. Push the multifunction lever away from you to switch the headlights to the high beam position. Refer to "Multifunction Lever" for further information.

NOTE: This system will not activate until the vehicle is at or above 25 mph (40 km/h).

To Deactivate

Perform either of the following steps to deactivate the SmartBeam™ system.

Downloaded from www.Manualslib.com manuals search engine

1. Pull the multifunction lever toward you to switch the headlights from the high beam to the low beam position.

2. Rotate the headlight switch clockwise from the AUTO to the on position.

NOTE: Broken, muddy, or obstructed headlights and taillights of vehicles in the field of view will cause headlights to remain on longer (closer to the vehicle). Also, dirt, film, and other obstructions on the windshield or camera lens will cause the system to function improperly.

Daytime Running Lights — If Equipped

The high beam headlights will come on as Daytime Running Lights whenever the ignition is placed in the RUN position, the headlights are off and the parking brake is off. The headlight switch must be used for normal nighttime driving.

Lights-On Reminder

If the headlights or parking lights are on after the ignition is placed in the OFF position, a chime will sound to alert the driver when the driver's door is opened.

Fog Lights — If Equipped

The front fog light switch is built into the headlight switch. To activate the front fog lights, turn on the parking lights or the low beam headlights and press the headlight switch. To turn off the front fog lights, either press the headlight switch a second time or turn off the headlight switch.

An indicator light in the instrument cluster illuminates when the fog lights are turned on.

NOTE: The fog lights will operate with the low beam headlights or parking lights on. However, selecting the high beam headlights will turn off the fog lights.

Downloaded from www.Manualslib.com manuals search engine

Multifunction Lever

The multifunction lever controls the operation of the turn signals, headlight beam selection and passing lights. The multifunction lever is located on the left side of the steering column.

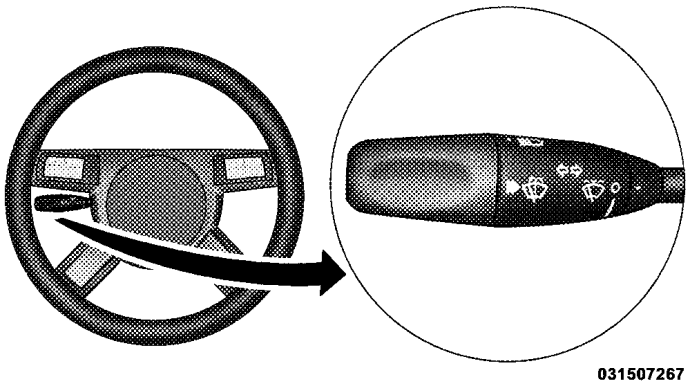

Multifunction Lever

Turn Signals

Move the multifunction lever up or down and the arrows on each side of the instrument cluster flash to show proper operation of the front and rear turn signal lights.

NOTE:

- If either light remains on and does not flash, or there is a very fast flash rate, check for a defective outside light bulb. If an indicator fails to light when the lever is moved, it would suggest that the indicator bulb is defective.
- A "Turn Signal On" message will appear in the EVIC (if equipped) and a continuous chime will sound if the vehicle is driven more than 1 mile (1.6 km) with either turn signal on.

Lane Change Assist

Tap the lever up or down once, without moving beyond the detent, and the turn signal (right or left) will flash three times then automatically turn off.

Downloaded from www.Manualslib.com manuals search engine

High/Low Beam Switch

Push the multifunction lever away from you to switch the headlights to high beam. Pull the multifunction lever toward you to switch the headlights back to low beam.

Flash-to-Pass

You can signal another vehicle with your headlights by lightly pulling the multifunction lever toward you. This will turn on the high beams headlights until the lever is released.

Overhead Console Map/Reading Lights

These lights are mounted between the sun visors on the overhead console. Each light is turned on by pressing the lens. Press the lens a second time to turn off the light. These lights also turn on when a door is opened, or when the UNLOCK button on the Remote Keyless Entry (RKE) transmitter is pressed or when the dimmer control is turned fully upward, past the second detent.

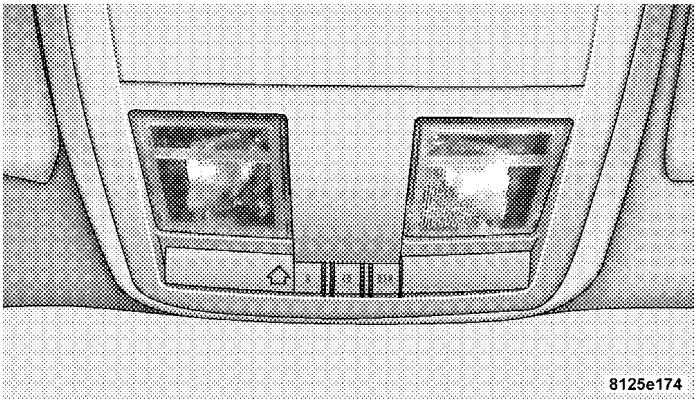

Overhead Console

Interior Lights

The interior lights come on when a door is opened.

To protect the battery, the interior lights will turn off automatically 10 minutes after the ignition is placed in the OFF position. This will occur if the interior lights were switched on manually or are on because a door is

Downloaded from www.Manualslib.com manuals search engine

open. This includes the glove box light, but not the trunk light. To restore interior light operation, either place the ignition in the RUN position or cycle the light switch.

Dimmer Control

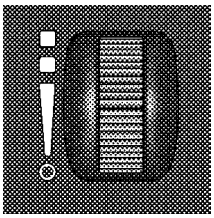

The dimmer control is part of the headlight switch and is located on the left side of the instrument panel. With the parking lights or headlights on, rotating the dimmer control upward will increase the brightness of the instrument panel lights and, if equipped, the lighting in the door map pockets and cupholders.

Dome Light Position

Rotate the dimmer control completely upward to the second detent to turn on the interior lights. The interior lights will remain on when the dimmer control is in this position.

Interior Light Defeat (OFF)

Rotate the dimmer control to the extreme bottom off position. The interior lights will remain off when the doors are open.

Parade Mode (Daytime Brightness Feature)

Rotate the dimmer control upward to the first detent. This feature brightens all text displays such as the odometer, EVIC (if equipped), and radio when the parking lights or headlights are on.

WINDSHIELD WIPERS AND WASHERS

The multifunction lever operates the windshield wipers and washer when the ignition is placed in the RUN position. The multifunction lever is located on the left side of the steering column.

Downloaded from www.Manualslib.com manuals search engine

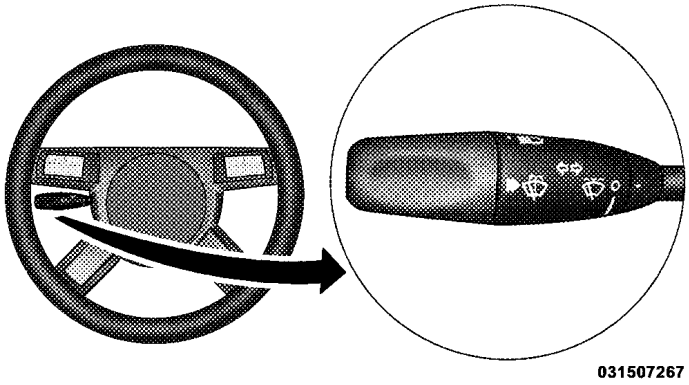

Windshield Wiper/Washer Control

Rotate the end of the multifunction lever to the first detent, past the intermittent settings for low-speed wiper operation, or to the second detent past the intermittent settings for high-speed wiper operation.

CAUTION!

Turn the windshield wipers off when driving through an automatic car wash. Damage to the windshield wipers may result if the wiper switch is left in any position other than off.

Intermittent Wiper System

Use the intermittent wiper when weather conditions make a single wiping cycle with a variable pause between cycles desirable. Rotate the end of the multifunction lever to select the desired delay interval. There are six delay settings which allow you to regulate the wipe interval from a minimum of one cycle every second to a maximum of approximately 23 seconds between cycles.

Downloaded from www.Manualslib.com manuals search engine

Mist Feature

Lightly push the multifunction lever inward (toward the steering column) to activate a single wipe cycle to clear off road mist or spray from a passing vehicle. The wipers will continue to operate until you release the multifunction lever.

Windshield Washers

To use the washer, push the multifunction lever inward completely (toward the steering column) and hold it for as long as washer spray is desired.

If you activate the washer while the windshield wiper control is in the delay range, the wipers will operate for two wipe cycles after releasing the lever and then resume the intermittent interval previously selected.

If you activate the washer while the windshield wiper is turned off, the wipers will operate for three wipe cycles and then turn off.

WARNING!

Sudden loss of visibility through the windshield could lead to an accident. You might not see other vehicles or other obstacles. To avoid sudden icing of the windshield during freezing weather, warm the windshield with the defroster before and during windshield washer use.

Headlights On With Wipers (Available with Automatic Headlights Only)

When this feature is active, the headlights will turn on approximately 10 seconds after the wipers are turned on if the headlight switch is placed in the AUTO position. In addition, the headlights will turn off when the wipers are turned off if they were turned on by this feature.

Downloaded from www.Manualslib.com manuals search engine

The Headlights On with Wipers feature can be turned on or off through the Electronic Vehicle Information Center (EVIC) (if equipped). Refer to "Electronic Vehicle Information Center (EVIC)/Personal Settings (Customer-Programmable Features)" in "Understanding Your Instrument Panel" for further information.

Rain Sensing Wipers — If Equipped

This feature senses moisture on the windshield and automatically activates the wipers for the driver. This feature is especially useful for road splash or over spray from the windshield washers of the vehicle ahead. Rotate the end of the multifunction lever to one of the six intermittent wiper settings to activate this feature.

The sensitivity of the system is adjustable from the multifunction lever. Wiper delay position 1 is the least sensitive and wiper delay position 6 is the most sensitive. Choose setting 3 or 4 for normal rain conditions. Choose setting 2 or 1 if you desire less wiper sensitivity. Choose setting 5 or 6 if you desire more sensitivity. The rain sense wipers will automatically change between an intermittent wipe, slow wipe and a fast wipe depending on the amount of moisture that is sensed on the windshield. Place the multifunction lever in the off position when not using the system.

NOTE:

- The Rain Sensing feature will not operate when the wiper speed is in the low or high position.
- The Rain Sensing feature may not function properly when ice or dried salt water is present on the windshield.
- Use of Rain-X® or products containing wax or silicone may reduce rain sensor performance.
- The Rain Sensing feature can be turned on and off through the EVIC (if equipped). Refer to "Electronic Vehicle Information Center (EVIC)/Personal Settings (Customer-Programmable Features)" in "Understanding Your Instrument Panel" for further information.

Downloaded from www.Manualslib.com manuals search engine

The Rain Sensing system has protective features for the wiper blades and arms. It will not operate under the following conditions:

- **Low Temperature Wipe Inhibit** — The Rain Sensing feature will not operate when the ignition is placed in the RUN position, the vehicle is stationary and the outside temperature is below 32°F (0°C), unless the wiper control on the multifunction lever is moved, the vehicle speed becomes greater than 0 mph (0 km/h) or the outside temperature rises above freezing.
- **Neutral Wipe Inhibit** — The rain sensing feature will not operate when the ignition is placed in the RUN position, the transmission shift lever is in the NEUTRAL position and the vehicle speed is less than 5 mph (8 km/h), unless the wiper control on the multifunction lever is moved or the shift lever is moved out of the NEUTRAL position.

TILT/TELESCOPING STEERING COLUMN

This feature allows you to tilt the steering column upward or downward. It also allows you to lengthen or shorten the steering column. The tilt/telescoping control handle is located below the steering wheel at the end of the steering column.

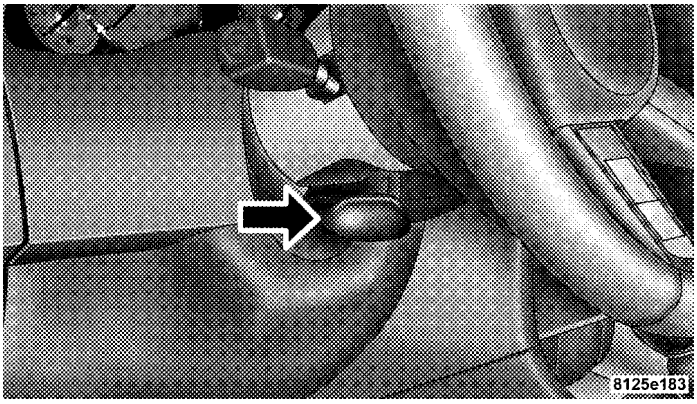

Tilt/Telescoping Control Handle

Downloaded from www.Manualslib.com manuals search engine

To unlock the steering column, pull the control handle outward. To tilt the steering column, move the steering wheel upward or downward as desired. To lengthen or shorten the steering column, pull the steering wheel outward or push it inward as desired. To lock the steering column in position, push the control handle inward until fully engaged.

WARNING!

Do not adjust the steering column while driving. Adjusting the steering column while driving or driving with the steering column unlocked, could cause the driver to lose control of the vehicle. Be sure the steering column is locked before driving your vehicle. Failure to follow this warning may result in serious injury or death.

POWER TILT/TELESCOPING STEERING COLUMN — IF EQUIPPED

This feature allows you to tilt the steering column upward or downward. It also allows you to lengthen or shorten the steering column. The power tilt/telescoping steering column lever is located below the multifunction lever on the steering column.

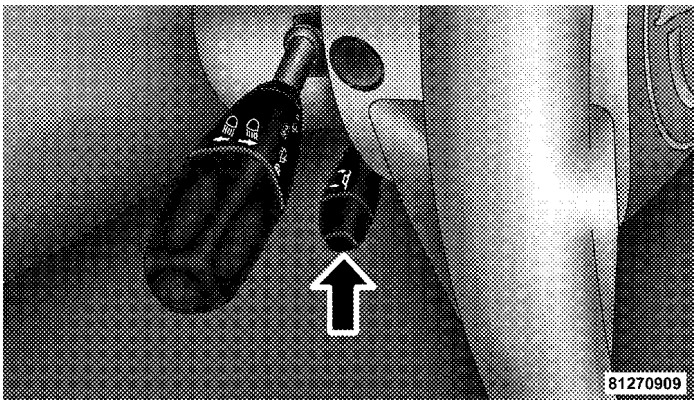

Power Tilt/Telescoping Steering

Downloaded from www.Manualslib.com manuals search engine

To tilt the steering column, move the lever up or down as desired. To lengthen or shorten the steering column, pull the lever toward you or push the lever away from you as desired.

NOTE: For vehicles equipped with Driver Memory Seat, you can use your Remote Keyless Entry (RKE) transmitter or the memory switch on the driver's door trim panel to return the tilt/telescopic steering column to pre-programmed positions. Refer to "Driver Memory Seat" in this section.

WARNING!

Do not adjust the steering column while driving. Adjusting the steering column while driving or driving with the steering column unlocked, could cause the driver to lose control of the vehicle. Be sure the steering column is locked before driving your vehicle. Failure to follow this warning may result in serious injury or death.

ADJUSTABLE PEDALS — IF EQUIPPED

The adjustable pedals system is designed to allow a greater range of driver comfort for steering wheel tilt and seat position. This feature allows both the brake and accelerator pedal to move toward or away from the driver to provide improved position with the steering wheel. The switch is located on the front side of the driver's seat cushion side shield.

Downloaded from www.Manualslib.com manuals search engine

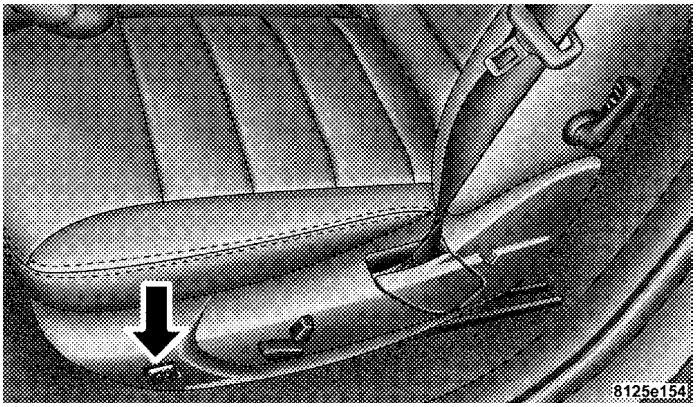

Adjustable Pedals Switch

Press the switch forward to move the pedals forward (toward the front of the vehicle).

Press the switch rearward to move the pedals rearward (toward the driver).

- The pedals can be adjusted with the ignition OFF.
- The pedals can be adjusted while driving.
- The pedals **cannot** be adjusted when the vehicle is in REVERSE or when the Electronic Speed Control is on. One of the following messages will display in the Electronic Vehicle Information Center (EVIC) (if equipped) if a pedal adjustment is attempted when the system is locked out: "Adjustable Pedal Disabled — Cruise Control Engaged" or "Adjustable Pedal Disabled — Vehicle In Reverse."

NOTE: For vehicles equipped with Driver Memory Seat, you can use your Remote Keyless Entry (RKE) transmitter or the memory switch on the driver's door trim panel to return the adjustable pedals to preprogrammed positions. Refer to "Driver Memory Seat" in "Understanding the Features of Your Vehicle" for further information.

Downloaded from www.Manualslib.com manuals search engine

CAUTION!

Do not place any article under the adjustable pedals or impede its ability to move as it may cause damage to the pedal controls. Pedal travel may become limited if movement is stopped by an obstruction in the adjustable pedal's path.

WARNING!

Do not adjust the pedals while the vehicle is moving. You could lose control and have an accident. Always adjust the pedals while the vehicle is parked.

ELECTRONIC SPEED CONTROL

When engaged, Electronic Speed Control takes over the accelerator operation at speeds greater than 25 mph (40 km/h).

The Electronic Speed Control lever, located on the right-side of the steering wheel, operates the system.

81bc4c2c

Electronic Speed Control Lever

Downloaded from www.Manualslib.com manuals search engine

NOTE: In order to ensure proper operation, the Electronic Speed Control System has been designed to shut down if multiple Speed Control functions are operated simultaneously. If this occurs, the Electronic Speed Control System can be reactivated by pushing the Electronic Speed Control ON/OFF button and resetting the desired vehicle set speed.

To Activate

Push and release the ON/OFF button, located on the end of the Electronic Speed Control lever. The indicator light in the instrument cluster will illuminate and the cluster will display a "Cruise ON" message to show that the speed control system is on. To turn the system off, push and release the ON/OFF button again. The system, indicator light and message will turn off.

WARNING!

Leaving the Electronic Speed Control system on when not in use is dangerous. You could accidentally set the system or cause it to go faster than you want. You could lose control and have an accident. Always leave the Electronic Speed Control system off when you are not using it.

To Set At A Desired Speed

When the vehicle reaches the speed desired, push the lever downward to SET DECEL and release, the cluster will display the "Cruise Set" message. Remove your foot from the accelerator pedal and the vehicle will operate at the selected speed.

Downloaded from www.Manualslib.com manuals search engine

NOTE:

- Electronic Speed Control will only function in 3rd, 4th, or 5th gear when in the Autostick® mode (if equipped).
- The Electronic Speed Control may not engage if a different size tire is installed on one wheel, such as the compact spare tire.

To Deactivate

The system will disable Electronic Speed Control without erasing the memory if you:

- Softly tap the brake pedal.
- Press the brake pedal.
- Pull the Electronic Speed Control lever toward you (CANCEL).

Pushing and releasing the ON/OFF button or turning the ignition OFF erases the set speed from memory.

To Resume Speed

If you deactivated the Electronic Speed Control without erasing the set speed from memory and your vehicle speed is above 20 mph (32 km/h) you can resume the previous set speed. To do so, push the lever upward to RESUME ACCEL and release. Then remove your foot from the accelerator pedal.

To Vary the Speed Setting

When the Electronic Speed Control is set, you can increase speed by pushing up and holding the RESUME ACCEL lever. If the lever is continually held in the RESUME ACCEL position, the set speed will continue to increase until the lever is released, then the new set speed will be established.

Tapping the Electronic Speed Control lever to RESUME ACCEL once will result in a 1 mph (1.6 km/h) speed increase. Each time the lever is tapped speed increases, so tapping the lever three times will increase speed by 3 mph (4.8 km/h), etc.

Downloaded from www.Manualslib.com manuals search engine

To decrease speed while Electronic Speed Control is set, push down and hold the lever in SET DECEL. If the lever is continually held in the SET DECEL position, the set speed will continue to until the lever is released. Release the lever when the desired speed is reached, and a new set speed will be established.

Tapping the Electronic Speed Control lever to SET DECEL once will result in a 1 mph (1.6 km/h) speed decrease. Each time the lever is tapped, speed decreases.

To Accelerate For Passing

Press the accelerator as you would normally. When the pedal is released, the vehicle will return to the set speed.

Using Electronic Speed Control on Hills

NOTE: The Electronic Speed Control system maintains speed up and down hills. A slight speed change on moderate hills is normal.

The automatic transmission will downshift while climbing uphill or descending downhill. This downshift is necessary to maintain vehicle set speed.

On steep hills, a greater speed loss or gain may occur, so it may be preferable to drive without Electronic Speed Control.

WARNING!

Electronic Speed Control can be dangerous where the system cannot maintain a constant speed. Your vehicle could go too fast for the conditions and you could lose control. An accident could be the result. Do not use Electronic Speed Control in heavy traffic or on roads that are winding, icy, snow-covered or slippery.

Downloaded from www.Manualslib.com manuals search engine

ADAPTIVE CRUISE CONTROL (ACC) — IF EQUIPPED

Adaptive Cruise Control (ACC) increases the driving convenience provided by cruise control while traveling on highways and major roadways. However, it is not a safety system and not designed to prevent collisions.

ACC will allow you to keep cruise control engaged in light to moderate traffic conditions without the constant need to reset your cruise control. ACC utilizes an infrared sensor designed to detect a vehicle directly ahead of you.

NOTE:

- If the sensor does not detect a vehicle ahead of you, ACC will maintain a fixed set speed.
- If the ACC sensor detects a vehicle ahead, ACC will apply limited braking or acceleration automatically to maintain a preset following distance, while matching the speed of the vehicle ahead.

WARNING!

- **Adaptive Cruise Control (ACC) is a convenience system. It is not a substitute for active driving involvement. It is always the driver's responsibility to be attentive of road, traffic, and weather conditions, vehicle speed, distance to the vehicle ahead; and, most importantly, brake operation to ensure safe operation of the vehicle under all road conditions. Your complete attention is always required while driving to maintain safe control of your vehicle. Failure to follow these warnings can result in an accident or serious personal injury.The ACC system:**
- **Does not react to pedestrians, oncoming vehicles, and stationary objects (i.e., a stopped vehicle in a traffic jam or a disabled vehicle).**

(Continued)

Downloaded from www.Manualslib.com manuals search engine

WARNING! (Continued)

- Cannot take street, traffic, and weather conditions into account, and may be limited upon adverse sight distance conditions.
- Does not predict the lane curvature or the movement of preceding vehicles and will not compensate for such changes.
- Does not always fully recognize complex driving conditions, which can result in wrong or missing distance warnings.
- May not detect a vehicle ahead when strong light (for example, sunrise or sunset) is directly shining on the front of the vehicle.
- Can only apply a maximum of 25% of the vehicle's braking capability, and will not bring the vehicle to a complete stop.

WARNING!

You should switch off the ACC system:

- When driving in fog, heavy rain, heavy snow, sleet, heavy traffic, and complex driving situations (i.e., in highway construction zones).
- When entering a turn lane or highway off ramp; when driving on roads that are winding, icy, snow-covered, slippery, or have steep uphill or downhill slopes; and when towing a trailer.
- When circumstances do not allow safe driving at a constant speed.

Failure to follow these warnings can result in an accident or serious personal injury.

Downloaded from www.Manualslib.com manuals search engine

The Cruise Control system has two control modes:

- Adaptive Cruise Control mode for maintaining an appropriate distance between vehicles.
- Normal (fixed speed) cruise control mode for cruising at a constant preset speed. For additional information, refer to "Normal (Fixed Speed) Cruise Control Mode" in this section. **Note:** The system will not react to preceding vehicles. Always be aware of the mode selected.

You can change the mode by using the control lever. The two control modes function differently. Always confirm which mode is selected.

Adaptive Cruise Control (ACC) Operation

The speed control lever (located on the right side of the steering wheel) operates the ACC system.

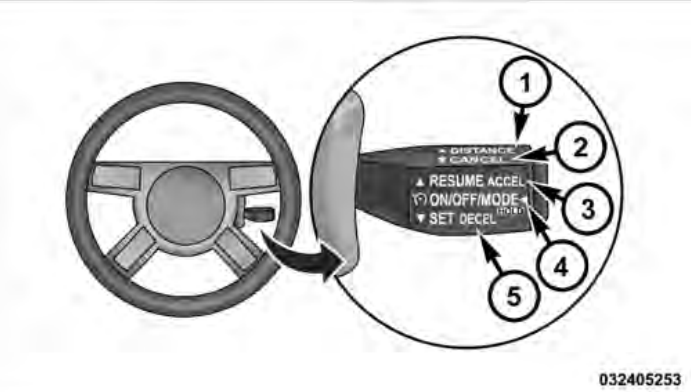

1 — DISTANCE SETTING
2 — CANCEL
3 — RESUME/ACCEL
4 — ON/OFF/MODE
5 — SET/DECEL

Activating Adaptive Cruise Control (ACC)

You can only activate ACC if the vehicle speed is above 25 mph (40 km/h).

Downloaded from www.Manualslib.com manuals search engine

When the system is turned on and in the READY state, the Electronic Vehicle Information Center (EVIC) displays "ACC READY."

When the system is OFF, the EVIC displays "CRUISE OFF."

NOTE: You cannot enable ACC under the following conditions:

- When you apply the brakes.
- When the parking brake is set.
- When the automatic transmission is in PARK, REVERSE or NEUTRAL.
- When the Electronic Stability Program (ESP) is switched off.
- When pushing the RESUME/ACCEL switch without a previously set speed in memory.

To Activate

Push and release the ON/OFF/MODE button located on the end of the speed control lever. The ACC menu in the EVIC displays "ACC READY."

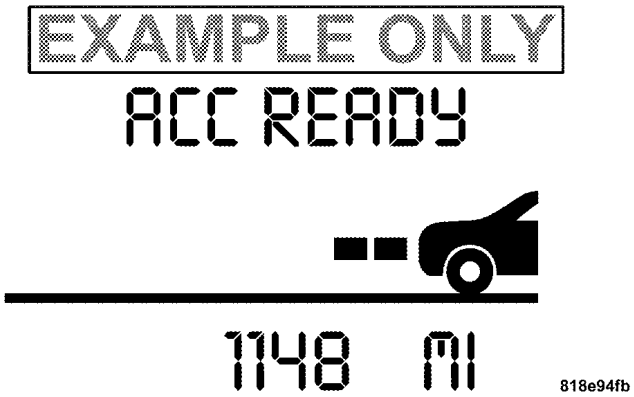

To turn the system OFF, push and release the ON/OFF/MODE button again. At this time, the system will turn off and the EVIC will display "CRUISE OFF."

Downloaded from www.Manualslib.com manuals search engine

WARNING!

Leaving the Adaptive Cruise Control (ACC) system on when not in use is dangerous. You could accidentally set the system or cause it to go faster than you want. You could lose control and have an accident. Always leave the system off when you are not using it.

To Set a Desired ACC Speed

When the vehicle reaches the speed desired, push the lever downward (SET/DECEL) and release. The EVIC will display the set speed.

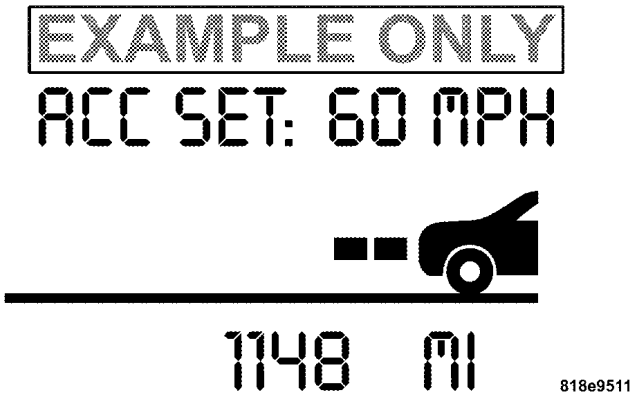

Remove your foot from the accelerator pedal. If you do not, the vehicle may continue to accelerate beyond the set speed. If this occurs:

- The message "DRIVER OVERRIDE" will display in the EVIC.

Downloaded from www.Manualslib.com manuals search engine

- The system will not be controlling the distance between your vehicle and the vehicle ahead. The vehicle speed will only be determined by the position of the accelerator pedal.

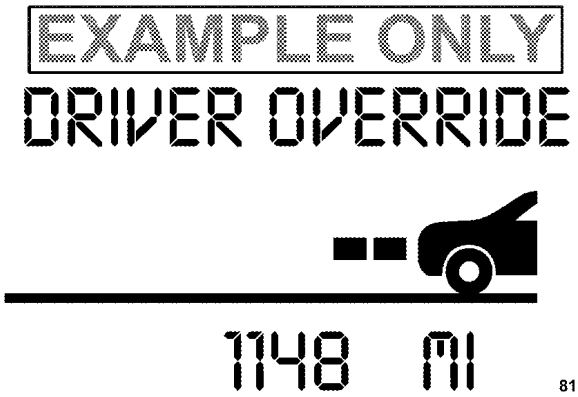

818e9515

To Cancel

The system will disable ACC without erasing the memory if:

- You softly tap the brake pedal.
- You depress the brake pedal.
- You pull the speed control lever toward you to CANCEL.
- The Electronic Stability Program/Traction Control System (ESP/TCS) activates.

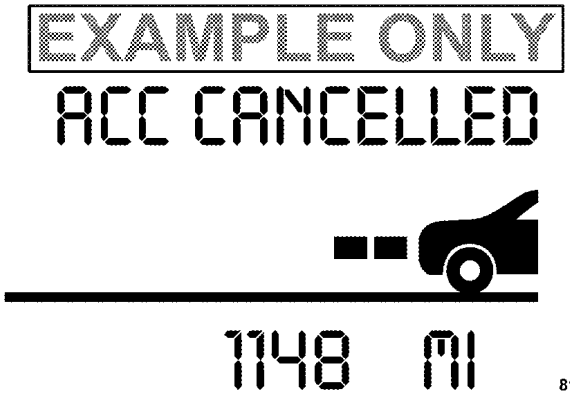

819725e0

Downloaded from www.Manualslib.com manuals search engine

To Turn Off

The system will turn off and erase the set speed in memory if:

- You push and release the ON/OFF/MODE button.
- You turn OFF the ignition.
- You switch off ESP.

To Resume Speed

Push the lever upward (RESUME/ACCEL) and release. Then remove your foot from the accelerator pedal. The EVIC will display the last set speed.

WARNING!

The Resume function should only be used if traffic and road conditions permit. Resuming a set speed that is too high or too low for prevailing traffic and road conditions could cause the vehicle to accelerate or decelerate too sharply for safe operation. This could cause an accident and/or serious injury.

To Vary the Speed Setting

While ACC is set, you can increase the set speed by lifting and holding the lever up (RESUME/ACCEL). If the lever is continually held, the set speed will continue to increase in 5 mph (10 km/h) increments until the lever is released. The increase in set speed is reflected in the EVIC display.

Tapping the lever up once will result in a 1 mph (1 km/h) increase in set speed. Each subsequent tap of the lever results in an increase of 1 mph (1 km/h).

Downloaded from www.Manualslib.com manuals search engine

While ACC is set, the set speed can be decreased by pushing and holding the lever down (SET/DECEL). If the lever is continually held, the set speed will continue to decrease in 5 mph (10 km/h) increments until the lever is released. The decrease in set speed is reflected in the EVIC display.

Tapping the lever down once will result in a 1 mph (1 km/h) decrease in set speed. Each subsequent tap of the lever results in a decrease of 1 mph (1 km/h).

NOTE:

- When you use the lever to decelerate, if the engine's braking power does not slow the vehicle sufficiently to reach the set speed, the brake system will automatically slow the vehicle.
- The ACC system can only apply a maximum of 25% of the vehicle's braking capability and will not bring the vehicle to a complete stop.
- The ACC system maintains set speed when driving up hill and down hill. However, a slight speed change on moderate hills is normal. In addition, downshifting may occur while climbing uphill or descending downhill. This is normal operation and necessary to maintain set speed.

Downloaded from www.Manualslib.com manuals search engine

Setting the Following Distance in ACC

The specified following distance for ACC can be set by varying the distance setting between long, medium, and short. Using this distance setting and the vehicle speed, ACC calculates and sets the distance to the vehicle ahead. This distance setting displays in the EVIC.

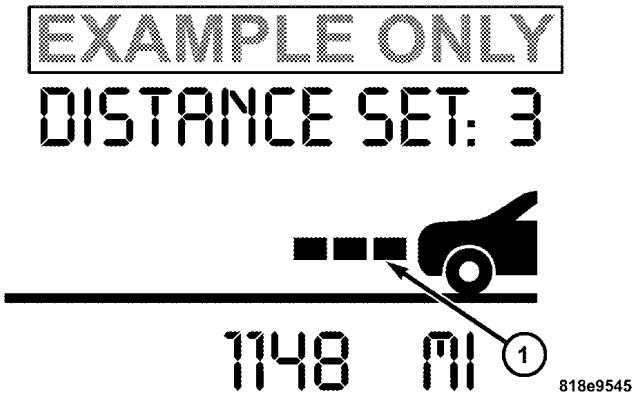

1 — Sensor Bars. Default Distance Setting is Three Bars = Long.

To change the distance setting, push the lever away from you (DISTANCE) and release. Each time this is done, the distance setting adjusts between long, medium, and short.

If there is no vehicle ahead, the vehicle will maintain the set speed. If a slower moving vehicle is detected in the same lane, the EVIC displays the "Sensed Vehicle Indicator" icon, and the system adjusts vehicle speed automatically to maintain the distance setting, regardless of the set speed.

The vehicle will then maintain the set distance until:

- The vehicle ahead accelerates to a speed above the set speed.
- The vehicle ahead moves out of your lane or view of the sensor.

Downloaded from www.Manualslib.com manuals search engine

- The vehicle ahead slows to a speed below 15 mph (24 km/h) and the system automatically disengages itself.
- The distance setting is changed.
- The system disengages. (Refer to the information on ACC Activation).

The maximum braking applied by ACC is limited; however, the driver can always apply the brakes manually, if necessary.

NOTE: The brake lights will illuminate whenever the ACC system applies the brakes.

A Proximity Warning will alert the driver if ACC predicts that its maximum braking level is not sufficient to maintain the set distance. If this occurs, a visual alert "ATTENTION" will flash in the EVIC and a chime will sound while ACC continues to apply its maximum braking capacity. When this occurs, you should immediately apply the brakes as needed to maintain a safe distance from the vehicle ahead.

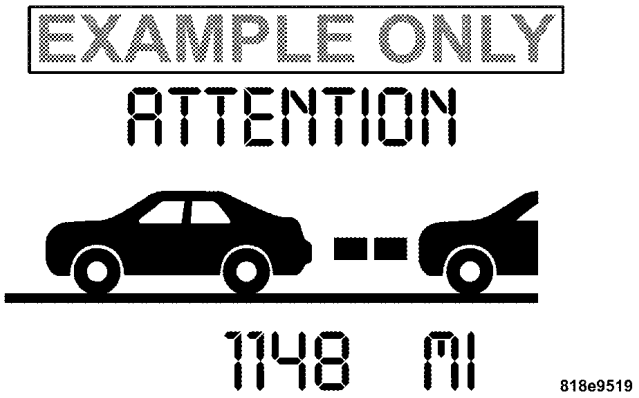

Downloaded from www.Manualslib.com manuals search engine

Adaptive Cruise Control (ACC) Menu

The EVIC displays the current ACC system settings. The EVIC is located in the upper part of the instrument cluster between the speedometer and the tachometer. The information it displays depends on ACC system status.

Menu Button

Press the MENU button (located on the steering wheel) repeatedly until one of the following displays in the EVIC:

CRUISE OFF

– When ACC is deactivated, the display will read "CRUISE OFF."

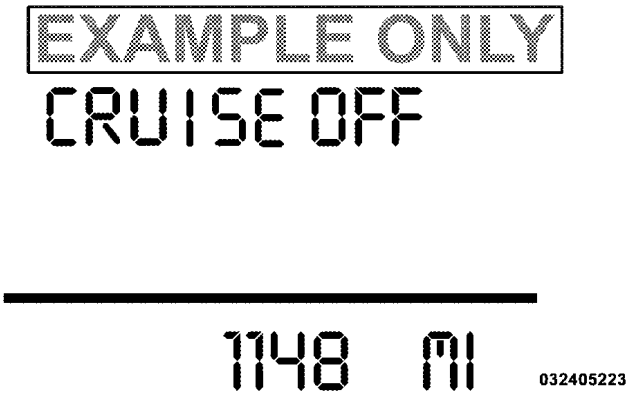

ACC READY

– When ACC is activated but the vehicle speed setting has not been selected, the display will read "ACC READY."

Downloaded from www.Manualslib.com manuals search engine

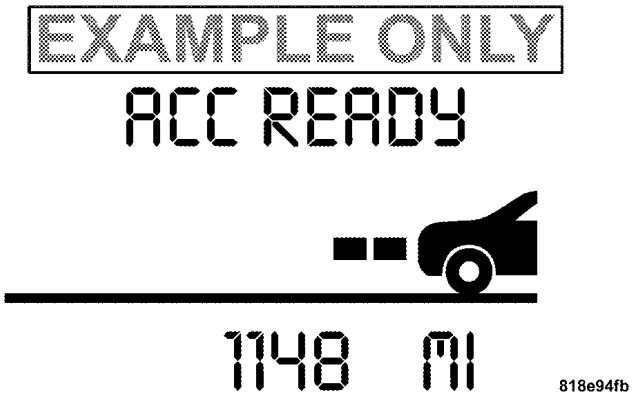

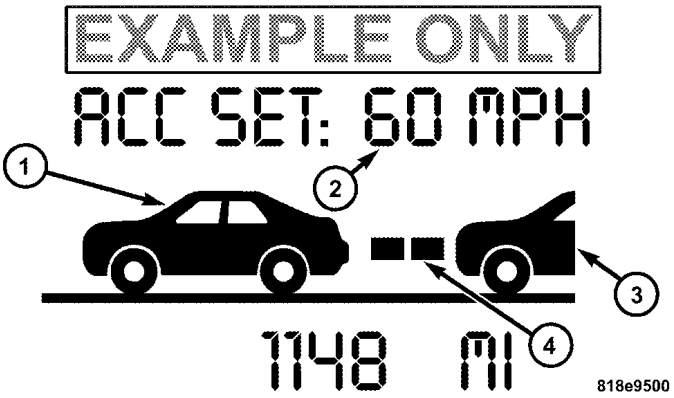

1 — Sensed Vehicle Indicator
2 — Set Speed
3 — Your Vehicle
4 — Following Distance Setting: Three Bars = Long; Two Bars = Medium; One Bar = Short.

ACC SET

– When ACC is set, the set speed will display.

Downloaded from www.Manualslib.com manuals search engine

The set speed will continue to display in place of the odometer reading when changing the EVIC display while ACC is set.

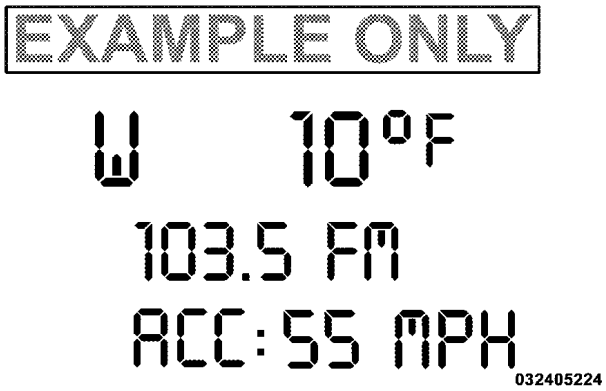

The ACC SET screen will display once again if any ACC activity occurs, which may include any of the following:

- Set speed change
- Distance setting change
- System cancel
- Acquisition/loss of Target
- Driver override
- System off
- Proximity warning
- ACC warning

The EVIC will return to the last display selected after five seconds of no ACC display activity.

Downloaded from www.Manualslib.com manuals search engine

Display Warnings and Maintenance

ACC Blinded Warning

The ACC Blinded Warning will display when conditions temporarily limit system performance. This most often occurs at times of poor visibility, such as in snow, fog, heavy rain, or when driving into direct sunlight (sunrise or sunset). The ACC system may also become temporarily blinded due to obstructions, such as dirt or ice. In these cases, the EVIC will display "ACC Blinded" and the system will deactivate.

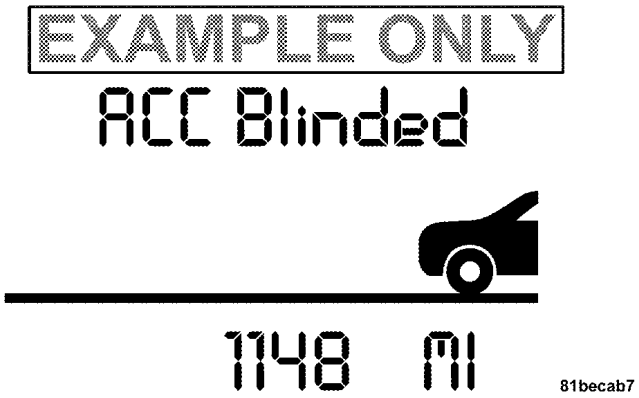

NOTE: If the ACC Blinded Warning is active Normal (Fixed Speed) Cruise Control is still available. For additional information refer to "Normal (Fixed Speed) Cruise Control Mode" in this section.

Downloaded from www.Manualslib.com manuals search engine

If weather conditions are not a factor, the driver should examine the sensor. It may require cleaning or removal of an obstruction. The sensor is located behind the grille, slightly offset from the center of the grille.

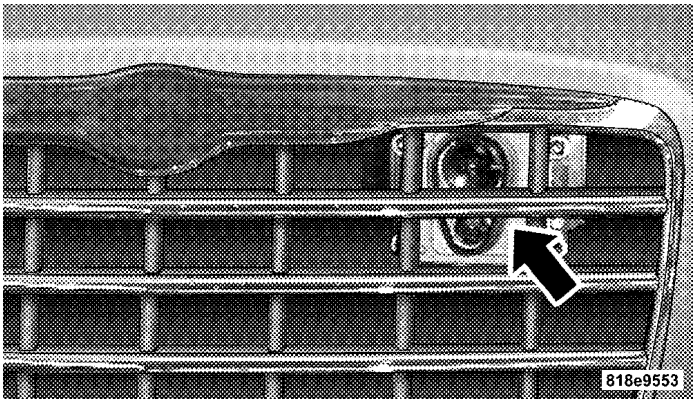

ACC Sensor Location

To keep the ACC System operating properly, it is important to note the following maintenance items:

- Always keep the sensor clean. Carefully wipe the sensor lens with a soft cloth. Be cautious not to damage the sensor lens.
- Do not remove any screws from the sensor or the sensor mount. Doing so could cause an ACC system malfunction or failure and require a sensor realignment.
- If the sensor is damaged due to an accident, see your authorized dealer for service.
- Do not attach or install any accessories near the sensor, including transparent material or aftermarket grilles. Doing so could cause an ACC system failure or malfunction.

When the condition that deactivated the system is no longer present, the system will return to the "CRUISE OFF" state and will resume function by simply reactivating it.

Downloaded from www.Manualslib.com manuals search engine

NOTE: Installing a vehicle front-end protector or an aftermarket grille or modifying the grille is not recommended. Doing so may block the sensor and inhibit ACC operation.

ACC Unavailable Warning

If the system turns off, and the EVIC displays "ACC UNAVAILABLE," there may be a temporary malfunction that limits ACC functionality. Although the vehicle is still drivable under normal conditions, ACC will be temporarily unavailable. If this occurs, try activating ACC again later, following a key cycle. If the problem persists, see your authorized dealer.

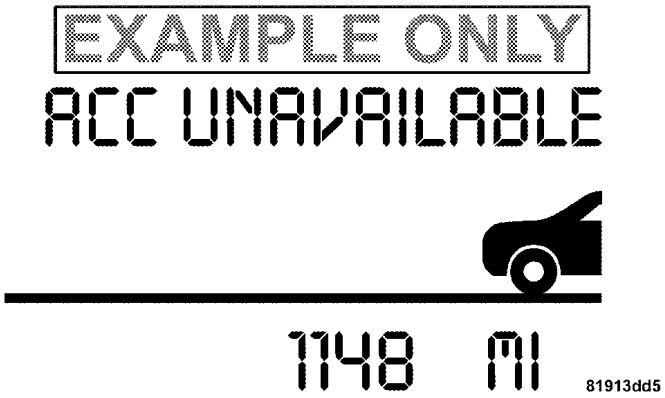

Service ACC Warning

If the system turns off, and the EVIC displays "SERVICE ACC," it indicates there is an internal system fault. Although the vehicle is still drivable under normal conditions, have the system checked by an authorized dealer.

Downloaded from www.Manualslib.com manuals search engine

Precautions While Driving with ACC

In certain driving situations, ACC may have detection issues. In these cases, ACC may brake late or unexpectedly. The driver needs to stay alert and may need to intervene.

Adding a Trailer Hitch

The weight of a trailer hitch may affect the performance of ACC. If there is a noticeable change in performance following the installation of a hitch, such as reduced detection range, please see your authorized dealer for service.

Offset Driving

ACC may not detect a vehicle in the same lane that is offset from your direct line of travel. There will not be sufficient distance to the vehicle ahead. The offset vehicle may move in and out of the line of travel, which can cause your vehicle to brake or accelerate unexpectedly.

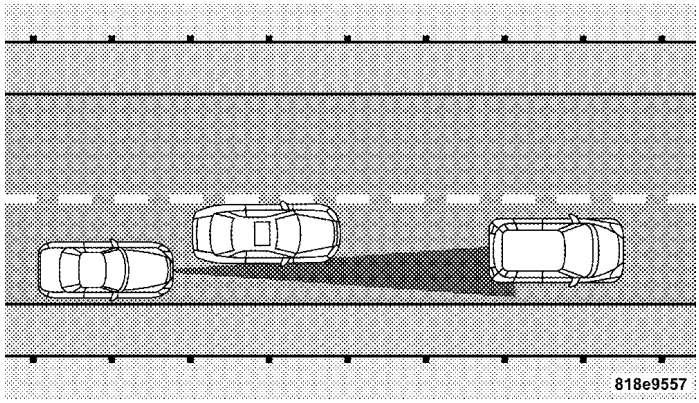

Turns and Bends

In turns or bends, ACC may detect a vehicle ahead too late or too early. This may cause your vehicle to brake late or unexpectedly. Give extra attention in curves and be ready to apply the brakes if necessary. Be sure to select an appropriate speed while driving in curves.

Downloaded from www.Manualslib.com manuals search engine

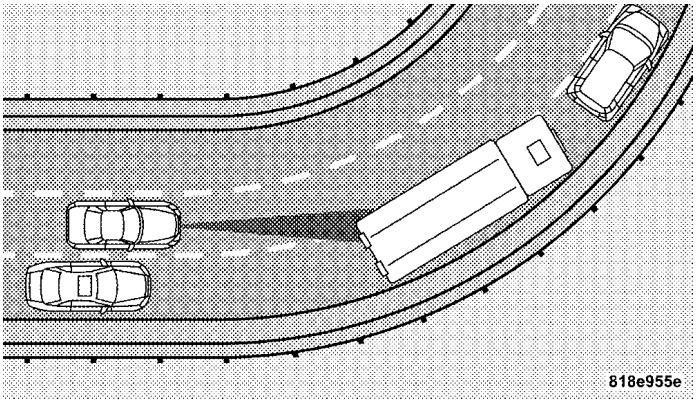

ACC may occasionally provide braking and/or a driver alert that you consider unnecessary. This may be the system's response to signs, guardrails, and other stationary objects in a curve. This may also occur at the base of steep hills. This is normal operation and your vehicle does not require service.

Using ACC on Hills

When driving on hills, ACC may not detect a vehicle in your lane. Depending on the speed, vehicle load, traffic conditions, and the steepness of the hills, ACC performance may be limited.

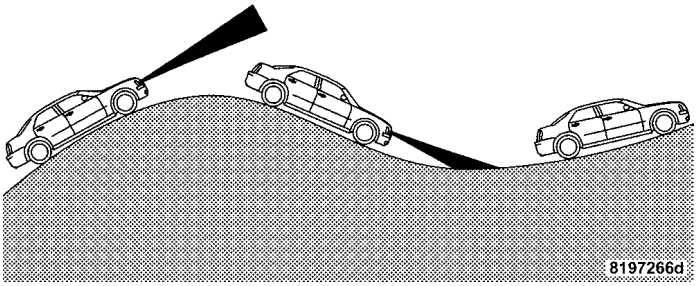

Downloaded from www.Manualslib.com manuals search engine

Lane Changing

ACC will not detect a vehicle until it is completely in the lane in which you are traveling. In the illustration shown, ACC has not yet detected the vehicle changing lanes and it may detect the vehicle until it's too late for the ACC system to take action. ACC will not detect a vehicle until it is completely in the lane. There will not be sufficient distance to the lane-changing vehicle. Always be attentive and ready to apply the brakes if necessary.

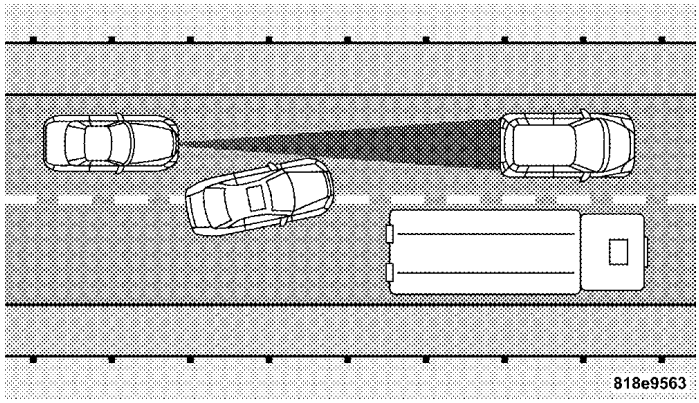

Narrow Vehicles

Some narrow vehicles traveling near the outer edges of the lane or edging into the lane are not detected until they have moved fully into the lane. There will not be sufficient distance to the vehicle ahead.

Downloaded from www.Manualslib.com manuals search engine

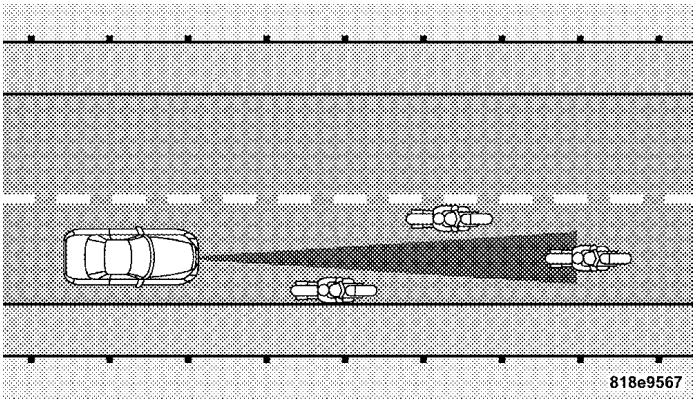

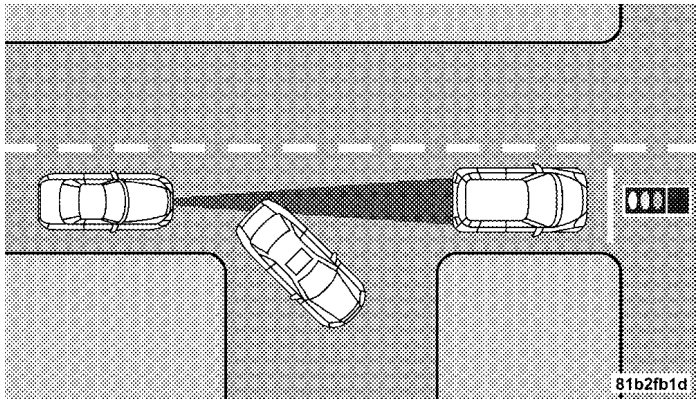

Stationary Objects and Vehicles

ACC does not react to stationary objects and stationary vehicles. For example, ACC will not react in situations where the vehicle you are following exits your lane and the vehicle ahead is stopped in your lane. Always be attentive and ready to apply the brakes if necessary.

General Information

CLASS 1 LASER PRODUCT
Classification Specifications:
21 C.F.R part 1040.10 & 1040.11
DIN EN 60825-1:2003
IEC 60825-1:2001

Downloaded from www.Manualslib.com manuals search engine

Normal (Fixed Speed) Cruise Control Mode

In addition to adaptive cruise control mode, a normal (fixed speed) cruise control mode is available for cruising at fixed speeds. The Normal cruise control mode is designed to maintain a set cruising speed without requiring the driver to operate the accelerator. Cruise control can only be operated if the vehicle speed is above 25 mph (40 km/h).

To change modes, press and hold the ON/OFF/MODE button for at least one second in either the OFF state or the READY state. "Normal Cruise Ready" will be displayed once the mode becomes available. To switch back to ACC, press and hold the ON/OFF/MODE button again for at least one second.

WARNING!

In the normal cruise control mode, the system will not react to vehicles ahead. In addition, the proximity warning does not activate and no alarm will sound even if you are too close to the vehicle ahead since the presence of the vehicle ahead nor the vehicle-to-vehicle distance is detected. Be sure to maintain a safe distance between your vehicle and the vehicle ahead. Always be aware which mode is selected.

To set a Desired Speed

When the vehicle reaches the speed desired, tap the lever down and release (SET/DECEL). The EVIC will display the set speed.

NOTE: You must observe the display when setting or changing speed, not the speedometer.

Downloaded from www.Manualslib.com manuals search engine

To Vary the Speed Setting
There are two ways to change the set speed:

- Use the accelerator pedal to adjust the vehicle to the desired speed and push the lever down (SET/DECEL).
- Tap the stalk up (ACCEL) or down (DECEL) to increase or decrease the set speed in 1 mph (1 km/h) increments respectively. Hold the lever up (ACCEL) or down (DECEL) for 5 mph (10 km/h) increments.

To Cancel
The system will disable Normal cruise control without erasing the memory if:

- You softly tap or depress the brake pedal.
- You pull the speed control lever toward you (CANCEL).
- The Electronic Stability Program/Traction Control System (ESP/TCS) activates.

To Resume
Push the lever up and release (RESUME/ACCEL) and then remove your foot from the accelerator pedal. The EVIC will display the last set speed.

To Turn Off
The system will turn off and erase the set speed in memory if:

- You push and release the ON/OFF/MODE button.
- You turn off the ignition.
- You switch off ESP.

If the cruise control system is turned off and reactivated, the system will return to the Vehicle-to-vehicle (adaptive) distance control mode.

Downloaded from www.Manualslib.com manuals search engine

PARKSENSE® REAR PARK ASSIST

The ParkSense® Rear Park Assist system is a driver aid that senses for obstacles behind the vehicle. Refer to ParkSense® System Usage Precautions for limitations of this system and recommendations.

ParkSense® is active when the driver shifts the transmission into the REVERSE position, and the parking brake is not applied, and the vehicle speed is less than 10 mph (16 km/h).

ParkSense® can be turned on or off through the Electronic Vehicle Information Center (EVIC) when the vehicle is in PARK. Refer to "Electronic Vehicle Information Center (EVIC)/Personal Settings (Customer-Programmable Features)" in "Understanding Your Instrument Panel" for further information.

ParkSense® uses four sensors located in the rear bumper to scan for obstacles up to 79 in (200 cm) away from the rear bumper fascia. The ParkSense® Warning Display located above the rear window provides both visible and audible warnings to indicate the range of the object.

ParkSense® LED Display

Downloaded from www.Manualslib.com manuals search engine

The Warning Display contains two sets of yellow and red indicators, one set to warn of obstacles behind the left rear of the vehicle and the other set to warn of obstacles behind the right rear of the vehicle. The driver can view the indicators either through the rearview mirror or by looking at the display above the rear window.

ParkSense® dimly illuminates the two inner most yellow indicators when it is ON and detecting no obstacles. The following chart shows the warning display operation when the system is detecting an obstacle:

WARNING DISPLAY DISTANCES

DISPLAY INDICATOR	OBSTACLE DISTANCE FROM:		INDICATOR COLOR	AUDIBLE SIGNAL
	REAR CORNERS	REAR CENTER		
Inner LED		79 in (200 cm)	Yellow	Yes, Half Second
1st LED		51.2 in (130 cm)	Yellow	No
2nd LED		45.3 in (115 cm)	Yellow	No
3rd LED	31.5 in (80 cm)	39.3 in (100 cm)	Yellow	No
4th LED	25.5 in (65 cm)	33.5 in (85 cm)	Yellow	No
5th LED	20 in (50 cm)	27.6 in (70 cm)	Yellow	No
6th LED	16 in (40 cm)	19.7 in (50 cm)	Red	Yes, Intermittent
7th LED	6 in (15 cm)	11.8 in (30 cm)	Red	Yes, Continuous

Downloaded from www.Manualslib.com manuals search engine

ParkSense® System Usage Precautions

NOTE:

- Ensure that the rear bumper is free of snow, ice, mud, dirt and debris to keep the ParkSense® Rear Park Assist system operating properly.
- Jackhammers, large trucks, and other vibrations could affect the performance of the ParkSense® Rear Park Assist system.
- When you turn ParkSense® off, the instrument cluster will display "PARK ASSIST DISABLED." Furthermore, once you turn ParkSense® off, it remains off until you turn it on again, even if you cycle the ignition key.
- When you move the shift lever to the REVERSE position and ParkSense® is turned off, the instrument cluster will display "PARK ASSIST DISABLED" message for as long as the vehicle is in REVERSE.
- ParkSense®, when on, will MUTE the radio when it is sounding a tone.
- If a ParkSense® system malfunction occurs, a single chime will sound once per ignition cycle. In addition, the Electronic Vehicle Information Center (EVIC) will display "SERVICE PARK ASSIST SYSTEM" and the LED in the ParkSense® switch will illuminate. If this occurs after making sure the rear fascia/bumper is clean and clear of snow, ice, mud, dirt, or other obstruction, see your authorized dealer for service.
- Clean the ParkSense® sensors regularly, taking care not to scratch or damage them. The sensors must not be covered with ice, snow, slush, mud, dirt, or debris. Failure to do so can result in ParkSense® not working properly. The ParkSense® system might not detect an obstacle behind the fascia/bumper, or it could provide a false indication that an obstacle is behind the fascia/bumper.

Downloaded from www.Manualslib.com manuals search engine

- Objects must not be within 12 in (30 cm) from the rear fascia/bumper while driving the vehicle. Failure to do so can result in the system misinterpreting a close object as a sensor problem, causing the "SERVICE PARK ASSIST SYSTEM" message to be displayed in the instrument cluster.

CAUTION!

- **The ParkSense® Rear Park Assist system is only a parking aid and it is unable to recognize every obstacle, including small obstacles. Parking curbs might be temporarily detected or not detected at all. Obstacles located above or below the sensors will not be detected when they are in close proximity.**

(Continued)

CAUTION! (Continued)

- **The vehicle must be driven slowly when using the ParkSense® Rear Park Assist system to be able to stop in time when the obstacle is detected. It is recommended that the driver looks over his/her shoulder when using ParkSense®.**

Downloaded from www.Manualslib.com manuals search engine

WARNING!

- **Drivers must be careful when backing up even when using the ParkSense® Rear Park Assist system. Always check carefully behind your vehicle, look behind you, and be sure to check for pedestrians, animals, other vehicles, obstructions, and blind spots before backing up. You are responsible for safety and must continue to pay attention to your surroundings. Failure to do so can result in serious injury or death.**

(Continued)

WARNING! (Continued)

- **Before using the ParkSense® Rear Park Assist system, it is strongly recommended that the ball mount and hitch ball assembly is disconnected from the vehicle when the vehicle is not used for towing. Failure to do so can result in injury or damage to vehicles or obstacles because the hitch ball will be much closer to the obstacle than the rear fascia when the warning display turns on the single flashing arc and sounds the continuous tone. Also, the ParkSense® sensors could detect the ball mount and hitch ball assembly, depending on its size and shape, giving a false indication that an obstacle is behind the vehicle.**

Downloaded from www.Manualslib.com manuals search engine

OVERHEAD CONSOLE

The overhead console contains courtesy/reading lights and storage for sunglasses. Universal Garage Door Opener (HomeLink®) buttons and power sunroof switch may also be included, if equipped.

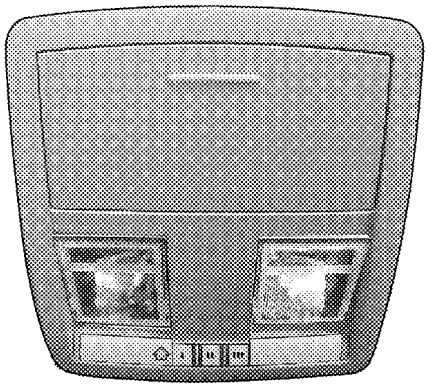

8125e191

Overhead Console

Courtesy/Reading Lights

At the forward end of the console are two courtesy/reading lights.

Press the lens to turn on the light. Press it a second time to turn off the light.

These lights also turn on when a door is opened, when the UNLOCK button on the Remote Keyless Entry (RKE) transmitter is pressed, when the Passive Entry door handle is used (refer to "Passive Entry" in "Things to Know Before Starting Your Vehicle" for further information) or when the dimmer control is turned fully upward, past the second detent.

Sunglasses Storage

At the rear of the overhead console, a compartment is provided for the storage of a pair of sunglasses.

Downloaded from www.Manualslib.com manuals search engine

The storage compartment access is a "push/push" design. Push on the raised bar on the compartment door to open. Push on the raised bar to close.

GARAGE DOOR OPENER — IF EQUIPPED

HomeLink® replaces up to three remote controls (hand-held transmitters) that operate devices such as garage door openers, motorized gates, lighting or home security systems. The HomeLink® unit operates off your vehicle's battery.

The HomeLink® buttons are located in the overhead console, and contain one, two or three dots/lines designating the different HomeLink® channels.

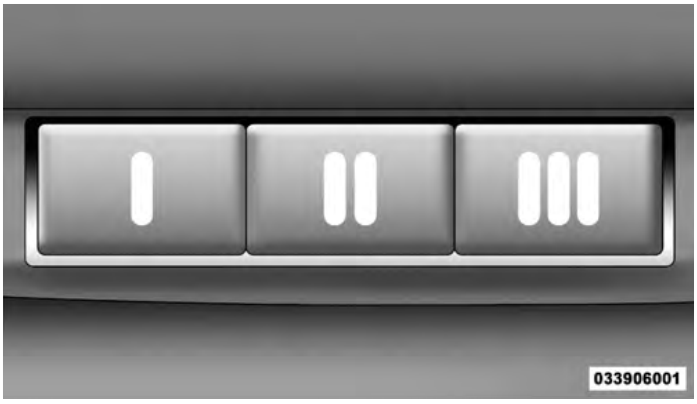

HomeLink® Buttons

NOTE: HomeLink® is disabled when the Vehicle Security Alarm is active.

Downloaded from www.Manualslib.com manuals search engine

WARNING!

- **Your motorized door or gate will open and close while you are training the Universal Transceiver. Do not train the transceiver if people, pets, or other objects are in the path of the door or gate. Only use this transceiver with a garage door opener that has a "stop and reverse" feature as required by federal safety standards. This includes most garage door opener models manufactured after 1982. Do not use a garage door opener without these safety features. Call toll-free 1–800–355–3515 or, on the Internet at www.HomeLink.com for safety information or assistance.**
- **Vehicle exhaust contains carbon monoxide, a dangerous gas. Do not run your vehicle in the garage while training the transceiver. Exhaust gas can cause serious injury or death.**

Programming HomeLink®

Before You Begin

If you have not trained any of the HomeLink® buttons, erase all channels before you begin training.

To do this, press and hold the two outside buttons for up to 20 seconds. The EVIC will display "CLEARING CHANNELS." Release the buttons when the EVIC message states "CHANNELS CLEARED."

It is recommended that a new battery be placed in the handheld transmitter of the device that is being copied to HomeLink® for more efficient training and accurate transmission of the radio-frequency signal.

Your vehicle should be parked outside of the garage while training.

1. Place the ignition in the RUN position.

Downloaded from www.Manualslib.com manuals search engine

2. Place the handheld transmitter 1 to 3 in (3 to 8 cm) from the HomeLink® buttons while keeping the EVIC display in view.

For optimal training, point the battery end of the handheld transmitter away from the HomeLink®.

3. Simultaneously, press and hold both the chosen HomeLink® button and the handheld transmitter button until the EVIC display changes from "CHANNEL # TRAINING" to "CHANNEL # TRAINED."

Then release both the HomeLink® and handheld transmitter buttons.

If the EVIC display states "DID NOT TRAIN" repeat Step 3. If the signal is too weak, replace the battery in the handheld transmitter.

It may take up to 30 seconds or longer in rare cases. The garage door may open and close while you train.

NOTE: Some gate operators and garage door openers may require you to replace Step 3 with procedures noted in the "Gate Operator/Canadian Programming" section.

4. Press and hold the just-trained HomeLink® button. If the channel has been trained, the EVIC display will now state "CHANNEL # TRANSMIT."

If the EVIC display still states "CHANNEL # TRAINING" repeat Step 3.

NOTE: After training a HomeLink® channel, if the garage door does not operate with HomeLink® and the garage door opener was manufactured after 1995, the garage door opener may have rolling code. If so, proceed to the heading "Programming A Rolling Code System."

5. PROGRAMMING A ROLLING CODE SYSTEM

At the garage door opener motor (in the garage), locate the "Learn" or "Training" button.

Downloaded from www.Manualslib.com manuals search engine

This can usually be found where the hanging antenna wire is attached to the garage door opener motor (it is NOT the button normally used to open and close the door).

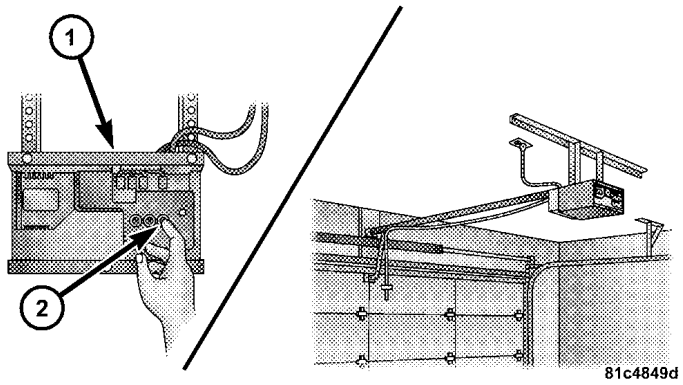

1 — Garage Door Opener
2 — Training Button

6. Firmly press and release the LEARN or TRAINING button. The name and color of the button may vary by manufacturer.

NOTE: You have 30 seconds in which to initiate the next step after the LEARN button has been pressed.

7. Return to the vehicle and press the programmed HomeLink® button twice (holding the button for two seconds each time). If the device is plugged in and activates, programming is complete.

If the device does not activate, press the button a third time (for two seconds) to complete the training.

If you have any problems, or require assistance, please call toll-free 1–800–355–3515 or, on the Internet at www.HomeLink.com for information or assistance.

To program the remaining two HomeLink® buttons, repeat each step for each remaining button. DO NOT erase the channels.

Downloaded from www.Manualslib.com manuals search engine

Gate Operator/Canadian Programming

Canadian radio-frequency laws require transmitter signals to "time-out" (or quit) after several seconds of transmission – which may not be long enough for HomeLink® to pick up the signal during programming. Similar to this Canadian law, some U.S. gate operators are designed to "time-out" in the same manner.

It may be helpful to unplug the device during the cycling process to prevent possible overheating of the garage door or gate motor.

If you are having difficulties programming a garage door opener or a gate operator, replace "Programming HomeLink" Step 3 with the following:

3. Continue to press and hold the HomeLink® button, while you press and release ("cycle"), your handheld transmitter every two seconds until HomeLink® has successfully accepted the frequency signal. The EVIC display will change from "CHANNEL # TRAINING" to "CHANNEL # TRAINED."

If you unplugged the device for training, plug it back in at this time.

Then proceed with Step 4 under "Programming HomeLink®" earlier in this section.

Using HomeLink®

To operate, press and release the programmed HomeLink® button. Activation will now occur for the trained device (i.e., garage door opener, gate operator, security system, entry door lock, home/office lighting, etc.,). The handheld transmitter of the device may also be used at any time.

Downloaded from www.Manualslib.com manuals search engine

Reprogramming A Single HomeLink® Button

To reprogram a channel that has been previously trained, follow these steps:

1. Place the ignition in the RUN position.

2. Press and hold the desired HomeLink® button for 20 seconds until the EVIC display states "CHANNEL # TRAINING." **Do not release the button.**

3. **Without releasing the button,** proceed with Programming HomeLink® Step 2 and follow all remaining steps.

Security

It is advised to erase all channels before you sell or turn in your vehicle.

To do this, press and hold the two outside buttons for 20 seconds until the EVIC message states "CHANNELS CLEARED." Note that all channels will be erased. Individual channels cannot be erased.

The HomeLink® Universal Transceiver is disabled when the Vehicle Security Alarm is active.

Troubleshooting Tips

If you are having trouble programming HomeLink®, here are some of the most common solutions:

- Replace the battery in the original transmitter.
- Press the LEARN button on the garage door opener to complete the training for rolling code.
- Did you unplug the device for training, and remember to plug it back in?

If you are having any problems or require assistance, please call toll-free 1–800–355–3515 or, on the Internet at www.HomeLink.com for information or assistance.

Downloaded from www.Manualslib.com manuals search engine

General Information

This device complies with FCC rules Part 15 and Industry Canada RSS-210. Operation is subject to the following two conditions:

1. This device may not cause harmful interference

2. This device must accept any interference that may be received including interference that may cause undesired operation

NOTE: The transmitter has been tested and it complies with FCC and IC rules. Changes or modifications not expressly approved by the party responsible for compliance could void the user's authority to operate the device.

The term "IC:" before the certification/registration number only signifies that Industry Canada technical specifications were met.

POWER SUNROOF — IF EQUIPPED

The power sunroof switch is located between the sun visors on the overhead console.

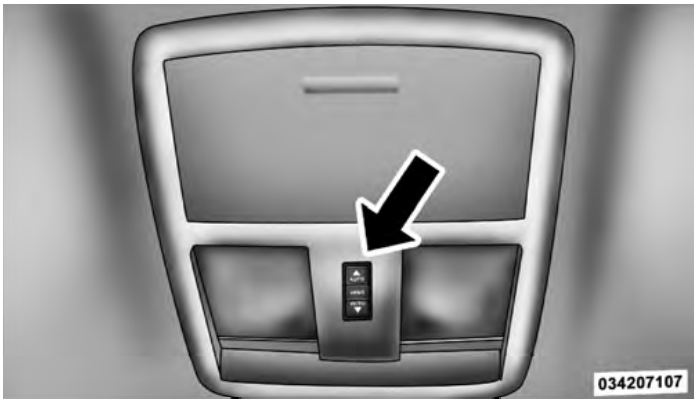

Power Sunroof Controls

Downloaded from www.Manualslib.com manuals search engine

WARNING!

- **Never leave children in a vehicle with the key in the ignition switch (or with the ignition in the Accessory or Run position, for vehicles equipped with Keyless Go™). Occupants, particularly unattended children, can become entrapped by the power sunroof while operating the power sunroof switch. Such entrapment may result in serious injury or death.**
- **In an accident, there is a greater risk of being thrown from a vehicle with an open sunroof. You could also be seriously injured or killed. Always fasten your seat belt properly and make sure all passengers are also properly secured.**

(Continued)

WARNING! (Continued)

- **Do not allow small children to operate the sunroof. Never allow your fingers, other body parts, or any object, to project through the sunroof opening. Injury may result.**

Opening Sunroof — Express

Press the switch rearward and release, and the sunroof will open automatically from any position. The sunroof will open fully and then stop automatically. This is called "Express Open". During Express Open operation, any movement of the sunroof switch will stop the sunroof.

Closing Sunroof — Express

Press the switch forward and release, and the sunroof will close automatically from any position. The sunroof will close fully and stop automatically. This is called "Express Close". During Express Close operation, any movement of the sunroof switch will stop the sunroof.

Downloaded from www.Manualslib.com manuals search engine

Pinch Protect Feature

This feature will detect an obstruction in the opening of the sunroof during Express Close operation. If an obstruction in the path of the sunroof is detected, the sunroof will automatically retract. If this occurs remove the obstruction and press the switch forward and release to Express Close.

Pinch Protect Override

If a known obstruction (ice, debris, etc.) prevents closing, press the switch forward and hold for two seconds after the reversal occurs. This allows the sunroof to move toward the closed position.

NOTE: Pinch protection is disabled while the switch is pressed.

Venting Sunroof — Express

Press and release the Vent button in the center of the switch, and the sunroof will open to the vent position. This is called "Express Vent", which operates regardless of sunroof position. During Express Vent operation, any movement of the sunroof switch will stop the sunroof.

Sunshade Operation

The sunshade can be opened manually. However, the sunshade will open automatically as the sunroof opens.

NOTE: The sunshade cannot be closed if the sunroof is open.

Downloaded from www.Manualslib.com manuals search engine

Wind Buffeting

Wind buffeting can be described as the perception of pressure on the ears or a helicopter-type sound in the ears. Your vehicle may exhibit wind buffeting with the windows down, or the sunroof (if equipped) in certain open or partially open positions. This is a normal occurrence and can be minimized. If the buffeting occurs with the rear windows open, then open the front and rear windows together to minimize the buffeting. If the buffeting occurs with the sunroof open, then adjust the sunroof opening to minimize the buffeting or open any window.

Sunroof Maintenance

Use only a nonabrasive cleaner and a soft cloth to clean the glass panel.

Ignition Off Operation

For vehicles not equipped with the Electronic Vehicle Information Center (EVIC), the power sunroof switch will remain active for 10 minutes after the ignition is placed in the OFF position. Opening either front door will cancel this feature.

For vehicles equipped with the EVIC, the power sunroof switch will remain active for up to 60 minutes after the ignition is placed in the OFF position. Opening either front door will cancel this feature. The time is programmable. Refer to "Electronic Vehicle Information Center (EVIC)/Personal Settings (Customer-Programmable Features)" in "Understanding Your Instrument Panel" for further information.

Sunroof Fully Closed

Press the switch forward and release to ensure that the sunroof is fully closed.

Downloaded from www.Manualslib.com manuals search engine

ELECTRICAL POWER OUTLETS

There are two 12 Volt (13 Amp) electrical power outlets on this vehicle. Both of the power outlets are protected by a fuse.

Insert cigar lighter or accessory plug into the power outlets for use to ensure proper operation.

NOTE:

- To ensure proper operation a MOPAR® knob and element must be used.
- Do not exceed the maximum power of 160 Watts (13 Amps) at 12 Volts. If the 160 Watt (13 Amp) power rating is exceeded the fuse protecting the system will need to be replaced.

The 12 Volt power outlet next to the ash receiver tray has power available only when the ignition is placed in the ACC or RUN position.

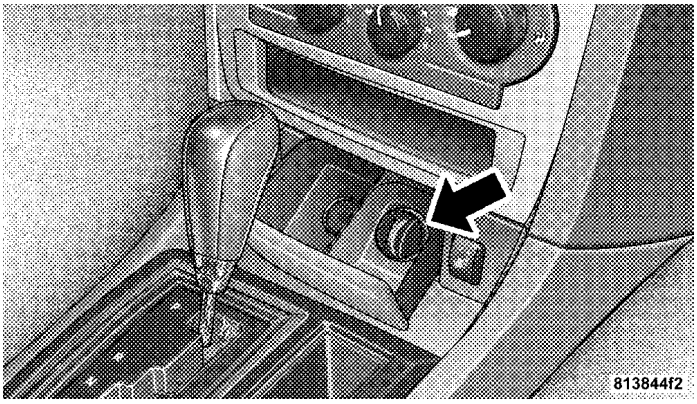

Front Power Outlet

WARNING!

Do not place ashes inside the cubby bin located on the center console on vehicle's not equipped with the ash receiver tray. A fire leading to bodily injury could result.

Downloaded from www.Manualslib.com manuals search engine

The center console outlet is powered directly from the battery (power available at all times). Items plugged into this outlet may discharge the battery and/or prevent the engine from starting.

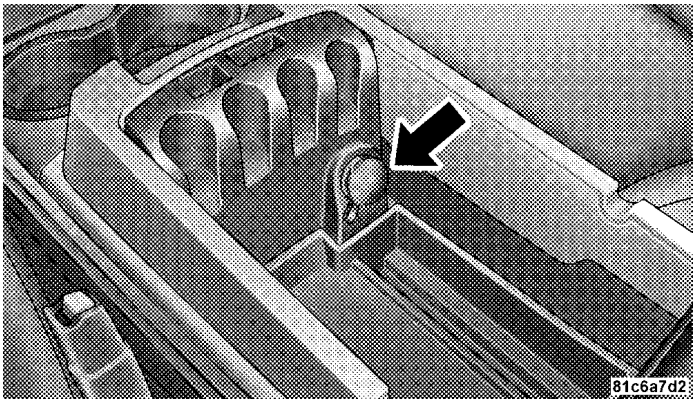

Center Console Power Outlet

WARNING!

To avoid serious injury or death:

- **Only devices designed for use in this type of outlet should be inserted into any 12 Volt outlet.**
- **Do not touch with wet hands.**
- **Close the lid when not in use and while driving the vehicle.**
- **If this outlet is mishandled, it may cause an electric shock and failure.**

Downloaded from www.Manualslib.com manuals search engine

CAUTION!

- **Many accessories that can be plugged in draw power from the vehicle's battery even when not in use (i.e., cellular phones, etc.). Eventually, if plugged in long enough, the vehicle's battery will discharge sufficiently to degrade battery life and/or prevent the engine from starting.**
- **Accessories that draw higher power (i.e., coolers, vacuum cleaners, lights, etc.) will degrade the battery even more quickly. Only use these intermittently and with greater caution.**

(Continued)

CAUTION! (Continued)

- **After the use of high power draw accessories or long periods of the vehicle not being started (with accessories still plugged in), the vehicle must be driven a sufficient length of time to allow the alternator to recharge the vehicle's battery.**
- **Power outlets are designed for accessory plugs only. Do not hang any type of accessory or accessory bracket from the plug. Improper use of the power outlet can cause damage.**

Downloaded from www.Manualslib.com manuals search engine

CUPHOLDERS

Front Seat Cupholders

The cupholders are located in the forward edge of the center console.

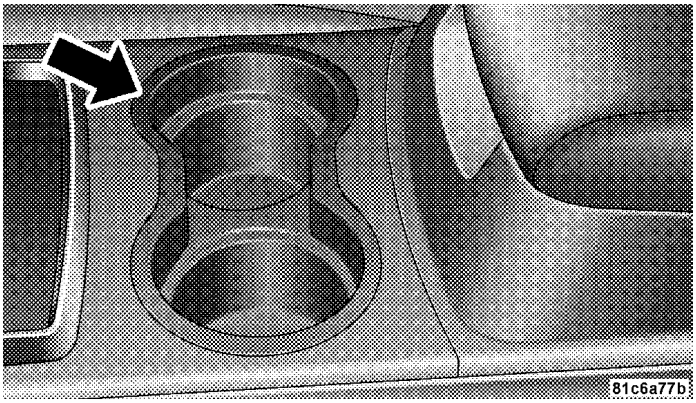

Front Seat Cupholders

Rear Seat Cupholders

The rear seat cupholders are located in the center armrest between the rear seats. The cupholders are positioned forward in the armrest and side-by-side to provide convenient access to beverage cans or bottles while maintaining a resting place for the rear occupants elbows.

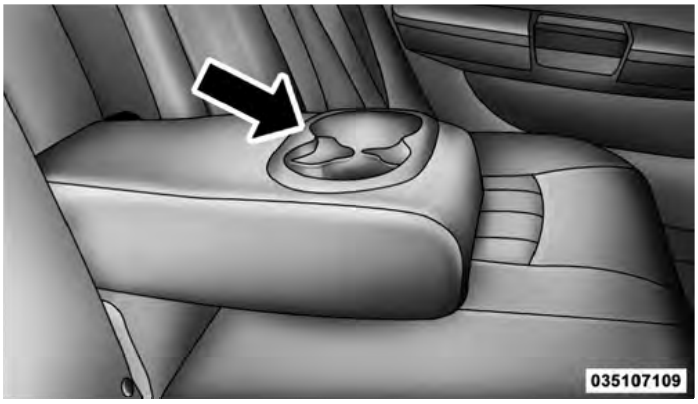

Rear Seat Cupholders

Downloaded from www.Manualslib.com manuals search engine

STORAGE

Console Features

The center console contains two shift bezel cubby bins with rubber mats for holding small items. For vehicles not equipped with navigation radio, the console also contains an extra storage bin located below the climate control, which holds up to four CD jewel cases.

Two separate storage compartments are also located underneath the armrest.

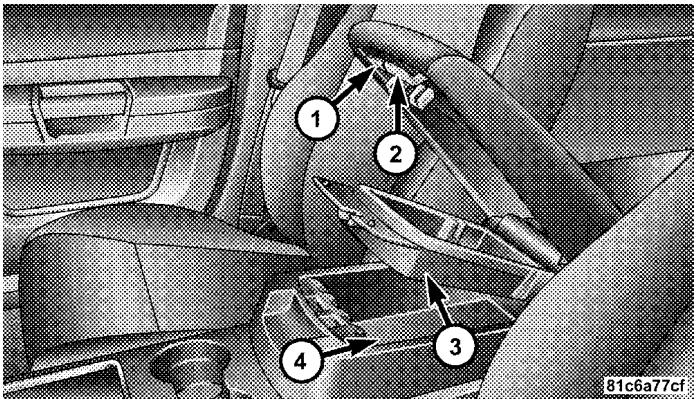

1 — Release button for bottom compartment
2 — Release button for top compartment
3 — Top Compartment
4 — Bottom Compartment. (You can access this compartment directly, without first exposing the upper compartment, by operating the Release Button for the bottom compartment with the armrest down.)

Downloaded from www.Manualslib.com manuals search engine

The top compartment holds small items, such as a pen and note pad, while the larger bottom compartment will hold CDs and alike. The bottom compartment also contains a 12 Volt power outlet and a molded-in coin holder (designed to hold various size coins). A slot in the left and right side of the top compartment provides clearance for power cords to pass conveniently out of the bin with the lid closed. This feature is ideal for games, laptop's, cellular phones or other electrical equipment. The console's front opening lid allows for easy access to these compartments.

Cargo Area

The 60/40 split-folding rear seat provides cargo-carrying versatility. The seatbacks fold down easily by pulling nylon tabs between the seatbacks and the bolsters. When the seats are folded down, they provide a continuous, nearly-flat extension of the load floor.

WARNING!

The weight and position of cargo and passengers can change the vehicle center of gravity and vehicle handling. To avoid loss of control resulting in personal injury, follow these guidelines for loading your vehicle:

- **Always place cargo evenly on the cargo floor. Put heavier objects as low and as far forward as possible.**
- **Place as much cargo as possible in front of the rear axle. Too much weight or improperly placed weight over or behind the rear axle can cause the rear of the vehicle to sway.**
- **Do not pile luggage or cargo higher than the top of the seatback. This could impair visibility or become a dangerous projectile in a sudden stop or collision.**

Downloaded from www.Manualslib.com manuals search engine

When the seatback is folded to the upright position, make sure it is latched by strongly pulling on the top of the seatback above the seat strap.

WARNING!

- **Be certain that the seatback is securely locked into position. If the seatback in not securely locked into position, the seat will not provide the proper stability for child seats and/or passengers. An improperly latched seat could cause serious injury.**
- **The cargo area in the rear of the vehicle (with the rear seatbacks in the locked-up or folded down position) should not be used as a play area by children when the vehicle is in motion. They could be seriously injured in an accident. Children should be seated and using the proper restraint system.**

(Continued)

WARNING! (Continued)

- **To help protect against personal injury, passengers should not be seated in the rear cargo area. The rear cargo space is intended for load carrying purposes only, not for passengers, who should sit in seats and use seat belts.**

CARGO AREA FEATURES

Trunk Mat — If Equipped

A reversible trunk mat covers the bottom of the cargo area. The rubber side of the mat is used to protect the interior of the trunk from mud, snow, and debris. It provides a nonskid surface to keep cargo from sliding.

REAR WINDOW FEATURES

Rear Window Defroster

The rear window defroster button is located on the climate control. Press this button to turn on the

Downloaded from www.Manualslib.com manuals search engine

rear window defroster and the heated outside mirrors (if equipped). An indicator in the button will illuminate when the rear window defroster is on. The rear window defroster automatically turns off after approximately 10 minutes. For an additional five minutes of operation, press the button a second time.

CAUTION!

Failure to follow these cautions can cause damage to the heating elements:

- **Use care when washing the inside of the rear window. Do not use abrasive window cleaners on the interior surface of the window. Use a soft cloth and a mild washing solution, wiping parallel to the heating elements. Labels can be peeled off after soaking with warm water.**

(Continued)

CAUTION! (Continued)

- **Do not use scrapers, sharp instruments, or abrasive window cleaners on the interior surface of the window.**
- **Keep all objects a safe distance from the window.**

LOAD LEVELING SYSTEM — IF EQUIPPED

The automatic load leveling system will provide a level-riding vehicle under most passenger and cargo loading conditions.

A hydraulic pump contained within the shock absorbers raises the rear of the vehicle to the correct height. It takes approximately 1 mile (1.6 km) of driving for the leveling to complete depending on road surface conditions.

If the leveled vehicle is not moved for approximately 15 hours, the leveling system will bleed itself down. The vehicle must be driven to reset the system.

Downloaded from www.Manualslib.com manuals search engine

Downloaded from www.Manualslib.com manuals search engine

UNDERSTANDING YOUR INSTRUMENT PANEL

CONTENTS

■ Instrument Panel Features 213

■ Instrument Cluster — Base 214

■ Instrument Cluster — Premium 215

■ Instrument Cluster Descriptions 216

■ Electronic Vehicle Information Center (EVIC) — If Equipped 230

- □ Electronic Vehicle Information Center (EVIC) Displays 232
- □ Oil Change Required 236
- □ Trip Functions 236
- □ Keyless Go Display — If Equipped 240
- □ Automatic All Wheel Drive (AWD) Displays — If Equipped 241
- □ Driver-Selectable Surround Sound (DSS) – If Equipped 242
- □ Compass Display 242
- □ Navigation — If Equipped 244
- □ Personal Settings (Customer-Programmable Features) 245

■ Setting The Analog Clock 251

Downloaded from www.Manualslib.com manuals search engine

■ Media Center 730N/430 (RER/REN/RBZ) — AM/FM Stereo Radio And CD/DVD/HDD/NAV — If Equipped 252
□ Operating Instructions — Voice Command System — If Equipped 252
□ Operating Instructions — Uconnect™ phone — If Equipped 252
□ Clock Setting Procedure — RBZ Radio 252
□ Clock Setting Procedure — RER/REN Radio 254
■ Media Center 130 (RES) — AM/FM Stereo Radio With CD Player (MP3 AUX Jack). 256
□ Operating Instructions — Radio Mode 256
□ Operation Instructions — CD Mode For CD And MP3 Audio Play 259
□ Notes On Playing MP3 Files 262
□ Operation Instructions - Auxiliary Mode 264
■ Media Center 130 (RES/RSC) — AM/FM Stereo Radio With CD Player (MP3 AUX Jack) And Sirius Radio 265
□ Operating Instructions — Radio Mode 265
□ Operation Instructions — CD Mode For CD And MP3 Audio Play 271
□ Notes On Playing MP3 Files 273
□ List Button (CD Mode For MP3 Play) 275
□ Info Button (CD Mode For MP3 Play) 276
■ Universal Consumer Interface (UCI) 0.5 — If Equipped 277
□ Connecting The iPod® 278

Downloaded from www.Manualslib.com manuals search engine

□ Using This Feature 278
□ Controlling The iPod® Using Radio Buttons . 278
□ Play Mode 279
□ List Or Browse Mode 280
■ Uconnect™ Multimedia (Satellite Radio) — If Equipped (REN/RER/RES Radios Only) . . 282
□ System Activation 282
□ Electronic Serial Number/Sirius Identification Number (ESN/SID) 283
□ Selecting Uconnect™ Multimedia (Satellite) Mode 283
□ Satellite Antenna 283
□ Reception Quality 284
□ Operating Instructions - Uconnect™ Multimedia (Satellite) Mode 284
□ Operating Instructions - Uconnect™ Phone (If Equipped) 286
■ Kicker® High Performance Sound System With Driver-Selectable Surround (DSS) – If Equipped 287
■ Video Entertainment System (VES)™ — If Equipped 288
■ Remote Sound System Controls — If Equipped 290
■ CD/DVD Disc Maintenance 292
■ Radio Operation And Cellular Phones 292
■ Climate Controls 292

Downloaded from www.Manualslib.com manuals search engine

□ Manual Air Conditioning And Heating System 293

□ Automatic Temperature Control — If Equipped 296

□ Operating Tips 301

Downloaded from www.Manualslib.com manuals search engine

INSTRUMENT PANEL FEATURES

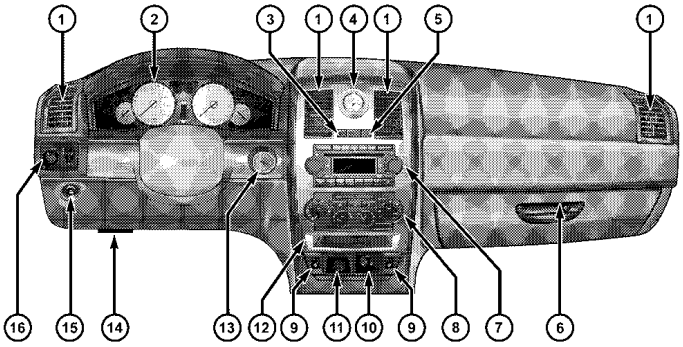

81bf1166

1 — Air Outlet
2 — Instrument Cluster
3 — Hazard Switch
4 — Analog Clock
5 — Electronic Stability Program Off Button* / Traction Control System Off Button*
6 — Glove Compartment
7 — Radio
8 — Climate Control
9 — Heated Seat Switch*
10 — Power Outlet
11 — Ash Tray*
12 — Storage Compartment*
13 — Ignition Switch
14 — Hood Release
15 — Trunk Release Button
16 — Headlight Switch
* If Equipped

Downloaded from www.Manualslib.com manuals search engine

INSTRUMENT CLUSTER — BASE

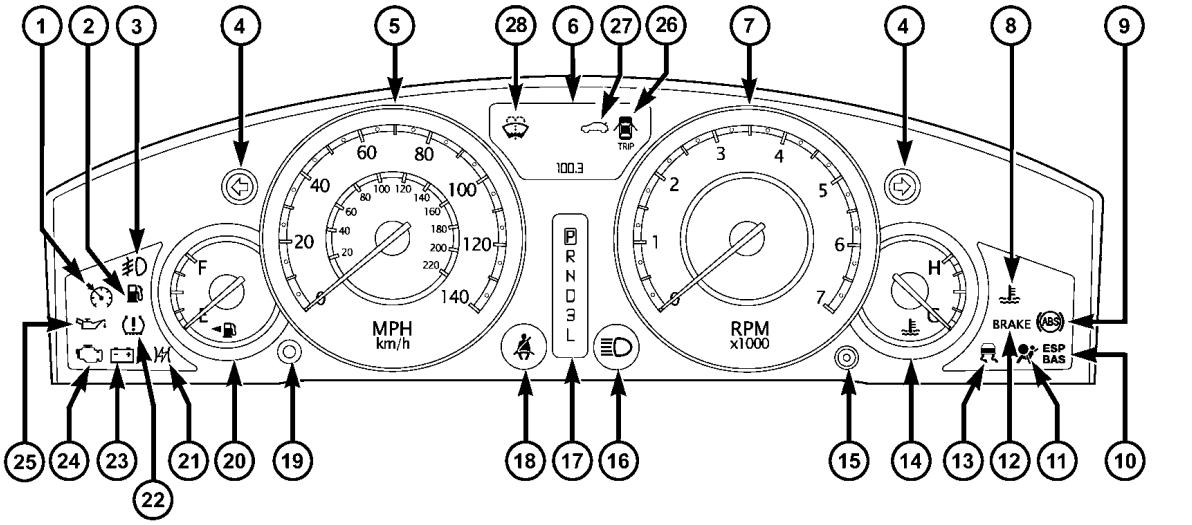

040307696

Downloaded from www.Manualslib.com manuals search engine

INSTRUMENT CLUSTER — PREMIUM

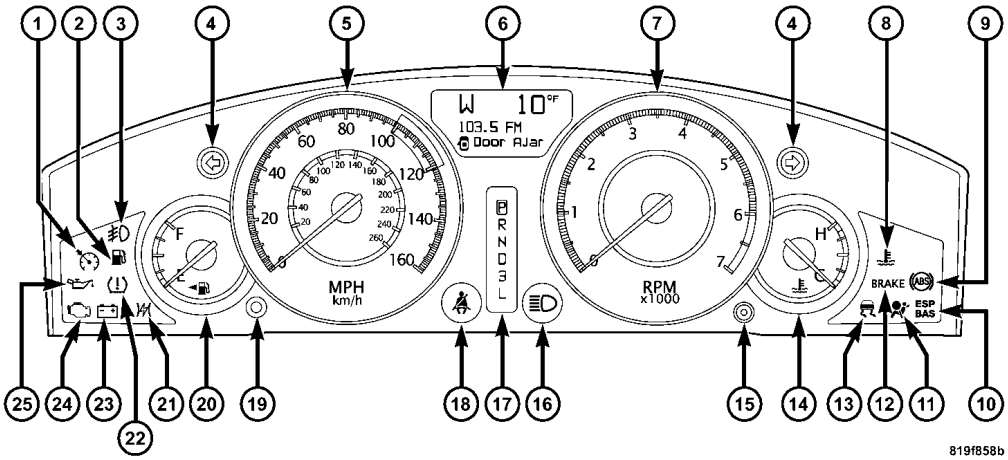

Downloaded from www.Manualslib.com manuals search engine

INSTRUMENT CLUSTER DESCRIPTIONS

1. Electronic Speed Control / Adaptive Cruise Control (ACC) Indicator Light — If Equipped

This light will turn on when the electronic speed control or Adaptive Cruise Control (ACC) is ON.

2. Low Fuel Indicator Light

This light will turn on and a single chime will sound when the fuel level drops to 1/8 tank.

3. Front Fog Light Indicator — If Equipped

This indicator will illuminate when the front fog lights are on.

4. Turn Signal Indicators

The arrow will flash with the exterior turn signal when the turn signal lever is operated.

NOTE:

- A continuous chime will sound if the vehicle is driven more than 1 mile (1.6 km) with either turn signal on.
- Check for an inoperative outside light bulb if either indicator flashes at a rapid rate.

5. Speedometer

Indicates vehicle speed.

6. Odometer / Trip Odometer / Electronic Vehicle Information Center (EVIC) Display Area — If Equipped

The odometer shows the total distance the vehicle has been driven. The trip odometer shows individual trip mileage. Refer to "Trip Odometer Button" for additional information.

Downloaded from www.Manualslib.com manuals search engine

NOTE: U.S. Federal regulations require that upon transfer of vehicle ownership, the seller certify to the purchaser the correct mileage that the vehicle has been driven. If your odometer needs to be repaired or serviced, the repair technician should leave the odometer reading the same as it was before the repair or service. If s/he cannot do so, then the odometer must be set at zero, and a sticker must be placed in the door jamb stating what the mileage was before the repair or service. It is a good idea for you to make a record of the odometer reading before the repair/service, so that you can be sure that it is properly reset, or that the door jamb sticker is accurate if the odometer must be reset at zero.

Vehicle Odometer Messages

When the appropriate conditions exist, the following warning messages will display in the odometer:

ECO . . . . . Fuel Saver Indicator
2drivE . . . . . Vehicle is in Rear Wheel Drive (RWD)
4drivE . . . . . Vehicle is in All Wheel Drive (AWD
tCASE . . . . . AWD System Fault
gASCAP . . . . . Loose Fuel Filler Cap Message
Lo tirE . . . . . Low Tire Pressure
noFUSE . . . . . Fuse Fault
CHAngE OIL . . . . . Oil Change Required

On vehicles equipped with a Premium Instrument Cluster, this display shows the Electronic Vehicle Information Center (EVIC) messages when the appropriate conditions exist. Refer to Electronic Vehicle Information Center (EVIC) for further information.

ECO (Fuel Saver Indicator) — If Equipped

The ECO indicator will illuminate when you are driving in a fuel efficient manner and can be used to modify driving habits in order to increase fuel economy. The ECO display will toggle on and off depending on driving habits and vehicle usage.

Downloaded from www.Manualslib.com manuals search engine

Rear Wheel Drive (RWD) / All Wheel Drive (AWD) Displays (Base Cluster)

On vehicles equipped with a Base Instrument Cluster, the odometer will display "2drivE" when the vehicle is in Rear Wheel Drive (RWD), and "4drivE" when All Wheel Drive (AWD) is activated.

If the odometer displays the "tCASE" warning message after engine start up, or during driving, the AWD system is not functioning properly and service is required.

NOTE: Vehicles equipped with Electronic Vehicle Information Center (EVIC) will display "ALL WHEEL DRIVE" and "REAR WHEEL DRIVE" when the appropriate condition exists. The EVIC will display "SERVICE AWD SYSTEM" if the system is not functioning properly and service is required. Refer to "Electronic Vehicle Information Center (EVIC)" for further information.

gASCAP

If the vehicle diagnostic system determines that the fuel filler cap is loose, improperly installed, or damaged, a "gASCAP" message will display in the odometer display area. Tighten the fuel filler cap properly and press the TRIP ODOMETER button to turn off the message. If the problem continues, the message will appear the next time the vehicle is started.

A loose, improperly installed, or damaged fuel filler cap may also turn on the Malfunction Indicator Light (MIL).

Lo tirE

When the appropriate tire pressure is low, the odometer display will toggle between Lo and tirE for three cycles.

noFUSE

If the vehicle diagnostic system determines that the Ignition Off Draw (IOD) fuse is improperly installed, or

Downloaded from www.Manualslib.com manuals search engine

damaged, a "noFUSE" message will display in the odometer display area. For further information on fuses and fuse locations refer to "Fuses" in "Maintaining Your Vehicle".

CHAngE OIL

Your vehicle is equipped with an engine oil change indicator system. The "CHAngE OIL" message will flash in the instrument cluster odometer for approximately 12 seconds after a single chime has sounded to indicate the next scheduled oil change interval. The engine oil change indicator system is duty cycle based, which means the engine oil change interval may fluctuate dependent upon your personal driving style.

Unless reset, this message will continue to display each time you place the ignition switch in the RUN position. To turn off the message temporarily, press and release the TRIP ODOMETER button on the instrument cluster. To reset the oil change indicator system (after performing the scheduled maintenance) perform the following procedure:

1. Place the ignition switch in the RUN position. (Do not start the engine).
2. Fully depress the accelerator pedal slowly three times within 10 seconds.
3. Place the ignition switch in the OFF position.

NOTE: If the indicator message illuminates when you start the vehicle, the oil change indicator system did not reset. If necessary, repeat this procedure.

On vehicles equipped with a Premium Instrument Cluster, this display shows the Electronic Vehicle Information Center (EVIC) messages when the appropriate conditions exist.

Downloaded from www.Manualslib.com manuals search engine

7. Tachometer

The red segments indicate the maximum permissible engine revolutions per minute (RPM x 1000) for each gear range. Ease up on the accelerator before reaching the red area.

8. Engine Temperature Warning Light

This light will turn on and a single chime will sound to warn of an overheated engine condition. When this light turns on, the engine temperature is critically hot. If the light turns on while driving, safely pull over and stop the vehicle. The vehicle should be turned OFF immediately and serviced as soon as possible. (Refer to "If Your Engine Overheats" in "What To Do In Emergencies" for further information).

9. Anti-Lock Brake (ABS) Light — If Equipped

This light monitors the Anti-Lock Brake System (ABS). The light will turn on when the ignition switch is placed in the RUN position and may stay on for as long as four seconds.

If the ABS Light remains on or turns on while driving, then the Anti-Lock portion of the brake system is not functioning and service is required. However, the conventional brake system will continue to operate normally if the Brake Warning Light is not on.

If the ABS Light is on, the brake system should be serviced as soon as possible to restore the benefits of Anti-Lock brakes. If the ABS Light does not turn on when the ignition switch is placed in the RUN position, have the light inspected by an authorized dealer.

Downloaded from www.Manualslib.com manuals search engine

10. Electronic Stability Program (ESP) / Brake Assist System (BAS) Malfunction Indicator Light

ESP
BAS

The yellow Electronic Stability Program (ESP) / Brake Assist System (BAS) Malfunction Indicator Light will turn on when the key in the ignition switch is placed in the RUN position. The light should go out with the engine running. The system will turn this light on continuously while the engine is running if it detects a malfunction in either the ESP, the BAS or both.

WARNING!

If a warning light remains on the system may not be working and you will not have the benefit of ESP or BAS. Under certain driving conditions, where ESP or BAS would be beneficial, you - if you have not adjusted your driving speeds and stopping in or to account for the lack of the feature, may be in accident.

11. Airbag Warning Light

This light will turn on for six to eight seconds as a bulb check when the ignition switch is first placed in the RUN position. If the light is either not on during starting, or stays on, or turns on while driving, then have the system inspected at an authorized dealer as soon as possible. Refer to "Occupant Restraints" in "Things To Know Before Starting Your Vehicle" for further information.

Downloaded from www.Manualslib.com manuals search engine

12. Brake Warning Light

BRAKE

This light monitors various brake functions, including brake fluid level and parking brake application. If the brake light turns on, it may indicate that the parking brake is applied, that the brake fluid level is low, or that there is a problem with the anti-lock brake system reservoir.

If the light remains on when the parking brake has been disengaged, and the fluid level is at the full mark on the master cylinder reservoir, it indicates a possible brake hydraulic system malfunction. In this case, the light will remain on until the condition has been corrected.

The dual brake system provides a reserve braking capacity in the event of a failure to a portion of the hydraulic system. A leak in either half of the dual brake system is indicated by the Brake Warning Light which will turn on when the brake fluid level in the master cylinder has dropped below a specified level.

The light will remain on until the cause is corrected.

NOTE: The light may flash momentarily during sharp cornering maneuvers which change fluid level conditions. The vehicle should have service performed, and the brake fluid level checked.

If brake failure is indicated, immediate repair is necessary.

WARNING!

Driving a vehicle with the brake light on is dangerous. Part of the brake system may have failed. It will take longer to stop the vehicle. You could have an accident. Have the vehicle checked immediately.

Downloaded from www.Manualslib.com manuals search engine

Vehicles equipped with the Anti-Lock Brake System (ABS), are also equipped with Electronic Brake Force Distribution (EBD). In the event of an EBD failure, the Brake Warning Light will turn on along with the ABS Light. Immediate repair to the ABS system is required.

Operation of the Brake Warning Light can be checked by turning the ignition switch from the OFF position to the RUN position. The light should illuminate for approximately two seconds. The light should then turn off unless the parking brake is applied or a brake fault is detected. If the light does not illuminate, have the light inspected by an authorized dealer.

The light also will turn on when the parking brake is applied with the ignition switch in the RUN position.

NOTE: This light shows only that the parking brake is applied. It does not show the degree of brake application.

13. Electronic Stability Program (ESP) / Traction Control System (TCS) Indicator Light — If Equipped

If this indicator light flashes during acceleration, ease up on the accelerator and apply as little throttle as possible. Adapt your speed and driving to the prevailing road conditions, and do not switch off the Electronic Stability Program (ESP).

14. Temperature Gauge

The temperature gauge shows engine coolant temperature. Any reading within the normal range indicates that the engine cooling system is operating satisfactorily.

The gauge pointer will likely indicate a higher temperature when driving in hot weather, up mountain grades, or when towing a trailer. It should not be allowed to exceed the upper limits of the normal operating range.

Downloaded from www.Manualslib.com manuals search engine

CAUTION!

Driving with a hot engine cooling system could damage your vehicle. If the temperature gauge reads "H," pull over and stop the vehicle. Idle the vehicle with the air conditioner turned off until the pointer drops back into the normal range. If the pointer remains on the "H," and you hear continuous chimes, turn the engine OFF immediately and call for service.

WARNING!

A hot engine cooling system is dangerous. You or others could be badly burned by steam or boiling coolant. You may want to call a service center if your vehicle overheats. If you decide to look under the hood yourself, refer to "Maintaining Your Vehicle" and follow the warnings under the Cooling System Pressure Cap paragraph.

15. Trip Odometer Button

Trip Odometer Button — Base Cluster
The word ″TRIP″ will appear when this button is pressed. Push in and hold the button for two seconds when the trip odometer displays to reset it to 0 miles (km). A second press of the button will display the outside temperature in the odometer.

Trip Odometer Button — Premium Cluster
Press this button to change the display from odometer to either of two trip odometer settings. The letter "A" or "B" will appear when in the trip odometer mode. Push in and hold the button for two seconds to reset the trip odometer to 0 miles (km). The odometer must be in TRIP mode to reset it.

Downloaded from www.Manualslib.com manuals search engine

16. High Beam Indicator

This indicator will turn on when the high beam headlights are ON. Push the multifunction lever away from the steering wheel to switch the headlights to high beam.

17. Shift Lever Indicator

The Shift Lever Indicator is self-contained within the instrument cluster. It displays the gear position of the automatic transmission.

18. Seat Belt Reminder Light

This light will turn on for five to eight seconds as a bulb check when the ignition switch is first placed in the RUN position. A chime will sound if the driver's seat belt is unbuckled during the bulb check. The Seat Belt Reminder Light will flash or remain on continuously if the driver's seat belt remains unbuckled after the bulb check or when driving. Refer to "Occupant Restraints" in "Things To Know Before Starting Your Vehicle" for further information.

19. Vehicle Security Light — If Equipped

The Vehicle Security Light flashes rapidly when the Vehicle Security Alarm is arming, and slowly when the Vehicle Security Alarm is armed.

20. Fuel Gauge

The pointer shows the level of fuel in the fuel tank when the ignition switch is placed in the RUN position.

21. Electronic Throttle Control (ETC) Light

This light will turn on briefly as a bulb check when the ignition switch is placed in the RUN position. This light will also turn on while the engine is running if there is a problem with the Electronic Throttle Control (ETC) system.

If the light comes on while the engine is running, safely bring the vehicle to a complete stop as soon as possible, place the shift lever in PARK, and cycle the ignition through the ACC and RUN positions. The light should

Downloaded from www.Manualslib.com manuals search engine

turn off. If the light remains lit with the engine running, your vehicle will usually be drivable. However, see an authorized dealer for service as soon as possible.

If the light is flashing when the engine is running, immediate service is required. In this case, you may experience reduced performance, an elevated/rough idle or engine stall, and your vehicle may require towing.

Also, have the system checked by an authorized dealer if the light does not come on during starting.

22. Tire Pressure Monitoring Telltale Light

Each tire, including the spare (if provided), should be checked monthly when cold and inflated to the inflation pressure recommended by the vehicle manufacturer on the vehicle placard or tire inflation pressure label. (If your vehicle has tires of a different size than the size indicated on the vehicle placard or tire inflation pressure label, you should determine the proper tire inflation pressure for those tires.)

As an added safety feature, your vehicle has been equipped with a Tire Pressure Monitoring System (TPMS) that illuminates a low tire pressure telltale when one or more of your tires is significantly under-inflated. Accordingly, when the low tire pressure telltale illuminates, you should stop and check your tires as soon as possible, and inflate them to the proper pressure. Driving on a significantly under-inflated tire causes the tire to overheat and can lead to tire failure. Under-inflation also reduces fuel efficiency and tire tread life, and may affect the vehicle's handling and stopping ability.

Please note that the TPMS is not a substitute for proper tire maintenance, and it is the driver's responsibility to

Downloaded from www.Manualslib.com manuals search engine

maintain correct tire pressure, even if under-inflation has not reached the level to trigger illumination of the TPMS low tire pressure telltale.

Your vehicle has also been equipped with a TPMS malfunction indicator to indicate when the system is not operating properly. The TPMS malfunction indicator is combined with the low tire pressure telltale. When the system detects a malfunction, the telltale will flash for approximately one minute and then remain continuously illuminated. This sequence will continue upon subsequent vehicle start-ups as long as the malfunction exists. When the malfunction indicator is illuminated, the system may not be able to detect or signal low tire pressure as intended. TPMS malfunctions may occur for a variety of reasons, including the installation of replacement or alternate tires or wheels on the vehicle that prevent the TPMS from functioning properly. Always check the TPMS malfunction telltale after replacing one or more tires or wheels on your vehicle to ensure that the replacement or alternate tires and wheels allow the TPMS to continue to function properly.

CAUTION!

The TPMS has been optimized for the original equipment tires and wheels. TPMS pressures and warning have been established for the tire size equipped on your vehicle. Undesirable system operation or sensor damage may result when using replacement equipment that is not of the same size, type, and/or style. Aftermarket wheels can cause sensor damage. Do not use aftermarket tire sealants or balance beads if your vehicle is equipped with a TPMS, as damage to the sensors may result.

Downloaded from www.Manualslib.com manuals search engine

23. Charging System Light

This light shows the status of the electrical charging system. The light should come on when the ignition switch is first placed in the RUN position and remain on briefly as a bulb check. If the light stays on or comes on while driving, turn off some of the vehicle's non-essential electrical devices or increase engine speed (if at idle). If the charging system light remains on, it means that the vehicle is experiencing a problem with the charging system. Obtain SERVICE IMMEDIATELY. See an authorized dealer.

If jump starting is required, refer to "Jump Starting Procedures" in "What To Do In Emergencies".

24. Malfunction Indicator Light (MIL)

The Malfunction Indicator Light (MIL) is part of an onboard diagnostic system called OBD. The OBD system monitors engine and automatic transmission control systems. The MIL will turn on when the ignition is placed in the RUN position before engine start. If the MIL does not come on when turning the ignition from the OFF to RUN position, have the condition checked promptly.

Certain conditions such as a loose or missing gas cap, poor fuel quality, etc., may illuminate the MIL after engine start. The vehicle should be serviced if the MIL stays on through several of your typical driving cycles. In most situations, the vehicle will drive normally and will not require towing.

CAUTION!

Prolonged driving with the MIL on could cause damage to the engine control system. It also could affect fuel economy and drivability. If the MIL is flashing, severe catalytic converter damage and power loss will soon occur. Immediate service is required.

Downloaded from www.Manualslib.com manuals search engine

WARNING!

A malfunctioning catalytic converter, as referenced above, can reach higher temperatures than in normal operating conditions. This can cause a fire if you drive slowly or park over flammable substances such as dry plants or wood or cardboard, etc. This could result in death or serious injury to the driver, occupants or others.

25. Oil Pressure Warning Light

This light indicates low engine oil pressure. The light should turn on momentarily when the engine is started. If the light turns on while driving, stop the vehicle, and shut OFF the engine as soon as possible. A single chime will sound when this light turns on. Do not operate the vehicle until the cause is corrected. This light does not indicate how much oil is in the engine. The engine oil level must be checked using the procedure shown in "Maintaining Your Vehicle".

26. Door Ajar Indicator

This light will turn on to indicate that one or more door may be ajar.

27. Decklid Ajar Indicator

This light will turn on to indicate that the decklid may be ajar.

28. Windshield Washer Fluid Low Indicator

This light will turn on to indicate the windshield washer fluid is low.

Downloaded from www.Manualslib.com manuals search engine

ELECTRONIC VEHICLE INFORMATION CENTER (EVIC) — IF EQUIPPED

The Electronic Vehicle Information Center (EVIC) features a driver-interactive display that is located in the instrument cluster.

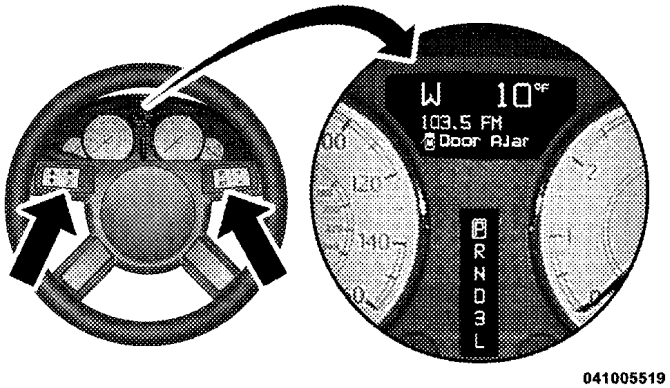

Electronic Vehicle Information Center (EVIC)

This system conveniently allows the driver to select a variety of useful information by pressing the switches mounted on the steering wheel. The EVIC consists of the following:

- System status
- Vehicle information warning message displays
- Tire Pressure Monitor System (if equipped)
- Personal Settings (Customer-Programmable Features)
- Compass display
- Outside temperature display
- Trip computer functions
- Uconnect™ Phone displays (if equipped)
- Navigation system screens (if equipped)
- Audio mode display

Downloaded from www.Manualslib.com manuals search engine

- Surround Sound modes (if equipped with Driver-Selectable Surround [DSS])

The system allows the driver to select information by pressing the following buttons mounted on the steering wheel.

MENU Button

Press and release the MENU button and the mode displayed will change between Trip Functions, Navigation (if equipped), System Status, and Personal Settings.

FUNCTION SELECT Button

Press the FUNCTION SELECT button to accept a selection. The FUNCTION SELECT button also functions as a remote sound system control. Refer to "Remote Sound System Controls".

SCROLL Button

Press the SCROLL button to scroll through Trip Functions, Navigation (if equipped), System Status Messages, and Personal Settings (Customer-Programmable Features). The SCROLL button also functions as a remote sound system control. Refer to "Remote Sound System Controls".

AUDIO MODE Button

Press the AUDIO MODE button to select the Compass/Temp/Audio screen. Along with compass reading and outside temperature, this screen will display radio and media mode information depending on which radio is in the vehicle. Refer to "Remote Sound System Controls".

Downloaded from www.Manualslib.com manuals search engine

Electronic Vehicle Information Center (EVIC) Displays

When the appropriate conditions exist, the EVIC displays the following messages:

- Turn Signal On (with a continuous warning chime if the vehicle is driven more than 1 mile [1.6 km] with either turn signal on)
- Left Front Turn Signal Light Out (with a single chime)
- Left Rear Turn Signal Light Out (with a single chime)
- Right Front Turn Signal Light Out (with a single chime)
- Right Rear Turn Signal Light Out (with a single chime)
- Memory #1/#2 Profile Set
- Memory #1/#2 Profile Recall
- Memory System Disabled – Vehicle Not In PARK (with a single chime)
- Memory System Disabled – Seat Belt Buckled (with a single chime)
- Personal Settings Not Available – Vehicle Not in PARK
- Left/Right Front Door Ajar (one or more, with a single chime if speed is above 1 mph [1.6 km/h])
- Left/Right Rear Door Ajar (one or more, with a single chime if speed is above 1 mph [1.6 km/h])
- Door(s) Ajar (with a single chime if vehicle is in motion)
- Trunk Ajar (with a single chime)
- Low Washer Fluid (with a single chime)
- ECO – Fuel Saver Indicator

Downloaded from www.Manualslib.com manuals search engine

- SERVICE AWD SYSTEM — All Wheel Drive (AWD) system is not functioning properly and service is required.
- Normal Cruise Ready — When Adaptive Cruise Control (ACC) system is turned off and Normal (Fixed Speed) Cruise Control mode is available. Refer to "Adaptive Cruise Control (ACC)" in "Understanding The Features Of Your Vehicle" (if equipped).
- Cruise Off — When the Adaptive Cruise Control (ACC) system is turned off. Refer to "Adaptive Cruise Control (ACC)" in "Understanding The Features Of Your Vehicle" (if equipped).
- ACC Ready — When the ACC system is activated. Refer to "Adaptive Cruise Control (ACC)" in "Understanding The Features Of Your Vehicle" (if equipped).
- ACC Set — After setting the desired speed in the ACC system. Refer to "Adaptive Cruise Control (ACC)" in "Understanding The Features Of Your Vehicle" (if equipped).
- ACC Cancelled — To disable the ACC system. Refer to "Adaptive Cruise Control (ACC)" in "Understanding The Features Of Your Vehicle" (if equipped).
- Sensed Vehicle Indicator — The system detects a slower moving vehicle in the same lane. Refer to "Adaptive Cruise Control (ACC)" in "Understanding The Features Of Your Vehicle" (if equipped).
- Driver Override — If you apply the accelerator after setting the desired speed in the ACC system. Refer to "Adaptive Cruise Control (ACC)" in "Understanding The Features Of Your Vehicle" (if equipped).

Downloaded from www.Manualslib.com manuals search engine

- Distance Set — After changing the desired following distance in the ACC system, this message will display momentarily. Refer to "Adaptive Cruise Control (ACC)" in "Understanding The Features Of Your Vehicle" (if equipped).
- Attention — If the ACC system predicts that its maximum braking level is not sufficient to maintain the set distance, this message will flash and a chime will sound while ACC continues to apply its maximum braking capacity. When this occurs, you should immediately apply the brakes as needed to maintain a safe distance from the vehicle ahead. Refer to "Adaptive Cruise Control (ACC)" in "Understanding The Features Of Your Vehicle" (if equipped).
- ACC Blinded — If the ACC system deactivates due to performance limiting conditions. Refer to "Adaptive Cruise Control (ACC)" in "Understanding The Features Of Your Vehicle" (if equipped).
- ACC Unavailable — If the ACC system turns off due to a temporary malfunction that limits functionality. Refer to "Adaptive Cruise Control (ACC)" in "Understanding The Features Of Your Vehicle" (if equipped).
- Service ACC — If the ACC system turns off due to an internal system fault that requires service from an authorized dealer. Refer to "Adaptive Cruise Control (ACC)" in "Understanding The Features Of Your Vehicle" (if equipped).
- Adjustable Pedals Disabled – Cruise Engaged (with a single chime) — only available on vehicles equipped with memory seats.
- Adjustable Pedals Disabled – Vehicle In REVERSE (with a single chime) — only available on vehicles equipped with memory seats.
- Channel # Transmit
- Channel # Training

Downloaded from www.Manualslib.com manuals search engine

- Channel # Trained
- Clearing Channels
- Channels Cleared
- Did Not Train
- Left Front Low Pressure (with a single chime). Refer to information on “Tire Pressure” and “Tire Pressure Monitor” under “Starting And Operating.”
- Left Rear Low Pressure (with a single chime). Refer to information on “Tire Pressure” and “Tire Pressure Monitor” under “Starting And Operating.”
- Right Front Low Pressure (with a single chime). Refer to information on “Tire Pressure” and “Tire Pressure Monitor” under “Starting And Operating.”
- Right Rear Low Pressure (with a single chime). Refer to information on “Tire Pressure” and “Tire Pressure Monitor” under “Starting And Operating.”
- Check TPM System (with a single chime). Refer to information on “Tire Pressure Monitor” under “Starting And Operating.”
- Check Gascap (refer to “Adding Fuel” in “Starting And Operating”)
- Service Park Assist System (with a single chime)
- Turn To Run (refer to “Remote Starting System” in “Things To Know Before Starting Your Vehicle”)
- Key Fob Battery Low
- Service Keyless System
- Wrong Key
- Push Button or Insert Key/Turn To Run (refer to “Remote Starting System” in “Things To Know Before Starting Your Vehicle”)
- Oil Change Required (with a single chime)

Downloaded from www.Manualslib.com manuals search engine

Oil Change Required

Your vehicle is equipped with an engine oil change indicator system. The "Oil Change Required" message will flash in the EVIC display for approximately 10 seconds after a single chime has sounded to indicate the next scheduled oil change interval. The engine oil change indicator system is duty cycle based, which means the engine oil change interval may fluctuate dependent upon your personal driving style.

Unless reset, this message will continue to display each time you turn the ignition switch to the RUN position. To turn off the message temporarily, press and release the MENU button. To reset the oil change indicator system (after performing the scheduled maintenance) perform the following procedure:

1. Place the ignition switch in the RUN position (Do not start the engine).

2. Fully depress the accelerator pedal slowly three times within 10 seconds.

3. Place the ignition in the OFF position.

NOTE: If the indicator message illuminates when you start the vehicle, the oil change indicator system did not reset. If necessary, repeat this procedure.

Trip Functions

Press and release the MENU button until one of the following Trip Functions displays in the EVIC:

- Average Fuel Economy / Fuel Saver Mode
- Distance To Empty
- Trip A
- Trip B
- Elapsed Time

Downloaded from www.Manualslib.com manuals search engine

- Display Units of Measure in

Press the SCROLL button to cycle through all the Trip Computer functions.

The Trip Functions mode displays the following information.

- *Average Fuel Economy / Fuel Saver Mode — If Equipped*

Shows the average fuel economy since the last reset. When the fuel economy is reset, the display will read "RESET" or show dashes for two seconds. Then, the history information will be erased, and the averaging will continue from the last fuel average reading before the reset.

The FUEL SAVER MODE message will display above the average fuel economy in the EVIC display. This message will appear whenever MDS (if equipped) allows the engine to operate on four cylinders, or if you are driving in a fuel efficient manner.

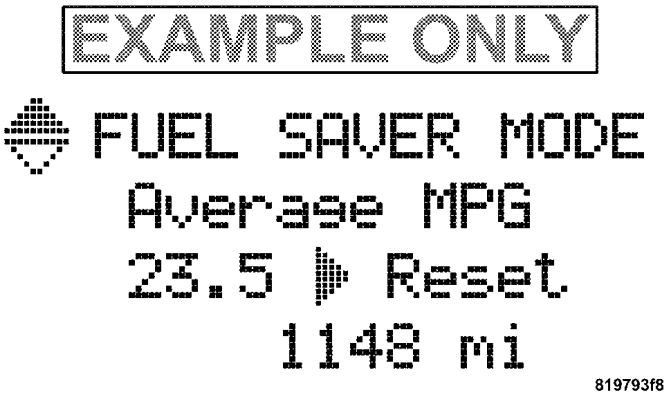

Fuel Saver Mode — On

Downloaded from www.Manualslib.com manuals search engine

This feature allows you to monitor when you are driving in a fuel efficient manner, and it can be used to modify driving habits in order to increase fuel economy.

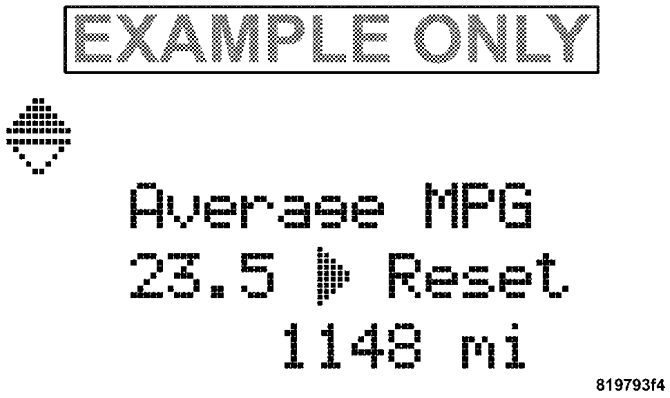

Fuel Saver Mode — Off

- ***Distance To Empty (DTE)***

Shows the estimated distance that can be traveled with the fuel remaining in the tank. This estimated distance is determined by a weighted average of the instantaneous and average fuel economy, according to the current fuel tank level. DTE cannot be reset through the FUNCTION SELECT button.

NOTE: Significant changes in driving style or vehicle loading will greatly affect the actual drivable distance of the vehicle, regardless of the DTE displayed value.

When the DTE value is less than 30 miles (48 km) estimated driving distance, the DTE display will change to a text display of "LOW FUEL." This display will continue until the vehicle runs out of fuel. Adding a significant amount of fuel to the vehicle will turn off the "LOW FUEL" text and a new DTE value will display.

Downloaded from www.Manualslib.com manuals search engine

- ***Trip A***

Shows the total distance traveled for Trip A since the last reset.

- ***Trip B***

Shows the total distance traveled for Trip B since the last reset.

- ***Elapsed Time***

Shows the total elapsed time of travel since the last reset when the ignition switch is in the ACC position. Elapsed time will increment when the ignition switch is in the RUN or START position.

- ***Display Units of Measure in***

To make your selection, press and release the FUNCTION SELECT button until "ENGLISH" or "METRIC" appears.

To Reset The Display

Reset will only occur while a resettable function is being displayed. Press and release the FUNCTION SELECT button once to clear the resettable function being displayed. To reset all resettable functions, press and release the FUNCTION SELECT button a second time within three seconds of resetting the currently-displayed function. (Reset ALL will display during this three-second window).

Downloaded from www.Manualslib.com manuals search engine

Keyless Go Display — If Equipped

When the ENGINE START/STOP button is pressed to change ignition switch positions, the Keyless Go icon momentarily appears in the EVIC display showing the new ignition switch position.

Keyless Go Display

The round symbol in the middle rotates to point at the new ignition switch position. If desired, the ignition switch position graphic can be set to be constantly visible by pressing the EVIC MENU button until the display appears.

Refer to "Keyless Go" in "Starting And Operating" for more information.

NOTE: Under certain conditions, the display may be superseded by another display of higher priority. But when the ignition switch position is changed, the display always re-appears.

Downloaded from www.Manualslib.com manuals search engine

Automatic All Wheel Drive (AWD) Displays — If Equipped

Automatic AWD operation could be activated by outside temperature, wheel slip, or other predetermined conditions, when the vehicle automatically transitions from RWD to AWD the EVIC will display the following message for five seconds.

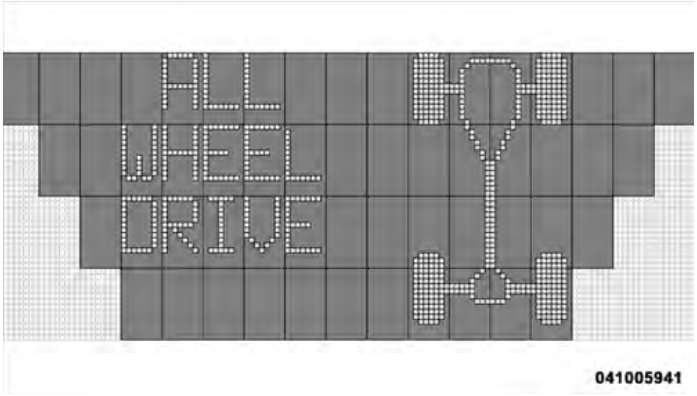

Rear Wheel Drive (RWD) to All Wheel Drive (AWD)

When the vehicle automatically transitions from AWD to RWD the EVIC will display the following message for five seconds.

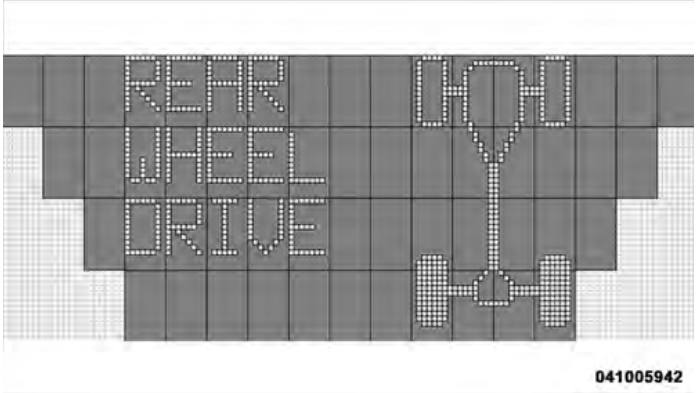

All Wheel Drive (AWD) to Rear Wheel Drive (RWD)

Refer to "All Wheel Drive — If Equipped" in "Starting And Operating" for more information on the All Wheel Drive (AWD) system.

4

Downloaded from www.Manualslib.com manuals search engine

Driver-Selectable Surround Sound (DSS) – If Equipped

Press and release the MENU button until "Surround Sound" displays in the EVIC. The EVIC provides information on the current surround mode.

- Stereo
- Video Surround
- Audio Surround

While in the Surround Sound menu, press the FUNCTION SELECT button to change surround modes. The Video Surround Mode will only be available for video media sources (DVDs, Video CDs, or other video media supported by the radio).

Compass Display

HOME Button

The compass readings indicate the direction the vehicle is facing. Press and release the HOME button to display one of eight compass readings and the outside temperature.

NOTE: The system will display the last known outside temperature when starting the vehicle and may need to be driven several minutes before the updated temperature is displayed. Engine temperature can also affect the displayed temperature, therefore temperature readings are not updated when the vehicle is not moving.

Automatic Compass Calibration

This compass is self-calibrating, which eliminates the need to set the compass manually. When the vehicle is new, the compass may appear erratic and the EVIC will display "CAL" until the compass is calibrated. You may also calibrate the compass by completing one or more 360

Downloaded from www.Manualslib.com manuals search engine

degree turns (in an area free from large metal or metallic objects) until the "CAL" message displayed in the EVIC turns off. The compass will now function normally.

Manual Compass Calibration

If the compass appears erratic and the "CAL" message does not appear in the EVIC display, you must put the compass into the Calibration Mode manually as follows:

1. Place the ignition switch in the RUN position.

2. Press and hold the HOME button for approximately two seconds.

3. Press the SCROLL button until "Calibrate Compass" displays in the EVIC.

4. Press and release the FUNCTION SELECT button to start the calibration. The message "CAL" will display in the EVIC.

5. Complete one or more 360 degree turns (in an area free from large metal or metallic objects) until the "CAL" message turns off. The compass will now function normally.

Compass Variance

Compass Variance is the difference between Magnetic North and Geographic North. To compensate for the differences, the variance should be set for the zone where the vehicle is driven, per the zone map. Once properly set, the compass will automatically compensate for the differences and provide the most accurate compass heading.

Downloaded from www.Manualslib.com manuals search engine

NOTE: Keep magnetic materials away from the top of the instrument panel, such as iPod's, Cell Phones, Laptops and Radar Detectors. This is where the compass module is located, and it can cause interference with the compass sensor, and it may give false readings.

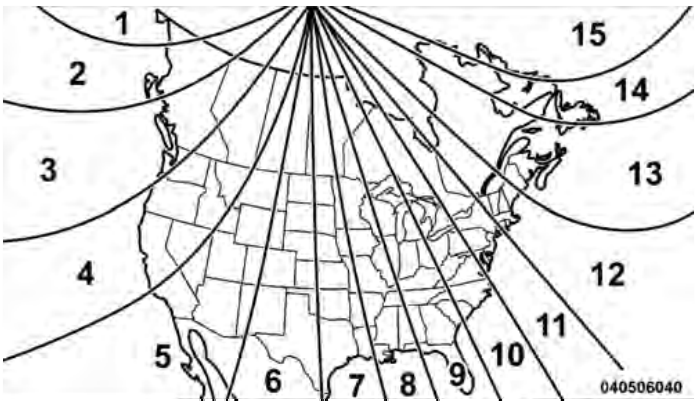

Compass Variance Map

1. Place the ignition switch in the RUN position.
2. Press and hold the HOME button for approximately two seconds.
3. Press the SCROLL button until "Compass Variance" message and the last variance zone number displays in the EVIC.
4. Press and release FUNCTION SELECT button until the proper variance zone is selected according to the map.
5. Press and release the HOME button to exit.

Navigation — If Equipped

Navigation Display Control

Press and release the MENU button until Navigation displays in the EVIC. When the Navigation System is On, the steering wheel buttons can be used to select the Map or Menu display on the Navigation Unit. When the Menu display is active, the SCROLL button can be used to scroll through the list, the FUNCTION SELECT button can be

Downloaded from www.Manualslib.com manuals search engine

used to select an item, and the AUDIO MODE button can be used to return to the previous menu. When the Map display is active, pressing the FUNCTION SELECT button will change the Navigation Unit Display to the Menu.

Turn-by-Turn Directions

The EVIC displays turn-by-turn directions to a programmed destination when Turn-by-Turn Navigation is enabled through Personal Settings. When enabled, the EVIC displays the name of the approaching road at the top of the screen, followed by an arrow to indicate the direction to turn the vehicle, and a count down to indicate the distance to the turn.

NOTE: Refer to your "Navigation User's Manual" for detailed operating instructions.

Personal Settings (Customer-Programmable Features)

Personal Settings allows the driver to set and recall features when the transmission is in PARK.

Press and release the MENU button until Personal Settings displays in the EVIC.

Use the SCROLL button to display one of the following choices.

"Language"

When in this display you may select one of five languages for all display nomenclature, including the trip functions and the navigation system (if equipped). Press the FUNCTION SELECT button while in this display to select English, Espanol, Deutsch, Italiano, or Francais. Then, as you continue, the information will display in the selected language.

NOTE: The EVIC will not change the Uconnect™ language selection.

Downloaded from www.Manualslib.com manuals search engine

"Lock Doors Automatically at 15 mph (24 km/h)"
When ON is selected, all doors will lock automatically when the vehicle reaches a speed of 15 mph (24 km/h). To make your selection, press and release the FUNCTION SELECT button until "ON" or "OFF" appears.

"Unlock Doors Automatically on Exit"
When ON is selected, all doors will unlock when the vehicle is stopped and the transmission is in the PARK or NEUTRAL position and the driver's door is opened. To make your selection, press and release the FUNCTION SELECT button until "ON" or "OFF" appears.

"Remote Key Unlock"
When **Driver Door 1st Press** is selected, only the driver's door will unlock on the first press of the Remote Keyless Entry (RKE) transmitter UNLOCK button. When Driver Door 1st Press is selected, you must press the RKE transmitter UNLOCK button twice to unlock the passenger's doors. When All Doors 1st Press is selected, all of the doors will unlock on the first press of the RKE transmitter UNLOCK button. To make your selection, press and release the FUNCTION SELECT button until "Driver Door 1st Press" or "All Doors 1st Press" appears.

NOTE: If the vehicle is equipped with Passive Entry and the EVIC is programmed to Unlock All Doors 1st Press, all doors will unlock no matter which Passive Entry equipped door handle is grasped. If Driver Door 1st Press is programmed, only the driver's door will unlock when the driver's door is grasped. With Passive Entry, if Driver Door 1st Press is programmed touching the handle more than once will only result in the driver's door opening. You have to touch a passenger Passive Entry equipped door handle to unlock all doors passively when Driver's Door Only is programmed in the EVIC.

Downloaded from www.Manualslib.com manuals search engine

"Recall Memory with Remote Key Unlock" — If Equipped

When ON is selected, you can use your RKE transmitter to recall one of two pre-programmed memory profiles. Each memory profile contains desired position settings for the driver seat, side mirror, adjustable pedals (if equipped), power tilt and telescopic steering column (if equipped), and a set of desired radio station presets. When OFF is selected, only the MEMORY switch on the driver's door trim panel will recall memory profiles. To make your selection, press and release the FUNCTION SELECT button until "ON" or "OFF" appears. Refer to "Driver Memory Seat" in "Understanding The Features Of Your Vehicle".

"Sound Horn with Remote Key Lock"

When ON is selected, a short horn sound will occur when the RKE LOCK button is pressed. This feature may be selected with or without the Flash Lights with Remote Key Lock feature. To make your selection, press and release the FUNCTION SELECT button until "ON" or "OFF" appears.

"Rain Sensing Intermittent Wipers" — If Equipped

When ON is selected, the system will automatically activate the windshield wipers if it senses moisture on the windshield. To make your selection, press and release the FUNCTION SELECT button until "ON" or "OFF" appears. When OFF is selected, the system reverts to the standard intermittent wiper operation.

"Automatically Move Seat Back on Exit" — If Equipped

This feature provides automatic driver seat positioning to enhance driver mobility when entering and exiting the vehicle. To make your selection, press and release the FUNCTION SELECT button until "ON" or "OFF" appears.

Downloaded from www.Manualslib.com manuals search engine

NOTE: The seat will return to the memorized seat location (if Recall Memory with Remote Key Unlock is set to ON) when the RKE transmitter is used to unlock the door. Refer to "Driver Memory Seat" in "Understanding The Features Of Your Vehicle" for further information.

"Flash Lights with Remote Key Lock"
When ON is selected, the front and rear turn signals will flash when the doors are locked or unlocked with the RKE transmitter. This feature may be selected with or without the sound horn on lock feature selected. To make your selection, press and release the FUNCTION SELECT button until "ON" or "OFF" appears.

"Headlights On with Wipers" (Available with Auto Headlights Only)
When ON is selected, and the HEADLIGHT switch is in the AUTO position, the headlights will turn on approximately 10 seconds after the wipers are turned on. The headlights will also turn off when the wipers are turned off if they were turned on by this feature. To make your selection, press and release the FUNCTION SELECT button until "ON" or "OFF" appears.

NOTE: Turning the headlights on during the daytime causes the instrument panel lights to dim. To increase the brightness, refer to "Lights" in "Understanding The Features Of Your Vehicle".

"Delay Turning Headlights Off"
When this feature is selected, the driver can choose to have the headlights remain on for 0, 30, 60, or 90 seconds when exiting the vehicle. To make your selection, press and release the FUNCTION SELECT button until "0," "30," "60," or "90" appears.

"Tilt Mirrors Down in Reverse" — If Equipped
When ON is selected, the outside rearview mirrors will tilt downward when the ignition switch is in the RUN position and the transmission is in the REVERSE position. The mirrors will move back to their previous

Downloaded from www.Manualslib.com manuals search engine

position when the transmission is shifted out of REVERSE. To make your selection, press and release the FUNCTION SELECT button until "ON" or "OFF" appears.

"Turn Headlights On with Remote Key Unlock"
When this feature is selected, the headlights will activate and remain on for up to 90 seconds when the doors are unlocked with the RKE transmitter. To make your selection, press and release the FUNCTION SELECT button until "OFF," "30 sec.," "60 sec.," or "90 sec." appears.

"Delay Power Off to Accessories Until Exit"
When this feature is selected, the power WINDOW switches, radio, hands-free system (if equipped), DVD video system (if equipped), power sunroof (if equipped), and power outlets will remain active for up to 60 minutes after the ignition switch is placed in the OFF position. Opening a vehicle door will cancel this feature. To make your selection, press and release the FUNCTION SELECT button until "Off," "45 sec.," "5 min.," "10 min.," "30 min.," or "60 min." appears.

"AWD System Displays"
When in this display you may select "ON" or "OFF". When ON is selected, the EVIC displays the current mode of the transfer-case. A five second display appears any time the transfer-case changes from All Wheel Drive (AWD) to Rear Wheel Drive (RWD) or from RWD to AWD. The EVIC also displays the current mode of the transfer-case when you shift into drive or reverse. To make your selection, press and release the FUNCTION SELECT button until "ON" or "OFF" appears.

Downloaded from www.Manualslib.com manuals search engine

"Confirmation of Voice Commands" — If Equipped

When ON is selected, all voice commands from the Uconnect™ system are confirmed. To make your selection, press and release the FUNCTION SELECT button until "ON" or "OFF" appears.

"Park Assist System" — If Equipped

When ON is selected, the system will scan for objects behind the vehicle when the transmission is in the REVERSE or NEUTRAL position. To make your selection, press and release the FUNCTION SELECT button until "ON" or "OFF" appears.

"Turn-by-Turn Navigation" — If Equipped

When ON is selected, the turn-by-turn directions will appear in the display as the vehicle approaches a designated turn within a programmed route. To make your selection, press and release the FUNCTION SELECT button until "ON" or "OFF" appears.

"Display ECO" — If Equipped

The "ECO" message is located in the Compass/Temperature display, this message can be turned on or off. To make your selection, press and release the FUNCTION SELECT button until "ON" or "OFF" appears.

"Display Units of Measure in"

The EVIC, odometer, and navigation system (if equipped) can be changed between English and Metric units of measure. To make your selection, press and release the FUNCTION SELECT button until "ENGLISH" or "METRIC" appears.

"Automatic High Beams" — If Equipped

When this feature is selected, the high beam headlights will deactivate automatically under certain conditions. To make your selection, press and release the FUNCTION SELECT button until "ON" or "OFF" appears. Refer to "SmartBeam™" in "Understanding The Features Of Your Vehicle" for further information.

Downloaded from www.Manualslib.com manuals search engine

"Passive Entry" — If Equipped

The Passive Entry system is an enhancement to the vehicle's Remote Keyless Entry (RKE) system. When ON is selected, this feature allows you to lock and unlock the vehicle's door(s) without having to press the RKE transmitter lock or unlock buttons. To make your selection, press and release the FUNCTION SELECT button until "ON" or "OFF" appears. Refer to "Door Locks/Passive Entry — If Equipped" in "Things To Know Before Starting Your Vehicle" for further information.

SETTING THE ANALOG CLOCK

To set the analog clock at the top center of the instrument panel, press and hold the button until the setting is correct.

Analog Clock

Downloaded from www.Manualslib.com manuals search engine

MEDIA CENTER 730N/430 (RER/REN/RBZ) — AM/FM STEREO RADIO AND CD/DVD/HDD/NAV — IF EQUIPPED

NOTE: The sales code is located on the lower right side of the unit's faceplate.

The REN, RER and RBZ radios contain a CD/DVD player, USB port, and a 30-gigabyte hard drive (HDD). Sirius Satellite Radio is optional. The 6.5 in (16.5 cm) touch screen allows for easy menu selection.

The RER radio also contains a Global Positioning System (GPS)-based Navigation system.

Refer to your Uconnect™ Multimedia REN, RER or RBZ user's manual for detailed operating instructions.

Operating Instructions — Voice Command System — If Equipped

For the radio, refer to "Voice Command" in "Understanding The Features Of Your Vehicle".

Operating Instructions — Uconnect™ Phone — If Equipped

Refer to "Uconnect™ Phone" in "Understanding The Features Of Your Vehicle".

Clock Setting Procedure — RBZ Radio

To Manually Set the Clock

1. Turn on the radio.

2. Touch the screen where the time is displayed, the clock setting menu will appear on the screen.

3. To move the hour forward, touch the screen where the word "Hour" with the arrow pointing upward is displayed. To move the hour backward, touch the screen where the word "Hour" with the arrow pointing downward is displayed.

4. To move the minute forward, touch the screen where the word "Min" with the arrow pointing upward is

Downloaded from www.Manualslib.com manuals search engine

displayed. To move the minute backward, touch the screen where the word "Min" with the arrow pointing downward is displayed.

5. To save the new time setting, touch the screen where the word "Save" is displayed.

Changing Daylight Savings Time

When selected, this feature will display the time of day in daylight savings time. Proceed as follows to change the current setting:

1. Turn on the radio.

2. Touch the screen where the time is displayed. The clock setting menu will appear on the screen.

3. When this feature is on, a check mark will appear in the box next to the words "Daylight Savings." Touch the screen where the words "Daylight Savings" are displayed to change the current setting.

Show Time if Radio is Off

When selected, this feature will display the time of day on the touch screen when the radio is turned off. Proceed as follows to change the current setting:

1. Turn on the radio.

2. Touch the screen where the time is displayed. The clock setting menu will appear on the screen.

3. When this feature is on, a check mark will appear in the box next to the words "Show Time if Radio is Off." Touch the screen where the words "Show Time if Radio is Off" are displayed to change the current setting.

Changing the Time Zone

1. Turn on the radio.

2. Touch the screen where the time is displayed. The clock setting menu will appear on the screen.

Downloaded from www.Manualslib.com manuals search engine

3. Touch the screen where the words “Set Time Zone” are displayed. The time zone selection menu will appear on the screen.

4. Select a time zone by touching the screen where your selection appears. If you do not see a time zone that you want to select, touch the screen where the word “Page” is displayed to view additional time zones in the menu.

5. Touch the screen where the word “Save” is displayed.

Clock Setting Procedure — RER/REN Radio

Uconnect® gps — RER Only

The GPS receiver used in this system is synchronized to the time data being transmitted by the GPS satellite. The satellite clock is Greenwich Mean Time (GMT). This is the worldwide standard for time. This makes the system’s clock very accurate once the appropriate time zone and daylight savings information is set.

To Manually Set the Clock — RER/REN

1. Turn on the radio.

2. Touch the screen where the time is displayed.

3. Touch the screen where “User Clock” is displayed, the clock setting menu will appear on the screen.

4. To move the hour forward, touch the screen where the word “Hour” with the arrow pointing upward is displayed. To move the hour backward, touch the screen where the word “Hour” with the arrow pointing downward is displayed.

5. To move the minute forward, touch the screen where the word “Min” with the arrow pointing upward is displayed. To move the minute backward, touch the screen where the word “Min” with the arrow pointing downward is displayed.

Downloaded from www.Manualslib.com manuals search engine

6. To save the new time setting, touch the screen where the word "Save" is displayed.

Changing Daylight Savings Time

When selected, this feature will display the time of day in daylight savings time. Proceed as follows to change the current setting:

1. Turn on the radio.

2. Touch the screen where "User Clock" is displayed, the clock setting menu will appear on the screen.

3. When this feature is on, a check mark will appear in the box next to the words "Daylight Savings." Touch the screen where the words "Daylight Savings" are displayed to change the current setting.

Show Time if Radio is Off

When selected, this feature will display the time of day on the touch screen when the radio is turned off. Proceed as follows to change the current setting:

1. Turn on the radio.

2. Touch the screen where the time is displayed.

3. Touch the screen where "User Clock" is displayed, the clock setting menu will appear on the screen.

4. When this feature is on, a check mark will appear in the box next to the words "Show Time if Radio is Off." Touch the screen where the words "Show Time if Radio is Off" are displayed to change the current setting.

Changing the Time Zone

1. Turn on the radio.

2. Touch the screen where the time is displayed.

3. Touch the screen where "User Clock" is displayed, the clock setting menu will appear on the screen.

Downloaded from www.Manualslib.com manuals search engine

4. Touch the screen where the words “Set Time Zone” are displayed. The time zone selection menu will appear on the screen.

5. Select a time zone by touching the screen where your selection appears. If you do not see a time zone that you want to select, touch the screen where the word “Page” is displayed to view additional time zones in the menu.

6. Touch the screen where the word “Save” is displayed.

MEDIA CENTER 130 (RES) — AM/FM STEREO RADIO WITH CD PLAYER (MP3 AUX JACK)

NOTE: The radio sales code is located on the lower right side of the radio faceplate.

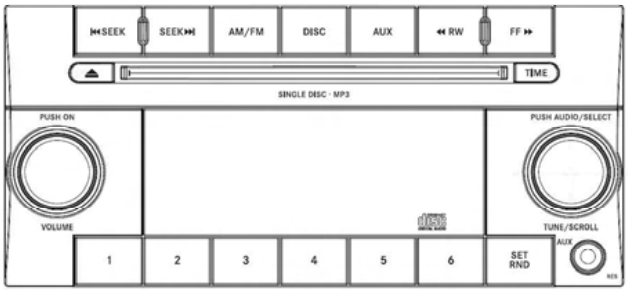

042305232

RES Radio

Operating Instructions — Radio Mode

NOTE: The ignition switch must be in the ON or ACC position to operate the radio.

Downloaded from www.Manualslib.com manuals search engine

Power Switch/Volume Control (Rotary)
Push the ON/VOLUME control knob to turn on the radio. Push the ON/VOLUME control knob a second time to turn off the radio.

Electronic Volume Control
The electronic volume control turns continuously (360 degrees) in either direction, without stopping. Turning the ON/VOLUME control knob to the right increases the volume, and to the left decreases it.

When the audio system is turned on, the sound will be set at the same volume level as last played.

SEEK Buttons
Press and release the SEEK buttons to search for the next listenable station in AM/FM mode. Press the right switch to seek up and the left switch to seek down. The radio will remain tuned to the new station until you make another selection. Holding either button will bypass stations without stopping, until you release it.

TIME Button
Press the TIME button to alternate display of the time and radio frequency.

Clock Setting Procedure

1. Press and hold the TIME button until the hours blink.

2. Adjust the hours by turning the right side TUNE/SCROLL control knob.

3. After adjusting the hours, press the right side TUNE/SCROLL control knob to set the minutes. The minutes will begin to blink.

4. Adjust the minutes using the right side TUNE/SCROLL control knob. Press the TUNE/SCROLL control knob to save time change.

5. To exit, press any button/knob, or wait five seconds.

Downloaded from www.Manualslib.com manuals search engine

RW/FF
Pressing the RW (Rewind) or FF (Fast Forward) buttons causes the tuner to search for the next frequency in the direction of the arrows. This feature operates in either AM or FM frequencies.

TUNE Control
Turn the rotary TUNE/SCROLL control knob clockwise to increase or counterclockwise to decrease the frequency.

Setting the Tone, Balance, and Fade
Push the rotary TUNE/SCROLL control knob and BASS will display. Turn the TUNE/SCROLL control knob to the right or left to increase or decrease the bass tones.

Push the rotary TUNE/SCROLL control knob a second time and MID will display. Turn the TUNE/SCROLL control knob to the right or left to increase or decrease the mid-range tones.

Push the rotary TUNE/SCROLL control knob a third time and TREBLE will display. Turn the TUNE/SCROLL control knob to the right or left to increase or decrease the treble tones.

Push the rotary TUNE/SCROLL control knob a fourth time and BALANCE will display. Turn the TUNE/SCROLL control knob to the right or left to adjust the sound level from the right or left side speakers.

Push the rotary TUNE/SCROLL control knob a fifth time and FADE will display. Turn the TUNE/SCROLL control knob to the left or right to adjust the sound level between the front and rear speakers.

Push the rotary TUNE/SCROLL control knob again to exit setting tone, balance, and fade.

AM/FM Button
Press the buttons to select either AM or FM mode.

Downloaded from www.Manualslib.com manuals search engine

SET/RND Button — To Set the Pushbutton Memory

When you are receiving a station that you wish to commit to pushbutton memory, press the SET/RND button. The symbol SET 1 will now show in the display window. Select the button (1 to 6) you wish to lock onto this station and press and release that button. If a button is not selected within five seconds after pressing the SET/RND button, the station will continue to play but will not be stored into pushbutton memory.

You may add a second station to each pushbutton by repeating the above procedure with this exception: Press the SET/RND button twice and SET 2 will show in the display window. Each button can be set for SET 1 and SET 2 in both AM and FM. This allows a total of 12 AM and 12 FM stations to be stored into pushbutton memory. The stations stored in SET 2 memory can be selected by pressing the pushbutton twice.

Every time a preset button is used, a corresponding button number will display.

Buttons 1 - 6

These buttons tune the radio to the stations that you commit to pushbutton memory (12 AM and 12 FM stations).

DISC Button

Pressing the DISC button will allow you to switch from AM/FM modes to Disc modes.

Operation Instructions — CD MODE For CD And MP3 Audio Play

NOTE:

- The ignition switch must be in the ON or ACC position to operate the radio.
- This radio is capable of playing compact discs (CD), recordable compact discs (CD-R), rewritable compact

Downloaded from www.Manualslib.com manuals search engine

discs (CD-RW), compact discs with MP3 tracks and multisession compact discs with CD and MP3 tracks.

Inserting Compact Disc(s)

Gently insert one CD into the CD player with the CD label facing up. The CD will automatically be pulled into the CD player and the CD icon will illuminate on the radio display. If a CD does not go into the slot more than 1.0 in (2.5 cm), a disc may already be loaded and must be ejected before a new disc can be loaded.

If you insert a disc with the ignition ON and the radio ON, the unit will switch from radio to CD mode and begin to play when you insert the disc. The display will show the track number, and index time in minutes and seconds. Play will begin at the start of track 1.

CAUTION!

- **This CD player will accept 4-3/4 in (12 cm) discs only. The use of other sized discs may damage the CD player mechanism.**
- **Do not use adhesive labels. These labels can peel away and jam the player mechanism.**
- **RES is a single CD player. Do not attempt to insert a second CD if one is already loaded.**
- **Dual-media disc types (one side is a DVD, the other side is a CD) should not be used, and they can cause damage to the player.**

Downloaded from www.Manualslib.com manuals search engine

EJECT Button - Ejecting a CD

Press the EJECT button to eject the CD.

If you have ejected a disc and have not removed it within 10 seconds, it will be reloaded. If the CD is not removed, the radio will reinsert the CD but will not play it.

A disc can be ejected with the radio and ignition OFF.

NOTE: Ejecting with the ignition OFF is not allowed on convertible or soft-top models (if equipped).

SEEK Button

Press the right SEEK button for the next selection on the CD. Press the left SEEK button to return to the beginning of the current selection, or return to the beginning of the previous selection if the CD is within the first second of the current selection. Pressing and holding the SEEK button will allow faster scrolling through the tracks in CD and MP3 modes.

TIME Button

Press this button to change the display from a large CD playing time display to a small CD playing time display.

RW/FF

Press and hold the FF (Fast Forward) button and the CD player will begin to fast forward until FF is released, or RW or another CD button is pressed. The RW (Reverse) button works in a similar manner.

AM/FM Button

Press the button to select either AM or FM mode.

SET/RND Button (Random Play Button)

Press this button while the CD is playing to activate Random Play. This feature plays the selections on the compact disc in random order to provide an interesting change of pace.

Downloaded from www.Manualslib.com manuals search engine

Press the right SEEK button to move to the next randomly selected track.

Press the RND button a second time to stop Random Play.

Notes on Playing MP3 Files

The radio can play MP3 files; however, acceptable MP3 file recording media and formats are limited. When writing MP3 files, pay attention to the following restrictions.

Supported Media (Disc Types)

The MP3 file recording media supported by the radio are CDDA, CD-R, CD-RW, MP3, and CDDA+MP3.

Supported Medium Formats (File Systems)

The medium formats supported by the radio are ISO 9660 Level 1 and Level 2 and includes the Joliet extension. When reading discs recorded using formats other than ISO 9660 Level 1 and Level 2, the radio may fail to read files properly and may be unable to play the file normally. UDF and Apple HFS formats are not supported.

The radio uses the following limits for file systems:

- Maximum number of folder levels: 8
- Maximum number of files: 255
- Maximum number of folders. (The radio display of file names and folder names is limited. For large numbers of files and/or folders, the radio may be unable to display the file name and folder name, and will assign a number instead. With a maximum number of files, exceeding 20 folders will result in this display. With 200 files, exceeding 50 folders will result in this display.)
- Maximum number of characters in file/folder names:
  - Level 1: 12 (including a separator "." and a three-character extension)

Downloaded from www.Manualslib.com manuals search engine

- Level 2: 31 (including a separator "." and a three-character extension)

Multisession disc formats are supported by the radio. Multisession discs may contain combinations of normal CD audio tracks and computer files (including MP3 files). Discs created with an option such as "keep disc open after writing" are most likely multisession discs. The use of multisession for CD audio or MP3 playback may result in longer disc loading times.

Supported MP3 File Formats

The radio will recognize only files with the *.MP3 extension as MP3 files. Non-MP3 files named with the *.MP3 extension may cause playback problems. The radio is designed to recognize the file as an invalid MP3 and will not play the file.

When using the MP3 encoder to compress audio data to an MP3 file, the bit rate and sampling frequencies in the following table are supported. In addition, variable bit rates (VBR) are also supported. The majority of MP3 files use a 44.1 kHz sampling rate and a 192, 160, 128, 96 or VBR bit rate.

MPEG Specification	Sampling Frequency (kHz)	Bit Rate (kbps)
MPEG-1 Audio Layer 3	48, 44.1, 32	320, 256, 224, 192, 160, 128, 112, 96, 80, 64, 56, 48, 40, 32
MPEG-2 Audio Layer 3	24, 22.05, 16	160, 128, 144, 112, 96, 80, 64, 56, 48, 40, 32, 24, 16, 8

ID3 Tag information for artist, song title, and album title are supported for version 1 ID3 tags. ID3 version 2 is not supported by the radios.

Playlist files are not supported. MP3 Pro files are not supported.

Downloaded from www.Manualslib.com manuals search engine

Playback of MP3 Files

When a medium containing MP3 data is loaded, the radio checks all files on the medium. If the medium contains a lot of folders or files, the radio will take more time to start playing the MP3 files.

Loading times for playback of MP3 files may be affected by the following:

- Media - CD-RW media may take longer to load than CD-R media
- Medium formats - Multisession discs may take longer to load than non-multisession discs
- Number of files and folders - Loading times will increase with more files and folders

To increase the speed of disc loading, it is recommended to use CD-R media and single-session discs. To create a single-session disc, enable the "Disc at Once" option before writing to the disc.

Operation Instructions - Auxiliary Mode

The auxiliary (AUX) jack is an audio input jack, which allows the user to plug in a portable device, such as an MP3 player, or cassette player, and utilize the vehicle's audio system to amplify the source and play through the vehicle speakers.

Pressing the DISC/AUX button will change the mode to auxiliary device if the AUX jack is connected.

NOTE: The AUX device must be turned on and the device's volume set to proper level. If the AUX audio is not loud enough, turn the device's volume up. If the AUX audio sounds distorted, turn the device's volume down.

TIME Button (Auxiliary Mode)

Press this button to change the display to time of day. The time of day will display for five seconds (when ignition is OFF).

Downloaded from www.Manualslib.com manuals search engine

MEDIA CENTER 130 (RES/RSC) — AM/FM STEREO RADIO WITH CD PLAYER (MP3 AUX JACK) AND SIRIUS RADIO

NOTE: The radio sales code is located on the lower right side of the radio faceplate.

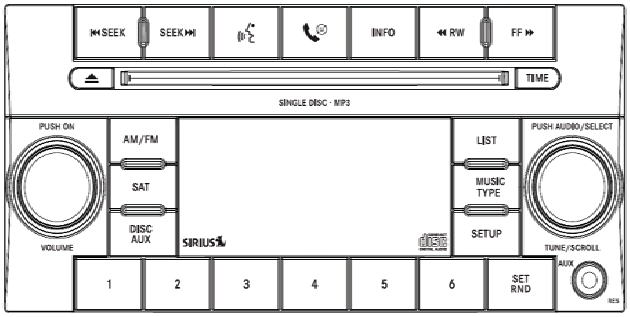

RES/RSC Radio

Operating Instructions — Radio Mode

NOTE: The ignition switch must be in the ON or ACC position to operate the radio.

Power Switch/Volume Control (Rotary)
Push the ON/VOLUME control knob to turn on the radio. Push the ON/VOLUME control knob a second time to turn off the radio.

Electronic Volume Control
The electronic volume control turns continuously (360 degrees) in either direction without stopping. Turning the ON/VOLUME control knob to the right increases the volume and to the left decreases it.

When the audio system is turned on, the sound will be set at the same volume level as last played.

SEEK Buttons
Press and release the SEEK buttons to search for the next listenable station in AM/FM mode. Press the right switch

4

Downloaded from www.Manualslib.com manuals search engine

to seek up and the left switch to seek down. The radio will remain tuned to the new station until you make another selection. Holding either button will bypass stations without stopping until you release it.

Voice Command System (Radio) — If Equipped
Refer to "Voice Command" in "Understanding The Features If Your Vehicle".

Voice Command Button Uconnect™ Phone — If Equipped
Press this button to operate the Uconnect™ Phone feature (if equipped). Refer to "Uconnect™ Phone" in "Understanding The Features If Your Vehicle".

If your vehicle is not equipped with or this feature is not available on your vehicle, a "Not Equipped With Uconnect" message will display on the radio screen.

Phone Button Uconnect™ Phone — If Equipped
Press this button to operate the Uconnect™ Phone feature (if equipped). Refer to "Uconnect™ Phone" in "Understanding The Features If Your Vehicle".

If your vehicle is not equipped with or this feature is not available on your vehicle, a "Not Equipped With Uconnect" message will display on the radio screen.

TIME Button
Press the TIME button to alternate display of the time and radio frequency.

Clock Setting Procedure

1. Press and hold the TIME button until the hours blink.

2. Adjust the hours by turning the right side TUNE/SCROLL control knob.

Downloaded from www.Manualslib.com manuals search engine

3. After adjusting the hours, press the right side TUNE/SCROLL control knob to set the minutes. The minutes will begin to blink.

4. Adjust the minutes using the right side TUNE/SCROLL control knob. Press the TUNE/SCROLL control knob to save time change.

5. To exit, press any button/knob or wait five seconds.

The clock can also be set by pressing the SETUP button. For vehicles equipped with satellite radio, press the SETUP button, use the TUNE/SCROLL control to select SET CLOCK, and then follow the above procedure, starting at Step 2. For vehicles not equipped with satellite radio, press the SETUP button and then follow the above procedure, starting at Step 2.

INFO Button
Press the INFO button for an RDS station (one with call letters displayed). The radio will return a Radio Text message broadcast from an FM station (FM mode only).

RW/FF
Pressing the RW (Rewind) or FF (Fast Forward) buttons causes the tuner to search for the next frequency in the direction of the arrows. This feature operates in either AM or FM frequencies.

TUNE Control
Turn the rotary TUNE/SCROLL control knob clockwise to increase or counterclockwise to decrease the frequency.

Setting the Tone, Balance, and Fade
Push the rotary TUNE/SCROLL control knob and BASS will display. Turn the TUNE/SCROLL control knob to the right or left to increase or decrease the bass tones.

Downloaded from www.Manualslib.com manuals search engine

Push the rotary TUNE/SCROLL control knob a second time and MID will display. Turn the TUNE/SCROLL control knob to the right or left to increase or decrease the mid-range tones.

Push the rotary TUNE/SCROLL control knob a third time and TREBLE will display. Turn the TUNE/SCROLL control knob to the right or left to increase or decrease the treble tones.

Push the rotary TUNE/SCROLL control knob a fourth time and BALANCE will display. Turn the TUNE/SCROLL control knob to the right or left to adjust the sound level from the right or left side speakers.

Push the rotary TUNE/SCROLL control knob a fifth time and FADE will display. Turn the TUNE/SCROLL control knob to the left or right to adjust the sound level between the front and rear speakers.

Push the rotary TUNE/SCROLL control knob again to exit setting tone, balance, and fade.

MUSIC TYPE Button

Pressing this button once will turn on the Music Type mode for five seconds. Pressing the MUSIC TYPE button or turning the TUNE/SCROLL control knob within five seconds will allow the program format type to be selected. Many radio stations do not currently broadcast Music Type information.

Toggle the MUSIC TYPE button to select the following format types:

Program Type	16-Digit Character Display
No program type or undefined	None
Adult Hits	Adlt Hit
Classical	Classicl

Downloaded from www.Manualslib.com manuals search engine

Program Type	16-Digit Character Display
Classic Rock	Cls Rock
College	College
Country	Country
Foreign Language	Language
Information	Inform
Jazz	Jazz
News	News
Nostalgia	Nostalga
Oldies	Oldies
Personality	Persnlty
Public	Public
Rhythm and Blues	R & B
Religious Music	Rel Musc
Religious Talk	Rel Talk
Rock	Rock

Program Type	16-Digit Character Display
Soft	Soft
Soft Rock	Soft Rck
Soft Rhythm and Blues	Soft R&B
Sports	Sports
Talk	Talk
Top 40	Top 40
Weather	Weather

By pressing the SEEK button when the Music Type icon is displayed, the radio will be tuned to the next frequency station with the same selected Music Type name. The Music Type function only operates when in the FM mode.

If a preset button is activated while in the Music Type (Program Type) mode, the Music Type mode will be exited and the radio will tune to the preset station.

Downloaded from www.Manualslib.com manuals search engine

SETUP Button

Pressing the SETUP button allows you to select between the following items:

- **Set Clock** — Pressing the SELECT button will allow you to set the clock. Adjust the hours by turning the TUNE/SCROLL control knob. After adjusting the hours, press the TUNE/SCROLL control knob to set the minutes. The minutes will begin to blink. Adjust the minutes using the right side TUNE/SCROLL control knob. Press the TUNE/SCROLL control knob to save time change.

AM/FM Button

Press the button to select either AM or FM mode.

SET/RND Button — To Set the Pushbutton Memory

When you are receiving a station that you wish to commit to pushbutton memory, press the SET/RND button. The symbol SET 1 will now show in the display window. Select the button (1–6) you wish to lock onto this station and press and release that button. If a button is not selected within five seconds after pressing the SET/RND button, the station will continue to play but will not be stored into pushbutton memory.

You may add a second station to each pushbutton by repeating the above procedure with this exception: Press the SET/RND button twice and SET 2 will show in the display window. Each button can be set for SET 1 and SET 2 in both AM and FM. This allows a total of 12 AM and 12 FM stations to be stored into pushbutton memory. The stations stored in SET 2 memory can be selected by pressing the pushbutton twice.

Every time a preset button is used, a corresponding button number will display.

Downloaded from www.Manualslib.com manuals search engine

Buttons 1 - 6
These buttons tune the radio to the stations that you commit to pushbutton memory (12 AM and 12 FM stations).

DISC/AUX Button
Pressing the DISC/AUX button will allow you to switch from AM/FM modes to DISC/AUX mode.

Operation Instructions — CD MODE for CD and MP3 Audio Play

NOTE:
- The ignition switch must be in the ON or ACC position to operate the radio.
- This radio is capable of playing compact discs (CD), recordable compact discs (CD-R), rewritable compact discs (CD-RW), compact discs with MP3 tracks and multisession compact discs with CD and MP3 tracks.

Inserting Compact Disc(s)
Gently insert one CD into the CD player with the CD label facing up. The CD will automatically be pulled into the CD player and the CD icon will illuminate on the radio display. If a CD does not go into the slot more than 1.0 in (2.5 cm), a disc may already be loaded and must be ejected before a new disc can be loaded.

If you insert a disc with the ignition ON and the radio ON, the unit will switch from radio to CD mode and begin to play when you insert the disc. The display will show the track number, and index time in minutes and seconds. Play will begin at the start of track 1.

CAUTION!

- **This CD player will accept 4–3/4 in (12 cm) discs only. The use of other sized discs may damage the CD player mechanism.**

(Continued)

Downloaded from www.Manualslib.com manuals search engine

CAUTION! (Continued)

- **Do not use adhesive labels. These labels can peel away and jam the player mechanism.**
- **RES is a single CD player. Do not attempt to insert a second CD if one is already loaded.**
- **Dual-media disc types (one side is a DVD, the other side is a CD) should not be used, and they can cause damage to the player.**

EJECT Button - Ejecting a CD

Press the EJECT button to eject the CD.

If you have ejected a disc and have not removed it within 10 seconds, it will be reloaded. If the CD is not removed, the radio will reinsert the CD but will not play it.

A disc can be ejected with the radio and ignition OFF.

NOTE: Ejecting with the ignition OFF is not allowed on convertible or soft-top models (if equipped).

SEEK Button

Press the right SEEK button for the next selection on the CD. Press the left SEEK button to return to the beginning of the current selection, or return to the beginning of the previous selection if the CD is within the first second of the current selection. Pressing and holding the SEEK button will allow faster scrolling through the tracks in CD and MP3 modes.

TIME Button

Press this button to change the display from a large CD playing time display to a small CD playing time display.

RW/FF

Press and hold FF (Fast Forward) and the CD player will begin to fast forward until FF is released or RW or another CD button is pressed. The RW (Reverse) button works in a similar manner.

Downloaded from www.Manualslib.com manuals search engine

AM/FM Button
Press the button to select either AM or FM mode.

SET/RND Button (Random Play Button)
Press this button while the CD is playing to activate Random Play. This feature plays the selections on the compact disc in random order to provide an interesting change of pace.

Press the right SEEK button to move to the next randomly selected track.

Press the SET/RND button a second time to stop Random Play.

Notes On Playing MP3 Files
The radio can play MP3 files; however, acceptable MP3 file recording media and formats are limited. When writing MP3 files, pay attention to the following restrictions.

Supported Media (Disc Types)
The MP3 file recording media supported by the radio are CDDA, CD-R, CD-RW, MP3, and CDDA+MP3.

Supported Medium Formats (File Systems)
The medium formats supported by the radio are ISO 9660 Level 1 and Level 2 and includes the Joliet extension. When reading discs recorded using formats other than ISO 9660 Level 1 and Level 2, the radio may fail to read files properly and may be unable to play the file normally. UDF and Apple HFS formats are not supported.

The radio uses the following limits for file systems:

- Maximum number of folder levels: 8
- Maximum number of files: 255
- Maximum number of folders. (The radio display of file names and folder names is limited. For large numbers of files and/or folders, the radio may be unable to display the file name and folder name and will assign

Downloaded from www.Manualslib.com manuals search engine

a number instead. With a maximum number of files, exceeding 20 folders will result in this display. With 200 files, exceeding 50 folders will result in this display.)

- Maximum number of characters in file/folder names:
  - Level 1: 12 (including a separator "." and a three-character extension)
  - Level 2: 31 (including a separator "." and a three-character extension)

Multisession disc formats are supported by the radio. Multisession discs may contain combinations of normal CD audio tracks and computer files (including MP3 files). Discs created with an option such as "keep disc open after writing" are most likely multisession discs. The use of multisession for CD audio or MP3 playback may result in longer disc loading times.

Supported MP3 File Formats

The radio will recognize only files with the *.MP3 extension as MP3 files. Non-MP3 files named with the *.MP3 extension may cause playback problems. The radio is designed to recognize the file as an invalid MP3 and will not play the file.

When using the MP3 encoder to compress audio data to an MP3 file, the bit rate and sampling frequencies in the following table are supported. In addition, variable bit rates (VBR) are also supported. The majority of MP3 files use a 44.1 kHz sampling rate and a 192, 160, 128, 96 or VBR bit rates.

MPEG Specification	Sampling Frequency (kHz)	Bit Rate (kbps)
MPEG-1 Audio Layer 3	48, 44.1, 32	320, 256, 224, 192, 160, 128, 112, 96, 80, 64, 56, 48, 40, 32

Downloaded from www.Manualslib.com manuals search engine

MPEG Specification	Sampling Frequency (kHz)	Bit Rate (kbps)
MPEG-2 Audio Layer 3	24, 22.05, 16	160, 128, 144, 112, 96, 80, 64, 56, 48, 40, 32, 24, 16, 8

ID3 Tag information for artist, song title, and album title are supported for version 1 ID3 tags. ID3 version 2 is not supported by the radios.

Playlist files are not supported. MP3 Pro files are not supported.

Playback of MP3 Files

When a medium containing MP3 data is loaded, the radio checks all files on the medium. If the medium contains a lot of folders or files, the radio will take more time to start playing the MP3 files.

Loading times for playback of MP3 files may be affected by the following:

- Media - CD-RW media may take longer to load than CD-R media
- Medium formats - Multisession discs may take longer to load than non-multisession discs
- Number of files and folders - Loading times will increase with more files and folders

To increase the speed of disc loading, it is recommended to use CD-R media and single-session discs. To create a single-session disc, enable the "Disc at Once" option before writing to the disc.

LIST Button (CD Mode for MP3 Play)

Pressing the LIST button will bring up a list of all folders on the disc. Scrolling up or down the list is done by turning the TUNE/SCROLL control knob. Selecting a folder by pressing the TUNE/SCROLL control knob will

Downloaded from www.Manualslib.com manuals search engine

begin playing the files contained in that folder (or the next folder in sequence if the selection does not contain playable files).

The folder list will time out after five seconds.

INFO Button (CD Mode for MP3 Play)

Pressing the INFO button repeatedly will scroll through the following TAG information: Song Title, Artist, File Name, and Folder Name (if available).

Press the INFO button once more to return to "elapsed time" priority mode.

Press and hold the INFO button for three seconds or more and the radio will display song titles for each file.

Press and hold the INFO button again for three seconds to return to "elapsed time" display.

Operation Instructions - Auxiliary Mode

The auxiliary (AUX) jack is an audio input jack which allows the user to plug in a portable device such as an MP3 player or cassette player and utilize the vehicle's audio system to amplify the source and play through the vehicle speakers.

Pressing the AUX button will change the mode to auxiliary device if the AUX jack is connected.

NOTE: The AUX device must be turned on and the device's volume set to the proper level. If the AUX audio is not loud enough, turn the device's volume up. If the AUX audio sounds distorted, turn the device's volume down.

TIME Button (Auxiliary Mode)

Press this button to change the display to time of day. The time of day will display for five seconds (when the ignition is OFF).

Downloaded from www.Manualslib.com manuals search engine

Operating Instructions - Uconnect™ Phone (If Equipped)
Refer to "Uconnect™ Phone" in "Understanding The Features If Your Vehicle".

Operating Instructions - Uconnect™ Multimedia (Satellite Radio) (If Equipped)
Refer to "Uconnect™ Multimedia (Satellite Radio)".

UNIVERSAL CONSUMER INTERFACE (UCI) 0.5 — IF EQUIPPED

NOTE: This section is for sales code RES and REQ/REL/RET radios only with uconnect™. For sales code RER, RBZ, REN, REP, REW, RB2 or REZ touch-screen radio UCI feature, refer to the separate RER, REN, RBZ, RB2 or REZ User's Manual. UCI is available only if equipped as an option with these radios.

This feature allows an iPod® to be plugged into the vehicle's sound system through a 16–pin connector, using the provided interface cable.

UCI supports Mini, 4G, Photo, Nano, 5G iPod® and iPhone® devices. Some iPod® software versions may not fully support the UCI features. Please visit Apple's website for software updates.

NOTE:
- If the radio has a USB port, connecting an iPod® to this port does not play the media. For playing an iPod®, use the separate 16–pin connector port (in the glove compartment on some vehicles).
- Connecting an iPod® to the AUX port located in the radio faceplate, plays media, but does not use the UCI feature to control the connected device.

Downloaded from www.Manualslib.com manuals search engine

Connecting The iPod®

Use the provided connection cable to connect an iPod® to the vehicle's 16–pin connector port (which is located in the glove compartment on some vehicles). Once the iPod® is connected and synchronized to the vehicle's UCI system (iPod® may take a few seconds to connect), the iPod® starts charging and is ready for use by pressing radio switches, as described below.

NOTE:

- It may be necessary to remove the connector pin protection cap from the 16–pin connector port, prior to connecting the cable.
- If the iPod® battery is completely discharged, it may not communicate with the UCI system until a minimum charge is attained. Leaving the iPod® connected to the UCI system may charge it to the required level.

Using This Feature

By using the provided connection cable to connect an iPod® to the vehicle's UCI 16–pin connector port:

- The iPod® audio can be played on the vehicle's sound system, providing metadata (artist, track title, album, etc.) information on the radio display.
- The iPod® can be controlled using the radio buttons to Play, Browse, and List the iPod® contents.
- The iPod® battery charges when plugged into the UCI connector (if supported by the specific iPod® device)

Controlling The iPod® Using Radio Buttons

To get into the UCI (iPod®) mode and access a connected iPod®, press the "AUX" button on the radio faceplate. Once in the UCI (iPod®) mode, iPod® audio tracks (if available from iPod®) start playing over the vehicle's audio system.

Downloaded from www.Manualslib.com manuals search engine

Play Mode

When switched to UCI mode, the iPod® automatically starts Play mode. In Play mode, use the following buttons on the radio faceplate to control the iPod® and display data:

- Use the TUNE control knob to select the next or previous track.
  - Turning it clockwise (forward) by one click, while playing a track, skips to the next track.
  - Turning it counterclockwise (backward) by one click, during the first two seconds of the track, will jump to the previous track in the list. Turning this button at any other time in the track, will jump to the beginning of the current track.
  - Jump backward in the current track by pressing and holding the << **RW** button. Holding the << **RW** button long enough will jump to the beginning of the current track.
- Jump forward in the current track by pressing and holding the **FF** >> button.
- A single press backward << **RW** or forward **FF** >> will jump backward or forward respectively, for five seconds.
- Use the << **SEEK** and **SEEK** >> buttons to jump to the previous or next track. If the << **SEEK** button is pressed during the first two seconds of the track, it will jump to the previous track in the list; pressing this button at any other time in the track, it will jump to the beginning of the track. Pressing the **SEEK** >> button during play mode, it will jump to the next track in the list.

Downloaded from www.Manualslib.com manuals search engine

- While a track is playing, press the **INFO** button to see the associated metadata (artist, track title, album, etc.) for that track. Pressing the **INFO** button again jumps to the next screen of data for that track. Once all screens have been viewed, the last **INFO** button press will go back to the play mode screen on the radio.
- Pressing the **REPEAT** button will change the iPod® mode to repeat the current playing track.
- Press the **SCAN** button to use iPod® scan mode, which will play the first five seconds of each track in the current list and then forward to the next song. To stop SCAN mode and start playing the desired track, when it is playing the track, press the **SCAN** button again. During Scan mode, pressing the << **SEEK** and **SEEK** >> buttons will select the previous and next tracks.
- **RND** button (available on sales code RES radio only): Pressing this button toggles between Shuffle ON and Shuffle OFF modes for the iPod®. If the **RND** icon is showing on the radio display, then the shuffle mode is ON.

List Or Browse Mode

During Play mode, pressing any of the buttons described below, will bring up List mode. List mode enables scrolling through the list of menus and tracks on the iPod®.

- **TUNE** control knob: The **TUNE** control knob functions in a similar manner as the scroll wheel on the iPod®.
  - Turning it clockwise (forward) and counterclockwise (backward) scrolls through the lists, displaying the track detail on the radio display. Once the track to be played is highlighted on the radio display, press the **TUNE** control knob to select and start playing the track. Turning the **TUNE** control knob

Downloaded from www.Manualslib.com manuals search engine

fast will scroll through the list faster. During fast scroll, a slight delay in updating the information on the radio display may be noticed.

- During all List modes, the iPod® displays all lists in "wrap-around" mode. So if the track is at the bottom of the list, just turn the wheel backwards (counter-clockwise) to get to the track faster.
- In List mode, the radio **PRESET** buttons are used as shortcuts to the following lists on the iPod®.
  - Preset 1 – Playlists
  - Preset 2 – Artists
  - Preset 3 – Albums
  - Preset 4 – Genres
  - Preset 5 – Audiobooks
  - Preset 6 – Podcasts
  - Pressing a PRESET button will display the current list on the top line and the first item in that list on the second line.
  - To Exit List mode without selecting a track, press the same **PRESET** button again to go back to **Play mode**.
- **LIST** button: The **LIST** button will display the top level menu of the iPod®. Turn the **TUNE** control knob to list the top-menu item to be selected and press the **TUNE** control knob. This will display the next sub-menu list item on the iPod® then follow the same steps to go to the desired track in that list. Not all iPod® sub-menu levels are available on this system.
- **MUSIC TYPE** button: The **MUSIC TYPE** button is another shortcut button to the genre listing on your iPod®.

Downloaded from www.Manualslib.com manuals search engine

CAUTION!

- **Leaving the iPod® (or any supported device) anywhere in the vehicle in extreme heat or cold can alter the operation or damage the device. Follow the device manufacturer's guidelines.**
- **Placing items on the iPod®, or connections to the iPod® in the vehicle, can cause damage to the device and/or to the connectors.**

WARNING!

Do not plug in or remove the iPod® while driving. Failure to follow this warning could result in an accident.

Uconnect™ Multimedia (SATELLITE RADIO) — IF EQUIPPED (REN/RER/RES RADIOS ONLY)

Satellite radio uses direct satellite-to-receiver broadcasting technology to provide clear digital sound, coast to coast. The subscription service provider is Sirius Satellite Radio. This service offers over 130 channels of music, sports, news, entertainment, and programming for children, directly from its satellites and broadcasting studios.

NOTE: Sirius service is not available in Hawaii and has limited coverage in Alaska.

System Activation

Sirius Satellite Radio service is pre-activated, and you may begin listening immediately to the one year of audio service that is included with the factory-installed satellite radio system in your vehicle. Sirius will supply a welcome kit that contains general information, including how to setup your on-line listening account. For further

Downloaded from www.Manualslib.com manuals search engine

information, call the toll-free number 888-539-7474, or visit the Sirius web site at www.sirius.com, or at www-.siriuscanada.ca for Canadian residents.

Electronic Serial Number/Sirius Identification Number (ESN/SID)

Please have the following information available when calling:

1. The Electronic Serial Number/Sirius Identification Number (ESN/SID).

2. Your Vehicle Identification Number.

To access the ESN/SID, refer to the following steps:

ESN/SID Access With RES Radios

With the ignition switch in the ON/RUN or ACC position and the radio on, press the SETUP button and scroll using the TUNE/SCROLL control knob until Sirius ID is selected. Press the TUNE/SCROLL control knob and the Sirius ID number will display. The Sirius ID number display will time out in two minutes. Press any button on the radio to exit this screen.

ESN/SID Access With REN/RER Radios

While in SAT mode, press the MENU button on the radio faceplate.

Next, touch the SUBSCRIPTION tab on the touch screen. All the ESNs that apply to your vehicle will display.

Selecting Uconnect™ Multimedia (Satellite) Mode

Press the SAT button until "SAT" appears in the display. A CD may remain in the radio while in the Satellite radio mode.

Satellite Antenna

To ensure optimum reception, do not place items on the roof around the rooftop antenna location. Metal objects placed within the line of sight of the antenna will cause decreased performance. Larger luggage items such as

Downloaded from www.Manualslib.com manuals search engine

bikes should be placed as far rearward as possible, within the loading design of the rack. Do not place items directly on or above the antenna.

Reception Quality

Satellite reception may be interrupted due to one of the following reasons:

- The vehicle is parked in an underground parking structure or under a physical obstacle.
- Dense tree coverage may interrupt reception in the form of short audio mutes.
- Driving under wide bridges or along tall buildings can cause intermittent reception.
- Placing objects over or too close to the antenna can cause signal blockage.

Operating Instructions - Uconnect™ Multimedia (Satellite) Mode

NOTE: The ignition switch must be in the ON or ACC position to operate the radio.

SEEK Buttons

Press and release the SEEK buttons to search for the next channel in Satellite mode. Press the right switch to seek up and the left switch to seek down. The radio will remain tuned to the new channel until you make another selection. Holding either button will bypass channels without stopping until you release it.

SCAN Button

Pressing the SCAN button causes the tuner to search for the next channel, pausing for eight seconds before continuing to the next. To stop the search, press the SCAN button a second time.

Downloaded from www.Manualslib.com manuals search engine

INFO Button
Pressing the INFO button will cycle the display information between Artist, Song Title, and Composer (if available). Also, pressing and holding the INFO button for an additional three seconds will make the radio display the Song Title all of the time (press and hold again to return to normal display).

RW/FF
Pressing the RW (Rewind) or FF (Fast Forward) buttons causes the tuner to search for the next channel in the direction of the arrows.

TUNE Control (Rotary)
Turn the rotary TUNE/SCROLL control knob clockwise to increase or counterclockwise to decrease the channel.

MUSIC TYPE Button
Pressing this button once will turn on the Music Type mode for five seconds. Pressing the MUSIC TYPE button or turning the TUNE/SCROLL control knob within five seconds will allow the program format type to be selected.

Toggle the MUSIC TYPE button again to select the music type.

By pressing the SEEK button when the Music Type function is active, the radio will be tuned to the next channel with the same selected Music Type name.

If a preset button is activated while in the Music Type (Program Type) mode, the Music Type mode will be exited and the radio will tune to the preset channel.

Downloaded from www.Manualslib.com manuals search engine

SETUP Button

Pressing the SETUP button allows you to select the following items:

- Display Sirius ID number — Press the AUDIO/ SELECT button to display the Sirius ID number. This number is used to activate, deactivate, or change the Sirius subscription.

SET Button – To Set the Pushbutton Memory

When you are receiving a channel that you wish to commit to pushbutton memory, press the SET button. The symbol SET 1 will now show in the display window. Select the button (1-6) you wish to lock onto this channel and press and release that button. If a button is not selected within five seconds after pressing the SET button, the channel will continue to play but will not be stored into pushbutton memory.

You may add a second channel to each pushbutton by repeating the above procedure with this exception: Press the SET button twice and SET 2 will show in the display window. Each button can be set for SET 1 and SET 2. This allows a total of 12 Satellite channels to be stored into pushbutton memory. The channels stored in SET 2 memory can be selected by pressing the pushbutton twice.

Every time a preset button is used, a corresponding button number will display.

Buttons 1 - 6

These buttons tune the radio to the channels that you commit to pushbutton memory (12 Satellite stations).

Operating Instructions - Uconnect™ Phone (If Equipped)

Refer to "Uconnect™ Phone" in "Understanding The Features Of Your Vehicle".

Downloaded from www.Manualslib.com manuals search engine

KICKER® HIGH PERFORMANCE SOUND SYSTEM WITH DRIVER-SELECTABLE SURROUND (DSS) – IF EQUIPPED

Your vehicle is equipped with a state of the art audio amplifier that provides 5.1-channel surround sound from any stereo audio source. A new feature of the KICKER® audio system offers the ability to choose surround sound for any audio source.

"Audio Surround" is optimized for front seat passengers for any audio source. This surround effect is available for audio from any source – AM/FM/CD/ Satellite Radio or AUX – and is activated through the Electronic Vehicle Information Center (EVIC). Refer to "Driver-Selectable Surround Sound (DSS)" under "Electronic Vehicle Information Center (EVIC)" in "Understanding Your Instrument Panel".

DSS modes for audio sources are "Stereo" and "Audio Surround," which is surround sound equalized for the front seat occupants. Please note that DSS effects are dependent on the mix of the original recording. Some audio will sound better in DSS modes, others in Stereo mode.

Downloaded from www.Manualslib.com manuals search engine

NOTE: Dependent on the audio source, the output may sound better in stereo or DDS surround mode.

When in "Audio Surround" mode, balance is set automatically. Fader control is available to add more surround audio if desired.

VIDEO ENTERTAINMENT SYSTEM (VES)™ — IF EQUIPPED

The optional Video Entertainment System (VES)™ includes the following components for rear seat entertainment:

- A diagonal 7 in (17.8 cm) Liquid Crystal Display (LCD) screen integrated into the center console armrest. The screen features brightness control for optimum daytime and nighttime viewing.

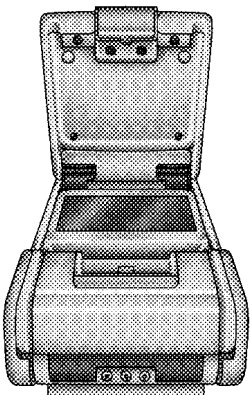

Opening the Rear Seat VES™

- The LCD screen swings up from the rear of the armrest to allow the rear seat passenger(s) to view the display.

Downloaded from www.Manualslib.com manuals search engine

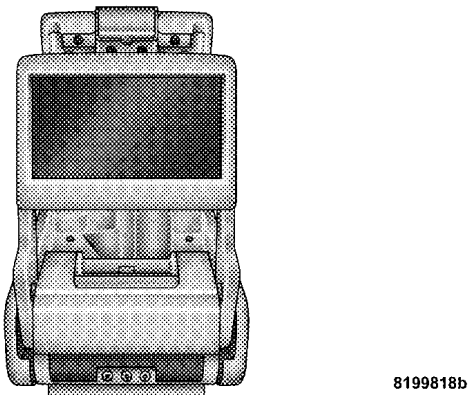

VES™ Video Screen

NOTE: Close the armrest after the LCD screen has been raised to its viewing position.

- The radio and DVD player controls allow front seat operation for easy setup in the case of younger rear seat passengers.
- A battery-powered infrared remote control snaps into a molded compartment in the center console armrest upper storage bin.

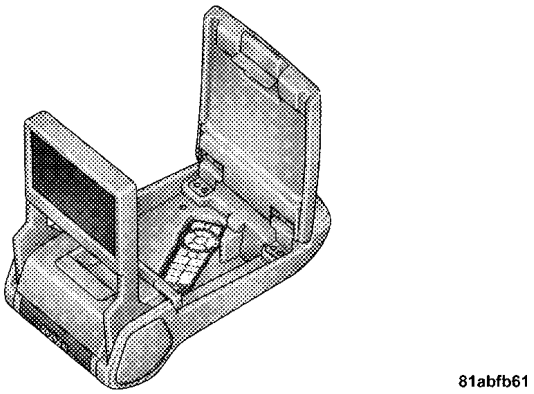

VES™ Remote Control

- Two wireless infrared headsets allow rear seat passengers to listen to the same or individual audio sources.

Downloaded from www.Manualslib.com manuals search engine

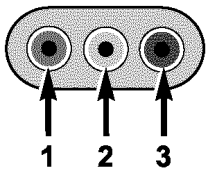

Audio/Video RCA Jacks (AUX Jacks) on the rear of the center console enable the monitor to display video directly from a video camera, connect video games for display on the screen, or play music directly from an MP3 player.

1. Video in (yellow)
2. Left audio in (white)
3. Right audio in (red)

NOTE: Refer to the "Uconnect™ Multimedia" section of Uconnect™ User Manual located on the DVD for further details.

REMOTE SOUND SYSTEM CONTROLS — IF EQUIPPED

The remote sound system controls are located on the surface of the steering wheel at the three and nine o'clock positions.

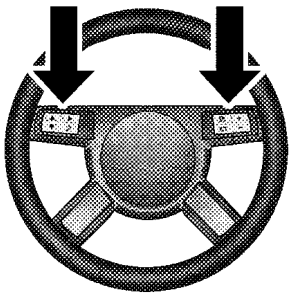

045105297

Remote Sound System Controls

Downloaded from www.Manualslib.com manuals search engine

Vehicles equipped with steering wheel-mounted buttons are also equipped with the Electronic Vehicle Information Center (EVIC). The EVIC features a driver-interactive display which is located in the instrument cluster.

VOLUME Button

The VOLUME button controls the sound level of the sound system. Press the top of the VOLUME button to increase the sound level. Press the bottom of the VOLUME button to decrease the sound level.

AUDIO MODE Button

Press the AUDIO MODE button to select the Compass/Temp/Audio screen. This screen displays radio and media mode information depending on which radio is in the vehicle.

If the Compass/Temp/Audio screen is already displayed when the AUDIO MODE button is pressed, then the mode will change (i.e. from AM to FM, to Media mode, etc., depending on which radio is in the vehicle).

FUNCTION SELECT Button

When the EVIC is in the Compass/Temp/Audio screen, press the FUNCTION SELECT button to operate various radio, media, and Universal Customer Interface (UCI) functions (i.e., advance presets, select next folder, jump to or start playing songs in playlists, etc., depending on which radio is in the vehicle and if equipped with UCI).

SCROLL Button

When the EVIC is in the Compass/Temp/Audio screen, press the SCROLL button to seek up and down radio stations, tracks, chapters, files, etc., depending on which radio is in the vehicle.

Downloaded from www.Manualslib.com manuals search engine

CD/DVD DISC MAINTENANCE

To keep a CD/DVD in good condition, take the following precautions:

1. Handle the disc by its edge; avoid touching the surface.

2. If the disc is stained, clean the surface with a soft cloth, wiping from center to edge.

3. Do not apply paper or tape to the disc; avoid scratching the disc.

4. Do not use solvents such as benzene, thinner, cleaners, or anti-static sprays.

5. Store the disc in its case after playing.

6. Do not expose the disc to direct sunlight.

7. Do not store the disc where temperatures may become too high.

NOTE: If you experience difficulty in playing a particular disc, it may be damaged (i.e., scratched, reflective coating removed, a hair, moisture or dew on the disc) oversized, or have protection encoding. Try a known good disc before considering disc player service.

RADIO OPERATION AND CELLULAR PHONES

Under certain conditions, the cellular phone being on in your vehicle can cause erratic or noisy performance from your radio. This condition may be lessened or eliminated by relocating the cellular phone antenna. This condition is not harmful to the radio. If your radio performance does not satisfactorily "clear" by the repositioning of the antenna, it is recommended that the radio volume be turned down or off during cellular phone operation.

CLIMATE CONTROLS

The air conditioning and heating system is designed to make you comfortable in all types of weather.

Downloaded from www.Manualslib.com manuals search engine

Manual Air Conditioning and Heating System

Manual Temperature Controls

Blower Control

The rotary knob on the left controls the blower. The control has an OFF position and four speed settings. **The blower will remain on until the control is turned to the OFF position or the ignition is turned OFF.**

NOTE: For vehicles equipped with Remote Start, the climate controls will not function during Remote Start operation if the blower control is left in the "O" (Off) position.

Downloaded from www.Manualslib.com manuals search engine

Temperature Control

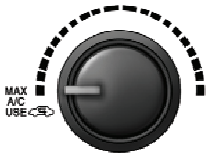

045607736

The rotary knob in the center controls air temperature. Rotate the control to the left for cooler air temperature and to the right for warmer air temperature. Rotating the control to the extreme left provides the coldest setting. Rotating the control to the extreme right provides the warmest setting.

Mode Control

045607737

The rotary knob on the right controls airflow distribution. Dots between each of the mode selections identify intermediate modes that allow the operator to fine-tune airflow distribution. The mode settings are as follows:

- *Defrost*

Air is directed to the windshield through the outlets at the base of the windshield. Air is also directed to the front door windows through the side window demister grilles.

NOTE: To improve fuel economy, leave in defrost only when necessary.

- *Defrost/Floor*

Air flows through the front and rear floor outlets and the outlets at the base of the windshield. Air is also directed to the front door windows through the side window demister grilles.

- *Floor*

Air flows through the floor outlets located under the instrument panel and into the rear seating area through vents under the front seats.

Downloaded from www.Manualslib.com manuals search engine

- *Bi-Level*

Air flows through the outlets located in the instrument panel and through the outlets located on the floor. Air flows through the registers in the back of the center console to the rear seat passengers. These registers can be closed to partially block airflow.

- *Panel*

Air flows through the outlets located in the instrument panel. Air flows through the registers in the back of the center console to the rear seat passengers. These registers can be closed to block airflow.

- *Recirculation Control*

The mode control knob also controls the recirculation feature. You can choose Bi-Level Recirculation air outlets, Panel Recirculation air outlets, or a mix or both while in this mode. Normally, air enters from outside the vehicle. However, when in Recirculation mode air inside the vehicle is re-used. Use this mode to cool the inside of the vehicle rapidly. The Recirculation mode can also be used to temporarily block out outside odors, smoke, and dust.

Air Conditioning Control

A/C

Press this button to turn the air conditioning on and off. When the air conditioning is turned on, cool dehumidified air will flow through the outlets selected with the mode control. Press this button a second time to turn off the air conditioning. An indicator in the button will illuminate when compressor operation is selected.

Downloaded from www.Manualslib.com manuals search engine

Automatic Temperature Control — If Equipped

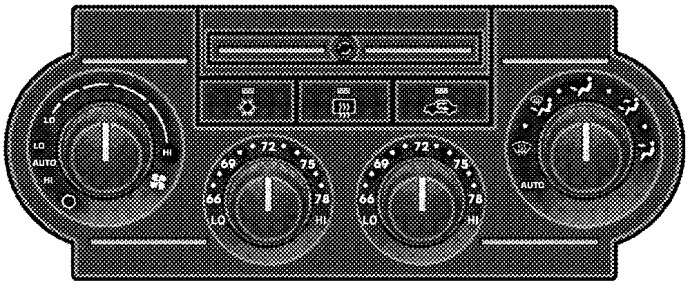

Automatic Temperature Controls

Automatic Operation

The Dual-Zone Climate Control System automatically maintains the climate in the cabin of the vehicle at the comfort levels desired by the driver and passenger.

Operation of the system is quite simple. Begin by turning the mode control knob (on the right) to AUTO, and place the blower control knob (on the left) to either LO AUTO or HI AUTO. The LO AUTO position should be used for front seat occupants only. The HI AUTO position should be used when more airflow is desired, or when rear seat occupants are present. Then, dial in the temperature you would like the system to maintain by rotating the driver or passenger temperature control knob. Once the comfort level is selected, the system will maintain that level automatically using the heating system. Should the desired comfort level require air conditioning, the system will automatically make the adjustment.

You will experience the greatest efficiency by simply allowing the system to function automatically. Selecting the OFF position on the fan control stops the system completely and closes the outside air intake.

Downloaded from www.Manualslib.com manuals search engine

72°F (22°C) is the recommended setting for maximum comfort for the average person; however, this may vary.

NOTE: The temperature setting can be adjusted at any time without affecting automatic operation.

Air conditioning in this system is automatic. Pressing the air conditioning control button while in AUTO mode will cause the indicator in the control button to flash three times and then turn off. This indicates that the system is in AUTO mode and requesting the air conditioning is not necessary.

The system will automatically control recirculation. However, pressing the recirculation control button will temporarily put the system in Recirculation mode (10 minutes). This can be used when outside conditions such as smoke, odors, dust, or high humidity are present. Activating recirculation will cause the indicator in the control button to illuminate. After 10 minutes, the system will return to normal AUTO mode function and the indicator will turn off.

NOTE:

- The surface of the climate control panel and the top center of the instrument panel should be kept free of debris due to the location of the climate control sensors. Mud on the windshield may also cause poor operation of this system.
- Extended use of recirculation may cause the windows to fog. If the interior of the windows begin to fog, press the recirculation button to return to outside air. Some temp/humidity conditions will cause captured interior air to condense on windows and hamper visibility. For this reason, the system will not allow recirculation to be selected while in Defrost or Defrost/Floor mode.

Downloaded from www.Manualslib.com manuals search engine

Attempting to use the recirculation while in these modes will cause the indicator in the control button to blink and then turn off.

Manual Operation

This system offers a full complement of manual override features, which consist of blower preferred automatic, mode preferred automatic, or blower and mode preferred automatic. This means the operator can override the blower, the mode, or both. There is a manual blower range for times when the AUTO setting is not desired. The blower can be set to any fixed blower speed by rotating the blower control knob (on the left).

NOTE: Please read the automatic temperature control operation chart that follows for details.

Downloaded from www.Manualslib.com manuals search engine

Automatic Temperature Control Operation		The system will…				
Operation	**How**	**Blower Control**	**Mode Control**	**Air Temperature Control**	**Air Recirculation Control**	**A/C Operation**
Full Automatic Operation	Set blower knob to either Hi or Lo Auto. Set mode knob to Auto. Set temperature knobs for comfort.	Automatic	Automatic	Automatic	Automatic but can be overridden for 10 minutes at a time.	Automatic
Blower Preferred Automatic	Set blower knob to any desired airflow level other than Hi or Lo Auto. Set mode knob to Auto. Set temperature knobs for comfort.	User selectable to any speed.	Automatic	Automatic	Automatic but can be overridden for 10 minutes at a time.	Automatic
Mode Preferred Automatic	Set mode knob to any desired air delivery point other than Auto. Set blower knob to either Hi or Lo Auto. Set temperature knobs for comfort.	Automatic	User selectable to any air delivery point.	Automatic	User selectable outside or recirculated.	User selectable A/C on or off.
Blower and Mode Preferred Automatic	Set blower knob to any desired airflow level other than Hi or Lo Auto. Set mode knob to any desired air delivery point other than Auto. Set temperature knobs for comfort.	User selectable to any speed.	User selectable to any air delivery point.	Automatic	User selectable outside or recirculated.	User selectable A/C on or off.

81341de7

Downloaded from www.Manualslib.com manuals search engine

The operator can override the AUTO mode setting to change airflow distribution by rotating the mode control knob (on the right) to one of the following positions.

- *Defrost*

Air is directed to the windshield through the outlets at the base of the windshield. Air is also directed to the front door windows through the side window demister grilles.

- *Defrost/Floor*

Air flows through the front and rear floor outlets and the outlets at the base of the windshield. Air is also directed to the front door windows through the side window demister grilles.

- *Floor*

Air flows through the floor outlets located under the instrument panel and into the rear seating area through vents under the front seats.

- *Bi-Level*

Air flows through the outlets located in the instrument panel and through the outlets located on the floor. Air flows through the registers in the back of the center console to the rear seat passengers. These registers can be closed to block airflow.

- *Panel*

Air flows through the outlets located in the instrument panel. Air flows through the registers in the back of the center console to the rear seat passengers. These registers can be closed to block airflow.

- *Air Conditioning Control*

Press this button to turn on the air conditioning during manual operation only. When the air conditioning is turned on, cool dehumidified air will flow through the outlets selected with the mode control dial. Press this button a second time to turn off the air conditioning. An indicator in the button illuminates when manual compressor operation is selected.

Downloaded from www.Manualslib.com manuals search engine

NOTE: To control the air conditioning manually, the mode selector must be moved out of the AUTO position.

- *Recirculation Control*

This button can be used to block out smoke, odors, dust, high humidity, or if rapid cooling is desired. The Recirculation mode should only be used temporarily. An indicator in the button illuminates when the Recirculation mode is active. You may use this feature separately.

NOTE: Extended use of recirculation may cause the windows to fog. If the interior of the windows begins to fog, press the recirculation button to return to outside air. Some temp/humidity conditions will cause captured interior air to condense on windows and hamper visibility. For this reason, the system will not allow recirculation to be selected while in Defrost or Defrost/Floor mode. Attempting to use the recirculation while in these modes will cause the indicator in the control button to blink and then turn off.

Operating Tips

NOTE: Refer to the chart at the end of this section for suggested control settings for various weather conditions.

Summer Operation

The engine cooling system in air-conditioned vehicles must be protected with a high-quality antifreeze coolant to provide proper corrosion protection and to protect against engine overheating. A solution of 50% ethylene glycol antifreeze coolant and 50% water is recommended. Refer to “Maintenance Procedures” in “Maintaining Your Vehicle” for proper coolant selection.

Downloaded from www.Manualslib.com manuals search engine

Winter Operation

Use of the air Recirculation mode during Winter months is not recommended because it may cause window fogging.

Vacation Storage

Any time you store your vehicle or keep it out of service (i.e., vacation) for two weeks or more, run the air conditioning system at idle for about five minutes in the fresh air and high blower setting. This will ensure adequate system lubrication to minimize the possibility of compressor damage when the system is started again.

Window Fogging

Interior fogging on the windshield can be quickly removed by turning the mode selector to Defrost. The Defrost/Floor mode can be used to maintain a clear windshield and provide sufficient heating. If side window fogging becomes a problem increase blower speed. Vehicle windows tend to fog on the inside in mild but rainy or humid weather.

NOTE: Recirculate without A/C should not be used for long periods, as fogging may occur.

Outside Air Intake

Make sure the air intake, located directly in front of the windshield, is free of obstructions such as leaves. Leaves collected in the air intake may reduce airflow, and if they enter the plenum, they could plug the water drains. In Winter months, make sure the air intake is clear of ice, slush, and snow.

A/C Air Filter

The climate control system filters outside air containing dust, pollen and some odors. Strong odors cannot be totally filtered out. Refer to "Maintenance Procedures" in "Maintaining Your Vehicle" for filter replacement instructions.

Downloaded from www.Manualslib.com manuals search engine

Control Setting Suggestions for Various Weather Conditions

WEATHER	CONTROL SETTINGS
HOT WEATHER AND VEHICLE INTERIOR IS VERY HOT	Open the windows, start the vehicle, set the Mode control to Panel or Bi-Level, and turn on A/C. Set the Fan control to the High position (full clockwise). Set the temperature control to full cool. After the hot air is flushed from the vehicle, set the Mode control to Recirculate with A/C on and roll up the windows. Once you are comfortable, set the Mode control to Panel or Bi-Level with A/C on.
WARM WEATHER	If it's sunny, set the Mode control to Panel and turn on A/C. If it's cloudy or dark, set the Mode control to Bi-Level with A/C on. Adjust Temperature control for comfort.
COOL OR COLD HUMID CONDITIONS	Set the Mode control to Defrost/Floor or Defrost. Set the Fan Control to the High position (full clockwise). Adjust Fan and Temperature control for comfort if windows are clear.
COLD DRY CONDITIONS	Set the Mode control to Floor. If it's sunny, you may want more upper air. In this case, set the Mode control to Bi-Level. In very cold weather, if you need extra heat at the windshield, set the Mode control to Defrost/Floor or Defrost as needed. Adjust Fan and Temperature control for comfort. 81352266

4

Downloaded from www.Manualslib.com manuals search engine

Downloaded from www.Manualslib.com manuals search engine

STARTING AND OPERATING

CONTENTS

■ Starting Procedures 309
- □ Automatic Transmission 309
- □ Keyless Go™ 310
- □ Normal Starting 311
- □ Extreme Cold Weather (Below −20°F Or −29°C) 312
- □ If Engine Fails To Start 312
- □ After Starting 314

■ Engine Block Heater — If Equipped 314

■ Automatic Transmission 314
- □ General Information 315
- □ Key Ignition Park Interlock 317
- □ Brake/Transmission Shift Interlock System . . 317
- □ Brake/Transmission Interlock Manual Override 318
- □ Four-Speed Automatic Transmission – If Equipped 319
- □ Gear Ranges 319

Downloaded from www.Manualslib.com manuals search engine

- Five-Speed Automatic Transmission – If Equipped 324
- Gear Ranges 324

■ AutoStick® — If Equipped 328
- Operation 329

■ All-Wheel Drive (AWD) — If Equipped 329

■ Driving On Slippery Surfaces 330
- Acceleration 330
- Traction 331

■ Driving Through Water 331
- Flowing/Rising Water 332
- Shallow Standing Water 332

■ Power Steering 334
- Power Steering Fluid Check 334

■ Multi-Displacement System (MDS) (If Equipped) – 5.7L Engine Only 335

■ Parking Brake 335

■ Anti-Lock Brake System 338

■ Electronic Brake Control System 340
- Anti-Lock Brake System (ABS) 340
- Traction Control System (TCS) 340
- Brake Assist System (BAS) 341
- Electronic Stability Program (ESP) 341
- Synchronizing ESP 344
- ESP/BAS Malfunction Indicator Light And ESP/TCS Indicator Light 344

Downloaded from www.Manualslib.com manuals search engine

■ Tire Safety Information 345
□ Tire Markings 345
□ Tire Identification Number (TIN) 349
□ Tire Terminology And Definitions 350
□ Tire Loading And Tire Pressure 351
■ Tires — General Information 355
□ Tire Pressure 355
□ Tire Inflation Pressures 356
□ Tire Pressures For High Speed Operation . . . 358
□ Radial Ply Tires 358
□ Compact Spare Tire – If Equipped 358
□ Limited-Use Spare – If Equipped 359
□ Tire Spinning 360
□ Tread Wear Indicators 360
□ Life Of Tire 361
□ Replacement Tires 362
■ Self-Sealing Tires — If Equipped 363
■ Snow Tires 363
■ Tire Rotation Recommendations 364
■ Tire Pressure Monitor System (TPMS) 365
□ Base System 367
□ Premium System – If Equipped 370
□ General Information 374
■ Fuel Requirements 374
□ 2.7L Engine 374
□ 3.5L And 5.7L Engine 374

Downloaded from www.Manualslib.com manuals search engine

- Reformulated Gasoline 375
- Gasoline/Oxygenate Blends 375
- E85 Usage In Non-Flex Fuel Vehicles 376
- MMT In Gasoline 377
- Materials Added To Fuel 377
- Fuel System Cautions 377
- Carbon Monoxide Warnings 378

■ Adding Fuel 379
- Fuel Filler Cap (Gas Cap) 379
- Loose Fuel Filler Cap Message 381

■ Vehicle Loading 381
- Vehicle Certification Label 382
- Gross Vehicle Weight Rating (GVWR) 382
- Gross Axle Weight Rating (GAWR) 382
- Overloading 383
- Loading 383

■ Trailer Towing 384
- Common Towing Definitions 384
- Trailer Hitch Classification 386
- Trailer Towing Weights (Maximum Trailer Weight Ratings) 388
- Trailer And Tongue Weight 388
- Towing Requirements 389
- Towing Tips 395

■ Recreational Towing (Behind Motorhome, Etc.) . 396
- Two-Wheel Drive And All-Wheel Drive 396

Downloaded from www.Manualslib.com manuals search engine

STARTING PROCEDURES

Before starting your vehicle, adjust your seat, adjust the inside and outside mirrors, fasten your seat belt, and if present, instruct all other occupants to buckle their seat belts.

WARNING!

Never leave children alone in a vehicle. Leaving unattended children in a vehicle is dangerous for a number of reasons. A child or others could be seriously or fatally injured. Do not leave the key fob in the ignition switch. A child could operate power windows, other controls, or move the vehicle.

Automatic Transmission

The shift lever must be in the NEUTRAL or PARK position before you can start the engine. Apply the brakes before shifting into any driving gear.

CAUTION!

Damage to the transmission may occur if the following precautions are not observed:

- **Shift into PARK only after the vehicle has come to a complete stop.**
- **Shift into or out of REVERSE only after the vehicle has come to a complete stop and the engine is at idle speed.**
- **Do not shift from REVERSE, PARK, or NEUTRAL into any forward gear when the engine is above idle speed.**
- **Before shifting into any gear, make sure your foot is firmly on the brake pedal.**

Using Fob With Integrated Key (Tip Start)

NOTE: Normal starting of either a cold or a warm engine is obtained without pumping or pressing the accelerator pedal.

Downloaded from www.Manualslib.com manuals search engine

Do not press the accelerator. Use the Fob with Integrated Key to briefly turn the ignition switch to the START position and release it as soon as the starter engages. The starter motor will continue to run, and it will disengage automatically when the engine is running. If the engine fails to start, the starter will disengage automatically in 10 seconds. If this occurs, turn the ignition switch to the LOCK position, wait 10 to 15 seconds, then repeat the "Normal Starting" procedure.

Keyless Go™

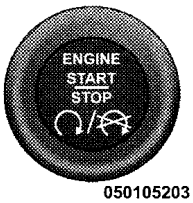

This feature allows the driver to operate the ignition switch with the push of a button, as long as the ENGINE START/STOP button is installed and the Remote Keyless Entry (RKE) transmitter is in the passenger compartment.

Installing and Removing the ENGINE START/STOP Button

Installing the Button

1. Remove the key fob from the ignition switch.

2. Insert the ENGINE START/STOP button into the ignition switch with the lettering facing up and readable.

3. Press firmly on the center of the button to secure it into position.

Removing the Button

1. The ENGINE START/STOP button can be removed from the ignition switch for key fob use.

2. Insert the metal part of the emergency key under the chrome bezel at the 6 o'clock position and gently pry the button loose.

Downloaded from www.Manualslib.com manuals search engine

NOTE: The ENGINE START/STOP button should only be removed or inserted with the ignition in the LOCK position (OFF position for Keyless Go™).

Normal Starting

Using the ENGINE START/STOP Button

NOTE: Normal starting of either a cold or a warm engine is obtained without pumping or pressing the accelerator pedal.

To start the engine, the transmission must be in PARK or NEUTRAL. Press and hold the brake pedal while pressing the ENGINE START/STOP button once. The system takes over and attempts to start the vehicle. If the vehicle fails to start, the starter will disengage automatically after 10 seconds. If you wish to stop the cranking of the engine prior to the engine starting, press the button again.

To Turn Off the Engine Using ENGINE START/STOP Button

1. Place the shift lever in PARK, then press and release the ENGINE START/STOP button.

2. The ignition switch will return to the OFF position.

3. If the shift lever is not in PARK, the ENGINE START/STOP button must be held for two seconds and vehicle speed must be above 5 mph (8 km/h) before the engine will shut off. The ignition switch position will remain in the ACC position until the shift lever is in PARK and the button is pressed twice to the OFF position. If the shift lever is not in PARK and the ENGINE START/STOP button is pressed once, the EVIC (if equipped) will display a "Vehicle Not In Park" message and the engine will remain running. Never leave a vehicle out of the PARK position, or it could roll.

Downloaded from www.Manualslib.com manuals search engine

NOTE: If the ignition switch is left in the ACC or RUN (engine not running) position and the transmission is in PARK, the system will automatically time out after 60 minutes of inactivity and the ignition will switch to the OFF position.

Keyless Go™ Functions – With Driver's Foot OFF the Brake Pedal Pedal (In PARK or NEUTRAL Position)

The Keyless Go™ feature operates similar to an ignition switch. It has four positions, OFF, ACC, RUN and START. To change the ignition switch positions without starting the vehicle and use the accessories follow these steps.

- Starting with the ignition switch in the OFF position:
- Press the ENGINE START/STOP button once to change the ignition switch to the ACC position (EVIC displays "IGNITION MODE ACCESSORY"),
- Press the ENGINE START/STOP button a second time to change the ignition switch to the RUN position (EVIC displays "IGNITION MODE RUN"),
- Press the ENGINE START/STOP button a third time to return the ignition switch to the OFF position (EVIC displays "IGNITION MODE OFF").

Extreme Cold Weather (Below −20°F or −29°C)

To ensure reliable starting at these temperatures, use of an externally powered electric engine block heater (available from your authorized dealer) is recommended.

If Engine Fails To Start

WARNING!

- **Never pour fuel or other flammable liquids into the throttle body air inlet opening in an attempt to start the vehicle. This could result in a flash fire causing serious personal injury.**

(Continued)

Downloaded from www.Manualslib.com manuals search engine

WARNING! (Continued)

- **Do not attempt to push or tow your vehicle to get it started. Vehicles equipped with an automatic transmission cannot be started this way. Unburned fuel could enter the catalytic converter and once the engine has started, ignite and damage the converter and vehicle. If the vehicle has a discharged battery, booster cables may be used to obtain a start from a booster battery or the battery in another vehicle. This type of start can be dangerous if done improperly. Refer to "Jump Starting" in "What To Do In Emergencies" for further information.**

Clearing a Flooded Engine (Using ENGINE START/STOP Button)

If the engine fails to start after you have followed the "Normal Starting" or "Extreme Cold Weather" procedures, it may be flooded. To clear any excess fuel, press and hold the brake pedal, push the accelerator pedal all the way to the floor and hold it, then press and release the ENGINE START/STOP button once. The starter motor will engage automatically, run for 10 seconds, and then disengage. Once this occurs, release the accelerator pedal and the brake pedal, wait 10 to 15 seconds, then repeat the "Normal Starting" procedure.

Clearing A Flooded Engine (Using Fob With Integrated Key)

If the engine fails to start after you have followed the "Normal Starting" or "Extreme Cold Weather" procedures, it may be flooded. To clear any excess fuel, push the accelerator pedal all the way to the floor and hold it. Then, turn the ignition switch to the START position and release it as soon as the starter engages. The starter motor will disengage automatically in 10 seconds. Once this occurs, release the accelerator pedal, turn the ignition switch to the LOCK position, wait 10 to 15 seconds, then repeat the "Normal Starting" procedure.

Downloaded from www.Manualslib.com manuals search engine

CAUTION!

To prevent damage to the starter, wait 10 to 15 seconds before trying again.

After Starting

The idle speed is controlled automatically and it will decrease as the engine warms up.

ENGINE BLOCK HEATER — IF EQUIPPED

The engine block heater warms the engine, and permits quicker starts in cold weather. Connect the cord to a standard 110-115 Volt AC electrical outlet with a grounded, three-wire extension cord.

The engine block heater cord is routed under the hood on the driver side of the vehicle. It has a removable cap that is located on the driver side of the Integrated Power Module.

WARNING!

Remember to disconnect the cord before driving. Damage to the 110-115 Volt electrical cord could cause electrocution.

AUTOMATIC TRANSMISSION

CAUTION!

Damage to the transmission may occur if the following precautions are not observed:

- **Shift into PARK only after the vehicle has come to a complete stop.**
- **Shift into or out of REVERSE only after the vehicle has come to a complete stop and the engine is at idle speed.**

(Continued)

Downloaded from www.Manualslib.com manuals search engine

CAUTION! (Continued)

- **Do not shift from REVERSE, PARK, or NEUTRAL into any forward gear when the engine is above idle speed.**
- **Before shifting into any gear, make sure your foot is firmly on the brake pedal.**

WARNING!

It is dangerous to move the shift lever out of PARK or NEUTRAL if the engine speed is higher than idle speed. If your foot is not firmly on the brake pedal, the vehicle could accelerate quickly forward or in reverse. You could lose control of the vehicle and hit someone or something. Only shift into gear when the engine is idling normally and when your right foot is firmly on the brake pedal.

General Information

The automatic transmission selects individual gears automatically, dependent upon:

- Altitude
- Vehicle loading
- Driving style
- Shift lever position
- Accelerator position
- Vehicle speed

The gear shifting process is continuously adapted, dependent on the driving style, the driving situation, and the road characteristics.

Downloaded from www.Manualslib.com manuals search engine

NOTE:

- After selecting any driving position, wait a moment to allow the gear to engage fully before accelerating, especially when the engine is cold.
- If there is a need to restart the engine, be sure to turn the ignition switch to the LOCK position (OFF position with Keyless Go™) before restarting. Transmission engagement may be delayed up to 10 seconds after restart if the ignition switch is not turned to the LOCK position (OFF position with Keyless Go™) first.
- The electronically-controlled transmission provides a precise shift schedule. The transmission electronics are self-calibrating. Therefore, the first few shifts on a new vehicle may be somewhat abrupt or soft until after the break-in period. This is a normal condition, and precision shifts will develop within a few shift cycles.

The shift lever is automatically locked while in the PARK position. To move the shift lever out of the PARK position, the brake pedal must be firmly pressed before the shift lock will release.

Move the shift lever to the desired position only when the engine is idling normally and the brake pedal is applied. Do not release the brake pedal until ready to drive. The vehicle may otherwise accelerate quickly when the shift lever is in the DRIVE or REVERSE position.

Downloaded from www.Manualslib.com manuals search engine

WARNING!

Unintended movement of a vehicle could injure those in and near the vehicle. As with all vehicles, you should never exit a vehicle while the engine is running. Before exiting a vehicle, you should always shift the transmission into PARK, remove the key fob from the ignition, and apply the parking brake. Once the key fob is removed from the ignition, the shift lever is locked in the PARK position, securing the vehicle against unwanted movement. Furthermore, you should never leave unattended children inside a vehicle.

Over-Temperature Mode

The transmission electronics constantly monitor the transmission oil temperature. If the transmission exceeds normal operating temperature, the transmission will change the way it shifts to help control the condition. This may result in a slightly different feeling or response during normal operation in the DRIVE position. After the transmission cools down, it will return to normal operation.

Key Ignition Park Interlock

This vehicle is equipped with a Key Ignition Park Interlock which requires the shift lever to be placed in PARK prior to rotating the key fob to the LOCK position. The key fob can only be removed from the ignition when the ignition is in the LOCK position and once removed the shift lever is locked in PARK.

Brake/Transmission Shift Interlock System

This vehicle is equipped with a Brake Transmission Shift Interlock System (BTSI) that holds the shift lever in the PARK position when the ignition switch is in the LOCK position (OFF position with Keyless Go™). To move the shift lever out of the PARK position, the ignition switch must be turned to the ON or START position (engine running or not) and the brake pedal must be pressed.

Downloaded from www.Manualslib.com manuals search engine

Brake/Transmission Interlock Manual Override

There is an override for the BTSI that allows you to move the shift lever out of the PARK position if an electrical system malfunction occurs (i.e., dead battery). To access the override, remove the rubber tray from the storage bin located to the right of the shift lever. The override access port is at the top of the bin to the right of the shift lever gate.

1. Turn the ignition switch to the ACC or ON position (RUN position with Keyless Go™) without starting the engine.

2. Firmly set the parking brake.

3. Press and maintain firm pressure on the brake pedal.

4. Using the screwdriver, press and hold the override tab through the access port on the center console.

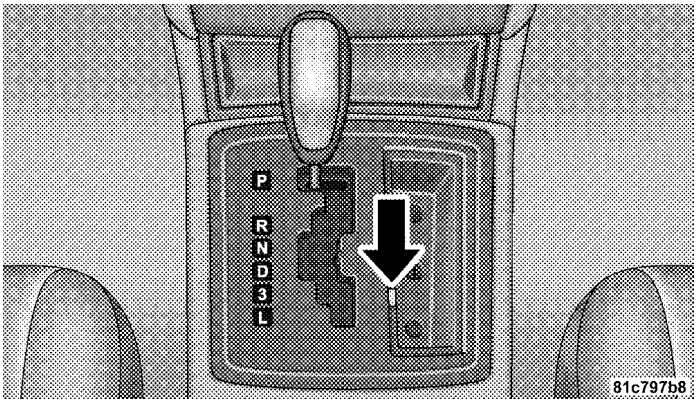

Interlock Manual Override

5. Move the shift lever into the NEUTRAL position.

6. The vehicle may then be started in NEUTRAL.

7. Reinstall the override cover.

Downloaded from www.Manualslib.com manuals search engine

With Keyless Go™ – If Equipped
If the engine is running, press the START/STOP button to turn it off. Release the brake pedal and press the START/STOP button once or twice to go to the ACC or RUN position. Do not start the engine. Then, follow the instructions shown above to activate the override.

Four-Speed Automatic Transmission – If Equipped

NOTE: Under extreme cold temperatures (-6°F (-21°C) and when in DRIVE, transmission operation may be briefly limited to only second gear operation. Normal operation will resume once the transmission temperature has risen to a suitable level.

Shifting from DRIVE to PARK or REVERSE should be done only after the accelerator pedal is released and the vehicle is stopped. Be sure to keep your foot on the brake pedal when moving the shift lever between these gears.

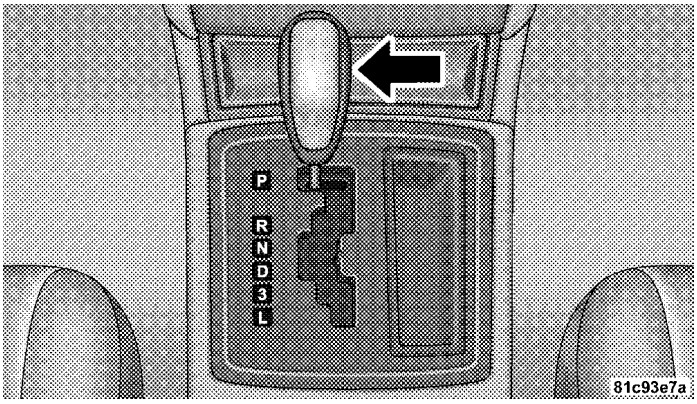

Shift Lever

Gear Ranges

PARK
This range supplements the parking brake by locking the transmission. The engine can be started in this range. Never use PARK while the vehicle is in motion. Apply the parking brake when leaving the vehicle in this range.

Downloaded from www.Manualslib.com manuals search engine

When parking on a flat surface, place the shift lever in the PARK position first, and then apply the parking brake.

When parking on a hill, it is important to set the parking brake before placing the shift lever in PARK, otherwise the load on the transmission locking mechanism may make it difficult to move the shift lever out of park. As an added precaution, turn the front wheels toward the curb on a downhill grade and away from the curb on an uphill grade.

WARNING!

Never use the PARK position as a substitute for the parking brake. Always apply the parking brake fully when parked to guard against vehicle movement and possible injury or damage.

The following indicators should be used to ensure that you have engaged the shift lever in the PARK position:

- When shifting into PARK move the shift lever all the way forward and left until it stops and is fully seated.
- Look at the shift indicator display on the instrument panel to ensure it is in the PARK position.

CAUTION!

Damage to the shifter could result if the shift lever is moved out of PARK before the ignition switch is turned from the LOCK (OFF position with Keyless Go™) to the ON position (RUN position with Keyless Go™).

REVERSE

This range is used for moving the vehicle rearward. Always stop before moving the shift lever to REVERSE.

Downloaded from www.Manualslib.com manuals search engine

NEUTRAL

This range is used when the vehicle is standing for prolonged periods with the engine running. The engine may be started in this range. Set the parking brake if you must leave the vehicle.

CAUTION!

Coasting the vehicle or driving for any other reason with shift lever in NEUTRAL can result in transmission damage.

WARNING!

Do not coast in NEUTRAL and never turn off the ignition to coast down a hill. These are unsafe practices that limit your response to changing traffic or road conditions. You might lose control of the vehicle and have an accident.

"D" (Overdrive)

This range is used for most city and highway driving. It provides the smoothest up shifts and down shifts and the best fuel economy. Select the "3" range when frequent transmission shifting occurs when using the Overdrive range, such as when operating the vehicle under heavy loading conditions (in hilly terrain, traveling into strong head winds, or while towing heavy trailers).

NOTE:

- If the vehicle is started in cold temperatures, shifts into Overdrive may be delayed. Normal Overdrive and shifting operation will resume when the temperature of the transmission reaches the appropriate temperature. Refer to the "Note" under "Torque Converter Clutch" later in this section.

Downloaded from www.Manualslib.com manuals search engine

- If the transmission temperature gets too hot, the transmission may downshift out of Overdrive or engage Overdrive at higher vehicle speeds until the transmission cools down. After cooldown, Overdrive will resume normal operation.

"3" (Third)
This range eliminates shifts into Overdrive. The transmission will operate normally in 1st, 2nd, and 3rd while in this range. The "3" position should also be used when descending steep grades to prevent brake system distress.

NOTE: Using the "3" range while operating the vehicle under heavy operating conditions will improve performance and extend transmission life by reducing excessive shifting and heat buildup.

"L" (Low)
This range should be used for engine braking when descending very steep grades. In this range, upshifts will occur only to prevent engine overspeed while downshifts occur earlier than in other gear range selections.

CAUTION!

Never race the engine with the brakes on and the vehicle in gear, and never hold the vehicle on an incline without applying the brakes. These practices can cause overheating and damage to the transmission.

Torque Converter Clutch
A feature designed to improve fuel economy has been added to the automatic transmission in this vehicle. A clutch within the torque converter engages automatically at calibrated speeds. This may result in a slightly different feeling or response during normal operation in high gear. When the vehicle speed drops or during acceleration, the clutch automatically and smoothly disengages.

Downloaded from www.Manualslib.com manuals search engine

NOTE:

- The torque converter clutch will not engage until the transmission fluid and engine coolant is warm (usually after 1–3 miles [1.6–4.8 km] of driving). Because engine speed is higher when the torque converter clutch is not engaged, it may seem as if the transmission is not shifting into Overdrive when cold. This is considered a normal condition. Pulling the shift lever into the "3" position will show that the transmission is able to shift into and out of Overdrive.
- If the vehicle has not been driven for several days, the first few seconds of operation after shifting the transmission into gear may seem sluggish. This is due to the transmission fluid partially draining from the torque converter into the transmission. This is considered a normal condition and it will not cause damage to the transmission. The torque converter will refill within five seconds of shifting from PARK into any other gear position.

Transmission Limp Home Mode

The transmission is monitored for abnormal conditions. If a condition is detected that could cause damage, the transmission automatically shifts into second gear. The transmission remains in second gear despite the forward gear selected. PARK, REVERSE, and NEUTRAL will continue to operate. This reset feature allows the vehicle to be driven to an authorized dealer for service without damaging the transmission.

If the problem has been momentary, the transmission can be reset to regain all forward gears.

- Stop the vehicle and shift into PARK.
- Turn the ignition switch to the LOCK position (OFF position with Keyless Go™), then start the engine.
- Shift into DRIVE and resume driving.

Downloaded from www.Manualslib.com manuals search engine

NOTE: Even if the transmission can be reset, we recommend that you visit an authorized dealer at your earliest possible convenience. Your authorized dealer has diagnostic equipment to determine if the problem could recur.

If the transmission cannot be reset, authorized dealer service is required.

Five-Speed Automatic Transmission – If Equipped

Shifting from DRIVE to PARK or REVERSE should be done only after the accelerator pedal is released and the vehicle is stopped. Be sure to keep your foot on the brake pedal when moving the shift lever between these gears.

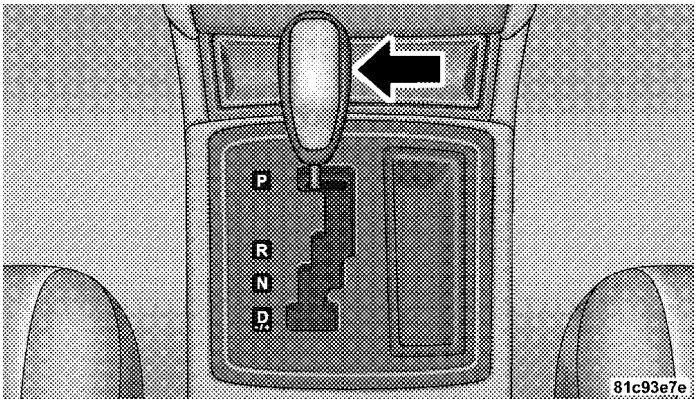

Shift Lever

Gear Ranges

PARK

This range supplements the parking brake by locking the transmission. The engine can be started in this range. Never use PARK while the vehicle is in motion. Apply the parking brake when leaving the vehicle in this range.

Downloaded from www.Manualslib.com manuals search engine

When parking on a flat surface, place the shift lever in the PARK position first, and then apply the parking brake.

When parking on a hill, it is important to set the parking brake before placing the shift lever in PARK, otherwise the load on the transmission locking mechanism may make it difficult to move the shift lever out of PARK. As an added precaution, turn the front wheels toward the curb on a downhill grade and away from the curb on an uphill grade.

WARNING!

Never use the PARK position as a substitute for the parking brake. Always apply parking brake fully when parked to guard against vehicle movement and possible injury or damage.

The following indicators should be used to ensure that you have engaged the shift lever in the PARK position:

- When shifting into PARK, move the shift lever all the way forward and left until it stops and is fully seated.
- Look at the shift indicator display on the instrument panel to ensure it is in the PARK position.

CAUTION!

Damage to the shifter could result if the shift lever is moved out of PARK before the ignition switch is turned from the LOCK (OFF position with Keyless Go™) to the ON position (RUN position with Keyless Go™).

REVERSE

This range is used for moving the vehicle rearward. Always stop before moving the shift lever to REVERSE.

Downloaded from www.Manualslib.com manuals search engine

NEUTRAL

This range is used when the vehicle is standing for prolonged periods with the engine running. The engine may be started in this range. Set the parking brake if you must leave the vehicle.

CAUTION!

Coasting the vehicle or driving for any other reason with shift lever in NEUTRAL can result in transmission damage.

WARNING!

Do not coast in NEUTRAL and never turn off the ignition to coast down a hill. These are unsafe practices that limit your response to changing traffic or road conditions. You might lose control of the vehicle and have an accident.

DRIVE

This range should be used for most city and highway driving. It provides the smoothest upshifts and downshifts and the best fuel economy.

The transmission automatically upshifts through fifth gear. The DRIVE position provides optimum driving characteristics under all normal operating conditions.

When frequent transmission shifting occurs (such as when operating the vehicle under heavy loading conditions, in hilly terrain, traveling into strong head winds, or while towing heavy trailers), use the AutoStick®/ Electronic Range Select (ERS) mode to select a lower gear.

Delayed Shifts in Cold Temperatures

During cold temperature operation, you may notice delayed upshifts depending on engine and transmission temperature as well as vehicle speed. This feature improves warm up time of the engine and transmission to achieve maximum efficiency.

Downloaded from www.Manualslib.com manuals search engine

Temporary Transmission Limp Home Mode

The transmission is monitored for abnormal conditions. If a condition is detected that could result in transmission damage, the transmission will engage Limp Home Mode. If vehicle acceleration worsens, or the transmission no longer shifts, the transmission is most likely operating in the Limp Home Mode. In this mode, the transmission will remain in the current gear until the vehicle is brought to a stop. After the vehicle has stopped, PARK, REVERSE, and NEUTRAL will continue to operate. Second gear will operate in the DRIVE position. The Malfunction Indicator Light (MIL) may be illuminated.

If the problem has been momentary, the transmission can be reset to regain all forward gears. To reset the transmission, use the following procedure:

1. Stop the vehicle.
2. Move the shift lever to the PARK position.
3. Turn the engine off.
4. Wait approximately 10 seconds.
5. Restart the engine.
6. Move the shift lever to the desired range. If the problem is no longer detected, the transmission will return to normal operation.

If the transmission cannot be reset, see your authorized dealer.

NOTE: Even if the transmission can be reset, we recommend that you visit your authorized dealer at your earliest possible convenience. Your authorized dealer has diagnostic equipment to determine if the problem could recur.

Have the transmission checked at your authorized dealer as soon as possible.

Downloaded from www.Manualslib.com manuals search engine

AutoStick®/Electronic Range Select (ERS)
Your vehicle may be equipped with AutoStick® or Electronic Range Select (ERS) to provide greater driver control of automatic transmission operation. Refer to "AutoStick®" in this section.

Electronic Range Select (ERS) – If Equipped
Electronic Range Select (ERS) allows the driver to limit the highest available transmission gear, providing you with more control of the vehicle. ERS allows you to maximize engine braking, eliminate undesirable upshifts, and improve overall vehicle performance. This system can also provide you with more control during mountain driving, trailer towing, and other situations.

ERS Operation
When the shift lever is in the Drive position, the transmission will operate automatically, shifting between the five available gears. Moving the shift lever to the left (D-) will activate ERS, downshift the transmission, and display the top available gear in the instrument cluster. Once in ERS mode, tapping the shift lever to the left (D-) or right (D+) will change the top available gear. The transmission will not shift above the indicated gear, but will shift up and down normally (automatically) through the lower gears. Holding the shift lever to the left (D-) will shift the transmission to the lowest gear possible (without overspeeding the engine) for maximum engine braking. Holding the shift lever to the right (D+) for a few seconds will disengage ERS mode.

AUTOSTICK® — IF EQUIPPED

AutoStick® is a driver-interactive transmission feature that offers manual gear shifting to provide you with more control of the vehicle. AutoStick® allows you to maximize engine braking, eliminate undesirable upshifts and downshifts, and improve overall vehicle performance. This system can also provide you with more control during passing, city driving, cold slippery conditions, mountain driving, trailer towing, and many other situations.

Downloaded from www.Manualslib.com manuals search engine

Operation

When the shift lever is in the DRIVE position, the transmission will operate automatically, shifting between the five available gears. To engage AutoStick®, simply move the shift lever to the right or left (D+/D-) while in the DRIVE position. The gear position will display in the instrument cluster. In the AutoStick® mode, the transmission will shift up and down when left or right (D-/D+) is manually selected by the driver. It will remain in the selected gear until another upshift or downshift is chosen. The transmission will automatically downshift as the vehicle slows to a stop (to prevent engine lugging) and will display the current gear. Tapping the shift lever to the D+ position (at a stop) will allow starting in second gear. After a stop, the driver should manually upshift (D+) the transmission as the vehicle is accelerated.

To disengage AutoStick® mode, hold the shift lever to the right (D+) for a few seconds. You can shift in or out of the AutoStick® mode at any time without taking your foot off the accelerator pedal.

WARNING!

Do not downshift for additional engine braking on a slippery surface. The drive wheels could lose their grip and the vehicle could skid, causing an accident or personal injury.

ALL-WHEEL DRIVE (AWD) — IF EQUIPPED

This vehicle is equipped with an active on-demand All-Wheel Drive (AWD) system which makes available optimum traction for a wide variety of road surface and driving conditions. The system minimizes wheel slip by automatically redirecting torque to the front and rear wheels as necessary.

Downloaded from www.Manualslib.com manuals search engine

To maximize fuel economy, your AWD vehicle automatically defaults to rear-wheel drive (RWD) when road and environmental conditions are such that wheel slip is unlikely to occur. When specific road and environmental conditions require increased levels of road traction, the vehicle automatically shifts into AWD mode. Automatic AWD operation could be activated by outside temperature, wheel slip, or other predetermined conditions (there may be a slight delay for AWD engagement after a wheel slip condition occurs). AWD can also be manually selected by moving the shift lever into the AutoStick® mode (+/-) or activating the windshield wipers for an extended period of time. Drive mode, RWD or AWD, is displayed momentarily in the Electronic Vehicle Information Center (EVIC) in the gage area of the vehicle display when the transmission is first shifted into gear, and if the drive mode changes during vehicle operation.

NOTE: If the "t CASE" or "SERVICE AWD SYSTEM" warning message appears after engine start up, or during driving, it means that the AWD system is not functioning properly and that service is required. Refer to "Electronic Vehicle Information Center (EVIC)" in "Understanding Your Instrument Panel" for further information.

CAUTION!

All wheels must have the same size and type tires. Unequal tire sizes must not be used. Unequal tire size may cause failure of the front differential and/or the transfer case.

DRIVING ON SLIPPERY SURFACES

Acceleration

Rapid acceleration on snow covered, wet, or other slippery surfaces may cause the rear wheels to pull erratically to the right or left. This phenomenon occurs when there is a difference in the surface traction under the rear (driving) wheels.

Downloaded from www.Manualslib.com manuals search engine

WARNING!

Rapid acceleration on slippery surfaces is dangerous. Unequal traction can cause sudden pulling of the rear wheels. You could lose control of the vehicle and possibly have an accident. Accelerate slowly and carefully whenever there is likely to be poor traction (ice, snow, wet mud, loose sand, etc.).

Traction

When driving on wet or slushy roads, it is possible for a wedge of water to build up between the tire and road surface. This is known as hydroplaning and may cause partial or complete loss of vehicle control and stopping ability. To reduce this possibility, the following precautions should be observed:

1. Slow down during rainstorms or when the roads are slushy.

2. Slow down if the road has standing water or puddles.

3. Replace tires when tread wear indicators first become visible.

4. Keep tires properly inflated.

5. Maintain sufficient distance between your vehicle and the vehicle in front of you to avoid a collision in a sudden stop.

DRIVING THROUGH WATER

Driving through water more than a few inches/centimeters deep will require extra caution to ensure safety and prevent damage to your vehicle.

Downloaded from www.Manualslib.com manuals search engine

Flowing/Rising Water

WARNING!

Do not drive on or across a road or path where water is flowing and/or rising (as in storm run-off). Flowing water can wear away the road or path's surface and cause your vehicle to sink into deeper water. Furthermore, flowing and/or rising water can carry your vehicle away swiftly. Failure to follow this warning may result in injuries that are serious or fatal to you, your passengers, and others around you.

Shallow Standing Water

Although your vehicle is capable of driving through shallow standing water, consider the following Caution and Warning before doing so.

CAUTION!

- **Always check the depth of the standing water before driving through it. Never drive through standing water that is deeper than the bottom of the tire rims mounted on the vehicle.**
- **Determine the condition of the road or the path that is under water and if there are any obstacles in the way before driving through the standing water.**
- **Do not exceed 5 mph (8 km/h) when driving through standing water. This will minimize wave effects.**

(Continued)

Downloaded from www.Manualslib.com manuals search engine

CAUTION! (Continued)

- Driving through standing water may cause damage to your vehicle's drivetrain components. Always inspect your vehicle's fluids (i.e., engine oil, transmission, axle, etc.) for signs of contamination (i.e., fluid that is milky or foamy in appearance) after driving through standing water. Do not continue to operate the vehicle if any fluid appears contaminated, as this may result in further damage. Such damage is not covered by the New Vehicle Limited Warranty.
- Getting water inside your vehicle's engine can cause it to lock up and stall out, and cause serious internal damage to the engine. Such damage is not covered by the New Vehicle Limited Warranty.

WARNING!

- Driving through standing water limits your vehicle's traction capabilities. Do not exceed 5 mph (8 km/h) when driving through standing water.
- Driving through standing water limits your vehicle's braking capabilities, which increases stopping distances. Therefore, after driving through standing water, drive slowly and lightly press on the brake pedal several times to dry the brakes.
- Getting water inside your vehicle's engine can cause it to lock up and stall out, and leave you stranded.
- Failure to follow these warnings may result in injuries that are serious or fatal to you, your passengers, and others around you.

Downloaded from www.Manualslib.com manuals search engine

POWER STEERING

The standard power steering system will give you good vehicle response and increased ease of maneuverability in tight spaces. The system will provide mechanical steering capability if power assist is lost.

If for some reason the power assist is interrupted, it will still be possible to steer your vehicle. Under these conditions, you will observe a substantial increase in steering effort, especially at very low vehicle speeds and during parking maneuvers.

NOTE:

- Increased noise levels at the end of the steering wheel travel are considered normal and do not indicate that there is a problem with the power steering system.
- Upon initial start-up in cold weather, the power steering pump may make noise for a short amount of time. This is due to the cold, thick fluid in the steering system. This noise should be considered normal, and it does not in any way damage the steering system.

WARNING!

Continued operation with reduced power steering assist could pose a safety risk to yourself and others. Service should be obtained as soon as possible.

CAUTION!

Prolonged operation of the steering system at the end of the steering wheel travel will increase the steering fluid temperature and it should be avoided when possible. Damage to the power steering pump may occur.

Power Steering Fluid Check

Checking the power steering fluid level at a defined service interval is not required. The fluid should only be checked if a leak is suspected, abnormal noises are

Downloaded from www.Manualslib.com manuals search engine

apparent, and/or the system is not functioning as anticipated. Coordinate inspection efforts through an authorized dealer.

CAUTION!

Do not use chemical flushes in your power steering system as the chemicals can damage your power steering components. Such damage is not covered by the New Vehicle Limited Warranty.

WARNING!

Fluid level should be checked on a level surface and with the engine off to prevent injury from moving parts and to ensure accurate fluid level reading. Do not overfill. Use only manufacturer's recommended power steering fluid.

If necessary, add fluid to restore to the proper indicated level. With a clean cloth, wipe any spilled fluid from all surfaces. Refer to "Fluids, Lubricants, and Genuine Parts" in "Maintaining Your Vehicle" for further information.

MULTI-DISPLACEMENT SYSTEM (MDS) (IF EQUIPPED) – 5.7L ENGINE ONLY

This feature offers improved fuel economy by shutting off four of the engine's eight cylinders during light load and cruise conditions. The system is automatic with no driver inputs or additional driving skills required.

NOTE: The MDS system may take some time to return to full functionality after a battery disconnect.

PARKING BRAKE

Before leaving the vehicle, make sure that the parking brake is fully applied and place the shift lever in the PARK position.

Downloaded from www.Manualslib.com manuals search engine

The foot operated parking brake is located below the lower left corner of the instrument panel. To apply the park brake, firmly push the park brake pedal fully. To release the parking brake, press the park brake pedal a second time and let your foot up as you feel the brake disengage.

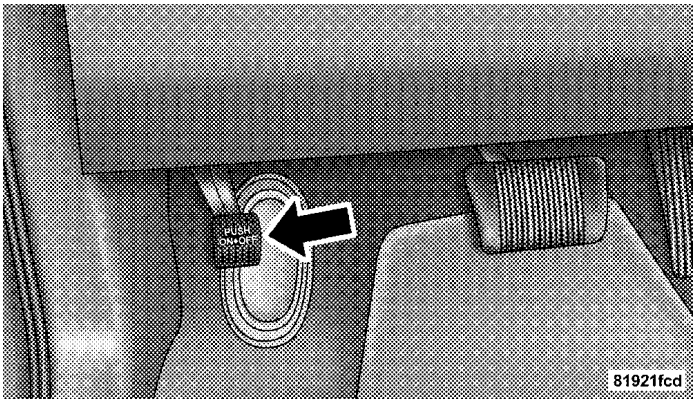

Parking Brake

When the parking brake is applied with the ignition switch in the ON position, the "Brake Warning Light" in the instrument cluster will illuminate.

NOTE:

- When the parking brake is applied and the transmission is placed in gear, the "Brake Warning Light" will flash. If vehicle speed is detected, a chime will sound to alert the driver. Fully release the parking brake before attempting to move the vehicle.
- This light only shows that the parking brake is applied. It does not show the degree of brake application.

When parking on a hill, it is important to turn the front wheels toward the curb on a downhill grade and away from the curb on an uphill grade. Apply the parking brake before placing the shift lever in PARK, otherwise the load on the transmission locking mechanism may

Downloaded from www.Manualslib.com manuals search engine

make it difficult to move the shift lever out of PARK. The parking brake should always be applied whenever the driver is not in the vehicle.

WARNING!

- **Never use the PARK position as a substitute for the parking brake. Always apply the parking brake fully when parked to guard against vehicle movement and possible injury or damage.**
- **Never leave children alone in a vehicle. Leaving unattended children in a vehicle is dangerous for a number of reasons. A child or others could be seriously or fatally injured.**
- **Do not leave the key fob in the ignition switch. A child could operate power windows, other controls, or move the vehicle.**

(Continued)

WARNING! (Continued)

- **Be sure the parking brake is fully disengaged before driving; failure to do so can lead to brake failure and an accident.**
- **Always fully apply the parking brake when leaving your vehicle, or it may roll and cause damage or injury. Also be certain to leave the transmission in PARK. Failure to do so may allow the vehicle to roll and cause damage or injury.**

CAUTION!

If the "Brake Warning Light" remains on with the parking brake released, a brake system malfunction is indicated. Have the brake system serviced by an authorized dealer immediately.

Downloaded from www.Manualslib.com manuals search engine

ANTI-LOCK BRAKE SYSTEM

The Anti-Lock Brake System (ABS) provides increased vehicle stability and brake performance under most braking conditions. The system automatically "pumps" the brakes during severe braking conditions to prevent wheel lock-up.

The Electronic Brake Force Distribution (EBD) prevents the rear wheels from over-braking and provides greater control of available braking forces applied to the rear axle.

When the vehicle is driven over 7 mph (11 km/h), you may also hear a slight clicking sound as well as some related motor noises. These noises are the system performing its self check cycle to ensure that the ABS is working properly. This self check occurs each time the vehicle is started and accelerated past 7 mph (11 km/h).

ABS is activated during braking under certain road or stopping conditions. ABS-inducing conditions can include ice, snow, gravel, bumps, railroad tracks, loose debris, or panic stops.

You also may experience the following when the brake system goes into Anti-Lock:

- The ABS motor running (it may continue to run for a short time after the stop),
- The clicking sound of solenoid valves,
- Brake pedal pulsations, and
- A slight drop or fall away of the brake pedal at the end of the stop.

These are all normal characteristics of ABS.

Downloaded from www.Manualslib.com manuals search engine

WARNING!

- **The ABS contains sophisticated electronic equipment that may be susceptible to interference caused by improperly installed or high output radio transmitting equipment. This interference can cause possible loss of anti-lock braking capability. Installation of such equipment should be performed by qualified professionals.**
- **Pumping of the Anti-Lock Brakes will diminish their effectiveness and may lead to an accident. Pumping makes the stopping distance longer. Just press firmly on your brake pedal when you need to slow down or stop.**

(Continued)

WARNING! (Continued)

- **The ABS cannot prevent the natural laws of physics from acting on the vehicle, nor can it increase braking or steering efficiency beyond that afforded by the condition of the vehicle brakes and tires or the traction afforded.**
- **The ABS cannot prevent accidents, including those resulting from excessive speed in turns, following another vehicle too closely, or hydroplaning. Only a safe, attentive, and skillful driver can prevent accidents.**
- **The capabilities of an ABS equipped vehicle must never be exploited in a reckless or dangerous manner that could jeopardize the user's safety or the safety of others.**

All vehicle wheels and tires must be the same size and type and tires must be properly inflated to produce accurate signals for the computer.

Downloaded from www.Manualslib.com manuals search engine

ELECTRONIC BRAKE CONTROL SYSTEM

Your vehicle is equipped with an advanced electronic brake control system that include Anti-Lock Brake System (ABS), Traction Control System (TCS), Brake Assist System (BAS), and the Electronic Stability Program (ESP). All four of these systems work together to enhance vehicle stability and control in various driving conditions.

Anti-Lock Brake System (ABS)

This system aids the driver in maintaining vehicle control under adverse braking conditions by controlling hydraulic brake pressure. This prevents wheel lock-up to help avoid skidding on slippery surfaces during braking. Refer to "Anti-Lock Brake System" in "Starting and Operating" for further information.

WARNING!

The ABS cannot prevent the natural laws of physics from acting on the vehicle, nor can it increase the traction afforded by prevailing road conditions. The ABS cannot prevent accidents, including those resulting from excessive speed in turns, driving on very slippery surfaces, or hydroplaning. Only a safe, attentive, and skillful driver can prevent accidents. The capabilities of an ABS-equipped vehicle must never be exploited in a reckless or dangerous manner that could jeopardize the user's safety or the safety of others.

Traction Control System (TCS)

This system monitors the amount of wheel spin of each driven wheel. If wheel spin is detected, brake pressure is applied to the slipping wheel(s) and engine power is reduced to provide enhanced acceleration and stability.

Downloaded from www.Manualslib.com manuals search engine

Brake Assist System (BAS)

This system complements the ABS by optimizing the vehicle braking capability during emergency brake maneuvers. This system detects an emergency braking situation by sensing the rate and amount of brake application and then applies optimum pressure to the brakes. This can help reduce braking distances.

Applying the brakes very quickly results in the best BAS assistance. To receive the benefits of this system, you must apply continuous brake pedal pressure during the stopping sequence. Do not reduce brake pedal pressure unless braking is no longer desired. Once the brake pedal is released, the BAS is deactivated.

WARNING!

The BAS cannot prevent the natural laws of physics from acting on the vehicle, nor can it increase the traction afforded by prevailing road conditions. The BAS cannot prevent accidents, including those resulting from excessive speed in turns, driving on very slippery surfaces, or hydroplaning. Only a safe, attentive, and skillful driver can prevent accidents. The capabilities of a BAS-equipped vehicle must never be exploited in a reckless or dangerous manner that could jeopardize the user's safety or the safety of others.

Electronic Stability Program (ESP)

This system enhances directional control and stability of the vehicle under various driving conditions. The ESP corrects for oversteering and understeering the vehicle by applying the brake of the appropriate wheel. Engine

Downloaded from www.Manualslib.com manuals search engine

power may also be reduced to assist in counteracting the condition of oversteer or understeer and help the vehicle maintain the desired path.

The ESP uses sensors in the vehicle to determine the path that the driver intends to steer the vehicle and compares it to the actual path of the vehicle. When the actual path does not match the intended path, the ESP applies the brake of the appropriate wheel to assist in counteracting the condition of oversteer or understeer.

- Oversteer - when the vehicle is turning more than appropriate for the steering wheel position.
- Understeer - when the vehicle is turning less than appropriate for the steering wheel position.

The "ESP/TCS Indicator Light" located in the instrument cluster, starts to flash as soon as the tires lose traction and the ESP system becomes active. The "ESP/TCS Indicator Light" also flashes when the TCS is active. If the "ESP/TCS Indicator Light" begins to flash during acceleration, ease up on the accelerator and apply as little throttle as possible. Be sure to adapt your speed and driving to the prevailing road conditions.

WARNING!

The ESP cannot prevent the natural laws of physics from acting on the vehicle, nor can it increase the traction afforded by prevailing road conditions. The ESP cannot prevent accidents, including those resulting from excessive speed in turns, driving on very slippery surfaces, or hydroplaning. Only a safe, attentive, and skillful driver can prevent accidents. The capabilities of an ESP-equipped vehicle must never be exploited in a reckless or dangerous manner that could jeopardize the user's safety or the safety of others.

Downloaded from www.Manualslib.com manuals search engine

The ESP system has two available operating modes:

ESP On

This is the normal operating mode for the ESP. Whenever the vehicle is started, the ESP system will be in this mode. This mode should be used for most driving conditions. The ESP should only be turned OFF for specific reasons as noted in the following paragraphs.

Partial Off

The "Partial Off" mode is intended for times when a more spirited driving experience is desired. It is also intended for driving in deep snow, sand, or gravel. This mode disables the TCS portion of the ESP and raises the threshold for ESP activation, which allows for more wheel spin than what ESP normally allows.

The ESP OFF switch is located on the switch bank in the center of the instrument panel. To enter the "Partial Off" mode, momentarily press the ESP OFF switch and the "ESP/TCS Indicator Light" will illuminate. To turn the ESP on again, momentarily press the ESP OFF switch and the "ESP/TCS Indicator Light" will turn off.

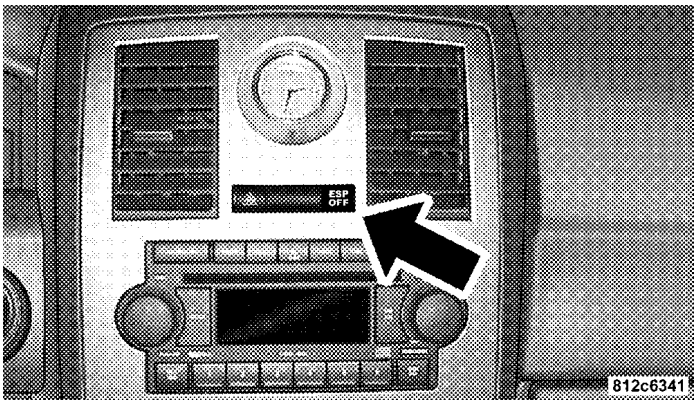

ESP OFF Switch

NOTE: To improve the vehicle's traction when driving with snow chains, or when starting off in deep snow, sand, or gravel, it may be desirable to switch to the "Partial Off" mode by momentarily pressing the ESP OFF

Downloaded from www.Manualslib.com manuals search engine

switch. Once the situation requiring "Partial Off" mode is overcome, turn the ESP on again by momentarily pressing the ESP OFF switch. This may be done while the vehicle is in motion.

Synchronizing ESP

ESP
BAS

The Malfunction Indicator Light for the ESP is combined with BAS indicator. If the power supply is interrupted (battery disconnected or discharged), the "ESP/BAS Malfunction Indicator Light" may illuminate with the engine running. If this should occur, turn the steering wheel completely to the left and then to the right. The "ESP/BAS Malfunction Indicator Light" should go out. However, if the light remains on, have the ESP and BAS checked at your authorized dealer as soon as possible.

ESP/BAS Malfunction Indicator Light and ESP/TCS Indicator Light

ESP
BAS

The Malfunction Indicator Light for the ESP is combined with the BAS indicator. The "ESP/BAS Malfunction Indicator Light" and the "ESP/TCS Indicator Light" in the instrument cluster both come on when the ignition switch is turned to the ON position. They should go out with the engine running.

The system will turn the "ESP/BAS Malfunction Indicator Light" on continuously while the engine running if it detects a malfunction in either the ESP or the BAS or both. If the light remains on after several ignition switch cycles, and you have driven the vehicle several miles (kilometers) at speeds greater than 30 mph (48 km/h), and the ESP is synchronized (refer to Synchronizing ESP), see your authorized dealer as soon as possible to have the problem diagnosed and corrected.

Downloaded from www.Manualslib.com manuals search engine

NOTE:

- The "ESP/TCS Indicator Light" and the "ESP/BAS Malfunction Indicator Light" will turn on momentarily each time the ignition switch is turned to the ON position.
- Each time the ignition switch is turned to the ON position, the ESP system will be on even if it was turned off previously.
- The ESP control system will make buzzing or clicking sounds when it is active. This is NORMAL; the sounds will stop when ESP becomes inactive following the maneuver that caused the ESP activation.

TIRE SAFETY INFORMATION

Tire Markings

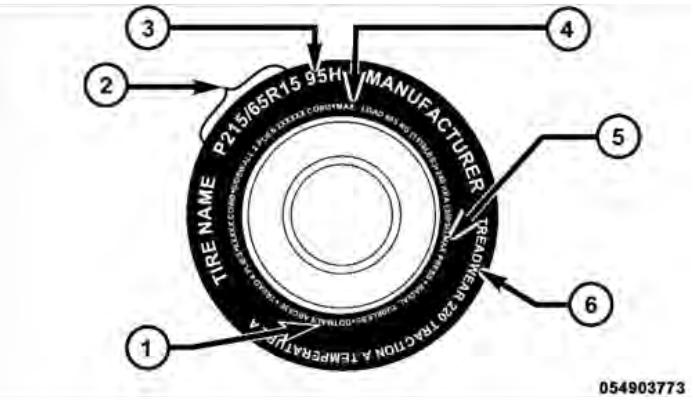

1 — U.S. DOT Safety Standards Code (TIN)	4 — Maximum Load
2 — Size Designation	5 — Maximum Pressure
3 — Service Description	6 — Treadwear, Traction and Temperature Grades

5

Downloaded from www.Manualslib.com manuals search engine

NOTE:

- P (Passenger) - Metric tire sizing is based on U.S. design standards. P-Metric tires have the letter "P" molded into the sidewall preceding the size designation. Example: P215/65R15 95H.
- European-Metric tire sizing is based on European design standards. Tires designed to this standard have the tire size molded into the sidewall beginning with the section width. The letter "P" is absent from this tire size designation. Example: 215/65R15 96H.
- LT (Light Truck) - Metric tire sizing is based on U.S. design standards. The size designation for LT-Metric tires is the same as for P-Metric tires except for the letters "LT" that are molded into the sidewall preceding the size designation. Example: LT235/85R16.
- Temporary spare tires are high-pressure compact spares designed for temporary emergency use only. Tires designed to this standard have the letter "T" molded into the sidewall preceding the size designation. Example: T145/80D18 103M.
- High flotation tire sizing is based on U.S. design standards and it begins with the tire diameter molded into the sidewall. Example: 31x10.5 R15 LT.

Downloaded from www.Manualslib.com manuals search engine

Tire Sizing Chart

EXAMPLE:
Size Designation:
P = Passenger car tire size based on U.S. design standards **"....blank...."** = Passenger car tire based on European design standards **LT** = Light truck tire based on U.S. design standards **T** = Temporary spare tire **31** = Overall diameter in inches (in)
215 = Section width in millimeters (mm)
65 = Aspect ratio in percent (%) — Ratio of section height to section width of tire **10.5** = Section width in inches (in)
R = Construction code — "R" means radial construction —"D" means diagonal or bias construction
15 = Rim diameter in inches (in)

Downloaded from www.Manualslib.com manuals search engine

EXAMPLE:
Service Description:
95 = Load Index — A numerical code associated with the maximum load a tire can carry
H = Speed Symbol — A symbol indicating the range of speeds at which a tire can carry a load corresponding to its load index under certain operating conditions — The maximum speed corresponding to the speed symbol should only be achieved under specified operating conditions (i.e., tire pressure, vehicle loading, road conditions, and posted speed limits)
Load Identification:
"....blank...." = Absence of any text on the sidewall of the tire indicates a Standard Load (SL) tire
Extra Load (XL) = Extra load (or reinforced) tire
Light Load = Light load tire
C, D, E = Load range associated with the maximum load a tire can carry at a specified pressure
Maximum Load — Maximum load indicates the maximum load this tire is designed to carry
Maximum Pressure — Maximum pressure indicates the maximum permissible cold tire inflation pressure for this tire

Downloaded from www.Manualslib.com manuals search engine

Tire Identification Number (TIN)

The TIN may be found on one or both sides of the tire, however, the date code may only be on one side. Tires with white sidewalls will have the full TIN, including the date code, located on the white sidewall side of the tire. Look for the TIN on the outboard side of black sidewall tires as mounted on the vehicle. If the TIN is not found on the outboard side, then you will find it on the inboard side of the tire.

EXAMPLE:
DOT MA L9 ABCD 0301
DOT = Department of Transportation — This symbol certifies that the tire is in compliance with the U.S. Department of Transportation tire safety standards and is approved for highway use
MA = Code representing the tire manufacturing location (two digits)
L9 = Code representing the tire size (two digits)
ABCD = Code used by the tire manufacturer (one to four digits)
03 = Number representing the week in which the tire was manufactured (two digits) —03 means the 3rd week.
01 = Number representing the year in which the tire was manufactured (two digits) —01 means the year 2001 — Prior to July 2000, tire manufacturers were only required to have one number to represent the year in which the tire was manufactured. Example: 031 could represent the 3rd week of 1981 or 1991

Downloaded from www.Manualslib.com manuals search engine

Tire Terminology and Definitions

Term	Definition
B-Pillar	The vehicle B-Pillar is a structural member of the body located between the front and rear door (of a four-door vehicle) running from the sill to the roof.
Cold Tire Pressure	Cold tire inflation pressure is defined as the tire pressure after the vehicle has not been driven for at least 3 hours, or driven less than 1 mile (1.6 km) after sitting for a three hour period. Inflation pressure is measured in units of PSI (pounds per square inch) or KPa (kilopascals).
Maximum Inflation Pressure	The maximum inflation pressure is the maximum permissible cold tire inflation pressure for this tire. The max inflation pressure is molded into the sidewall.
Recommended Inflation Pressure	Vehicle manufacturer's recommended tire inflation pressure as shown on the tire placard.
Tire Placard	A paper label permanently attached to the vehicle showing the vehicle's loading capacity, the original equipment tire size and the recommended inflation pressure.

Downloaded from www.Manualslib.com manuals search engine

Tire Loading and Tire Pressure

Tire Placard Location

NOTE: The proper cold tire inflation pressure is listed on the driver's side B-Pillar.

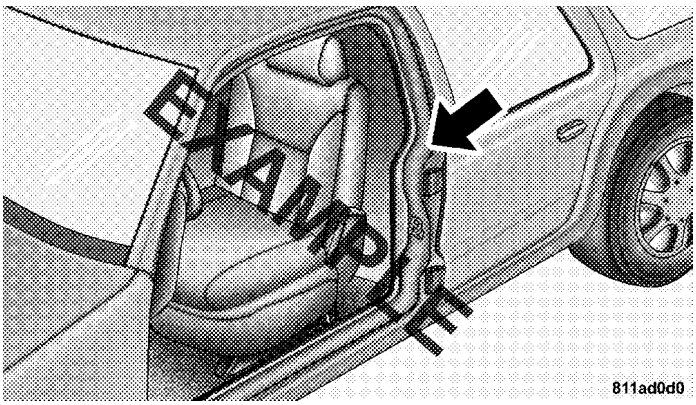

Tire Placard Location

Tire and Loading Information Placard

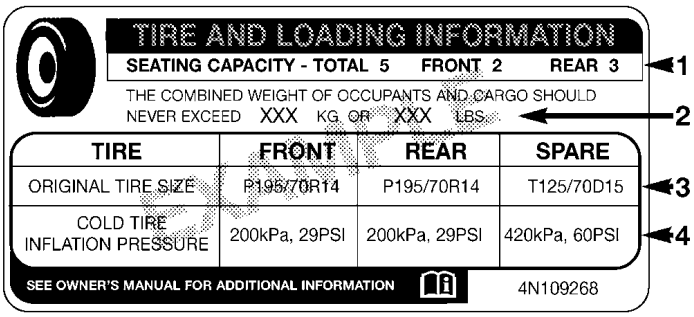

Tire and Loading Information Placard

This placard tells you important information about the:

1) number of people that can be carried in the vehicle
2) total weight your vehicle can carry
3) tire size designed for your vehicle
4) cold tire inflation pressures for the front, rear, and spare tires.

5

Downloaded from www.Manualslib.com manuals search engine

Loading

The vehicle maximum load on the tire must not exceed the load carrying capacity of the tire on your vehicle. You will not exceed the tire's load carrying capacity if you adhere to the loading conditions, tire size, and cold tire inflation pressures specified on the Tire and Loading Information placard and in the "Vehicle Loading" section of this manual.

NOTE: Under a maximum loaded vehicle condition, gross axle weight ratings (GAWRs) for the front and rear axles must not be exceeded. For further information on GAWRs, vehicle loading, and trailer towing, refer to "Vehicle Loading" in this section.

To determine the maximum loading conditions of your vehicle, locate the statement "The combined weight of occupants and cargo should never exceed XXX lbs or XXX kg" on the Tire and Loading Information placard. The combined weight of occupants, cargo/luggage and trailer tongue weight (if applicable) should never exceed the weight referenced here.

Steps for Determining Correct Load Limit

1. Locate the statement "The combined weight of occupants and cargo should never exceed XXX lbs or XXX kg" on your vehicle's placard.

2. Determine the combined weight of the driver and passengers that will be riding in your vehicle.

3. Subtract the combined weight of the driver and passengers from XXX lbs or XXX kg.

Downloaded from www.Manualslib.com manuals search engine

4. The resulting figure equals the available amount of cargo and luggage load capacity. For example, if "XXX" amount equals 1,400 lbs (635 kg) and there will be five 150 lb (68 kg) passengers in your vehicle, the amount of available cargo and luggage load capacity is 650 lbs (295 kg) (since 5 x 150 = 750, and 1400 – 750 = 650 lbs [295 kg]).

5. Determine the combined weight of luggage and cargo being loaded on the vehicle. That weight may not safely exceed the available cargo and luggage load capacity calculated in Step 4.

6. If your vehicle will be towing a trailer, load from your trailer will be transferred to your vehicle. Consult this manual to determine how this reduces the available cargo and luggage load capacity of your vehicle.

NOTE:

- The following table shows examples on how to calculate total load, cargo/luggage, and towing capacities of your vehicle with varying seating configurations and number and size of occupants. This table is for illustration purposes only and may not be accurate for the seating and load carry capacity of your vehicle.
- For the following example, the combined weight of occupants and cargo should never exceed 865 lbs (392 kg).

Downloaded from www.Manualslib.com manuals search engine

Occupants			Combined weight of occupants and cargo from Tire Placard	MINUS	Combined Occupant's weight	=	AVAILABLE Cargo/Luggage and Trailer Tongue Weight
TOTAL	FRONT	REAR					
EXAMPLE 1							
5	2	3	865 lbs	minus	Occupant 1: 200 lbs Occupant 2: 130 lbs Occupant 3: 160 lbs Occupant 4: 100 lbs Occupant 5: 80 lbs TOTAL WEIGHT: 670 lbs 670 lbs	=	195 lbs
EXAMPLE 2							
3	2	1	865 lbs	minus	Occupant 1: 210 lbs Occupant 2: 180 lbs Occupant 3: 150 lbs TOTAL WEIGHT: 540 lbs 540 lbs	=	325 lbs
EXAMPLE 3							
2	2	0	865 lbs	minus	Occupant 1: 200 lbs Occupant 2: 200 lbs TOTAL WEIGHT: 400 lbs 400 lbs	=	465 lbs

EXAMPLE

811a4d11

Downloaded from www.Manualslib.com manuals search engine

WARNING!

Overloading of your tires is dangerous. Overloading can cause tire failure, affect vehicle handling, and increase your stopping distance. Use tires of the recommended load capacity for your vehicle. Never overload them.

TIRES — GENERAL INFORMATION

Tire Pressure

Proper tire inflation pressure is essential to the safe and satisfactory operation of your vehicle. Three primary areas are affected by improper tire pressure:

Safety

WARNING!

- **Improperly inflated tires are dangerous and can cause accidents.**
- **Under-inflation increases tire flexing and can result in tire over-heating and failure.**
- **Over-inflation reduces a tire's ability to cushion shock. Objects on the road and chuckholes can cause damage that result in tire failure.**
- **Unequal tire pressures can cause steering problems. You could lose control of your vehicle.**
- **Over-inflated or under-inflated tires can affect vehicle handling and can fail suddenly, resulting in loss of vehicle control.**

(Continued)

Downloaded from www.Manualslib.com manuals search engine

WARNING! (Continued)

- **Unequal tire pressures from one side of the vehicle to the other can cause the vehicle to drift to the right or left.**
- **Always drive with each tire inflated to the recommended cold tire inflation pressure.**

Economy

Improper inflation pressures can cause uneven wear patterns to develop across the tire tread. These abnormal wear patterns will reduce tread life resulting in a need for earlier tire replacement. Under-inflation also increases tire rolling resistance and results in higher fuel consumption.

Ride Comfort and Vehicle Stability

Proper tire inflation contributes to a comfortable ride. Over-inflation produces a jarring and uncomfortable ride.

Tire Inflation Pressures

The proper cold tire inflation pressure is listed on the driver's side "B" Pillar.

Some vehicles may have Supplemental Tire Pressure Information for vehicle loads that are less than the maximum loaded vehicle condition. These pressure conditions will be found in the "Supplemental Tire Pressure Information" section of this manual.

The pressure should be checked and adjusted as well as inspecting for signs of tire wear or visible damage at least once a month. Use a good quality pocket-type gauge to check tire pressure. Do not make a visual judgement when determining proper inflation. Radial tires may look properly inflated even when they are under-inflated.

Downloaded from www.Manualslib.com manuals search engine

CAUTION!

After inspecting or adjusting the tire pressure, always reinstall the valve stem cap. This will prevent moisture and dirt from entering the valve stem, which could damage the valve stem.

Inflation pressures specified on the placard are always "cold tire inflation pressure." Cold tire inflation pressure is defined as the tire pressure after the vehicle has not been driven for at least three hours, or driven less than 1 mile (1.6 km) after a three hour period. The cold tire inflation pressure must not exceed the maximum inflation pressure molded into the tire sidewall.

Check tire pressures more often if subject to a wide range of outdoor temperatures, as tire pressures vary with temperature changes.

Tire pressures change by approximately 1 psi (7 kPa) per 12°F (7°C) of air temperature change. Keep this in mind when checking tire pressure inside a garage, especially in the Winter.

Example: If garage temperature = 68°F (20°C) and the outside temperature = 32°F (0°C) then the cold tire inflation pressure should be increased by 3 psi (21 kPa), which equals 1 psi (7 kPa) for every 12°F (7°C) for this outside temperature condition.

Tire pressure may increase from 2 to 6 psi (13 to 40 kPa) during operation. DO NOT reduce this normal pressure build up or your tire pressure will be too low.

Downloaded from www.Manualslib.com manuals search engine

Tire Pressures for High Speed Operation

The manufacturer advocates driving at safe speeds within posted speed limits. Where speed limits or conditions are such that the vehicle can be driven at high speeds, maintaining correct tire inflation pressure is very important. Increased tire pressure and reduced vehicle loading may be required for high-speed vehicle operation. Refer to original equipment or an authorized tire dealer for recommended safe operating speeds, loading and cold tire inflation pressures.

WARNING!

High speed driving with your vehicle under maximum load is dangerous. The added strain on your tires could cause them to fail. You could have a serious accident. Do not drive a vehicle loaded to the maximum capacity at continuous speeds above 75 mph (120 km/h).

Radial Ply Tires

WARNING!

Combining radial ply tires with other types of tires on your vehicle will cause your vehicle to handle poorly. The instability could cause an accident. Always use radial ply tires in sets of four. Never combine them with other types of tires.

Cuts and punctures in radial tires are repairable only in the tread area because of sidewall flexing. Consult your authorized tire dealer for radial tire repairs.

Compact Spare Tire – If Equipped

The compact spare is for temporary emergency use with radial tires. It is engineered to be used on your style vehicle only. Since this tire has limited tread life, the original tire should be repaired (or replaced) and reinstalled at the first opportunity.

Downloaded from www.Manualslib.com manuals search engine

WARNING!

Temporary use spare tires are for emergency use only. With these tires, do not drive more than 50 mph (80 km/h). Temporary use spare tires have limited tread life. When the tread is worn to the tread wear indicators, the temporary use spare tire needs to be replaced. Be sure to follow the warnings, which apply to your spare. Failure to do so could result in spare tire failure and loss of vehicle control.

Do not install a wheel cover or attempt to mount a conventional tire on the compact spare wheel, since the wheel is designed specifically for the compact spare.

Do not install more than one compact spare tire/wheel on the vehicle at any given time.

CAUTION!

Because of the reduced ground clearance, do not take your vehicle through an automatic car wash with the compact spare installed. Damage to the vehicle may result.

Limited-Use Spare – If Equipped

The limited-use spare tire is for temporary emergency use on your vehicle. This tire is identified by a limited-use spare tire warning label located on the limited-use spare tire and wheel assembly. This tire may look like the original equipped tire on the front or rear axle of your vehicle, but it is not. Installation of this limited-use spare tire affects vehicle handling. Since it is not the same tire, replace (or repair) the original tire and reinstall on the vehicle at the first opportunity.

Downloaded from www.Manualslib.com manuals search engine

WARNING!

The limited-use spare tires are for emergency use only. Installation of this limited-use spare tire affects vehicle handling. With this tire, do not drive more than 50 mph (80 km/h). Keep inflated to the cold tire inflation pressure listed on either your tire placard or limited-use spare tire and wheel assembly. Replace (or repair) the original tire at the first opportunity and reinstall it on your vehicle. Failure to do so could result in loss of vehicle control.

Tire Spinning

When stuck in mud, sand, snow, or ice conditions, do not spin your vehicle's wheels faster than 30 mph (48 km/h) or for longer than 30 seconds continuously without stopping when you are stuck.

WARNING!

Fast spinning tires can be dangerous. Forces generated by excessive wheel speeds may cause tire damage or failure. A tire could explode and injure someone. Do not spin your vehicle's wheels faster than 30 mph (48 km/h) or for more than 30 seconds continuously when you are stuck, and do not let anyone near a spinning wheel, no matter what the speed.

Tread Wear Indicators

Tread wear indicators are in the original equipment tires to help you in determining when your tires should be replaced.

Downloaded from www.Manualslib.com manuals search engine

1 — Worn Tire
2 — New Tire

These indicators are molded into the bottom of the tread grooves. They will appear as bands when the tread depth becomes 1/16 in (2 mm). When the tread is worn to the tread wear indicators, the tire should be replaced.

Life of Tire

The service life of a tire is dependent upon varying factors including, but not limited to:

- Driving style
- Tire pressure
- Distance driven

WARNING!

Tires and the spare tire should be replaced after six years, regardless of the remaining tread. Failure to follow this warning can result in sudden tire failure. You could lose control and have an accident resulting in serious injury or death.

Keep dismounted tires in a cool, dry place with as little exposure to light as possible. Protect tires from contact with oil, grease, and gasoline.

Downloaded from www.Manualslib.com manuals search engine

Replacement Tires

The tires on your new vehicle provide a balance of many characteristics. They should be inspected regularly for wear and correct cold tire inflation pressure. The manufacturer strongly recommends that you use tires equivalent to the originals in size, quality and performance when replacement is needed. (Refer to the paragraph on "Tread Wear Indicators"). Refer to the "Tire and Loading Information" placard for the size designation of your tire. The service description and load identification will be found on the original equipment tire. Failure to use equivalent replacement tires may adversely affect the safety, handling, and ride of your vehicle. We recommend that you contact your original equipment or an authorized tire dealer with any questions you may have on tire specifications or capability.

WARNING!

- **Do not use a tire, wheel size or rating other than that specified for your vehicle. Some combinations of unapproved tires and wheels may change suspension dimensions and performance characteristics, resulting in changes to steering, handling, and braking of your vehicle. This can cause unpredictable handling and stress to steering and suspension components. You could lose control and have an accident resulting in serious injury or death. Use only the tire and wheel sizes with load ratings approved for your vehicle.**
- **Never use a tire with a smaller load index or capacity, other than what was originally equipped on your vehicle. Using a tire with a smaller load index could result in tire overloading and failure. You could lose control and have an accident.**

(Continued)

Downloaded from www.Manualslib.com manuals search engine

WARNING! (Continued)

- **Failure to equip your vehicle with tires having adequate speed capability can result in sudden tire failure and loss of vehicle control.**

CAUTION!

Replacing original tires with tires of a different size may result in false speedometer and odometer readings.

SELF-SEALING TIRES — IF EQUIPPED

A non-hardening viscous sealant applied to the inner liner of each tire fills punctures up to 0.19 in (5 mm) to minimize the loss of air pressure. This contributes to the safety of the vehicle by significantly reducing the probability of a roadside stop due to a flat tire.

SNOW TIRES

Some areas of the country require the use of snow tires during the winter. Standard tires are of the all season type and satisfy this requirement as indicated by the M+S designation on the tire sidewall.

If you need snow tires, select tires equivalent in size and type to the original equipment tires. Use snow tires only in sets of four. Failure to do so may adversely affect the safety and handling of your vehicle.

Snow tires generally have lower speed ratings than what was originally equipped with your vehicle and should not be operated at sustained speeds over 75 mph (120 km/h).

Downloaded from www.Manualslib.com manuals search engine

TIRE ROTATION RECOMMENDATIONS

Tires on the front and rear axles of vehicles operate at different loads and perform different steering, driving, and braking functions. For these reasons, they wear at unequal rates.

These effects can be reduced by timely rotation of tires. The benefits of rotation are especially worthwhile with aggressive tread designs such as those on all season type tires. Rotation will increase tread life, help to maintain mud, snow and wet traction levels, and contribute to a smooth, quiet ride.

Refer to "Maintenance Schedule" for the proper maintenance intervals. The reasons for any rapid or unusual wear should be corrected prior to rotation being performed.

The suggested rotation method is the "forward cross" shown in the following diagram. This rotation pattern does not apply to some directional tires that must not be reversed.

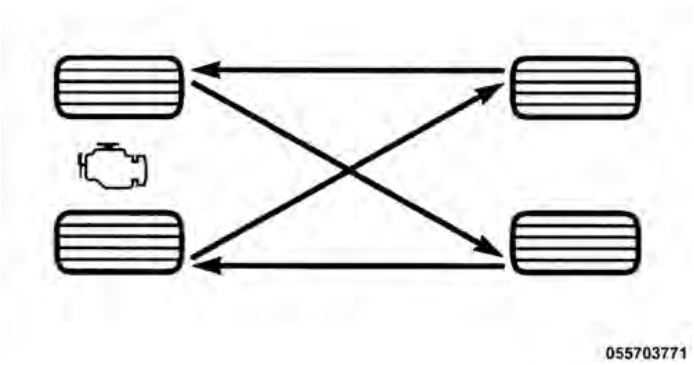

Tire Rotation

Downloaded from www.Manualslib.com manuals search engine

TIRE PRESSURE MONITOR SYSTEM (TPMS)

The Tire Pressure Monitor System (TPMS) will warn the driver of a low tire pressure based on the vehicle recommended cold placard pressure.

The tire pressure will vary with temperature by about 1 psi (6.9 kPa) for every 12°F (6.5°C). This means that when the outside temperature decreases, the tire pressure will decrease. Tire pressure should always be set based on cold inflation tire pressure. This is defined as the tire pressure after the vehicle has not been driven for at least three hours, or driven less than 1 mile (1.6 km) after a three hour period. The cold tire inflation pressure must not exceed the maximum inflation pressure molded into the tire sidewall. Refer to "Tires – General Information" in "Starting and Operating" for information on how to properly inflate the vehicle's tires. The tire pressure will also increase as the vehicle is driven - this is normal and there should be no adjustment for this increased pressure.

The TPMS will warn the driver of a low tire pressure if the tire pressure falls below the low-pressure warning limit for any reason, including low temperature effects and natural pressure loss through the tire.

The TPMS will continue to warn the driver of low tire pressure as long as the condition exists, and will not turn off until the tire pressure is at or above the recommended cold placard pressure. Once the low tire pressure warning (Tire Pressure Monitoring [TPM] Telltale Light) illuminates, you must increase the tire pressure to the recommended cold placard pressure in order for the TPM Telltale Light to turn off. The system will automatically update and the TPM Telltale Light will turn off once the system receives the updated tire pressures. The vehicle may need to be driven for up to 20 minutes above 15 mph (25 km/h) in order for the TPMS to receive this information.

Downloaded from www.Manualslib.com manuals search engine

For example, your vehicle may have a recommended cold (parked for more than three hours) placard pressure of 30 psi (207 kPa). If the ambient temperature is 68°F (20°C) and the measured tire pressure is 27 psi (186 kPa), a temperature drop to 20°F (-7°C) will decrease the tire pressure to approximately 23 psi (158 kPa). This tire pressure is sufficiently low enough to turn ON the TPM Telltale Light. Driving the vehicle may cause the tire pressure to rise to approximately 27 psi (186 kPa), but the TPM Telltale Light will still be ON. In this situation, the TPM Telltale Light will turn OFF only after the tires are inflated to the vehicle's recommended cold placard pressure value.

CAUTION!

- **The TPMS has been optimized for the original equipment tires and wheels. TPMS pressures and warning have been established for the tire size equipped on your vehicle. Undesirable system operation or sensor damage may result when using replacement equipment that is not of the same size, type, and/or style. Aftermarket wheels can cause sensor damage. Do not use aftermarket tire sealants or balance beads if your vehicle is equipped with a TPMS, as damage to the sensors may result.**
- **After inspecting or adjusting the tire pressure, always reinstall the valve stem cap. This will prevent moisture and dirt from entering the valve stem, which could damage the TPM sensor.**

Downloaded from www.Manualslib.com manuals search engine

NOTE:

- The TPMS is not intended to replace normal tire care and maintenance or to provide warning of a tire failure or condition.
- The TPMS should not be used as a tire pressure gauge while adjusting your tire pressure.
- Driving on a significantly under-inflated tire causes the tire to overheat and can lead to tire failure. Under-inflation also reduces fuel efficiency and tire tread life, and may affect the vehicle's handling and stopping ability.
- The TPMS is not a substitute for proper tire maintenance, and it is the driver's responsibility to maintain correct tire pressure using an accurate tire pressure gauge, even if under-inflation has not reached the level to trigger illumination of the TPM Telltale Light.
- Seasonal temperature changes will affect tire pressure, and the TPMS will monitor the actual tire pressure in the tire.

Base System

The Tire Pressure Monitor System (TPMS) uses wireless technology with wheel rim mounted electronic sensors to monitor tire pressure levels. Sensors mounted to each wheel as part of the valve stem transmit tire pressure readings to the receiver module.

NOTE: It is particularly important for you to check the tire pressure in all of the tires on your vehicle monthly and to maintain the proper pressure.

The TPMS consists of the following components:

- Receiver module,
- Four TPM sensors, and
- TPM Telltale Light

The matching full size spare wheel and tire assembly (if equipped) has a TPM sensor. The matching full size spare can be used in place of any of the four road tires. The

Downloaded from www.Manualslib.com manuals search engine

TPMS will only monitor the pressure in the full size spare when it is used in place of a road tire. Otherwise, a spare with a pressure below the low-pressure limit will not cause the TPM Telltale Light to illuminate or the chime to sound.

Tire Pressure Monitoring Low Pressure Warnings

The TPM Telltale Light will illuminate in the instrument cluster and a chime will sound when tire pressure is low in one or more of the four active road tires. Should this occur, you should stop as soon as possible, check the inflation pressure of each tire on your vehicle, and inflate each tire to the vehicle's recommended cold placard pressure value. Once the system receives the updated tire pressures, the system will automatically update and the TPM Telltale Light will turn off. The vehicle may need to be driven for up to 20 minutes above 15 mph (25 km/h) in order for the TPMS to receive this information.

Check TPMS Warning

If a system fault is detected, the TPM Telltale Light will flash on and off for 75 seconds and then remain on solid. The system fault will also sound a chime. If the ignition switch is cycled, this sequence will repeat, providing the system fault still exists. The TPM Telltale Light will turn off when the fault condition no longer exists. A system fault can occur due to any of the following:

1. Signal interference due to electronic devices or driving next to facilities emitting the same radio frequencies as the TPM sensors.

2. Installing aftermarket window tinting that contains materials that may block radio wave signals.

3. Accumulation of snow or ice around the wheels or wheel housings.

4. Using tire chains on the vehicle.

5. Using wheels/tires not equipped with TPM sensors.

Downloaded from www.Manualslib.com manuals search engine

Vehicles with Full Size Spare

1. The matching full size spare wheel and tire assembly has a TPM sensor that can be monitored by the TPMS.

2. If you install the full size spare in place of a road tire that has a pressure below the low-pressure warning limit, upon the next ignition switch cycle, a chime will sound and the TPM Telltale Light will turn ON.

3. Driving the vehicle for up to 20 minutes above 15 mph (25 km/h) will turn off the TPM Telltale Light, as long as no tire pressure is below the low-pressure warning limit in any of the four active road tires.

Vehicles with Compact Spare

1. The compact spare tire does not have a TPM sensor. Therefore, the TPMS will not monitor the pressure in the compact spare tire.

2. If you install the compact spare tire in place of a road tire that has a pressure below the low-pressure warning limit, upon the next ignition switch cycle, a chime will sound and the TPM Telltale Light will turn ON.

3. After driving the vehicle for up to 20 minutes above 15 mph (25 km/h), the TPM Telltale Light will flash on and off for 75 seconds and then remain on solid.

4. For each subsequent ignition switch cycle, a chime will sound and the TPM Telltale Light will flash on and off for 75 seconds and then remain on solid.

5. Once you repair or replace the original road tire, and reinstall it on the vehicle in place of the compact spare, the TPMS will update automatically and the TPM Telltale Light will turn OFF, as long as no tire pressure is below the low-pressure warning limit in any of the four active road tires. The vehicle may need to be driven for up to 20 minutes above 15 mph (25 km/h) in order for the TPMS to receive this information.

Downloaded from www.Manualslib.com manuals search engine

Premium System – If Equipped

The Tire Pressure Monitor System (TPMS) uses wireless technology with wheel rim mounted electronic sensors to monitor tire pressure levels. Sensors mounted to each wheel as part of the valve stem transmit tire pressure readings to the receiver module.

NOTE: It is particularly important for you to check the tire pressure in all of the tires on your vehicle monthly and to maintain the proper pressure.

The TPMS consists of the following components:

- Receiver module,
- Four TPM sensors,
- Various TPMS messages, which display in the Electronic Vehicle Information Center (EVIC), and
- TPM Telltale Light

The matching full size spare wheel and tire assembly (if equipped) has a TPM sensor. The full size spare can be used in place of any of the four road tires. A spare with a pressure below the low-pressure limit will not cause the TPM Telltale Light to illuminate or the chime to sound.

Tire Pressure Monitoring Low Pressure Warnings

The TPM Telltale Light will illuminate in the instrument cluster and a chime will sound when tire pressure is low in one or more of the four active road tires. In addition, the EVIC will display one or more low pressure messages (Left Front, Left Rear, Right Front, Right Rear) for three seconds and a graphic showing the pressure values of each tire with the low tire pressure values flashing.

Downloaded from www.Manualslib.com manuals search engine

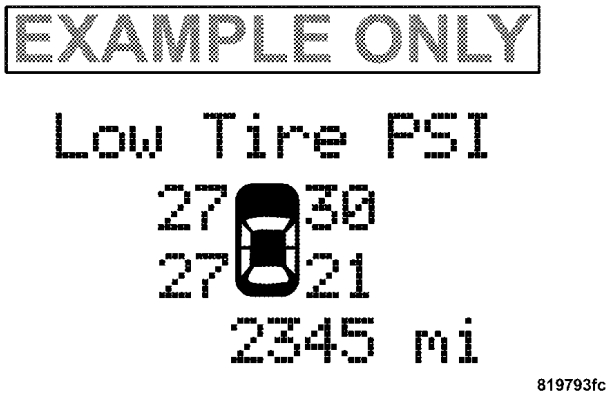

Should this occur, you should stop as soon as possible and inflate the tires with a low pressure condition (those flashing in the EVIC graphic) to the vehicle's recommended cold placard pressure inflation value. Once the system receives the updated tire pressures, the system will automatically update, the graphic display in the EVIC will stop flashing, and the TPM Telltale Light will turn off. The vehicle may need to be driven for up to 20 minutes above 15 mph (25 km/h) in order for the TPMS to receive this information.

Check TPMS Warning

If a system fault is detected, the TPM Telltale Light will flash on and off for 75 seconds and then remain on solid. The system fault will also sound a chime. In addition, the EVIC will display a "CHECK TPM SYSTEM" message for three seconds and then display dashes (- -) in place of the pressure value to indicate which sensor is not being received.

Downloaded from www.Manualslib.com manuals search engine

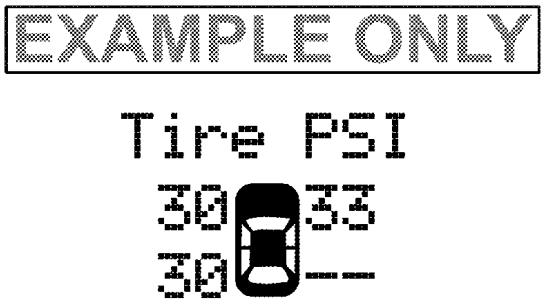

81979401

If the ignition switch is cycled, this sequence will repeat, providing the system fault still exists. If the system fault no longer exists, the TPM Telltale Light will no longer flash, and the "CHECK TPM SYSTEM" message will no longer display, and a pressure value will display in place of the dashes. A system fault can occur due to any of the following:

1. Signal interference due to electronic devices or driving next to facilities emitting the same radio frequencies as the TPM sensors.

2. Installing aftermarket window tinting that contains materials that may block radio wave signals.

3. Accumulation of snow or ice around the wheels or wheel housings.

4. Using tire chains on the vehicle.

5. Using wheels/tires not equipped with TPM sensors.

Vehicles with Full Size Spare

1. The matching full size spare wheel and tire assembly has a TPM sensor that can be monitored by the TPMS.

2. If you install the full size spare in place of a road tire that has a pressure below the low-pressure warning limit, upon the next ignition switch cycle, a chime will sound and the TPM Telltale Light will turn ON. In addition, the

Downloaded from www.Manualslib.com manuals search engine

EVIC will display a low pressure message and a graphic showing the low tire pressure value flashing.

3. After driving the vehicle for up to 20 minutes above 15 mph (25 km/h) the TPM Telltale Light will turn OFF, as long as no tire pressure is below the low-pressure warning limit in any of the four active road tires.

Vehicles with Compact Spare

1. The compact spare tire does not have a TPM sensor. Therefore, the TPMS will not monitor the pressure in the compact spare tire.

2. If you install the compact spare tire in place of a road tire that has a pressure below the low-pressure warning limit, upon the next ignition switch cycle, the TPM Telltale Light will remain ON and a chime will sound. In addition, the graphic in the EVIC will still display a flashing pressure value.

3. After driving the vehicle for up to 20 minutes above 15 mph (25 km/h), the TPM Telltale Light will flash on and off for 75 seconds and then remain on solid. In addition, the EVIC will display a "CHECK TPM SYSTEM" message for three seconds and then display dashes (- -) in place of the pressure value.

4. For each subsequent ignition switch cycle, a chime will sound, the TPM Telltale Light will flash on and off for 75 seconds and then remain on solid, and the EVIC will display a "CHECK TPM SYSTEM" message for three seconds and then display dashes (- -) in place of the pressure value.

5. Once you repair or replace the original road tire and reinstall it on the vehicle in place of the compact spare, the TPMS will update automatically. In addition, the TPM Telltale Light will turn OFF and the graphic in the EVIC will display a new pressure value instead of dashes (- -), as long as no tire pressure is below the low-pressure

Downloaded from www.Manualslib.com manuals search engine

warning limit in any of the four active road tires. The vehicle may need to be driven for up to 20 minutes above 15 mph (25 km/h) in order for the TPMS to receive this information.

General Information

This device complies with Part 15 of the FCC rules and RSS 210 of Industry Canada. Operation is subject to the following conditions:

- This device may not cause harmful interference.
- This device must accept any interference received, including interference that may cause undesired operation.

The TPM sensors are regulated under one of the following licenses:

United States KR5S120123
Canada 2671-S120123

FUEL REQUIREMENTS

2.7L Engine

800dfab6

The 2.7L engine is designed to meet all emissions regulations and provide excellent fuel economy and performance when using high-quality unleaded "regular" gasoline having an octane rating of 87. The use of premium gasoline is not recommended, as it will not provide any benefit over regular gasoline in these engines.

3.5L and 5.7L Engine

800dfab7

The 3.5L and 5.7L engine is designed to meet all emissions regulations and provide satisfactory fuel economy and performance when using high-quality unleaded gasoline having an octane range of 87 to 89. The manufacturer recommends the use of 89 octane for optimum performance. The use of

Downloaded from www.Manualslib.com manuals search engine

premium gasoline is not recommended, as it will not provide any benefit over regular gasoline in these engines.

Light spark knock at low engine speeds is not harmful to your engine. However, continued heavy spark knock at high speeds can cause damage and immediate service is required. Poor quality gasoline can cause problems such as hard starting, stalling, and hesitations. If you experience these symptoms, try another brand of gasoline before considering service for the vehicle.

Over 40 auto manufacturers worldwide have issued and endorsed consistent gasoline specifications (the World Wide Fuel Charter, WWFC) which define fuel properties necessary to deliver enhanced emissions, performance, and durability for your vehicle. The manufacturer recommends the use of gasoline that meets the WWFC specifications, if they are available.

Reformulated Gasoline

Many areas of the country require the use of cleaner burning gasoline referred to as "Reformulated Gasoline." Reformulated gasoline contains oxygenates and are specifically blended to reduce vehicle emissions and improve air quality.

The manufacturer supports the use of reformulated gasoline. Properly blended reformulated gasoline will provide excellent performance and durability of engine and fuel system components.

Gasoline/Oxygenate Blends

Some fuel suppliers blend unleaded gasoline with oxygenates such as 10% ethanol, MTBE, and ETBE. Oxygenates are required in some areas of the country during the winter months to reduce carbon monoxide emissions. Fuels blended with these oxygenates may be used in your vehicle.

Downloaded from www.Manualslib.com manuals search engine

CAUTION!

DO NOT use gasoline containing Methanol or E85 Ethanol. Use of these blends may result in starting and driveability problems and may damage critical fuel system components.

Problems that result from using methanol/gasoline or E85 ethanol blends are not the responsibility of the manufacturer. While MTBE is an oxygenate made from methanol, it does not have the negative effects of methanol.

E85 Usage In Non-Flex Fuel Vehicles

Non-FFV vehicles are compatible with gasoline containing 10% ethanol (E10). Gasoline with higher ethanol content may void the vehicle's warranty.

If a Non-FFV vehicle is inadvertently fueled with E85 fuel, the engine will have some or all of these symptoms:

- operate in a lean mode
- OBD II "Malfunction Indicator Light" on
- poor engine performance
- poor cold start and cold driveability
- increased risk for fuel system component corrosion

To fix a Non-FFV vehicle inadvertently fueled once with E85 perform the following:

- change the engine oil and oil filter
- disconnect and reconnect the battery
- drain the fuel tank (see your authorized dealer)

More extensive repairs will be required for prolonged exposure to E85 fuel.

Downloaded from www.Manualslib.com manuals search engine

MMT In Gasoline

MMT is a manganese-containing metallic additive that is blended into some gasoline to increase octane. Gasoline blended with MMT provides no performance advantage beyond gasoline of the same octane number without MMT. Gasoline blended with MMT reduces spark plug life and reduces emissions system performance in some vehicles. The manufacturer recommends that gasoline without MMT be used in your vehicle. The MMT content of gasoline may not be indicated on the gasoline pump, therefore, you should ask your gasoline retailer whether the gasoline contains MMT. It is even more important to look for gasoline without MMT in Canada, because MMT can be used at levels higher than those allowed in the United States. MMT is prohibited in Federal and California reformulated gasoline.

Materials Added to Fuel

All gasoline sold in the United States is required to contain effective detergent additives. Use of additional detergents or other additives is not needed under normal conditions and they would result in additional cost. Therefore, you should not have to add anything to the fuel.

Fuel System Cautions

CAUTION!

Follow these guidelines to maintain your vehicle's performance:

- **The use of leaded gas is prohibited by Federal law. Using leaded gasoline can impair engine performance and damage the emissions control system.**

(Continued)

Downloaded from www.Manualslib.com manuals search engine

CAUTION! (Continued)

- **An out-of-tune engine or certain fuel or ignition malfunctions can cause the catalytic converter to overheat. If you notice a pungent burning odor or some light smoke, your engine may be out of tune or malfunctioning and may require immediate service. Contact your authorized dealer for service assistance.**
- **The use of fuel additives, which are now being sold as octane enhancers, is not recommended. Most of these products contain high concentrations of methanol. Fuel system damage or vehicle performance problems resulting from the use of such fuels or additives is not the responsibility of the manufacturer.**

NOTE: Intentional tampering with the emissions control system can result in civil penalties being assessed against you.

Carbon Monoxide Warnings

WARNING!

Carbon monoxide (CO) in exhaust gases is deadly. Follow the precautions below to prevent carbon monoxide poisoning:

- **Do not inhale exhaust gases. They contain carbon monoxide, a colorless and odorless gas, which can kill. Never run the engine in a closed area, such as a garage, and never sit in a parked vehicle with the engine running for an extended period. If the vehicle is stopped in an open area with the engine running for more than a short period, adjust the ventilation system to force fresh, outside air into the vehicle.**

(Continued)

Downloaded from www.Manualslib.com manuals search engine

WARNING! (Continued)

- **Guard against carbon monoxide with proper maintenance. Have the exhaust system inspected every time the vehicle is raised. Have any abnormal conditions repaired promptly. Until repaired, drive with all side windows fully open.**
- **Keep the trunk closed when driving your vehicle to prevent carbon monoxide and other poisonous exhaust gases from entering the vehicle.**

ADDING FUEL

Fuel Filler Cap (Gas Cap)

The gas cap is located behind the fuel filler door on the left side of the vehicle. Push in on the left side (near the edge) of the fuel filler door to access the fuel filler cap. If the gas cap is lost or damaged, be sure the replacement cap is for use with this vehicle.

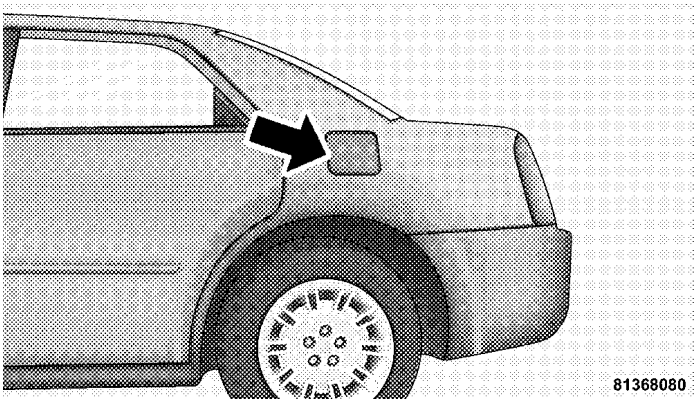

Fuel Filler Door

Downloaded from www.Manualslib.com manuals search engine

NOTE: When removing the fuel filler cap, lay the cap tether in the hook, located on the fuel filler cap door reinforcement.

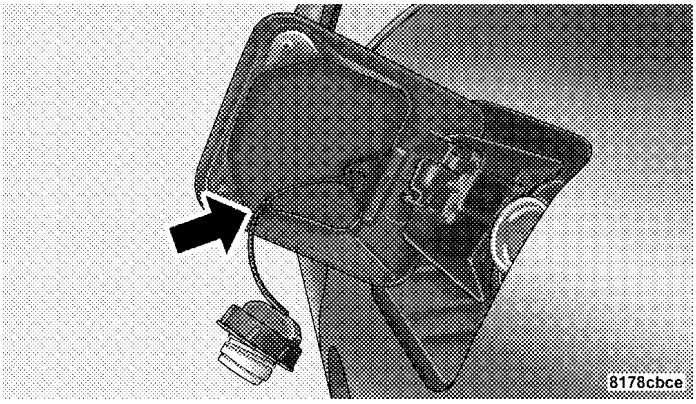

Gas Cap Tether Hook

CAUTION!

- **Damage to the fuel system or emissions control system could result from using an improper fuel tank filler tube cap (gas cap).**
- **A poorly fitting gas cap could let impurities into the fuel system.**
- **A poorly fitting gas cap may cause the Malfunction Indicator Light (MIL) to turn on.**
- **To avoid fuel spillage and overfilling, do not "top off" the fuel tank after filling. When the fuel nozzle "clicks" or shuts off, the fuel tank is full.**

WARNING!

- **Never have any smoking materials lit in or near the vehicle when the gas cap is removed or the tank filled.**

(Continued)

Downloaded from www.Manualslib.com manuals search engine

WARNING! (Continued)

- **Never add fuel to the vehicle when the engine is running.**
- **A fire may result if gasoline is pumped into a portable container that is inside of a vehicle. You could be burned. Always place gas containers on the ground while filling.**

NOTE:

- Tighten the gas cap until you hear a "clicking" sound. This is an indication that the gas cap is tightened properly. The MIL in the instrument cluster may turn on if the gas cap is not secured properly. Make sure that the gas cap is tightened each time the vehicle is refueled.
- When the fuel nozzle "clicks" or shuts off, the fuel tank is full.

Loose Fuel Filler Cap Message

If the vehicle diagnostic system determines that the fuel filler cap is loose, improperly installed, or damaged, a "gASCAP" message will display in the odometer or a "Check Gascap" message will display in the Electronic Vehicle Information Center (EVIC) (if equipped). If this occurs, tighten the fuel filler cap properly and press the TRIP ODOMETER button to turn off the message. If the problem continues, the message will appear the next time the vehicle is started.

A loose, improperly installed, or damaged fuel filler cap may also turn on the MIL. Refer to "Onboard Diagnostic System" in "Maintaining Your Vehicle" for further information.

VEHICLE LOADING

The load carrying capacity of your vehicle is shown on the "Vehicle Certification Label." This information should be used for passenger and luggage loading as indicated.

Downloaded from www.Manualslib.com manuals search engine

Do not exceed the specified Gross Vehicle Weight Rating (GVWR) or the Gross Axle Weight Rating (GAWR).

Vehicle Certification Label

Your vehicle has a Vehicle Certification Label affixed to the rear of the driver's door.

The label contains the following information:

- Name of manufacturer
- Month and year of manufacture
- Gross Vehicle Weight Rating (GVWR)
- Gross Axle Weight Rating (GAWR) front
- Gross Axle Weight Rating (GAWR) rear
- Vehicle Identification Number (VIN)
- Type of Vehicle
- Month Day and Hour of Manufacture (MDH)

The bar code allows a computer scanner to read the VIN.

Gross Vehicle Weight Rating (GVWR)

The GVWR is the total allowable weight of your vehicle. This includes driver, passengers, and cargo. The total load must be limited so that you do not exceed the GVWR.

Gross Axle Weight Rating (GAWR)

The GAWR is the maximum capacity of the front and rear axles. Distribute the load over the front and rear axles evenly. Make sure that you do not exceed either front or rear GAWR.

WARNING!

Because the front wheels steer the vehicle, it is important that you do not exceed the maximum front or rear GAWR. A dangerous driving condition can result if either rating is exceeded. You could lose control of the vehicle and have an accident.

Downloaded from www.Manualslib.com manuals search engine

Overloading

The load carrying components (axle, springs, tires, wheels, etc.) of your vehicle will provide satisfactory service as long as you do not exceed the GVWR and the front and rear GAWR.

The best way to figure out the total weight of your vehicle is to weigh it when it is fully loaded and ready for operation. Weigh it on a commercial scale to ensure that it is not over the GVWR.

Figure out the weight on the front and rear of the vehicle separately. It is important that you distribute the load evenly over the front and rear axles.

Overloading can cause potential safety hazards and shorten useful service life. Heavier axles or suspension components do not necessarily increase the vehicle's GVWR.

Loading

To load your vehicle properly, first figure out its empty weight, axle-by-axle and side-by-side. Store heavier items down low and be sure you distribute their weight as evenly as possible. Stow all loose items securely before driving. If weighing the loaded vehicle shows that you have exceeded either GAWR, but the total load is within the specified GVWR, you must redistribute the weight. Improper weight distribution can have an adverse effect on the way your vehicle steers and handles and the way the brakes operate.

NOTE:

- Refer to the "Vehicle Certification Label" affixed to the rear of the driver's door for your vehicle's GVWR and GAWRs.
- Refer to the "Tire Placard" for your vehicle's proper tire pressure.

Downloaded from www.Manualslib.com manuals search engine

TRAILER TOWING

In this section, you will find safety tips and information on limits to the type of towing you can reasonably do with your vehicle. Before towing a trailer, carefully review this information to tow your load as efficiently and safely as possible.

To maintain warranty coverage, follow the requirements and recommendations in this manual concerning vehicles used for trailer towing.

Common Towing Definitions

The following trailer towing related definitions will assist you in understanding the following information:

Gross Vehicle Weight Rating (GVWR)
The GVWR is the total allowable weight of your vehicle. This includes driver, passengers, cargo, and tongue weight. The total load must be limited so that you do not exceed the GVWR. Refer to "Vehicle Loading/Vehicle Certification Label" in "Starting and Operating" for further information.

Gross Trailer Weight (GTW)
The GTW is the weight of the trailer plus the weight of all cargo, consumables, and equipment (permanent or temporary) loaded in or on the trailer in its "loaded and ready for operation" condition.

The recommended way to measure GTW is to put your fully loaded trailer on a vehicle scale. The entire weight of the trailer must be supported by the scale.

Gross Combination Weight Rating (GCWR)
The GCWR is the total permissible weight of your vehicle and trailer when weighed in combination.

NOTE: The GCWR rating includes a 150 lbs (68 kg) allowance for the presence of a driver.

Downloaded from www.Manualslib.com manuals search engine

Gross Axle Weight Rating (GAWR)
The GAWR is the maximum capacity of the front and rear axles. Distribute the load over the front and rear axles evenly. Make sure that you do not exceed either front or rear GAWR. Refer to "Vehicle Loading/Vehicle Certification Label" in "Starting and Operating" for further information.

WARNING!

It is important that you do not exceed the maximum front or rear GAWR. A dangerous driving condition can result if either rating is exceeded. You could lose control of the vehicle and have an accident.

Tongue Weight (TW)
The tongue weight is the downward force exerted on the hitch ball by the trailer. In most cases, it should not be less than 10% or more than 15% of the trailer load. You must consider this as part of the load on your vehicle.

Frontal Area
The frontal area is the maximum height multiplied by the maximum width of the front of a trailer.

Trailer Sway Control
The trailer sway control is a telescoping link that can be installed between the hitch receiver and the trailer tongue that typically provides adjustable friction associated with the telescoping motion to dampen any unwanted trailer swaying motions while traveling.

Weight-Carrying Hitch
A weight-carrying hitch supports the trailer tongue weight, just as if it were luggage located at a hitch ball or some other connecting point of the vehicle. These kinds of hitches are the most popular on the market today and they are commonly used to tow small- and medium-sized trailers.

Downloaded from www.Manualslib.com manuals search engine

Weight-Distributing Hitch

A weight-distributing system works by applying leverage through spring (load) bars. They are typically used for heavier loads to distribute trailer tongue weight to the tow vehicle's front axle and the trailer axle(s). When used in accordance with the manufacturer's directions, it provides for a more level ride, offering more consistent steering and brake control thereby enhancing towing safety. The addition of a friction / hydraulic sway control also dampens sway caused by traffic and crosswinds and contributes positively to tow vehicle and trailer stability. Trailer sway control and a weight distributing (load equalizing) hitch are recommended for heavier Tongue Weights (TW) and may be required depending on vehicle and trailer configuration / loading to comply with Gross Axle Weight Rating (GAWR) requirements.

WARNING!

- **An improperly adjusted weight distributing hitch system may reduce handling, stability, braking performance, and could result in an accident.**
- **Weight distributing systems may not be compatible with surge brake couplers. Consult with your hitch and trailer manufacturer or a reputable recreational vehicle dealer for additional information.**

Trailer Hitch Classification

Your vehicle may be factory equipped for safe towing of trailers weighing over 2,000 lbs (907 kg) with the optional Trailer Tow Prep Package. See your authorized dealer for package content.

Downloaded from www.Manualslib.com manuals search engine

The following chart provides the industry standard for the maximum trailer weight a given trailer hitch class can tow and should be used to assist you in selecting the correct trailer hitch for your intended towing condition. Refer to the "Trailer Towing Weights (Maximum Trailer Weight Ratings)" chart for the Maximum GTW towable for your given drivetrain.

Trailer Hitch Classification Definitions	
Class	**Max. Trailer Hitch Industry Standards**
Class I - Light Duty	2,000 lbs (907 kg)
Class II - Medium Duty	3,500 lbs (1 587 kg)
Class III - Heavy Duty	5,000 lbs (2 268 kg)
Class IV - Extra Heavy Duty	10,000 lbs (4 540 kg)
Refer to the "Trailer Towing Weights (Maximum Trailer Weight Ratings)" chart for the Maximum Gross Trailer Weight (GTW) towable for your given drivetrain.	

All trailer hitches should be professionally installed on your vehicle.

Downloaded from www.Manualslib.com manuals search engine

Trailer Towing Weights (Maximum Trailer Weight Ratings)

The following chart provides the maximum trailer weight ratings towable for your given drivetrain.

Engine/Transmission	Frontal Area	Max. GTW (Gross Trailer Wt.)	Max. Tongue Wt. (See Note)
2.7L & 3.5L Rear Wheel Drive (RWD) Automatic	22 sq ft (2.04 sq m)	1,000 lbs (454 kg)	100 lbs (45 kg)
3.5L All Wheel Drive (AWD) & 5.7L Automatic	32 sq ft (2.97 sq m)	2,000 lbs (907 kg)	200 lbs (91 kg)
Refer to local laws for maximum trailer towing speeds			
NOTE: The trailer tongue weight must be considered as part of the combined weight of occupants and cargo, and it should never exceed the weight referenced on the "Tire and Loading Information" placard. Refer to "Tire Safety Information" in "Starting and Operating" for further information.			

Trailer and Tongue Weight

Always load a trailer with 60% to 65% of the weight in the front of the trailer. This places 10% to 15% of the Gross Trailer Weight (GTW) on the tow hitch of your vehicle. Loads balanced over the wheels or heavier in the rear can cause the trailer to sway **severely** side to side which will cause loss of control of the vehicle and trailer. Failure to load trailers heavier in front is the cause of many trailer accidents.

Never exceed the maximum tongue weight stamped on your bumper or trailer hitch.

Downloaded from www.Manualslib.com manuals search engine

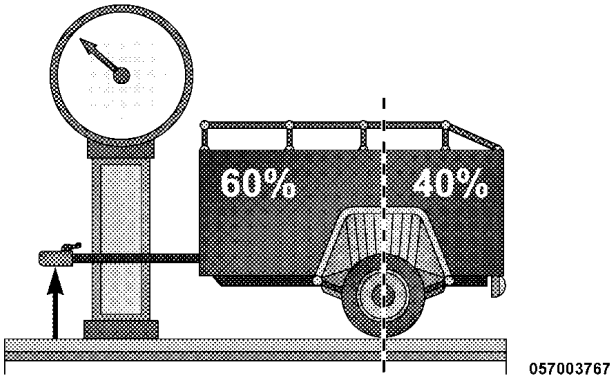

Consider the following items when computing the weight on the rear axle of the vehicle:

- The tongue weight of the trailer.
- The weight of any other type of cargo or equipment put in or on your vehicle.
- The weight of the driver and all passengers.

NOTE: Remember that everything put into or on the trailer adds to the load on your vehicle. Also, additional factory-installed options or dealer-installed options must be considered as part of the total load on your vehicle. Refer to the "Tire and Loading Information" placard for the maximum combined weight of occupants and cargo for your vehicle.

Towing Requirements

To promote proper break-in of your new vehicle drive-train components the following guidelines are recommended:

CAUTION!

- **Do not tow a trailer at all during the first 500 miles (805 km) the new vehicle is driven. The engine, axle or other parts could be damaged.**

(Continued)

Downloaded from www.Manualslib.com manuals search engine

CAUTION! (Continued)

- **During the first 500 miles (805 km) that a trailer is towed, do not drive over 50 mph (80 km/h) and do not make starts at full throttle. This helps the engine and other parts of the vehicle wear in at the heavier loads.**

WARNING!

Improper towing can lead to an injury accident. Follow these guidelines to make your trailer towing as safe as possible:

(Continued)

WARNING! (Continued)

- **Make certain that the load is secured in the trailer and it will not shift during travel. When trailering cargo that is not fully secured, dynamic load shifts can occur that may be difficult for the driver to control. You could lose control of your vehicle and have an accident.**
- **When hauling cargo or towing a trailer, do not overload your vehicle or trailer. Overloading can cause a loss of control, poor performance, or damage to brakes, axle, engine, transmission, steering, suspension, chassis structure, or tires.**
- **Safety chains must always be used between your vehicle and trailer. Always connect the chains to the frame or hook retainers of the vehicle hitch. Cross the chains under the trailer tongue and allow enough slack for turning corners.**

(Continued)

Downloaded from www.Manualslib.com manuals search engine

WARNING! (Continued)

- **Vehicles with trailers should not be parked on a grade. When parking, apply the parking brake on the tow vehicle. Put the tow vehicle automatic transmission in PARK. Always, block or "chock" the trailer wheels.**
- **GCWR must not be exceeded.**
- **Total weight must be distributed between the tow vehicle and the trailer such that the following four ratings are not exceeded:**

  1. Max loading as defined on the "Tire and Loading Information" placard.

  2. GTW

  3. GAWR

(Continued)

WARNING! (Continued)

4. Tongue weight rating for the trailer hitch utilized. (This requirement may limit the ability to always achieve the 10% to 15% range of tongue weight as a percentage of total trailer weight.)

Towing Requirements – Tires

– Do not attempt to tow a trailer while using a compact spare tire.

– Proper tire inflation pressures are essential to the safe and satisfactory operation of your vehicle. Refer to "Tires – General Information" in "Starting and Operating" for information on tire pressures and for proper tire inflation procedures.

– Check the trailer tires for proper tire inflation pressures before trailer usage.

Downloaded from www.Manualslib.com manuals search engine

– Check for signs of tire wear or visible tire damage before towing a trailer. Refer to "Tires – General Information" in "Starting and Operating" for information on tread wear indicators and for the proper inspection procedure.

– When replacing tires, refer to "Tires – General Information" in "Starting and Operating" for information on replacement tires and for the proper tire replacement procedures. Replacing tires with a higher load carrying capacity will not increase the vehicle's GVWR and GAWR limits.

Towing Requirements – Trailer Brakes

– Do **not** interconnect the hydraulic brake system or vacuum system of your vehicle with that of the trailer. This could cause inadequate braking and possible personal injury.

– An electronically actuated trailer brake controller is required when towing a trailer with electronically actuated brakes. When towing a trailer equipped with a hydraulic surge actuated brake system, an electronic brake controller is not required.

– Trailer brakes are recommended for trailers over 1,000 lbs (454 kg) and required for trailers in excess of 2,000 lbs (907 kg).

CAUTION!

If the trailer weighs more than 1,000 lbs (454 kg) loaded, it should have its own brakes, and they should be of adequate capacity. Failure to do this could lead to accelerated brake lining wear, higher brake pedal effort, and longer stopping distances.

Downloaded from www.Manualslib.com manuals search engine

WARNING!

- **Do not connect trailer brakes to your vehicle's hydraulic brake lines. It can overload your brake system and cause it to fail. You might not have brakes when you need them and could have an accident.**
- **Towing any trailer will increase your stopping distance. When towing, you should allow for additional space between your vehicle and the vehicle in front of you. Failure to do so could result in an accident.**

Towing Requirements – Trailer Lights and Wiring

Whenever you pull a trailer, regardless of the trailer size, stoplights and turn signals on the trailer are required for motoring safety.

The Trailer Tow Package may include a four and seven-pin wiring harness. Use a factory approved trailer harness and connector.

NOTE: Do not cut or splice wiring into the vehicles wiring harness.

The electrical connections are all complete to the vehicle but you must mate the harness to a trailer connector. Refer to the following illustrations.

Downloaded from www.Manualslib.com manuals search engine

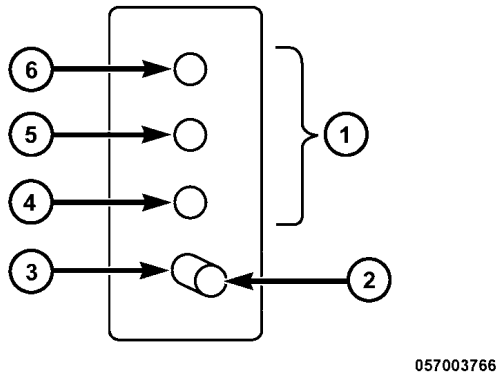

Four-Pin Connector

1 — Female Pins	4 — Park
2 — Male Pin	5 — Left Stop/Turn
3 — Ground	6 — Right Stop/Turn

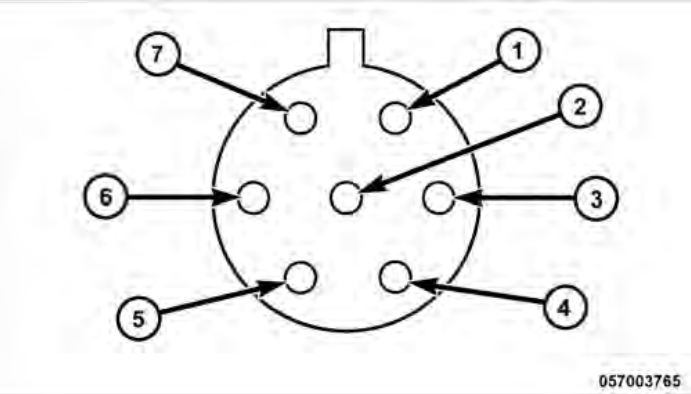

Seven-Pin Connector

1 — Battery	5 — Ground
2 — Backup Lamps	6 — Left Stop/Turn
3 — Right Stop/Turn	7 — Running Lamps
4 — Electric Brakes	

Downloaded from www.Manualslib.com manuals search engine

Towing Tips

Before setting out on a trip, practice turning, stopping, and backing up the trailer in an area located away from heavy traffic.

Automatic Transmission

The DRIVE range can be selected when towing. However, if frequent shifting occurs while in this range, select a lower gear range using the "3" position (if equipped) or the AutoStick®/ERS feature (if equipped).

NOTE: Selecting a lower gear range while operating the vehicle under heavy operating conditions will improve performance and extend transmission life by reducing excessive shifting and heat build up. This action will also provide better engine braking.

If you REGULARLY tow a trailer for more than 45 minutes of continuous operation, then change the automatic transmission fluid and filter according to the interval specified for "police, taxi, fleet, or frequent trailer towing." Refer to "Maintenance Schedule" for the proper maintenance intervals.

Electronic Speed Control – If Equipped

- Do not use in hilly terrain or with heavy loads.
- When using the speed control, if you experience speed drops greater than 10 mph (16 km/h), disengage until you can get back to cruising speed.
- Use speed control in flat terrain and with light loads to maximize fuel efficiency.

Downloaded from www.Manualslib.com manuals search engine

AutoStick®/Electronic Range Select (ERS) – If Equipped

– By using the AutoStick®/Electronic Range Select (ERS) mode and selecting a specific gear range, frequent shifting can be avoided. The highest gear range should be selected that allows for adequate performance. For example, choose "4" if the desired speed can be maintained. Choose "3" or "2" if needed to maintain the desired speed.

– Extended driving at high RPM should be avoided to prevent excess heat generation. A reduction in vehicle speed may be required to avoid extended driving at high RPM. Return to a higher gear range or vehicle speed when road conditions and RPM level allows.

Cooling System

To reduce potential for engine and transmission overheating, take the following actions:

– *City Driving*

When stopped for short periods of time, shift the transmission into NEUTRAL and increase engine idle speed.

– *Highway Driving*

Reduce speed.

– *Air Conditioning*

Turn off temporarily.

RECREATIONAL TOWING (BEHIND MOTORHOME, ETC.)

Two-Wheel Drive and All-Wheel Drive

Recreational towing (with all four wheels on the ground) is allowed **ONLY** if the rear driveshaft is removed and the transmission is in NEUTRAL (for both RWD and AWD vehicles).

Downloaded from www.Manualslib.com manuals search engine

WARNING!

If the driveshaft is removed, the vehicle can roll even if the transmission is in PARK, which could cause serious injury or death.

The parking brake must be firmly engaged and the wheels chocked during driveshaft removal and installation. The parking brake must remain engaged unless the vehicle is securely and properly connected to the tow vehicle, or the driveshaft is completely reinstalled. See your authorized dealer for proper driveshaft removal and reinstallation procedures, including flange orientation/alignment, use of thread-locking compound, proper bolt torque specifications, etc.

CAUTION!

Towing this vehicle in violation of the above requirements can cause severe transmission and/or transfer case damage. Such damage is not covered by the New Vehicle Limited Warranty.

Downloaded from www.Manualslib.com manuals search engine

Downloaded from www.Manualslib.com manuals search engine

WHAT TO DO IN EMERGENCIES

CONTENTS

■ Hazard Warning Flasher 400
■ If Your Engine Overheats 400
■ Jacking And Tire Changing 401
□ Jack Location/Spare Tire Stowage 402
□ Preparations For Jacking 404
□ Jacking And Changing a Tire 404
□ Compact Spare Tire 410
□ Wheel Cover Or Center Cap Installation — If Equipped 410
■ Jump-Starting Procedures 413
□ Preparations For Jump-Start 413
□ Jump-Starting Procedure 415
■ Freeing A Stuck Vehicle 417
■ Towing A Disabled Vehicle 418
□ Without The Ignition Key FOB 418
□ Towing This Vehicle Behind Another Vehicle 418
□ Towing This Vehicle Behind Another Vehicle With A Tow Dolly 419

Downloaded from www.Manualslib.com manuals search engine

HAZARD WARNING FLASHER

The Hazard Warning flasher switch is located in the center of the instrument panel between the center air outlets.

Press the switch to turn on the Hazard Warning flasher. When the switch is activated, all directional turn signals will flash on and off to warn oncoming traffic of an emergency. Press the switch a second time to turn off the Hazard Warning flasher.

This is an emergency warning system and it should not be used when the vehicle is in motion. Use it when your vehicle is disabled and it is creating a safety hazard for other motorists.

When you must leave the vehicle to seek assistance, the Hazard Warning flasher will continue to operate even though the ignition is placed in the OFF position.

NOTE: With extended use the Hazard Warning flasher may wear down your battery.

IF YOUR ENGINE OVERHEATS

In any of the following situations, you can reduce the potential for overheating by taking the appropriate action.

- On the highways — slow down.
- In city traffic — while stopped, place the transmission in NEUTRAL, but do not increase the engine idle speed.

NOTE: There are steps that you can take to slow down an impending overheat condition:

- If your air conditioner (A/C) is on, turn it off. The A/C system adds heat to the engine cooling system and turning the A/C off can help remove this heat.

Downloaded from www.Manualslib.com manuals search engine

- You can also turn the temperature control to maximum heat, the mode control to floor and the blower control to high. This allows the heater core to act as a supplement to the radiator and aids in removing heat from the engine cooling system.

CAUTION!

Driving with a hot cooling system could damage your vehicle. If the temperature gauge reads "H," pull over and stop the vehicle. Idle the vehicle with the air conditioner turned off until the pointer drops back into the normal range. If the pointer remains on the "H," turn the engine off immediately and call for service.

WARNING!

You or others can be badly burned by hot engine coolant (antifreeze) or steam from your radiator. If you see or hear steam coming from under the hood, do not open the hood until the radiator has had time to cool. Never try to open a cooling system pressure cap when the radiator or coolant bottle is hot.

JACKING AND TIRE CHANGING

WARNING!

- **Do not attempt to change a tire on the side of the vehicle close to moving traffic. Pull far enough off the road to avoid the danger of being hit when operating the jack or changing the wheel.**

(Continued)

Downloaded from www.Manualslib.com manuals search engine

WARNING! (Continued)

- **Getting under a jacked-up vehicle is dangerous. The vehicle could slip off the jack and fall on you. You could be crushed. Never get any part of your body under a vehicle that is on a jack. Never start or run the engine while the vehicle is on a jack. If you need to get under a raised vehicle, take it to a service center where it can be raised on a lift.**
- **The jack is designed to use as a tool for changing tires only. The jack should not be used to lift the vehicle for service purposes. The vehicle should be jacked on a firm level surface only. Avoid ice or slippery areas.**

Jack Location/Spare Tire Stowage

The jack and spare tire are both stowed under an access cover in the trunk. Follow these steps to access the jack and spare tire.

NOTE: The spare tire must be removed in order to access the jack.

1. Open the trunk.
2. Lift the access cover using the pull strap.

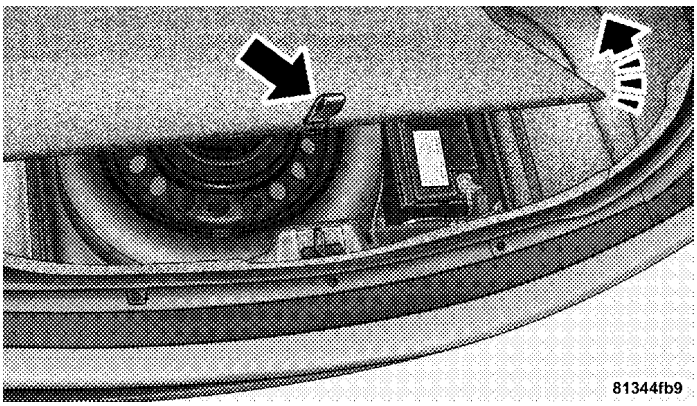

Opening The Access Panel

Downloaded from www.Manualslib.com manuals search engine

3. Remove the fastener securing the spare tire.

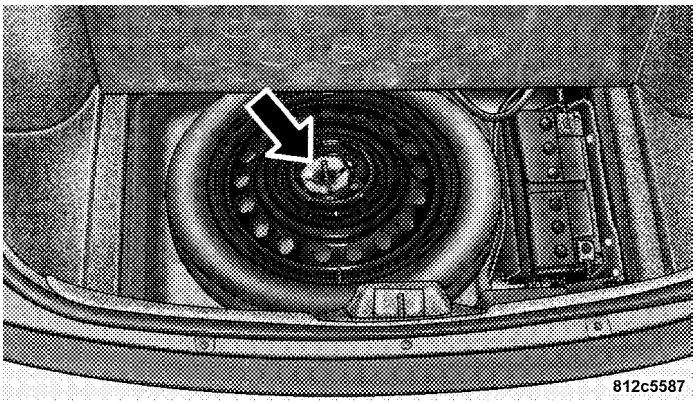

Spare Tire Fastener

4. Remove the spare tire.
5. Remove the fastener securing the jack.

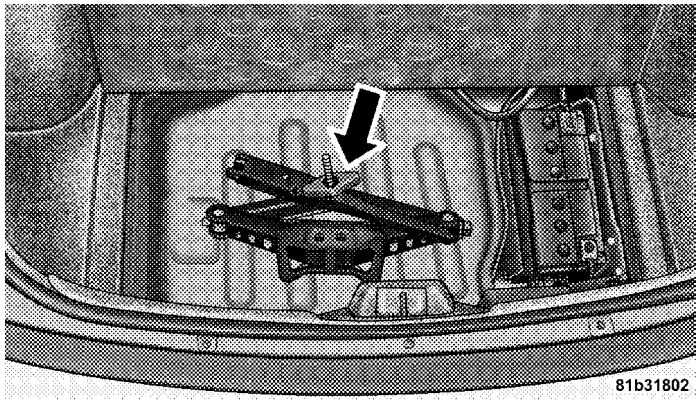

Jack Fastener

WARNING!

A loose tire or jack thrown forward in a collision or hard stop could endanger the occupants of the vehicle. Always stow the jack parts and the spare tire in the places provided.

Downloaded from www.Manualslib.com manuals search engine

Preparations for Jacking

1. Park the vehicle on a firm, level surface as far from the edge of the roadway as possible. Avoid icy or slippery areas.

WARNING!

Do not attempt to change a tire on the side of the vehicle close to moving traffic. Pull far enough off the road to avoid being hit when operating the jack or changing the wheel.

2. Set the parking brake.
3. Place the shift lever into PARK.
4. Turn OFF the ignition.
5. Turn on the Hazard Warning flasher.

6. Block the front and rear of the wheel diagonally opposite of the jacking position. For example, if changing the right front tire, block the left rear wheel.

NOTE: Passengers should not remain in the vehicle when the vehicle is being jacked.

Jacking and Changing a Tire

WARNING!

Carefully follow these tire changing warnings to help prevent personal injury or damage to your vehicle:

(Continued)

Downloaded from www.Manualslib.com manuals search engine

WARNING! (Continued)

- **Always park on a firm, level surface as far from the edge of the roadway as possible before raising the vehicle.**
- **Block the wheel diagonally opposite the wheel to be raised.**
- **Set the parking brake firmly and set an automatic transmission in PARK; a manual transmission in REVERSE.**
- **Never start or run the engine with the vehicle on a jack.**
- **Do not let anyone sit in the vehicle when it is on a jack.**
- **Do not get under the vehicle when it is on a jack.**
- **Only use the jack in the positions indicated and for lifting this vehicle during a tire change.**

(Continued)

WARNING! (Continued)

- **If working on or near a roadway, be extremely careful of motor traffic.**
- **To assure that spare tires, flat or inflated, are securely stowed, spares must be stowed with the valve stem facing the ground.**
- **Turn on the Hazard Warning flasher.**

Jack Warning Label

1. Remove the spare tire, jack, and lug wrench.

Downloaded from www.Manualslib.com manuals search engine

2. If equipped with steel wheels, do not remove the wheel cover at this time. If equipped with aluminum wheels where the center cap covers the lug nuts, use the lug wrench to pry the center cap off carefully before raising the vehicle.

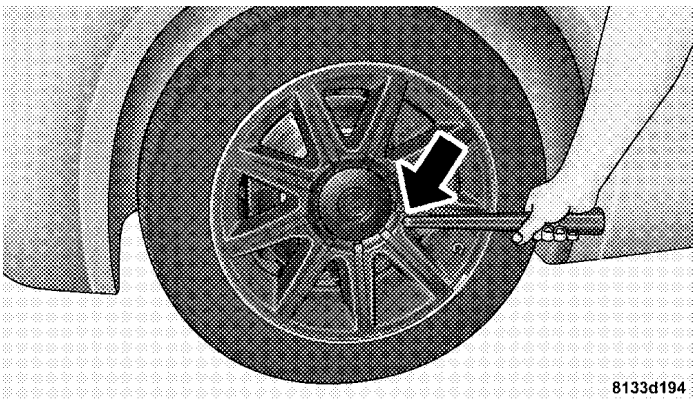

Center Cap Removal

WARNING!

To avoid possible personal injury, handle the wheel covers with care to avoid contact with the metal edges and retention teeth.

Downloaded from www.Manualslib.com manuals search engine

3. Before raising the vehicle, use the lug wrench to loosen, but not remove, the lug nuts on the wheel with the flat tire. Turn the lug nuts counterclockwise one turn while the wheel is still on the ground.

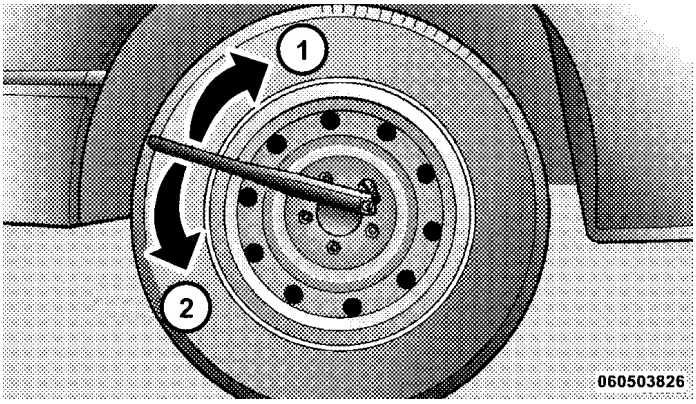

Lug Nut Removal/Installation

1 — Tighten
2 — Loosen

4. Place the jack underneath the lift area that is closest to the flat tire. Turn the jack screw clockwise to firmly engage the jack saddle with the lift area of the sill flange.

Downloaded from www.Manualslib.com manuals search engine

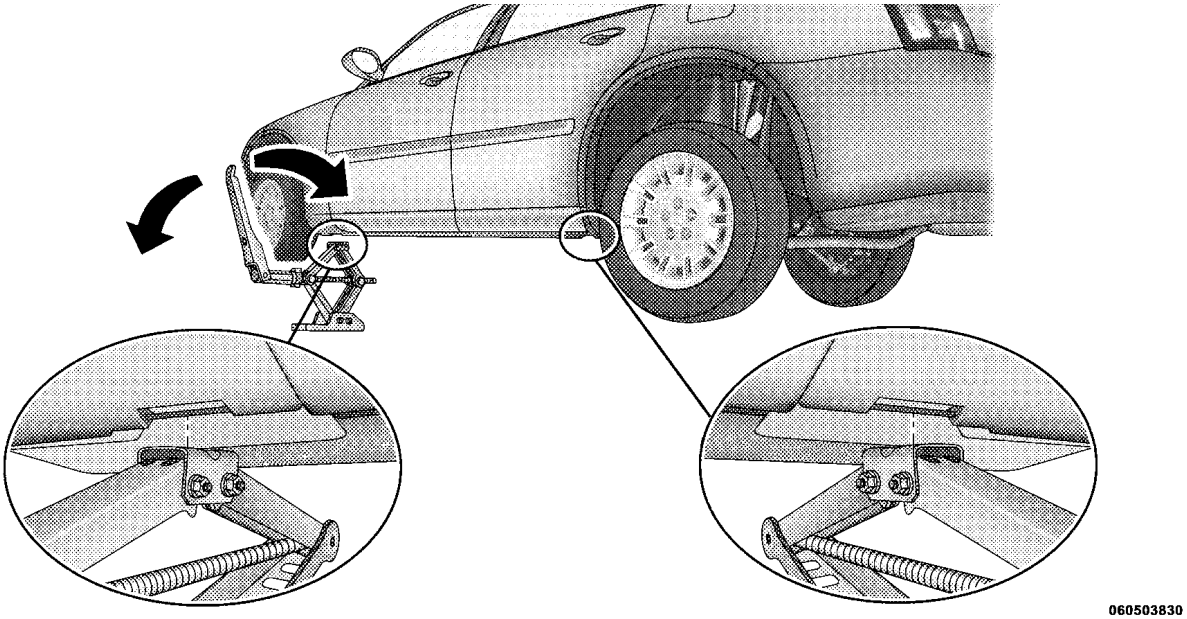

Jack Engagement Locations

Downloaded from www.Manualslib.com manuals search engine

5. Raise the vehicle just enough to remove the flat tire and install the spare tire.

WARNING!

Raising the vehicle higher than necessary can make the vehicle less stable. It could slip off the jack and hurt someone near it. Raise the vehicle only enough to remove the tire.

6. Remove the lug nuts, wheel cover (if equipped), and tire. Remove the cover by hand. Do not pry it off.

7. Mount the spare tire.

NOTE: For vehicles equipped with a center cap or wheel cover, do not attempt to install it on the compact spare. However, when reinstalling the road tire, follow the procedure under "Wheel Cover or Center Cap Installation" in place of the remaining steps in this procedure.

8. Install the lug nuts with the cone shaped end of the lug nut toward the wheel. Lightly tighten the lug nuts. To avoid the risk of forcing the vehicle off the jack, do not tighten the lug nuts fully until the vehicle is lowered to the ground.

9. Lower the vehicle to the ground by turning the jack handle counterclockwise.

10. Finish tightening the lug nuts. Push down on the wrench while tightening for increased leverage. Alternate lug nuts until each nut has been tightened twice. The correct tightness of each lug nut is 100 ft/lb. (135 N·m). If in doubt about the correct tightness, have them checked with a torque wrench by your authorized dealer or at a service station.

11. Stow the jack, tools and flat tire. Make sure the base of the jack faces the rear of the vehicle before tightening down the fastener.

Downloaded from www.Manualslib.com manuals search engine

WARNING!

A loose tire or jack thrown forward in a collision or hard stop could endanger the occupants of the vehicle. Always stow the jack parts and the spare tire in the places provided.

Compact Spare Tire

The compact spare tire is for temporary emergency use with radial tires. It is engineered to be used on your style vehicle only. Since this tire has limited tread life, the original tire should be repaired (or replaced) and reinstalled at the first opportunity.

- Keep tire inflated to 60 psi (414 KPa) cold inflation pressure.
- This tire is designed as an emergency spare only. Do not exceed 50 mph (80 km/h) speed.

WARNING!

The limited-use spare tires are for emergency use only. Installation of this limited-use spare tire affects vehicle handling. With this tire, do not drive more than 60 mph (100 km/h). Keep inflated to the cold tire inflation pressure listed on either your tire placard or limited-use spare tire and wheel assembly. Replace (or repair) the original tire at the first opportunity and reinstall it on your vehicle. Failure to do so could result in loss of vehicle control.

Wheel Cover or Center Cap Installation — If Equipped

NOTE: Do not attempt to install a center cap or wheel cover on the compact spare.

Downloaded from www.Manualslib.com manuals search engine

1. Mount the road tire on the axle. For vehicles equipped with wheel covers, perform Steps 2 and 3. For vehicles equipped with center caps, proceed to Step 4.

2. Install two lug nuts on the mounting studs, which are on each side of the stud that is in alignment with the valve stem. Install the lug nuts with the cone shaped end of the nut toward the wheel. Lightly tighten the lug nuts. To avoid the risk of forcing the vehicle off the jack, do not tighten the lug nuts fully until the vehicle is lowered to the ground.

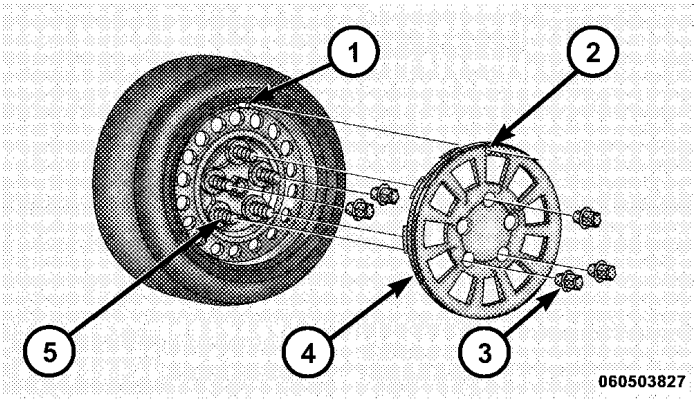

Tire and Wheel Cover Or Center Cap

1 — Valve Stem
2 — Valve Notch
3 — Wheel Lug Nut
4 — Wheel Cover
5 — Mounting Stud

Downloaded from www.Manualslib.com manuals search engine

3. Align the valve notch in the wheel cover with the valve stem on the wheel. Install the cover by hand, snapping the cover over the two lug nuts. Do not use a hammer or excessive force to install the cover.

4. Install the remaining lug nuts with the cone shaped end of the nut toward the wheel. Lightly tighten the lug nuts. To avoid the risk of forcing the vehicle off the jack, do not tighten the lug nuts fully until the vehicle is lowered to the ground.

5. Lower the vehicle to the ground by turning the jack handle counterclockwise.

6. Finish tightening the lug nuts. Push down on the wrench while tightening for increased leverage. Alternate lug nuts until each nut has been tightened twice. The correct tightness of each lug nut is 100 ft/lb. (135 N·m). If in doubt about the correct tightness, have them checked with a torque wrench by your authorized dealer or at a service station.

7. For vehicles equipped with center caps, install the center cap by hand. Do not use a hammer or excessive force to install the center cap.

8. Stow the jack, tools, and spare tire. Make sure the base of the jack faces the rear of the vehicle before tightening down the fastener.

WARNING!

A loose tire or jack thrown forward in a collision or hard stop could endanger the occupants of the vehicle. Always stow the jack parts and the spare tire in the places provided.

Downloaded from www.Manualslib.com manuals search engine

JUMP-STARTING PROCEDURES

If your vehicle has a discharged battery it can be jump-started using a set of jumper cables and a battery in another vehicle or by using a portable battery booster pack. Jump-starting can be dangerous if done improperly so please follow the procedures in this section carefully.

NOTE: When using a portable battery booster pack follow the manufacturer's operating instructions and precautions.

CAUTION!

Do not use a portable battery booster pack or any other booster source with a system voltage greater than 12 Volts or damage to the battery, starter motor, alternator or electrical system may occur.

WARNING!

Do not attempt jump-starting if the battery is frozen. It could rupture or explode and cause personal injury.

Preparations for Jump-Start

The battery is stored under an access cover in the trunk. Remote battery posts are located on the right side of the engine compartment for jump-starting.

NOTE: The remote battery posts are viewed by standing on the right side of the vehicle looking over the fender.

Downloaded from www.Manualslib.com manuals search engine

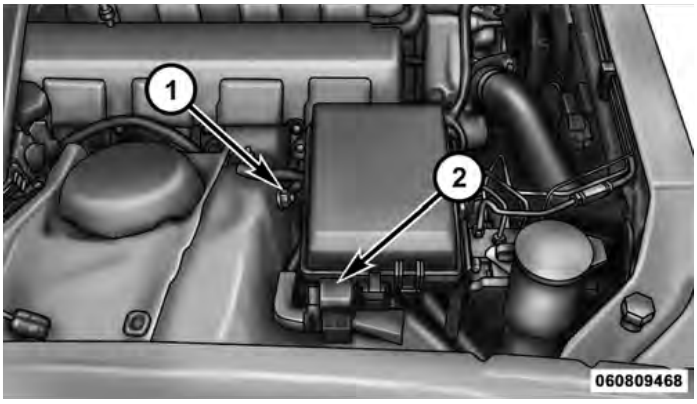

1 — Remote Negative **(-)** Post
2 — Remote Positive **(+)** Post

Remote Battery Posts

WARNING!

- **Take care to avoid the radiator cooling fan whenever the hood is raised. It can start anytime the ignition switch is on. You can be injured by moving fan blades.**
- **Remove any metal jewelry such as watch bands or bracelets that might make an inadvertent electrical contact. You could be seriously injured.**
- **Batteries contain sulfuric acid that can burn your skin or eyes and generate hydrogen gas which is flammable and explosive. Keep open flames or sparks away from the battery.**

1. Set the parking brake, shift the automatic transmission into PARK and turn the ignition to LOCK.

Downloaded from www.Manualslib.com manuals search engine

2. Turn off the heater, radio, and all unnecessary electrical accessories.

3. If using another vehicle to jump-start the battery, park the vehicle within the jumper cables reach, set the parking brake and make sure the ignition is OFF.

WARNING!

Do not allow vehicles to touch each other as this could establish a ground connection and personal injury could result.

Jump-Starting Procedure

WARNING!

Failure to follow this procedure could result in personal injury or property damage due to battery explosion.

CAUTION!

Failure to follow these procedures could result in damage to the charging system of the booster vehicle or the discharged vehicle.

1. Connect the positive **(+)** end of the jumper cable to the remote positive **(+)** post of the discharged vehicle.

2. Connect the opposite end of the positive **(+)** jumper cable to the positive **(+)** post of the booster battery.

3. Connect the negative end **(-)** of the jumper cable to the negative **(-)** post of the booster battery.

4. Connect the opposite end of the negative **(-)** jumper cable to the remote negative **(-)** post of the vehicle with the discharged battery.

Downloaded from www.Manualslib.com manuals search engine

WARNING!

Do not connect the cable to the negative post (-) of the discharged battery. The resulting electrical spark could cause the battery to explode and could result in personal injury.

5. Start the engine in the vehicle that has the booster battery, let the engine idle a few minutes, and then start the engine in the vehicle with the discharged battery.

Once the engine is started, remove the jumper cables in the reverse sequence:

6. Disconnect the negative **(-)** jumper cable from the remote negative **(-)** post of the vehicle with the discharged battery.

7. Disconnect the negative end **(-)** of the jumper cable from the negative **(-)** post of the booster battery.

8. Disconnect the opposite end of the positive **(+)** jumper cable from the positive **(+)** post of the booster battery.

9. Disconnect the positive **(+)** end of the jumper cable from the remote positive **(+)** post of the discharged vehicle.

If frequent jump-starting is required to start your vehicle you should have the battery and charging system inspected at your authorized dealer.

CAUTION!

Accessories that can be plugged into the vehicle power outlets draw power from the vehicle's battery, even when not in use (i.e., cellular phones, etc.). Eventually, if plugged in long enough, the vehicle's battery will discharge sufficiently to degrade battery life and/or prevent the engine from starting.

Downloaded from www.Manualslib.com manuals search engine

FREEING A STUCK VEHICLE

If your vehicle becomes stuck in mud, sand, or snow, it can often be moved by a rocking motion. Turn your steering wheel right and left to clear the area around the front wheels. Then shift back and forth between REVERSE and DRIVE. Using minimal accelerator pedal pressure to maintain the rocking motion, without spinning the wheels, is most effective.

NOTE: Turn off the Electronic Stability Program (ESP) — if equipped, or Traction Control System (TCS) — if equipped before rocking the vehicle. Refer to "Electronic Brake Control" in "Starting and Operating" for further information.

CAUTION!

- **When "rocking" a stuck vehicle by moving between 1st and REVERSE, do not spin the wheels faster than 15 mph (24 km/h), or drivetrain damage may result.**
- **Revving the engine or spinning the wheels too fast may lead to transmission overheating and failure. It can also damage the tires. Do not spin the wheels above 30 mph (48 km/h) while in gear (no transmission shifting occurring).**

Downloaded from www.Manualslib.com manuals search engine

WARNING!

Fast spinning tires can be dangerous. Forces generated by excessive wheel speeds may cause damage, or even failure, of the axle and tires. A tire could explode and injure someone. Do not spin your vehicle's wheels faster than 30 mph (48 km/h) or for longer than 30 seconds continuously without stopping when you are stuck and do not let anyone near a spinning wheel, no matter what the speed.

TOWING A DISABLED VEHICLE

Without The Ignition Key Fob

Special care must be taken when the vehicle is towed with the ignition in the OFF position. The only approved method of towing without the ignition key is with a flatbed truck. Proper towing equipment is necessary to prevent damage to the vehicle.

Towing This Vehicle Behind Another Vehicle

Flatbed towing is recommended. DO NOT tow an AWD vehicle with the rear wheels on the ground unless the rear driveshaft is removed and the transmission is in NEUTRAL.

Vehicles WITHOUT AWD may be towed (with rear wheels on the ground) with the transmission in NEUTRAL under the following conditions:

- The distance to be traveled must not exceed 15 miles (24 km).
- The towing speed must not exceed 30 mph (48 km/h).

CAUTION!

Exceeding these towing limits may cause severe transmission damage. Such damage is not covered by the New Vehicle Limited Warranty.

Downloaded from www.Manualslib.com manuals search engine

Vehicles equipped with AWD can be towed with the transmission in NEUTRAL and the rear wheels OFF the ground (or the rear driveshaft removed) with no limitation on speed or distance.

CAUTION!

- **Do not attempt to tow this vehicle from the front with sling-type towing equipment. Damage to the front fascia will result.**
- **If the transmission is not operative or if the vehicle is to be towed more than 15 miles (24 km) or faster than 30 mph (48 kph), then the only approved method of towing is with a flatbed truck. Otherwise, damage to the transmission may result.**
- **Do not tow the vehicle from the rear. Damage to the rear sheet metal and fascia will occur.**

(Continued)

CAUTION! (Continued)

- **Do not push or tow this vehicle with another vehicle as damage to the bumper fascia and transmission may result.**

If you must use the accessories (wipers, defrosters, etc.) while being towed, the ignition must be placed in the RUN position, not the ACC position. Make certain the transmission remains in NEUTRAL.

Towing This Vehicle Behind Another Vehicle With A Tow Dolly

The manufacturer **does not recommend** that you tow this vehicle on a tow dolly. Vehicle damage may occur.

Downloaded from www.Manualslib.com manuals search engine

Downloaded from www.Manualslib.com manuals search engine

MAINTAINING YOUR VEHICLE

CONTENTS

- Engine Compartment — 2.7L 423
- Engine Compartment — 3.5L 424
- Engine Compartment — 5.7L 425
- Onboard Diagnostic System — OBD II 426
  - Loose Fuel Filler Cap 426
- Emissions Inspection And Maintenance Programs 427
- Replacement Parts 428
- Dealer Service 428
- Maintenance Procedures 429
  - Engine Oil 430
  - Engine Oil Filter 433
  - Engine Air Cleaner Filter 433
  - Maintenance-Free Battery 434
  - Air Conditioner Maintenance 436
  - A/C Air Filter 437
  - Body Lubrication 439
  - Windshield Wiper Blades 440

Downloaded from www.Manualslib.com manuals search engine

- Adding Washer Fluid 440
- Exhaust System 441
- Cooling System 444
- Brake System 449
- Automatic Transmission 452
- All Wheel Drive (AWD) – If Equipped 454
- Rear Axle 454
- Appearance Care And Protection From Corrosion 455

■ Fuses 460
- Integrated Power Module 460
- Rear Power Distribution Center 463

■ Vehicle Storage 468

■ Replacement Bulbs 468

■ Bulb Replacement 470
- Low Beam Headlamp, High Beam Headlamp, Park/Turn Lamp, Inner Park Lamp, And Outer Park Lamp – 300 Models . . 470
- Low Beam Headlamp, High Beam Headlamp, And Park/Turn Lamp – 300C . . . 472
- Backup Lamp, Side Marker Lamp, And Tail/Stop Turn Lamp — 300 Models 472
- Tail/Stop, Tail, Turn Signal Lamp, And Backup Lamp — 300C Models 476
- License Lamp 479

■ Fluid Capacities 480

■ Fluids, Lubricants, And Genuine Parts 482
- Engine 482
- Chassis 483

Downloaded from www.Manualslib.com manuals search engine

ENGINE COMPARTMENT — 2.7L

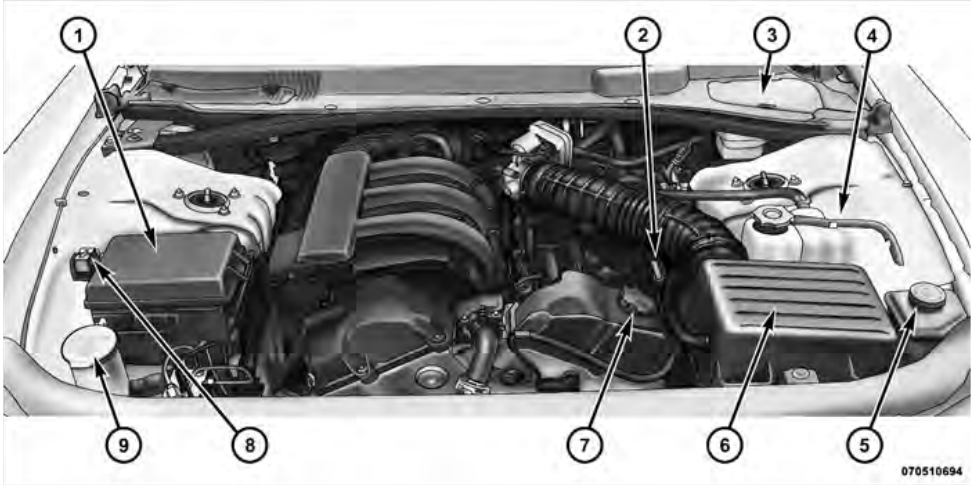

1 — Integrated Power Module
2 — Engine Oil Dipstick
3 — Brake Fluid Reservoir Access Cover
4 — Engine Coolant Reservoir
5 — Power Steering Fluid Reservoir
6 — Air Cleaner Filter
7 — Engine Oil Fill
8 — Remote Jump Start (Positive Battery Post)
9 — Washer Fluid Reservoir

Downloaded from www.Manualslib.com manuals search engine

ENGINE COMPARTMENT — 3.5L

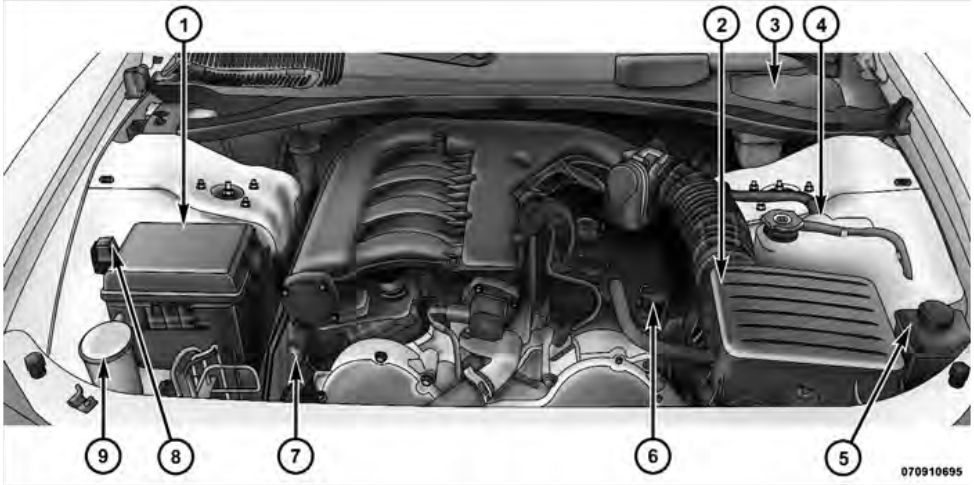

1 — Integrated Power Module
2 — Air Cleaner Filter
3 — Brake Fluid Reservoir Access Cover
4 — Engine Coolant Reservoir
5 — Power Steering Fluid Reservoir
6 — Engine Oil Fill
7 — Engine Oil Dipstick
8 — Remote Jump Start (Positive Battery Post)
9 — Washer Fluid Reservoir

Downloaded from www.Manualslib.com manuals search engine

ENGINE COMPARTMENT — 5.7L

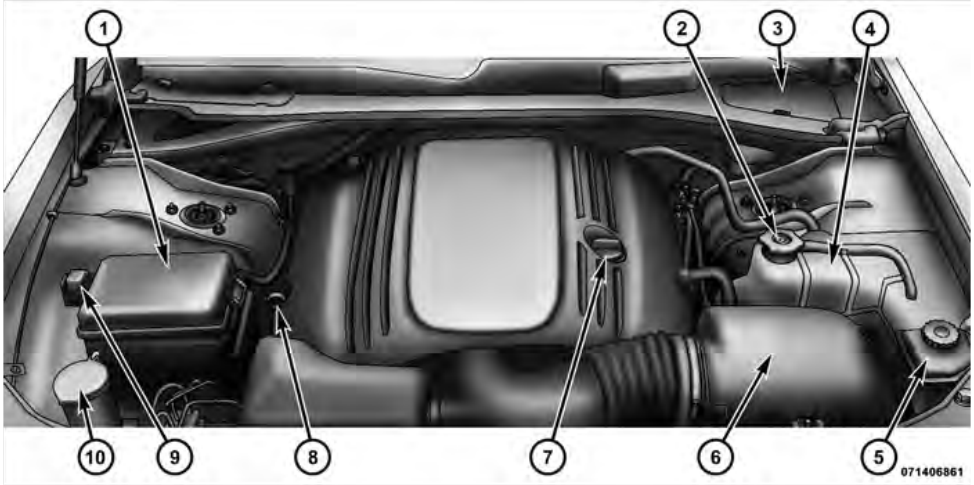

1 — Integrated Power Module
2 — Coolant Pressure Cap
3 — Brake Fluid Reservoir Access Cover
4 — Engine Coolant Reservoir
5 — Power Steering Fluid Reservoir
6 — Air Cleaner Filter
7 — Engine Oil Fill
8 — Engine Oil Dipstick
9 — Remote Jump Start (Positive Battery Post)
10 — Washer Fluid Reservoir

Downloaded from www.Manualslib.com manuals search engine

ONBOARD DIAGNOSTIC SYSTEM — OBD II

Your vehicle is equipped with a sophisticated onboard diagnostic system called OBD II. This system monitors the performance of the emissions, engine, and automatic transmission control systems. When these systems are operating properly, your vehicle will provide excellent performance and fuel economy, as well as engine emissions well within current government regulations.

If any of these systems require service, the OBD II system will turn on the "Malfunction Indicator Light (MIL)." It will also store diagnostic codes and other information to assist your service technician in making repairs. Although your vehicle will usually be drivable and not need towing, see your authorized dealer for service as soon as possible.

CAUTION!

- **Prolonged driving with the MIL on could cause further damage to the emissions control system. It could also affect fuel economy and driveability. The vehicle must be serviced before any emissions tests can be performed.**
- **If the MIL is flashing while the engine is running, severe catalytic converter damage and power loss will soon occur. Immediate service is required.**

Loose Fuel Filler Cap

If the vehicle diagnostic system determines that the fuel filler cap is loose, improperly installed, or damaged, a "gASCAP" message will appear in the odometer or a "Check Gascap" message will display in the Electronic Vehicle Information Center (EVIC) (if equipped). If this occurs, tighten the fuel filler cap properly and press the

Downloaded from www.Manualslib.com manuals search engine

TRIP ODOMETER button to turn off the message. If the problem continues, the message will appear the next time the vehicle is started.

A loose, improperly installed, or damaged fuel filler cap may also turn on the MIL.

EMISSIONS INSPECTION AND MAINTENANCE PROGRAMS

In some localities, it may be a legal requirement to pass an inspection of your vehicle's emissions control system. Failure to pass could prevent vehicle registration.

For states that require an Inspection and Maintenance (I/M), this check verifies the "Malfunction Indicator Light (MIL)" is functioning and is not on when the engine is running, and that the OBD II system is ready for testing.

Normally, the OBD II system will be ready. The OBD II system may **not** be ready if your vehicle was recently serviced, recently had a dead battery or a battery replacement. If the OBD II system should be determined not ready for the I/M test, your vehicle may fail the test.

Your vehicle has a simple ignition key-actuated test, which you can use prior to going to the test station. To check if your vehicle's OBD II system is ready, you must do the following:

1. Turn the ignition switch to the ON position, but do not crank or start the engine.

2. If you crank or start the engine, you will have to start this test over.

3. As soon as you turn the ignition switch to the ON position, you will see the MIL symbol come on as part of a normal bulb check.

4. Approximately 15 seconds later, one of two things will happen:

Downloaded from www.Manualslib.com manuals search engine

a. The MIL will flash for about 10 seconds and then return to being fully illuminated until you turn OFF the ignition or start the engine. This means that your vehicle's OBD II system is **not ready** and you should **not** proceed to the I/M station.

b. The MIL will not flash at all and will remain fully illuminated until you turn OFF the ignition or start the engine. This means that your vehicle's OBD II system is **ready** and you can proceed to the I/M station.

If your OBD II system is **not ready,** you should see your authorized dealer or repair facility. If your vehicle was recently serviced or had a battery failure or replacement, you may need to do nothing more than drive your vehicle as you normally would in order for your OBD II system to update. A recheck with the above test routine may then indicate that the system is now ready.

Regardless of whether your vehicle's OBD II system is ready or not, if the MIL is illuminated during normal vehicle operation you should have your vehicle serviced before going to the I/M station. The I/M station can fail your vehicle because the MIL is on with the engine running.

REPLACEMENT PARTS

Use of genuine MOPAR® parts for normal/scheduled maintenance and repairs is highly recommended to ensure the designed performance. Damage or failures caused by the use of non-MOPAR® parts for maintenance and repairs will not be covered by the manufacturer's warranty.

DEALER SERVICE

Your authorized dealer has the qualified service personnel, special tools, and equipment to perform all service operations in an expert manner. Service Manuals are available which include detailed service information for your vehicle. Refer to these Service Manuals before attempting any procedure yourself.

Downloaded from www.Manualslib.com manuals search engine

NOTE: Intentional tampering with emissions control systems may void your warranty and could result in civil penalties being assessed against you.

WARNING!

You can be badly injured working on or around a motor vehicle. Only do service work for which you have the knowledge and the proper equipment. If you have any doubt about your ability to perform a service job, take your vehicle to a competent mechanic.

MAINTENANCE PROCEDURES

The pages that follow contain the **required** maintenance services determined by the engineers who designed your vehicle.

Besides those maintenance items specified in the fixed maintenance schedule, there are other components which may require servicing or replacement in the future.

CAUTION!

- **Failure to properly maintain your vehicle or perform repairs and service when necessary could result in more costly repairs, damage to other components or negatively impact vehicle performance. Immediately have potential malfunctions examined by an authorized Chrysler Group LLC dealership or qualified repair center.**

(Continued)

Downloaded from www.Manualslib.com manuals search engine

CAUTION! (Continued)

- **Your vehicle has been built with improved fluids that protect the performance and durability of your vehicle and also allow extended maintenance intervals. Do not use chemical flushes in these components as the chemicals can damage your engine, transmission, power steering or air conditioning. Such damage is not covered by the New Vehicle Limited Warranty. If a flush is needed because of component malfunction, use only the specified fluid for the flushing procedure.**

Engine Oil

Checking Oil Level – 2.7L and 3.5L Engines

To assure proper engine lubrication, the engine oil must be maintained at the correct level. Check the oil level at regular intervals, such as every fuel stop. The best time to check the engine oil level is about five minutes after a fully warmed engine is shut off.

Checking the oil while the vehicle is on level ground will improve the accuracy of the oil level readings. Maintain the oil level between the MIN and MAX markings on the dipstick. Adding 1.0 qt (1.0 L) of oil when the reading is at the MIN mark will result in a MAX reading on these engines.

CAUTION!

Overfilling or underfilling will cause oil aeration or loss of oil pressure. This could damage your engine.

Checking Oil Level – 5.7L Engine

To assure proper engine lubrication, the engine oil must be maintained at the correct level. Check the oil level at regular intervals, such as every fuel stop. The best time to check the engine oil level is about five minutes after a fully warmed engine is shut off.

Downloaded from www.Manualslib.com manuals search engine

Checking the oil while the vehicle is on level ground will improve the accuracy of the oil level readings. Maintain the oil level in the "SAFE" range. Adding 1.0 qt (1.0 L) of oil when the reading is at the bottom of the "SAFE" range will result in an oil level at the top of the "SAFE" range on these engines.

CAUTION!

Overfilling or underfilling will cause oil aeration or loss of oil pressure. This could damage your engine.

Change Engine Oil

The oil change indicator system will remind you that it is time to take your vehicle in for scheduled maintenance. Refer to "Maintenance Schedule" for the proper maintenance intervals.

NOTE: Under no circumstances should oil change intervals exceed 6,000 miles (10 000 km) or six months, whichever occurs first.

Engine Oil Selection

For best performance and maximum protection under all types of operating conditions, the manufacturer only recommends engine oils that are API Certified and meet the requirements of Chrysler Material Standard MS-6395.

American Petroleum Institute (API) Engine Oil Identification Symbol

This symbol means that the oil has been certified by the American Petroleum Institute (API). The manufacturer only recommends API Certified engine oils.

Downloaded from www.Manualslib.com manuals search engine

CAUTION!

Do not use chemical flushes in your engine oil as the chemicals can damage your engine. Such damage is not covered by the New Vehicle Limited Warranty.

Engine Oil Viscosity (SAE Grade) – 2.7L and 5.7L Engines

SAE 5W-20 engine oil is recommended for all operating temperatures. This engine oil improves low temperature starting and vehicle fuel economy.

The engine oil filler cap also shows the recommended engine oil viscosity for your engine. For information on engine oil filler cap location, refer to "Engine Compartment" in "Maintaining Your Vehicle" for further information.

NOTE: Vehicles equipped with a 5.7L engine must use SAE 5W-20 oil. Failure to do so may result in improper operation of the Multi-Displacement System (MDS). Refer to "Multi-Displacement System" in "Starting and Operating" for further information.

Lubricants which do not have both, the engine oil certification mark and the correct SAE viscosity grade number should not be used.

Engine Oil Viscosity (SAE Grade) – 3.5L Engine

SAE 10W-30 engine oil is recommended for all operating temperatures.

The engine oil filler cap also shows the recommended engine oil viscosity for your engine. For information on engine oil filler cap location, refer to "Engine Compartment" in "Maintaining Your Vehicle" for further information.

Lubricants which do not have both, the engine oil certification mark and the correct SAE viscosity grade number should not be used.

Downloaded from www.Manualslib.com manuals search engine

Synthetic Engine Oils

You may use synthetic engine oils provided the recommended oil quality requirements are met, and the recommended maintenance intervals for oil and filter changes are followed.

Materials Added to Engine Oil

Do not add any supplemental materials, other than leak detection dyes, to your engine oil. Engine oil is an engineered product and its performance may be impaired by supplemental additives.

Disposing of Used Engine Oil and Oil Filters

Care should be taken in disposing of used engine oil and oil filters from your vehicle. Used oil and oil filters, indiscriminately discarded, can present a problem to the environment. Contact your authorized dealer, service station, or governmental agency for advice on how and where used oil and oil filters can be safely discarded in your area.

Engine Oil Filter

The engine oil filter should be replaced with a new filter at every engine oil change.

Engine Oil Filter Selection

This manufacturer's engines have a full-flow type oil filter. Use a filter of this type for replacement. The quality of replacement filters varies considerably. Only high quality filters should be used to assure most efficient service. MOPAR® engine oil filters are a high quality oil filter and are recommended.

Engine Air Cleaner Filter

Refer to "Maintenance Schedule" for the proper maintenance intervals.

Downloaded from www.Manualslib.com manuals search engine

WARNING!

The air induction system (air cleaner, hoses, etc.) can provide a measure of protection in the case of engine backfire. Do not remove the air induction system (air cleaner, hoses, etc.) unless such removal is necessary for repair or maintenance. Make sure that no one is near the engine compartment before starting the vehicle with the air induction system (air cleaner, hoses, etc.) removed. Failure to do so can result in serious personal injury.

Engine Air Cleaner Filter Selection

The quality of replacement engine air cleaner filters varies considerably. Only high quality filters should be used to assure most efficient service. MOPAR® engine air cleaner filters are a high quality filter and are recommended.

Maintenance-Free Battery

Your vehicle is equipped with a maintenance-free battery. You will never have to add water, nor is periodic maintenance required.

NOTE: The battery is stored under an access cover in the trunk. Remote battery terminals are located in the engine compartment for jump starting. Refer to "Jump-Starting Procedures" in "What To Do In Emergencies" for further information.

Downloaded from www.Manualslib.com manuals search engine

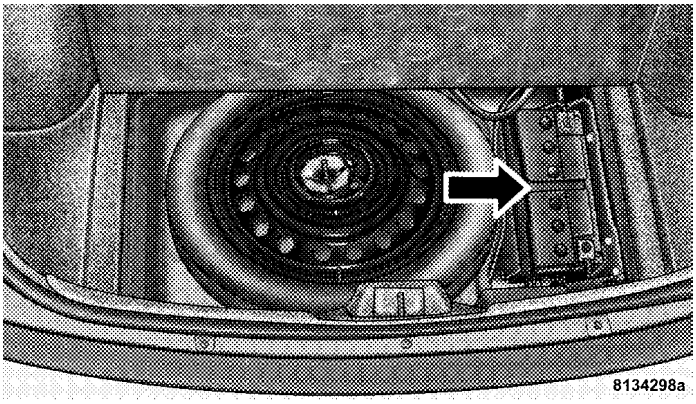

Battery Location

WARNING!

- **Battery fluid is a corrosive acid solution and can burn or even blind you. Do not allow battery fluid to contact your eyes, skin, or clothing. Do not lean over a battery when attaching clamps. If acid splashes in eyes or on skin, flush the area immediately with large amounts of water.**
- **Battery gas is flammable and explosive. Keep flame or sparks away from the battery. Do not use a booster battery or any other booster source with an output greater than 12 Volts. Do not allow cable clamps to touch each other.**
- **Battery posts, terminals, and related accessories contain lead and lead compounds. Wash hands after handling.**

(Continued)

Downloaded from www.Manualslib.com manuals search engine

WARNING! (Continued)

- **The battery in this vehicle has a vent hose that should not be disconnected and should only be replaced with a battery of the same type (vented).**

CAUTION!

- **It is essential when replacing the cables on the battery that the positive cable is attached to the positive post and the negative cable is attached to the negative post. Battery posts are marked positive (+) and negative (-) and are identified on the battery case. Cable clamps should be tight on the terminal posts and free of corrosion.**
- **If a "fast charger" is used while the battery is in the vehicle, disconnect both vehicle battery cables before connecting the charger to the battery. Do not use a "fast charger" to provide starting voltage.**

Air Conditioner Maintenance

For best possible performance, your air conditioner should be checked and serviced by an authorized dealer at the start of each warm season. This service should include cleaning of the condenser fins and a performance test. Drive belt tension should also be checked at this time.

CAUTION!

Do not use chemical flushes in your air conditioning system as the chemicals can damage your air conditioning components. Such damage is not covered by the New Vehicle Limited Warranty.

Downloaded from www.Manualslib.com manuals search engine

WARNING!

- **Use only refrigerants and compressor lubricants approved by the manufacturer for your air conditioning system. Some unapproved refrigerants are flammable and can explode, injuring you. Other unapproved refrigerants or lubricants can cause the system to fail, requiring costly repairs. Refer to the Warranty Information Book, located on the DVD, for further warranty information.**
- **The air conditioning system contains refrigerant under high pressure. To avoid risk of personal injury or damage to the system, adding refrigerant or any repair requiring lines to be disconnected should be done by an experienced technician.**

Refrigerant Recovery and Recycling

R-134a Air Conditioning Refrigerant is a hydrofluorocarbon (HFC) that is endorsed by the Environmental Protection Agency and is an ozone-saving product. However, the manufacturer recommends that air conditioning service be performed by authorized dealers or other service facilities using recovery and recycling equipment.

NOTE: Use only manufacturer approved A/C system sealers, stop leak products, seal conditioners, compressor oil, and refrigerants.

A/C Air Filter

The filter is located in the fresh air inlet under the hood, behind a removable panel in the cowl on the passenger side of the vehicle, next to the windshield wipers. When installing a new filter, ensure its proper orientation.

Downloaded from www.Manualslib.com manuals search engine

1. Remove the access door in the cowl screen by pressing the retaining clips.

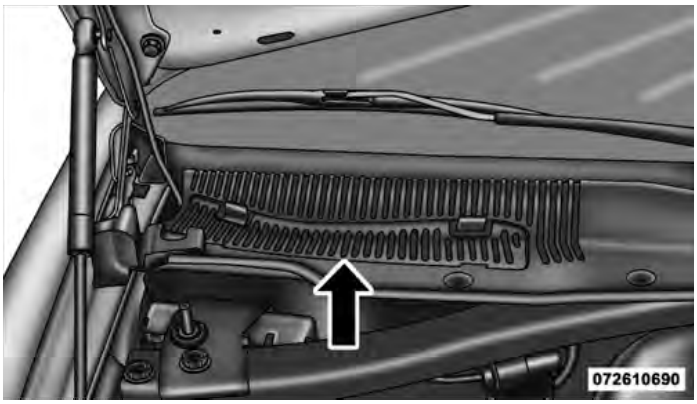

Access Door

2. Slide the lid on the filter adapter forward and down and remove the used filter.

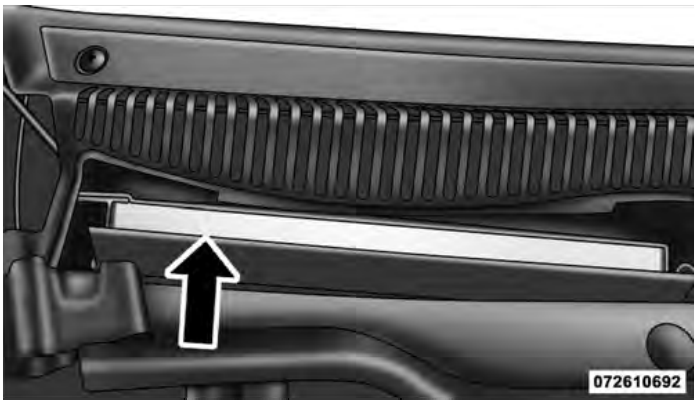

Downloaded from www.Manualslib.com manuals search engine

3. Install the new filter with arrows pointing in the direction of airflow, which is toward the rear of the vehicle (text and arrows on the filter will indicate this).

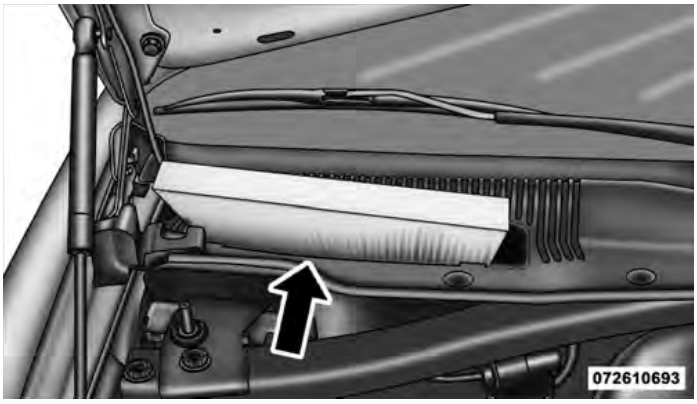

A/C Air Filter

Refer to "Maintenance Schedule" for the proper maintenance intervals.

Body Lubrication

Locks and all body pivot points, including such items as seat tracks, door hinge pivot points and rollers, liftgate, tailgate, sliding doors and hood hinges, should be lubricated periodically with a lithium based grease, such as MOPAR® Spray White Lube or equivalent to assure quiet, easy operation and to protect against rust and wear. Prior to the application of any lubricant, the parts concerned should be wiped clean to remove dust and grit; after lubricating excess oil and grease should be removed. Particular attention should also be given to hood latching components to ensure proper function. When performing other underhood services, the hood latch, release mechanism and safety catch should be cleaned and lubricated.

Downloaded from www.Manualslib.com manuals search engine

The external lock cylinders should be lubricated twice a year, preferably in the Fall and Spring. Apply a small amount of a high quality lubricant, such as MOPAR® Lock Cylinder Lubricant or equivalent, directly into the lock cylinder.

Windshield Wiper Blades

Clean the rubber edges of the wiper blades and the windshield periodically with a sponge or soft cloth and a mild nonabrasive cleaner. This will remove accumulations of salt or road film.

Operation of the wipers on dry glass for long periods may cause deterioration of the wiper blades. Always use washer fluid when using the wipers to remove salt or dirt from a dry windshield.

Avoid using the wiper blades to remove frost or ice from the windshield. Keep the blade rubber out of contact with petroleum products such as engine oil, gasoline, etc.

NOTE: Life expectancy of wiper blades varies depending on geographical area and frequency of use. Poor performance of blades may be present with chattering, marks, water lines or wet spots. If any condition is present please proceed to clean wiper blades with humid cloth removing any debris that may be affecting its function.

Adding Washer Fluid

The windshield washer and the headlight washer (if equipped) share the same fluid reservoir. The fluid reservoir is located in the front of the engine compartment. Be sure to check the fluid level in the reservoir at regular intervals. Fill the reservoir with windshield washer solvent (not radiator antifreeze) and operate the system for a few seconds to flush out the residual water.

When refilling the washer fluid reservoir, apply some washer fluid to a cloth or towel and wipe the wiper blades clean. This will help blade performance.

Downloaded from www.Manualslib.com manuals search engine

To prevent freeze-up of your windshield washer system in cold weather, select a solution or mixture that meets or exceeds the temperature range of your climate. This rating information can be found on most washer fluid containers.

The fluid reservoir will hold nearly 1 gal (4 L) of washer fluid when the message "Low Washer Fluid" appears in the Electronic Vehicle Information Center (EVIC) (if equipped).

WARNING!

Commercially available windshield washer solvents are flammable. They could ignite and burn you. Care must be exercised when filling or working around the washer solution.

Exhaust System

The best protection against carbon monoxide entry into the vehicle body is a properly maintained engine exhaust system.

If you notice a change in the sound of the exhaust system; or if the exhaust fumes can be detected inside the vehicle; or when the underside or rear of the vehicle is damaged; have an authorized technician inspect the complete exhaust system and adjacent body areas for broken, damaged, deteriorated, or mispositioned parts. Open seams or loose connections could permit exhaust fumes to seep into the passenger compartment. In addition, inspect the exhaust system each time the vehicle is raised for lubrication or oil change. Replace as required.

Downloaded from www.Manualslib.com manuals search engine

WARNING!

- **Exhaust gases can injure or kill. They contain carbon monoxide (CO), which is colorless and odorless. Breathing it can make you unconscious and can eventually poison you. To avoid breathing CO, refer to "Safety Tips/Exhaust Gas" in "Things To Know Before Starting Your Vehicle" for further information.**
- **A hot exhaust system can start a fire if you park over materials that can burn. Such materials might be grass or leaves coming into contact with your exhaust system. Do not park or operate your vehicle in areas where your exhaust system can contact anything that can burn.**

CAUTION!

- **The catalytic converter requires the use of unleaded fuel only. Leaded gasoline will destroy the effectiveness of the catalyst as an emissions control device and may seriously reduce engine performance and cause serious damage to the engine.**
- **Damage to the catalytic converter can result if your vehicle is not kept in proper operating condition. In the event of engine malfunction, particularly involving engine misfire or other apparent loss of performance, have your vehicle serviced promptly. Continued operation of your vehicle with a severe malfunction could cause the converter to overheat, resulting in possible damage to the converter and vehicle.**

Downloaded from www.Manualslib.com manuals search engine

Under normal operating conditions, the catalytic converter will not require maintenance. However, it is important to keep the engine properly tuned to assure proper catalyst operation and prevent possible catalyst damage.

NOTE: Intentional tampering with emissions control systems can result in civil penalties being assessed against you.

In unusual situations involving grossly malfunctioning engine operation, a scorching odor may suggest severe and abnormal catalyst overheating. If this occurs, stop the vehicle, turn off the engine and allow it to cool. Service, including a tune-up to manufacturer's specifications, should be obtained immediately.

To minimize the possibility of catalytic converter damage:

- Do not shut off the engine or interrupt the ignition, when the transmission is in gear and the vehicle is in motion.
- Do not try to start the engine by pushing or towing the vehicle.
- Do not idle the engine with any spark plug wires disconnected or removed, such as when diagnostic testing, or for prolonged periods during very rough idle or malfunctioning operating conditions.

Downloaded from www.Manualslib.com manuals search engine

Cooling System

WARNING!

- **When working near the radiator cooling fan, disconnect the fan motor lead or turn the ignition switch to the LOCK position (OFF position for Keyless Go™). The fan is temperature controlled and can start at any time the ignition switch is in the ON position (RUN position for Keyless Go™).**
- **You or others can be badly burned by hot engine coolant (antifreeze) or steam from your radiator. If you see or hear steam coming from under the hood, do not open the hood until the radiator has had time to cool. Never try to open a cooling system pressure cap when the radiator is hot.**

Coolant Checks

Check engine coolant (antifreeze) protection every 12 months (before the onset of freezing weather, where applicable). If the engine coolant (antifreeze) is dirty or rusty in appearance, the system should be drained, flushed, and refilled with fresh coolant. Check the front of the A/C condenser for any accumulation of bugs, leaves, etc. If dirty, clean by gently spraying water from a garden hose vertically down the face of the condenser.

Check the coolant recovery bottle tubing for brittle rubber, cracking, tears, cuts, and tightness of the connection at the bottle and radiator. Inspect the entire system for leaks.

With the engine at normal operating temperature (but not running), check the cooling system pressure cap for proper vacuum sealing by draining a small amount of engine coolant (antifreeze) from the radiator drain cock. If the cap is sealing properly, the engine coolant (antifreeze) will begin to drain from the coolant recovery bottle. DO NOT REMOVE THE COOLANT PRESSURE CAP WHEN THE COOLING SYSTEM IS HOT.

Downloaded from www.Manualslib.com manuals search engine

Cooling System – Drain, Flush, and Refill

If the engine coolant (antifreeze) is dirty or contains a considerable amount of sediment, clean and flush with a reliable cooling system cleaner. Follow with a thorough rinsing to remove all deposits and chemicals. Properly dispose of the old engine coolant (antifreeze) solution.

Refer to "Maintenance Schedule" for the proper maintenance intervals.

Selection of Coolant

Use only the manufacturer's recommended engine coolant (antifreeze). Refer to "Fluids, Lubricants, and Genuine Parts" in "Maintaining Your Vehicle" for further information.

CAUTION!

- **Mixing of engine coolant (antifreeze) other than specified HOAT engine coolant (antifreeze), may result in engine damage and may decrease corrosion protection. If a non-HOAT engine coolant (antifreeze) is introduced into the cooling system in an emergency, it should be replaced with the specified engine coolant (antifreeze) as soon as possible.**
- **Do not use water alone or alcohol-based engine coolant (antifreeze) products. Do not use additional rust inhibitors or antirust products, as they may not be compatible with the radiator engine coolant (antifreeze) and may plug the radiator.**

(Continued)

Downloaded from www.Manualslib.com manuals search engine

CAUTION! (Continued)

- **This vehicle has not been designed for use with propylene glycol-based engine coolant (antifreeze). Use of propylene glycol-based engine coolant (antifreeze) is not recommended.**

Adding Coolant

Your vehicle has been built with an improved engine coolant (antifreeze) that allows extended maintenance intervals. This engine coolant (antifreeze) can be used up to five years or 102,000 miles (170 000 km) before replacement. To prevent reducing this extended maintenance period, it is important that you use the same engine coolant (antifreeze) throughout the life of your vehicle.

Please review these recommendations for using Hybrid Organic Additive Technology (HOAT) engine coolant (antifreeze). When adding engine coolant (antifreeze):

- The manufacturer recommends using MOPAR® Antifreeze/Coolant 5 Year/100,000 Mile Formula HOAT (Hybrid Organic Additive Technology) or equivalent.
- Mix a minimum solution of 50% HOAT engine coolant (antifreeze) and distilled water. Use higher concentrations (not to exceed 70%) if temperatures below −34°F (−37°C) are anticipated.
- Use only high purity water such as distilled or deionized water when mixing the water/engine coolant (antifreeze) solution. The use of lower quality water will reduce the amount of corrosion protection in the engine cooling system.

Please note that it is the owner's responsibility to maintain the proper level of protection against freezing according to the temperatures occurring in the area where the vehicle is operated.

Downloaded from www.Manualslib.com manuals search engine

NOTE: Mixing engine coolant (antifreeze) types will decrease the life of the engine coolant (antifreeze) and will require more frequent engine coolant (antifreeze) changes.

Cooling System Pressure Cap

The cap must be fully tightened to prevent loss of engine coolant (antifreeze), and to ensure that engine coolant (antifreeze) will return to the radiator from the coolant recovery bottle.

The cap should be inspected and cleaned if there is any accumulation of foreign material on the sealing surfaces.

WARNING!

- **The warning words "DO NOT OPEN HOT" on the cooling system pressure cap are a safety precaution. Never add engine coolant (antifreeze) when the engine is overheated. Do not loosen or remove the cap to cool an overheated engine. Heat causes pressure to build up in the cooling system. To prevent scalding or injury, do not remove the pressure cap while the system is hot or under pressure.**
- **Do not use a pressure cap other than the one specified for your vehicle. Personal injury or engine damage may result.**

Downloaded from www.Manualslib.com manuals search engine

Disposal of Used Coolant

Used ethylene glycol-based engine coolant (antifreeze) is a regulated substance requiring proper disposal. Check with your local authorities to determine the disposal rules for your community. To prevent ingestion by animals or children, do not store ethylene glycol-based engine coolant (antifreeze) in open containers or allow it to remain in puddles on the ground. If ingested by a child or pet, seek emergency assistance immediately. Clean up any ground spills immediately.

Coolant Level

The coolant bottle provides a quick visual method for determining that the coolant level is adequate. With the engine OFF and cold, the level of the coolant in the bottle should be between the ranges indicated on the bottle.

The radiator normally remains completely full, so there is no need to remove the radiator cap unless checking for engine coolant (antifreeze) freeze point or replacing engine coolant (antifreeze). Advise your service attendant of this. As long as the engine operating temperature is satisfactory, the coolant bottle need only be checked once a month.

When additional engine coolant (antifreeze) is needed to maintain the proper level, it should be added to the coolant bottle. Do not overfill.

Points to Remember

NOTE: When the vehicle is stopped after a few miles (kilometers) of operation, you may observe vapor coming from the front of the engine compartment. This is normally a result of moisture from rain, snow, or high humidity accumulating on the radiator and being vaporized when the thermostat opens, allowing hot engine coolant (antifreeze) to enter the radiator.

Downloaded from www.Manualslib.com manuals search engine

If an examination of your engine compartment shows no evidence of radiator or hose leaks, the vehicle may be safely driven. The vapor will soon dissipate.

- Do not overfill the coolant recovery bottle.
- Check engine coolant (antifreeze) freeze point in the radiator and in the coolant recovery bottle. If engine coolant (antifreeze) needs to be added, contents of coolant recovery bottle must also be protected against freezing.
- If frequent engine coolant (antifreeze) additions are required, or if the level in the coolant recovery bottle does not drop when the engine cools, the cooling system should be pressure tested for leaks.
- Maintain engine coolant (antifreeze) concentration at 50% HOAT engine coolant (antifreeze) (minimum) and distilled water for proper corrosion protection of your engine, which contains aluminum components.
- Make sure that the radiator and coolant recovery bottle overflow hoses are not kinked or obstructed.
- Keep the front of the radiator clean. If your vehicle is equipped with air conditioning, keep the front of the condenser clean.
- Do not change the thermostat for Summer or Winter operation. If replacement is ever necessary, install ONLY the correct type thermostat. Other designs may result in unsatisfactory engine coolant (antifreeze) performance, poor gas mileage, and increased emissions.

Brake System

In order to assure brake system performance, all brake system components should be inspected periodically. Refer to “Maintenance Schedule” for the proper maintenance intervals.

Downloaded from www.Manualslib.com manuals search engine

WARNING!

Riding the brakes can lead to brake failure and possibly an accident. Driving with your foot resting or riding on the brake pedal can result in abnormally high brake temperatures, excessive lining wear, and possible brake damage. You would not have your full braking capacity in an emergency.

Master Cylinder – Brake Fluid Level Check

Check the fluid level in the master cylinder immediately if the brake system warning light indicates system failure.

Check the fluid level in the master cylinder when performing underhood services.

Clean the top of the master cylinder area before removing the cap. Add fluid to bring the level up to the "MAX" mark on the side of the master cylinder reservoir.

Add enough fluid to bring the level up to the requirements described on the brake fluid reservoir. With disc brakes, fluid level can be expected to fall as the brake pads wear. However, low fluid level may be caused by a leak and a checkup may be needed.

Use only manufacturer's recommended brake fluid. Refer to "Fluids, Lubricants, and Genuine Parts" in "Maintaining Your Vehicle" for further information.

Downloaded from www.Manualslib.com manuals search engine

WARNING!

- **Use only manufacturer's recommended brake fluid. Refer to "Fluids, Lubricants, and Genuine Parts" in "Maintaining Your Vehicle" for further information. Using the wrong type of brake fluid can severely damage your brake system and/or impair its performance. The proper type of brake fluid for your vehicle is also labeled on the original factory installed hydraulic master cylinder reservoir.**

(Continued)

WARNING! (Continued)

- **To avoid contamination from foreign matter or moisture, use only new brake fluid or fluid that has been in a tightly closed container. Keep the master cylinder reservoir cap secured at all times. Brake fluid in a open container absorbs moisture from the air resulting in a lower boiling point. This may cause it to boil unexpectedly during hard or prolonged braking, resulting in sudden brake failure. This could result in a accident.**
- **Overfilling the brake fluid reservoir can result in spilling brake fluid on hot engine parts, causing the brake fluid to catch fire. Brake fluid can also damage painted and vinyl surfaces, care should be taken to avoid its contact with these surfaces.**

(Continued)

Downloaded from www.Manualslib.com manuals search engine

WARNING! (Continued)

- **Do not allow petroleum based fluid to contaminate the brake fluid. Brake seal components could be damaged, causing partial or complete brake failure. This could result in an accident.**

Automatic Transmission

Fluid Level Check

Regular automatic transmission fluid level checks are not required. For this reason, the dipstick is omitted.

If you notice fluid loss or transmission malfunction, have your authorized dealer check the transmission fluid level.

CAUTION!

- **Using a transmission fluid other than the manufacturer's recommended fluid may cause deterioration in transmission shift quality and/or torque converter shudder. Using a transmission fluid other than that recommended by the manufacturer will result in more frequent fluid and filter changes. Refer to "Fluids, Lubricants, and Genuine Parts" in "Maintaining Your Vehicle" for further information.**
- **The fluid level is preset at the factory and it does not require adjustment under normal operating conditions. If a transmission fluid leak occurs, visit your authorized dealer immediately. Severe damage to the transmission may occur. Your authorized dealer has the proper tools to adjust the fluid level accurately.**

Downloaded from www.Manualslib.com manuals search engine

Fluid and Filter Changes

Refer to "Maintenance Schedule" for the proper maintenance intervals.

If the transmission is disassembled for any reason, the fluid and filter should be changed.

Selection of Lubricant

It is important that the proper lubricant is used in the transmission to assure optimum transmission performance. Use only manufacturer's recommended transmission fluid. Refer to "Fluids, Lubricants, and Genuine Parts" in "Maintaining Your Vehicle" for further information. It is important that the transmission fluid be maintained at the prescribed level using the recommended fluid. No chemical flushes should be used in any transmission; only the approved lubricant may be used.

Special Additives

Automatic Transmission Fluid (ATF) is an engineered product and its performance may be impaired by supplemental additives. Therefore, do not add any fluid additives to the transmission. The only exception to this policy is the use of special dyes to aid in detecting fluid leaks. In addition, avoid using transmission sealers as they may adversely affect seals.

CAUTION!

Do not use chemical flushes in your transmission as the chemicals can damage your transmission components. Such damage is not covered by the New Vehicle Limited Warranty.

Downloaded from www.Manualslib.com manuals search engine

All Wheel Drive (AWD) – If Equipped

The all wheel drive system consists of a transfer case and front differential. The exterior surface of these components should be inspected for evidence of fluid leaks. Confirmed leaks should be repaired as soon as possible.

The transfer case fluid fill/inspection plug is located in the middle of the rear housing. To inspect the transfer case fluid level, remove the fill/inspection plug. The fluid level should be even with the bottom of the hole. Use this plug to add fluid as required.

The front differential fill plug is located on the outer cover near the halfshaft attachment. To inspect the differential fluid level, remove the fill plug. The fluid level should be even with or slightly below the bottom of the hole.

Fluid Changes

Refer to "Maintenance Schedule" for the proper maintenance intervals.

Rear Axle

For normal service, periodic fluid level checks are not required. When the vehicle is serviced for other reasons the exterior surfaces of the axle assembly should be inspected. If gear oil leakage is suspected inspect the fluid level. Refer to "Fluids, Lubricants, and Genuine Parts" in "Maintaining Your Vehicle" for further information.

Fluid Level Check

Check the fluid level by removing the fill plug on the axle. The fluid level should be at the bottom of the fill hole. Add fluid, if necessary, to maintain the proper level. Refer to "Fluids, Lubricants, and Genuine Parts" in "Maintaining Your Vehicle" for further information.

Change Axle Fluid

Refer to "Maintenance Schedule" for the proper maintenance intervals.

Downloaded from www.Manualslib.com manuals search engine

Appearance Care and Protection from Corrosion

Protection of Body and Paint from Corrosion

Vehicle body care requirements vary according to geographic locations and usage. Chemicals that make roads passable in snow and ice, and chemicals that are sprayed on trees and road surfaces during other seasons, are highly corrosive to the metal in your vehicle. Outside parking, which exposes your vehicle to airborne contaminants, road surfaces on which the vehicle is operated, extreme hot or cold weather and other extreme conditions will have an adverse effect on paint, metal trim, and underbody protection.

The following maintenance recommendations will enable you to obtain maximum benefit from the corrosion resistance built into your vehicle.

What Causes Corrosion?

Corrosion is the result of deterioration or removal of paint and protective coatings from your vehicle.

The most common causes are:

- Road salt, dirt, and moisture accumulation.
- Stone and gravel impact.
- Insects, tree sap, and tar.
- Salt in the air near seacoast localities.
- Atmospheric fallout/industrial pollutants.

Washing

- Wash your vehicle regularly. Always wash your vehicle in the shade using MOPAR® Car Wash or a mild car wash soap, and rinse the panels completely with clear water.
- If insects, tar, or other similar deposits have accumulated on your vehicle, use MOPAR® Super Kleen Bug and Tar Remover or equivalent to remove.

Downloaded from www.Manualslib.com manuals search engine

- Use a high quality cleaner wax, such as MOPAR® Cleaner Wax or equivalent to remove road film, stains and to protect your paint finish. Take care never to scratch the paint.
- Avoid using abrasive compounds and power buffing that may diminish the gloss or thin out the paint finish.

CAUTION!

- **Do not use abrasive or strong cleaning materials such as steel wool or scouring powder that will scratch metal and painted surfaces.**
- **Use of power washers exceeding 1,200 psi (8 274 kPa) can result in damage or removal of paint and decals.**

Special Care

- If you drive on salted or dusty roads or if you drive near the ocean, hose off the undercarriage at least once a month.
- It is important that the drain holes in the lower edges of the doors, rocker panels, and trunk be kept clear and open.
- If you detect any stone chips or scratches in the paint, touch them up immediately. The cost of such repairs is considered the responsibility of the owner.
- If your vehicle is damaged due to an accident or similar cause, which destroys the paint and protective coating, have your vehicle repaired as soon as possible. The cost of such repairs is considered the responsibility of the owner.

Downloaded from www.Manualslib.com manuals search engine

- If you carry special cargo such as chemicals, fertilizers, de-icer salt, etc., be sure that such materials are well packaged and sealed.
- If a lot of driving is done on gravel roads, consider mud or stone shields behind each wheel.
- Use MOPAR® Touch Up Paint or equivalent on scratches as soon as possible. Your authorized dealer has touch up paint to match the color of your vehicle.

Wheel and Wheel Trim Care

All wheels and wheel trim, especially aluminum and chrome-plated wheels should be cleaned regularly with a mild soap and water to prevent corrosion. To remove heavy soil and/or excessive brake dust, use MOPAR® Wheel Cleaner or equivalent or select a nonabrasive, non-acidic cleaner. Do not use scouring pads, steel wool, a bristle brush, or metal polishes. Only MOPAR® or equivalent is recommended. Do not use oven cleaner. Avoid automatic car washes that use acidic solutions or harsh brushes that may damage the wheels' protective finish.

Stain Repel Fabric Cleaning Procedure – If Equipped

Stain Repel seats may be cleaned in the following manner:

- Remove as much of the stain as possible by blotting with a clean, dry towel.
- Blot any remaining stain with a clean, damp towel.
- For tough stains, apply MOPAR® Total Clean or a mild soap solution to a clean, damp cloth and remove the stain. Use a fresh, damp towel to remove soap residue.
- For grease stains, apply MOPAR® Multi-Purpose Cleaner or equivalent to a clean, damp cloth and remove the stain. Use a fresh, damp towel to remove soap residue.

Downloaded from www.Manualslib.com manuals search engine

- Do not use any harsh solvents or any other form of protectants on Stain Repel products.

Interior Care

Use MOPAR® Fabric Cleaner or equivalent to clean fabric upholstery and MOPAR® Carpet Cleaner or equivalent for carpeting.

Interior Trim should be cleaned starting with a damp cloth, or MOPAR® Satin Select or equivalent. Do not use harsh cleaners or Armor All®. Use MOPAR® Total Clean or equivalent to clean vinyl upholstery.

MOPAR® Total Clean or equivalent is specifically recommended for leather upholstery.

Your leather upholstery can be best preserved by regular cleaning with a damp soft cloth. Small particles of dirt can act as an abrasive and damage the leather upholstery and should be removed promptly with a damp cloth. Stubborn soils can be removed easily with a soft cloth and appropriate products such as MOPAR® Total Clean or equivalent. Care should be taken to avoid soaking your leather upholstery with any liquid. Please do not use polishes, oils, cleaning fluids, solvents, detergents, or ammonia-based cleaners to clean your leather upholstery. Application of a leather conditioner is not required to maintain the original condition.

WARNING!

Do not use volatile solvents for cleaning purposes. Many are potentially flammable, and if used in closed areas they may cause respiratory harm.

Cleaning Headlights

Your vehicle has plastic headlights that are lighter and less susceptible to stone breakage than glass headlights.

Plastic is not as scratch resistant as glass and therefore different lens cleaning procedures must be followed.

Downloaded from www.Manualslib.com manuals search engine

To minimize the possibility of scratching the lenses and reducing light output, avoid wiping with a dry cloth. To remove road dirt, wash with a mild soap solution followed by rinsing.

Do not use abrasive cleaning components, solvents, steel wool or other aggressive material to clean the lenses.

Glass Surfaces

All glass surfaces should be cleaned on a regular basis with MOPAR® Glass Cleaner or any commercial household-type glass cleaner. Never use an abrasive type cleaner. Use caution when cleaning the inside rear window equipped with electric defrosters or the right rear quarter window equipped with the radio antenna. Do not use scrapers or other sharp instrument that may scratch the elements.

When cleaning the rear view mirror, spray cleaner on the towel or rag that you are using. Do not spray cleaner directly on the mirror.

Cleaning Plastic Instrument Cluster Lenses

The lenses in front of the instruments in this vehicle are molded in clear plastic. When cleaning the lenses, care must be taken to avoid scratching the plastic.

1. Clean with a wet soft rag or micro-fiber towel. A mild soap solution may be used, but do not use high alcohol content or abrasive cleaners. If soap is used, wipe clean with a clean damp rag.

2. Dry with a soft tissue.

Seat Belt Maintenance

Do not bleach, dye, or clean the belts with chemical solvents or abrasive cleaners. This will weaken the fabric. Sun damage can also weaken the fabric.

If the belts need cleaning, use MOPAR® Total Clean, a mild soap solution, or lukewarm water. Do not remove the belts from the vehicle to wash them.

Downloaded from www.Manualslib.com manuals search engine

Replace the belts if they appear frayed or worn or if the buckles do not work properly.

Cleaning the Center Console Cupholders

Clean with a damp cloth or towel using a mild detergent with the cupholder in the center console.

NOTE: The cupholder cannot be removed.

FUSES

Integrated Power Module

The Integrated Power Module (IPM) is located in the engine compartment. This module contains fuses and relays.

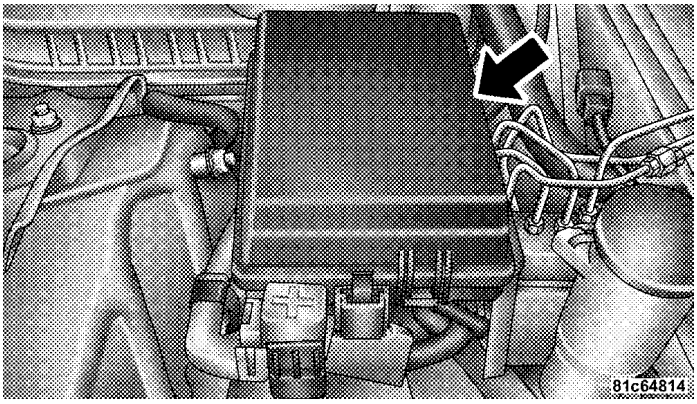

Integrated Power Module

Downloaded from www.Manualslib.com manuals search engine

CAUTION!

- **When installing the integrated power module cover, it is important to ensure the cover is properly positioned and fully latched. Failure to do so may allow water to get into the integrated power module and possibly result in an electrical system failure.**
- **When replacing a blown fuse, it is important to use only a fuse having the correct amperage rating. The use of a fuse with a rating other than indicated may result in a dangerous electrical system overload. If a properly rated fuse continues to blow, it indicates a problem in the circuit that must be corrected.**

Cavity	Cartridge Fuse	Mini-Fuse	Description
1	—	15 Amp Blue	Washer Motor
2	—	25 Amp Neutral	Powertrain Control Module (PCM)
3	—	25 Amp Neutral	Ignition Run/Start
4	—	25 Amp Neutral	Alternator/EGR Solenoid
5	—	—	—
6	—	25 Amp Neutral	Ignition Coils/Injectors/Short Runner Valve
7	—	—	—

Downloaded from www.Manualslib.com manuals search engine

Cavity	Car-tridge Fuse	Mini-Fuse	Description
8	—	30 Amp Green	Starter
9	—	—	—
10	30 Amp Pink	—	Windshield Wiper
11	30 Amp Pink	—	Anti-Lock Brake System (ABS) Valves – If Equipped
12	40 Amp Green	—	Radiator Fan
13	50 Amp Red	—	Anti-Lock Brake System (ABS) Pump Motor – If Equipped

Cavity	Car-tridge Fuse	Mini-Fuse	Description
14	—	—	—
15	50 Amp Red	—	Radiator Fan
16	—	—	—
17	—	—	—
18	—	—	—
19	—	—	—
20	—	—	—
21	—	—	—
22	—	—	—

Downloaded from www.Manualslib.com manuals search engine

Rear Power Distribution Center

There is also a power distribution center located in the trunk under the spare tire access panel. This center contains fuses and relays.

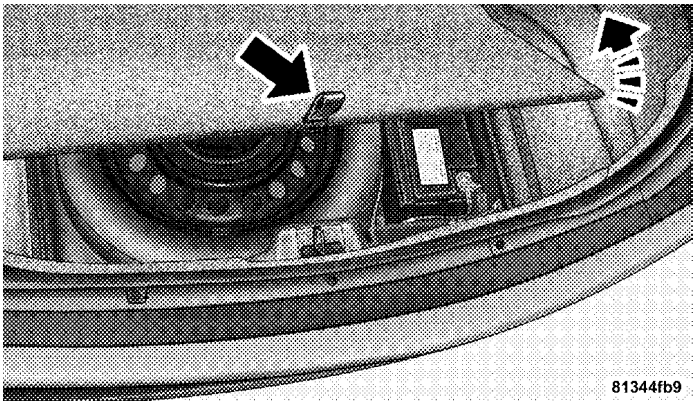

Opening The Access Panel

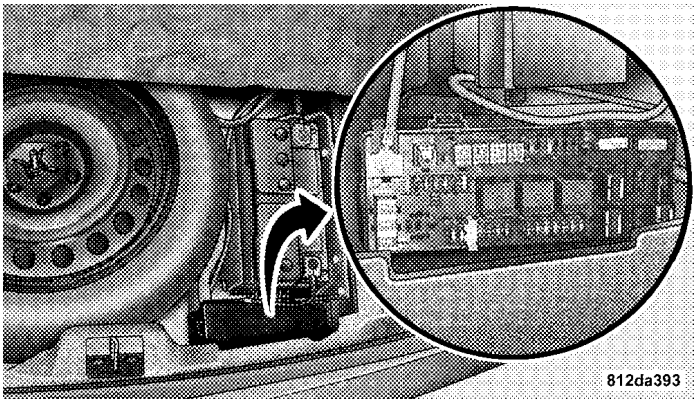

Rear Power Distribution Center

Downloaded from www.Manualslib.com manuals search engine

CAUTION!

- **When installing the power distribution center cover, it is important to ensure the cover is properly positioned and fully latched. Failure to do so may allow water to get into the power distribution center and possibly result in an electrical system failure.**
- **When replacing a blown fuse, it is important to use only a fuse having the correct amperage rating. The use of a fuse with a rating other than indicated may result in a dangerous electrical system overload. If a properly rated fuse continues to blow, it indicates a problem in the circuit that must be corrected.**

Cavity	Cartridge Fuse	Mini-Fuse	Description
1	60 Amp Yellow	—	Ignition Off Draw (IOD) **Cavity 1 of the Rear Power Distribution Center contains a black IOD fuse needed for vehicle processing during assembly. The service replacement part is a 60 Amp yellow cartridge fuse.**
2	40 Amp Green	—	Integrated Power Module (IPM)
3	—	—	—
4	40 Amp Green	—	Integrated Power Module (IPM)

Downloaded from www.Manualslib.com manuals search engine

Cavity	Car-tridge Fuse	Mini-Fuse	Description
5	30 Amp Pink	—	Heated Seats – If Equipped
6	—	20 Amp Yellow	Fuel Pump
7	—	15 Amp Blue	Rear Heated Seats – If Equipped
8	—	15 Amp Blue	Diagnostic Link Connector (DLC)/Wireless Control Module (WCM)/ Wireless Ignition Node (WIN)
9	—	20 Amp Yellow	Power Outlet
10	—	—	—
11 *	—	—	—
12 *	—	—	—

Cavity	Car-tridge Fuse	Mini-Fuse	Description
13 *	—	—	—
14	—	10 Amp Red	AC Heater Control/ Cluster/Security Module – If Equipped
15	—	20 Amp Yellow	Trailer Tow Brake Module – If Equipped
16	—	—	—
17	—	20 Amp Yellow	Cluster
18	—	20 Amp Yellow	Selectable Power Outlet
19	—	10 Amp Red	Stop Lights
20	—	—	—
21	—	—	—

Downloaded from www.Manualslib.com manuals search engine

Cavity	Cartridge Fuse	Mini-Fuse	Description
22	—	—	—
23	—	—	—
24	—	—	—
25	—	—	—
26	—	—	—
27	—	10 Amp Red	Occupant Restraint Controller (ORC)
28	—	10 Amp Red	Ignition Run, AC Heater Control/Headlights/Park Assist – If Equipped/Tire Pressure Monitoring – If Equipped/Occupant Restraint Controller (ORC)
29	—	5 Amp Orange	Adaptive Cruise Control (ACC) – If Equipped/Cluster/Electronic Stability Program (ESP) – If Equipped/Powertrain Control Module (PCM)/STOP LIGHT Switch
30	—	10 Amp Red	Door Modules/Power Mirrors/Steering Control Module (SCM)
31	—	—	—
32	—	—	—
33	—	—	—
34	—	—	—

Downloaded from www.Manualslib.com manuals search engine

Cavity	Car-tridge Fuse	Mini-Fuse	Description
35	—	5 Amp Orange	Antenna Module – If Equipped/Power Mirrors/Rain Sensor – If Equipped
36	—	25 Amp Natural	Hands-Free Phone – If Equipped/Video Monitor – If Equipped/Radio
37	—	15 Amp Blue	Transmission
38	—	10 Amp Red	Analog Clock/Cargo Light/Satellite Receiver (SDARS) Video – If Equipped/Vehicle Information Module – If Equipped

Cavity	Car-tridge Fuse	Mini-Fuse	Description
39	—	10 Amp Red	Heated Mirrors – If Equipped
40	—	5 Amp Orange	Auto Inside Rearview Mirror – If Equipped/ Heated Seats – If Equipped/Switch Bank
41	—	15 Amp Blue	AWD Module – If Equipped
42	30 Amp Pink	—	Front Blower Motor
43	30 Amp Pink	—	Rear Window Defroster
44	20 Amp Blue	—	Amplifier – If Equipped/Sunroof – If Equipped

Downloaded from www.Manualslib.com manuals search engine

* Cavities 11, 12, and 13 contain self-resetting fuses (circuit breakers) that are only serviceable by an authorized dealer. The cluster, the driver seat switch (if equipped), and the memory module (if equipped) are fused by the 25 Amp circuit breaker in Cavity 11. The passenger seat switch (if equipped) is fused by the 25 Amp circuit breaker in Cavity 12. The door modules, the driver power window switch, and the passenger power window switch are fused by the 25 Amp circuit breaker in Cavity 13. If you experience temporary or permanent loss of these systems, see your authorized dealer for service.

VEHICLE STORAGE

If you are leaving your vehicle dormant for more than 21 days, you may want to take these steps to protect your battery.

- Disconnect the negative cable from the battery.
- Anytime you store your vehicle, or keep it out of service (i.e., vacation) for two weeks or more, run the air conditioning system at idle for about five minutes in the fresh air and high blower setting. This will ensure adequate system lubrication to minimize the possibility of compressor damage when the system is started again.

REPLACEMENT BULBS

Interior	Bulb Number
Rear Courtesy/Reading Lamps	W5W
Rear Compartment (Trunk) Lamp	562
Overhead Console Reading Lamps	578
Visor Vanity Lamps	A6220
Glove Box Lamp – If Equipped	194
Door Courtesy	562
Shift Indicator Lamp	JKLE14140
Optional Door Map Pocket/Cupholder	LED (Serviced at Authorized Dealer)

Downloaded from www.Manualslib.com manuals search engine

NOTE: For lighted switches, see your authorized dealer for replacement instructions.

All of the interior bulbs are glass wedge base or glass cartridge types. Aluminum base bulbs are not approved and should not be used for replacement.

Exterior (300 Models)	**Bulb Number**
Low Beam Headlamp	9006
High Beam Headlamp	9005
Front Park/Turn Lamp	3157
Front Inner Park Lamp	194NA
Front Outer Park Lamp	194NA
Front Fog Lamp – If Equipped	PSX24W
Front Sidemarker	W5W (Serviced at Authorized Dealer)
Tail/Stop/Turn Lamp	3057
Rear Sidemarker	168
Backup Lamp	3057
Center High Mount Stop Lamp (CHMSL)	LED (Serviced at Authorized Dealer)
License	168

Exterior (300C Models)	**Bulb Number**
Low Beam Headlamp (Standard Halogen)	9006XS
Low Beam Headlamp – High Intensity Discharge (HID)	D1S (Serviced at Authorized Dealer)
High Beam Headlamp	9005
Front Park/Turn Lamp	3157AK
Front Fog Lamp	PSX24W
Front Sidemarker	W5W (Serviced at Authorized Dealer)
Tail/Stop Lamp	3057
Tail Lamp	3057
Turn Signal Lamp	3757A
Backup Lamp	3057
Center High Mount Stop Lamp (CHMSL)	LED (Serviced at Authorized Dealer)
Outside Mirror Turn Signal & Approach Lamps (Serviced at Authorized Dealer)	LED
License	W5W

Downloaded from www.Manualslib.com manuals search engine

BULB REPLACEMENT

Low Beam Headlamp, High Beam Headlamp, Park/Turn Lamp, Inner Park Lamp, and Outer Park Lamp – 300 Models

1. Open the hood.

NOTE: Removal of the air cleaner filter housing may be necessary prior to replacing bulbs in the headlamp assembly on the driver side of the vehicle.

2. Twist the appropriate bulb and socket assembly counterclockwise, and then pull it out of the headlamp assembly.

3. Disconnect the bulb from the socket assembly and install the replacement bulb.

4. Reinstall the bulb and socket assembly into the headlamp assembly, and then turn it clockwise.

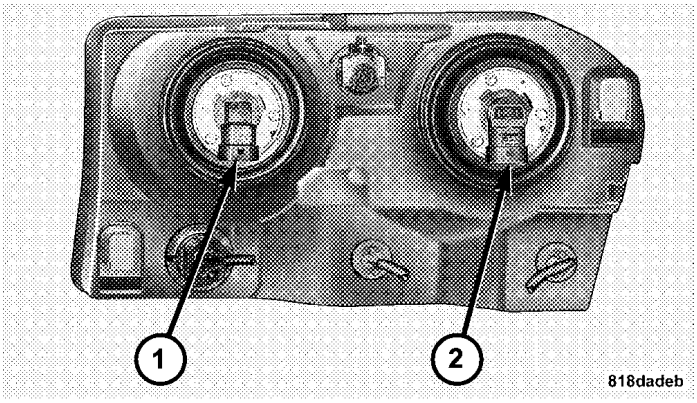

1 — High Beam Headlamp Bulb
2 — Low Beam Headlamp Bulb

Downloaded from www.Manualslib.com manuals search engine

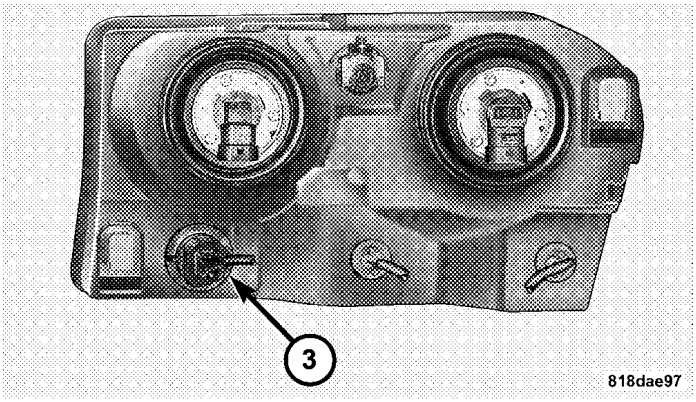

3 — Park/Turn Lamp Bulb

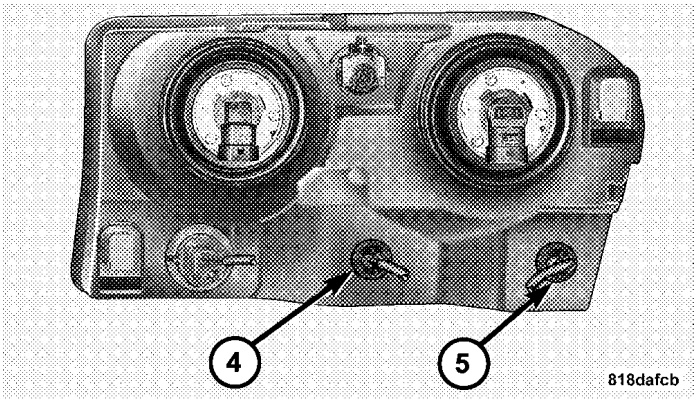

4 — Inner Park Lamp Bulb
5 — Outer Park Lamp Bulb

Downloaded from www.Manualslib.com manuals search engine

CAUTION!

Do not touch the new bulb with your fingers. Oil contamination will severely shorten bulb life. If the bulb comes in contact with an oily surface, clean the bulb with rubbing alcohol.

Low Beam Headlamp, High Beam Headlamp, and Park/Turn Lamp – 300C

High Intensity Discharge Headlamps (HID) — If Equipped

The headlamps are a type of high voltage discharge tube. High voltage can remain in the circuit even with the headlamp switch off and the key removed. **Because of this, you should not attempt to service a headlamp bulb yourself. If a headlamp bulb fails, take your vehicle to an authorized dealer for service.**

WARNING!

A transient high tension occurs at the bulb sockets of HID headlamps when the headlamp switch is turned ON. It may cause serious electrical shock or electrocution if not serviced properly. See your authorized dealer for service.

NOTE: On vehicles equipped with HID headlamps, when the headlamps are turned on, there is a blue hue to the lights. This diminishes and becomes more white after approximately 10 seconds, as the system charges.

Backup Lamp, Side Marker Lamp, and Tail/Stop Turn Lamp — 300 Models

1. Open the trunk.

Downloaded from www.Manualslib.com manuals search engine

2. Remove two fasteners from the back of the tail lamp assembly.

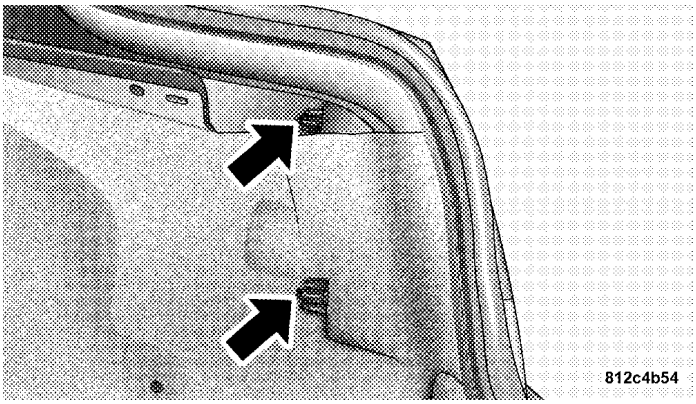

3. Pull back the trunk liner.

4. Remove the remaining fastener from the back of the tail lamp assembly.

5. Push the electrical connector locking tab to the side.

6. Disconnect the electrical connector.

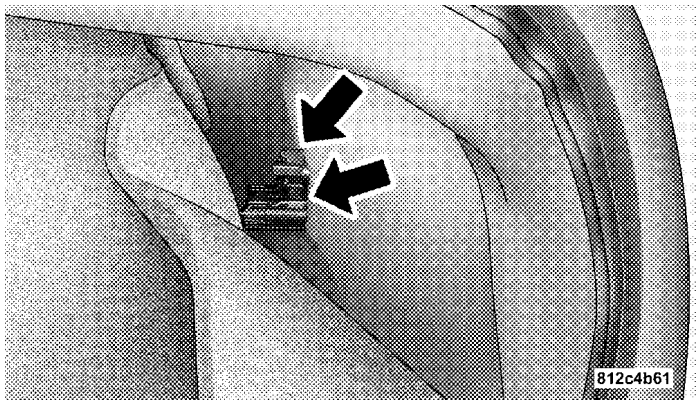

Downloaded from www.Manualslib.com manuals search engine

7. Pull the tail lamp assembly clear from the vehicle to access the bulbs.

8. Turn the appropriate bulb and socket assembly counterclockwise to remove it from the tail lamp assembly.

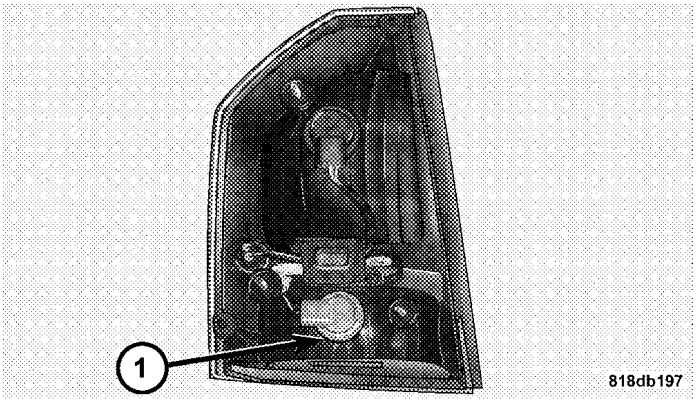

1 — Backup Lamp Bulb

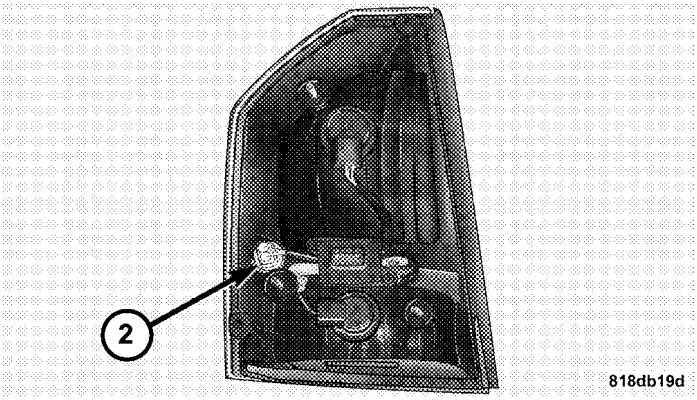

2 — Side Marker Lamp Bulb

Downloaded from www.Manualslib.com manuals search engine

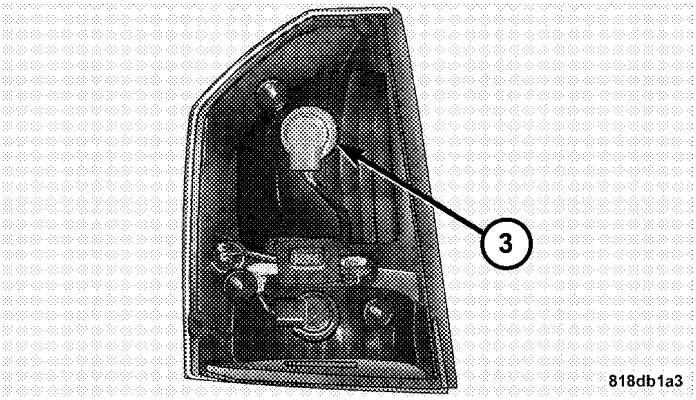

3 — Tail/Stop/Turn Lamp Bulb

9. Disconnect the bulb from the socket assembly and install the replacement bulb.

10. Reinstall the bulb and socket assembly into the tail lamp assembly, and then turn it clockwise.

11. Reinstall the tail lamp assembly, fasteners, electrical connector, and trunk liner.

12. Close the trunk.

Downloaded from www.Manualslib.com manuals search engine

Tail/Stop, Tail, Turn Signal Lamp, and Backup Lamp — 300C Models

1. Open the trunk.

2. Remove two fasteners from the back of the tail lamp assembly.

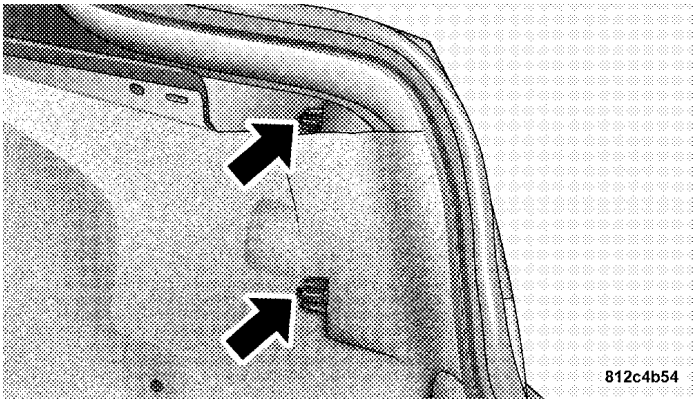

3. Pull back the trunk liner.

4. Remove the remaining fastener from the back of the tail lamp assembly.

5. Push the electrical connector locking tab to the side.

6. Disconnect the electrical connector.

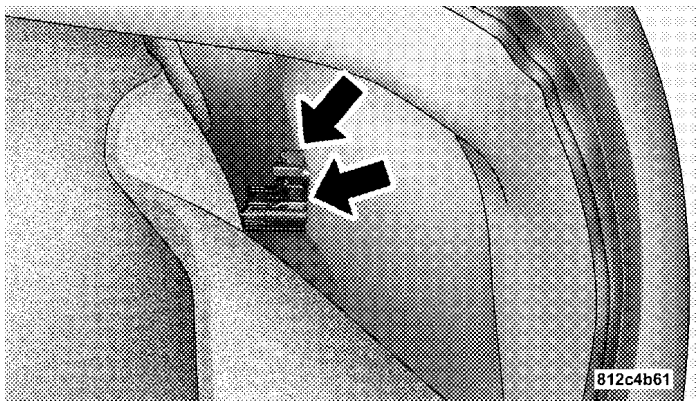

Downloaded from www.Manualslib.com manuals search engine

7. Pull the tail lamp assembly clear from the vehicle to access the bulbs. Turn bulb sockets counterclockwise to remove.

8. Turn the appropriate bulb and socket assembly counterclockwise to remove it from the tail lamp assembly.

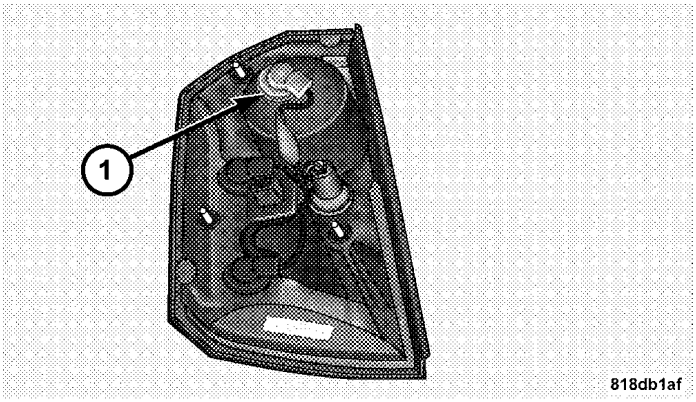

1 — Tail/Stop Lamp Bulb

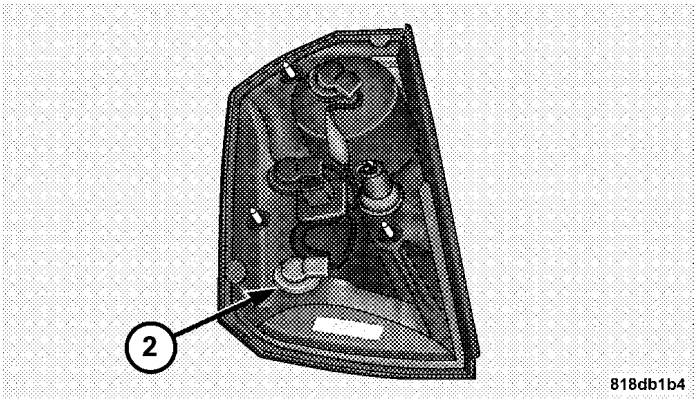

2 — Tail Lamp Bulb

Downloaded from www.Manualslib.com manuals search engine

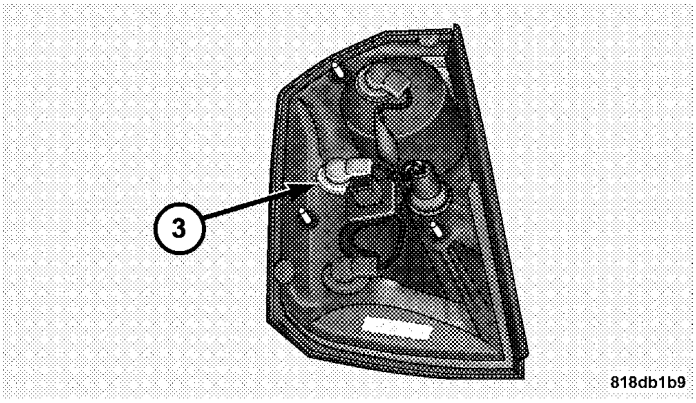

3 — Turn Signal Lamp Bulb

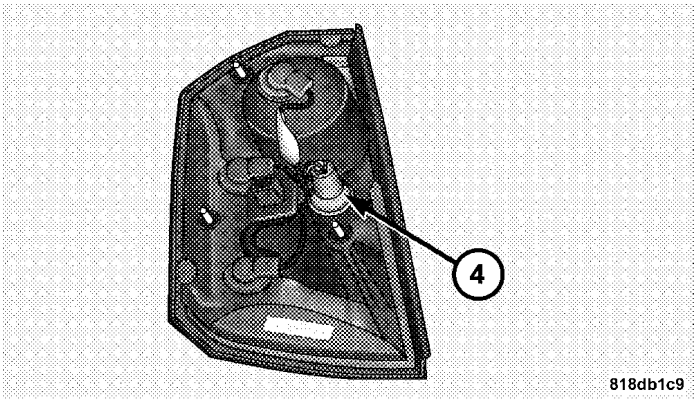

4 — Backup Lamp Bulb

9. Disconnect the bulb from the socket assembly and install the replacement bulb.

10. Reinstall the bulb and socket assembly into the tail lamp assembly, and then turn it clockwise.

Downloaded from www.Manualslib.com manuals search engine

11. Reinstall the tail lamp assembly, fasteners, electrical connector, and trunk liner.

12. Close the trunk.

License Lamp

1. Remove the screws securing the lamp to the rear fascia.

2. Remove the bulb and socket assembly.

3. Disconnect the bulb from the socket assembly and install the replacement bulb.

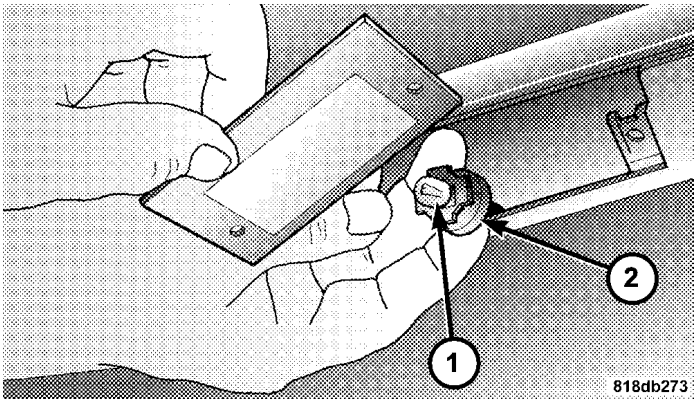

1 — License Lamp Bulb
2 — Socket

4. Reinstall the bulb and socket assembly.

5. Reattach the lamp to the rear fascia, and then install the screws.

Downloaded from www.Manualslib.com manuals search engine

FLUID CAPACITIES

	U.S.	Metric
Fuel (Approximate)		
2.7 Liter Engine	18 Gallons	68 Liters
3.5 Liter Engine without All Wheel Drive	18 Gallons	68 Liters
3.5 Liter Engine with All Wheel Drive	19 Gallons	72 Liters
5.7 Liter Engine	19 Gallons	72 Liters
Engine Oil with Filter		
2.7 Liter Engine (SAE 5W-20, API Certified)	6.0 Quarts	5.7 Liters
3.5 Liter Engine (SAE 10W-30, API Certified)	6.0 Quarts	5.7 Liters
5.7 Liter Engine (SAE 5W-20, API Certified)	7.0 Quarts	6.6 Liters
Cooling System *		
2.7 Liter Engine (MOPAR® Antifreeze/Coolant 5 Year/100,000 Mile Formula or equivalent)	9.9 Quarts	9.4 Liters

Downloaded from www.Manualslib.com manuals search engine

	U.S.	Metric
3.5 Liter Engine without All Wheel Drive (MOPAR® Antifreeze/ Coolant 5 Year/100,000 Mile Formula or equivalent)	11.1 Quarts	10.5 Liters
3.5 Liter Engine with All Wheel Drive (MOPAR® Antifreeze/Coolant 5 Year/100,000 Mile Formula or equivalent)	11.4 Quarts	10.8 Liters
5.7 Liter Engine without Severe Duty II Cooling System (MOPAR® Antifreeze/Coolant 5 Year/100,000 Mile Formula or equivalent)	14.7 Quarts	13.9 Liters
5.7 Liter Engine with Severe Duty II Cooling System (MOPAR® Antifreeze/Coolant 5 Year/100,000 Mile Formula or equivalent)	15.1 Quarts	14.3 Liters
* Includes heater and coolant recovery bottle filled to MAX level.		

Downloaded from www.Manualslib.com manuals search engine

FLUIDS, LUBRICANTS, AND GENUINE PARTS

Engine

Component	Fluid, Lubricant, or Genuine Part
Engine Coolant	MOPAR® Antifreeze/Coolant 5 Year/100,000 Mile Formula HOAT (Hybrid Organic Additive Technology) or equivalent.
Engine Oil – 2.7L Engine	Use API Certified SAE 5W-20 Engine Oil, meeting the requirements of Chrysler Material Standard MS-6395. Refer to the engine oil fill cap for correct SAE grade.
Engine Oil – 3.5L Engine	Use API Certified SAE 10W-30 Engine Oil, meeting the requirements of Chrysler Material Standard MS-6395. Refer to the engine oil fill cap for correct SAE grade.
Engine Oil – 5.7L Engine	Use API Certified SAE 5W-20 Engine Oil, meeting the requirements of Chrysler Material Standard MS-6395. Refer to the engine oil fill cap for correct SAE grade.
Engine Oil Filter	MOPAR® Engine Oil Filter or equivalent.
Spark Plugs – 2.7L Engine	TE10MCC5 (Gap 0.050 in [1.27 mm])
Spark Plugs – 3.5L Engine	ZFR5LP–13G (Gap 0.050 in [1.27 mm])
Spark Plugs – 5.7L Engine	LZFR5C–11 (Gap 0.043 in [1.1 mm])

Downloaded from www.Manualslib.com manuals search engine

Component	Fluid, Lubricant, or Genuine Part
Fuel Selection – 2.7L Engine	87 Octane
Fuel Selection – 3.5L and 5.7L Engines	87 Octane Acceptable — 89 Octane Recommended

Chassis

Component	Fluid, Lubricant, or Genuine Part
Automatic Transmission	MOPAR® ATF+4® Automatic Transmission Fluid or equivalent licensed ATF+4® product.
Brake Master Cylinder	MOPAR® DOT 3 and SAE J1703 should be used or equivalent. If DOT 3 brake fluid is not available, then DOT 4 is acceptable. Use only recommended brake fluids.
Power Steering Reservoir	MOPAR® Power Steering Fluid + 4, MOPAR® ATF+4® Automatic Transmission Fluid or equivalent licensed ATF+4® product.
Front Axle	API GL-5 SAE 75W90 Synthetic Gear Lubricant or equivalent.
Rear Axle	API GL-5 SAE 75W140 Synthetic Gear Lubricant or equivalent.
Transfer Case	MOPAR® Transfer Case Lubricant for BorgWarner 44–40 or equivalent.

Downloaded from www.Manualslib.com manuals search engine

Downloaded from www.Manualslib.com manuals search engine

MAINTENANCE SCHEDULES

CONTENTS

■ Emissions Control System Maintenance 486
■ Maintenance Schedule 486
□ Required Maintenance Intervals 488

Downloaded from www.Manualslib.com manuals search engine

EMISSIONS CONTROL SYSTEM MAINTENANCE

The Scheduled Maintenance services listed in **bold type** must be done at the times or mileages specified to ensure the continued proper functioning of the emissions control system. These and all other maintenance services included in this manual, should be done to provide best vehicle performance and reliability. More frequent maintenance may be needed for vehicles in severe operating conditions, such as dusty areas and very short trip driving.

Inspection and service should also be done anytime a malfunction is suspected.

NOTE: Maintenance, replacement or repair of the emissions control devices and systems on your vehicle may be performed by any automotive repair establishment or individual using any automotive part that has been certified pursuant to U.S. EPA or in the State of California, California Air Resources Board regulations.

MAINTENANCE SCHEDULE

The oil change indicator system will remind you that it is time to take your vehicle in for scheduled maintenance.

On Electronic Vehicle Information Center (EVIC) equipped vehicles, “Oil Change Required” will be displayed in the EVIC and a single chime will sound, indicating that an oil change is necessary.

On Non-EVIC equipped vehicles, “Change Oil” will flash in the instrument cluster odometer and a single chime will sound, indicating that an oil change is necessary.

Based on engine operation conditions, the oil change indicator message will illuminate. This means that service is required for your vehicle. Have your vehicle serviced as soon as possible, within the next 500 miles (805 km).

Downloaded from www.Manualslib.com manuals search engine

NOTE:

- The oil change indicator message will not monitor the time since the last oil change. Change your vehicle's oil if it has been six months since your last oil change, even if the oil change indicator message is NOT illuminated.
- Change your engine oil more often if you drive your vehicle off-road for an extended period of time.
- Under no circumstances should oil change intervals exceed 6,000 miles (10,000 km) or six months, whichever comes first.

Your authorized dealer will reset the oil change indicator message after completing the scheduled oil change. If a scheduled oil change is performed by someone other than your authorized dealer, the message can be reset by referring to the steps described under "Electronic Vehicle Information Center (EVIC)/Oil Change Required" in "Understanding Your Instrument Panel" or under "Instrument Cluster Description/Odometer/Trip Odometer" in "Understanding Your Instrument Panel" for further information.

At Each Stop for Fuel

- Check the engine oil level. Refer to "Maintenance Procedures/Engine Oil" in "Maintaining Your Vehicle" for further information.
- Check the windshield washer solvent and add if required.

Once a Month

- Check tire pressure and look for unusual wear or damage.
- Inspect the battery, and clean and tighten the terminals as required.

Downloaded from www.Manualslib.com manuals search engine

- Check the fluid levels of the coolant reservoir, brake master cylinder, and power steering, add as needed.
- Check all lights and other electrical items for correct operation.

At Each Oil Change

- Change the engine oil filter.
- Inspect the brake hoses and lines.

CAUTION!

Failure to perform the required maintenance items may result in damage to the vehicle.

Required Maintenance Intervals

Refer to the Maintenance Schedules on the following pages for the required maintenance intervals.

Downloaded from www.Manualslib.com manuals search engine

6,000 Miles (10,000 km) or 6 Months Maintenance Service Schedule

- ❏ Change the engine oil and engine oil filter.
- ❏ Rotate tires.

Odometer Reading Date

Repair Order # Dealer Code

Signature Authorized Chrysler Dealer

12,000 Miles (20,000 km) or 12 Months Maintenance Service Schedule

- ❏ Change the engine oil and engine oil filter.
- ❏ Rotate tires.
- ❏ If using your vehicle for any of the following: Dusty or off-road conditions. Inspect the engine air cleaner filter; replace if necessary.
- ❏ Replace the air conditioning filter (if equipped)
- ❏ Inspect the brake linings; replace if necessary.
- ❏ Inspect the CV joints. Perform the first inspection at 12,000 miles (20 000 km) or 12 months.
- ❏ Inspect exhaust system. Perform the first inspection at 12,000 miles (20 000 km) or 12 months.
- ❏ Inspect the front suspension, tie rod ends and boot seals for cracks or leaks and all parts for damage, wear, improper looseness or end play; replace if necessary.

Odometer Reading Date

Repair Order # Dealer Code

Signature Authorized Chrysler Dealer

Downloaded from www.Manualslib.com manuals search engine

18,000 Miles (30,000 km) or 18 Months Maintenance Service Schedule

- ❏ Change the engine oil and engine oil filter.
- ❏ Rotate tires.
- ❏ Inspect the rear axle fluid. Inspect the front axle fluid — All Wheel Drive (AWD).

Odometer Reading Date

Repair Order # Dealer Code

Signature Authorized Chrysler Dealer

24,000 Miles (40,000 km) or 24 Months Maintenance Service Schedule

- ❏ Change the engine oil and engine oil filter.
- ❏ Rotate tires.
- ❏ If using your vehicle for any of the following: Dusty or off-road conditions. Inspect the engine air cleaner filter; replace if necessary.
- ❏ Replace the air conditioning filter (if equipped)
- ❏ Inspect the brake linings; replace if necessary.
- ❏ Inspect the CV joints.
- ❏ Inspect exhaust system.
- ❏ Inspect the front suspension, tie rod ends and boot seals for cracks or leaks and all parts for damage, wear, improper looseness or end play; replace if necessary.

Odometer Reading Date

Repair Order # Dealer Code

Signature Authorized Chrysler Dealer

Downloaded from www.Manualslib.com manuals search engine

30,000 Miles (50,000 km) or 30 Months Maintenance Service Schedule

- ❏ Change the engine oil and engine oil filter.
- ❏ Rotate tires.
- ❏ Replace the engine air cleaner filter.
- ❏ **Replace the spark plugs (5.7L Engine).**
- ❏ Inspect the transfer case fluid — All Wheel Drive (AWD).
- ❏ Adjust parking brake on vehicles equipped with four-wheel disc brakes.

Odometer Reading Date

Repair Order # Dealer Code

Signature Authorized Chrysler Dealer

36,000 Miles (60,000 km) or 36 Months Maintenance Service Schedule

- ❏ Change the engine oil and engine oil filter.
- ❏ Rotate tires.
- ❏ If using your vehicle for any of the following: Dusty or off-road conditions. Inspect the engine air cleaner filter; replace if necessary.
- ❏ Replace the air conditioning filter (if equipped)
- ❏ Inspect the rear axle fluid. Inspect the front axle fluid — All Wheel Drive (AWD).
- ❏ Inspect the brake linings; replace if necessary.
- ❏ Inspect the front suspension, tie rod ends and boot seals for cracks or leaks and all parts for damage, wear, improper looseness or end play; replace if necessary.

Odometer Reading Date

Repair Order # Dealer Code

Signature Authorized Chrysler Dealer

Downloaded from www.Manualslib.com manuals search engine

42,000 Miles (70,000 km) or 42 Months Maintenance Service Schedule

- ❏ Change the engine oil and engine oil filter.
- ❏ Rotate tires.

Odometer Reading Date

Repair Order # Dealer Code

Signature Authorized Chrysler Dealer

48,000 Miles (80,000 km) or 48 Months Maintenance Service Schedule

- ❏ Change the engine oil and engine oil filter.
- ❏ Rotate tires.
- ❏ If using your vehicle for any of the following: Dusty or off-road conditions. Inspect the engine air cleaner filter; replace if necessary.
- ❏ Replace the air conditioning filter (if equipped)
- ❏ Inspect the brake linings; replace if necessary.
- ❏ Inspect the CV joints.
- ❏ Inspect exhaust system.
- ❏ Inspect the front suspension, tie rod ends and boot seals for cracks or leaks and all parts for damage, wear, improper looseness or end play; replace if necessary.
- ❏ Change the rear axle fluid and on models equipped with All Wheel Drive (AWD) change the front axle fluid if using your vehicle for any of the following: police, taxi, fleet, off-road, or frequent trailer towing.

Odometer Reading Date

Repair Order # Dealer Code

Signature Authorized Chrysler Dealer

Downloaded from www.Manualslib.com manuals search engine

54,000 Miles (90,000 km) or 54 Months Maintenance Service Schedule

- ❏ Change the engine oil and engine oil filter.
- ❏ Rotate tires.
- ❏ Inspect the rear axle fluid. Inspect the front axle fluid — All Wheel Drive (AWD).

Odometer Reading Date

Repair Order # Dealer Code

Signature Authorized Chrysler Dealer

Downloaded from www.Manualslib.com manuals search engine

60,000 Miles (100,000 km) or 60 Months Maintenance Service Schedule

- ❏ Change the engine oil and engine oil filter.
- ❏ Rotate tires.
- ❏ Replace the engine air cleaner filter.
- ❏ **Replace the spark plugs (5.7L Engine).**
- ❏ Replace the air conditioning filter (if equipped)
- ❏ Inspect the brake linings; replace if necessary.
- ❏ Adjust parking brake on vehicles equipped with four-wheel disc brakes.
- ❏ Change the automatic transmission fluid and filter if using your vehicle for any of the following: police, taxi, fleet, or frequent trailer towing.
- ❏ Change the transfer case fluid if using your vehicle for any of the following: police, taxi, fleet, or frequent trailer towing — All Wheel Drive (AWD).
- ❏ Flush and replace the engine coolant at 60 months if not done at 102,000 miles (170 000 km).
- ❏ Inspect the front suspension, tie rod ends and boot seals for cracks or leaks and all parts for damage, wear, improper looseness or end play; replace if necessary.

Odometer Reading Date

Repair Order # Dealer Code

Signature Authorized Chrysler Dealer

Downloaded from www.Manualslib.com manuals search engine

66,000 Miles (110,000 km) or 66 Months Maintenance Service Schedule

- ❏ Change the engine oil and engine oil filter.
- ❏ Rotate tires.

Odometer Reading Date

Repair Order # Dealer Code

Signature Authorized Chrysler Dealer

72,000 Miles (120,000 km) or 72 Months Maintenance Service Schedule

- ❏ Change the engine oil and engine oil filter.
- ❏ Rotate tires.
- ❏ If using your vehicle for any of the following: Dusty or off-road conditions. Inspect the engine air cleaner filter; replace if necessary.
- ❏ Replace the air conditioning filter (if equipped)
- ❏ Inspect the rear axle fluid. Inspect the front axle fluid — All Wheel Drive (AWD).
- ❏ Inspect the brake linings; replace if necessary.
- ❏ Inspect the CV joints.
- ❏ Inspect exhaust system.
- ❏ Inspect the front suspension, tie rod ends and boot seals for cracks or leaks and all parts for damage, wear, improper looseness or end play; replace if necessary.

Odometer Reading Date

Repair Order # Dealer Code

Signature Authorized Chrysler Dealer

Downloaded from www.Manualslib.com manuals search engine

78,000 Miles (130,000 km) or 78 Months Maintenance Service Schedule

- ❏ Change the engine oil and engine oil filter.
- ❏ Rotate tires.

Odometer Reading Date

Repair Order # Dealer Code

Signature Authorized Chrysler Dealer

84,000 Miles (140,000 km) or 84 Months Maintenance Service Schedule

- ❏ Change the engine oil and engine oil filter.
- ❏ Rotate tires.
- ❏ If using your vehicle for any of the following: Dusty or off-road conditions. Inspect the engine air cleaner filter; replace if necessary.
- ❏ Replace the air conditioning filter (if equipped)
- ❏ Inspect the brake linings; replace if necessary.
- ❏ Inspect the front suspension, tie rod ends and boot seals for cracks or leaks and all parts for damage, wear, improper looseness or end play; replace if necessary.

Odometer Reading Date

Repair Order # Dealer Code

Signature Authorized Chrysler Dealer

Downloaded from www.Manualslib.com manuals search engine

90,000 Miles (150,000 km) or 90 Months Maintenance Service Schedule

- ❏ Change the engine oil and engine oil filter.
- ❏ Rotate tires.
- ❏ Replace the engine air cleaner filter.
- ❏ **Replace the spark plugs (5.7L Engine).**
- ❏ **Inspect and replace PCV valve if necessary. †**
- ❏ Inspect the rear axle fluid. Inspect the front axle fluid — All Wheel Drive (AWD).
- ❏ Inspect the transfer case fluid — All Wheel Drive (AWD).
- ❏ Adjust parking brake on vehicles equipped with four-wheel disc brakes.

Odometer Reading Date

Repair Order # Dealer Code

Signature Authorized Chrysler Dealer

Downloaded from www.Manualslib.com manuals search engine

96,000 Miles (160,000 km) or 96 Months Maintenance Service Schedule

- ❏ Change the engine oil and engine oil filter.
- ❏ Rotate tires.
- ❏ If using your vehicle for any of the following: Dusty or off-road conditions. Inspect the engine air cleaner filter; replace if necessary.
- ❏ Replace the air conditioning filter (if equipped)
- ❏ Inspect the brake linings; replace if necessary.
- ❏ Inspect the CV joints.
- ❏ Inspect exhaust system.
- ❏ Inspect the front suspension, tie rod ends and boot seals for cracks or leaks and all parts for damage, wear, improper looseness or end play; replace if necessary.
- ❏ Change the rear axle fluid and on models equipped with All Wheel Drive (AWD) change the front axle fluid if using your vehicle for any of the following: police, taxi, fleet, off-road, or frequent trailer towing.

Odometer Reading Date

Repair Order # Dealer Code

Signature Authorized Chrysler Dealer

102,000 Miles (170,000 km) or 102 Months Maintenance Service Schedule

- ❏ Change the engine oil and engine oil filter.
- ❏ Rotate tires.
- ❏ **Replace the spark plugs (2.7L and 3.5L Engines).**
- ❏ **Replace the timing belt (3.5L Engine).**
- ❏ Flush and replace the engine coolant if not done at 60 months.

Odometer Reading Date

Repair Order # Dealer Code

Signature Authorized Chrysler Dealer

Downloaded from www.Manualslib.com manuals search engine

108,000 Miles (180,000 km) or 108 Months Maintenance Service Schedule

- ❏ Change the engine oil and engine oil filter.
- ❏ Rotate tires.
- ❏ If using your vehicle for any of the following: Dusty or off-road conditions. Inspect the engine air cleaner filter; replace if necessary.
- ❏ Replace the air conditioning filter (if equipped)
- ❏ Inspect the rear axle fluid. Inspect the front axle fluid — All Wheel Drive (AWD).
- ❏ Inspect the brake linings; replace if necessary.
- ❏ Inspect the front suspension, tie rod ends and boot seals for cracks or leaks and all parts for damage, wear, improper looseness or end play; replace if necessary.

Odometer Reading Date

Repair Order # Dealer Code

Signature Authorized Chrysler Dealer

114,000 Miles (190,000 km) or 114 Months Maintenance Service Schedule

- ❏ Change the engine oil and engine oil filter.
- ❏ Rotate tires.

Odometer Reading Date

Repair Order # Dealer Code

Signature Authorized Chrysler Dealer

Downloaded from www.Manualslib.com manuals search engine

120,000 Miles (200,000 km) or 120 Months Maintenance Service Schedule

- ❏ Change the engine oil and engine oil filter.
- ❏ Rotate tires.
- ❏ Replace the engine air cleaner filter.
- ❏ Replace the air conditioning filter (if equipped)
- ❏ **Replace the spark plugs (5.7L Engine).**
- ❏ Inspect the brake linings; replace if necessary.
- ❏ Adjust parking brake on vehicles equipped with four-wheel disc brakes.
- ❏ Inspect the CV joints.
- ❏ Inspect exhaust system.
- ❏ Inspect the front suspension, tie rod ends and boot seals for cracks or leaks and all parts for damage, wear, improper looseness or end play; replace if necessary.
- ❏ Change the automatic transmission fluid and filter.
- ❏ Change the transfer case fluid if using your vehicle for any of the following: police, taxi, fleet, or frequent trailer towing — All Wheel Drive (AWD).
- ❏ Replace the accessory drive belt (2.7L/3.5L Engines).

Odometer Reading _____ Date _____

Repair Order # _____ Dealer Code _____

Signature Authorized Chrysler Dealer _____

Downloaded from www.Manualslib.com manuals search engine

126,000 Miles (210,000 km) or 126 Months Maintenance Service Schedule

- ❏ Change the engine oil and engine oil filter.
- ❏ Rotate tires.
- ❏ Inspect the rear axle fluid. Inspect the front axle fluid — All Wheel Drive (AWD).

Odometer Reading Date

Repair Order # Dealer Code

Signature Authorized Chrysler Dealer

132,000 Miles (220,000 km) or 132 Months Maintenance Service Schedule

- ❏ Change the engine oil and engine oil filter.
- ❏ Rotate tires.
- ❏ If using your vehicle for any of the following: Dusty or off-road conditions. Inspect the engine air cleaner filter; replace if necessary.
- ❏ Replace the air conditioning filter (if equipped)
- ❏ Inspect the brake linings; replace if necessary.
- ❏ Inspect the front suspension, tie rod ends and boot seals for cracks or leaks and all parts for damage, wear, improper looseness or end play; replace if necessary.

Odometer Reading Date

Repair Order # Dealer Code

Signature Authorized Chrysler Dealer

Downloaded from www.Manualslib.com manuals search engine

138,000 Miles (230,000 km) or 138 Months Maintenance Service Schedule

- ❏ Change the engine oil and engine oil filter.
- ❏ Rotate tires.

Odometer Reading Date

Repair Order # Dealer Code

Signature Authorized Chrysler Dealer

144,000 Miles (240,000 km) or 144 Months Maintenance Service Schedule

- ❏ Change the engine oil and engine oil filter.
- ❏ Rotate tires.
- ❏ If using your vehicle for any of the following: Dusty or off-road conditions. Inspect the engine air cleaner filter; replace if necessary.
- ❏ Replace the air conditioning filter (if equipped)
- ❏ Inspect the brake linings; replace if necessary.
- ❏ Inspect the CV joints.
- ❏ Inspect exhaust system.
- ❏ Inspect the front suspension, tie rod ends and boot seals for cracks or leaks and all parts for damage, wear, improper looseness or end play; replace if necessary.
- ❏ Change the rear axle fluid and on models equipped with All Wheel Drive (AWD) change the front axle fluid if using your vehicle for any of the following: police, taxi, fleet, off-road, or frequent trailer towing.

Odometer Reading Date

Repair Order # Dealer Code

Signature Authorized Chrysler Dealer

Downloaded from www.Manualslib.com manuals search engine

150,000 Miles (250,000 km) or 150 Months Maintenance Service Schedule

- ❏ Change the engine oil and engine oil filter.
- ❏ Rotate tires.
- ❏ Replace the engine air cleaner filter.
- ❏ **Replace the spark plugs (5.7L Engines).**
- ❏ Inspect the transfer case fluid — All Wheel Drive (AWD).
- ❏ Adjust parking brake on vehicles equipped with four-wheel disc brakes.

Odometer Reading Date

Repair Order # Dealer Code

Signature Authorized Chrysler Dealer

† This maintenance is recommended by the manufacturer to the owner, but is not required to maintain emissions warranty.

WARNING!

- **You can be badly injured working on or around a motor vehicle. Do only service work for which you have the knowledge and the right equipment. If you have any doubt about your ability to perform a service job, take your vehicle to a competent mechanic.**
- **Failure to properly inspect and maintain your vehicle could result in a component malfunction and effect vehicle handling and performance. This could cause an accident**

Downloaded from www.Manualslib.com manuals search engine

Downloaded from www.Manualslib.com manuals search engine

IF YOU NEED CONSUMER ASSISTANCE

CONTENTS

■ Suggestions For Obtaining Service For Your Vehicle 507
- □ Prepare For The Appointment 507
- □ Prepare A List 507
- □ Be Reasonable With Requests 507

■ If You Need Assistance 507
- □ Chrysler Group LLC Customer Center 508
- □ Chrysler Canada Inc. Customer Center 508
- □ In Mexico Contact 508
- □ Customer Assistance For The Hearing Or Speech Impaired (TDD/TTY) 509
- □ Service Contract 509

■ Warranty Information 510

■ MOPAR® Parts 510

■ Reporting Safety Defects 510
- □ In The 50 United States And Washington, D.C. 510
- □ In Canada 511

Downloaded from www.Manualslib.com manuals search engine

■ Publication Order Forms 511

■ Department Of Transportation Uniform Tire Quality Grades 513

□ Treadwear 513

□ Traction Grades 513

□ Temperature Grades 514

Downloaded from www.Manualslib.com manuals search engine

SUGGESTIONS FOR OBTAINING SERVICE FOR YOUR VEHICLE

Prepare For The Appointment

If you're having warranty work done, be sure to have the right papers with you. Take your warranty folder. All work to be performed may not be covered by the warranty. Discuss additional charges with the service manager. Keep a maintenance log of your vehicle's service history. This can often provide a clue to the current problem.

Prepare A List

Make a written list of your vehicle's problems or the specific work you want done. If you've had an accident or work done that is not on your maintenance log, let the service advisor know.

Be Reasonable With Requests

If you list a number of items and you must have your vehicle by the end of the day, discuss the situation with the service advisor and list the items in order of priority. At many authorized dealers, you may obtain a rental vehicle at a minimal daily charge. If you need a rental, it is advisable to make these arrangements when you call for an appointment.

IF YOU NEED ASSISTANCE

The manufacturer and its authorized dealers are vitally interested in your satisfaction. We want you to be happy with our products and services.

Warranty service must be done by an authorized dealer. We strongly recommend that you take the vehicle to an authorized dealer. They know your vehicle the best, and are most concerned that you get prompt and high quality service. The manufacturer's authorized dealers have the facilities, factory-trained technicians, special tools, and the latest information to ensure the vehicle is fixed correctly and in a timely manner.

Downloaded from www.Manualslib.com manuals search engine

This is why you should always talk to an authorized dealer's service manager first. Most matters can be resolved with this process.

- If for some reason you are still not satisfied, talk to the general manager or owner of the authorized dealership. They want to know if you need assistance.
- If an authorized dealership is unable to resolve the concern, you may contact the manufacturer's customer center.

Any communication to the manufacturer's customer center should include the following information:

- Owner's name and address
- Owner's telephone number (home and office)
- Authorized dealership name
- Vehicle Identification Number (VIN)
- Vehicle delivery date and mileage

Chrysler Group LLC Customer Center
P.O. Box 21–8004
Auburn Hills, MI 48321–8004
Phone: (800) 247–9753

Chrysler Canada Inc. Customer Center
P.O. Box 1621
Windsor, Ontario N9A 4H6
Phone: (800) 465–2001

In Mexico contact:
Av. Prolongacion Paseo de la Reforma, 1240
Sante Fe C.P. 05109
Mexico, D. F.
In Mexico City: 5081-7568
Outside Mexico City: 1-800-505-1300

Downloaded from www.Manualslib.com manuals search engine

Customer Assistance For The Hearing Or Speech Impaired (TDD/TTY)

To assist customers who have hearing difficulties, the manufacturer has installed special TDD (Telecommunication Devices for the Deaf) equipment at its customer center. Any hearing or speech impaired customer, who has access to a TDD or a conventional teletypewriter (TTY) in the United States, can communicate with the manufacturer by dialing 1–800–380–CHRY.

Canadian residents with hearing difficulties that require assistance can use the special needs relay service offered by Bell Canada. For TTY teletypewriter users, dial 711 and for Voice callers, dial 1 800 855-0511 to connect with a Bell Relay Service operator.

Service Contract

You may have purchased a service contract for a vehicle to help protect you from the high cost of unexpected repairs after the manufacturer's New Vehicle Limited Warranty expires. The manufacturer stands behind only the manufacturer's service contracts. If you purchased a manufacturer's service contract, you will receive Plan Provisions and an Owner Identification Card in the mail within three weeks of the vehicle delivery date. If you have any questions about the service contract, call the manufacturer's Service Contract National Customer Hotline at 1-800-521-9922 (Canadian residents, call 1-800-485-2001).

The manufacturer will not stand behind any service contract that is not the manufacturer's service contract. It is not responsible for any service contract other than the manufacturer's service contract. If you purchased a service contract that is not a manufacturer's service contract, and you require service after the manufacturer's New Vehicle Limited Warranty expires, please refer to the contract documents, and contact the person listed in those documents.

Downloaded from www.Manualslib.com manuals search engine

We appreciate that you have made a major investment when you purchased the vehicle. An authorized dealer has also made a major investment in facilities, tools, and training to assure that you are absolutely delighted with the ownership experience. You'll be pleased with their sincere efforts to resolve any warranty issues or related concerns.

WARNING!

Engine exhaust, some of its constituents, and certain vehicle components contain, or emit, chemicals known to the State of California to cause cancer and birth defects, or other reproductive harm. In addition, certain fluids contained in vehicles and certain products of component wear contain, or emit, chemicals known to the State of California to cause cancer and birth defects, or other reproductive harm.

WARRANTY INFORMATION

See the Warranty Information Booklet, located on the DVD, for the terms and provisions of Chrysler Group LLC warranties applicable to this vehicle and market.

MOPAR® PARTS

MOPAR® fluids, lubricants, parts, and accessories are available from an authorized dealer. They are recommended for your vehicle in order to help keep the vehicle operating at its best.

REPORTING SAFETY DEFECTS

In the 50 United States and Washington, D.C.

If you believe that your vehicle has a defect that could cause a crash or cause injury or death, you should immediately inform the National Highway Traffic Safety Administration (NHTSA) in addition to notifying the manufacturer.

Downloaded from www.Manualslib.com manuals search engine

If NHTSA receives similar complaints, it may open an investigation, and if it finds that a safety defect exists in a group of vehicles, it may order a recall and remedy campaign. However, NHTSA cannot become involved in individual problems between you, your authorized dealer, and the manufacturer.

To contact NHTSA, you may either call the Auto Safety Hotline toll free at 1–888–327–4236 (TTY: 1–800–424–9153), or go to http://www.safercar.gov; or write to: Administrator, NHTSA, 1200 New Jersey Avenue, SE., West Building, Washington, D.C. 20590. You can also obtain other information about motor vehicle safety from http://www.safercar.gov.

In Canada

If you believe that your vehicle has a safety defect, you should contact the Customer Service Department immediately. Canadian customers who wish to report a safety defect to the Canadian government should write to: Transport Canada, Motor Vehicle Defect Investigations and Recalls, 2780 Sheffield Road, Ottawa, Ontario K1B 3V9.

PUBLICATION ORDER FORMS

To order the following manuals, you may use either the website or the phone numbers listed below. Visa, Mastercard, American Express, and Discover orders are accepted. If you prefer mailing your payment, please call for an order form.

NOTE: A street address is required when ordering manuals (no P.O. Boxes).

- *Service Manuals*

  These comprehensive Service Manuals provide the information that students and professional technicians need in diagnosing/troubleshooting, problem solving, maintaining, servicing, and repairing Chrysler Group LLC vehicles. A complete working knowledge of the

Downloaded from www.Manualslib.com manuals search engine

vehicle, system, and/or components is written in straightforward language with illustrations, diagrams, and charts.

- *Diagnostic Procedure Manuals*

  Diagnostic Procedure Manuals are filled with diagrams, charts and detailed illustrations. These practical manuals make it easy for students and technicians to find and fix problems on computer-controlled vehicle systems and features. They show exactly how to find and correct problems the first time, using step-by-step troubleshooting and drivability procedures, proven diagnostic tests and a complete list of all tools and equipment.

- *Owner's Manuals*

  These Owner's Manuals have been prepared with the assistance of service and engineering specialists to acquaint you with specific Chrysler Group LLC vehicles. Included are starting, operating, emergency and maintenance procedures as well as specifications, capabilities and safety tips.

Call toll free at:

- **1–800–890–4038 (U.S.)**
- **1–800–387–1143 (Canada)**

Or

Visit us on the Worldwide Web at:

- **www.techauthority.com**

Downloaded from www.Manualslib.com manuals search engine

DEPARTMENT OF TRANSPORTATION UNIFORM TIRE QUALITY GRADES

The following tire grading categories were established by the National Highway Traffic Safety Administration. The specific grade rating assigned by the tire's manufacturer in each category is shown on the sidewall of the tires on your vehicle.

All passenger car tires must conform to Federal safety requirements in addition to these grades.

Treadwear

The Treadwear grade is a comparative rating, based on the wear rate of the tire when tested under controlled conditions on a specified government test course. For example, a tire graded 150 would wear one and one-half times as well on the government course as a tire graded 100. The relative performance of tires depends upon the actual conditions of their use, however, and may depart significantly from the norm due to variations in driving habits, service practices, and differences in road characteristics and climate.

Traction Grades

The Traction grades, from highest to lowest, are AA, A, B, and C. These grades represent the tire's ability to stop on wet pavement, as measured under controlled conditions on specified government test surfaces of asphalt and concrete. A tire marked C may have poor traction performance.

WARNING!

The traction grade assigned to this tire is based on straight-ahead braking traction tests, and does not include acceleration, cornering, hydroplaning, or peak traction characteristics.

Downloaded from www.Manualslib.com manuals search engine

Temperature Grades

The temperature grades are A (the highest), B, and C, representing the tire's resistance to the generation of heat and its ability to dissipate heat, when tested under controlled conditions on a specified indoor laboratory test wheel. Sustained high temperature can cause the material of the tire to degenerate and reduce tire life, and excessive temperature can lead to sudden tire failure. The grade C corresponds to a level of performance, which all passenger car tires must meet under the Federal Motor Vehicle Safety Standard No. 109. Grades B and A represent higher levels of performance on the laboratory test wheel, than the minimum required by law.

WARNING!

The temperature grade for this tire is established for a tire that is properly inflated and not overloaded. Excessive speed, under-inflation, or excessive loading, either separately or in combination, can cause heat buildup and possible tire failure.

Downloaded from www.Manualslib.com manuals search engine

INDEX

Downloaded from www.Manualslib.com manuals search engine

About Your Brakes 335
ABS (Anti-Lock Brake System) 338
Adaptive Cruise Control (ACC) (Cruise Control) . . 162
Adding Engine Coolant (Antifreeze) 446
Adding Fuel 379
Adding Washer Fluid 440
Additives, Fuel 377
Adjustable Pedals 156
Air Cleaner, Engine (Engine Air Cleaner Filter) . . . 433
Air Conditioner Maintenance 436
Air Conditioning 293,295
Air Conditioning Controls 293
Air Conditioning Filter 302,437
Air Conditioning, Operating Tips 303
Air Conditioning Refrigerant 436,437
Air Conditioning System 293,295,296,436
Air Pressure, Tires 226,356
Airbag 56,65
Airbag Deployment 66
Airbag Light 64,69,82,221
Airbag Maintenance 68
Airbag, Side 62,65
Airbag, Window (Side Curtain) 59,62,65
Alarm, Panic 25
Alarm (Security Alarm) 18,225
Alarm System (Security Alarm) 18
All Wheel Drive (AWD) 329,454
Alterations/Modifications, Vehicle 7
Antenna, Satellite Radio 283
Antifreeze (Engine Coolant) 445,446,480
Disposal 448
Anti-Lock Brake System (ABS) 338,340
Anti-Lock Warning Light 220
Anti-Theft Security Alarm (Theft Alarm) 18
Appearance Care 455
Arming Theft System (Security Alarm) 18
Assistance Towing 110
Auto Down Power Windows 41

Downloaded from www.Manualslib.com manuals search engine

Auto Unlock, Doors 34
Auto Up Power Windows 41
Automatic Dimming Mirror 92
Automatic Door Locks 32,34
Automatic Headlights 145
Automatic Oil Change Indicator 219,236
Automatic Temperature Control (ATC) 296
Automatic Transaxle
  Special Additives 453
Automatic Transmission 319,324,452,453
  Adding Fluid 453,483
  Autostick 328
  Fluid and Filter Changes 453
  Fluid Change 453
  Fluid Level Check 452
  Fluid Type 483
  Gear Ranges 319,324
  Overdrive 321
  Shifting 319,324
  Special Additives 453
  Torque Converter 322
Automatic Transmission Limp Home Mode . . 323,327
Autostick 328
Axle Fluid 483
Axle Lubrication (Axle Fluid) 483

Battery 434
  Keyless Transmitter Replacement (RKE) 26
  Location 434
Belts, Seat 46,82
Body Mechanism Lubrication 439
B-Pillar Location 351
Brake Assist System 341
Brake Control System, Electronic 340
Brake Fluid 483
Brake, Parking 335
Brake System 449
  Anti-Lock (ABS) 338

Downloaded from www.Manualslib.com manuals search engine

Fluid Check 450,483
Master Cylinder 450
Parking 335
Warning Light 222
Brakes 449
Brake/Transmission Interlock 317
Break-In Recommendations, New Vehicle 80
Brightness, Interior Lights 150
Bulb Replacement 468,470
Bulbs, Light 84,468

Calibration, Compass 243
Capacities, Fluid 480
Caps, Filler
Fuel 379
Oil (Engine) 432
Power Steering 334
Radiator (Coolant Pressure) 447
Car Washes 455
Carbon Monoxide Warning 81,378
Cargo (Vehicle Loading) 381
Cellular Phone 96,292
Certification Label 382
Changing A Flat Tire 401
Chart, Tire Sizing 347
Check Engine Light
(Malfunction Indicator Light) 427
Checking Your Vehicle For Safety 81
Checks, Safety 81
Child Restraint 71,72,73,76,77
Child Restraint Tether Anchors 74,76
Child Safety Locks 37
Clean Air Gasoline 375
Cleaning
Wheels 457
Windshield Wiper Blades 440
Climate Control 292
Clock 251,252,254,257,266

Downloaded from www.Manualslib.com manuals search engine

Coin Holder 204
Cold Weather Operation 312
Compact Disc (CD) Maintenance 292
Compact Spare Tire 358
Compass 242
Compass Calibration 243
Compass Variance 243
Computer, Trip/Travel 236
Connector
  UCI 277
  Universal Consumer Interface (UCI) 277
Conserving Fuel 236
Console, Floor 204
Console, Overhead 189
Contract, Service 509
Coolant Pressure Cap (Radiator Cap) 447
Cooling System 444
  Adding Coolant (Antifreeze) 446
  Coolant Capacity 480
  Coolant Level 444,448
  Disposal of Used Coolant 448
  Drain, Flush, and Refill 445
  Inspection 448
  Points to Remember 448
  Pressure Cap 447
  Radiator Cap 447
  Selection of Coolant (Antifreeze) 445,480,482
Corrosion Protection 455
Cruise Control (Speed Control) 158,162
Cruise Light 216
Cupholders 203,460
Customer Assistance 507
Customer Programmable Features 245

Daytime Brightness, Interior Lights 150
Daytime Running Lights 147
Dealer Service 428
Deck Lid, Emergency Release 44

Downloaded from www.Manualslib.com manuals search engine

Deck Lid, Power Release 43
Defroster, Rear Window 206
Defroster, Windshield 83,294,300
Delay (Intermittent) Wipers 151
Diagnostic System, Onboard 426
Dimmer Switch, Headlight 149
Dipsticks
  Oil (Engine) 430
  Power Steering 334
Disabled Vehicle Towing 418
Disposal
  Antifreeze (Engine Coolant) 448
  Engine Oil 433
Door Locks 30
Door Locks, Automatic 32
Door Opener, Garage 190
Driving
  On Slippery Surfaces 330
  Through Flowing, Rising, or Shallow
  Standing Water 331
DVD Player (Video Entertainment System™) 288

Electric Rear Window Defrost 206
Electric Remote Mirrors 94
Electrical Power Outlets 200
Electronic Brake Control System 340
  Anti-Lock Brake System 340
  Brake Assist System 341
  Electronic Stability Program 341
  Traction Control System 340
Electronic Power Distribution Center (Fuses) 460
Electronic Speed Control (Cruise Control) 158,162
Electronic Stability Program (ESP) 341
Electronic Throttle Control Warning Light 225
Electronic Vehicle Information Center (EVIC) 230
Emergency Deck Lid Release 44

Downloaded from www.Manualslib.com manuals search engine

Emergency, In Case of
Freeing Vehicle When Stuck 417
Hazard Warning Flasher 400
Jacking 401
Jump Starting 413
Overheating 400
Towing 418
Emergency Trunk Release 44
Emission Control System Maintenance 427,486
Engine 423,424,425
Air Cleaner 433
Block Heater 314
Break-In Recommendations 80
Checking Oil Level 430
Compartment 423,424,425
Coolant (Antifreeze) 444,482
Cooling 444
Exhaust Gas Caution 81,378
Fails to Start 312
Flooded, Starting 312
Fuel Requirements 374
Jump Starting 413
Multi-Displacement 335
Oil 430,480,482
Oil Change Interval 219,236,431
Oil Filler Cap 432
Oil Filter 433
Oil Filter Disposal 433
Oil Selection 431,480
Oil Synthetic 433
Overheating 400
Starting 309
Temperature Gauge 223
Engine Oil Viscosity 432
Enhanced Accident Response Feature 66
Entry System, Illuminated 20
Ethanol 375
Exhaust Gas Caution 81,378

Downloaded from www.Manualslib.com manuals search engine

Exhaust System 81,441
Exterior Folding Mirrors 93
Exterior Lighting 144
Exterior Lights 84

Filters
  Air Cleaner 433
  Air Conditioning 302,437
  Engine Oil 433,482
  Engine Oil Disposal 433
Flashers
  Hazard Warning 400
  Turn Signal 84,148,216
Flash-To-Pass 149
Flat Tire Changing 401
Flooded Engine Starting 312
Floor Console 204
Fluid, Brake 483
Fluid Capacities 480
Fluid Leaks 84
Fluid Level Checks
  Automatic Transmission 452
  Brake 450
  Cooling System 444
  Engine Oil 430
  Power Steering 334
  Transfer Case 454
Fluids 482
Fluids, Lubricants and Genuine Parts 482
Fog Lights 147,216
Folding Rear Seat 136
Freeing A Stuck Vehicle 417
Fuel 374
  Adding 379
  Additives 377
  Clean Air 375
  Conserving 236
  Ethanol 375

Downloaded from www.Manualslib.com manuals search engine

Filler Cap (Gas Cap) 379
Gasoline 374
Gauge 225
Materials Added 377
Methanol 375
Octane Rating 374,482
Requirements 374
Saver Mode 236
Specifications 482
Tank Capacity 480
Fuel System Caution 380
Fueling 379
Fuses 460

Garage Door Opener (HomeLink®) 190
Gas Cap (Fuel Filler Cap) 379,426
Gasoline, Clean Air 375
Gasoline (Fuel)
Conserving 236
Gasoline, Reformulated 375
Gauges
Coolant Temperature 223
Fuel 225
Odometer 216
Speedometer 216
Tachometer 220
Gear Ranges 319,324
General Information 17,27,124,181,374
General Maintenance 429
Glass Cleaning 459
Gross Axle Weight Rating 382,385
Gross Vehicle Weight Rating 382,384
GVWR 382

Hands-Free Phone (Uconnect™) 96
Hazard
Driving Through Flowing, Rising, or Shallow
Standing Water 331

Downloaded from www.Manualslib.com manuals search engine

Hazard Warning Flasher 400
Head Restraints 132
Head Rests 132
Headlight Washers 440
Headlights 472
  Automatic 145
  Bulb Replacement 470
  Cleaning 458
  Delay 145
  High Beam/Low Beam Select Switch 149
  Lights On Reminder 147
  On With Wipers 145,152
  Passing 149
  Switch 144
  Time Delay 145
Heated Mirrors 95
Heated Seats 134
Heater 293
Heater, Engine Block 314
High Beam/Low Beam Select (Dimmer) Switch . . 149
Hitches
  Trailer Towing 386
Holder, Coin 204
Holder, Cup 203
HomeLink® (Garage Door Opener) Transmitter . . . 190
Hood Release 142

Ignition 14
  Key 12,14
Ignition Key Removal 14
Illuminated Entry 20
Immobilizer (Sentry Key) 16
Infant Restraint 71,72
Inflation Pressure Tires 226
Information Center, Vehicle 230
Inside Rearview Mirror 91
Instrument Cluster 214,216
Instrument Panel and Controls 213

Downloaded from www.Manualslib.com manuals search engine

Instrument Panel Lens Cleaning 459
Integrated Power Module (Fuses) 460
Interior Appearance Care 458
Interior Fuses 460
Interior Lights 149
Intermittent Wipers (Delay Wipers) 151
Introduction 4

Jack Location 402
Jack Operation 404
Jacking Instructions 404
Jump Starting 413

Key, Programming 17
Key, Replacement 17
Key, Sentry (Immobilizer) 16
Key-In Reminder 15
Keyless Entry System 20
Keyless Go 12,240,310
Keys 12
Kicker Sound System 287
Knee Bolster 56

Lane Change and Turn Signals 148
Lane Change Assist 148
Lap/Shoulder Belts 46
LATCH (Lower Anchors and Tether for
CHildren) 74,76
Latch Plate 48
Latches 84
  Hood 142
Lead Free Gasoline 374
Leaks, Fluid 84
Life of Tires 361
Light Bulbs 84,468
Lights 84,144
  Airbag 64,69,82,221
  Anti-Lock 220

Downloaded from www.Manualslib.com manuals search engine

Automatic Headlights 145
Brake Assist Warning 344
Brake Warning 222
Bulb Replacement 468,470
Courtesy/Reading 149,189
Cruise 216
Daytime Running 147
Dimmer Switch, Headlight 148,149
Electronic Stability Program (ESP) Indicator . . . 344
Electronic Throttle Control Warning 225
Engine Temperature Warning 220
Exterior 84
Fog 147,216
Hazard Warning Flasher 400
Headlight Switch 144
Headlights 144,472
Headlights On Reminder 147
Headlights On With Wipers 145,152
High Beam 149,225
High Beam Indicator 225
High Beam/Low Beam Select 149
Illuminated Entry 20
Instrument Cluster 144,216
Intensity Control 150
Interior 149,189
License 479
Lights On Reminder 147
Low Fuel 216
Low Tire 226
Malfunction Indicator (Check Engine) 228
Map Reading 149,189
Oil Pressure 229
Parade Mode (Daytime Brightness) 150
Passing 149
Reading 149,189
Seat Belt Reminder 225
Service 468,470
Service Engine Soon (Malfunction Indicator) . . . 228

Downloaded from www.Manualslib.com manuals search engine

SmartBeams 146
Tire Pressure Monitoring (TPMS) 226,365
Traction Control 344
Turn Signal 84,148,216
Vanity Mirror 96
Voltage 228
Warning (Instrument Cluster Description) 216
Load Leveling System 207
Loading Vehicle 381,383
Capacities 383
Tires 351
Locks 30
Auto Unlock 34
Automatic Door 32
Child Protection 37
Door 30
Power Door 32
Low Tire Pressure System 365
Lower Anchors and Tether for CHildren (LATCH) 74,76
Lubrication, Body 439
Lumbar Support 132

Maintenance Free Battery 434
Maintenance, General 429
Maintenance Procedures 429
Maintenance Schedule 486
Maintenance, Sunroof 199
Malfunction Indicator Light (Check Engine) . . 228,427
Manual, Service 511
Manual Transmission 454
Fluid Level Check 454
Map/Reading Lights 149,189
Master Cylinder (Brakes) 450
Memory Feature (Memory Seat) 138
Memory Seat 138
Memory Seats and Radio 138

Downloaded from www.Manualslib.com manuals search engine

Methanol 375
Mini-Trip Computer 236
Mirrors 91
Automatic Dimming 92
Electric Powered 94
Electric Remote 94
Exterior Folding 93
Heated 95
Outside 92
Rearview 91
Vanity 96
Mode
Fuel Saver 236
Modifications/Alterations, Vehicle 7
Monitor, Tire Pressure System 365
Mopar Parts 428,510
MTBE/ETBE 375
Multi-Displacement Engine System 335
Multi-Function Control Lever 148
New Vehicle Break-In Period 80

Occupant Restraints 45,62,66
Occupant Restraints (Sedan) 59,62,65
Octane Rating, Gasoline (Fuel) 374,482
Odometer 216,224
Trip 216,224
Oil Change Indicator 219,236
Oil Change Indicator, Reset 219,236
Oil, Engine 430,482
Capacity 480
Change Interval 219,236,431
Checking 430
Dipstick 430
Disposal 433
Filter 433,482
Filter Disposal 433
Identification Logo 431
Materials Added to 433

Downloaded from www.Manualslib.com manuals search engine

Recommendation 431,480
Synthetic 433
Viscosity 432,480
Oil Filter, Change 433
Oil Filter, Selection 433
Onboard Diagnostic System 426,427
Opener, Garage Door (HomeLink®) 190
Operating Precautions 426
Operator Manual (Owner's Manual) 4
Outside Rearview Mirrors 92
Overdrive 321
Overhead Console 189
Overheating, Engine 224,400
Owner's Manual (Operator Manual) 4,511

Paint Care 455
Panic Alarm 25
Park Sense System, Rear 184
Parking Brake 335
Passing Light 149
Passive Entry 35
Pedals, Adjustable 156
Personal Settings 245
Pets 80
Phone, Cellular 96
Phone, Hands-Free (Uconnect™) 96
Placard, Tire and Loading Information 351
Power
Deck Lid Release 43
Distribution Center (Fuses) 460,463
Door Locks 32
Mirrors 94
Outlet (Auxiliary Electrical Outlet) 200
Seats 130
Steering 334
Sunroof 196
Tilt/Telescoping Steering Column 155
Windows 40

Downloaded from www.Manualslib.com manuals search engine

Power Steering Fluid 483
Pregnant Women and Seat Belts 55
Preparation for Jacking 404
Pretensioners
  Seat Belts 53
Programmable Electronic Features 245
Programming Transmitters
(Remote Keyless Entry) 20

Radial Ply Tires 358
Radiator Cap (Coolant Pressure Cap) 447
Radio Operation 292
Radio Remote Controls 290
Radio, Satellite (Uconnect® studios) 282
Rain Sensitive Wiper System 153
Rear Cupholder 203
Rear Park Sense System 184
Rear Seat, Folding 136
Rear Window Defroster 206
Rear Window Features 206
Rearview Mirrors 91
Reclining Front Seats 131
Recreational Towing 396
Reformulated Gasoline 375
Refrigerant 437
Release, Hood 142
Reminder, Lights On 147
Reminder, Seat Belt 53
Remote Control
  Starting System 27
Remote Keyless Entry (RKE) 20
Remote Sound System (Radio) Controls 290
Remote Starting System 27
Remote Trunk Release 43
Replacement Bulbs 468
Replacement Keys 17
Replacement Parts 428
Replacement Tires 362

Downloaded from www.Manualslib.com manuals search engine

Reporting Safety Defects 510
Resetting Oil Change Indicator 219,236
Restraint, Head 132
Restraints, Child 71
Restraints, Occupant 45
Rocking Vehicle When Stuck 417
Rotation, Tires 364

Safety Checks Inside Vehicle 82
Safety Checks Outside Vehicle 84
Safety Defects, Reporting 510
Safety, Exhaust Gas 81
Safety Information, Tire 345
Safety Tips 81
Satellite Radio Antenna 283
Satellite Radio (Uconnect® studios) 282
Schedule, Maintenance 486
Seat Belt Maintenance 459
Seat Belt Reminder 53
Seat Belts 45,46,82
Adjustable Upper Shoulder Anchorage 51
And Pregnant Women 55
Child Restraint 71,72,73,77
Extender 55
Front Seat 46,48
Inspection 82
Operating Instructions 48
Pretensioners 53
Rear Seat 46
Reminder 225
Untwisting Procedure 52
Seats 129
Adjustment 129
Easy Entry 141
Head Restraints 132
Heated 134
Height Adjustment 130
Lumbar Support 132

Downloaded from www.Manualslib.com manuals search engine

Memory 138
Power 130
Rear Folding 136
Reclining 131
Seatback Release 136
Tilting 130
Security Alarm (Theft Alarm) 18
Selection of Coolant (Antifreeze) 445,482
Selection of Oil 431
Self-Sealing Tires 363
Sentry Key (Immobilizer) 16
Sentry Key Programming 17
Sentry Key Replacement 17
Service Assistance 507
Service Contract 509
Service Engine Soon Light
(Malfunction Indicator) 228
Service Manuals 511
Setting the Clock 251,252,254,257,266
Settings, Personal 245
Shifting 314
Automatic Transmission 314,319,324
Shoulder Belt Upper Anchorage 51
Shoulder Belts 46
Side View Mirror Adjustment 92
Signals, Turn 84,148,216
Slippery Surfaces, Driving On 330
SmartBeams 146
Snow Tires 363
Sound System
Kicker 287
Spare Tire 358,359,402
Spark Plugs 482
Specifications
Fuel (Gasoline) 482
Oil 482
Speed Control (Cruise Control) 158,162
Speedometer 216

Downloaded from www.Manualslib.com manuals search engine

Starting 27,309
Automatic Transmission 309
Cold Weather 312
Engine Fails to Start 312
Remote 27
Starting and Operating 309
Starting Procedures 309
Steering
Column Controls 148
Column Lock 154
Power 334
Tilt Column 154,155
Wheel, Tilt 154,155
Steering Wheel Mounted Sound
System Controls 290
Storage 204,468
Storage, Vehicle 302,468
Storing Your Vehicle 468
Stuck, Freeing 417
Sun Roof 196
Sunglasses Storage 189
Sunroof Maintenance 199
Supplemental Restraint System - Airbag 56
Sway Control, Trailer 385
Synthetic Engine Oil 433
System, Remote Starting 27

Tachometer 220
Telescoping Steering Column 154,155
Temperature Control, Automatic (ATC) 296
Temperature Gauge, Engine Coolant 223,401
Tether Anchor, Child Restraint 74
Theft Alarm (Security Alarm) 18
Theft System (Security Alarm) 18
Tilt Steering Column 154,155
Time Delay, Headlight 145
Tire and Loading Information Placard 351
Tire Identification Number (TIN) 349

Downloaded from www.Manualslib.com manuals search engine

Tire Markings 345
Tire Safety Information 345
Tires 84,355,513
Aging (Life of Tires) 361
Air Pressure 355
Changing 401,404
Compact Spare 358
Flat Changing 401
General Information 355
High Speed 358
Inflation Pressures 356
Jacking 404
Life of Tires 361
Load Capacity 351,352
Pressure Monitor System (TPMS) 365
Quality Grading 513
Radial 358
Replacement 362
Rotation 364
Safety 345,355
Self-Sealing 363
Sizes 347
Snow Tires 363
Spare Tire 402
Spinning 360
Trailer Towing 391
Tread Wear Indicators 360
To Open Hood 142
Tongue Weight/Trailer Weight 388
Torque Converter Clutch 322
Towing 384
24-Hour Towing Assistance 110
Behind a Motor Home 396
Disabled Vehicle 418
Guide 388
Recreational 396
Weight 388
Towing Assistance 110

Downloaded from www.Manualslib.com manuals search engine

Towing Vehicle Behind a Motor Home 396
Traction Control 340
Trailer Towing 384
Cooling System Tips 396
Hitches 386
Minimum Requirements 389
Tips 395
Trailer and Tongue Weight 388
Wiring 393
Trailer Towing Guide 388
Trailer Weight 388
Transfer Case 454
Fluid 454,483
Maintenance 454
Transmission 452
Automatic 314,319,324,452
Fluid 483
Range Indicator 319,324
Shifting 314
Transmitter Battery Service
(Remote Keyless Entry) 26
Transmitter, Garage Door Opener (HomeLink®) . . 190
Transmitter Programming
(Remote Keyless Entry) 20
Transmitter, Remote Keyless Entry (RKE) 20
Transporting Pets 80
Tread Wear Indicators 360
Trip Odometer 216,224
Trunk Lid (Deck Lid) 43,44
Trunk Release, Emergency 44
Trunk Release Remote Control 43
Turn Signals 148,216

UCI Connector 277
Uconnect™ (Hands-Free Phone) 96
Uniform Tire Quality Grades 513
Universal Consumer Interface (UCI) Connector . . . 277
Universal Transmitter 190

Downloaded from www.Manualslib.com manuals search engine

Unleaded Gasoline 374
Untwisting Procedure, Seat Belt 52

Vanity Mirrors 96
Variance, Compass 243
Vehicle Certification Label 382
Vehicle Identification Number (VIN) 6
Vehicle Loading 352,381,383
Vehicle Modifications/Alterations 7
Vehicle Storage 302,468
Vehicle Theft Alarm (Security Alarm) 18
Video Entertainment System™
(Rear Seat Video System) 288
Viscosity, Engine Oil 432
Voice Recognition System (VR) 124

Warning Flasher, Hazard 400
Warning Lights
(Instrument Cluster Description) 216
Warnings and Cautions 6
Warranty Information 510
Washer, Adding Fluid 440
Washers, Windshield 152,440
Washing Vehicle 455
Water
Driving Through 331
Wheel and Wheel Trim 457
Wheel and Wheel Trim Care 457
Wind Buffeting 43,199
Window Fogging 302
Windows 40
Power 40
Windshield Defroster 83,294,300
Windshield Washers 150,152
Windshield Wiper Blades 440
Windshield Wipers 150
Wiper Blade Replacement 440
Wipers, Intermittent 151
Wipers, Rain Sensitive 153

Downloaded from www.Manualslib.com manuals search engine

CHRYSLER

SERVICE

STICK WITH THE SPECIALISTS®

Chrysler Group LLC

10C481-126-AC

3rd Edition

Printed in U.S.A.

Downloaded from www.Manualslib.com manuals search engine