ELECTRICAL SYSTEM

SECTION EL

CONTENTS

PRECAUTIONS 3
Supplemental Restraint System (SRS) "AIR BAG" 3
Wiring Diagrams and Trouble Diagnosis 3
HARNESS CONNECTOR 4
Description 4
STANDARDIZED RELAY 5
Description 5
POWER SUPPLY ROUTING 7
Schematic 7
Wiring Diagram - POWER - 8
Inspection 14
GROUND 15
Ground Distribution 15
COMBINATION SWITCH 26
Check 26
Replacement 27
HEADLAMP 28
Component Parts and Harness Connector Location 28
System Description 28
Wiring Diagram - H/LAMP - 29
Trouble Diagnoses 31
Bulb Replacement 32
Aiming Adjustment 34
PARKING, LICENSE AND TAIL LAMPS 35
Wiring Diagram - TAIL/L - 35
STOP LAMP 37
Wiring Diagram - STOP/L - 37
BACK-UP LAMP 38
Wiring Diagram - BACK/L - 38
TURN SIGNAL AND HAZARD WARNING LAMPS 39
Wiring Diagram - TURN - 39
Trouble Diagnoses 41
Blub Replacement 41
Electrical Components Inspection 42
ILLUMINATION 43
Schematic 43
Wiring Diagram - ILL - 44
INTERIOR ROOM LAMP 47
System Description 47
Wiring Diagram - ROOM/L - 49
Trouble Diagnoses for Interior Lamp Timer 50
SPOT AND TRUNK ROOM LAMPS 57
Wiring Diagram - INT/L - 57
METERS AND GAUGES 58
Component Parts and Harness Connector Location 58
System Description 58
Combination Meter 60
Schematic 62
Wiring Diagram - METER - 63
Meter/Gauge Operation and Odo/Trip Meter Segment Check in Diagnosis Mode 64
Trouble Diagnoses 65
Electrical Components Inspection 71
WARNING LAMPS 73
Schematic 73
Wiring Diagram - WARN - 74
Electrical Components Inspection 77
A/T INDICATOR 78
Wiring Diagram - AT/IND - 78
WARNING BUZZER 79
Component Parts and Harness Connector Location 79
System Description 79
Wiring Diagram - BUZZER - 81
Trouble Diagnoses 82
FRONT WIPER AND WASHER 87
System Description 87
Wiring Diagram - WIPER - 89
Removal and Installation 90
Washer Nozzle Adjustment 91
Washer Tube Layout 92
HORN 93
Wiring Diagram - HORN - 93
CIGARETTE LIGHTER 94
Wiring Diagram - CIGAR - 94

CONTENTS (Cont'd)

CLOCK.....95
Wiring Diagram - CLOCK -.....95
REAR WINDOW DEFOGGER.....96
Component Parts and Harness Connector Location 96
System Description.....96
Wiring Diagram - DEF -.....97
Trouble Diagnoses.....98
Electrical Components Inspection 100
Filament Check.....101
Filament Repair 102
AUDIO.....103
Wiring Diagram - AUDIO -.....103
AUDIO ANTENNA 104
Location of Antenna.....104
Window Antenna Repair.....104
POWER SUNROOF.....106
System Description.....106
Wiring Diagram - SROOF - 107
Trouble Diagnoses.....109
DOOR MIRROR.....110
Wiring Diagram - MIRROR - 110
POWER WINDOW.....111
System Description.....111
Schematic 113
Wiring Diagram - WINDOW - 114
Trouble Diagnoses.....117
POWER DOOR LOCK.....120
Component Parts and Harness Connector Location 120
System Description.....120
Wiring Diagram - D/LOCK -.....121
Trouble Diagnoses.....123
UNIFIED METER CONTROL UNIT (TIME CONTROL SYSTEM).....131
Description 131
Schematic 132
Time Control System Inspection Table.....133
NATS (NISSAN ANTI-THEFT SYSTEM).....134
Component Parts and Harness Connetor Location 134
System Description.....135
System Composition.....135
Wiring Diagram - NATS -.....136
CONSULT-II 137
Trouble Diagnoses.....139
How to Replace NATS IMMU.....153
ELECTRICAL UNITS LOCATION.....154
Engine Compartment.....154
Passenger Compartment.....156
HARNESS LAYOUT.....158
How to Read Harness Layout 158
Outline.....159
Main Harness.....160
Engine Room Harness 162
Engine Control Harness 166
Engine Sub Harness.....168
Engine Harness 169
Body Harness 170
Tail Harness 172
Room Lamp Harness.....173
Door Harness.....174
BULB SPECIFICATIONS 175
Headlamp.....175
Exterior Lamp 175
Interior Lamp.....175
WIRING DIAGRAM CODES (CELL CODES).....176

Supplemental Restraint System (SRS) "AIR BAG"

NMEL0001

The Supplemental Restraint System such as "AIR BAG" used along with a seat belt, helps to reduce the risk or severity of injury to the driver and front passenger for certain types of collision. The SRS system composition which is available to NISSAN MODEL S15 is as follows:
The Supplemental Restraint System consists of driver air bag module (located in the center of the steering wheel), front passenger air bag module (located on the instrument panel on passenger side), a diagnosis sensor unit, warning lamp, wiring harness and spiral cable.
Information necessary to service the system safely is included in the **RS section** of this Service Manual.

WARNING:

- **To avoid rendering the SRS inoperative, which could increase the risk of personal injury or death in the event of a collision which would result in air bag inflation, all maintenance should be performed by an authorized NISSAN dealer.**
- **Improper maintenance, including incorrect removal and installation of the SRS, can lead to personal injury caused by unintentional activation of the system. For removal of Spiral Cable and Air Bag Module, see the RS section.**
- **Do not use electrical test equipment on any circuit related to the SRS unless instructed to in this Service Manual. SRS wiring harnesses can be identified with yellow harness connector.**

Wiring Diagrams and Trouble Diagnosis

NMEL0002

When you read wiring diagrams, refer to the following:

- Refer to GI-11, "HOW TO READ WIRING DIAGRAMS"
- Refer to EL-7, "POWER SUPPLY ROUTING" for power distribution circuit

When you perform trouble diagnosis, refer to the following:

- Refer to GI-31, "HOW TO FOLLOW TEST GROUPS IN TROUBLE DIAGNOSES"
- Refer to GI-20, "HOW TO PERFORM EFFICIENT DIAGNOSIS FOR AN ELECTRICAL INCIDENT"

Check for any Service bulletins before servicing the vehicle.

Description

NMEL0003

HARNESS CONNECTOR (TAB-LOCKING TYPE)

NMEL0003S01

- The tab-locking type connectors help prevent accidental looseness or disconnection.
- The tab-locking type connectors are disconnected by pushing or lifting the locking tab(s). Refer to the illustration below.

Refer to the next page for description of the slide-locking type connector.

CAUTION:

Do not pull the harness or wires when disconnecting the connector.

[Example]

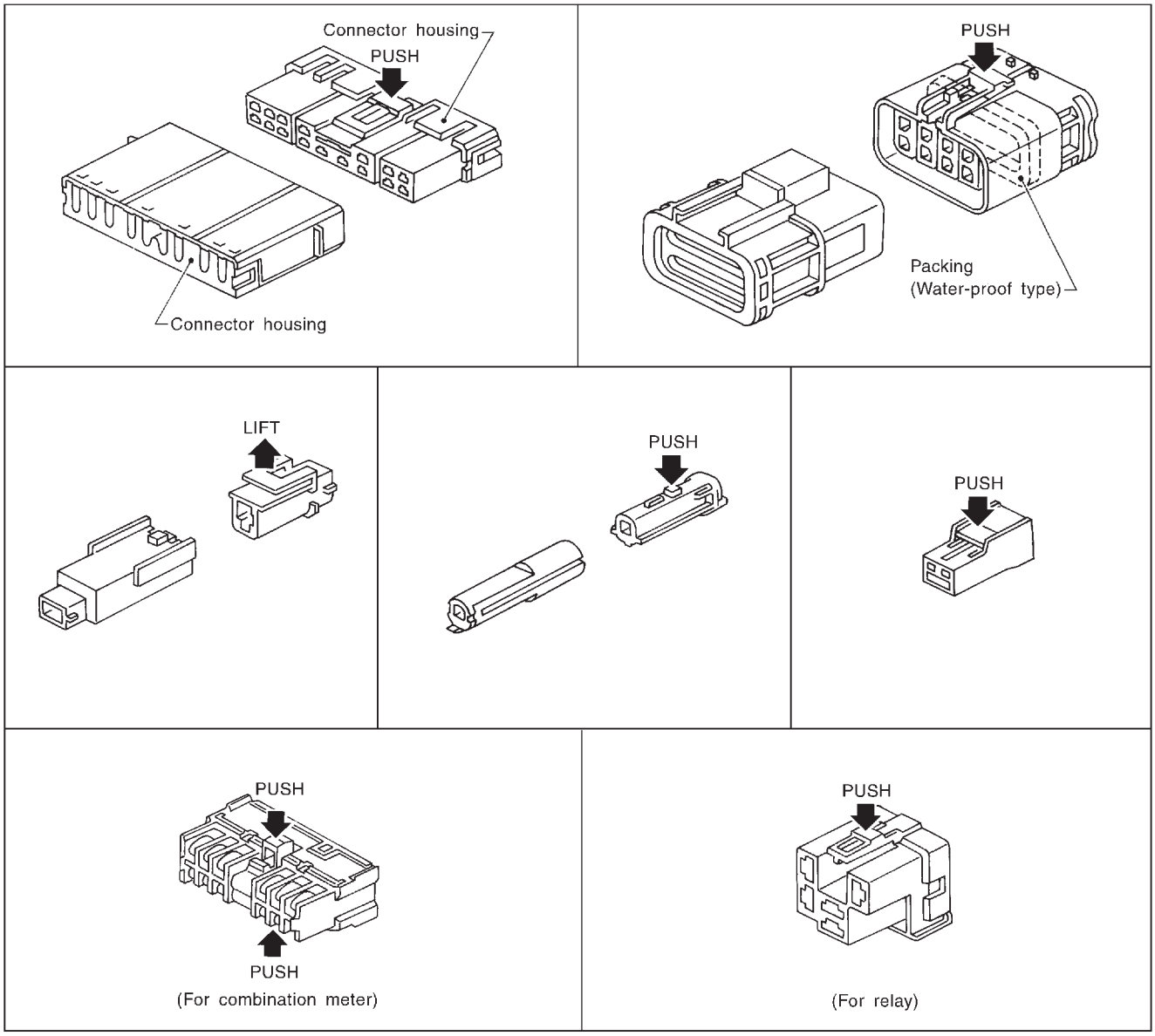

SEL769DA

Description

NMEL0004

NORMAL OPEN, NORMAL CLOSED AND MIXED TYPE RELAYS

NMEL0004S01

Relays can mainly be divided into three types: normal open, normal closed and mixed type relays.

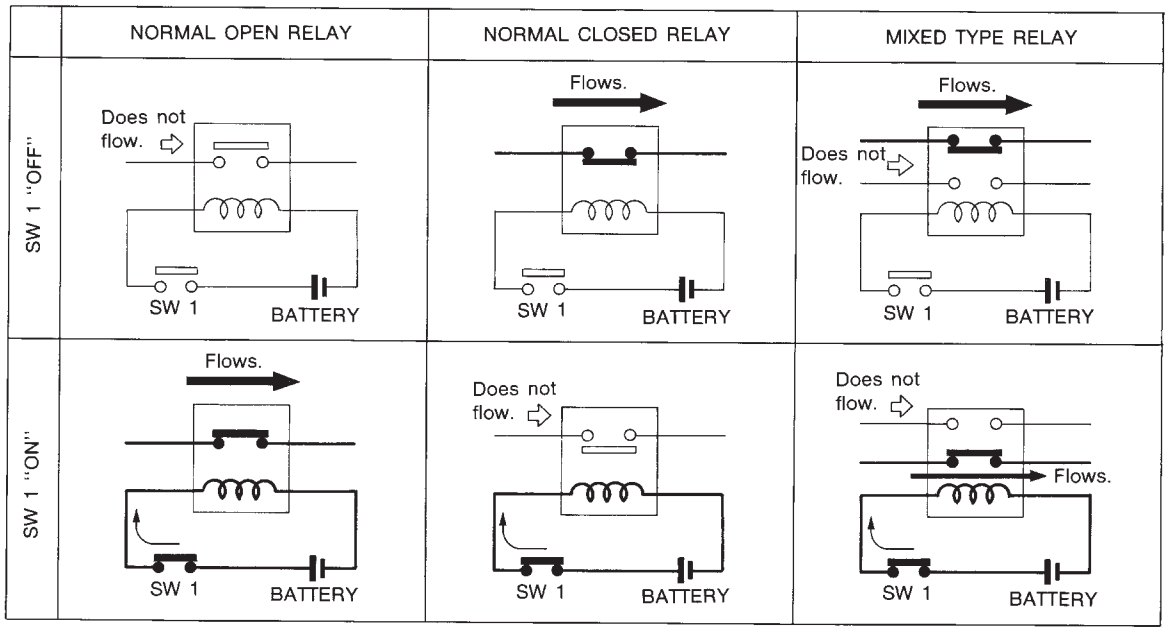

SEL881H

TYPE OF STANDARDIZED RELAYS

NMEL0004S02

1M	1 Make	2M	2 Make
1T	1 Transfer	1M·1B	1 Make 1 Break

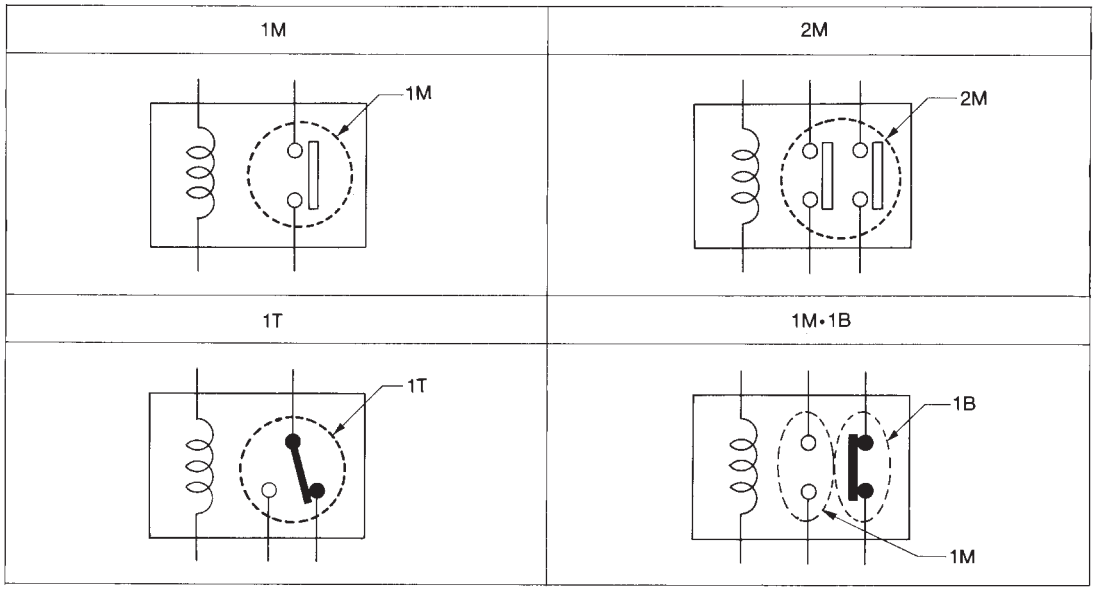

SEL882H

Type	Outer view	Circuit	Connector symbol and connection	Case color
1T	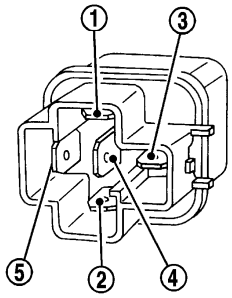	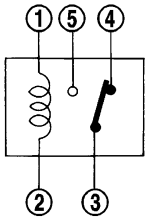	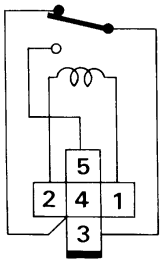	BLACK
2M	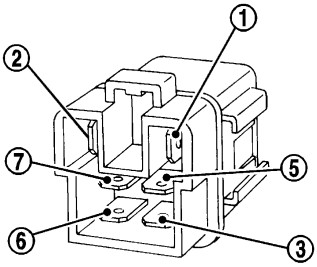	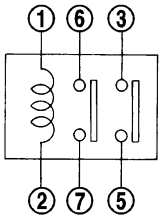	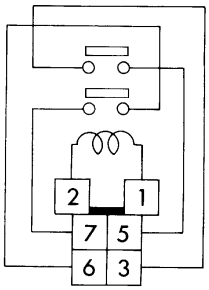	BROWN
1M•1B	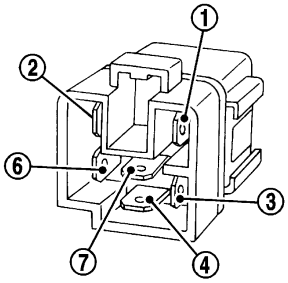	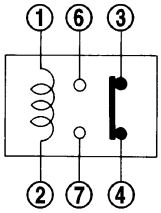	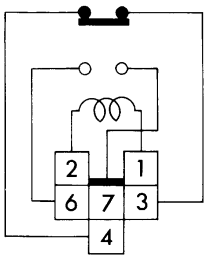	GRAY
1M	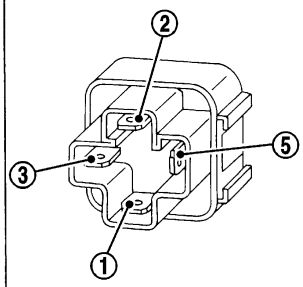	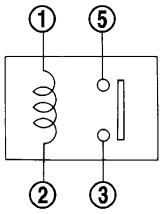	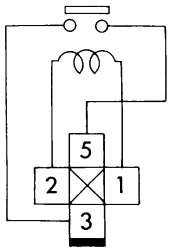	BLUE
	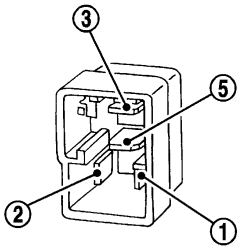		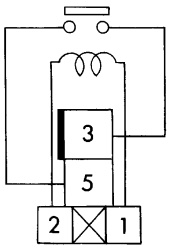	

The arrangement of terminal numbers on the actual relays may differ from those shown above.

SEL188W

Schematic

NMEL0005

For detailed ground distribution information, refer to “GROUND DISTRIBUTION”, EL-15.

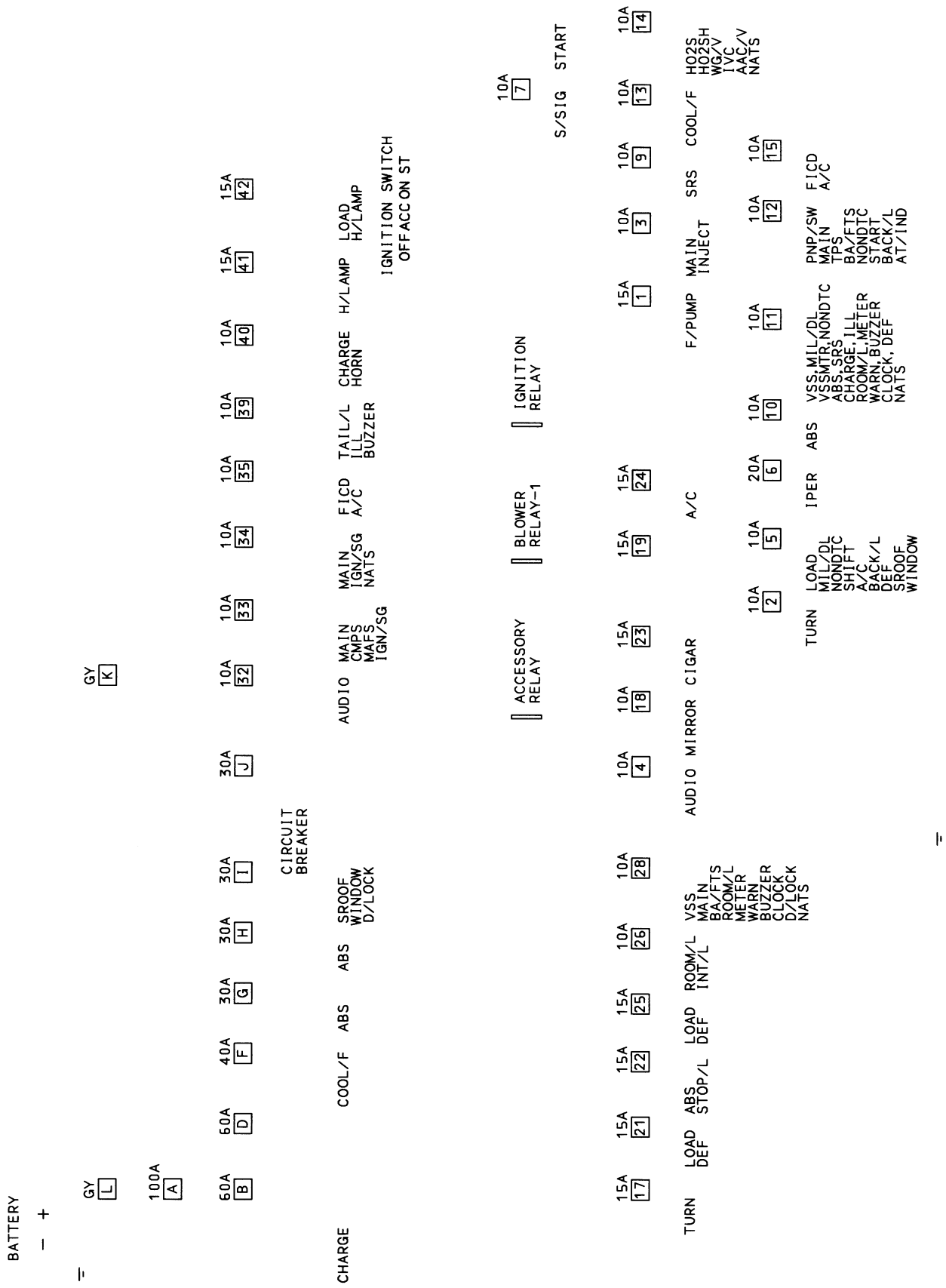

TEL780B

Wiring Diagram — POWER —

NMEL0006

BATTERY POWER SUPPLY — IGNITION SW. IN ANY POSITION

NMEL0006S01

EL-POWER-01

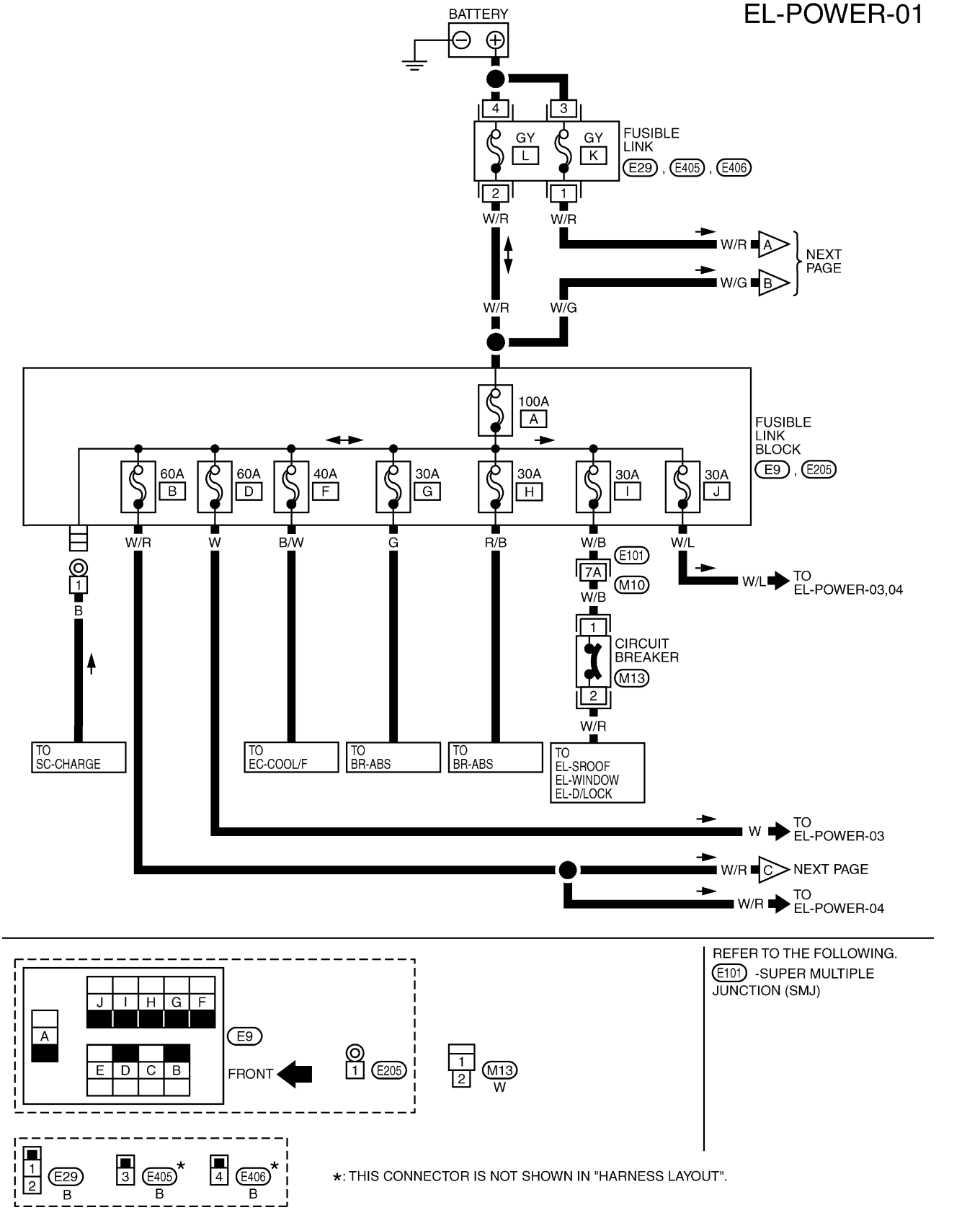

REFER TO THE FOLLOWING.
E101 -SUPER MULTIPLE JUNCTION (SMJ)

*: THIS CONNECTOR IS NOT SHOWN IN "HARNESS LAYOUT".

TEL781B

EL-POWER-02

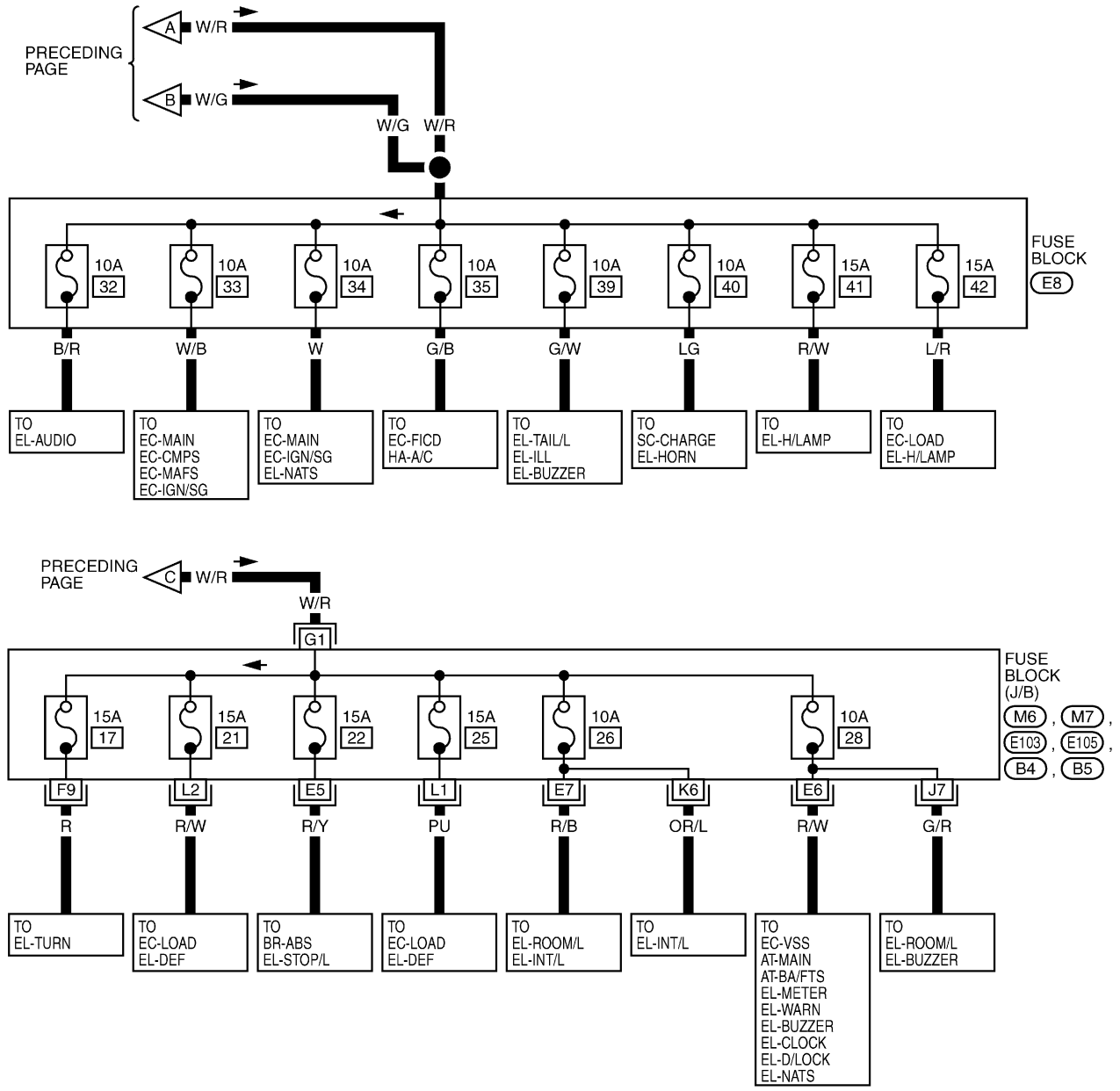

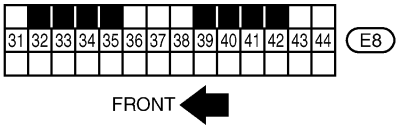

REFER TO THE FOLLOWING.

M6, M7, E103, E105, B4, B5 -FUSE BLOCK-JUNCTION BOX (J/B)

1	6	11	16	21	25
2	7	12	17	22	26
3	8	13	18	23	27
4	9	14	19	24	
5	10	15	20		28

UP

TEL782B

ACCESSORY POWER SUPPLY — IGNITION SW. IN "ACC" OR "ON"

NMEL0006S02

EL-POWER-03

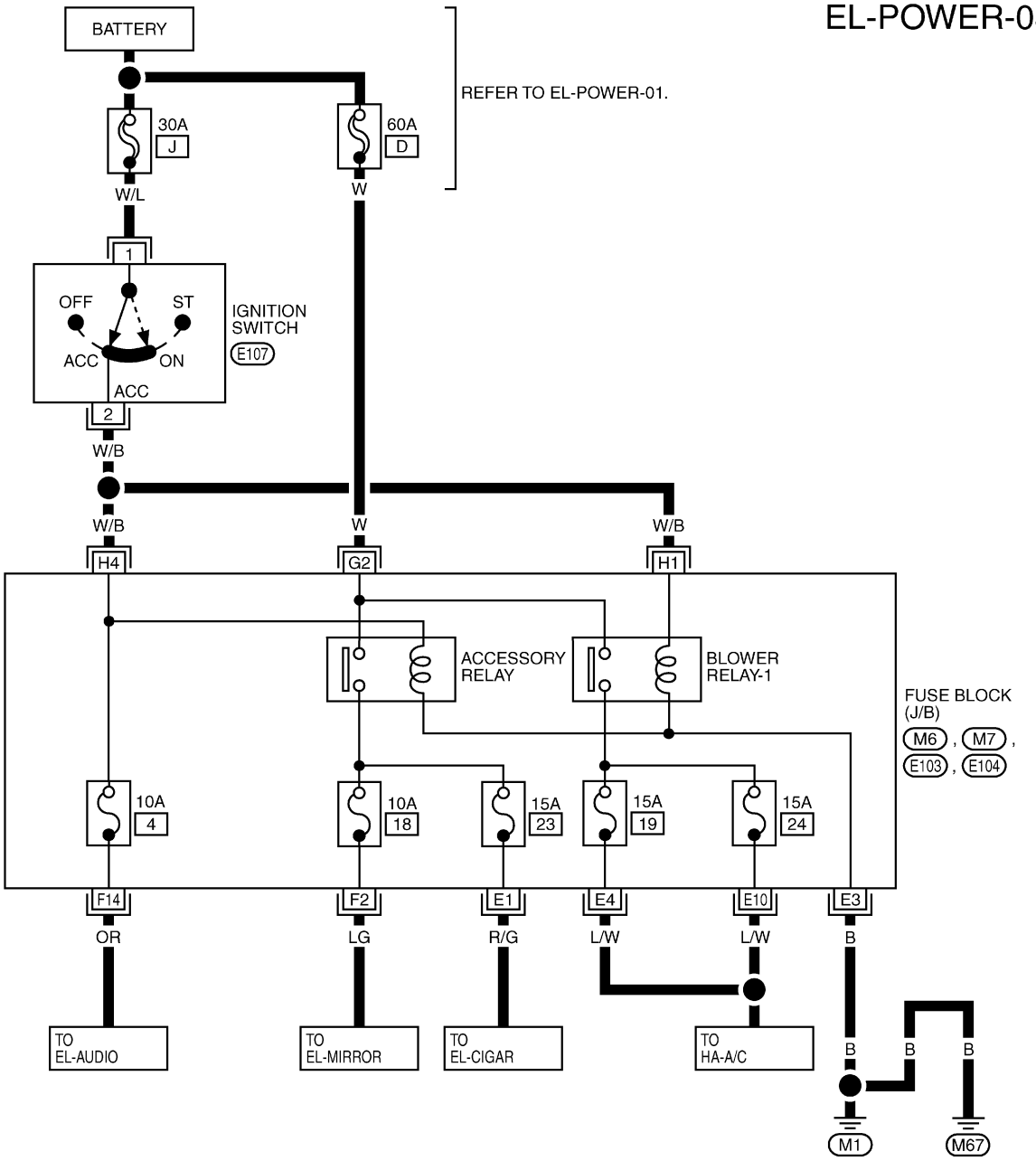

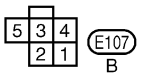

REFER TO THE FOLLOWING.

M6 , M7 , E103 , E104
-FUSE BLOCK-JUNCTION BOX (J/B)

1	6	11	16	21	25
2	7	12	17	22	26
3	8	13	18	23	27
4	9	14	19	24	
5	10	15	20		28

UP

TEL783B

IGNITION POWER SUPPLY — IGNITION SW. IN "ON" AND/OR "START"

NMEL0006S03

EL-POWER-04

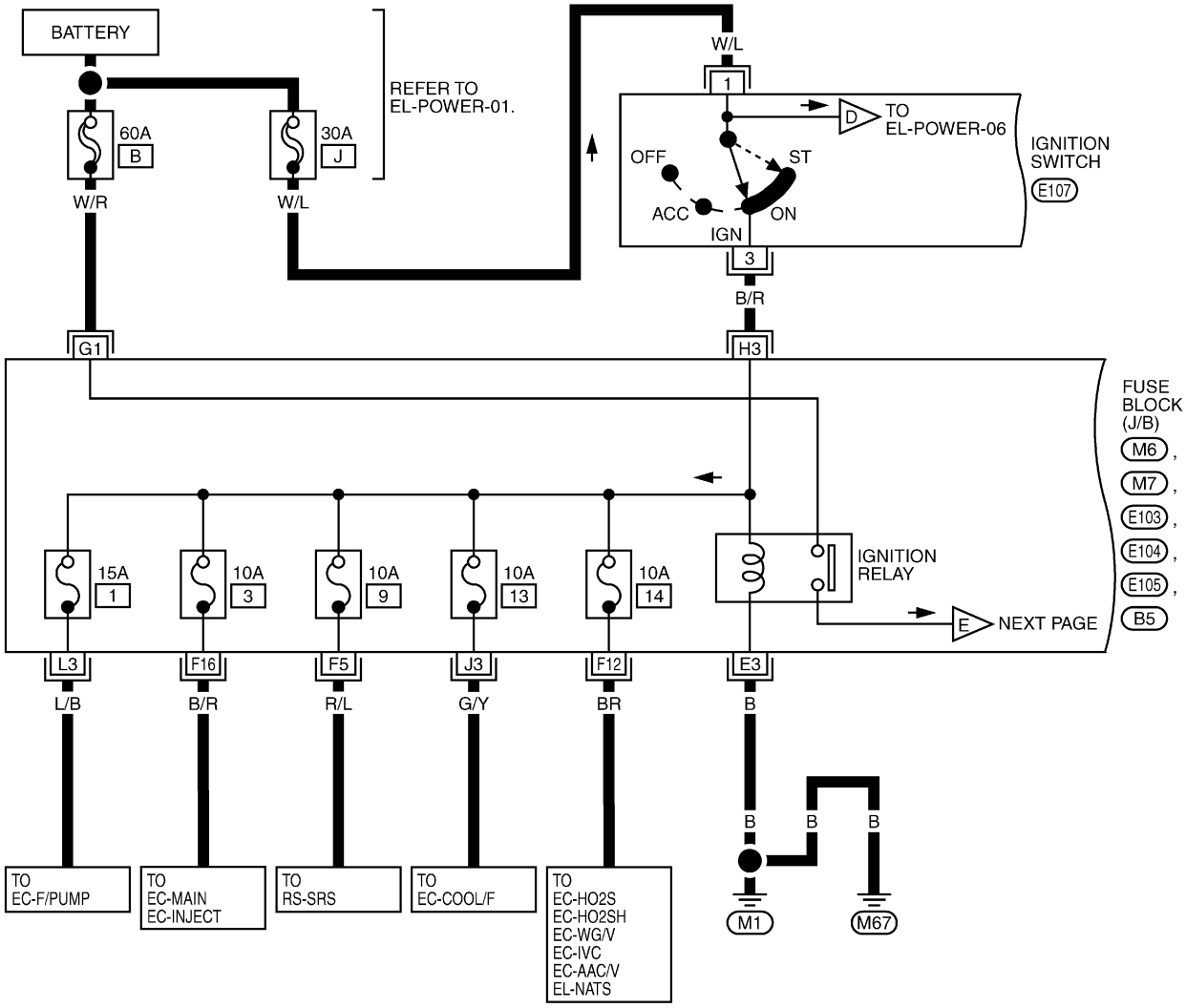

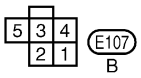

REFER TO THE FOLLOWING.

M6 , M7 , E103 , E104 ,
E105 , B5 -FUSE BLOCK-
JUNCTION BOX (J/B)

1	6	11	16	21	25
2	7	12	17	22	26
3	8	13	18	23	27
4	9	14	19	24	
5	10	15	20		28

UP

TEL784B

EL-POWER-05

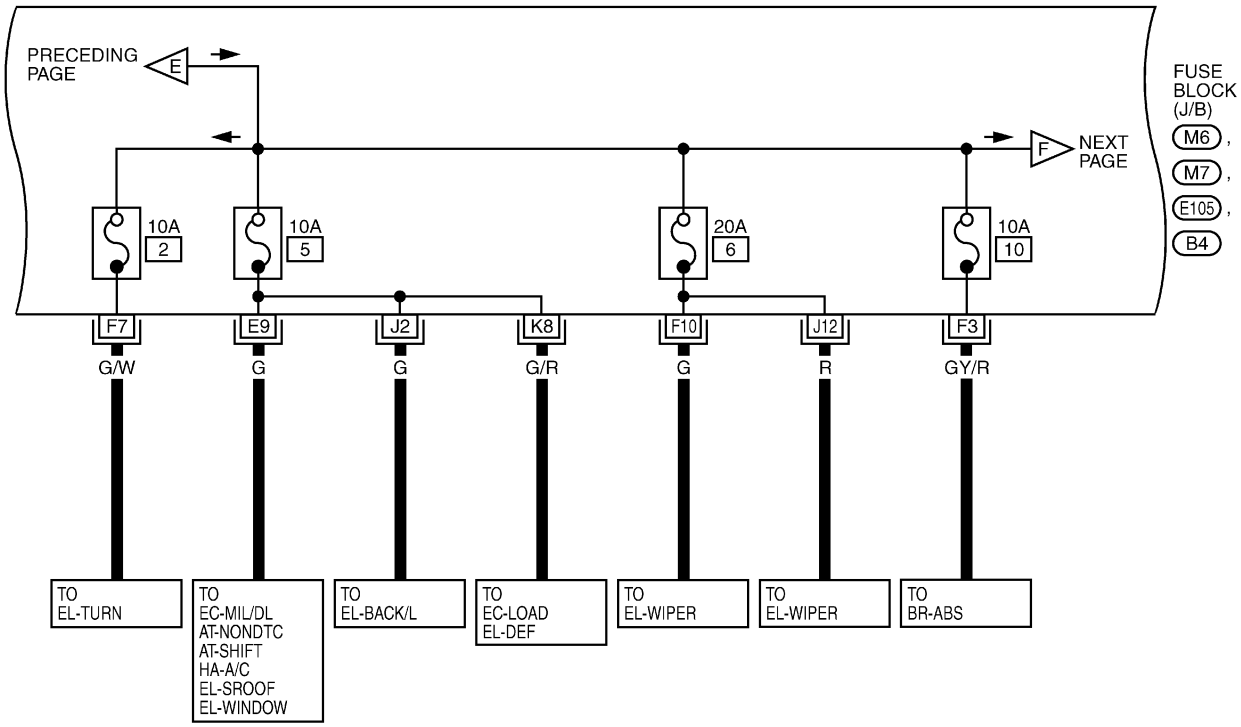

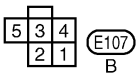

REFER TO THE FOLLOWING.

M6 , M7 , E105 , B4
-FUSE BLOCK-JUNCTION BOX (J/B)

1	6	11	16	21	25
2	7	12	17	22	26
3	8	13	18	23	27
4	9	14	19	24	
5	10	15	20		28

UP

TEL785B

EL-POWER-06

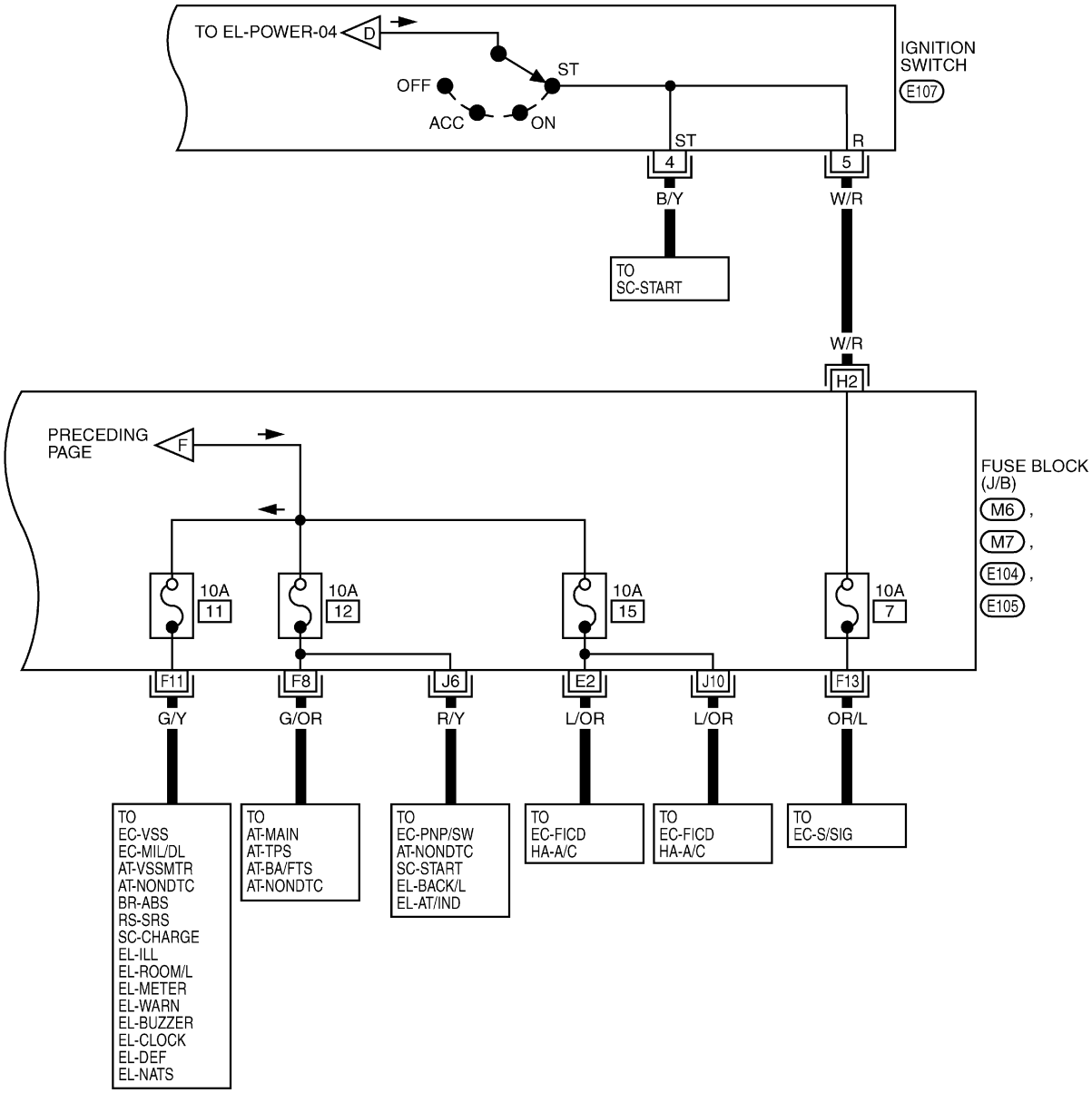

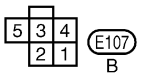

REFER TO THE FOLLOWING.

M6 , M7 , E104 , E105
-FUSE BLOCK-JUNCTION BOX (J/B)

1	6	11	16	21	25
2	7	12	17	22	26
3	8	13	18	23	27
4	9	14	19	24	
5	10	15	20		28

UP

TEL786B

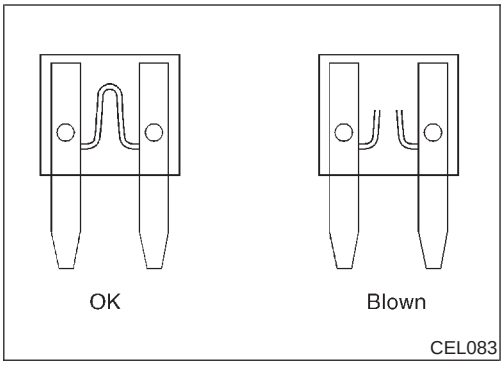

Inspection

NMEL0007

FUSE

NMEL0007S01

- **If fuse is blown, be sure to eliminate cause of problem before installing new fuse.**
- **Use fuse of specified rating. Never use fuse of more than specified rating.**
- **Do not partially install fuse; always insert it into fuse holder properly.**
- **Remove fuse for "ELECTRICAL PARTS (BAT)" if vehicle is not used for a long period of time.**

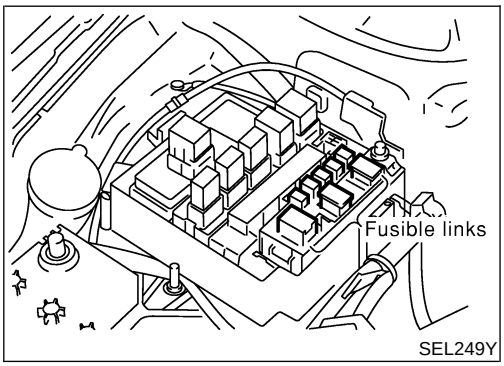

FUSIBLE LINK

NMEL0007S02

A melted fusible link can be detected either by visual inspection or by feeling with finger tip. If its condition is questionable, use circuit tester or test lamp.

CAUTION:

- **If fusible link should melt, it is possible that critical circuit (power supply or large current carrying circuit) is shorted. In such a case, carefully check and eliminate cause of problem.**
- **Never wrap outside of fusible link with vinyl tape. Important: Never let fusible link touch any other wiring harness, vinyl or rubber parts.**

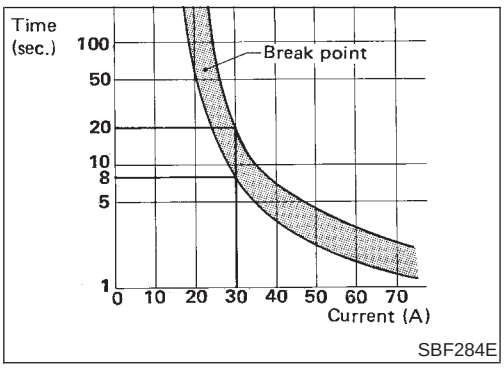

CIRCUIT BREAKER

NMEL0007S03

For example, when current is 30A, the circuit is broken within 8 to 20 seconds.

Ground Distribution

NMEL0008

MAIN HARNESS

NMEL0008S01

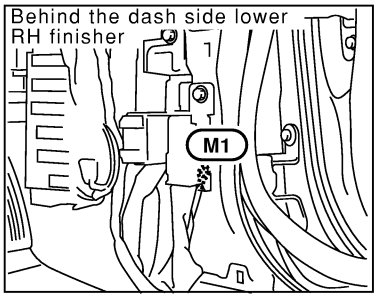

CON-NECTOR NUMBER	CONNECT TO
M2	Door lock relay
M4	Power window relay
M6	Fuse block (J/B) • Accessory relay • Ignition relay • Blower relay-1
M18	Combination meter (Terminal No. 9) • Unified meter control unit • Air bag warning lamp • Fuel gauge • Water temperature gauge
M19	Combination meter (Terminal No. 28) • Turn signal and hazard warning lamp • Clock • Fuel warning lamp
M19	Combination meter (Terminal No. 29) • High beam indicator
M20	Combination meter (Terminal No. 60) • A/T indicator lamp
M21	Combination flasher unit
M36	Hazard switch
M37	Rear window defogger switch (Terminal No. 2)
M37	Rear window defogger switch (Illumination)(Terminal No. 6)
M37	Rear window defogger switch (Indicator)(Terminal No. 4)
M41	A/T mode switch
R3	Spot lamp
D6	Door mirror remote control switch
D7	Power window main switch
D8	Door unlock sensor

M16 R1 Room lamp harness

M15 D2 Door harness RH

A Next page

CEL300A

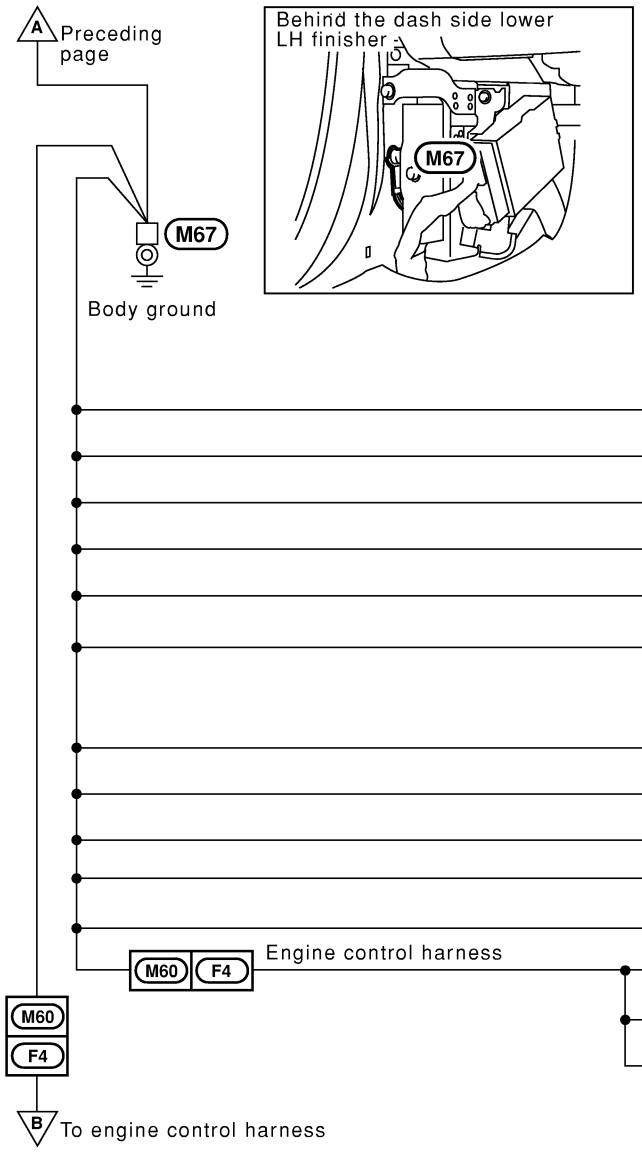

CON-NECTOR NUMBER	CONNECT TO
M27	Air mix door motor
M28	Mode door motor
M31	A/C control unit (Terminal No. 6)
M31	A/C control unit (Terminal No. 10)
M35	PTC
M39	Cigarette lighter socket • Cigarette lighter • Illumination
M40	Ashtray illumination
M42	Air bag diagnosis sensor unit
M48	Intake door motor
M58	Blower relay-2 (Terminal No. 1)
M58	Blower relay-2 (Terminal No. 3)
F11	Front wiper motor
F12	Side turn signal lamp LH
F40	ABS actuator

CEL301A

ENGINE ROOM HARNESS

NMEL0008S02

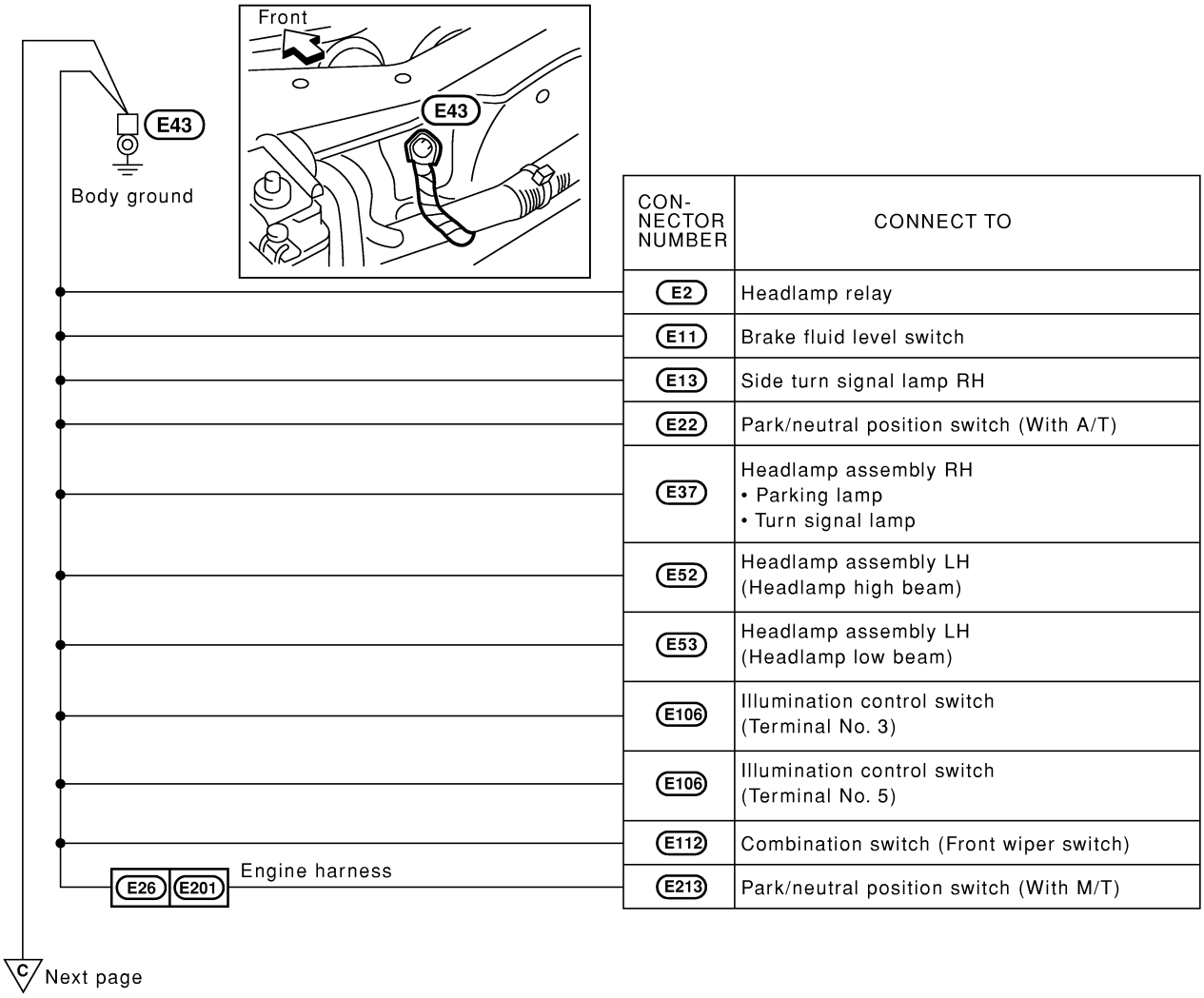

CON-NECTOR NUMBER	CONNECT TO
E2	Headlamp relay
E11	Brake fluid level switch
E13	Side turn signal lamp RH
E22	Park/neutral position switch (With A/T)
E37	Headlamp assembly RH • Parking lamp • Turn signal lamp
E52	Headlamp assembly LH (Headlamp high beam)
E53	Headlamp assembly LH (Headlamp low beam)
E106	Illumination control switch (Terminal No. 3)
E106	Illumination control switch (Terminal No. 5)
E112	Combination switch (Front wiper switch)
E213	Park/neutral position switch (With M/T)

CEL302A

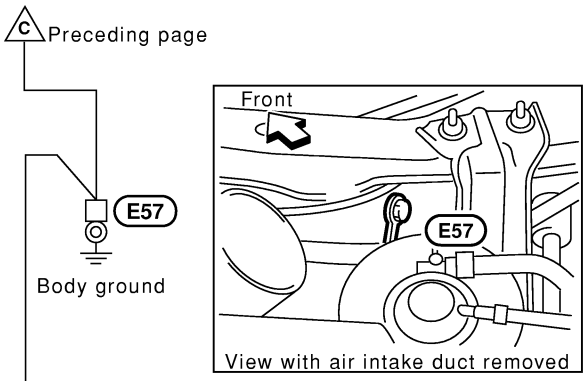

CON-NECTOR NUMBER	CONNECT TO
E38	Headlamp assembly RH (Headlamp low beam)
E39	Headlamp assembly RH (Headlamp high beam)
E44	Cooling fan motor
E54	Headlamp assembly LH • Parking lamp • Turn signal lamp

CEL303A

ENGINE CONTROL HARNESS

NMEL0008S03

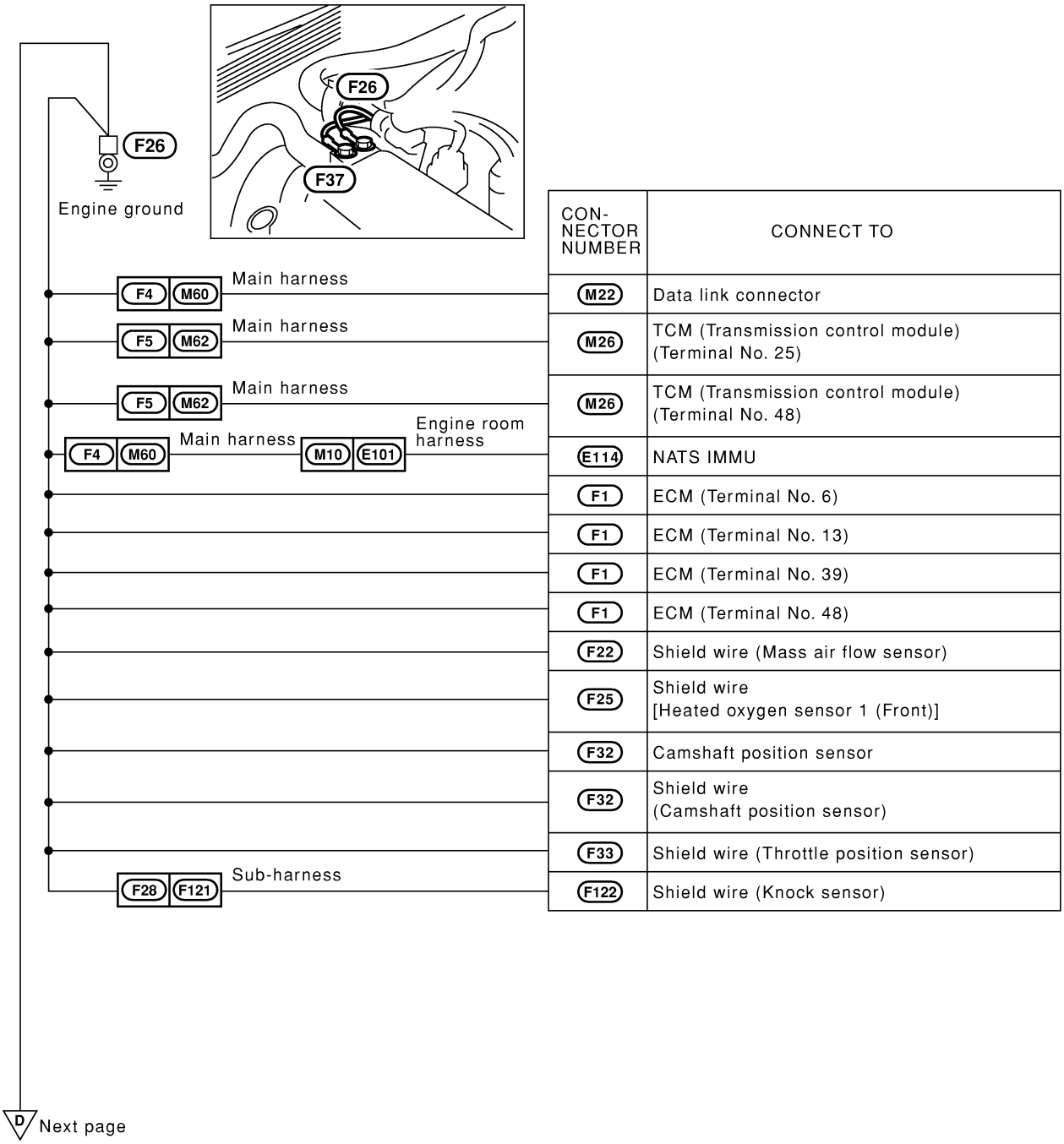

CON-NECTOR NUMBER	CONNECT TO
M22	Data link connector
M26	TCM (Transmission control module) (Terminal No. 25)
M26	TCM (Transmission control module) (Terminal No. 48)
E114	NATS IMMU
F1	ECM (Terminal No. 6)
F1	ECM (Terminal No. 13)
F1	ECM (Terminal No. 39)
F1	ECM (Terminal No. 48)
F22	Shield wire (Mass air flow sensor)
F25	Shield wire [Heated oxygen sensor 1 (Front)]
F32	Camshaft position sensor
F32	Shield wire (Camshaft position sensor)
F33	Shield wire (Throttle position sensor)
F122	Shield wire (Knock sensor)

CEL304A

Ground Distribution (Cont'd)

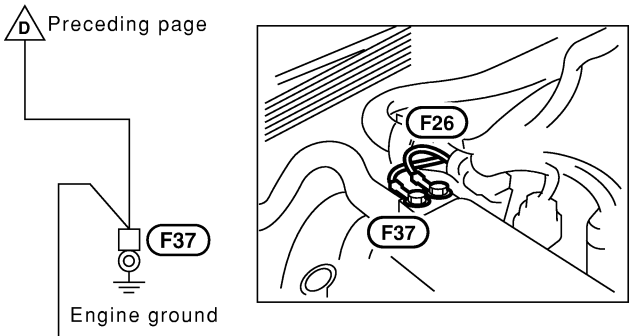

CON-NECTOR NUMBER	CONNECT TO
F1	ECM (Terminal No. 107)
F1	ECM (Terminal No. 108)
F1	ECM (Terminal No. 116)
F23	Power steering oil pressure switch
F29	IACV-FICD solenoid valve
F35	Condenser

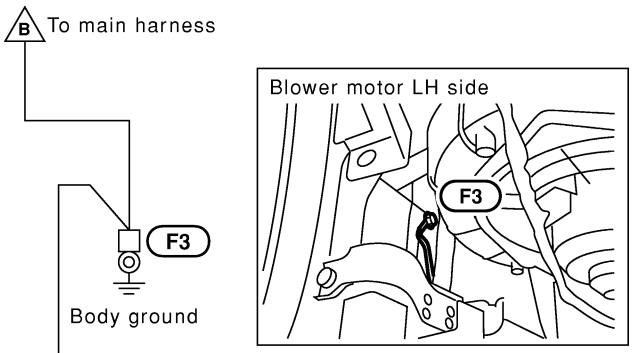

CON-NECTOR NUMBER	CONNECT TO
F8	ABS control unit (Terminal No. 26)
F8	ABS control unit (Terminal No. 28)
F8	ABS control unit (Terminal No. 30)
F8	ABS control unit (Terminal No. 32)

CEL305A

ENGINE HARNESS

NMEL0008S07

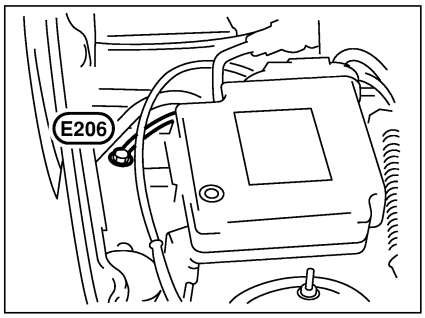

CON-NECTOR NUMBER	CONNECT TO
E208	Alternator (E)

CEL306A

ENGINE SUB HARNESS

NMEL0008S08

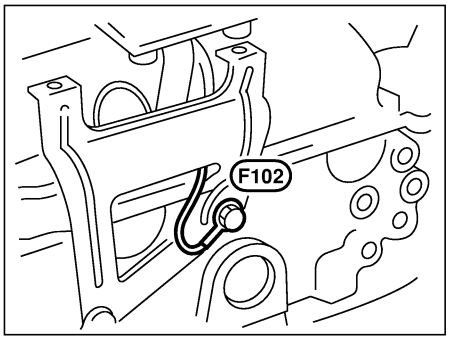

CON-NECTOR NUMBER	CONNECT TO
F103	Ignition coil No. 4 (With power transistor)
F104	Ignition coil No. 3 (With power transistor)
F105	Ignition coil No. 2 (With power transistor)
F106	Ignition coil No. 1 (With power transistor)

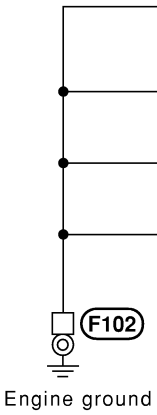

CEL307A

BODY HARNESS

NMEL0008S04

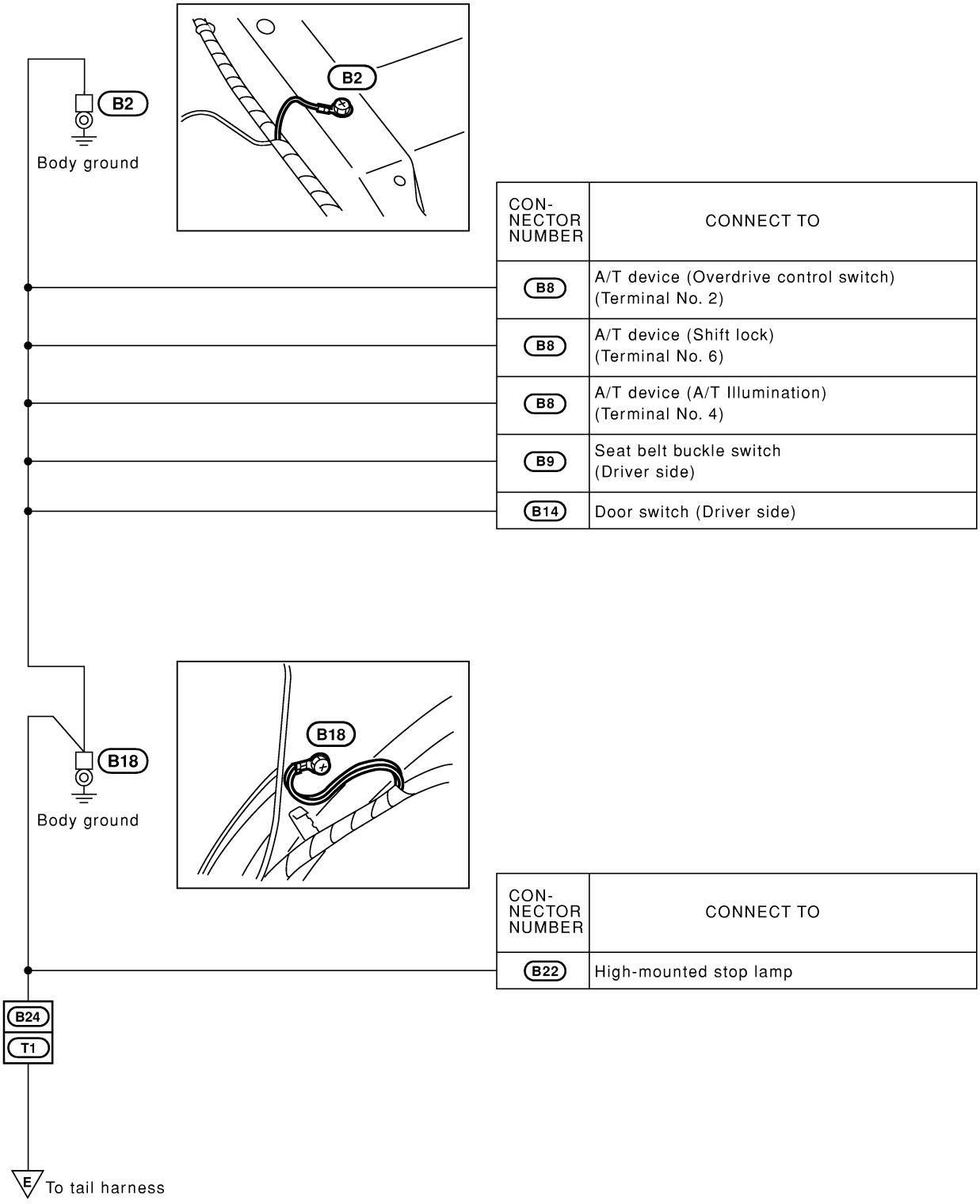

CON-NECTOR NUMBER	CONNECT TO
B8	A/T device (Overdrive control switch) (Terminal No. 2)
B8	A/T device (Shift lock) (Terminal No. 6)
B8	A/T device (A/T Illumination) (Terminal No. 4)
B9	Seat belt buckle switch (Driver side)
B14	Door switch (Driver side)

CON-NECTOR NUMBER	CONNECT TO
B22	High-mounted stop lamp

CEL308A

TAIL HARNESS

NMEL0008S06

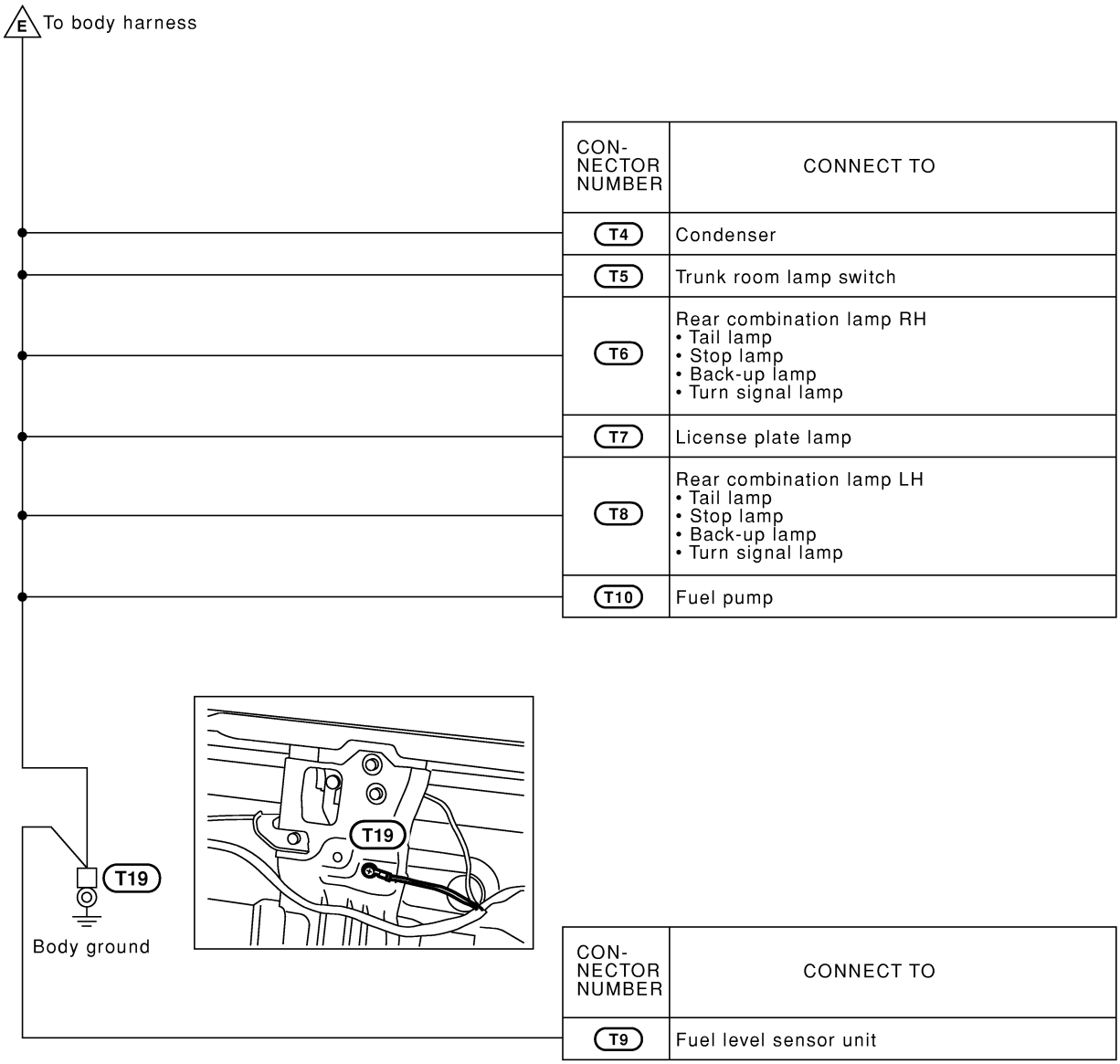

CON-NECTOR NUMBER	CONNECT TO
T4	Condenser
T5	Trunk room lamp switch
T6	Rear combination lamp RH • Tail lamp • Stop lamp • Back-up lamp • Turn signal lamp
T7	License plate lamp
T8	Rear combination lamp LH • Tail lamp • Stop lamp • Back-up lamp • Turn signal lamp
T10	Fuel pump

CON-NECTOR NUMBER	CONNECT TO
T9	Fuel level sensor unit

CEL309A

REAR WINDOW DEFOGGER HARNESS

NMEL0008S09

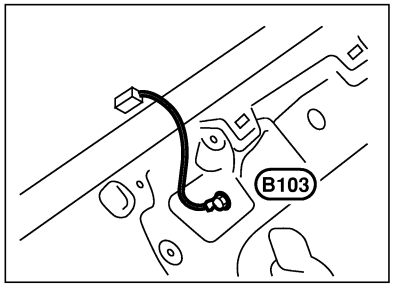

CON-NECTOR NUMBER	CONNECT TO
B102	Rear window defogger (–)

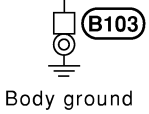

CEL310A

Check

NMEL0009

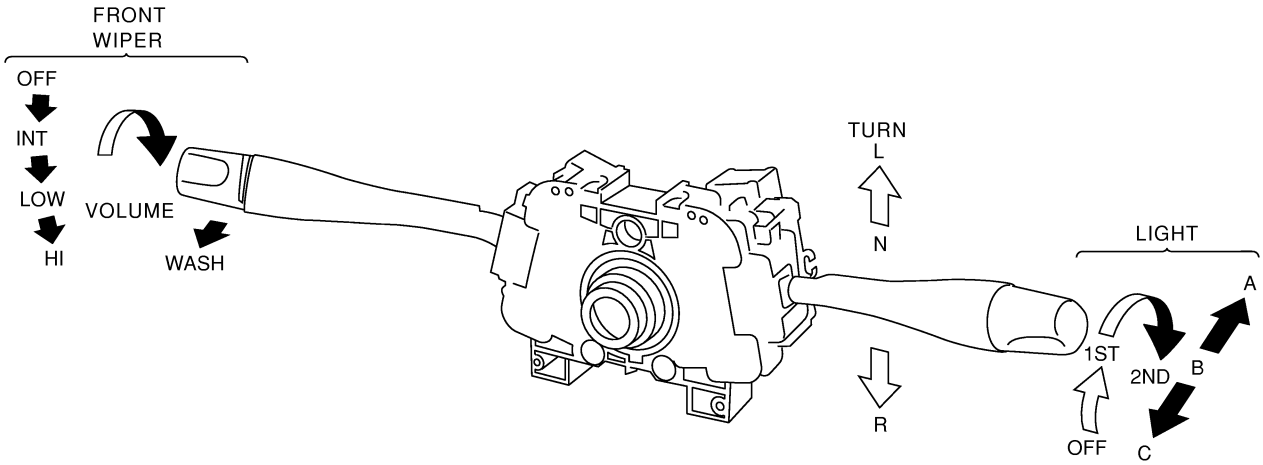

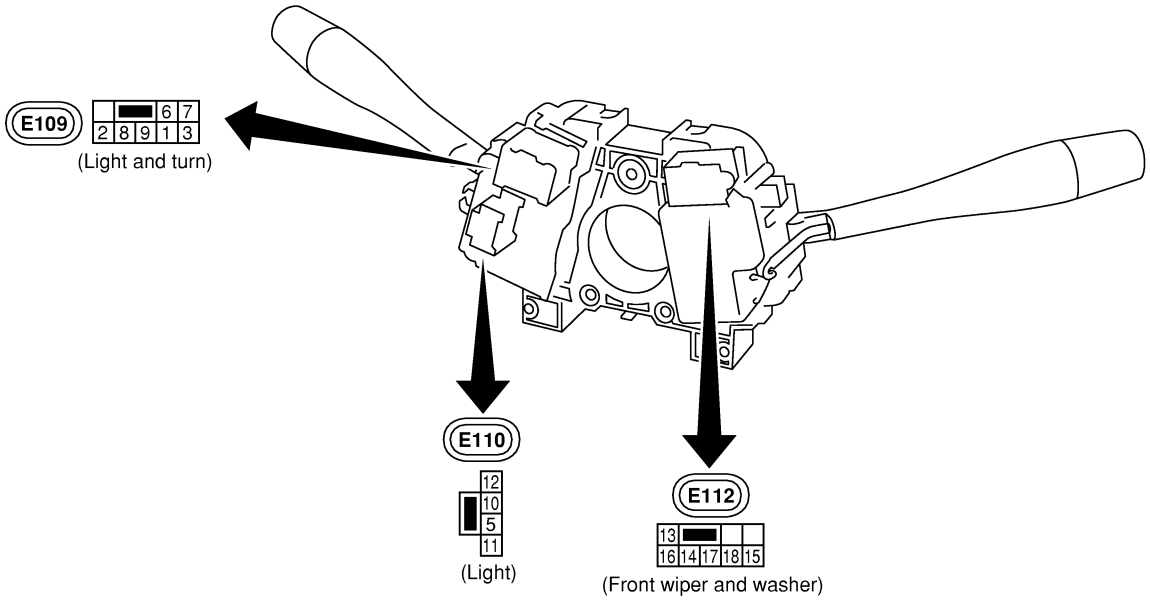

TURN SIGNAL LAMP SWITCH

	L	N	R
1	○		○
2			○
3	○		

LIGHTING SWITCH

	OFF			1ST			2ND		
	A	B	C	A	B	C	A	B	C
5			○			○	○	○	○
6			○			○	○		○
7								○	
8			○			○	○	○	○
9			○			○	○		○
10								○	
11				○	○	○	○	○	○
12				○	○	○	○	○	○

FRONT WIPER AND WASHER SWITCH

	OFF	INT	LO	HI	WASH
13					○
14	○	○	○		
✕	○	○			
✕		○			
15					○
16				○	
17		○	○	○	○
18					○

WIPER AMPLIFIRE (In combination switch)

VARIABLE INTERMITTENT WIPER VOLUME

CEL311A

Replacement

NMEL0010

For removal and installation of spiral cable, refer to RS section [“Installation — Air Bag Module and Spiral Cable”, “SUPPLEMENTAL RESTRAINT SYSTEM (SRS)”].

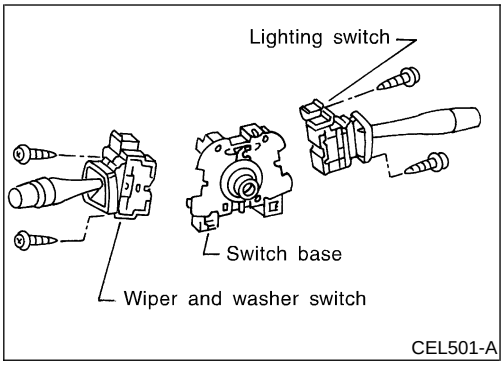

CEL501-A

- Each switch can be replaced without removing combination switch base.

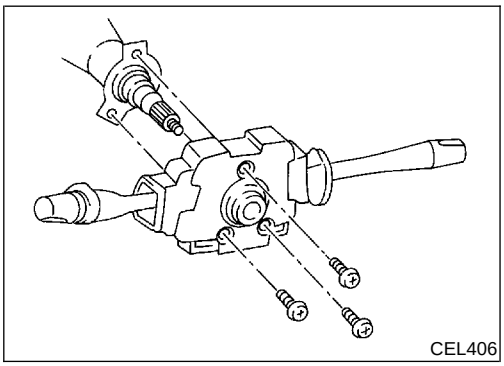
CEL406

- To remove combination switch base, remove base attaching screw.

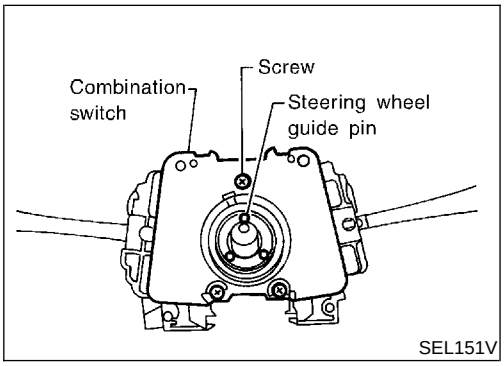

SEL151V

- Before installing the steering wheel, align the steering wheel guide pins with the screws which secure the combination switch as shown in the left figure.

Component Parts and Harness Connector Location

NMEL0197

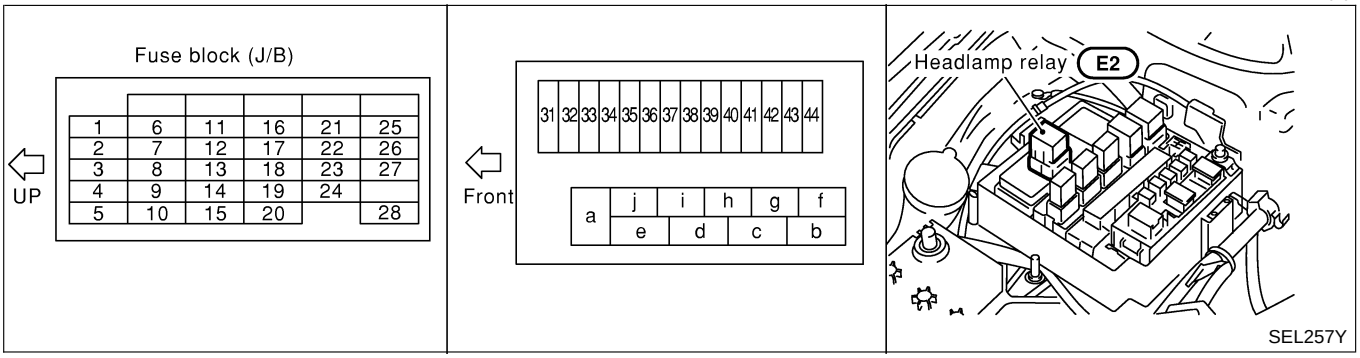

System Description

NMEL0198

The headlamp operation is controlled by the lighting switch which is built into the combination switch.
Power is supplied at all times

- to lighting switch terminal 8
- to headlamp relay terminal 6
- through 15A fuse (No. 42, located in the fuse and fusible link box), and
- to lighting switch terminal 5
- to headlamp relay terminal 3
- through 15A fuse (No. 41, located in the fuse and fusible link box).

HEADLAMP SWITCH OPERATION

NMEL0198S09

Low Beam Operation

NMEL0198S0901

When the lighting switch is turned to the 2ND position and placed in LOW (“B”) position, power is supplied

- from lighting switch terminal 10
- to terminal 1 of the headlamp LH, and
- from lighting switch terminal 7
- to terminal 1 of the headlamp RH.

Terminal 2 of each headlamp supplies ground through body grounds E43 and E57.
With power and ground supplied, the low beams will illuminate.

High Beam Operation/Flash-to-Pass Operation

NMEL0198S0902

When the lighting switch is turned to the 2ND position and placed in HIGH (“A”) position or PASS (“C”) position, power is supplied

- from lighting switch terminal 6
- to terminal 3 of the headlamp RH, and
- from lighting switch terminal 9
- to terminal 3 of the headlamp LH,
- to headlamp relay terminal 1
- to combination meter terminal 40 for the high beam indicator.

Ground is supplied

- to terminal 29 of the combination meter through body grounds M1 and M67, and
- to headlamp relay terminal 2 through body grounds E43 and E57.

Then headlamp relay is energized and power is supplied to terminal 1 of each headlamp.
Terminals 2 and 4 of each headlamp supply ground through body grounds E43 and E57.
With power and ground supplied, the high beams, the low beams and the high beam indicator illuminate.

Wiring Diagram — H/LAMP —

NMEL0013

EL-H/LAMP-01

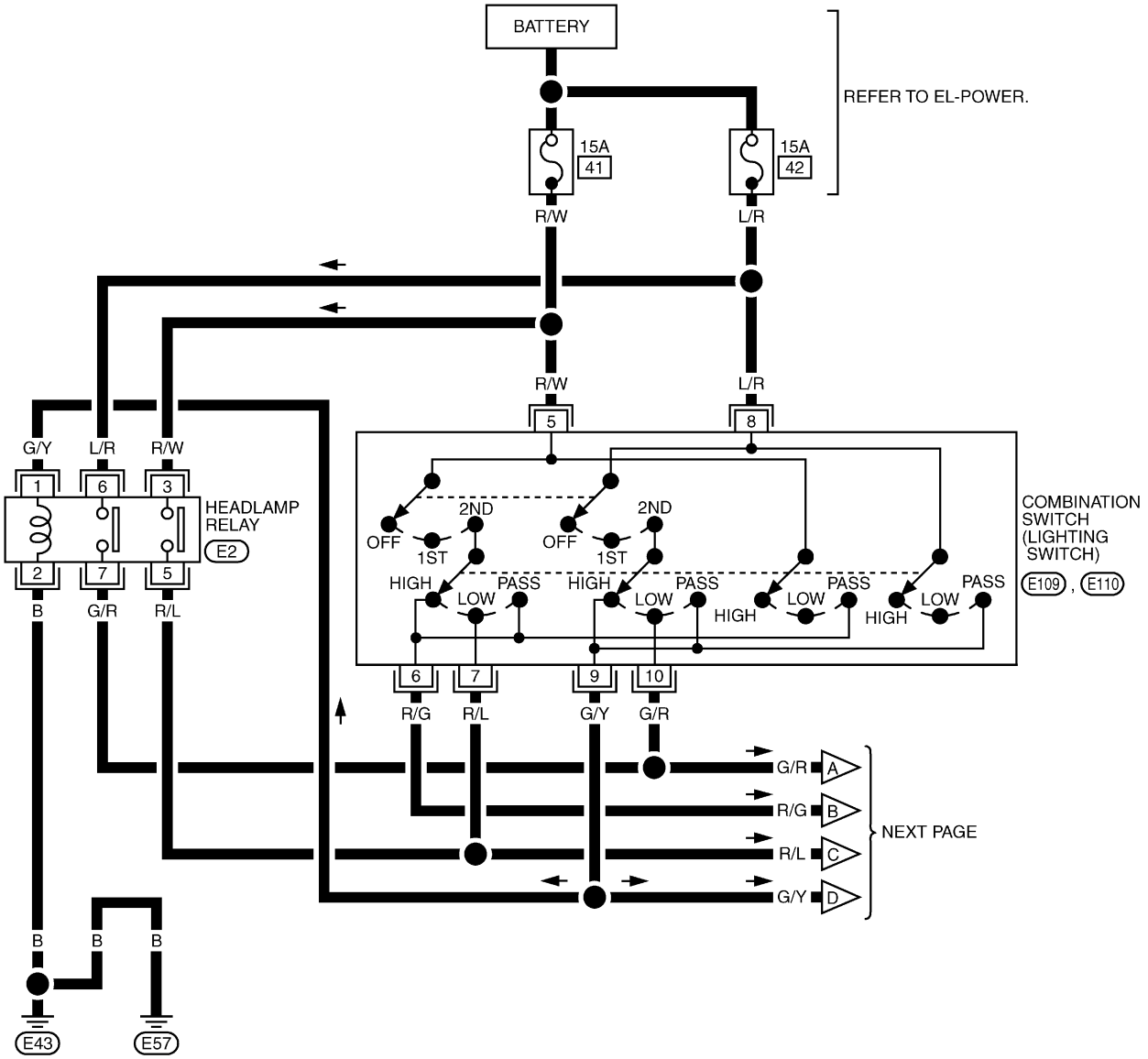

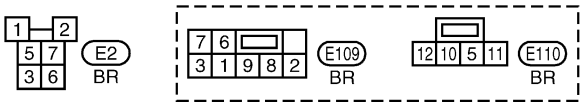

TEL787B

EL-H/LAMP-02

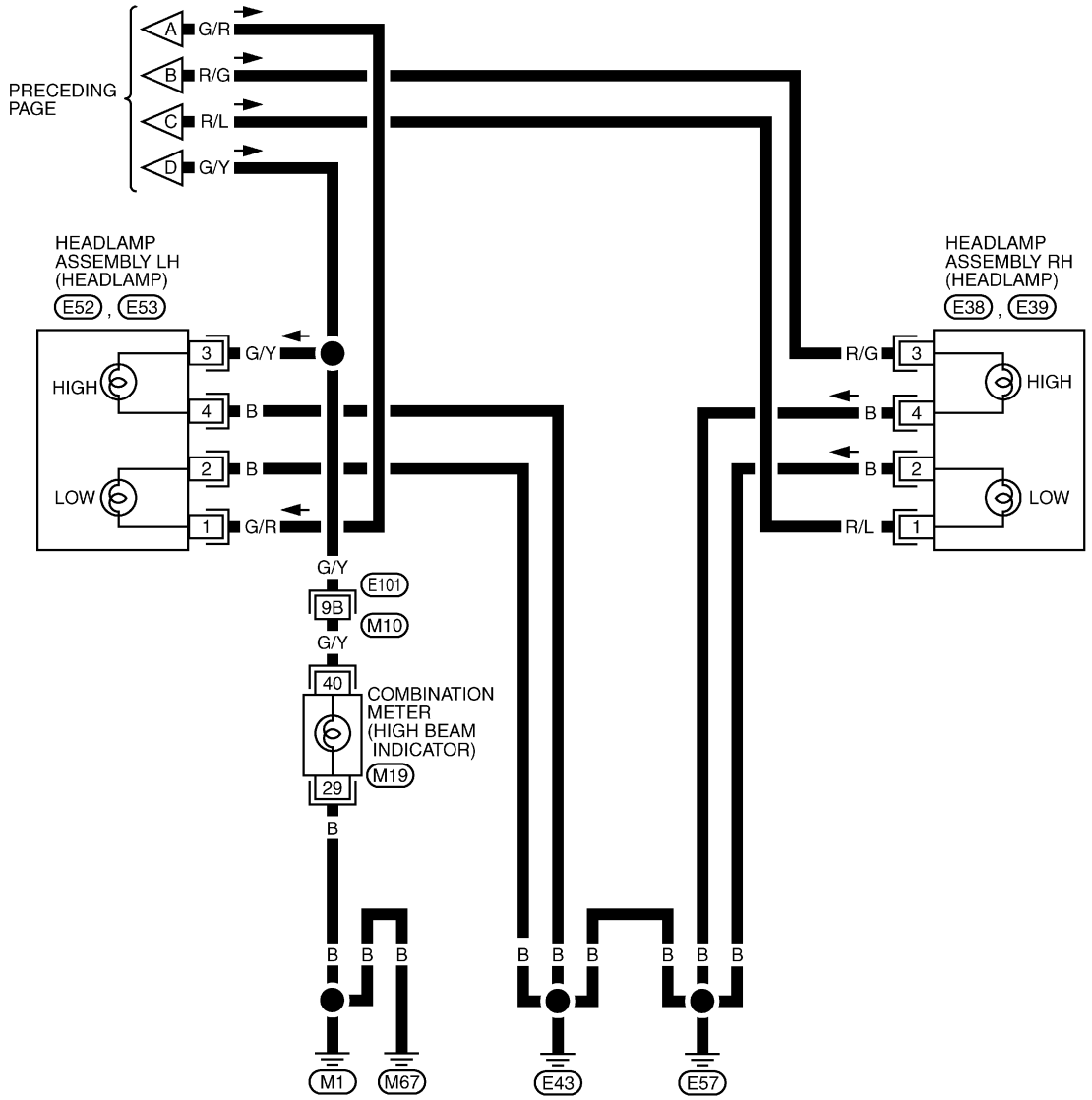

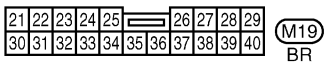

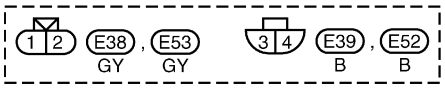

REFER TO THE FOLLOWING.
E101 -SUPER MULTIPLE JUNCTION (SMJ)

TEL788B

Trouble Diagnoses

NMEL0202

Symptom	Possible cause	Repair order
Neither headlamp operates.	1. Lighting switch	1. Check Lighting switch.
LH headlamp (low and high beam) does not operate, but RH headlamp (low and high beam) does operate.	1. 15A fuse 2. Lighting switch	1. Check 15A fuse (No. 42, located in fusible link and fuse box). Verify battery positive voltage is present at lighting switch terminal 8. 2. Check lighting switch.
RH headlamp (low and high beam) does not operate, but LH headlamp (low and high beam) does operate.	1. 15A fuse 2. Lighting switch	1. Check 15A fuse (No. 41, located in fusible link and fuse box). Verify battery positive voltage is present at lighting switch terminal 5. 2. Check lighting switch.
LH high beam does not operate, but LH low beam does operate.	1. Bulb 2. Open in LH high beam circuit 3. LH high beam ground circuit 4. Lighting switch	1. Check bulb. 2. Check the harness between lighting switch and LH headlamp for an open circuit. 3. Check the harness between LH headlamp and ground. 4. Check lighting switch.
LH low beam does not operate, but LH high beam does operate.	1. Bulb 2. Open in LH low beam circuit 3. LH low beam ground circuit 4. Lighting switch	1. Check bulb. 2. Check the harness between lighting switch and LH headlamp for an open circuit. 3. Check the harness between LH headlamp and ground. 4. Check lighting switch.
RH high beam does not operate, but RH low beam does operate.	1. Bulb 2. Open in RH high beam circuit 3. RH high beam ground circuit 4. Lighting switch	1. Check bulb. 2. Check the harness between lighting switch and RH headlamp for an open circuit. 3. Check the harness between RH headlamp and ground. 4. Check lighting switch.
RH low beam does not operate, but RH high beam does operate.	1. Bulb 2. Open in RH low beam circuit 3. RH low beam ground circuit 4. Lighting switch	1. Check bulb. 2. Check the harness between lighting switch and RH headlamp for an open circuit. 3. Check the harness between RH headlamp and ground. 4. Check lighting switch.
High beam indicator does not work.	1. Bulb 2. Ground circuit 3. Open in high beam circuit	1. Check bulb in combination meter. 2. Check harness between high beam indicator and ground. 3. Check the harness between lighting switch and combination meter for an open circuit.
When the lighting switch is turned to the 2ND position and placed in HIGH (“A”) position, low beam does not operate, but high beam does operate.	1. Headlamp relay circuit 2. Headlamp relay ground circuit 3. Headlamp relay	1. Check the following. a. Harness between headlamp relay and fuse. b. Harness between headlamp relay and lighting switch. 2. Check harness between headlamp relay and ground. 3. Check headlamp relay.

Bulb Replacement

NMEL0015

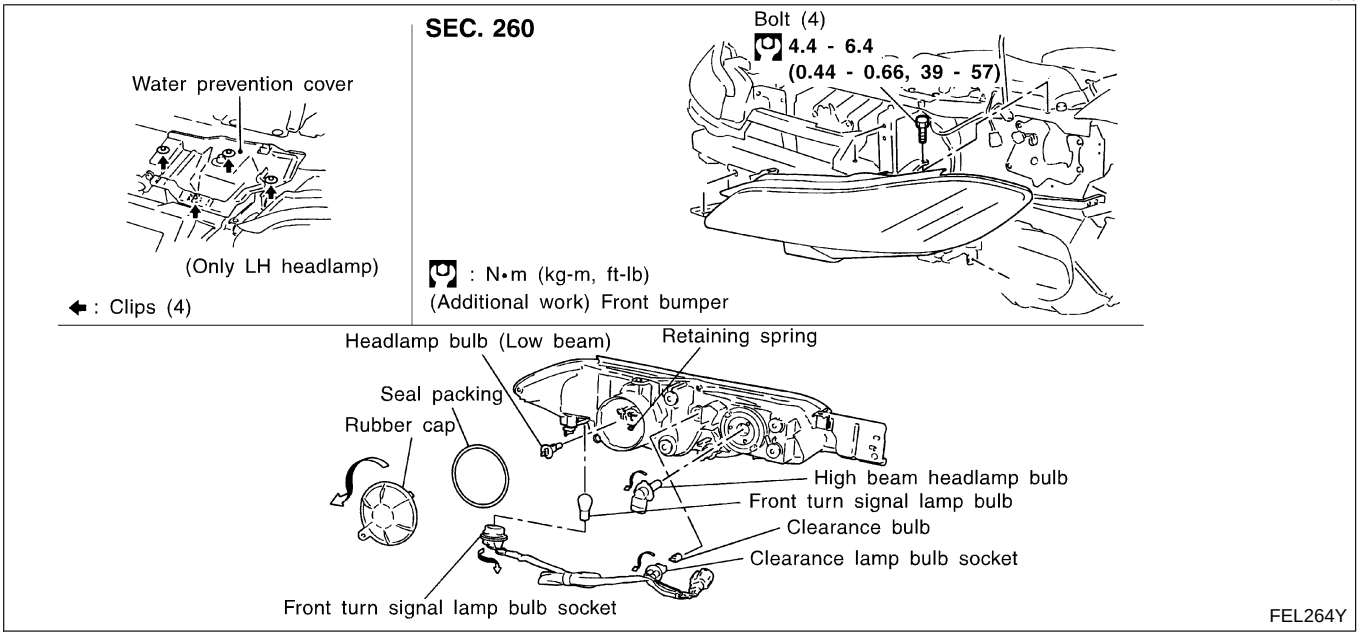

The headlamp is a semi-sealed beam type which uses a replaceable halogen bulb. The bulb can be replaced from the engine compartment side without removing the headlamp body.

- **Grasp only the plastic base when handling the bulb. Never touch the glass envelope.**

RH HEADLAMP

NMEL0015S01

Headlamp Bulb (Low beam)

NMEL0015S0101

1. Disconnect the battery cable.
2. Pull off the rubber cap.
3. Push and turn the bulb retaining pin.
4. Remove the headlamp bulb carefully. Do not shake or rotate bulb when removing it.
5. Install in reverse order of removal.

Headlamp Bulb (High beam)

NMEL0015S0102

1. Disconnect the harness connector from rear end of the bulb.
2. Turn bulb cover counterclockwise, then remove it.
3. Remove the headlamp bulb carefully. Do not shake or rotate the bulb when removing it.
4. Install in reverse order of removal.

Turn Signal Lamp Bulb

NMEL0015S0103

1. Remove front fender protector.
2. Turn bulb cover counterclockwise, then remove it.
3. Remove the turn signal lamp bulb carefully. Do not shake or rotate the bulb when removing it.
4. Install in reverse order of removal.

LH HEADLAMP

=NMEL0015S02

Headlamp Bulb (Low beam)

NMEL0015S0201

1. Disconnect the battery cable.
2. Remove air duct and air cleaner case.
3. Pull off the rubber cap.
4. Push and turn the bulb retaining pin.
5. Remove the headlamp bulb carefully. Do not shake or rotate the bulb when removing it.
6. Install in reverse order of removal.

Headlamp Bulb (High beam)

NMEL0015S0202

1. Disconnect the harness connector from rear end of the bulb.
2. Turn bulb cover counterclockwise, then remove it.
3. Remove the headlamp bulb carefully. Do not shake or rotate the bulb when removing it.
4. Install in reverse order of removal.

Turn Signal Lamp Bulb

NMEL0015S0203

1. Remove front fender protector.
2. Remove air guide to inter cooler.
3. Turn bulb cover counterclockwise, then remove it.
4. Remove the turn signal lamp bulb carefully. Do not shake or rotate the bulb when removing it.
5. Install in reverse order of removal.

CAUTION:

Do not leave headlamp reflector without bulb for a long period of time. Dust, moisture, smoke, etc. entering headlamp body may affect the performance of the headlamp. Remove headlamp bulb from the headlamp reflector just before a replacement bulb is installed.

Aiming Adjustment

=NMEL0016

For details, refer to the regulations in your own country.

Before performing aiming adjustment, check the following.

1) Keep all tires inflated to correct pressures.
2) Place vehicle and tester on one and same flat surface.
3) See that there is no-load in vehicle (coolant, engine oil filled up to correct level and full fuel tank) other than the driver (or equivalent weight placed in driver's position).

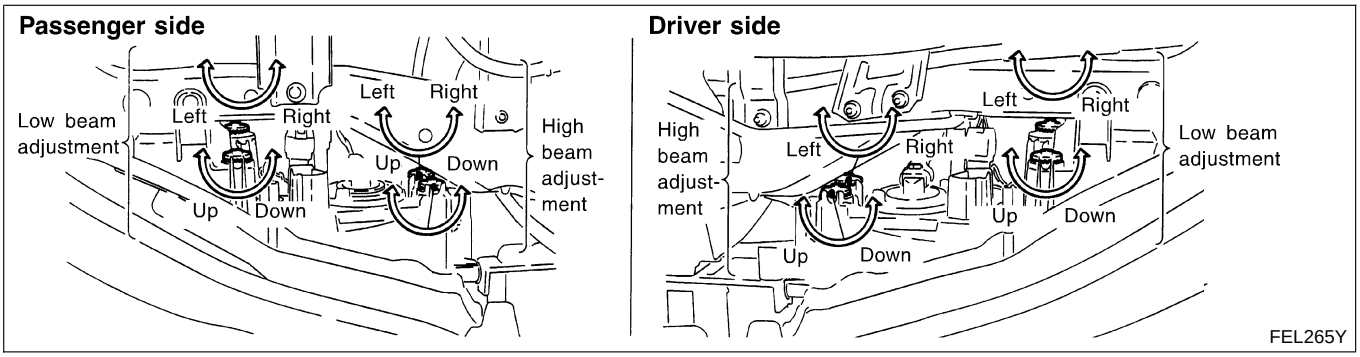

LOW/HIGH BEAM

NMEL0016S02

1. Turn headlamp low beam on.
2. Use adjusting screws to perform aiming adjustment.

- **First tighten the adjusting screw all the way and then make adjustment by loosening the screw.**

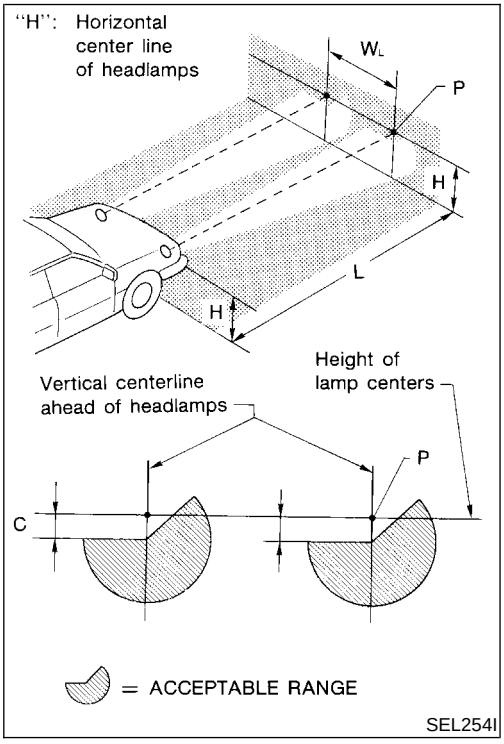

- **Adjust headlamps so that main axis of light is parallel to center line of body and is aligned with point P shown in illustration.**
- **Figure to the left shows headlamp aiming pattern for driving on right side of road; for driving on left side of road, aiming pattern is reversed.**
- **Dotted lines in illustration show center of headlamp.**
  "H": Horizontal center line of headlamps
  "W_L": Distance between each headlamp center
  "L": 3,000 mm (118.1 in)
  "C": 30 mm (1.18 in)

Wiring Diagram — TAIL/L —

NMEL0024

EL-TAIL/L-01

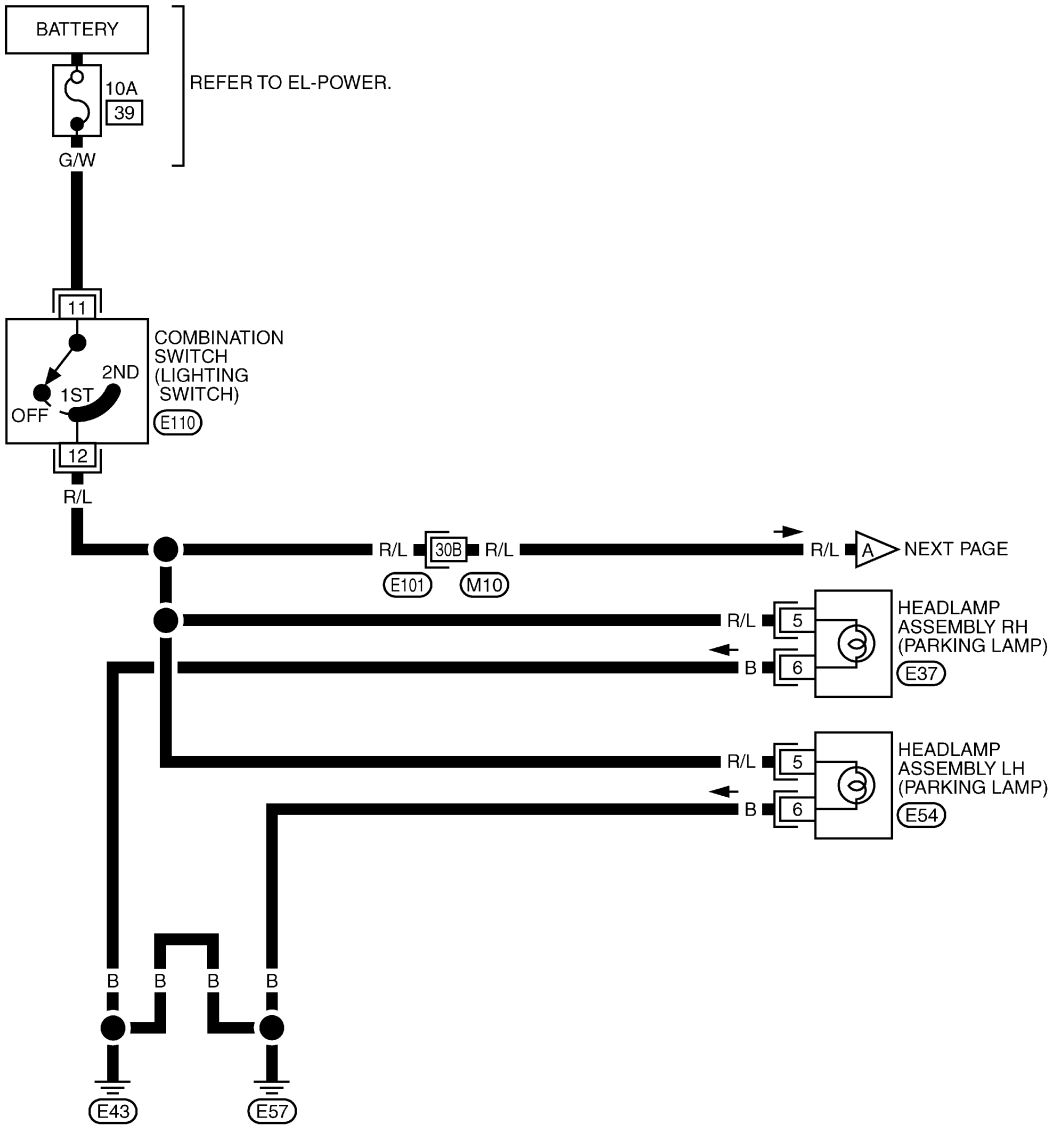

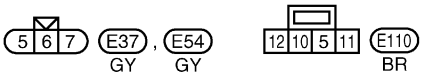

REFER TO THE FOLLOWING.
E101 -SUPER MULTIPLE JUNCTION (SMJ)

TEL789B

EL-TAIL/L-02

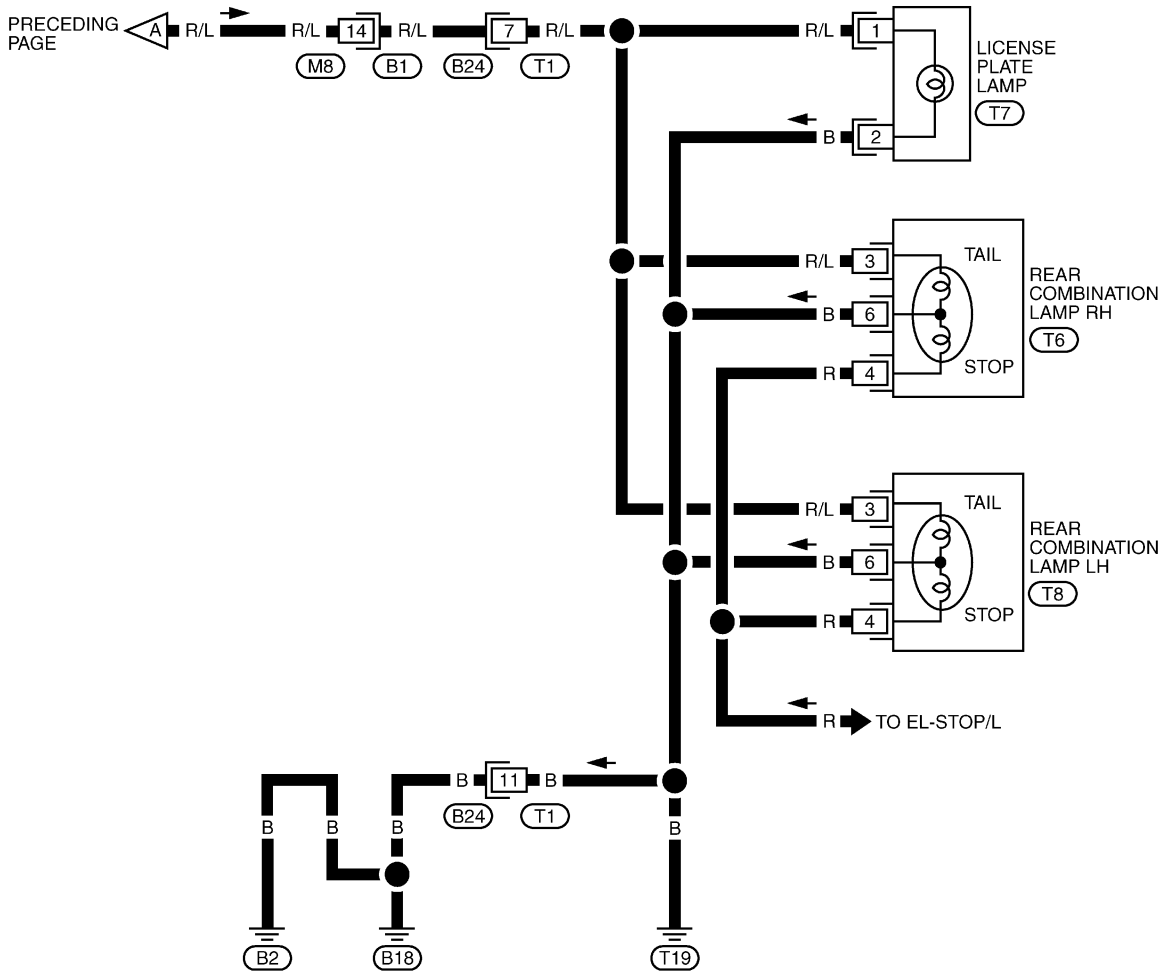

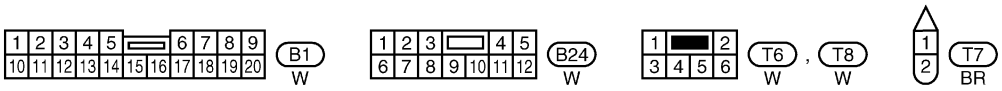

TEL790B

Wiring Diagram — STOP/L —

NMEL0025

EL-STOP/L-01

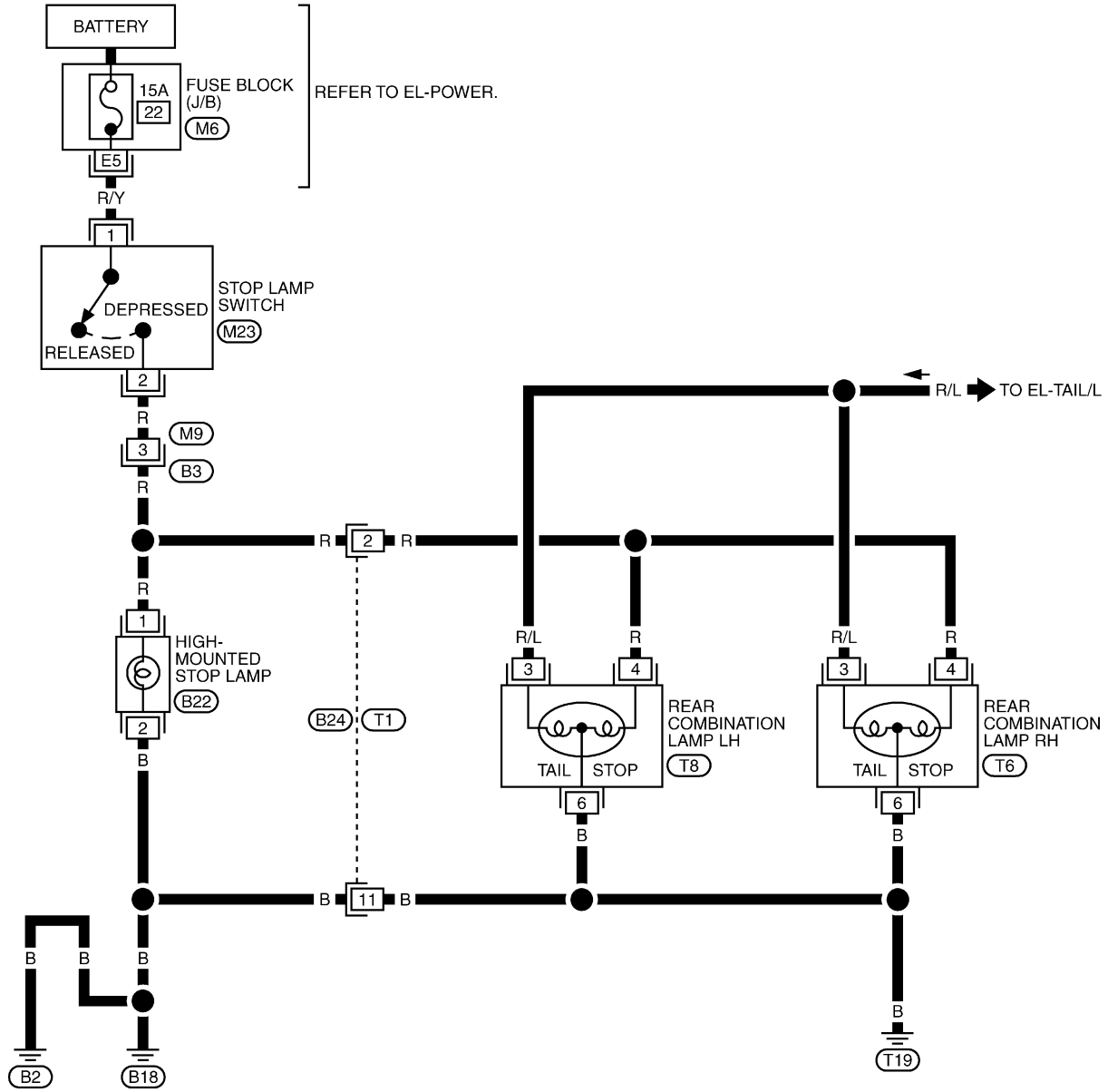

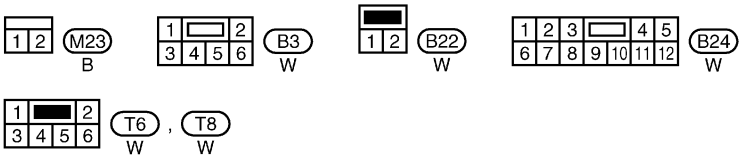

REFER TO THE FOLLOWING.
M6 -FUSE BLOCK-JUNCTION BOX (J/B)

TEL791B

Wiring Diagram — BACK/L —

NMEL0026

EL-BACK/L-01

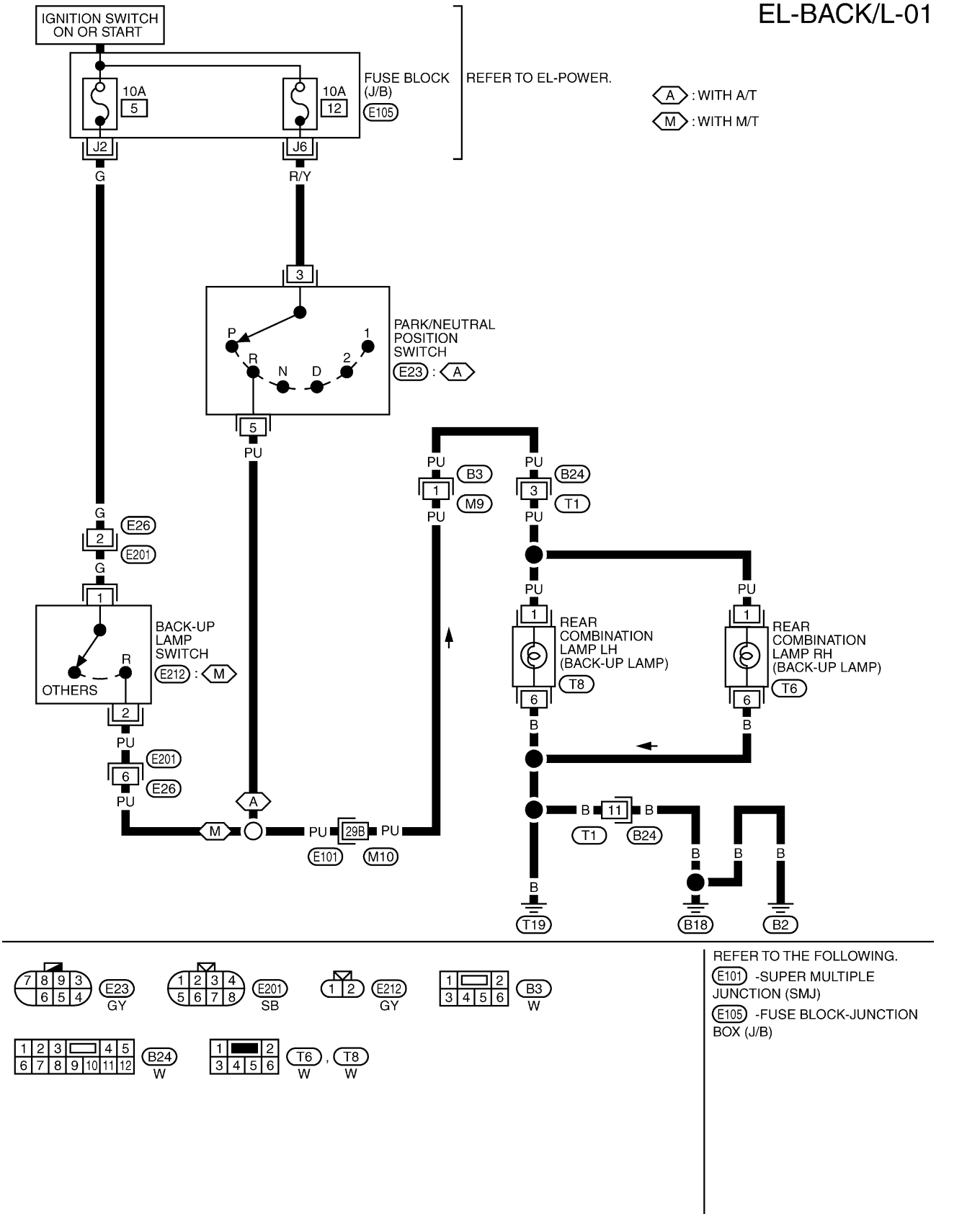

REFER TO THE FOLLOWING.
E101 -SUPER MULTIPLE JUNCTION (SMJ)
E105 -FUSE BLOCK-JUNCTION BOX (J/B)

TEL792B

Wiring Diagram — TURN —

NMEL0032

EL-TURN-01

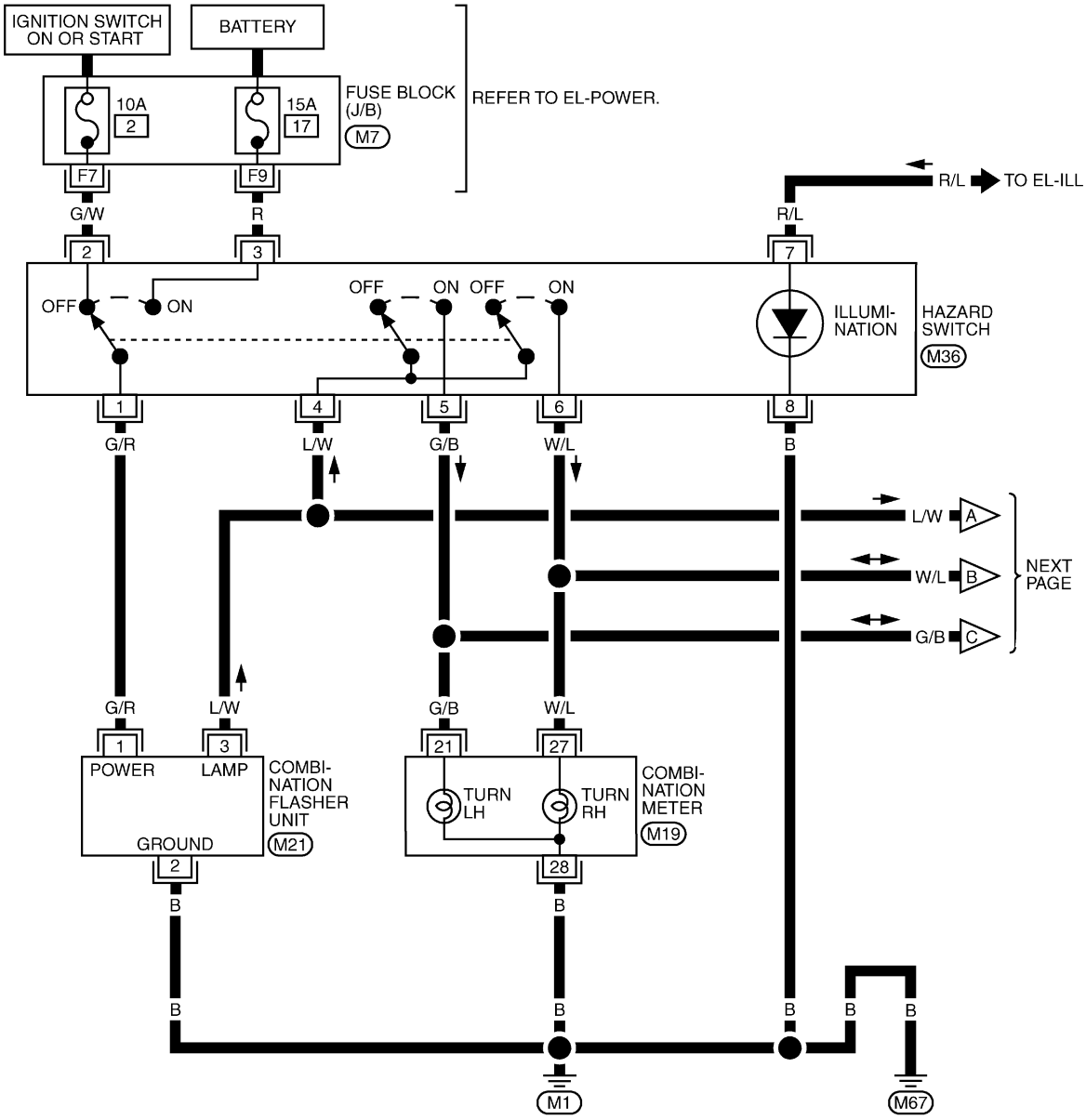

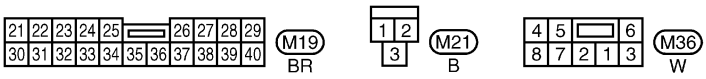

REFER TO THE FOLLOWING.
M7 -FUSE BLOCK-JUNCTION BOX (J/B)

TEL793B

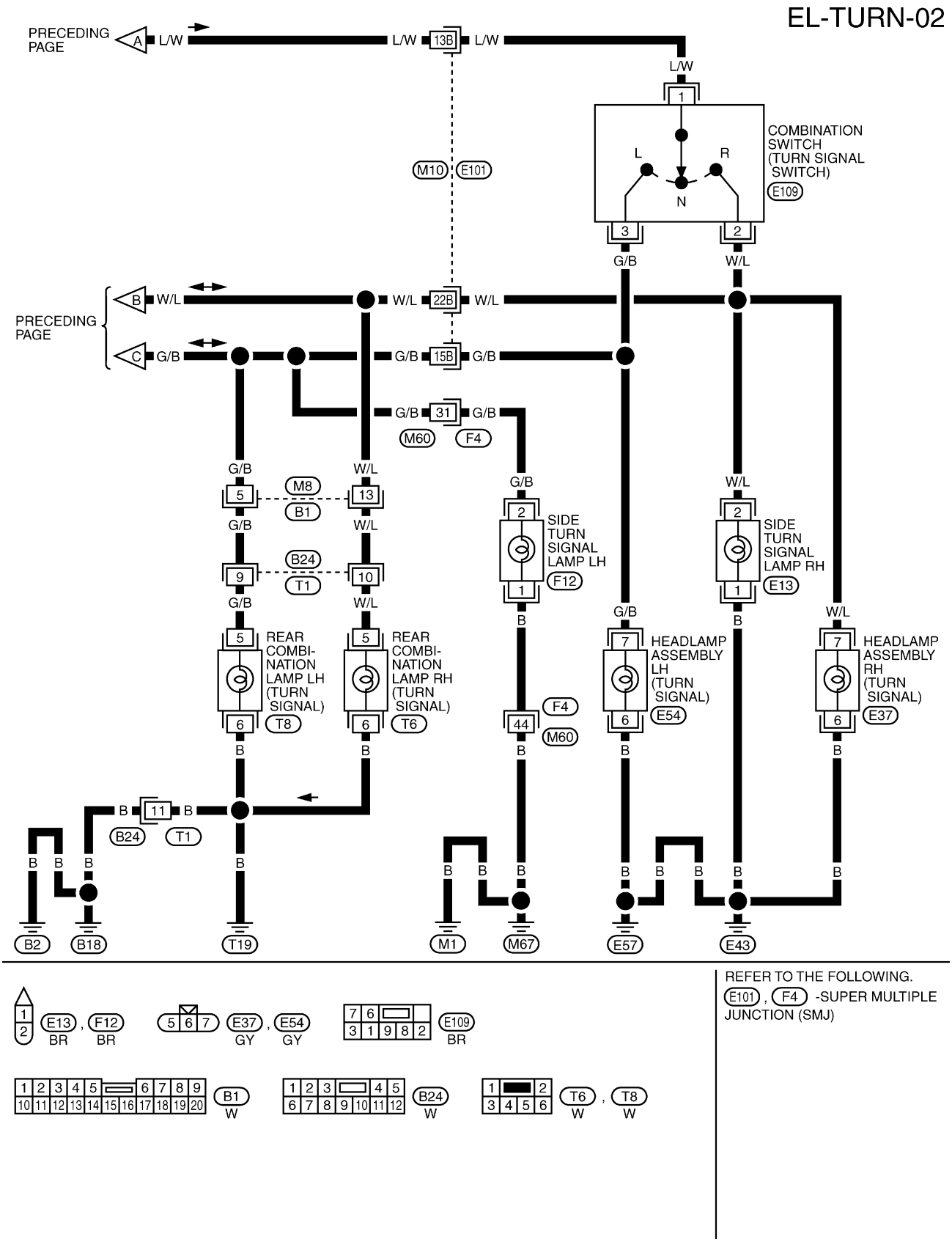
EL-TURN-02
PRECEDING PAGE
A
L/W
13B
M10
E101
COMBINATION SWITCH (TURN SIGNAL SWITCH)
E109
L
R
N
G/B
W/L
B
C
22B
15B
31
M60
F4
M8
B1
B24
T1
SIDE TURN SIGNAL LAMP LH
F12
SIDE TURN SIGNAL LAMP RH
E13
REAR COMBI-NATION LAMP LH (TURN SIGNAL)
T8
REAR COMBI-NATION LAMP RH (TURN SIGNAL)
T6
HEADLAMP ASSEMBLY LH (TURN SIGNAL)
E54
HEADLAMP ASSEMBLY RH (TURN SIGNAL)
E37
B2
B18
T19
M1
M67
E57
E43
E13, F12 BR
E37, E54 GY
E109 BR
B1 W
B24 W
T6, T8 W
REFER TO THE FOLLOWING.
E101, F4 -SUPER MULTIPLE JUNCTION (SMJ)
TEL794B

Trouble Diagnoses

NMEL0033

Symptom	Possible cause	Repair order
Turn signal and hazard warning lamps do not operate.	1. Hazard switch 2. Combination flasher unit 3. Open in combination flasher unit circuit	1. Check hazard switch. 2. Refer to combination flasher unit check. 3. Check wiring to combination flasher unit for open circuit.
Turn signal lamps do not operate but hazard warning lamps operate.	1. 10A fuse 2. Hazard switch 3. Turn signal switch 4. Open in turn signal switch circuit	1. Check 10A fuse [No. 2, located in fuse block (J/B)]. Turn ignition switch ON and verify battery positive voltage is present at terminal 2 of hazard switch. 2. Check hazard switch. 3. Check turn signal switch. 4. Check the wire between combination flasher unit terminal 3 and turn signal switch terminal 1 for open circuit.
Hazard warning lamps do not operate but turn signal lamps operate.	1. 15A fuse 2. Hazard switch 3. Open in hazard switch circuit	1. Check 15A fuse [No. 17, located in fuse block (J/B)]. Verify battery positive voltage is present at terminal 3 of hazard switch. 2. Check hazard switch. 3. Check the wire between combination flasher unit terminal 3 and hazard switch terminal 4 for open circuit.
Headlamp assembly LH or RH does not operate.	1. Bulb 2. Grounds E43 and E57 3. Open in headlamp assembly circuit	1. Check bulb. 2. Check grounds E43 and E57. 3. Check the wire between headlamp assembly and turn signal switch.
Rear combination lamp LH or RH does not operate.	1. Bulb 2. Grounds B2, B18 and T19 3. Open in rear combination lamp circuit	1. Check bulb. 2. Check grounds B2, B18 and T19. 3. Check the wire between rear combination lamp and turn signal switch.
Side turn signal lamp LH does not operate.	1. Bulb 2. Grounds M1 and M67 3. Open in side turn signal lamp LH circuit	1. Check bulb. 2. Check grounds M1 and M67. 3. Check harness between side turn signal lamp LH and turn signal switch.
Side turn signal lamp RH does not operate.	1. Bulb 2. Grounds E43 and E57 3. Open in side turn signal lamp RH circuit	1. Check bulb. 2. Check grounds E43 and E57. 3. Check harness between side turn signal lamp RH and turn signal switch.
LH and RH turn indicators do not operate.	1. Ground	1. Check grounds M1 and M67.
LH or RH turn indicator does not operate.	1. Bulb 2. Open combination meter circuit	1. Check bulb in combination meter. 2. Check the wire between hazard switch and combination meter.

Blub Replacement

NMEL0322

Refer to “Bulb Replacement” in “HEADLAMP”, EL-32.

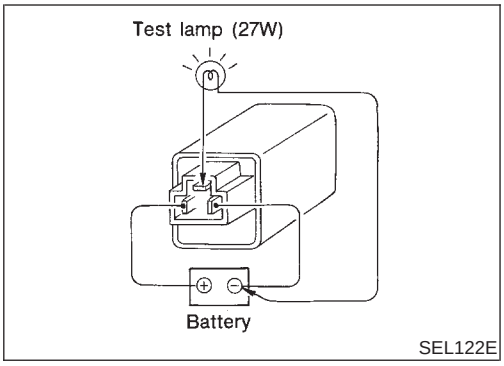

Electrical Components Inspection

NMEL0034

COMBINATION FLASHER UNIT CHECK

NMEL0034S01

- Before checking, ensure that bulbs meet specifications.
- Connect a battery and test lamp to the combination flasher unit, as shown. Combination flasher unit is properly functioning if it blinks when power is supplied to the circuit.

Schematic

NMEL0036

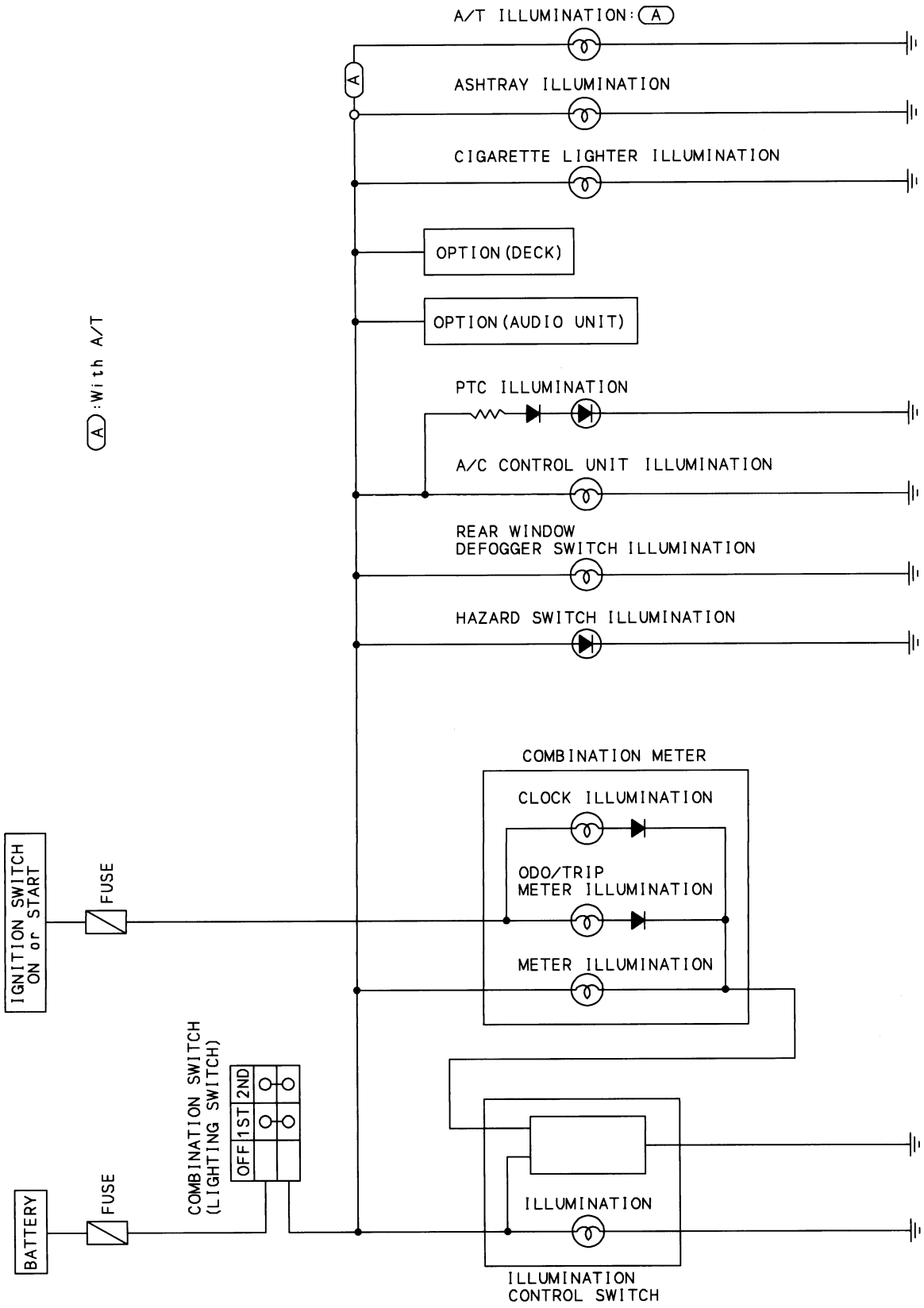

TEL795B

Wiring Diagram — ILL —

NMEL0037

EL-ILL-01

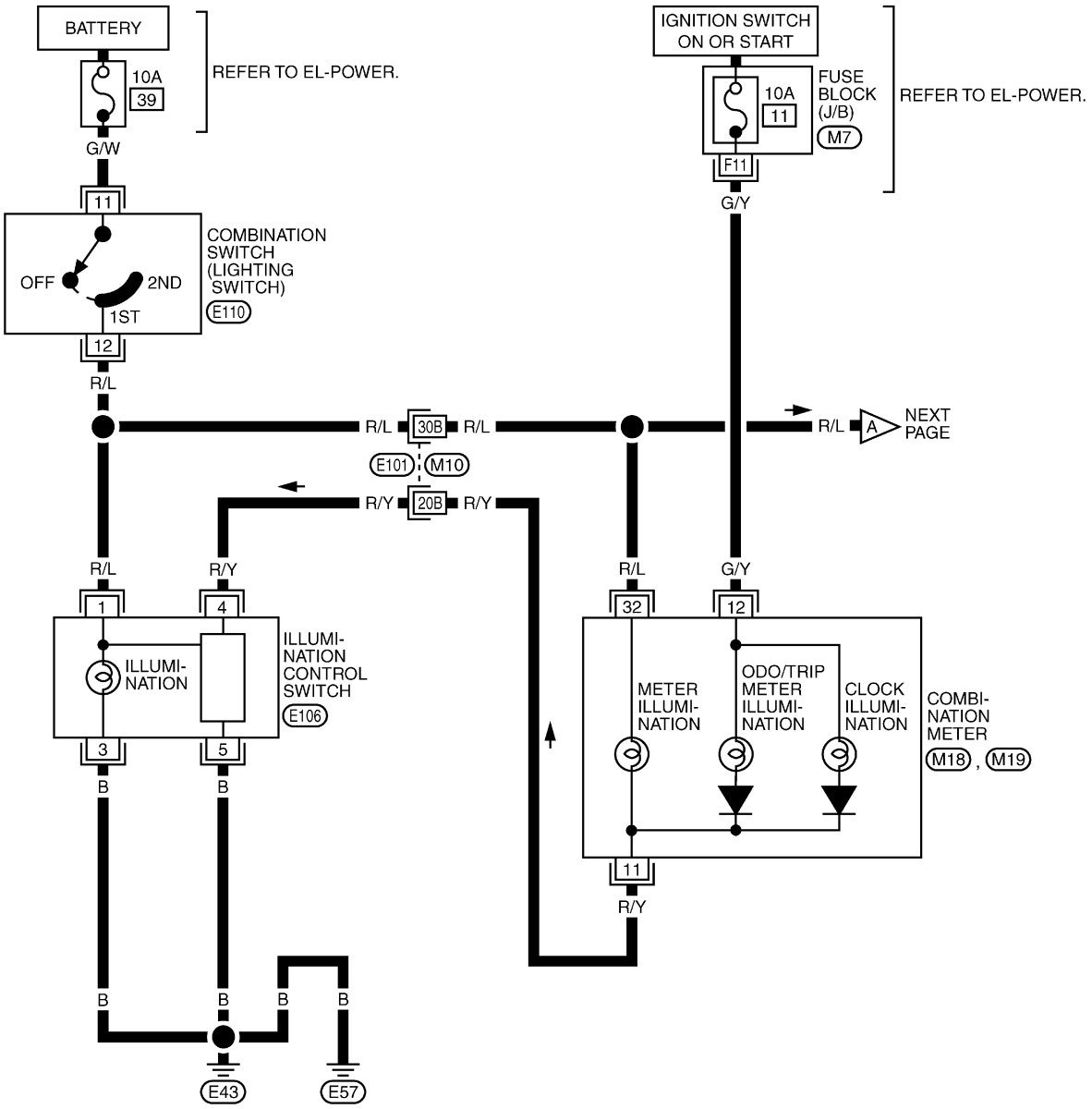

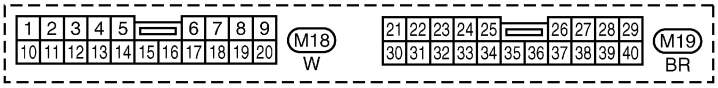

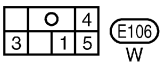

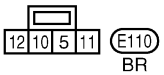

REFER TO THE FOLLOWING.
E101 -SUPER MULTIPLE JUNCTION (SMJ)
M7 -FUSE BLOCK-JUNCTION BOX (J/B)

TEL796B

EL-ILL-02

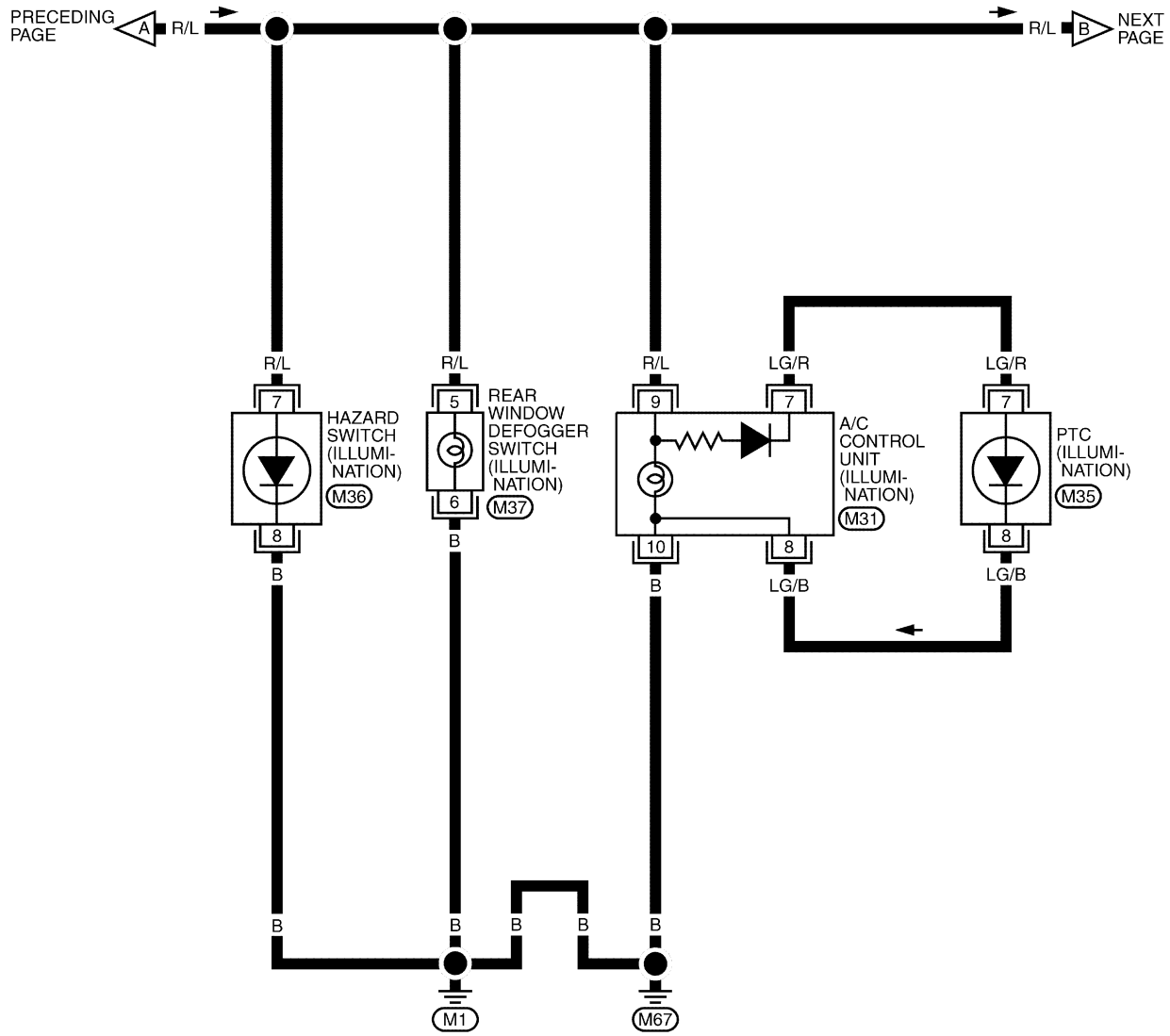

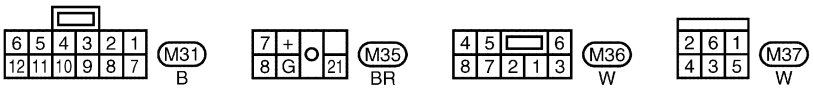

TEL797B

EL-ILL-03

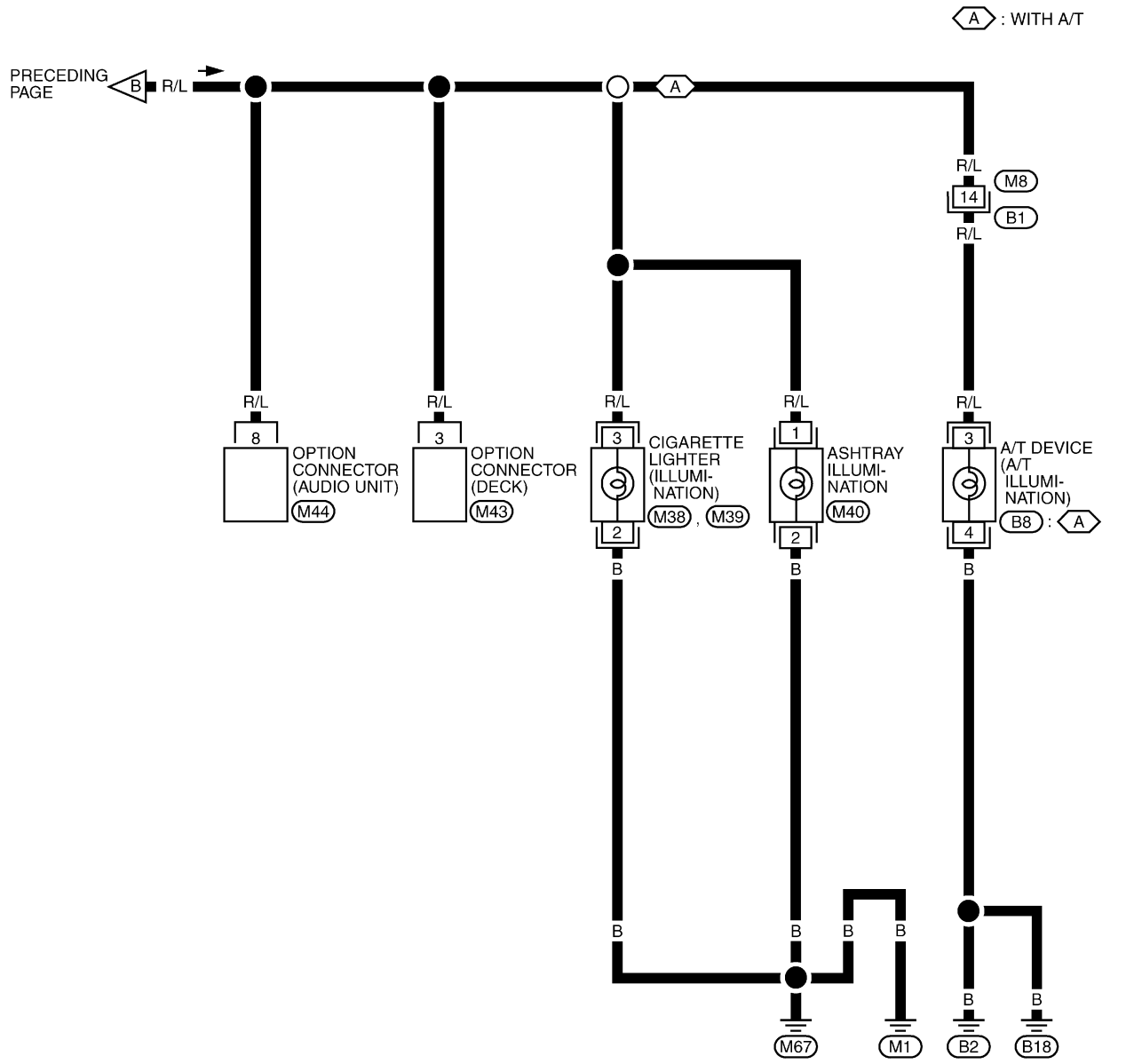

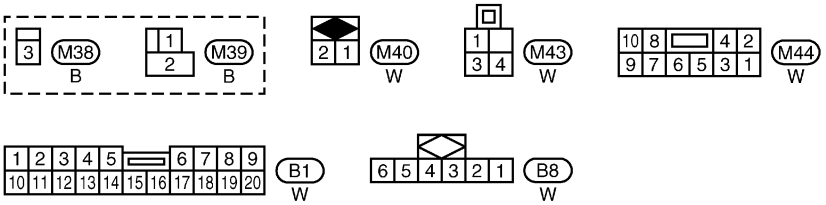

TEL798B

System Description

NMEL0165

POWER SUPPLY AND GROUND

NMEL0165S01

Power is supplied at all times:

- through 10A fuse [No. 28, located in the fuse block (J/B)]
- to key switch terminal 1
- through 10A fuse [No. 26, located in the fuse block (J/B)]
- to interior room lamp terminal 1.

When the key is withdrawn from ignition key cylinder, power is interrupted:

- through key switch terminal 2
- to combination meter terminal 33.

With the ignition key switch in the ON or START position, power is supplied:

- through 10A fuse [No. 11, located in the fuse block (J/B)]
- to combination meter terminal 12.

When the driver side door is opened, ground is supplied:

- through case ground of door switch (driver side) and
- to door switch (driver side) terminal 1
- through body grounds B2 and B18
- to door switch (driver side) terminal 3
- from door switch (driver side) terminal 2
- to combination meter terminal 24.

When the passenger side door is opened, ground is supplied:

- through case ground of door switch (passenger side)
- to door switch (passenger side) terminal 1
- to combination meter terminal 5.

When the driver side door is unlocked, unified meter control unit (time control system) receives a ground signal:

- through body grounds terminals M1 and M67
- to door unlock sensor terminal 1
- from door unlock sensor terminal 2
- to combination meter terminal 22.

When a signal, or combination of signals is received by the unified meter control unit (time control system), ground is supplied:

- through combination meter terminal 38
- to interior room lamp terminal 2.

With power and ground supplied, the interior room lamp illuminates.

SWITCH OPERATION

NMEL0165S02

When interior room lamp switch is ON, ground is supplied:

- through case grounds of interior room lamp
- to interior room lamp.

INTERIOR ROOM LAMP TIMER OPERATION

NMEL0165S03

When interior room lamp switch is in the “DOOR” position, the unified meter control unit (time control system) keeps the interior room lamp illuminated for about 20 seconds when:

- unlock signal is supplied from door unlock sensor while all doors are closed and key is out of ignition key cylinder
- key is withdrawn from ignition key cylinder while all doors are closed
- driver’s door is opened and then closed while key is out of the ignition key cylinder. (However, if the driver’s door is closed with the key inserted in the ignition key cylinder after the driver’s door is opened with the key withdrawn, the timer is operated.)

The timer is canceled when:

- driver’s door is locked,
- driver’s door is opened, or

- ignition switch is turned ON.

When driver's door is locked, interior room lamp timer is canceled as described before.

ON-OFF CONTROL

NMEL0165S04

When the driver side door or passenger door is opened, the interior room lamp turns on while the interior room lamp switch is in the "DOOR" position.

Wiring Diagram — ROOM/L —

NMEL0163

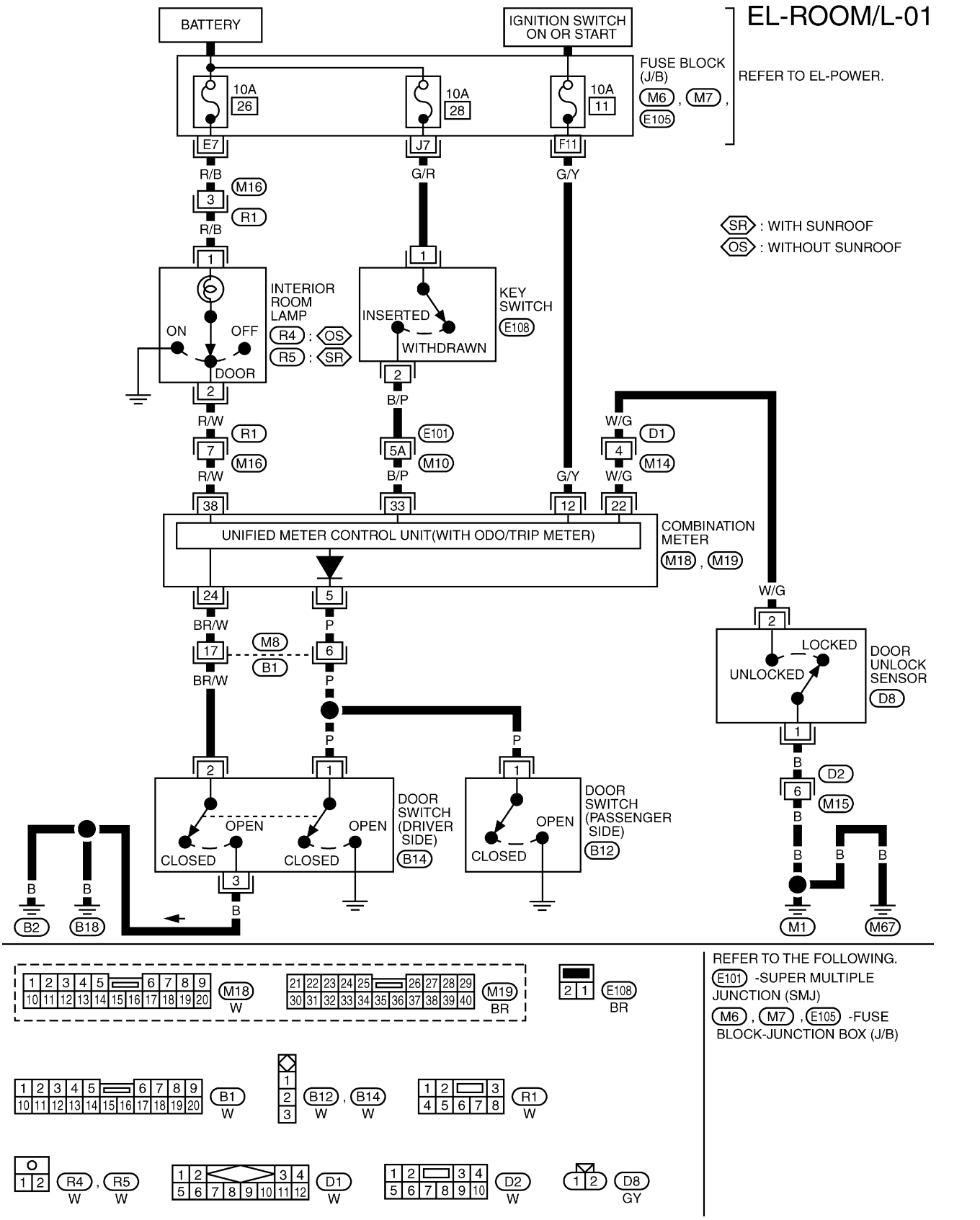

TEL799B

Trouble Diagnoses for Interior Lamp Timer

=NMEL0215

DIAGNOSTIC PROCEDURE 1

NMEL0215S01

SYMPTOM: Interior lamp timer does not operate.

1	CHECK IGNITION ON SIGNAL

1. Disconnect combination meter harness connector.
2. Check voltage between combination meter harness connector M18 terminal 12 (G/Y) and ground.

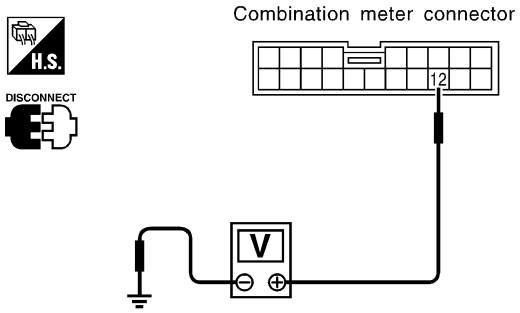

Terminal No.		Ignition switch position		
(+)	(–)	OFF	ACC	ON
12	Ground	0V	0V	Battery voltage

SEL216Y

OK or NG

OK	▶	GO TO 2.
NG	▶	**Check the following.** ● 10A fuse [No. 11, located in fuse block (J/B)] ● Harness for open or short between combination meter and fuse

2	CHECK DOOR SWITCH INPUT SIGNAL

1. Connect combination meter harness connector.
2. Check the following.

- Voltage between combination meter harness connector M19 terminal 24 (BR/W) and ground (Driver side)
- Voltage between combination meter harness connector M18 terminal 5 (P) and ground (Passenger side)

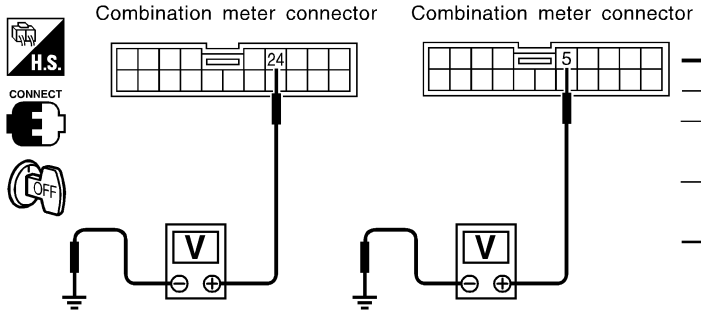

Terminals No.		Condition (Door)	Voltage [V]
(+)	(–)		
24	Ground	Open	0
		Closed	Approx. 5
5	Ground	Open	0
		Closed	Approx. 5

SEL217Y

OK or NG

OK	▶	GO TO 4.
NG	▶	GO TO 3.

3	CHECK DOOR SWITCH

1. Disconnect door switch harness connector.
2. Check the following.
- Continuity between door switch harness connector B14 terminals 2 and 3, and terminal 1 and ground (Driver side).
- Continuity between door switch harness connector B12 terminal 1 and ground (Passenger side).

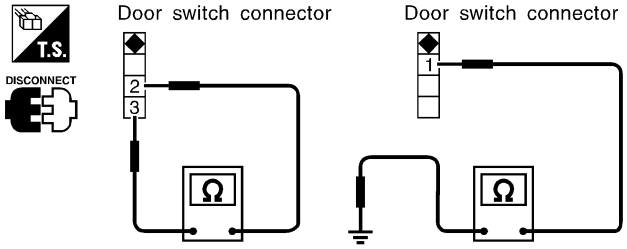

Terminal No.	Condition (Door switch)	Continuity
2-3	Pushed	No
	Released	Yes
1-Ground	Pushed	No
	Released	Yes

SEL218Y

OK or NG

OK	▶	**Check the following.** - Door switch ground circuit and condition - Harness for open or short between combination meter and door switch
NG	▶	Replace door switch.

4	CHECK DOOR UNLOCK SENSOR CIRCUIT

1. Disconnect combination meter harness connector.
2. Check continuity between combination meter harness connector M19 terminal 22 (W/G) and ground.

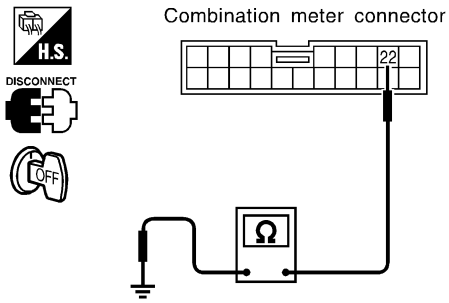

Terminal No.	Condition (Driver's door)	Continuity
22-Ground	Locked	No
	Unlocked	Yes

SEL219Y

OK or NG

OK	▶	GO TO 7.
NG	▶	GO TO 5.

5 CHECK DOOR UNLOCK SENSOR

1. Disconnect door unlock sensor harness connector.
2. Check continuity between door unlock sensor harness connector D8 terminals 1 and 2.

Door unlock sensor connector

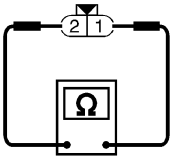

Terminal No.	Condition (Driver's Door)	Continuity
1-2	Locked	No
	Unlocked	Yes

SEL220Y

OK or NG

OK	▶	GO TO 6.
NG	▶	Replace door unlock sensor.

6 CHECK DOOR UNLOCK SENSOR INPUT SIGNAL

1. Connect door unlock sensor harness connector and combination meter harness connector.
2. Check voltage combination meter harness connector M19 terminal 22 (W/G) and ground.

Combination meter connector

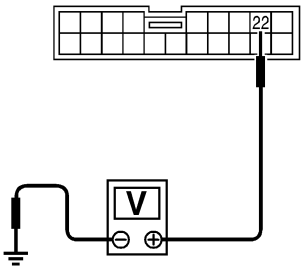

Terminal No. (+)	Terminal No. (–)	Condition (Driver's Door)	Voltage [V]
22	Ground	Locked	Approx. 5
		Unlocked	0

SEL221Y

OK or NG

OK	▶	**Check the following.** ● Door unlock sensor ground circuit ● Harness for open or short between combination meter and door unlock sensor
NG	▶	Replace combination meter.

7	CHECK KEY SWITCH INPUT SIGNAL

Check voltage between combination meter harness connector M19 terminal 33 (B/P) and ground.

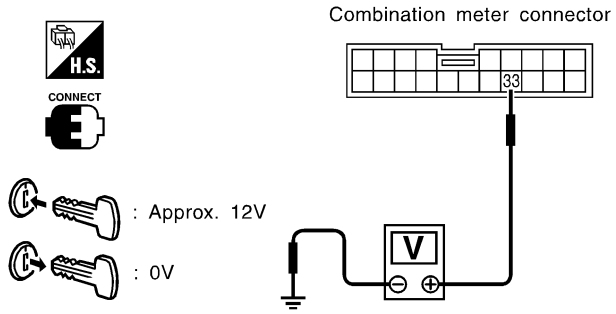

Voltage [V]:

Condition of key switch: key is inserted.
Approx. 12
Condition of key switch: key is withdrawn.
0

SEL222Y

OK or NG

OK	▶	Replace unified meter control unit.
NG	▶	GO TO 8.

8	CHECK KEY SWITCH (INSERT)

1. Disconnect key switch harness connector.
2. Check continuity between key switch harness connector E108 terminals 1 and 2.

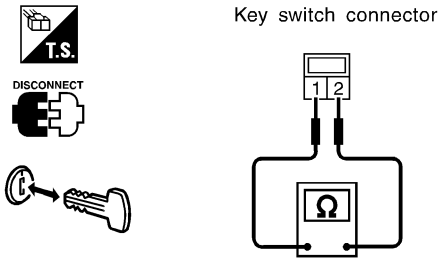

Continuity:
Condition of key switch: key is inserted.
Yes
Condition of key switch: key is withdrawn.
No

SEL223Y

OK or NG

OK	▶	**Check the following.** ● 10A fuse [No. 28, located in fuse block (J/B)] ● Harness for open or short between key switch and fuse ● Harness for open or short between combination meter and key switch
NG	▶	Replace key switch.

DIAGNOSTIC PROCEDURE 2

=NMEL0215S02

SYMPTOM: Interior lamp timer does not cancel properly.

1 CHECK IGNITION ON SIGNAL

1. Disconnect combination meter harness connector.
2. Check voltage between combination meter harness connector M18 terminal 12 (G/Y) and ground.

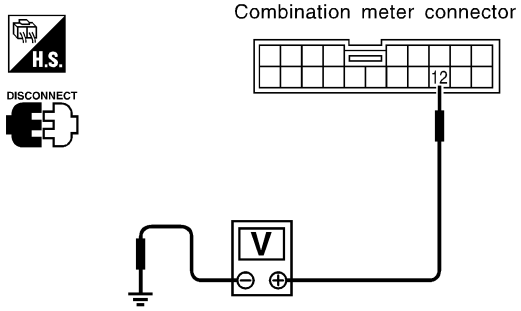

Terminal No.		Ignition switch position		
(+)	(–)	OFF	ACC	ON
12	Ground	0V	0V	Battery voltage

SEL216Y

OK or NG

OK	▶	GO TO 2.
NG	▶	**Check the following.** ● 10A fuse [No. 11, located in fuse block (J/B)] ● Harness for open or short between combination meter and fuse

2 CHECK DOOR SWITCH INPUT SIGNAL

1. Connect combination meter harness connector.
2. Check the following.
- Voltage between combination meter harness connector M19 terminal 24 (BR/W) and ground (Driver side)
- Voltage between combination meter harness connector M18 terminal 5 (P) and ground (Passenger side)

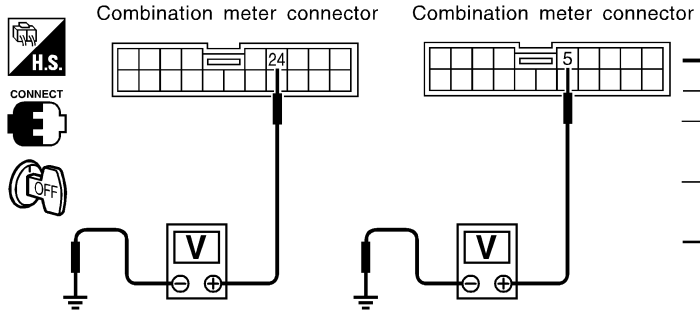

Terminals No.		Condition (Door)	Voltage [V]
(+)	(–)		
24	Ground	Open	0
		Closed	Approx. 5
5	Ground	Open	0
		Closed	Approx. 5

SEL217Y

OK or NG

OK	▶	GO TO 4.
NG	▶	GO TO 3.

3	CHECK DOOR SWITCH

1. Disconnect door switch harness connector.
2. Check the following.
- Continuity between harness connector B14 terminals 2 and 3, and terminal 1 and ground (Driver side)
- Continuity between door switch harness connector B12 terminal 1 and ground (Passenger side)

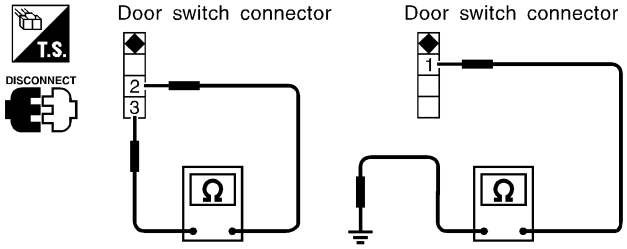

Terminal No.	Condition (Door switch)	Continuity
2-3	Pushed	No
	Released	Yes
1-Ground	Pushed	No
	Released	Yes

SEL218Y

OK or NG

OK	▶	**Check the following.** ● Door switch ground circuit and condition ● Harness for open or short between combination meter and door switch
NG	▶	Replace door switch.

4	CHECK DOOR UNLOCK SENSOR INPUT SIGNAL

1. Disconnect combination meter harness connector.
2. Check continuity between combination meter harness connector M19 terminal 22 (W/G) and ground.

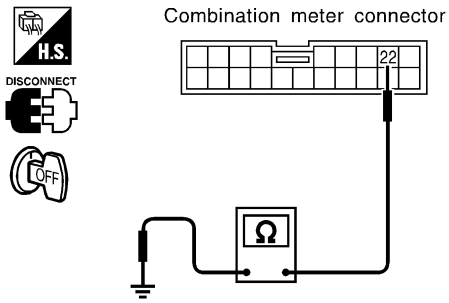

Terminal No.	Condition (Driver's door)	Continuity
22-Ground	Locked	No
	Unlocked	Yes

SEL219Y

OK or NG

OK	▶	Replace unified meter control unit.
NG	▶	GO TO 5.

5	CHECK DOOR UNLOCK SENSOR

1. Disconnect door unlock sensor harness connector.
2. Check continuity between door unlock sensor harness connector D8 terminals 1 and 2.

Door unlock sensor connector

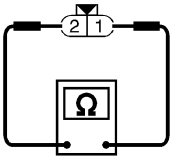

Terminal No.	Condition (Driver's Door)	Continuity
1-2	Locked	No
	Unlocked	Yes

SEL220Y

OK or NG

OK	▶	GO TO 6.
NG	▶	Replace door unlock sensor.

6	CHECK DOOR UNLOCK SENSOR INPUT SIGNAL

1. Connect door unlock sensor harness connector and combination meter harness connector.
2. Check voltage combination meter harness connector M19 terminal 22 (W/G) and ground.

Combination meter connector

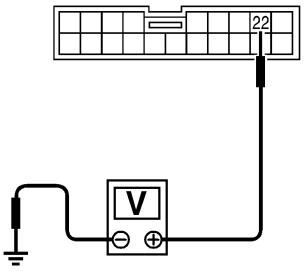

Terminal No.		Condition (Driver's Door)	Voltage [V]
(+)	(–)		
22	Ground	Locked	Approx. 5
		Unlocked	0

SEL221Y

OK or NG

OK	▶	**Check the following.** ● Door unlock sensor ground circuit ● Harness for open or short between combination meter and door unlock sensor
NG	▶	Replace unified meter control unit.

Wiring Diagram — INT/L —

NMEL0323

EL-INT/L-01

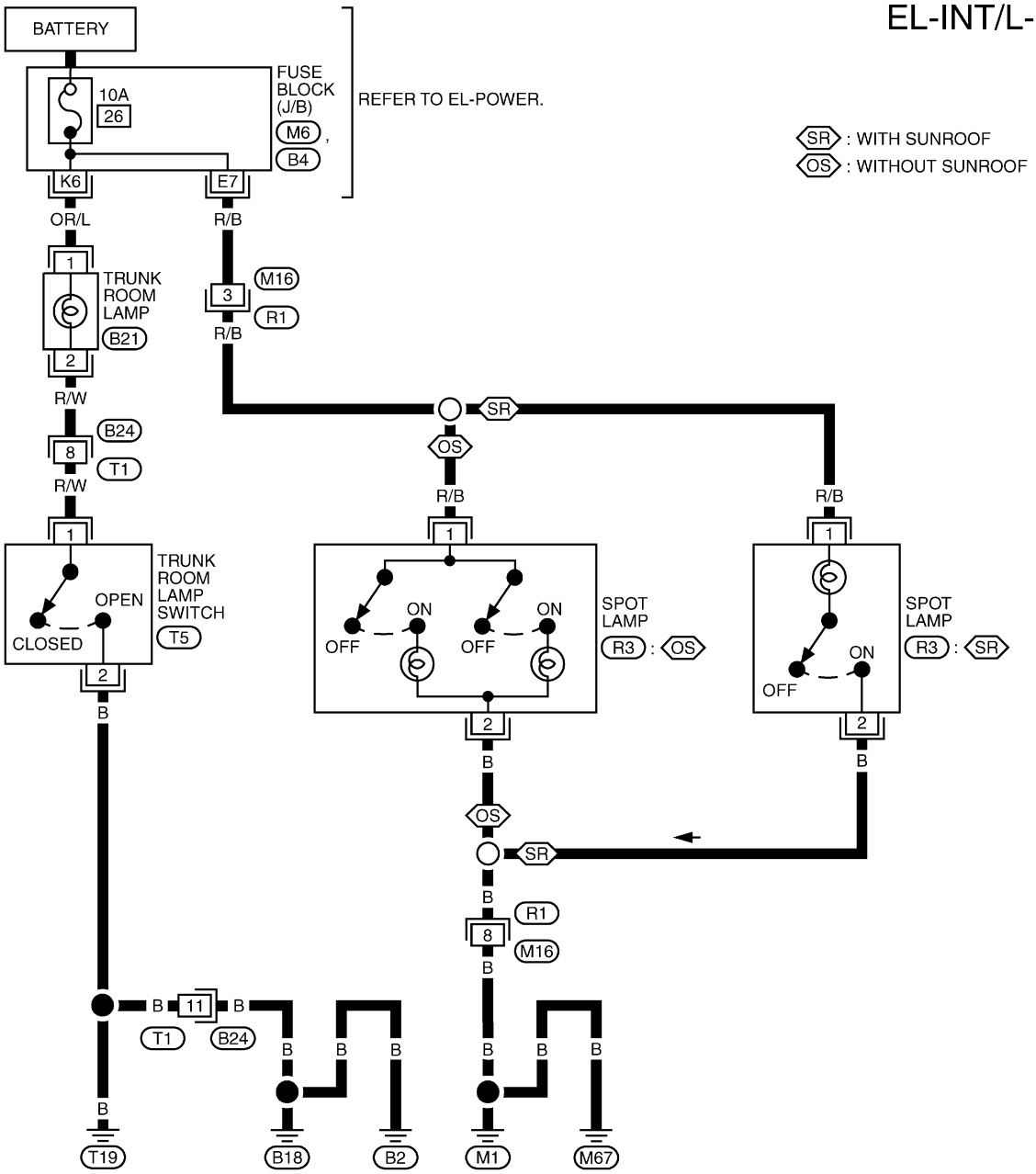

REFER TO THE FOLLOWING.
M6 , B4 -FUSE BLOCK-JUNCTION BOX (J/B)

TEL800B

Component Parts and Harness Connector Location

NMEL0041

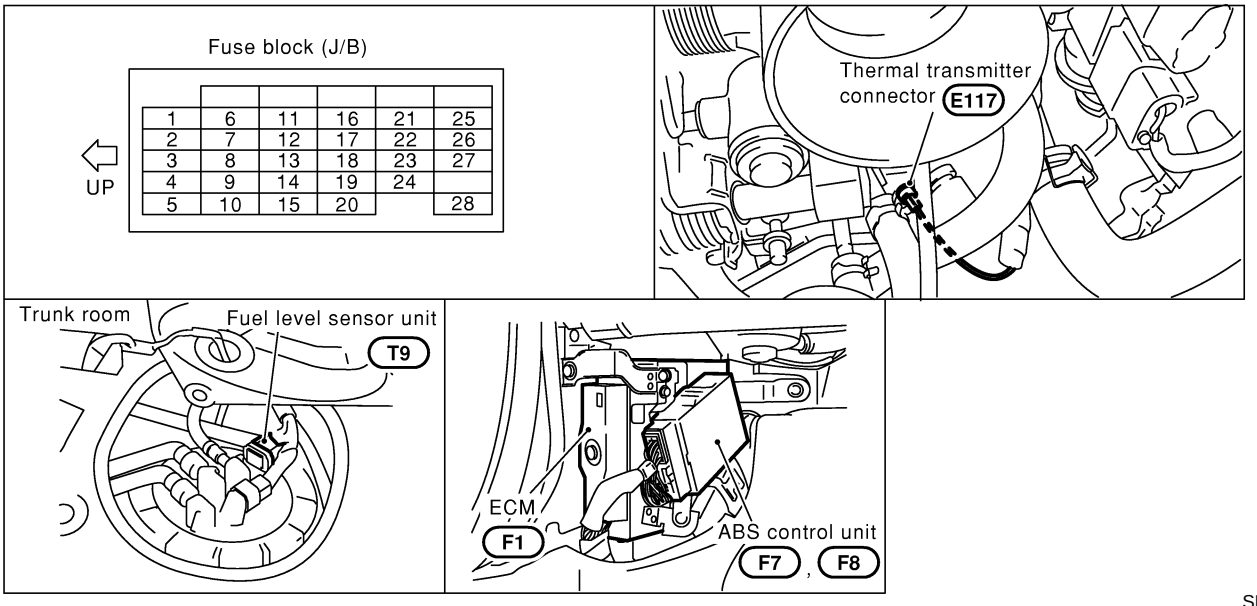

SEL255Y

System Description

NMEL0042

UNIFIED CONTROL METER

NMEL0042S06

- Speedometer, odo/trip meter, tachometer, fuel gauge and water temperature gauge are controlled totally by unified meter control unit built-in combination meter.
- Digital meter is adopted for odo/trip meter.*
  *The record of the odo meter is kept even if the battery cable is disconnected. The record of the trip meter is erased when the battery cable is disconnected.
- Odo/trip meter segment can be checked in diagnosis mode.
- Meter/gauge can be checked in diagnosis mode.

POWER SUPPLY AND GROUND CIRCUIT

NMEL0042S08

Power is supplied at all times

- through 10A fuse [No. 28, located in the fuse block (J/B)]
- to combination meter terminal 13.

With the ignition switch in the ON or START position, power is supplied

- through 10A fuse [No. 11, located in the fuse block (J/B)]
- to combination meter terminal 12.

Ground is supplied

- to combination meter terminal 9
- through body grounds M1 and M67.

WATER TEMPERATURE GAUGE

NMEL0042S01

The water temperature gauge indicates the engine coolant temperature. The reading on the gauge is based on the resistance of the thermal transmitter.
As the temperature of the coolant increases, the resistance of the thermal transmitter decreases. A variable ground is supplied to terminal 18 of the combination meter for the water temperature gauge. The needle on the gauge moves from “C” to “H”.

TACHOMETER

NMEL0042S02

The tachometer indicates engine speed in revolutions per minute (rpm).
The tachometer is regulated by a signal

- from terminal 2 of the ECM
- to combination meter terminal 15 for the tachometer.

FUEL GAUGE

NMEL0042S03

The fuel gauge indicates the approximate fuel level in the fuel tank.
The fuel gauge is regulated by a variable ground signal supplied

- to combination meter terminal 17 for the fuel gauge
- from terminal 2 of the fuel level sensor unit
- through terminal 4 of the fuel level sensor unit and
- through body grounds B2, B18 and T19.

SPEEDOMETER

NMEL0042S04

The combination meter provides a voltage signal to the ABS control unit for the speedometer.
The voltage is supplied

- from combination meter terminal 14 for the speedometer
- to terminal 11 of ABS control unit.

The speedometer converts the voltage into the vehicle speed displayed.

TIME CONTROL SYSTEM

NMEL0042S09

For time control system operation, refer to "UNIFIED METER CONTROL UNIT (TIME CONTROL SYSTEM)", EL-131.

Combination Meter

NMEL0043

CHECK

NMEL0043S01

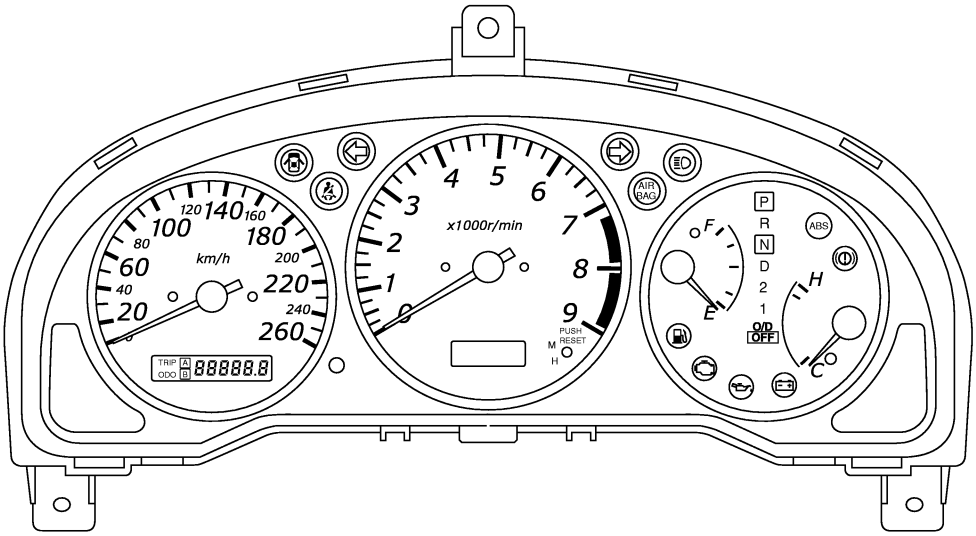

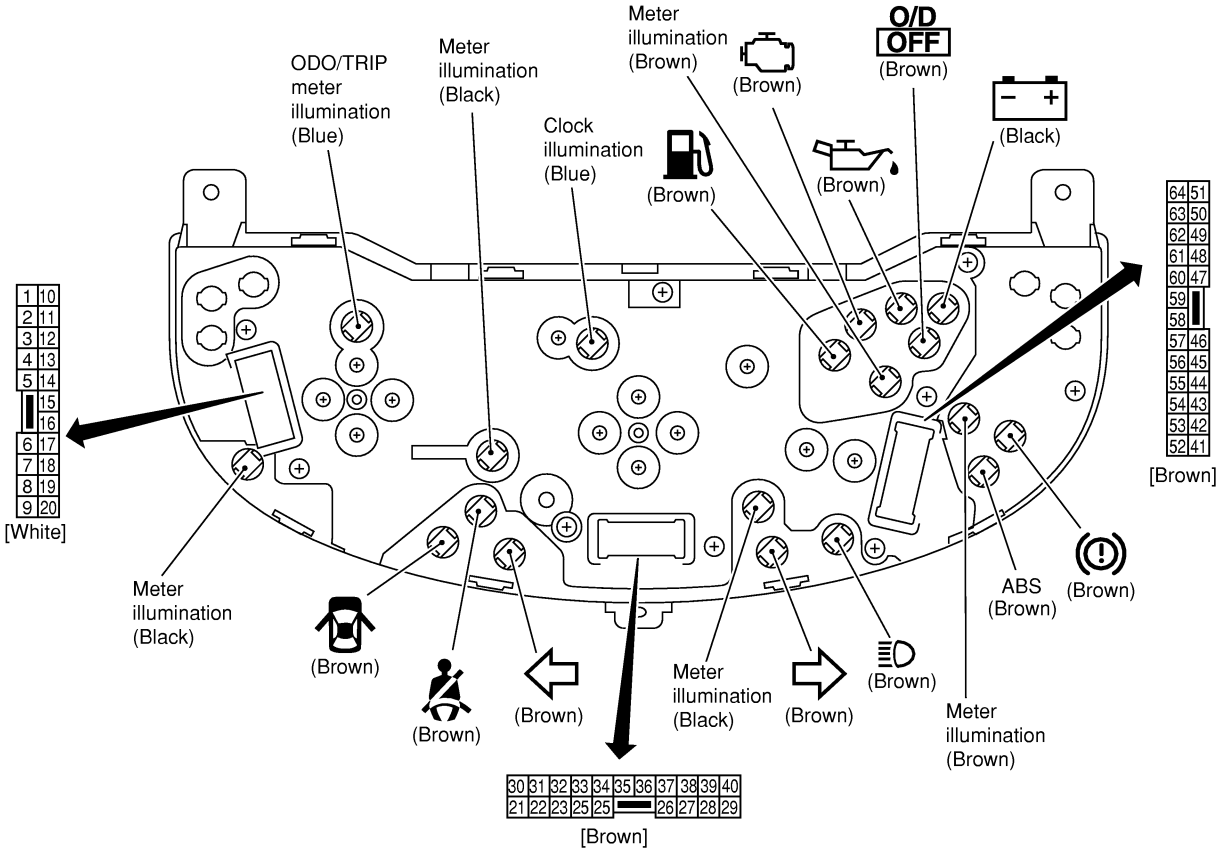

Bulb socket color	Bulb wattage
Brown	1.4W
Blue	2.0W
Black	3.0W

( ): Bulb socket color

CEL312A

CONSTRUCTION

NMEL0043S02

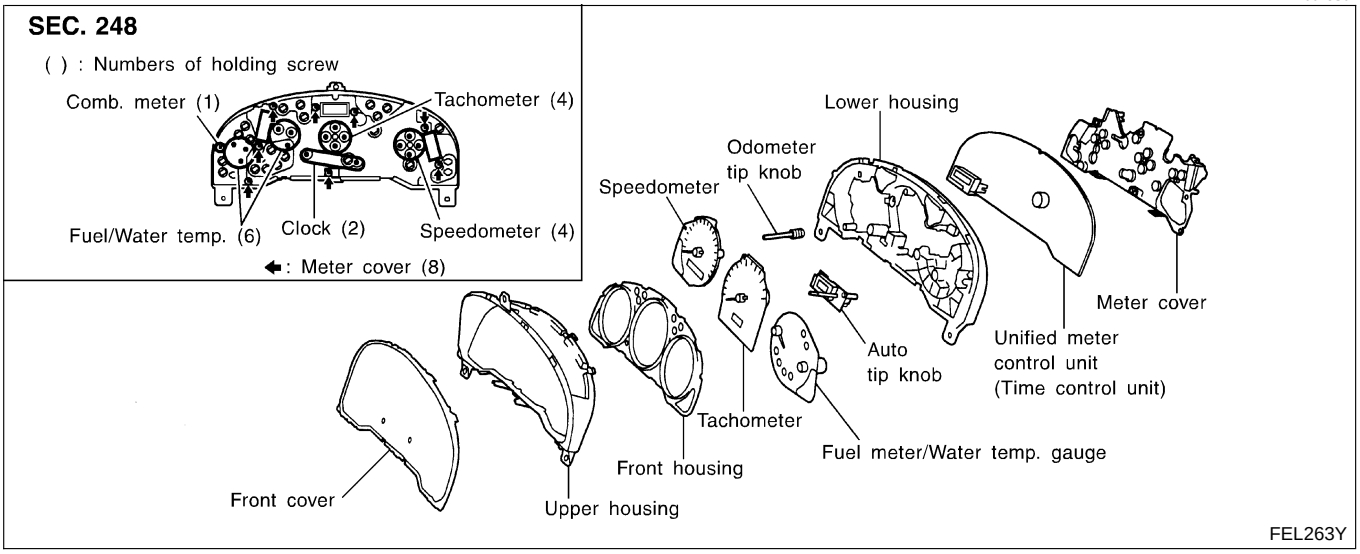

Schematic

NMEL0324

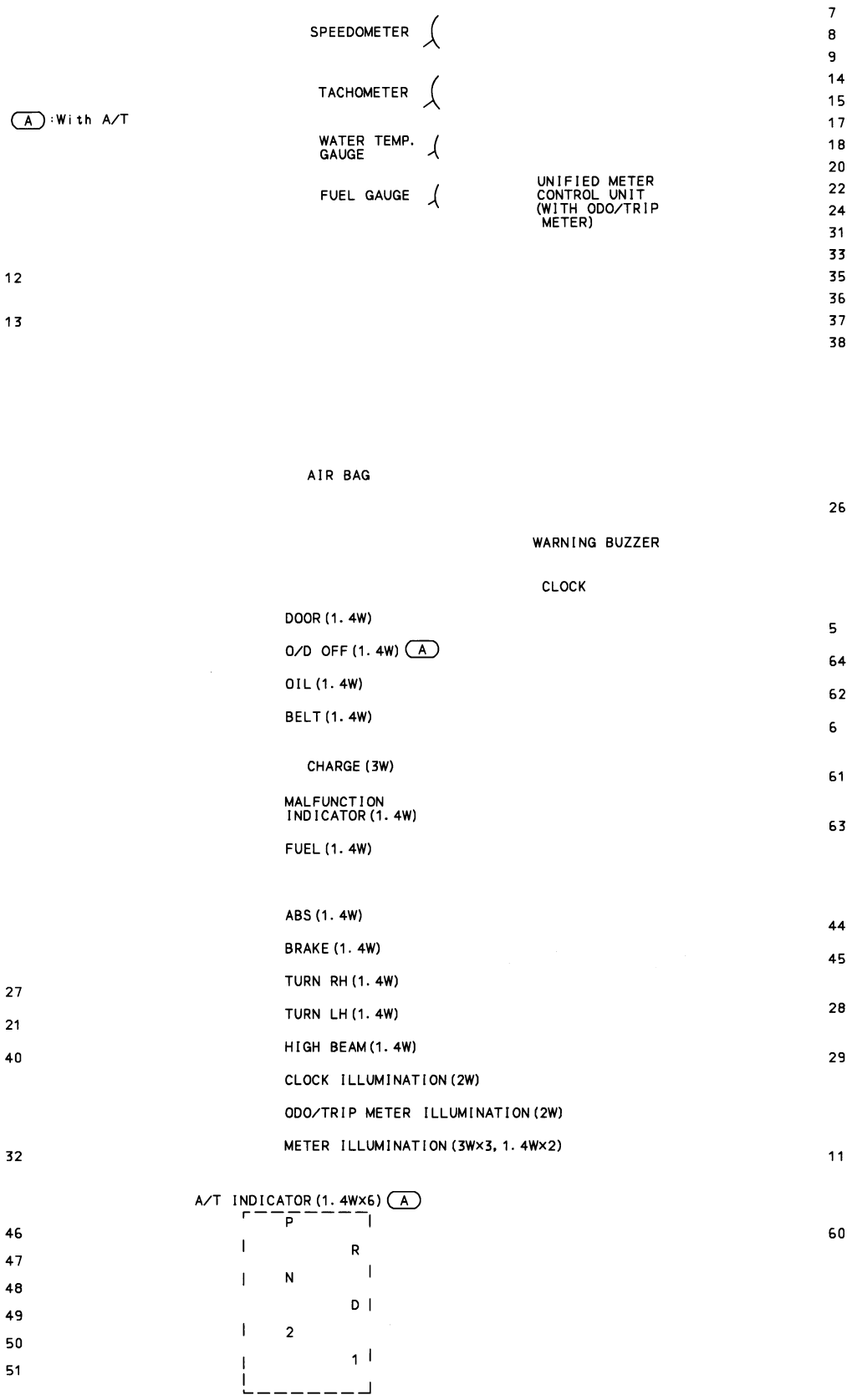

TEL801B

Wiring Diagram — METER —

NMEL0045

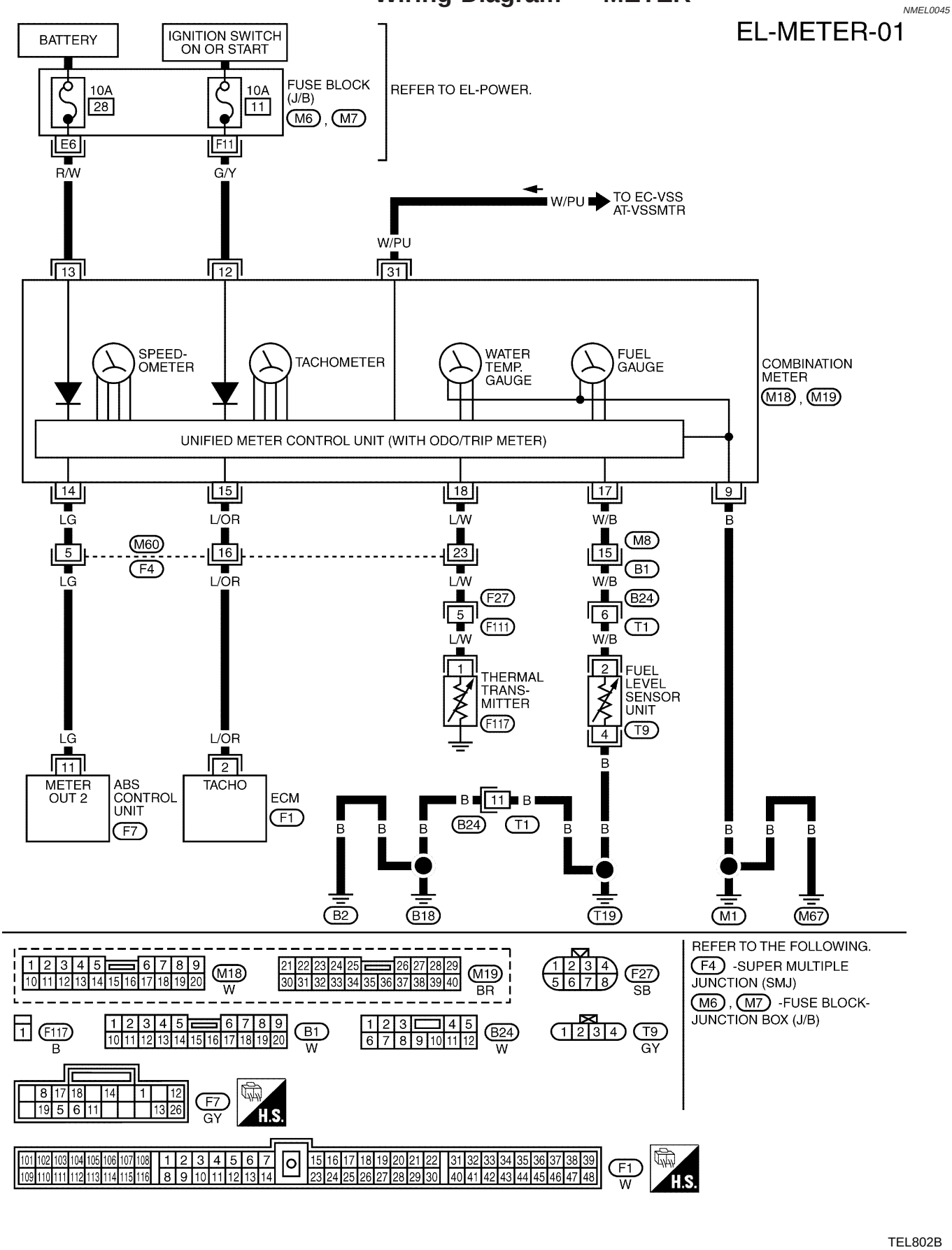

Meter/Gauge Operation and Odo/Trip Meter Segment Check in Diagnosis Mode

NMEL0151

DIAGNOSIS FUNCTION

NMEL0151S01

- Odo/trip meter segment can be checked in diagnosis mode.
- Meters/gauges can be checked in diagnosis mode.

HOW TO ALTERNATE DIAGNOSIS MODE

NMEL0151S02

1. Turn ignition switch to ON and change odo/trip meter to “TRIP A” or “TRIP B”.
2. Turn ignition switch to OFF.
3. Turn ignition switch to ON when pushing odo/trip meter switch.
4. Confirm that trip meter indicates “0000.0”.
5. Push odo/trip meter switch more than three times within 5 seconds.

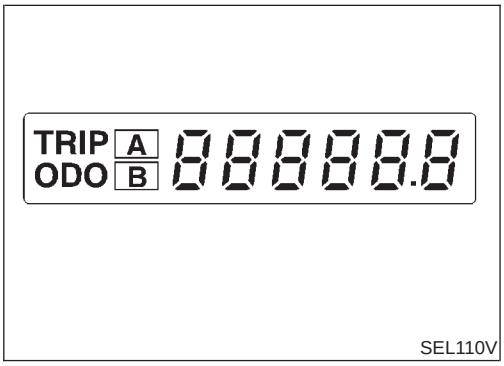

SEL110V

6. All odo/trip meter segments should be turned on.

NOTE:
If some segments are not turned on, unified meter control unit with odo/trip meter should be replaced.

At this point, the unified control meter is turned to diagnosis mode.

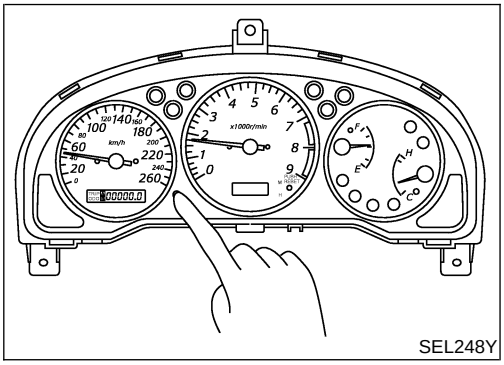

SEL248Y

7. Push odo/trip meter switch. Indication of each meter/gauge should be as shown left during pushing odo/trip meter switch if it is no malfunctioning.

NOTE:
It takes about a few seconds for indication of fuel gauge and water temperature gauge to become stable.

Trouble Diagnoses

PRELIMINARY CHECK

NMEL0046

NMEL0046S04

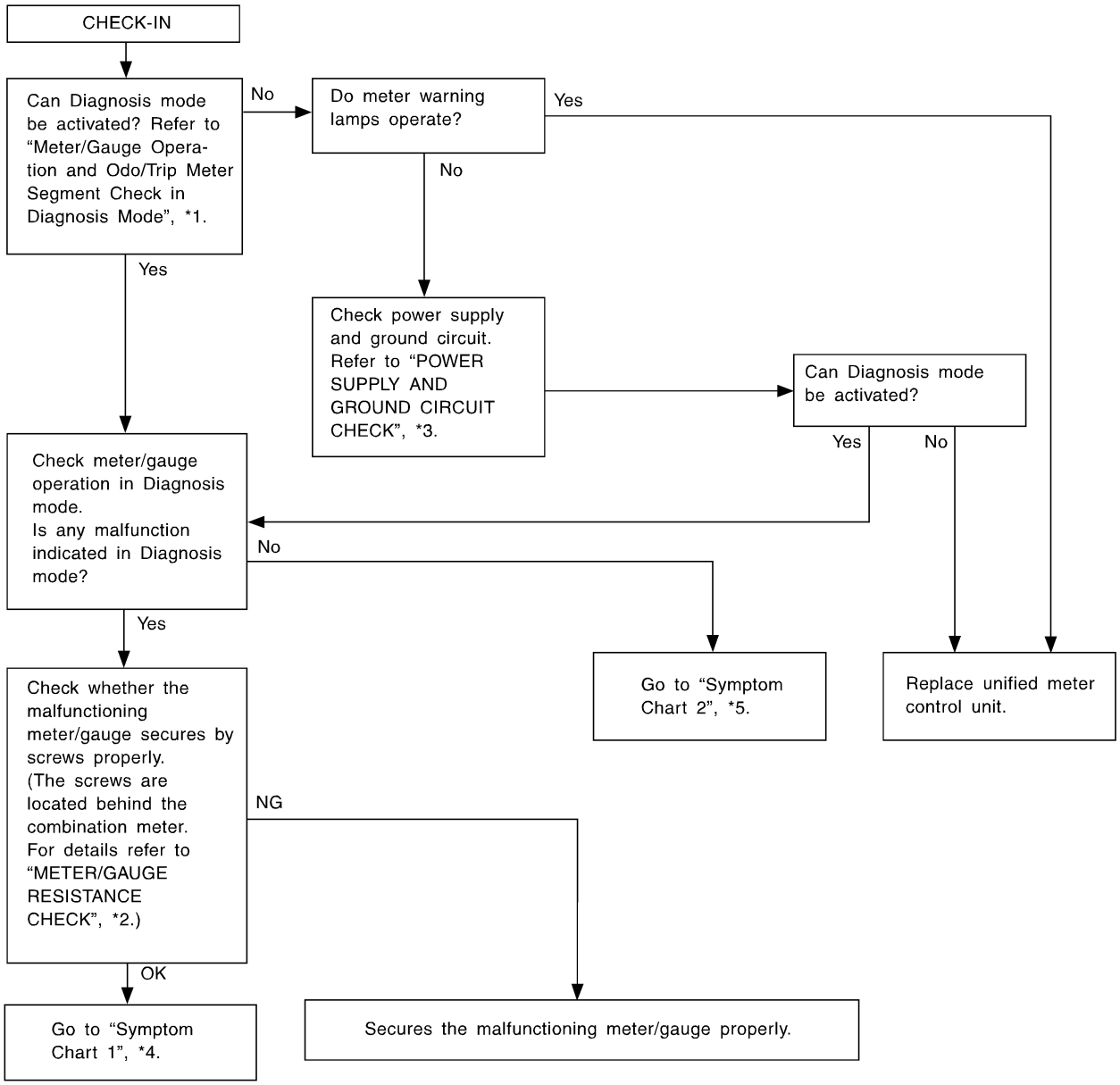

SEL361W

*1: Meter/Gauge Operation and Odo/Trip Meter Segment Check in Diagnosis Mode (EL-64)

*2: METER/GAUGE RESISTANCE CHECK (EL-71)

*3: POWER SUPPLY AND GROUND CIRCUIT CHECK (EL-67)

*4: Symptom Chart 1 (EL-66)

*5: Symptom Chart 2 (EL-66)

SYMPTOM CHART

NMEL0046S10

Symptom Chart 1 (Malfunction is Indicated in Diagnosis Mode)

NMEL0046S1001

Symptom	Possible causes	Repair order
Odo/trip meter indicate(s) malfunction in Diagnosis mode.	Unified meter control unit	Replace unified meter control unit.
Multiple meter/gauge indicate malfunction in Diagnosis mode.		
One of speedometer/ tachometer/fuel gauge/ water temp. gauge indicates malfunction in Diagnosis mode.	1. Meter/Gauge 2. Unified meter control unit	1. Check resistance of meter/gauge indicating malfunction. If the resistance is NG, replace the meter/ gauge. Refer to "METER/GAUGE RESISTANCE CHECK", EL-71. 2. If the resistance of meter/gauge is OK, replace unified meter control unit.

Symptom Chart 2 (No Malfunction is Indicated in Diagnosis Mode)

NMEL0046S1002

Symptom	Possible causes	Repair order
One of speedometer/ tachometer/fuel gauge/ water temp. gauge is malfunctioning.	1. Sensor signal - Vehicle speed signal - Engine revolution signal - Fuel gauge - Water temp. gauge 2. Unified meter control unit	1. Check the sensor for malfunctioning meter/gauge. INSPECTION/VEHICLE SPEED SIGNAL (Refer to EL-68.) INSPECTION/ENGINE REVOLUTION SIGNAL (Refer to EL-68.) INSPECTION/FUEL LEVEL SENSOR UNIT (Refer to EL-69.) INSPECTION/THERMAL TRANSMITTER (Refer to EL-70.) 2. Replace unified meter control unit.
Multiple meter/gauge are malfunctioning. (except odo/trip meter)		

Before starting trouble diagnoses below, perform PRELIMINARY CHECK, EL-65.

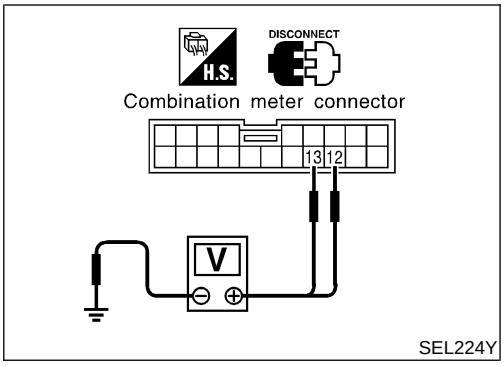

POWER SUPPLY AND GROUND CIRCUIT CHECK

=NMEL0046S07

Power Supply Circuit Check

NMEL0046S0701

Terminals			Ignition switch position		
(+)		(−)	OFF	ACC	ON
Connector	Terminal (Wire color)				
M18	13 (R/W)	Ground	Battery voltage	Battery voltage	Battery voltage
	12 (G/Y)	Ground	0V	0V	Battery voltage

If NG, check the following.

- 10A fuse [No. 28, located in fuse block (J/B)]
- 10A fuse [No. 11, located in fuse block (J/B)]
- Harness for open or short between fuse and combination meter

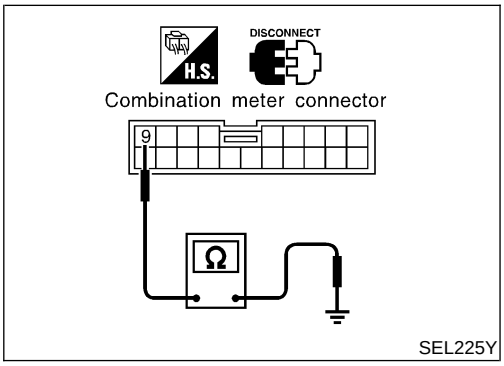

Ground Circuit Check

NMEL0046S0702

Terminals			Continuity
(+)		(−)	
Connector	Terminal (Wire color)		
M18	9 (B)	Ground	Yes

INSPECTION/VEHICLE SPEED SIGNAL

=NMEL0046S03

1	CHECK ABS CONTROL UNIT OUTPUT

1. Lift up drive wheel.
2. Turn ignition switch "ON".
3. Check voltage between combination meter harness connector M18 terminal 14 (LG) and ground when rotating wheel by hand.

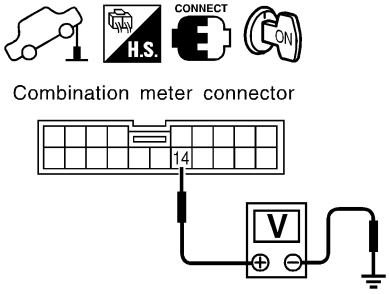

Voltage: Approx. 0 - 5V

SEL226Y

OK or NG

OK	▶	ABS control unit output signal is OK.
NG	▶	**Check the following.** ● Harness for open or short between ABS control unit and combination meter. ● ABS control unit. Refer to BR-72, "Control Unit".

INSPECTION/ENGINE REVOLUTION SIGNAL

NMEL0046S02

1	CHECK ECM OUTPUT

1. Start engine.
2. Check voltage between combination meter harness connector M18 terminals 15 (L/OR) and ground at idle and 2,000 rpm.

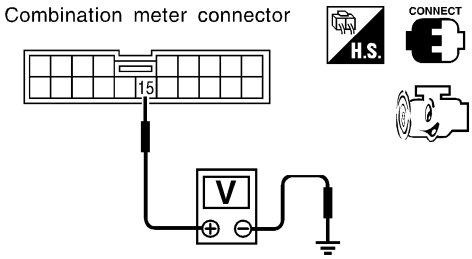

Higher rpm = Higher voltage
Lower rpm = Lower voltage
Voltage should change with rpm.

SEL227Y

OK or NG

OK	▶	Engine revolution signal is OK.
NG	▶	Harness for open or short between ECM and combination meter

INSPECTION/FUEL LEVEL SENSOR UNIT

=NMEL0046S08

1	CHECK GROUND CIRCUIT FOR FUEL LEVEL SENSOR UNIT

1. Disconnect fuel level sensor unit harness connector.
2. Check harness continuity between fuel level sensor unit harness connector T9 terminal 4 (B) and ground.

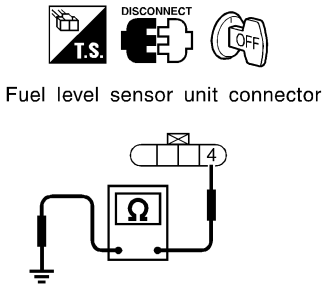

Continuity should exist.

SEL228Y

OK or NG

OK	▶	GO TO 2.
NG	▶	Repair harness or connector.

2	CHECK FUEL LEVEL SENSOR UNIT

Refer to "FUEL LEVEL SENSOR UNIT CHECK" (EL-71).

OK or NG

OK	▶	GO TO 3.
NG	▶	Replace fuel level sensor unit.

3	CHECK HARNESS FOR OPEN OR SHORT

1. Disconnect combination meter connector and fuel level sensor unit connector.
2. Check continuity between combination meter harness connector M18 terminal 17 (W/B) and fuel level sensor unit harness connector T9 terminal 2 (W/B).
   Continuity should exist.
3. Check continuity between combination meter harness connector M18 terminal 17 (W/B) and ground.
   Continuity should not exist.

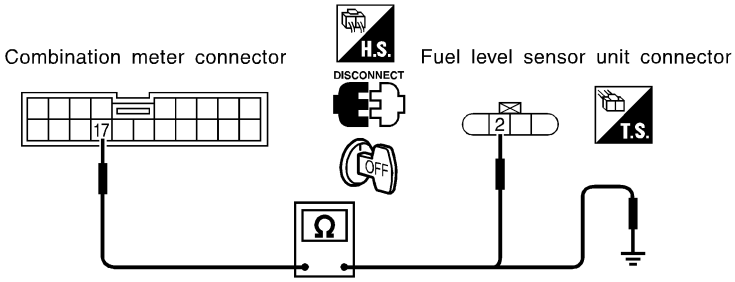

SEL229Y

OK or NG

OK	▶	Fuel level sensor unit is OK.
NG	▶	Repair harness or connector.

INSPECTION/THERMAL TRANSMITTER

=NMEL0046S09

1	CHECK THERMAL TRANSMITTER	
Refer to "THERMAL TRANSMITTER CHECK" (EL-72).		
OK or NG		
OK	▶	GO TO 2.
NG	▶	Replace.

2 CHECK HARNESS FOR OPEN OR SHORT

1. Disconnect combination meter connector and thermal transmitter connector.
2. Check continuity between combination meter harness connector M18 terminal 18 (L/W) and thermal transmitter harness connector F117 terminal 1 (L/W).
   Continuity should exist.
3. Check continuity between combination meter harness connector M18 terminal 18 (L/W) and ground.
   Continuity should not exist.

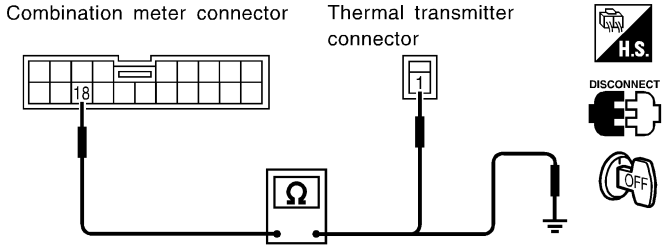

SEL230Y

OK or NG		
OK	▶	Thermal transmitter is OK.
NG	▶	Repair harness or connector.

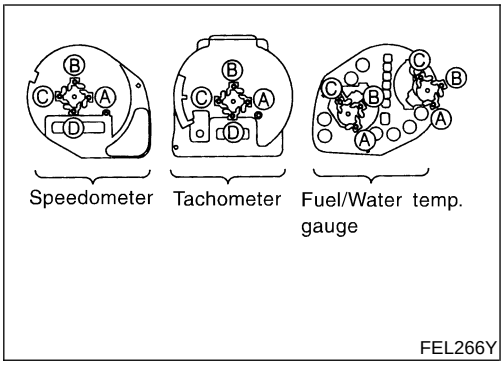

Electrical Components Inspection

METER/GAUGE RESISTANCE CHECK

=NMEL0047

NMEL0047S04

Check resistance between installation screws of meter/gauge.

Screws		Resistance Ω
Tacho/Speedometer	Fuel/Temp. gauge	
A - C	A - C	Approx. 190 - Approx. 260
B - D	B - C	Approx. 230 - Approx. 310

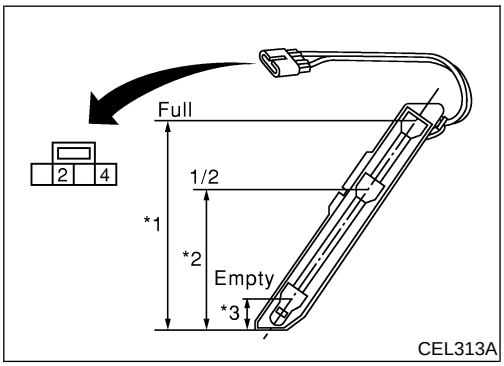

FUEL LEVEL SENSOR UNIT CHECK

NMEL0047S01

- For removal, refer to FE-8, “FUEL SYSTEM”.

Sending Unit

NMEL0047S0101

Check the resistance between terminals 2 and 4.

Ohmmeter		Float position mm (in)			Resistance value Ω
(+)	(−)				
2	4	*1	Full	361 (14.21)	Approx. 4 - 6
		*2	1/2	249 (9.80)	30 - 36
		*3	Empty	46 (1.81)	80 - 93

*1 and *3: When float is in contact with stopper.

Lead Switch

=NMEL0047S0102

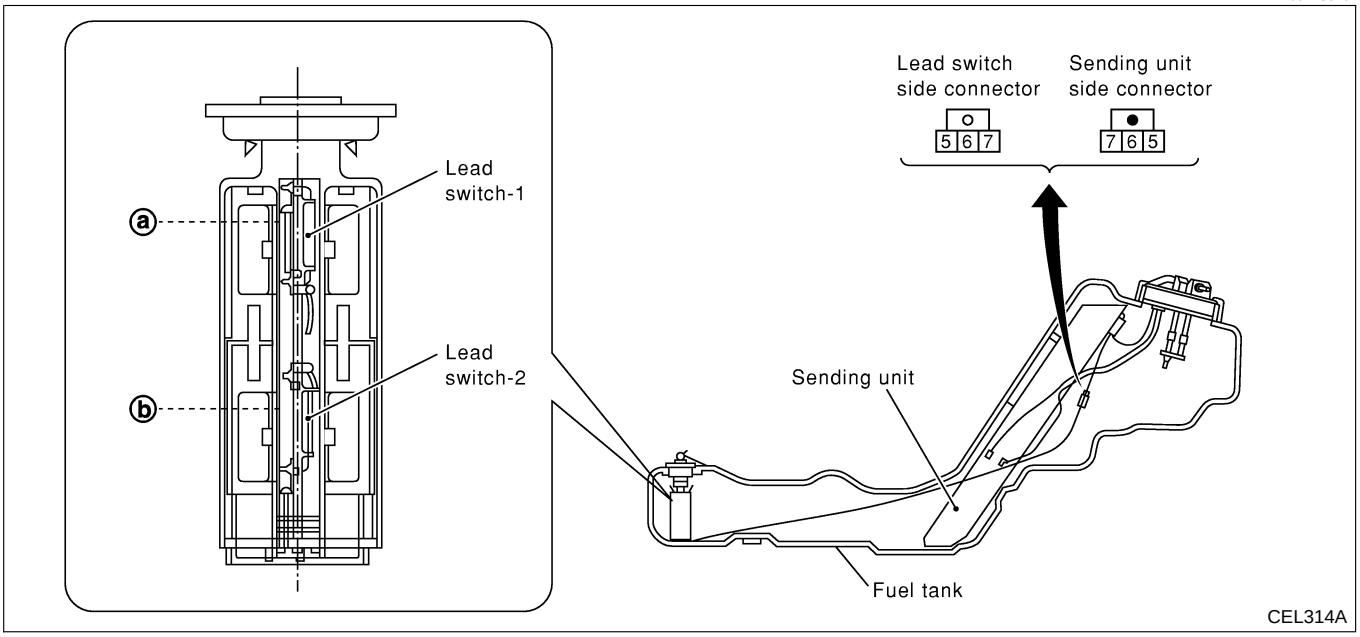

Lead switch is built into the fuel tank.
Check the continuity between terminals 5 and 6 or 5 and 7.

Terminals	Lead switch condition		Fuel level line	Fuel capacity (Approximate values) ℓ (Imp qt)
	SW1	SW2		
5-6 and 5-7	ON	ON	Above a	More than 6.8 (6)
5-6	OFF	ON	a - b	2.5 - 6.8 (2-1/4-6)
No continuity	OFF	OFF	Below b	Less than 2.5 (2-1/4)

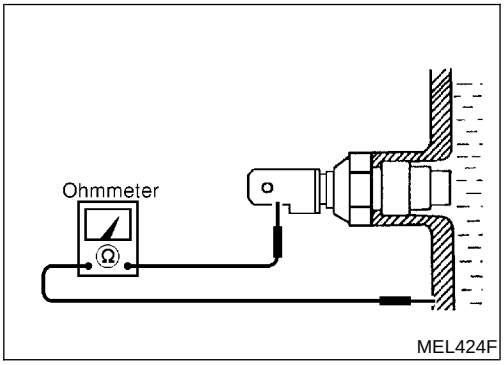

THERMAL TRANSMITTER CHECK

NMEL0047S02

Check the resistance between the terminals of thermal transmitter and body ground.

Water temperature	Resistance
60°C (140°F)	Approx. 170 - 210Ω
100°C (212°F)	Approx. 47 - 53Ω

Schematic

NMEL0049

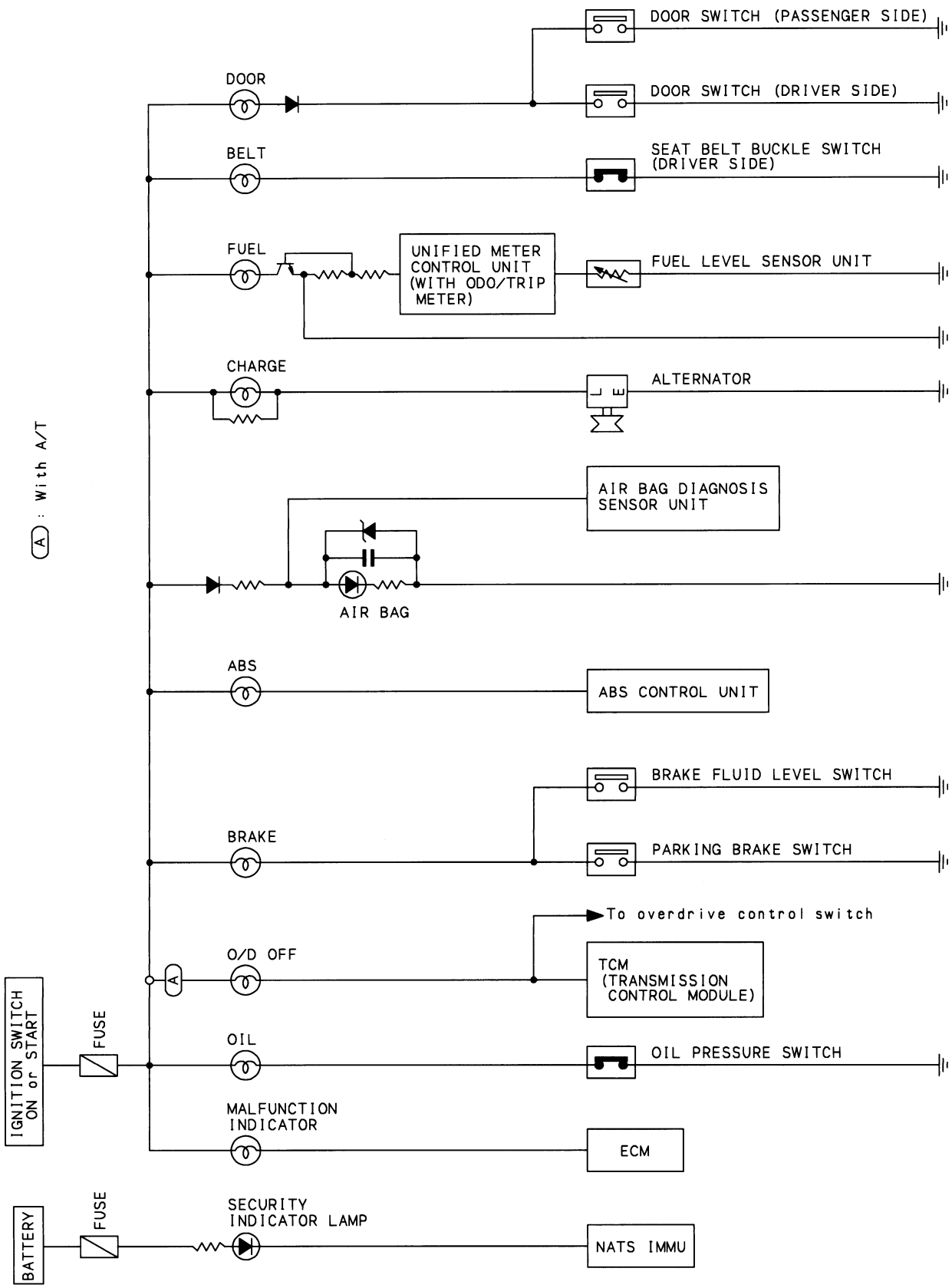

TEL803B

Wiring Diagram — WARN —

NMEL0050

EL-WARN-01

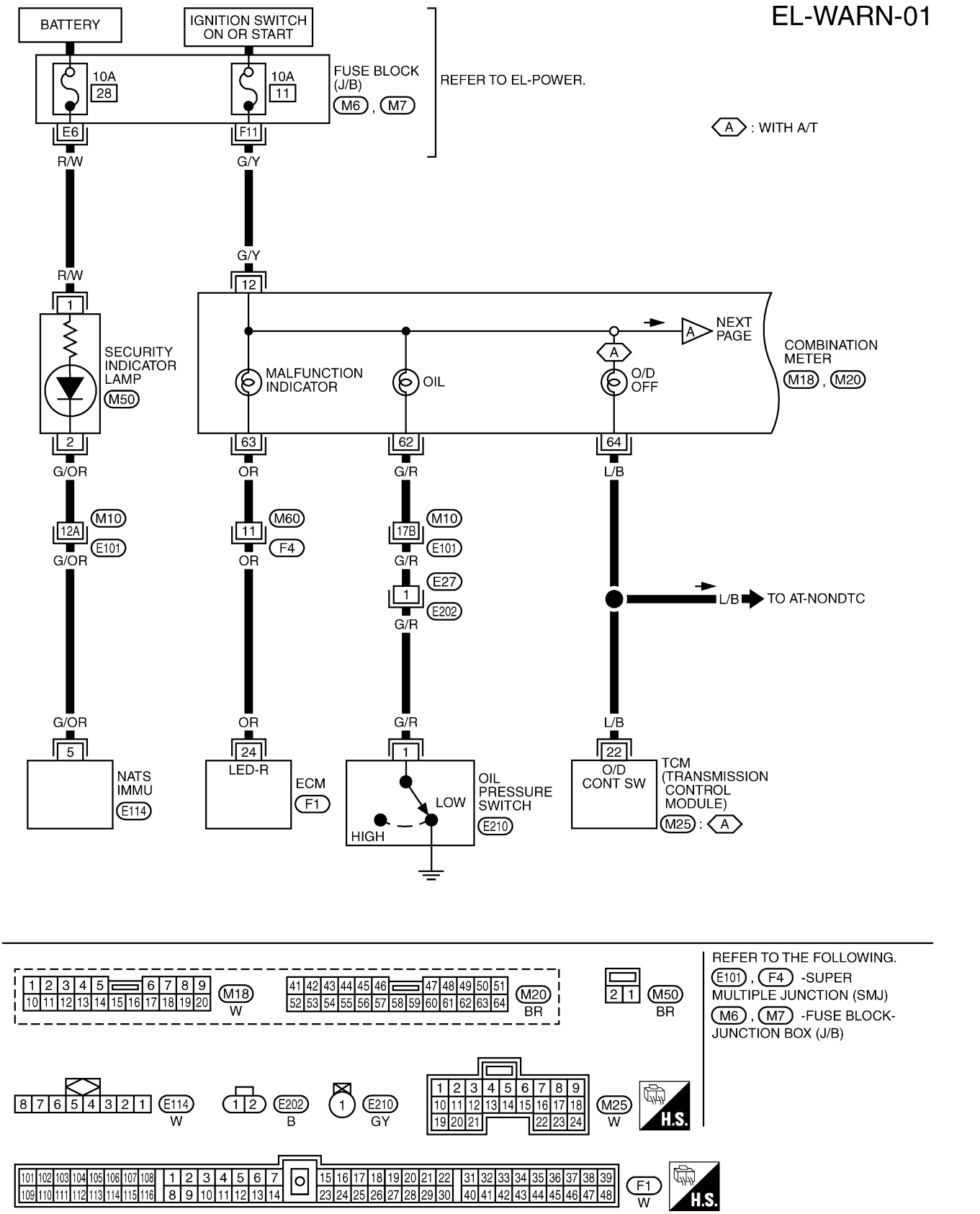

EL-WARN-02

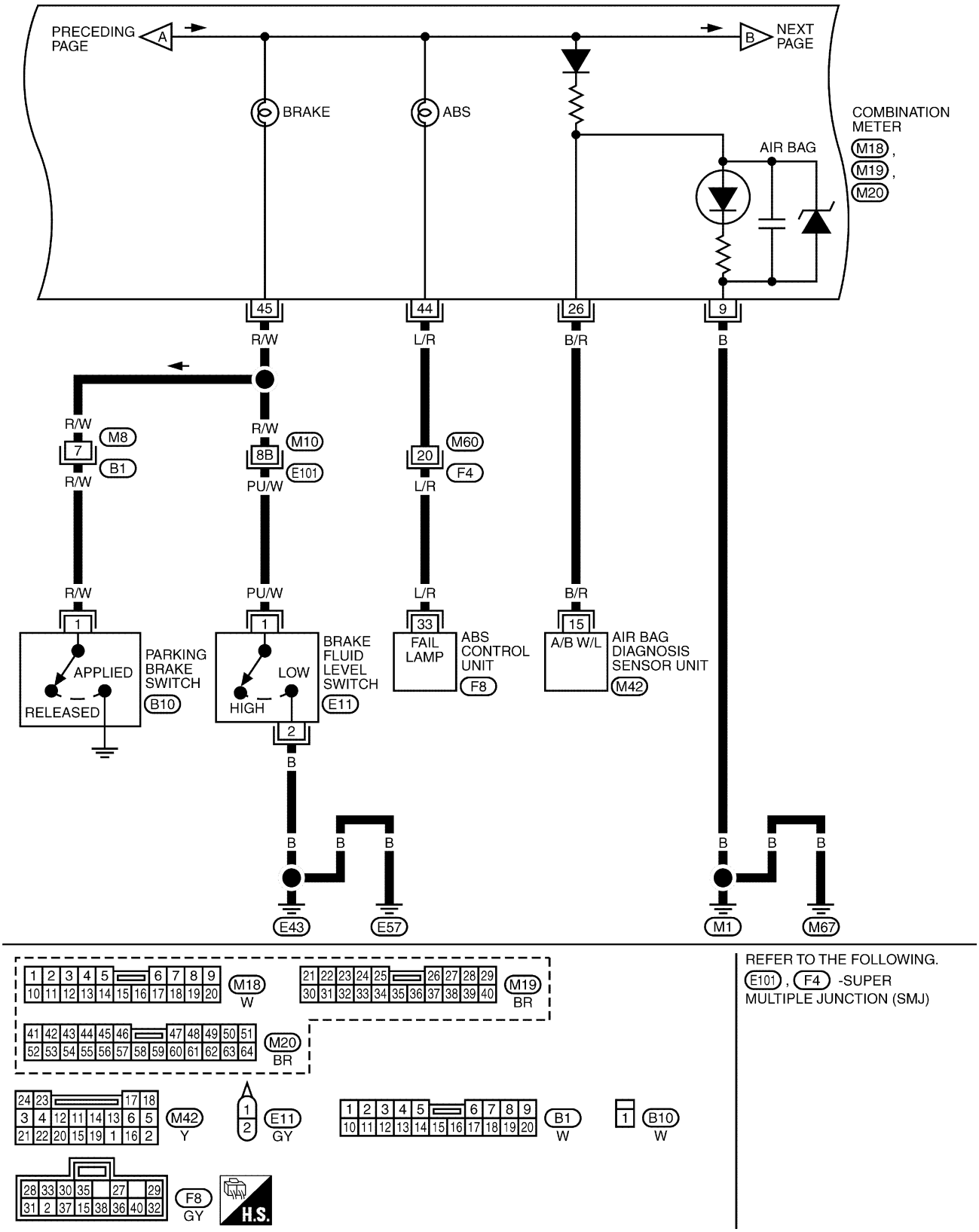

TEL805B

EL-WARN-03

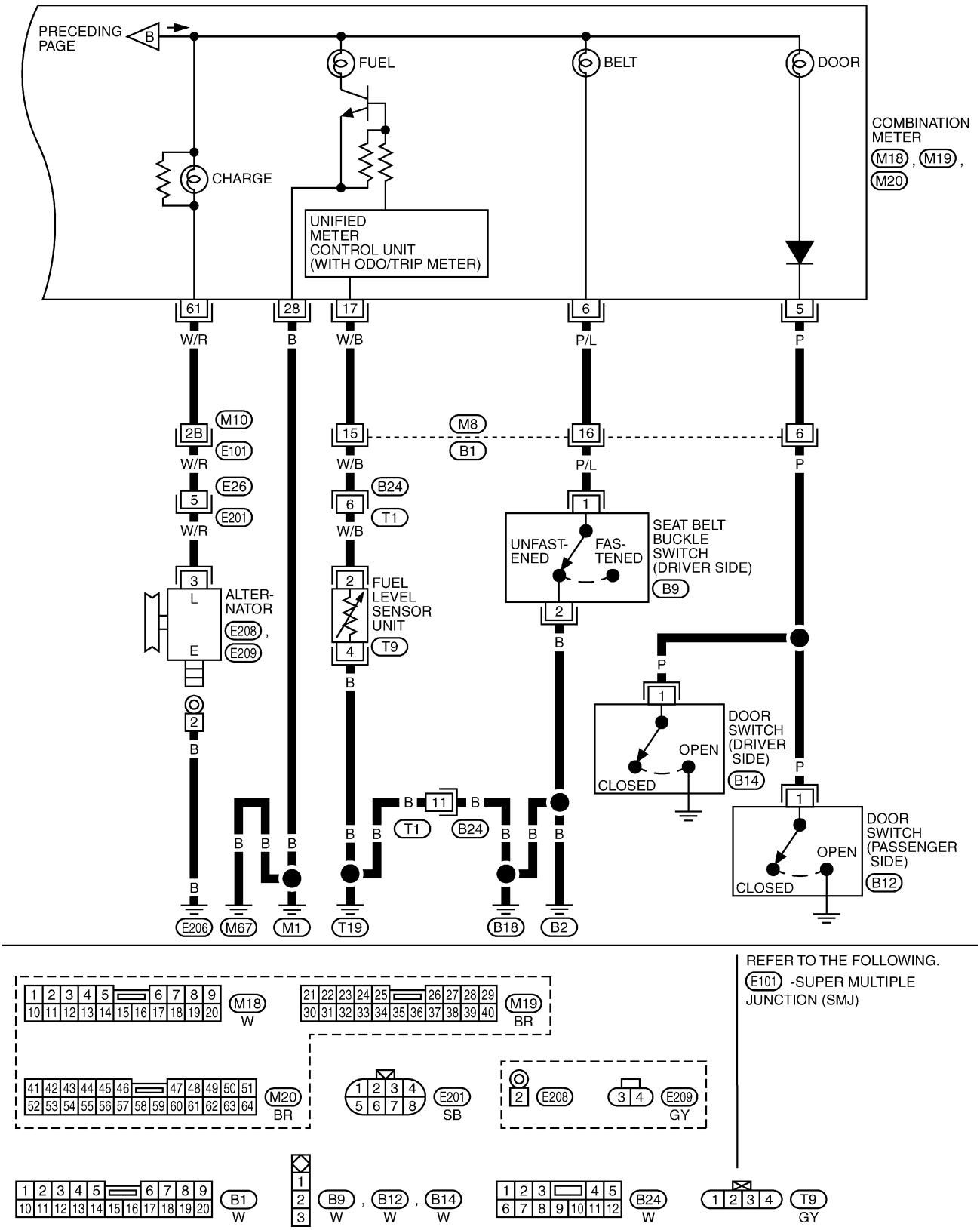

TEL806B

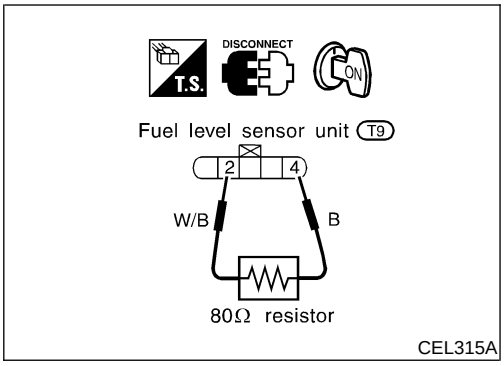

CEL315A

Electrical Components Inspection

NMEL0051

FUEL WARNING LAMP OPERATION CHECK

NMEL0051S01

1. Turn ignition switch “OFF”.
2. Disconnect fuel level sensor unit harness connector T9.
3. Connect a resistor (80Ω) between fuel level sensor unit harness connector terminals 2 and 4.
4. Turn ignition switch “ON”.

The fuel warning lamp should come on.

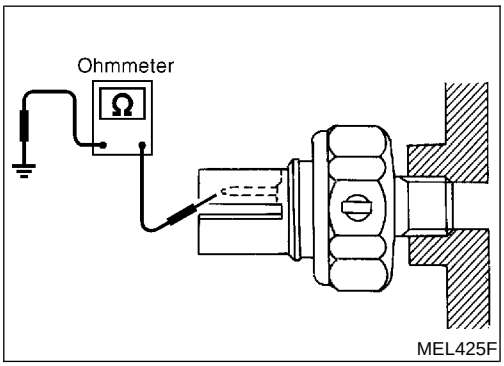

MEL425F

OIL PRESSURE SWITCH CHECK

NMEL0051S02

	Oil pressure kPa (bar, kg/cm^2, psi)	Continuity
Engine running	More than 10 - 20 (0.10 - 0.20, 0.1 - 0.2, 1 - 3)	No
Engine not running	Less than 10 - 20 (0.10 - 0.20, 0.1 - 0.2, 1 - 3)	Yes

Check the continuity between the terminals of oil pressure switch and body ground.

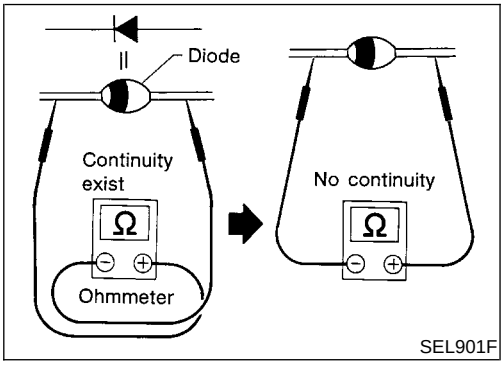

SEL901F

DIODE CHECK

NMEL0051S03

- Check continuity using an ohmmeter.
- Diode is functioning properly if test results are as shown in the figure at left.
- Check diodes at the combination meter harness connector instead of on the combination meter assembly. Refer to EL-74, “WARNING LAMP” wiring diagrams.

NOTE:

Specification may vary depending on the type of tester. Before performing this inspection, be sure to refer to the instruction manual for the tester to be used.

Wiring Diagram — AT/IND —

NMEL0159

EL-AT/IND-01

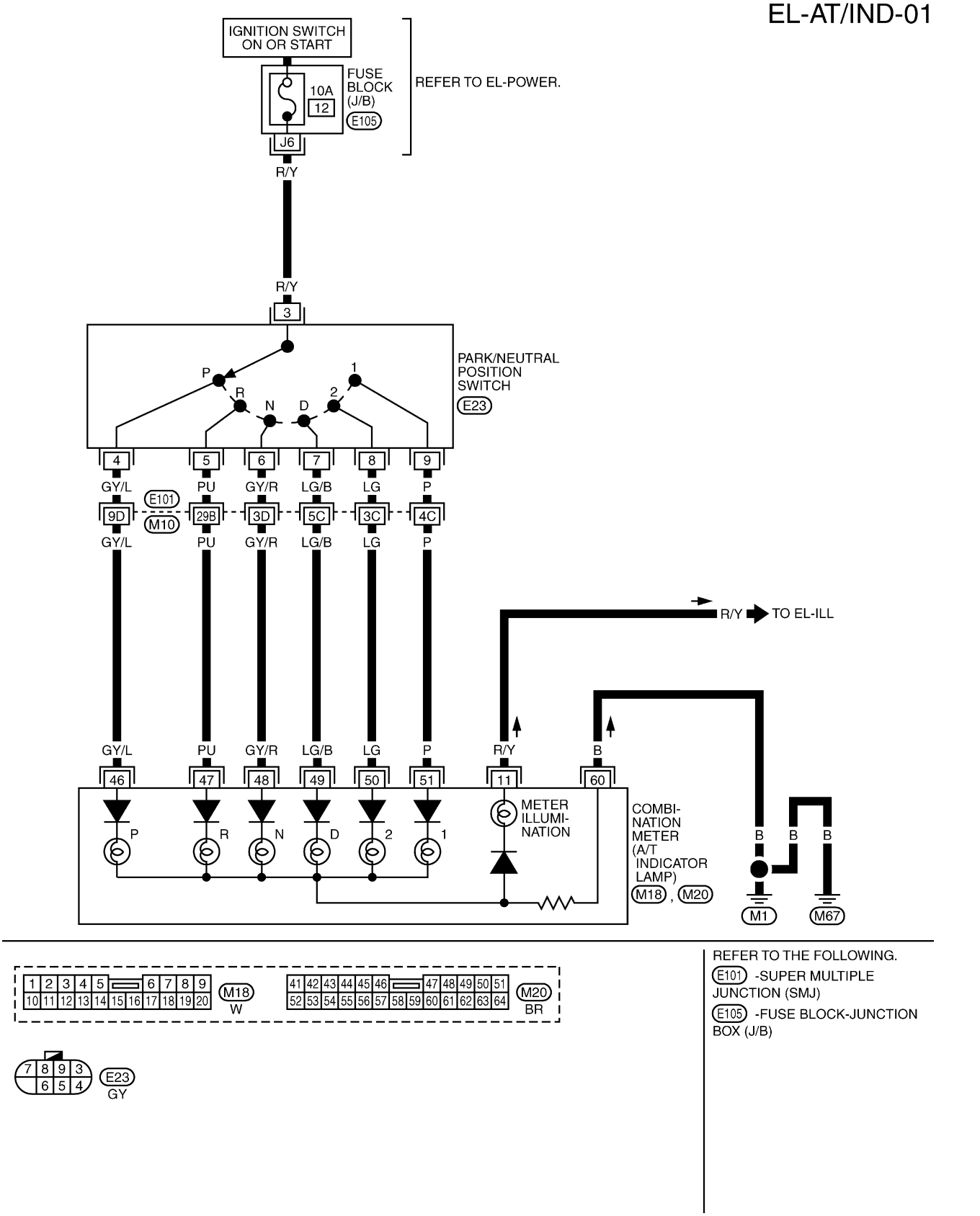

TEL807B

Component Parts and Harness Connector Location

NMEL0052

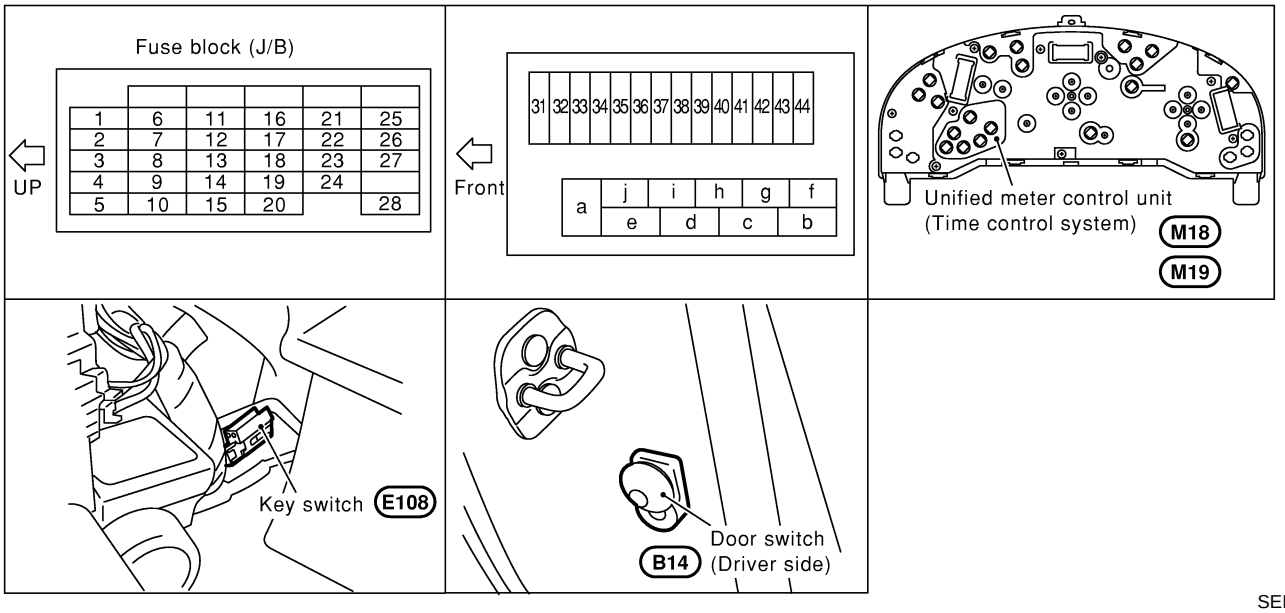

SEL254Y

System Description

NMEL0053

The warning buzzer is controlled by unified meter control unit (time control system).
The warning buzzer is located in the combination meter.
Power is supplied at all times

- through 10A fuse [No. 28, located in the fuse block (J/B)]
- to key switch terminal 1,
- to combination meter terminal 13, and
- through 10A fuse (No. 39, located in the fuse and fusible link box)
- to lighting switch terminal 11.

With the ignition switch in the ON or START position, power is supplied

- through 10A fuse [No. 11, located in the fuse block (J/B)]
- to combination meter terminal 12.

Ground is supplied to combination meter terminal 9 through body grounds M1 and M67.
When a signal, or combination of signals, is received by the unified meter control unit (time control system), the warning buzzer will sound.

IGNITION KEY WARNING BUZZER

NMEL0053S01

With the key in the ignition key cylinder, the ignition switch in the OFF position, and the driver's door open, the warning buzzer will sound.
Power is supplied

- from key switch terminal 2
- to combination meter terminal 33.

Ground is supplied

- from door switch (driver side) terminal 2
- to combination meter terminal 24.

Door switch (driver side) terminal 3 is grounded through body grounds B2 and B18.

LIGHT WARNING BUZZER

NMEL0053S02

With ignition switch OFF, driver's door open, and lighting switch in 1ST or 2ND position, warning buzzer will sound.
Power is supplied

- from lighting switch terminal 12
- to combination meter terminal 32.

Ground is supplied

- from door switch (driver side) terminal 2
- to combination meter terminal 24.

Door switch (driver side) terminal 3 is grounded through body grounds B2 and B18.

Wiring Diagram — BUZZER —

NMEL0054

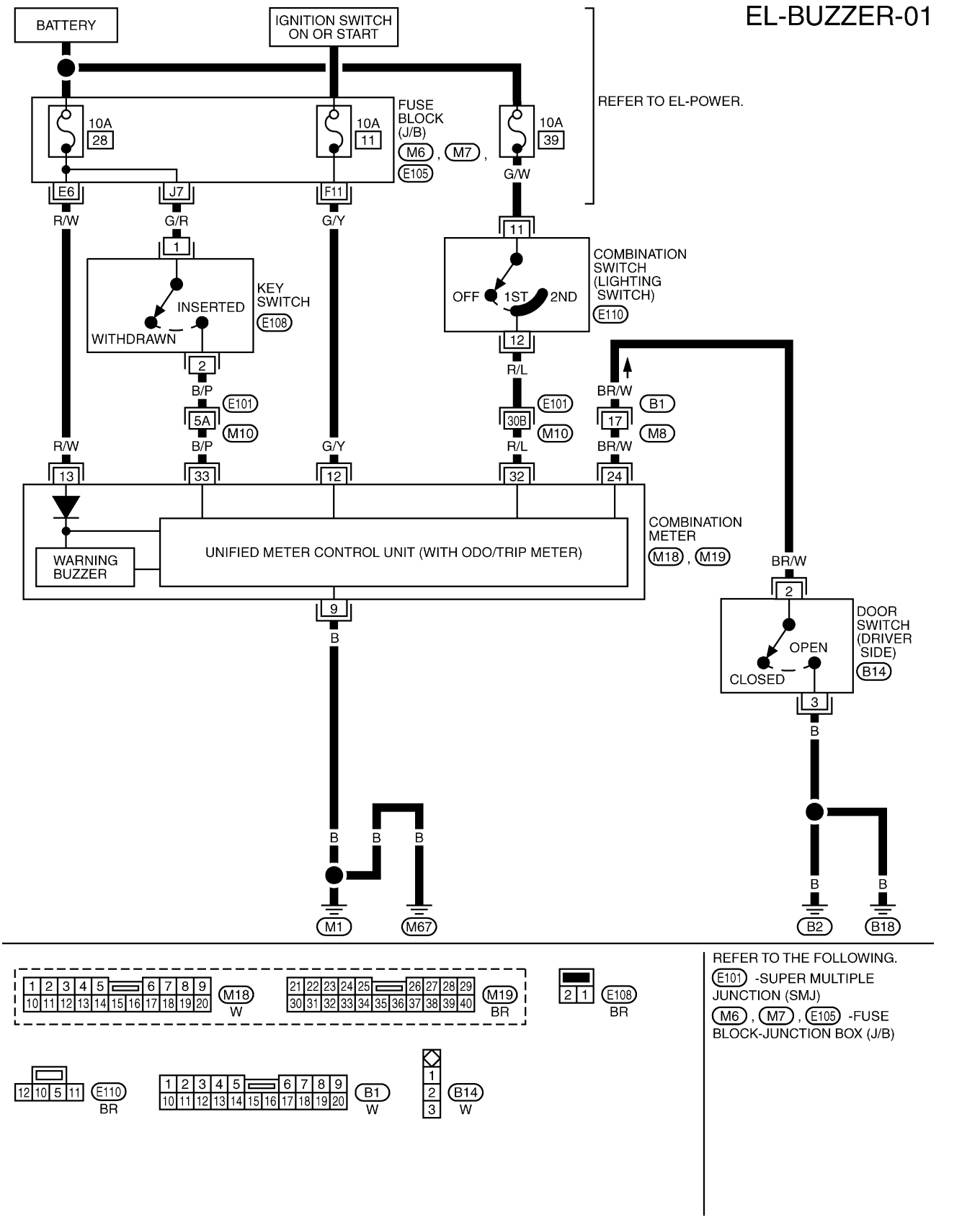

TEL808B

Trouble Diagnoses

NMEL0055

SYMPTOM CHART

NMEL0055S01

REFERENCE PAGE (EL-)	82	83	84	85
SYMPTOM	POWER SUPPLY AND GROUND CIRCUIT CHECK	DIAGNOSTIC PROCEDURE 1 (LIGHTING SWITCH INPUT SIGNAL CHECK)	DIAGNOSTIC PROCEDURE 2 (KEY SWITCH INSERT SIGNAL CHECK)	DIAGNOSTIC PROCEDURE 3
Light warning buzzer does not activate.	X	X		X
Ignition key warning buzzer does not activate.	X		X	X
All warning buzzers do not activate.	X			X

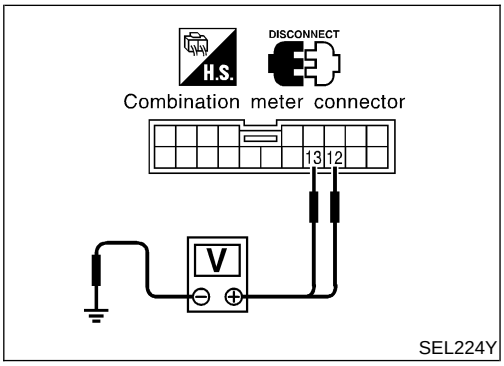

POWER SUPPLY AND GROUND CIRCUIT CHECK

NMEL0055S02

Power Supply Circuit Check

NMEL0055S0201

Terminals			Ignition switch position		
(+)		(−)	OFF	AAC	ON
Connector	Terminal (Wire color)				
M18	13 (R/W)	Ground	Battery voltage	Battery voltage	Battery voltage
	12 (G/Y)	Ground	0V	0V	Battery voltage

If NG, check the following:

- 10A fuse [No. 28, located in fuse block (J/B)]
- 10A fuse [No. 11, located in fuse block (J/B)]
- Harness for open or short between fuse and combination meter

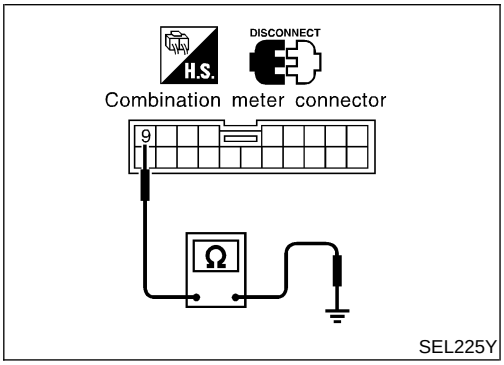

Ground Circuit Check

NMEL0055S0202

Terminals			Continuity
(+)		(−)	
Connector	Terminal (Wire color)		
M18	9 (B)	Ground	Yes

DIAGNOSTIC PROCEDURE 1 (LIGHTING SWITCH INPUT SIGNAL CHECK)

=NMEL0055S03

1	CHECK LIGHTING SWITCH INPUT SIGNAL

Check voltage between combination meter harness connector M19 terminal 32 (R/L) and ground.

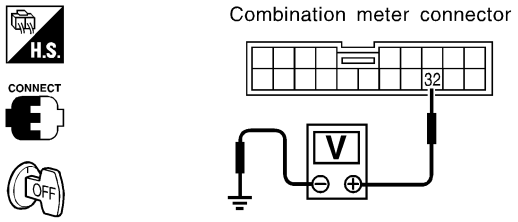

Voltage [V]:
Condition of lighting switch: 1ST or 2ND
Approx. 12
Condition of lighting switch: OFF
0

SEL231Y

OK or NG

OK	▶	Lighting switch is OK.
NG	▶	**Check the following.** ● 10A fuse (No. 39, located in the fuse and fusible link box) ● Lighting switch ● Harness for open or short between combination meter and fuse ● Harness for open or short between combination meter and lighting switch

DIAGNOSTIC PROCEDURE 2 (KEY SWITCH INSERT SIGNAL CHECK)

=NMEL0055S04

1	CHECK KEY SWITCH INPUT SIGNAL

Check voltage between combination meter harness connector M19 terminal 33 (B/P) and ground.

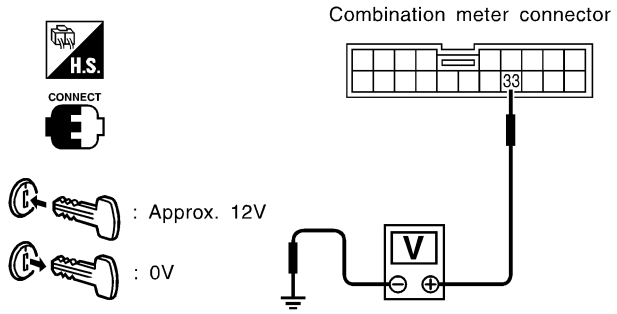

Voltage [V]:

Condition of key switch: key is inserted.
Approx. 12
Condition of key switch: key is withdrawn.
0

SEL222Y

OK or NG

OK	▶	Key switch is OK.
NG	▶	GO TO 2.

2	CHECK KEY SWITCH (INSERT)

1. Disconnect key switch harness connector.
2. Check continuity between key switch harness connector E108 terminals 1 and 2.

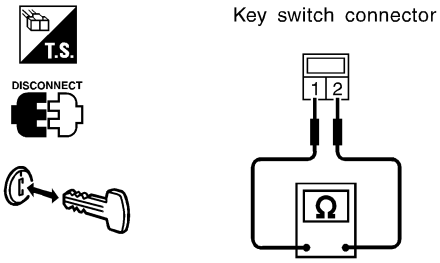

Continuity:
Condition of key switch: key is inserted.
Yes
Condition of key switch: key is withdrawn.
No

SEL223Y

OK or NG

OK	▶	**Check the following.** ● 10A fuse [No. 28, located in fuse block (J/B)] ● Harness for open or short between key switch and fuse ● Harness for open or short between combination meter and key switch
NG	▶	Replace key switch.

DIAGNOSTIC PROCEDURE 3

=NMEL0055S06

1 CHECK IGNITION ON SIGNAL

1. Disconnect combination meter harness connector.
2. Check voltage between combination meter harness connector M18 terminal 12 (G/Y) and ground.

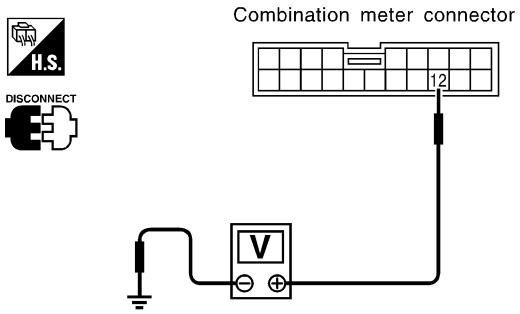

Terminal No.		Ignition switch position		
(+)	(–)	OFF	ACC	ON
12	Ground	0V	0V	Battery voltage

SEL216Y

OK or NG

OK	▶	GO TO 2.
NG	▶	**Check the following.** ● 10A fuse [No. 11, located in fuse block (J/B)] ● Harness for open or short between combination meter and fuse

2 CHECK DOOR SWITCH INPUT SIGNAL

1. Connect combination meter harness connector.
2. Check voltage between combination meter harness connector M19 terminal 24 (BR/W) and ground.

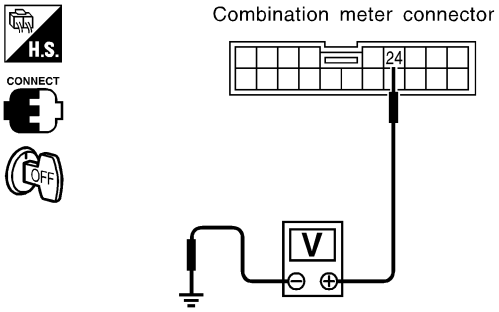

Terminals No.		Condition (Driver's door)	Voltage [V]
(+)	(–)		
24	Ground	Open	0
		Closed	Approx. 5

SEL232Y

OK or NG

OK	▶	Driver side door switch is OK.
NG	▶	GO TO 3.

3	CHECK DRIVER SIDE DOOR SWITCH

1. Disconnect door switch harness connector.
2. Check continuity between door switch harness connector B14 terminals 2 and 3, and terminal and ground.

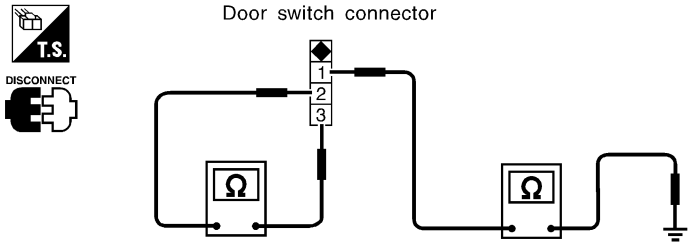

Terminal No.	Condition (Driver's door switch)	Continuity
2-3	Pushed	No
	Released	Yes
1-Ground	Pushed	No
	Released	Yes

SEL233Y

OK or NG

OK	▶	**Check the following.** ● Driver side door switch ground circuit and condition ● Harness for open or short between combination meter and driver side door switch
NG	▶	Replace driver side door switch.

System Description

NMEL0057

WIPER OPERATION

NMEL0057S01

The wiper switch is controlled by a lever built into the combination switch.
There are three wiper switch positions:

- LO speed
- HI speed
- INT (Intermittent)

With the ignition switch in the ON or START position, power is supplied

- through 20A fuse [No. 6, located in the fuse block (J/B)]
- to wiper motor terminal 4.

Low and High Speed Wiper Operation

NMEL0057S0101

Ground is supplied to wiper switch terminal 17 through body grounds E43 and E57.
When the wiper switch is placed in the LO position, ground is supplied

- through terminal 14 of the wiper switch
- to wiper motor terminal 2.

With power and ground supplied, the wiper motor operates at low speed.
When the wiper switch is placed in the HI position, ground is supplied

- through terminal 16 of the wiper switch
- to wiper motor terminal 3.

With power and ground supplied, the wiper motor operates at high speed.

Auto Stop Operation

NMEL0057S0102

With wiper switch turned OFF, wiper motor will continue to operate until wiper arms reach windshield base.
When wiper arms are not located at base of windshield with wiper switch OFF, ground is provided

- from terminal 14 of the wiper switch
- to wiper motor terminal 2, in order to continue wiper motor operation at low speed.

Ground is also supplied

- through terminal 13 of the wiper switch
- to wiper motor terminal 5
- through terminal 6 of the wiper motor, and
- through body grounds M67 and M1.

When wiper arms reach base of windshield, wiper motor terminals 4 and 5 are connected instead of terminals 5 and 6. Wiper motor will then stop wiper arms at the STOP position.

Intermittent Operation

NMEL0057S0103

The wiper motor operates the wiper arms one time at low speed at a set interval of approximately 2 to 13 seconds. This feature is controlled by the wiper amplifier (INT SW) combined with wiper switch.
When the wiper switch is placed in the INT position, ground is supplied to wiper amplifier.
The desired interval time is input to wiper amplifier (INT VR) from wiper volume switch combined with wiper switch.
Then intermittent ground is supplied

- to wiper motor terminal 2
- from terminal 14 of wiper switch
- through wiper amplifier (OUTPUT).

The wiper motor operates at low speed at the desired interval.

WASHER OPERATION

NMEL0057S02

With the ignition switch in the ON or START position, power is supplied

- through 20A fuse [No. 6, located in the fuse block (J/B)]
- to washer motor terminal 1.

When the lever is pulled to the WASH position, ground is supplied

- to washer motor terminal 2
- from terminal 18 of the wiper switch
- through terminal 17 of the wiper switch, and

- through body grounds E43 and E57.

With power and ground supplied, the washer motor operates.
When the lever is pulled to the WASH position for one second or more, the wiper motor operates at low speed for approximately 3 seconds to clean windshield. This feature is controlled by the wiper amplifier in the same manner as the intermittent operation.

Wiring Diagram — WIPER —

NMEL0058

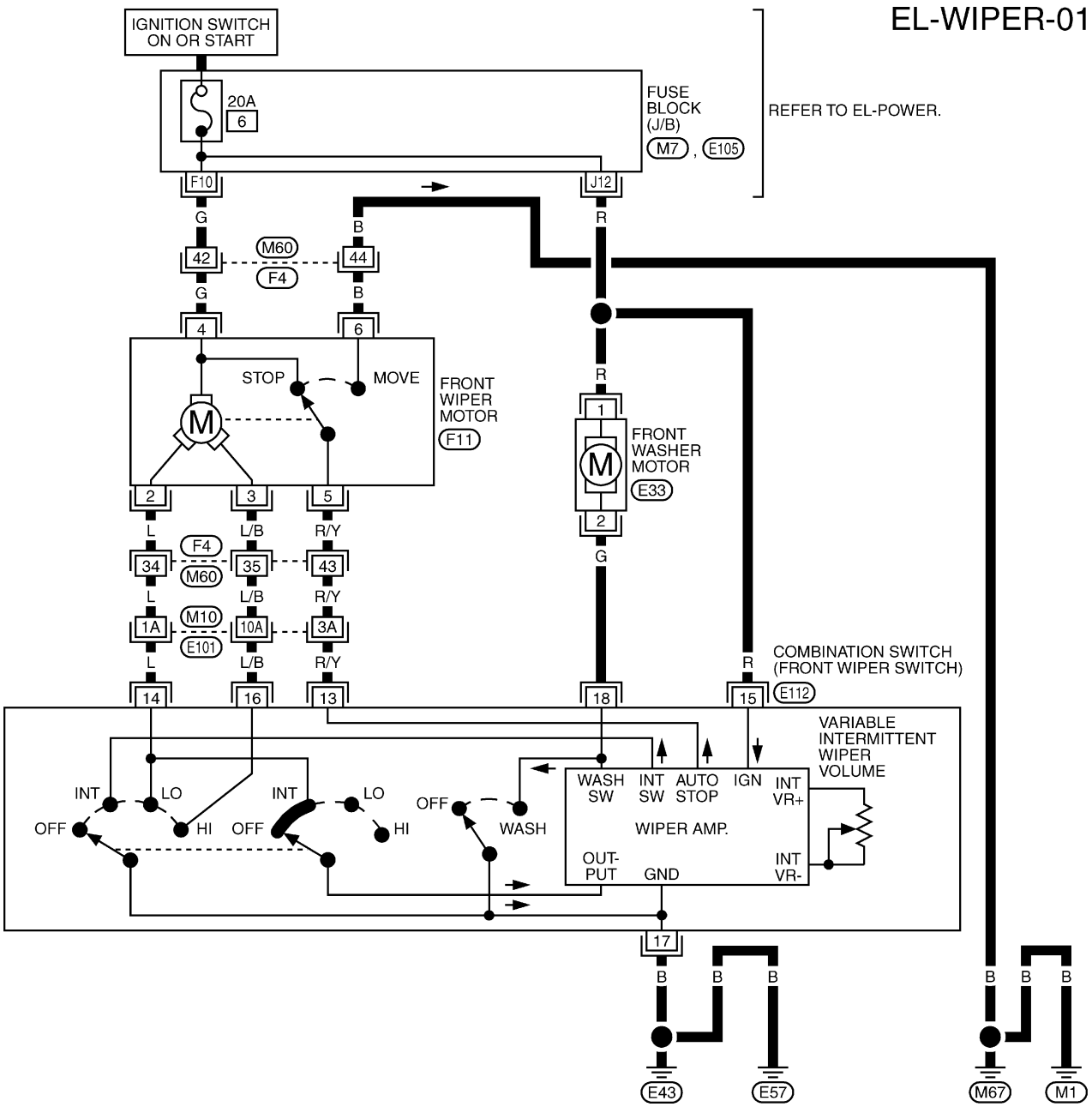

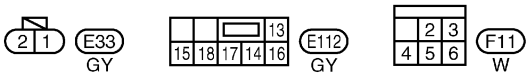

REFER TO THE FOLLOWING.
E101 , F4 -SUPER MULTIPLE JUNCTION (SMJ)
M7 , E105 -FUSE BLOCK-JUNCTION BOX (J/B)

TEL809B

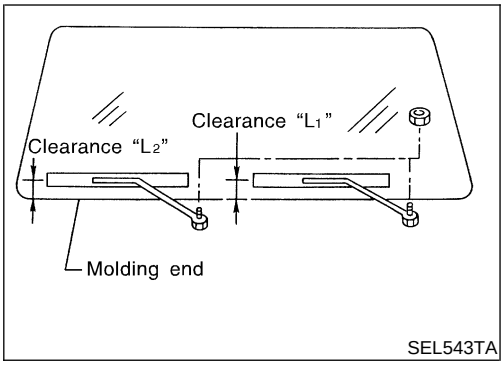

Removal and Installation

NMEL0060

WIPER ARMS

NMEL0060S01

1. Prior to wiper arm installation, turn on wiper switch to operate wiper motor and then turn it "OFF" (Auto Stop).
2. Lift the blade up and then set it down onto glass surface to set the blade center to clearance "L_1" & "L_2" immediately before tightening nut.
3. Eject washer fluid. Turn on wiper switch to operate wiper motor and then turn it "OFF".
4. Ensure that wiper blades stop within clearance "L_1" & "L_2".
   Clearance "L_1": 17.5 - 32.5 mm (1.161 - 1.752 in)
   Clearance "L_2": 29.5 - 44.5 mm (0.689 - 1.280 in)

- Tighten wiper arm nuts to specified torque.
  Front wiper: 21 - 26 N·m (2.1 - 2.7 kg-m, 16 - 19 ft-lb)

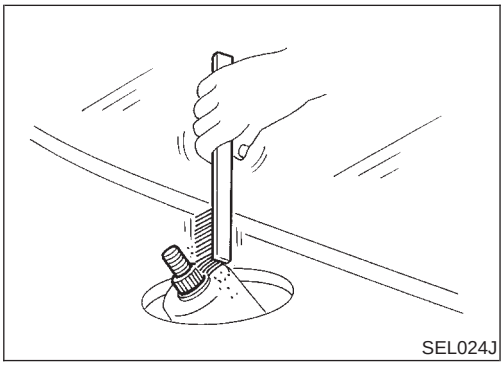

- **Before reinstalling wiper arm, clean up the pivot area as illustrated. This will reduce possibility of wiper arm looseness.**

WIPER LINKAGE

NMEL0060S02

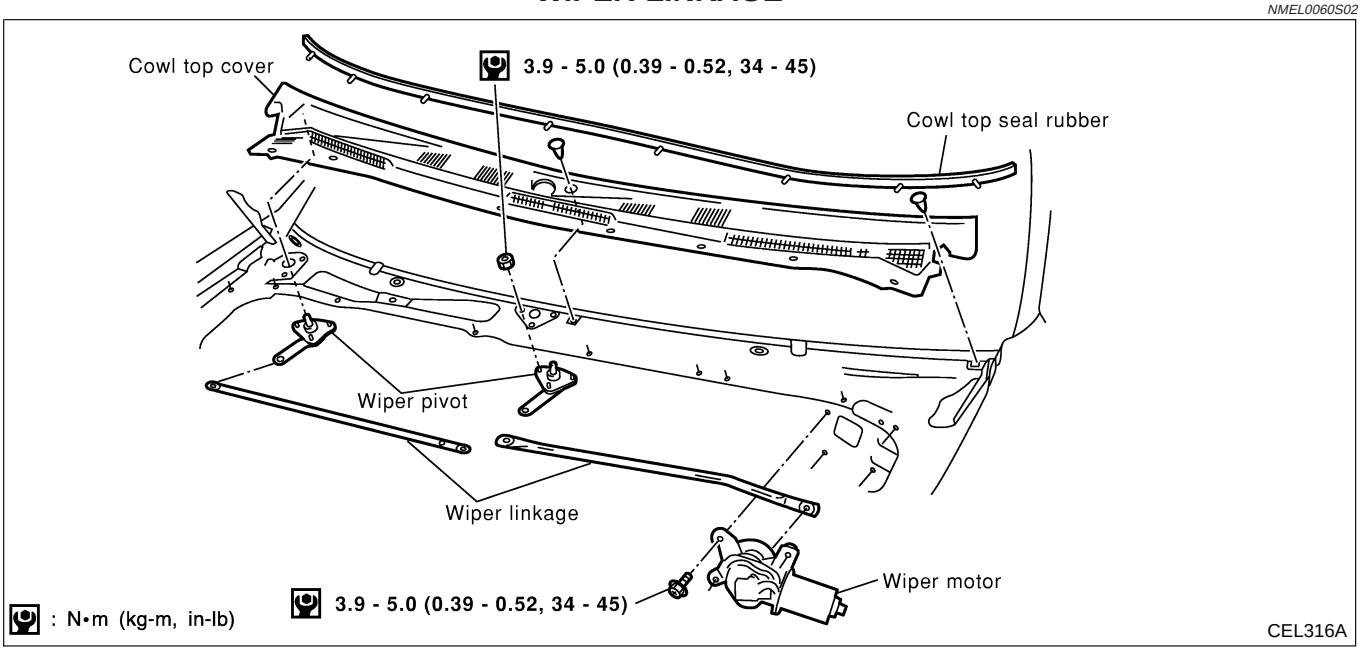

Removal

NMEL0060S0201

1. Remove cowl top seal rubber and cowl top cover.
2. Remove wiper motor connector.
3. Remove nuts that secure wiper pivot.
4. Remove 4 screws that secure wiper motor.
5. Detach wiper motor from wiper linkage at ball joint.
6. Remove wiper linkage.

Be careful not to break ball joint rubber boot.

Installation

NMEL0060S0202

- Grease ball joint portion before installation.

1. Installation is the reverse order of removal.

Washer Nozzle Adjustment

NMEL0061

- Adjust washer nozzle with suitable tool as shown in the figure at left.

Adjustable range: ±10°

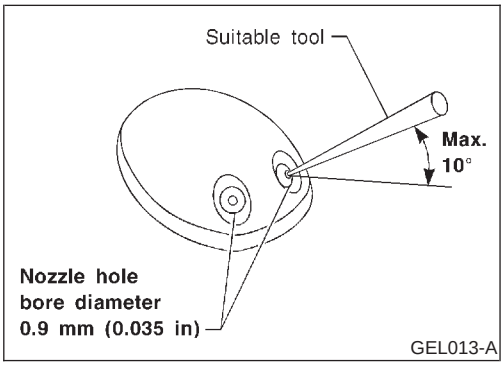

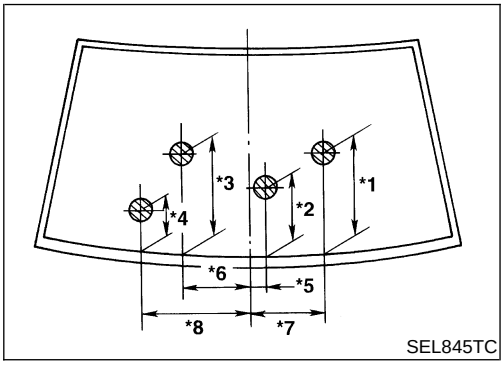

Unit: mm (in)

*1	358 (14.09)	*5	70 (2.76)
*2	245 (9.65)	*6	245 (9.65)
*3	300 (11.81)	*7	378 (14.88)
*4	203 (7.99)	*8	503 (19.80)

*: The diameters of these circles are less than 80 mm (3.15 in).

Washer Tube Layout

NMEL0062

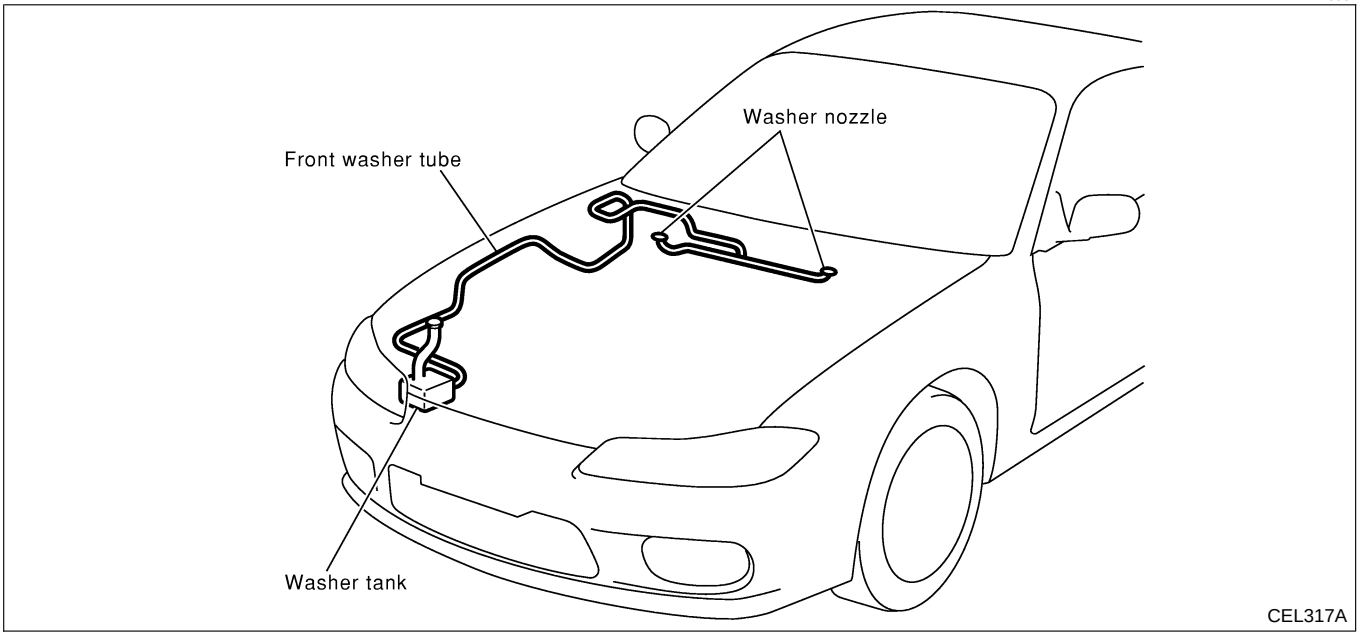

Wiring Diagram — HORN —

NMEL0071

EL-HORN-01

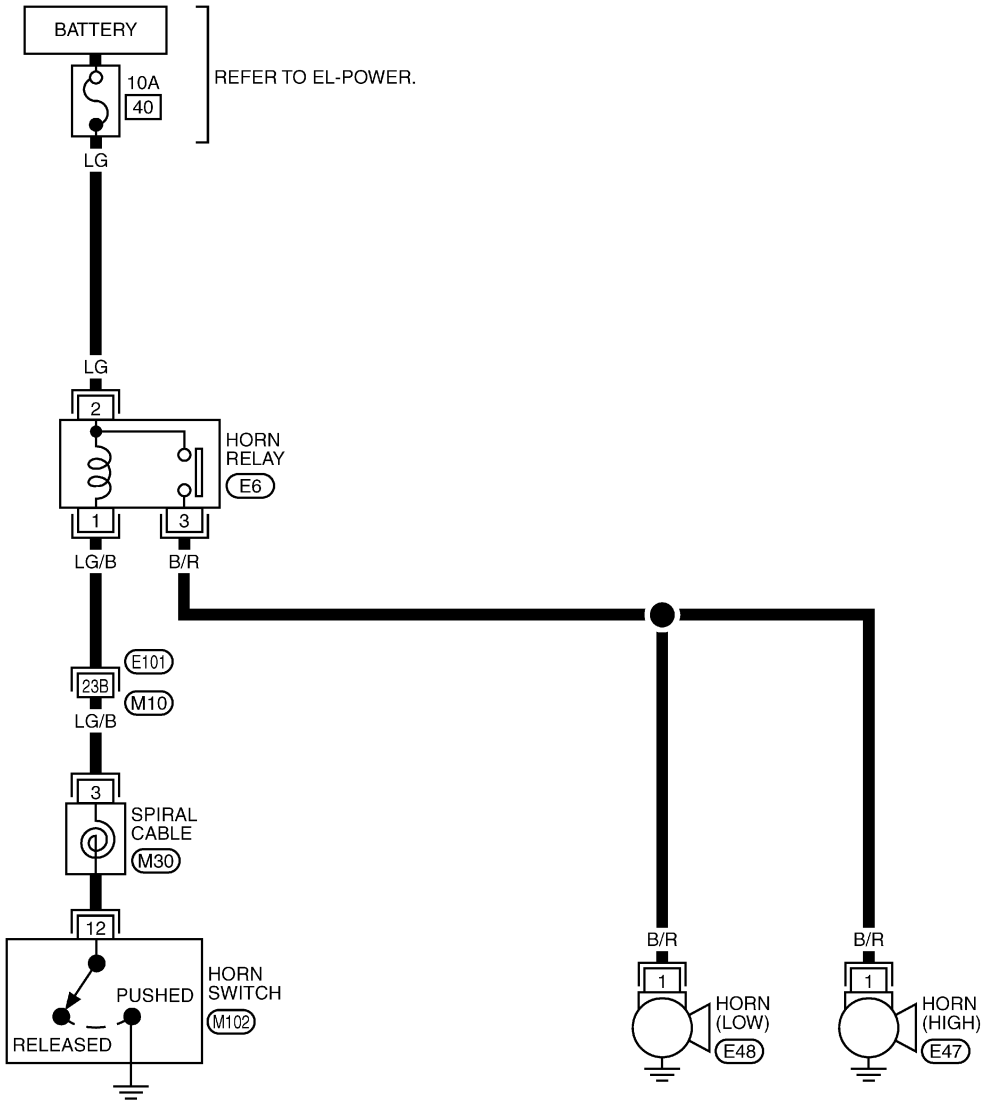

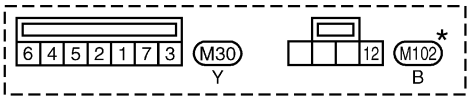

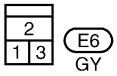

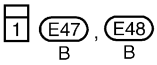

REFER TO THE FOLLOWING.
E101 -SUPER MULTIPLE JUNCTION (SMJ)

*: THIS CONNECTOR IS NOT SHOWN IN "HARNESS LAYOUT".

TEL810B

Wiring Diagram — CIGAR —

NMEL0156

EL-CIGAR-01

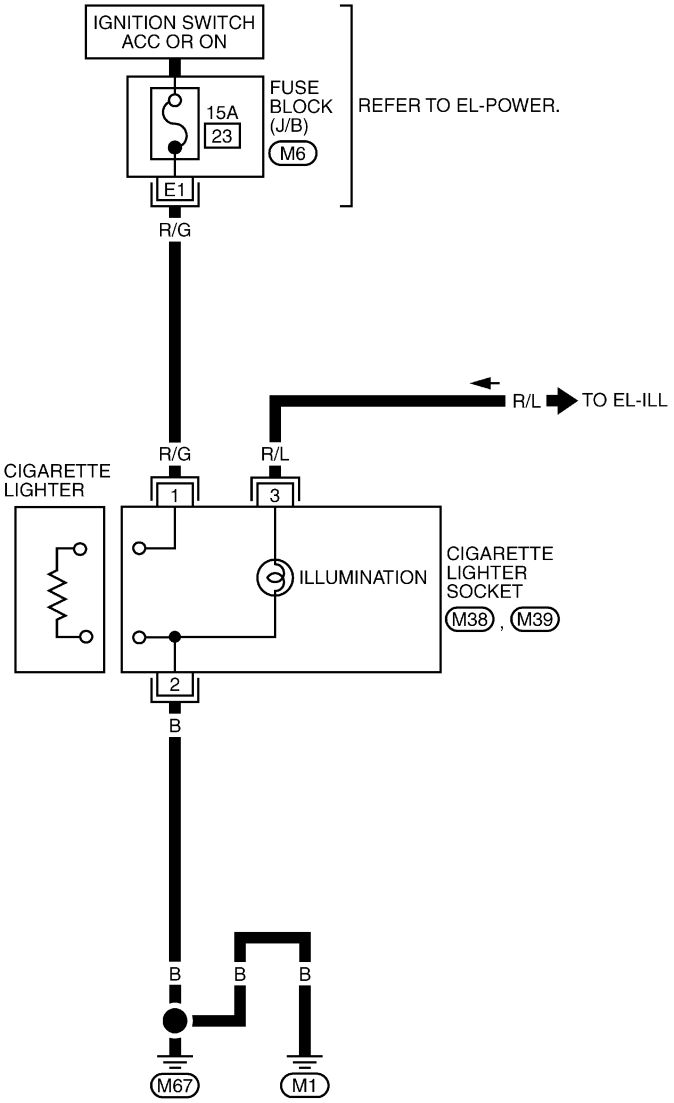

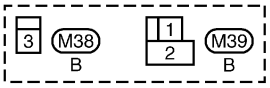

REFER TO THE FOLLOWING.
M6 -FUSE BLOCK-JUNCTION BOX (J/B)

TEL811B

Wiring Diagram — CLOCK —

NMEL0166

EL-CLOCK-01

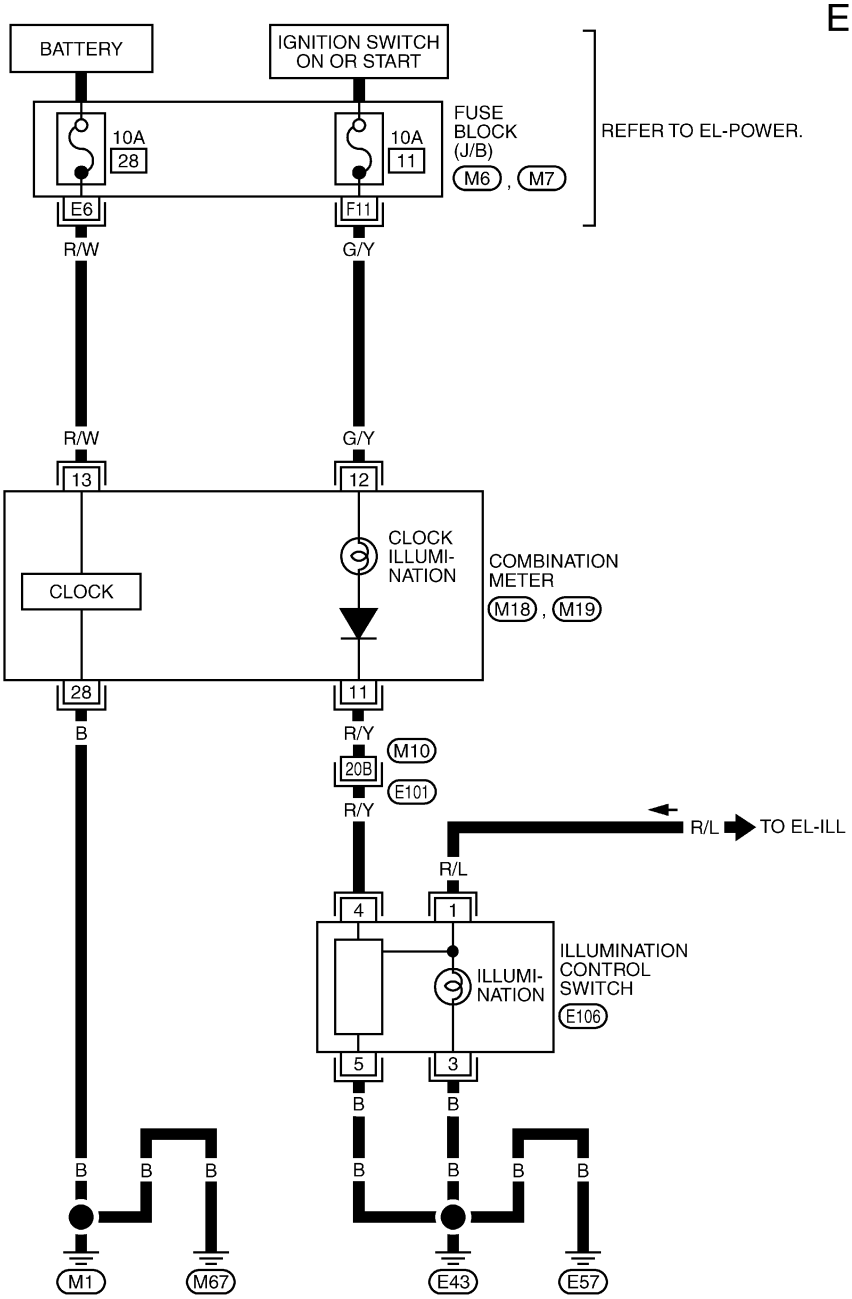

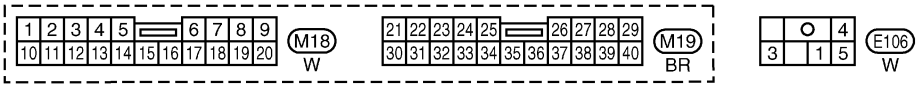

REFER TO THE FOLLOWING.
E101 -SUPER MULTIPLE JUNCTION (SMJ)
M6 , M7 -FUSE BLOCK-JUNCTION BOX (J/B)

TEL812B

Component Parts and Harness Connector Location

NMEL0072

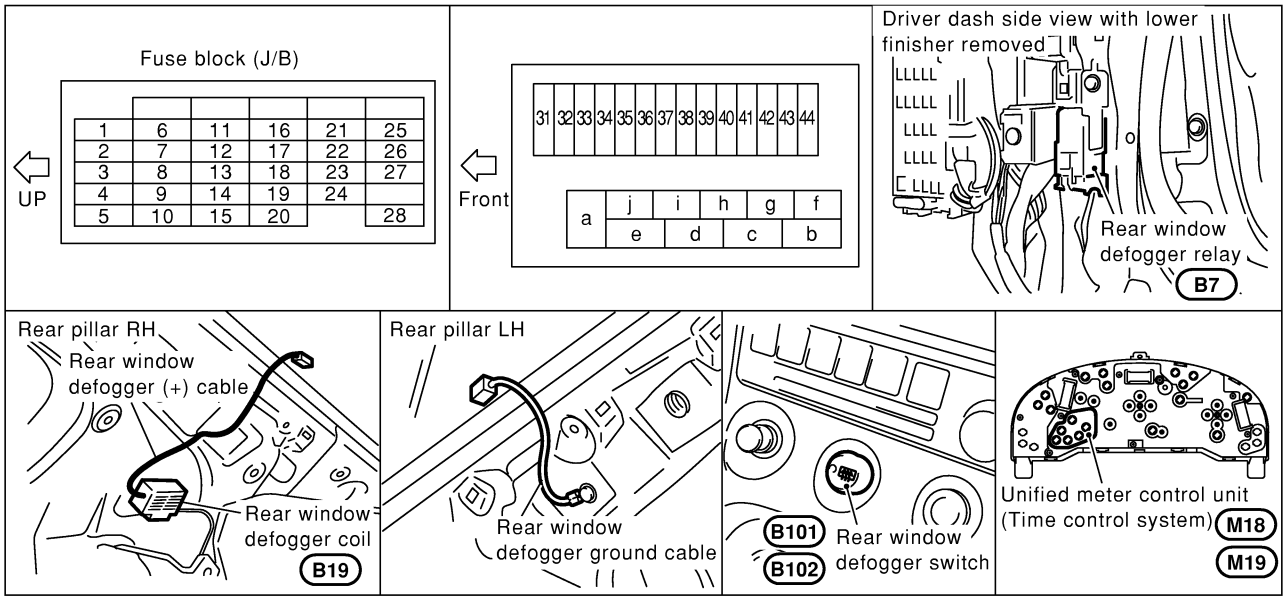

SEL252Y

System Description

NMEL0073

The rear window defogger system is controlled by the unified meter control unit (time control system). The rear window defogger operates only for approximately 15 minutes.
Power is supplied at all times

- to rear window defogger relay terminal 3
- through 15A fuse [No. 25, located in the fuse block (J/B)] and
- to rear window defogger relay terminal 6
- through 15A fuse [No. 21, located in the fuse block (J/B)].

With the ignition switch in the ON or START position, power is supplied

- through 10A fuse [No. 5, located in the fuse block (J/B)]
- to the rear window defogger relay terminal 1 and
- through 10A fuse [No. 11, located in the fuse block (J/B)]
- to combination meter terminal 12.

Ground is supplied to terminal 2 of the rear window defogger switch through body grounds M1 and M67.
When the rear window defogger switch is turned ON, ground is supplied

- through terminal 1 of the rear window defogger switch
- to combination meter terminal 20.

Terminal 37 of the combination meter then supplies ground to the rear window defogger relay terminal 2.
With power and ground supplied, the rear window defogger relay is energized.
Power is supplied

- through terminals 5 and 7 of the rear window defogger relay
- to the rear window defogger terminal 1.

Terminal 2 of the rear window defogger is grounded through body ground B103.
With power and ground supplied, the rear window defogger filaments heat and defog the rear window.
When the system is activated, the rear window defogger indicator illuminates in the rear window defogger switch.
Power is supplied

- to terminal 3 of the rear window defogger switch
- from terminals 5 and 7 of the rear window defogger relay.

Terminal 4 of the rear window defogger switch is grounded through body grounds M1 and M67.

Wiring Diagram — DEF —

=NMEL0074

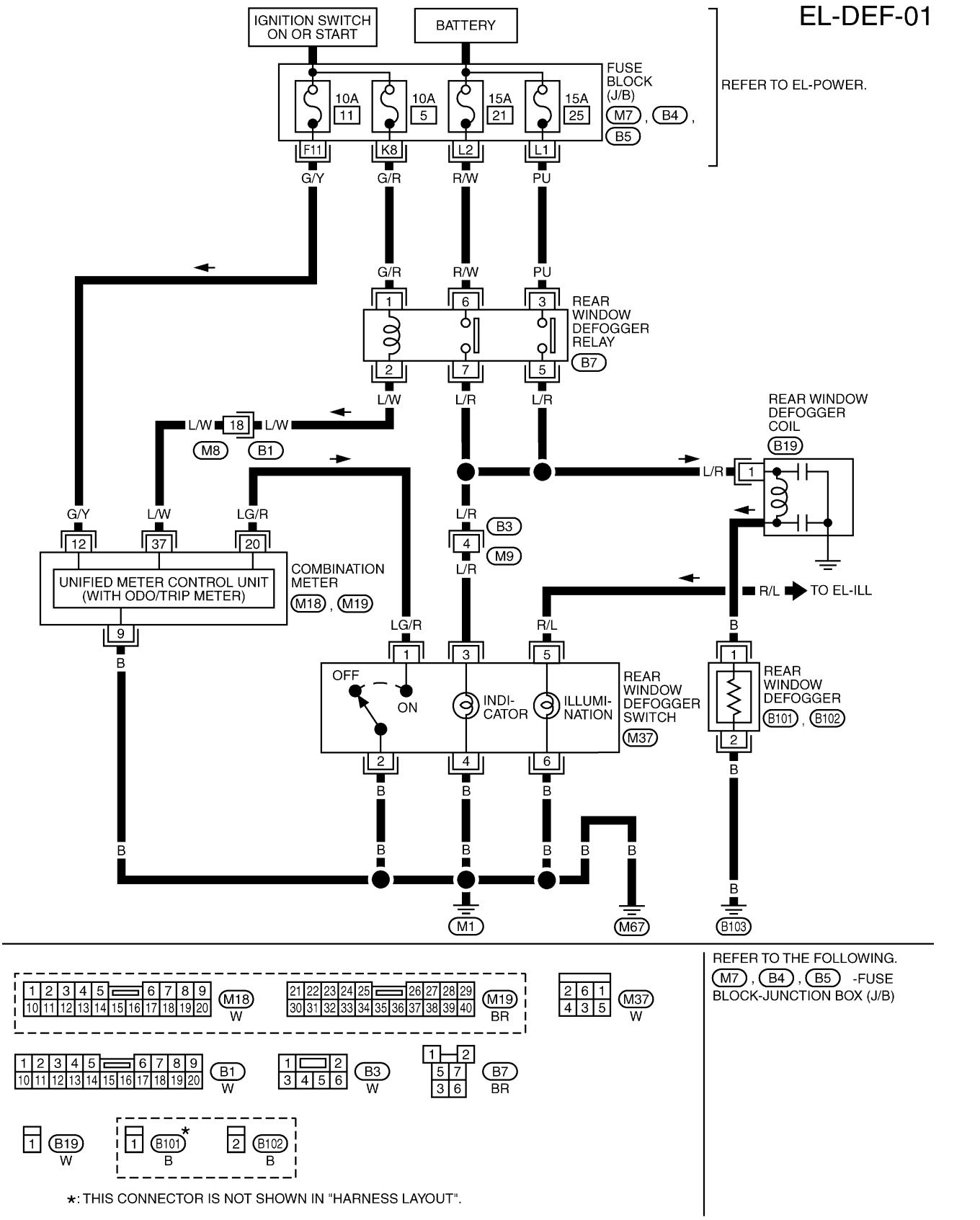

REFER TO THE FOLLOWING.
M7 , B4 , B5 -FUSE BLOCK-JUNCTION BOX (J/B)

*: THIS CONNECTOR IS NOT SHOWN IN "HARNESS LAYOUT".

TEL813B

Trouble Diagnoses

NMEL0075

DIAGNOSTIC PROCEDURE

NMEL0075S01

SYMPTOM: Rear window defogger does not activate, or does not go off after activating.

1	CHECK REAR WINDOW DEFOGGER OUTPUT SIGNAL

1. Turn ignition switch to ON position.
2. Check voltage between combination meter harness connector M19 terminal 37 (L/W) and ground.

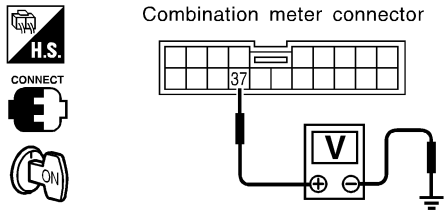

Voltage [V]:
Rear window defogger switch is "OFF".
Approx. 12
Rear window defogger switch is "ON".
0

SEL234Y

OK or NG

OK	▶	**Check the following.** ● Rear window defogger relay (Refer to EL-100.) ● Rear window defogger circuit ● Rear window defogger filament (Refer to EL-101.)
NG	▶	GO TO 2.

2	CHECK DEFOGGER RELAY COIL SIDE CIRCUIT

1. Disconnect combination meter harness connector.
2. Turn ignition switch to ON position.
3. Check voltage between combination meter harness connector M19 terminal 37 (L/W) and ground.

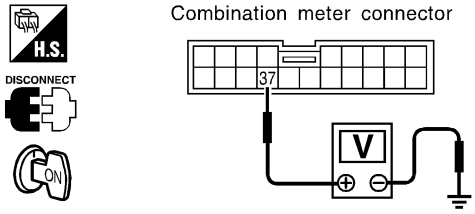

Battery voltage should exist.

SEL235Y

OK or NG

OK	▶	GO TO 3.
NG	▶	**Check the following.** ● 10A fuse [No. 5, located in the fuse block (J/B)] ● Rear window defogger relay ● Harness for open or short between fuse and rear window defogger relay ● Harness for open or short between rear window defogger relay and combination meter

3	CHECK REAR WINDOW DEFOGGER SWITCH INPUT SIGNAL

Check continuity between combination meter harness connector M18 terminal 20 (LG/R) and ground.

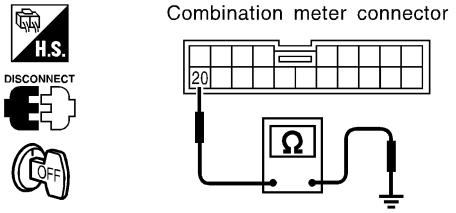

Continuity:
Rear window defogger switch is pushed.
Continuity should exist.
Rear window defogger switch is released.
Continuity should not exist.

SEL236Y

OK or NG

OK	▶	GO TO 4.
NG	▶	**Check the following.** ● Rear window defogger switch (Refer to EL-100.) ● Harness for open or short between combination meter and rear window defogger switch ● Rear window defogger switch ground circuit

4	CHECK IGNITION INPUT SIGNAL

Check voltage between combination meter harness connector M18 terminal 12 (G/Y) and ground.

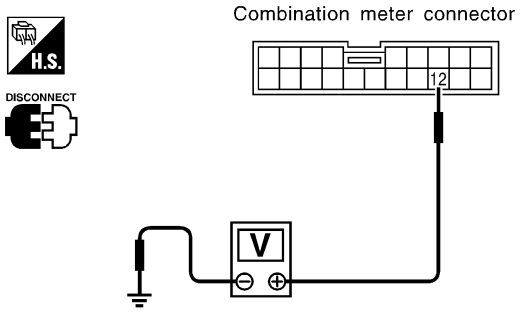

Terminal No.		Ignition switch position		
(+)	(–)	OFF	ACC	ON
12	Ground	0V	0V	Battery voltage

SEL216Y

OK or NG

OK	▶	GO TO 5.
NG	▶	**Check the following.** ● 10A fuse [No. 11, located in the fuse block (J/B)] ● Harness for open or short between combination meter and fuse

5	CHECK COMBINATION METER GROUND CIRCUIT

Check continuity between combination meter harness connector M18 terminal 9 (B) and ground.

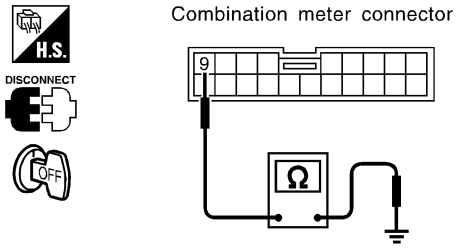

Continuity should exist.

SEL237Y

OK or NG

OK	▶	Replace unified meter control unit.
NG	▶	Repair harness or connector.

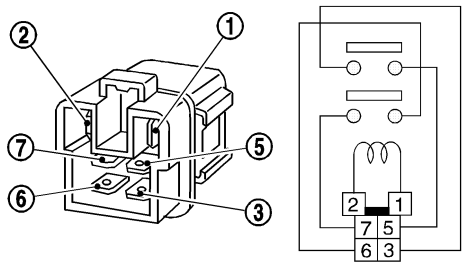

SEC202B

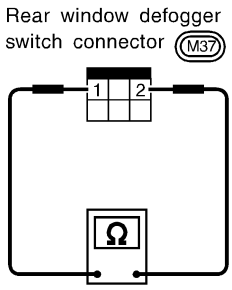

SEL430TH

Electrical Components Inspection

NMEL0076

REAR WINDOW DEFOGGER RELAY

NMEL0076S01

Check continuity between terminals 3 and 5, 6 and 7.

Condition	Continuity
12V direct current supply between terminals 1 and 2	Yes
No current supply	No

REAR WINDOW DEFOGGER SWITCH

NMEL0076S02

Check continuity between terminals when rear window defogger switch is pushed and released.

Terminals	Condition	Continuity
1 - 2	Rear window defogger switch is pushed.	Yes
	Rear window defogger switch is released.	No

Filament Check

=NMEL0077

1. Attach probe circuit tester (in volt range) to middle portion of each filament.

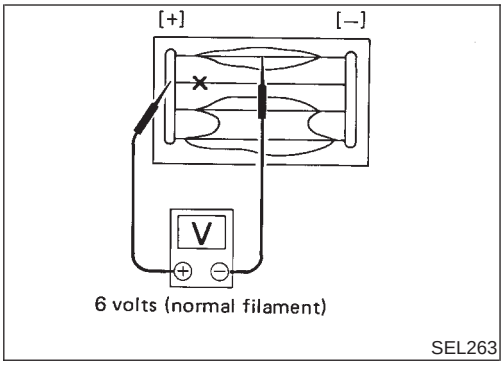

- **When measuring voltage, wrap tin foil around the top of the negative probe. Then press the foil against the wire with your finger.**

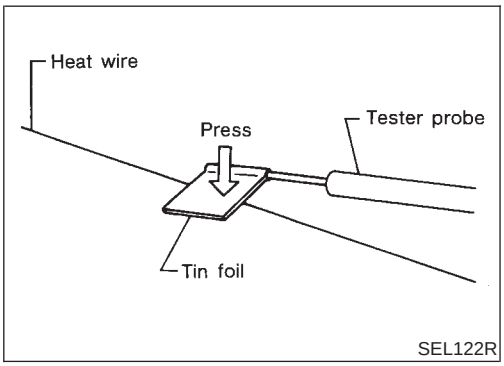

2. If a filament is burned out, circuit tester registers 0 or 12 volts.

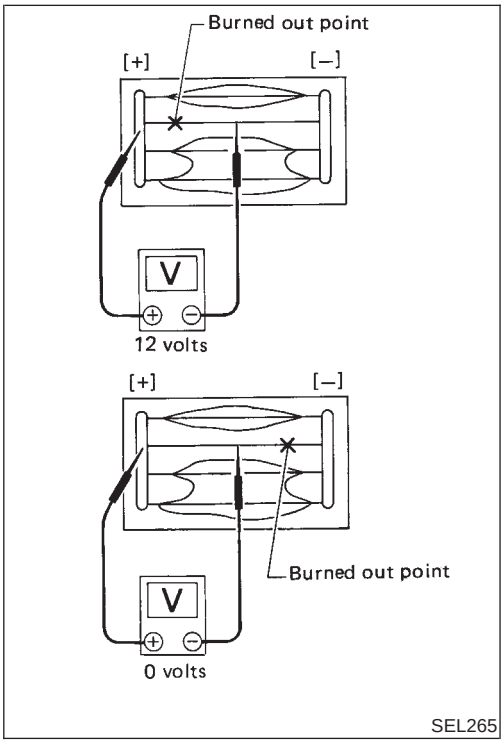

3. To locate burned out point, move probe to left and right along filament. Test needle will swing abruptly when probe passes the point.

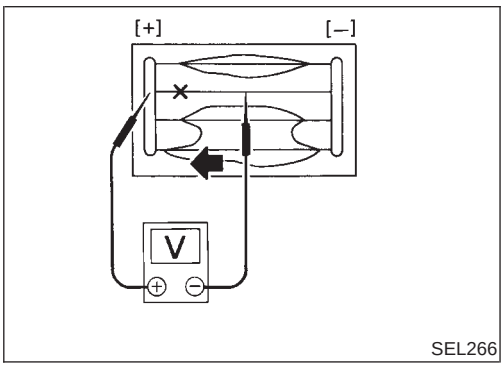

Filament Repair

NMEL0078

REPAIR EQUIPMENT

NMEL0078S01

1) Conductive silver composition (Dupont No. 4817 or equivalent)
2) Ruler 30 cm (11.8 in) long
3) Drawing pen
4) Heat gun
5) Alcohol
6) Cloth

REPAIRING PROCEDURE

NMEL0078S02

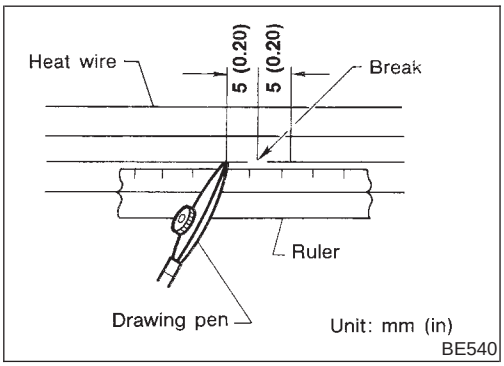

1. Wipe broken heat wire and its surrounding area clean with a cloth dampened in alcohol.
2. Apply a small amount of conductive silver composition to tip of drawing pen.

Shake silver composition container before use.

3. Place ruler on glass along broken line. Deposit conductive silver composition on break with drawing pen. Slightly overlap existing heat wire on both sides [preferably 5 mm (0.20 in)] of the break.

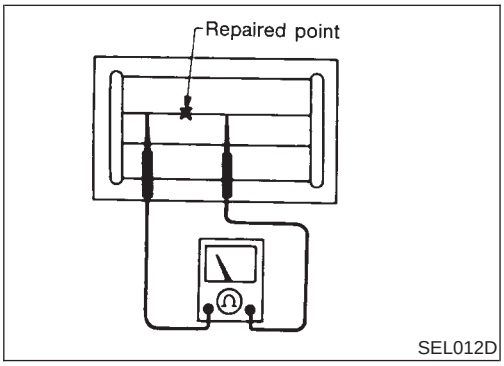

4. After repair has been completed, check repaired wire for continuity. This check should be conducted 10 minutes after silver composition is deposited.

Do not touch repaired area while test is being conducted.

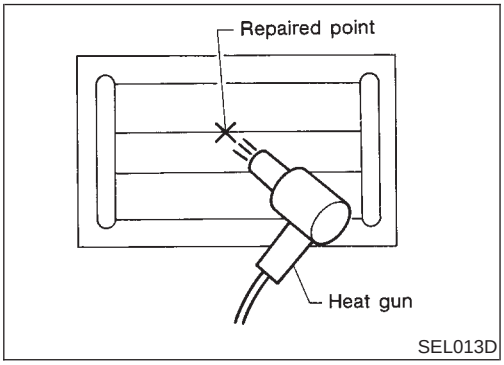

5. Apply a constant stream of hot air directly to the repaired area for approximately 20 minutes with a heat gun. A minimum distance of 3 cm (1.2 in) should be kept between repaired area and hot air outlet. If a heat gun is not available, let the repaired area dry for 24 hours.

Wiring Diagram — AUDIO —

NMEL0081

EL-AUDIO-01

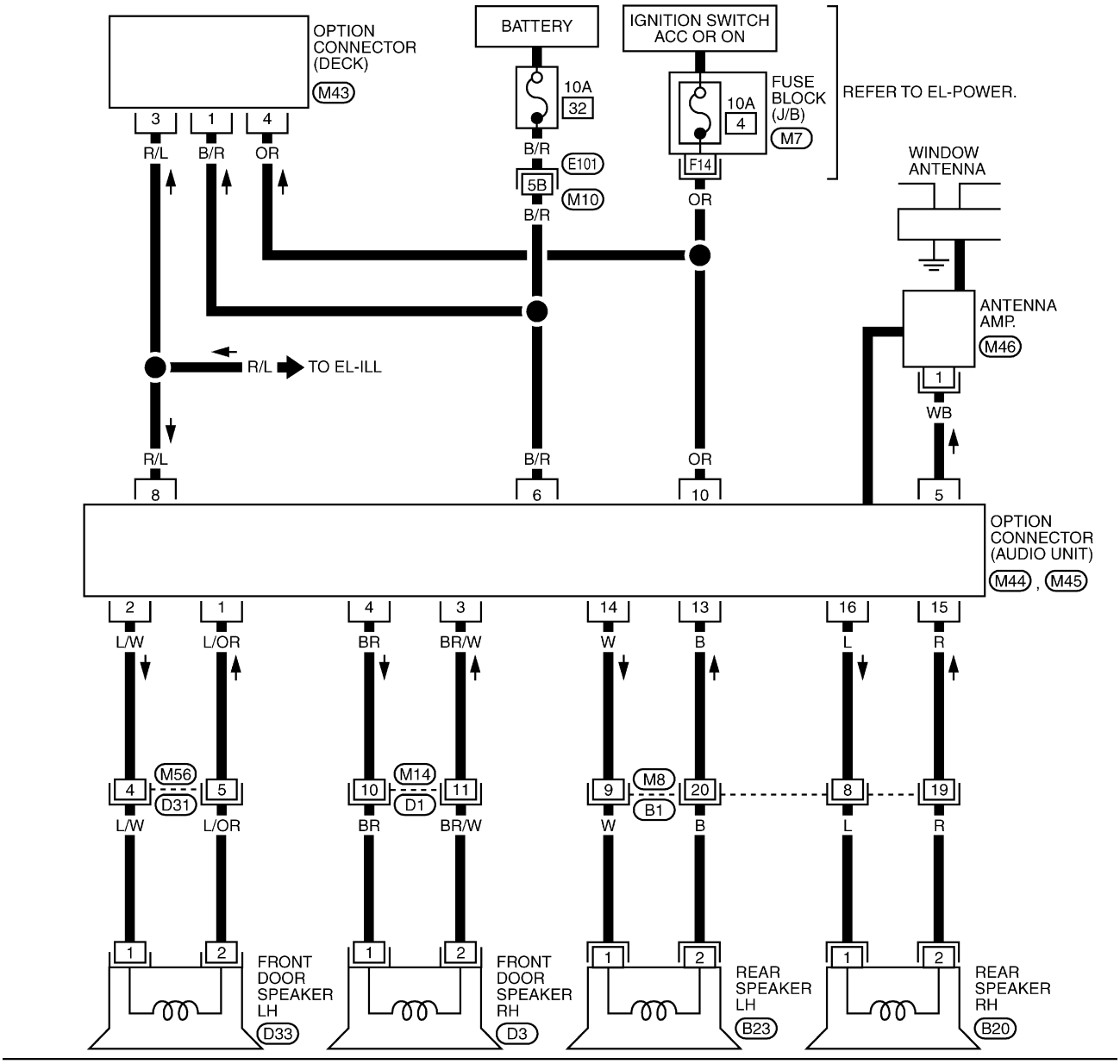

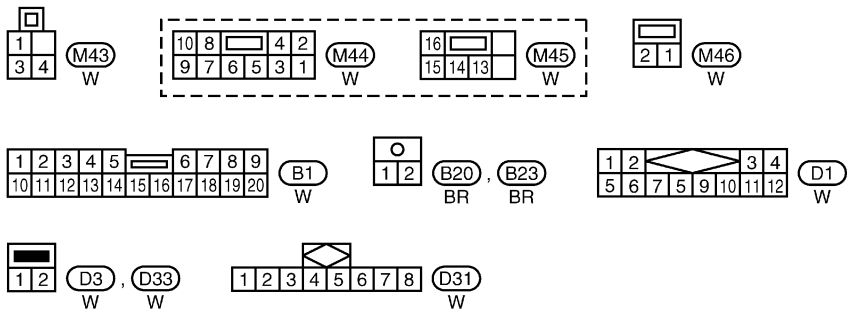

REFER TO THE FOLLOWING.

E101 -SUPER MULTIPLE JUNCTION (SMJ)

M7 -FUSE BLOCK-JUNCTION BOX (J/B)

TEL814B

Location of Antenna

NMEL0087

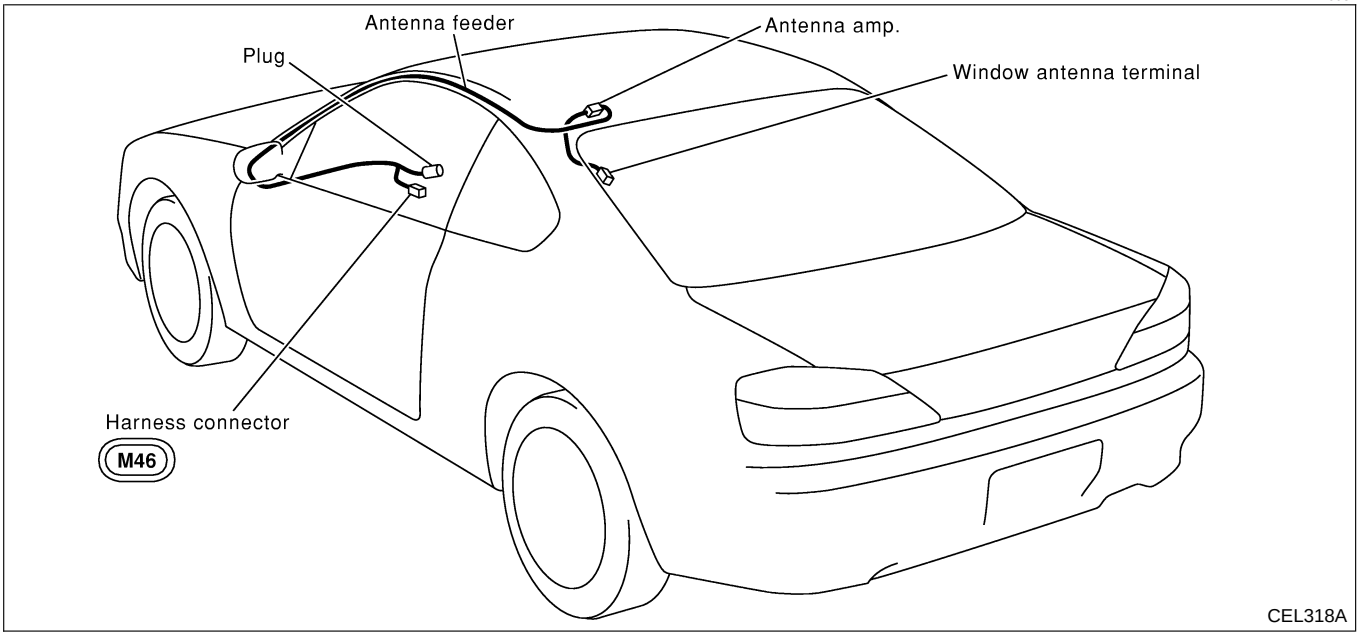

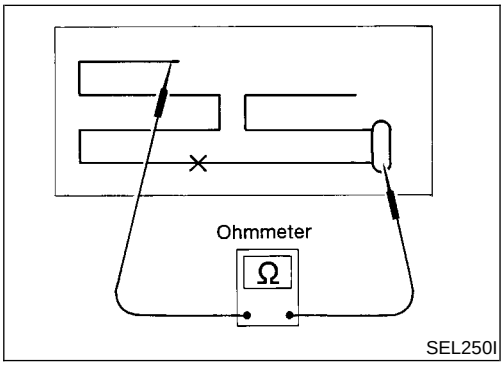

Window Antenna Repair

NMEL0250

ELEMENT CHECK

NMEL0250S01

1. Attach probe circuit tester (in ohm range) to antenna terminal on each side.
   If an element is OK, continuity should exist.
   If an element is broken, no continuity should exist. Go to step 2.

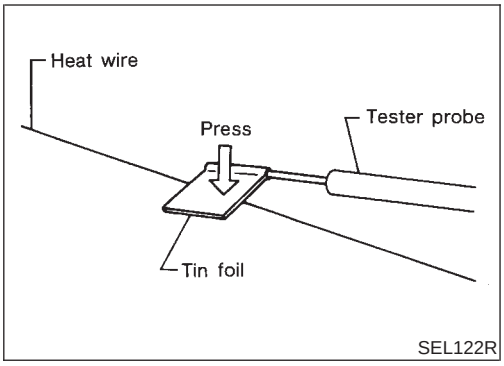

SEL122R

- **When measuring continuity, wrap tin foil around the top of probe. Then press the foil against the wire with your finger.**

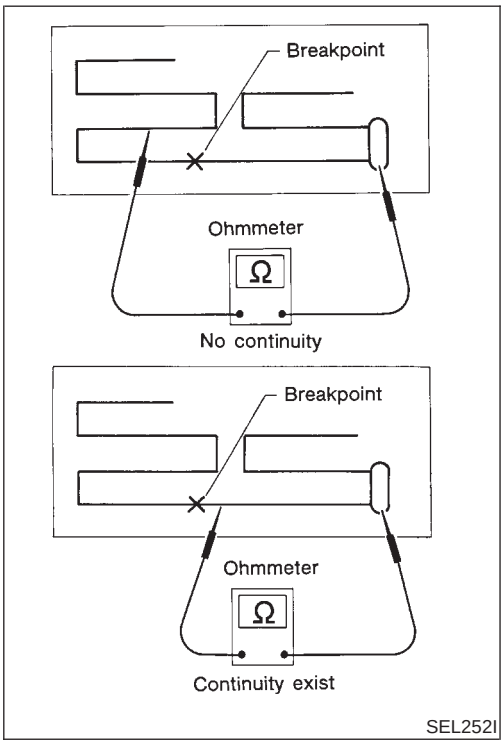

SEL252I

2. To locate broken point, move probe along element. Tester needle will swing abruptly when probe passes the point.

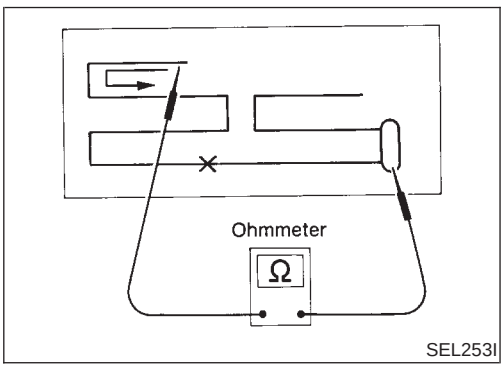

SEL253I

ELEMENT REPAIR

NMEL0250S02

Refer to "Filament Repair", "REAR WINDOW DEFOGGER" (EL-102).

System Description

NMEL0222

OUTLINE

NMEL0222S01

Electric sunroof system consists of

- Sunroof switch
- Sunroof motor

OPERATION

NMEL0222S03

The sunroof can be opened or closed and tilted up or down with the sunroof switch.

Wiring Diagram — SROOF —

NMEL0089

EL-SROOF-01

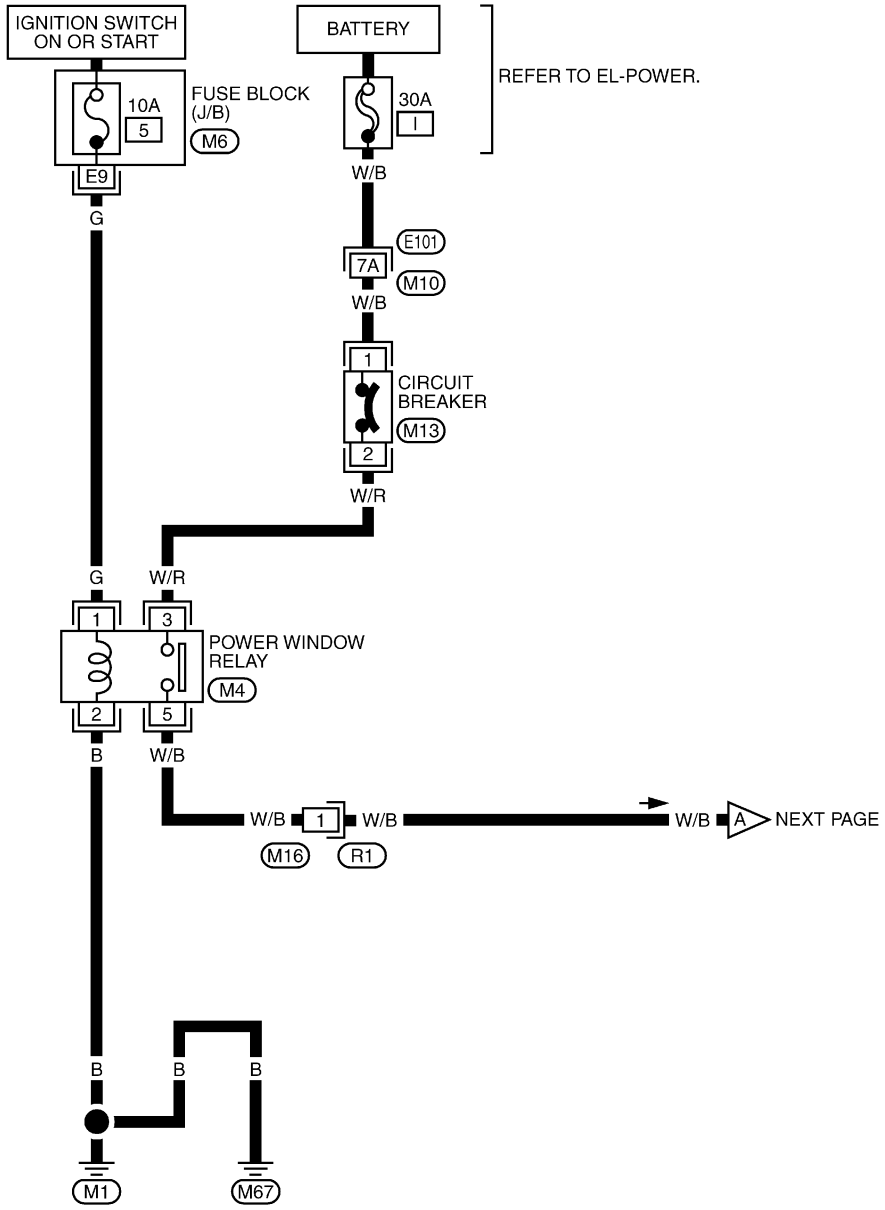

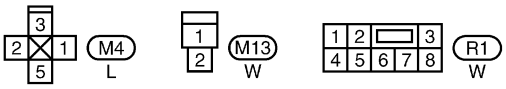

REFER TO THE FOLLOWING.
E101 -SUPER MULTIPLE JUNCTION (SMJ)
M6 -FUSE BLOCK-JUNCTION BOX (J/B)

TEL815B

EL-SROOF-02

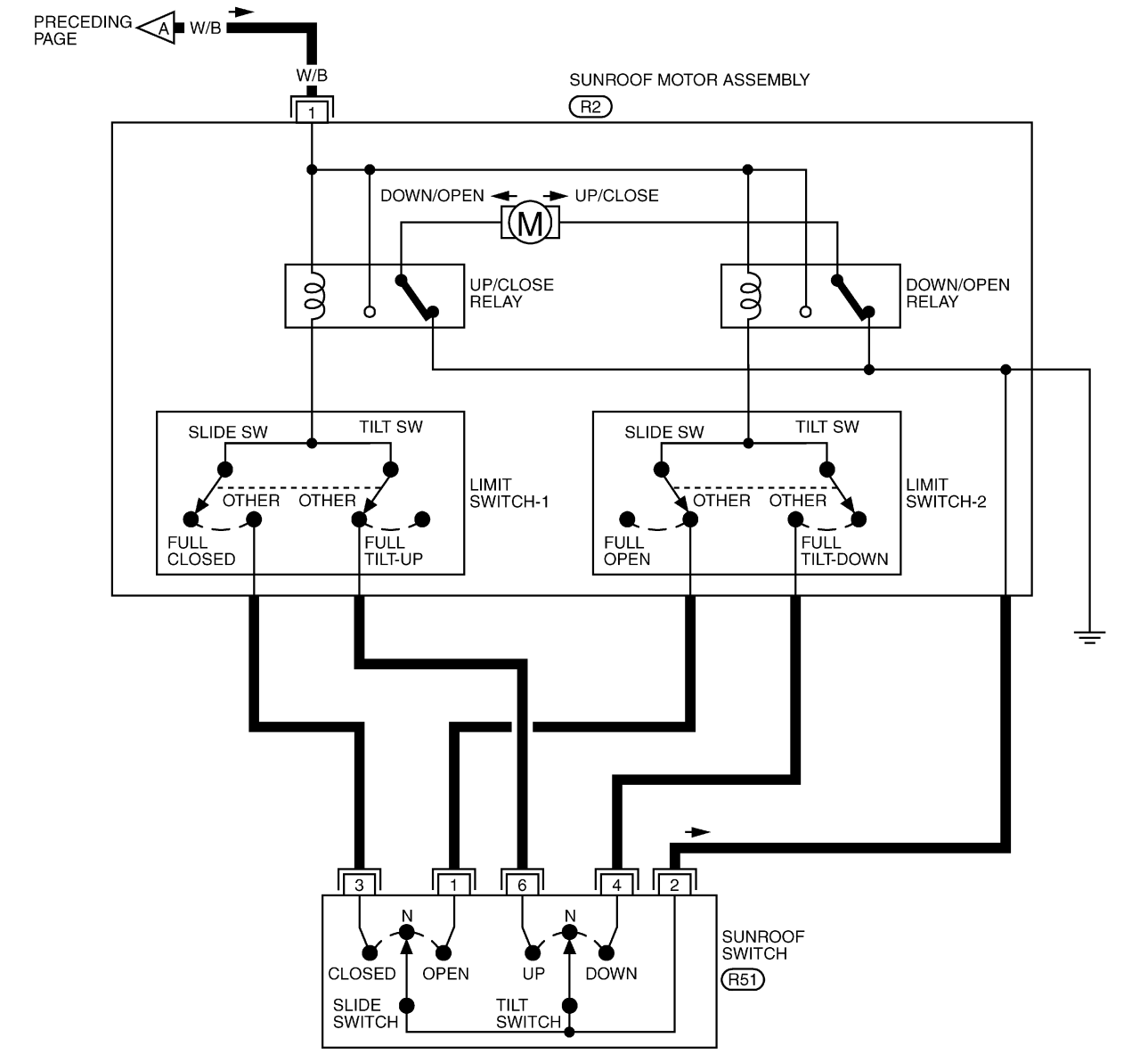

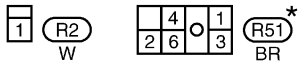

*: THIS CONNECTOR IS NOT SHOWN IN "HARNESS LAYOUT".

TEL816B

Trouble Diagnoses

NMEL0225

Symptom	Possible cause	Repair order
Power sunroof cannot be operated using any switch.	1. 10A fuse, 30A fusible link and M13 circuit breaker 2. Sunroof motor ground circuit 3. Sunroof switch 4. Sunroof switch circuit 5. Sunroof motor	1. Check 10A fuse [No. 5, located in fuse block (J/B)], 30A fusible link (letter **I**, located in fuse and fusible link box) and M13 circuit breaker. Turn ignition switch “ON” and verify battery positive voltage is present at terminals 1 of sunroof motor. 2. Check sunroof motor ground circuit. 3. Check sunroof switch. 4. Check harness between sunroof switch and sunroof motor. 5. Check sunroof motor.
Power sunroof cannot be operated using one of the sunroof switches.	1. Sunroof switch 2. Sunroof switch circuit	1. Check sunroof switch. 2. Check the harness between sunroof motor and sunroof switch.

Wiring Diagram — MIRROR —

NMEL0090

EL-MIRROR-01

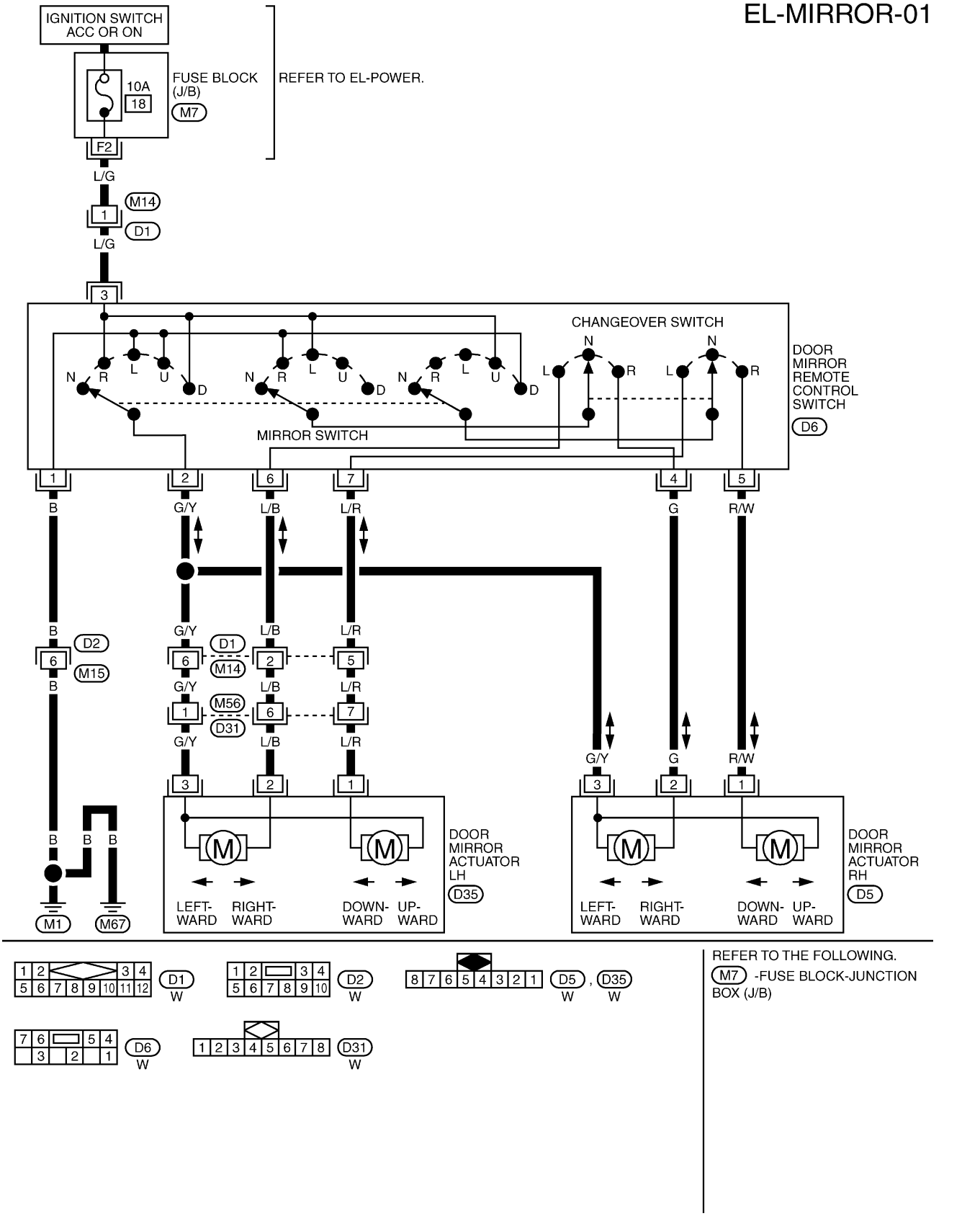

TEL817B

System Description

NMEL0191

Power is supplied at all times
- from 30A fusible link (letter **I**, located in the fuse and fusible link box)
- to circuit breaker terminal 1
- through circuit breaker terminal 2
- to power window relay terminal 3 and
- to power window main switch terminal 10.

With ignition switch in ON or START position, power is supplied
- through 10A fuse [No. 5, located in the fuse block (J/B)]
- to power window relay terminal 1 and

Ground is supplied to power window relay terminal 2
- through body grounds M1 and M67.

The power window relay is energized and power is supplied
- through power window relay terminal 5
- to power window main switch terminal 13,
- to power window switch (passenger side) terminal 5.

MANUAL OPERATION

NMEL0191S01

Driver Side Door

NMEL0191S0101

Ground is supplied
- to power window main switch terminal 5
- through body grounds M1 and M67.

WINDOW UP
When the driver's window switch in the power window main switch is pressed in the up position, power is supplied
- to driver side power window regulator terminal 1
- through power window main switch terminal 6.

Ground is supplied
- to driver side power window regulator terminal 3
- through power window main switch terminal 7.

Then, the motor raises the window until the switch is released.
WINDOW DOWN
When the driver's window switch in the power window main switch is pressed in the down position, power is supplied
- to driver side power window regulator terminal 3
- through power window main switch terminal 7.

Ground is supplied
- to driver side power window regulator terminal 1
- through power window main switch terminal 6.

Then, the motor lowers the window until the switch is released.

Passenger Side Door

NMEL0191S0102

Ground is supplied
- to power window main switch terminal 5
- through body grounds M1 and M67.

NOTE:
Numbers in parentheses are terminal numbers, when power window switch is pressed in the UP and DOWN positions respectively.

POWER WINDOW MAIN SWITCH OPERATION
Power is supplied
- through power window main switch terminals (12, 14)
- to power window sub-switch (passenger side) terminals (3, 4).

The subsequent operation is the same as the power window switch operation.
POWER WINDOW SUB-SWITCH OPERATION
Power is supplied

- through power window sub-switch terminals 1 and 2
- to power window regulator terminals 1 and 2.

Ground is supplied

- to power window regulator terminals 1 and 2
- through power window sub-switch terminals 1 and 2
- to power window sub-switch terminals 3 and 4
- through power window main switch terminals 12 and 14.

Then, the motor raises or lowers the window until the switch is released.

AUTO OPERATION

NMEL0191S02

The power window AUTO feature enables the driver to open or close the driver's window without holding the window switch in the down or up position.
The AUTO feature operates on the driver's window.

POWER WINDOW LOCK

NMEL0191S03

The power window lock is designed to lock operation of passenger's door window.
When the lock switch is pressed to lock position, ground of the sub-switches in the power window main switch is disconnected. This prevents the power window motors from operating.

INTERRUPTION DETECTION FUNCTION

NMEL0191S05

Power window main switch monitors the power window regulator motor operation and the power window position (full closed or other) for driver's power window by the signals from encoder and limit switch in power window regulator.
When power window main switch detects interruption during the following close operation in the driver's side door,

- automatic close operation when ignition switch is in the "ON" position
- automatic close operation during retained power operation

Power window main switch controls driver's power window regulator motor for open and the power window will be lowered about 150 mm (5.91 in).

Schematic

NMEL0103

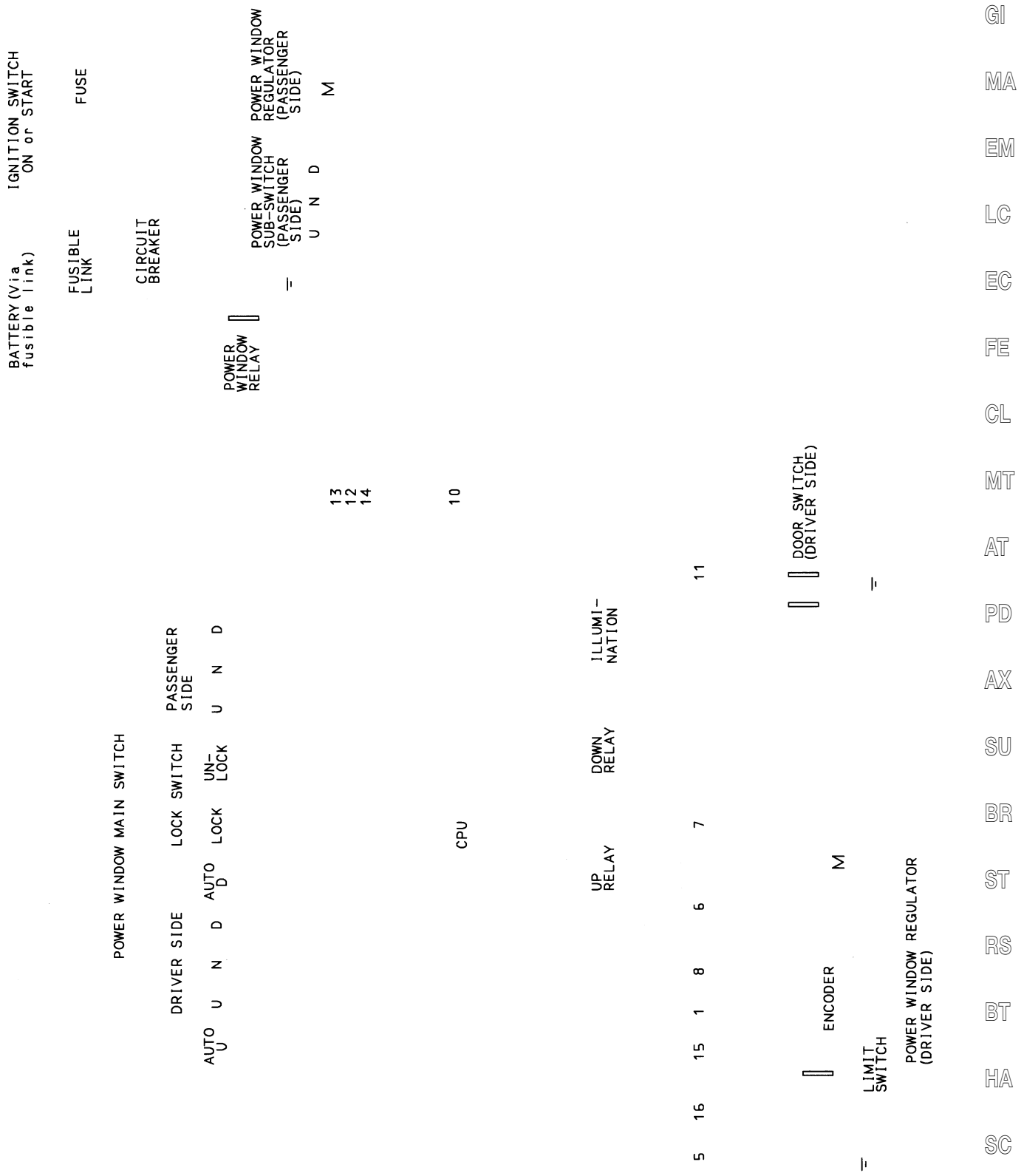

TEL818B

Wiring Diagram — WINDOW —

NMEL0104

EL-WINDOW-01

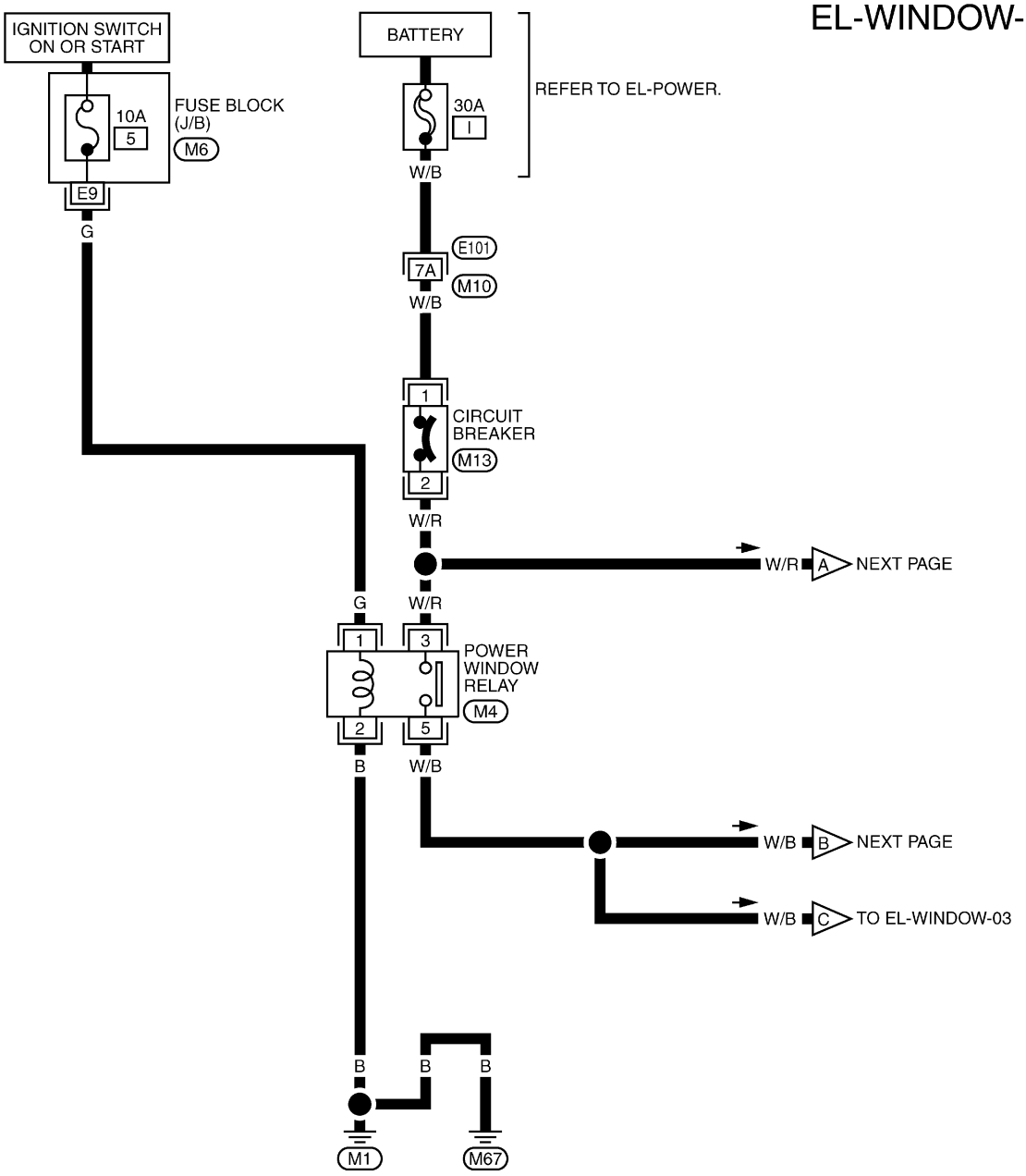

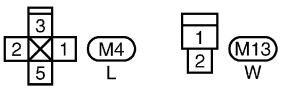

REFER TO THE FOLLOWING.
E101 -SUPER MULTIPLE JUNCTION (SMJ)
M6 -FUSE BLOCK-JUNCTION BOX (J/B)

TEL819B

EL-WINDOW-02

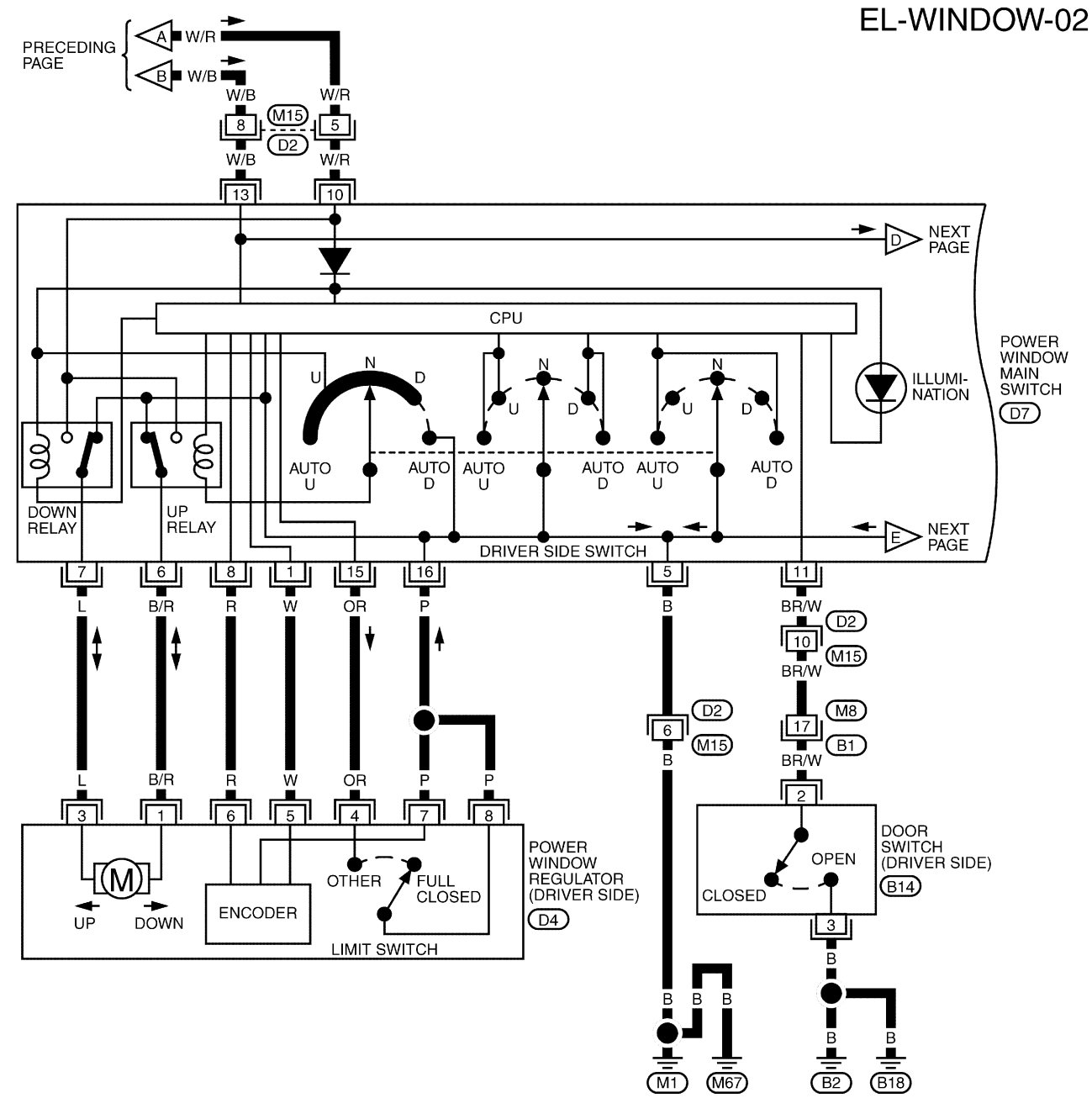

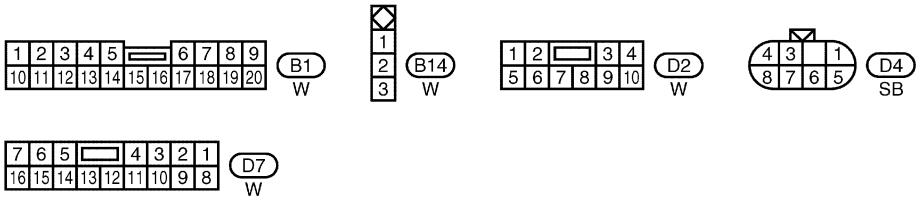

TEL820B

EL-WINDOW-03

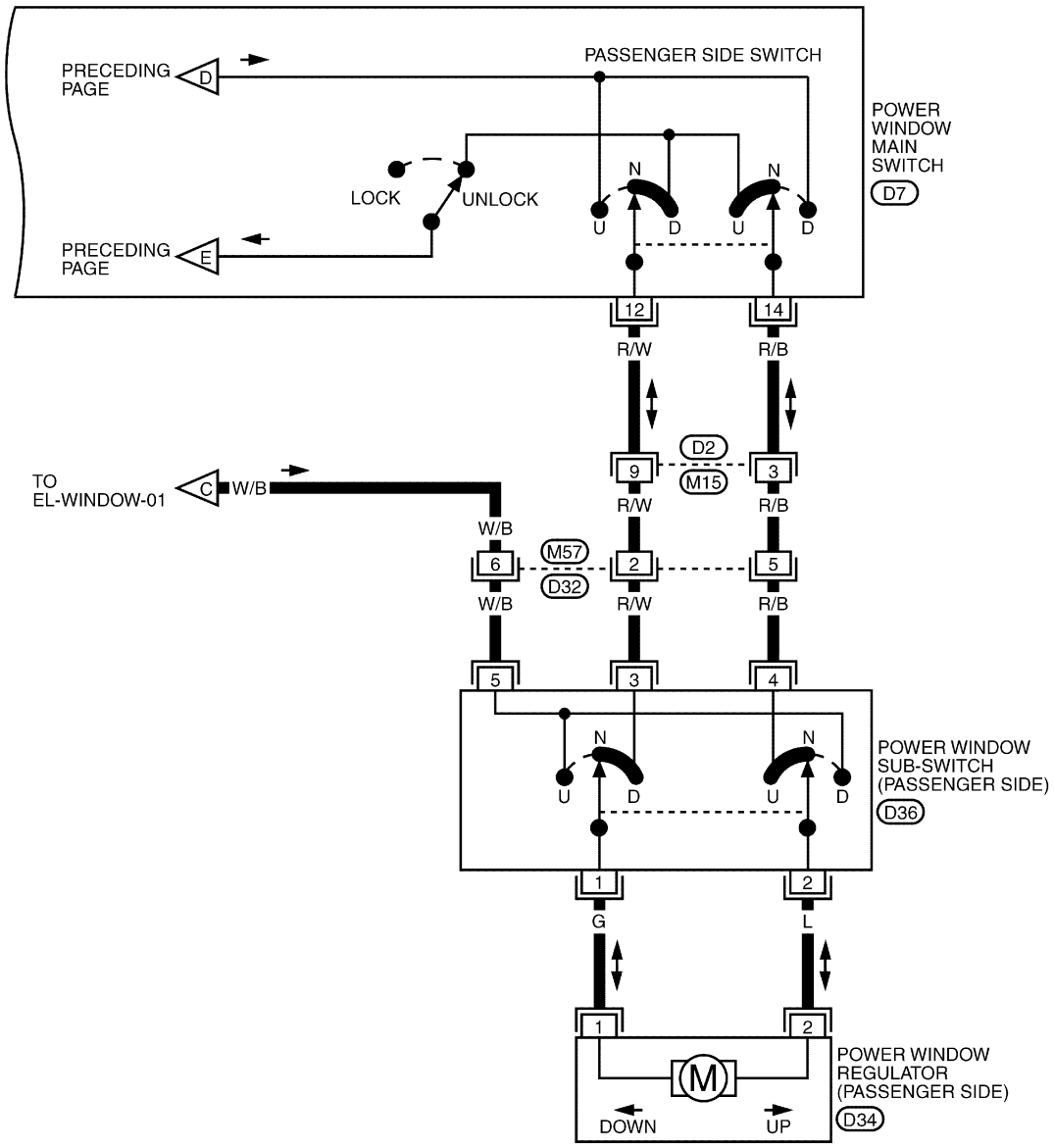

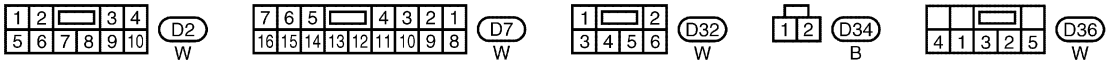

TEL821B

Trouble Diagnoses

NMEL0105

Symptom	Possible cause	Repair order
None of the power windows can be operated using any switch.	1. 10A fuse 2. 30A fusible link, M13 circuit breaker 3. Power window relay 4. Open/short in power window main switch circuit 5. Ground circuit 6. Power window main switch	1. Check 10A fuse [No. 5, located in fuse block (J/B)] Turn ignition switch “ON” and verify battery positive voltage is present at terminal 1 of power window relay. 2. Check 30A fusible link (letter **I**, located in fuse and fusible link box) and M13 circuit breaker. Verify battery positive voltage is present at terminal 3 of power window relay. 3. Check power window relay. 4. Check W/B wire between power window relay and power window main switch for open/short circuit. 5. Check the following: a. Check ground circuit of power window main switch. b. Check power window relay ground circuit. 6. Check power window main switch.
Driver side power window cannot be operated but other windows can be operated.	1. Driver side power window regulator circuit 2. Driver side power window regulator 3. Open/short in power window main switch circuit 4. Power window main switch	1. Check harness between power window main switch and driver side power window regulator for open or short circuit. 2. Check driver side power window regulator. 3. Check W/B wire between power window relay and power window main switch for open/short circuit. 4. Check power window main switch.
One or more power windows except driver’s side window cannot be operated.	1. Power window sub-switches 2. Power window regulators 3. Power window main switch 4. Power window circuit	1. Check power window sub-switch. 2. Check power window regulator. 3. Check power window main switch. 4. Check the following. a. Check harness between the power window relay terminal 5 and power window sub-switch terminal 5. b. Check harnesses between power window main switch and power window sub-switch for open/short circuit. c. Check harnesses between power window sub-switch and power window regulator for open/short circuit.
Power windows except driver’s side window cannot be operated using power window main switch but can be operated by power window sub-switch.	1. Power window main switch	1. Check power window main switch.
Driver side power window automatic operation does not function properly.	1. Power window main switch	1. Check power window main switch.

ENCODER AND LIMIT SWITCH CHECK

=NMEL0105S01

1	CHECK DOOR WINDOW SLIDE MECHANISM

Check the following.
- Obstacles in window, glass molding, etc.
- Worn or deformed glass molding
- Door sash tilted too far inward or outward
- Door window regulator

OK or NG

OK	▶	GO TO 2.
NG	▶	Remove obstacles or repair door window slide mechanism.

2	CHECK POWER SUPPLY TO LIMIT SWITCH

Check voltage between power window main switch harness connector D7 terminal 15 (OR) and ground.

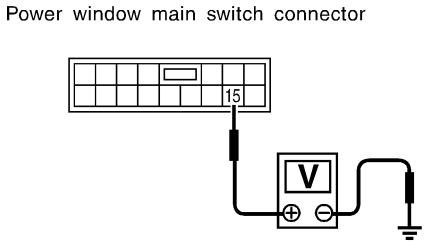

Voltage: 5V

NOTE: Check voltage when power window regulator harness connector is disconnected.

SEL238Y

OK or NG

OK	▶	GO TO 3.
NG	▶	Replace power window main switch.

3	CHECK LIMIT SWITCH OPERATION

Check voltage between power window main switch harness connector D7 terminal 15 (OR) and ground during power window closing operation.

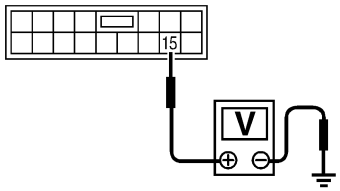

Terminal No.	Condition	Voltage (DCV)
Power window main switch: 15	Approx. 15 mm (0.59 in) below the full closed position to full closed position	Approx. 5
	Other positions	Approx. 0

SEL239Y

OK or NG

OK	▶	GO TO 5.
NG	▶	GO TO 4.

4	RESET LIMIT SWITCH

Reset limit switch. Refer to BT-19, "Door Limit Switch Reset". Then check voltage between power window main switch harness connector D7 terminal 15 (OR) and ground during power window closing operation at least ten times.

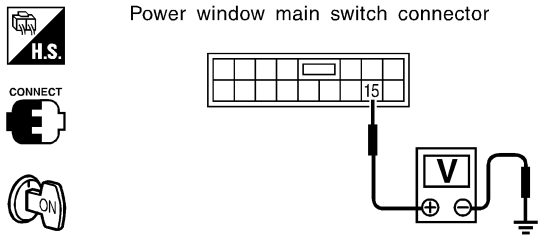

Terminal No.	Condition	Voltage (DCV)
Power window main switch: 15	Approx. 15 mm (0.59 in) below the full closed position to full closed position	Approx. 5
	Other positions	Approx. 0

SEL239Y

OK or NG

OK	▶	GO TO 5.
NG	▶	Replace power window regulator motor (driver side).

5	CHECK ENCODER

Measure voltage between power window main switch harness connector D7 terminal 8 (R) and ground with oscilloscope when power window is in automatic closing operation.

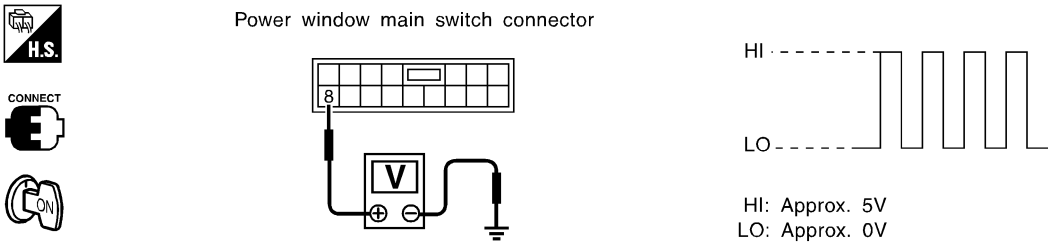

SEL240Y

OK or NG

OK	▶	Replace power window main switch.
NG	▶	Replace power window regulator motor (driver side).

Component Parts and Harness Connector Location

NMEL0106

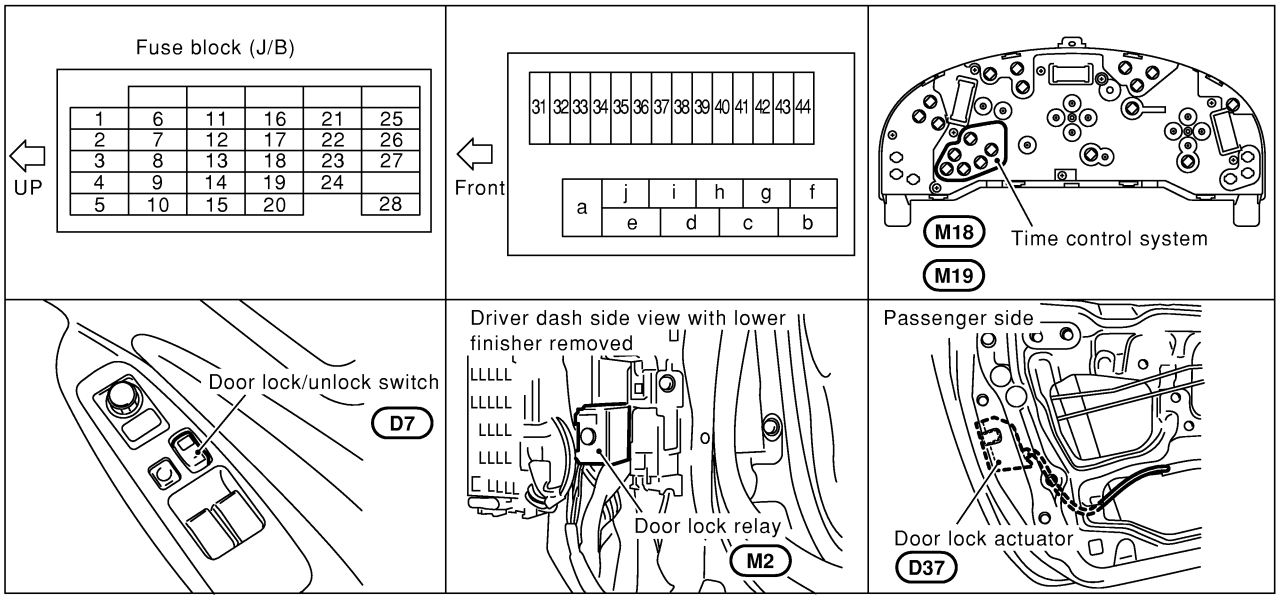

SEL253Y

System Description

NMEL0107

OPERATION

NMEL0107S04

- The lock/unlock switch on the driver's door trim can lock and unlock the passenger's door.
- The lock knob on the driver's door can lock and unlock all doors. (Signals from door unlock sensor)
- With the key inserted in the driver's door key cylinder, the doors can be locked by turning the key to the "LOCK" position, and unlocked by turning to the "UNLOCK" position. (Signals from door unlock sensor)

Wiring Diagram — D/LOCK —

NMEL0109

EL-D/LOCK-01

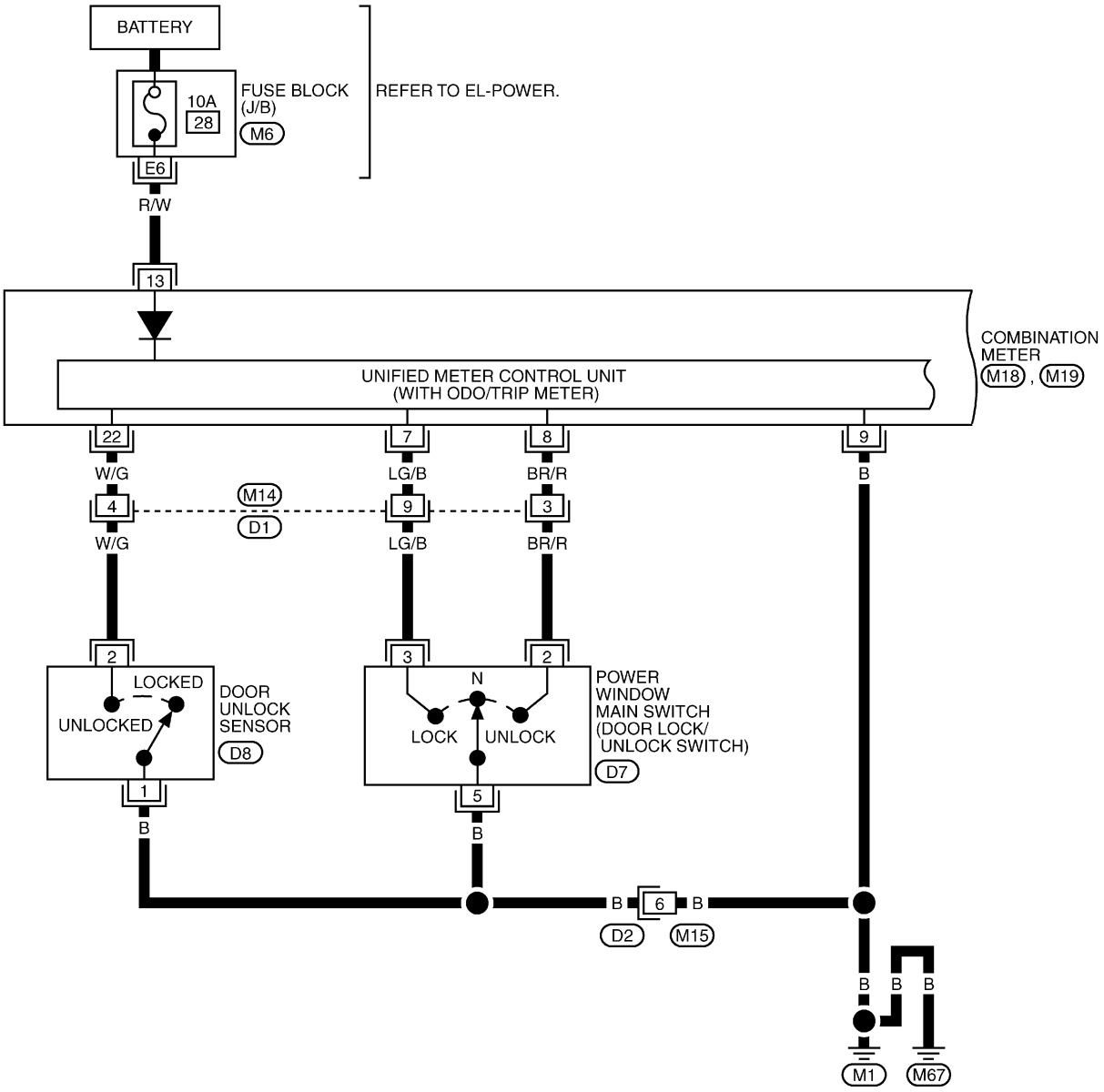

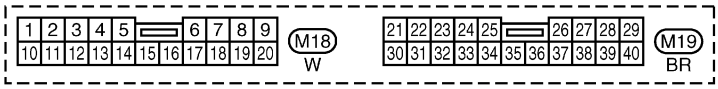

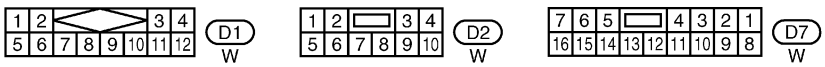

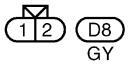

REFER TO THE FOLLOWING.
M6 -FUSE BLOCK-JUNCTION BOX (J/B)

TEL822B

EL-D/LOCK-02

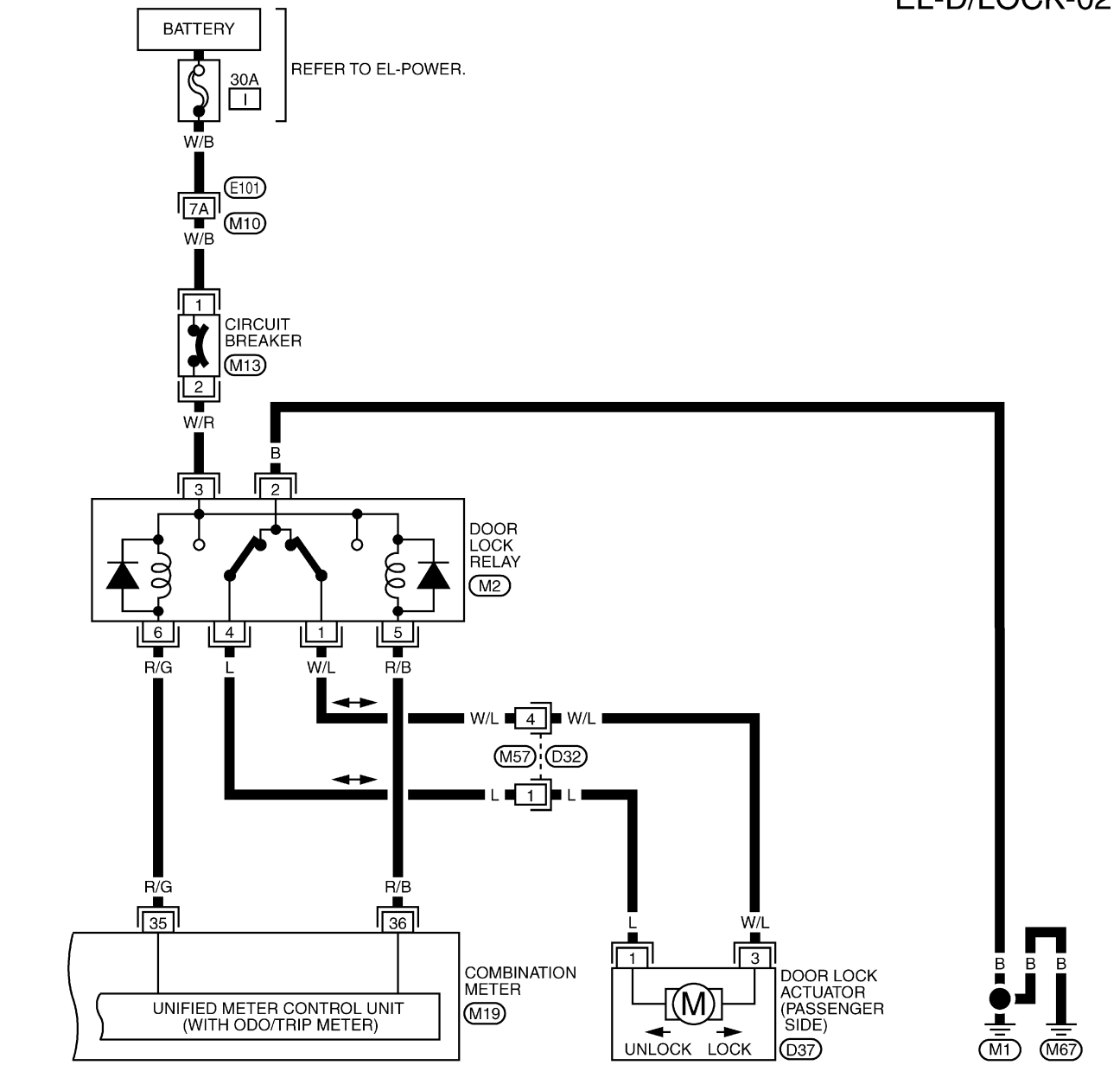

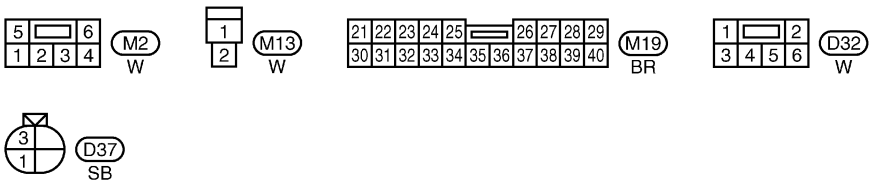

REFER TO THE FOLLOWING.
E101 -SUPER MULTIPLE JUNCTION (SMJ)

TEL823B

Trouble Diagnoses

SYMPTOM CHART

NMEL0193

NMEL0193S01

REFERENCE PAGE (EL-)	123	125	127	129
SYMPTOM	POWER SUPPLY AND GROUND CIRCUIT CHECK	DOOR LOCK/UNLOCK SWITCH CHECK	DOOR UNLOCK SENSOR CHECK	DOOR LOCK ACTUATOR CHECK
Power door lock does not operate with driver's door lock knob/ key cylinder and door lock/unlock switch on door trim.	X			X
Power door lock does not operate with door lock/unlock switch on door trim.		X		
Power door lock does not operate with driver's door lock knob/ key cylinder.			X	

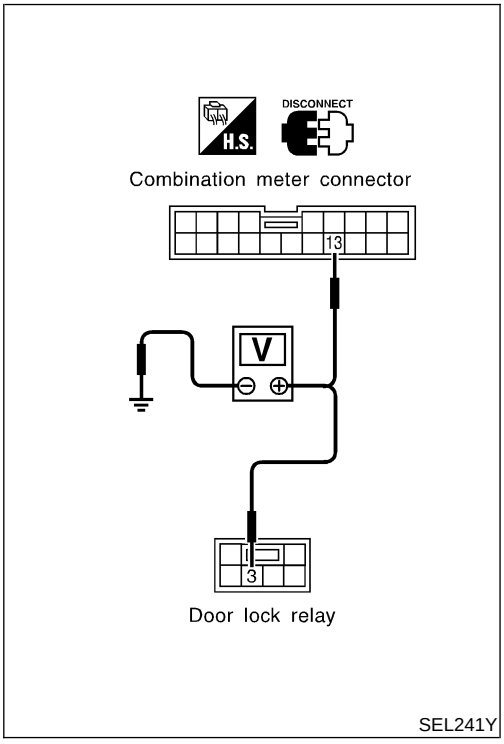

POWER SUPPLY AND GROUND CIRCUIT CHECK

NMEL0193S12

Power Supply Circuit Check

NMEL0193S1201

Terminal No.			Ignition switch position		
(+)		(−)	OFF	ACC	ON
Connector	Terminal (Wire color)				
M18	13 (R/W)	Ground	Battery voltage	Battery voltage	Battery voltage
M2	3 (W/R)	Ground	Battery voltage	Battery voltage	Battery voltage

If NG, check the following.

- 10A fuse [No. 28, located in fuse block (J/B)]
- 30A fusible link [letter **I**, located in fuse and fusible link box]
- Circuit breaker
- Harness for open or short between fuse and combination meter
- Harness for open or short between fusible link and circuit breaker

- Harness for open or short between circuit breaker and door lock relay

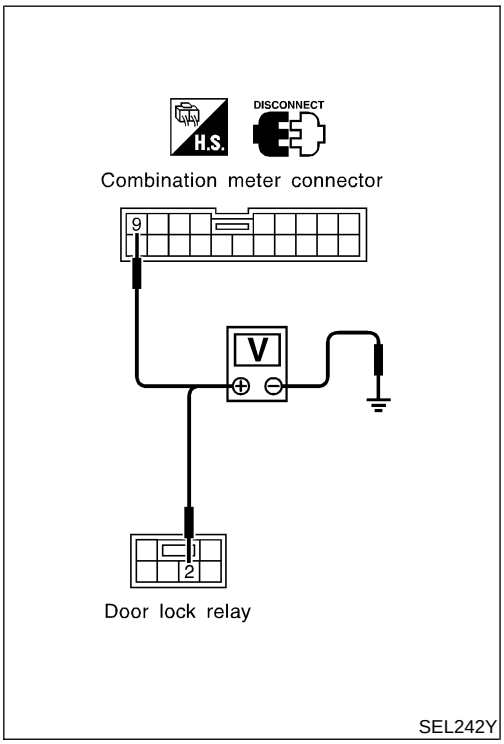

Ground Circuit Check

NMEL0193S1202

Terminal No.			Continuity
(+)		(−)	
Connector	Terminal (Wire color)		
M18	9 (B)	Ground	Yes
M2	2 (B)	Ground	Yes

DOOR LOCK/UNLOCK SWITCH CHECK

=NMEL0193S05

1	CHECK DOOR LOCK/UNLOCK SWITCH CIRCUIT

1. Disconnect combination meter harness connector.
2. Check continuity between combination meter harness connector M18 terminal 7 (LG/B) or 8 (BR/R) and ground.

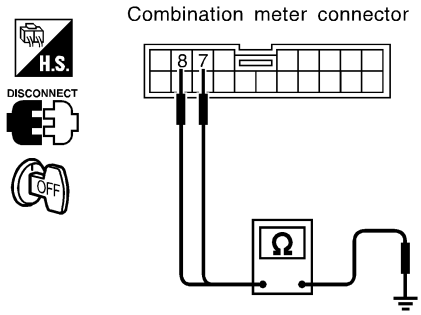

Terminal No.	Condition (Door lock/unlock switch)	Continuity
7-Ground	Lock	Yes
	Neutral/Unlock	No
8-Ground	Unlock	Yes
	Neutral/Lock	No

SEL243Y

OK or NG

OK	▶	Door lock/unlock switch is OK; go to unified meter control unit (time control system) check. Refer to EL-133.
NG	▶	GO TO 2.

2	CHECK DOOR LOCK/UNLOCK SWITCH

1. Disconnect door lock/unlock switch harness connector.
2. Check continuity between door lock/unlock switch terminals.
- Power window main switch (Door lock/unlock switch)

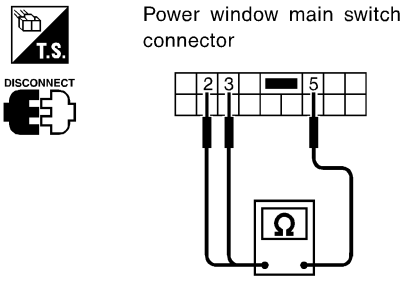

Condition	Terminal No.		
	2	3	5
Lock		○	○
N	No continuity		
Unlock	○		○

SEL244Y

OK or NG

OK	▶	GO TO 3.
NG	▶	Replace door lock/unlock switch.

3	CHECK DOOR LOCK/UNLOCK SWITCH INPUT SIGNAL

1. Connect combination meter harness connector and door lock/unlock switch harness connector.
2. Check voltage between combination meter harness connector M18 terminal 7 (LG/B) or 8 (BR/R) and ground.

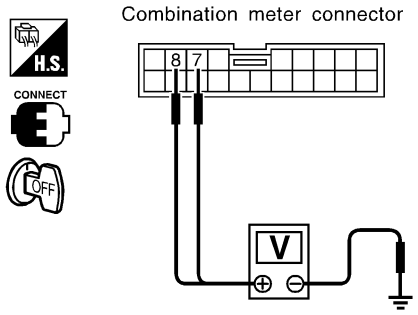

Terminal No. (+)	Terminal No. (–)	Condition (Door lock/unlock switch)	Voltage [V]
7	Ground	Lock	0
		Neutral/Unlock	Approx. 5
8	Ground	Unlock	0
		Neutral/Lock	Approx. 5

SEL245Y

OK or NG

OK	▶	**Check the following.** ● Ground circuit for door lock/unlock switch ● Harness for open or short between door lock/unlock switch and combination meter
NG	▶	Replace unified meter control unit (time control system).

DOOR UNLOCK SENSOR CHECK

=NMEL0193S11

1	CHECK DOOR UNLOCK SENSOR CIRCUIT

1. Disconnect combination meter harness connector.
2. Check continuity between combination meter harness connector M19 terminal 22 (W/G) and ground.

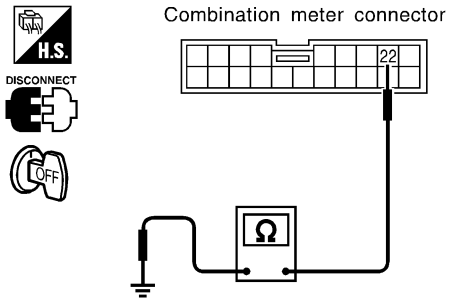

Terminal No.	Condition (Driver's door)	Continuity
22-Ground	Locked	No
	Unlocked	Yes

SEL219Y

OK or NG

OK	▶	Door unlock sensor is OK; go to unified meter control unit (time control system) check. Refer to EL-133.
NG	▶	GO TO 2.

2	CHECK DOOR UNLOCK SENSOR

1. Disconnect door unlock sensor harness connector.
2. Check continuity between door unlock sensor harness connector D8 terminals 1 and 2.

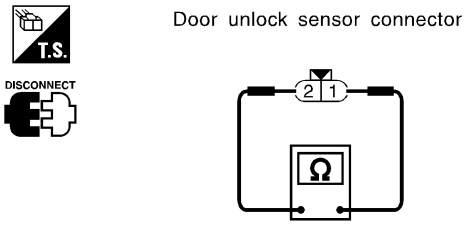

Terminal No.	Condition (Driver's Door)	Continuity
1-2	Locked	No
	Unlocked	Yes

SEL220Y

OK or NG

OK	▶	GO TO 3.
NG	▶	Replace door unlock sensor.

3	CHECK DOOR UNLOCK SENSOR INPUT SIGNAL

1. Connect door unlock sensor harness connector and combination meter harness connector.
2. Check voltage combination meter harness connector M19 terminal 22 (W/G) and ground.

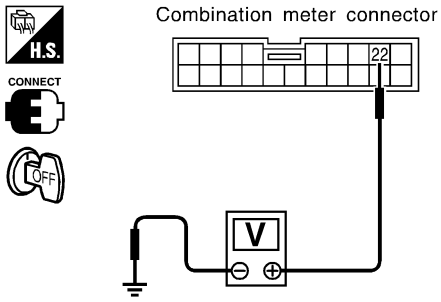

Terminal No.		Condition (Driver's Door)	Voltage [V]
(+)	(–)		
22	Ground	Locked	Approx. 5
		Unlocked	0

SEL221Y

OK or NG

OK	▶	**Check the following.** ● Door unlock sensor ground circuit ● Harness for open or short between combination meter and door unlock sensor
NG	▶	Replace unified meter control unit (time control system).

DOOR LOCK ACTUATOR CHECK

=NMEL0193S08

1 CHECK DOOR LOCK ACTUATOR CIRCUIT

1. Disconnect combination meter harness connector.
2. Check voltage between combination meter harness connector M19 terminal 35 (R/G) or 36 (R/B) and ground.

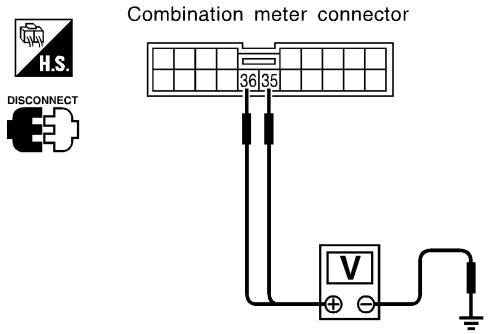

Terminal No. (+)	Terminal No. (–)	Condition (Door lock/unlock switch)	Voltage [V]
35	Ground	Lock	Approx. 12
36	Ground	Unlock	

SEL246Y

OK or NG

OK	▶	GO TO 2.
NG	▶	**Check the following.** ● Door lock relay ● Harness for open or short between combination meter and door lock relay

2 CHECK DOOR LOCK INPUT SIGNAL

1. Connect combination meter harness connector.
2. Check voltage between combination meter harness connector M19 terminal 35 (R/G) or 36 (R/B) and ground.

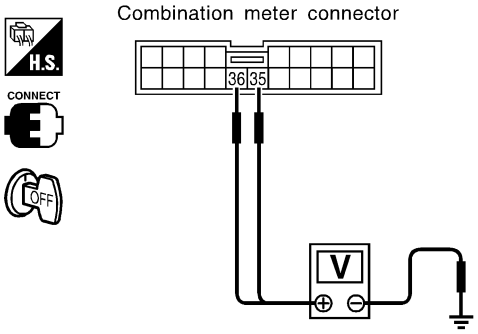

Terminal No. (+)	Terminal No. (–)	Condition (Door lock/unlock switch)	Voltage [V]
35	Ground	Lock	Approx. 12 → 0 → 12
36	Ground	Unlock	

SEL247Y

OK or NG

OK	▶	GO TO 3.
NG	▶	Replace unified meter control unit (time control system).

3 CHECK DOOR LOCK RELAY

Check door lock relay.

OK or NG

OK	▶	GO TO 4.
NG	▶	Replace door lock relay.

4	CHECK DOOR LOCK ACTUATOR

1. Disconnect door lock actuator harness connector.
2. Apply 12V direct current to door lock actuator harness connector D37 and check operation.

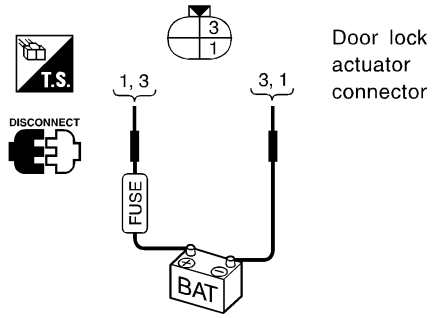

Door lock actuator operation:
Terminals between (+): 1 and (–): 3
Unlocked → Locked
Terminals between (+): 3 and (–): 1
Locked → Unlocked

SEL222WD

OK or NG

OK	▶	Check harness for open or short between door lock relay and door lock actuator.
NG	▶	Replace door lock actuator.

Description

NMEL0308

OUTLINE

NMEL0308S01

Unified meter control unit (time control system) totally controls the following body electrical system operations.

- Warning buzzer
- Rear window defogger
- Power door lock
- Interior room lamp

INPUT/OUTPUT

NMEL0308S02

System	Input	Output
Power door lock	Door lock/unlock switch Door unlock sensor	Door lock actuator
Warning buzzer	Key switch (Insert) Ignition switch (ON) Lighting switch (1st or 2nd) Door switch driver side	Warning buzzer (located in combination meter)
Rear window defogger	Ignition switch (ON) Rear window defogger switch	Rear window defogger relay
Interior room lamp	Door switches Door unlock sensor Ignition switch (ON) Key switch (Insert)	Interior room lamp

Schematic

NMEL0309

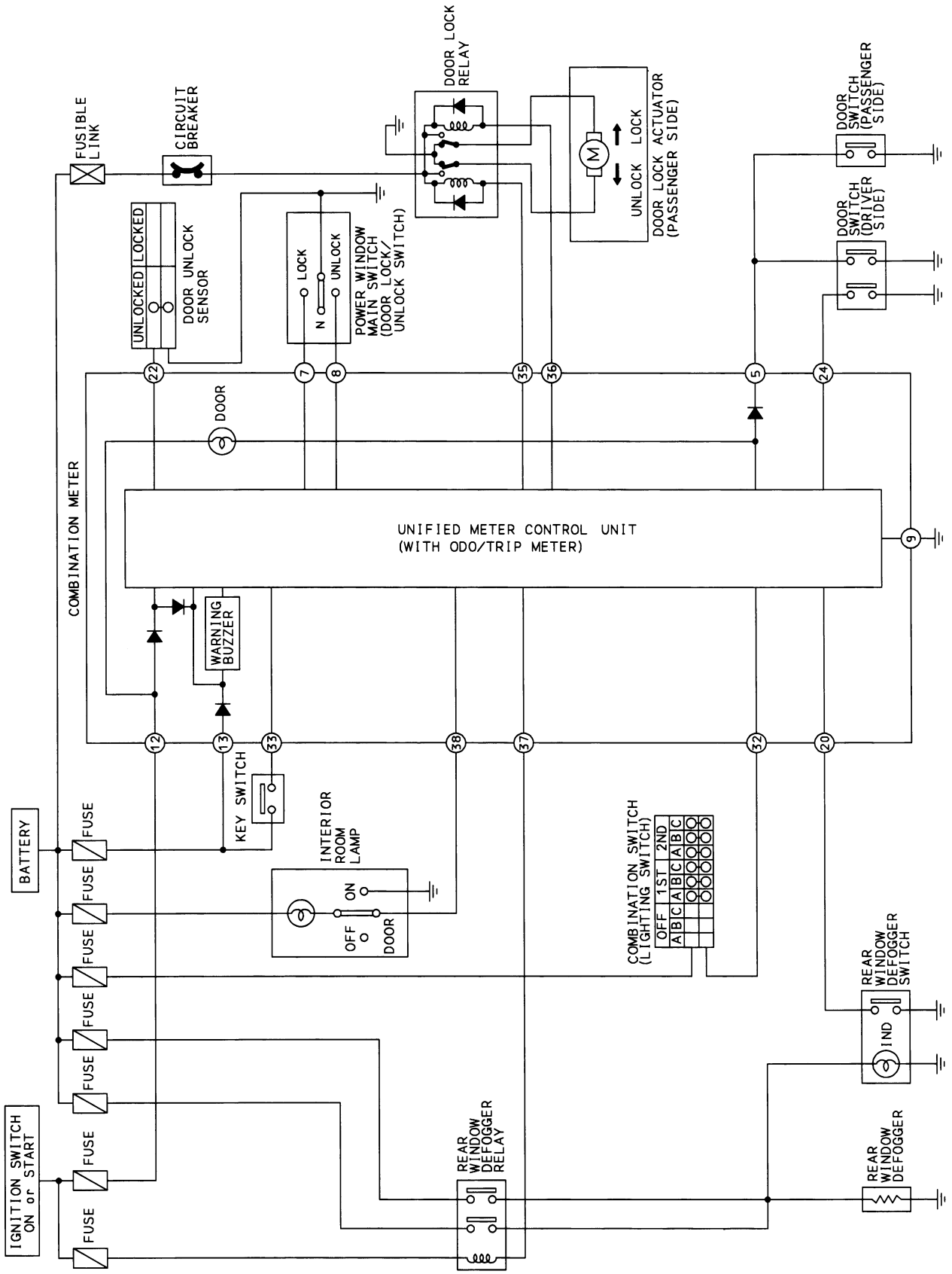

TEL824B

Time Control System Inspection Table

NMEL0310

Terminal No.	Wire color	Connections	Operated condition	Voltage (Approximate values)
5	P	Door switch (Driver/Passenger)	OFF (Closed) → ON (Open)	5V → 0V
7	LG/B	Door lock/unlock switch	Neutral → Locked	5V → 0V
8	BR/R	Door lock/unlock switch	Neutral → Unlocked	5V → 0V
9	B	Ground	—	—
12	G/Y	Ignition switch	ON or START → OFF or ACC	12V → 0V
13	R/W	Battery	Battery voltage	12V
20	LG/R	Rear window defogger switch	OFF → ON (Ignition key is in “OFF” position)	5V → 0V
22	W/G	Driver door unlock sensor	Driver door: OFF (Locked) → ON (Unlocked)	5V → 0V
24	BR/W	Driver door switch	Driver door: OFF (Closed) → ON (Open)	5V → 0V
32	R/L	Combination switch (Lighting switch)	1ST, 2ND Position: ON → OFF	12V → 0V
33	B/P	Key switch	Key inserted → Key withdrawn from IGN key cylinder	12V → 0V
35	R/G	Door lock relay	Door lock/unlock switch: Neutral → Locked	12V → 0V → 12V
36	R/B	Door lock relay	Door lock/unlock switch: Neutral → Unlocked	12V → 0V → 12V
37	L/W	Rear window defogger relay	Rear window defogger switch: OFF → ON (Ignition key is in “ON” position)	12V → 0V*1
38	R/W	Interior room lamp	Driver/Passenger door: OFF (Closed) → ON (Open) (Lamp switch in “Door” position)	12V → 0V
			Ignition key is in “ON” position (Lamp switch in “Door” position)	12V
			Key withdrawn from IGN key cylinder (Lamp switch in “Door” position)	0V*2

*1: Rear defogger ON (For approximately 15 minutes)
*2: Will increase to 12 volts approximately 20 seconds after the key is withdrawn from IGN key cylinder.

Component Parts and Harness Connetor Location

NMEL0325

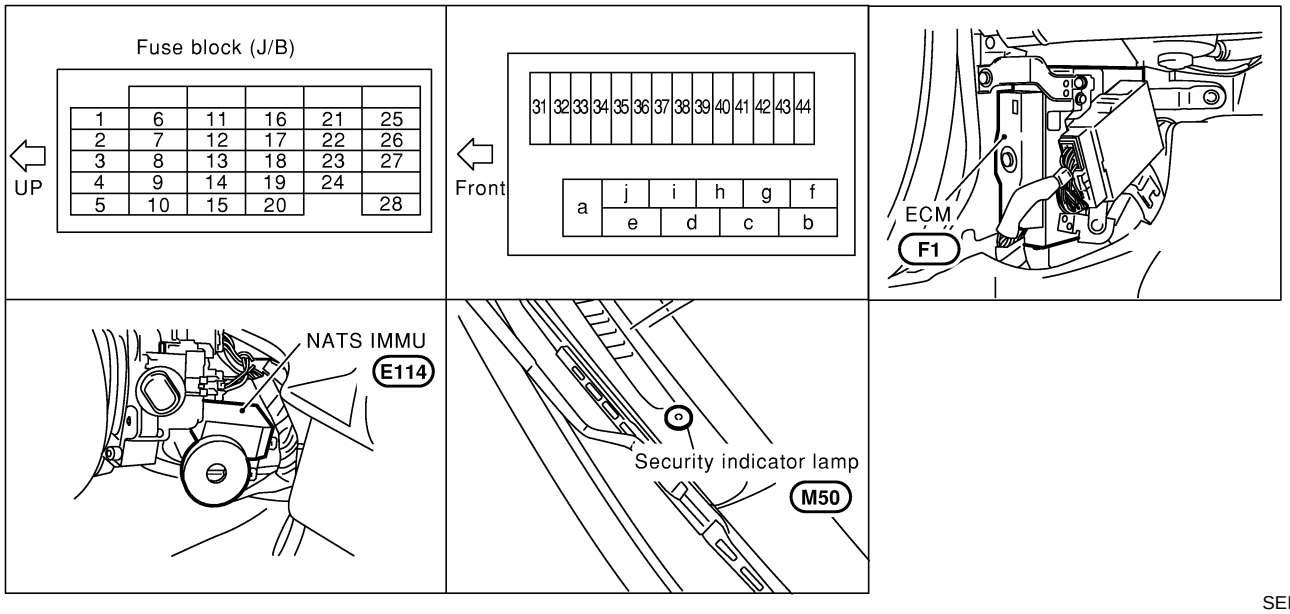

SEL251Y

NOTE:
If customer reports a “No Start” condition, request ALL KEYS to be brought to the Dealer in case of an NATS malfunction.

System Description

=NMEL0326

NATS (Nissan Anti-Theft System) has the following immobilizer functions:

- Since only NATS ignition keys, whose ID nos. have been registered into the ECM and IMMU of NATS, allow the engine to run, operation of a stolen vehicle without a NATS registered key is prevented by NATS. That is to say, NATS will immobilize the engine if someone tries to start it without the registered key of NATS.
- All of the originally supplied ignition key IDs (except for card plate key) have been NATS registered.
  If requested by the vehicle owner, a maximum of five key IDs can be registered into the NATS components.
- The security indicator blinks when the ignition switch is in “OFF” or “ACC” position. Therefore, NATS warns outsiders that the vehicle is equipped with the anti-theft system.
- When NATS detects trouble, the security indicator lamp lights up while ignition key is in the “ON” position.
- NATS trouble diagnoses, system initialization and additional registration of other NATS ignition key IDs must be carried out using CONSULT-II hardware and CONSULT-II NATS software.
  When NATS initialization has been completed, the ID of the inserted ignition key is automatically NATS registered. Then, if necessary, additional registration of other NATS ignition key IDs can be carried out.
  Regarding the procedures of NATS initialization and NATS ignition key ID registration, refer to CONSULT-II operation manual, IVIS/NVIS.
- **When servicing a malfunction of the NATS (indicated by lighting up of Security Indicator Lamp) or registering another NATS ignition key ID no., it may be necessary to re-register original key identification. Therefore, be sure to receive all keys from vehicle owner.**

System Composition

NMEL0327

The immobilizer function of the NATS consists of the following:

- NATS ignition key
- NATS immobilizer control unit (NATS IMMU) located in the ignition key cylinder
- Engine control module (ECM)
- Security indicator

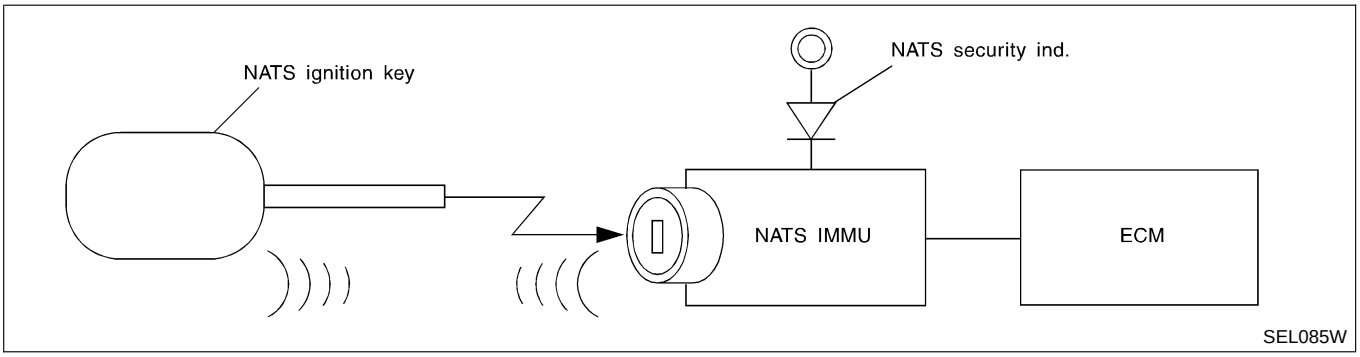

Wiring Diagram — NATS —

NMEL0328

EL-NATS-01

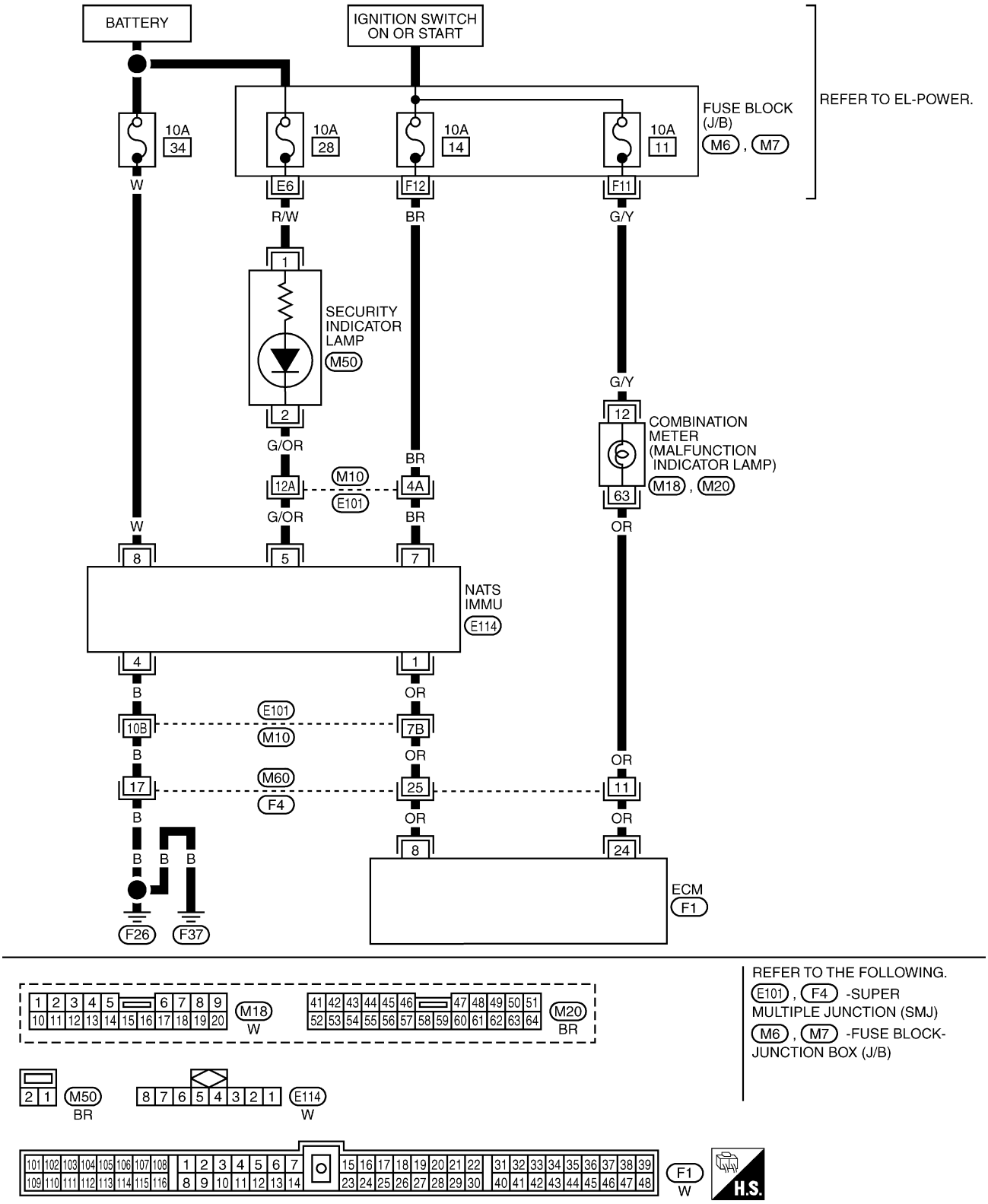

TEL825B

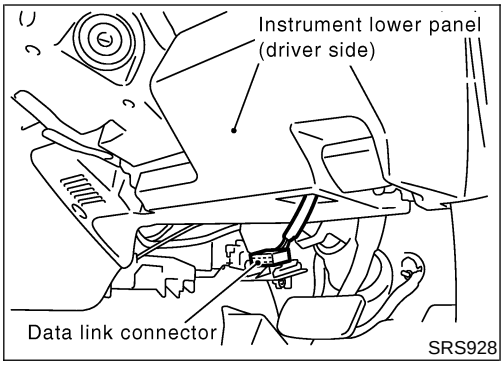

CONSULT-II

NMEL0329

CONSULT-II INSPECTION PROCEDURE

NMEL0329S01

1. Turn ignition switch OFF.
2. Insert NATS program card into CONSULT-II.

Program card
NATS (AEN00A)

3. Connect CONSULT-II to data link connector.

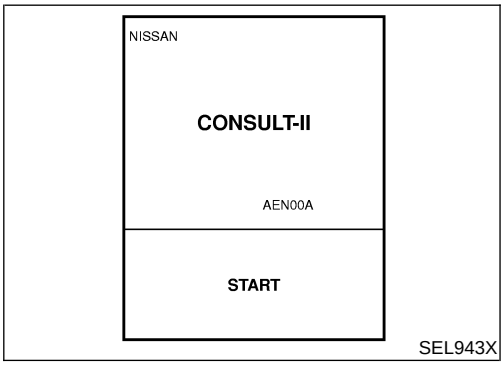

4. Turn ignition switch ON.
5. Touch “START”.

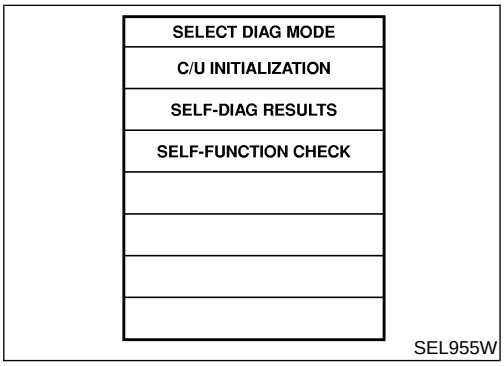

6. Perform each diagnostic test mode according to each service procedure.

For further information, see the CONSULT-II Operation Manual, NATS.

CONSULT-II DIAGNOSTIC TEST MODE FUNCTION

NMEL0329S02

CONSULT-II DIAGNOSTIC TEST MODE	Description
C/U INITIALIZATION	When replacing any of the following three components, C/U initialization and re-registration of all NATS ignition keys are necessary. (NATS ignition key/IMMU/ECM)
SELF-FUNCTION CHECK	ECM checks its own NATS communication interface by itself.
SELF-DIAG RESULTS	Detected items (screen terms) are as shown in the chart EL-138.

HOW TO READ SELF-DIAGNOSTIC RESULTS

NMEL0329S03

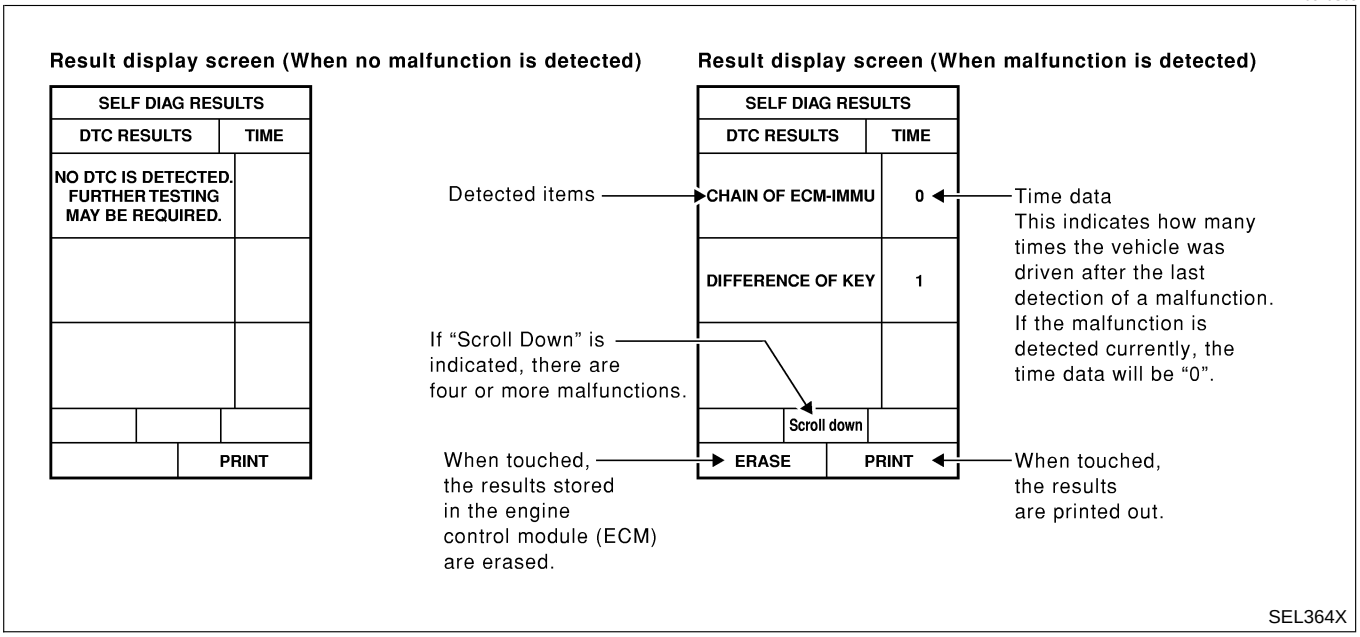

SELF-DIAGNOSTIC RESULTS ITEM CHART

NMEL0329S04

Detected items (Screen terms)	Description	Reference page
IMMU	ECM received the signal from IMMU that IMMU is malfunctioning.	EL-141
ECM	ECM is malfunctioning.	EL-141
CHAIN OF ECM-IMMU	Communication impossible between ECM and IMMU.	EL-142
DIFFERENCE OF KEY	IMMU can receive the key ID signal but the result of ID verification between key ID and IMMU is NG.	EL-146
CHAIN OF IMMU-KEY	IMMU cannot receive the key ID signal.	EL-147
ID DISCORD, IMM-ECM	The result of ID verification between IMMU and ECM is NG. System initialization is required.	EL-148
ELECTRONIC NOISE	Noise (interference) interfered into NATS communication lines during communicating.	EL-149
DON'T ERASE BEFORE CHECKING ENG DIAG	Engine trouble data and NATS trouble data have been detected in ECM.	EL-139
LOCK MODE	When the starting operation is carried out 5 or more times consecutively under the folowing conditions, NATS will shift the mode to one which prevents the engine from being started. ● Unregistered ignition key is used ● IMMU or ECM malfunctioning	EL-152

Trouble Diagnoses

WORK FLOW

NMEL0330

NMEL0330S01

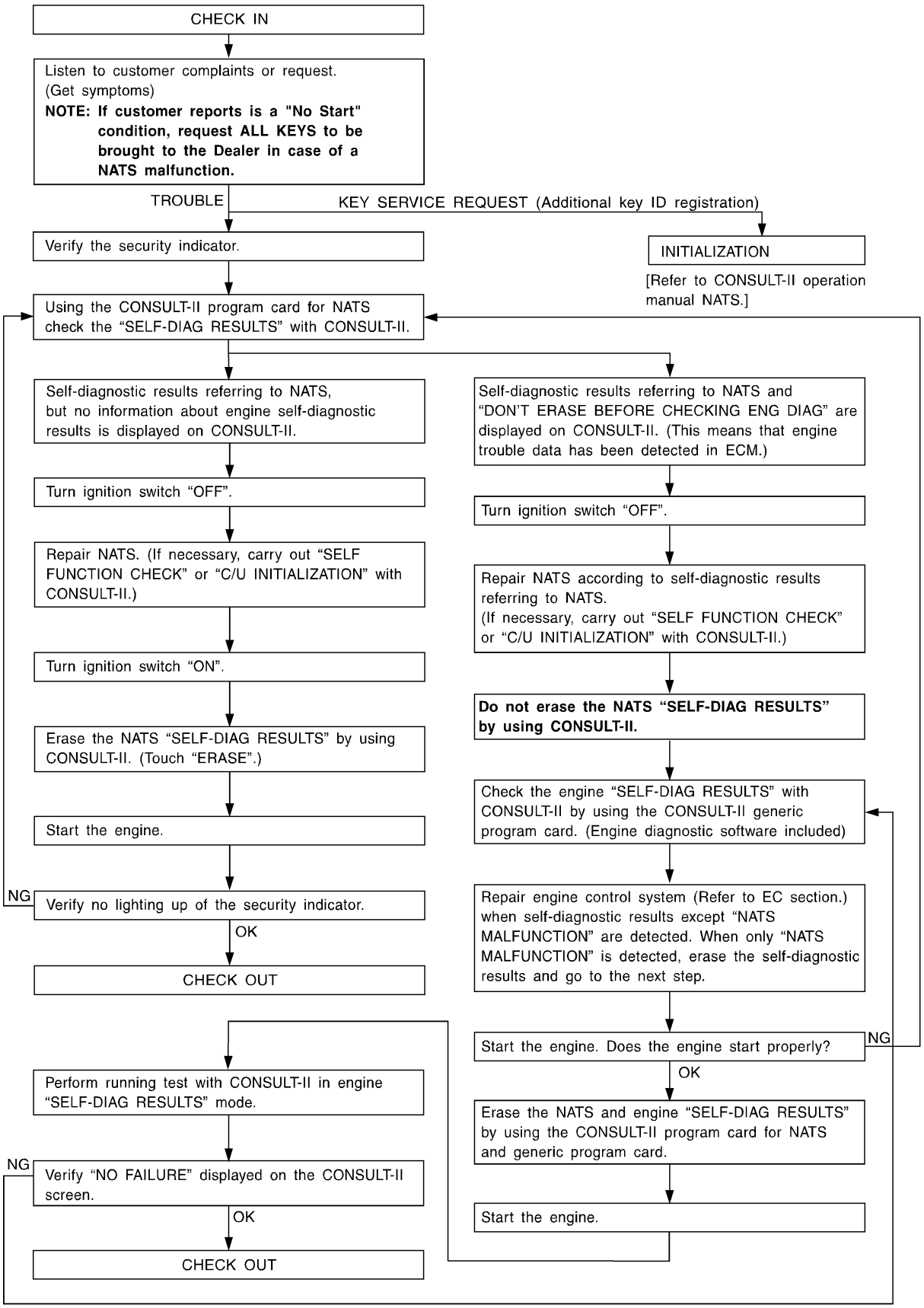

SEL932XA

SYMPTOM MATRIX CHART 1
(Self-diagnosis related item)

NMEL0330S02

SYMPTOM	Displayed "SELF-DIAG RESULTS" on CONSULT screen.	DIAGNOSTIC PROCEDURE (Reference page)	SYSTEM (Malfunctioning part or mode)	REFERENCE PART NO. OF ILLUSTRATION ON NEXT PAGE
• Security indicator lighting up* • Engine will start.	IMMU	PROCEDURE 1 (EL-141)	IMMU	A
	ECM	PROCEDURE 2 (EL-141)	ECM	B
• Security indicator lighting up* • Engine hard to start	CHAIN OF ECM-IMMU	PROCEDURE 3 (EL-142)	Open circuit in battery voltage line of IMMU circuit	C1
			Open circuit in ignition line of IMMU circuit	C2
			Open circuit in ground line of IMMU circuit	C3
			Open circuit in communication line between IMMU and ECM	C4
			Short circuit between IMMU and ECM communication line and battery voltage line	C4
			Short circuit between IMMU and ECM communication line and ground line	C4
			ECM	B
			IMMU	A
	DIFFERENCE OF KEY	PROCEDURE 4 (EL-146)	Unregistered key	D
			IMMU	A
	CHAIN OF IMMU-KEY	PROCEDURE 5 (EL-147)	Malfunction of key ID chip	E
			IMMU	A
	ID DISCORD, IMM-ECM	PROCEDURE 6 (EL-148)	System initialisation has not yet been completed.	F
			ECM	F
	ELECTRONIC NOISE	PROCEDURE 7 (EL-149)	Noise interference in communication line	—
	LOCK MODE	PROCEDURE 9 (EL-152)	LOCK MODE	D
• MIL staying ON • Security indicator lighting up*	DON'T ERASE BEFORE CHECKING ENG DIAG	WORK FLOW (EL-139)	Engine trouble data and NATS trouble data have been detected in ECM	—

*: When NATS detects trouble, the security indicator lights up while ignition key is in the "ON" position.

SYMPTOM MATRIX CHART 2

(Non self-diagnosis related item)

NMEL0330S03

SYMPTOM	DIAGNOSTIC PROCEDURE (Reference page)	SYSTEM (Malfunctioning part or mode)
Security ind. does not light up.	PROCEDURE 8 (EL-150)	Security ind.
		Open circuit between Fuse and IMMU
		Continuation of initialization mode
		IMMU

DIAGNOSTIC SYSTEM DIAGRAM

NMEL0330S04

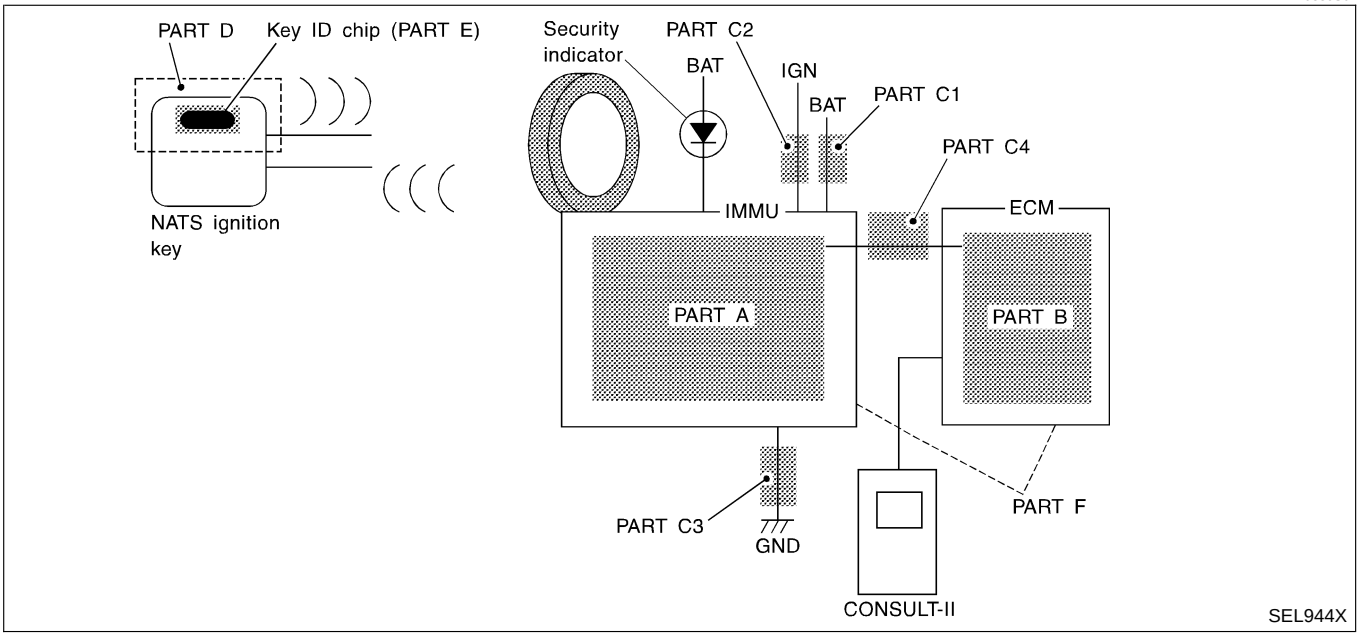

SELF-DIAG RESULTS	
DTC RESULTS	TIME
IMMU	0

SEL951W

DIAGNOSTIC PROCEDURE 1

NMEL0330S05

Self-diagnostic results:
"IMMU" displayed on CONSULT-II screen

1. Confirm SELF-DIAGNOSTIC RESULTS "ECM" displayed on CONSULT-II screen. Ref. part No. B.
2. Replace IMMU.
3. Perform initialization with CONSULT-II.
   For initialization, refer to "CONSULT-II operation manual NATS".

SELF-DIAG RESULTS	
DTC RESULTS	TIME
ECM	0

SEL952W

DIAGNOSTIC PROCEDURE 2

NMEL0330S06

Self-diagnostic results:
"ECM" displayed on CONSULT-II screen

1. Confirm SELF-DIAGNOSTIC RESULTS "ECM" displayed on CONSULT-II screen. Ref. part No. B.
2. Replace ECM.
3. Perform initialization with CONSULT-II.
   For initialization, refer to "CONSULT-II operation manual NATS".

DIAGNOSTIC PROCEDURE 3

=NMEL0330S07

Self-diagnostic results:
"CHAIN OF ECM-IMMU" displayed on CONSULT-II screen

1	CONFIRM SELF-DIAGNOSTIC RESULTS

Confirm SELF-DIAGNOSTIC RESULTS "CHAIN OF ECM-IMMU" displayed on CONSULT-II screen.

SELF DIAG RESULTS	
DTC RESULTS	TIME
CHAIN OF ECM-IMMU	0

SEL366X

Is CONSULT-II screen displayed as above?

Yes	▶	GO TO 2.
No	▶	GO TO SYMPTOM MATRIX CHART 1.

2	CHECK POWER SUPPLY CIRCUIT FOR IMMU

1. Disconnect IMMU connector.
2. Check voltage between IMMU harness connector E114 terminal 8 (W) and ground with CONSULT-II or tester.

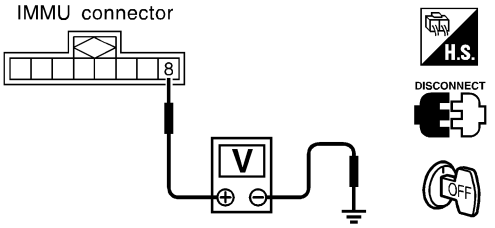

Battery voltage should exist.

SEL302WG

OK or NG

OK	▶	GO TO 3.
NG	▶	**Check the following** ● 10A fuse (No. 34, located in the fuse and fusible link box) ● Harness for open or short between fuse and IMMU connector **Ref. Part No. C1**

3	CHECK IGN SW. ON SIGNAL

1. Turn ignition switch ON.
2. Check voltage between IMMU harness connector E114 terminal 7 (BR) and ground with CONSULT-II or tester.

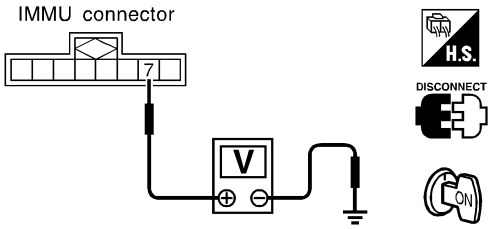

Battery voltage should exist.

SEL303WI

OK or NG

OK	▶	GO TO 4.
NG	▶	**Check the following** ● 10A fuse [No. 14, located in the fuse block (J/B)] ● Harness for open or short between fuse and IMMU connector **Ref. part No. C2**

4	CHECK GROUND CIRCUIT FOR IMMU

1. Turn ignition OFF.
2. Check continuity between IMMU harness connector E114 terminal 4 (B) and ground.

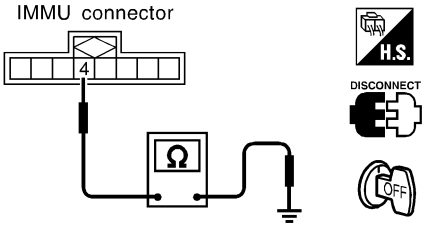

Continuity should exist.

SEL304WG

OK or NG

OK	▶	GO TO 5.
NG	▶	Repair harness. **Ref. part No. C3**

5	CHECK COMMUNICATION LINE OPEN CIRCUIT

1. Disconnect ECM connector.
2. Check continuity between ECM harness connector F1 terminal 8 (OR) and IMMU harness connector E114 terminal 1 (OR).

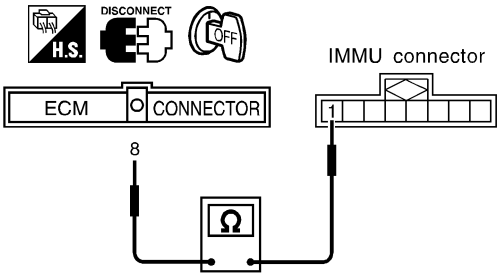

Continuity should exist.

SEL260Y

OK or NG

OK	▶	GO TO 6.
NG	▶	Repair harness or connector. **Ref. part No. C4**

6	CHECK COMMUNICATION LINE BATTERY SHORT CIRCUIT

1. Turn ignition ON.
2. Check voltage between ECM harness connector F1 terminal 8 (OR) or IMMU harness connector E114 terminal 1 (OR) and ground.

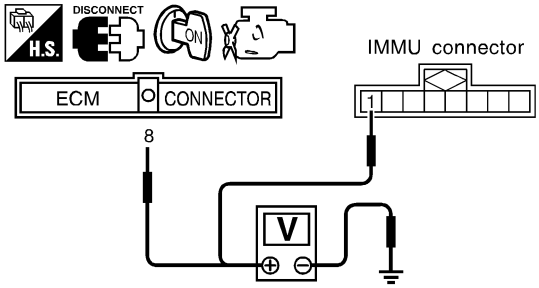

Voltage: 0V

SEL261Y

OK or NG

OK	▶	GO TO 7.
NG	▶	Communication line is short-circuited with battery voltage line or ignition switch ON line. Repair harness or connectors. **Ref. part No. C4**

7	CHECK COMMUNICATION LINE GROUND SHORT CIRCUIT

1. Turn ignition switch OFF.
2. Check continuity between ECM harness connector F1 terminal 8 (OR) or IMMU harness connector E114 terminal 1 (PU/R) and ground.

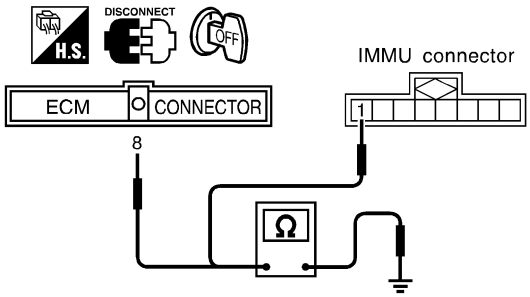

Continuity should not exist.

SEL262Y

OK or NG

OK	▶	GO TO 8.
NG	▶	Communication line is short-circuited with ground line. Repair harness or connectors. **Ref. part No. C4**

8	SELF-FUNCTION CHECK

1. Connect ECM connector and disconnect IMMU connector.
2. Turn ignition switch ON.
3. Touch "SELF-FUNCTION CHECK" on CONSULT-II "SELECT DIAG MODE" screen.
4. Touch "START". ECM will then check its communication interface by itself.

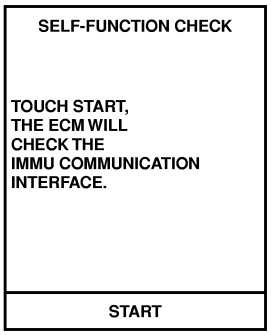

SEL936X

SELF-FUNCTION CHECK result:

OK or NG

OK	▶	IMMU is malfunctioning. Replace IMMU. **Ref. part No. A** Perform initialization with CONSULT-II. For the operation of initialization, refer to "CONSULT-II operation manual NATS".
NG	▶	ECM is malfunctioning. Replace ECM. **Ref. part No. B** Perform initialization with CONSULT-II. For the operation of initialization, refer to "CONSULT-II operation manual NATS".

DIAGNOSTIC PROCEDURE 4

=NMEL0330S08

Self-diagnostic results: "DIFFERENCE OF KEY" displayed on CONSULT-II screen

1	CONFIRM SELF-DIAGNOSTIC RESULTS

Confirm SELF-DIAGNOSTIC RESULTS "DIFFERENCE OF KEY" displayed on CONSULT-II screen.

SELF DIAG RESULTS	
DTC RESULTS	TIME
DIFFERENCE OF KEY	0

SEL367X

Is CONSULT-II screen displayed as above?

Yes	▶	GO TO 2.
No	▶	GO TO SYMPTOM MATRIX CHART 1.

2	PERFORM INITIALIZATION WITH CONSULT-II

Perform initialization with CONSULT-II. Re-register all NATS ignition key IDs.
For initialization and registration of NATS ignition key IDs, refer to "CONSULT-II operation manual NATS".

IMMU INITIALIZATION
INITIALIZATION FAIL
THEN IGN KEY SW 'OFF' AND 'ON', AFTER CONFIRMING SELF-DIAG AND PASSWORD, PERFORM C/U INITIALIZATION AGAIN.

SEL297W

NOTE:
If the initialization is not completed or fails, CONSULT-II shows above message on the screen.

Can the system be initialized and can the engine be started with re-registered NATS ignition key?

Yes	▶	Ignition key ID was unregistered. **Ref. part No. D**
No	▶	IMMU is malfunctioning. Replace IMMU. **Ref. part No. A** Perform initialization with CONSULT-II. For initialization, refer to "CONSULT-II operation manual NATS".

DIAGNOSTIC PROCEDURE 5

=NMEL0330S09

Self-diagnostic results:
"CHAIN OF IMMU-KEY" displayed on CONSULT-II screen

1	CONFIRM SELF-DIAGNOSTIC RESULTS

Confirm SELF-DIAGNOSTIC RESULTS "CHAIN OF IMMU-KEY" displayed on CONSULT-II screen.

SELF DIAG RESULTS	
DTC RESULTS	TIME
CHAIN OF IMMU-KEY	0

SEL368X

Is CONSULT-II screen displayed as above?

Yes	▶	GO TO 2.
No	▶	GO TO SYMPTOM MATRIX CHART 1.

2	CHECK NATS IGNITION KEY ID CHIP

Start engine with another registered NATS ignition key.

Does the engine start?

Yes	▶	Ignition key ID chip is malfunctioning. Replace the ignition key. **Ref. part No. E** Perform initialization with CONSULT-II. For initialization, refer to "CONSULT-II Operation Manual NATS".
No	▶	GO TO 3.

3	CHECK IMMU INSTALLATION

Check IMMU installation.
Refer to "How to Replace IMMU" in EL-153.

OK or NG

OK	▶	IMMU is malfunctioning. Replace IMMU. **Ref. part No. A** Perform initialization with CONSULT-II. For initialization, refer to "CONSULT-II Operation Manual NATS".
NG	▶	Reinstall IMMU correctly.

DIAGNOSTIC PROCEDURE 6

=NMEL0330S10

Self-diagnostic results: "ID DISCORD, IMM-ECM" displayed on CONSULT-II screen

1	CONFIRM SELF-DIAGNOSTIC RESULTS

Confirm SELF-DIAGNOSTIC RESULTS "ID DISCORD, IMM-ECM" displayed on CONSULT-II screen.

SELF DIAG RESULTS	
DTC RESULTS	TIME
ID DISCORD, IMM-ECM	0

SEL369X

NOTE:
"ID DISCORD IMMU-ECM":
Registered ID of IMMU is in discord with that of ECM.

Is CONSULT-II screen displayed as above?

Yes	▶	GO TO 2.
No	▶	GO TO SYMPTOM MATRIX CHART 1.

2	PERFORM INITIALIZATION WITH CONSULT-II

Perform initialization with CONSULT-II. Re-register all NATS ignition key IDs.
For initialization, refer to "CONSULT-II operation manual NATS".

IMMU INITIALIZATION
INITIALIZATION FAIL
THEN IGN KEY SW 'OFF' AND 'ON', AFTER CONFIRMING SELF-DIAG AND PASSWORD, PERFORM C/U INITIALIZATION AGAIN.

SEL297W

NOTE:
If the initialization is not completed or fails, CONSULT-II shows above message on the screen.

Can the system be initialized?

Yes	▶	Start engine. (END) (System initialization had not been completed. **Ref. part No. F**)
No	▶	ECM is malfunctioning. Replace ECM. **Ref. part No. F** Perform initialization with CONSULT-II. For initialization, refer to "CONSULT-II operation manual NATS".

DIAGNOSTIC PROCEDURE 7

=NMEL0330S11

Self-diagnostic results:
"ELECTRONIC NOISE/MINGLE NOISE" displayed on CONSULT screen

1	CONFIRM SELF-DIAGNOSTIC RESULTS

Confirm SELF-DIAGNOSTIC RESULTS "ELECTRONIC NOISE/MINGLE NOISE" displayed on CONSULT-II screen.

SELF DIAG RESULTS	
DTC RESULTS	TIME
ELECTRONIC/MINGLE NOISE	0

SEL937X

Is CONSULT-II screen displayed as above?

Yes	▶	GO TO 2.
No	▶	GO TO SYMPTOM MATRIX CHART 1.

2	TURN OFF AND REMOVE NOISE

1. Turn off or remove any possible noise sources.
2. Touch "ERASE" on CONSULT-II SELF-DIAGNOSTIC RESULTS screen.
3. Start engine.

Does engine start?

Yes	▶	INSPECTION END
No	▶	GO TO 1.

DIAGNOSTIC PROCEDURE 8
"SECURITY INDICATOR LAMP DOES NOT LIGHT UP"

=NMEL0330S12

1	CHECK FUSE	
Check 10A fuse [No. 28, located in the fuse block (J/B)].		
Is 10A fuse OK?		
Yes	▶	GO TO 2.
No	▶	Replace fuse.

2	CHECK SECURITY INDICATOR LAMP	
1. Install 10A fuse. 2. Perform initialization with CONSULT-II. For initialization, refer to "CONSULT-II Operation Manual NATS". 3. Turn ignition switch OFF. 4. Start engine and turn ignition switch OFF. 5. Check the security indicator lamp lighting. **Security indicator lamp should be blinking.**		
OK or NG		
OK	▶	INSPECTION END
NG	▶	GO TO 3.

3	CHECK SECURITY INDICATOR LAMP POWER SUPPLY CIRCUIT	
1. Disconnect security indicator lamp connector. 2. Check voltage between security indicator lamp harness connector M50 terminal 1 (R/W) and ground.		
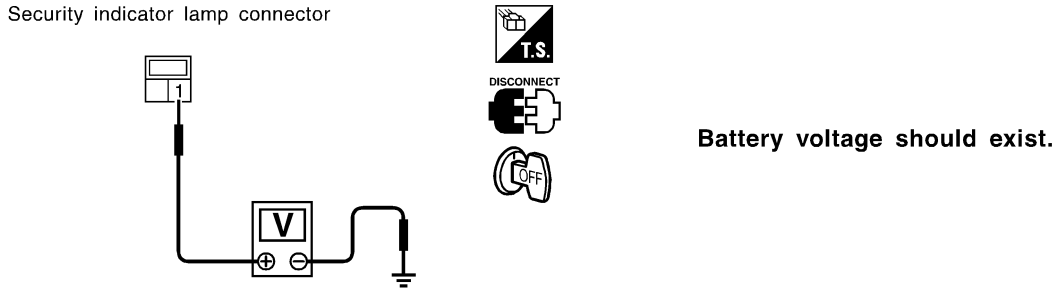		
OK or NG		
OK	▶	GO TO 4.
NG	▶	Check harness for open or short between fuse and security indicator lamp.

4	CHECK SECURITY INDICATOR LAMP	
Check security Indicator Lamp.		
Is security indicator lamp OK?		
Yes	▶	GO TO 5.
No	▶	Replace security indicator lamp.

5	CHECK IMMU FUNCTION

1. Connect IMMU connector.
2. Disconnect security indicator lamp connector.
3. Check continuity between IMMU harness connector E114 terminal 5 (G/OR) and ground.

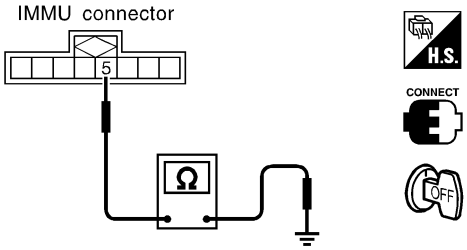

Cotinuity should exist intermittently.

SEL300WG

OK or NG

OK	▶	Check harness for open or short between security indicator lamp and IMMU.
NG	▶	IMMU is malfunctioning. Replace IMMU. Perform initialization with CONSULT-II. For initialization, refer to "CONSULT-II operation manual NATS".

DIAGNOSTIC PROCEDURE 9

=NMEL0330S13

Self-diagnostic results: "LOCK MODE" displayed on CONSULT-II screen

1	CONFIRM SELF-DIAGNOSTIC RESULTS

Confirm SELF-DIAGNOSTIC RESULTS "LOCK MODE" is displayed on CONSULT-II screen.

SELF DIAG RESULTS	
DTC RESULTS	TIME
LOCK MODE	0

SEL371X

Is CONSULT-II screen displayed as above?

Yes	▶	GO TO 2.
No	▶	GO TO SYMPTOM MATRIX CHART 1.

2	ESCAPE FROM LOCK MODE

1. Turn ignition switch OFF.
2. Turn ignition switch ON with registered key. (Do not start engine.) Wait 5 seconds.
3. Return the key to OFF position.
4. Repeat steps 2 and 3 twice (total of three cycles).
5. Start the engine.

Does engine start?

Yes	▶	System is OK. (Now system is escaped from "LOCK MODE".)
No	▶	GO TO 3.

3	CHECK IMMU ILLUSTRATION

Check IMMU installation. Refer to "How to Replace IMMU" in EL-153.

OK or NG

OK	▶	GO TO 4.
NG	▶	Reinstall IMMU correctly.

4	PERFORM INITIALIZATION WITH CONSULT-II

Perform initialization with CONSULT-II.
For initialization, refer to "CONSULT-II operation manual NATS".

IMMU INITIALIZATION
INITIALIZATION FAIL
THEN IGN KEY SW 'OFF' AND 'ON', AFTER CONFIRMING SELF-DIAG AND PASSWORD, PERFORM C/U INITIALIZATION AGAIN.

SEL297W

NOTE:
If the initialization is not completed or fails, CONSULT-II shows the above message on the screen.

Can the system be initialized?

Yes	▶	System is OK.
No	▶	GO TO DIAGNOSTIC PROCEDURE 4 to check "CHAIN OF IMMU-KEY", refer to EL-147.

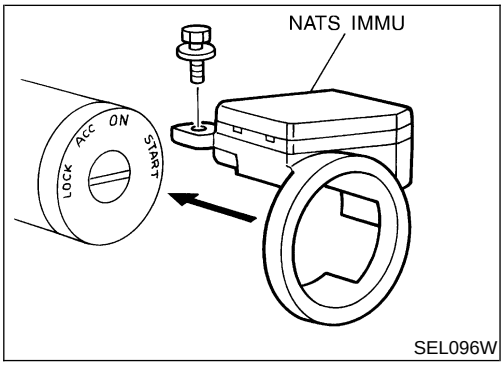

SEL096W

How to Replace NATS IMMU

NMEL0331

NOTE:

- **If NATS IMMU is not installed correctly, NATS system will not operate properly and SELF-DIAG RESULTS on CONSULT-II screen will show "LOCK MODE" or "CHAIN OF IMMU-KEY".**

Engine Compartment

NMEL0129

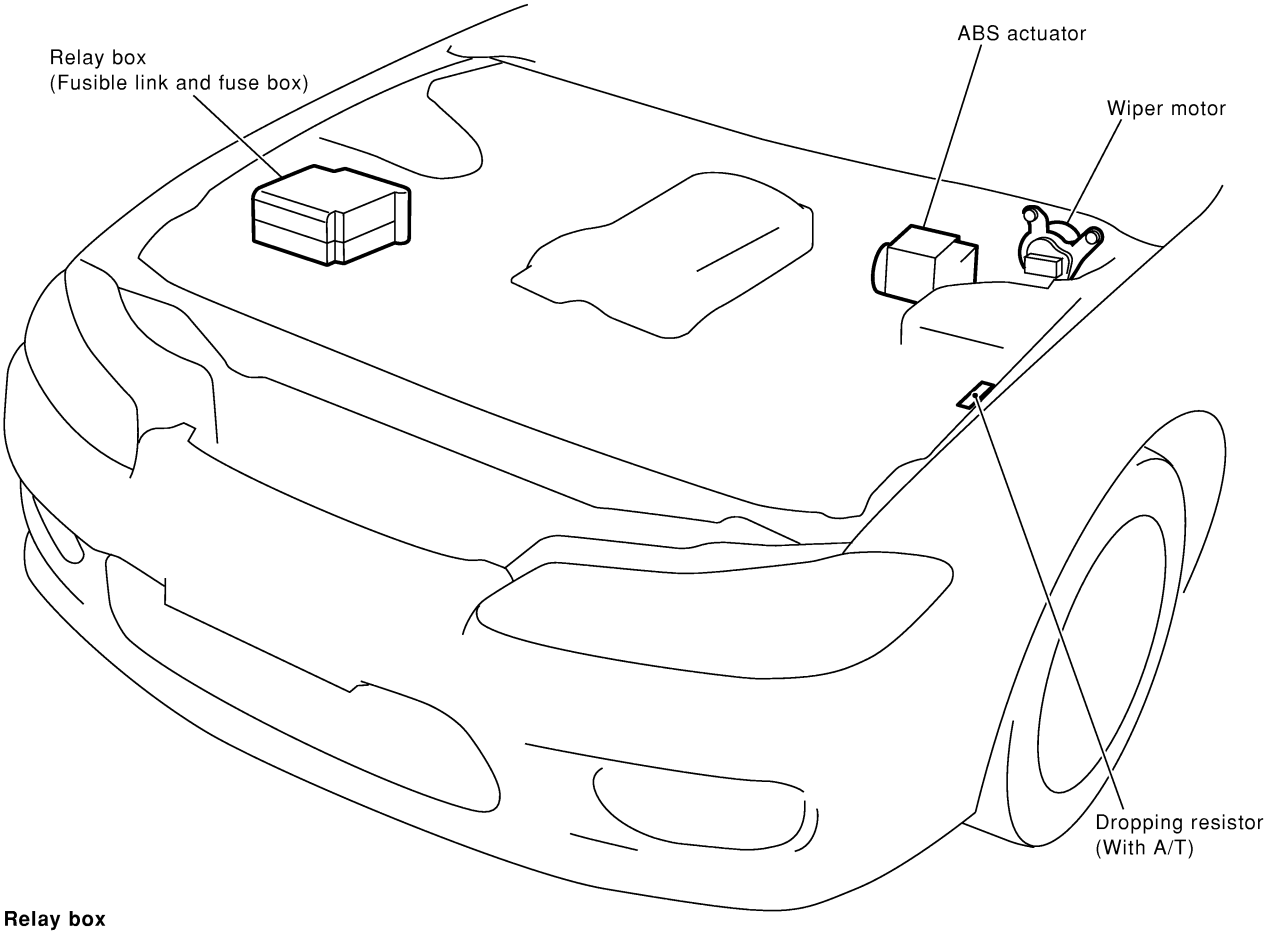

Relay box

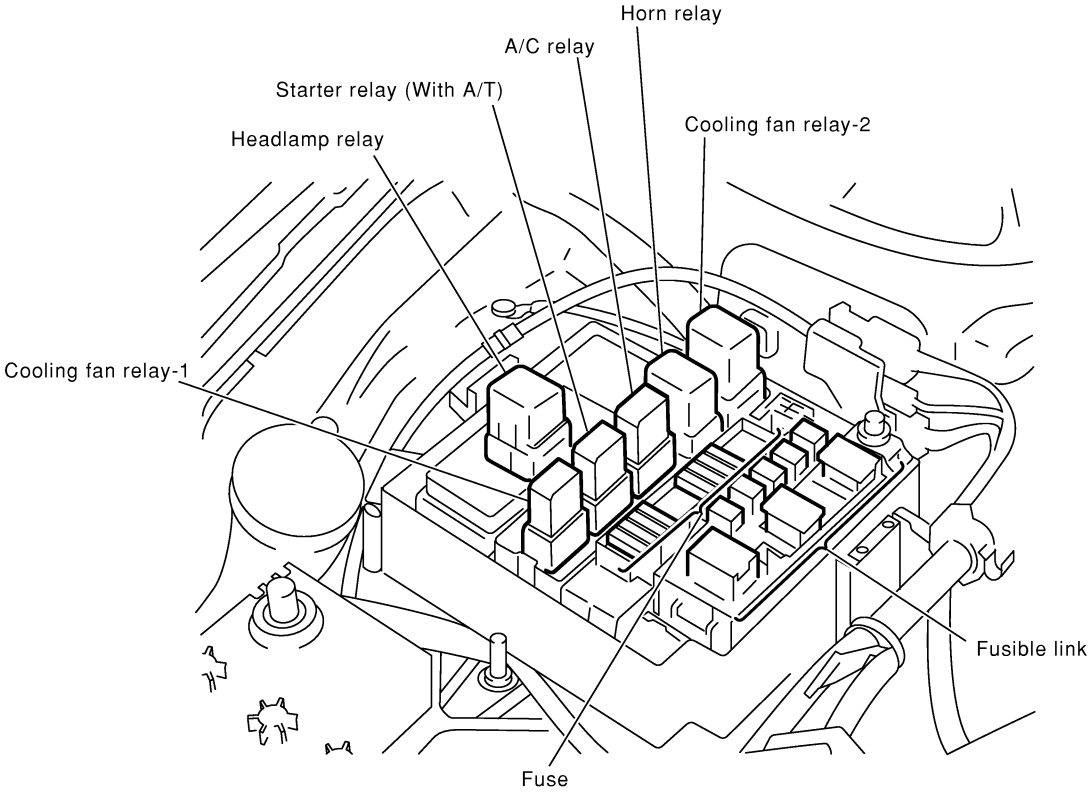

CEL319A

NOTE:

Passenger Compartment

NMEL0130

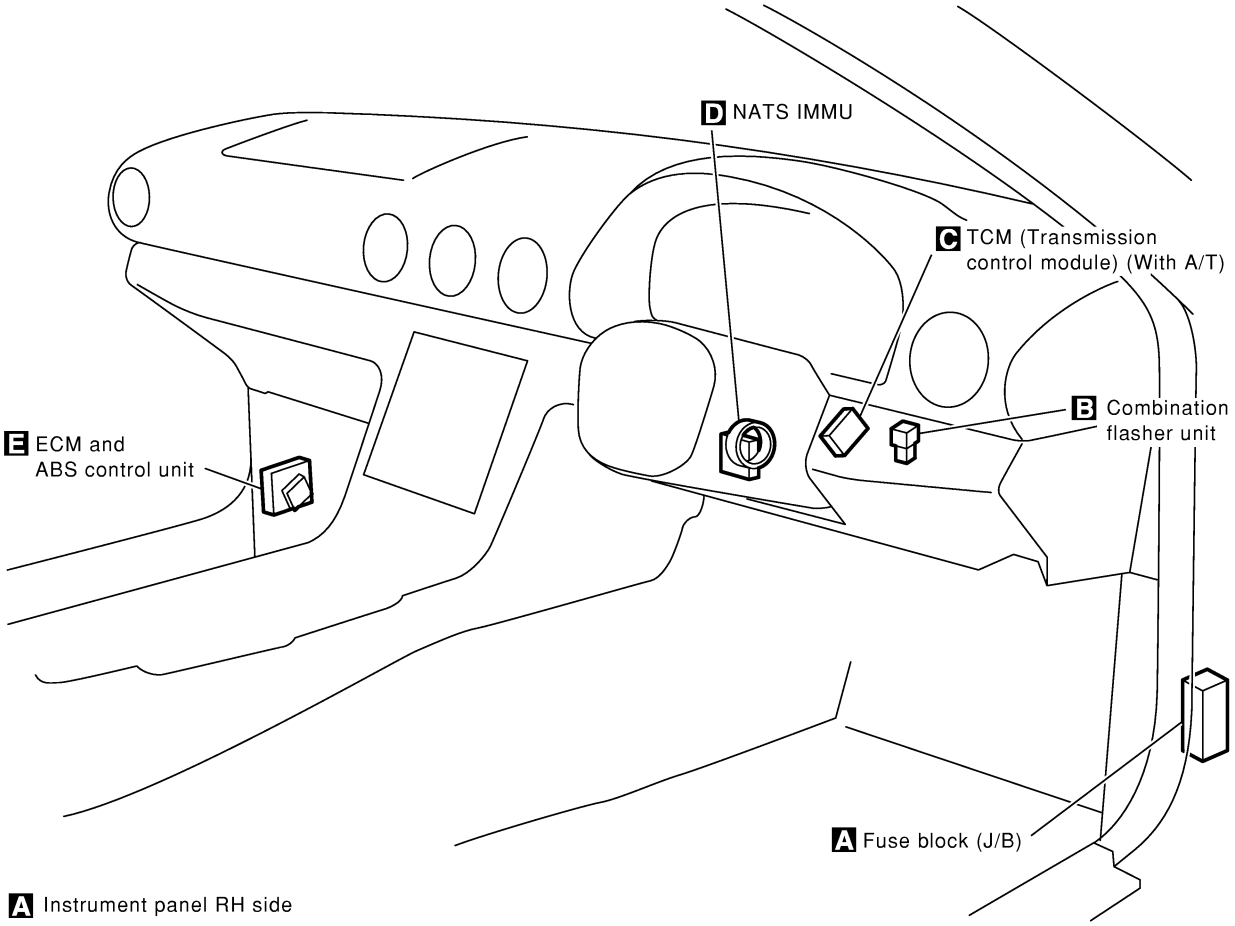

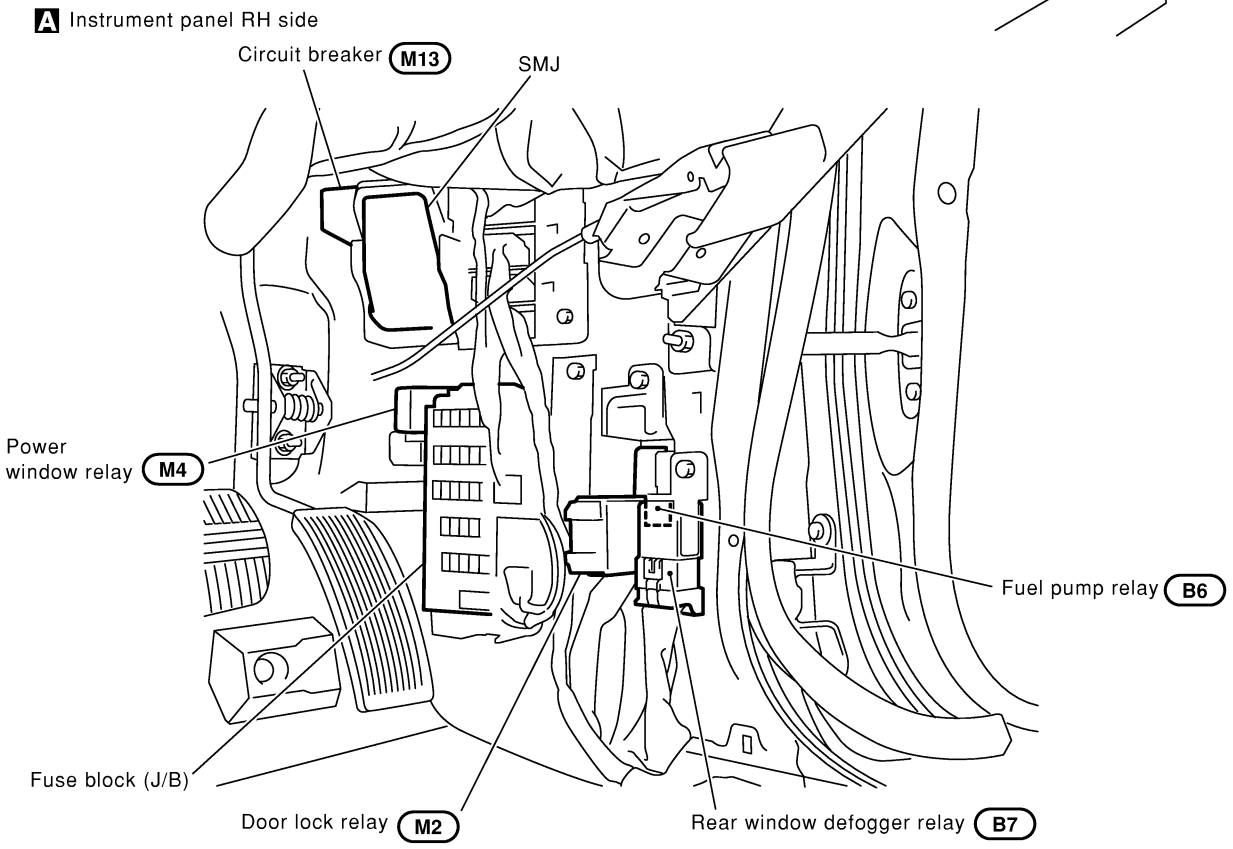

CEL320A

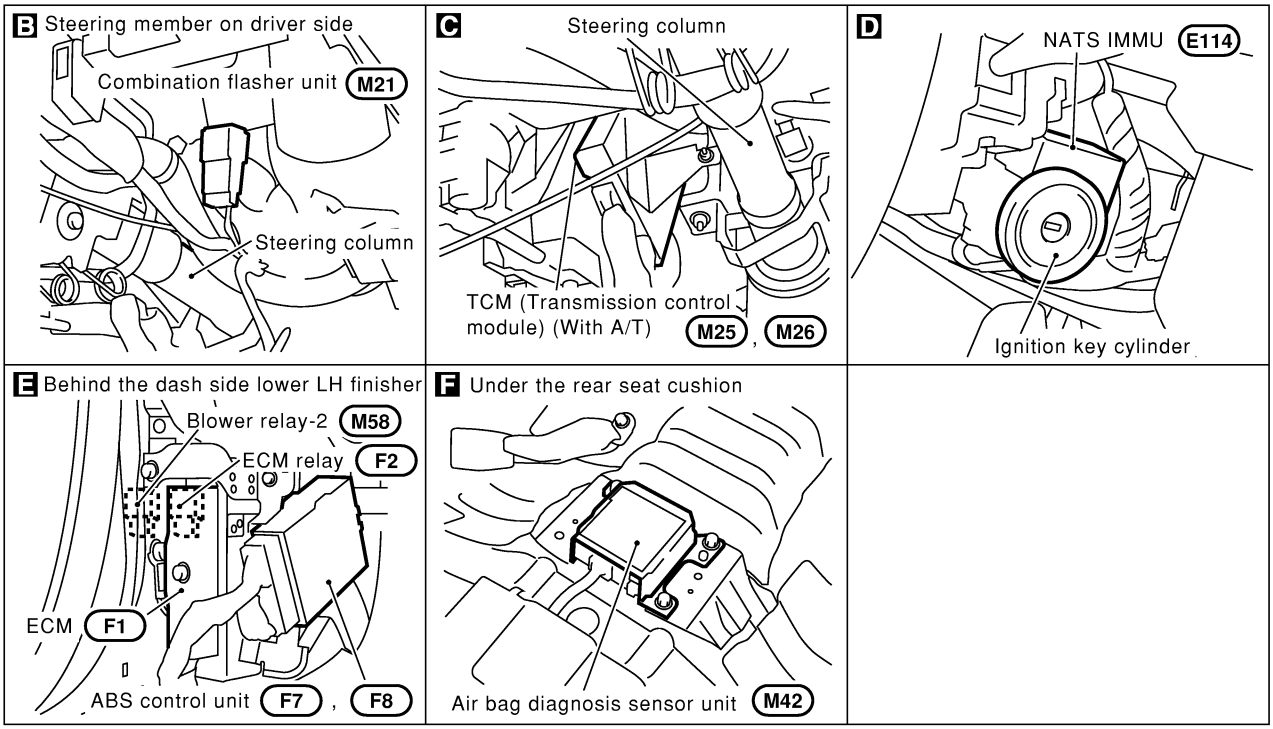
B Steering member on driver side
Combination flasher unit M21
Steering column
C Steering column
TCM (Transmission control module) (With A/T) M25 , M26
D
NATS IMMU E114
Ignition key cylinder
E Behind the dash side lower LH finisher
Blower relay-2 M58
ECM relay F2
ECM F1
ABS control unit F7 , F8
F Under the rear seat cushion
Air bag diagnosis sensor unit M42

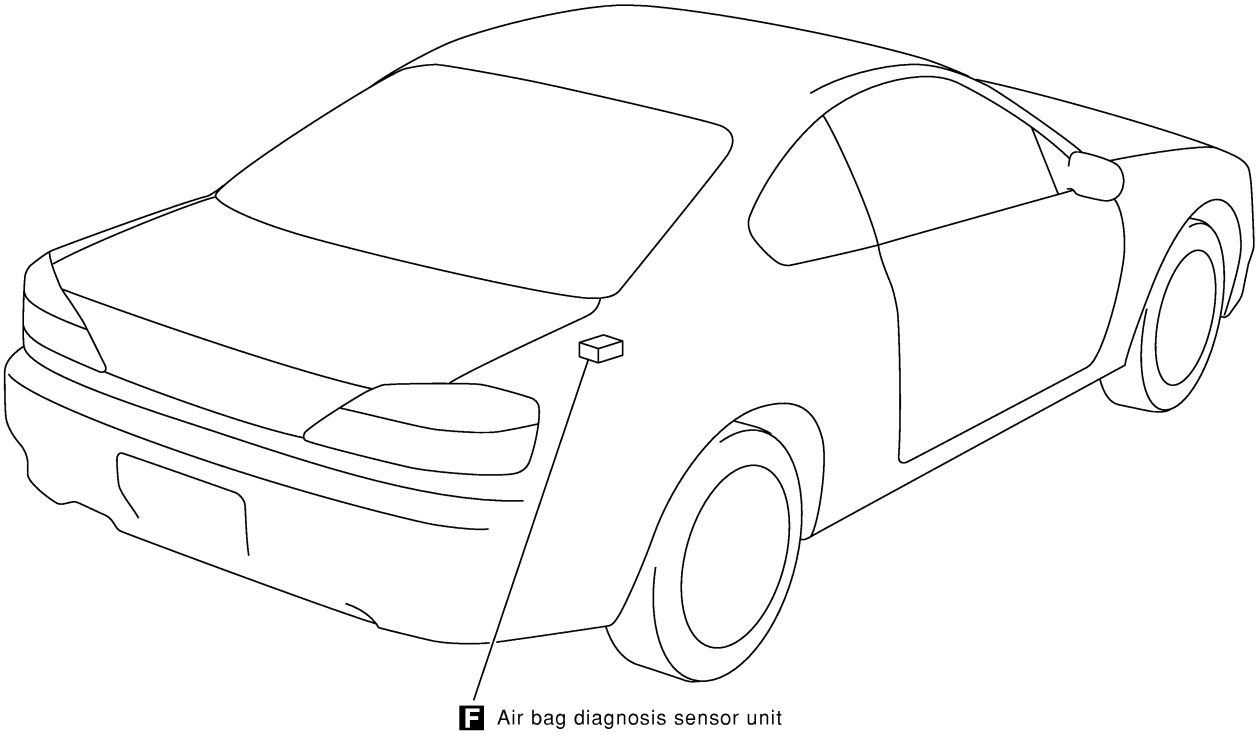
F Air bag diagnosis sensor unit

CEL321A

How to Read Harness Layout

NMEL0131

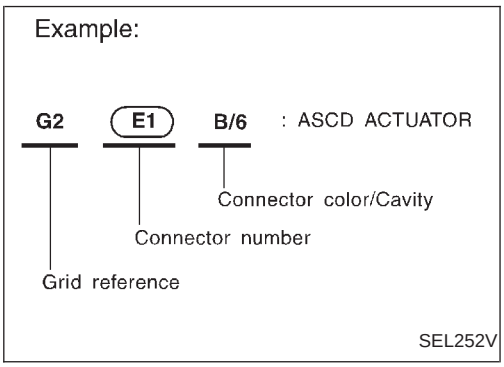

The following Harness Layouts use a map style grid to help locate connectors on the drawings:

- Main Harness
- Engine Room Harness (Engine Compartment)
- Engine Control Harness
- Body Harness

TO USE THE GRID REFERENCE

NMEL0131S01

1. Find the desired connector number on the connector list.
2. Find the grid reference.
3. On the drawing, find the crossing of the grid reference letter column and number row.
4. Find the connector number in the crossing zone.
5. Follow the line (if used) to the connector.

CONNECTOR SYMBOL

NMEL0131S02

Main symbols of connector (in Harness Layout) are indicated in the below.

Connector type	Water proof type		Standard type	
	Male	Female	Male	Female
• Cavity: Less than 4 • Relay connector				
• Cavity: From 5 to 8				
• Cavity: More than 9				
• Ground terminal etc.	—			

Outline

NMEL0132

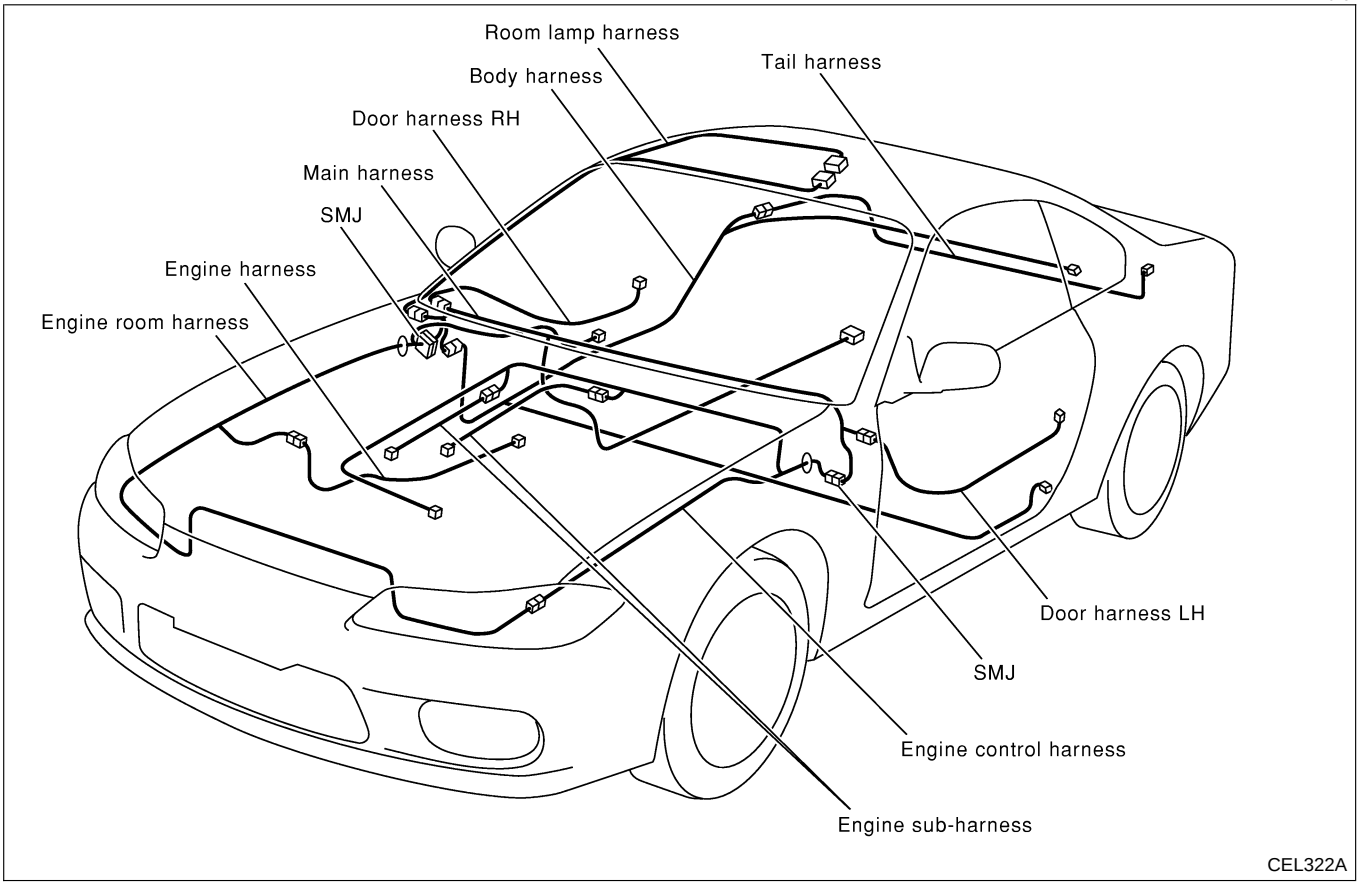

NOTE:
For detailed ground distribution information, refer to “Ground Distribution”, “GROUND”, EL-15.

Main Harness

NMEL0133

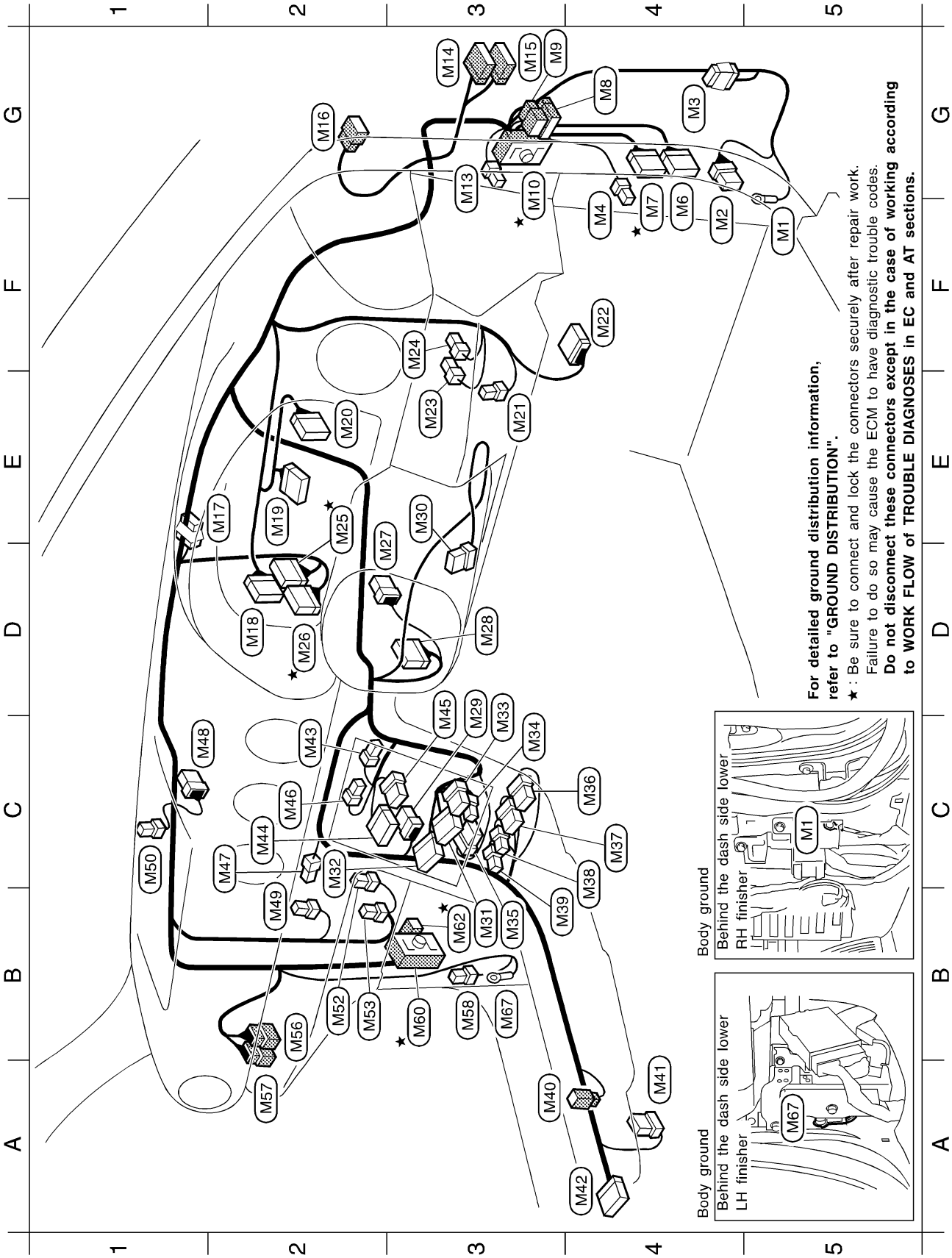

CEL323A

F5	M1	–	:	Body ground
F4	M2	W/6	:	Door lock relay
G4	M3	SB/6	:	Joint connector-1 (With A/T)
F4	M4	L/4	:	Power window relay
F4	M6	W/10	:	Fuse block (J/B)
F4★	M7	W/16	:	Fuse block (J/B)
G4	M8	W/20	:	To B1
G3	M9	W/6	:	To B3
G3★	M10	SMJ	:	To E101
G3	M13	W/2	:	Circuit breaker
G3	M14	W/12	:	To D1
G3	M15	W/10	:	To D2
G2	M16	W/8	:	To R1
E2	M17	SB/6	:	Joint connector-2 (With A/T)
D2	M18	W/20	:	Combination meter
E2	M19	BR/20	:	Combination meter
E2	M20	BR/24	:	Combination meter
E3	M21	B/3	:	Combination flasher unit
F4	M22	GY/14	:	Data link connector
E3	M23	B/2	:	Stop lamp switch
F3	M24	BR/2	:	Shift lock brake switch (With A/T)
E2★	M25	W/24	:	TCM (Transmission control module) (With A/T)
D2★	M26	GY/24	:	TCM (Transmission control module) (With A/T)
D3	M27	B/6	:	Air mix door motor
D3	M28	BR/10	:	Mode door motor
D3	M29	B/6	:	Bi-level door motor
E3	M30	Y/7	:	Spiral cable
B3	M31	B/12	:	Push control unit
C2	M32	B/16	:	Push control unit
D3	M33	W/6	:	Fan switch
C3	M34	W/3	:	A/C switch
B3	M35	BR/6	:	PTC
C4	M36	W/8	:	Hazard switch
C4	M37	W/6	:	Rear window defogger
C4	M38	B/1	:	Cigarette lighter illumination
B3	M39	B/2	:	Cigarette lighter socket
A3	M40	W/2	:	Ashtray illumination
A4	M41	W/8	:	A/T mode switch
A4	M42	Y/20	:	Air bag diagnosis sensor unit
C2	M43	W/4	:	Option connector (Deck)
C2	M44	W/10	:	Option connector (Audio unit)
D3	M45	W/6	:	Option connector (Audio unit)
C2	M46	W/2	:	Antenna amp.
C2	M47	Y/2	:	Front passenger air bag module
C1	M48	W/8	:	Intake door motor
B2	M49	W/3	:	Thermo control amplifier
C1	M50	BR/2	:	Security indicator lamp
B2	M52	BR/4	:	Fan resistor
B2	M53	W/2	:	Blower motor
B2	M56	W/8	:	To D31
A2	M57	W/6	:	To D32
B3	M58	L/4	:	Blower relay-2
B3★	M60	W/48	:	To F4
B3★	M62	W/4	:	To F5 (With A/T)
B3	M67	–	:	Body ground

★: Be sure to connect and lock the connectors securely after repair work. Failure to do so may cause the ECM to have diagnostic trouble codes. **Do not disconnect these connectors except in the case of working according to WORK FLOW of TROUBLE DIAGNOSES in EC and AT sections.**

Engine Room Harness

NMEL0134

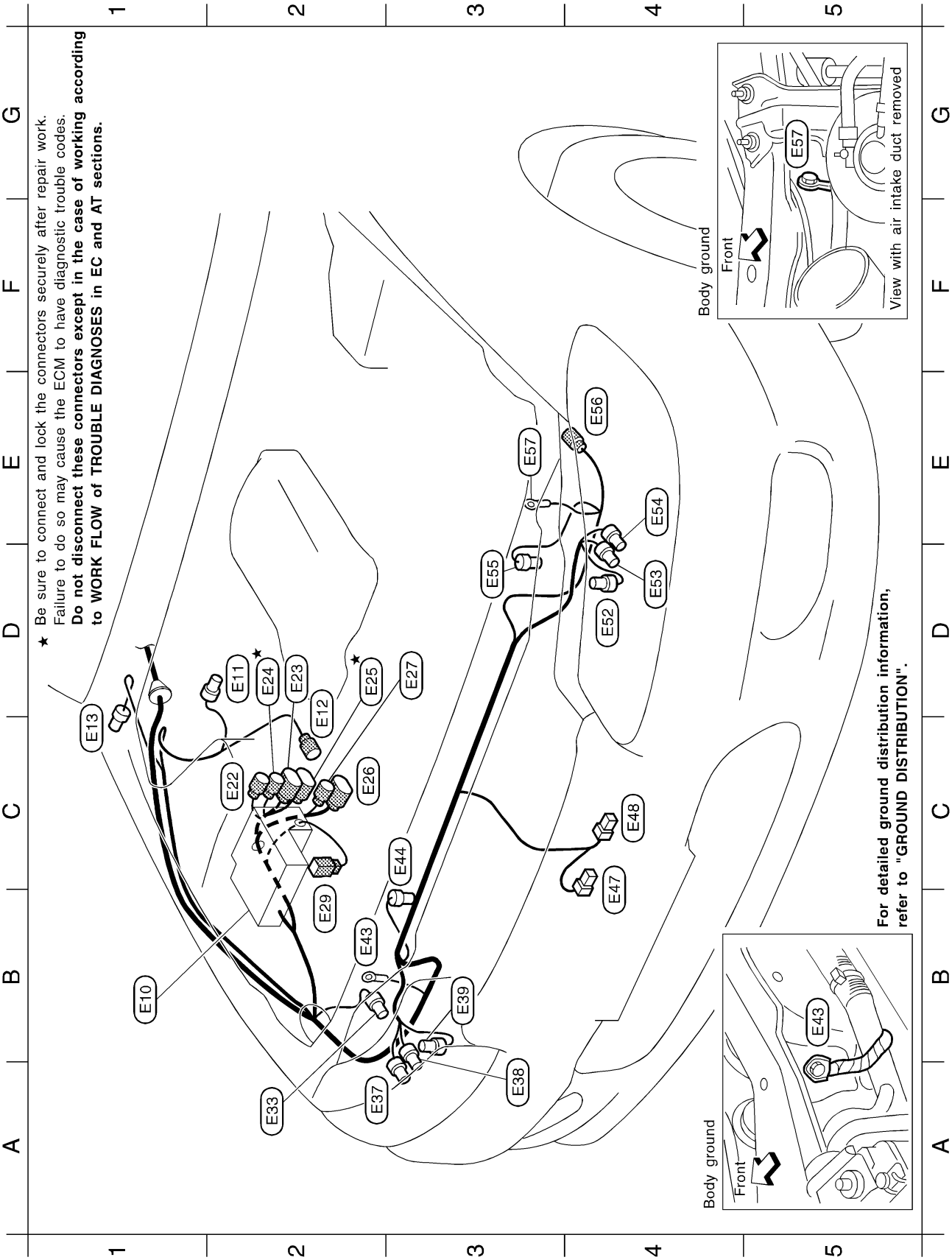

CEL325A

	E2	BR/6	:	Headlamp relay
	E3	L/4	:	Cooling fan relay-1
	E4	L/4	:	Starter relay (With A/T)
	E5	L/4	:	A/C relay
	E6	GY/3	:	Horn relay
	E8	–	:	Fuse block
	E9	–	:	Fusible link block
B1	E10	–	:	Relay box (Fusible link and fuse block)
D2	E11	GY/2	:	Brake fluid level switch
D2	E12	GY/2	:	Front wheel sensor RH
C1	E13	BR/2	:	Side turn signal lamp RH
C2	E22	GY/2	:	Park/neutral position switch (With A/T)
D2	E23	GY/8	:	Park/neutral position switch (With A/T)
D2★	E24	GY/3	:	Revolution sensor (With A/T)
D2★	E25	BR/8	:	To terminal cord assembly (With A/T)
C2	E26	SB/8	:	To E201
D3	E27	B/2	:	To E202
B2	E29	B/2	:	Fusible link
A2	E33	GY/2	:	Front washer motor
A2	E37	GY/3	:	Front combination lamp RH
A3	E38	GY/2	:	Headlamp RH (Low)
B3	E39	B/2	:	Headlamp RH (High)
B2	E43	–	:	Body ground
C3	E44	GY/4	:	Cooling fan motor
B4	E47	B/1	:	Horn high
C4	E48	B/1	:	Horn low
D4	E52	B/2	:	Headlamp LH (High)
D4	E53	GY/2	:	Headlamp LH (Low)
E4	E54	GY/3	:	Front combination lamp LH
D3	E55	B/4	:	Triple-pressure switch
E4	E56	GY/3	:	To F20
E3	E57	–	:	Body ground

Relay box (Fusible link and fuse box) E10

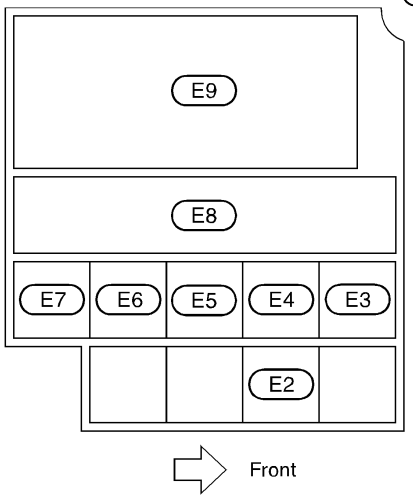

★: Be sure to connect and lock the connectors securely after repair work. Failure to do so may cause the ECM to have diagnostic trouble codes. **Do not disconnect these connectors except in the case of working according to WORK FLOW of TROUBLE DIAGNOSES in EC and AT sections.**

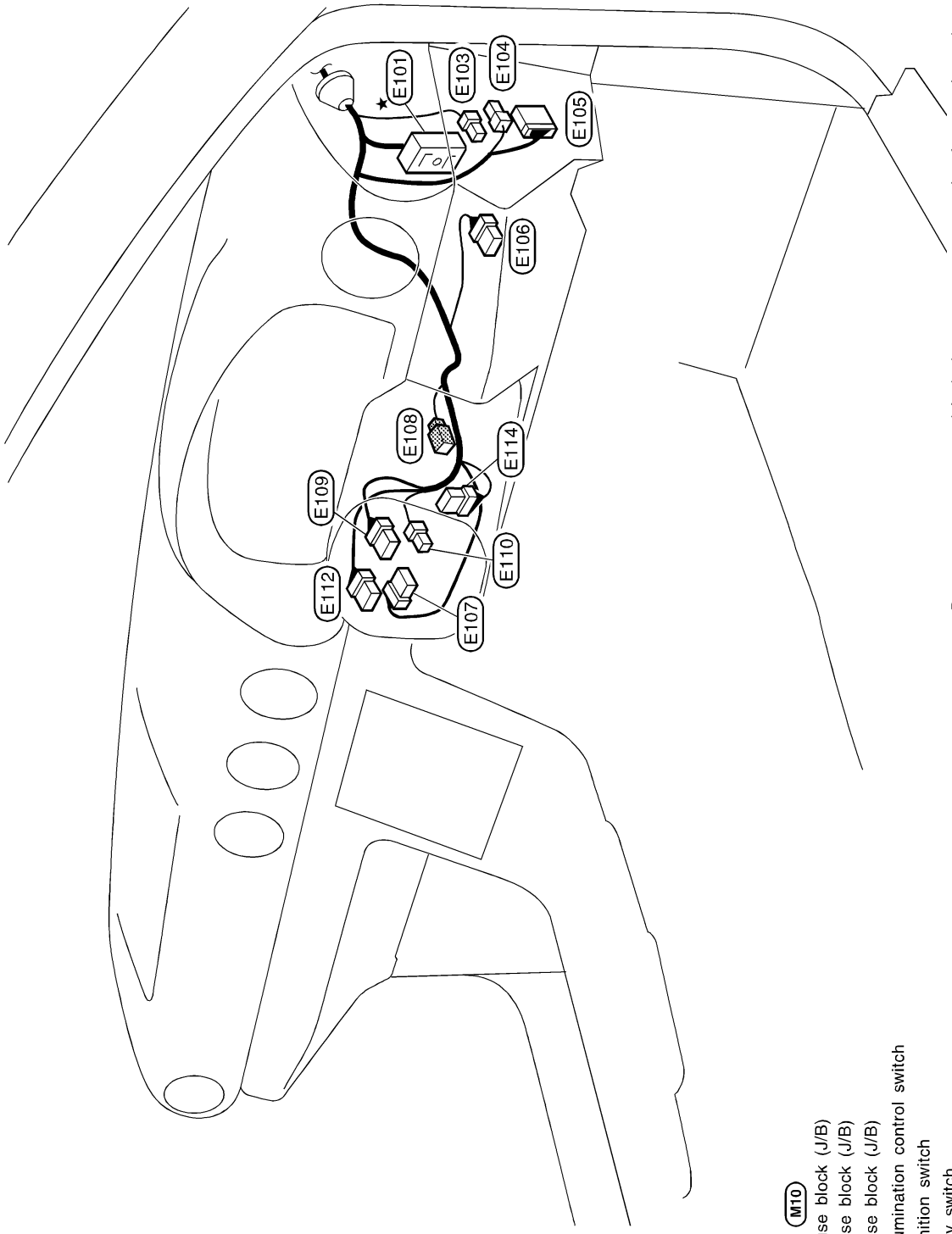

★: Be sure to connect and lock the connectors securely after repair work. Failure to do so may cause the ECM to have diagnostic trouble codes. **Do not disconnect these connectors except in the case of working according to WORK FLOW of TROUBLE DIAGNOSES in EC and AT sections.**

★ E101	SMJ	: To M10
E103	B/2	: Fuse block (J/B)
E104	W/4	: Fuse block (J/B)
E105	W/12	: Fuse block (J/B)
E106	W/6	: Illumination control switch
E107	B/5	: Ignition switch
E108	BR/2	: Key switch
E109	BR/8	: Combination switch (Lighting switch/Turn signal lamp switch)
E110	BR/4	: Combination switch (Lighting switch)
E112	GY/8	: Combination switch (Front wiper switch)
E114	W/8	: NATS IMMU

CEL327A

NOTE:

Engine Control Harness

NMEL0135

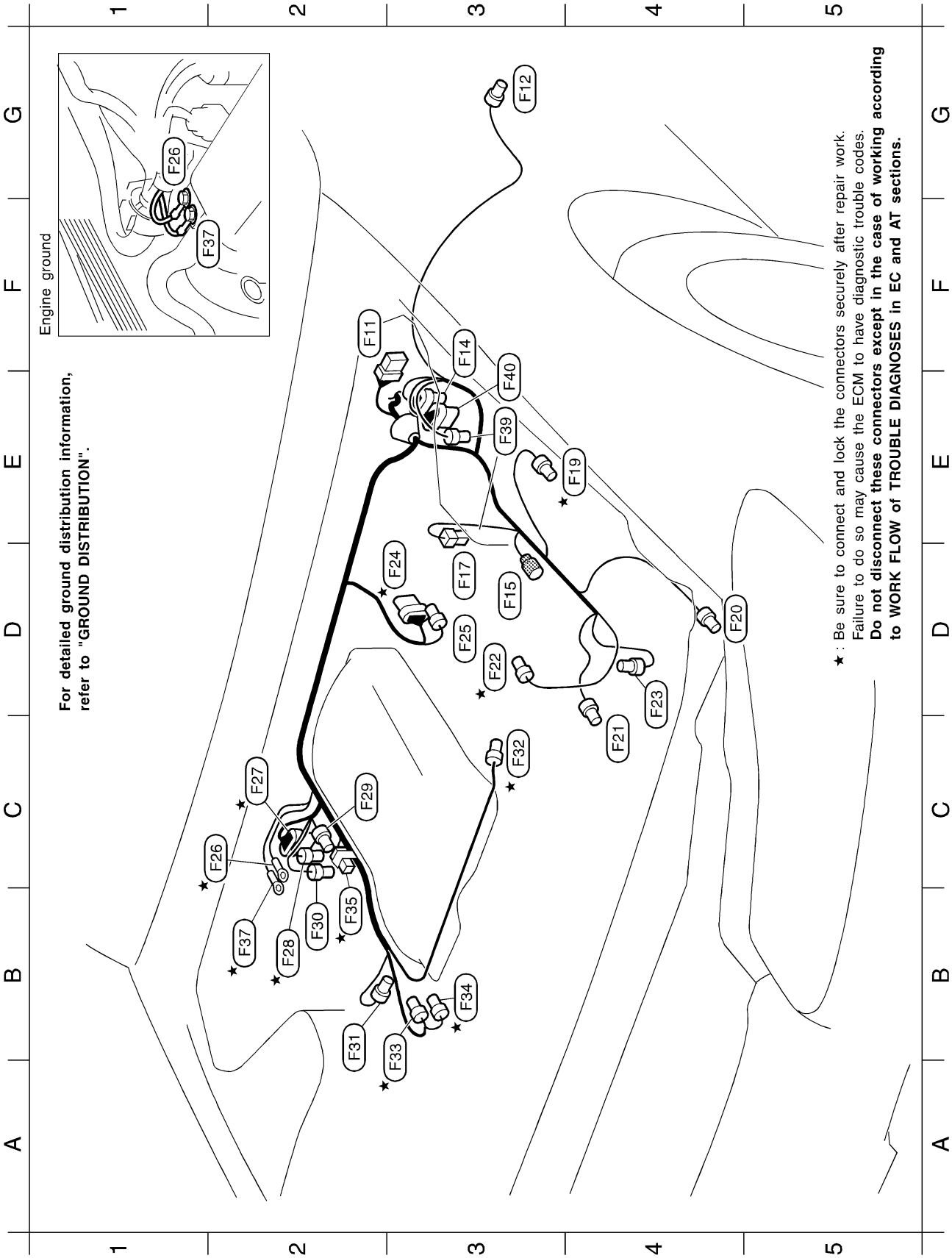

CEL328A

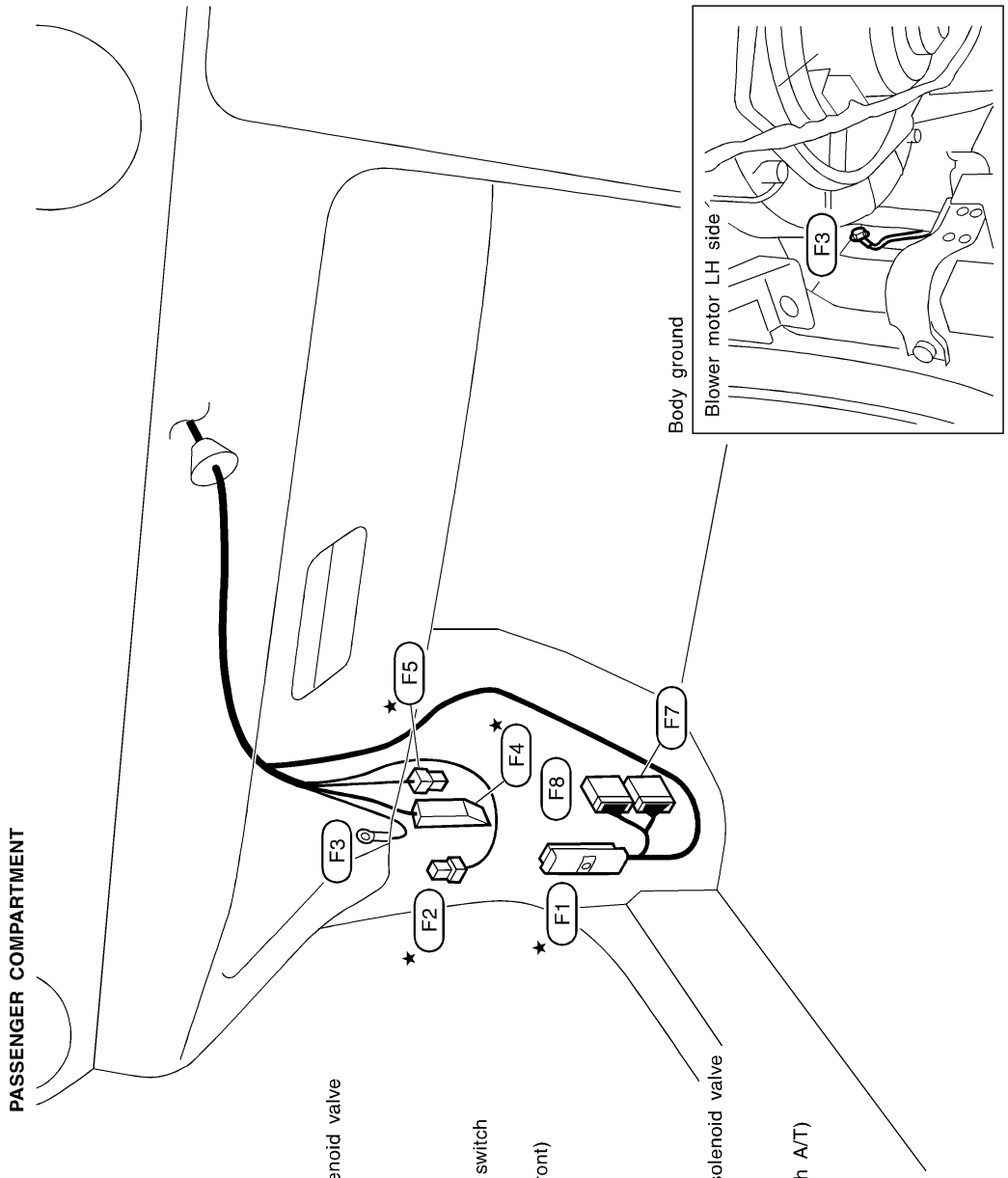

★	F1	W/64	: ECM
★	F2	BR/6	: ECM relay
	F3	–	: Body ground
★	F4	W/48	: To M60
★	F5	W/4	: To M62 (With A/T)
	F7	GY/20	: ABS control unit
	F8	GY/16	: ABS control unit
F2	F11	W/6	: Front wiper motor
G3	F12	BR/2	: Side turn signal lamp LH
F3	F14	SB/8	: ABS actuator
D3	F15	GY/2	: Front wheel sensor LH
D3	F17	B/2	: Wastegate valve control solenoid valve
E4 ★	F19	GY/2	: Dropping resistor (With A/T)
D4	F20	GY/3	: To E56
C4	F21	B/1	: Compressor
D3 ★	F22	BR/4	: Mass air flow sensor
D4	F23	GY/2	: Power steering oil pressure switch
D3 ★	F24	GY/6	: To F101
D3	F25	GY/3	: Heated oxygen sensor 1 (Front)
C2 ★	F26	–	: Engine ground
C2 ★	F27	SB/8	: To F111
B2 ★	F28	GY/2	: To F121
C2	F29	PU/2	: IACV-FICD solenoid valve
B2	F30	BR/2	: IACV-AAC valve
B2 ★	F31	B/2	: Intake valve timing control solenoid valve
C3 ★	F32	GY/4	: Camshaft position sensor
A2 ★	F33	BR/3	: Throttle position sensor
B3 ★	F34	GY/3	: Throttle position switch (With A/T)
B2 ★	F35	W/2	: Condenser
B2 ★	F37	–	: Engine ground
E3	F39	B/2	: ABS actuator
E3	F40	GY/8	: ABS actuator

For detailed ground distribution information, refer to "GROUND DISTRIBUTION".

★: Be sure to connect and lock the connectors securely after repair work. Failure to do so may cause the ECM to have diagnostic trouble codes. **Do not disconnect these connectors except in the case of working according to WORK FLOW of TROUBLE DIAGNOSES in EC and AT sections.**

CEL329A

Engine Sub Harness

NMEL0332

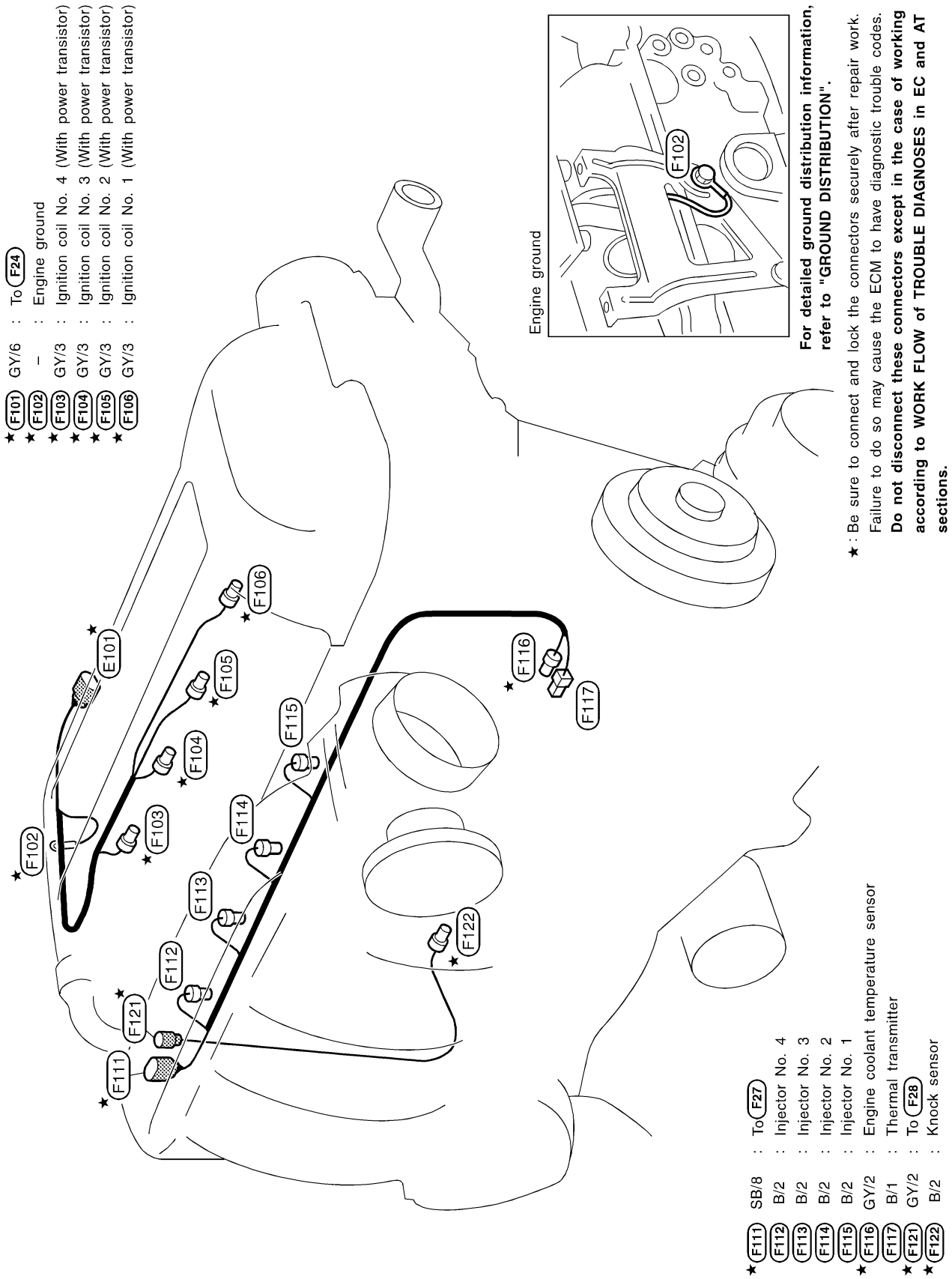

CEL330A

Engine Harness

NMEL0333

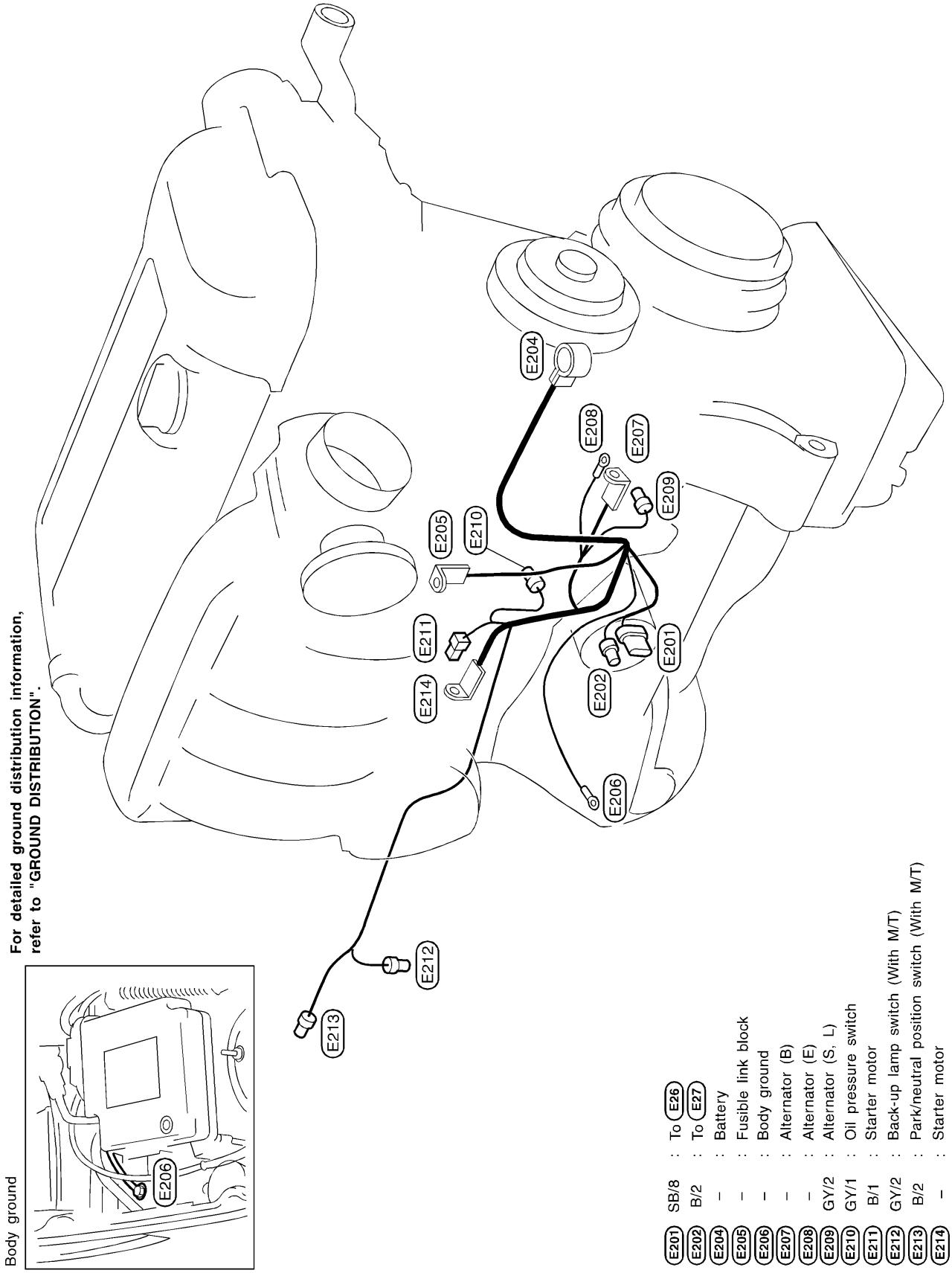

CEL331A

Body Harness

NMEL0136

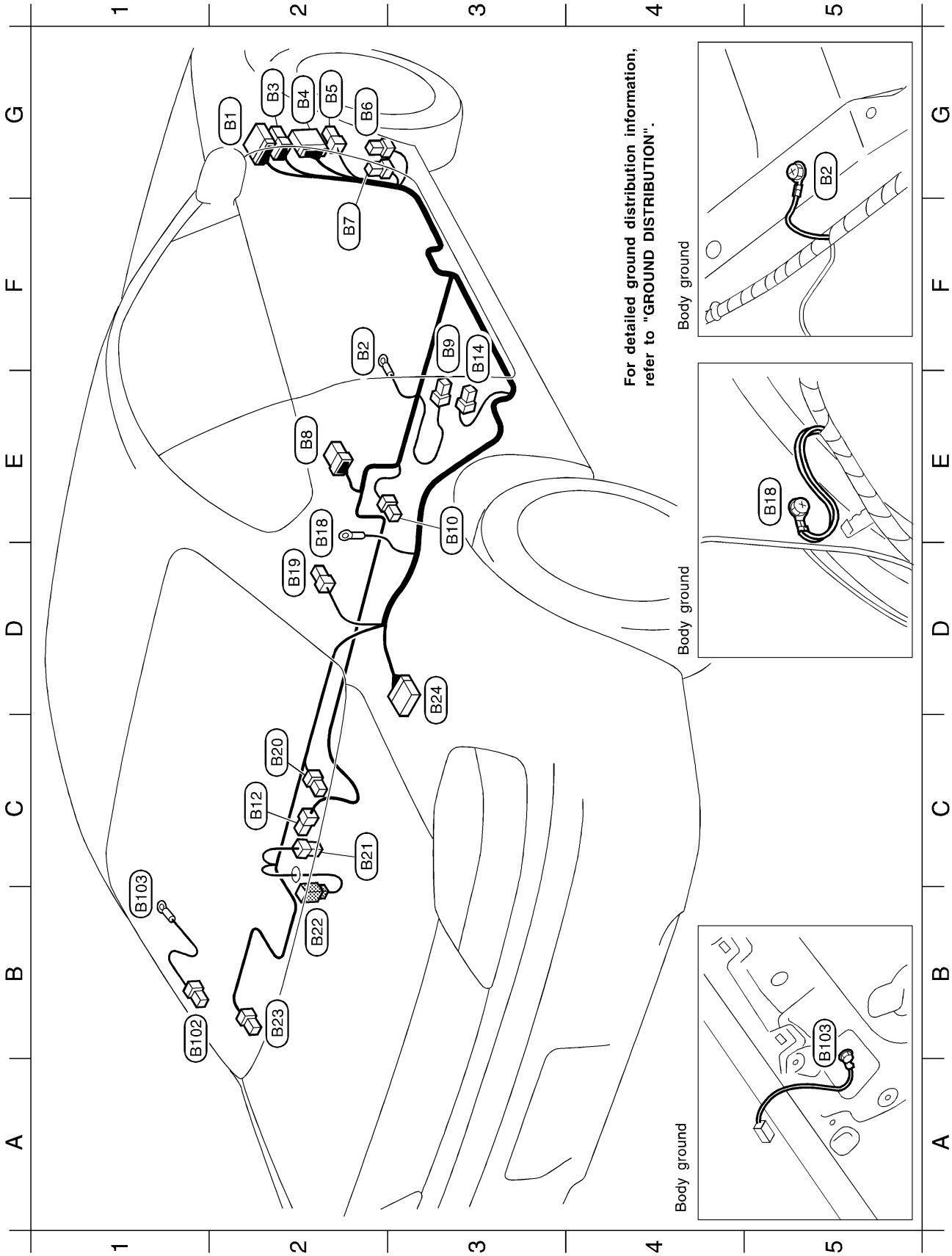

CEL332A

G2	B1	W/20	:	To M8
F2	B2	–	:	Body ground
G2	B3	W/6	:	To M9
G2	B4	W/10	:	Fuse block (J/B)
G2	B5	W/3	:	Fuse block (J/B)
G2	B6	L/4	:	Fuel pump relay
F2	B7	BR/6	:	Rear window defogger relay
E2	B8	W/6	:	A/T device (With A/T)
F3	B9	W/3	:	Seat belt buckle switch (Driver side)
E3	B10	W/1	:	Parking brake switch
C2	B12	W/3	:	Door switch (Passenger side)
F3	B14	W/3	:	Door switch (Driver side)
E2	B18	–	:	Body ground
D2	B19	W/1	:	Rear window defogger coil
C2	B20	BR/2	:	Rear speaker RH
C2	B21	W/2	:	Trunk room lamp
B2	B22	W/2	:	High-mounted stop lamp
B2	B23	BR/2	:	Rear speaker LH
D3	B24	W/12	:	To T1

Rear window defogger harness

B1	B102	B/1	:	Rear window defogger (–)
B1	B103	–	:	Body ground

Tail Harness

NMEL0138

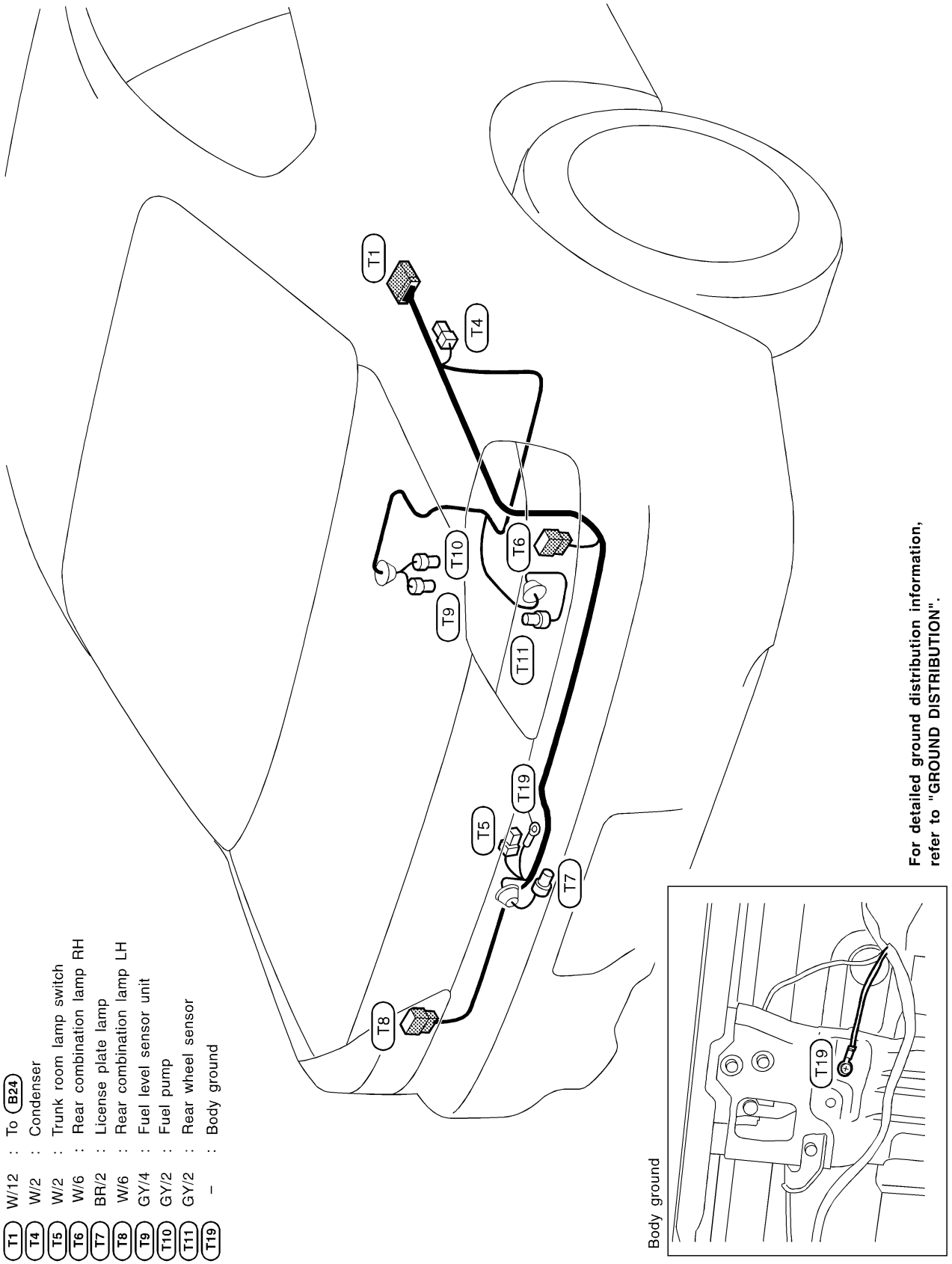

CEL334A

Room Lamp Harness

NMEL0334

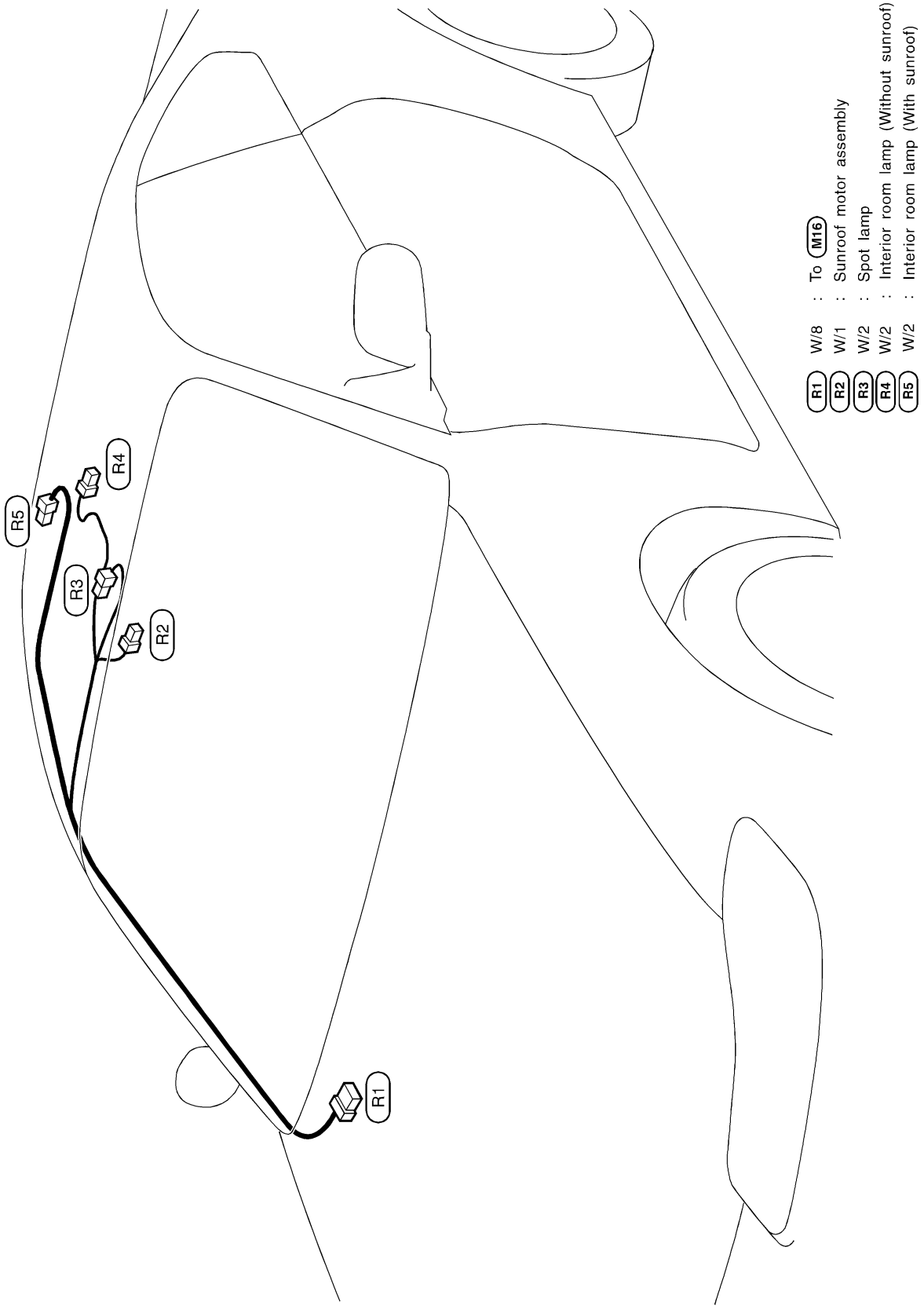

CEL335A

Door Harness

NMEL0142

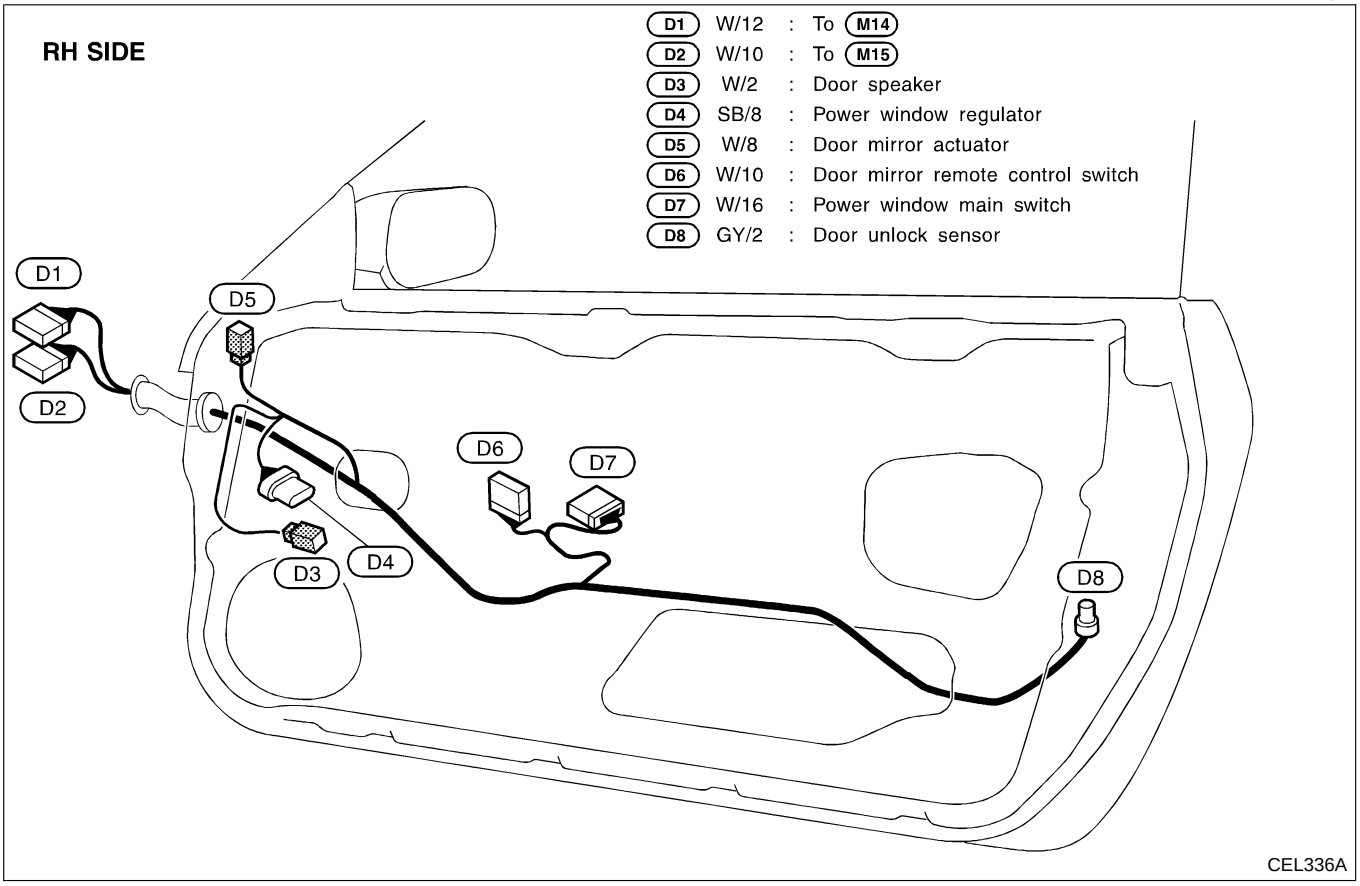

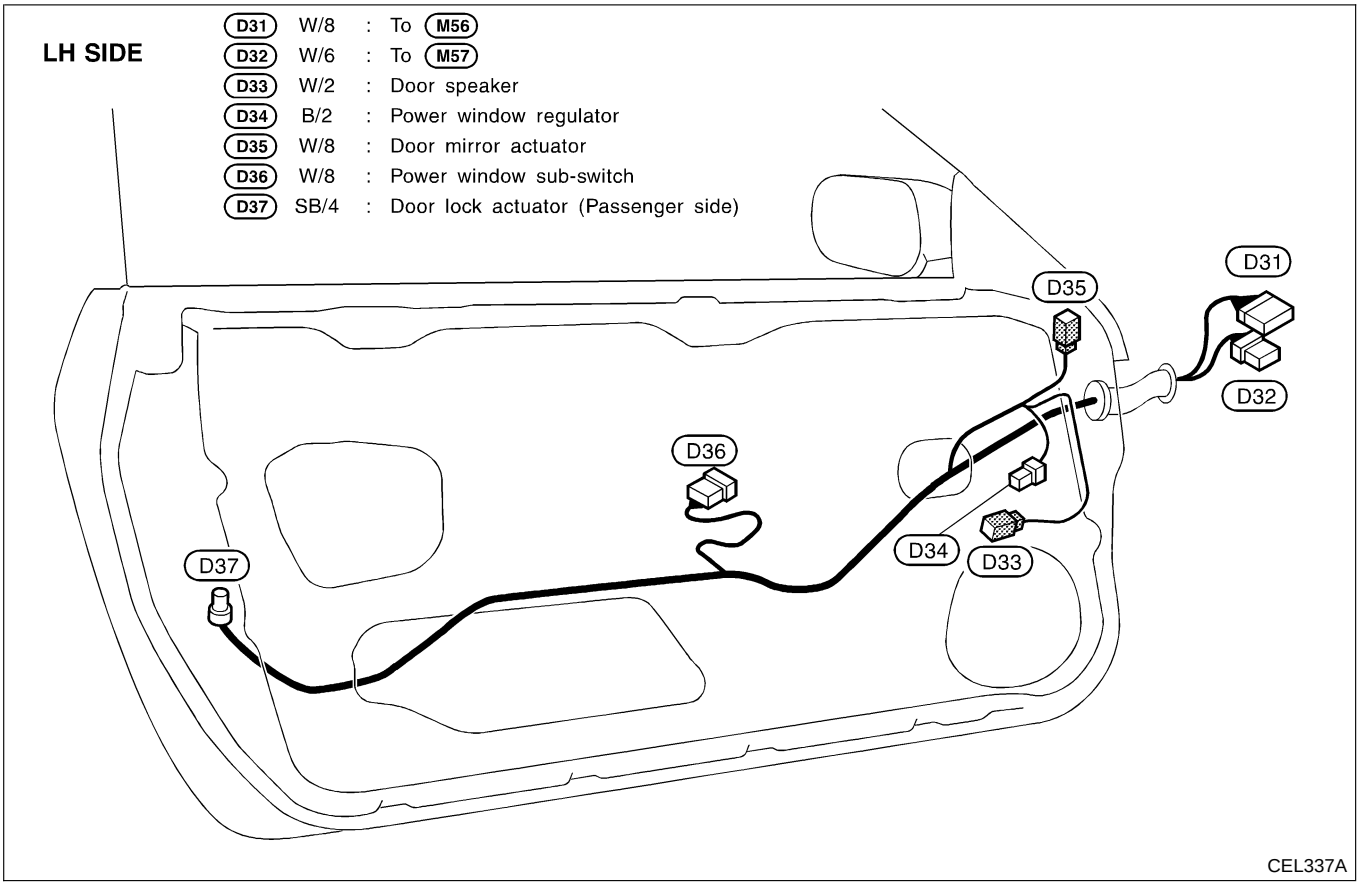

BULB SPECIFICATIONS

Headlamp

NMEL0144S03

Item	Wattage (W)
High (Semi-sealed beam)	60
Low (Semi-sealed beam)	55 (H1LL)

Exterior Lamp

NMEL0144S01

Item		Wattage (W)
Parking lamp		5
Front turn signal lamp		21
Side turn signal lamp		5
Rear combination lamp	Turn signal	21
	Stop/Tail	21/5
	Back-up	18
License plate lamp		5
High-mounted stop lamp		18

Interior Lamp

NMEL0144S02

Item		Wattage (W)
Interior room lamp		10
Spot lamp	With sunroof	10
	Without sunroof	8
Trunk room lamp		3.4

WIRING DIAGRAM CODES (CELL CODES)

Use the chart below to find out what each wiring diagram code stands for.
Refer to the wiring diagram code in the alphabetical index to find the location (page number) of each wiring diagram.

Code	Section	Wiring Diagram Name
AAC/V	EC	IACV-AAC Valve
ABS	BR	Anti-lock Brake System
A/C	HA	Air Conditioner
AT/C	EC	A/T Control
AT/IND	EL	A/T Indicator Lamp
AUDIO	EL	Audio
BACK/L	EL	Back-up Lamp
BA/FTS	AT	A/T Fluid Temperature Sensor and TCM Power Supply
BUZZER	EL	Warning Buzzer
CHARGE	SC	Charging System
CIGAR	EL	Cigarette Lighter
CLOCK	EL	Clock
CMPS	EC	Camshaft Position Sensor
COOL/F	EC	Cooling Fan Control
DEF	EL	Rear Window Defogger
D/LOCK	EL	Power Door Lock
ECTS	EC	Engine Coolant Temperature Sensor
ENGSS	AT	Engine Speed Signal
FICD	EC	IACV-FICD Solenoid Valve
F/PUMP	EC	Fuel Pump Control
H/LAMP	EL	Headlamp
HORN	EL	Horn
HO2S	EC	Heated Oxygen Sensor
HO2SH	EC	Heated Oxygen Sensor Heater
IGN/SG	EC	Ignition Signal
ILL	EL	Illumination
INJECT	EC	Injector
INT/L	EL	Spot and Trunk Room Lamps
IVC	EC	Intake Valve Timing Control Solenoid Valve
KS	EC	Knock Sensor
LOAD	EC	Load Signal
LPSV	AT	Line Pressure Solenoid Valve
MAFS	EC	Mass Air Flow Sensor
MAIN	AT	Main Power Supply and Ground Circuit
MAIN	EC	Main Power Supply and Ground Circuit
METER	EL	Speedometer, Tachometer, Temp., and Fuel Gauges
MIL/DL	EC	MIL and Data Link Connector
MIRROR	EL	Door Mirror
NATS	EL	NISSAN ANTI-THEFT SYSTEM
NONDTC	AT	Non-detectable Items
OVRCSV	AT	Overrun Clutch Solenoid Valve
PNP/SW	EC	Park/Neutral Position Switch
POWER	EL	Power Supply Routing
PST/SW	EC	Power Steering Oil Pressure Switch
ROOM/L	EL	Interior Room Lamp
S/SIG	EC	Start Signal
SHIFT	AT	A/T Shift Lock System
SROOF	EL	Electric Sunroof
SRS	RS	Supplemental Restraint System
SSV/A	AT	Shift Solenoid Valve A
SSV/B	AT	Shift Solenoid Valve B
START	SC	Starting System
STOP/L	EL	Stop Lamp
TAIL/L	EL	Parking, License and Tail Lamps
TCV	AT	Torque Converter Clutch Solenoid Valve
TPS	AT	Throttle Position Sensor
TPS	EC	Throttle Position Sensor
TURN	EL	Turn Signal and Hazard Warning Lamps
VSS	EC	Vehicle Speed Sensor
VSSA/T	AT	Vehicle Speed Sensor A/T (Revolution Sensor)
VSSMTR	AT	Vehicle Speed Sensor MTR
WARN	EL	Warning Lamps
WG/V	EC	Wastegate valve control
WINDOW	EL	Power Window
WIPER	EL	Front Wiper and Washer