CORSA

Owner's Manual

Contents

Introduction 2
In brief 6
Keys, doors and windows 21
Seats, restraints 34
Storage 55
Instruments and controls 63
Lighting 100
Climate control 110
Driving and operating 119
Vehicle care 156
Service and maintenance 202
Technical data 205
Customer information 215
Index 224

Introduction

Fuel	Designation			
Engine oil	Grade			
	Viscosity			
Tyre pressure		Tyre size	Front	Rear
	Summer tyres			
	Winter tyres			
Weights				
	Gross vehicle weight rating			
	- Kerb weight, basic model			
	= Loading			

Vehicle specific data

Please enter your vehicle's data on the previous page to keep it easily accessible. This information is available in the sections "Service and maintenance" and "Technical data" as well as on the identification plate.

Introduction

Your vehicle is a designed combination of advanced technology, safety, environmental friendliness and economy.

This Owner's Manual provides you with all the necessary information to enable you to drive your vehicle safely and efficiently.

Make sure your passengers are aware of the possible risk of accident and injury which may result from improper use of the vehicle.

You must always comply with the specific laws and regulations of the country that you are in. These laws may differ from the information in this Owner's Manual.

Disregarding the description given in this manual may affect your warranty.

When this Owner's Manual refers to a workshop visit, we recommend your Opel Service Partner.

For gas vehicles we recommend an Opel Repairer authorised for servicing gas vehicles.

All Opel Service Partners provide first-class service at reasonable prices. Experienced mechanics trained by Opel work according to specific Opel instructions.

The customer literature pack should always be kept ready to hand in the vehicle.

Using this manual

- This manual describes all options and features available for this model. **Certain descriptions, including those for display and menu functions, may not apply to your vehicle due to model variant, country specifications, special equipment or accessories.**
- The "In brief" section will give you an initial overview.
- The table of contents at the beginning of this manual and within each section shows where the information is located.
- The index will enable you to search for specific information.
- This Owner's Manual depicts left-hand drive vehicles. Operation is similar for right-hand drive vehicles.
- The Owner's Manual uses the engine identifier code. The corresponding sales designation and engineering code can be found in the section "Technical data".
- Directional data, e.g. left or right, or front or back, always relate to the direction of travel.
- Displays may not support your specific language.
- Display messages and interior labelling are written in **bold** letters.

Danger, Warnings and Cautions

⚠Danger

Text marked ⚠**Danger** provides information on risk of fatal injury. Disregarding this information may endanger life.

⚠Warning

Text marked ⚠**Warning** provides information on risk of accident or injury. Disregarding this information may lead to injury.

Caution

Text marked **Caution** provides information on possible damage to the vehicle. Disregarding this information may lead to vehicle damage.

Symbols

Page references are indicated with ⇨. ⇨ means "see page".

Page references and index entries refer to the indented headings given in the section table of content.

We wish you many hours of pleasurable driving.

Your Opel Team

In brief

Initial drive information

Vehicle unlocking

Press 🔓 to unlock vehicle. Open the doors by pulling the handles.

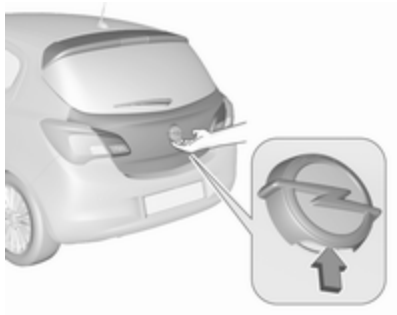

To open the tailgate, push the touchpad switch below the brand emblem.

Radio remote control ⇨ 22.

Central locking system ⇨ 23.

Load compartment ⇨ 26.

Seat adjustment

Longitudinal adjustment

Pull handle, slide seat, release handle. Try to move the seat back and forth to ensure that the seat is locked in place.

Seat position ⇨ 35.

Seat adjustment ⇨ 36.

Backrest inclination

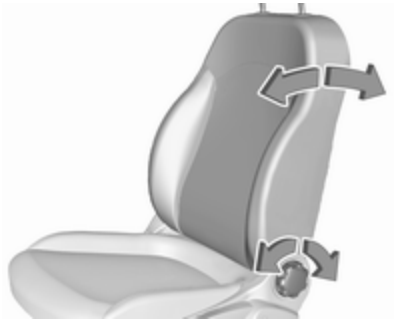

Turn handwheel. Do not lean on backrest while adjusting.

Seat position ⇨ 35.

Seat adjustment ⇨ 36.

Seat folding ⇨ 37.

Sport seat ⇨ 37.

Seat height

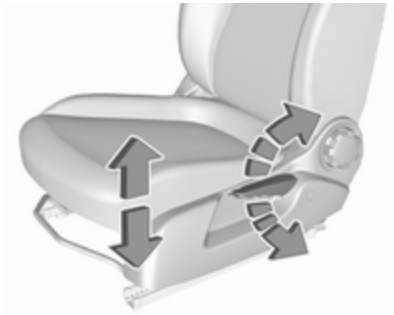

Lever pumping motion

up : seat higher
down : seat lower

Seat position ⇨ 35.

Seat adjustment ⇨ 36.

Head restraint adjustment

Press release button, adjust height, engage.

Head restraints ⇨ 34.

Seat belt

Pull out the seat belt and fasten in belt buckle. The seat belt must not be twisted and must fit close against the body. The backrest must not be tilted back too far (maximum approx. 25°).

To unfasten belt, press red button on belt buckle.

Seat position ⇨ 35.

Seat belts ⇨ 39.

Airbag system ⇨ 42.

Mirror adjustment

Interior mirror

To adjust the mirror, move the mirror housing in the desired direction.

Manual anti-dazzle interior mirror ⇨ 30.

Automatic anti-dazzle interior mirror ⇨ 30.

Exterior mirrors

Select the relevant exterior mirror with the rocker switch and adjust the mirror with the control .

Convex exterior mirrors ⇨ 29.

Electric adjustment ⇨ 29.

Folding exterior mirrors ⇨ 29.

Heated exterior mirrors ⇨ 30.

Steering wheel adjustment

Unlock the lever, adjust the steering wheel, then engage the lever and ensure it is fully locked.

Do not adjust the steering wheel unless the vehicle is stationary and the steering wheel lock has been released.

Airbag system ⇨ 42.

Ignition positions ⇨ 120.

Instrument panel overview

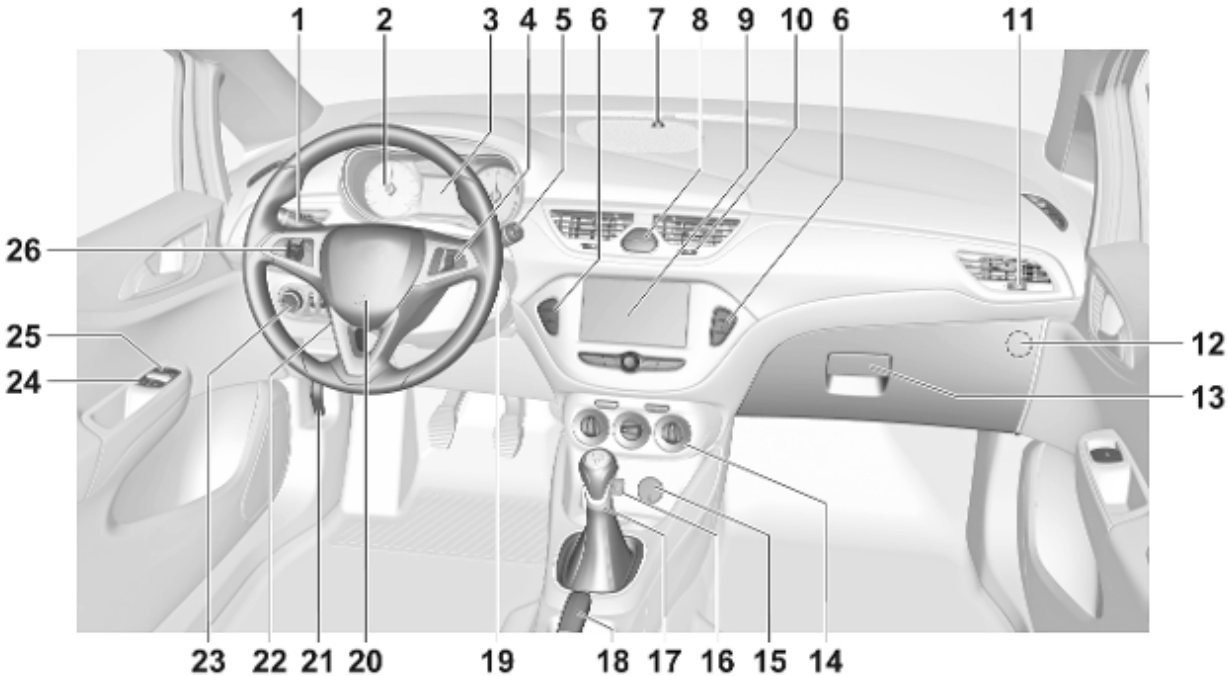

1 Turn lights, headlight flash, low beam and high beam 104
Exit lighting 108
Parking lights 105
Buttons for Driver Information Centre 83
2 Instruments 71
3 Driver Information Centre 83
4 Infotainment controls 64
5 Windscreen wiper, windscreen washer system, rear window wiper, rear window washer system 65
6 Central locking system 23
City mode 134
Fuel selector 73
Eco button for stop-start system 122
Traction Control system 133
Electronic Stability Control . 133
Parking assist 141
Lane departure warning 64
Seat heating 38
Heated steering wheel 64
7 Anti-theft alarm system status LED 27
8 Hazard warning flashers 104
Control indicator for airbag deactivation 79
Control indicator for front passenger seat belt 78
9 Info Display 88
10 Centre air vents 117
11 Side air vents, passenger side 117
12 Airbag deactivation 47
13 Glovebox 55
14 Climate control system 110
15 Power outlet 69
16 USB input 10
17 Selector lever 127
18 Parking brake 132
19 Ignition switch with steering wheel lock 120
20 Horn 65
Driver airbag 45
21 Bonnet release lever 158
22 Steering wheel adjustment . . 64
23 Light switch 100
Headlight range adjustment 102
Rear fog light 105
Front fog lights 104
Brightness of instrument panel illumination 106
Fuse box 175
24 Power windows 31
25 Exterior mirrors 29
26 Cruise control 135
Speed limiter 137
Forward collision alert 138

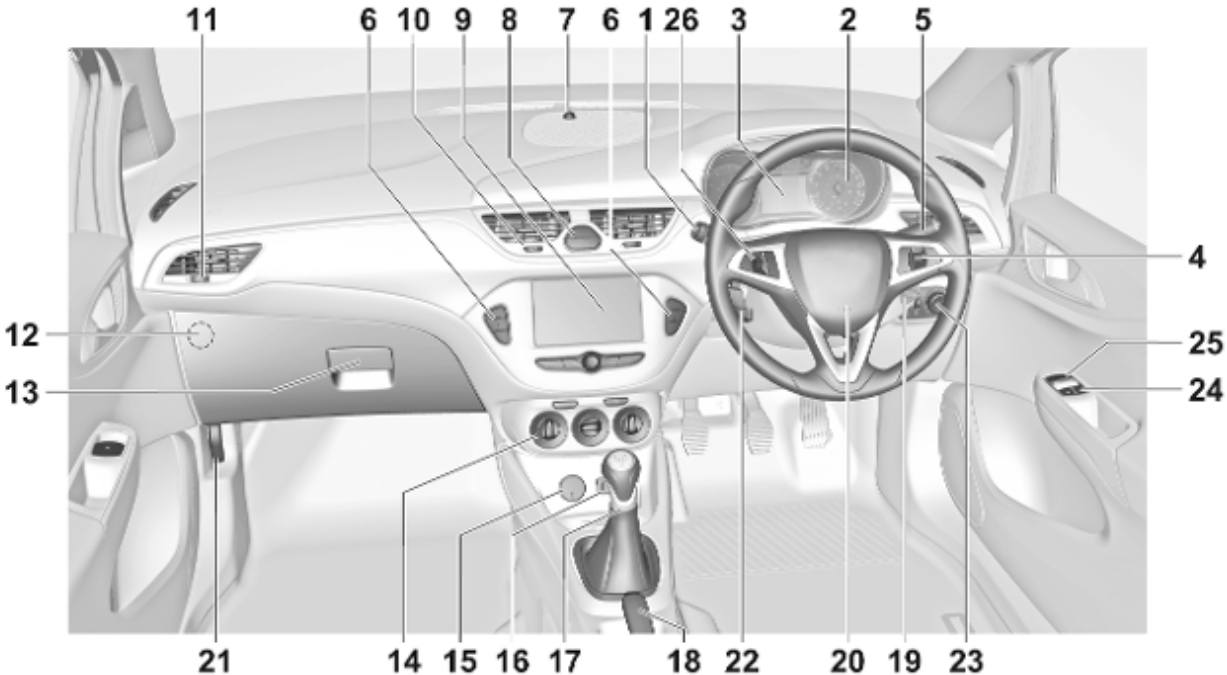
11
6
10
9
8
7
6
1
26
3
2
5
4
12
13
25
24
21
14
15
16
17
18
22
20
19
23

1 Turn lights, headlight flash, low beam and high beam 104
Exit lighting 108
Parking lights 105
Buttons for Driver Information Centre 83
2 Instruments 71
3 Driver Information Centre 83
4 Infotainment controls 64
5 Windscreen wiper, windscreen washer system, rear window wiper, rear window washer system 65
6 Central locking system 23
City mode 134
Fuel selector 73
Eco button for stop-start system 122
Traction Control system 133
Electronic Stability Control . 133
Parking assist 141
Lane departure warning 64
Seat heating 38
Heated steering wheel 64
7 Anti-theft alarm system status LED 27
8 Hazard warning flashers 104
Control indicator for airbag deactivation 79
Control indicator for front passenger seat belt 78
9 Info Display 88
10 Centre air vents 117
11 Side air vents, passenger side 117
12 Airbag deactivation 47
13 Glovebox 55
14 Climate control system 110
15 Power outlet 69
16 USB input 10
17 Selector lever 127
18 Parking brake 132
19 Ignition switch with steering wheel lock 120
20 Horn 65
Driver airbag 45
21 Bonnet release lever 158
22 Steering wheel adjustment . . 64
23 Light switch 100
Headlight range adjustment 102
Rear fog light 105
Front fog lights 104
Brightness of instrument panel illumination 106
Fuse box 175
24 Power windows 31
25 Exterior mirrors 29
26 Cruise control 135
Speed limiter 137
Forward collision alert 138

Exterior lighting

Light switch

Turn light switch:

0 : lights off
⇛ : sidelights
≣D : headlights

Light switch ⇨ 100.

Light switch with automatic light control

AUTO : automatic light control: exterior lighting is switched on and off automatically
⏻ : activation or deactivation of the automatic light control
⇛ : sidelights
≣D : headlights

Automatic light control ⇨ 101.

Headlight flash, high beam and low beam

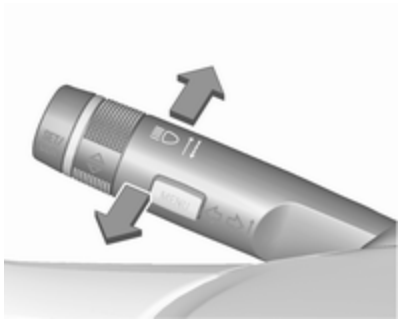

headlight flash : pull stalk
high beam : push stalk
low beam : push or pull stalk

High beam ⇨ 102.

Headlight flash ⇨ 102.

Turn lights

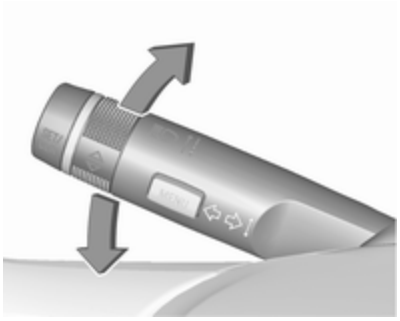

stalk up : right turn light
stalk down : left turn light

Turn lights ⇨ 104.

Parking lights ⇨ 105.

Hazard warning flashers

Operated by pressing ⚠.

Hazard warning flashers ⇨ 104.

Horn

Press 📯.

Washer and wiper systems

Windscreen wiper

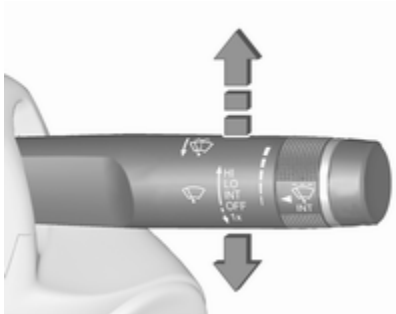

HI : fast
LO : slow
INT : interval wiping
or
automatic wiping with rain sensor
OFF : off

For single wipe when the wiper is off, press lever down to position **1x**.

Windscreen wiper ⇨ 65.

Windscreen washer

Pull lever.

Windscreen washer system ⇨ 65.
Washer fluid ⇨ 161.
Wiper blade replacement ⇨ 163.

Rear window wiper

Press the rocker switch to activate the rear window wiper:

ON : continuous operation
OFF : off
INT : intermittent operation

Rear window washer

Push lever.

Washer fluid is sprayed on the rear window and the wiper wipes a few times.

Rear window wiper and washer ⇨ 66.

Climate control

Heated rear window

The heating is operated by pressing .

Heated rear window ⇨ 32.

Heated windscreen ⇨ 33.

Heated exterior mirrors

Pressing also activates the heated exterior mirrors.

Heated exterior mirrors ⇨ 30.

Demisting and defrosting the windows

- Set air distribution control to .
- Press .
- Set temperature control to warmest level.
- Set fan speed to highest level.
- Switch on heated rear window .
- Open side air vents as required and direct them towards the door windows.

Climate control system ⇨ 110.

Transmission

Manual transmission

Reverse: with the vehicle stationary, depress clutch pedal and press the release button on the selector lever and engage the gear.

If the gear does not engage, set the lever to neutral, release the clutch pedal and depress again; then repeat gear selection.

Manual transmission ⇨ 130.

Automatic transmission

P : park
R : reverse
N : neutral
D : drive
M : manual mode
+ : press to upshift in manual mode
− : press to downshift in manual mode

The selector lever can only be moved out of **P** when the ignition is on and the brake pedal is applied. To engage **P** or **R**, press the release button.

Automatic transmission ⇨ 127.

Starting off

Check before starting off

- Tyre pressure ⇨ 179 and condition ⇨ 214.
- Engine oil level and fluid levels ⇨ 159.
- All windows, mirrors, exterior lighting and number plates are free from dirt, snow and ice and are operational.
- Proper position of mirrors ⇨ 29, seats ⇨ 35 and seat belts ⇨ 40.
- Brake function at low speed, particularly if the brakes are wet.

Starting the engine

- Turn key to position **1**.
- Move the steering wheel slightly to release the steering wheel lock.
- Manual transmission: operate clutch and brake pedal.

  Automatic transmission: operate brake pedal and move selector lever to **P** or **N**.
- Do not operate accelerator pedal.
- Turn key to position **3** and release.

Starting the engine ⇨ 121.

Stop-start system

If the vehicle is at a low speed or at a standstill and certain conditions are fulfilled, activate an Autostop as follows:

Vehicles with manual transmission:

- Depress the clutch pedal.
- Engage neutral gear.
- Release the clutch pedal.

An Autostop is indicated by control indicator Ⓐ.

To restart the engine, depress the clutch pedal again. Control indicator Ⓐ extinguishes.

Parking

⚠ Warning

- Do not park the vehicle on an easily ignitable surface. The high temperature of the exhaust system could ignite the surface.
- Always apply the parking brake. Activate the manual parking brake without pressing the release button. Apply as firmly as possible on a downhill slope or uphill slope. Depress brake pedal at the same time to reduce operating force.
- Switch off the engine.
- If the vehicle is on a level surface or uphill slope, engage first gear or set the selector lever to position **P** before removing the ignition key. On an uphill slope, turn the front wheels away from the kerb.

  If the vehicle is on a downhill slope, engage reverse gear or

set the selector lever to position **P** before removing the ignition key. Turn the front wheels towards the kerb.

- Close the windows.
- Remove the ignition key from the ignition switch. Turn the steering wheel until the steering wheel lock is felt to engage.

  For vehicles with automatic transmission, the key can only be removed when the selector lever is in position **P**.

- Lock the vehicle by pressing on the radio remote control.

  Activate the anti-theft alarm system ⇨ 27.
- The engine cooling fans may run after the engine has been switched off ⇨ 158.

Caution

After running at high engine speeds or with high engine loads, operate the engine briefly at a low load or run in neutral for approx. 30 seconds before switching off, in order to protect the turbocharger.

Keys, locks ⇨ 21.

Laying-up the vehicle for a long period of time ⇨ 157.

Keys, doors and windows

Keys, locks **21**
Keys 21
Radio remote control 22
Memorised settings 23
Central locking system 23
Automatic locking 25
Child locks 25
Doors **26**
Load compartment 26
Vehicle security **27**
Anti-theft locking system 27
Anti-theft alarm system 27
Immobiliser 28
Exterior mirrors **29**
Convex shape 29
Electric adjustment 29
Folding mirrors 29
Heated mirrors 30
Interior mirrors **30**
Manual anti-dazzle 30
Automatic anti-dazzle 30
Windows **31**
Windscreen 31
Manual windows 31
Power windows 31
Heated rear window 32
Heated windscreen 33
Sun visors 33

Keys, locks

Keys

Caution
Do not attach heavy or bulky items to the ignition key.

Replacement keys

The key number is specified on a detachable tag.

The key number must be quoted when ordering replacement keys, as it is a component of the immobiliser system.

Locks ⇨ 198.

The code number of the adapter for the locking wheel bolts is specified on a card. It must be quoted when ordering a replacement adapter.

Wheel changing ⇨ 191.

Key with foldaway key section

Press button to extend. To fold the key, first press the button.

Radio remote control

Used to operate:

- central locking system
- anti-theft locking system
- anti-theft alarm system

The radio remote control has a range of approx. 20 m. It can be restricted by external influences. The hazard warning flashers confirm operation.

Handle with care, protect from moisture and high temperatures and avoid unnecessary operation.

Fault

If the central locking system cannot be operated with the radio remote control, it may be due to the following:

- The range is exceeded.
- The battery voltage is too low.
- Frequent, repeated operation of the radio remote control while not in range, which will require re-synchronisation.
- Overload of the central locking system by operating at frequent intervals, the power supply is interrupted for a short time.
- Interference from higher-power radio waves from other sources.

Unlocking ⇨ 23.

Basic settings

Some settings can be changed in the Info Display.

Vehicle personalisation ⇨ 92.

Radio remote control battery replacement

Replace the battery as soon as the range reduces.

Batteries do not belong in household waste. They must be disposed of at an appropriate recycling collection point.

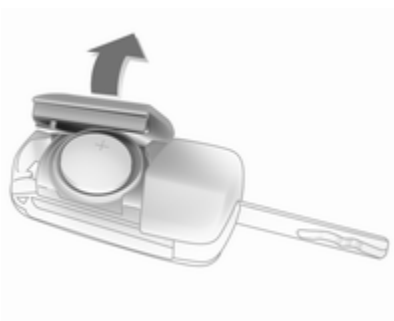

Extend the key and open the unit sideways. Replace the battery (battery type CR 2032), paying attention to the installation position. Close the unit and synchronise.

Memorised settings

Whenever the ignition is switched off, some functions of the following settings may be automatically memorised by the remote control unit:

- lighting
- electronic climate control
- presets for Infotainment system
- central locking system
- comfort settings

The saved settings are automatically used the next time the memorised key is inserted into the ignition switch and turned to position **1** ⇨ 120.

A precondition is that **Personalization by driver** is activated in the personal settings of the Info Display. This must be set for each key used.

Vehicle personalisation ⇨ 92.

Central locking system

Unlocks and locks doors, load compartment and fuel filler flap.

From inside the vehicle with the doors locked, pull an interior door handle to unlock the respective door.

Note
In the event of an accident in which airbags or belt pretensioners are deployed, the vehicle is automatically unlocked.

Note
3 minutes after unlocking with the remote control, the doors are relocked automatically if no door has been opened.

Unlocking

Press 🔓.

Two settings are selectable in the Info Display:

- To unlock only the driver's door and fuel filler flap, press 🔓 once. To unlock all doors and load compartment, press 🔓 twice.
- Press 🔓 once to unlock all doors, load compartment and fuel filler flap.

Vehicle personalisation ⇨ 92.

The setting can be saved for the key being used.

Memorised settings ⇨ 23.

Unlocking and opening the tailgate ⇨ 26.

Locking

Close doors, load compartment and fuel filler flap.

Press 🔒.

If the driver's door is not closed properly, the central locking system will not work.

Central locking buttons

Locks or unlocks doors, the load compartment and fuel filler flap from inside the passenger compartment.

Press 🔒 to lock.

Press 🔓 to unlock.

Delayed door lock

Switch off engine and remove key from the lock. Press 🔒 with at least one door opened and three chimes will sound. When the last door is closed, the vehicle will automatically lock all doors after 5 seconds and feedback is given.

After 10 minutes, the vehicle will automatically lock all doors even if a door is still open. This function may be activated or deactivated in the Info Display.

Vehicle personalisation ⇨ 92.

Fault in radio remote control system

Unlocking

Manually unlock the driver's door by turning the key in the lock. Switch on the ignition and press the central locking button 🔓 to unlock the other doors, load compartment and fuel filler flap.

By switching on the ignition, the anti-theft locking system is deactivated.

Locking

Manually lock the driver's door by turning the key in the lock.

Fault in central locking system

Unlocking

Manually unlock the driver's door by turning the key in the lock. The other doors can be opened by pulling the interior handle. The load compartment and fuel filler flap cannot be opened.

To deactivate the anti-theft locking system, switch on the ignition ⇨ 27.

Locking

Press inside locking knob of all doors except driver's door. Then close the driver's door and lock it from the outside with the key.

The fuel filler flap and tailgate cannot be locked.

Automatic locking

This security feature can be configured to automatically lock doors, load compartment and fuel filler flap as soon as a certain speed is exceeded.

Additionally, it is configurable to unlock the driver's door or all doors after the ignition is switched off and the ignition key is removed (manual transmission) or the selector lever is moved to position **P** (automatic transmission).

Settings can be changed in the Info Display.

Vehicle personalisation ⇨ 92.

The settings can be saved for the key being used ⇨ 23.

Child locks

⚠ Warning

Use the child locks whenever children are occupying the rear seats.

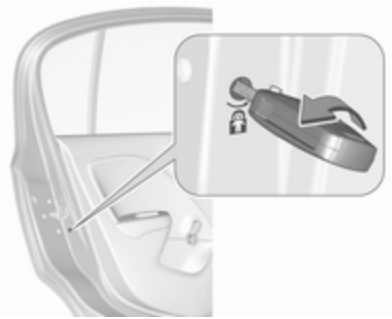

Using a key or suitable screwdriver, turn switch on rear door lock to the horizontal position. The door cannot be opened from inside.

Doors

Load compartment

Tailgate

Opening

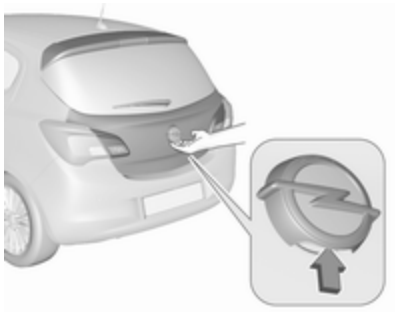

To open the tailgate, push the touchpad switch below the brand emblem.

Closing

Use interior handle.

Do not press the touchpad switch whilst closing as this will unlock the tailgate again.

Central locking system ⇨ 23.

General hints for operating tailgate

⚠ Danger

Do not drive with the tailgate open or ajar, e.g. when transporting bulky objects, since toxic exhaust

gases, which cannot be seen or smelled, could enter the vehicle. This can cause unconsciousness and even death.

Caution

Before opening the tailgate, check overhead obstructions, e.g. a garage door, to avoid damage to the tailgate. Always check the moving area above and behind the tailgate.

Note
The installation of certain heavy accessories onto the tailgate may affect its ability to remain open.

Vehicle security

Anti-theft locking system

⚠ Warning

Do not use the system if there are people in the vehicle! The doors cannot be unlocked from the inside.

The system deadlocks all the doors. All doors must be closed otherwise the system cannot be activated.

If the ignition was on, the driver's door must be opened and closed once so that the vehicle can be secured.

Unlocking the vehicle disables the mechanical anti-theft locking system. This is not possible with the central locking button.

Activating

Press 🔒 on the radio remote control twice within 5 seconds.

Anti-theft alarm system

The anti-theft alarm system is combined with the anti-theft locking system.

It monitors:

- doors, tailgate, bonnet
- ignition

Activation

- Self-activated 30 seconds after locking the vehicle by pressing once.
- Directly by pressing twice within 5 seconds.

Status LED

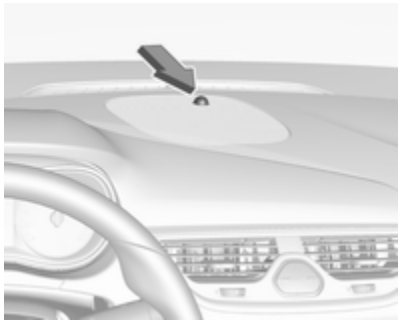

Status LED is integrated in the sensor on top of the instrument panel.

Status during the first 30 seconds of anti-theft alarm system activation:

LED illuminates	:	test, arming delay
LED flashes quickly	:	doors, tailgate or bonnet not completely closed, or system fault

Status after system is armed:

LED flashes slowly	:	system is armed

Seek the assistance of a workshop in the event of faults.

Deactivation

Unlocking the vehicle by pressing deactivates anti-theft alarm system.

The system is not deactivated by unlocking the driver's door with the key or with the central locking button in the passenger compartment.

Alarm

When triggered, the alarm horn sounds and the hazard warning lights flash simultaneously. The number and duration of alarm signals are stipulated by legislation.

The alarm can be silenced by pressing any button on the radio remote control or by switching on the ignition.

The anti-theft alarm system can only be deactivated by pressing on the radio remote control or by switching on the ignition.

A triggered alarm, which has not been interrupted by the driver, will be indicated by the hazard warning lights. They will flash quickly three times when the vehicle is unlocked with the radio remote control.

Vehicle messages ⇨ 89.

If the vehicle's battery is to be disconnected (e.g. for maintenance work), the alarm siren must be deactivated as follows: Switch the ignition on then off, then disconnect the vehicle's battery within 15 seconds.

Immobiliser

The system is part of the ignition switch and checks whether the vehicle is allowed to be started with the key being used.

The immobiliser is activated automatically after the key has been removed from the ignition switch.

If the control indicator flashes when the ignition is on, there is a fault in the system; the engine cannot be started. Switch off the ignition and repeat the start attempt.

If the control indicator continues flashing, attempt to start the engine using the spare key and seek the assistance of a workshop.

Note
The immobiliser does not lock the doors. You should always lock the vehicle after leaving it.

Switch on the anti-theft alarm system ⇨ 23, ⇨ 27.

Control indicator ⇨ 82.

Exterior mirrors

Convex shape

The shape of the mirror makes objects appear smaller, which will affect the ability to estimate distances.

Electric adjustment

Select the relevant exterior mirror by pressing the rocker switch to the left **(L)** or right **(R)**. Then swivel the control to adjust the mirror.

Rocker switch in center position: no mirror is selected to be adjusted.

Folding mirrors

For pedestrian safety, the exterior mirrors will swing out of their normal mounting position if they are struck with sufficient force. Reposition the mirror by applying slight pressure to the mirror housing.

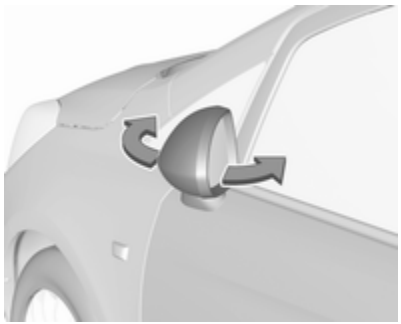

Parking position

The exterior mirrors can be folded in by pressing gently on the outer edge of the housing, e.g. when in a confined parking situation.

Heated mirrors

Operated by pressing ⊞.

Mirror heating works with the engine running.

It is switched off automatically after 6 minutes.

Pressing ⊞ once more during the same ignition cycle allows the heating to operate for another 3 minutes.

Interior mirrors

Manual anti-dazzle

To reduce dazzle, adjust the lever on the underside of the mirror housing.

Automatic anti-dazzle

Dazzle from following vehicles is automatically reduced, when driving in the dark.

Windows

Windscreen

Windscreen stickers

Do not attach stickers, e.g. toll road stickers or similar, on the windscreen in the area of the interior mirror. Otherwise the detection zone of the sensor in the mirror housing could be restricted.

Windscreen replacement

Caution

If the vehicle has a front-looking camera sensor for the driver assistance systems, it is very important that any windscreen replacement is performed accurately according to Opel specifications. Otherwise, these systems may not work properly and there is a risk of unexpected behaviour and / or messages from these systems.

Manual windows

The rear door windows can be opened or closed manually with the window cranks.

Power windows

⚠ Warning

Take care when operating the power windows. Risk of injury, particularly to children.

Be careful when closing the windows. Ensure that nothing becomes trapped in them as they move.

Operable with ignition on (position **2**) ⇨ 120.

Retained power off ⇨ 121.

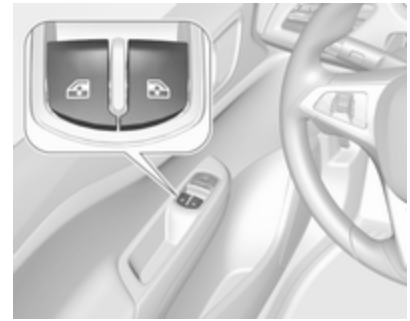

Operate the switch in the door trim for the respective window. Push to open or pull to close.

Open

Short push: window opens in stages.

Long push: window opens automatically to end position. To stop movement, operate switch once more.

Close

Short pull: window closes in stages.

Longer pull: window closes automatically to end position. To stop movement, operate switch once more.

Safety function

If the window glass encounters resistance above the middle of the window during automatic closing, it is immediately stopped and opened again.

Override safety function

In the event of closing difficulties due to frost or the like, switch on the ignition, then pull the switch several times to close the windows in stages.

Overload

If the windows are repeatedly operated at short intervals, the window operation is disabled for some time.

Fault

If the windows cannot be opened or closed automatically, activate the window electronics as follows:

1. Close the doors.
2. Switch on ignition.
3. Close the window completely and operate the button for an additional 5 seconds.
4. Open the window completely and operate the button for 1 second further.
5. Repeat this procedure for each window.

Heated rear window

Operated by pressing ⊞.

Rear window heating works with the engine running.

It is switched off automatically after 6 minutes.

Pressing ⊞ once more during the same ignition cycle allows the heating to operate for another 3 minutes.

Heated windscreen

Operated by pressing ⊞.

Windscreen heating works together with heated rear window and engine running.

It is switched off automatically after 6 minutes.

Pressing ⊞ once more during the same ignition cycle allows the heating to operate for another 3 minutes.

Sun visors

The sun visors can be folded down or swivelled to the side to prevent dazzling.

The cover of the mirrors should be closed when driving.

A ticket holder is located on the backside of the sun visor.

Seats, restraints

Head restraints **34**
Front seats **35**
Seat position 35
Seat adjustment 36
Seat folding 37
Heating 38
Seat belts **39**
Three-point seat belt 40
Airbag system **42**
Front airbag system 45
Side airbag system 46
Curtain airbag system 47
Airbag deactivation 47
Child restraints **48**
Child restraint systems 48
Child restraint installation locations 52

Head restraints

Position

⚠ Warning

Only drive with the head restraint set to the proper position.

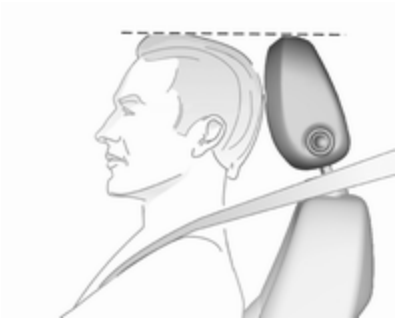

The upper edge of the head restraint should be at upper head level. If this is not possible for extremely tall people, set to highest position, and set to lowest position for small people.

Adjustment

Front head restraints, height adjustment

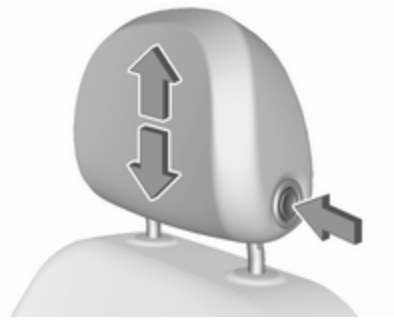

Press release button, adjust height, engage.

Rear head restraints, height adjustment

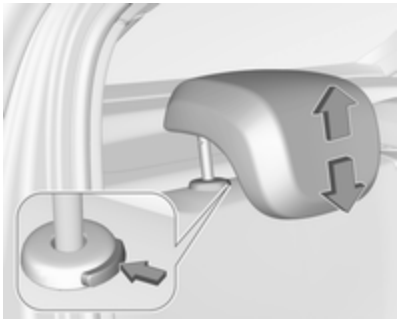

Pull the head restraint upwards and let engage. To move downwards, press the catch to release and push the head restraint downwards.

Removal of rear head restraint

E.g. when using a child restraint system ⇨ 48.

Press both catches, pull the head restraint upwards and remove.

Place the head restraint in a net bag and secure the underside of the bag with Velcro® fasteners to the load compartment floor. A suitable net bag is available from your workshop.

Front seats

Seat position

⚠ Warning

Only drive with the seat correctly adjusted.

⚠ Danger

Do not sit closer than 25 cm to the steering wheel, to permit safe airbag deployment.

⚠ Warning

Never adjust seats while driving as they could move uncontrollably.

- Sit with buttocks as far back against the backrest as possible. Adjust the distance between the seat and the pedals so that legs are slightly angled when fully pressing the pedals. Slide the front passenger seat as far back as possible.
- Set seat height high enough to have a clear field of vision on all sides and of all display instruments. There should be at least one hand of clearance between head and the roof frame. Your thighs should rest lightly on the seat without pressing into it.
- Sit with shoulders as far back against the backrest as possible. Set the backrest rake so that it is possible to easily reach the steering wheel with arms slightly bent. Maintain contact between shoulders and the backrest when turning the steering wheel. Do not angle the backrest too far back. We recommend a maximum rake of approx. 25°.
- Adjust seat and steering wheel in a way that the wrist rests on top of the steering wheel while the arm is fully extended and shoulders on the backrest.
- Adjust the steering wheel ⇨ 64.
- Adjust the head restraint ⇨ 34.
- Adjust the height of the seat belt ⇨ 40.

Seat adjustment

Drive only with engaged seats and backrests.

Longitudinal adjustment

Pull handle, slide seat, release handle. Try to move the seat back and forth to ensure that the seat is locked in place.

Backrest inclination

Turn handwheel to adjust inclination. Do not lean on backrest while adjusting.

Seat height

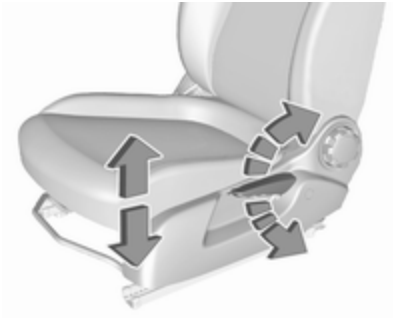

Lever pumping motion

up : seat higher
down : seat lower

Seat folding

Standard seat folding

Pull release lever towards the front and fold backrest forwards. Then slide seat forwards to the stop.

To restore, slide the seat backwards to the stop. Lift backrest to upright position without operating the release lever. Allow backrest to engage.

⚠Warning

When folding up, ensure that the seat is securely locked in position before driving. Failure to do so may result in personal injury in the event of heavy braking or collision.

The memory function allows the seat to engage in its original position after folding.

Do not operate handwheel for backrest inclination when backrest is folded forwards.

Caution

When seat height is in the highest position, push head restraints down and fold up sun visors before folding backrest forwards.

Sport seat folding

Remove seat belt from belt mount on the backrest.

Pull release lever located on the backrest, fold backrest forwards and release lever. Slide seat forwards to the stop.

To restore, slide the seat backwards to the stop. Lift backrest to upright position without operating the release lever. Allow backrest to engage.

⚠Warning

When folding up, ensure that the seat is securely locked in position before driving. Failure to do so may result in personal injury in the event of heavy braking or collision.

The memory function allows the seat to engage in its original position after folding.

Do not operate backrest adjuster handwheel when backrest is folded forwards.

Heating

Activate seat heating by pressing for the respective front seat.

The LED in the button illuminates to indicate activation.

Pressing once more deactivates seat heating.

Seat heating is operational when engine is running.

During an Autostop, seat heating is also operational.

Stop-start system ⇨ 122.

Seat belts

The seat belts are locked during heavy acceleration or deceleration of the vehicle holding the occupants in the sitting position. Therefore the risk of injury is considerably reduced.

⚠ Warning

Fasten seat belt before each trip.

In the event of an accident, people not wearing seat belts endanger their fellow occupants and themselves.

Seat belts are designed to be used by only one person at a time.

Child restraint system ⇨ 48.

Periodically check all parts of the belt system for damage, pollution and proper functionality.

Have damaged components replaced by a workshop. After an accident, have the belts and triggered belt pretensioners replaced by a workshop.

Note

Make sure that the belts are not damaged by shoes or sharp-edged objects or trapped. Prevent dirt from getting into the belt retractors.

Seat belt reminder

For driver's seat, the seat belt reminder is indicated by control indicator in the instrument cluster ⇨ 78.

For front passenger seat, the seat belt reminder is indicated by control indicator 2 in the centre console ⇨ 75.

For rear seats, the seat belt reminder is indicated by symbols in the Driver Information Centre ⇨ 83.

Belt force limiters

On the front seats and the rear outboard seats, stress on the body is reduced by the gradual release of the belt during a collision.

Belt pretensioners

In the event of a head-on or rear-end collision of a certain severity, the front seat belts are tightened.

⚠Warning

Incorrect handling (e.g. removal or fitting of belts) can trigger the belt pretensioners.

Deployment of the belt pretensioners is indicated by continuous illumination of control indicator ⇨ 78.

Triggered belt pretensioners must be replaced by a workshop. Belt pretensioners can only be triggered once.

Note

Do not affix or install accessories or other objects that may interfere with the operation of the belt pretensioners. Do not make any modifications to belt pretensioner components as this will invalidate the operating permit of your vehicle.

Three-point seat belt

Fasten

Withdraw the belt from the retractor, guide it untwisted across the body and insert the latch plate into the buckle. Tighten the lap belt regularly while driving by pulling the shoulder belt.

Sport seat: Feed seat belt through belt mount on backrest when fastening seat belt.

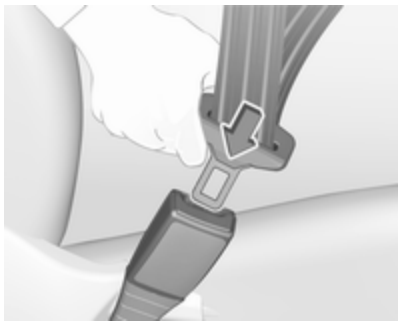

Loose or bulky clothing prevents the belt from fitting snugly. Do not place objects such as handbags or mobile devices between the belt and your body.

⚠ Warning

The belt must not rest against hard or fragile objects in the pockets of your clothing.

Seat belt reminder ⇨ 78.

Height adjustment

1. Pull belt out slightly.
2. Shift the height adjuster upwards or press button to disengage and push the height adjuster downwards.

Adjust the height so that the belt lies across the shoulder. It must not lie across the throat or upper arm.

Do not adjust while driving.

Unfasten

To release belt, press red button on belt buckle.

Using the seat belt while pregnant

⚠ Warning

The lap belt must be positioned as low as possible across the pelvis to prevent pressure on the abdomen.

Airbag system

The airbag system consists of a number of individual systems depending on the scope of equipment.

When triggered, the airbags inflate within milliseconds. They also deflate so quickly that it is often unnoticeable during the collision.

⚠ Warning

The airbag system deploys in an explosive manner, repairs must be performed by skilled personnel only.

⚠ Warning

Adding accessories that change the vehicle's frame, bumper system, height, front end or side sheet metal, may keep the airbag system from working properly. The operation of the airbag system can also be affected by changing any parts of the front seats, seat belts, airbag sensing and diagnostic module, steering wheel, instrument panel, inner door seals including the speakers, any of the airbag modules, ceiling or pillar trim, front sensors, side impact sensors or airbag wiring.

Note

The airbag systems and belt pretensioner control electronics are located in the centre console area. Do not put any magnetic objects in this area.

Do not affix any objects onto the airbag covers and do not cover them with other materials. Have damaged covers replaced by a workshop.

Each airbag is triggered only once. Have deployed airbags replaced by a workshop. Furthermore, it may be necessary to have the steering wheel, the instrument panel, parts of the panelling, the door seals, handles and the seats replaced.

Do not make any modifications to the airbag system as this will invalidate the vehicle operating permit.

Fault

If there is a fault in the airbag system, the control indicator illuminates and a message or a warning code appears in the Driver Information Centre. The system is not operational.

Have the cause of the fault remedied by a workshop.

Control indicator for airbag systems ⇨ 78.

Child restraint systems on front passenger seat with airbag systems

EN: NEVER use a rearward-facing child restraint on a seat protected by an ACTIVE AIRBAG in front of it; DEATH or SERIOUS INJURY to the CHILD can occur.

DE: Nach hinten gerichtete Kindersitze NIEMALS auf einem Sitz verwenden, der durch einen davor befindlichen AKTIVEN AIRBAG geschützt ist, da dies den TOD oder SCHWERE VERLETZUNGEN DES KINDES zur Folge haben kann.

FR: NE JAMAIS utiliser un siège d'enfant orienté vers l'arrière sur un siège protégé par un COUSSIN GONFLABLE ACTIF placé devant lui, sous peine d'infliger des BLESSURES GRAVES, voire MORTELLES à l'ENFANT.

ES: NUNCA utilice un sistema de retención infantil orientado hacia atrás en un asiento protegido por un AIRBAG FRONTAL ACTIVO. Peligro de MUERTE o LESIONES GRAVES para el NIÑO.

RU: ЗАПРЕЩАЕТСЯ устанавливать детское удерживающее устройство лицом назад на сиденье автомобиля, оборудованном фронтальной подушкой безопасности, если ПОДУШКА НЕ ОТКЛЮЧЕНА! Это может привести к СМЕРТИ или СЕРЬЕЗНЫМ ТРАВМАМ РЕБЕНКА.

NL: Gebruik NOOIT een achterwaarts gericht kinderzitje op een stoel met een ACTIEVE AIRBAG ervoor, om DODELIJK of ERNSTIG LETSEL van het KIND te voorkomen.

DA: Brug ALDRIG en bagudvendt autostol på et forsæde med AKTIV AIRBAG, BARNET kan komme i LIVSFARE eller komme ALVORLIGT TIL SKADE.

SV: Använd ALDRIG en bakåtvänd barnstol på ett säte som skyddas med en framförvarande AKTIV AIRBAG. DÖDSFALL eller ALLVARLIGA SKADOR kan drabba BARNET.

FI: ÄLÄ KOSKAAN sijoita taaksepäin suunnattua lasten turvaistuinta istuimelle, jonka edessä on AKTIIVINEN TURVATYYNY, LAPSI VOI KUOLLA tai VAMMAUTUA VAKAVASTI.

NO: Bakovervendt barnesikringsutstyr må ALDRI brukes på et sete med AKTIV KOLLISJONSPUTE foran, da det kan føre til at BARNET utsettes for LIVSFARE og fare for ALVORLIGE SKADER.

PT: NUNCA use um sistema de retenção para crianças voltado para trás num banco protegido com um AIRBAG ACTIVO na frente do mesmo, poderá ocorrer a PERDA DE VIDA ou FERIMENTOS GRAVES na CRIANÇA.

IT: Non usare mai un sistema di sicurezza per bambini rivolto all'indietro su un sedile protetto da AIRBAG ATTIVO di fronte ad esso: pericolo di MORTE o LESIONI GRAVI per il BAMBINO!

EL: ΠΟΤΕ μη χρησιμοποιείτε παιδικό κάθισμα ασφαλείας με φορά προς τα πίσω σε κάθισμα που προστατεύεται από μετωπικό ΕΝΕΡΓΟ ΑΕΡΟΣΑΚΟ, διότι το παιδί μπορεί να υποστεί ΘΑΝΑΣΙΜΟ ή ΣΟΒΑΡΟ ΤΡΑΥΜΑΤΙΣΜΟ.

PL: NIE WOLNO montować fotelika dziecięcego zwróconego tyłem do kierunku jazdy na fotelu, przed którym znajduje się WŁĄCZONA PODUSZKA POWIETRZNA. Niezastosowanie się do tego zalecenia może być przyczyną ŚMIERCI lub POWAŻNYCH OBRAŻEŃ u DZIECKA.

TR: Arkaya bakan bir çocuk emniyet sistemini KESİNLİKLE önünde bir AKTİF HAVA YASTIĞI ile korunmakta olan bir koltukta kullanmayınız. ÇOCUK ÖLEBİLİR veya AĞIR ŞEKİLDE YARALANABİLİR.

UK: НІКОЛИ не використовуйте систему безпеки для дітей, що встановлюється обличчям назад, на сидінні з УВІМКНЕНОЮ ПОДУШКОЮ БЕЗПЕКИ, інакше це може призвести до СМЕРТІ чи СЕРЙОЗНОГО ТРАВМУВАННЯ ДИТИНИ.

HU: SOHA ne használjon hátrafelé néző biztonsági gyerekülést előlről AKTÍV LÉGZSÁKKAL védett ülésen, mert a GYERMEK HALÁLÁT vagy KOMOLY SÉRÜLÉSÉT okozhatja.

HR: NIKADA nemojte koristiti sustav zadržavanja za djecu okrenut prema natrag na sjedalu s AKTIVNIM ZRAČNIM JASTUKOM ispred njega, to bi moglo dovesti do SMRTI ili OZBILJNJIH OZLJEDA za DIJETE.

SL: NIKOLI ne nameščajte otroškega varnostnega sedeža, obrnjenega v nasprotni smeri vožnje, na sedež z AKTIVNO ČELNO ZRAČNO BLAZINO, saj pri tem obstaja nevarnost RESNIH ali SMRTNIH POŠKODB za OTROKA.

SR: NIKADA ne koristiti bezbednosni sistem za decu u kome su deca okrenuta unazad na sedištu sa AKTIVNIM VAZDUŠNIM JASTUKOM ispred sedišta zato što DETE može da NASTRADA ili da se TEŠKO POVREDI.

MK: НИКОГАШ не користете детско седиште свртено наназад на седиште заштитено со АКТИВНО ВОЗДУШНО ПЕРНИЧЕ пред него, затоа што детето може ДА ЗАГИНЕ или да биде ТЕШКО ПОВРЕДЕНО.

BG: НИКОГА не използвайте детска седалка, гледаща назад, върху седалка, която е защитена

чрез АКТИВНА ВЪЗДУШНА ВЪЗГЛАВНИЦА пред нея - може да се стигне до СМЪРТ или СЕРИОЗНО НАРАНЯВАНЕ на ДЕТЕТО.

RO: Nu utilizați NICIODATĂ un scaun pentru copil îndreptat spre partea din spate a mașinii pe un scaun protejat de un AIRBAG ACTIV în fața sa; acest lucru poate duce la DECESUL sau VĂTĂMAREA GRAVĂ a COPILULUI.

CS: NIKDY nepoužívejte dětský zádržný systém instalovaný proti směru jízdy na sedadle, které je chráněno před sedadlem AKTIVNÍM AIRBAGEM. Mohlo by dojít k VÁŽNÉMU PORANĚNÍ nebo ÚMRTÍ DÍTĚTE.

SK: NIKDY nepoužívajte detskú sedačku otočenú vzad na sedadle chránenom AKTÍVNYM AIRBAGOM, pretože môže dôjsť k SMRTI alebo VÁŽNYM ZRANENIAM DIEŤAŤA.

LT: JOKIU BŪDU nemontuokite atgal atgręžtos vaiko tvirtinimo sistemos sėdynėje, prieš kurią įrengta AKTYVI ORO PAGALVĖ, nes VAIKAS GALI ŽŪTI arba RIMTAI SUSIŽALOTI.

LV: NEKĀDĀ GADĪJUMĀ neizmantojiet uz aizmuguri vērstu bērnu sēdeklīti sēdvietā, kas tiek aizsargāta ar tās priekšā uzstādītu AKTĪVU DROŠĪBAS SPILVENU, jo pretējā gadījumā BĒRNS var gūt SMAGAS TRAUMAS vai IET BOJĀ.

ET: ÄRGE kasutage tahapoole suunatud lapseturvaistet istmel, mille ees on AKTIIVSE TURVAPADJAGA kaitstud iste, sest see võib põhjustada LAPSE SURMA või TÕSISE VIGASTUSE.

MT: QATT tuża trażżin għat-tfal li jħares lejn in-naħa ta' wara fuq sit protett b'AIRBAG ATTIV quddiemu; dan jista' jikkawża l-MEWT jew ĠRIEĦI SERJI lit-TFAL.

GA: Ná húsáid srian sábháilteachta linbh cúil RIAMH ar shuíochán a bhfuil mála aeir ag feidhmiú os a chomhair. Tá baol BÁIS nó GORTÚ DONA don PHÁISTE ag baint leis.

Beyond the warning required by ECE R94.02, for safety reasons a forward-facing child restraint system must only be used subject to the instructions and restrictions in the tables ⇨ 52.

The airbag label is located on both sides of the front passenger sun visor.

Airbag deactivation ⇨ 47.

Front airbag system

The front airbag system consists of one airbag in the steering wheel and one in the instrument panel on the front passenger side. The location is identified by the word **AIRBAG**.

The front airbag system is triggered in the event of a front-end impact of a certain severity. The ignition must be switched on.

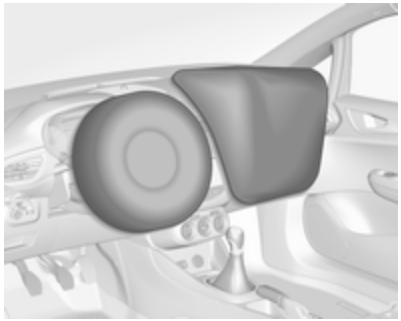

The inflated airbags cushion the impact, thereby reducing the risk of injury to the upper body and head of the front seat occupants considerably.

⚠ Warning

Optimum protection is only provided when the seat is in the proper position.

Seat position ⇨ 35.

Keep the area in which the airbag inflates clear of obstructions.

Fit the seat belt correctly and engage securely. Only then is the airbag able to protect.

Side airbag system

The side airbag system consists of an airbag in each front seat backrest. The location is identified by the word **AIRBAG**.

The side airbag system is triggered in the event of a side impact of a certain severity. The ignition must be switched on.

The inflated airbags cushion the impact, thereby reducing the risk of injury to the upper body and pelvis in the event of a side-on collision considerably.

⚠ Warning

Keep the area in which the airbag inflates clear of obstructions.

Note

Only use protective seat covers that have been approved for the vehicle. Be careful not to cover the airbags.

Curtain airbag system

The curtain airbag system consists of an airbag in the roof frame on each side. The location is identified by the word **AIRBAG** on the roof pillars.

The curtain airbag system is triggered in the event of a side-on impact of a certain severity. The ignition must be switched on.

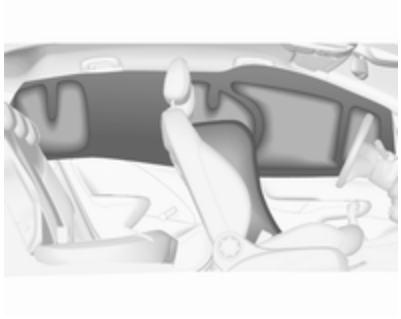

The inflated airbags cushion the impact, thereby reducing the risk of injury to the head in the event of a side-on impact considerably.

⚠ Warning

Keep the area in which the airbag inflates clear of obstructions.

The hooks on the handles in the roof frame are only suitable for hanging up light articles of clothing, without coat hangers. Do not keep any items in these clothes.

Airbag deactivation

The front passenger airbag system must be deactivated for a child restraint system on the passenger seat according to the instructions in the tables ⇨ 52.

The other airbag systems, the belt pretensioners and all driver airbag systems will remain active.

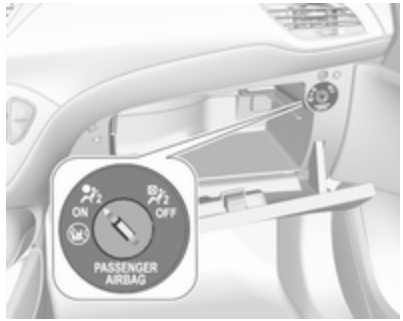

The front passenger airbag system can be deactivated via a key-operated switch on the passenger side of the instrument panel.

Use the ignition key to choose the switch position:

OFF : front passenger airbag is deactivated and will not inflate in the event of a collision. Control indicator OFF illuminates continuously in the centre console

ON : front passenger airbag is active

⚠ Danger

Deactivate passenger airbag only in combination with the use of a child restraint system, subject to the instructions and restrictions in the tables ⇨ 52.

Otherwise, there is a risk of fatal injury for a person occupying a seat with a deactivated front passenger airbag.

If control indicator illuminates for approx. 60 seconds after the ignition is switched on, the front passenger airbag system will inflate in the event of a collision.

If both control indicators are illuminated at the same time, there is a system failure. The status of the system is not discernible, therefore no person is allowed to occupy the front passenger seat. Contact a workshop immediately.

Change status only when the vehicle is stopped with the ignition off.

Status remains until the next change.

Control indicator for airbag deactivation ⇨ 79.

Child restraints

Child restraint systems

⚠ Danger

If using a rear-facing child restraint system on the front passenger seat, the airbag system for the front passenger seat must be deactivated. This also applies to certain forward-facing child restraint systems as indicated in the tables ⇨ 52.

Airbag deactivation ⇨ 47.

Airbag label ⇨ 42.

We recommend a child restraint system which is tailored specifically to the vehicle. For further information, contact your workshop.

When a child restraint system is being used, pay attention to the following usage and installation instructions and also those supplied with the child restraint system.

Always comply with local or national regulations. In some countries, the use of child restraint systems is forbidden on certain seats.

Child restraint systems can be fastened with:

- Three-point seat belt
- ISOFIX brackets
- Top-tether anchors

Three-point seat belt

Child restraint systems can be fastened by using a three-point seat belt. After fastening the child restraint system the seat belt has to be tightened ⇨ 52.

ISOFIX brackets

On rear seats

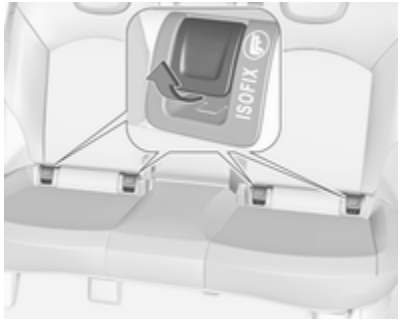

Fasten vehicle-approved ISOFIX child restraint systems to the ISOFIX mounting brackets. Specific vehicle ISOFIX child restraint system positions are marked in the table by IL ⇨ 52.

The vehicle is equipped with guides in the backrests to support the installation of the child restraint system.

ISOFIX mounting brackets on the rear seats are indicated by the ISOFIX logo on the backrest.

Open the flaps of the guides before mounting a child restraint system. After removing the child restraint system, close the flaps.

On front passenger seat

Place the child restraint system in the centre of the seat and push backwards. Make sure that the child restraint system is engaged properly.

Top-tether anchors

On rear seats

Top-tether anchors are marked with the symbol for a child seat.

In addition to the ISOFIX mounting brackets, fasten the Top-tether strap to the Top-tether anchors.

ISOFIX child restraint systems of universal category positions are marked in the table by IUF ⇨ 52.

On front passenger seat

An additional fastening point is located on the passenger seat rail in the rear foot well.

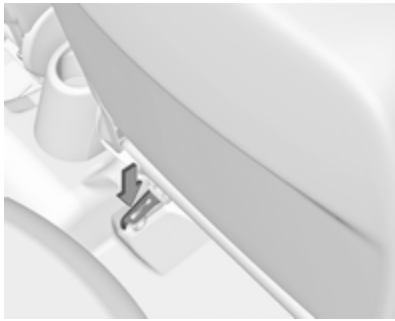

Selecting the right system

The rear seats are the most convenient location to fasten a child restraint system.

Children should travel facing rearwards in the vehicle as long as possible. This ensures that the child's backbone, which is still very weak, is under less strain in the event of an accident.

Suitable are restraint systems that comply with valid UN ECE regulations. Check local laws and regulations for mandatory use of child restraint systems.

Ensure that the child restraint system to be installed is compatible with the vehicle type.

Refer to the tables on the following pages, the instructions supplied with the child restraint system and the vehicle type list of non-universal child restraint systems.

The following child restraints are recommended for the following weight classes:

- **Group 0, Group 0+**
  Maxi Cosi Cabriofix plus Easyfix, for children up to 13 kg
- **Group I**
  OPEL Duo, for children from 13 kg to 18 kg in this group

Ensure that the mounting location of the child restraint system within the vehicle is correct, see following tables.

Allow children to enter and exit the vehicle only on the side facing away from the traffic.

When the child restraint system is not in use, secure the seat with a seat belt or remove it from the vehicle.

Note
Do not affix anything on the child restraint systems and do not cover them with any other materials.

A child restraint system which has been subjected to stress in an accident must be replaced.

Child restraint installation locations

Permissible options for fastening a child restraint system with a three-point seat belt

	On front passenger seat			
Weight class	activated airbag	deactivated airbag	On rear outboard seats	On rear centre seat
Group 0: up to 10 kg	X	U[1,2]	U/L[3]	X
Group 0+: up to 13 kg	X	U[1,2]	U/L[3]	X
Group I: 9 to 18 kg	X	U[1,2]	U/L[3,4]	X
Group II: 15 to 25 kg	U[1,2]	X	U/L[3,4]	X
Group III: 22 to 36 kg	U[1,2]	X	U/L[3,4]	X

U : universal suitability in conjunction with three-point seat belt
L : suitable for particular child restraint systems of the 'specific-vehicle', 'restricted' or 'semi-universal' categories. The child restraint system must be approved for the specific vehicle type (refer to the vehicle type list of the child restraint system)
X : no child restraint system permitted in this weight class
[1] : move seat forwards as far as necessary and adjust seat backrest as far as necessary to a vertical position to ensure that the belt runs forwards from the upper anchorage point
[2] : move seat upwards as far as necessary and adjust seat backrest as far as necessary to a vertical position to ensure that the belt is tight on the buckle side
[3] : move the respective front seat ahead of the child restraint system forwards as far as necessary
[4] : adjust the respective backrest to the rearmost position ⇨ 57, adjust the respective headrest as necessary or remove if required ⇨ 34

Permissible options for fitting an ISOFIX child restraint system

Weight class	Size class	Fixture	On front passenger seat[5] activated airbag	On front passenger seat[5] deactivated airbag	On rear outboard seats	On rear centre seat
Group 0: up to 10 kg	E	ISO/R1	X	IL	IL[3]	X
Group 0+: up to 13 kg	E	ISO/R1	X	IL	IL[3]	X
	D	ISO/R2	X	IL	IL[3]	X
	C	ISO/R3	X	IL	IL[3]	X
Group I: 9 to 18 kg	D	ISO/R2	X	IL	IL[3,4]	X
	C	ISO/R3	X	IL	IL[3,4]	X
	B	ISO/F2	X	IL/IUF	IL, IUF[3,4]	X
	B1	ISO/F2X	X	IL/IUF	IL, IUF[3,4]	X
	A	ISO/F3	X	IL/IUF	IL, IUF[3,4]	X
Group II: 15 to 25 kg			IL[1,2]	X	IL[3,4]	X
Group III: 22 to 36 kg			IL[1,2]	X	IL[3,4]	X

IL : suitable for particular ISOFIX restraint systems of the "specific-vehicle", "restricted" or "semi-universal" categories. (ISOFIX / Top-tether fastening points optional for the front passenger seat but not available for sport seats). The ISOFIX restraint system must be approved for the specific vehicle type (refer to the vehicle type list of the child restraint system)

IUF : suitable for ISOFIX forward-facing child restraint systems of universal category approved for use in this weight class (ISOFIX / Top-tether fastening points optional for the front passenger seat but not available for sport seats)

X : no ISOFIX child restraint system approved for this weight class
1 : move seat forwards as far as necessary and adjust seat backrest as far as necessary to a vertical position to ensure that the belt runs forwards from the upper anchorage point
2 : move seat upwards as far as necessary and adjust seat backrest as far as necessary to a vertical position to ensure that the belt is tight on the buckle side
3 : move the respective front seat ahead of the child restraint system forwards as far as necessary
4 : adjust the respective backrest to the rearmost position ⇨ 57, adjust the respective headrest as necessary or remove if required ⇨ 34
5 : ISOFIX / Top-tether fastening points optional for the front passenger seat (not available for sport seats)

ISOFIX size class and seat device

A – ISO/F3 : forward-facing child restraint system for children of maximum size in the weight class 9 to 18 kg
B – ISO/F2 : forward-facing child restraint system for smaller children in the weight class 9 to 18 kg
B1 – ISO/F2X : forward-facing child restraint system for smaller children in the weight class 9 to 18 kg
C – ISO/R3 : rear-facing child restraint system for children of maximum size in the weight class up to 18 kg
D – ISO/R2 : rear-facing child restraint system for smaller children in the weight class up to 18 kg
E – ISO/R1 : rear-facing child restraint system for young children in the weight class up to 13 kg

Storage

Storage compartments **55**
Glovebox 55
Cupholders 55
Front storage 56
Underseat storage 57
Load compartment **57**
Load compartment cover 59
Rear floor storage cover 59
Lashing eyes 60
Warning triangle 60
First aid kit 61
Roof rack system **61**
Roof rack 61
Loading information **61**

Storage compartments

⚠ Warning

Do not store heavy or sharp objects in the storage compartments. Otherwise, the storage compartment lid could open and vehicle occupants could be injured by objects being thrown around in the event of hard braking, a sudden change in direction or an accident.

Glovebox

Pull lever to open the glovebox cover.

The glovebox features a coin holder.

The glovebox features an adapter for the locking wheel bolts.

The glovebox should be closed whilst driving.

Cupholders

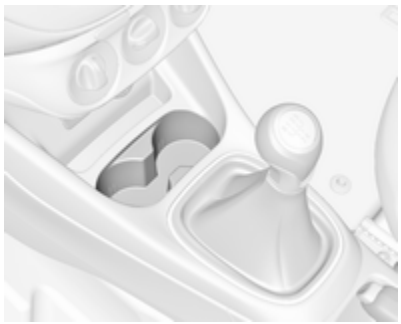

Cupholders are located in the centre console.

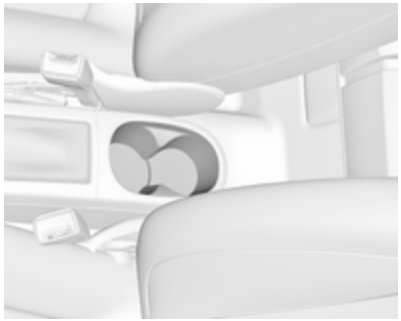

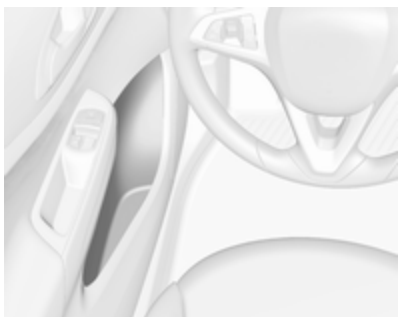

The pockets in the doors are designed to carry bottles.

Additional bottleholders are located in the rear side panels.

Flexible cupholder strap

A movable rubber strap is located in the storage compartment in front of the gear selector lever. Pull out the strap to fix a cup or ashtray.

Front storage

Storage compartments are located below the light switch, in the centre console and in the doors.

Additional storage compartments are located in the side panels beside the rear seats.

Underseat storage

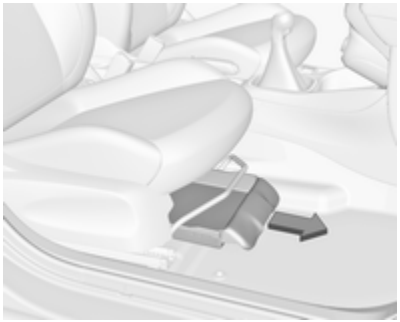

Lift at recessed edge and pull out. Maximum load: 1.5 kg. To close, push in and engage.

Load compartment

Load compartment extension

The rear backrest can be locked in two positions. When transporting bulky items, lock in an upright position.

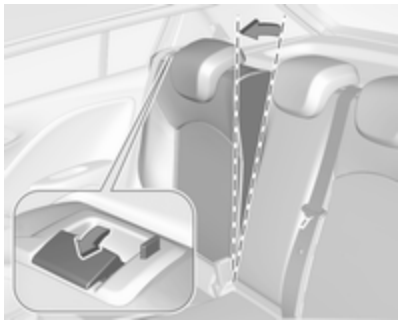

Split backrest

Pull the release handle on the relevant side, pull the backrest forwards to the vertical position and engage.

Single-unit backrest

Pull the release handle on both sides, pull the backrest forwards to the vertical position and engage.

When unlocking, a red marking appears next to the release lever. The backrest is properly engaged when the red marks on both sides near the release lever are no longer visible.

Folding down rear backrests

Remove load compartment cover as necessary.

Push head restraints down by pressing the catch.

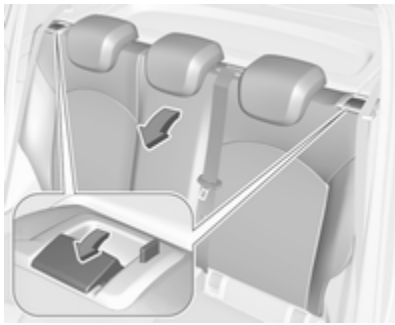

Guide the seat belts through side supports to protect them against damage. When folding the backrest, pull the seat belts along with it.

Split backrest

Pull the release handle on the relevant side and fold it down onto the seat cushion.

Single-unit backrest

Pull the release handle on both sides and fold it down onto the seat cushion.

If the vehicle is to be loaded via a rear door, take the seat belt out of the seat backrest guide and insert the latch plate in the recess as shown in the illustration.

To fold up, raise the backrest and guide it into an upright position until it engages audibly.

Ensure that the seat belts of the outboard seats are placed in the corresponding belt guides.

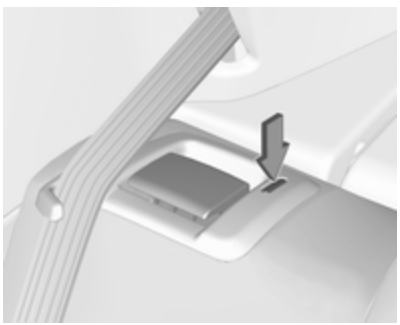

The backrest is properly engaged when the red marks on both sides near the release lever are no longer visible.

⚠Warning

Only drive the vehicle when the backrests are securely locked into position. Otherwise there is a risk of personal injury or damage to the load or vehicle in the event of hard braking or a collision.

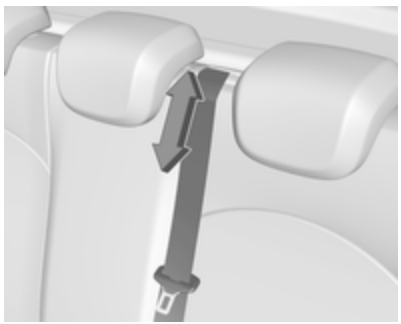

The seat belt of the centre seat could be blocked when the backrest is folded up too quickly. To unlock the retractor, push in the seat belt or pull it out by approx. 20 mm then release.

Load compartment cover

Do not place any objects on the cover.

3-door / 5-door hatchback

Removing

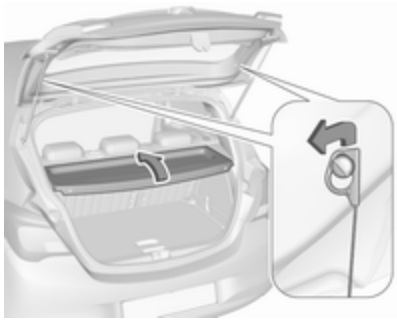

Unhook retaining strings from tailgate.

Lift cover at the rear and push it upwards at the front.

Remove the cover.

Stowing

When the load compartment is fully loaded, stow the load compartment cover on the rear seats or remove from vehicle.

Fitting

Engage cover in side guides and fold downwards. Attach retaining strings to tailgate.

Rear floor storage cover

Rear floor cover

Lift up rear floor cover to gain access to emergency breakdown equipment.

Tools ⇨ 177.

In models with a tyre repair kit on the right side in the load compartment, the spare wheel recess may be used as an additional stowage compartment.

Tyre repair kit ⇨ 185.

Double load-bay floor

The double load-bay floor can be inserted in the load compartment in two positions:

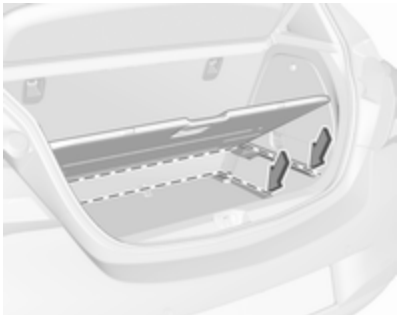

- directly above the cover for the spare wheel recess or the floor cover
- or in the upper openings in the load compartment

To remove, lift the load-bay floor using the recess and pull backwards.

To insert, push the load-bay floor forwards in the corresponding guide, then lower.

If mounted in the upper position, the space between the load-bay floor and the spare wheel well cover can be used as a stowage compartment.

In this position, if the rear seat backrests are folded forwards, an almost completely flat load bay is created.

The double load-bay floor is able to withstand a load of no more than 100 kg. In the lower position, the double load-bay floor is able to withstand the maximum permissible load.

Lashing eyes

3-door / 5-door hatchback

The lashing eyes are designed to secure items against slippage, e.g. using lashing straps or luggage net.

Warning triangle

The warning triangle is stowed in the load compartment below the tailgate.

First aid kit

Stow the first-aid kit in the compartment in the left wall of the load compartment.

To open the compartment, disengage cover and open it.

Roof rack system

Roof rack

For safety reasons and to avoid damage to the roof, the vehicle approved roof rack system is recommended. For further information contact your workshop.

Follow the installation instructions and remove the roof rack when not in use.

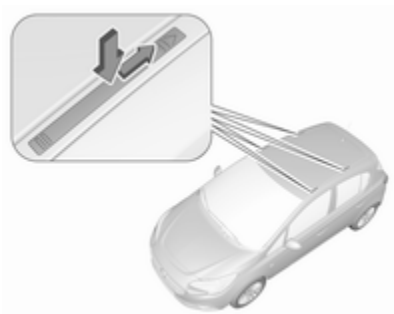

Push covers for concealing roof rack mounts down and push backwards.

Attach roof rack at appropriate points, see enclosed roof rack system instructions.

Loading information

- Heavy objects in the load compartment should be placed against the seat backrests. Ensure that the backrests are securely engaged. If objects can be stacked, heavier objects should be placed at the bottom.
- Prevent sliding of loose objects by securing them with straps attached to the lashing eyes ⇨ 60.

- Use the hook at the right sidewall of the load compartment for hanging up carrier bags. Maximum load: 5 kg.
- Do not allow the load to protrude above the upper edge of the backrests.
- Do not place any objects on the load compartment cover or the instrument panel.
- Do not cover the sensor on top of the instrument panel.
- The load must not obstruct the operation of the pedals, parking brake and gear selector lever, or hinder the freedom of movement of the driver. Do not place any unsecured objects in the interior.
- Do not drive with an open load compartment.

⚠Warning

Always make sure that the load in the vehicle is securely stowed. Otherwise objects can be thrown around inside the vehicle and cause personal injury or damage to the load or vehicle.

- The payload is the difference between the permitted gross vehicle weight (see identification plate ⇨ 206) and the EC kerb weight.

  To calculate the payload, enter the data for your vehicle in the weights table at the front of this manual.

  The EC kerb weight includes weights for the driver (68 kg), luggage (7 kg) and all fluids (fuel tank 90% full).

  Optional equipment and accessories increase the kerb weight.
- Driving with a roof load increases the sensitivity of the vehicle to cross-winds and has a detrimental effect on vehicle handling due to the vehicle's higher centre of gravity. Distribute the load evenly and secure it properly with retaining straps. Adjust the tyre pressure and vehicle speed according to the load conditions. Check and retighten the straps frequently.

  Do not drive faster than 120 km/h.

  The permissible roof load is 75 kg. The roof load is the combined weight of the roof rack and the load.

Instruments and controls

Controls **64**
Steering wheel adjustment 64
Steering wheel controls 64
Heated steering wheel 64
Horn 65
Windscreen wiper and washer . . 65
Rear window wiper and washer 66
Outside temperature 67
Clock 68
Power outlets 69
Cigarette lighter 70
Ashtrays 70
Warning lights, gauges and indicators **71**
Instrument cluster 71
Speedometer 71
Odometer 71
Trip odometer 71
Tachometer 72
Fuel gauge 72
Fuel selector 73
Engine coolant temperature gauge 74
Service display 74
Control indicators 75
Turn lights 77
Seat belt reminder 78
Airbag and belt tensioners 78
Airbag deactivation 79
Charging system 79
Malfunction indicator light 79
Service vehicle soon 79
Brake and clutch system 79
Operate pedal 80
Antilock brake system (ABS) 80
Gear shifting 80
Power steering 80
Lane departure warning 80
Parking assist 80
Electronic Stability Control and Traction Control system 81
Exhaust filter 81
Tyre pressure monitoring system 81
Engine oil pressure 81
Low fuel 82
Immobiliser 82
Reduced engine power 82
Autostop 82
Exterior light 82
High beam 82
Front fog lights 82
Rear fog light 82
Cruise control 83
Vehicle detected ahead 83
Speed limiter 83
Traffic sign assistant 83
Door open 83
Displays **83**
Driver Information Centre 83
Info Display 88
Vehicle messages **89**
Warning chimes 91
Battery voltage 92
Vehicle personalisation **92**
Telematics service **95**
OnStar 95

Controls

Steering wheel adjustment

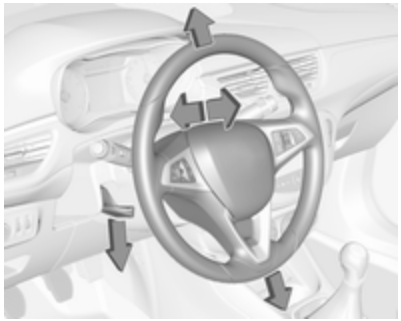

Unlock lever, adjust steering wheel, then engage lever and ensure it is fully locked.

Do not adjust steering wheel unless vehicle is stationary and steering wheel lock has been released.

Steering wheel controls

Cruise control and speed limiter are operated via the controls on the left side of the steering wheel.

Additionally, forward collision alert can be set by using the controls on the left side of the steering wheel.

Infotainment system can be operated via the controls on the right side of the steering wheel.

Driver assistance systems ⇨ 135.

Further information is available in the Infotainment manual.

Heated steering wheel

Activate heating by pressing ♨. Activation is indicated by the LED in the button.

The highlighted grip areas of the steering wheel are heated quicker and to a higher temperature than the other areas.

Heating is operational when the engine is running and during an Autostop.

Stop-start system ⇨ 122.

Horn

Press 📯.

Windscreen wiper and washer

Windscreen wiper

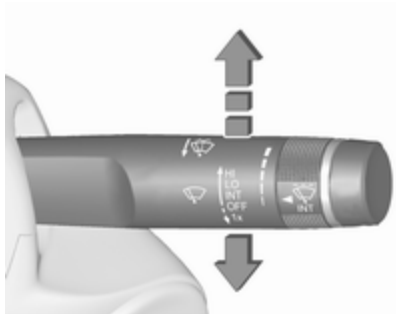

HI : fast
LO : slow
INT : interval wiping
or
automatic wiping with rain sensor
OFF : off

For a single wipe when the windscreen wiper is off, press the lever down to position **1x**.

Do not use if the windscreen is frozen.

Switch off in car washes.

Adjustable wiper interval

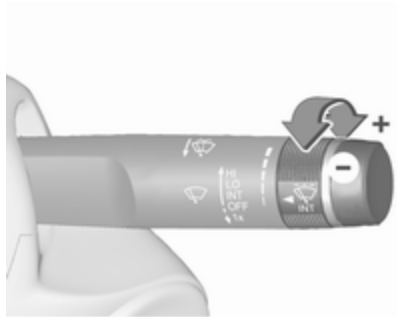

Wiper lever in position **INT**.

Turn the adjuster wheel to adjust the wiping frequency.

Adjustable sensitivity of the rain sensor

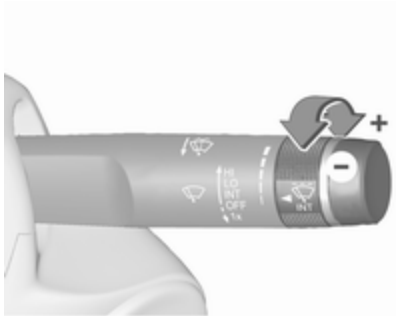

Wiper lever in position **INT**.

Turn the adjuster wheel to adjust the sensitivity of the rain sensor.

The rain sensor detects the amount of water on the windscreen and automatically regulates the wiping frequency and speed.

After 20 seconds without wiping activity, the wiper arms move slightly down to park position.

Keep the sensor free from dust, dirt and ice.

Windscreen washer

Pull lever. Washer fluid is sprayed onto the windscreen and the wiper wipes a few times.

Washer fluid ⇨ 161

Rear window wiper and washer

Rear window wiper

Press the rocker switch to activate the rear window wiper:

ON : continuous operation
OFF : off
INT : intermittent operation

Do not use if the rear window is frozen.

Switch off in car washes.

The rear window wiper comes on automatically when the windscreen wiper is switched on and reverse gear is engaged.

Activation or deactivation of this function can be changed in the menu **Settings** in the Info Display.

Vehicle personalisation ⇨ 92.

Rear window washer

Push lever. Washer fluid is sprayed onto the rear window and the wiper wipes a few times.

Washer fluid ⇨ 161

Outside temperature

A drop in temperature is indicated immediately and a rise in temperature after a time delay. Temperatures below 3 °C flash on the display.

Illustration shows Graphic Info Display.

Illustration shows Colour Info Display.

Uplevel display

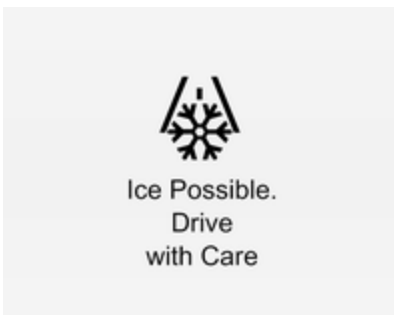

If outside temperature drops to 3 °C, a warning message is displayed in the Driver Information Centre.

⚠ Warning

The road surface may already be icy even though the display indicates a few degrees above 0 °C.

Clock

Graphic Info Display

Press **CONFIG** to open the **Settings** menu.

Scroll through the list and select the menu item **Time Date** to display the respective submenu.

Note
For a detailed description of menu operation, refer to the Infotainment manual.

Set time

Press the **MENU-TUNE** knob to enter the **Set time** submenu.

Turn the **MENU-TUNE** knob to change the current value of the first setting.

Press the **MENU-TUNE** knob to confirm the set value.

The cursor then switches to the next value. If all values are set, you are automatically returned to the next higher menu level.

Set date

Press the **MENU-TUNE** knob to enter the **Set date** submenu.

Turn the **MENU-TUNE** knob to change the current value of the first setting.

Press the **MENU-TUNE** knob to confirm the set value.

The cursor then switches to the next value. If all values are set, you are automatically returned to the next higher menu level.

Set time format

To switch between the available options, repeatedly press the **MENU-TUNE** knob.

Set date format

To switch between the available options, repeatedly press the **MENU-TUNE** knob.

RDS clock synchronization
The RDS signal of most VHF transmitters automatically sets the time. RDS time synchronisation can take a few minutes. Some transmitters do not send a correct time signal. In such cases, it is recommended to switch off the automatic time synchronisation.

To switch between the options **On** and **Off**, repeatedly press the **MENU-TUNE** knob.

Colour Info Display

Press ⌂ then select **Settings** screen.

Select **Time and Date** to display the respective submenu.

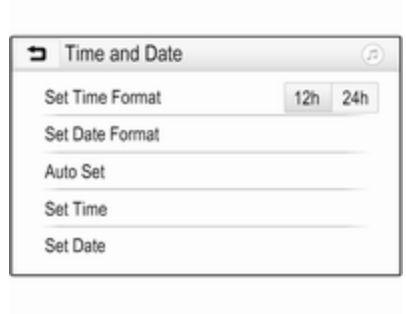

Set Time Format
To select the desired time format, touch the screen buttons **12 h** or **24 h**.

Set Date Format
To select the desired date format, select **Set Date Format** and choose between the available options in the submenu.

Auto Set
To choose whether time and date are to be set automatically or manually, select **Auto Set**.

For time and date to be set automatically, select **On - RDS**.

For time and date to be set manually, select **Off - Manual**. If **Auto Set** is set to **Off - Manual**, the submenu items **Set Time** and **Set Date** become available.

Set time and date
To adjust the time and date settings, select **Set Time** or **Set Date**.

Touch **+** or **-** to adjust the settings.

Power outlets

A 12 V power outlet is located in the centre console.

Do not exceed the maximum power consumption of 120 W.

With ignition off, the power outlet is deactivated. Additionally, the power outlet is deactivated in the event of low vehicle battery voltage.

Electrical accessories that are connected must comply with the electromagnetic compatibility requirements laid down in DIN VDE 40 839.

Do not connect any current-delivering accessories, e.g. electrical charging devices or batteries.

Do not damage the outlet by using unsuitable plugs.

Stop-start system ⇨ 122.

Cigarette lighter

The cigarette lighter is located in the centre console.

Press in cigarette lighter. It switches off automatically once the element is glowing. Pull out lighter.

Ashtrays

Caution
To be used only for ash and not for combustible rubbish.

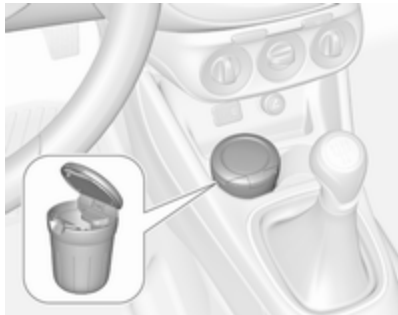

The portable ashtray can be placed in the cupholders.

Warning lights, gauges and indicators

Instrument cluster

The needles of the instruments briefly rotate to the end position when the ignition is switched on.

Speedometer

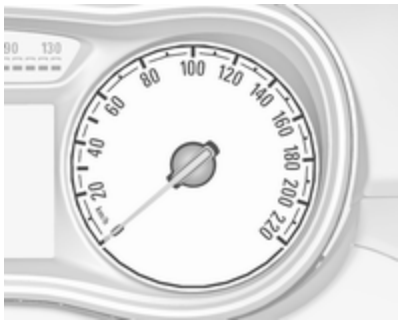

Indicates vehicle speed.

Odometer

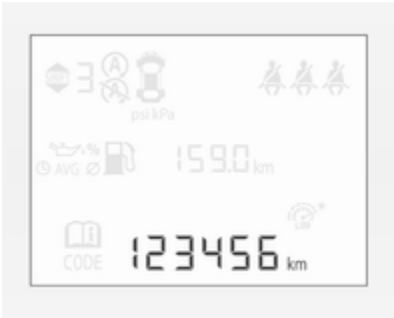

The bottom line displays the recorded distance in km.

Trip odometer

The recorded distance is displayed since the last reset.

Trip odometer counts up to 9999 km and then restarts at 0.

Midlevel display

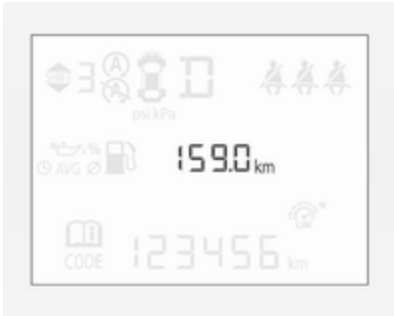

To reset, press **SET/CLR** on the stalk for a few seconds ⇨ 83.

Uplevel display

Two trip odometer pages are selectable for different trips.

Select menu /i\ by pressing **Menu** on the stalk. Turn adjuster wheel on the stalk and select /i\1 or /i\2. Each trip odometer page can be reset separately by pressing **SET/CLR** on the stalk for a few seconds on the respective menu.

Tachometer

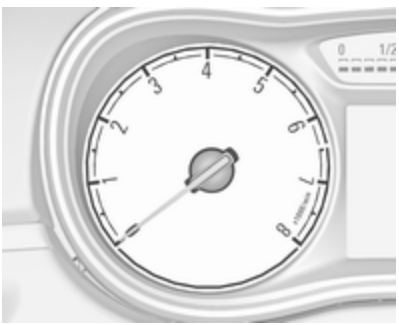

Displays the engine speed.

Drive in a low engine speed range for each gear as much as possible.

Caution

If the needle is in the red warning zone, the maximum permitted engine speed is exceeded. Engine at risk.

Fuel gauge

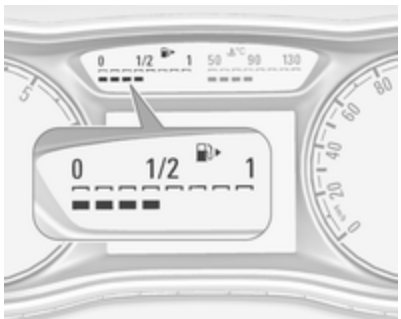

Displays the fuel level or gas content in the tank depending on the operation mode.

Number of LEDs displayed shows the level in the respective fuel tank. 8 LEDs means fuel tank is full.

During liquid gas operation, the level in the gas tank is displayed.

Low fuel indication

One remaining LED illuminating white indicates that the fuel level is low.

If the LED changes to red and ⛽ illuminates yellow, refuel the tank soon.

If the LED illuminates red and ⛽ flashes yellow, refuel immediately.

Never run the fuel tank dry.

The arrow indicates the vehicle side where the fuel filler flap is located.

Because of the fuel remaining in the tank, the top-up quantity may be less than the specified tank capacity.

During liquid gas operation, the system automatically switches over to petrol operation when gas tanks are empty ⇨ 73.

Fuel selector

Pressing **LPG** switches between petrol and liquid gas operation as soon as the required parameters (coolant temperature, gas temperature and minimum engine speed) have been reached. The requirements are usually fulfilled after approx. 60 seconds (depending on exterior temperature) and the first firm press on the accelerator. The LED status shows the current operating mode.

LED off	:	petrol operation
LED flashes	:	checking conditions for fuel transition to liquid gas operation. Illuminates if conditions are fulfilled.
LED illuminates	:	liquid gas operation
LED flashes five times and extinguishes	:	liquid gas tank is empty or failure in liquid gas system. A message is displayed in the Driver Information Centre.

The selected fuel mode is stored and reactivated at the next ignition cycle, if conditions allow.

As soon as the liquid gas tank is empty, petrol operation is automatically engaged until the ignition is switched off.

When switching automatically between petrol or gas operation, a brief delay of engine tractive power may be noticeable.

When petrol fuel tank is empty, the engine will not start.

Every six months, run the petrol tank down until control indicator ⛽ illuminates, then refuel. This helps maintain fuel quality and system function for petrol operation.

Fill the tank completely at regular intervals to prevent corrosion in the tank.

Faults and remedies

If gas mode is not possible, check whether there is enough liquid gas or petrol present for starting.

Due to extreme temperatures in combination with the gas composition, it may take slightly longer before the system switches from petrol to gas mode.

In extreme situations, the system may also switch back to petrol mode if the minimum requirements are not fulfilled. If conditions allow, it might be possible to manually switch back to liquid gas operation.

Seek the assistance of a workshop in the event of all other faults.

Caution

Repairs and adjustments may only be made by trained specialists in order to maintain the safety and warranty on the LPG system.

Liquid gas is given a particular odour (odorised) so that any leaks can be detected easily.

⚠ Warning

If you smell gas in the vehicle or in the immediate vicinity, switch to petrol mode immediately. No smoking. No naked flames or ignition sources.

If the gas odour persists, do not start the engine. Have the cause of the fault remedied by a workshop.

When using underground car parks, follow the instructions of the operator and local laws.

Note
In the event of an accident, switch off the ignition.

Fuel for liquid gas operation ⇨ 152.

Engine coolant temperature gauge

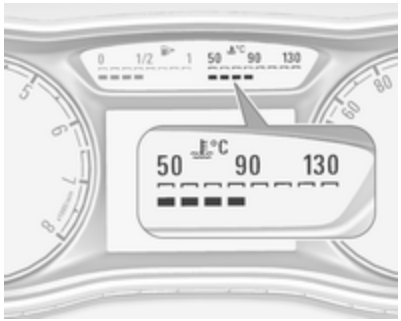

Number of LEDs displayed shows the coolant temperature.

up to 3 LEDs	:	engine operating temperature not yet reached
4 to 6 LEDs	:	normal operating temperature
more than 6 LEDs	:	temperature too high

Caution

If engine coolant temperature is too high, stop vehicle, switch off engine. Danger to engine. Check coolant level.

Service display

The engine oil life system lets you know when to change the engine oil and filter. Based on driving conditions, the interval at which an engine oil and filter change will be indicated can vary considerably.

When the system has calculated that engine oil life has been diminished, a warning message appears in the Driver Information Centre. Have engine oil and filter changed by a workshop within one week or 500 km, whichever occurs first.

This can be an additional engine oil and filter change or part of a regular service.

To display the remaining engine oil life duration use the buttons on the stalk:

Press **MENU** to select the **Vehicle Information Menu** 🚗.

Turn the adjuster wheel to select **Remaining Oil Life**.

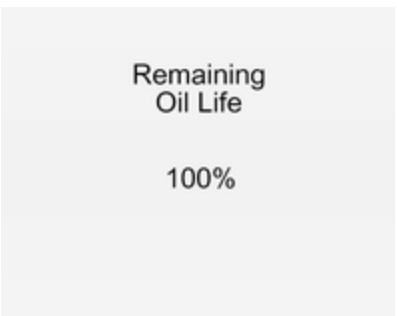

The remaining engine oil life duration is displayed in percent in the Driver Information Centre.

Reset

Press **SET/CLR** on the stalk for several seconds to reset. The remaining engine oil life duration menu must be active. Switch on ignition, but not the engine.

The system must be reset every time the engine oil is changed to ensure proper functionality. Seek the assistance of a workshop.

Next service

A message appears in the Driver Information Centre, when maintenance of the vehicle is required. Have maintenance work carried out by a workshop within one week or 500 km, whichever occurs first.

Driver Information Centre ⇨ 83.

Service information ⇨ 202.

Control indicators

The control indicators described are not present in all vehicles. The description applies to all instrument versions.

Depending on the equipment, the position of the control indicators may vary. When the ignition is switched on, most control indicators will illuminate briefly as a functionality test.

The control indicator colours mean:

red : danger, important reminder
yellow : warning, information, fault
green : confirmation of activation
blue : confirmation of activation
white : confirmation of activation

Control indicators in the instrument cluster

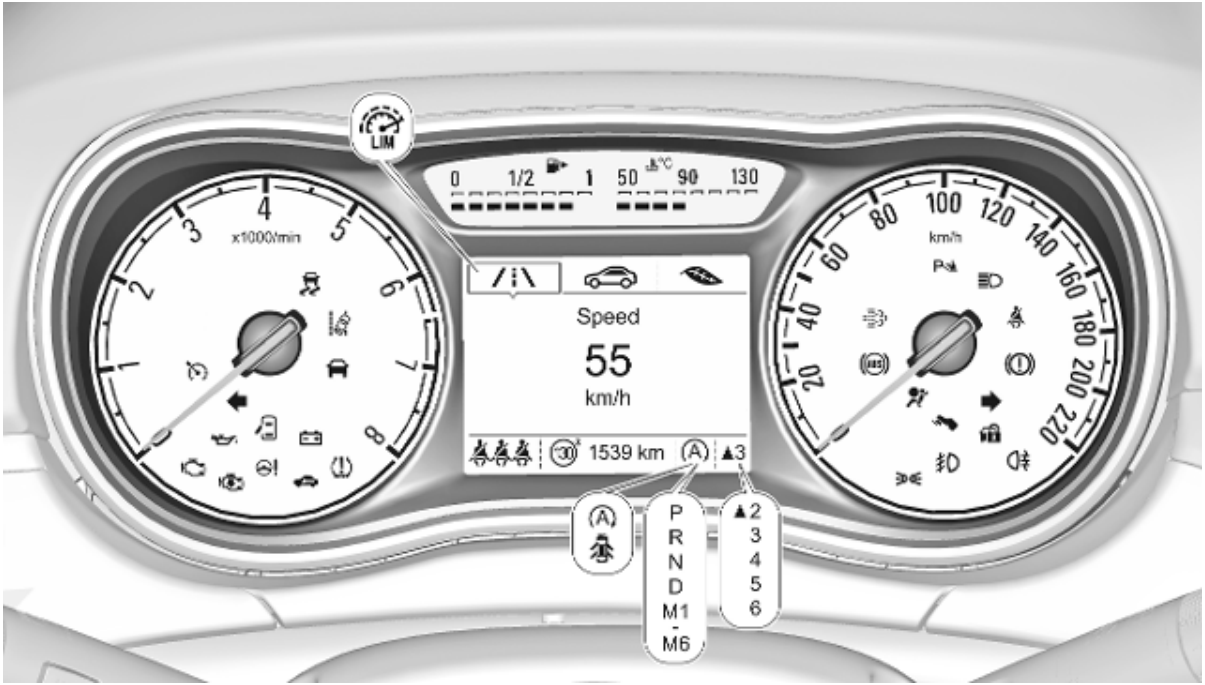

Control indicators in the centre console

Overview

- Turn lights ⇨ 77
- Seat belt reminder ⇨ 78
- Airbag and belt tensioners ⇨ 78
- Airbag deactivation ⇨ 79
- Charging system ⇨ 79
- Malfunction indicator light ⇨ 79
- Service vehicle soon ⇨ 79
- Brake and clutch system ⇨ 79
- Operate pedal ⇨ 80
- Antilock brake system (ABS) ⇨ 80
- Gear shifting ⇨ 80
- Power steering ⇨ 80
- Lane departure warning ⇨ 80
- Parking assist ⇨ 80
- Electronic Stability Control and Traction Control system ⇨ 81
- Exhaust filter ⇨ 81
- Tyre pressure monitoring system ⇨ 81
- Engine oil pressure ⇨ 81
- Low fuel ⇨ 82
- Immobiliser ⇨ 82
- Reduced engine power ⇨ 82
- Autostop ⇨ 82
- Exterior light ⇨ 82
- High beam ⇨ 82
- Fog light ⇨ 82
- Rear fog light ⇨ 82
- Cruise control ⇨ 83
- Vehicle detected ahead ⇨ 83
- Speed limiter ⇨ 83
- Traffic sign assistant ⇨ 83
- Door open ⇨ 83

Turn lights

⇦⇨ illuminates or flashes green.

Illuminates briefly

The parking lights are switched on.

Flashes

A turn light or the hazard warning flashers are activated.

Rapid flashing: failure of a turn light or associated fuse.

Bulb replacement ⇨ 164.

Fuses ⇨ 172.

Turn lights ⇨ 104.

Seat belt reminder

Seat belt reminder on front seats

for driver's seat illuminates or flashes red in the tachometer.

²⁾ for front passenger seat illuminates or flashes red in the centre console when the seat is occupied.

Illuminates
After the ignition has been switched on, until the seat belt has been fastened.

Flashes
After having started the engine for a maximum of 100 seconds, until the seat belt has been fastened.

Fastening the seat belt ⇨ 40.

Seat belt status on rear seats

in the Driver Information Centre flashes or illuminates.

Illuminates
After having started the engine for a minimum of 35 seconds, until the seat belt has been fastened.

Also illuminates if an unfastened seat belt is fastened whilst driving.

Flashes
After starting-off, when the seat belt is unfastened.

Fastening the seat belt ⇨ 40.

Airbag and belt tensioners

illuminates red.

When the ignition is switched on, the control indicator illuminates for approx. 4 seconds. If it does not illuminate, does not go out after 4 seconds or illuminates whilst driving, there is a fault in the airbag system. Seek the assistance of a workshop. The airbags and belt pretensioners may fail to trigger in the event of an accident.

Deployment of the belt pretensioners or airbags is indicated by continuous illumination of .

⚠ Warning

Have the cause of the fault remedied immediately by a workshop.

Belt pretensioners ⇨ 39.

Airbag system ⇨ 42.

Airbag deactivation

illuminates yellow.

Illuminates for approx. 60 seconds after the ignition is switched on. The front passenger airbag is activated.

illuminates yellow.

The front passenger airbag is deactivated ⇨ 47.

⚠ Danger

Risk of fatal injury for a child using a child restraint system together with activated front passenger airbag.

Risk of fatal injury for an adult person with deactivated front passenger airbag.

Charging system

illuminates red.

Illuminates when the ignition is switched on and extinguishes shortly after the engine starts.

Illuminates when the engine is running

Stop, switch off engine. Vehicle battery is not charging. Engine cooling may be interrupted. The brake servo unit may cease to be effective. Seek the assistance of a workshop.

Malfunction indicator light

illuminates or flashes yellow.

Illuminates when the ignition is switched on and extinguishes shortly after the engine starts.

Illuminates when the engine is running

Fault in the emission control system. The permitted emission limits may be exceeded. Seek the assistance of a workshop immediately.

Flashes when the engine is running

Fault that could lead to catalytic converter damage. Ease up on the accelerator until the flashing stops. Seek the assistance of a workshop immediately.

Service vehicle soon

illuminates yellow.

Additionally, a warning message is displayed in the Driver Information Centre.

The vehicle requires a service.

Seek the assistance of a workshop.

Vehicle messages ⇨ 89.

Brake and clutch system

illuminates red.

The brake and clutch fluid level is too low, when manual parking brake is not applied ⇨ 161.

⚠Warning
Stop. Do not continue your journey. Consult a workshop.

Illuminates when the manual parking brake is applied and ignition is switched on ⇨ 132.

Operate pedal

illuminates or flashes yellow.

Illuminates

Clutch pedal must be depressed to start the engine in Autostop mode.

Stop-start system ⇨ 122.

Flashes

Clutch pedal must be depressed to start the engine with the key ⇨ 18, ⇨ 121.

On some versions, the Driver Information Centre indicates a message to operate the clutch pedal ⇨ 89.

Antilock brake system (ABS)

(ABS) illuminates yellow.

Illuminates for a few seconds after the ignition is switched on. The system is ready for operation when the control indicator extinguishes.

If the control indicator does not go out after a few seconds, or if it illuminates while driving, there is a fault in the ABS. The brake system remains operational but without ABS regulation.

Antilock brake system ⇨ 131.

Gear shifting

▲ with the number of a higher gear is indicated, when upshifting is recommended for fuel saving reasons.

Power steering

! illuminates yellow.

Illuminates with power steering disabled

Failure in the power steering system. Consult a workshop.

Illumination of ! and simultaneously

Power steering system must be calibrated, system calibration ⇨ 134.

Lane departure warning

illuminates green or flashes yellow.

Illuminates green

System is switched on and ready to operate.

Flashes yellow

System recognises an unintended lane change.

Lane departure warning ⇨ 149.

Parking assist

P illuminates yellow.

Fault in system

or

Fault due to sensors that are dirty or covered by ice or snow

or

Interference due to external sources of ultrasound. Once the source of interference is removed, the system will operate normally.

Have the cause of the fault in the system remedied by a workshop.

Parking assist ⇨ 141.

Electronic Stability Control and Traction Control system

flashes or illuminates yellow.

Flashes

The system is actively engaged. Engine output may be reduced and the vehicle may be braked automatically to a small degree.

Illuminates

A fault in the system is present. A warning message or warning code appears in the Driver Information Centre. Continued driving is possible. The system is not operational. Driving stability, however, may deteriorate depending on road surface conditions.

Have the cause of the fault remedied by a workshop.

Electronic Stability Control ⇨ 133.

Traction Control system ⇨ 133.

Exhaust filter

illuminates or flashes yellow.

The exhaust filter requires cleaning.

Continue driving until extinguishes. If possible, do not allow engine speed to drop below 2000 rpm.

Illuminates

The exhaust filter is full. Start cleaning process as soon as possible.

Flashes

The maximum filling level of the filter is reached. Start cleaning process immediately to avoid damage to the engine.

Exhaust filter ⇨ 125.

Stop-start system ⇨ 122.

Tyre pressure monitoring system

illuminates or flashes yellow.

Illuminates

Tyre pressure loss. Stop immediately and check tyre pressure.

Flashes

Fault in system or tyre without pressure sensor mounted (e.g. spare wheel). After 60-90 seconds the control indicator illuminates continuously. Consult a workshop.

Tyre pressure monitoring system ⇨ 180.

Engine oil pressure

illuminates red.

Illuminates when the ignition is switched on and extinguishes shortly after the engine starts.

Illuminates when the engine is running

Caution

Engine lubrication may be interrupted. This may result in damage to the engine and/or locking of the drive wheels.

1. Depress the clutch.
2. Set selector lever to neutral.
3. Move out of the flow of traffic as quickly as possible without impeding other vehicles.
4. Switch off the ignition.

⚠Warning

When the engine is off, considerably more force is needed to brake and steer.

During an Autostop, the brake servo unit will still be operational.

Do not remove key until vehicle is stationary, otherwise the steering wheel lock could engage unexpectedly.

Keep engine turned off and let the vehicle be towed to a workshop.

Low fuel

illuminates or flashes yellow.

Illuminates

Level in fuel tank is too low.

Flashes

Fuel used up. Refuel immediately. Never run the fuel tank dry.

Refuelling ⇨ 152.

Catalytic converter ⇨ 126.

Immobiliser

flashes yellow.

Fault in the immobiliser system. The engine cannot be started.

Immobiliser ⇨ 28.

Reduced engine power

illuminates yellow.

The engine power is limited. Consult a workshop.

Autostop

Autostop active

Ⓐ illuminates red or white.

Engine is in an Autostop.

Stop-start system ⇨ 122.

Exterior light

illuminates green.

The exterior lights are on ⇨ 100.

High beam

illuminates blue.

Illuminated when high beam is on or during headlight flash ⇨ 102.

Front fog lights

illuminates green.

The front fog lights are on ⇨ 104.

Rear fog light

illuminates yellow.

The rear fog light is on ⇨ 105.

Cruise control

illuminates white or green.

Illuminates white

The system is on.

Illuminates green

Cruise control is active.

Cruise control ⇨ 135.

Vehicle detected ahead

illuminates green.

A vehicle ahead is detected in the same lane.

Forward collision alert ⇨ 138.

Speed limiter

illuminates in the Driver Information Centre when Speed limiter is active. Set speed is indicated alongside symbol.

Speed limiter ⇨ 137.

Traffic sign assistant

60 displays detected traffic signs as a control indicator.

Traffic sign assistant ⇨ 146.

Door open

illuminates.

A door or the tailgate is open.

Displays

Driver Information Centre

The Driver Information Centre is located in the instrument cluster.

Depending on the version and equipment, the Driver Information Centre is available as Midlevel display or Uplevel display.

Driver Information Centre indicates depending on the equipment:

- vehicle information and settings
- trip/fuel information
- economic information

The following indications appear if required:

- warning messages ⇨ 89
- gear shift indication ⇨ 80
- drive mode indication ⇨ 127
- tyre pressure warning ⇨ 180
- seat belt reminder indication ⇨ 78
- Autostop indication ⇨ 122
- service information ⇨ 79

Selecting menus and functions

The menus and functions can be selected via the buttons on the stalk.

Press **MENU** to switch between the main menus or to return from a submenu to the next higher menu level.

Turn the adjuster wheel to select a submenu of the main menu or to set a numeric value.

Press **SET/CLR** to select and confirm a function.

Vehicle and service messages are popped-up in the Driver Information Centre if required. Confirm messages by pressing **SET/CLR**.

Vehicle messages ⇨ 89.

Midlevel display

Main menus are:

- trip/fuel information, see description below
- vehicle information, see description below

Some of the displayed functions differ when the vehicle is being driven or at a standstill. Some functions are only available when the vehicle is being driven.

Uplevel display

Main menus are:

- trip/fuel information menu, displayed by /i\, see description below
- vehicle information menu, displayed by , see description below
- eco information menu, displayed by , see description below

Note
Some systems override the main menu tabs. The currently active tab is indicated by a small arrow head.

Some of the displayed functions differ when the vehicle is being driven or at a standstill. Some functions are only available when the vehicle is being driven.

Trip/Fuel information menu

Possible pages are:

- digital vehicle speed
- trip odometer
- average fuel economy
- average vehicle speed
- instantaneous fuel economy
- fuel range
- fuel range LPG version
- timer
- outside temperature

Selection and indication is different between Midlevel display and Uplevel display.

Digital vehicle speed

Digital display of the instantaneous speed.

Trip odometer

Trip odometer displays the current distance since a certain reset.

Trip odometer counts up to 9999.9 km and then restarts at 0.

Turn the adjuster wheel to select between trip odometer 1 and 2 for Uplevel display.

To reset, press **SET/CLR** for a few seconds while viewing this page.

The information of trip page 1 and 2 can be reset separately while the respective display is active.

Average fuel economy

Display of average consumption. The measurement can be reset at any time and starts with a default value.

To reset, press **SET/CLR** for a few seconds while viewing this page.

The information of trip page 1 and 2 can be reset separately while the respective display is active.

On vehicles with LPG engines: Average consumption is indicated for the currently selected mode, LPG or petrol.

Average vehicle speed

Display of average speed. The measurement can be reset at any time.

To reset, press **SET/CLR** for a few seconds while viewing this page.

The information of trip page 1 and 2 can be reset separately while the respective display is active.

Instantaneous fuel economy

Display of the instantaneous consumption.

On vehicles with LPG engines: Instantaneous consumption is indicated for the currently selected mode, LPG or petrol.

Fuel range

Range is calculated from current fuel tank level and current consumption. The display shows average values.

After refuelling, the range is updated automatically after a brief delay.

When the fuel level in the tank is low, a message appears on the display and control indicator ⛽ in the fuel gauge illuminates.

When the tank must be refuelled immediately, a warning message appears and remains on the display. Additionally, control indicator ⛽ flashes in the fuel gauge ⇨ 82.

Fuel range, LPG version

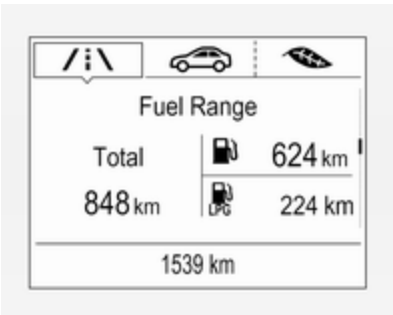

Display of the approximate total fuel range for each fuel tank (LPG and petrol). A low fuel level in either tank is indicated by **Low** in the respective section.

Timer

To start or stop the timer, press **SET/CLR**. To reset, press **SET/CLR** for a few seconds.

Outside temperature

Display of current outside temperature.

Vehicle information menu

Possible pages are:

- unit
- speed warning
- remaining engine oil life indication
- tyre pressure
- tyre loading
- outside temperature
- following distance
- traffic sign assistant
- language

Selection and indication is different between Midlevel display and Uplevel display.

Unit

Press **SET/CLR** while page is displayed. Select imperial (unit 1) or metric (unit 3) by turning the adjuster wheel. Press **SET/CLR** to set the unit of measurement.

Speed warning

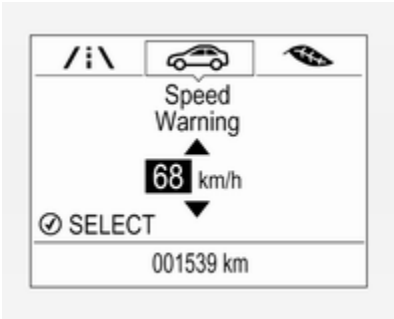

The speed warning function alerts the driver when a set speed is exceeded.

To set the speed warning, press **SET/CLR** while the page is displayed. Turn the adjuster wheel to select the value. Press **SET/CLR** to set the speed.

If the selected speed limit is exceeded, a warning chime sounds. Once the speed is set, this feature can be turned off by pressing **SET/CLR** while viewing this page.

Remaining oil life
Indicates an estimate of the oil's useful life. The number in percentage means the current remaining oil life and indicates when to change the engine oil and filter ⇨ 74.

Tyre pressure
Tyre pressures of all wheels are displayed on this page during driving ⇨ 180.

Tyre load
The tyre pressure category according to the actual tyre inflation pressure can be selected ⇨ 180.

Outside temperature
Display of current outside temperature.

Following distance
Displays the distance in seconds to a preceding moving vehicle ⇨ 140.

Traffic sign assistant
Displays the detected traffic signs for the current route section ⇨ 146.

Language
Select preferred country language as the display language.

Eco information menu

Possible pages are:

- economy trend
- economy index
- top consumers

Economy trend

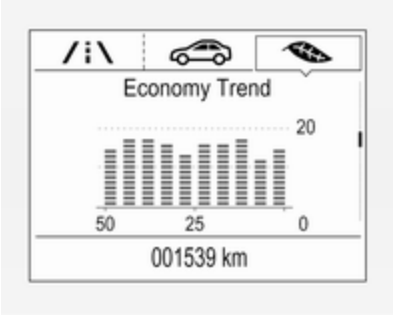

Displays the average consumption development over a distance of 50 km. Filled segments display the consumption in 5 km steps and shows the effect of topography or driving behaviour on fuel consumption.

Graph can be reset by pressing **SET/CLR**.

Economy index
The current fuel consumption is indicated on an economic scale. For economical driving, adapt driving style to keep the filled segments within the Eco area. The more segments are filled, the higher the fuel consumption.

Simultaneously, the average consumption value is indicated.

Top consumers
List of top comfort consumers currently switched on is displayed in descending order. Fuel saving potential is indicated.

Info Display

Colour Info Display

Depending on the vehicle configuration, the vehicle has a Colour Info Display with touch screen functionality.

The Colour Info Display with touch screen functionality indicates in colour:

- time ⇨ 68
- outside temperature ⇨ 67
- date ⇨ 68
- rear view camera indication ⇨ 145
- parking assist instruction ⇨ 141
- electronic climate control settings ⇨ 113
- Infotainment system, see description in the Infotainment manual
- system messages
- vehicle messages ⇨ 89
- settings for vehicle personalisation ⇨ 92

The type of information and how it is displayed depends on the settings made.

Selecting menus and settings

Menus and settings are selected via the touch screen display.

Press ⏻ to switch on the display.

Press ⌂ to display the homepage.

Touch required menu display icon with the finger.

Touch a respective icon to confirm a selection.

Touch ⮌ to return to the next higher menu level.

Press ⌂ to return to the homepage.

For further information, see Infotainment manual.

Vehicle personalisation ⇨ 92.

Graphic Info Display

Depending on the vehicle configuration, the vehicle has a Graphic Info Display.

The Graphic Info Display indicates:

- time ⇨ 68
- outside temperature ⇨ 67
- date ⇨ 68
- electronic climate control settings ⇨ 113

- Infotainment system, see description in the Infotainment manual
- settings for vehicle personalisation ⇨ 92

Selecting menus and settings

Menus and settings are accessed via the display.

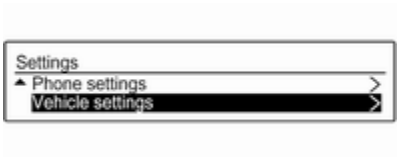

Press **CONFIG**: Menu page **Settings** is displayed.

Turn knob **MENU-TUNE** to select a setting or value.

Press knob **MENU-TUNE** to confirm a setting or value.

Press **BACK** to exit a menu or setting without changing or delete the last character in a character sequence. Press the button for a few seconds to delete the entire entry.

To exit the **Settings** menu, press **BACK** in steps or press **CONFIG** after confirming the changes.

Vehicle personalisation ⇨ 92.

Memorised settings ⇨ 23.

Vehicle messages

Messages are indicated mainly in the Driver Information Centre, in some cases together with a warning chime.

Press **SET/CLR**, **MENU** or turn the adjuster wheel to confirm a message.

Vehicle messages on Midlevel display

The vehicle messages are displayed as code numbers.

No.	Vehicle message
1	Change engine oil
3	Engine coolant level low
4	Air conditioning off
5	Steering wheel is locked
7	Turn steering wheel, switch ignition off and then on
9	Turn steering wheel, start engine again
12	Vehicle overloaded
13	Compressor overheated
15	Centre high-mounted brake light failure
16	Brake light failure
17	Headlight levelling malfunction
18	Left low beam failure
19	Rear fog light failure
20	Right low beam failure
21	Left sidelight failure
22	Right sidelight failure
23	Reversing light failure
24	Number plate light failure
25	Left front turn light failure
26	Left rear turn light failure
27	Right front turn light failure
28	Right rear turn light failure
29	Check trailer brake light
30	Check trailer reversing light
31	Check left trailer turn light
32	Check right trailer turn light
33	Check trailer rear fog light
34	Check trailer rear light
35	Replace battery in radio remote control
49	Lane departure warning unavailable
53	Tighten fuel filler cap
55	Exhaust filter is full ⇨ 125
56	Tyre pressure imbalance on front axle
57	Tyre pressure imbalance on rear axle
58	Tyres without pressure sensors detected

No.	Vehicle message
59	Open then close driver window
60	Open then close front passenger window
65	Theft attempted
66	Service anti-theft alarm system
67	Service steering wheel lock
68	Service power steering
75	Service air conditioning
79	Top up engine oil
81	Service transmission
82	Change engine oil soon
84	Engine power reduced
89	Service vehicle soon
90	Service brake assist
94	Shift to park before exiting
95	Service airbag
128	Bonnet open

No.	Vehicle message
134	Parking assist fault, clean bumper
136	Service parking assist
145	Check washer fluid level
151	Press clutch to start
174	Low vehicle battery
258	Parking assist off

Vehicle messages on Uplevel display

The vehicle messages are displayed as text. Follow the instructions given in the messages.

Vehicle messages on Colour Info Display

Some important messages appear additionally in the Colour Info Display. Some messages only pop-up for a few seconds.

Warning chimes

If several warnings appear at the same time, only one warning chime will sound.

When starting the engine or whilst driving

The warning chime regarding unfastened seat belts has priority over any other warning chime.

- If seat belt is not fastened.
- If a door or the tailgate is not fully closed when starting off.
- If a certain speed is exceeded with parking brake applied.
- If a programmed speed is exceeded.
- If a warning message appears in the Driver Information Centre or Info Display.
- If the parking assist detects an object.
- If unintended lane change occurs.
- If the exhaust filter has reached the maximum filling level.

When the vehicle is parked and / or the driver's door is opened

- With exterior lights on.

During an Autostop

- If the driver's door is opened.

Battery voltage

Uplevel display

When the vehicle battery voltage is running low, a warning message will appear in the Driver Information Centre.

Midlevel display

When the vehicle battery voltage is running low, a warning code 174 will appear in the Driver Information Centre.

1. Switch off immediately any electrical consumers which are not required for a safe drive, e.g. seat heating, heated windscreen and heated rear window or other main consumers.
2. Charge the vehicle battery by driving continuously for a while or by using a charging device.

The warning message or warning code will disappear after the engine has been started twice consecutively without a voltage drop.

If the vehicle battery cannot be recharged, have the cause of the fault remedied by a workshop.

Vehicle personalisation

The vehicle's behaviour can be personalised by changing the settings in the Info Display.

Some of the personal settings for different drivers can be memorised individually for each vehicle key.

Memorised settings ⇨ 23.

Depending on vehicle equipment and country-specific regulations, some of the functions described below might not be available.

Some functions are only displayed or active when the engine is running.

Personal settings

Graphic Info Display

Press **CONFIG** for the Settings menu.

Turn the **MENU-TUNE** control to move to the desired setup menu, and then press **MENU-TUNE**.

Select **Settings** and then **Vehicle settings**.

Vehicle settings

- **Climate and air quality**

  Auto fan speed: Modifies the level of the cabin airflow of the climate control in automatic mode.

  Auto rear demist: Activates automatically the heated rear window.

- **Comfort settings**

  Chime volume: Changes the volume of warning chimes.

  Personalization by driver: Activates or deactivates the personalisation function.

  Rear auto wipe in reverse:

  Activates or deactivates automatic switching on of the rear window wiper when reverse gear is engaged.

- **Park assist / Collision detection**

  Park assist: Activates or deactivates the parking assist.

- **Exterior ambient lighting**

  Exterior lighting by unlocking:

  Activates or deactivates the entry lighting.

  Duration upon exit of vehicle:

  Activates or deactivates and changes the duration of exit lighting.

- **Power door locks**

  Auto door lock: Activates or deactivates the automatic door locking function after switching on ignition.

  Stop door lock if door open: Activates or deactivates the door locking function while a door is open.

  Delayed door lock: Activates or deactivates the delayed door locking function. This menu option is displayed with **Stop door lock if door open** deactivated.

  Central locking system ⇨ 23.

- **Remote locking, unlocking, starting**

  Remote unlock feedback:

  Activates or deactivates the hazard warning flasher feedback whilst unlocking.

  Passive door unlock: Changes the configuration to unlock only the driver's door or the whole vehicle whilst unlocking.

  Auto relock doors: Activates or deactivates the automatic relock

function after unlocking without opening the vehicle.

- **Restore factory settings**:

  Resets all settings to the default settings.

Personal settings

Colour Info Display

Press ⌂ and then select **Settings**.

In the corresponding submenus the following settings can be changed:

Vehicle

- **Climate & Air Quality**

  Auto Fan Max Speed: Modifies the level of the cabin airflow of the climate control in automatic mode.

  Auto Rear Defog: Automatically activates heated rear window.

- **Collision / Detection Systems**

  Park Assist: Activates or deactivates the parking assist.

- **Comfort and Convenience**

  Chime Volume: Changes the volume of warning chimes.

  Personalization By Driver: Activates or deactivates the personalisation function.

  Auto Wipe in Reverse Gear: Activates or deactivates automatic switching on of the rear window wiper when reverse gear is engaged.

- **Lighting**

  Vehicle Locator Lights: Activates or deactivates the entry lighting.

  Exit Lighting: Activates or deactivates and changes the duration of exit lighting.

- **Power Door Locks**

  Unlocked Door Anti Lock Out: Activates or deactivates the door locking function while a door is open.

  Auto Door Lock: Activates or deactivates the automatic door locking function after switching on ignition.

  Delayed Door Lock: Activates or deactivates the delayed door locking function. This feature delays the actual locking of the doors until all doors are closed.

- **Remote Lock, Unlock, Start**

  Remote Unlock Light Feedback: Activates or deactivates the hazard warning flasher feedback whilst unlocking.

  Remote Door Unlock: Changes the configuration to unlock only the driver's door or the whole vehicle whilst unlocking.

  Relock Remotely Unlocked Doors: Activates or deactivates

the automatic relock function after unlocking without opening the vehicle.

Rear camera

- Rear View Camera Guidelines: Activates or deactivates the rear view camera guidelines on the Info Display.
- Rear Park Assist Symbols: Activates or deactivates the warning symbols on the Info Display.

Telematics service

OnStar

OnStar is a personal connectivity and service assistant with integrated Wi-Fi hotspot. The OnStar service is available 24 hours a day, seven days a week.

Note
OnStar is not available for all markets. For further information, contact your workshop.

Note
In order to be available and operational, OnStar needs a valid OnStar subscription, functioning vehicle electrics, mobile service and GPS satellite link.

To activate the OnStar services and set up an account, press ⓞ and speak with an advisor.

Depending on the equipment of the vehicle, the following services are available:

- Emergency services and support in the case of a vehicle breakdown
- Wi-Fi hotspot
- Smartphone application
- Remote control, e.g. location of the vehicle, activation of horn and lights, control of central locking system
- Stolen vehicle assistance
- Vehicle diagnostics
- Destination download

Note
The OnStar module of the vehicle is deactivated after ten days without an ignition cycle. Functions requiring a data connection will be available again after switching on the ignition.

OnStar buttons

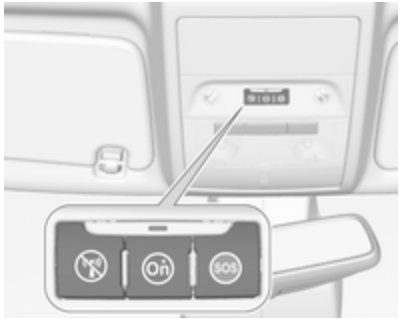

Privacy button

Press and hold ⊘ until a message is heard to activate or deactivate the transmission of the vehicle location.

Press ⊘ to answer a call or to end a call to an advisor.

Press ⊘ to access the Wi-Fi settings.

Service button

Press ⓞⓝ to establish a connection to an advisor.

SOS button

Press SOS to establish a priority emergency connection to a specially trained emergency advisor.

Status LED

Green: The system is ready with activated transmission of the vehicle location.

Green flashing: The system is on a call.

Red: A problem arose.

Off: The system is ready with deactivated transmission of the vehicle location or the system is in standby mode.

Red / green flashing for a short period of time: The transmission of the vehicle location has been deactivated.

OnStar services

General services

If you need any information e.g. opening hours, points of interest and destinations or if you need any support e.g. in the case of a vehicle breakdown, a flat tyre and empty fuel tank, press ⓞⓝ to establish a connection to an advisor.

Emergency services

In the case of an emergency situation, press SOS and talk to an advisor. The advisor then contacts emergency or assistance service providers and directs them to your vehicle.

In the case of an accident with activation of airbags or belt tensioners, an automatic emergency call is established. The advisor is immediately connected to your vehicle to see whether help is needed.

Wi-Fi hotspot

The Wi-Fi hotspot of the vehicle provides internet connectivity with a maximum speed of 4G/LTE.

Note
The Wi-Fi hotspot functionality is not available for all markets.

Note
Some mobile devices connect to Wi-Fi hotspots automatically and use mobile data capacity in the

background, even if they are not in use. This includes automatic updates, downloads, as well as programme or app synchronisation traffic. The data volume purchased via OnStar might be consumed rapidly. Turn off automatic synchronisations in the settings of your device.

Up to seven devices may be connected.

To connect a mobile device with the Wi-Fi hotspot:

1. Press ⊛ and then select Wi-Fi settings on the Info Display. The settings displayed include the Wi-Fi hotspot name (SSID), password and connection type.
2. Start a Wi-Fi network search on your mobile device.
3. Select your vehicle hotspot (SSID) when listed.
4. When prompted, enter the password on your mobile device.

Note
To change the SSID or password, press ⓞ and talk to an advisor or log in to your account.

To switch off the Wi-Fi hotspot functionality, press ⓞ to call an advisor.

Smartphone app
With the myOpel smartphone app, some vehicle functions can be operated remotely.

The following functions are available:

- Lock or unlock vehicle.
- Honk horn or flash lights.
- Check fuel level, engine oil life and tyre pressure (only with tyre pressure monitoring system).
- Send navigation destination to the vehicle, if equipped with a built-in navigation system.
- Locate vehicle on a map.
- Manage Wi-Fi settings.

To operate these functions, download the app from App Store® or Google Play™ Store.

Remote control
If desired, use any phone to call an advisor, who can remotely operate specific vehicle functions. Find the respective OnStar phone number on our country-specific website.

The following functions are available:

- Lock or unlock vehicle.
- Provide information on the vehicle location.
- Honk horn or flash lights.

Stolen vehicle assistance
If the vehicle is stolen, report the theft to the authorities and request OnStar stolen vehicle assistance. Use any phone to call an advisor. Find the respective OnStar phone number on our country-specific website.

OnStar can provide support in locating and recovering the vehicle.

Theft alert
When the anti-theft alarm system is triggered, a notification is sent to OnStar. You are then informed about this event by text message or email.

Restart prevention
By sending remote signals, OnStar can prevent the vehicle from restarting once it has been turned off.

On-demand diagnostics
At any time e.g. if the vehicle displays a vehicle message, press ⓞ to contact an advisor and ask to complete a real-time diagnostic check to directly determine the issue. Depending on the results, the advisor will provide further support.

Diagnostic report
The vehicle automatically transmits diagnostic data to OnStar which sends a monthly email report to you and your preferred workshop.

Note
The workshop notification function can be disabled in your account.

The report contains the status of key operating systems of the vehicle like engine, transmission, airbags, ABS, and other major systems. It also provides information on possible maintenance items and tyre pressure (only with tyre pressure monitoring system).

To look at the information in greater detail, select the link within the email and log in to your account.

Destination download
A desired destination can be directly downloaded to the navigation system.

Press ⓞ to call an advisor and describe the destination or point of interest.

The advisor can look up any address or point of interest and directly send the destination to the built-in navigation system.

OnStar settings

OnStar PIN
To have full access to all OnStar services, a four-digit PIN is required. The PIN has to be personalised when first talking to an advisor.

To change the PIN, press ⓞ to call an advisor.

Account data
An OnStar subscriber has an account where all the data is stored. To request a change of the account information, press ⓞ and talk to an advisor or log in to your account.

If the OnStar service is used on another vehicle, press ⓞ and request that the account be transferred to the new vehicle.

Note
In any case, if the vehicle is disposed of, sold or otherwise transferred, immediately inform OnStar about the changes and terminate the OnStar service on this vehicle.

Vehicle location
The vehicle location is transmitted to OnStar when service is requested or triggered. A message on the Info Display informs about this transmission.

To activate or deactivate the transmission of the vehicle location, press and hold ⓣ until an audio message is heard.

The deactivation is indicated by the status light flashing red and green for a short period of time and each time the vehicle is started.

Note
If the transmission of the vehicle location is deactivated, some services are no longer available.

Note
The vehicle location always remains accessible to OnStar in the case of an emergency.

Find the privacy policy in your account.

Software updates

OnStar may remotely carry out software updates without further notice or consent. These updates are to enhance or maintain safety and security or the operation of the vehicle.

These updates may concern privacy issues. Find the privacy policy in your account.

Lighting

Exterior lighting **100**
Light switch 100
Automatic light control 101
High beam 102
Headlight flash 102
Headlight range adjustment 102
Headlights when driving abroad 102
Daytime running lights 103
Xenon lighting system 103
Hazard warning flashers 104
Turn lights 104
Front fog lights 104
Rear fog light 105
Parking lights 105
Reversing lights 105
Misted light covers 105
Interior lighting **106**
Instrument panel illumination control 106
Interior lights 106
Reading lights 107
Lighting features **107**
Entry lighting 107
Exit lighting 108
Battery discharge protection 108

Exterior lighting

Light switch

Turn light switch:

0 : lights off
: sidelights
: headlights

Control indicator ⇨ 82.

Light switch with automatic light control

Turn light switch:

AUTO : automatic light control: headlights are switched on and off automatically depending on external lighting conditions

⏻ : activation or deactivation of the automatic light control. Switch turns back to AUTO

≡D : sidelights

≡D : headlights

A status message in the Driver Information Centre indicates the current status of the automatic light control.

When switching on the ignition, automatic light control is active.

When headlights are on, ≡D illuminates.

Control indicator ≡D ⇨ 82.

Tail lights

Tail lights are illuminated together with headlights and sidelights.

Automatic light control

When the automatic light control function is switched on and the engine is running, the system switches between daytime running light and headlights automatically depending on the lighting conditions and information given by the rain sensor system.

Daytime running light ⇨ 103.

Automatic headlight activation

During poor lighting conditions the headlights are switched on.

Furthermore the headlights are switched on if the windscreen wipers have been activated for several wipes.

Tunnel detection

When a tunnel is entered, the headlights are switched on immediately.

High beam

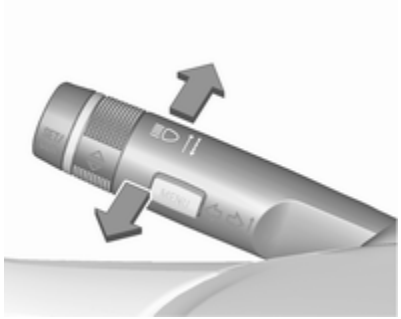

To switch from low to high beam, push stalk.

To switch to low beam, push stalk again or pull.

Headlight flash

To activate the headlight flash, pull stalk.

Headlight range adjustment

Manual headlight range adjustment

To adapt headlight range to the vehicle load to prevent dazzling: turn thumb wheel to required position.

0 : front seats occupied
1 : all seats occupied
2 : all seats occupied and load compartment laden
3 : driver's seat occupied and load compartment laden

Headlights when driving abroad

The asymmetrical headlight beam extends visibility at the edge of the road at the passenger side.

However, when driving in countries where traffic drives on the opposite side of the road, adjust the headlights to prevent dazzling of oncoming traffic.

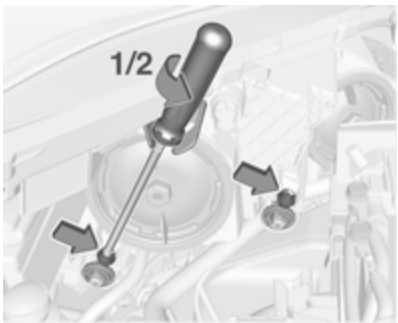

There are two adjuster elements on each headlight housing.

Turn both adjuster elements on each headlight housing $^1/_2$ turn with a size six hexagon key anticlockwise to

set to right-hand traffic mode. Therefore, insert the key in the guide as shown in the illustration. Alternatively, a Phillips head screwdriver size three can be used for setting.

To reset to left-hand traffic mode, turn adjuster elements $^1/_2$ turn clockwise.

Daytime running lights

Daytime running light increases visibility of the vehicle during daylight.

They are switched on automatically when ignition is on.

Versions with automatic light control

The system switches automatically between daytime running light and headlights, depending on the lighting conditions and information given by the rain sensor system.

Automatic light control ⇨ 101.

Xenon lighting system

Xenon lighting system includes:

- xenon headlights for low and high beam
- corner lighting
- reversing function

Xenon headlights

Xenon headlights for low and high beam ensure better visibility under all conditions.

Operation is the same as for halogen headlights.

Light switch ⇨ 100.

High beam ⇨ 102.

Headlight flash ⇨ 102.

Headlight range adjustment ⇨ 102.

Headlights when driving abroad ⇨ 102.

Automatic light control ⇨ 101.

Corner lighting

On tight bends or when turning off, depending on the steering angle or the indicator light signal, an additional left or right reflector is switched on which illuminates the road in the direction of travel. It is activated up to a speed of 40 km/h.

Reversing function

To assist driver's orientation when parking, both corner lights and reversing light illuminate when headlights are on and reverse gear is engaged. They remain illuminated for a short time after disengaging reverse gear or until driving faster than 7 km/h in a forward gear.

Hazard warning flashers

Operated by pressing ⚠.

In the event of an accident with airbag deployment, the hazard warning flashers are activated automatically.

Turn lights

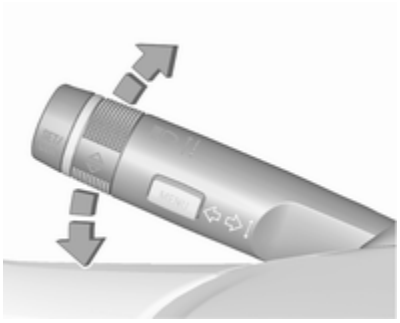

stalk up : right turn light
stalk down : left turn light

A resistance point can be felt when moving the stalk.

Constant flashing is activated when the stalk is being moved beyond the resistance point. It is deactivated when the steering wheel is moved in the opposite direction or stalk is manually moved back to its neutral position.

Activate temporary flashing by holding the stalk just before the resistance point. Turn lights will flash until stalk is being released.

To activate three flashes, tap the stalk briefly without passing the resistance point.

Front fog lights

Operated by pressing ≢D.

Light switch in position **AUTO**: switching on front fog lights will switch the low beam on automatically.

Rear fog light

Operated by pressing ⌀‡.

Light switch in position **AUTO**: switching on rear fog light will switch on headlights automatically.

Parking lights

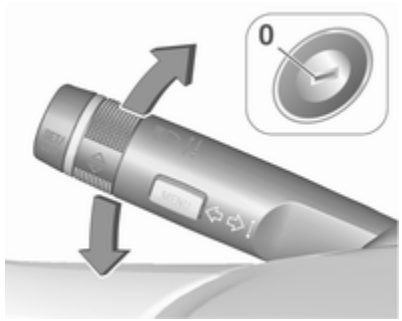

When the vehicle is parked, the parking lights on one side can be activated:

1. Switch off the ignition.
2. Move the stalk all the way up (right parking lights) or down (left parking lights).

Confirmed by an acoustic signal and the corresponding turn light control indicator.

Reversing lights

The reversing light comes on when the ignition is on and reverse gear is selected.

Misted light covers

The inside of the light housing may mist up briefly in poor, wet and cold weather conditions, in heavy rain or after washing. The mist disappears quickly by itself. To help, switch on the headlights.

Interior lighting

Instrument panel illumination control

Brightness of the following lights can be adjusted when the exterior lights are on:

- instrument panel illumination
- dome light
- Info Display
- illuminated switches and operation elements

Turn thumb wheel and hold until the desired brightness is obtained.

On vehicles with automatic light control, the brightness can only be adjusted when the exterior lights are on and the light sensor detects night conditions.

Interior lights

Front courtesy light

Operate rocker switch:

centre position	:	automatic switching on when opening a door, turns off after a delay
press I	:	permanently on
press 0	:	permanently off

Front courtesy light with reading lights

When opening a door, the courtesy light automatically switches on and then off after a delay.

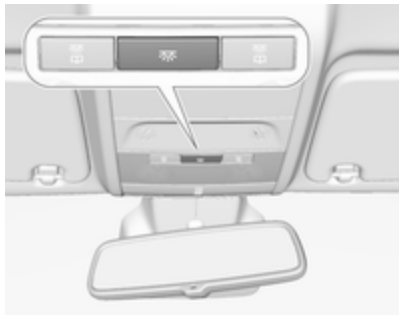

Pressing switches courtesy light on or off manually.

Switching on ignition will turn off courtesy light.

When exterior lighting has been on previously, courtesy light will turn on when ignition is switched off.

Note
In the event of an accident with airbag deployment, the courtesy lights are turned on automatically.

Rear courtesy lights

Left and right lamps are operated separately.

Operate rocker switches:

centre position	:	automatic switching on when opening a door, turns off after a delay
press I	:	permanently on
press 0	:	permanently off

Dome light

Spotlight incorporated in the inside mirror housing comes on when headlights are switched on.

Dome light illuminates gear shifting console indirectly.

Reading lights

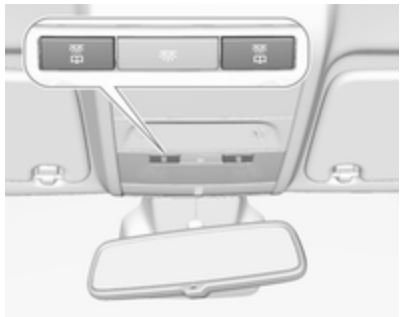

Operated by pressing for the left and right side.

Lighting features

Entry lighting

Welcome lighting

The following lights are switched on for a short time by unlocking the vehicle with the radio remote control:

- headlights
- tail lights
- number plate lights
- instrument panel light
- interior lights

Some functions are only operable when it is dark outside, to facilitate locating the vehicle.

Lighting switches off immediately when the ignition key is turned to position **1** ⇨ 120.

Activation or deactivation of this function can be changed in the Info Display.

Vehicle personalisation ⇨ 92.

The settings can be saved for the key being used ⇨ 23.

The following lights will additionally switch on when the driver's door is opened:

- illumination of all switches
- Driver Information Centre

Exit lighting

The following lights switch on if the key is removed from the ignition switch:

- interior lights
- instrument panel light (only when it is dark)

They will switch off automatically after a delay and will be activated again if the driver's door is opened.

Path lighting

Headlights, tail lights and number plate lights illuminate the surrounding area for an adjustable time after leaving the vehicle.

Activating

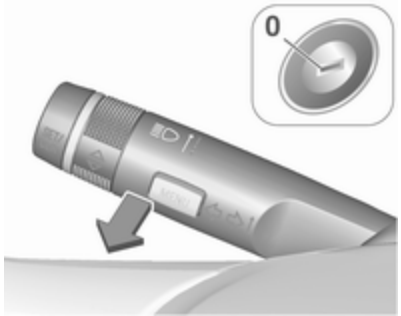

1. Switch off the ignition.
2. Remove the ignition key.
3. Open driver's door.
4. Pull the stalk.
5. Close the driver's door.

If the driver's door is not closed the lights switch off after 2 minutes.

Exit lighting is switched off immediately if the stalk is pulled while the driver's door is open.

Activation, deactivation and duration of this function can be changed in the Info Display.

Vehicle personalisation ⇨ 92.

The settings can be saved for the key being used ⇨ 23.

Battery discharge protection

Vehicle battery state of charge function

The function guarantees longest vehicle battery life via a generator with controllable power output and optimised power distribution.

To prevent discharge of the vehicle battery when driving, the following systems are reduced automatically in two stages and finally switched off:

- heated rear window
- heated windscreen
- heated mirrors
- heated seats
- fan

In the second stage, a message which confirms the activation of the vehicle battery discharge protection will be displayed in the Driver Information Centre.

Switching off electric lights

To prevent discharge of the vehicle battery when the ignition is switched off, some interior lights are switched off automatically after some time.

Climate control

Climate control systems **110**
Heating and ventilation system 110
Air conditioning system 111
Electronic climate control system 113
Air vents **117**
Adjustable air vents 117
Fixed air vents 118
Maintenance **118**
Air intake 118
Air conditioning regular operation 118
Service 118

Climate control systems

Heating and ventilation system

Controls for:

- temperature
- fan speed
- air distribution

Heated rear window ⇨ 32.

Heated windscreen ⇨ 33.

Heated seats ⇨ 38.

Heated steering wheel ⇨ 64.

Temperature

red : warm
blue : cold

Heating will not be fully effective until the engine has reached normal operating temperature.

Fan speed

Adjust the air flow by switching the fan to the desired speed.

Air distribution

: to head area
: to head area and foot well
: to foot well and windscreen
: to windscreen, front door windows and foot well
: to windscreen and front door windows

Intermediate settings are possible.

Demisting and defrosting the windows

- Set temperature control to warmest level.
- Set fan speed to highest speed.
- Set air distribution control to .
- Switch on heated rear window .
- Open side air vents as required and direct them towards door windows.
- For simultaneous warming of the foot well, set air distribution control to .

Air conditioning system

Controls for:

- temperature
- fan speed
- air distribution

: cooling
: air recirculation
: heated rear window ⇨ 32

Heated windscreen ⇨ 33.

Heated seats ⇨ 38.

Heated steering wheel ⇨ 64.

Temperature

red : warm
blue : cold

Heating will not be fully effective until the engine has reached normal operating temperature.

Fan speed

Adjust the air flow by switching the fan to the desired speed.

Air distribution

: to head area
: to head area and foot well
: to foot well and windscreen
: to windscreen, front door windows and foot well
: to windscreen and front door windows (air conditioning is activated in the background to help preventing windows from fogging)

Intermediate settings are possible.

Cooling ❄

Press ❄ to switch on cooling. The LED in the button illuminates to indicate activation. Cooling is only functional when the engine is running and climate control fan is switched on.

Press ❄ again to switch off cooling.

The air conditioning system cools and dehumidifies (dries) as soon as the outside temperature is slightly above the freezing point. Therefore condensation may form and drip from under the vehicle.

If no cooling or drying is required, switch off the cooling system for fuel saving reasons.

Activated cooling may inhibit Autostops.

Stop-start system ⇨ 122.

Air recirculation system

Press to activate air recirculation mode. The LED in the button illuminates to indicate activation.

Press again to deactivate air recirculation mode.

⚠ Warning

The exchange of fresh air is reduced in air recirculation mode. In operation without cooling the air humidity increases, so the windows may mist up from inside. The quality of the passenger compartment air deteriorates, which may cause the vehicle occupants to feel drowsy.

In warm and very humid ambient air conditions, the windscreen may mist up from outside, when cold air is directed towards it. If windscreen mists up from outside, activate windscreen wiper and deactivate .

Maximum cooling

Briefly open the windows so that hot air can disperse quickly.

- Switch on cooling ❄.
- Air recirculation system on.
- Set temperature control to coldest level.
- Set fan speed to highest level.
- Set air distribution control to .
- Open all vents.

Demisting and defrosting the windows

- Set temperature control to warmest level.
- Set fan speed to highest level.
- Set air distribution control to .
- Switch on heated rear window .
- Open side air vents as required and direct them towards the door windows.

Note
If air distribution mode is selected while engine is running, an Autostop will be inhibited until another air distribution is selected.

If air distribution mode is selected while the engine is in an Autostop, the engine will restart automatically.

Stop-start system ⇨ 122.

Electronic climate control system

Controls for:

- fan speed
- temperature
- air distribution

❄ : cooling
AUTO : automatic mode
 : manual air recirculation

: demisting and defrosting
: heated rear window ⇨ 32

Heated windscreen ⇨ 33.

Heated seats ⇨ 38.

Heated steering wheel ⇨ 64.

In automatic mode, temperature, fan speed and air distribution are regulated automatically.

Climate control settings are shown on the Info Display. Setting modifications are briefly popped-up, superimposed over the currently displayed menu.

The electronic climate control system is only fully operational when the engine is running.

Automatic mode AUTO

Basic setting for maximum comfort:

- Press **AUTO**, air distribution and fan speed are regulated automatically. The LED in the button illuminates to indicate activation.
- Open all air vents to allow optimised air distribution in automatic mode.
- Press to switch on optimal cooling and demisting. The LED in the button illuminates to indicate activation.
- Set the preselected temperature using the centre rotary knob. Recommended temperature is 22 °C.

Temperature preselection

Set temperature by turning the centre rotary knob to the desired value. It is indicated on the display in the switch.

For reasons of comfort, change temperature only in small increments.

If the minimum temperature **Lo** is set, the climate control system runs at maximum cooling if cooling ❄ is switched on.

If the maximum temperature **Hi** is set, the climate control system runs at maximum heating.

Note
If ❄ is switched on, reducing the set cabin temperature can cause the engine to restart from an Autostop or inhibit an Autostop.

Stop-start system ⇨ 122.

Demisting and defrosting the windows

- Press . The LED in the button illuminates to indicate activation.
- Temperature and air distribution are set automatically and the fan runs at high speed.
- Switch on heated rear window .
- To return to previous mode: press . To return to automatic mode: press **AUTO**.

Setting of automatic rear window heating can be changed in the Info Display.

Vehicle personalisation ⇨ 92.

Note
If is pressed while the engine is running, an Autostop will be inhibited until is pressed again.

If is pressed with the fan switched on and the engine running, an Autostop will be inhibited until is pressed again or until the fan is switched off.

If is pressed while the engine is in an Autostop, the engine will restart automatically.

If is pressed with the fan switched on while the engine is in an Autostop, the engine will restart automatically.

Stop-start system ⇨ 122.

Manual settings

Climate control system settings can be changed by activating the buttons and rotary knobs as follows. Changing a setting will deactivate automatic mode.

Fan speed

Turn left rotary knob to decrease or increase fan speed. The fan speed is indicated in the Info Display.

Turning knob to ○: fan and cooling are switched off.

To return to automatic mode: Press **AUTO**.

Air distribution

Turn right rotary knob for desired adjustment. Setting is indicated in the Info Display.

- : to foot well and windscreen
- : to windscreen, front door windows and foot well
- : to windscreen and front door windows (air conditioning is activated in the background to help preventing windows from fogging)
- : to head area via adjustable air vents
- : to head area and foot well

Return to Automatic air distribution: press **AUTO**.

Cooling

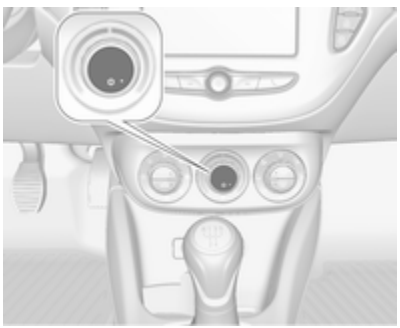

Press to switch on cooling. The LED in the button illuminates to indicate activation. Cooling is only functional when the engine is running and climate control fan is switched on.

Press again to switch off cooling.

The air conditioning system cools and dehumidifies (dries) as soon as the outside temperature is slightly above the freezing point. Therefore condensation may form and drip from under the vehicle.

If no cooling or drying is required, switch off the cooling system for fuel saving reasons.

When the cooling system is switched off, no engine restart will be requested by the climate control system during an Autostop. Exception: defrost system is activated and outside temperature above 0 °C requests a restart.

Stop-start system ⇨ 122.

The status of cooling operation is indicated in the Info Display.

Activation or deactivation of cooling operation after engine start can be changed in the Info Display.

Vehicle personalisation ⇨ 92.

Air recirculation mode

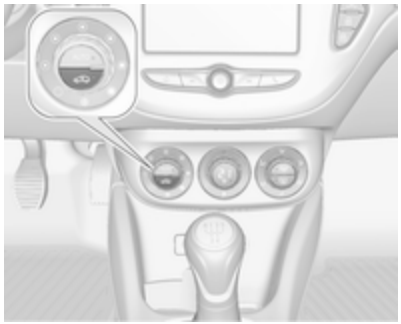

Press to activate air recirculation mode. The LED in the button illuminates to indicate activation.

Press again to deactivate air recirculation mode.

⚠ Warning

The exchange of fresh air is reduced in air recirculation mode. In operation without cooling, the air humidity increases, so the windows may mist up from inside.

The quality of the passenger compartment air deteriorates, which may cause the vehicle occupants to feel drowsy.

In warm and very humid ambient air conditions, the windscreen may mist up from outside when cold air is directed towards it. If windscreen mists up from outside, activate windscreen wiper and deactivate .

Basic settings

Some settings can be changed in the Info Display.

Vehicle personalisation ⇨ 92.

Air vents

Adjustable air vents

At least one air vent must be open while the cooling is on.

Adjust the air amount at the vent outlet by turning the adjuster wheel. The vent is closed when the adjuster wheel is turned close to the left or right.

Direct the flow of air by tilting and swivelling the slats.

⚠ Warning

Do not attach any objects to the slats of the air vents. Risk of damage and injury in case of an accident.

Fixed air vents

Additional air vents are located beneath the windscreen and door windows and in the foot wells.

Maintenance

Air intake

The air intake in front of the windscreen in the engine compartment must be kept clear to allow air intake. Remove any leaves, dirt or snow.

Air conditioning regular operation

In order to ensure continuously efficient performance, cooling must be operated for a few minutes once a month, irrespective of the weather and time of year. Operation with cooling is not possible when the outside temperature is too low.

Service

For optimal cooling performance, it is recommended to annually check the climate control system, starting three years after initial vehicle registration, including:

- functionality and pressure test
- heating functionality
- leakage check
- check of drive belts
- cleaning of condenser and evaporator drainage
- performance check

Note

Refrigerant R-134a contains fluorinated greenhouse gases.

Driving and operating

Driving hints **119**
Control of the vehicle 119
Starting and operating **120**
New vehicle running-in 120
Ignition switch positions 120
Retained power off 121
Starting the engine 121
Overrun cut-off 122
Stop-start system 122
Parking 124
Engine exhaust **125**
Exhaust filter 125
Catalytic converter 126
Automatic transmission **127**
Transmission display 127
Selector lever 127
Manual mode 128
Electronic driving programmes 128
Fault 129
Interruption of power supply 129
Manual transmission **130**
Brakes **131**
Antilock brake system 131
Parking brake 132
Brake assist 132
Hill start assist 132
Ride control systems **133**
Traction Control system 133
Electronic Stability Control 133
City mode 134
Driver assistance systems **135**
Cruise control 135
Speed limiter 137
Forward collision alert 138
Following distance indication ... 140
Parking assist 141
Rear view camera 145
Traffic sign assistant 146
Lane departure warning 149
Fuel **150**
Fuel for petrol engines 150
Fuel for liquid gas operation 152
Refuelling 152

Driving hints

Control of the vehicle

Never coast with engine not running

Many systems will not function in this situation (e.g. brake servo unit, power steering). Driving in this manner is a danger to yourself and others.

All systems function during an Autostop.

Stop-start system ⇨ 122.

Idle boost

If charging of the vehicle battery is required due to battery condition, the power output of the generator must be increased. This will be achieved by an idle boost which may be audible.

A message appears in the Driver Information Centre.

Pedals

To ensure the pedal travel is uninhibited, there must be no mats in the area of the pedals.

Use only floor mats, which fit properly and are fixed by the retainers on the driver side.

Driving downhill

Engage a gear when driving downhill to ensure that sufficient brake pressure is available.

Starting and operating

New vehicle running-in

Do not brake unnecessarily hard for the first few journeys.

During the first drive, smoke may occur because of wax and oil evaporating off the exhaust system. Park the vehicle in the open for a while after the first drive and avoid inhaling the fumes.

During the running-in period, fuel and engine oil consumption may be higher.

Additionally, the cleaning process of the exhaust filter may take place more often.

Exhaust filter ⇨ 125.

Autostop may be inhibited to allow for charging of the vehicle battery.

Ignition switch positions

Turn key:

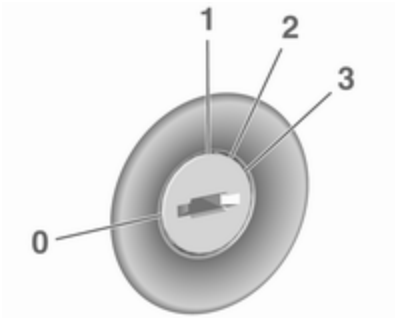

0 : ignition off: Some functions remain active until key is removed or driver's door is opened, provided the ignition was on previously

1 : accessory power mode: Steering wheel lock released, some electrical functions are operable, ignition is off

2 : ignition on power mode: Ignition is on. Control indicators illuminate and most electrical functions are operable

3 : engine start: Release key after starting procedure begins

Steering wheel lock

Remove key from ignition switch and turn steering wheel until it engages.

Retained power off

The following electronic systems are operable until the driver's door is opened or at the latest for 10 minutes after the ignition is switched off:

- power windows
- power outlets

Starting the engine

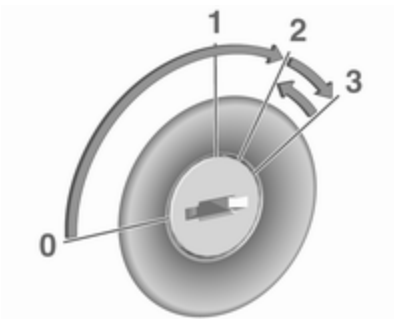

Turn key to position **1** to release the steering wheel lock.

Manual transmission: operate clutch and brake pedal.

Automatic transmission: operate brake pedal and move selector lever to **P** or **N**.

Do not operate the accelerator pedal.

Turn key briefly to position **3** and release: an automatic procedure operates the starter after a brief delay, until the engine is running. See 'Automatic Starter Control'.

Before restarting or to switch off the engine, turn the key back to position **0**.

During an Autostop, the engine can be started by depressing the clutch pedal.

Starting the vehicle at low temperatures

Petrol engines

The start of the engine without additional heaters is possible down to -30 °C.

Required is an engine oil with the correct viscosity, the correct fuel, performed services and a sufficiently charged vehicle battery.

With temperatures below -30 °C, the automatic transmission requires a warming phase of approx. 5 minutes. The selector lever must be in position **P**.

Automatic starter control

This function controls the engine starting procedure. The driver does not need to hold the key in position **3**. Once applied, the system will go on starting automatically until the engine is running. Because of the checking procedure, the engine starts running after a short delay.

Possible reasons for a non-starting engine:

- clutch pedal not operated (manual transmission)
- brake pedal not operated or selector lever not in **P** or **N** (automatic transmission)
- timeout occurred

Turbo engine warm-up

Upon start-up, engine available torque may be limited for a short time, especially when the engine temperature is cold. The limitation is to allow the lubrication system to fully protect the engine.

Overrun cut-off

The fuel supply is automatically cut off during overrun, i.e. when the vehicle is driven with a gear engaged but accelerator is released.

Depending on driving conditions, the overrun cut-off may be deactivated.

Stop-start system

The stop-start system helps to save fuel and to reduce the exhaust emissions. When conditions allow, it switches off the engine as soon as the vehicle is at a low speed or at a standstill, e.g. at a traffic light or in a traffic jam.

On vehicles with manual transmission, the engine is started automatically as soon as the clutch is depressed.

Activation

The stop-start system is available as soon as the engine is started, the vehicle starts-off and the conditions as stated below in this section are fulfilled.

Deactivation

Deactivate the stop-start system manually by pressing **eco**. The deactivation is indicated when the LED in the button extinguishes.

Autostop

Vehicles with manual transmission
If the vehicle is at a low speed or at a standstill, activate an Autostop as follows:

- Depress the clutch pedal.
- Set the lever in neutral.
- Release the clutch pedal.

The engine will be switched off while the ignition stays on.

Indication

An Autostop is indicated by control indicator Ⓐ.

During an Autostop, the heating and brake performance will be maintained.

Conditions for an Autostop

The stop-start system checks if each of the following conditions is fulfilled:

- The stop-start system is not manually deactivated.
- The bonnet is fully closed.
- The driver's door is closed or the driver's seat belt is fastened.
- The vehicle battery is sufficiently charged and in good condition.
- The engine is warmed-up.
- The engine coolant temperature is not too high.
- The engine exhaust temperature is not too high, e.g. after driving with high engine load.
- The ambient temperature is above -5 °C.
- The climate control system allows an Autostop.
- The brake vacuum is sufficient.
- The self-cleaning function of the exhaust filter is not active.
- The vehicle was driven at least at walking speed since the last Autostop.

Otherwise an Autostop will be inhibited.

Certain settings of the climate control system may inhibit an Autostop. See 'Climate control' chapter for further information ⇨ 110.

Immediately after motorway driving an Autostop may be inhibited.

New vehicle running-in ⇨ 120.

Vehicle battery discharge protection

To ensure reliable engine restarts, several vehicle battery discharge protection features are implemented as part of the stop-start system.

Power saving measures

During an Autostop, several electrical features, e.g. the rear window heating, are disabled or switched into a power saving mode. The fan speed of the climate control system is reduced to save power.

Restart of the engine by the driver

Vehicles with manual transmission

Depress the clutch pedal to restart the engine.

When the engine is restarted, control indicator Ⓐ in the Driver Information Centre extinguishes.

If the selector lever is shifted out of neutral before depressing the clutch pedal first, control indicator illuminates or is shown as a symbol in the Driver Information Centre.

Control indicator ⇨ 79.

Restart of the engine by the stop-start system

The selector lever must be in neutral to enable an automatic restart.

If one of the following conditions occurs during an Autostop, the engine will be restarted automatically by the stop-start system:

- The stop-start system is manually deactivated.
- The bonnet is opened.
- The driver's seat belt is unfastened and the driver's door is opened.
- The engine temperature is too low.

- The charging level of the vehicle battery is below a defined level.
- The brake vacuum is not sufficient.
- The vehicle is driven at least at walking speed.
- The climate control system requests an engine start.
- The air conditioning is manually switched on.

If the bonnet is not fully closed, a warning message is displayed in the Driver Information Centre.

If an electrical accessory, e.g. a portable CD player, is connected to the power outlet, a brief power drop during restart might be noticeable.

Parking

⚠ Warning

- Do not park the vehicle on an easily ignitable surface. The high temperature of the exhaust system could ignite the surface.

- Always apply the parking brake. Activate the manual parking brake without pressing the release button. Apply as firmly as possible on a downhill slope or uphill slope. Depress brake pedal at the same time to reduce operating force.
- Switch off the engine.
- If the vehicle is on a level surface or uphill slope, engage first gear or set the selector lever to position **P** before removing the ignition key. On an uphill slope, turn the front wheels away from the kerb.

  If the vehicle is on a downhill slope, engage reverse gear or set the selector lever to position **P** before removing the ignition key. Turn the front wheels towards the kerb.
- Close the windows.
- Remove the ignition key from the ignition switch. Turn the steering wheel until the steering wheel lock is felt to engage.

  For vehicles with automatic transmission, the key can only be removed when the selector lever is in position **P**.

- Lock the vehicle.
- Activate the anti-theft alarm system.
- The engine cooling fans may run after the engine has been switched off ⇨ 158.

Caution

After running at high engine speeds or with high engine loads, operate the engine briefly at a low load or run in neutral for approx. 30 seconds before switching off, in order to protect the turbocharger.

Note
In the event of an accident with airbag deployment, the engine is switched off automatically if the vehicle comes to a standstill within a certain time.

Engine exhaust

⚠ Danger

Engine exhaust gases contain poisonous carbon monoxide, which is colourless and odourless and could be fatal if inhaled.

If exhaust gases enter the interior of the vehicle, open the windows. Have the cause of the fault rectified by a workshop.

Avoid driving with an open load compartment, otherwise exhaust gases could enter the vehicle.

Exhaust filter

Automatic cleaning process

The exhaust filter system filters soot particles out of the exhaust gases. The system includes a self-cleaning function that runs automatically during driving without any notification. The filter is cleaned by periodically burning off the soot particles at high temperature. This process takes place automatically under set driving conditions and may take up to 25 minutes. Typically it needs between 7 and 12 minutes. Autostop is not available and fuel consumption may be higher during this period. The emission of smells and smoke during this process is normal.

System requires manual cleaning process

Under certain driving conditions, e.g. driving short distances, the system cannot clean itself automatically.

If cleaning of the filter is required and if previous driving conditions did not enable automatic cleaning, it will be

indicated by illumination of ⛽ and a warning message in the Driver Information Centre.

⛽ illuminates along with a warning message when exhaust filter is full. Start cleaning process as soon as possible.

⛽ flashes along with a warning message when exhaust filter has reached the maximum filling level. Start cleaning process immediately to avoid damage to the engine.

Activate manual cleaning process

To activate cleaning process, continue driving, keep engine speed above 2000 rpm. Shift down if necessary. Exhaust filter cleaning is then started.

Cleaning takes place quickest at high engine speeds and loads.

Control indicator ⛽ extinguishes as soon as the self-cleaning operation is complete. Keep on driving until self-cleaning operation is complete.

Caution

If possible, do not interrupt cleaning process. Drive until cleaning is completed to avoid the need for service or repair by a workshop.

Cleaning process not possible

If cleaning is not possible for any reasons, control indicator 🔧 illuminates. Engine power may be reduced. Seek the assistance of a workshop immediately.

Catalytic converter

The catalytic converter reduces the amount of harmful substances in the exhaust gases.

Caution

Fuel grades other than those listed on pages ⇨ 150, ⇨ 210 could damage the catalytic converter or electronic components.

Unburnt fuel will overheat and damage the catalytic converter. Therefore avoid excessive use of the starter, running the fuel tank dry and starting the engine by pushing or towing.

In the event of misfiring, uneven engine running, a reduction in engine performance or other unusual problems, have the cause of the fault rectified by a workshop as soon as possible. In an emergency, driving can be continued for a short period, keeping vehicle speed and engine speed low.

Automatic transmission

The automatic transmission permits automatic gearshifting (automatic mode) or manual gearshifting (manual mode).

Manual shifting is possible in manual mode by pressing + or − on the selector lever ⇨ 128.

Transmission display

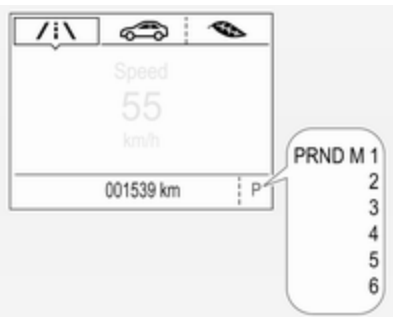

The mode or selected gear is shown in the Driver Information Centre.

In automatic mode, the driving programme is indicated by **D**.

In manual mode, **M** and the number of the selected gear is indicated.

R indicates reverse gear.

N indicates neutral position.

P indicates park position.

Selector lever

P : park position, wheels are locked, engage only when the vehicle is stationary and the parking brake is applied

R : reverse gear, engage only when the vehicle is stationary

N : neutral

D : automatic shift mode

M : manual shift mode

+ : push to upshift in manual mode

− : push to downshift in manual mode

The selector lever is locked in **P** and can only be moved when the ignition is on and the brake pedal is applied.

Without brake pedal applied, control indicator illuminates.

If the selector lever is not in **P** when the ignition is switched off, control indicator flashes.

To engage **P**, **R** or **M**, press the release button.

The engine can only be started with the lever in position **P** or **N**. When position **N** is selected, press the brake pedal or apply the parking brake before starting.

Do not accelerate while engaging a gear. Never depress the accelerator pedal and brake pedal at the same time.

When a gear is engaged, the vehicle slowly begins to creep when the brake is released.

Engine braking

To utilise the engine braking effect, select a lower gear in good time when driving downhill, see manual mode.

Rocking the vehicle

Rocking the vehicle is only permissible if the vehicle is stuck in sand, mud or snow. Move the selector lever between **D** and **R** in a repeat pattern. Do not race the engine and avoid sudden acceleration.

Parking

Apply the parking brake and engage **P**.

The ignition key can only be removed when the selector lever is in position **P**.

Manual mode

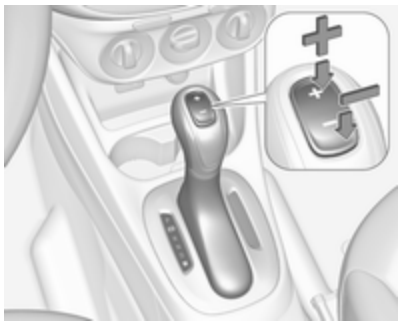

Move selector lever to position **M**.

Press **+** on the selector lever to shift to a higher gear.

Press **–** on the selector lever to shift to a lower gear.

If a higher gear is selected when vehicle speed is too low, or a lower gear when vehicle speed is too high, the shift is not executed. This can cause a message in the Driver Information Centre.

In manual mode, no automatic shifting to a higher gear takes place at high engine revolutions.

Gear shift indication

The symbol ▲ with a number beside it is indicated when gearshifting is recommended for fuel saving reasons.

Shift indication appears only in manual mode.

Electronic driving programmes

- The automatic neutral shift function automatically shifts to idling when the vehicle is stopped with a forward gear engaged and the brake pedal is pressed.

- Special programmes automatically adapt the shifting points when driving up inclines or down hills.
- When starting off in snowy or icy conditions or on other slippery surfaces, the electronic transmission control selects a higher gear automatically.

Kickdown

Pressing down the accelerator pedal beyond the kickdown detent will lead to maximum acceleration independent of selected driving mode. The transmission shifts to a lower gear depending on engine speed.

Fault

In the event of a fault, control indicator illuminates. Additionally, a message is displayed in the Driver Information Centre.

Vehicle messages ⇨ 89.

The transmission no longer shifts automatically. Continued travel is possible with manual shifting. Only the highest gear is available. Depending on the fault, second gear may also be available in manual mode. Shift only when the vehicle is at a standstill.

Have the cause of the fault remedied by a workshop.

Interruption of power supply

In the event of an interruption of power supply, the selector lever cannot be moved out of the **P** position. The ignition key cannot be removed from the ignition switch.

If the vehicle battery is discharged, start the vehicle using jump leads ⇨ 195.

If the vehicle battery is not the cause of the fault, release the selector lever.

1. Apply the parking brake.

2. Release the selector lever trim from the centre console; Poke with a finger into the leather socket in front of the selector lever and push the trim upwards at the front rim from below, as shown in the illustration. Rotate trim to the left.

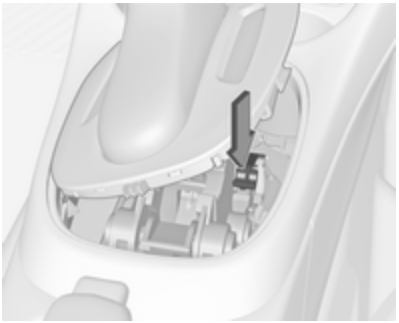

3. Push down the release lever and move the selector lever out of **P** or **N**. If these positions are engaged again, the selector lever will be locked in position again. Have the cause of the power supply interruption remedied by a workshop.
4. Mount the selector lever trim onto the centre console and refit.

Manual transmission

To engage reverse, depress the clutch pedal and then press the release button on the selector lever and engage the gear.

If the gear does not engage, set the lever to neutral, release the clutch pedal and depress again; then repeat gear selection.

Do not slip the clutch unnecessarily.

When operating, depress the clutch pedal completely. Do not use the pedal as a foot rest.

Caution
It is not advisable to drive with the hand resting on the selector lever.

Gear shift indication ⇨ 80.

Stop-start system ⇨ 122.

Brakes

The brake system comprises two independent brake circuits.

If a brake circuit fails, the vehicle can still be braked using the other brake circuit. However, braking effect is achieved only when the brake pedal is depressed firmly. Considerably more force is needed for this. The braking distance is extended. Seek the assistance of a workshop before continuing the journey.

When the engine is not running, the support of the brake servo unit disappears once the brake pedal has been depressed once or twice. Braking effect is not reduced, but braking requires significantly greater force. It is especially important to bear this in mind when being towed.

Control indicator ⓘ ⇨ 79.

Antilock brake system

Antilock brake system (ABS) prevents the wheels from locking.

ABS starts to regulate brake pressure as soon as a wheel shows a tendency to lock. The vehicle remains steerable, even during hard braking.

ABS control is made apparent through a pulse in the brake pedal and the noise of the regulation process.

For optimum braking, keep the brake pedal fully depressed throughout the braking process, despite the fact that the pedal is pulsating. Do not reduce the pressure on the pedal.

After starting-off the system performs a self-test which may be audible.

Control indicator (ABS) ⇨ 80.

Adaptive brake light

During full braking, all three brake lights flash for the duration of ABS control.

Fault

⚠ Warning

If there is a fault in the ABS, the wheels may be liable to lock due to braking that is heavier than normal. The advantages of ABS are no longer available. During hard braking, the vehicle can no longer be steered and may swerve.

Have the cause of the fault remedied by a workshop.

Parking brake

Manual parking brake

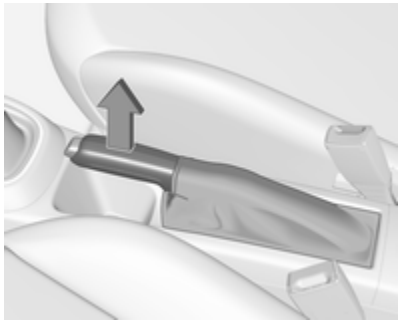

⚠Warning

Always apply parking brake firmly without operating the release button, and apply as firmly as possible on a downhill or uphill slope.

To release the parking brake, pull the lever up slightly, press the release button and fully lower the lever.

To reduce the operating forces of the parking brake, depress the brake pedal at the same time.

Control indicator (!) ⇨ 79.

Brake assist

If the brake pedal is depressed quickly and forcefully, maximum brake force is automatically applied (full braking).

Maintain steady pressure on the brake pedal for as long as full braking is required. Maximum brake force is automatically reduced when the brake pedal is released.

Hill start assist

The system helps prevent unintended movement when driving away on inclines.

When releasing the brake pedal after stopping on an incline, the brakes remain on for a further 2 seconds. The brakes release automatically as soon as the vehicle begins to accelerate or the 2 seconds holding time is over.

The hill start assist is not active during an Autostop.

Ride control systems

Traction Control system

The Traction Control system (TC) is a component of the Electronic Stability Control (ESC).

TC improves driving stability when necessary, regardless of the type of road surface or tyre grip, by preventing the drive wheels from spinning.

As soon as the drive wheels start to spin, engine output is reduced and the wheel spinning the most is braked individually. This considerably improves the driving stability of the vehicle on slippery road surfaces.

TC is operational after each engine start as soon as the control indicator extinguishes.

When TC operates flashes.

⚠Warning

Do not let this special safety feature tempt you into taking risks when driving.

Adapt speed to the road conditions.

Fault

If there is a fault in the system the control indicator illuminates continuously and a message or a warning code appears in the Driver Information Centre. The system is not operational.

Have the cause of the fault remedied by a workshop.

Electronic Stability Control

Electronic Stability Control (ESC) improves driving stability when necessary, regardless of the type of road surface or tyre grip.

As soon as the vehicle starts to swerve (understeer/oversteer), engine output is reduced and the wheels are braked individually.

ESC operates in combination with the Traction Control system (TC). It prevents the drive wheels from spinning.

ESC is operational after each engine start as soon as the control indicator extinguishes.

When ESC operates flashes.

⚠Warning

Do not let this special safety feature tempt you into taking risks when driving.

Adapt speed to the road conditions.

Control indicator ⇨ 81.

Fault

If there is a fault in the system, the control indicator illuminates continuously and a message or a warning code appears in the Driver Information Centre. The system is not operational.

Have the cause of the fault remedied by a workshop.

City mode

City mode is a feature which enables increased steering assistance during lower speed conditions, e.g. city traffic or parking. Steering assistance is increased for greater convenience.

Activation

Press when engine is running. The system works from standstill up to 35 km/h, and in reverse gear. Above this speed, the system changes to normal mode. When activated, City mode engages automatically below 35 km/h.

An illuminated LED in the City mode button indicates that the system is active.

Additionally, a message pops-up in the Driver Information Centre.

City mode remains active during an Autostop, but is only operational when the engine is running.

Stop-start system ⇨ 122.

Deactivation

Press . The LED in the button extinguishes.

Additionally, a message pops-up in the Driver Information Centre.

Each time the engine is started, City mode is deactivated.

Fault

In the event of a fault in the system, control indicator ! illuminates.

Additionally, a message pops-up in the Driver Information Centre.

Vehicle messages ⇨ 89.

System calibration

If control indicators ! and illuminate simultaneously, a calibration of the power steering

system is necessary. This can occur e.g. when turning the steering wheel for one rotation with ignition switched off. In this case, switch on ignition and turn steering wheel once from lock to lock.

If control indicators ⊖! and ⚠ do not extinguish after calibration, seek the assistance of a workshop.

Driver assistance systems

⚠ Warning

Driver assistance systems are developed to support the driver and not to replace the driver's attention.

The driver accepts full responsibility when driving the vehicle.

When using driver assistance systems, always take care regarding the current traffic situation.

Cruise control

The cruise control can store and maintain speeds of approx. 30 km/h to maximum vehicle speed. Deviations from the stored speeds may occur when driving uphill or downhill.

For safety reasons, the cruise control cannot be activated until the brake pedal has been operated once. Activating in first gear is not possible.

Do not use the cruise control if it is not advisable to maintain a constant speed.

On vehicles with automatic transmission cruise control can be activated in automatic mode and manual mode.

Control indicator ⇨ 83.

Switching on the system

Press ⌀; control indicator ⌀ in instrument cluster illuminates white.

Activation of the functionality

Accelerate to the desired speed and turn thumb wheel to **SET/-**, the current speed is stored and maintained. Control indicator ⌀ in instrument cluster illuminates green. Set speed is indicated on the display. Accelerator pedal can be released.

Vehicle speed can be increased by depressing the accelerator pedal. When the accelerator pedal is released, the previously stored speed is resumed.

Cruise control remains activated while gearshifting.

Increase speed

With cruise control active, hold thumb wheel turned to **RES/+** or briefly turn to **RES/+** repeatedly: speed increases continuously or in small increments.

Alternatively accelerate to the desired speed and store by turning to **SET/-**.

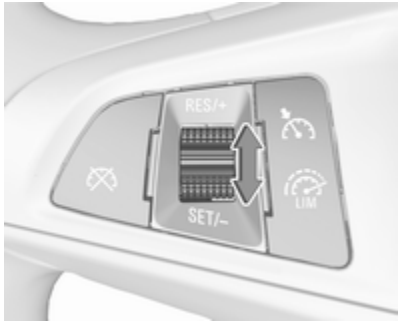

Reduce speed

With cruise control active, hold thumb wheel turned to **SET/-** or briefly turn to **SET/-** repeatedly: speed decreases continuously or in small increments.

Deactivation of the functionality

Press ⌀; control indicator ⌀ in instrument cluster illuminates white. Cruise control is deactivated. Last stored speed remains in memory for later speed resume.

Automatic deactivation:

- Vehicle speed is below approx. 30 km/h.
- Vehicle speed drops more than 25 km/h below the set speed.
- The brake pedal is depressed.
- The clutch pedal is depressed for a few seconds.
- The selector lever is in **N**.
- Engine speed is in a very low range.
- The Traction Control system or Electronic Stability Control is operating.
- Parking brake is applied.
- Simultaneous pressing **RES/+** and brake pedal deactivates cruise control and will delete stored speed.

Resume stored speed

Turn thumb wheel to **RES/+** at a speed above 30 km/h. The stored speed will be obtained.

Switching off the system

Press ⏲, control indicator ⏲ in instrument cluster extinguishes. The stored speed is deleted.

Pressing ⏲ to activate the speed limiter or switching off the ignition also switches off cruise control and deletes the stored speed.

Speed limiter

The speed limiter prevents the vehicle exceeding a preset maximum speed.

The maximum speed can be set at speeds above 25 km/h up to 200 km/h.

The driver can only accelerate up to the preset speed. Deviations from the limited speed may occur when driving downhill.

The preset speed limit is displayed in the Driver Information Centre when the system is active.

Activation of the functionality

Press ⏲. If cruise control has been activated before, it is switched off when speed limiter is activated and the control indicator ⏲ extinguishes.

Set speed limit

Accelerate to the desired speed and briefly turn thumb wheel to **SET/-**: the current speed is stored as maximum speed. Speed limit is displayed in the Driver Information Centre.

Change speed limit

With speed limiter active, turn thumb wheel to **RES/+** to increase or **SET/-** to decrease the desired maximum speed.

Exceeding the speed limit

When exceeding the limited speed without driver input, the speed will flash in the Driver Information Centre and a chime sounds during this period.

In the event of an emergency, it is possible to exceed the speed limit by depressing the accelerator pedal firmly nearly to the final point. In this case no chime appears.

Release the accelerator pedal and the speed limiter function is reactivated once a speed lower than the limit speed is obtained.

Deactivation of the functionality

Press : speed limiter is deactivated and the vehicle can be driven without speed limit.

The stored limited speed is indicated in brackets in the Driver Information Centre. Additionally, a corresponding message appears.

Resume limit speed

Turn thumb wheel to **RES/+**. The stored speed limit will be obtained and is indicated without brackets in the Driver Information Centre.

Switching off the system

Press , the speed limit indication extinguishes in the Driver Information Centre. The stored speed is deleted.

By pressing to activate cruise control, speed limiter is also deactivated and the stored speed is deleted.

By switching off the ignition, speed limiter is also deactivated, but the speed limit will be stored for next speed limiter activation.

Forward collision alert

The forward collision alert can help to avoid or reduce the harm caused by front-end crashes.

Forward collision alert uses the front camera system in the windscreen to detect a vehicle directly ahead, in your path, within a distance of approx. 60 m.

A vehicle ahead is indicated by control indicator .

If a vehicle directly ahead is approached too quickly, a warning chime and alert in the Driver Information Centre is provided.

Activation

Forward collision alert operates automatically above 40 km/h, if it is not deactivated by pressing , see below.

Selecting the alert sensitivity

The alert sensitivity can be set to near, medium or far.

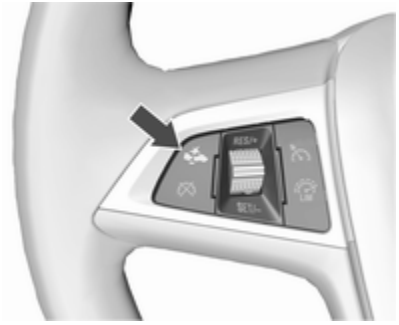

Press ⚙, the current setting is shown on the Driver Information Centre. Press ⚙ repeatedly to change the alert sensitivity. The selected setting is also displayed in the Driver Information Centre.

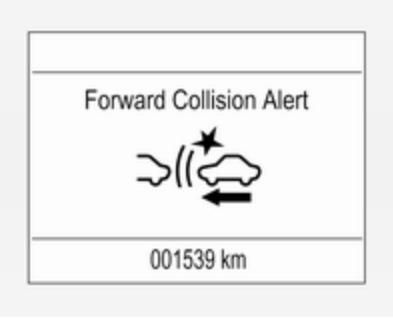

Alerting the driver

The vehicle ahead control indicator 🚗 illuminates green in the instrument cluster when the system has detected a vehicle in the driving path.

Caution

The colour lighting of this control indicator does not correspond to local traffic laws on following distance. The driver bears full responsibility for maintaining safe following distance according to applicable traffic rules, weather and road conditions etc. at all times.

When the time to a potential collision with a vehicle in front gets too small and a collision is imminent, the collision alert symbol pops-up in the Driver Information Centre and the driver gets notified by a warning chime sound.

Depress the brake pedal and steer the vehicle, if it is required by the situation.

Deactivation

The system can be deactivated. Press ⚙ repeatedly until the following message appears in the Driver Information Centre.

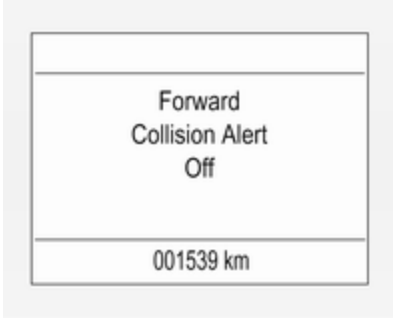

If the forward collision alert was deactivated, alert sensitivity is set to "medium" when ignition is switched on next time.

The settings "near", "medium" or "far" will be stored when the ignition is switched off.

General information

⚠Warning

Forward collision alert is just a warning system and does not apply the brakes. When approaching a vehicle ahead too rapidly, it may not provide you enough time to avoid a collision.

The driver accepts full responsibility for the appropriate following distance based on traffic, weather and visibility conditions.

The complete attention of the driver is always required while driving. The driver must always be ready to take action and apply the brakes.

System limitations

The system is designed to warn of vehicles only, but may react also to other objects.

In the following cases, forward collision alert may not detect a vehicle ahead or sensor performance is limited:

- on winding roads
- when weather limits visibility, e.g. fog, rain, or snow
- when the sensor is blocked by snow, ice, slush, mud, dirt, windscreen damage or affected by foreign items, e.g. stickers

Following distance indication

The following distance indication displays the distance to a preceding moving vehicle. The front camera in the windscreen is used to detect the distance of a vehicle directly ahead in the vehicle's path. It is active at speeds above 40 km/h.

When a preceding vehicle is detected ahead, the distance is indicated in seconds, displayed on a page in the Driver Information Centre ⇨ 83. Press **MENU** on the stalk to select and turn the adjuster wheel to choose following distance indication page.

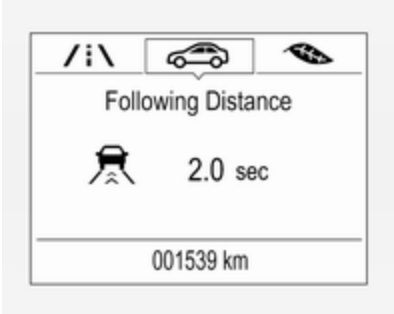

The minimum indicated distance is 0.5 seconds.

If there is no vehicle ahead or the vehicle ahead is out of range, two dashes will be displayed: -.- sec.

Parking assist

Rear parking assist

⚠ Warning

It is the driver who bears full responsibility for the parking manoeuvre.

Always check the surrounding area while reversing and using the rear parking assist system.

The rear parking assist makes parking easier by measuring the distance between the vehicle and rear obstacles. It informs and warns the driver via acoustic signals and display indication.

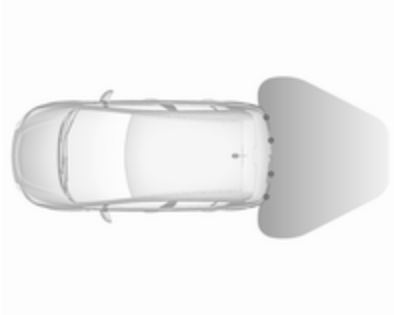

The system has four ultrasonic parking sensors in the rear bumper.

Activation

When reverse gear is engaged, the system is ready to operate automatically.

An illuminated LED in the parking assist button P indicates that the system is ready to operate.

Indication

The system warns the driver with acoustic signals against potentially hazardous obstacles behind the vehicle in a distance range up to 1.5 m. The interval between the sounds becomes shorter as the vehicle gets closer to that obstacle. When the distance is less than approx. 30 cm, the sound is continuous.

Additionally, the distance to rear obstacles is displayed by changing distance lines in the Driver Information Centre with Uplevel display ⇨ 83 or, depending on the version, on the Colour Info Display ⇨ 88.

The distance indication can be inhibited by vehicle messages with a higher priority. After approving the message by pressing **SET/CLR** on the stalk, distance indication appears again.

Deactivation

The system automatically switches off when reverse gear is disengaged.

Manual deactivation is also possible by pressing the parking assist button P.

In both cases, the LED in the button extinguishes.

Fault

In the event of a fault or if the system does not work temporarily, e.g. because of high external noise level or other interference factors, the LED in the button flashes for 3 seconds then extinguishes. Control indicator P illuminates in the instrument cluster ⇨ 80 or a message is indicated in the Driver Information Centre.

Front-rear parking assist

⚠ Warning

The driver bears full responsibility for the parking manoeuvre.

Always check the surrounding area when driving backwards or forwards while using parking assist system.

The front-rear parking assist measures the distance between the vehicle and obstacles in front and behind the vehicle. It informs and warns the driver via acoustic signals and display indication.

It uses two different acoustic warning signals for the front and rear monitoring areas, each with a different tone frequency.

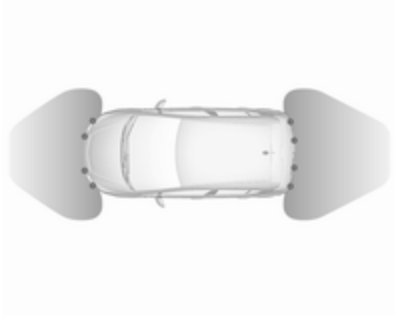

The system has four ultrasonic parking sensors each in the rear and front bumper.

Activation

When reverse gear is engaged, the front and rear parking assist is ready to operate.

The system is also activated automatically at a speed up to 11 km/h.

An illuminated LED in the parking assist button P⋙⚠ indicates that the system is ready to operate.

If P⋙⚠ is switched off within an ignition cycle, the front parking assist is deactivated. If vehicle speed has exceeded 25 km/h beforehand, parking assist will be reactivated when speed drops below 11 km/h.

Indication

The system warns the driver with acoustic signals against potentially hazardous obstacles in front of the vehicle in a distance range up to 80 cm and against potentially hazardous obstacles behind the vehicle in a distance range up to 1.5 m.

Depending on which side of the vehicle is closer to an obstacle, you will hear acoustic warning signals in the vehicle on the respective side. The interval between the sounds becomes shorter as the vehicle gets closer to that obstacle. When the distance is less than approx. 30 cm, the sound is continuous.

Additionally, the distance to rear and front obstacles is displayed by changing distance lines in the Driver Information Centre with Uplevel display ⇨ 83 or, depending on the version, on the Colour Info Display ⇨ 88.

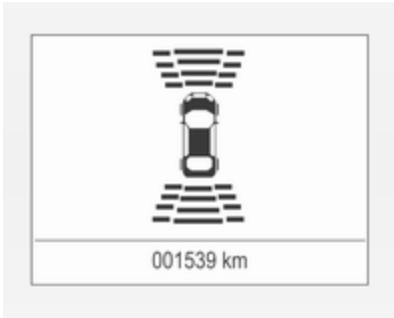

The distance indication can be inhibited by vehicle messages with a higher priority. After dismissing the message, distance indication appears again.

The distance to obstacles is shown on the Colour Info Display by coloured zones in front of or behind the vehicle ⇨ 88.

Deactivation

The rear parking assist automatically switches off when reverse gear is disengaged.

The front parking assist is deactivated automatically at a speed above 11 km/h.

Manual deactivation is also possible by pressing the parking assist button P⋙▲.

When the system is deactivated, the LED in the button extinguishes and, if manually deactivated, a message pops-up in the Driver Information Centre.

After a manual deactivation, the front-rear parking assist is activated again if P⋙▲ is pressed or if reverse gear is engaged.

The complete system can be manually deactivated in the vehicle personalisation menu in the Info Display. It remains deactivated during the ignition cycle or until activation in personalisation menu again.

Vehicle personalisation ⇨ 92.

Fault

In the event of a fault or if the system does not work temporarily, e.g. because of high external noise level or other interference factors, a message pops-up in the Driver Information Centre.

Vehicle messages ⇨ 89.

Basic notes on parking assist systems

⚠Warning

Under certain circumstances, various reflective surfaces on objects or clothing as well as external noise sources may cause the system to fail to detect obstacles.

Special attention must be paid to low obstacles which can damage the lower part of the bumper.

Caution

Performance of the system can be reduced when sensors are covered, e.g. by ice or snow.

Performance of the parking assist system can be reduced due to heavy loading.

Special conditions apply if there are taller vehicles in the vicinity (e.g. off-road vehicles, mini vans, vans). Object identification and

correct distance indication in the upper part of these vehicles cannot be guaranteed.

Objects with a very small reflection cross-section, e.g. objects of narrow size or soft materials, may not be detected by the system.

Parking assist systems do not detect objects outside the detection range.

Note

It is possible that the sensor detects a non-existing object caused by echo disturbance from external acoustic noise or mechanical misalignments (sporadic false warnings may occur).

Make sure that the front number plate is properly mounted (not bent and no gaps to the bumper on the left or right side) and the sensors are firmly in place.

Low curbs and surface irregularities, e.g. on construction zones, are not detected by the system. The driver accepts responsibility.

Rear view camera

The rear view camera assists the driver when reversing by displaying a view of the area behind the vehicle.

The view of the camera is displayed in the Colour Info Display.

⚠ Warning

The rear view camera does not replace driver vision. Note that objects that are outside the camera's field of view and the parking assist sensors, e.g. below the bumper or underneath the vehicle, are not displayed.

Do not reverse or park the vehicle using only the rear view camera.

Always check the surrounding of the vehicle before driving.

Activation

Rear view camera is automatically activated when reverse gear is engaged.

Functionality

The camera is mounted between the number plate lights and has a viewing angle of 130°.

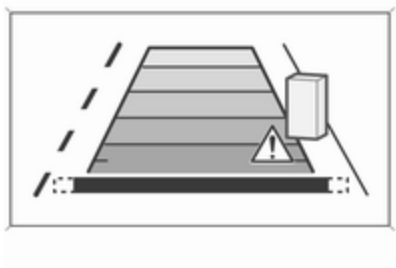

The area displayed by the camera is limited. The distance of the image that appears on the display differs from the actual distance.

Warning symbols

Warning symbols are indicated as triangles ⚠on the picture, which show obstacles detected by the rear sensors of the parking assist.

Additionally ⚠appears on the top line of the Info Display with the warning to check the vehicle surrounding.

Deactivation

The camera is deactivated when a certain forward speed is exceeded or if reverse gear is not engaged for approx. 10 seconds.

Rear view camera can be manually deactivated in the vehicle personalisation menu in the Info Display.

Vehicle personalisation ⇨ 92.

Deactivation of guiding lines and warning symbols

Activation or deactivation of the visual guiding lines and the warning symbols can be changed by touch buttons in the lower zone of the display.

Fault

Fault messages are displayed with a ⚠on the top line of the Info Display.

The rear view camera may not operate properly when:

- The surrounding is dark.
- The sun or the beam of headlights is shining directly into the camera lens.
- Ice, snow, mud, or anything else covers the camera lens. Clean the lens, rinse it with water, and wipe it with a soft cloth.
- The vehicle is towing a trailer.
- The vehicle had a rear end accident.
- There are extreme temperature changes.

Traffic sign assistant

Functionality

The traffic sign assistant system detects designated traffic signs via a front camera and displays them in the Driver Information Centre.

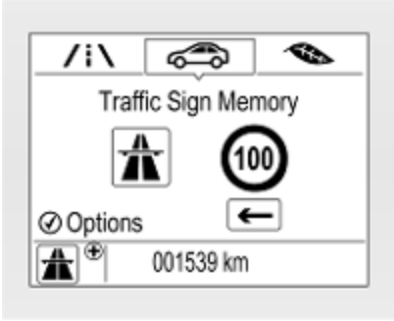

Traffic signs, which will be detected, are:

Limit and no passing signs

- speed limit
- no passing
- end of speed limit
- end of no passing

Road signs
Beginning and end of:

- city regions (country-specific)
- motorways
- A-roads
- play streets

Add-on signs

- additional hints to traffic signs
- restriction of trailer towing
- tractor constraints
- wet warning
- ice warning
- direction arrows

Speed limit signs and no passing signs are displayed in the Driver Information Centre until the next speed limit sign or end of speed limit is detected or up to a defined sign timeout.

Indication of multiple signs on the display is possible.

An exclamation mark in a frame indicates that there is an additional sign detected which cannot be clearly identified by the system.

The system operates without loss of performance up to a speed of 200 km/h depending on the lighting conditions. At night the system is active up to a speed of 160 km/h.

As soon as vehicle speed becomes slower than 55 km/h, the display will be reset and the content of the traffic sign page will be cleared, e.g. when entering a city zone. The next recognized speed indication will be displayed.

Display indication

Information about the currently valid traffic signs is available on the designated traffic sign assistant page in the Driver Information Centre.

Additionally, the currently valid speed limit is displayed permanently in the lower line of the Driver Information Centre. In case a speed limit with add-on is available, a **+** symbol is displayed in this area.

Choose 🚗 via **MENU** and select traffic sign assistant page with the adjuster wheel on the stalk ⇨ 83.

When another page on the Driver Information Centre menu was selected and then traffic sign assistant page is chosen again, the last recognised traffic sign will be displayed.

Alert function

The alert function can be activated or deactivated in the setting menu of the traffic sign assistant page.

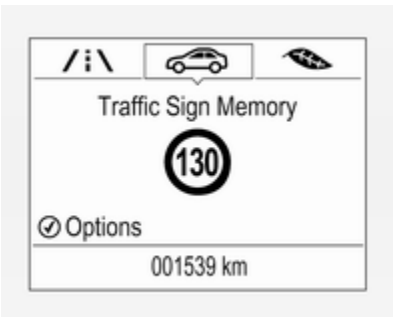

Once activated and when the traffic sign detection page is currently not displayed, newly detected speed limit and no passing signs are displayed as pop-up alerts in the Driver Information Centre.

When traffic sign assistant page is displayed, press **SET/CLR** on the stalk.

Select **Alerts ON** or **Alerts OFF** by turning the adjuster wheel and press **SET/CLR**.

Pop-up alert is displayed for approx. 8 seconds in the Driver Information Centre.

System reset

The content of the traffic sign memory can be cleared in the setting menu of the traffic sign assistant page by selecting **Reset** and confirm by pressing **SET/CLR** on the stalk.

Alternatively, SET/CLR can be pressed for 3 seconds to clear the content of the page.

Upon successful reset, a chime will sound and the following “Default Sign” is indicated until the next traffic sign is detected.

In some cases, traffic sign assistant is cleared up automatically by the system.

Clearing of traffic signs

There are different scenarios that lead to clearing the currently displayed traffic signs. After clearing, the “Default Sign” is displayed in the Driver Information Centre.

Reasons for signs being cleared:

- A predefined distance was driven or time has elapsed (differs for each sign type)
- Vehicle drives through a turn
- The speed becomes slower than 52 km/h (city entry detection)

Fault

The traffic sign assistant system may not operate correctly if:

- The area of the windscreen, where the front camera is located, is not clean or affected by foreign items, e.g. stickers.
- Traffic signs are completely or partially covered or difficult to discern.
- There are adverse environmental conditions, e.g. heavy rain, snow, direct sunlight or shadows.
- Traffic signs are incorrectly mounted or damaged.
- Traffic signs do not comply with the Vienna Convention on Road Signs and Signals.

Caution

The system is intended to help the driver within a defined speed range to discern certain traffic signs. Do not ignore traffic signs which are not displayed by the system.

The system does not discern any other than the conventional traffic signs that might give or end a speed limit.

Do not let this special feature tempt you into taking risks when driving.

Always adapt speed to the road conditions.

The driver assistance systems do not relieve the driver from full responsibility for vehicle operation.

Lane departure warning

The lane departure warning system observes the lane markings between which the vehicle is driving via a front camera. The system detects lane changes and warns the driver in the event of an unintended lane change via visual and acoustic signals.

Criteria for the detection of an unintended lane change are:

- No operation of turn lights.
- No brake pedal operation.
- No active accelerator operation or speeding-up.
- No active steering.

If the driver is performing these actions, no warning will be issued.

Activation

The lane departure warning system is activated by pressing ⛙. The illuminated LED in the button indicates that the system is switched on. When control indicator ⛙ in the instrument cluster illuminates green, the system is ready to operate.

The system is only operable at vehicle speeds above 56 km/h and if lane markings are available.

When the system recognises an unintended lane change, control indicator ⛙ changes to yellow and flashes. Simultaneously a chime sound is activated.

Deactivation

The system is deactivated by pressing ⛙, LED in the button extinguishes.

At speeds below 56 km/h the system is inoperable.

Fault

The lane departure warning system may not operate properly when:

- The windscreen is not clean.
- There are adverse environmental conditions e.g. heavy rain, snow, direct sunlight or shadows.

The system can not operate when no lane marking is detected.

Fuel

Fuel for petrol engines

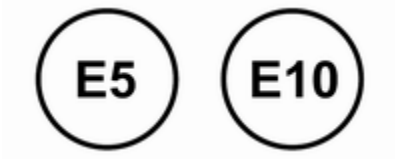

Only use unleaded fuel that complies with European standard EN 228 or equivalent.

The engine is capable of running with fuel that contains up to 10% ethanol (e.g. named E10).

Use fuel with the recommended octane rating. A lower octane rating can reduce engine power and torque and slightly increases fuel consumption.

Caution

Do not use fuel or fuel additives that contain metallic compounds such as manganese-based additives. This may cause engine damage.

Caution

Use of fuel that does not comply to EN 228 or equivalent can lead to deposits or engine damage.

Caution

Use of fuel with a lower octane rating than the lowest possible rating could lead to uncontrolled combustion and engine damage.

The engine-specific requirements regarding octane rating are given in the engine data overview ⇨ 210. A country-specific label at the fuel filler flap can supersede the requirement.

Fuel additive

Fuel should contain detergent additives that help prevent engine and fuel system deposits from forming. Clean fuel injectors and intake valves will allow the emission control system to work properly. In certain countries fuel does not contain sufficient quantities of additive to keep fuel injectors and intake valves clean. In these countries a fuel additive is required for some engines to make up for this lack of detergency. Only use fuel additive approved for the vehicle.

Adding fuel additive to the filled fuel tank is required at least every 15,000 km or after one year, whichever occurs first. For further information, contact your workshop.

Prohibited fuels

Fuels containing oxygenates such as ethers and ethanol, as well as reformulated fuel, are available in some cities. If these fuels comply with the previously described specification, then they are acceptable to use. However, E85 (85% ethanol) and other fuels containing more than 15% ethanol must be used only in FlexFuel vehicles.

Caution

Do not use fuel containing methanol. It can corrode metal parts in the fuel system and also damage plastic and rubber parts. This damage would not be covered by the vehicle warranty.

Some fuels, mainly high octane racing fuels, can contain an octane enhancing additive called methylcyclopentadienyl manganese tricarbonyl (MMT). Do not use fuels or fuel additives with MMT as they can reduce spark plug life and affect emission control system performance. The malfunction indicator light may illuminate ⇨ 79. If this occurs, seek the assistance of a workshop.

Fuel for liquid gas operation

Liquid gas is known as LPG (Liquefied Petroleum Gas) or under its French name GPL (Gaz de Pétrole Liquéfié). LPG is also known as Autogas.

LPG consists mainly of propane and butane. The octane rating is between 105 and 115, depending on the butane proportion. LPG is stored liquid at around 5-10 bar pressure.

The boiling point depends on the pressure and mixing ratio. At ambient pressure, it is between -42 °C (pure propane) and -0.5 °C (pure butane).

Caution

The system works at an ambient temperature of approx. -8 °C to 100 °C.

Full function of the LPG system can only be guaranteed with liquid gas which complies with the minimum requirements of DIN EN 589.

Fuel selector ⇨ 73.

Refuelling

⚠ Danger

Before refuelling, switch off ignition and any external heaters with combustion chambers.

Follow the operating and safety instructions of the filling station when refuelling.

⚠ Danger

Fuel is flammable and explosive. No smoking. No naked flames or sparks.

If you can smell fuel in your vehicle, have the cause of this remedied immediately by a workshop.

A label with symbols at the fuel filler flap is indicating the allowed fuel types. In Europe the pump nozzles of the filling stations are marked with these symbols. Refuel only the allowed fuel type.

Caution

In case of misfuelling, do not switch on ignition.

Fuel filler flap is located at right rear side of the vehicle.

The fuel filler flap can only be opened if the vehicle is unlocked. Release the fuel filler flap by pushing the flap.

Petrol refuelling

To open, turn the cap slowly anticlockwise.

The fuel filler cap can be retained in the bracket on the fuel filler flap.

Place the nozzle in straight position to the filler neck and press with slight force to insert.

To refuel, switch on pump nozzle.

After the automatic cut-off, the tank can be topped up by operating the pump nozzle a maximum of two more times.

Caution
Wipe off any overflowing fuel immediately.

To close, turn the fuel filler cap clockwise until it clicks.

Close the flap and engage.

Liquid gas refuelling

Follow the operating and safety instructions of the filling station when refuelling.

Filling adapter

As filling systems are not standardised, different adapters are required which are available from Opel Distributors and from Opel Service Partners.

ACME adapter: Belgium, Germany, Ireland, Luxembourg, Switzerland

DISH adapter: Austria, Bosnia-Herzegovina, Bulgaria, Croatia, Czech Republic, Denmark, Estonia, France, Greece, Hungary, Italy, Latvia, Lithuania, Macedonia, Poland, Portugal, Romania, Serbia, Slovakia, Slovenia, Sweden, Switzerland, Turkey, Ukraine

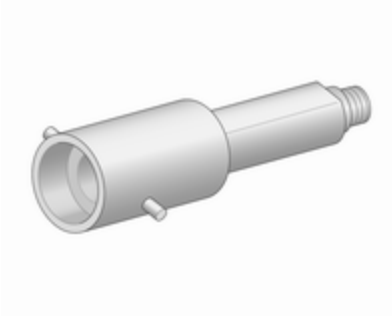

Bayonet adapter: Netherlands, Norway, Spain, United Kingdom

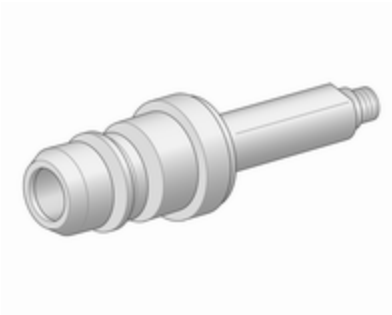

EURO adapter: Spain

The filling valve for the liquid gas is behind the fuel filler cap.

Unscrew protective cap from the filler neck.

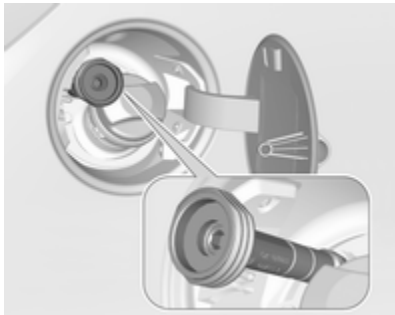

Screw the required adapter hand-tight onto the filler neck.

ACME adapter: Screw the nut of the filling nozzle onto the adapter. Engage the locking lever of the filler nozzle.

DISH adapter: Place the filler nozzle into the adapter. Engage the locking lever of the filler nozzle.

Bayonet adapter: Place filler nozzle on the adapter and turn one quarter turn. Engage the locking lever of the filler nozzle.

EURO adapter: Press the filler nozzle onto the adapter. Engage the locking lever of the filler nozzle.

Press the button at the liquid gas supply point. The filling system stops or begins to run slowly when 80% of the tank volume is reached (maximum fill level).

Release button on filling system and the filling process stops. Release the locking lever and remove the filler nozzle. A small quantity of liquid gas may escape.

Remove adapter and stow securely in vehicle.

Fit protective cap to prevent the penetration of foreign bodies into the filler opening and the system.

⚠ Warning

Due to the system design, an escape of liquid gas after releasing the locking lever is unavoidable. Avoid inhaling.

⚠ Warning

The liquid gas tank should only be filled to 80% capacity, for safety reasons.

The multivalve on the liquid gas tank automatically limits the fill quantity. If a larger quantity is added, we recommend not exposing the vehicle to the sun until the excess amount has been used up.

Fuel filler cap

Only use genuine fuel filler caps.

Vehicle care

General Information **156**
Accessories and vehicle modifications 156
Vehicle storage 157
End-of-life vehicle recovery 157
Vehicle checks **158**
Performing work 158
Bonnet 158
Engine oil 159
Engine coolant 160
Washer fluid 161
Brakes 161
Brake fluid 161
Vehicle battery 162
Wiper blade replacement 163
Bulb replacement **164**
Halogen headlights 164
Xenon headlights 167
Front fog lights 168
Front turn lights 168
Tail lights 168
Side turn lights 170
Centre high-mounted brake light 171
Number plate light 171
Interior lights 172
Electrical system **172**
Fuses 172
Engine compartment fuse box . 173
Instrument panel fuse box 175
Vehicle tools **177**
Tools 177
Wheels and tyres **178**
Winter tyres 178
Tyre designations 178
Tyre pressure 179
Tyre pressure monitoring system 180
Tread depth 184
Changing tyre and wheel size . 184
Wheel covers 185
Tyre chains 185
Tyre repair kit 185
Wheel changing 191
Spare wheel 192
Jump starting **195**
Towing **196**
Towing the vehicle 196
Towing another vehicle 197
Appearance care **198**
Exterior care 198
Interior care 200

General Information

Accessories and vehicle modifications

We recommend the use of genuine parts and accessories and factory approved parts specific for your vehicle type. We cannot assess or guarantee reliability of other products - even if they have a regulatory or otherwise granted approval.

Any modification, conversion or other changes made to standard vehicle specifications (including, without limitation, software modifications, modifications of the electronic control units) may invalidate the warranty offered by Opel. Furthermore, such changes may affect driver assistance systems, fuel consumption, CO_2 emissions and other emissions of the vehicle. They may also invalidate the vehicle operating permit.

Caution
When transporting the vehicle on a train or on a recovery vehicle, the mud flaps may be damaged.

Vehicle storage

Storage for a long period of time

If the vehicle is to be stored for several months:

- Wash and wax the vehicle.
- Have the wax in the engine compartment and underbody checked.
- Clean and preserve the rubber seals.
- Fill up fuel tank completely.
- Change the engine oil.
- Drain the washer fluid reservoir.
- Check the coolant antifreeze and corrosion protection.
- Adjust tyre pressure to the value specified for full load.
- Park the vehicle in a dry, well ventilated place. Engage first or reverse gear or set selector lever to **P**. Prevent the vehicle from rolling.
- Do not apply the parking brake.
- Open the bonnet, close all doors and lock the vehicle.
- Disconnect the clamp from the negative terminal of the vehicle battery. Beware that all systems are not functional, e.g. anti-theft alarm system.

Putting back into operation

When the vehicle is to be put back into operation:

- Connect the clamp to the negative terminal of the vehicle battery. Activate the electronics of the power windows.
- Check tyre pressure.
- Fill up the washer fluid reservoir.
- Check the engine oil level.
- Check the coolant level.
- Fit the number plate if necessary.

End-of-life vehicle recovery

Information on end-of-life vehicle recovery centres and the recycling of end-of-life vehicles is available on our website. Only entrust this work to an authorised recycling centre.

Gas vehicles must be recycled by a service centre authorised for gas vehicles.

Vehicle checks

Performing work

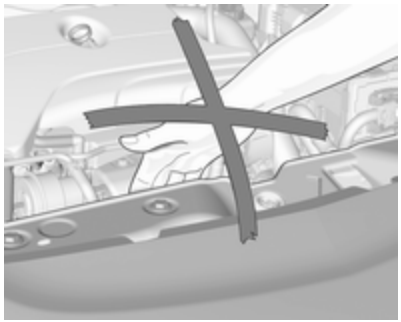

⚠Warning

Only perform engine compartment checks when the ignition is off.

The cooling fan may start operating even if the ignition is off.

⚠Danger

The ignition system and Xenon headlights use extremely high voltage. Do not touch.

Bonnet

Opening

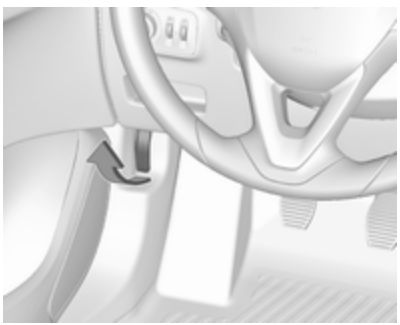

Pull the release lever and return it to its original position.

Push the safety catch upwards and open the bonnet.

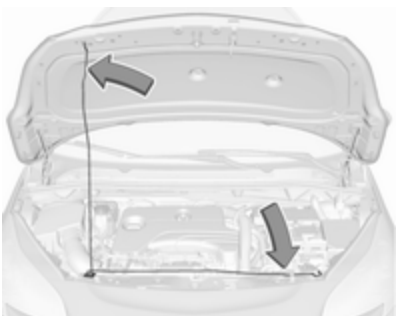

Secure the bonnet support.

If the bonnet is opened during an Autostop, the engine will be restarted automatically for safety reasons.

Closing

Before closing the bonnet, press the support into the holder.

Lower the bonnet and allow it to fall into the latch from a low height (20-25 cm). Check that the bonnet is engaged.

Caution
Do not press the bonnet into the latch, to avoid dents.

Engine oil

Check the engine oil level manually on a regular basis to prevent damage to the engine. Ensure that the correct specification of oil is used.

Recommended fluids and lubricants ⇨ 203.

The maximum engine oil consumption is 0.6 l per 1000 km.

Check with the vehicle on a level surface. The engine must be at operating temperature and switched off for at least 5 minutes.

Pull out the dipstick, wipe it clean, reinsert it fully, pull out and read the engine oil level.

Different dipsticks are used depending on engine variant.

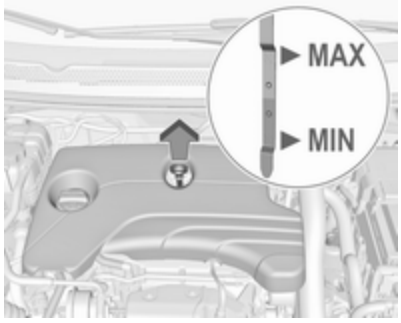

When the engine oil level has dropped to the **MIN** mark, top-up engine oil.

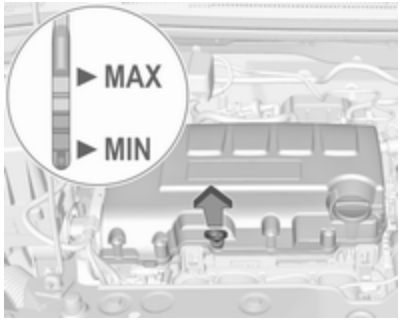

We recommend the use of the same grade of engine oil that was used at the last change.

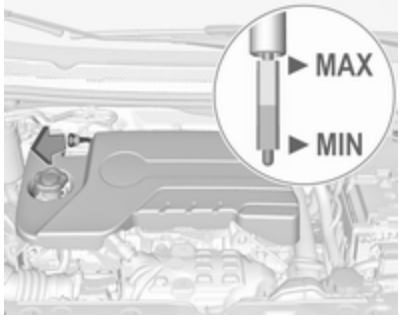

The engine oil level must not exceed the **MAX** mark on the dipstick.

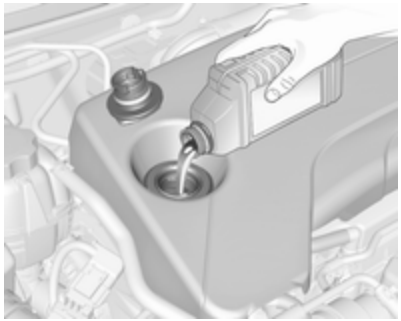

Caution
Overfilled engine oil must be drained or suctioned out. If the oil exceeds the maximum level, do not start the vehicle and contact a workshop.

Capacities ⇨ 212.

Fit the cap on straight and tighten it.

Engine coolant

The coolant provides freeze protection down to approx. -28 °C. In northern countries with very low temperatures, the factory filled coolant provides frost protection down to approx. -37 °C.

Caution
Only use approved antifreeze.

Coolant and antifreeze ⇨ 203.

Coolant level

Caution
Too low a coolant level can cause engine damage.

Different coolant reservoirs are used depending on engine variant.

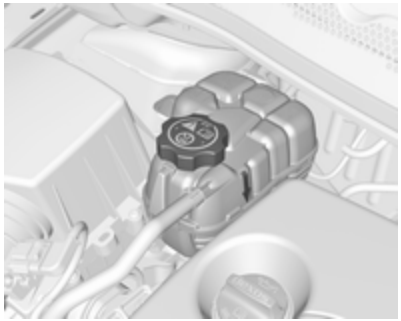

If the cooling system is cold, the coolant level should be above the filling line mark.

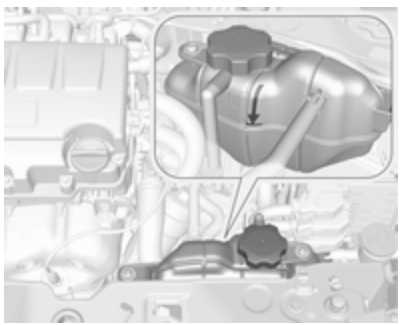

Top-up if the level is low.

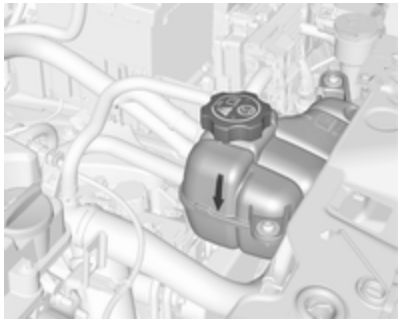

⚠Warning

Allow the engine to cool before opening the cap. Carefully open the cap, relieving the pressure slowly.

To top-up, use a 1:1 mixture of released coolant concentrate mixed with clean tap water. If no coolant concentrate is available, use clean tap water. Install the cap tightly. Have the coolant concentration checked and have the cause of the coolant loss remedied by a workshop.

Washer fluid

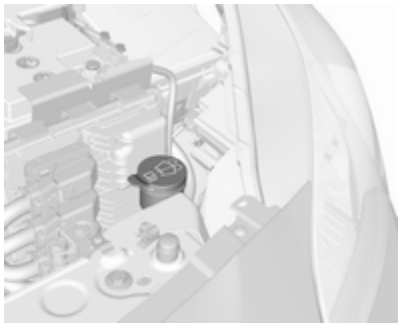

Fill with clean water mixed with a suitable quantity of approved windscreen washer fluid which contains antifreeze.

Caution

Only washer fluid with a sufficient antifreeze concentration provides protection at low temperatures or a sudden drop in temperature.

Washer fluid ⇨ 203.

Brakes

In the event of minimum thickness of the brake lining, a squealing noise sounds during braking.

Continued driving is possible but have the brake lining replaced as soon as possible.

Once new brake linings are installed, do not brake unnecessarily hard for the first few journeys.

Brake fluid

⚠Warning

Brake fluid is poisonous and corrosive. Avoid contact with eyes, skin, fabrics and painted surfaces.

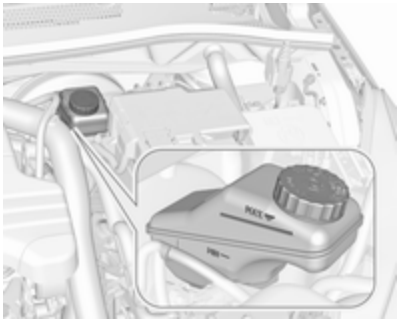

The brake fluid level must be between the **MIN** and **MAX** marks.

If fluid level is below the **MIN** mark, seek the assistance of a workshop.

Brake and clutch fluid ⇨ 203.

Vehicle battery

The vehicle battery is maintenance-free provided that the driving profile allows sufficient charging of the battery. Short-distance-driving and frequent engine starts can discharge the vehicle battery. Avoid the use of unnecessary electrical consumers.

Batteries do not belong in household waste. They must be disposed of at an appropriate recycling collection point.

Laying up the vehicle for more than four weeks can lead to vehicle battery discharge. Disconnect the clamp from the negative terminal of the vehicle battery.

Ensure the ignition is switched off before connecting or disconnecting the vehicle battery.

Battery discharge protection ⇨ 108.

Disconnecting the battery

If the vehicle's battery is to be disconnected (e.g. for maintenance work), the alarm siren must be deactivated as follows: Switch the ignition on then off, then disconnect the vehicle's battery within 15 seconds.

Replacing the vehicle battery

Note
Any deviation from the instructions given in this section may lead to temporary deactivation or disturbance of the stop-start system.

When the vehicle battery is being replaced, please ensure that there are no open ventilation holes in the vicinity of the positive terminal. If a ventilation hole is open in this area, it must be closed off with a dummy cap, and the ventilation in the vicinity of the negative terminal must be opened.

Ensure that the battery is always replaced by the same type of battery.

We recommend the use of an original Opel battery.

Note
Using an AGM vehicle battery different from the original Opel vehicle battery may result in a lower performance.

We recommend that you have the vehicle battery replaced by a workshop.

Charging the vehicle battery

⚠ Warning

On vehicles with stop-start system, ensure that the charging potential does not exceed 14.6 V when using a battery charger. Otherwise the vehicle battery may be damaged.

Jump starting ⇨ 195.

Stop-start system ⇨ 122.

Warning label

Meaning of symbols:

- No sparks, naked flames or smoking.
- Always shield eyes. Explosive gases can cause blindness or injury.
- Keep the vehicle battery out of the reach of children.
- The vehicle battery contains sulfuric acid which could cause blindness or serious burn injuries.
- See the Owner's manual for further information.
- Explosive gas may be present in the vicinity of the battery.

Wiper blade replacement

Windscreen

Lift the wiper arm until it stays in the raised position. Press the catches on both sides, tilt wiper blade at a 90° angle to the wiper arm and remove upwards.

Insert in reverse order.

Lower wiper arm carefully.

Rear window

Lift wiper arm. Disengage wiper blade as shown in illustration and remove.

Attach the wiper blade slightly angled to the wiper arm and push until it engages.

Lower wiper arm carefully.

Bulb replacement

Switch off the ignition and switch off the relevant switch or close the doors.

Only hold a new bulb at the base! Do not touch the bulb glass with bare hands.

Use only the same bulb type for replacement.

Replace headlight bulbs from within the engine compartment.

Bulb check

After a bulb replacement switch on the ignition, operate and check the lights.

Halogen headlights

Halogen headlights with separate bulbs for sidelight, low beam and high beam.

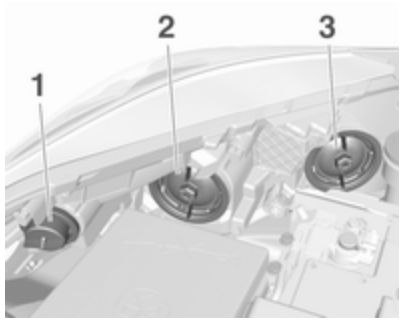

Sidelight / daytime running light (1)

Low beam (2)

High beam (3)

Front turn lights ⇨ 168.

Low beam

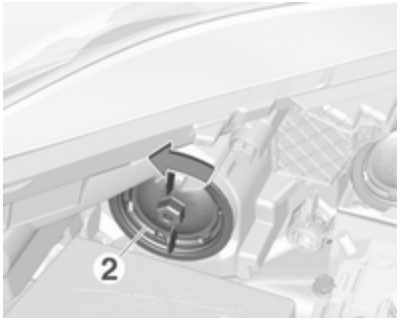

1. Rotate the cap (2) anticlockwise and remove it.

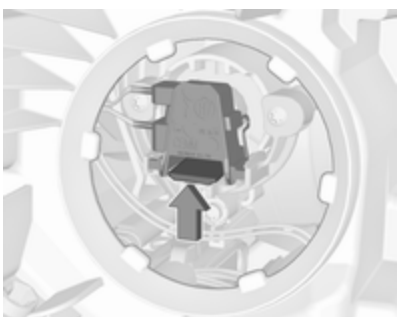

2. Press the clip to disengage bulb holder. Withdraw the bulb holder from the reflector.

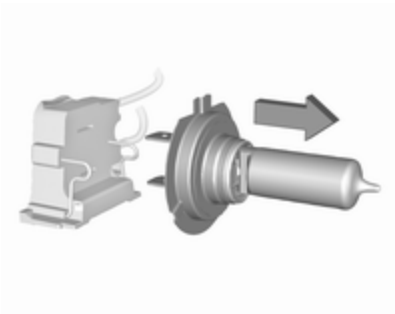

3. Detach the bulb from the bulb holder and replace the bulb.
4. Insert the bulb holder with the clip downwards and engage into the reflector until it clicks.
5. Install cap.

High beam

1. Rotate the cap (3) anticlockwise and remove it.

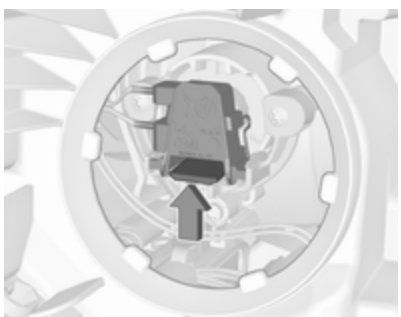

2. Press the clip to disengage bulb holder. Withdraw the bulb holder from the reflector.

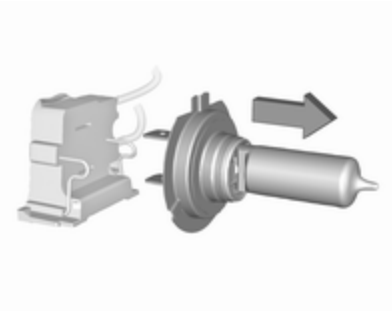

3. Detach the bulb from the bulb holder and replace the bulb.
4. Insert the bulb holder with the clip downwards and engage into the reflector until it clicks.
5. Install cap.

Sidelight / daytime running light with bulbs

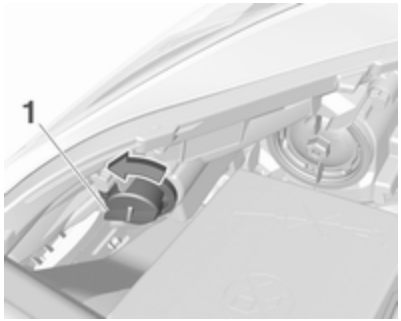

1. Rotate bulb socket (1) anticlockwise to disengage.

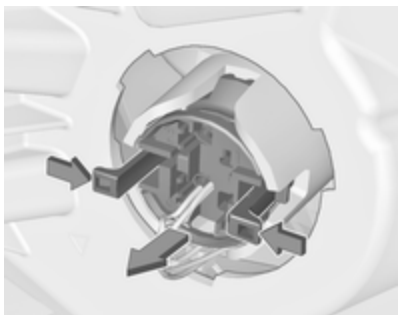

2. Press both clips together and withdraw the bulb socket from the headlamp housing.

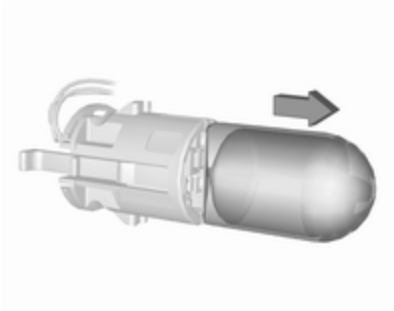

3. Remove the bulb from the socket by pulling.
4. Replace and insert new bulb into socket.
5. Insert the bulb socket into the headlamp housing and turn clockwise.

Sidelight / daytime running light with LEDs

Sidelights and daytime running lights are designed as LEDs and cannot be changed. Consult a workshop in case of a defective LED.

Xenon headlights

⚠ Danger

Xenon headlights work under extremely high electrical voltage. Do not touch. Have bulbs replaced by a workshop.

Sidelight / daytime running lights are designed as LEDs and cannot be changed.

Bulbs for corner lighting can be changed.

Front turn lights ⇨ 168.

Corner lighting

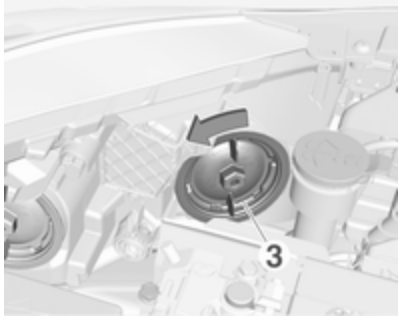

1. Rotate the cap (3) anticlockwise and remove it.

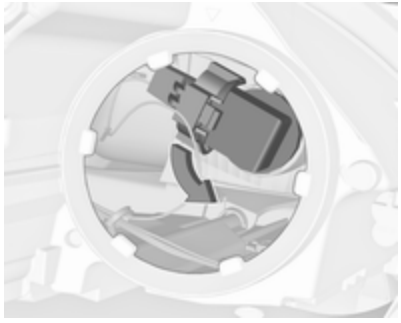

2. Rotate the bulb holder anticlockwise to disengage. Withdraw the bulb holder from the reflector.

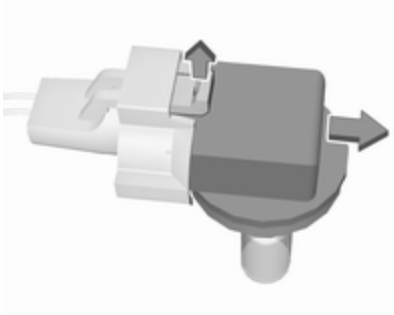

3. Remove the bulb from the plug connector by disengaging and pulling.
4. Replace the bulb. Connect and engage bulb holder with the plug connector.
5. Insert the bulb holder into the reflector and rotate clockwise to secure.
6. Fit the cap and rotate clockwise.

Front fog lights

The bulbs are accessible from the underside of the vehicle.

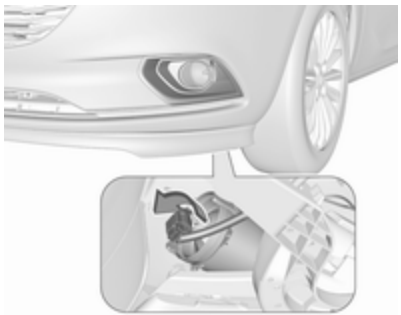

1. Turn the bulb holder anti-clockwise and remove it from the reflector.

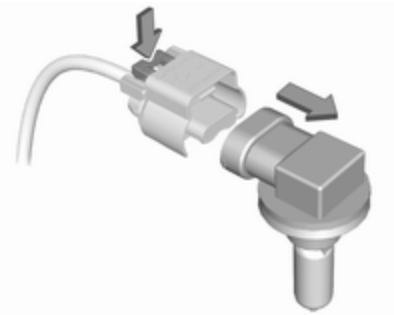

2. Disengage the bulb socket from the plug connector by pressing the retaining lug.
3. Remove and replace the bulb socket with bulb and attach the plug connector.
4. Insert the bulb socket into the reflector by turning clockwise and engage.

Front turn lights

Front turn lights consist of long-life bulbs which cannot be changed.

Consult a workshop in case of a defective long-life bulb.

Tail lights

1. Release the cover in the load compartment on the respective side and remove.

   On the right side, remove all components, such as tyre repair kit or tools, from the rear insert. Compress this insert at the upper side and remove from the sidewall.

2. Unscrew both plastic securing nuts from the inside by hand.

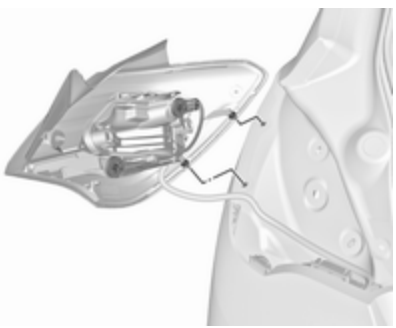

3. Carefully withdraw the light assembly from the recesses and remove.

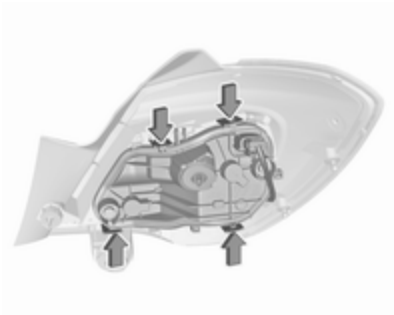

4. Press the retaining lugs and remove the bulb carrier from the light assembly.

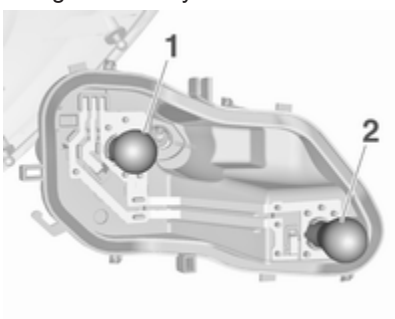

5. Remove the bulb by pushing the bulb slightly into the socket and rotating anticlockwise:

   Tail light / brake light (**1**)

   Turn light (**2**)

6. Insert bulb into bulb carrier and turn clockwise. Engage bulb carrier into the light assembly. Fit light assembly with the retaining pins into the recesses of the vehicle body and tighten the plastic securing nuts from inside the load compartment.

   Close cover and engage.

Reversing light / rear fog light

Left-hand drive models

Reversing light is located on the right light assembly in the tailgate, and the rear fog light is located on the left light assembly in the tailgate.

Right-hand drive models

Reversing light is located on the left light assembly in the tailgate, and the rear fog light is located on the right light assembly in the tailgate.

The description of bulb replacement is the same for both lights.

1. Remove screw from the tailgate.

2. Move light assembly slightly to the outside, then withdraw from the tailgate.

3. Remove the bulb holder by turning.

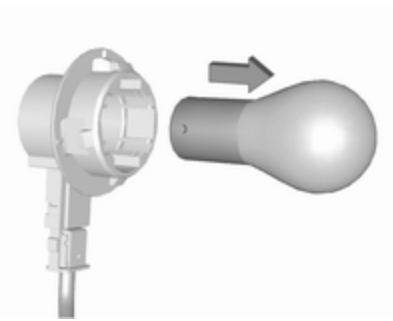

4. Remove the bulb by pushing slightly into the socket and rotating anticlockwise. Replace the bulb.
5. Insert the bulb socket into the assembly and turn to secure.
6. Attach light assembly into the tailgate and secure with the screw.

Side turn lights

To replace bulb, remove lamp housing:

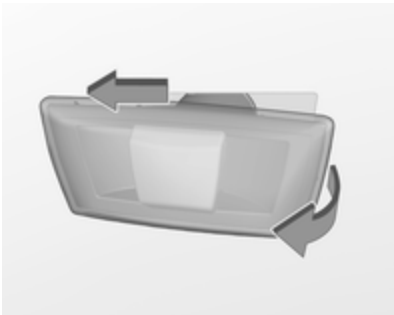

1. Slide lamp to its left side and remove with its right end.

2. Turn bulb holder anticlockwise and remove from housing.

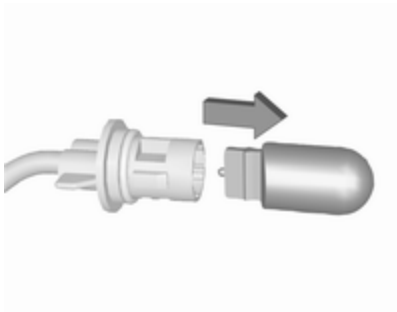

3. Pull bulb from bulb holder and replace it.

4. Insert bulb holder and turn clockwise.
5. Insert left end of the lamp, slide to the left and insert right end.

Centre high-mounted brake light

Have LEDs replaced by a workshop.

Number plate light

1. Insert screwdriver in recess of the cover, press to the side and release spring.

2. Remove lamp downwards, taking care not to pull on the cable.

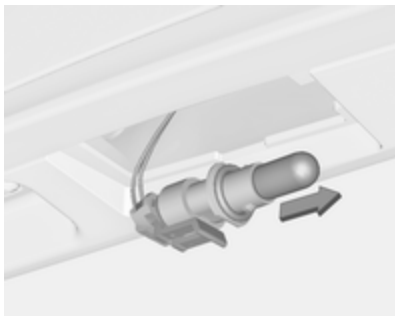

3. Remove bulb holder from lamp housing by turning anticlockwise.

4. Pull bulb from bulb holder and replace it.
5. Insert bulb holder into lamp housing and turn clockwise.
6. Insert lamp into bumper and let engage.

Interior lights

Have the following bulbs replaced by a workshop:

- courtesy light, reading lights
- load compartment light
- dome light
- instrument panel illumination

Electrical system

Fuses

Data on the replacement fuse must match the data on the defective fuse.

There are two fuse boxes in the vehicle:

- in the front left of the engine compartment
- in left-hand drive vehicles, behind the light switch, or, in right-hand drive vehicles, behind the glovebox

Before replacing a fuse, turn off the respective switch and the ignition.

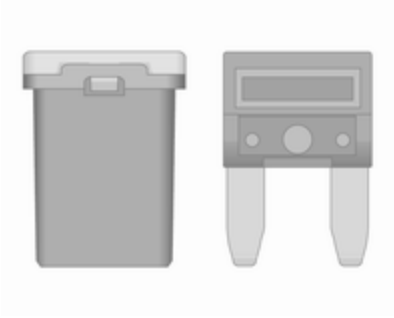

There are different kinds of fuses in the vehicle.

Depending on the type of fuse, a blown fuse can be recognized by its melted wire. Do not replace the fuse until the cause of the fault has been remedied.

Some functions are protected by several fuses.

Fuses may also be inserted without existence of a function.

Fuse extractor

A fuse extractor may be located in the fuse box in the engine compartment.

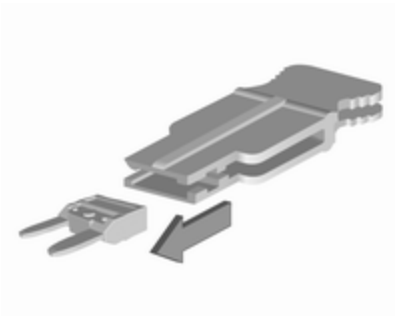

Place the fuse extractor on the various types of fuse from the top, and withdraw fuse.

Engine compartment fuse box

The fuse box is in the front left of the engine compartment.

Disengage the cover and fold it upwards until it stops. Remove the cover vertically upwards.

No.	Circuit
1	-
2	-
3	Battery sensor
4	Chassis control module, fuel pump
5	ABS
6	Low beam and daytime running light left, Xenon high beam
7	–
8	LPG control module
9	Body control module
10	Headlamp levelling
11	Rear wiper
12	Heated rear window
13	Low beam and daytime running light right
14	Heated exterior mirror
15	–

No.	Circuit
16	Brake booster kit
17	Ignition signal, waterpump
18	Engine control module
19	Fuel pump
20	–
21	Engine solenoids, engine sensors
22	–
23	Ignition coils, injectors
24	Washer system
25	–
26	Engine sensors
27	Engine management
28	Engine control module
29	Engine control module
30	Engine control module
31	High beam left, Xenon low beam left

No.	Circuit
32	High beam right, Xenon low beam right
33	Engine control module
34	Horn
35	Air condition compressor clutch
36	Front fog lights

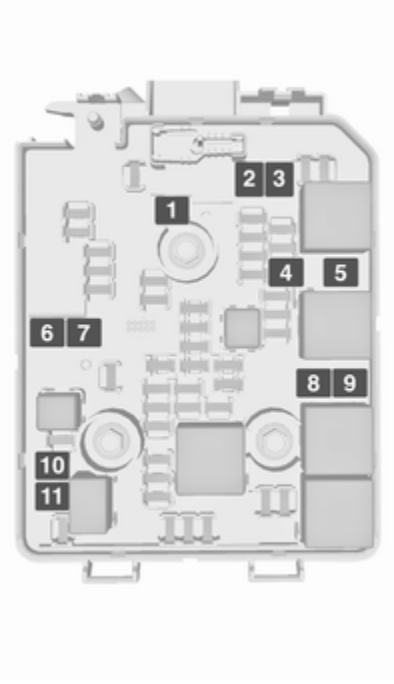

No.	Circuit
1	ABS
2	Front wiper
3	Blower
4	Seat heating
5	Cooling fan
6	–
7	Transmission
8	Cooling fan
9	Cooling fan
10	Cooling fan
11	Starter

After having changed defective fuses close the fuse box cover and press until it engages.

If the fuse box cover is not closed correctly, malfunction may occur.

Instrument panel fuse box

Left-hand drive vehicles

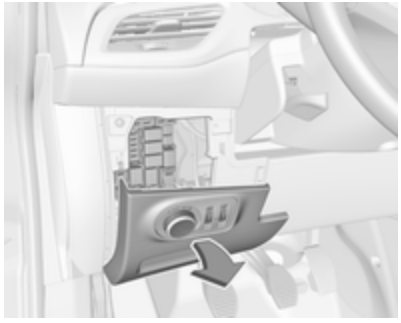

The fuse box is behind the light switch in the instrument panel. Hold the handle, then pull and fold down the light switch.

Right-hand drive vehicles

The fuse box is located behind a cover in the glovebox. Open the glovebox, then open the cover and fold it down.

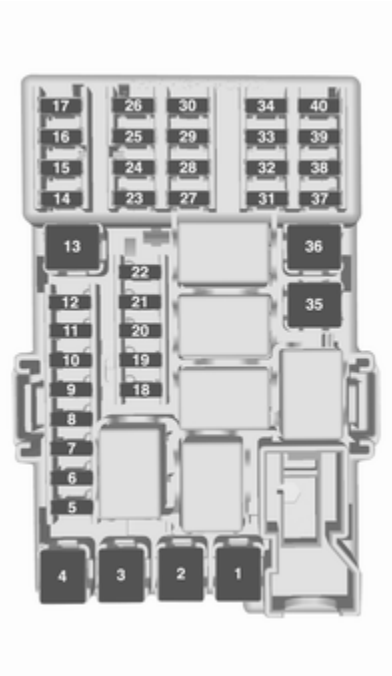

No.	Circuit
1	–
2	–
3	Power windows
4	Voltage transformer
5	Body control module 1
6	Body control module 2
7	Body control module 3
8	Body control module 4
9	Body control module 5
10	Body control module 6
11	Body control module 7
12	Body control module 8
13	–
14	Tailgate
15	Airbag system
16	Data link connector
17	Ignition

No.	Circuit
18	Air conditioning system
19	–
20	Parking assist, rain sensor, front camera
21	Brake switch
22	Infotainment system
23	Display
24	–
25	Auxiliary jack
26	Instrument panel
27	–
28	–
29	–
30	–
31	Horn
32	–
33	Heated steering wheel

No.	Circuit
34	–
35	Tyre repair kit
36	–
37	Rear wiper
38	Cigarette lighter
39	Power windows, automatic transmission display
40	–

Vehicle tools

Tools

Vehicles without spare wheel

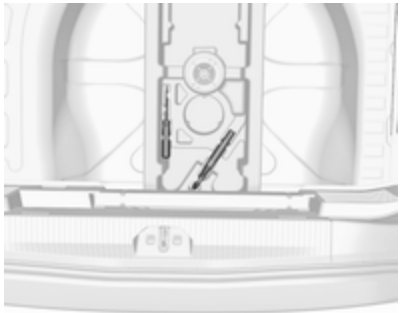

The tools and the towing eye are located in the load compartment below the floor cover.

On LPG version, the tools and the towing eye are located on the right side of the load compartment behind a cover.

Vehicles with spare wheel

The jack, wheel bolt wrench and some tools are located on the right side of the load compartment, behind a cover ⇨ 59.

Wheels and tyres

Tyre condition, wheel condition

Drive over edges slowly and at right angles if possible. Driving over sharp edges can cause tyre and wheel damage. Do not trap tyres on the kerb when parking.

Regularly check the wheels for damage. Seek the assistance of a workshop in the event of damage or unusual wear.

We recommend not swapping the front wheels with the rear wheels and vice versa, as this can affect vehicle stability. Always use less worn tyres on the rear axle.

Winter tyres

Winter tyres improve driving safety at temperatures below 7 °C and should therefore be fitted on all wheels.

All tyre sizes are permitted as winter tyres ⇨ 214.

In accordance with country-specific regulations, affix the speed sticker in the driver's field of view.

⚠ Danger

Use winter tyres at temperatures below 0 °C, otherwise damage of the high performance sports tyres is possible.

Tyre designations

E.g. **195/55 R 16 95 H**

195 : tyre width, mm
55 : cross-section ratio (tyre height to tyre width), percentage
R : belt type: Radial
RF : type: RunFlat
16 : wheel diameter, inches
95 : load index e.g. 95 is equivalent to 690 kg
H : speed code letter

Speed code letter:

Q : up to 160 km/h
S : up to 180 km/h
T : up to 190 km/h
H : up to 210 km/h
V : up to 240 km/h
W : up to 270 km/h

Choose a tyre appropriate for the maximum speed of your vehicle. Refer to the EEC Certificate of Conformity provided with your vehicle or other national registration documents. Optional equipment could reduce the maximum speed of the vehicle.

Directional tyres

Directional tyres must be mounted so that they rotate in the correct direction. The proper rotation direction is indicated by a symbol (e.g. an arrow) on the sidewall.

Tyre pressure

Check the pressure of cold tyres at least every 14 days and before any long journey.

Do not forget the spare wheel.

Tyre pressure ⇨ 214.

The tyre pressure information label on the right door frame indicates the original equipment tyres and the correspondent tyre pressures.

The tyre pressure data refers to cold tyres. It applies to summer and winter tyres.

The ECO tyre pressure serves to achieve the smallest amount of fuel consumption possible.

Incorrect tyre pressures will impair safety, vehicle handling, comfort and fuel economy and will increase tyre wear.

Tyre pressures differ depending on various options.

For the correct tyre pressure value, follow the procedure below:

- Identify the engine identifier code. Engine data ⇨ 210.
- Identify the respective tyre.

The tyre pressure table indicates the required pressure for a specific tyre size only ⇨ 214.

For the tyres approved for your vehicle, refer to the EEC Certificate of Conformity provided with your vehicle or other national registration documents.

The driver is responsible for correct adjustment of tyre pressure.

⚠ Warning

If the pressure is too low, this can result in considerable tyre warm-up and internal damage, leading to tread separation and even to tyre blow-out at high speeds.

⚠Warning

For specific tyres the recommended tyre pressure as shown in the tyre pressure table may exceed the maximum tyre pressure as indicated on the tyre. Never exceed the maximum tyre pressure as indicated on the tyre.

If the tyre pressure must be reduced or increased, switch off ignition. After adjusting tyre pressure switch on ignition and select the relevant setting on the page **Tyre load** in the Driver Information Centre ⇨ 83.

Temperature dependency

The tyre pressure depends on the temperature of the tyre. During driving, tyre temperature and pressure increase. Tyre pressure values provided on the tyre information label and tyre pressure chart are valid for cold tyres, which means at 20 °C.

The pressure increases by nearly 10 kPa for a 10 °C temperature increase. This must be considered when warm tyres are checked.

The tyre pressure value displayed in the Driver Information Centre shows the real tyre pressure. A cooled down tyre will show a decreased value, which does not indicate an air leak.

Tyre pressure monitoring system

The tyre pressure monitoring system checks the pressure of all four tyres once a minute when vehicle speed exceeds a certain limit.

Caution

Tyre pressure monitoring system warns only about low tyre pressure condition and does not replace regular tyre maintenance by the driver.

All wheels must be equipped with pressure sensors and the tyres must have the prescribed pressure.

Note
In countries where the tyre pressure monitoring system is legally required, the use of wheels without pressure sensors will invalidate the vehicle operating permit.

The current tyre pressures can be shown in the **Vehicle Information Menu** in the Driver Information Centre.

The menu can be selected by pressing the buttons on the stalk.

Press **MENU** to select the **Vehicle Information Menu**.

Turn the adjuster wheel to select the tyre pressure monitoring system.

Midlevel display:

The tyre pressure for each tyre is displayed on its own page.

Uplevel display:

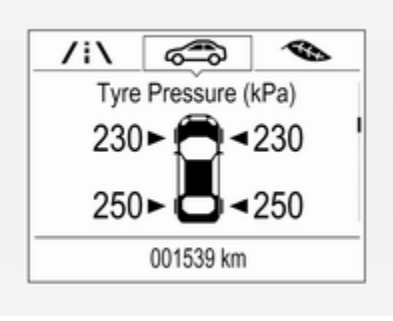

The tyre pressures for all tyres are displayed on one page.

System status and pressure warnings are displayed by a message indicating the corresponding tyre in the Driver Information Centre.

The system considers the tyre temperature for the warnings.

Temperature dependency ⇨ 179.

A detected low tyre pressure condition is indicated by the control indicator (!) ⇨ 81.

If (!) illuminates, stop as soon as possible and inflate the tyres as recommended ⇨ 214.

If (!) flashes for 60-90 seconds then illuminates continuously, there is a fault in the system. Consult a workshop.

After inflating, some driving may be required to update the tyre pressure values in the Driver Information Centre. During this time (!) may illuminate.

If (!) illuminates at lower temperatures and extinguishes after driving, this could be an indicator for approaching a low tyre pressure condition. Check tyre pressure.

Vehicle messages ⇨ 89.

If the tyre pressure must be reduced or increased, switch off ignition.

Only mount wheels with pressure sensors, otherwise the tyre pressure will not be displayed and (!) illuminates continuously.

A spare wheel or temporary spare wheel is not equipped with pressure sensors. The tyre pressure monitoring system is not operational for these tyres. Control indicator (!) illuminates. For the further three tyres, the system remains operational.

The use of commercially-available liquid tyre repair kits can impair the function of the system. Factory-approved repair kits can be used.

Operating electronic devices or being close to facilities using similar wave frequencies could disrupt the tyre pressure monitoring system.

Each time the tyres are replaced, tyre pressure monitoring system sensors must be dismounted and serviced. For the screwed sensor; replace valve core and sealing ring. For the clipped sensor; replace complete valve stem.

Vehicle loading status

Adjust tyre pressure to load condition according to the tyre information label or tyre pressure chart ⇨ 214, and select the appropriate setting in the menu **Tyre Load** in the Driver Information Centre, **Vehicle Information Menu** ⇨ 83. This setting is the reference for the tyre pressure warnings.

The menu **Tyre Load** only appears when the vehicle is at a standstill and the parking brake is applied.

On vehicles with automatic transmission, the selector lever must be in **P**.

Midlevel display:

Select

- **LO** for comfort pressure up to three people.
- **ECO** for Eco pressure up to three people.
- **Hi** for full loading.

Uplevel display:

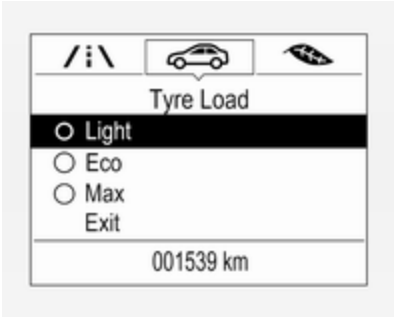

Select

- **Light** for comfort pressure up to three people.
- **Eco** for Eco pressure up to three people.
- **Max** for full loading.

Tyre pressure sensor matching process

Each pressure sensor has a unique identification code. The identification code must be matched to a new wheel position after rotating the wheels or exchanging the complete wheel set and if one or more tyre pressure sensors were replaced. The

tyre pressure sensor matching process should also be performed after replacing a spare wheel with a road wheel containing a tyre pressure sensor.

The malfunction light ⓘ and the warning message or code should extinguish at the next ignition cycle. The sensors are matched to the wheel positions, using a relearn tool, in the following order: left side front wheel, right side front wheel, right side rear wheel and left side rear wheel. The turn light at the current active position is illuminated until sensor is matched.

Consult a workshop for service. There are 2 minutes to match the first wheel position, and 5 minutes overall to match all four wheel positions. If it takes longer, the matching process stops and must be restarted.

The tyre pressure sensor matching process is:

1. Apply the parking brake.
2. Turn the ignition on.
3. On vehicles with automatic transmission: set the selector lever to **P**.

   On vehicles with manual transmission: select neutral.
4. Use **MENU** on the stalk to select the **Vehicle Information Menu** in the Driver Information Centre.
5. Turn the adjuster wheel to scroll to the tyre pressure menu.

   Midlevel display:

Uplevel display:

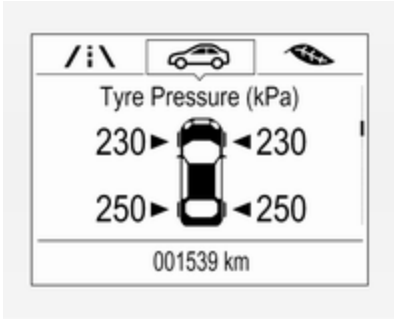

6. Press **SET/CLR** to begin the sensor matching process. A message requesting acceptance of the process should be displayed.
7. Press **SET/CLR** again to confirm the selection. The horn sounds twice to indicate that the receiver is in relearn mode.
8. Start with the left side front wheel.
9. Place the relearn tool against the tyre sidewall, near the valve stem. Then press the button to activate the tyre pressure sensor. A horn chirp confirms that the sensor identification code has been matched to this wheel position.

10. Proceed to the right side front wheel, and repeat the procedure in step 9 .
11. Proceed to the right side rear wheel, and repeat the procedure in step 9.
12. Proceed to the left side rear wheel, and repeat the procedure in step 9. The horn sounds twice to indicate that the sensor identification code has been matched to the left side rear wheel, and the tyre pressure sensor matching process is no longer active.
13. Turn off the ignition.
14. Set all four tyres to the recommended air pressure level as indicated on the tyre pressure information label.
15. Ensure the tyre loading status is set according to the selected pressure ⇨ 83.

Tread depth

Check tread depth at regular intervals.

Tyres should be replaced for safety reasons at a tread depth of 2-3 mm (4 mm for winter tyres).

For safety reasons it is recommended that the tread depth of the tyres on one axle should not vary by more than 2 mm.

The legally permissible minimum tread depth (1.6 mm) has been reached when the tread has worn down as far as one of the tread wear indicators (TWI). Their position is indicated by markings on the sidewall.

Tyres age, even if they are not used. We recommend tyre replacement every six years.

Changing tyre and wheel size

If tyres of a different size than those fitted at the factory are used, it may be necessary to reprogramme the nominal tyre pressure and to make other vehicle modifications.

After converting to a different tyre size, have the label with tyre pressures replaced.

Tyre pressure monitoring system ⇨ 180.

Caution
When converting to wheels with 14 inch diameter, the ground clearance will be reduced. This must be considered when passing over obstacles.

⚠Warning

The use of unsuitable tyres or wheels may lead to accidents and will invalidate the vehicle operating permit.

Wheel covers

Wheel covers and tyres that are factory approved for the respective vehicle and comply with all of the relevant wheel and tyre combination requirements must be used.

If the wheel covers and tyres used are not factory approved, the tyres must not have a rim protection ridge.

Wheel covers must not impair brake cooling.

⚠Warning

Use of unsuitable tyres or wheel covers could lead to sudden pressure loss and thereby accidents.

Steel wheels: When using locking wheel nuts, do not attach wheel covers.

Tyre chains

Tyre chains are only permitted on the front wheels.

Always use fine mesh chains that add no more than 10 mm to the tyre tread and the inboard sides (including chain lock).

⚠Warning

Damage may lead to tyre blowout.

Tyre chains are permitted on tyres of size 175/70 R14, 185/70 R14, 185/65 R15, 205/45 R17.

Tyre chains are permitted on tyres of size 195/55 R16 with rims of size 16 x 6 and 16 x 6.5, the latter only in combination with limited steering angle. Seek the assistance of a workshop.

Tyre chains are not permitted on tyres of size 215/45 R17 and 215/40 R18.

The use of tyre chains is not permitted on the temporary spare wheel.

Tyre repair kit

Minor damage to the tyre tread can be repaired with the tyre repair kit.

Do not remove foreign bodies from the tyres.

Tyre damage exceeding 4 mm or that is at the tyre's side wall near the rim cannot be repaired with the tyre repair kit.

⚠Warning

Do not drive faster than 80 km/h.

Do not use for a lengthy period.

Steering and handling may be affected.

If you have a flat tyre:

Apply the parking brake and engage first gear, reverse gear or **P**.

The tyre repair kit is stowed in the load compartment.

Depending on the equipment, the tyre repair kit is in a compartment in the right sidewall or in a compartment under the floor cover.

Vehicles with tyre repair kit under the floor cover

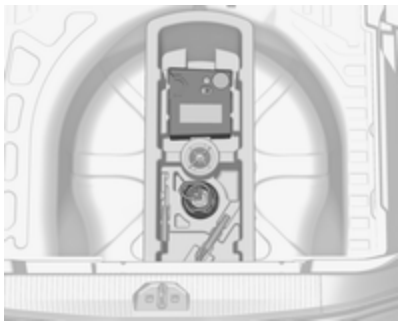

1. Take the tyre repair kit from the compartment.
2. Remove the compressor.

3. Remove the electrical connection cable and air hose from the stowage compartments on the underside of the compressor.

4. Screw the compressor air hose to the connection on the sealant bottle.
5. Fit the sealant bottle into the retainer on the compressor.

   Set the compressor near the tyre in such a way that the sealant bottle is upright.

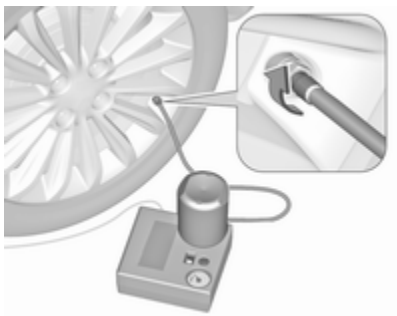

6. Unscrew valve cap from defective tyre.
7. Screw the filler hose to the tyre valve.
8. The switch on the compressor must be set to O.
9. Connect the compressor plug to the power outlet or cigarette lighter socket.

   To avoid discharging the battery, we recommend running the engine.

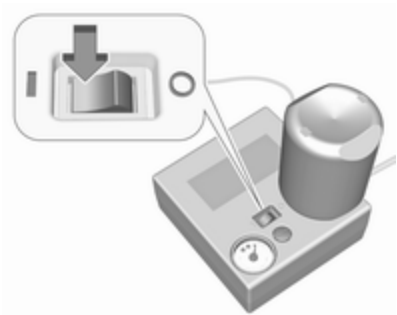

10. Set the rocker switch on the compressor to I. The tyre is filled with sealant.
11. The compressor pressure gauge briefly indicates up to 6 bar whilst the sealant bottle is emptying (approx. 30 seconds). Then the pressure starts to drop.
12. All of the sealant is pumped into the tyre. Then the tyre is inflated.
13. The prescribed tyre pressure should be obtained within 10 min.

    Tyre pressure ⇨ 214.

    When the correct pressure is obtained, switch off the compressor.

    If the prescribed tyre pressure is not obtained within 10 min, remove the tyre repair kit. Move the vehicle one tyre rotation. Reattach the tyre repair kit and continue the filling procedure for 10 min. If the prescribed tyre pressure is still not obtained, the tyre is too badly damaged. Seek the assistance of a workshop.

Drain excess tyre pressure with the button over the pressure indicator.

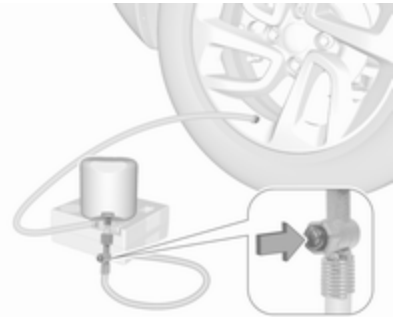

Depending on version the button can be located on the air hose.

Do not run the compressor longer than 10 min.

14. Detach the tyre repair kit. Push catch on bracket to remove sealant bottle from bracket. Screw the tyre inflation hose to the free connection of the sealant bottle. This prevents sealant from escaping. Stow tyre repair kit in load compartment.
15. Remove any excess sealant using a cloth.
16. Take the label indicating maximum permitted speed from the sealant bottle and affix in the driver's field of view.
17. Continue driving immediately so that sealant is evenly distributed in the tyre. After driving approx. 10 km (but no more than 10 minutes), stop and check tyre pressure. Screw compressor air hose directly onto tyre valve and compressor when doing this.

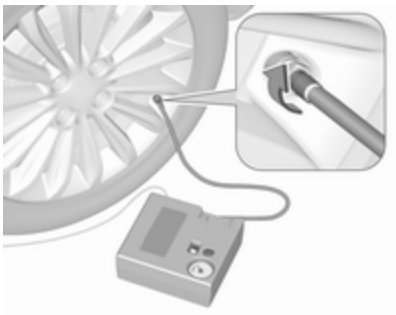

If tyre pressure is more than 1.3 bar, set it to the correct value. Repeat the procedure until there is no more loss of pressure.

If the tyre pressure has fallen below 1.3 bar, the vehicle must not be used. Seek the assistance of a workshop.

18. Stow away tyre repair kit in load compartment.

Vehicles with tyre repair kit in the sidewall

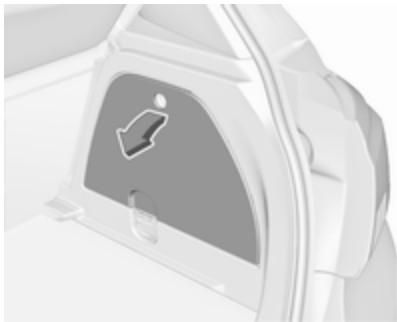

To open the compartment, disengage the cover and open it.

1. Take the sealant bottle and bracket with air hose from the insert.

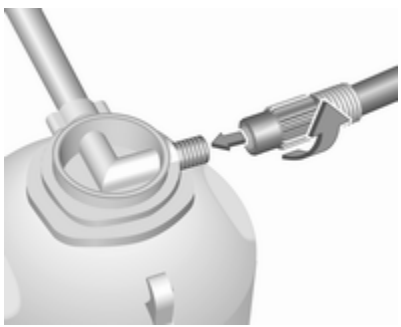

2. Detach air hose from bracket and screw onto sealant bottle connection.

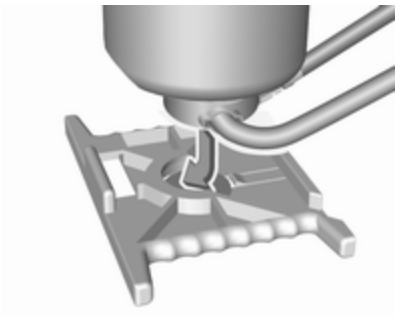

3. Position the sealant bottle on the bracket. Make sure that the bottle does not fall.

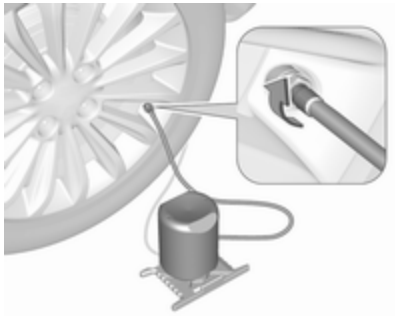

4. Unscrew valve cap from defective tyre.
5. Screw tyre inflation hose to valve.
6. Screw air hose onto compressor connection.
7. Switch on ignition.

   To avoid discharging the battery, we recommend running the engine.

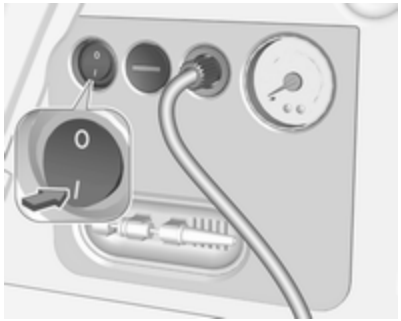

8. Press on/off switch on the compressor. The tyre is filled with sealant.
9. The compressor pressure gauge briefly indicates up to 6 bar whilst the sealant bottle is emptying (approx. 30 seconds). Then the pressure starts to drop.
10. All of the sealant is pumped into the tyre. Then the tyre is inflated.
11. The prescribed tyre pressure should be obtained within 10 minutes.

    Tyre pressure ⇨ 214.

    When the correct pressure is obtained, switch off the compressor by pressing the on/off switch again.

    If the prescribed tyre pressure is not obtained within 10 minutes, remove the tyre repair kit. Move the vehicle one tyre rotation. Reattach the tyre repair kit and continue the filling procedure for 10 minutes. If the prescribed tyre pressure is still not obtained, the tyre is too badly damaged. Seek the assistance of a workshop.

    Release excess tyre pressure using ▬.

    Do not run the compressor for longer than 10 minutes.
12. Push catch on bracket to remove sealant bottle from bracket. Screw the tyre inflation hose to the free connection of the sealant bottle. This prevents sealant from escaping. Stow tyre repair kit in load compartment.
13. Remove any excess sealant using a cloth.
14. Take the label indicating maximum permitted speed from the sealant bottle and affix in the driver's field of view.
15. Continue driving immediately so that sealant is evenly distributed in the tyre. After driving approx. 10 km (but no more than 10 minutes), stop and check tyre pressure. Screw compressor air hose directly onto tyre valve and compressor when doing this.

    If tyre pressure is more than 1.3 bar, set it to the correct value. Repeat the procedure until there is no more loss of pressure.

    If the tyre pressure has fallen below 1.3 bar, the vehicle must not be used. Seek the assistance of a workshop.
16. Stow away tyre repair kit in load compartment.

General information

Note
The driving characteristics of the repaired tyre are severely affected, therefore have this tyre replaced.

If unusual noise is heard or the compressor becomes hot, turn compressor off for at least 30 min.

The built-in safety valve opens at a pressure of 7 bar.

Note the expiry date of the kit. After this date its sealing capability is no longer guaranteed. Pay attention to storage information on sealant bottle.

Replace the used sealant bottle. Dispose of the bottle as prescribed by applicable laws.

The compressor and sealant can be used from approx. -30 °C.

The adapters possibly supplied can be used to pump up other items e.g. footballs, air mattresses, inflatable dinghies etc. They can be located on the underside of the compressor. To remove, screw on compressor air hose and withdraw adapter.

Wheel changing

Make the following preparations and observe the following information:

- Park the vehicle on a level, firm and non-skid surface. The front wheels must be in the straight-ahead position.
- Apply the parking brake and engage first gear, reverse gear or **P**.
- If the ground on which the vehicle is standing is soft, a solid board (max. 1 cm thick) should be placed under the jack.
- Take heavy objects out of the vehicle before jacking up.
- No people or animals may be in the vehicle when it is jacked-up.
- Never crawl under a jacked-up vehicle.
- Do not start the vehicle when it is raised on the jack.
- Before screwing in the wheel bolts, clean them and lightly coat the taper of each wheel bolt with commercially available grease.

⚠ Warning

Do not grease the thread of the wheel bolt.

Jacking positions

The jacking positions shown refer to the use of lifting arms and accessory jacks used for changing winter / summer tyres.

Rear arm position of the lifting platform located centrally under the recess of the sill.

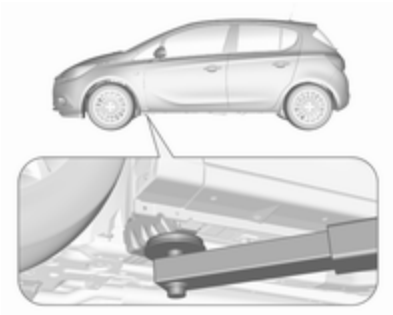

Front arm position of the lifting platform at the underbody.

Spare wheel

The spare wheel can be classified as a temporary spare wheel depending on the size compared to the other mounted wheels and country regulations. In this case a permissible maximum speed applies, even though no label at the spare wheel indicates this.

Only mount one temporary spare wheel. Do not drive faster than 80 km/h. Take curves slowly. Do not use for a long period of time.

Caution

The use of a spare wheel that is smaller than the other wheels or in combination with winter tyres could affect driveability. Have the defective tyre replaced as soon as possible.

3-door / 5-door hatchback

The spare wheel is located in the load compartment beneath the floor covering. It is secured with a wing nut.

Fitting a double load-bay floor in this case in the upper position ⇨ 59.

To remove, unscrew wing nut, lift spare wheel, move to a vertical position and remove from above.

When stowing the replaced wheel or the temporary spare wheel back in the spare wheel well, always secure with the wing nut.

Fitting the spare wheel

Make the following preparations and observe the following information:

- Park the vehicle on a level, firm and non-skid surface. The front wheels must be in the straight-ahead position.
- Apply the parking brake and engage first gear, reverse gear or **P**.
- Remove the spare wheel.
- Never change more than one wheel at once.
- Use the jack only to change wheels in case of puncture, not for seasonal winter or summer tyre change.
- The jack is maintenance-free.

- If the ground on which the vehicle is standing is soft, a solid board (max. 1 cm thick) should be placed under the jack.
- Take heavy objects out of the vehicle before jacking up.
- No people or animals may be in the vehicle when it is jacked-up.
- Never crawl under a jacked-up vehicle.
- Do not start the vehicle when it is raised on the jack.
- Before screwing in the wheel bolts, clean them and lightly coat the taper of each wheel bolt with commercially available grease.

⚠ Warning

Do not grease the thread of the wheel bolt.

1. **Steel wheels:**

   Pull off the wheel cover.

   Alloy wheels with bolt caps

   Disengage wheel bolt caps with a screwdriver and remove. To protect the wheel, place a soft cloth between the screwdriver and the alloy wheel.

2. Install the wheel wrench ensuring that it locates securely and loosen each wheel bolt by half a turn.

   The wheels might be protected by locking wheel bolts. To loosen these specific bolts, first attach the adapter for the locking wheel bolts onto the head of the bolt before installing the wheel wrench. The adapter is located in the glovebox.

3. Ensure the jack is correctly positioned under the relevant vehicle jacking point.

   On versions with sill panels or retrofitted sill panels, no jack may be used. The vehicle may be damaged.

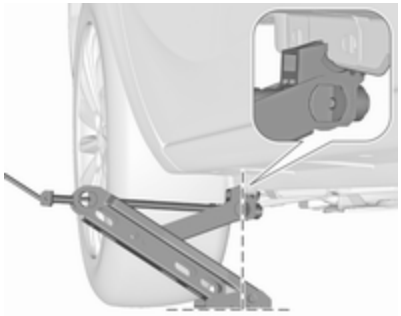

4. Set the jack to the necessary height. Position it directly below the jacking point in a manner that prevents it from slipping.

Attach jack handle and with the jack correctly aligned rotate handle until wheel is clear of the ground.

5. Unscrew the wheel bolts.
6. Change the wheel.
7. Screw on the wheel bolts.
8. Lower vehicle.
9. Install the wheel wrench ensuring that it is securely located and tighten each bolt in a crosswise sequence. Tightening torque is 110 Nm.
10. Align the valve hole in the wheel cover of the steel wheel with the tyre valve before installing.

    Install wheel bolt caps or centre cap on alloy wheel.
11. Install vehicle jacking point cover.
12. Stow and secure the replaced wheel and the vehicle tools ⇨ 177.

    Stow the adapter for the locking wheel bolts ⇨ 55.
13. Check the tyre pressure of the installed tyre and the wheel bolt torque as soon as possible.

Spare wheel with directional tyre

If possible, fit directional tyres such that they roll in the direction of travel. The rolling direction is indicated by a symbol (e.g. an arrow) on the sidewall.

The following applies to tyres fitted opposing the rolling direction:

- Driveability may be affected. Have the defective tyre renewed or repaired as soon as possible and fit it instead of the spare wheel.
- Drive particularly carefully on wet and snow-covered road surfaces.

Jump starting

Do not start with a quick charger.

A vehicle with a discharged vehicle battery can be started using jump leads and the vehicle battery of another vehicle.

⚠ Warning

Be extremely careful when starting with jump leads. Any deviation from the following instructions can lead to injuries or damage caused by battery explosion or damage to the electrical systems of both vehicles.

⚠ Warning

Avoid contact of the battery with eyes, skin, fabrics and painted surfaces. The fluid contains sulphuric acid which can cause injuries and damage in the event of direct contact.

- Never expose the battery to naked flames or sparks.
- A discharged vehicle battery can already freeze at a temperature of 0 °C. Defrost the frozen battery before connecting jump leads.
- Wear eye protection and protective clothing when handling a battery.
- Use a booster battery with the same voltage (12 V). Its capacity (Ah) must not be much less than that of the discharged vehicle battery.
- Use jump leads with insulated terminals and a cross section of at least 16 mm^2.
- Do not disconnect the discharged vehicle battery from the vehicle.
- Switch off all unnecessary electrical consumers.
- Do not lean over the battery during jump starting.
- Do not allow the terminals of one lead to touch those of the other lead.
- The vehicles must not come into contact with each other during the jump starting process.
- Apply the parking brake, transmission in neutral, automatic transmission in **P**.
- Open the positive terminal protection caps of both vehicle batteries.

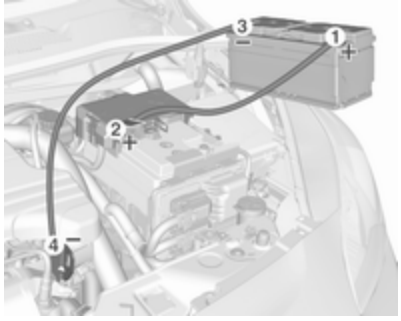

Lead connection order:

1. Connect the red lead to the positive terminal of the booster vehicle battery.
2. Connect the other end of the red lead to the positive terminal of the discharged vehicle battery.

3. Connect the black lead to the negative terminal of the booster vehicle battery.
4. Connect the other end of the black lead to a vehicle grounding point, such as the engine block or an engine mounting bolt. Connect as far away from the discharged vehicle battery as possible, however at least 60 cm.

Route the leads so that they cannot catch on rotating parts in the engine compartment.

To start the engine:

1. Start the engine of the vehicle providing the jump.
2. After 5 minutes, start the other engine. Start attempts should be made for no longer than 15 seconds at an interval of 1 minute.
3. Allow both engines to idle for approx. 3 minutes with the leads connected.
4. Switch on electrical consumers (e.g. headlights, heated rear window) of the vehicle receiving the jump start.
5. Reverse above sequence exactly when removing leads.

Towing

Towing the vehicle

Wrap a cloth around the tip of a flat screwdriver to prevent paint damage. Insert the screwdriver in the slot at the lower part of the cap. Release the cap by carefully moving the screwdriver downwards.

The towing eye is stowed with the vehicle tools ⇨ 177.

Screw in the towing eye as far as it will go until it stops in a horizontal position.

Attach a tow rope – or better still a tow rod – to the towing eye.

The towing eye must only be used for towing and not for recovering the vehicle.

Switch on ignition to release steering wheel lock and to permit operation of brake lights, horn and windscreen wiper.

Switch the selector lever to neutral.

Release the parking brake.

Caution

Drive slowly. Do not drive jerkily. Excessive tractive force can damage the vehicle.

When the engine is not running, considerably more force is needed to brake and steer.

To prevent the entry of exhaust gases from the towing vehicle, switch on the air recirculation and close the windows.

Vehicles with automatic transmission: the vehicle must be towed facing forwards, not faster than 80 km/h nor further than 100 km. In all other cases and when the transmission is defective, the front axle must be raised off the ground.

Seek the assistance of a workshop.

After towing, unscrew the towing eye.

Insert cap at the top and engage downwards.

Towing another vehicle

Wrap a cloth around the tip of a flat screwdriver to prevent paint damage. Insert the screwdriver in the slot at the lower part of the cap. Release the cap by carefully moving the screwdriver downwards.

The towing eye is stowed with the vehicle tools ⇨ 177.

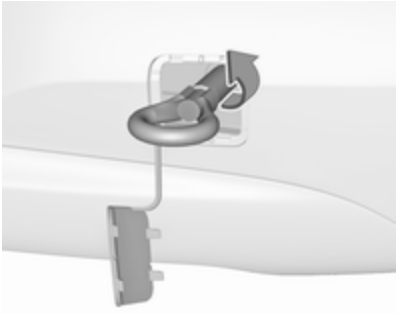

Screw in the towing eye as far as it will go until it stops in a horizontal position.

The lashing eye at the rear underneath the vehicle must never be used as a towing eye.

Attach a tow rope – or even better a tow bar – to the towing eye.

The towing eye must only be used for towing and not for recovering a vehicle.

Caution
Drive slowly. Do not drive jerkily. Excessive tractive force can damage the vehicle.

After towing, unscrew the towing eye.

Insert cap at the top and engage downwards.

Appearance care

Exterior care

Locks

The locks are lubricated at the factory using a high quality lock cylinder grease. Use a de-icing agent only when absolutely necessary, as this has a degreasing effect and impairs lock function. After using a de-icing agent, have the locks regreased by a workshop.

Washing

The paintwork of your vehicle is exposed to environmental influences. Wash and wax your vehicle regularly. When using automatic vehicle washes, select a programme that includes waxing. Restrictions for filmed or matt painted body parts or decor tapes, see "Polishing and waxing".

Bird droppings, dead insects, resin, pollen and the like should be cleaned off immediately, as they contain aggressive constituents which can cause paint damage.

If using a car wash, comply with the car wash manufacturer's instructions. The windscreen wiper and rear window wiper must be switched off. Remove antenna and external accessories such as roof racks etc.

If you wash your vehicle by hand, make sure that the insides of the wheel housings are also thoroughly rinsed out.

Clean edges and folds on opened doors and the bonnet as well as the areas they cover.

Clean bright metal mouldings with a cleaning solution approved for aluminium to avoid damages.

Caution
Always use a cleaning agent with a pH value of 4 to 9. Do not use cleaning agents on hot surfaces.

Have the door hinges of all doors greased by a workshop.

Do not clean the engine compartment with a steam-jet or high-pressure jet cleaner.

Thoroughly rinse and leather-off the vehicle. Rinse leather frequently. Use separate leathers for painted and glass surfaces: remnants of wax on the windows will impair vision.

Do not use hard objects to remove spots of tar. Use tar removal spray on painted surfaces.

Exterior lights

Headlight and other light covers are made of plastic. Do not use any abrasive or caustic agents, do not use an ice scraper, and do not clean them dry.

Polishing and waxing

Wax painted parts of the vehicle regularly (at the latest when water no longer beads). Otherwise, the paintwork will dry out.

Polishing is necessary only if the paint has become dull or if solid deposits have become attached to it.

Paintwork polish with silicone forms a protective film, making waxing unnecessary.

Unpainted plastic body parts must not be treated with wax or polishing agents.

Matt filmed body parts or decor tapes must not be polished, to avoid gleaming. Do not use hot wax programmes in automatic car washes if the vehicle is equipped with these parts.

Matt painted decor parts, e.g. mirror housing cover, must not be polished. Otherwise these parts would become agleam or the colour would be dissolved.

Windows and wiper blades

Switch off wipers before handling in their areas.

Use a soft lint-free cloth or chamois leather together with window cleaner and insect remover.

When cleaning the rear window from inside, always wipe in parallel to the heating element to prevent damage.

For mechanical removal of ice, use a sharp-edged ice scraper. Press the scraper firmly against the glass so that no dirt can get under it and scratch the glass.

Clean smearing wiper blades with a soft cloth and window cleaner.

Remove dirt residues from smearing wiper blades by using a soft cloth and window cleaner. Also make sure to remove any residues such as wax, insect residues and similar from the window.

Ice residues, pollution and continuous wiping on dry windows will damage or even destroy the wiper blades.

Wheels and tyres

Do not use high-pressure jet cleaners.

Clean rims with a pH-neutral wheel cleaner.

Rims are painted and can be treated with the same agents as the body.

Paintwork damage

Rectify minor paintwork damage with a touch-up pen before rust forms. Have more extensive damage or rust areas repaired by a workshop.

Underbody

Some areas of the vehicle underbody have a PVC undercoating while other critical areas have a durable protective wax coating.

After the underbody is washed, check the underbody and have it waxed if necessary.

Bitumen / rubber materials could damage the PVC coating. Have underbody work carried out by a workshop.

Before and after winter, wash the underbody and have the protective wax coating checked.

Liquid gas system

⚠ Danger

Liquid gas is heavier than air and can collect in sink points.

Take care when performing work at the underbody in a pit.

For painting work and when using a drying booth at a temperature above 60 °C, the liquid gas tank must be removed.

Do not make any modifications to the liquid gas system.

Towing equipment

Do not clean the coupling ball bar with a steam-jet or high-pressure jet cleaner.

Interior care

Interior and upholstery

Only clean the vehicle interior, including the instrument panel fascia and panelling, with a dry cloth or interior cleaner.

Clean the leather upholstery with clear water and a soft cloth. In case of heavy soiling, use leather care.

The instrument cluster and the displays should only be cleaned using a soft damp cloth. If necessary use a weak soap solution.

Clean fabric upholstery with a vacuum cleaner and brush. Remove stains with an upholstery cleaner.

Clothing fabrics may not be colourfast. This could cause visible discolourations, especially on light-coloured upholstery. Removable stains and discolourations should be cleaned as soon as possible.

Clean seat belts with lukewarm water or interior cleaner.

Caution

Close Velcro fasteners as open Velcro fasteners on clothing could damage seat upholstery.

The same applies to clothing with sharp-edged objects, like zips or belts or studded jeans.

Plastic and rubber parts

Plastic and rubber parts can be cleaned with the same cleaner as used to clean the body. Use interior cleaner if necessary. Do not use any other agent. Avoid solvents and petrol in particular. Do not use high-pressure jet cleaners.

Service and maintenance

General information **202**
Service information 202
Recommended fluids, lubricants and parts **203**
Recommended fluids and lubricants 203

General information

Service information

In order to ensure economical and safe vehicle operation and to maintain the value of your vehicle, it is of vital importance that all maintenance work is carried out at the proper intervals as specified.

The detailed, up-to-date service schedule for your vehicle is available at the workshop.

Service display ⇨ 74.

European service intervals

Maintenance of your vehicle is required every 30,000 km or after one year, whichever occurs first. Additional engine oil and filter change is indicated by the engine oil life system, when required earlier than maintenance.

A shorter service interval can be valid for severe driving behaviour, e.g. for taxis and police vehicles.

The European service intervals are valid for the following countries: Andorra, Austria, Belgium, Bosnia-Herzegovina, Bulgaria, Croatia, Cyprus, Czech Republic, Denmark, Estonia, Finland, France, Germany, Greece, Greenland, Hungary, Iceland, Ireland, Italy, Latvia, Liechtenstein, Lithuania, Luxembourg, Macedonia, Malta, Monaco, Montenegro, Netherlands, Norway, Poland, Portugal, Romania, San Marino, Serbia, Slovakia, Slovenia, Spain, Sweden, Switzerland, United Kingdom.

Service display ⇨ 74.

International service intervals

Maintenance of your vehicle is required every 15,000 km or after one year, whichever occurs first. Additional engine oil and filter change is indicated by the engine oil life system, when required earlier than maintenance.

Severe operating conditions exist if one or more of the following circumstances occur frequently: Cold starting, stop and go operation, trailer operation, mountain driving, driving on poor and sandy road surfaces,

increased air pollution, presence of airborne sand and high dust content, driving at high altitude and large variations of temperature. Under these severe operating conditions, certain service work may be required more frequently than the regular service interval.

The international service intervals are valid for the countries which are not listed in the European service intervals.

Service display ⇨ 74.

Confirmations

Confirmation of service is recorded in the Service and Warranty Booklet. The date and mileage is completed with the stamp and signature of the servicing workshop.

Make sure that the Service and Warranty Booklet is completed correctly as continuous proof of service is essential if any warranty or goodwill claims are to be met, and is also a benefit when selling the vehicle.

Recommended fluids, lubricants and parts

Recommended fluids and lubricants

Only use products that meet the recommended specifications.

⚠ Warning

Operating materials are hazardous and could be poisonous. Handle with care. Pay attention to information given on the containers.

Engine oil

Engine oil is identified by its quality and its viscosity. Quality is more important than viscosity when selecting which engine oil to use. The oil quality ensures e.g. engine cleanliness, wear protection and oil aging control, whereas viscosity grade gives information on the oil's thickness over a temperature range.

Dexos is the newest engine oil quality that provides optimum protection for petrol engines. If it is unavailable, engine oils of other listed qualities have to be used. Recommendations for petrol engines are also valid for Compressed Natural Gas (CNG), Liquified Petroleum Gas (LPG) and Ethanol (E85) fuelled engines.

Select the appropriate engine oil based on its quality and on the minimum ambient temperature ⇨ 207.

Topping up engine oil

Caution

In case of any spilled oil, wipe it up and dispose it properly.

Engine oils of different manufacturers and brands can be mixed as long as they comply with the required engine oil quality and viscosity.

Use of engine oils for all petrol engines with only ACEA quality is prohibited, since it can cause engine damage under certain operating conditions.

Select the appropriate engine oil based on its quality and on the minimum ambient temperature ⇨ 207.

Additional engine oil additives

The use of additional engine oil additives could cause damage and invalidate the warranty.

Engine oil viscosity grades

The SAE viscosity grade gives information of the thickness of the oil.

Multigrade oil is indicated by two figures, e.g. SAE 5W-30. The first figure, followed by a W, indicates the low temperature viscosity and the second figure the high temperature viscosity.

Select the appropriate viscosity grade depending on the minimum ambient temperature ⇨ 207.

All of the recommended viscosity grades are suitable for high ambient temperatures.

Coolant and antifreeze

Use only silicate-free long life coolant (LLC) antifreeze. Consult a workshop.

The system is factory filled with coolant designed for excellent corrosion protection and frost protection down to approx. -28 °C. In northern countries with very low temperatures the factory filled coolant provides frost protection down to approx. -37 °C. This concentration should be maintained all year round. The use of additional coolant additives that intend to give additional corrosion protection or seal against minor leaks can cause function problems. Liability for consequences resulting from the use of additional coolant additives will be rejected.

Washer fluid

Use only washer fluid approved for the vehicle to prevent damage of wiper blades, paintwork, plastic and rubber parts. Consult a workshop.

Brake and clutch fluid

Over time, brake fluid absorbs moisture which will reduce braking effectiveness. The brake fluid should therefore be replaced at the specified interval.

Technical data

Vehicle identification **205**
Vehicle Identification Number .. 205
Identification plate 206
Engine identification 206
Vehicle data **207**
Recommended fluids and lubricants 207
Engine data 210
Vehicle dimensions 212
Capacities 212
Tyre pressures 214

Vehicle identification

Vehicle Identification Number

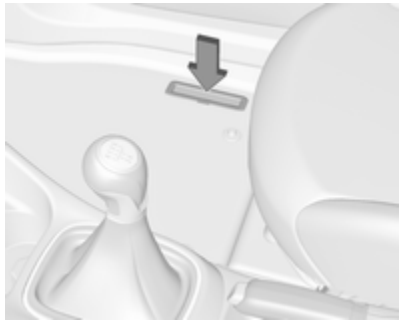

The Vehicle Identification Number is stamped on the identification plate and on the floor pan, under the floor covering, visible under a cover.

The Vehicle Identification Number may be embossed on the instrument panel, visible through the windscreen, or in the engine compartment on the right body panel.

Identification plate

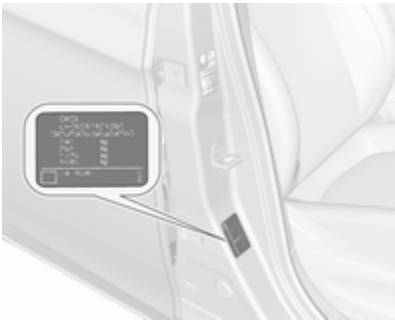

The identification plate is located on the left or right door frame.

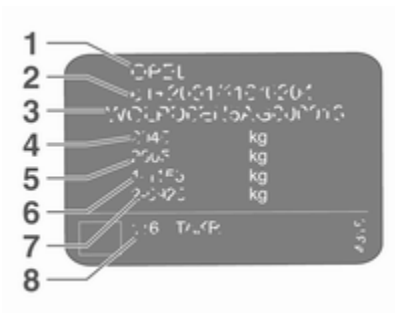

Information on identification label:

1 : manufacturer
2 : type approval number
3 : vehicle identification number
4 : permissible gross vehicle weight rating in kg
5 : permissible gross train weight in kg
6 : maximum permissible front axle load in kg
7 : maximum permissible rear axle load in kg
8 : vehicle-specific or country-specific data

The combined total of front and rear axle loads must not exceed the permissible gross vehicle weight.

Vehicle's kerb weight depends on the specification of the vehicle, e.g. optional equipment and accessories. Refer to the EEC Certificate of Conformity provided with your vehicle or other national registration documents.

The technical data is determined in accordance with European Community standards. We reserve the right to make modifications.

Specifications in the vehicle documents always have priority over those given in this manual.

Engine identification

The technical data tables use the engine identifier code. The engine data table additionally shows the engineering code.

Engine data ⇨ 210.

To identify the respective engine, refer to the EEC Certificate of Conformity provided with your vehicle or other national registration documents.

The Certificate of Conformity shows the engine identifier code, other national publications may show the engineering code. Check piston displacement and engine power to identify the respective engine.

Vehicle data

Recommended fluids and lubricants

European service schedule

Required engine oil quality

	All European countries with European service interval ⇨ 202	
Engine oil quality	Petrol engines B / D / F10XFL, D14NEH	All other petrol engines (including LPG, E85)
dexos1 Gen2	✓	–
dexos2	–	✓

All engines except B / D / F10XFL and D14NEH: In case dexos quality is unavailable, you may use max. 1 l engine oil quality ACEA C3 for topping up once between each engine oil change.

Engine oil viscosity grades

	All European countries with European service interval ⇨ 202
Ambient temperature	Petrol engines
down to -25 °C	SAE 0W-30 or SAE 0W-40 SAE 5W-30 or SAE 5W-40
below -25 °C	SAE 0W-30 or SAE 0W-40

International service schedule

Required engine oil quality

	All European countries with European service interval ⇨ 202	
Engine oil quality	Petrol engines B / D / F10XFL, D14NEH	All other petrol engines (including LPG, E85)
dexos1 Gen2	✓	–
dexos2	–	✓

In case dexos quality is unavailable, you may use the engine oil qualities listed below:

	All countries with international service interval ⇨ 202	
Engine oil quality	Petrol engines B / D / F10XFL, D14NEH	All other petrol engines (including LPG, E85)
ACEA A3/B4	–	✓
ACEA C3	–	✓

Engine oil viscosity grades

	All countries with international service interval ⇨ 202
Ambient temperature	Petrol engines
down to -25 °C	SAE 0W-30 or SAE 0W-40 SAE 5W-30 or SAE 5W-40
below -25 °C	SAE 0W-30 or SAE 0W-40
down to -20 °C	SAE 10W-30[1)] or SAE 10W-40[1)]

1) Permitted, but usage of engine oils with dexos quality is recommended.

Engine data

Engine identifier code	B / D / F10XFL	B / D / F10XFT	D12XEL	D14XEJ
Sales designation	1.0	1.0	1.2	1.4
Engineering code	B10XFT	B10XFT	B12XER	B14XER
Piston displacement [cm^3]	999	999	1229	1398
Engine power [kW]	66	85	51	55
at rpm	3700 - 6000	5000 - 6000	5600	4200 - 6000
Torque [Nm]	170	170	115	130
at rpm	1800 - 3700	1800 - 4500	4000	4000
Fuel type	Petrol	Petrol	Petrol	Petrol
Octane rating RON[2)]				
recommended	95	95	95	95
possible	91	91	98	98
possible	98	98	91	91
Additional fuel type	–	–	–	–

2) A country-specific label at the fuel filler flap can supersede the engine-specific requirement.

Engine identifier code	D14XEL	D14NEJ	D14XEL	D14NEH
Sales designation	1.4	1.4	1.4 LPG	1.4 Turbo
Engineering code	B14XER	B14NEL	B14XER	B14NET
Piston displacement [cm^3]	1398	1364	1398	1364
Engine power [kW]	66	74	66	110
at rpm	6000	3500 - 6000	6000	5000
Torque [Nm]	130	200	130	220
at rpm	4000	1850 - 3500	4000	3000 - 4500
Fuel type	Petrol	Petrol	Liquid gas / Petrol	Petrol
Octane rating RON[2)]				
recommended	95	95	95	98
possible	98	98	98	95
possible	91	91	91	–
Additional fuel type	-	–	Liquid gas (LPG)	–

2) A country-specific label at the fuel filler flap can supersede the engine-specific requirement.

Vehicle dimensions

	5-door vehicle	3-door vehicle
Length [mm]	4021	4021 - 4036
Width with two exterior mirrors [mm]	1944	1944
Height (without antenna) [mm][3)]	1466 - 1516	1466 - 1501
Length of load compartment floor [mm]	705	705
Length of load compartment with folded rear seats [mm]	1372	1372
Load compartment width [mm]	944	944
Load compartment height [mm]	876	843
Turning circle diameter [m][4)]	11.0 - 11.9	11.0 - 11.9

3) Depending on options.
4) Depending on body and equipment variants.

Capacities

Engine oil

including filter [l]	4.0
between MIN and MAX [l]	1.0

Fuel tank	
Petrol, refilling quantity [l]	45
LPG, refilling quantity [l]	31

Tyre pressures

Engine	Tyres	Comfort with up to 3 people		ECO with up to 3 people		With full load	
		front	rear	front	rear	front	rear
		[kPa/bar] ([psi])	[kPa/bar] ([psi])	[kPa/bar] ([psi])	[kPa/bar] ([psi])	[kPa/bar] ([psi])	[kPa/bar] ([psi])
D12XEL, D14XEL, D14XEL LPG	175/70 R14, 185/70 R14, 185/65 R15, 195/55 R16, 215/45 R17	210/2.1 (31)	210/2.1 (31)	270/2.7 (39)	250/2.5 (37)	260/2.6 (38)	320/3.2 (46)
D14XEJ	175/70 R14, 185/70 R14, 185/65 R15, 215/45 R17	210/2.1 (31)	210/2.1 (31)	270/2.7 (39)	250/2.5 (37)	260/2.6 (38)	320/3.2 (46)
	195/55 R16	210/2.1 (31)	230/2.3 (34)	270/2.7 (39)	250/2.5 (37)	260/2.6 (38)	320/3.2 (46)
B / D / F10XFL, B / D / F10XFT, D14NEJ, D14NEH	185/65 R15, 195/55 R16, 215/45 R17	230/2.3 (34)	230/2.3 (34)	270/2.7 (39)	250/2.5 (37)	260/2.6 (38)	320/3.2 (46)
B / D / F10XFT Sport, D14NEH Sport	195/55 R16	230/2.3 (34)	230/2.3 (34)	270/2.7 (39)	250/2.5 (37)	260/2.6 (38)	320/3.2 (46)
	215/45 R17	240/2.4 (35)	240/2.4 (35)	270/2.7 (39)	250/2.5 (37)	260/2.6 (38)	320/3.2 (46)

Customer information

Customer information **215**
Declaration of conformity 215
REACH 218
Software acknowledgement 218
Registered trademarks 220
Vehicle data recording and privacy **220**
Event data recorders 220
Radio Frequency Identification (RFID) 223

Customer information

Declaration of conformity

Transmission systems

This vehicle has systems that transmit and / or receive radio waves subject to Directive 2014/53/EU. The manufacturers of the systems listed below declare conformity with Directive 2014/53/EU. The full text of the EU declaration of conformity for each system is available at the following internet address: www.opel.com/conformity.

Importer is
Opel / Vauxhall, Bahnhofsplatz, 65423 Ruesselsheim am Main, Germany.

Antenna
Laird

Daimlerring 31, 31135 Hildesheim, Germany

Operation frequency: N/A

Maximum output: N/A

Immobiliser
Robert Bosch GmbH

Robert Bosch Platz 1, 70839 Gerlingen, Germany

Operation frequency: 125 kHz

Maximum output:
5.1 dBµA/m @ 10 m

Infotainment system R 4.0 / Navi 4.0
LG Electronics

European Shared Service center B.V., Krijgsman 1, 1186 DM Amstelveen, The Netherlands

Operation frequency (MHz)	Maximum output (dBm)
2400.0 - 2483.5	4
2400.0 - 2483.5	13
5725.0 - 5850.0	13

Infotainment system R300 BT
Humax Automotive co. Ltd.

2, Yeongmun-ro, Cheoin-gu, Yong-in-si, Gyeonggi-do, Korea

Operation frequency:
2402 - 2480 MHz

Maximum output: 4 dBm

OnStar module
LG Electronics

European Shared Service center B.V., Krijgsman 1, 1186 DM Amstelveen, The Netherlands

Operation frequency (MHz)	Maximum output (dBm)
2402 - 2480	4
2412 - 2462	18
880 - 915	33
1710 - 1785	24
1850 - 1910	24
1920 - 1980	24
2500 - 2570	23

Radio remote control transmitter
Continental Automotive GmbH

Siemensstraße 12, 93055 Regensburg, Germany

Operation frequency: 433.92 MHz

Maximum output: -5.7 dbm

Robert Bosch GmbH

Robert Bosch Platz 1, 70839 Gerlingen, Germany

Operation frequency: 433.92 MHz

Maximum output: -4 dbm

Parking heater remote conrtol receiver
Eberspaecher Climate Control Systems GmbH & Co. KG

Eberspaecherstrasse 24, 73730 Esslingen, Germany

Operation frequency: N/A

Maximum output: N/A

Parking heater remote conrtol transmitter
Eberspaecher Climate Control Systems GmbH & Co. KG

Eberspaecherstrasse 24, 73730 Esslingen, Germany

Operation frequency: 434.6 MHz

Maximum output: 10 dBm

Radio remote control receiver
Robert Bosch GmbH

Robert Bosch Platz 1, 70839 Gerlingen, Germany

Operation frequency: N/A

Maximum output: N/A

Tyre pressure sensors
Schrader Electronics Ltd.

11 Technology Park, Belfast Road, Antrim BT41 1QS, Northern Ireland, United Kingdom

Operation frequency: 433.92 MHz

Maximum output: 10 dBm

Jack

Wir leben Autos.

Konformitätserklärung

nach EG Richtlinie 2006/42/EG

Hiermit erklären wir, dass das Produkt:

Produktbezeichnung: Wagenheber

Typ/GM-Teilenummern: 13331922

den Bestimmungen der Richtlinie 2006/42/EG entspricht.

Angewendete technische Normen:

GMN9737	Jacking
GM 14337	Standard Equipment Jack - Hardware Tests
GMN5127	Vehicle Integrity-Hoisting and Service Station Jacking
GMW15005	Standard Equipment Jack and Spare Tire, Vehicle Test
ISO TS 16949	Qualitätsmanagementsystem

Der Unterzeichner ist Bevollmächtigter für die Zusammenstellung der technischen Unterlagen.

Rüsselsheim, 31. Januar 2014

Hans-Peter Metzger
Engineering Group Manager Chassis & Structure
Adam Opel AG

Adam Opel AG
Bahnhofsplatz
65423 Rüsselsheim
T (0 61 42) 7-70, F (0 61 42) 7-7 88 00
www.opel.de

Vorstand:
Dr. Karl-Thomas Neumann (Vorsitzender),
Michael F. Ableson, Holger Kimmes,
Michael Lohscheller, Dr. Thomas Sedran,
Peter Thom, Susanna Webber, Johan Willems

Aufsichtsrat:
Stephen J. Ginsky (Vorsitzender)

Sitz der Gesellschaft: Rüsselsheim
Handelsregister:
Amtsgericht Darmstadt, HRB 89158

Ein Unternehmen der GM Gruppe

Translation of the original declaration of conformity

Declaration of conformity according to EC Directive 2006/42/EC

We declare that the product:

Product designation: Jack

Type/GM part number: 13331922

is in compliance with the provisions of Directive 2006/42/EC.

Applied technical standards:

GMN9737	:	jacking
GM 14337	:	standard equipment jack – hardware tests
GMN5127	:	vehicle integrity – hoisting and service station jacking
GMW15005	:	standard equipment jack and spare tyre, vehicle test
ISO TS 16949	:	quality management systems

The signatory is authorised to compile the technical documentation.

Rüsselsheim, 31st January 2014

signed by

Hans-Peter Metzger

Engineering Group Manager Chassis & Structure

Adam Opel AG

D-65423 Rüsselsheim

REACH

Registration, Evaluation, Authorisation and Restriction of Chemicals (REACH) is a European Union regulation adopted to improve the protection of human health and the environment from the risks that can be posed by chemicals. Visit www.opel.com/reach for further information and for access to the Article 33 communication.

Software acknowledgement

Certain OnStar components include libcurl and unzip software and other third party software. Below are the notices and licenses associated with libcurl and unzip and for other third party software please see http://www.lg.com/global/support/opensource/index.

libcurl

Copyright and permission notice

Copyright (c) 1996 - 2010, Daniel Stenberg, <daniel@haxx.se>.

All rights reserved.

Permission to use, copy, modify, and distribute this software for any purpose with or without fee is hereby granted, provided that the above copyright notice and this permission notice appear in all copies.

The software is provided "as is", without warranty of any kind, express or implied, including but not limited to the warranties of merchantability, fitness for a particular purpose and noninfringement of third party rights. In no event shall the authors or

copyright holders be liable for any claim, damages or other liability, whether in an action of contract, tort or otherwise, arising from, out of or in connection with the software or the use or other dealings in the software.

Except as contained in this notice, the name of a copyright holder shall not be used in advertising or otherwise to promote the sale, use or other dealings in this Software without prior written authorization of the copyright holder.

unzip

This is version 2005-Feb-10 of the Info-ZIP copyright and license. The definitive version of this document should be available at ftp://ftp.info-zip.org/pub/infozip/license.html indefinitely.

Copyright (c) 1990-2005 Info-ZIP. All rights reserved.

For the purposes of this copyright and license, “Info-ZIP” is defined as the following set of individuals:

Mark Adler, John Bush, Karl Davis, Harald Denker, Jean-Michel Dubois, Jean-loup Gailly, Hunter Goatley, Ed Gordon, Ian Gorman, Chris Herborth, Dirk Haase, Greg Hartwig, Robert Heath, Jonathan Hudson, Paul Kienitz, David Kirschbaum, Johnny Lee, Onno van der Linden, Igor Mandrichenko, Steve P. Miller, Sergio Monesi, Keith Owens, George Petrov, Greg Roelofs, Kai Uwe Rommel, Steve Salisbury, Dave Smith, Steven M. Schweda, Christian Spieler, Cosmin Truta, Antoine Verheijen, Paul von Behren, Rich Wales, Mike White.

This software is provided “as is,” without warranty of any kind, express or implied. In no event shall Info-ZIP or its contributors be held liable for any direct, indirect, incidental, special or consequential damages arising out of the use of or inability to use this software.

Permission is granted to anyone to use this software for any purpose, including commercial applications, and to alter it and redistribute it freely, subject to the following restrictions:

1. Redistributions of source code must retain the above copyright notice, definition, disclaimer, and this list of conditions.
2. Redistributions in binary form (compiled executables) must reproduce the above copyright notice, definition, disclaimer, and this list of conditions in documentation and/or other materials provided with the distribution. The sole exception to this condition is redistribution of a standard UnZipSFX binary (including SFXWiz) as part of a self-extracting archive; that is permitted without inclusion of this license, as long as the normal SFX banner has not been removed from the binary or disabled.
3. Altered versions--including, but not limited to, ports to new operating systems, existing ports with new graphical interfaces, and dynamic, shared, or static library versions--must be plainly marked as such and must not be misrepresented as being the

original source. Such altered versions also must not be misrepresented as being Info-ZIP releases--including, but not limited to, labeling of the altered versions with the names “Info-ZIP” (or any variation thereof, including, but not limited to, different capitalizations), “Pocket UnZip,” “WiZ” or “MacZip” without the explicit permission of Info-ZIP. Such altered versions are further prohibited from misrepresentative use of the Zip-Bugs or Info-ZIP e-mail addresses or of the Info-ZIP URL(s).

4. Info-ZIP retains the right to use the names “Info-ZIP,” “Zip,” “UnZip,” “UnZipSFX,” “WiZ,” “Pocket UnZip,” “Pocket Zip,” and “MacZip” for its own source and binary releases.

Registered trademarks

Apple Inc.
Apple CarPlay™ is a trademark of Apple Inc.

App Store® and iTunes Store® are registered trademarks of Apple Inc. iPhone®, iPod®, iPod touch®, iPod nano®, iPad® and Siri® are registered trademarks of Apple Inc.

Bluetooth SIG, Inc.
Bluetooth® is a registered trademark of Bluetooth SIG, Inc.

DivX, LLC
DivX® and DivX Certified® are registered trademarks of DivX, LLC.

EnGIS Technologies, Inc.
BringGo® is a registered trademark of EnGIS Technologies, Inc.

Google Inc.
Android™ and Google Play™ Store are trademarks of Google Inc.

Stitcher Inc.
Stitcher™ is a trademark of Stitcher, Inc.

Velcro Companies
Velcro® is a registered trademark of Velcro Companies.

Verband der Automobilindustrie e.V.
AdBlue® is a registered trademark of the VDA.

Vehicle data recording and privacy

Event data recorders

Electronic control units are installed in your vehicle. Control units process data which is received by vehicle sensors, for example, or which they generate themselves or exchange amongst themselves. Some control units are necessary for the safe functioning of your vehicle, others assist you while you drive (driver assistance systems), while others provide comfort or infotainment functions.

The following contains general information about data processing in the vehicle. You will find additional information as to which specific data is uploaded, stored and passed on to third parties and for what purpose in your vehicle under the key word Data Protection closely linked to the references for the affected functional characteristics in the relevant owner's manual or in the general terms of sale. These are also available online.

Operating data in the vehicle

Control units process data for operation of the vehicle.

This data includes, e.g.:

- vehicle status information (e.g. speed, movement delay, lateral acceleration, wheel rotation rate, "seat belts fastened" display)
- ambient conditions (e.g. temperature, rain sensor, distance sensor)

As a rule such data is transient, not stored for longer than an operational cycle, and only processed on board the vehicle itself. Control units often include data storage (including the vehicle key). This is used to allow information to be documented temporarily or permanently on vehicle condition, component stress, maintenance requirements and technical events and errors.

Depending on technical equipment levels, the data stored is as follows:

- system component operating states (e.g. fill level, tyre pressure, battery status)
- faults and defects in important system components (e.g. lights, brakes)
- system reactions in special driving situations (e.g. triggering of an airbag, actuation of the stability control systems)
- information on events damaging the vehicle
- for electric vehicles the amount of charge in the high-voltage battery, estimated range

In special cases (e.g. if the vehicle has detected a malfunction), it may be necessary to save data that would otherwise just be volatile.

When you use services (e.g. repairs, maintenance), the operating data saved can be read together with the vehicle identification number and used where necessary. Staff working for the service network (e.g. garages, manufacturers) or third parties (e.g. breakdown services) can read the data from the vehicle. The same applies to warranty work and quality assurance measures.

Data is generally read via the OBD (On-Board Diagnostics) port prescribed by law in the vehicle. The operating datawhich is read out, documents the technical condition of the vehicle or individual components and assists with fault diagnosis, compliance with warranty obligations and quality improvement. This data, in particular information on component stress, technical events, operator errors and other faults, is transmitted to the manufacturer where appropriate, together with the vehicle identification number. The manufacturer is also subject to product liability. The manufacturer potentially also uses operating data from vehicles for product recalls. This data can also be used to check customer warranty and guarantee claims.

Fault memories in the vehicle can be reset by a service company when carrying out servicing or repairs or at your request.

Comfort and infotainment functions

Comfort settings and custom settings can be stored in the vehicle and changed or reset at any time.

Depending on the equipment level in question, these include

- seat and steering wheel position settings
- chassis and air conditioning settings
- custom settings such as interior lighting

You can input your own data in the infotainment functions for your vehicle as part of the selected features.

Depending on the equipment level in question, these include

- multimedia data such as music, videos or photos for playback in an integrated multimedia system
- address book data for use with an integrated hands-free system or an integrated navigation system
- input destinations
- data on the use of online services

This data for comfort and infotainment functions can be stored locally in the vehicle or be kept on a device that you have connected to the vehicle (e.g. a smartphone, USB stick or MP3 player). Data that you have input yourself can be deleted at any time.

This data can only be transmitted out of the vehicle at your request, particularly when using online services in accordance with the settings selected by you.

Smartphone integration, e.g. Android Auto or Apple CarPlay

If your vehicle is equipped accordingly, you can connect your smartphone or another mobile device to the vehicle so that you can control it via the controls integrated in the vehicle. The smartphone image and sound can be output via the multimedia system in this case. At the same time, specific information is transmitted to your smartphone. Depending on the type of integration, this includes data such as position data, day / night mode and other general vehicle information. For more information, please see the operating instructions for the vehicle / infotainment system.

Integration allows selected smartphone apps to be used, such as navigation or music playback. No further integration is possible between smartphone and vehicle, in particular active access to vehicle data. The nature of further data processing is determined by the provider of the app used. Whether you can define settings, and if so which ones, is dependent on the app in question and your smartphone's operating system.

Online services

If your vehicle has a radio network connection, this allows data to be exchanged between your vehicle and other systems. The radio network connection is made possible by means of a transmitter device in your vehicle or a mobile device provided by you (e.g. a smartphone). Online functions can be used via this radio network connection. These include online services and applications / apps provided to you by the manufacturer or other providers.

Proprietary services

In the case of the manufacturer's online services, the relevant functions are described by the manufacturer in an appropriate location (e.g. Owner's Manual, the manufacturer's website) and the associated data protection information is provided. Personal data may be used to provide online services. Data exchange for this purpose takes place via a protected connection, e.g. using the manufacturer's IT systems provided for the purpose. Collection, processing and use of personal data for the purposes of preparation of services take place solely on the basis of legal permission, e.g. in the case of a legally prescribed emergency communication system or a contractual agreement, or by virtue of consent.

You can activate or deactivate the services and functions (which are subject to charges to some extent) and, in some cases, the vehicle's entire radio network connection. This does not include statutory functions and services such as an emergency communication system.

Third party services

If you make use of online services from other providers (third parties), these services are subject to the liability and data protection and usage conditions of the provider in question. The manufacturer frequently has no influence over the content exchanged in this regard.

Therefore, please note the nature, scope and purpose of the collection and use of personal data within the scope of third party services provided by the service provider in question.

Radio Frequency Identification (RFID)

RFID technology is used in some vehicles for functions such as tyre pressure monitoring and immobiliser. It is also used in connection with conveniences such as radio remote controls for door locking / unlocking and starting. RFID technology in Opel vehicles does not use or record personal information or link with any other Opel system containing personal information.

Index

A

Accessories and vehicle modifications 156
Adjustable air vents 117
Airbag and belt tensioners 78
Airbag deactivation 47, 79
Airbag label..... 42
Airbag system 42
Air conditioning regular operation 118
Air conditioning system 111
Air intake 118
Air vents..... 117
Antilock brake system 131
Antilock brake system (ABS) 80
Anti-theft alarm system 27
Anti-theft locking system 27
Appearance care..... 198
Ashtrays 70
Automatic anti-dazzle 30
Automatic light control 101
Automatic locking 25
Automatic transmission 127
Autostop..... 82, 122

B

Battery discharge protection 108
Battery voltage 92
Belts..... 39
Bonnet 158
Brake and clutch fluid..... 203
Brake and clutch system 79
Brake assist 132
Brake fluid 161
Brakes 131, 161
Breakdown..... 196
Bulb replacement 164

C

Capacities 212
Catalytic converter 126
Central locking system 23
Centre high-mounted brake light 171
Changing tyre and wheel size ... 184
Charging system 79
Child locks 25
Child restraint installation locations 52
Child restraints..... 48
Child restraint systems 48
Cigarette lighter 70
City mode..... 134
Climate control 17
Climate control systems..... 110
Clock 68
Code..... 89
Control indicators..... 75
Control of the vehicle 119
Controls..... 64
Convex shape 29

Coolant and antifreeze..... 203
Corner lighting..... 103
Cruise control 83, 135
Cupholders 55
Curtain airbag system 47

D

Danger, Warnings and Cautions . . . 4
Daytime running lights 103
Declaration of conformity..... 215
Door open 83
Doors..... 26
Driver assistance systems..... 135
Driver Information Centre..... 83
Driving hints..... 119

E

Easy entry..... 37
Electric adjustment 29
Electrical system..... 172
Electronic climate control system 113
Electronic driving programmes . . 128
Electronic Stability Control..... 133
Electronic Stability Control and
Traction Control system..... 81
End-of-life vehicle recovery 157
Engine compartment fuse box ... 173
Engine coolant 160
Engine coolant temperature
gauge 74
Engine data 210
Engine exhaust 125
Engine identification..... 206
Engine oil 159, 203, 207, 212
Engine oil pressure 81
Entry lighting 107
Event data recorders..... 220
Exhaust filter..... 81, 125
Exit lighting 108
Exterior care 198
Exterior light 82
Exterior lighting 14, 100
Exterior mirrors..... 29

F

Fault 129
First aid..... 61
First aid kit 61
Fixed air vents 118
Folding mirrors 29
Following distance indication..... 140
Forward collision alert..... 138
Front airbag system 45
Front fog lights 82, 104, 168
Front seats..... 35
Front storage..... 56
Front turn lights 168
Fuel..... 150
Fuel for liquid gas operation..... 152
Fuel for petrol engines 150
Fuel gauge 72
Fuel selector 73
Fuel tank..... 212
Fuses 172

G

Gauges..... 71
Gear shifting..... 80
Glovebox 55

H

Halogen headlights 164
Hand brake..... 131, 132
Hazard warning flashers 104
Headlight flash 102
Headlight range adjustment 102
Headlights..... 100
Headlights when driving abroad 102
Head restraint adjustment 8
Head restraints 34
Heated mirrors 30
Heated rear window 32
Heated steering wheel 64
Heated windscreen..... 33
Heating 38
Heating and ventilation system . 110
High beam 82, 102
Hill start assist 132
Horn 15, 65

I
Identification plate 206
Ignition switch positions 120
Immobiliser 28, 82
Indicators..... 71
Info Display..... 88
Information displays..... 83
Instrument cluster 71
Instrument panel fuse box 175
Instrument panel illumination control 106
Instrument panel overview 10
Interior care 200
Interior lighting..... 106
Interior lights 106, 172
Interior mirrors..... 30
Interruption of power supply 129
Introduction 3

J
Jump starting 195

K
Key, memorised settings..... 23
Keys 21
Keys, locks..... 21

L
Lane departure warning..... 80, 149
Lashing eyes 60
Light switch 100
Load compartment 26, 57
Load compartment cover 59
Loading information 61
Low fuel 82
LPG..... 73, 152

M
Malfunction indicator light 79
Manual anti-dazzle 30
Manual mode 128
Manual transmission 130
Manual windows 31
Memorised settings..... 23
Midlevel display..... 83
Mirror adjustment 8
Misted light covers 105

N
New vehicle running-in 120
Number plate light 171

O
Object detection systems..... 141
Odometer 71
Oil, engine..... 203, 207
OnStar..... 95
Operate pedal..... 80
Outside temperature 67
Overrun cut-off 122

P
Parking 19, 124
Parking assist 80, 141
Parking brake 132
Parking lights 105
Particulate filter..... 125
Performing work 158
Power outlets 69
Power steering..... 80
Power windows 31
Puncture..... 192

R
Radio Frequency Identification (RFID)..... 223
Radio remote control 22
REACH..... 218
Reading lights 107
Rear floor storage cover 59
Rear fog light 82, 105, 168
Rear view camera 145
Rear window wiper and washer . . 66
Recommended fluids and lubricants 203, 207
Reduced engine power..... 82
Refuelling 152
Registered trademarks..... 220
Retained power off..... 121
Reversing lights 105
Ride control systems..... 133

Roof load..... 61
Roof rack 61

S
Safety belts..... 39
Seat adjustment 7, 36
Seat belt 8
Seat belt reminder 78
Seat belts 39
Seat folding 37
Seat heating..... 38
Seat position 35
Selector lever 127
Service 118
Service display 74
Service information 202
Service vehicle soon 79
Side airbag system 46
Sidelights..... 100
Side turn lights 170
Software acknowledgement..... 218
Spare wheel 192
Speed limiter..... 83, 137
Speedometer 71
Starting and operating..... 120
Starting off 18
Starting the engine 121
Steering wheel adjustment 9, 64
Steering wheel controls 64
Stop-start system..... 122
Storage..... 55
Storage compartments..... 55
Sun visors 33
Symbols 4

T
Tachometer 72
Tail lights 168
Three-point seat belt 40
Tools 177
Towing..... 196
Towing another vehicle 197
Towing the vehicle 196
Traction Control system 133
Traffic sign assistant..... 83, 146
Transmission 18
Transmission display 127
Tread depth 184
Trip odometer 71
Turn lights 77, 104
Tyre chains 185
Tyre designations 178
Tyre pressure 179
Tyre pressure monitoring
system..... 81, 180
Tyre pressures 214
Tyre repair kit 185

U
Underseat storage 57
Upholstery..... 200
Uplevel display..... 83
Using this manual 3

V
Vehicle battery 162
Vehicle checks..... 158
Vehicle data..... 207
Vehicle data recording and
privacy..... 220
Vehicle detected ahead..... 83
Vehicle dimensions 212
Vehicle Identification Number 205
Vehicle jack..... 177
Vehicle messages 89
Vehicle personalisation 92
Vehicle security..... 27
Vehicle specific data 3
Vehicle storage..... 157
Vehicle tools..... 177
Vehicle unlocking 6
Ventilation..... 110

W
Warning chimes 91
Warning lights..... 71
Warning triangle 60
Washer and wiper systems 16
Washer fluid 161
Wheel changing 191
Wheel covers 185
Wheels and tyres 178

Windows..... 31
Windscreen..... 31
Windscreen wiper and washer 65
Winter tyres 178
Wiper blade replacement 163

X

Xenon headlights 167
Xenon lighting system..... 103

www.opel.com

Copyright by Opel Automobile GmbH, Rüsselsheim, Germany.

The information contained in this publication is effective as of the date indicated below. Opel Automobile GmbH reserves the right to make changes to the technical specifications, features and design of the vehicles relative to the information in this publication as well as changes to the publication itself.

Edition: August 2018, Opel Automobile GmbH, Rüsselsheim.

Printed on chlorine-free bleached paper.

ID-OCREOBSE1808-en