MAINTENANCE

MA

SECTION MA

CONTENTS

PRECAUTIONS AND PREPARATION 3
Supplemental Restraint System (SRS) "AIR BAG" (Dual Air Bag System) 3
Supplemental Restraint System (SRS) "AIR BAG" (Single Air Bag System) 3
Special Service Tools 4
Commercial Service Tool 4
PRE-DELIVERY INSPECTION ITEMS 5
GENERAL MAINTENANCE 6
PERIODIC MAINTENANCE (Except for Europe) 7
Engine and Emission Control Service 7
Chassis and Body Service 8
Maintenance Under Severe Driving Conditions 9
PERIODIC MAINTENANCE (For Europe) 10
Engine Oil & Minor Service 10
Engine and Emission Control Service 11
Chassis and Body Services 12
Maintenance Under Severe Driving Conditions 13
RECOMMENDED LUBRICANTS AND FLUIDS 14
Lubricants and Fluids 14
SAE Viscosity Number 15
Anti-freeze Coolant Mixture Ratio 16

GA

ENGINE MAINTENANCE 17
Checking Drive Belts 17
Changing Engine Coolant 19
Checking Cooling System 21
Checking Fuel Lines 22
Changing Fuel Filter 22
Cleaning and Changing Air Cleaner Filter 23
Changing Engine Oil 24
Changing Oil Filter 24
Checking and Changing Spark Plugs 25
Checking Ignition Wires 26
Changing Positive Crankcase Ventilation (PCV) Filter 26
Checking EVAP Vapor Lines 26
Checking Oxygen Sensor (O2S) or Heated Oxygen Sensor (HO2S) 27

SR

ENGINE MAINTENANCE 28
Checking Drive Belts 28
Changing Engine Coolant 29
Checking Cooling System 31
Checking Fuel Lines 32
Changing Fuel Filter 32
Changing Air Cleaner Filter 33
Changing Engine Oil 33
Changing Oil Filter 34
Changing Spark Plugs (Platinum-tipped type) 34
Checking Ignition Wires 35
Checking EVAP Vapor & Purge Lines 36
Checking Heated Oxygen Sensor (HO2S) 37

CD

ENGINE MAINTENANCE 38
Manifold Nut Check 38
Checking Drive Belt 38
Changing Engine Coolant 38
Checking Cooling System 40
Checking Fuel Line 40
Changing Air Cleaner Filter 41
Water Draining, Fuel Filter Check and Replacement 41
Changing Engine Oil 41
Changing Engine Oil Filter 42
Checking Injection Nozzle 43
Checking Idle Speed 44
Replacing Timing Belt 44

CONTENTS (Cont'd.)

CHASSIS AND BODY MAINTENANCE 45
Checking Exhaust System 45
Checking Clutch Fluid Level and Leaks 45
Checking Clutch System 45
Checking M/T Oil 45
Changing M/T Oil 46
Checking A/T Fluid Level 46
Changing A/T Fluid 47
Checking Brake Fluid Level and Leaks 47
Checking Brake System 47
Changing Brake Fluid 47
Checking Brake Booster, Vacuum Hoses, Connections and Check Valve 48
Checking Disc Brake 48
Checking Drum Brake 49
Balancing Wheels 49
Tire Rotation 50
Checking Steering Gear and Linkage 50
Checking Power Steering Fluid and Lines 50
Lubricating Locks, Hinges and Hood Latches 51
Checking Seat Belts, Buckles, Retractors, Anchors and Adjusters 51
Checking Body Corrosion 52

GA

SERVICE DATA AND SPECIFICATIONS (SDS) 53
Engine Maintenance 53

SR

SERVICE DATA AND SPECIFICATIONS (SDS) 54
Engine Maintenance 54

CD

SERVICE DATA AND SPECIFICATIONS (SDS) 55
Engine Maintenance 55

SERVICE DATA AND SPECIFICATIONS (SDS) 56
Chassis and Body Maintenance 56

Supplemental Restraint System (SRS) "AIR BAG" (Dual Air Bag System)

The Supplemental Restraint System "Air Bag", used along with a seat belt, helps to reduce the risk or severity of injury to the driver and front passenger in a frontal collision. The Supplemental Restraint System consists of air bag modules (located in the center of the steering wheel and on the instrument panel on the passenger side), a diagnosis sensor unit, warning lamp, wiring harness and spiral cable. Information necessary to service the system safely is included in the **RS section** of this Service Manual.

WARNING:

- **To avoid rendering the SRS inoperative, which could increase the risk of personal injury or death in the event of a collision which would result in air bag inflation, all maintenance must be performed by an authorized NISSAN dealer.**
- **Improper maintenance, including incorrect removal and installation of the SRS, can lead to personal injury caused by unintentional activation of the system.**
- **Do not use electrical test equipment on any circuit related to the SRS unless instructed to in this Service Manual. SRS wiring harnesses are covered with yellow insulation either just before the harness connectors or for the complete harness, for easy identification.**

Supplemental Restraint System (SRS) "AIR BAG" (Single Air Bag System)

The Supplemental Restraint System "Air Bag", used along with a seat belt, helps to reduce the risk or severity of injury to the driver in a frontal collision. The Supplemental Restraint System consists of an air bag module (located in the center of the steering wheel), a diagnosis sensor unit, warning lamp, wiring harness and spiral cable. Information necessary to service the system safely is included in the **RS section** of this Service Manual.

WARNING:

- **To avoid rendering the SRS inoperative, which could increase the risk of personal injury or death in the event of a collision which would result in air bag inflation, all maintenance must be performed by an authorized NISSAN dealer.**
- **Improper maintenance, including incorrect removal and installation of the SRS, can lead to personal injury caused by unintentional activation of the system.**
- **Do not use electrical test equipment on any circuit related to the SRS.**

Special Service Tools

The actual shapes of Kent-Moore tools may differ from those of special service tools illustrated here.

Tool number Tool name	Description	Engine application		
		GA	SR	CD
KV10115801 KV10115800 (Kent-Moore Europe make) Oil filter wrench	Removing oil filter 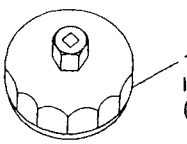 14 faces, Inner span: 64.3 mm (2.531 in) (Face to opposite face) NT362	—	X	—
KV10105900 Oil filter cap wrench	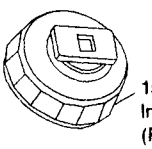 15 faces, Inner span: 80 mm (3.15 in) (Face to opposite corner) NT555	X	—	X
KV11102600 Lifter plate replacer	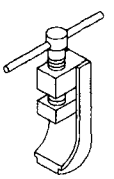 NT556	—	—	X
EG17650301 Radiator cap tester adapter	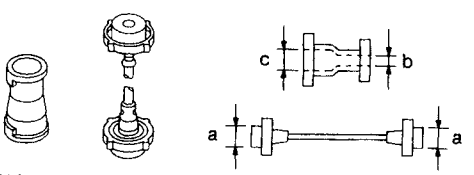 **a: 28 (1.10) dia.** **b: 31.4 (1.236) dia.** **c: 41.3 (1.626) dia.** Unit: mm (in) NT564	X	X	X

Commercial Service Tool

Tool name	Description	Engine application		
		GA	SR	CD
Spark plug wrench	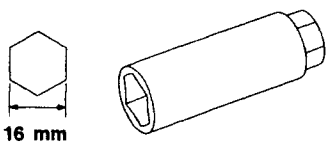 **16 mm** **(0.63 in)** Wrench with a magnet to hold spark plug NT047	X	X	—

Shown below are Pre-delivery Inspection Items required for the new vehicle. It is recommended that necessary items other than those listed here be added, paying due regard to the conditions in each country.

Perform applicable items on each model. Consult text of this section for specifications.

UNDER HOOD — engine off

- ☐ Radiator coolant level and coolant hose connections for leaks
- ☐ Battery fluid level, specific gravity and conditions of battery terminals
- ☐ Drive belts tension
- ☐ Fuel filter for water or dusts, and fuel lines and connections for leaks
- ☐ Engine oil level and oil leaks
- ☐ Clutch and brake reservoir fluid level and fluid lines for leaks
- ☐ Windshield and rear window washer and headlamp cleaner reservoir fluid level
- ☐ Power steering reservoir fluid level and hose connections for leaks

ON INSIDE AND OUTSIDE

- ☐ Remove front spring/strut spacer (If applicable)
- ☐ Operation of all instruments, gauges, lights and accessories
- ☐ Operation of horn(s), wiper and washer
- ☐ Steering lock for operation
- ☐ Check air conditioner for gas leaks
- ☐ Front and rear seats, and seat belts for operation
- ☐ All moldings, trims and fittings for fit and alignment
- ☐ All windows for operation and alignment
- ☐ Hood, trunk lid, door panels for fit and alignment
- ☐ Latches, keys and locks for operation
- ☐ Weatherstrips for adhesion and fit
- ☐ Headlamp aiming
- ☐ Tighten wheel nuts (Inc. inner nuts if applicable)
- ☐ Tire pressure (Inc. spare tire)
- ☐ Check front wheels for toe-in
- ☐ Install clock/voltmeter/room lamp fuse (If applicable)
- ☒ Install deodorizing filter to air purifier (If applicable)
- ☒ Remove wiper blade protectors (If applicable)

UNDER BODY

- ☐ Manual transmission/transaxle, transfer and differential gear oil level
- ☐ Brake and fuel lines and oil/fluid reservoirs for leaks
- ☐ Tighten bolts and nuts of steering linkage and gear box, suspension, propeller shafts and drive shafts
- ☒ Tighten rear body bolts and nuts (Models with wooden bed only)

ROAD TEST

- ☐ Clutch operation
- ☐ Parking brake operation
- ☐ Service brake operation
- ☐ Automatic transmission/transaxle shift timing and kickdown
- ☐ Steering control and returnability
- ☐ Engine performance
- ☐ Squeaks and rattles

ENGINE OPERATING AND HOT

- ☐ Adjust idle mixture and speed (and ignition timing*1)
- ☐ Automatic transmission/transaxle fluid level
- ☒ Engine idling and stop knob operation (Diesel only)

FINAL INSPECTION

- ☐ Install necessary parts (outside mirror, wheel covers, seat belts, mat, carpet or mud flaps)
- ☐ Inspect for interior and exterior metal and paint damage
- ☐ Check for spare tire, jack, tools (wheel chock), and literature
- ☐ Wash, clean interior and exterior

*1: Not required on models with a direct ignition system

☒ : Not applicable to this model.

General maintenance includes those items which should be checked during the normal day-to-day operation of the vehicle. They are essential if the vehicle is to continue operating properly. The owners can perform the checks and inspections themselves or they can have their NISSAN dealers do them.

Item	Reference pages
OUTSIDE THE VEHICLE The maintenance items listed here should be performed from time to time, unless otherwise specified.	
Tires Check the pressure with a gauge periodically when at a service station, including the spare, and adjust to the specified pressure if necessary. Check carefully for damage, cuts or excessive wear.	—
Windshield wiper blades Check for cracks or wear if they do not wipe properly.	—
Doors and engine hood Check that all doors , the engine hood, the trunk lid and back door operate properly. Also ensure that all latches lock securely. Lubricate hinges, latches, rollers and links if necessary. Make sure that the secondary latch keeps the hood from opening when the primary latch is released. When driving in areas using road salt or other corrosive materials, check for lubrication frequently.	MA-51
Tire rotation Tires should be rotated every 10,000 km (6,000 miles).	MA-50
INSIDE THE VEHICLE The maintenance items listed here should be checked on a regular basis, such as when performing periodic maintenance, cleaning the vehicle, etc.	
Lights Make sure that the headlights, stop lights, tail lights, turn signal lights, and other lights are all operating properly and installed securely. Also check headlight aim.	—
Warning lights and buzzers/chimes Make sure that all warning lights and buzzers/chimes are operating properly.	—
Steering wheel Check for change in the steering conditions, such as excessive free play, hard steering or strange noises. **Free play: Less than 35 mm (1.38 in)**	—
Seat belts Check that all parts of the seat belt system (e.g. buckles, anchors, adjusters and retractors) operate properly and smoothly, and are installed securely. Check the belt webbing for cuts, fraying, wear or damage.	
UNDER THE HOOD AND VEHICLE The maintenance items listed here should be checked periodically e.g. each time you check the engine oil or refuel.	
Windshield washer fluid Check that there is adequate fluid in the tank.	—
Engine coolant level Check the coolant level when the engine is cold.	MA-19, 38
Engine oil level Check the level after parking the vehicle on a level spot and turning off the engine.	MA-24, 33, 41
Brake and clutch fluid levels Make sure that the brake and clutch fluid levels are between the "MAX" and "MIN" lines on the reservoir.	MA-45, 47
Battery Check the fluid level in each cell. It should be between the "MAX" and "MIN" lines.	—

The following tables show the normal maintenance schedule. Depending upon weather and atmospheric conditions, varying road surfaces, individual driving habits and vehicle usage, additional or more frequent maintenance may be required.

Periodic maintenance beyond the last period shown on the tables requires similar maintenance.

Engine and Emission Control Service

Abbreviations: I = Inspect and correct or replace as necessary, R = Replace, A = Adjust, C = Clean.

MAINTENANCE OPERATION		MAINTENANCE INTERVAL										
Perform either at number of kilometers (miles) or months, whichever comes first.	km x 1,000	10	20	30	40	50	60	70	80	Reference page		
	(Miles x 1,000)	(6)	(12)	(18)	(24)	(30)	(36)	(42)	(48)			
	Months	6	12	18	24	30	36	42	48			
Underhood and under vehicle											GA	SR
Intake & exhaust valve clearance (GA15DE & GA16DE engines)	See NOTE (1)									EM	41	—
Drive belts					I				I	MA	17	24
Engine anti-freeze coolant (Ethylene glycol base) (LLC)					R				R	MA	19	29
Engine coolant (Soft water)		R	R	R	R	R	R	R	R	MA	19	29
Cooling system			I		I		I		I	MA	21	31
Fuel lines					I				I	MA	22	32
Air cleaner filter (Dry paper type)★		C	C	C	R	C	C	C	R	MA	23	—
Air cleaner filter (Viscous paper type)★					R				R	MA	23	33
Engine oil (Use API SE, SF, SG or SH oil.)★		R	R	R	R	R	R	R	R	MA	24	33
Engine oil filter★		R	R	R	R	R	R	R	R	MA	24	33
Fuel filter★					R				R	MA	22	32
Spark plugs (except Platinum-tipped type)					R				R	MA	25	—
Spark plugs (Platinum-tipped type)		Replace every 100,000 km (60,000 miles).								MA	—	34
Ignition wires					I				I	MA	26	35
PCV filter★					R				R	MA	26	—
Vapor lines					I				I	MA	26	36
(Heated) Oxygen Sensor					I				I	MA	27	37

NOTE: (1) If valve noise increases, check valve clearance.

★ Maintenance items with "★" should be performed more frequently according to "Maintenance under severe driving conditions".

Chassis and Body Service

Abbreviations: I = Inspect and correct or replace as necessary, R = Replace, L = Lubricate.

MAINTENANCE OPERATION	MAINTENANCE INTERVAL										
Perform either at number of kilometers (miles) or months, whichever comes first.	km x 1,000	1	10	20	30	40	50	60	70	80	Reference page
	(Miles x 1,000)	(0.6)	(6)	(12)	(18)	(24)	(30)	(36)	(42)	(48)	
	Months	—	6	12	18	24	30	36	42	48	
Underhood and under vehicle											
Brake, clutch & automatic transaxle fluid or oil (For level & leaks)★			I	I	I	I	I	I	I	I	MA-47, 45, 46
Brake fluid★						R				R	MA-47
Brake booster vacuum hoses, connections & check valve						I				I	MA-48
Power steering fluid & lines (For level & leaks)			I*	I	I*	I	I*	I	I*	I	MA-50
Brake, clutch & exhaust systems			I	I	I	I	I	I	I	I	MA-47, 45
Manual transaxle oil (For level & leaks)★			I*	I	I*	I	I*	I	I*	I	MA-45
Steering gear & linkage, axle & suspension parts & drive shafts★		I*		I		I		I		I	MA-50 FA-5 RA-4
Outside and inside											
Wheel alignment, if necessary, rotate & balance wheels				I		I		I		I	MA-49 FA-6
Brake pads, disc & other brake components★			I	I	I	I	I	I	I	I	MA-48
Brake linings, drums & other brake components				I		I		I		I	MA-49
Locks, hinges & hood latch★			L*	L	L*	L	L*	L	L*	L	MA-51
Seat belts, buckles, retractors, anchors & adjuster				I		I		I		I	MA-51
Foot brake, parking brake & clutch (For free play, stroke & operation)			I*	I	I*	I	I*	I	I*	I	BR-11, 37 CL-5
Air bag system	See NOTE (1)										RS-11

NOTE: (1) Inspect at the first 10 years, and then every 2 years.

★ Maintenance items with "★" should be performed more frequently according to "Maintenance Under Severe Driving Conditions".

*: Except for Australia models

Maintenance Under Severe Driving Conditions

The maintenance intervals shown on the preceding pages are for normal operating conditions. If the vehicle is mainly operated under severe driving conditions as shown below, more frequent maintenance must be performed on the following items as shown in the table.

SEVERE DRIVING CONDITIONS

A — Driving under dusty conditions
B — Driving repeatedly short distances
C — Towing a trailer or caravan
D — Extensive idling
E — Driving in extremely adverse weather conditions or in areas where ambient temperatures are either extremely low or extremely high
F — Driving in high humidity areas or in mountainous areas
G — Driving in areas using salt or other corrosive materials
H — Driving on rough and/or muddy roads or in the desert
I — Driving with frequent use of braking or in mountainous areas

Driving condition	Maintenance item	Maintenance operation	Maintenance interval	Reference page		
					GA	SR
A	Air cleaner filter					
	Dry paper type	Clean	More frequently	MA	23	—
	All types	Replace	More frequently	MA	23	33
	PCV filter	Replace	More frequently	MA	26	—
A B C D	Engine oil & oil filter	Replace	Every 5,000 km (3,000 miles) or 3 months	MA	24	24
A . . . E	Fuel filter	Replace	Every 20,000 km (12,000 miles) or 12 months	MA	22	32
. . . . . F . . .	Brake fluid	Replace	Every 20,000 km (12,000 miles) or 12 months	MA-47		
. . C . . . . H .	Automatic & manual transaxle oil	Replace	Every 40,000 km (24,000 miles) or 24 months	MA-46, 45		
. . . . . G H .	Steering gear & linkage, axle & suspension parts & drive shafts	Check	Every 10,000 km (6,000 miles) or 6 months	MA-50 FA-5, 7 RA-4		
A . C . . . G H I	Brake pads, discs & other brake components	Check	Every 5,000 km (3,000 miles) or 3 months	MA-48		
A . C . . . G H I	Brake linings, drums & other brake components	Check	Every 10,000 km (6,000 miles) or 6 months	MA-49		
. . . . . G . .	Lock, hinges & hood latch	Lubricate	Every 5,000 km (3,000 miles) or 3 months	MA-51		

Maintenance operation: Check = Check. Correct or replace if necessary.

The following tables show the normal maintenance schedule. Depending upon weather and atmospheric conditions, varying road surfaces, individual driving habits and vehicle usage, additional or more frequent maintenance may be required.

Periodic maintenance beyond the last period shown on the tables requires similar maintenance.

Engine Oil & Minor Service

GASOLINE ENGINE

Abbreviation: R = Replace.

MAINTENANCE OPERATION		MAINTENANCE INTERVAL								
Perform either at number of kilometers (miles) or months, whichever comes first.	km x 1,000	15	30	45	60	75	90	105	120	Reference page
	(Miles x 1,000)	(9)	(18)	(27)	(36)	(45)	(54)	(63)	(72)	
	Months	12	24	36	48	60	72	84	96	
Underhood and under vehicle										
Engine oil (API SG or SH oil)★		R	R	R	R	R	R	R	R	MA-24
Engine oil filter★		R	R	R	R	R	R	R	R	MA-24

DIESEL ENGINE

Abbreviations: R = Replace, I = Inspect and correct or replace as necessary

MAINTENANCE OPERATION										
Perform either at number of kilometers (miles) or months, whichever comes first.	km x 1,000	10	20	30	40	50	60	70	80	Reference page
	(Miles x 1,000)	(6)	(12)	(18)	(24)	(30)	(36)	(42)	(48)	
	Months	6	12	18	24	30	36	42	48	
Underhood and under vehicle										
Engine oil (Use API CD oil)★		R	R	R	R	R	R	R	R	MA-41
Engine oil filter★		R	R	R	R	R	R	R	R	MA-41
Drive belts		I	I		I		I		I	MA-38
Idle speed			I		I		I		I	MA-44

NOTE: ★ Maintenance items with "★" should be performed more frequently according to "Maintenance Under Severe Driving Conditions".

Engine and Emission Control Service

Abbreviations: I = Inspect and correct or replace as necessary, R = Replace.

MAINTENANCE OPERATION		MAINTENANCE INTERVAL					
Perform either at number of kilometers (miles) or months, whichever comes first.	km x 1,000	30	60	90	120	Reference page	
	(Miles x 1,000)	(18)	(36)	(54)	(72)		
	Months	12	24	36	48		
Underhood and under vehicle						GA	CD
Engine anti-freeze coolant (Ethylene glycol base) (LLC)	See NOTE (1)			R		MA-19	MA-38
Cooling system		I	I	I	I	MA-21	MA-40
Fuel lines			I		I	MA-22	MA-40
Air cleaner filter (Viscous paper type)★			R		R	MA-23	MA-41
GASOLINE ENGINE: Intake & exhaust valve clearance	See NOTE (2)					EM-41	—
GASOLINE ENGINE: Drive belts	See NOTE (3)		I	I	I	MA-17, 18	—
GASOLINE ENGINE: Fuel filter★				R		MA-22	—
GASOLINE ENGINE: Spark plugs	See NOTE (4)	R	R	R	R	MA-25	—
GASOLINE ENGINE: Ignition wires*				I		MA-26	—
GASOLINE ENGINE: PCV filter★			R		R	MA-26	—
GASOLINE ENGINE: Vapor lines (Hoses, connections, etc.)	See NOTE (5)		I		I	MA-26	—
GASOLINE ENGINE: (Heated) oxygen sensor*			I		I	MA-27	—
DIESEL ENGINE: Fuel filter			R		R	—	MA-41
DIESEL ENGINE: Nozzles	See NOTE (6)					—	MA-43
DIESEL ENGINE: Timing belts for camshaft and injection pump		Replace every 90,000 km (54,000 miles)				—	EM-120, 124

*: Except for Swedish models

NOTE: (1) Replace at the first 90,000 km (54,000 miles) or 60 months, then every 60,000 km (36,000 miles) or 24 months, whichever comes first.
(2) If valve noise increases, check valve clearance.
(3) After 60,000 km (36,000 miles) or 24 months, inspect every 30,000 km (18,000 miles) or 12 months, whichever comes first.
(4) For Swedish models, perform at mileage interval only.
(5) For Swedish models, inspect at the first 90,000 km (54,000 miles), and then every 60,000 km (36,000 miles) or 24 months, whichever comes first.
(6) If engine power decreases, black smoke is emitted or engine noise increases, check and, if necessary, adjust the fuel injection nozzle's starting pressure and the fuel spray pattern.
★ Maintenance items with "★" should be performed more frequently according to "Maintenance Under Severe Driving Conditions".

Chassis and Body Services

Abbreviations: R = Replace. I = Inspect, and correct or replace as necessary.

MAINTENANCE OPERATION		MAINTENANCE INTERVAL				
Perform either at number of kilometers (miles) or months, whichever comes first.	km x 1,000	30	60	90	120	Reference page
	(Miles x 1,000)	(18)	(36)	(54)	(72)	
	Months	12	24	36	48	
CHASSIS AND BODY	**Underhood and under vehicle**					
Brake & clutch oil (For level & leaks)★		I	I	I	I	MA-47, 45
Automatic transaxle fluid (For level & leaks)★		I	I	I	I	MA-46
Brake fluid★			R		R	MA-47
Brake booster vacuum hoses, connections & check valve			I		I	MA-48
Power steering fluid & lines (For level & leaks)		I	I	I	I	MA-50
Brake & clutch systems		I	I	I	I	MA-47, 45
Manual transaxle oil (For leaks)★		I	I	I	I	MA-45
Steering gear & linkage, axle & suspension parts & exhaust system★			I		I	MA-50, 45, FA-5, RA-4
Drive shafts★		I	I	I	I	FA-7
	Outside and Inside					
Wheel alignment (If necessary, rotate & balance wheels)		I	I	I	I	MA-49, FA-6
Brake pads, disc & other brake components★		I	I	I	I	MA-48
Brake linings, drums & other components★		I	I	I	I	MA-49
Headlamp aiming		I	I	I	I	EL-75
Foot brake, parking brake & clutch (For free play, stroke & operation)		I	I	I	I	BR-11, 37, CL-5
Body corrosion			Annually			MA-52
Air bag system			See NOTE (1)			RS-11

NOTE: ★ Maintenance items with "★" should be performed more frequently according to "Maintenance under severe driving conditions".
(1) Inspect at the first 10 years and then every 2 years.

Maintenance Under Severe Driving Conditions

The maintenance intervals shown on the preceding pages are for normal operating conditions. If the vehicle is mainly operated under severe driving conditions as shown below, more frequent maintenance must be performed on the following items as shown in the table.

SEVERE DRIVING CONDITIONS

A — Driving under dusty conditions
B — Driving repeatedly short distances
C — Towing a trailer
D — Extensive idling
E — Driving in extremely adverse weather conditions or in areas where ambient temperatures are either extremely low or extremely high
F — Driving in high humidity areas or in mountainous areas
G — Driving in areas using salt or other corrosive materials
H — Driving on rough and/or muddy roads or in the desert
I — Driving with frequent use of braking or in mountainous areas

Driving condition	Maintenance item	Maintenance operation	Maintenance interval	Reference page
A B C D	Engine oil & oil filter			
	Gasoline engine	Replace	Every 7,500 km (4,500 miles) or 6 months	MA-24
	Diesel engine	Replace	Every 5,000 km (3,000 miles) or 3 months	MA-41
A	Air cleaner filter & PCV filter	Replace	Every 30,000 km (18,000 miles) or 12 months	MA-23, 41
A E	Fuel filter	Replace		MA-22, 41
F	Brake fluid	Replace		MA-47
G H	Steering gear & linkage, axle & suspension parts & exhaust system	Check		MA-50, 45 FA-5 RA-4
C H	Automatic & manual transaxle oil	Replace	Every 60,000 km (36,000 miles) or 24 months	MA-46, 45
A C G H I	Brake pads, discs & other brake components	Check	Every 15,000 km (9,000 miles) or 6 months	MA-48
A C G H I	Brake lining, drums & other brake components	Check		MA-49
C H	Drive shaft	Check		FA-7

Maintenance operation: Check = Check. Correct or replace if necessary.

Lubricants and Fluids

		Capacity (Approximate)		Recommended lubricants and fluids
		Liter	Imp measure	
Engine oil (Refill)				
Gasoline				
With oil filter	GA	3.2	2-7/8 qt	For Europe: API SG or SH*1 Except for Europe: API SE, SF, SG or SH*1
	SR20DE	3.4	3 qt	
Without oil filter	GA	2.8	2-1/2 qt	
	SR20DE	3.2	2-7/8 qt	
Diesel				
With oil filter	CD20	5.1	4-1/2 qt	API CD*1
Without oil filter	CD20	4.6	4 qt	
Cooling system (With reservoir tank)				
Gasoline				
With heater	GA series (M/T)	5.9	5-1/4 qt	Anti-freeze coolant (Ethylene glycol base) or soft water
	GA series (A/T)	6.4	5-5/8 qt	
	SR series (M/T)	6.1	5-3/8 qt	
	SR series (A/T)	6.6	5-7/8 qt	
Without heater	GA series (M/T)	5.6	4-7/8 qt	
	GA series (A/T)	6.1	5-3/8 qt	
	SR series (M/T)	5.8	5-1/8 qt	
	SR series (A/T)	6.3	5-1/2 qt	
Diesel				
With heater	CD20	5.2	4-5/8 qt	
Without heater	CD20	4.9	4-3/8 qt	
Manual transaxle gear oil				
RS5F30A		2.8 - 3.0	4-7/8 - 5-1/4 pt	API GL-4*1
RS5F31A		2.9 - 3.2	5-1/8 - 5-5/8 pt	
RS5F32A		3.7 - 3.9	6-1/2 - 6-7/8 pt	
Automatic transaxle fluid				Genuine NISSAN ATF or equivalent*2
RL4F03A		7.0	6-1/8 qt	
Power steering fluid		—	—	Type DEXRON™
Brake & clutch fluid		—	—	For Europe: DOT3 or DOT4 (US FMVSS NO. 116)*3 Except for Europe: DOT3 (US FMVSS NO. 116)
Multi-purpose grease		—	—	NLGI No. 2 (Lithium soap base)

*1: For further details, see "SAE Viscosity Number".
*2: For more information regarding suitable fluids, contact a NISSAN dealership for correct brand of DEXRON® IIE or DEXRON® III.
*3: Never mix different types of fluids (DOT3 and DOT4).

SAE Viscosity Number

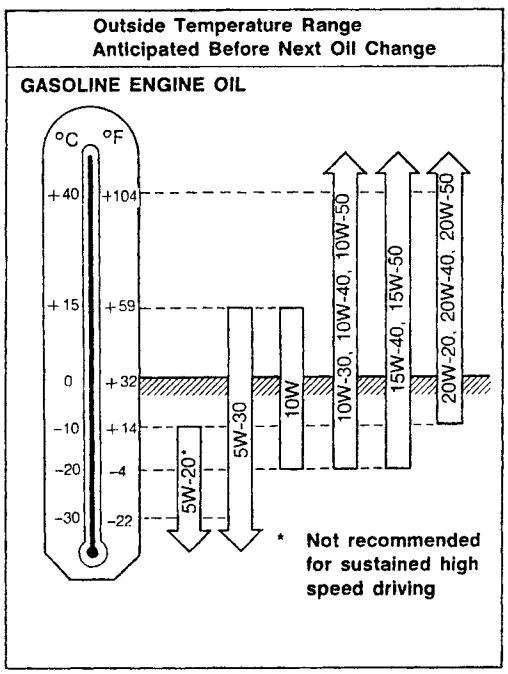

TI0005

- **For cold and warm areas:**
  10W-30 is preferable for ambient temperatures above –20°C (–4°F).
- **For hot areas:**
  20W-40 and 20W-50 are suitable.

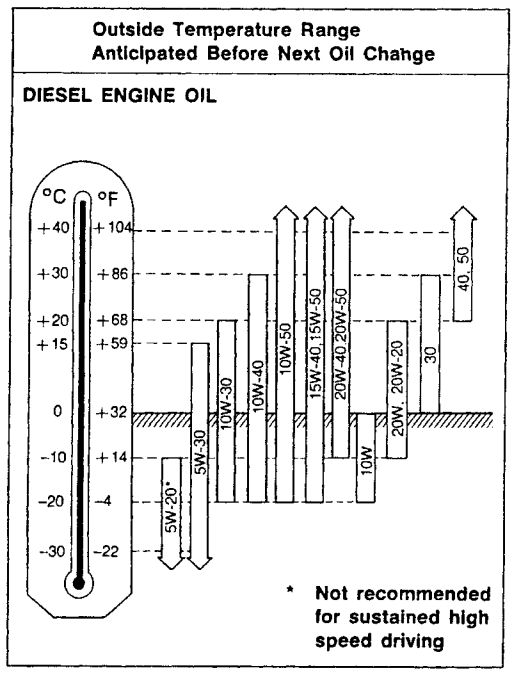

TI0006

- **For cold and warm areas:**
  10W-30 is preferable for ambient temperatures above –20°C (–4°F).
- **For hot areas:**
  20W-40 and 20W-50 are suitable.

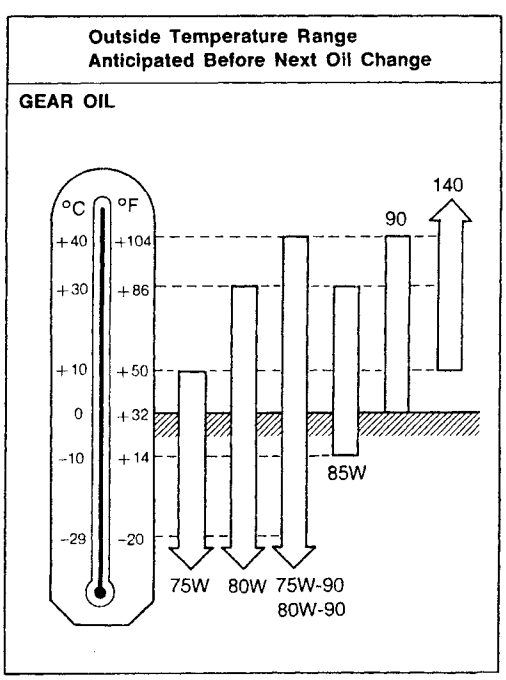

TI0003

- **80W-90 is preferable for ambient temperatures below 40°C (104°F).**

Anti-freeze Coolant Mixture Ratio

The engine cooling system is filled at the factory with a high-quality, year-round, anti-freeze coolant solution. The anti-freeze solution contains rust and corrosion inhibitors. Therefore, additional cooling system additives are not necessary.

CAUTION:

When adding or replacing coolant, be sure to use only an ethylene glycol anti-freeze with the proper mixture ratio. See the following examples:

Outside temperature down to		Anti-freeze	Soft water
°C	°F		
–15	5	30%	70%
–35	–30	50%	50%

The use of other types of coolant solutions may damage your cooling system.

Checking Drive Belts

EXCEPT FOR GA14DE ENGINE

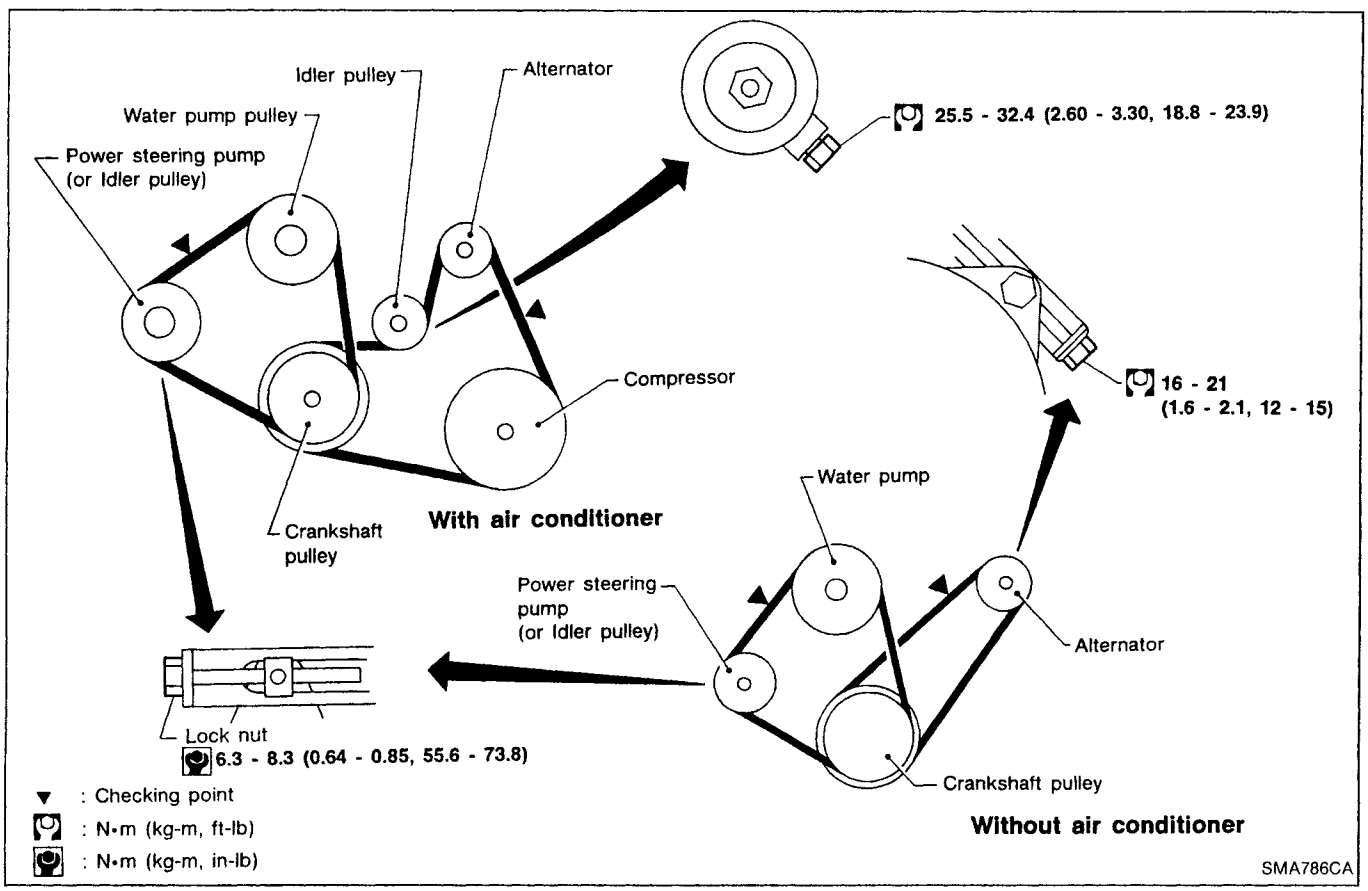

1. Inspect for cracks, fraying, wear or oil adhesion. If necessary, replace with a new one.
2. Inspect drive belt deflections by pushing on the belt midway between pulleys.

Adjust if belt deflections exceed the limit.

Belt deflection:

Unit: mm (in)

	Used belt deflection		Deflection of new belt
	Limit	Deflection after adjustment	
Alternator			
With air conditioner compressor	10 (0.39)	6 - 7 (0.24 - 0.28)	5.5 - 6.5 (0.217 - 0.256)
Without air conditioner compressor	11 (0.43)	7 - 9 (0.28 - 0.35)	6 - 8 (0.24 - 0.31)
Power steering oil pump	7.5 (0.295)	4 - 6 (0.16 - 0.24)	3 - 5 (0.12 - 0.20)
Applied pushing force	98 N (10 kg, 22 lb)		

Inspect drive belt deflections when engine is cold.

Checking Drive Belts (Cont'd)

FOR GA14DE ENGINE

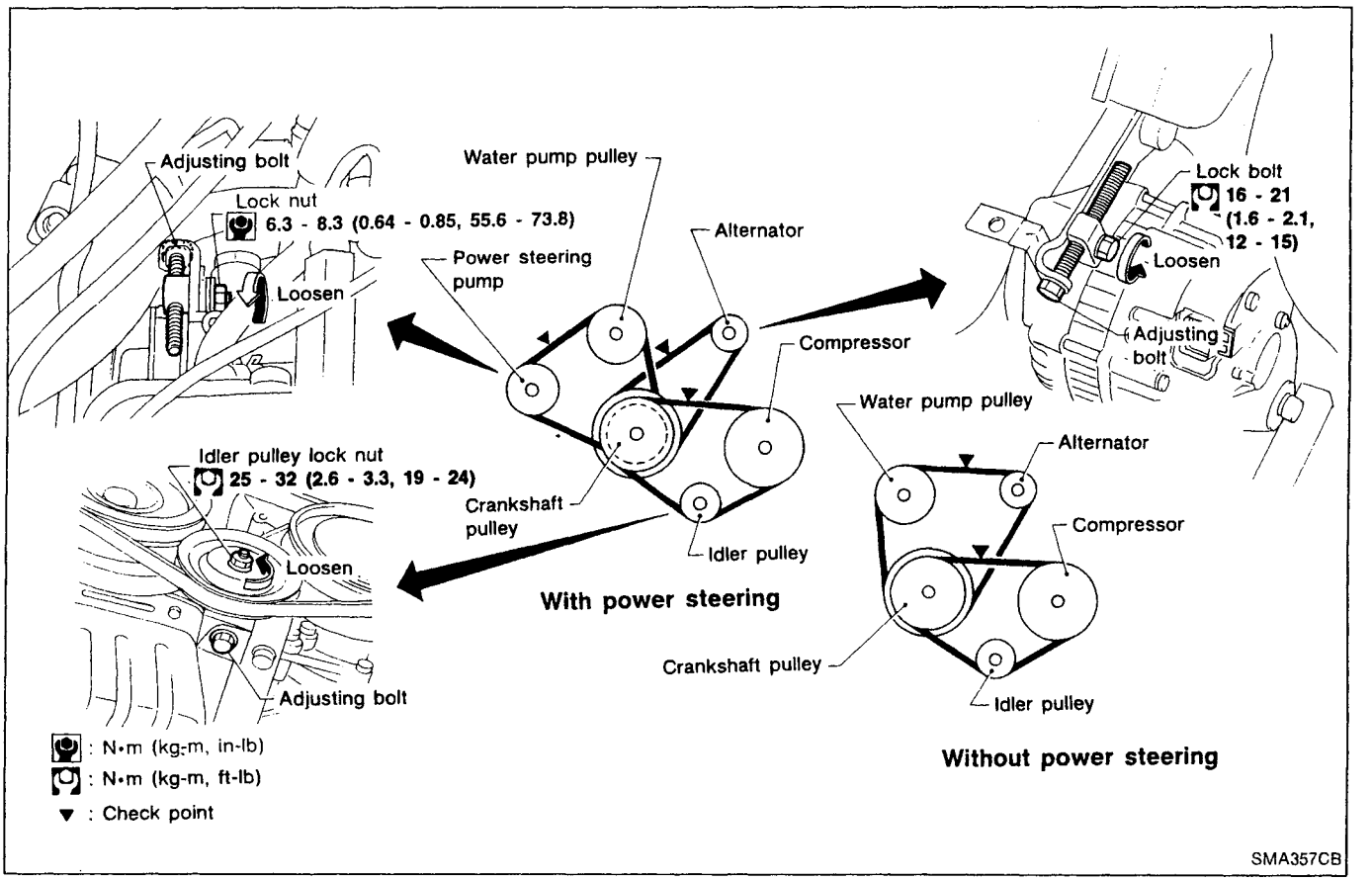

1. Inspect for cracks, fraying, wear or oil adhesion. If necessary, replace with a new one.
2. Inspect drive belt deflections by pushing on the belt midway between pulleys.

Adjust if belt deflections exceed the limit.

Belt deflection:

Unit: mm (in)

	Used belt deflection		Deflection of new belt
	Limit	Deflection after adjustment	
Alternator			
With power steering	11 (0.43)	7 - 9 (0.28 - 0.35)	6 - 8 (0.24 - 0.31)
Without power steering	10 (0.39)		
Air conditioner compressor	9.5 (0.374)	6 - 8 (0.24 - 0.31)	5 - 7 (0.20 - 0.28)
Power steering oil pump	7.5 (0.295)	4 - 6 (0.16 - 0.24)	3 - 5 (0.12 - 0.20)
Applied pushing force	98 N (10 kg, 22 lb)		

Inspect drive belt deflections when engine is cold.

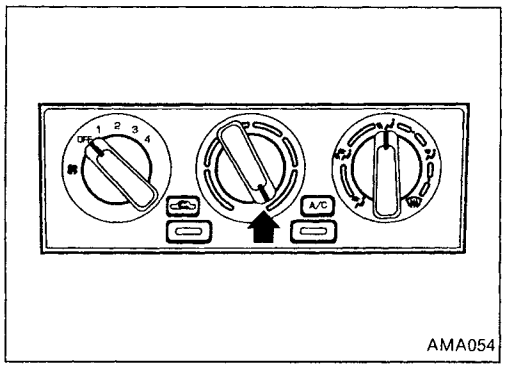

Changing Engine Coolant

WARNING:
To avoid being scalded, never change the coolant when the engine is hot.

—DRAINING ENGINE COOLANT—

1. Move heater "TEMP" control lever all the way to "HOT".
- **Make sure that blower switch is "OFF".**

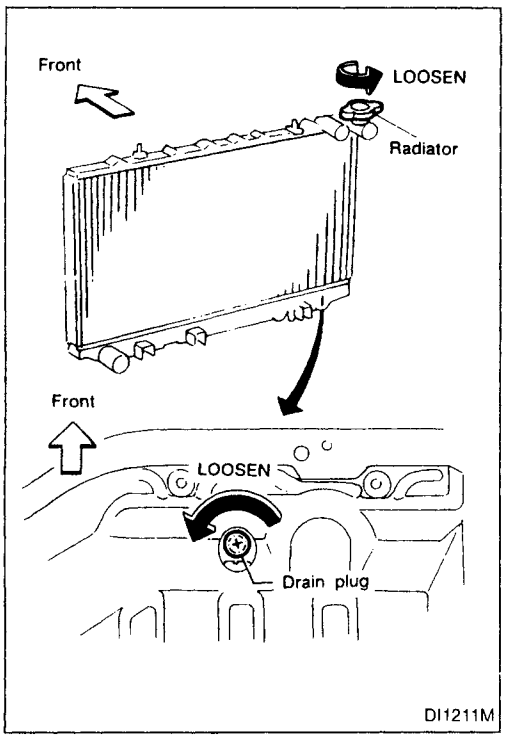

2. Open radiator drain plug at the bottom of radiator, and remove radiator cap.
3. Remove reservoir tank, drain coolant, then clean reservoir tank.
   Install it temporarily.
- **Be careful not to allow coolant to contact drive belts.**

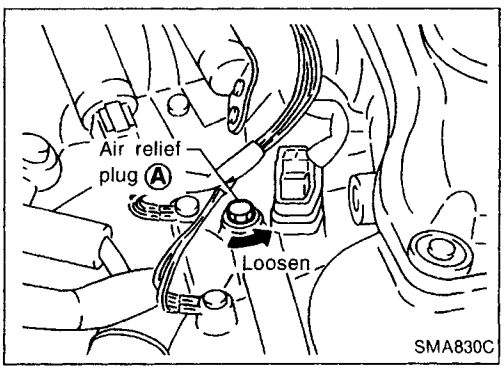

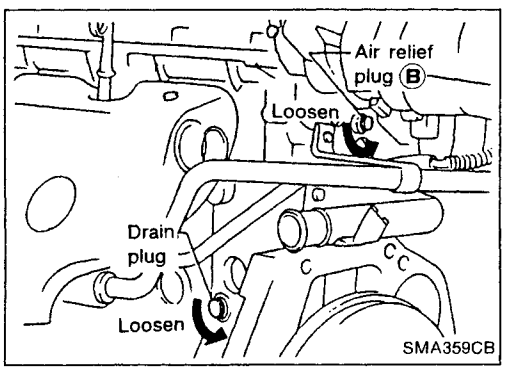

4. Remove cylinder block drain plug and air relief plug.

—FLUSHING COOLING SYSTEM—

5. Install radiator drain plug, cylinder block drain plug and air relief plug Ⓑ securely.
6. Fill radiator with water until water spills from the air relief plug Ⓐ hole, then install air relief plug Ⓐ.
   Fill radiator and reservoir tank with water and install radiator cap.
   Air relief plug:
   : 7 - 8 N·m (0.7 - 0.8 kg-m, 61 - 69 in-lb)

Changing Engine Coolant (Cont'd)

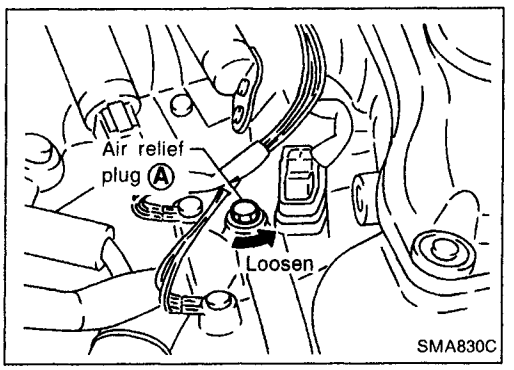

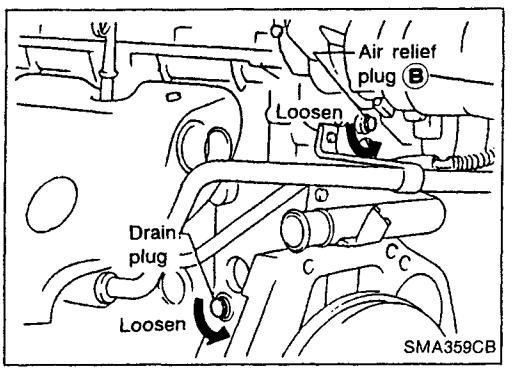

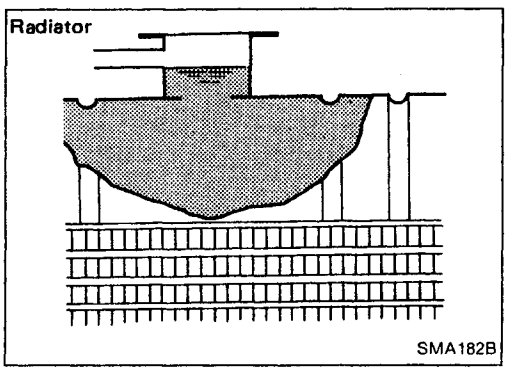

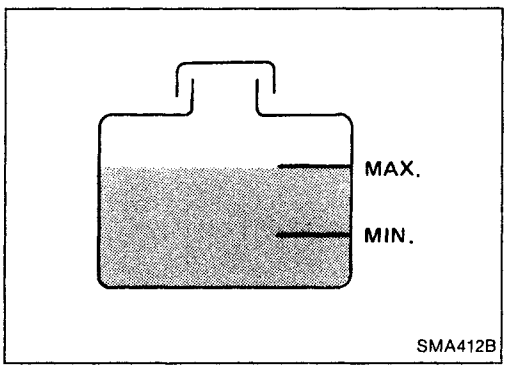

7. Warm up engine until cooling fan operates, then race engine 2 or 3 times under no-load.
8. Stop engine and wait until it cools down.
9. Drain water.
10. Repeat steps 2 through 9 until clear water begins to drain from radiator.

—REFILLING ENGINE COOLANT—

11. Install reservoir tank, radiator drain plug, cylinder block drain plug and air relief plug Ⓑ.

- **Apply sealant to the thread of cylinder block drain plug.**
  : 34 - 44 N·m (3.5 - 4.5 kg-m, 25 - 33 ft-lb)

12. Fill radiator with coolant until coolant spills from the air relief plug Ⓐ hole, then install air relief plug Ⓐ.
13. Fill radiator and reservoir tank with coolant up to specified level and install radiator cap.
    Air relief plug:
    : 7 - 8 N·m (0.7 - 0.8 kg-m, 61 - 69 in-lb)

For coolant mixture ratio, refer to MA-16.
Coolant capacity (With reservoir tank):

Unit: ℓ (Imp qt)

	With heater	Without heater
M/T	5.9 (5-1/4)	5.6 (4-7/8)
A/T	6.4 (5-5/8)	6.1 (5-3/8)

Reservoir tank capacity (for MAX level):
0.7ℓ (5/8 Imp qt)

Pour coolant through coolant filler neck slowly to allow air in system to escape.

14. Warm up engine to normal operating temperature.
15. Run engine at 2,500 rpm for 10 seconds and return to idle speed.

- Repeat 2 or 3 times.

Watch coolant temperature gauge so as not to overheat the engine.

Changing Engine Coolant (Cont'd)

16. Stop engine and cool it down.
- Cool down using a fan to reduce the time.
17. Remove the radiator filler cap and check coolant level.
- If necessary, refill radiator up to filler neck with coolant.
18. Refill reservoir tank to Max line with coolant.
19. Repeat step 14 through step 18 two or more times.
20. Warm up engine, and check for sound of coolant flow while running engine from idle up to 4,000 rpm with heater temperature control set at several positions between COOL and HOT.
- Sound may be noticeable at heater water cock.
21. If sound is heard, bleed air from cooling system by repeating steps 14 through 18 until coolant level no longer drops.
- **Clean excess coolant from engine.**

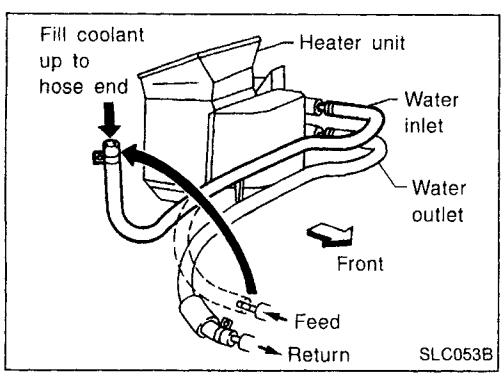

CAUTION:
When heater unit is removed or replaced, refill engine coolant as shown, removing heater hose at feeding connector on engine.

Checking Cooling System

CHECKING HOSES

Check hoses for improper attachment and for leaks, cracks, damage, loose connections, chafing and deterioration.

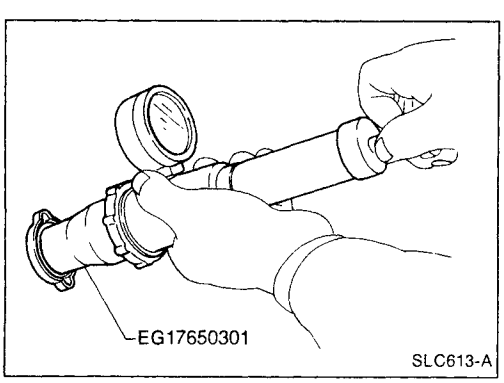

CHECKING RADIATOR CAP

Apply pressure to radiator cap with cap tester to see if it is satisfactory.

Radiator cap relief pressure:
Standard
78 - 98 kPa
(0.78 - 0.98 bar, 0.8 - 1.0 kg/cm^2, 11 - 14 psi)
Limit
59 - 98 kPa
(0.59 - 0.98 bar, 0.6 - 1.0 kg/cm^2, 9 - 14 psi)

Checking Cooling System (Cont'd)

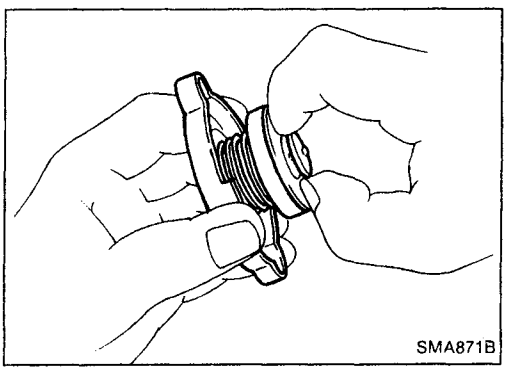

Pull the negative-pressure valve to open it. Check that it closes completely when released.

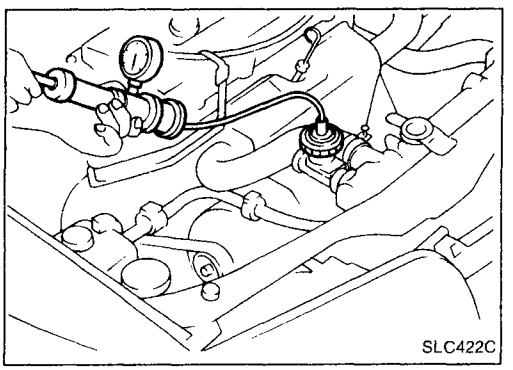

CHECKING COOLING SYSTEM FOR LEAKS

Apply pressure to the cooling system with cap tester to check for leakage.

Testing pressure:

157 kPa (1.57 bar, 1.6 kg/cm^2, 23 psi)

CAUTION:

Higher pressure than the specified value may cause damage to radiator.

Checking Fuel Lines

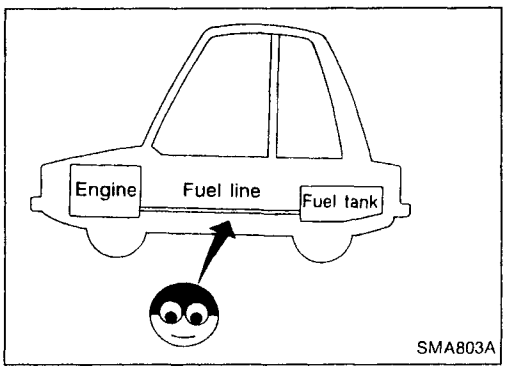

Inspect fuel lines and tank for improper attachment and for leaks, cracks, damage, loose connections, chafing and deterioration.

If necessary, repair or replace faulty parts.

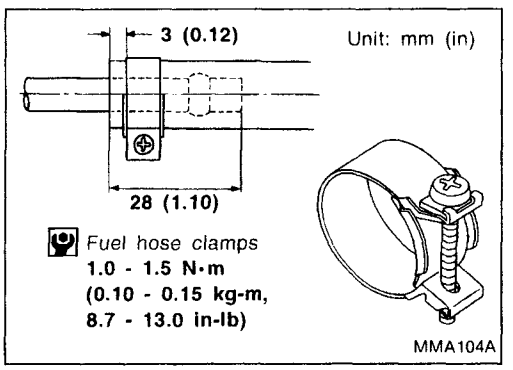

CAUTION:

Tighten high-pressure rubber hose clamp so that clamp end is 3 mm (0.12 in) from hose end.

Tightening torque specifications are the same for all rubber hose clamps.

Ensure that screw does not contact adjacent parts.

Changing Fuel Filter

WARNING:

Before removing fuel filter, release fuel pressure from fuel line to eliminate danger.

Changing Fuel Filter (Cont'd)

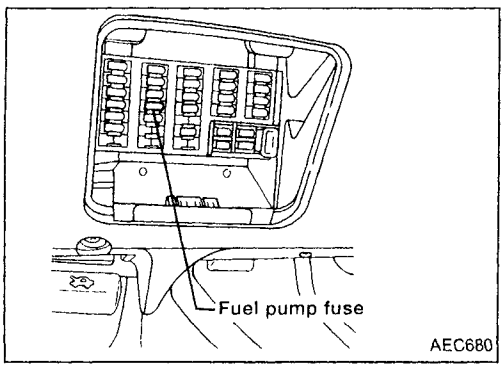

1. Remove fuse for fuel pump.
2. Start engine.
3. After engine stalls, crank engine two or three times to make sure that fuel pressure is released.
4. Turn ignition switch off and install fuse for fuel pump.

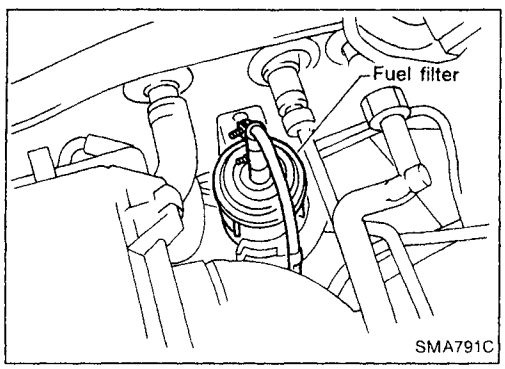

5. Loosen fuel hose clamps.
6. Replace fuel filter.

- **Be careful not to spill fuel over engine compartment. Place a shop towel to absorb fuel.**
- **Use a high-pressure type fuel filter. Do not use a synthetic resinous fuel filter.**
- **When tightening fuel hose clamps, refer to Checking Fuel Lines.**

Cleaning and Changing Air Cleaner Filter

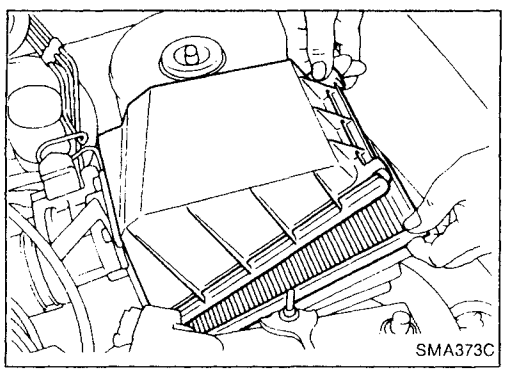

VISCOUS PAPER TYPE

The viscous paper type filter does not need cleaning between renewals.

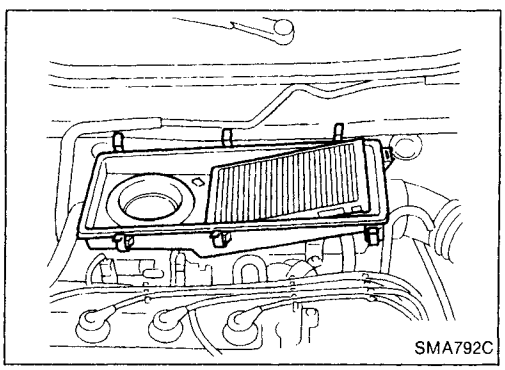

DRY PAPER TYPE

Clean or replace element more often under dusty driving conditions.

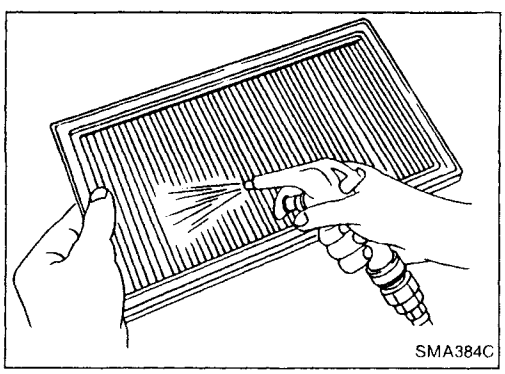

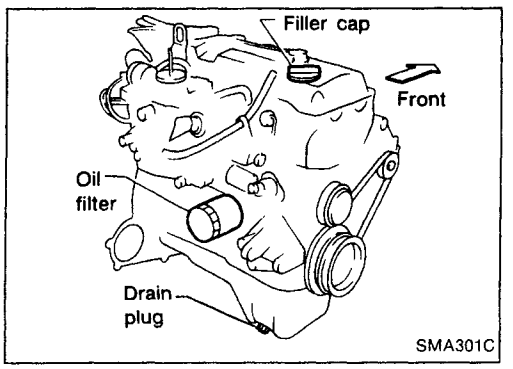

Changing Engine Oil

WARNING:

- **Be careful not to burn yourself, as the engine oil is hot.**
- **Prolonged and repeated contact with used engine oil may cause skin cancer; try to avoid direct skin contact with used oil. If skin contact is made, wash thoroughly with soap or hand cleaner as soon as possible.**

1. Warm up engine, and check for oil leakage from engine components.
2. Remove drain plug and oil filler cap.
3. Drain oil and refill with new engine oil.

Refill oil capacity (Approximate):

Unit: ℓ (Imp qt)

With oil filter change	3.2 (2-7/8)
Without oil filter change	2.8 (2-1/2)

Regarding the Anti-freeze Coolant Mixture Ratio, refer to "RECOMMENDED FLUIDS AND LUBRICANTS".

CAUTION:

- **Be sure to clean drain plug and install with new washer.**
  Drain plug:
  [O]: 29 - 39 N·m (3.0 - 4.0 kg-m, 22 - 29 ft-lb)
- **Use recommended engine oil "API SE, SF, SG or SH" with suitable viscosity.**
- **Refill oil capacity changes depending on the oil temperature and drain time. Use these values as a reference and be certain to check with the dipstick when changing the oil.**

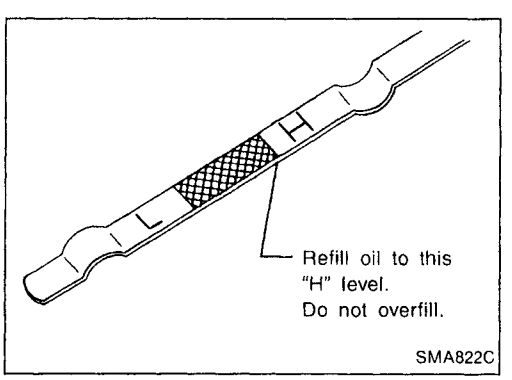

4. Check oil level.
5. Start engine and check area around drain plug and oil filter for oil leakage.
6. Run engine for a few minutes, then turn it off. After several minutes, check oil level.

Changing Oil Filter

1. Remove oil filter with Tool.

WARNING:

Be careful not to burn yourself, as the engine and the engine oil are hot.

Changing Oil Filter (Cont'd)

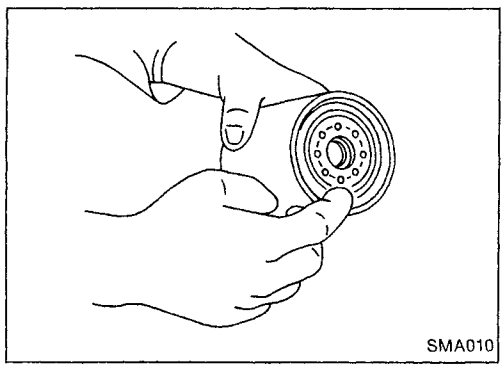

2. Before installing new oil filter, clean the oil filter mounting surface on cylinder block, and coat the rubber seal of oil filter with a little engine oil.

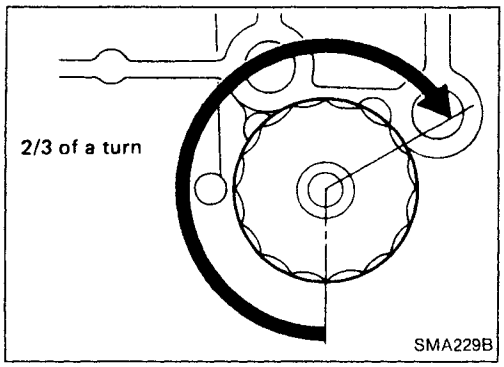

3. Screw in the oil filter until a slight resistance is felt, then tighten an additional 2/3 turn.
4. Add engine oil.

Refer to Changing Engine Oil.

- **Clean excess oil from engine.**

Checking and Changing Spark Plugs

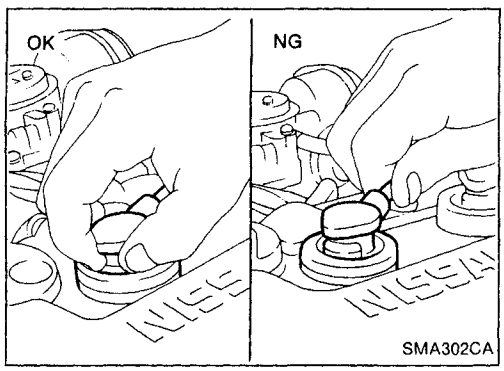

1. Disconnect ignition wires from spark plugs at boot. Do not pull on the wire.

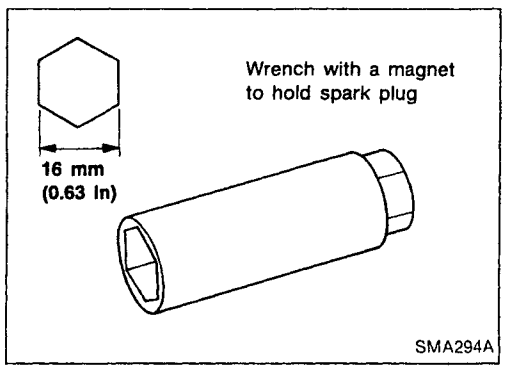

2. Remove spark plugs with spark plug wrench.
3. Clean plugs in sand blast cleaner.
4. Check insulator for cracks or chips, gasket for damage or deterioration and electrode for wear and burning. If they are excessively worn away, replace with new spark plugs.
5. Check spark plug gap.

Spark plug:

	GA16DE & GA14DE engine for Europe and Israel	GA16DE & GA15DE engine except for Europe and Israel
Type		
Standard	BKR5E	BKR5E-11
Cold	BKR6E, BKR7E	BKR6E-11, BKR7E-11
Plug gap mm (in)	0.8 - 0.9 (0.031 - 0.035)	1.0 - 1.1 (0.039 - 0.043)

Checking and Changing Spark Plugs (Cont'd)

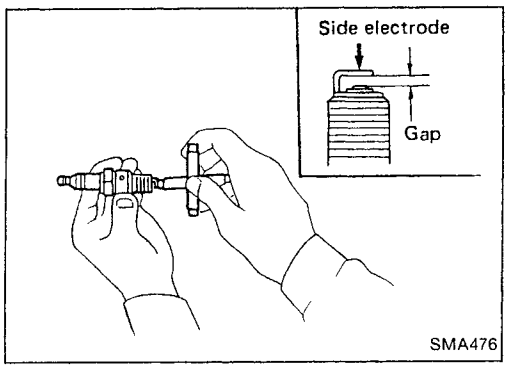

6. Install spark plugs. Reconnect ignition wires according to nos. indicated on them.
   Spark plug:
   [O]: 20 - 29 N·m (2.0 - 3.0 kg-m, 14 - 22 ft-lb)

Checking Ignition Wires

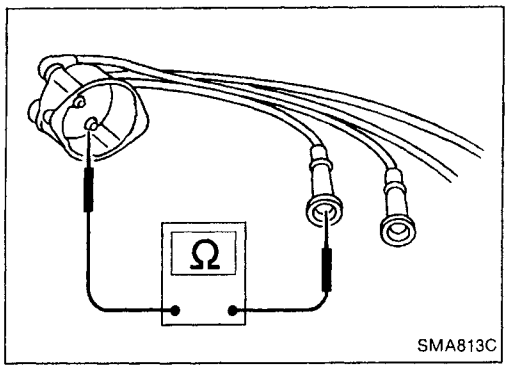

1. Inspect wires for cracks, damage, burned terminals and for improper fit.
2. Measure the resistance of wires and check for intermittent breaks.

Cylinder No.	Resistance kΩ [at 25°C (77°F)]
1	Approximately 11
2	Approximately 10
3	Approximately 8
4	Approximately 6.5

If it exceeds the limit, replace the ignition wire with a new one.

Changing Positive Crankcase Ventilation (PCV) Filter

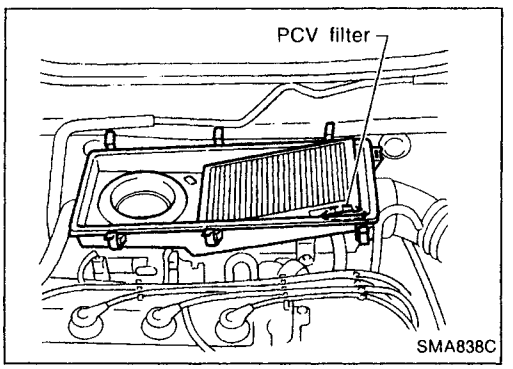

Remove air cleaner cover and replace PCV filter.

Checking EVAP Vapor Lines

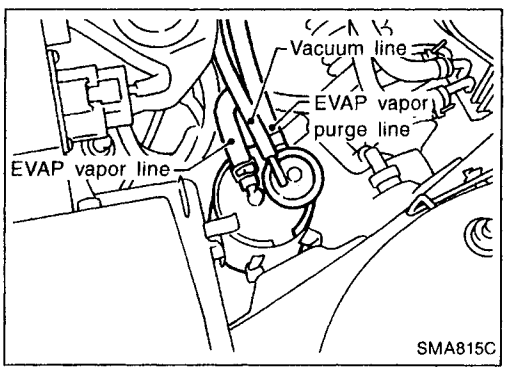

1. Visually inspect EVAP vapor lines for improper attachment and for cracks, damage, loose connections, chafing and deterioration.
2. Inspect vacuum relief valve of fuel tank filler cap for clogging, sticking, etc.

Refer to EVAPORATIVE EMISSION SYSTEM INSPECTION in EC section.

A

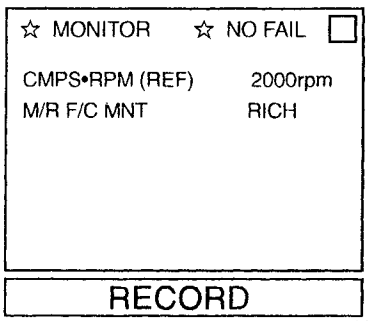

MEC711B

B

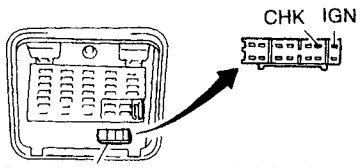

Data link connector for CONSULT (Connect CHK and IGN terminals with a suitable harness.)

SEF909P

C

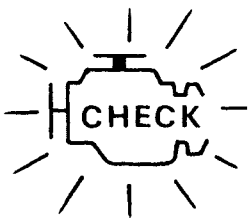

Malfunction indicator lamp

SEF051PA

Checking Oxygen Sensor (O2S) or Heated Oxygen Sensor (HO2S)

Checking procedure

INSPECTION START

↓

Start engine and warm it up until water temperature indicator points to the middle of gauge.

↓

A B C

1. See "M/R F/C MNT" in "Data monitor" mode.
2. Run engine at about 2,000 rpm for about 2 minutes under no-load.
3. Maintaining engine at 2,000 rpm under no-load (engine is warmed up sufficiently.), check that the monitor fluctuates between "LEAN" and "RICH" more than 5 times during 10 seconds.

1 time **RICH → LEAN → RICH →**
2 times **RICH → LEAN → RICH → LEAN → RICH .....**

OR

1. Set "Oxygen sensor monitor"*1 or "Heated oxygen sensor monitor"*2 in the Diagnostic test mode II. (Refer to EC section.)
2. Run engine at about 2,000 rpm for about 2 minutes under no-load.
3. Maintaining engine at 2,000 rpm under no-load, check to make sure that malfunction indicator lamp on the instrument panel goes ON and OFF more than 5 times during 10 seconds.

OK → INSPECTION END

NG → Check and adjustment should be made by referring to IDLE SPEED/IGNITION TIMING/IDLE MIXTURE RATIO INSPECTION **(BASIC SERVICE PROCEDURE)** in EC section.

*1: Except for Australia (A/T), Israel and Europe
*2: For Australia (A/T), Israel and Europe

Checking Drive Belts

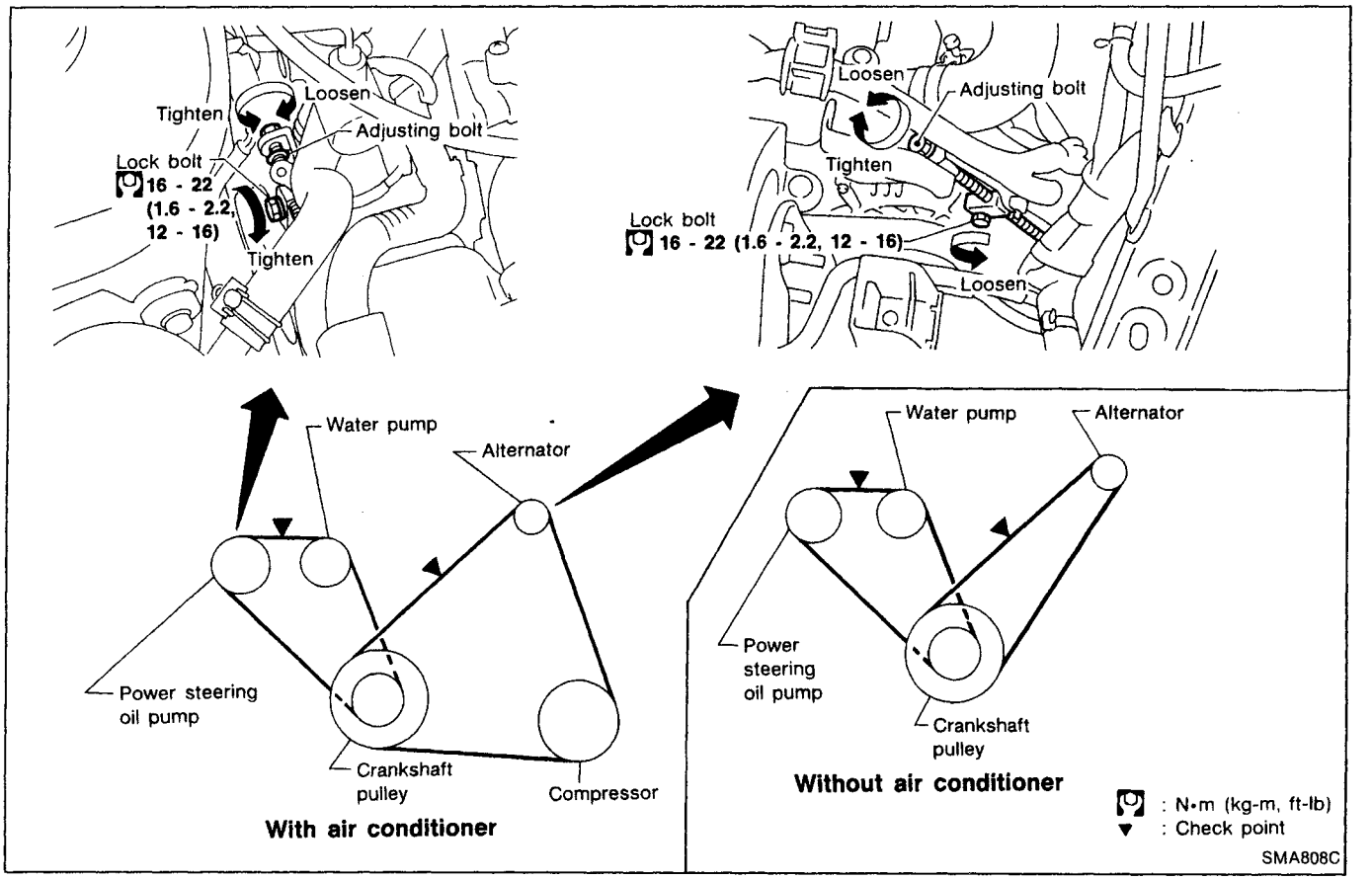

1. Inspect for cracks, fraying, wear or oil adhesion. If necessary, replace with a new one.
2. Inspect drive belt deflections by pushing on the belt midway between pulleys.

Alternator drive belt fitting place (Models without air conditioner)

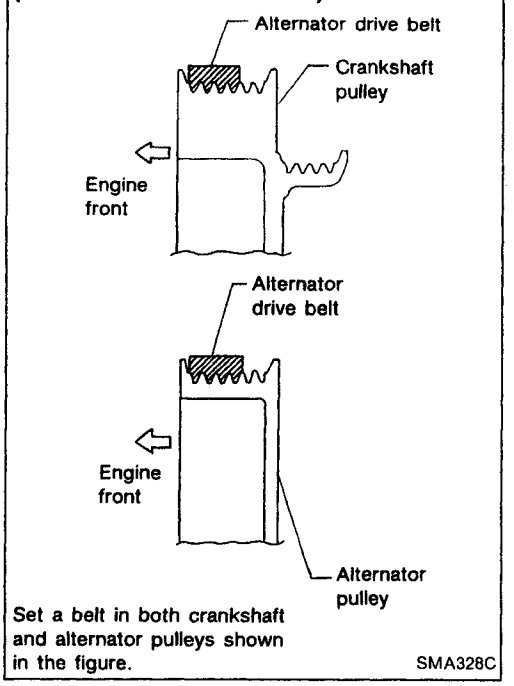

Set a belt in both crankshaft and alternator pulleys shown in the figure.

Adjust if belt deflections exceed the limit.
Belt deflection:

Unit: mm (in)

Drive belts	Used belt deflection		Deflection of new belt
	Limit	Deflection after adjustment	
Alternator			
With air conditioner compressor	11.5 - 12.5 (0.453 - 0.492)	7 - 8 (0.28 - 0.31)	6.5 - 7.5 (0.256 - 0.295)
Without air conditioner compressor	12 - 13 (0.47 - 0.51)	8 - 9 (0.31 - 0.35)	7 - 8 (0.28 - 0.31)
Power steering oil pump	6 - 7 (0.24 - 0.28)	4 - 5 (0.16 - 0.20)	3.5 - 4.5 (0.138 - 0.177)
Applied pushing force	98 N (10 kg, 22 lb)		

Inspect drive belt deflections when engine is cold.

Changing Engine Coolant

WARNING:
To avoid being scalded, never change the coolant when the engine is hot.

—DRAINING ENGINE COOLANT—

1. Turn ignition switch "ON". Move heater "TEMP" control knob all the way to "HOT".

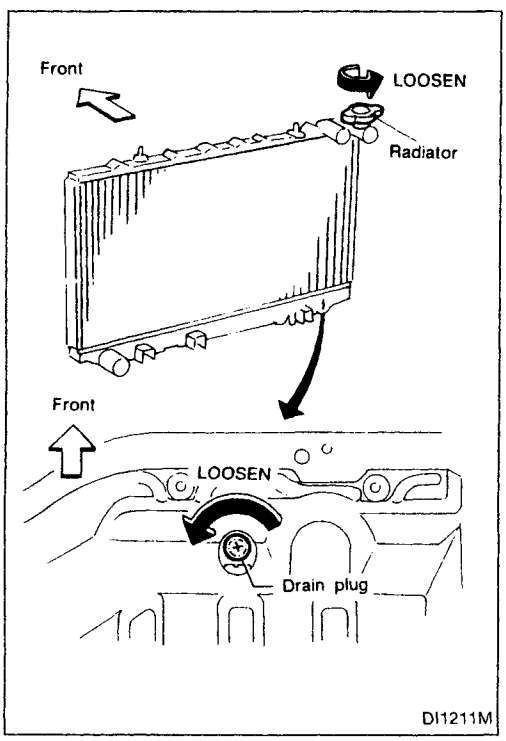

2. Open radiator drain plug at the bottom of radiator, and remove radiator cap.
3. Remove reservoir tank, drain coolant, then clean reservoir tank.
   Install it temporarily.

- **Be careful not to allow coolant to contact drive belts.**

Changing Engine Coolant (Cont'd)

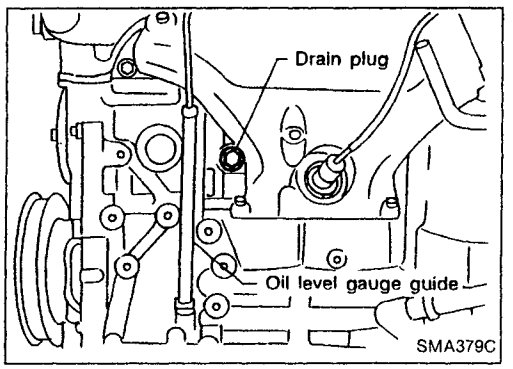

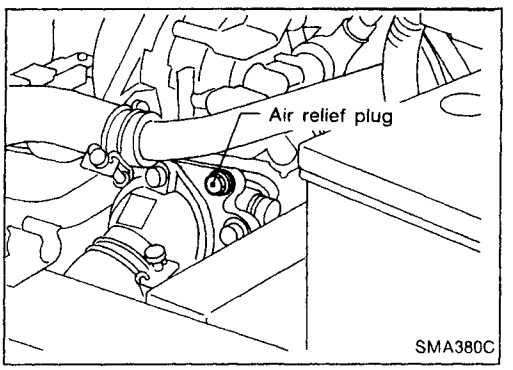

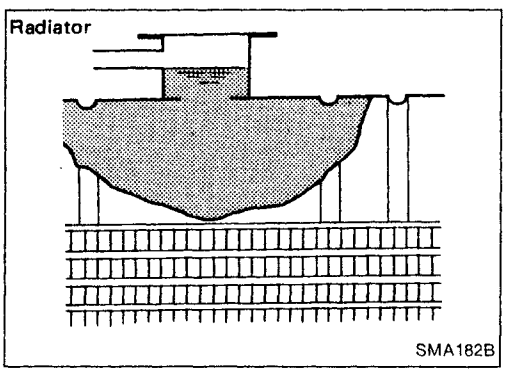

4. Remove cylinder block drain plug and air relief plug.

—FLUSHING COOLING SYSTEM—

5. Install radiator drain plug and cylinder block drain plug securely.
6. Fill radiator with water until water spills from the air relief hole, then install air relief plug.
   Fill radiator and reservoir tank with water and install radiator cap.
   Air relief plug:
   : 10 N·m (1.0 kg-m, 87 in-lb)
7. Warm up engine until cooling fan operates, then race engine 2 or 3 times under no-load.
8. Stop engine and wait until it cools down.
9. Drain water.
10. Repeat steps 2 through 9 until clear water begins to drain from radiator.

—REFILLING ENGINE COOLANT—

11. Install reservoir tank, radiator drain plug and cylinder block drain plug.

- **Apply sealant to the thread of cylinder block drain plug.**
  : 8 - 12 N·m (0.8 - 1.2 kg-m, 69 - 104 in-lb)

12. Fill radiator with coolant until coolant spills from the air relief hole, then install air relief plug.
13. Fill radiator and reservoir tank with coolant up to specified level and install radiator cap.
    Air relief plug:
    : 10 N·m (1.0 kg-m, 87 in-lb)

For coolant mixture ratio, refer to MA-16.
Coolant capacity (With reservoir tank):

Unit: ℓ (Imp qt)

	With heater	Without heater
M/T	6.1 (5-3/8)	5.8 (5-1/8)
A/T	6.6 (5-7/8)	6.3 (5-1/2)

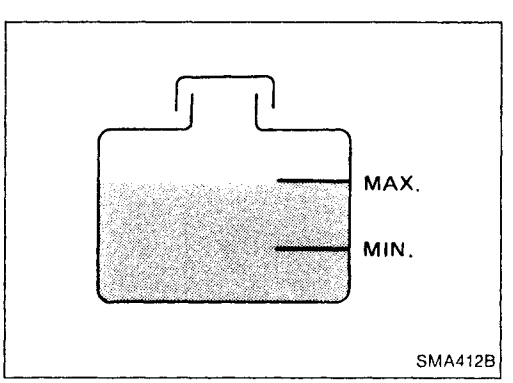

Reservoir tank capacity (for MAX level):
0.7ℓ (5/8 Imp qt)
Pour coolant through coolant filler neck slowly to allow air in system to escape.

Changing Engine Coolant (Cont'd)

14. Warm up engine to normal operating temperature.
15. Run engine at 2,500 rpm for 10 seconds and return to idle speed.
- Repeat 2 or 3 times.

Watch coolant temperature gauge so as not to overheat the engine.

16. Stop engine and cool it down.
- Cool down using a fan to reduce the time.

17. Refill reservoir tank to Max line with coolant.
18. Repeat step 15 through step 17 two or more times.
19. Warm up engine, and check for sound of coolant flow while running engine from idle up to 4,000 rpm with heater temperature control set at several positions between COOL and HOT.
- Sound may be noticeable at heater water cock.

20. If sound is heard, bleed air from cooling system by repeating steps 14 through 17 until coolant level no longer drops.
- **Clean excess coolant from engine.**

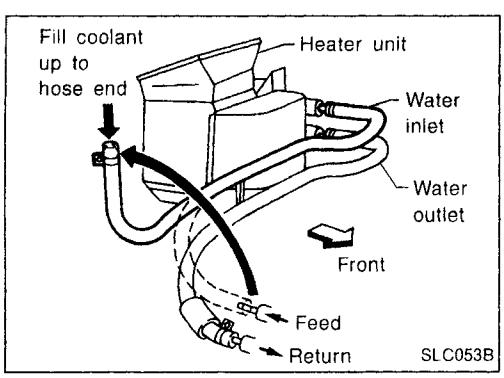

CAUTION:
When heater unit is removed or replaced, refill engine coolant as shown, removing heater hose at feeding connector on engine.

Checking Cooling System

CHECKING HOSES

Check hoses for improper attachment and for leaks, cracks, damage, loose connections, chafing and deterioration.

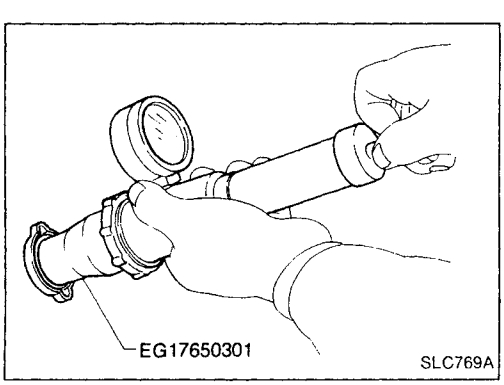

CHECKING RADIATOR CAP

Apply pressure to radiator cap with cap tester to see if it is satisfactory.

Radiator cap relief pressure:
Standard
78 - 98 kPa
(0.78 - 0.98 bar, 0.8 - 1.0 kg/cm^2, 11 - 14 psi)
Limit
59 - 98 kPa
(0.59 - 0.98 bar, 0.6 - 1.0 kg/cm^2, 9 - 14 psi)

Checking Cooling System (Cont'd)

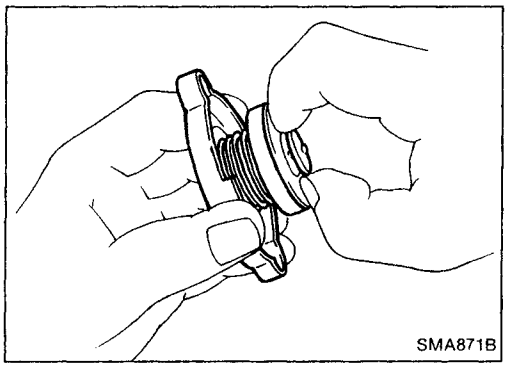
SMA871B

Pull the negative-pressure valve to open it. Check that it closes completely when released.

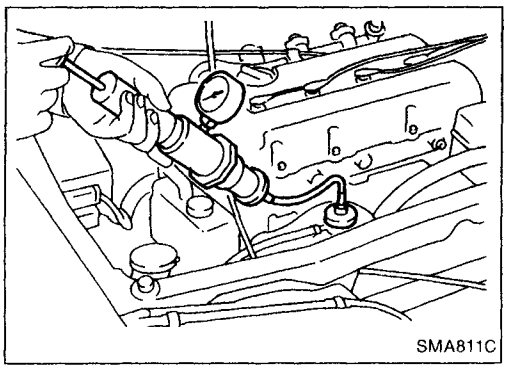
SMA811C

CHECKING COOLING SYSTEM FOR LEAKS

Apply pressure to the cooling system with cap tester to check for leakage.

Testing pressure:

157 kPa (1.57 bar, 1.6 kg/cm^2, 23 psi)

CAUTION:

Higher pressure than the specified value may cause damage to radiator.

Checking Fuel Lines

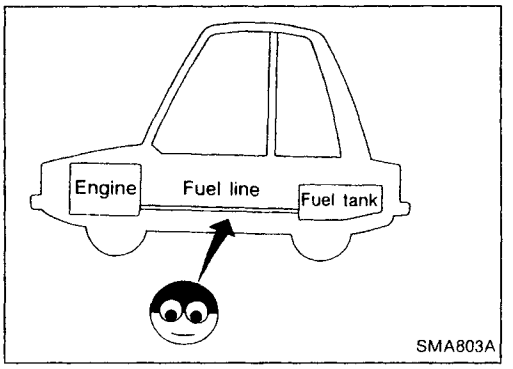

SMA803A

Inspect fuel lines and tank for improper attachment, leaks, cracks, damage, loose connections, chafing or deterioration. If necessary, repair or replace faulty parts.

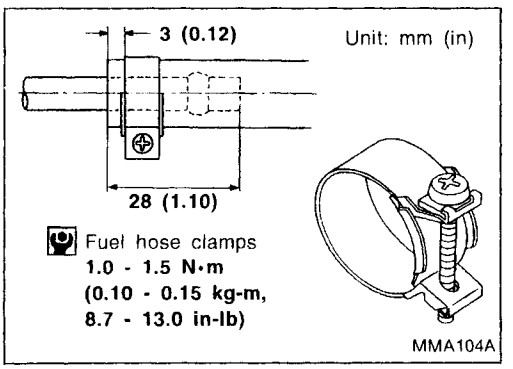

MMA104A

CAUTION:

Tighten high-pressure rubber hose clamp so that clamp end is 3 mm (0.12 in) from hose end.

Tightening torque specifications are the same for all rubber hose clamps.

Ensure that screw does not contact adjacent parts.

Changing Fuel Filter

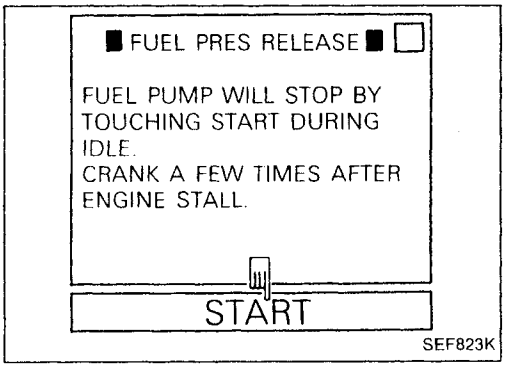

SEF823K

WARNING:

Before removing fuel filter, release fuel pressure from fuel line to eliminate danger.

1. Start engine.
2. Perform "FUEL PRESSURE RELEASE" in "WORK SUPPORT" mode with CONSULT.
3. After engine stalls, crank engine two or three times to make sure that fuel pressure is released.
4. Turn ignition switch off.

Changing Fuel Filter (Cont'd)

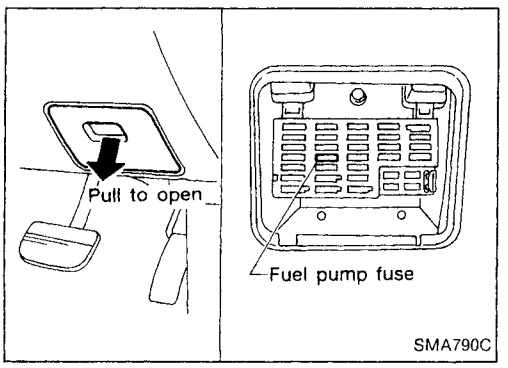

1. Remove fuse for fuel pump.
2. Start engine.
3. After engine stalls, crank engine two or three times to make sure that fuel pressure is released.
4. Turn ignition switch off and install fuse for fuel pump.

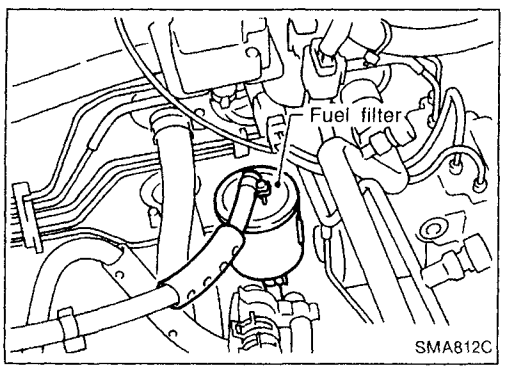

5. Loosen fuel hose clamps.
6. Replace fuel filter.

- **Be careful not to spill fuel over engine compartment. Place a shop towel to absorb fuel.**
- **Use a high-pressure type fuel filter. Do not use a synthetic resinous fuel filter.**
- **When tightening fuel hose clamps, refer to "Checking Fuel Lines".**

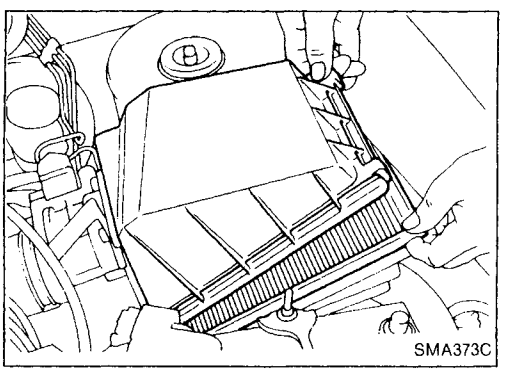

Changing Air Cleaner Filter

Viscous paper type

The viscous paper type filter does not need cleaning between renewals.

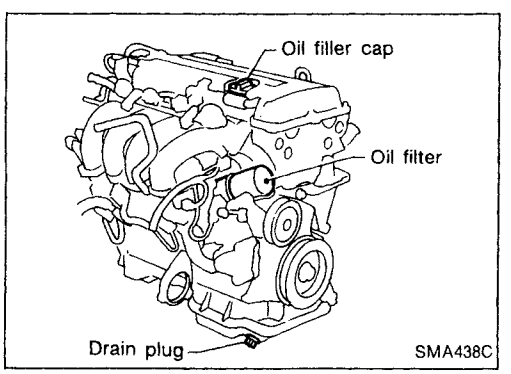

Changing Engine Oil

WARNING:

- **Be careful not to burn yourself, as the engine oil is hot.**
- **Prolonged and repeated contact with used engine oil may cause skin cancer; try to avoid direct skin contact with used oil. If skin contact is made, wash thoroughly with soap or hand cleaner as soon as possible.**

1. Warm up engine, and check for oil leakage from engine components.
2. Remove drain plug and oil filler cap.
3. Drain oil and refill with new engine oil.

Refill oil capacity (Approximate):

Unit: ℓ (Imp qt)

With oil filter change	3.4 (3)
Without oil filter change	3.2 (2-7/8)

CAUTION:

- **Be sure to clean drain plug and install with new washer.**
  Drain plug:
  [O]: 29 - 39 N·m (3.0 - 4.0 kg-m, 22 - 29 ft-lb)
- **Use recommended engine oil (API SE, SF, SG or SH grade).**

The refill capacity changes depending on the oil temperature and drain time, use these values as a reference and be certain to check with the dipstick when changing the oil.

Changing Engine Oil (Cont'd)

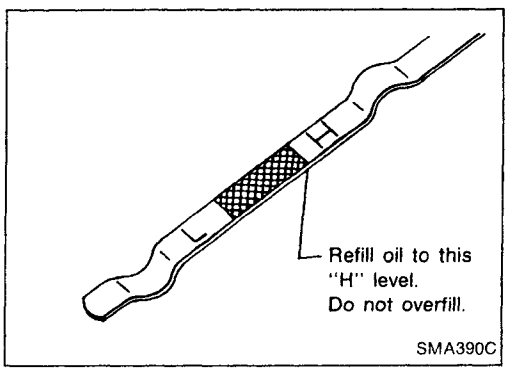

4. Check oil level.
5. Start engine and check area around drain plug and oil filter for oil leakage.
6. Run engine for a few minutes, then turn it off. After several minutes, check oil level.

Changing Oil Filter

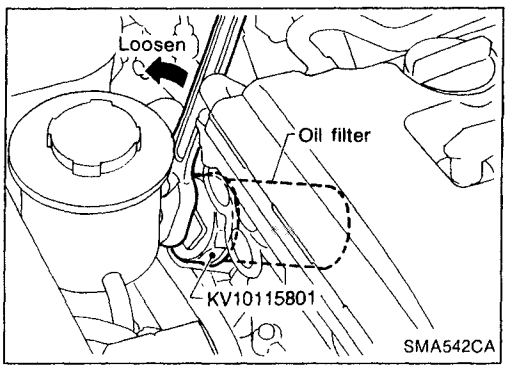

1. Remove oil filter with Tool.

WARNING:

Be careful not to burn yourself, as the engine and the engine oil are hot.

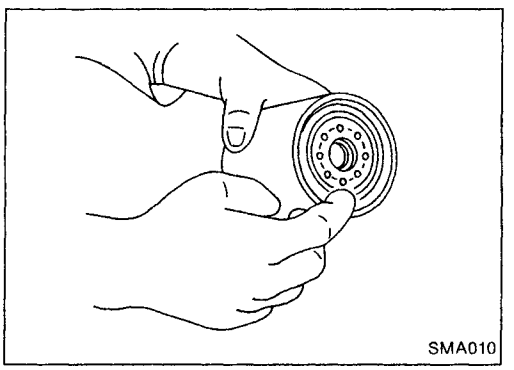

2. Clean oil filter mounting surface on cylinder block. Coat rubber seal of new oil filter with engine oil.

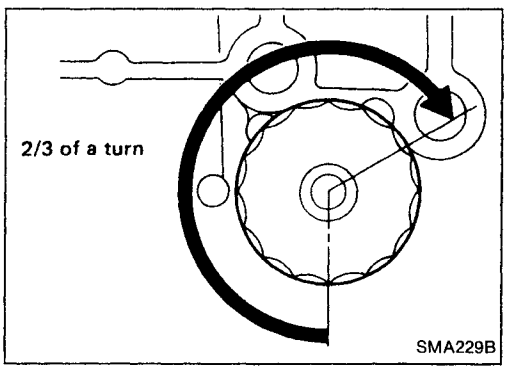

3. Screw in the oil filter until a slight resistance is felt, then tighten an additional 2/3 turn.
4. Add engine oil.

Refer to Changing Engine Oil.

- **Clean excess oil from engine.**

Changing Spark Plugs (Platinum-tipped type)

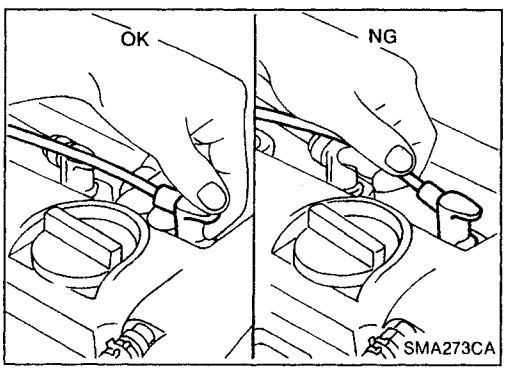

1. Disconnect ignition wires from spark plugs at boot. Do not pull on the wire.

Changing Spark Plugs (Platinum-tipped type) (Cont'd)

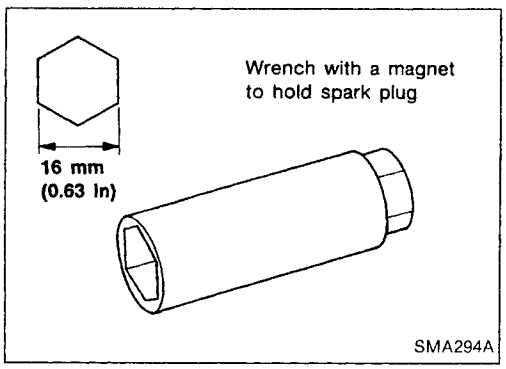

2. Remove spark plugs with suitable spark plug wrench.

Spark plug:

Make	NGK
Standard type	PFR5B-11
Alternative	PFR6B-11 PFR7B-11

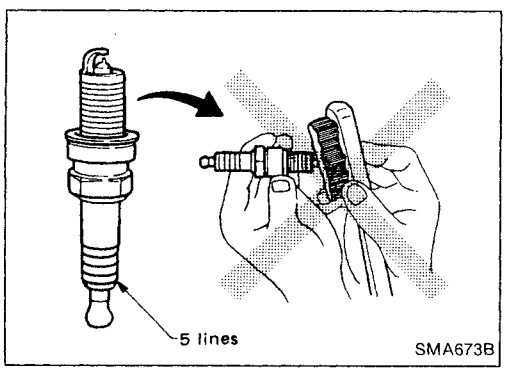

- **Do not use a wire brush for cleaning.**
- **If plug tip is covered with carbon, spark plug cleaner may be used.**
  Cleaner air pressure:
  Less than 588 kPa (5.9 bar, 6 kg/cm^2, 85 psi)
  Cleaning time:
  Less than 20 seconds

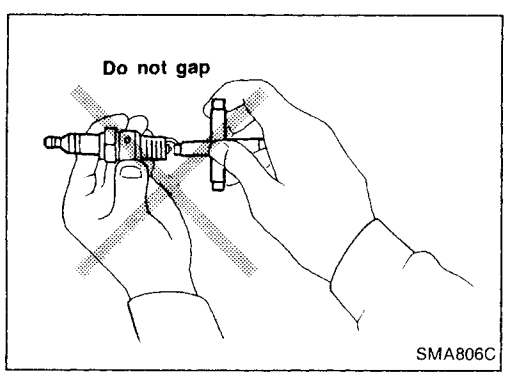

- **Checking and adjusting plug gap are not required between change intervals.**

3. Install spark plugs Reconnect ignition wires according to numbers. indicated on them.
   Spark plug:
   [O]: 20 - 29 N·m (2.0 - 3.0 kg-m, 14 - 22 ft-lb)

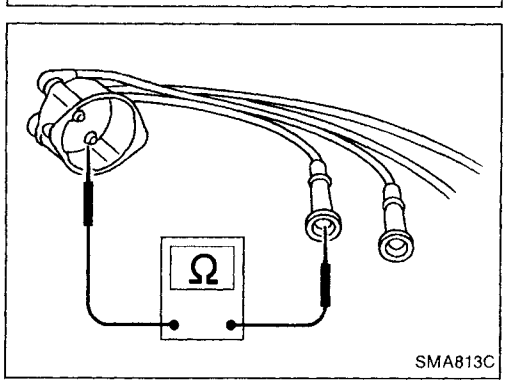

Checking Ignition Wires

1. Inspect wires for cracks, damage, burned terminals and for improper fit.
2. Measure the resistance of wires and check for intermittent breaks.

Resistance:

Cylinder No.	Resistance kΩ [at 25°C (77°F)]
1	Approximately 11
2	Approximately 9.5
3	Approximately 8
4	Approximately 7

If it exceeds the limit, replace the ignition wire with a new one.

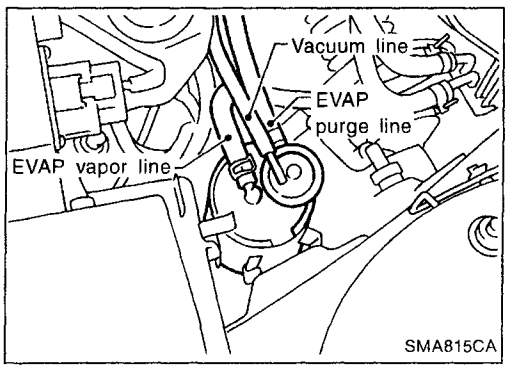

Checking EVAP Vapor & Purge Lines

1. Visually inspect EVAP vapor and purge lines for improper attachment and for cracks, damage, loose connections, chafing and deterioration.
2. Inspect vacuum relief valve of fuel tank filler cap for clogging, sticking, etc.

Refer to EVAPORATIVE EMISSION SYSTEM in EC section.

A

☆ MONITOR ☆ NO FAIL

CMPS•RPM (REF)	2000rpm
M/R F/C MNT	RICH

RECORD

MEC711B

B

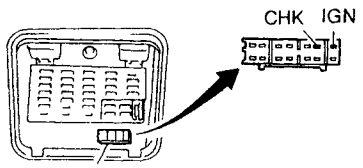

Data link connector for CONSULT (Connect CHK and IGN terminals with a suitable harness.)

SEF909P

C

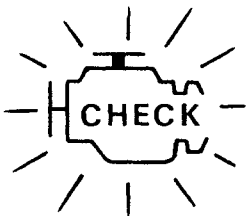

Malfunction indicator lamp

SEF051PA

Checking Heated Oxygen Sensor (HO2S)

Checking procedure

INSPECTION START

↓

Start engine and warm it up until water temperature indicator points to the middle of gauge.

↓

A B C

1. See "M/R F/C MNT" in "Data monitor" mode.
2. Run engine at about 2,000 rpm for about 2 minutes under no-load.
3. Maintaining engine at 2,000 rpm under no-load (engine is warmed up sufficiently.), check that the monitor fluctuates between "LEAN" and "RICH" more than 5 times during 10 seconds.

1 time **RICH → LEAN → RICH →**

2 times **RICH → LEAN → RICH → LEAN → RICH .....**

OR

1. Set "Heated oxygen sensor monitor" in the Diagnostic test mode II. (Refer to EC section.)
2. Run engine at about 2,000 rpm for about 2 minutes under no-load.
3. Maintaining engine at 2,000 rpm under no-load, check to make sure that malfunction indicator lamp on the instrument panel goes ON and OFF more than 5 times during 10 seconds.

OK → INSPECTION END

NG → Check and adjustment should be made by referring to IDLE SPEED/ IGNITION TIMING/IDLE MIXTURE RATIO INSPECTION in EC section.

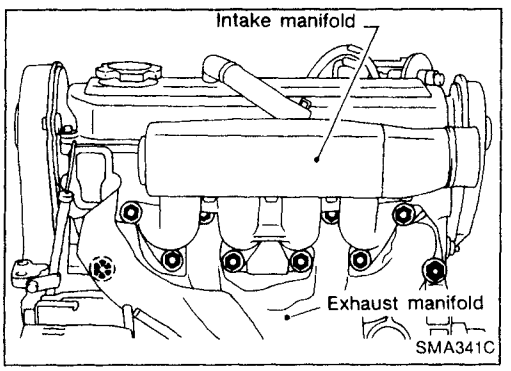

Manifold Nut Check

1. Remove exhaust manifold cover.
2. Tighten manifold bolts and nuts to the specified torque. Refer to "SERVICE DATA AND SPECIFICATIONS (SDS)".
3. Install exhaust manifold cover.

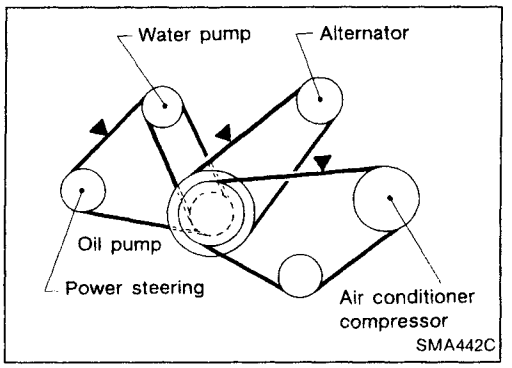

Checking Drive Belt

WARNING:

Inspect drive belt deflections when engine is cold. When engine is hot, check deflections at least 30 minutes after engine has been switched off.

1. Inspect belts for cracks, fraying, wear or oil adhesion. If necessary, replace with new ones.
2. Inspect drive belt deflections by pushing on the belt midway between pulleys.
3. Adjust belt deflection if it exceeds the limit.

Belt deflection:

Unit: mm (in)

	Used belt deflection		Deflection of new belt
	Limit	Deflection after adjustment	
Alternator	14 (0.55)	11 - 13 (0.43 - 0.51)	9 - 11 (0.35 - 0.43)
Air conditioner compressor	14 (0.55)	11 - 13 (0.43 - 0.51)	9 - 11 (0.35 - 0.43)
Power steering oil pump	8 (0.31)	5 - 7 (0.20 - 0.28)	4 - 6 (0.16 - 0.24)
Water pump without power steering	—	8 (0.31)	6 (0.24)
Applied pushing force	98 N (10 kg, 22 lb)		

Inspect drive belt deflections when engine is cold.

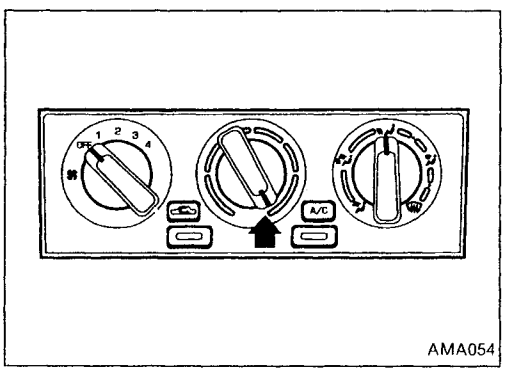

Changing Engine Coolant

WARNING:

To avoid the danger of being scalded, never attempt to change the coolant when the engine is hot.

1. Set heater "TEMP" control dial to the max. "HOT" position.

- **Make sure that air conditioner switch is "OFF".**

Changing Engine Coolant (Cont'd)

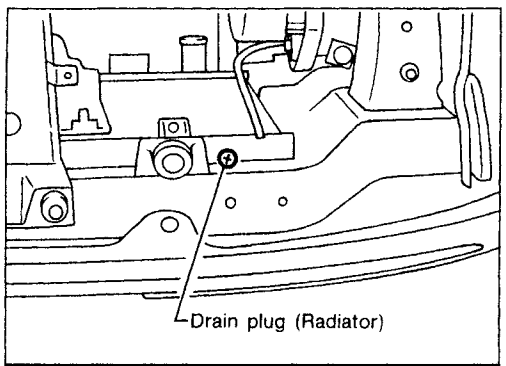

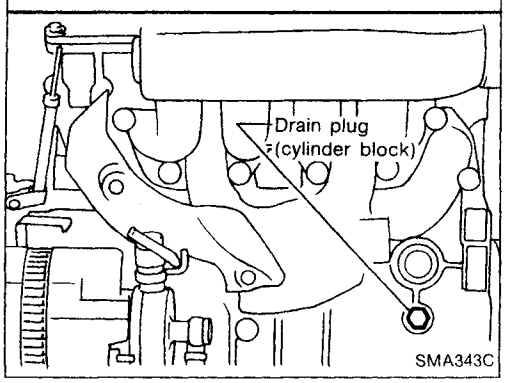

2. Open drain plugs on the bottom right of radiator and on the left side of cylinder block.
3. Remove radiator cap and drain coolant.
4. Close drain plugs and fill radiator with water up to filler neck.
5. Warm up engine and repeat steps 2, 3 and 4 one or two times to drain old coolant.

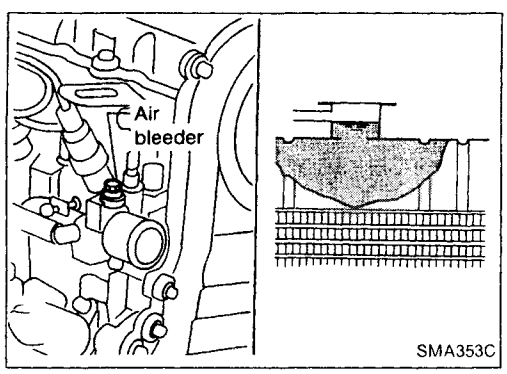

6. Open air bleeder on intake manifold.
7. Fill radiator with coolant up to filler neck.
   Follow instructions attached to anti-freeze container for anti-freeze to water mixing ratio.

Pour coolant slowly to allow air in system to escape.

Coolant capacity:

Unit: ℓ (Imp qt)

With heater	5.2 (4-5/8)
Without heater	4.9 (4-3/8)

Regarding the Anti-freeze Coolant Mixture Ratio, refer to "RECOMMENDED FLUIDS AND LUBRICANTS".

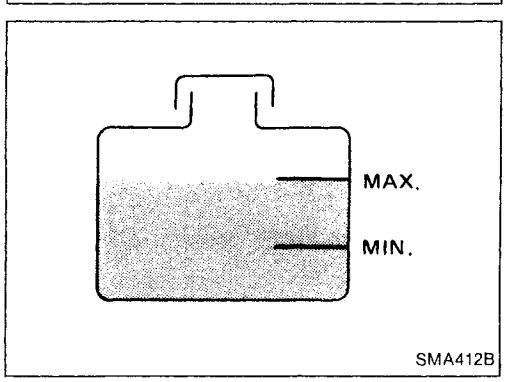

8. Securely close air bleeder.
9. Fill reservoir tank with coolant up to "MAX" level.
10. Warm up engine at about 2,000 rpm to normal operating temperature.
11. Stop engine and allow it to cool.
12. Check coolant level and refill reservoir tank if necessary.

- **Clean excess coolant from engine.**

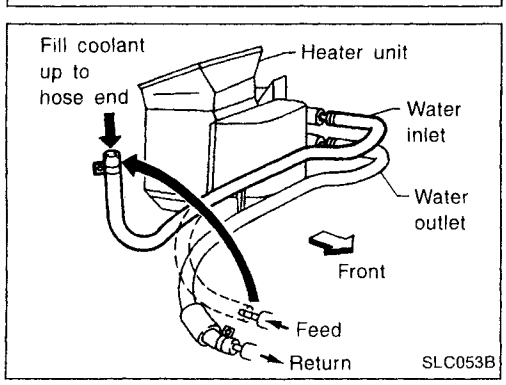

CAUTION:

When heater unit is removed or replaced, refill engine coolant as shown, removing heater hose at feeding connector on engine.

Checking Cooling System

HOSE AND CLAMP CHECK

Check hoses for improper attachment, leaks, cracks, damage, loose connections, chafing and deterioration.

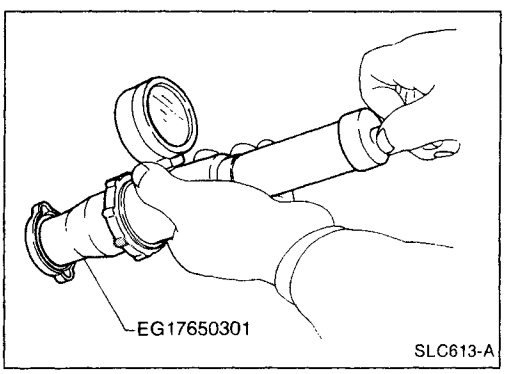

CHECKING RADIATOR CAP

1. Check relief pressure with cap tester.
   Radiator cap relief pressure:
   Standard
   78 - 98 kPa
   (0.78 - 0.98 bar, 0.8 - 1.0 kg/cm^2, 11 - 14 psi)
   Limit
   59 - 98 kPa
   (0.59 - 0.98 bar, 0.6 - 1.0 kg/cm^2, 9 - 14 psi)
   Replace radiator cap if pressure is not within the specified values.

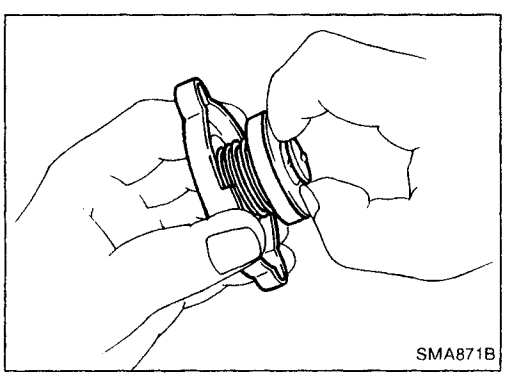

2. Pull the negative-pressure valve to open it, and check that it closes completely when released.

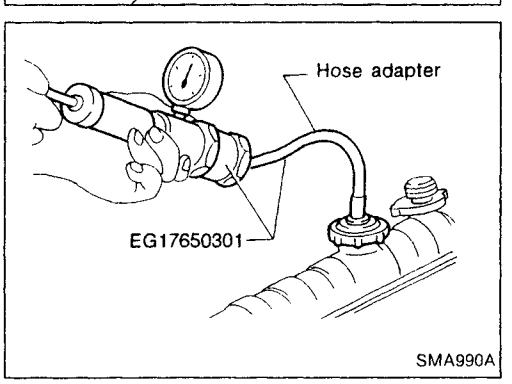

CHECKING COOLING SYSTEM FOR LEAKS

Apply pressure to the cooling system with cap tester to check for leakage.

Testing pressure:
157 kPa (1.57 bar, 1.6 kg/cm^2, 23 psi)

CAUTION:
Use of higher pressure than that specified value may cause damage to radiator.

Checking Fuel Line

Inspect fuel lines and tank for improper attachment, leaks, cracks, damage, loose connections, chafing and deterioration. If necessary, repair or replace malfunctioning parts.

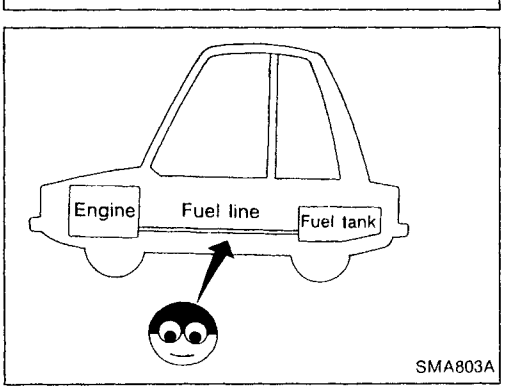

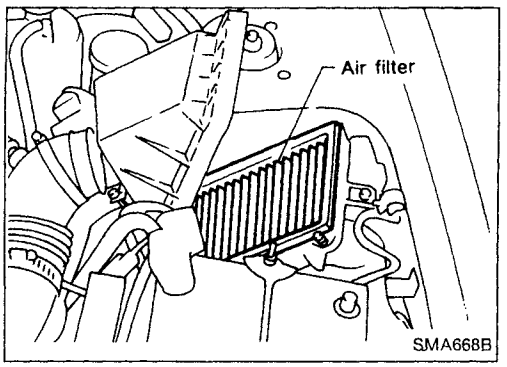

Changing Air Cleaner Filter

The viscous paper type air cleaner filter does not require any cleaning operation between renewals.

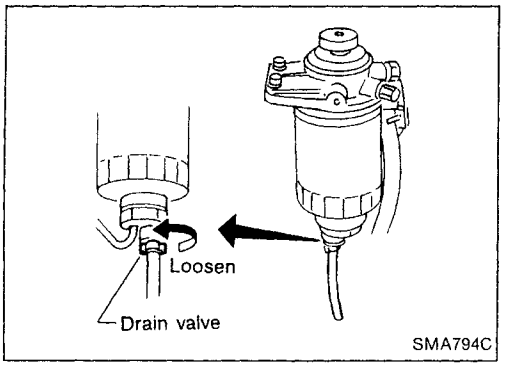

Water Draining, Fuel Filter Check and Replacement

DRAINING WATER

Open drain valve at the bottom of fuel filter.

FUEL FILTER CHECK

Check fuel filter for fuel leakage, damage and other abnormal signs.

REPLACING FUEL FILTER

1. Disconnect water sensor connector and replace fuel filter with a new one.

Hand-tighten fuel filter by about 2/3 turn after O-ring touches mounting surface. Follow the instructions on fuel filter.

2. Connect water sensor connector and bleed fuel system.

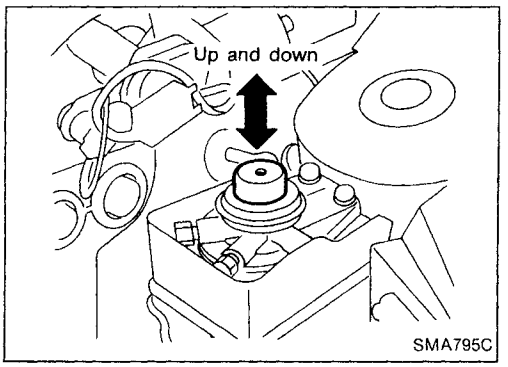

FUEL SYSTEM AIR BLEEDING

1. Move priming pump up and down until **there is suddenly more resistance in the movement. Then stop this action and start the engine.**
2. If engine does not operate smoothly after being started, race it two or three times.

When refilling empty fuel tank, bleed air out of fuel system.

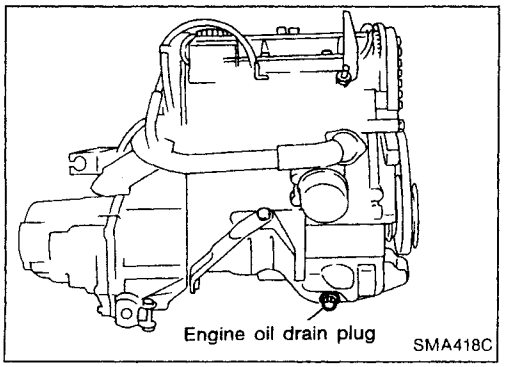

Changing Engine Oil

WARNING:

- **Be careful not to burn yourself, as engine oil is hot.**
- **Prolonged and repeated contact with used engine oil may cause skin cancer; try to avoid direct skin contact with used oil. If skin contact is made, wash thoroughly with soap or hand cleaner as soon as possible.**

1. Warm up engine, and check for oil leakage from engine components.
2. Remove oil drain plug and drain oil.

Changing Engine Oil (Cont'd)

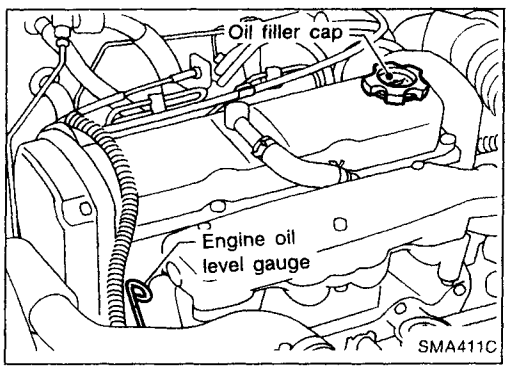

3. Tighten oil drain plug.
4. Fill with engine oil.
   Oil refill capacity:
   Without oil filter
   4.6 ℓ (4 Imp qt)
   With oil filter
   5.1 ℓ (4-1/2 Imp qt)

- **Use recommended engine oil "API CD" with suitable viscosity.**

5. Confirm oil level and warm up engine.

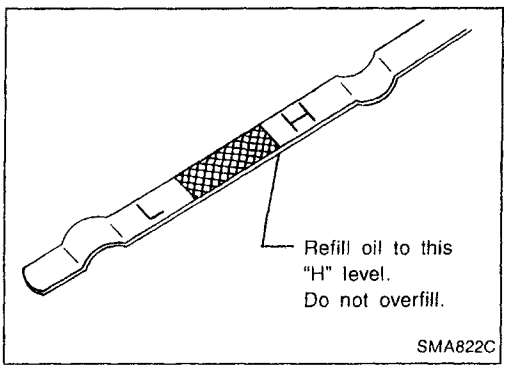

6. Recheck oil level and adjust it to "H" level if necessary.

Changing Engine Oil Filter

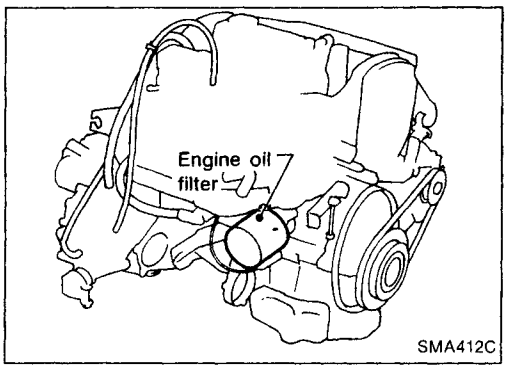

1. Remove oil filter with Tool.

WARNING:
Be careful not to burn yourself, as engine and engine oil are hot.

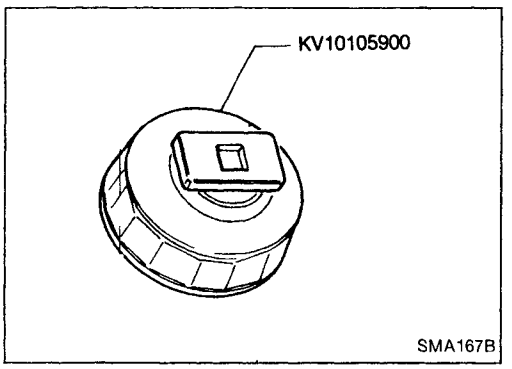

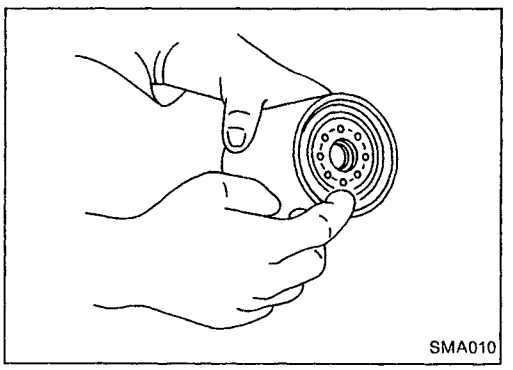

2. Before installing new oil filter, wipe clean oil filter mounting surface on cylinder block, and apply a little engine oil to rubber seal of oil filter.

Changing Engine Oil Filter (Cont'd)

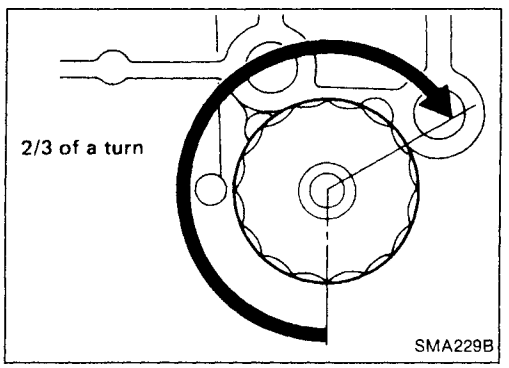

3. Screw oil filter on until a slight resistance is felt, then tighten an additional 2/3 turn.
4. Warm up engine and check oil level.
5. Adjust oil level if necessary.

Refer to Step 4 in "Changing Engine Oil", MA-42.

- **Clean excess oil from engine.**

Checking Injection Nozzle

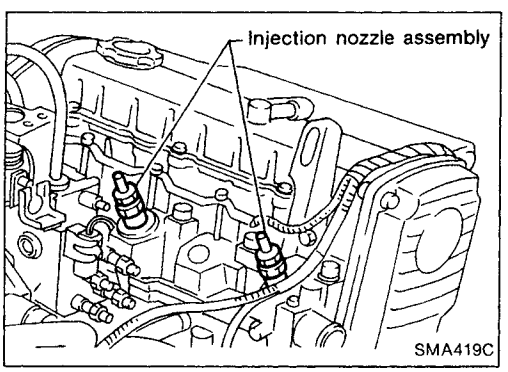

1. Remove injection delivery tubes and fuel spill tube.
2. Remove nozzle with a suitable tool [span 27 mm (1.06 in)].

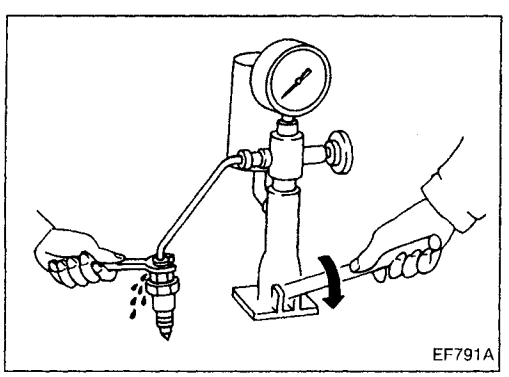

WARNING:
When using nozzle tester, be careful not to allow diesel fuel sprayed from nozzle to come into contact with your hand or body, and make sure that your eyes are properly protected.

3. Clean and check nozzles.
4. Install nozzle to injection nozzle tester and bleed air from flare nut.
5. Check initial injection pressure by pumping tester handle one time per second.

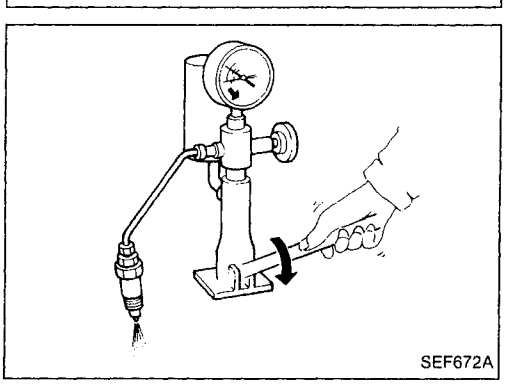

6. Install injector to pressure tester.
7. Check initial injection pressure by pumping tester handle slowly (one time per second).
   Injection pressure:
   12,749 kPa (127.5 bar, 130 kg/cm^2, 1,849 psi)

- **Always check initial injection pressure before installing new nozzle.**

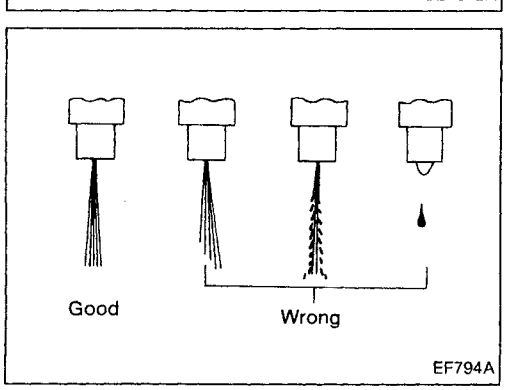

8. Check fuel spray pattern by pumping tester handle quickly (4 or 6 times per second).
9. If initial injection pressure or injection nozzle is not normal, adjust or clean injection nozzle or replace it.

Refer to EC section for injection pressure adjustment.

10. Install all injection nozzles and securely connect fuel spill tube and delivery tubes.
11. Bleed air from fuel system and check for fuel leakage with engine running.

Checking Injection Nozzle (Cont'd)

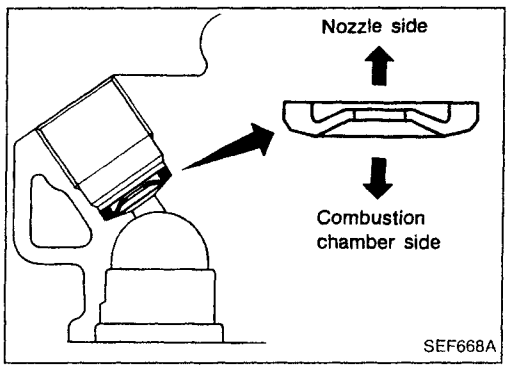

Checking Idle Speed

PREPARATION

1. Make sure that injection timing is correct.
2. Make sure that injection nozzles are in good condition.
3. Make sure that the following parts are in good condition.
- Air cleaner clogging
- Glow system
- Engine oil and coolant levels
- Air intake system (Oil filler cap, oil level gauge, etc.)
4. Set shift lever in "Neutral" position. Engage parking brake and lock both front and rear wheels with wheel chocks.
5. Turn off air conditioner, lights and accessories.
6. Warm up engine to normal operating temperature.
7. Attach a diesel tacho tester.
8. Race engine two or three times and check idle speed.

Idle speed (M/T):
700^{+50}_{-0} rpm

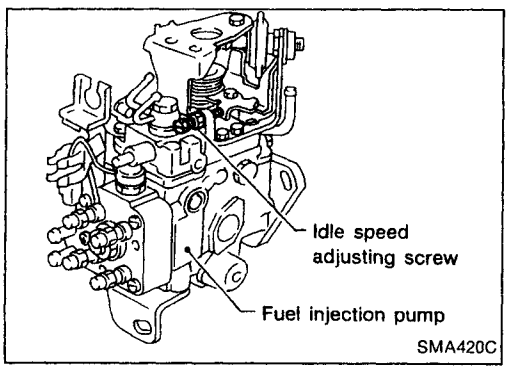

9. If it is out of specification, adjust idle speed with idle speed adjusting screw.

Securely lock the adjusting screw with lock nut.

Replacing Timing Belt

Refer to "TIMING BELT" in EM section.

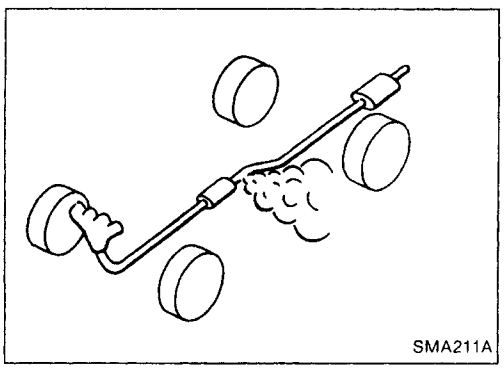
SMA211A

Checking Exhaust System

Check exhaust pipes, muffler and mounting for improper attachment and for leaks, cracks, damage, loose connections, chafing and deterioration.

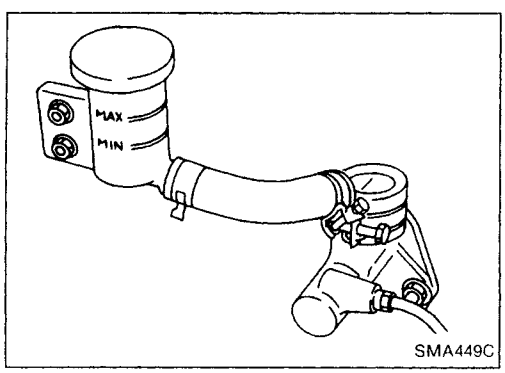

SMA449C

Checking Clutch Fluid Level and Leaks

If fluid level is extremely low, check clutch system for leaks.

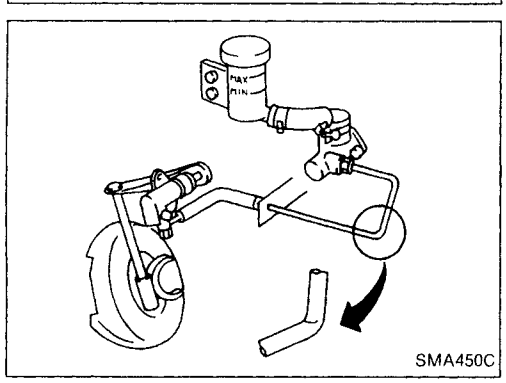
SMA450C

Checking Clutch System

HYDRAULIC TYPE

Check fluid lines and operating cylinder for improper attachment, cracks, damage, loose connections, chafing and deterioration.

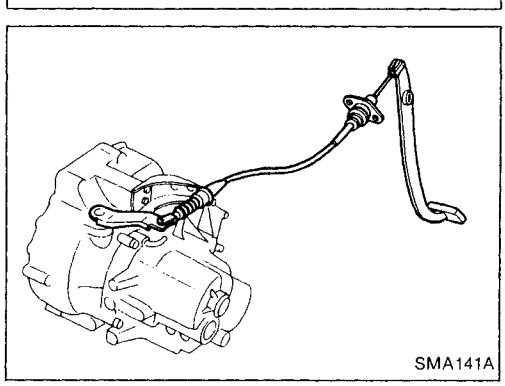
SMA141A

MECHANICAL TYPE

Check cable and links for improper attachment, chafing, wear and deterioration.

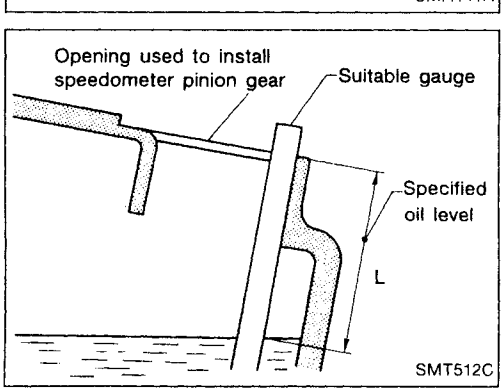

SMT512C

Checking M/T Oil

- Check that oil is not leaking from transaxle or around it.
- Remove speedometer pinion and check that the oil level L at vehicle rear side is within specification.

Specified oil level (Dimension L):

RS5F30A 58 - 66 mm (2.28 - 2.60 in)
RS5F31A
GA engine 57 - 66 mm (2.24 - 2.60 in)
CD engine 54 - 61 mm (2.13 - 2.40 in)
RS5F32A 39 - 44 mm (1.54 - 1.73 in)

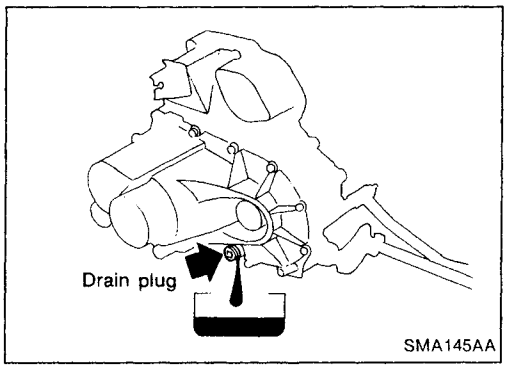

Changing M/T Oil

1. Drain oil from drain plug and refill with new gear oil.
2. Check oil level. (Refer to "Checking M/T Oil".)

Oil grade:
API GL-4
Viscosity:
See "RECOMMENDED FLUIDS AND LUBRICANTS", MA-14.
Capacity:
RS5F30A 2.8 - 3.0ℓ (4-7/8 - 5-1/4 Imp pt)
RS5F31A 2.9 - 3.2ℓ (5-1/8 - 5-5/8 Imp pt)
RS5F32A 3.7 - 3.9ℓ (6-1/2 - 6-7/8 Imp pt)
Drain plug:
[O]: 15 - 20 N·m (1.5 - 2.0 kg-m, 11 - 14 ft-lb)

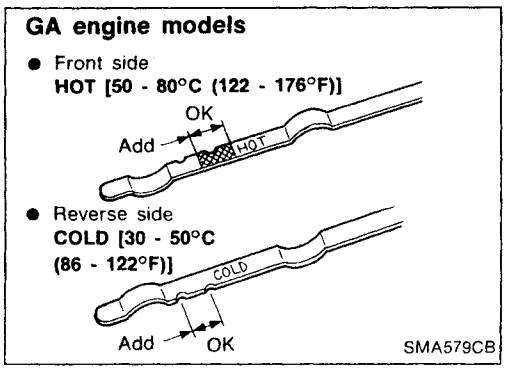

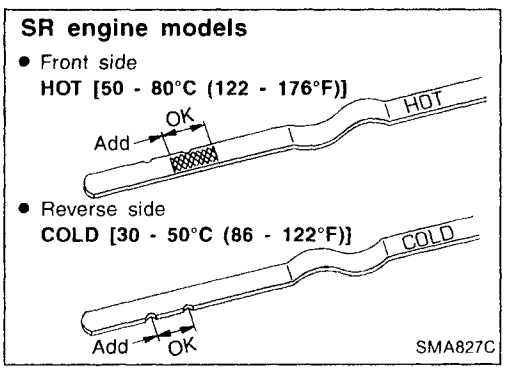

Checking A/T Fluid Level

1. Warm up engine.
2. Check for fluid leakage.
3. Before driving, fluid level can be checked at fluid temperatures of 30 to 50°C (86 to 122°F) using "COLD" range on dipstick.

a. Park vehicle on level surface and set parking brake.
b. Start engine and move selector lever through each gear position. Leave selector lever in "P" position.
c. Check fluid level with engine idling.
d. Remove dipstick and note reading. If level is at low side of either range, add fluid to the charging pipe.
e. Re-insert dipstick into charging pipe as far as it will go.
f. Remove dipstick and note reading. If reading is at low side of range, add fluid to the charging pipe. Do not overfill.

4. Drive vehicle for approximately 5 minutes in urban areas.
5. Re-check fluid level at fluid temperatures of 50 to 80°C (122 to 177°F) using "HOT" range on dipstick.

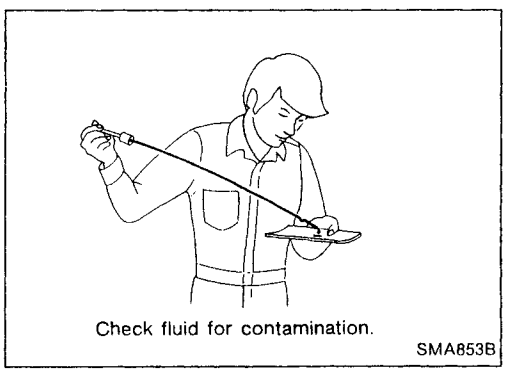

6. Check fluid condition. If fluid is very dark or smells burned, or contains friction material (clutches, band, etc.), check operation of A/T. Refer to AT section for checking operation of A/T.

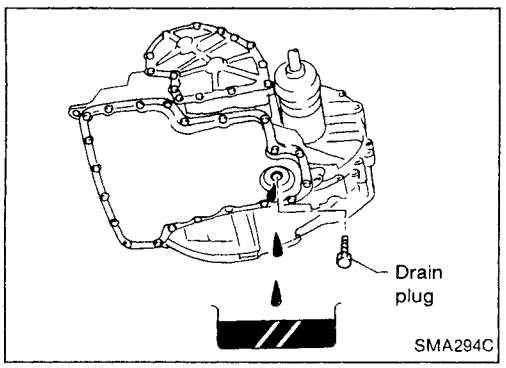

Changing A/T Fluid

1. Warm up A/T fluid.
2. Stop engine.
3. Drain A/T fluid from drain plug and refill with new A/T fluid. Always refill with same volume as drained fluid.
   Fluid grade:
   Genuine Nissan ATF or equivalent
   See "RECOMMENDED FLUIDS AND LUBRICANTS", MA-14.
   Fluid capacity (With torque converter):
   7.0ℓ (6-1/8 Imp qt)
   Drain plug:
   : 29 - 39 N·m (3.0 - 4.0 kg-m, 22 - 29 ft-lb)
4. Run engine at idle speed for five minutes.
5. Check fluid level and condition. Refer to "Checking A/T Fluid". If fluid is still dirty, repeat steps 2 through 5.

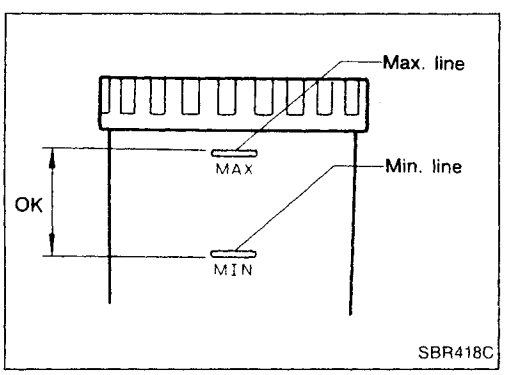

Checking Brake Fluid Level and Leaks

If fluid level is extremely low, check brake system for leaks.

Checking Brake System

Check brake fluid lines and parking brake cables for improper attachment and for leaks, chafing, abrasions, deterioration, etc.

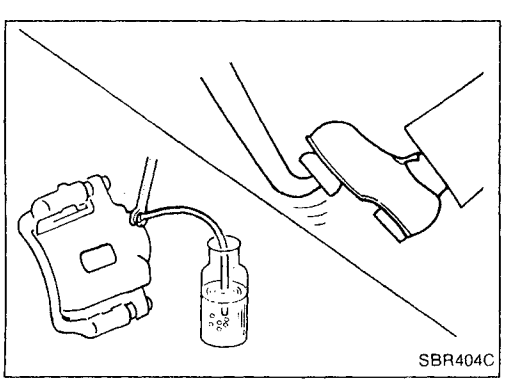

Changing Brake Fluid

1. Drain brake fluid from each air bleeder valve.
2. Refill until new brake fluid comes out from each air bleeder valve.
   Use same procedure as in bleeding hydraulic system to refill brake fluid.
   Refer to "CHECK AND ADJUSTMENT" in BR section.

- **Refill with recommended brake fluid.**
  See "RECOMMENDED FLUIDS AND LUBRICANTS".
- **Never reuse drained brake fluid.**
- **Be careful not to splash brake fluid on painted areas.**

Checking Brake Booster, Vacuum Hoses, Connections and Check Valve

Check vacuum lines, connections and check valve for improper attachment, air tightness, chafing and deterioration.

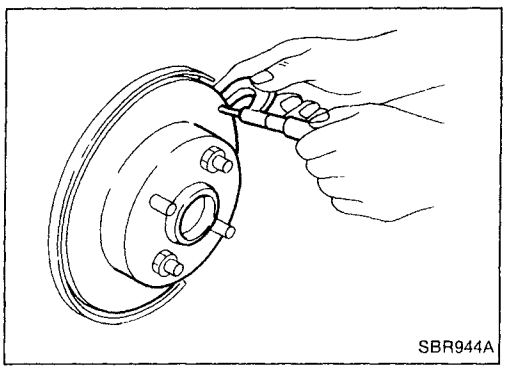
SBR944A

Checking Disc Brake

Check condition of disc brake components.

ROTOR

Check condition and thickness.

Standard thickness:
- **CL22VD and CL22VE 18.0 mm (0.709 in)**
- **AD22VF 26.0 mm (1.024 in)**
- **CL7HB 7.0 mm (0.276 in)**
- **CL9HC 9.0 mm (0.354 in)**

Minimum thickness:
- **CL22VD and CL22VE 16.0 mm (0.630 in)**
- **AD22VF 24 mm (0.945 in)**
- **CL7HB 6.0 mm (0.236 in)**
- **CL9HC 8.0 mm (0.315 in)**

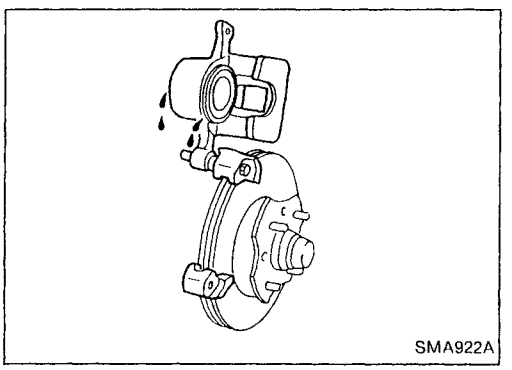
SMA922A

CALIPER

Check for leakage.

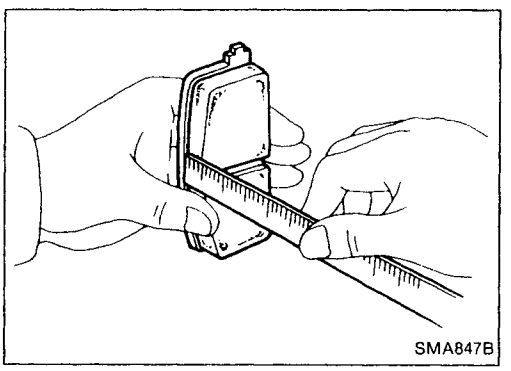
SMA847B

PAD

Check for wear or damage.

Standard thickness:
- **CL22VD and CL22VE 11.0 mm (0.433 in)**
- **AD22VF 10.0 mm (0.394 in)**
- **CL7HB and CL9HC 10.0 mm (0.394 in)**

Minimum thickness:
- **CL22VD, CL22VE and AD22VF 2.0 mm (0.079 in)**
- **CL7HB and CL9HC 1.5 mm (0.059 in)**

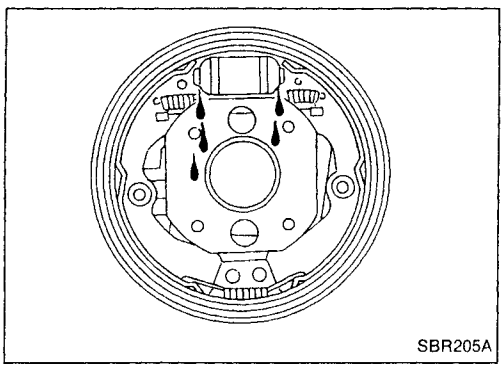

Checking Drum Brake

Check condition of drum brake components.

WHEEL CYLINDER

Check for leakage.

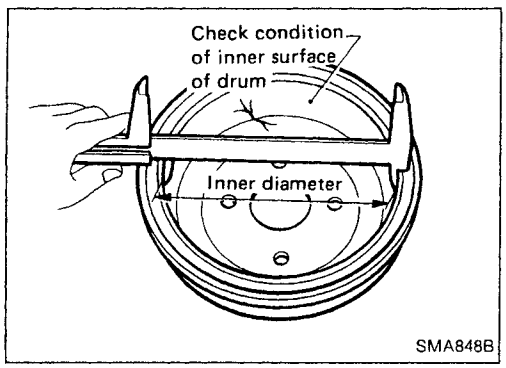

DRUM

Check condition of inner surface.

Standard diameter:
180.0 mm (7.09 in)
Drum repair limit (Inner diameter):
181.0 mm (7.13 in)

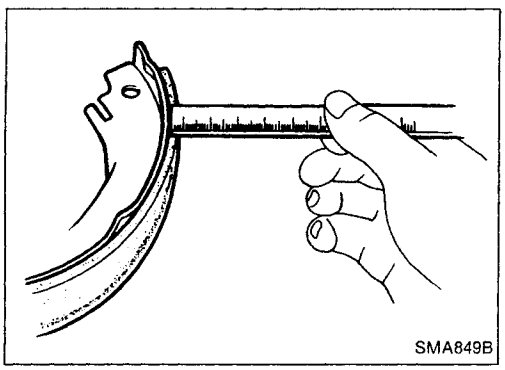

LINING

Check for wear or damage.

Standard thickness:
4.0 mm (0.157 in)
Lining wear limit (Minimum thickness):
1.5 mm (0.059 in)

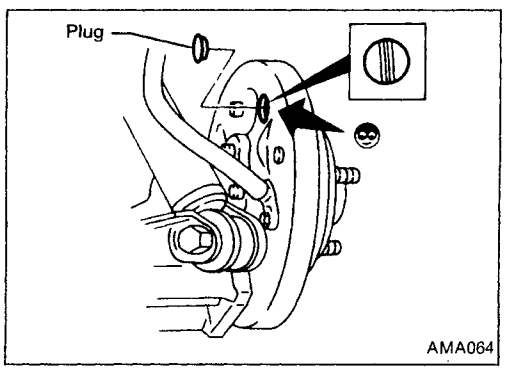

TEMPORARY METHOD FOR CHECKING LINING WEAR

Remove inspection hole plug and check for lining wear.

Balancing Wheels

- Adjust wheel balance using road wheel center.
  Wheel balance (Maximum allowable unbalance):
  Refer to SDS (MA-56).

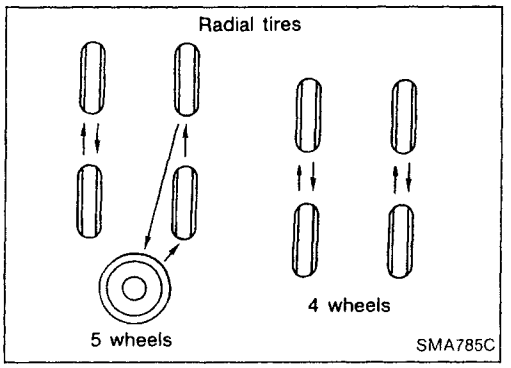

Tire Rotation

- Do not include the T-type spare tire when rotating the tires.
  Wheel nuts:
  : 98 - 118 N·m (10.0 - 12.0 kg-m, 72 - 87 ft-lb)

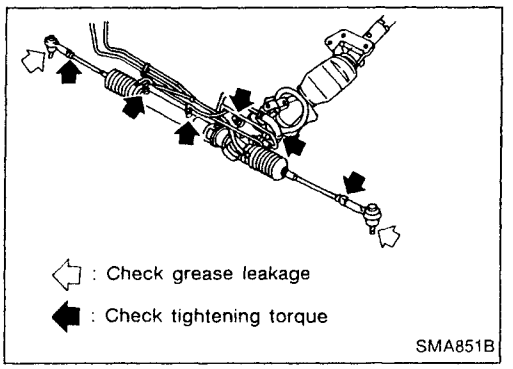

Checking Steering Gear and Linkage

STEERING GEAR

- Check gear housing and boots for looseness, damage or grease leakage.
- Check connection with steering column for looseness.

STEERING LINKAGE

- Check ball joint, dust cover and other component parts for looseness, wear, damage or grease leakage.

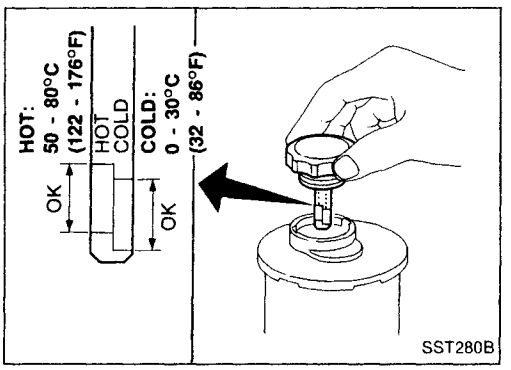

Checking Power Steering Fluid and Lines

- Check fluid level with engine off.
- Check fluid level using dipstick on reservoir cap, or referring to the scale on reservoir tank. Use "HOT" range at fluid temperatures of 50 to 80°C (122 to 176°F). Use "COLD" range at fluid temperatures of 0 to 30°C (32 to 86°F).

CAUTION:

- **Do not overfill.**
- **Recommended fluid is Automatic Transmission Fluid "DEXRON™" type or equivalent.**

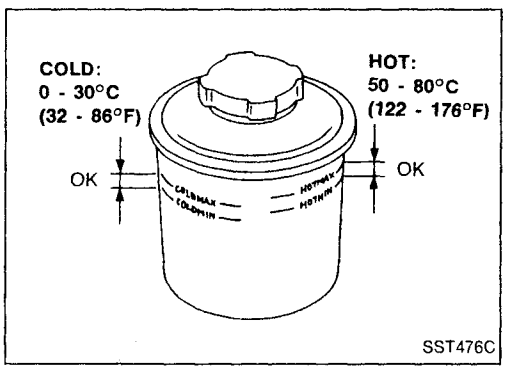

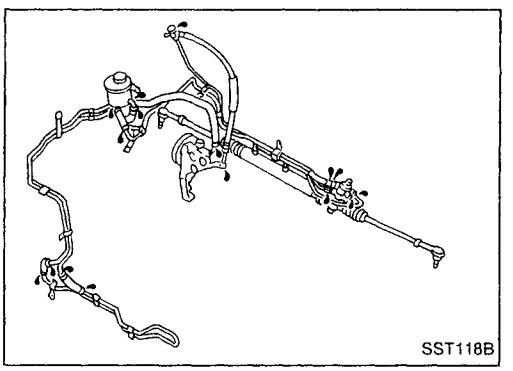

- Check lines for improper attachment, leaks, cracks, damage, loose connections, chafing and deterioration.
- Check rack boots for accumulation of power steering fluid.

Lubricating Locks, Hinges and Hood Latches

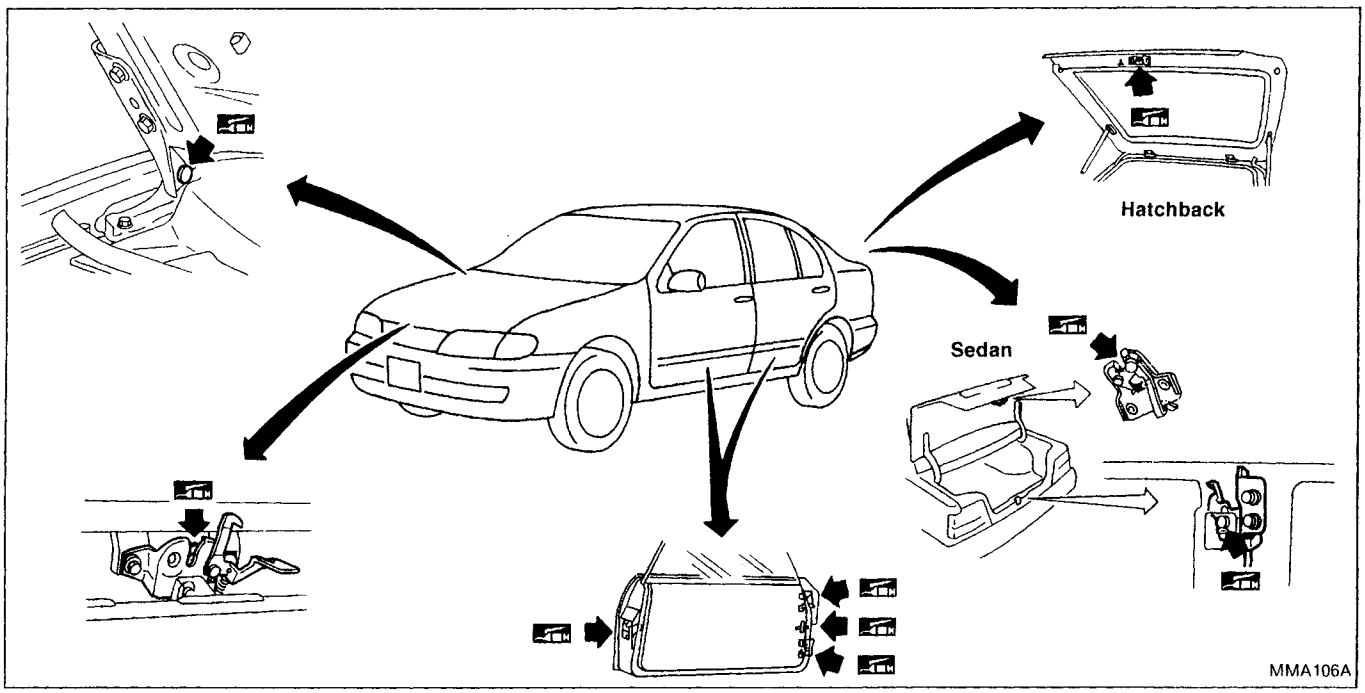

Checking Seat Belts, Buckles, Retractors, Anchors and Adjusters

CAUTION:

- After any collision, inspect all seat belt assemblies, including retractors and other attached hardwares (i.e. guide rail set). Nissan recommends to replace all seat belt assemblies in use during a collision, unless not damaged and properly operating after minor collision.
  Also inspect seat belt assemblies not in use during a collision, and replace if damaged or improperly operating.
- If any component of seat belt assembly is questionable, do not repair.
  Replace as seat belt assembly.
- If webbing is cut, frayed, or damaged, replace belt assembly.
- Never oil tongue and buckle.
- Use a genuine seat belt assembly.

For seat belt pre-tensioner, refer to section RS.

Anchor bolt
43 - 55 N·m
(4.4 - 5.6 kg-m,
32 - 41 ft-lb)

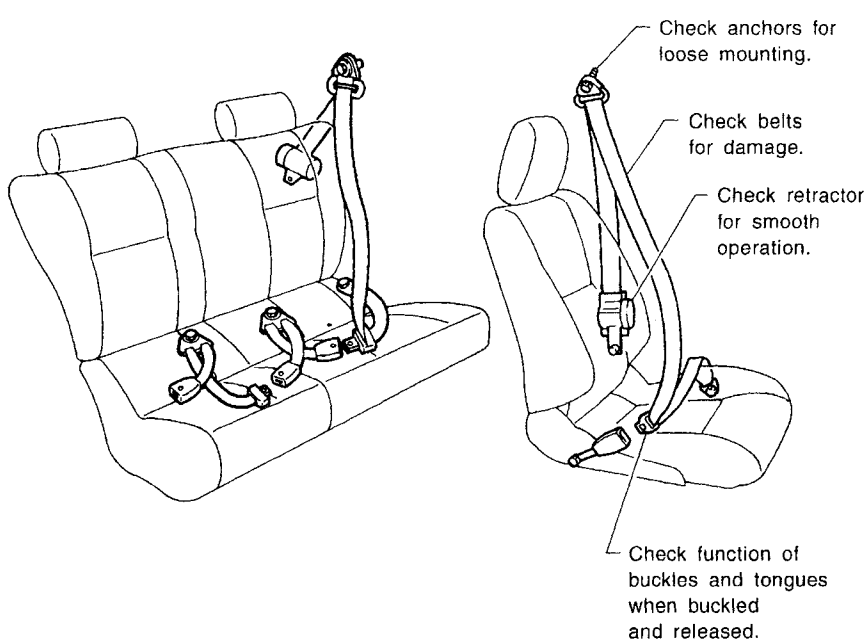

Checking Body Corrosion

Visually check the body sheet metal panel for corrosion, paint damage (scratches, chipping, rubbing, etc.) or damage to the anti-corrosion materials. In particular, check the following locations.

Hemmed portion

Hood front end, door lower end, trunk lid rear end, etc.

Panel joint

Side sill of rear fender and center pillar, rear wheel housing of rear fender, around strut tower in engine compartment, etc.

Panel edge

Trunk lid opening, sunroof opening, fender wheelarch flange, fuel filler lid flange, around holes in panel, etc.

Parts contact

Waist molding, windshield molding, bumper, etc.

Protectors

Damage or condition of mudguard, fender protector, chipping protector, etc.

Anti-corrosion materials

Damage or separation of anti-corrosion materials under the body.

Drain holes

Condition of drain holes at door and side sill.
When repairing corroded areas, refer to the Corrosion Repair Manual.

Engine Maintenance

INSPECTION AND ADJUSTMENT

Drive belt deflection

GA14DE engine except for Europe

Unit: mm (in)

	Used belt deflection		Deflection of new belt
	Limit	Deflection after adjustment	
Alternator			
With air conditioner compressor	10 (0.39)	6 - 7 (0.24 - 0.28)	5.5 - 6.5 (0.217 - 0.256)
Without air conditioner compressor	11 (0.43)	7 - 9 (0.28 - 0.35)	6 - 8 (0.24 - 0.31)
Power steering oil pump	7.5 (0.295)	4 - 6 (0.16 - 0.24)	3 - 5 (0.12 - 0.20)
Applied pushing force	98 N (10 kg, 22 lb)		

GA14DE engine for Europe

Unit: mm (in)

	Used belt deflection		Deflection of new belt
	Limit	Deflection after adjustment	
Alternator			
With power steering	11 (0.43)	7 - 9 (0.28 - 0.35)	6 - 8 (0.24 - 0.31)
Without power steering	10 (0.39)		
Air conditioner compressor	9.5 (0.374)	6 - 8 (0.24 - 0.31)	5 - 7 (0.20 - 0.28)
Power steering oil pump	7.5 (0.295)	4 - 6 (0.16 - 0.24)	3 - 5 (0.12 - 0.20)
Applied pushing force	98 N (10 kg, 22 lb)		

Engine oil capacity (Refill capacity)

Unit: ℓ (Imp qt)

With oil filter change	3.2 (2-7/8)
Without oil filter change	2.8 (2-1/2)

Coolant capacity (Refill capacity)

With reservoir tank

Unit: ℓ (Imp qt)

	With heater	Without heater
M/T	5.9 (5-1/4)	5.6 (4-7/8)
A/T	6.4 (5-5/8)	6.1 (5-3/8)

Spark plug

	GA16DE & GA14DE engine for Europe and Israel	GA16DE & GA15DE engine except for Europe and Israel
Type		
Standard	BKR5E	BKR5E-11
Cold	BKR6E, BKR7E	BKR6E-11, BKR7E-11
Plug gap mm (in)	0.8 - 0.9 (0.031 - 0.035)	1.0 - 1.1 (0.039 - 0.043)

Engine Maintenance

INSPECTION AND ADJUSTMENT

Drive belt deflection

Unit: mm (in)

	Used belt deflection		Deflection of new belt
	Limit	Deflection after adjustment	
Alternator			
With air conditioner compressor	11.5 - 12.5 (0.453 - 0.492)	7 - 8 (0.28 - 0.31)	6.5 - 7.5 (0.256 - 0.295)
Without air conditioner compressor	12 - 13 (0.47 - 0.51)	8 - 9 (0.31 - 0.35)	7 - 8 (0.28 - 0.31)
Power steering oil pump	6 - 7 (0.24 - 0.28)	4 - 5 (0.16 - 0.20)	3.5 - 4.5 (0.138 - 0.177)
Applied pushing force	98 N (10 kg, 22 lb)		

Engine oil capacity (Refill capacity)

Unit: ℓ (Imp qt)

With oil filter change	3.4 (3)
Without oil filter change	3.2 (2-7/8)

Coolant capacity (Refill capacity)

With reservoir tank

Unit: ℓ (Imp qt)

	With heater	Without heater
M/T	6.1 (5-3/8)	5.8 (5-1/8)
A/T	6.6 (5-7/8)	6.3 (5-1/2)
Reservoir tank	0.7 (5/8)	

Spark plug (Platinum-tipped type)

Make	NGK
Type	
Standard	PFR5B-11
Alternative	PFR6B-11 PFR7B-11

Engine Maintenance

INSPECTION AND ADJUSTMENT

Drive belt deflection

Unit: mm (in)

	Used belt deflection		Deflection of new belt
	Limit	Deflection after adjustment	
Alternator	14 (0.55)	11 - 13 (0.43 - 0.51)	9 - 11 (0.35 - 0.43)
Air conditioner compressor	14 (0.55)	11 - 13 (0.43 - 0.51)	9 - 11 (0.35 - 0.43)
Power steering oil pump	8 (0.31)	5 - 7 (0.20 - 0.28)	4 - 6 (0.16 - 0.24)
Water pump without power steering	—	8 (0.31)	6 (0.24)
Applied pushing force	98 N (10 kg, 22 lb)		

Coolant capacity (Refill capacity)

Unit: ℓ (Imp qt)

With heater	5.2 (4-5/8)
Without heater	4.9 (4-3/8)
Reservoir tank	0.7 (5/8)

Cooling system check

Unit: kPa (bar, kg/cm^2, psi)

Radiator cap relief pressure	
Standard	78 - 98 (0.78 - 0.98, 0.8 - 1.0, 11 - 14)
Limit	59 - 98 (0.59 - 0.98, 0.6 - 1.0, 9 - 14)
Radiator testing pressure	157 (1.57, 1.6, 23)

Engine oil capacity (Refill capacity)

Unit: ℓ (Imp qt)

Without oil filter	4.6 (4)
With oil filter	5.1 (4-1/2)

Injection nozzle

Unit: kPa (bar, kg/cm^2, psi)

Injection pressure	12,749 (127.5, 130, 1,849)

Idle speed

Unit: rpm

	Standard	—
M/T	700^{+50}_{-0}	800*

*: Air conditioner "ON"

TIGHTENING TORQUE

Unit	N·m	kg-m	ft-lb	in-lb
Manifold nuts & bolts	18 - 22	1.8 - 2.2	13 - 16	—
Rocker cover screw	2 - 4	0.2 - 0.4	1.4 - 2.9	17 - 35
Alternator, power steering mounting bolt	62 - 75	6.3 - 7.6	46 - 55	—
Alternator, power steering adjuster lock bolt	16 - 21	1.6 - 2.1	12 - 15	—
Cylinder block drain plug	54 - 74	5.5 - 7.5	40 - 54	—
Engine oil pan drain plug	29 - 39	3.0 - 4.0	22 - 29	—
Injector (To head)	59 - 69	6.0 - 7.0	43 - 51	—
Spill tube	39 - 49	4.0 - 5.0	29 - 36	—
Delivery tube	22 - 25	2.2 - 2.5	16 - 18	—

Chassis and Body Maintenance

INSPECTION AND ADJUSTMENT

Wheel balance

Maximum allowable unbalance	Dynamic (At rim flange) g (oz)	10 (0.35) (one side)
	Static g (oz)	20 (0.71)