2008 Pontiac Grand Prix Owner Manual

Seats and Restraint Systems 1-1
- Front Seats 1-2
- Rear Seats 1-9
- Safety Belts 1-10
- Child Restraints 1-29
- Airbag System 1-52
- Restraint System Check 1-66

Features and Controls 2-1
- Keys 2-2
- Doors and Locks 2-10
- Windows 2-16
- Theft-Deterrent Systems 2-18
- Starting and Operating Your Vehicle 2-23
- Mirrors 2-38
- OnStar® System 2-40
- Storage Areas 2-43
- Sunroof 2-44

Instrument Panel 3-1
- Instrument Panel Overview 3-4
- Climate Controls 3-28
- Warning Lights, Gages, and Indicators 3-38
- Driver Information Center (DIC) 3-55
- Audio System(s) 3-94

Driving Your Vehicle 4-1
- Your Driving, the Road, and Your Vehicle 4-2
- Towing 4-27

Service and Appearance Care 5-1
- Service 5-3
- Fuel 5-5
- Checking Things Under the Hood 5-10
- Headlamp Aiming 5-51
- Bulb Replacement 5-54
- Windshield Replacement 5-61
- Windshield Wiper Blade Replacement 5-61
- Tires 5-62
- Appearance Care 5-109
- Vehicle Identification 5-119
- Electrical System 5-120
- Capacities and Specifications 5-128

Maintenance Schedule 6-1
- Maintenance Schedule 6-2

Customer Assistance Information 7-1
- Customer Assistance and Information 7-2
- Reporting Safety Defects 7-14
- Vehicle Data Recording and Privacy 7-16

Index 1

Downloaded from www.Manualslib.com manuals search engine

GENERAL MOTORS, GM, the GM Emblem, PONTIAC, the PONTIAC Emblem, and the names GRAND PRIX, and GXP are registered trademarks of General Motors Corporation.

This manual includes the latest information at the time it was printed. We reserve the right to make changes after that time without notice. For vehicles first sold in Canada, substitute the name “General Motors of Canada Limited” for Pontiac Division whenever it appears in this manual.

This manual describes features that may be available in this model, but your vehicle may not have all of them. For example, more than one entertainment system may be offered or your vehicle may have been ordered without a front passenger or rear seats.

Keep this manual in the vehicle for quick reference.

Canadian Owners

A French language copy of this manual can be obtained from your dealer/retailer or from:

Helm, Incorporated
P.O. Box 07130
Detroit, MI 48207

1-800-551-4123
www.helminc.com

Propriétaires Canadiens

On peut obtenir un exemplaire de ce guide en français auprès de concessionnaire ou à l’adresse suivante:

Helm Incorporated
P.O. Box 07130
Detroit, MI 48207

1-800-551-4123
www.helminc.com

Litho in U.S.A.
Part No. 15863021 B Second Printing

©2007 General Motors Corporation. All Rights Reserved.

Downloaded from www.Manualslib.com manuals search engine

Using this Manual

You should read this owner manual from beginning to end when you first receive the new vehicle to learn about the vehicle's features and controls. Pictures and words work together to explain things.

Index

A good place to quickly locate information about the vehicle is the Index in the back of the manual. It is an alphabetical list of what is in the manual and the page number where it can be found.

Safety Warnings and Symbols

There are a number of safety cautions in this book. A box with the word CAUTION is used to tell about things that could hurt you or others if you were to ignore the warning.

⚠ CAUTION:

These mean there is something that could hurt you or other people.

We tell you what the hazard is and what to do to help avoid or reduce the hazard. Please read these cautions. If you do not, you or others could be hurt.

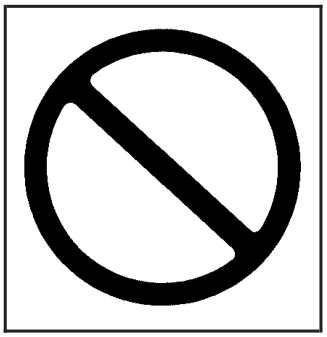

A circle with a slash through it is a safety symbol which means "Do Not," "Do Not do this" or "Do Not let this happen."

Downloaded from www.Manualslib.com manuals search engine

Vehicle Damage Warnings

You will also find notices in this manual.

Notice: **These mean there is something that could damage your vehicle.**

A notice tells about something that can damage the vehicle. Many times, this damage would not be covered by your vehicle's warranty, and it could be costly. The notice tells what to do to help avoid the damage.

When you read other manuals, you might see CAUTION and NOTICE warnings in different colors or in different words.

There are also warning labels on the vehicle which use the same words, CAUTION or NOTICE.

Vehicle Symbols

The vehicle has components and labels that use symbols instead of text. Symbols are shown along with the text describing the operation or information relating to a specific component, control, message, gage, or indicator.

Downloaded from www.Manualslib.com manuals search engine

Section 1 Seats and Restraint Systems

Front Seats 1-2
Manual Seats 1-2
Power Seat 1-3
Power Lumbar 1-4
Heated Seats 1-4
Reclining Seatbacks 1-5
Head Restraints 1-7
Passenger Folding Seatback 1-8
Rear Seats 1-9
Split Folding Rear Seat 1-9
Safety Belts 1-10
Safety Belts: They Are for Everyone 1-10
How to Wear Safety Belts Properly 1-15
Lap-Shoulder Belt 1-22
Safety Belt Use During Pregnancy 1-28
Safety Belt Extender 1-28
Child Restraints 1-29
Older Children 1-29
Infants and Young Children 1-32
Child Restraint Systems 1-35
Where to Put the Restraint 1-38
Lower Anchors and Tethers for Children (LATCH) 1-39
Securing a Child Restraint in a Rear Seat Position 1-46
Securing a Child Restraint in the Right Front Seat Position 1-49
Airbag System 1-52
Where Are the Airbags? 1-55
When Should an Airbag Inflate? 1-57
What Makes an Airbag Inflate? 1-58
How Does an Airbag Restrain? 1-58
What Will You See After an Airbag Inflates? 1-58
Passenger Sensing System 1-60
Servicing Your Airbag-Equipped Vehicle 1-64
Adding Equipment to Your Airbag-Equipped Vehicle 1-65
Restraint System Check 1-66
Checking the Restraint Systems 1-66
Replacing Restraint System Parts After a Crash 1-67

Downloaded from www.Manualslib.com manuals search engine

Front Seats

Manual Seats

⚠ CAUTION:

You can lose control of the vehicle if you try to adjust a manual driver's seat while the vehicle is moving. The sudden movement could startle and confuse you, or make you push a pedal when you do not want to. Adjust the driver's seat only when the vehicle is not moving.

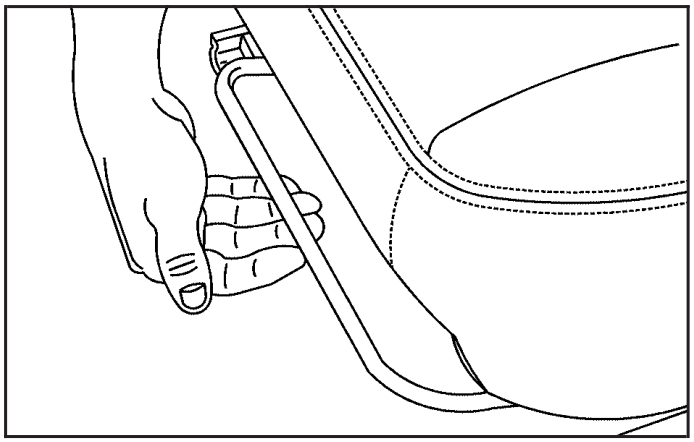

Lift the bar located under the front of the seat to unlock it. Slide the seat to where you want it and release the bar. Try to move the seat with your body to be sure the seat is locked in place.

Downloaded from www.Manualslib.com manuals search engine

Power Seat

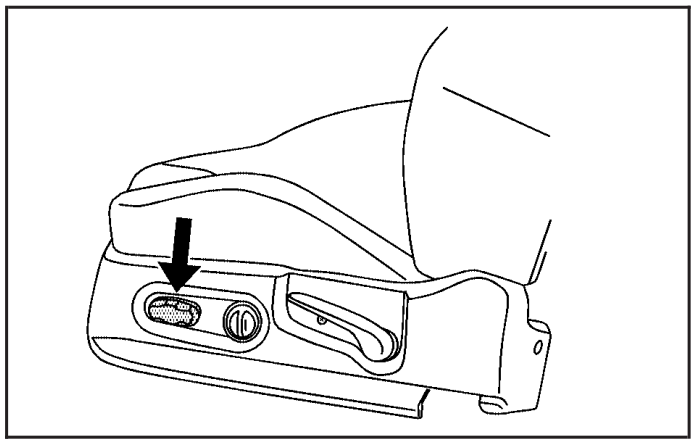

Driver's Seat Power Seat Control, Power Lumbar, and Manual Recline shown

The driver's seat power control is located on the outboard side of the seat.

To adjust the seat, do any of the following:

- Move the seat forward or rearward by sliding the control forward or rearward.
- Raise or lower the front part of the seat cushion by moving the front of the control up or down.
- Raise or lower the rear part of the seat cushion by moving the rear of the control up or down.
- Raise or lower the entire seat by moving the entire control up or down.

Downloaded from www.Manualslib.com manuals search engine

Power Lumbar

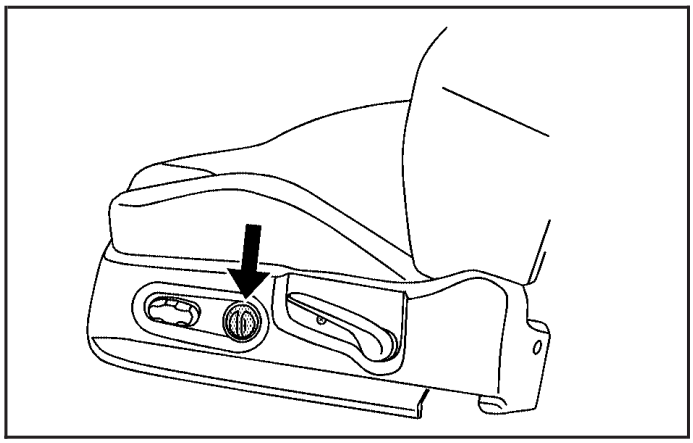

Driver's Seat with Power Seat, Power Lumbar, and Manual Recline shown

Your driver's seat may have power lumbar. The control is located on the outboard side of the seat cushion.

Press the control forward to increase lumbar support. Press the control rearward to decrease lumbar support.

Keep in mind that as your seating position changes, as it may during long trips, so should the position of your lumbar support. Adjust the seat as needed.

Heated Seats

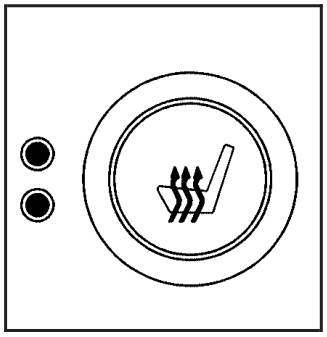

If the vehicle has this feature, the buttons are located on the climate control panel. See *Climate Control System on page 3-28* for more information.

Press the button once to activate the high heat setting. Both indicator lights next to the button will come on.

Press the button again to select the lower temperature setting. Only the bottom indicator light will come on.

Press the button a third time to turn the heat off.

This feature only works when the ignition is on.

Downloaded from www.Manualslib.com manuals search engine

Reclining Seatbacks

⚠ CAUTION:

You can lose control of the vehicle if you try to adjust a manual driver's seat while the vehicle is moving. The sudden movement could startle and confuse you, or make you push a pedal when you do not want to. Adjust the driver's seat only when the vehicle is not moving.

⚠ CAUTION:

If the seatback is not locked, it could move forward in a sudden stop or crash. That could cause injury to the person sitting there. Always push and pull on the seatback to be sure it is locked.

The seats have manual reclining seatbacks. The lever used to operate them is located on the outboard side of the seats.

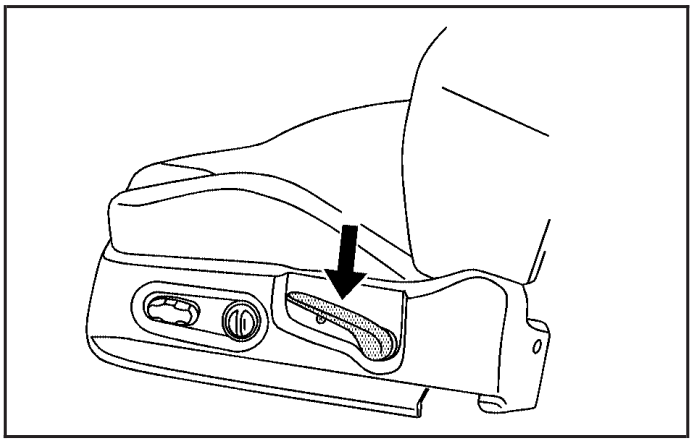

Driver's Seat with Power Seat, Power Lumbar, and Manual Recline shown

To recline the seatback, do the following:

1. Lift the recline lever.
2. Move the seatback to the desired position, then release the lever to lock the seatback in place.
3. Push and pull on the seatback to make sure it is locked.

Downloaded from www.Manualslib.com manuals search engine

To return the seatback to an upright position, do the following:

1. Lift the lever fully without applying pressure to the seatback and the seatback will return to the upright position.
2. Push and pull on the seatback to make sure it is locked.

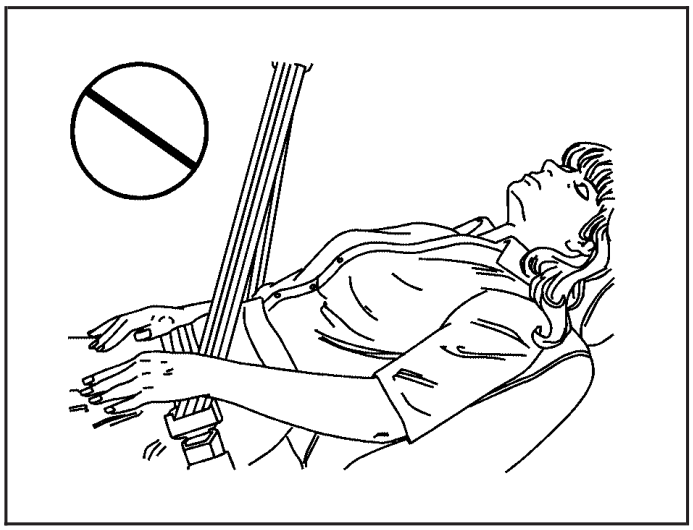

⚠ CAUTION:

Sitting in a reclined position when your vehicle is in motion can be dangerous. Even if you buckle up, your safety belts cannot do their job when you are reclined like this.

The shoulder belt cannot do its job because it will not be against your body. Instead, it will be in front of you. In a crash, you could go into it, receiving neck or other injuries.

The lap belt cannot do its job either. In a crash, the belt could go up over your abdomen. The belt forces would be there, not at your pelvic bones. This could cause serious internal injuries.

For proper protection when the vehicle is in motion, have the seatback upright. Then sit well back in the seat and wear your safety belt properly.

Do not have a seatback reclined if the vehicle is moving.

Downloaded from www.Manualslib.com manuals search engine

Head Restraints

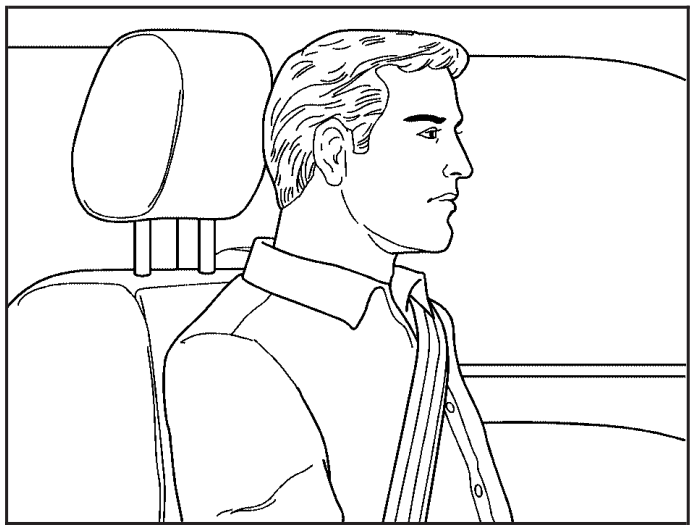

Adjust the head restraint so that the top of the restraint is at the same height as the top of the occupant's head. This position reduces the chance of a neck injury in a crash.

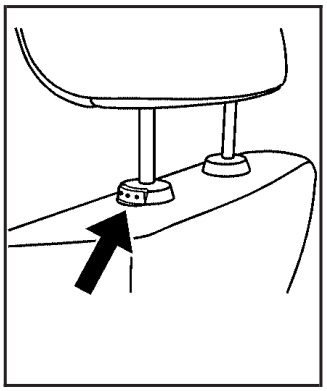

Pull the head restraint up to raise it.

To lower the head restraint, press the button, located on the top of the seatback, and push the head restraint down.

Downloaded from www.Manualslib.com manuals search engine

Passenger Folding Seatback

⚠ CAUTION:

If you fold the seatback forward to carry longer objects, such as skis, be sure any such cargo is not near an airbag. In a crash, an inflating airbag might force that object toward a person. This could cause severe injury or even death. Secure objects away from the area in which an airbag would inflate. For more information, see *Where Are the Airbags? on page 1-55* and *Loading Your Vehicle on page 4-22*.

⚠ CAUTION:

Things you put on this seatback can strike and injure people in a sudden stop or turn, or in a crash. Remove or secure all items before driving.

If the vehicle has this feature, the front passenger seat can be folded flat for more cargo space.

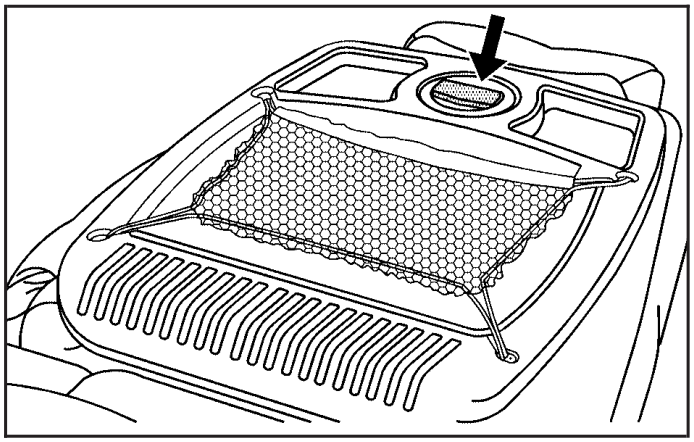

To fold the front passenger seatback flat, pull up on the lever located on back of the seat. Push the seatback forward until it locks in place.

To return the seatback to the upright position, pull up on the lever on the back of the seat. Push the seatback up until it locks in place.

Downloaded from www.Manualslib.com manuals search engine

⚠ CAUTION:

If the seatback is not locked, it could move forward in a sudden stop or crash. That could cause injury to the person sitting there. Always push and pull on the seatback to be sure it is locked.

Push and pull on the seatback to make sure it is locked.

Rear Seats

Split Folding Rear Seat

Both sides of the rear seatback can be folded down. This gives direct access to the trunk. Make sure the front seats are not reclined. If they are, the rear seatback(s) may not fold down all the way.

Notice: **Folding a rear seat with the safety belts still fastened may cause damage to the seat or the safety belts. Always unbuckle the safety belts and return them to their normal stowed position before folding a rear seat.**

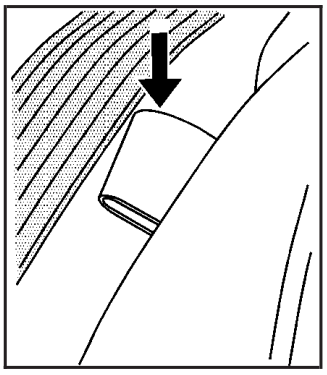

To lower the rear seatback, pull the tab located on the outboard side of the seatback and fold the seatback forward.

⚠ CAUTION:

If the seatback is not locked, it could move forward in a sudden stop or crash. That could cause injury to the person sitting there. Always push and pull on the seatback to be sure it is locked.

To raise the rear seatback, lift the seatback up until it latches. Push and pull on the seatback to be sure it is locked in position.

The seatbacks should be kept in the upright, locked position when they are not being used to extend the cargo area.

Downloaded from www.Manualslib.com manuals search engine

Safety Belts

Safety Belts: They Are for Everyone

This part of the manual tells you how to use safety belts properly. It also tells you some things you should not do with safety belts.

⚠ CAUTION:

Do not let anyone ride where he or she cannot wear a safety belt properly. If you are in a crash and you are not wearing a safety belt, your injuries can be much worse. You can hit things inside the vehicle harder or be ejected from it and be seriously injured or killed. In the same crash, you might not be, if you are buckled up. Always fasten your safety belt, and check that your passenger(s) are restrained properly too.

⚠ CAUTION:

It is extremely dangerous to ride in a cargo area, inside or outside of a vehicle. In a collision, people riding in these areas are more likely to be seriously injured or killed. Do not allow people to ride in any area of your vehicle that is not equipped with seats and safety belts.
Be sure everyone in your vehicle is in a seat and using a safety belt properly.

Your vehicle has indicators as a reminder to buckle your safety belts. See *Safety Belt Reminders on page 3-41*.

In most states and in all Canadian provinces, the law requires wearing safety belts. Here is why:

You never know if you will be in a crash. If you do have a crash, you do not know if it will be a serious one.

A few crashes are mild, and some crashes can be so serious that even buckled up, a person would not survive. But most crashes are in between. In many of them, people who buckle up can survive and sometimes walk away. Without belts they could have been badly hurt or killed.

After more than 40 years of safety belts in vehicles, the facts are clear. In most crashes buckling up does matter... a lot!

Downloaded from www.Manualslib.com manuals search engine

Why Safety Belts Work

When you ride in or on anything, you go as fast as it goes.

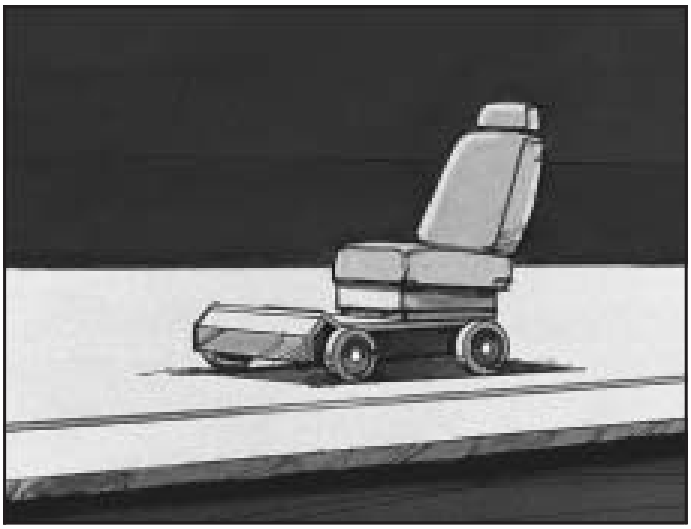

Take the simplest vehicle. Suppose it is just a seat on wheels.

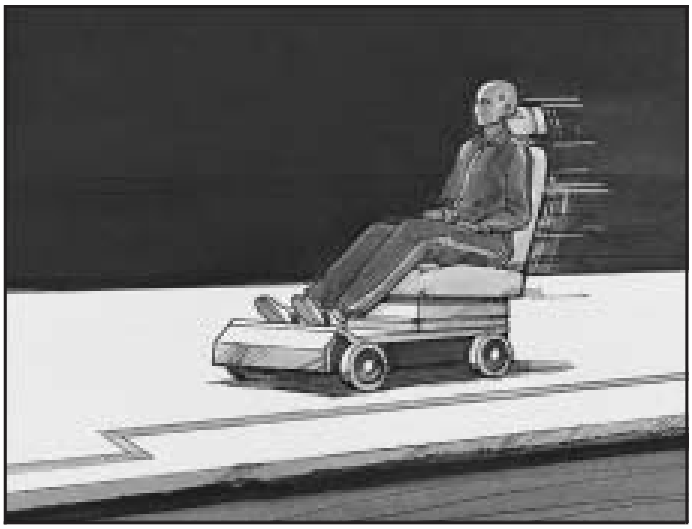

Put someone on it.

Downloaded from www.Manualslib.com manuals search engine

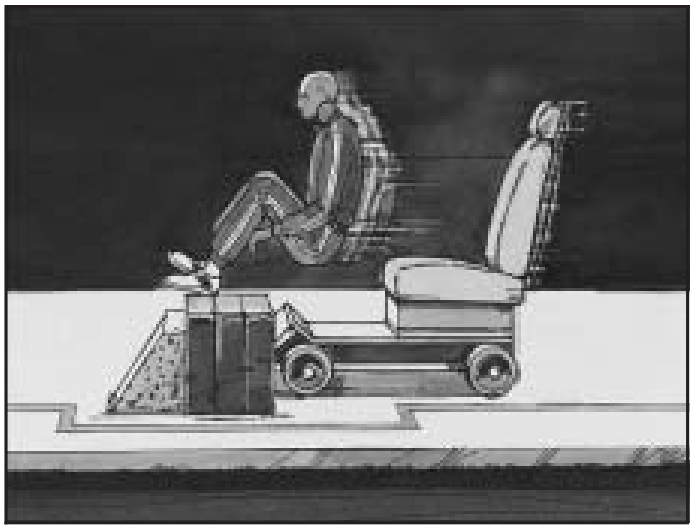

Get it up to speed. Then stop the vehicle. The rider does not stop.

The person keeps going until stopped by something. In a real vehicle, it could be the windshield...

Downloaded from www.Manualslib.com manuals search engine

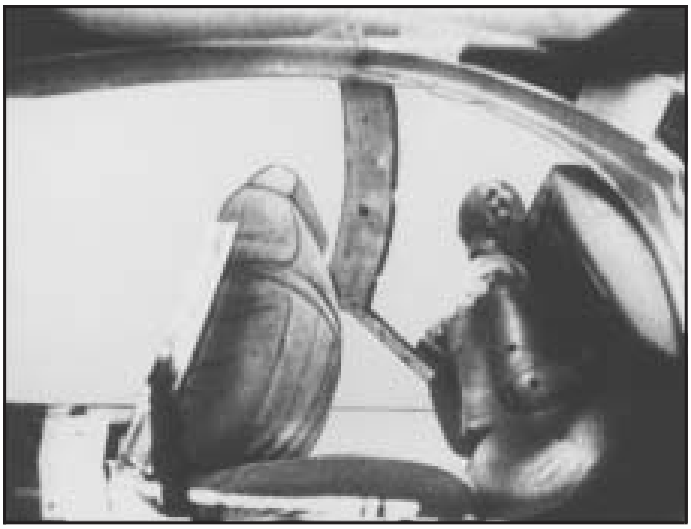

or the instrument panel...

or the safety belts!

With safety belts, you slow down as the vehicle does. You get more time to stop. You stop over more distance, and your strongest bones take the forces. That is why safety belts make such good sense.

Downloaded from www.Manualslib.com manuals search engine

Questions and Answers About Safety Belts

Q: Will I be trapped in the vehicle after a crash if I am wearing a safety belt?

A: You *could* be — whether you are wearing a safety belt or not. But your chance of being conscious during and after an accident, so you *can* unbuckle and get out, is *much* greater if you are belted. And you can unbuckle a safety belt, even if you are upside down.

Q: If my vehicle has airbags, why should I have to wear safety belts?

A: Airbags are supplemental systems only; so they work *with* safety belts — not instead of them. Whether or not an airbag is provided, all occupants still have to buckle up to get the most protection. That is true not only in frontal collisions, but especially in side and other collisions.

Q: If I am a good driver, and I never drive far from home, why should I wear safety belts?

A: You may be an excellent driver, but if you are in a crash — even one that is not your fault — you and your passenger(s) can be hurt. Being a good driver does not protect you from things beyond your control, such as bad drivers.

Most accidents occur within 25 miles (40 km) of home. And the greatest number of serious injuries and deaths occur at speeds of less than 40 mph (65 km/h).

Safety belts are for everyone.

Downloaded from www.Manualslib.com manuals search engine

How to Wear Safety Belts Properly

This section is only for people of adult size.

Be aware that there are special things to know about safety belts and children. And there are different rules for smaller children and babies. If a child will be riding in your vehicle, see *Older Children on page 1-29* or *Infants and Young Children on page 1-32*. Follow those rules for everyone's protection.

It is very important for all occupants to buckle up. Statistics show that unbelted people are hurt more often in crashes than those who are wearing safety belts.

Occupants who are not buckled up can be thrown out of the vehicle in a crash. And they can strike others in the vehicle who are wearing safety belts.

First, before you or your passenger(s) wear a safety belt, there is important information you should know.

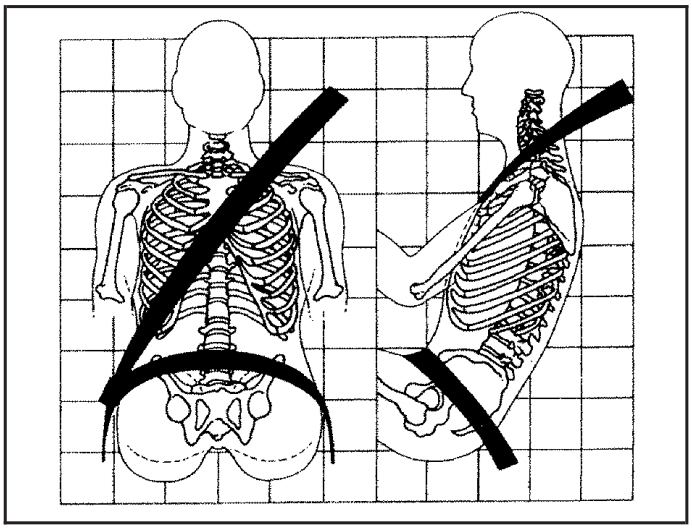

Sit up straight and always keep your feet on the floor in front of you. The lap part of the belt should be worn low and snug on the hips, just touching the thighs. In a crash, this applies force to the strong pelvic bones and you would be less likely to slide under the lap belt. If you slid under it, the belt would apply force on your abdomen. This could cause serious or even fatal injuries. The shoulder belt should go over the shoulder and across the chest. These parts of the body are best able to take belt restraining forces.

The shoulder belt locks if there is a sudden stop or crash.

Downloaded from www.Manualslib.com manuals search engine

Q: What is wrong with this?

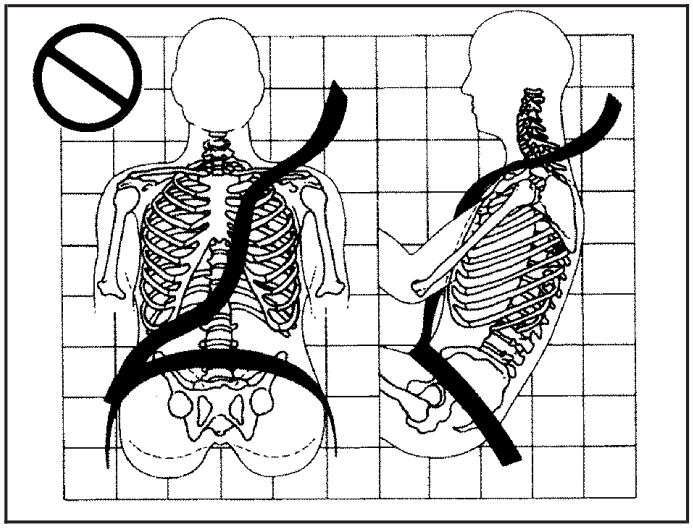

A: The shoulder belt is too loose. It will not give as much protection this way.

⚠ CAUTION:

You can be seriously hurt if your shoulder belt is too loose. In a crash, you would move forward too much, which could increase injury. The shoulder belt should fit snugly against your body.

Downloaded from www.Manualslib.com manuals search engine

Q: What is wrong with this?

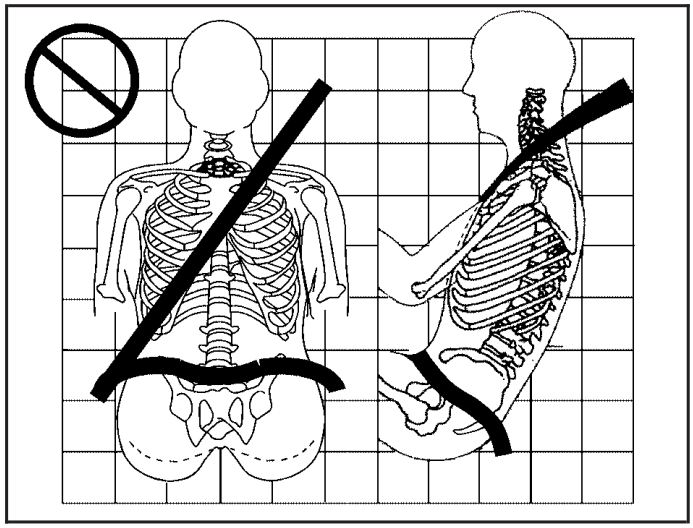

A: The lap belt is too loose. It will not give nearly as much protection this way.

⚠ CAUTION:

You can be seriously hurt if your lap belt is too loose. In a crash, you could slide under the lap belt and apply force on your abdomen. This could cause serious or even fatal injuries. The lap belt should be worn low and snug on the hips, just touching the thighs.

Downloaded from www.Manualslib.com manuals search engine

Q: What is wrong with this?

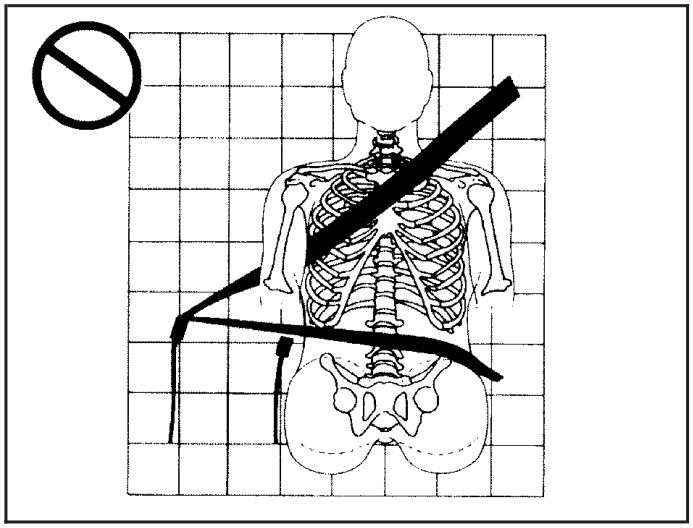

A: The belt is buckled in the wrong place.

⚠ CAUTION:

You can be seriously injured if your belt is buckled in the wrong place like this. In a crash, the belt would go up over your abdomen. The belt forces would be there, not on the pelvic bones. This could cause serious internal injuries. Always buckle your belt into the buckle nearest you.

Downloaded from www.Manualslib.com manuals search engine

Q: What is wrong with this?

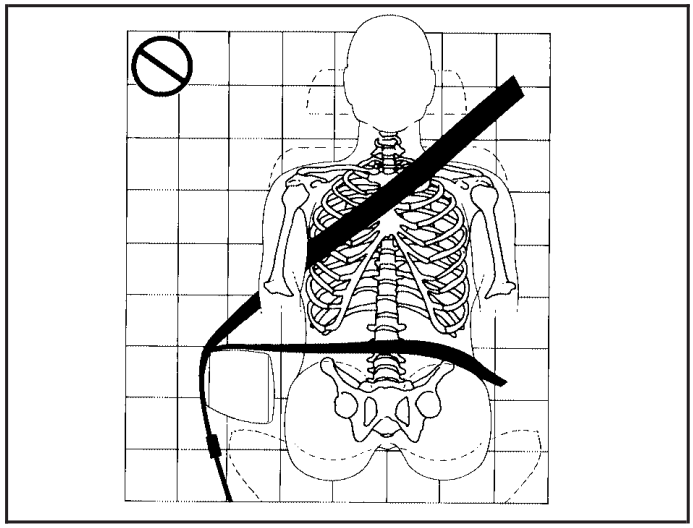

A: The belt is over an armrest.

⚠ CAUTION:

You can be seriously injured if your belt goes over an armrest like this. The belt would be much too high. In a crash, you can slide under the belt. The belt force would then be applied on the abdomen, not on the pelvic bones, and that could cause serious or fatal injuries.
Be sure the belt goes under the armrests.

Downloaded from www.Manualslib.com manuals search engine

Q: What is wrong with this?

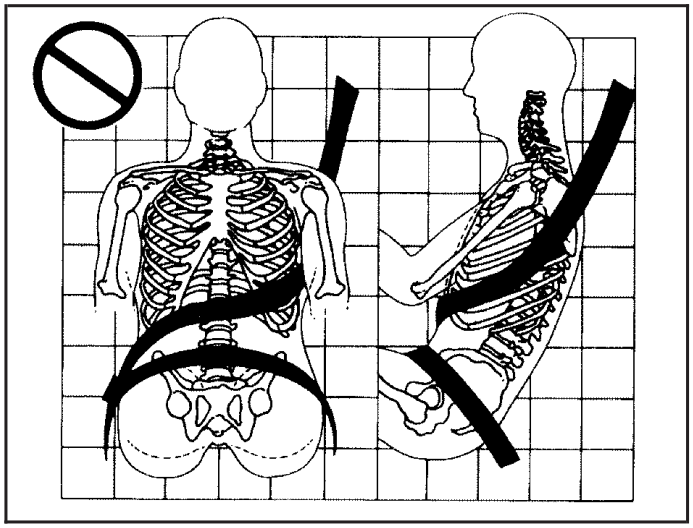

A: The shoulder belt is worn under the arm. It should be worn over the shoulder at all times.

⚠ CAUTION:

You can be seriously injured if you wear the shoulder belt under your arm. In a crash, your body would move too far forward, which would increase the chance of head and neck injury. Also, the belt would apply too much force to the ribs, which are not as strong as shoulder bones. You could also severely injure internal organs like your liver or spleen. The shoulder belt should go over the shoulder and across the chest.

Downloaded from www.Manualslib.com manuals search engine

Q: What is wrong with this?

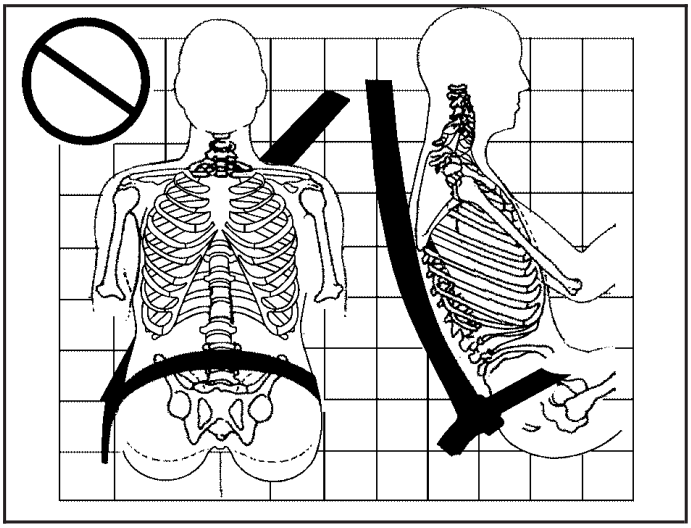

A: The belt is behind the body.

⚠ CAUTION:

You can be seriously injured by not wearing the lap-shoulder belt properly. In a crash, you would not be restrained by the shoulder belt. Your body could move too far forward increasing the chance of head and neck injury. You might also slide under the lap belt. The belt force would then be applied right on the abdomen. That could cause serious or fatal injuries. The shoulder belt should go over the shoulder and across the chest.

Downloaded from www.Manualslib.com manuals search engine

Q: What is wrong with this?

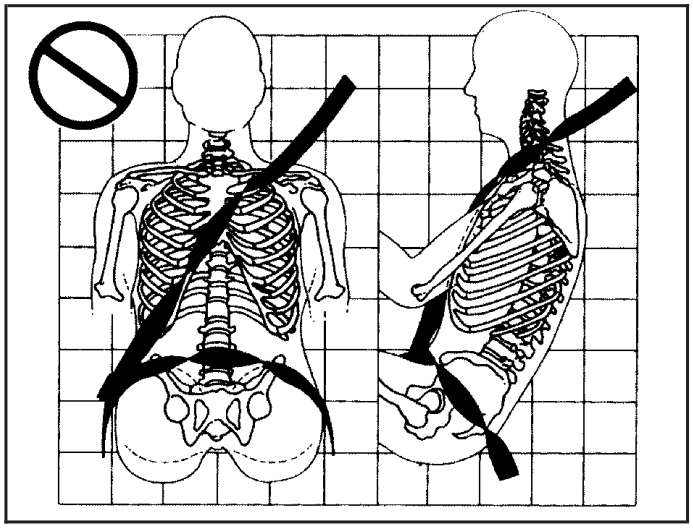

A: The belt is twisted across the body.

⚠ CAUTION:

You can be seriously injured by a twisted belt. In a crash, you would not have the full width of the belt to spread impact forces. If a belt is twisted, make it straight so it can work properly, or ask your dealer/retailer to fix it.

Lap-Shoulder Belt

All seating positions in your vehicle have a lap-shoulder belt.

Here is how to wear a lap-shoulder belt properly.

1. Adjust the seat, if the seat is adjustable, so you can sit up straight. To see how, see “Seats” in the Index.
2. Pick up the latch plate and pull the belt across you. Do not let it get twisted.

   The lap-shoulder belt may lock if you pull the belt across you very quickly. If this happens, let the belt go back slightly to unlock it. Then pull the belt across you more slowly.

   If you ever pull the shoulder portion of a passenger belt out all the way, you may engage the child restraint locking feature. If this happens, just let the belt go back all the way and start again.

Downloaded from www.Manualslib.com manuals search engine

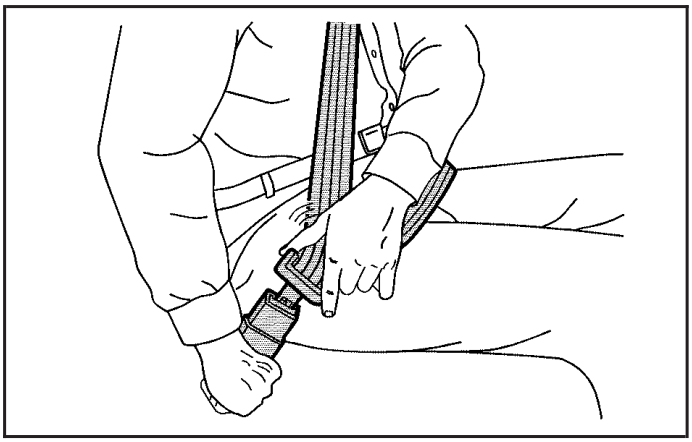

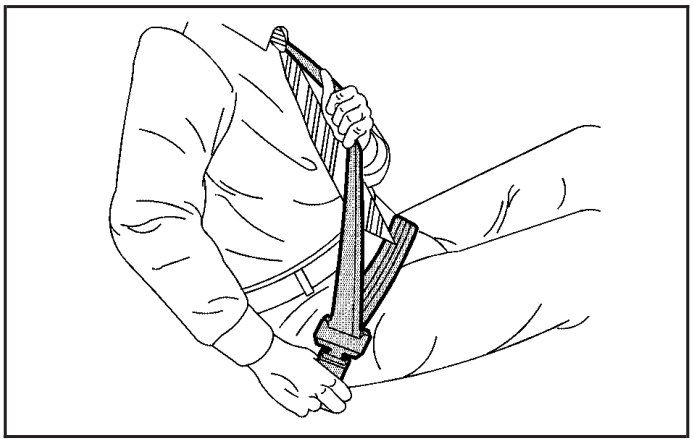

3. Push the latch plate into the buckle until it clicks.

   Pull up on the latch plate to make sure it is secure. If the belt is not long enough, see *Safety Belt Extender on page 1-28*.

   Make sure the release button on the buckle is positioned so you would be able to unbuckle the safety belt quickly if necessary.

4. If equipped with a shoulder belt height adjuster, move it to the height that is right for you. Improper shoulder belt height adjustment could reduce the effectiveness of the safety belt in a crash. See “Shoulder Belt Height Adjustment” later in this section.

5. To make the lap part tight, pull up on the shoulder belt.

   It may be necessary to pull stitching on the safety belt through the latch plate to fully tighten the lap belt on smaller occupants.

Downloaded from www.Manualslib.com manuals search engine

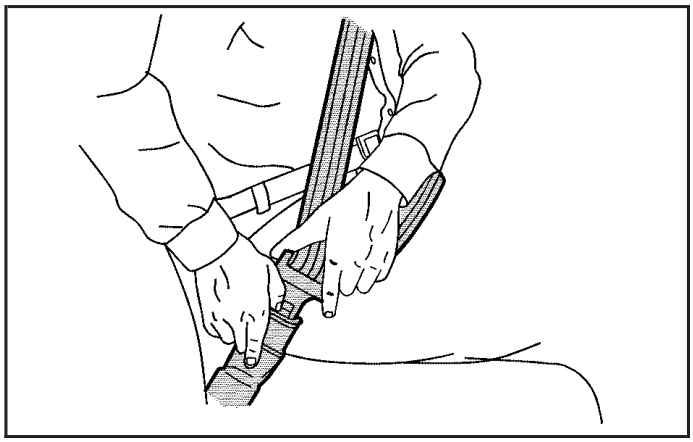

To unlatch the belt, push the button on the buckle. The belt should go back out of the way.

Before you close a door, be sure the belt is out of the way. If you slam the door on it, you can damage both the belt and your vehicle.

Shoulder Belt Height Adjuster

Your vehicle has a shoulder belt height adjuster for the driver and right front passenger position.

Adjust the height so that the shoulder portion of the belt is centered on your shoulder. The belt should be away from your face and neck, but not falling off your shoulder. Improper shoulder belt height adjustment could reduce the effectiveness of the safety belt in a crash.

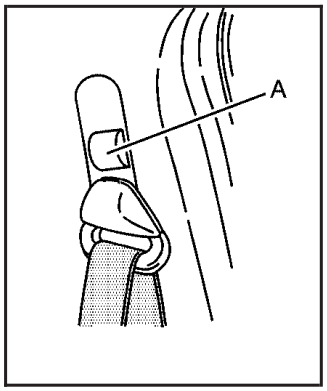

To move it down, pull the release button (A) out and move the height adjuster to the desired position. You can move the height adjuster up just by pushing up on the shoulder belt guide.

After you move the height adjuster to where you want it, try to move it down without pressing the release button to make sure it has locked into position.

Downloaded from www.Manualslib.com manuals search engine

Safety Belt Pretensioners

Your vehicle has safety belt pretensioners for front outboard occupants. Although you cannot see them, they are part of the safety belt assembly. They can help tighten the safety belts during the early stages of a moderate to severe frontal or near frontal crash if the threshold conditions for pretensioner activation are met.

Pretensioners work only once. If they activate in a crash, you will need to get new ones, and probably other new parts for your safety belt system. See *Replacing Restraint System Parts After a Crash on page 1-67*.

Rear Safety Belt Comfort Guides

Rear shoulder belt comfort guides may provide added safety belt comfort for older children who have outgrown booster seats and for some adults. When installed on a shoulder belt, the comfort guide positions the belt away from the neck and head.

There is one guide for each outboard passenger position in the rear seat. Here is how to install a comfort guide to the safety belt:

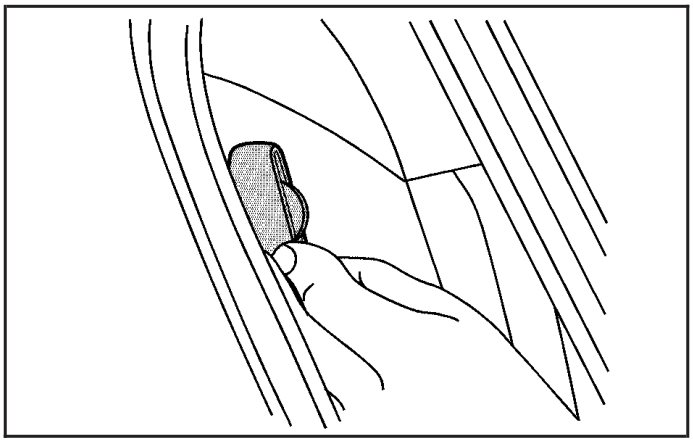

1. Pull the elastic cord out from between the edge of the seatback and the interior body to remove the guide from its storage clip.

Downloaded from www.Manualslib.com manuals search engine

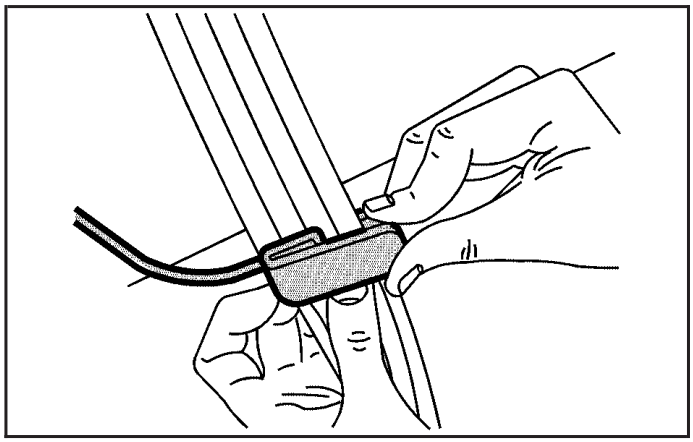

2. Place the guide over the belt and insert the two edges of the belt into the slots of the guide.

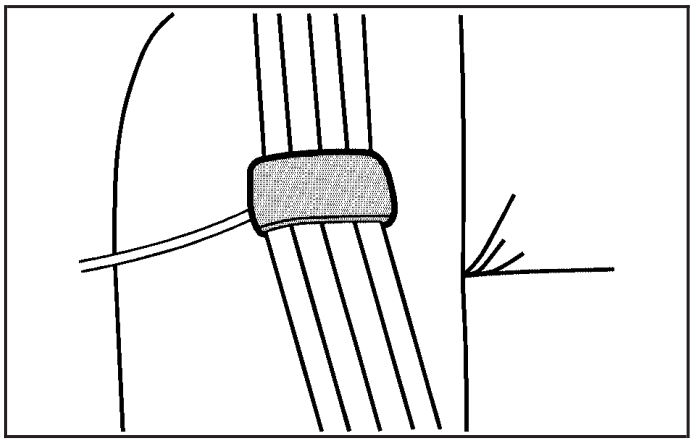

3. Be sure that the belt is not twisted and it lies flat. The elastic cord must be under the belt and the guide on top.

Downloaded from www.Manualslib.com manuals search engine

⚠ CAUTION:

A safety belt that is not properly worn may not provide the protection needed in a crash. The person wearing the belt could be seriously injured. The shoulder belt should go over the shoulder and across the chest. These parts of the body are best able to take belt restraining forces.

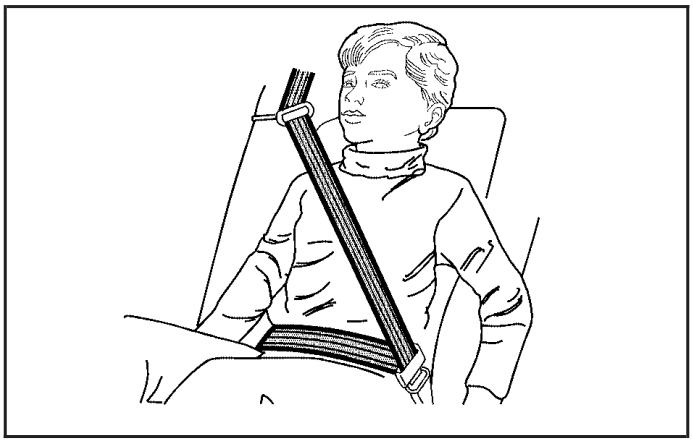

4. Buckle, position, and release the safety belt as described previously in this section. Make sure that the shoulder belt crosses the shoulder.

To remove and store the comfort guide, squeeze the belt edges together so that you can take them out of the guide. Pull the guide upward to expose its storage clip, and then slide the guide onto the clip. Turn the guide and clip inward and slide them in between the seatback and the interior body, leaving only the loop of the elastic cord exposed.

Downloaded from www.Manualslib.com manuals search engine

Safety Belt Use During Pregnancy

Safety belts work for everyone, including pregnant women. Like all occupants, they are more likely to be seriously injured if they do not wear safety belts.

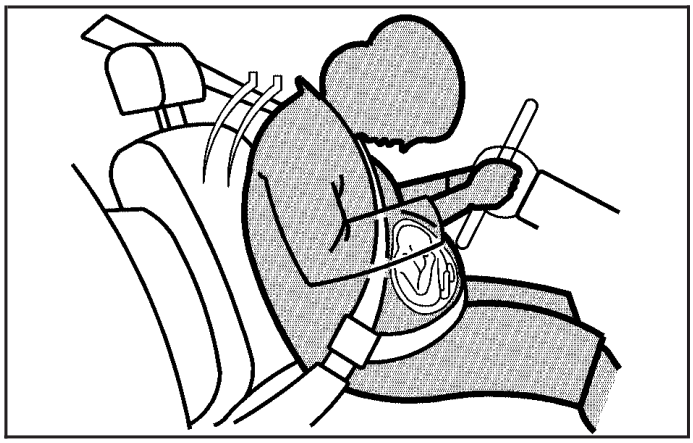

A pregnant woman should wear a lap-shoulder belt, and the lap portion should be worn as low as possible, below the rounding, throughout the pregnancy.

The best way to protect the fetus is to protect the mother. When a safety belt is worn properly, it is more likely that the fetus will not be hurt in a crash. For pregnant women, as for anyone, the key to making safety belts effective is wearing them properly.

Safety Belt Extender

If the vehicle's safety belt will fasten around you, you should use it.

But if a safety belt is not long enough, your dealer/retailer will order you an extender. When you go in to order it, take the heaviest coat you will wear, so the extender will be long enough for you. To help avoid personal injury, do not let someone else use it, and use it only for the seat it is made to fit. The extender has been designed for adults. Never use it for securing child seats. To wear it, attach it to the regular safety belt. For more information, see the instruction sheet that comes with the extender.

Downloaded from www.Manualslib.com manuals search engine

Child Restraints

Older Children

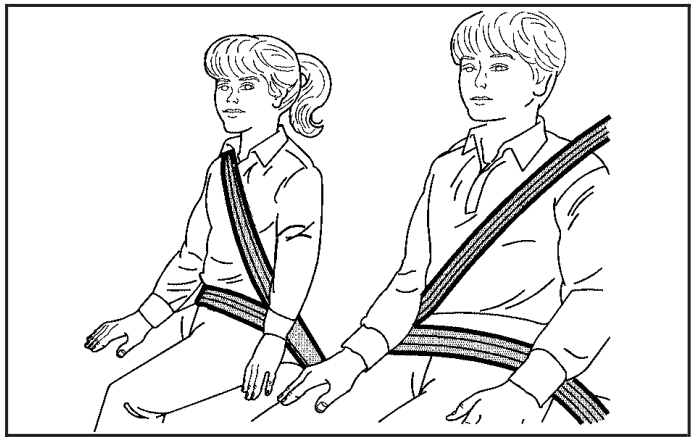

Older children who have outgrown booster seats should wear the vehicle's safety belts.

The manufacturer's instructions that come with the booster seat state the weight and height limitations for that booster. Use a booster seat with a lap-shoulder belt until the child passes the below fit test:

- Sit all the way back on the seat. Do the knees bend at the seat edge? If yes, continue. If no, return to the booster seat.
- Buckle the lap-shoulder belt. Does the shoulder belt rest on the shoulder? If yes, continue. If no, try using the rear safety belt comfort guide. See "Rear Safety Belt Comfort Guides" under *Lap-Shoulder Belt on page 1-22* for more information. If the shoulder belt still does not rest on the shoulder, then return to the booster seat.
- Does the lap belt fit low and snug on the hips, touching the thighs? If yes, continue. If no, return to the booster seat.
- Can proper safety belt fit be maintained for the length of the trip? If yes, continue. If no, return to the booster seat.

Downloaded from www.Manualslib.com manuals search engine

Q: What is the proper way to wear safety belts?

A: An older child should wear a lap-shoulder belt and get the additional restraint a shoulder belt can provide. The shoulder belt should not cross the face or neck. The lap belt should fit snugly below the hips, just touching the top of the thighs. This applies belt force to the child's pelvic bones in a crash. It should never be worn over the abdomen, which could cause severe or even fatal internal injuries in a crash.

Also see "Rear Safety Belt Comfort Guides" under *Lap-Shoulder Belt on page 1-22*.

According to accident statistics, children and infants are safer when properly restrained in the rear seating positions than in the front seating positions.

In a crash, children who are not buckled up can strike other people who are buckled up, or can be thrown out of the vehicle. Older children need to use safety belts properly.

⚠ CAUTION:

Never do this.

Here two children are wearing the same belt. The belt cannot properly spread the impact forces. In a crash, the two children can be crushed together and seriously injured. A belt must be used by only one person at a time.

Downloaded from www.Manualslib.com manuals search engine

⚠ CAUTION:

Never do this.

Here a child is sitting in a seat that has a lap-shoulder belt, but the shoulder part is behind the child. In a crash, the child would not be restrained by the shoulder belt. The child might slide under the lap belt. The belt force would then be applied right on the abdomen. That could cause serious or fatal injuries. The child could also move too far forward increasing the chance of head and neck injury. The shoulder belt should go over the shoulder and across the chest.

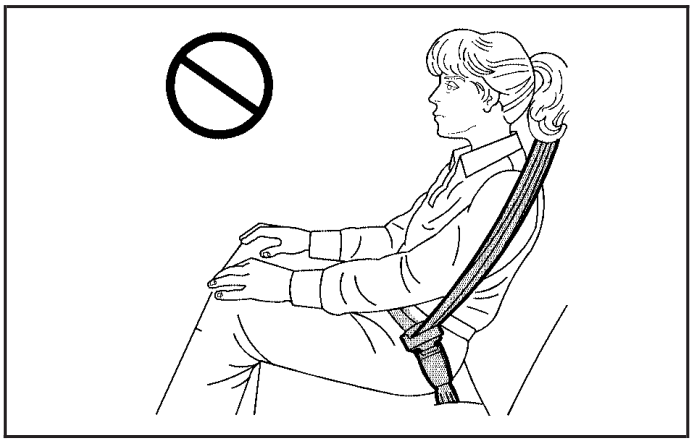

Downloaded from www.Manualslib.com manuals search engine

Infants and Young Children

Everyone in a vehicle needs protection! This includes infants and all other children. Neither the distance traveled nor the age and size of the traveler changes the need, for everyone, to use safety restraints. In fact, the law in every state in the United States and in every Canadian province says children up to some age must be restrained while in a vehicle.

⚠ CAUTION:

Children can be seriously injured or strangled if a shoulder belt is wrapped around their neck and the safety belt continues to tighten. Never leave children unattended in a vehicle and never allow children to play with the safety belts.

Every time infants and young children ride in vehicles, they should have the protection provided by appropriate restraints. Children who are not restrained properly can strike other people, or can be thrown out of the vehicle. In addition, young children should not use the vehicle's adult safety belts alone; they need to use a child restraint.

⚠ CAUTION:

People should never hold an infant in their arms while riding in a vehicle. An infant does not weigh much — until a crash. During a crash an infant will become so heavy it is not possible to hold it. For example, in a crash at only 25 mph (40 km/h), a 12 lb (5.5 kg) infant will suddenly become a 240 lb (110 kg) force on a person's arms. An infant should be secured in an appropriate restraint.

Downloaded from www.Manualslib.com manuals search engine

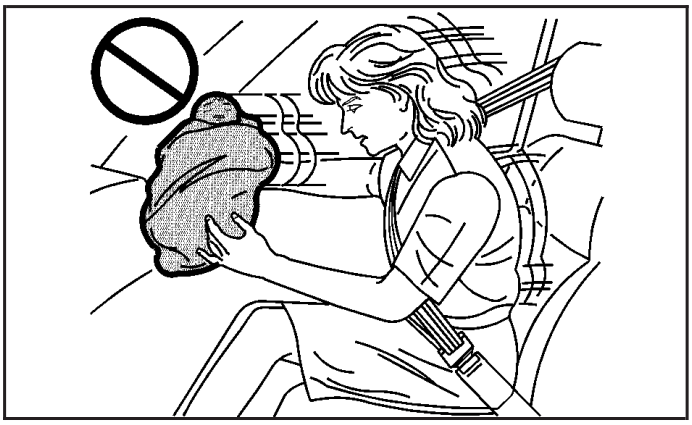

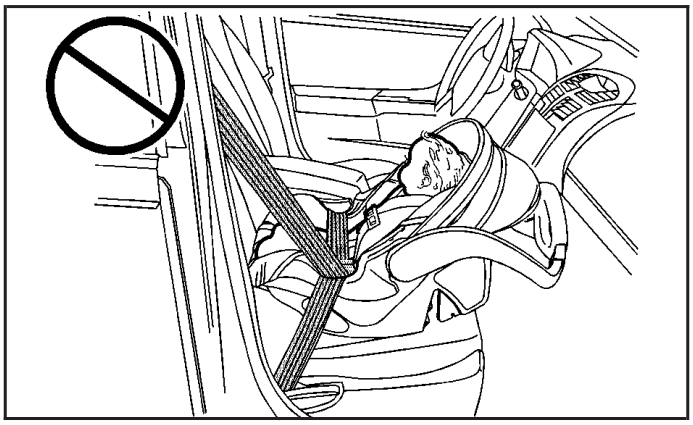

⚠ CAUTION:

Children who are up against, or very close to, any airbag when it inflates can be seriously injured or killed. Airbags plus lap-shoulder belts offer protection for adults and older children, but not for young children and infants. Neither the vehicle's safety belt system nor its airbag system is designed for them. Young children and infants need the protection that a child restraint system can provide.

Downloaded from www.Manualslib.com manuals search engine

Q: What are the different types of add-on child restraints?

A: Add-on child restraints, which are purchased by the vehicle's owner, are available in four basic types. Selection of a particular restraint should take into consideration not only the child's weight, height, and age but also whether or not the restraint will be compatible with the motor vehicle in which it will be used.

For most basic types of child restraints, there are many different models available. When purchasing a child restraint, be sure it is designed to be used in a motor vehicle. If it is, the restraint will have a label saying that it meets federal motor vehicle safety standards.

The restraint manufacturer's instructions that come with the restraint state the weight and height limitations for a particular child restraint. In addition, there are many kinds of restraints available for children with special needs.

⚠ CAUTION:

Newborn infants need complete support, including support for the head and neck. This is necessary because a newborn infant's neck is weak and its head weighs so much compared with the rest of its body. In a crash, an infant in a rear-facing seat settles into the restraint, so the crash forces can be distributed across the strongest part of an infant's body, the back and shoulders. Infants should always be secured in appropriate infant restraints.

Downloaded from www.Manualslib.com manuals search engine

⚠ CAUTION:

The body structure of a young child is quite unlike that of an adult or older child, for whom the safety belts are designed. A young child's hip bones are still so small that the vehicle's regular safety belt may not remain low on the hip bones, as it should. Instead, it may settle up around the child's abdomen. In a crash, the belt would apply force on a body area that is unprotected by any bony structure. This alone could cause serious or fatal injuries. Young children should always be secured in appropriate child restraints.

Child Restraint Systems

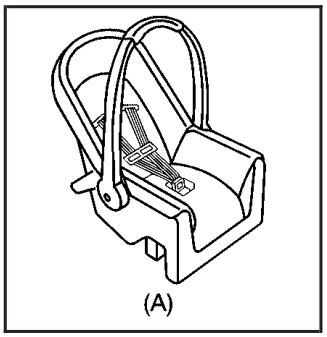

A rear-facing infant seat (A) provides restraint with the seating surface against the back of the infant.

The harness system holds the infant in place and, in a crash, acts to keep the infant positioned in the restraint.

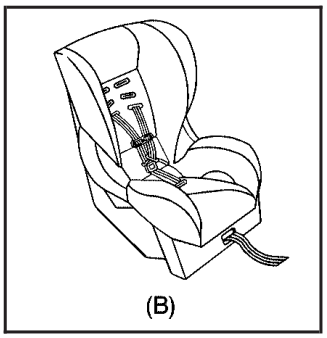

A forward-facing child seat (B) provides restraint for the child's body with the harness.

Downloaded from www.Manualslib.com manuals search engine

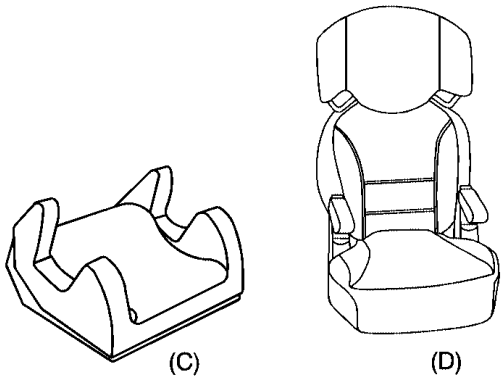

A booster seat (C-D) is a child restraint designed to improve the fit of the vehicle's safety belt system. A booster seat can also help a child to see out the window.

Securing an Add-On Child Restraint in the Vehicle

⚠ CAUTION:

A child can be seriously injured or killed in a crash if the child restraint is not properly secured in the vehicle. Make sure the child restraint is properly installed in the vehicle using the vehicle's safety belt or LATCH system, following the instructions that came with that restraint, and also the instructions in this manual.

Downloaded from www.Manualslib.com manuals search engine

To help reduce the chance of injury, the child restraint must be secured in the vehicle. Child restraint systems must be secured in vehicle seats by lap belts or the lap belt portion of a lap-shoulder belt, or by the LATCH system. See *Lower Anchors and Tethers for Children (LATCH) on page 1-39* for more information. A child can be endangered in a crash if the child restraint is not properly secured in the vehicle.

When securing an add-on child restraint, refer to the instructions that come with the restraint which may be on the restraint itself or in a booklet, or both, and to this manual. The child restraint instructions are important, so if they are not available, obtain a replacement copy from the manufacturer.

Keep in mind that an unsecured child restraint can move around in a collision or sudden stop and injure people in the vehicle. Be sure to properly secure any child restraint in your vehicle — even when no child is in it.

Securing the Child Within the Child Restraint

⚠ CAUTION:

A child can be seriously injured or killed in a crash if the child is not properly secured in the child restraint. Because there are different systems, it is important to refer to the instructions that come with the restraint. Make sure the child is properly secured, following the instructions that came with that restraint.

Downloaded from www.Manualslib.com manuals search engine

Where to Put the Restraint

Accident statistics show that children are safer if they are restrained in the rear rather than the front seat.

We recommend that children and child restraints be secured in a rear seat, including: an infant or a child riding in a rear-facing child restraint; a child riding in a forward-facing child seat; an older child riding in a booster seat; and children, who are large enough, using safety belts.

A label on your sun visor says, “Never put a rear-facing child seat in the front.” This is because the risk to the rear-facing child is so great, if the airbag deploys.

⚠ CAUTION:

A child in a rear-facing child restraint can be seriously injured or killed if the right front passenger’s airbag inflates. This is because the back of the rear-facing child restraint would be very close to the inflating airbag.

Even though the passenger sensing system is designed to turn off the right front passenger’s frontal airbag if the system detects a rear-facing child restraint, no system is fail-safe, and no one can guarantee that an airbag will not deploy under some unusual circumstance, even though it is turned off. We recommend that rear-facing child restraints be secured in a rear seat, even if the airbag is off.

If you secure a forward-facing child restraint in the right front seat, always move the front passenger seat as far back as it will go. It is better to secure the child restraint in a rear seat.

See *Passenger Sensing System on page 1-60* for additional information.

Downloaded from www.Manualslib.com manuals search engine

When securing a child restraint in a rear seating position, study the instructions that came with your child restraint to make sure it is compatible with this vehicle.

Wherever you install a child restraint, be sure to secure the child restraint properly.

Keep in mind that an unsecured child restraint can move around in a collision or sudden stop and injure people in the vehicle. Be sure to properly secure any child restraint in your vehicle — even when no child is in it.

Lower Anchors and Tethers for Children (LATCH)

The LATCH system holds a child restraint during driving or in a crash. This system is designed to make installation of a child restraint easier. The LATCH system uses anchors in the vehicle and attachments on the child restraint that are made for use with the LATCH system.

Make sure that a LATCH-compatible child restraint is properly installed using the anchors, or use the vehicle's safety belts to secure the restraint, following the instructions that came with that restraint, and also the instructions in this manual. When installing a child restraint with a top tether, you must also use either the lower anchors or the safety belts to properly secure the child restraint. A child restraint must never be installed using only the top tether and anchor.

In order to use the LATCH system in your vehicle, you need a child restraint that has LATCH attachments. The child restraint manufacturer will provide you with instructions on how to use the child restraint and its attachments. The following explains how to attach a child restraint with these attachments in your vehicle.

Not all vehicle seating positions or child restraints have lower anchors and attachments or top tether anchors and attachments.

Downloaded from www.Manualslib.com manuals search engine

Lower Anchors

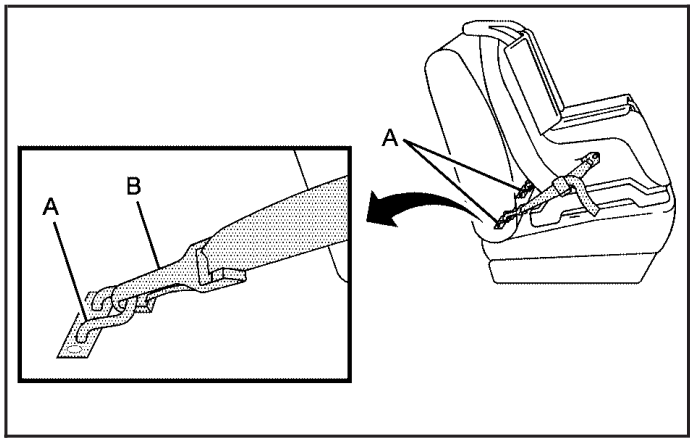

Lower anchors (A) are metal bars built into the vehicle. There are two lower anchors for each LATCH seating position that will accommodate a child restraint with lower attachments (B).

Top Tether Anchor

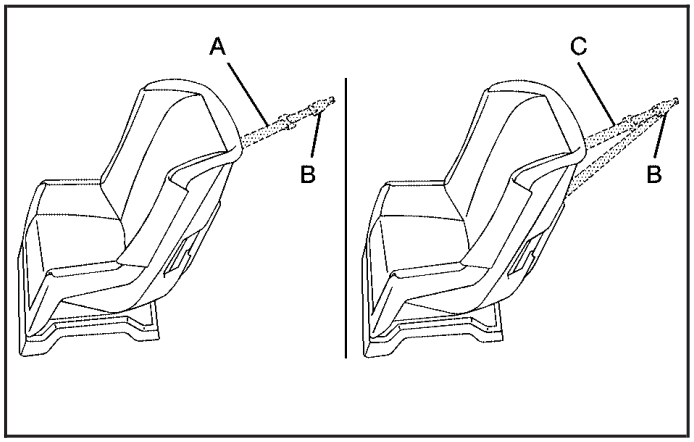

A top tether (A, C) anchors the top of the child restraint to the vehicle. A top tether anchor is built into the vehicle. The top tether attachment (B) on the child restraint connects to the top tether anchor in the vehicle in order to reduce the forward movement and rotation of the child restraint during driving or in a crash.

Downloaded from www.Manualslib.com manuals search engine

Your child restraint may have a single tether (A) or a dual tether (C). Either will have a single attachment (B) to secure the top tether to the anchor.

Some child restraints that have a top tether are designed for use with or without the top tether being attached. Others require the top tether always to be attached. In Canada, the law requires that forward-facing child restraints have a top tether, and that the tether be attached. Be sure to read and follow the instructions for your child restraint.

If the child restraint does not have a top tether, one can be obtained, in kit form, for many child restraints. Ask the child restraint manufacturer whether or not a kit is available.

Lower Anchor and Top Tether Anchor Locations

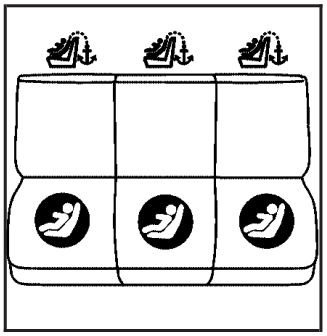

Rear Seat

(Top Tether Anchor): Seating positions with top tether anchors.

(Lower Anchor): Seating positions with two lower anchors.

To assist you in locating the lower anchors, each seating position with lower anchors has two labels, near the crease between the seatback and the seat cushion.

Downloaded from www.Manualslib.com manuals search engine

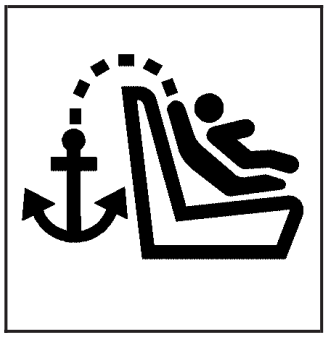

To assist you in locating the top tether anchors, the top tether anchor symbol is located on the cover.

The top tether anchors are located on the rear seatback filler panel. Open the cover to access the anchors. Be sure to use an anchor located on the same side of the vehicle as the seating position where the child restraint will be placed.

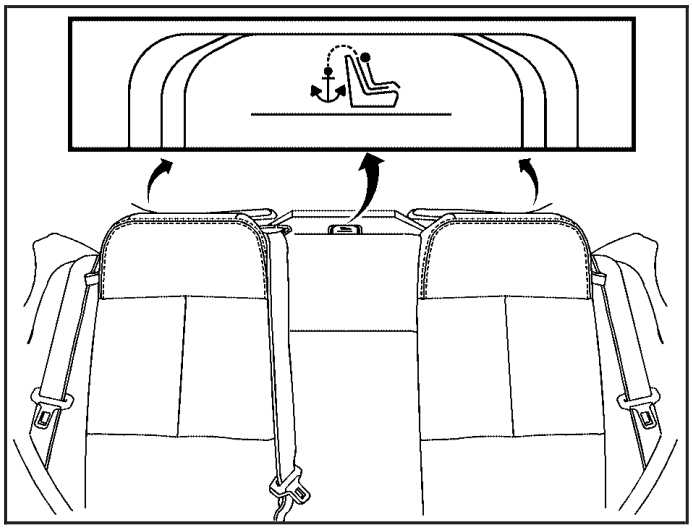

Do not secure a child restraint in a position without a top tether anchor if a national or local law requires that the top tether be attached, or if the instructions that come with the child restraint say that the top tether must be attached.

Accident statistics show that children are safer if they are restrained in the rear rather than the front seat. See *Where to Put the Restraint on page 1-38* for additional information.

Downloaded from www.Manualslib.com manuals search engine

Securing a Child Restraint Designed for the LATCH System

⚠ CAUTION:

If a LATCH-type child restraint is not attached to anchors, the restraint will not be able to protect the child correctly. In a crash, the child could be seriously injured or killed. Make sure that a LATCH-type child restraint is properly installed using the anchors, or use the vehicle's safety belts to secure the restraint, following the instructions that came with that restraint, and also the instructions in this manual.

⚠ CAUTION:

Each top tether anchor and lower anchor in the vehicle is designed to hold only one child restraint. Attaching more than one child restraint to a single anchor could cause the anchor or attachment to come loose or even break during a crash. A child or others could be injured if this happens. To help prevent injury to people and damage to your vehicle, attach only one child restraint per anchor.

Downloaded from www.Manualslib.com manuals search engine

⚠ CAUTION:

Children can be seriously injured or strangled if a shoulder belt is wrapped around their neck and the safety belt continues to tighten. Secure any unused safety belts behind the child restraint so children cannot reach them. Pull the shoulder belt all the way out of the retractor to set the lock, if your vehicle has one, after the child restraint has been installed. Be sure to follow the instructions of the child restraint manufacturer.

Notice: **Contact between the child restraint LATCH attachment parts and the vehicle's safety belt assembly may cause damage to these parts. Make sure when securing unused safety belts behind the child restraint that there is no contact between the child restraint LATCH attachment parts and the vehicle's safety belt assembly.**

Folding an empty rear seat with the safety belts secured may cause damage to the safety belt or the seat. When removing the child restraint, always remember to return the safety belts to their normal, stowed position before folding the rear seat.

1. Attach and tighten the lower attachments to the lower anchors. If the child restraint does not have lower attachments or the desired seating position does not have lower anchors, secure the child restraint with the top tether and the safety belts. Refer to your child restraint manufacturer instructions and the instructions in this manual.
   - 1.1. Find the lower anchors for the desired seating position.
   - 1.2. Put the child restraint on the seat.
   - 1.3. Attach and tighten the lower attachments on the child restraint to the lower anchors.
2. If the child restraint manufacturer recommends that the top tether be attached, attach and tighten the top tether to the top tether anchor, if equipped. Refer to the child restraint instructions and the following steps:
   - 2.1. Find the top tether anchor.
   - 2.2. Pull open the top tether anchor cover to expose the anchor.

Downloaded from www.Manualslib.com manuals search engine

2.3. Route, attach, and tighten the top tether according to your child restraint instructions and the following instructions:

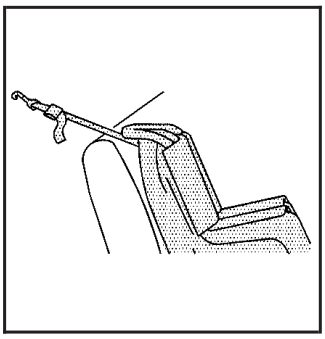

If the position you are using does not have a headrest or head restraint and you are using a single tether, route the tether over the seatback.

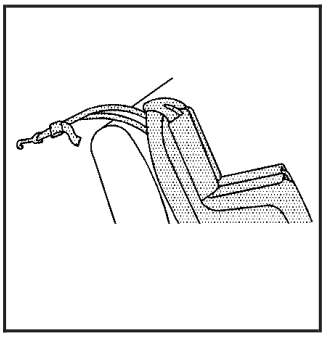

If the position you are using does not have a headrest or head restraint and you are using a dual tether, route the tether over the seatback.

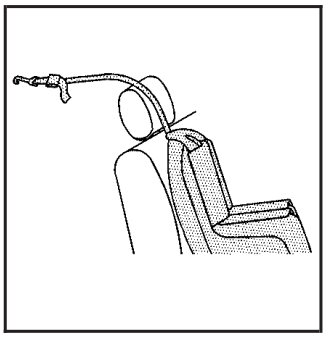

If the position you are using has a fixed headrest or head restraint and you are using a single tether, route the tether over the headrest or head restraint.

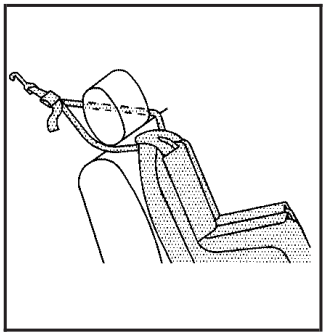

If the position you are using has a fixed headrest or head restraint and you are using a dual tether, route the tether around the headrest or head restraint.

3. Push and pull the child restraint in different directions to be sure it is secure.

Downloaded from www.Manualslib.com manuals search engine

Securing a Child Restraint in a Rear Seat Position

When securing a child restraint in a rear seating position, study the instructions that came with your child restraint to make sure it is compatible with this vehicle.

If your child restraint has the LATCH system, see *Lower Anchors and Tethers for Children (LATCH) on page 1-39* for how to install your child restraint using LATCH. If you secure a child restraint using a safety belt and it uses a top tether, see *Lower Anchors and Tethers for Children (LATCH) on page 1-39* for top tether anchor locations.

Do not secure a child restraint in a position without a top tether anchor if a national or local law requires that the top tether be anchored, or if the instructions that come with the child restraint say that the top strap must be anchored.

In Canada, the law requires that forward-facing child restraints have a top tether, and that the tether be attached.

If your child restraint does not have the LATCH system, you will be using the safety belt to secure the child restraint in this position. Be sure to follow the instructions that came with the child restraint. Secure the child in the child restraint when and as the instructions say.

If you need to install more than one child restraint in the rear seat, be sure to read *Where to Put the Restraint on page 1-38*.

1. Put the child restraint on the seat.
2. Pick up the latch plate, and run the lap and shoulder portions of the vehicle's safety belt through or around the restraint. The child restraint instructions will show you how.

Downloaded from www.Manualslib.com manuals search engine

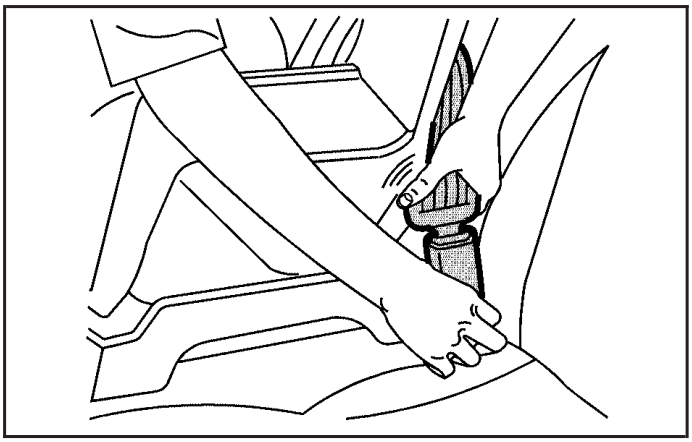

3. Push the latch plate into the buckle until it clicks.

   Make sure the release button is positioned so you would be able to unbuckle the safety belt quickly if necessary.

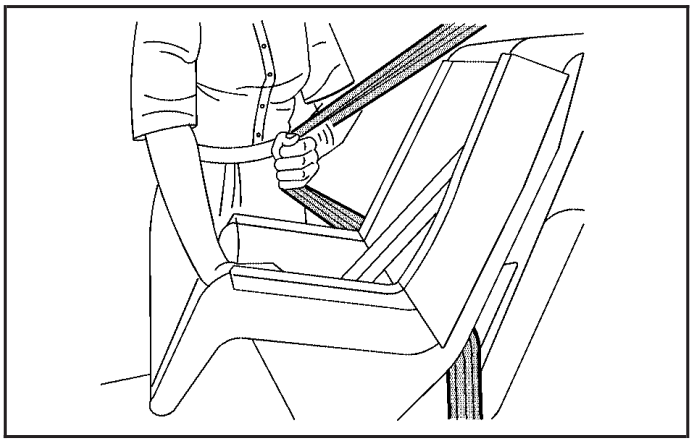

4. Pull the rest of the shoulder belt all the way out of the retractor to set the lock.

Downloaded from www.Manualslib.com manuals search engine

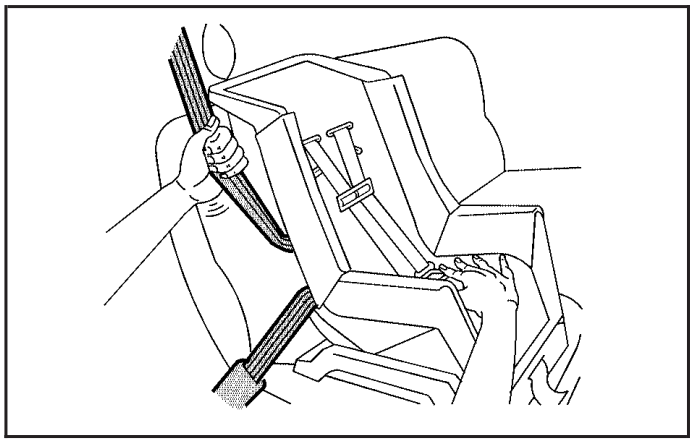

5. To tighten the belt, push down on the child restraint, pull the shoulder portion of the belt to tighten the lap portion of the belt, and feed the shoulder belt back into the retractor. If you are using a forward-facing child restraint, you may find it helpful to use your knee to push down on the child restraint as you tighten the belt.
6. If your child restraint has a top tether, follow the child restraint manufacturer's instructions regarding the use of the top tether. See *Lower Anchors and Tethers for Children (LATCH) on page 1-39* for more information.
7. Push and pull the child restraint in different directions to be sure it is secure.

To remove the child restraint, unbuckle the vehicle's safety belt and let it go back all the way. If the top tether is attached to a top tether anchor, disconnect it.

Downloaded from www.Manualslib.com manuals search engine

Securing a Child Restraint in the Right Front Seat Position

Your vehicle has airbags. A rear seat is a safer place to secure a forward-facing child restraint. See *Where to Put the Restraint on page 1-38*.

In addition, your vehicle has a passenger sensing system which is designed to turn off the right front passenger's frontal airbag under certain conditions. See *Passenger Sensing System on page 1-60* and *Passenger Airbag Status Indicator on page 3-43* for more information on this, including important safety information.

A label on your sun visor says, "Never put a rear-facing child seat in the front." This is because the risk to the rear-facing child is so great, if the airbag deploys.

⚠ CAUTION:

A child in a rear-facing child restraint can be seriously injured or killed if the right front passenger's airbag inflates. This is because the back of the rear-facing child restraint would be very close to the inflating airbag.

Even though the passenger sensing system is designed to turn off the right front passenger's frontal airbag if the system detects a rear-facing child restraint, no system is fail-safe, and no one can guarantee that an airbag will not deploy under some unusual circumstance, even though it is turned off. We recommend that rear-facing child restraints be secured in a rear seat, even if the airbag is off.

If you secure a forward-facing child restraint in the right front seat, always move the front passenger seat as far back as it will go. It is better to secure the child restraint in a rear seat.

See *Passenger Sensing System on page 1-60* for additional information.

Downloaded from www.Manualslib.com manuals search engine

If your child restraint has the LATCH system, see *Lower Anchors and Tethers for Children (LATCH) on page 1-39* for how to install your child restraint using LATCH. If you secure a child restraint using a safety belt and it uses a top tether, see *Lower Anchors and Tethers for Children (LATCH) on page 1-39* for top tether anchor locations.

Do not secure a child seat in a position without a top tether anchor if a national or local law requires that the top tether be anchored, or if the instructions that come with the child restraint say that the top strap must be anchored.

In Canada, the law requires that forward-facing child restraints have a top tether, and that the tether be attached.

You will be using the lap-shoulder belt to secure the child restraint in this position. Follow the instructions that came with the child restraint.

1. Move the seat as far back as it will go before securing the forward-facing child restraint.

   When the passenger sensing system has turned off the right front passenger's frontal airbag, the off indicator on the passenger airbag status indicator should light and stay lit when you start the vehicle. See *Passenger Airbag Status Indicator on page 3-43*.

2. Put the child restraint on the seat.

3. Pick up the latch plate, and run the lap and shoulder portions of the vehicle's safety belt through or around the restraint. The child restraint instructions will show you how.

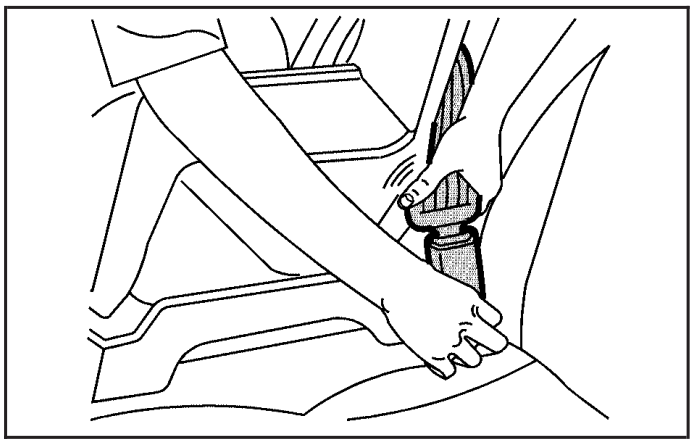

4. Push the latch plate into the buckle until it clicks.

   Make sure the release button is positioned so you would be able to unbuckle the safety belt quickly if necessary.

Downloaded from www.Manualslib.com manuals search engine

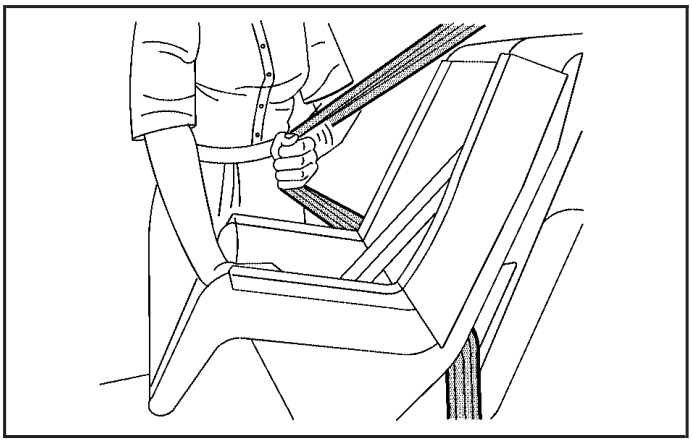

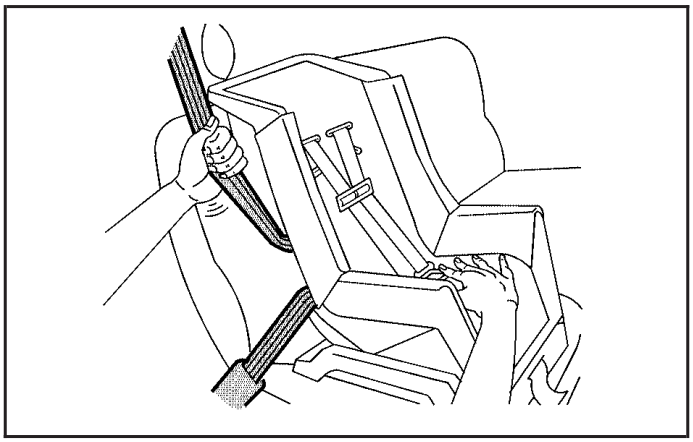

5. Pull the rest of the shoulder belt all the way out of the retractor to set the lock.

6. To tighten the belt, push down on the child restraint, pull the shoulder portion of the belt to tighten the lap portion of the belt and feed the shoulder belt back into the retractor. If you are using a forward-facing child restraint, you may find it helpful to use your knee to push down on the child restraint as you tighten the belt.

7. Push and pull the child restraint in different directions to be sure it is secure.

If the airbag is off, the off indicator in the passenger airbag status indicator will come on and stay on when the vehicle is started.

Downloaded from www.Manualslib.com manuals search engine

If a child restraint has been installed and the on indicator is lit, turn the vehicle off. Remove the child restraint from the vehicle and reinstall the child restraint.

If, after reinstalling the child restraint and restarting the vehicle, the on indicator is still lit, check to make sure that the vehicle's seatback is not pressing the child restraint into the seat cushion. If this happens, slightly recline the vehicle's seatback and adjust the seat cushion if possible. Also make sure the child restraint is not trapped under the vehicle head restraint. If this happens, adjust the head restraint.

Remove any additional material from the seat such as blankets, cushions, seat covers, seat heaters or seat massagers before reinstalling or securing the child restraint.

If the on indicator is still lit, secure the child in the child restraint in a rear seat position in the vehicle and check with your dealer/retailer.

To remove the child restraint, unbuckle the vehicle's safety belt and let it go back all the way.

Airbag System

Your vehicle has the following airbags:

- A frontal airbag for the driver.
- A frontal airbag for the right front passenger

Your vehicle may also have the following airbags:

- A roof-rail airbag for the driver and the passenger seated directly behind the driver.
- A roof-rail airbag for the right front passenger and the passenger seated directly behind the right front passenger.

All of the airbags in your vehicle will have the word AIRBAG embossed in the trim or on an attached label near the deployment opening.

For frontal airbags, the word AIRBAG will appear on the middle part of the steering wheel for the driver and on the instrument panel for the right front passenger.

With roof-rail airbags, the word AIRBAG will appear along the headliner or trim.

Downloaded from www.Manualslib.com manuals search engine

Airbags are designed to supplement the protection provided by safety belts. Even though today's airbags are also designed to help reduce the risk of injury from the force of an inflating bag, all airbags must inflate very quickly to do their job.

Here are the most important things to know about the airbag system:

⚠ CAUTION:

You can be severely injured or killed in a crash if you are not wearing your safety belt — even if you have airbags. Wearing your safety belt during a crash helps reduce your chance of hitting things inside the vehicle or being ejected from it. Airbags are "supplemental restraints" to the safety belts. All airbags are designed to work with safety belts, but do not replace them.

⚠ CAUTION:

Frontal airbags are designed to deploy in moderate to severe frontal and near frontal crashes. They are not designed to inflate in rollover, rear crashes, or in many side crashes.

Roof-rail airbags are designed to inflate in moderate to severe crashes where something hits the side of your vehicle. They are not designed to inflate in frontal, in rollover, or in rear crashes.

Everyone in your vehicle should wear a safety belt properly — whether or not there is an airbag for that person.

Downloaded from www.Manualslib.com manuals search engine

⚠ CAUTION:

Airbags inflate with great force, faster than the blink of an eye. Anyone who is up against, or very close to, any airbag when it inflates can be seriously injured or killed. Do not sit unnecessarily close to the airbag, as you would be if you were sitting on the edge of your seat or leaning forward. Safety belts help keep you in position before and during a crash. Always wear your safety belt, even with airbags. The driver should sit as far back as possible while still maintaining control of the vehicle.

Occupants should not lean on or sleep against the door or side windows in seating positions with roof-rail airbags.

⚠ CAUTION:

Airbags plus lap-shoulder belts offer the best protection for adults, but not for young children and infants. Neither the vehicle's safety belt system nor its airbag system is designed for them. Young children and infants need the protection that a child restraint system can provide. Always secure children properly in your vehicle. To read how, see *Older Children on page 1-29* or *Infants and Young Children on page 1-32*.

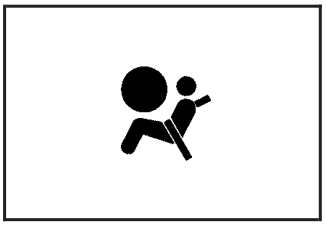

There is an airbag readiness light on the instrument panel, which shows the airbag symbol.

The system checks the airbag electrical system for malfunctions. The light tells you if there is an electrical problem. See *Airbag Readiness Light on page 3-42* for more information.

Downloaded from www.Manualslib.com manuals search engine

Where Are the Airbags?

The driver's frontal airbag is in the middle of the steering wheel.

The right front passenger's airbag is in the instrument panel on the passenger's side.

Downloaded from www.Manualslib.com manuals search engine

Driver Side shown, Passenger Side similar

If your vehicle has roof-rail airbags for the driver, right front passenger, and second row outboard passengers, they are in the ceiling above the side windows.

⚠ CAUTION:

If something is between an occupant and an airbag, the airbag might not inflate properly or it might force the object into that person causing severe injury or even death. The path of an inflating airbag must be kept clear.
Do not put anything between an occupant and an airbag, and do not attach or put anything on the steering wheel hub or on or near any other airbag covering.

If your vehicle has roof-rail airbags, never secure anything to the roof of your vehicle by routing the rope or tie down through any door or window opening. If you do, the path of an inflating roof-rail airbag will be blocked.

Downloaded from www.Manualslib.com manuals search engine

When Should an Airbag Inflate?

Frontal airbags are designed to inflate in moderate to severe frontal or near-frontal crashes to help reduce the potential for severe injuries mainly to the driver's or right front passenger's head and chest. However, they are only designed to inflate if the impact exceeds a predetermined deployment threshold. Deployment thresholds are used to predict how severe a crash is likely to be in time for the airbags to inflate and help restrain the occupants.

Whether your frontal airbags will or should deploy is not based on how fast your vehicle is traveling. It depends largely on what you hit, the direction of the impact, and how quickly your vehicle slows down.

Frontal airbags may inflate at different crash speeds. For example:

- If the vehicle hits a stationary object, the airbags could inflate at a different crash speed than if the vehicle hits a moving object.
- If the vehicle hits an object that deforms, the airbags could inflate at a different crash speed than if the vehicle hits an object that does not deform.
- If the vehicle hits a narrow object (like a pole), the airbags could inflate at a different crash speed than if the vehicle hits a wide object (like a wall).
- If the vehicle goes into an object at an angle, the airbags could inflate at a different crash speed than if the vehicle goes straight into the object.

Thresholds can also vary with specific vehicle design.

Frontal airbags are not intended to inflate during vehicle rollovers, rear impacts, or in many side impacts.

In addition, your vehicle has dual-stage frontal airbags. Dual-stage airbags adjust the restraint according to crash severity. Your vehicle has electronic frontal sensors, which help the sensing system distinguish between a moderate frontal impact and a more severe frontal impact. For moderate frontal impacts, dual-stage airbags inflate at a level less than full deployment. For more severe frontal impacts, full deployment occurs.

Your vehicle may or may not have roof-rail airbags. See *Airbag System on page 1-52*. Roof-rail airbags are intended to inflate in moderate to severe side crashes. Roof-rail airbags will inflate if the crash severity is above the system's designed threshold level. The threshold level can vary with specific vehicle design.

Roof-rail airbags are not intended to inflate in frontal impacts, near-frontal impacts, rollovers, or rear impacts. A roof-rail airbag is intended to deploy on the side of the vehicle that is struck.

In any particular crash, no one can say whether an airbag should have inflated simply because of the damage to a vehicle or because of what the repair costs were. For frontal airbags, inflation is determined by what the vehicle hits, the angle of the impact, and how quickly the vehicle slows down. For roof-rail airbags, deployment is determined by the location and severity of the side impact.

Downloaded from www.Manualslib.com manuals search engine

What Makes an Airbag Inflate?

In a deployment event, the sensing system sends an electrical signal triggering a release of gas from the inflator. Gas from the inflator fills the airbag causing the bag to break out of the cover and deploy. The inflator, the airbag, and related hardware are all part of the airbag module.

Frontal airbag modules are located inside the steering wheel and instrument panel. For vehicles with roof-rail airbags, there are airbag modules in the ceiling of the vehicle, near the side windows that have occupant seating positions.

How Does an Airbag Restrain?

In moderate to severe frontal or near frontal collisions, even belted occupants can contact the steering wheel or the instrument panel. In moderate to severe side collisions, even belted occupants can contact the inside of the vehicle.

Airbags supplement the protection provided by safety belts. Frontal airbags distribute the force of the impact more evenly over the occupant's upper body, stopping the occupant more gradually. Roof-rail airbags distribute the force of the impact more evenly over the occupant's upper body.

But airbags would not help in many types of collisions, primarily because the occupant's motion is not toward those airbags. See *When Should an Airbag Inflate? on page 1-57* for more information.

Airbags should never be regarded as anything more than a supplement to safety belts.

What Will You See After an Airbag Inflates?

After the frontal airbags inflate, they quickly deflate, so quickly that some people may not even realize an airbag inflated. Roof-rail airbags may still be at least partially inflated for some time after they deploy. Some components of the airbag module may be hot for several minutes. For location of the airbag modules, see *What Makes an Airbag Inflate? on page 1-58*.

The parts of the airbag that come into contact with you may be warm, but not too hot to touch. There may be some smoke and dust coming from the vents in the deflated airbags. Airbag inflation does not prevent the driver from seeing out of the windshield or being able to steer the vehicle, nor does it prevent people from leaving the vehicle.

Downloaded from www.Manualslib.com manuals search engine

⚠ CAUTION:

When an airbag inflates, there may be dust in the air. This dust could cause breathing problems for people with a history of asthma or other breathing trouble. To avoid this, everyone in the vehicle should get out as soon as it is safe to do so. If you have breathing problems but cannot get out of the vehicle after an airbag inflates, then get fresh air by opening a window or a door. If you experience breathing problems following an airbag deployment, you should seek medical attention.

Your vehicle has a feature that may automatically unlock the doors, turn the interior lamps on, and turn the hazard warning flashers on when the airbags inflate. You can lock the doors, turn the interior lamps off, and turn the hazard warning flashers off by using the controls for those features.

In many crashes severe enough to inflate the airbag, windshields are broken by vehicle deformation. Additional windshield breakage may also occur from the right front passenger airbag.

- Airbags are designed to inflate only once. After an airbag inflates, you will need some new parts for the airbag system. If you do not get them, the airbag system will not be there to help protect you in another crash. A new system will include airbag modules and possibly other parts. The service manual for your vehicle covers the need to replace other parts.
- Your vehicle has a crash sensing and diagnostic module which records information after a crash. See *Vehicle Data Recording and Privacy on page 7-16* and *Event Data Recorders on page 7-16*.
- Let only qualified technicians work on the airbag systems. Improper service can mean that an airbag system will not work properly. See your dealer/retailer for service.

Downloaded from www.Manualslib.com manuals search engine

Passenger Sensing System

Your vehicle has a passenger sensing system for the right front passenger's position. The passenger airbag status indicator will be visible on the instrument panel when you start your vehicle.

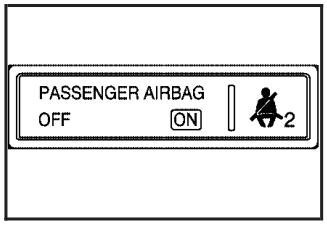

United States

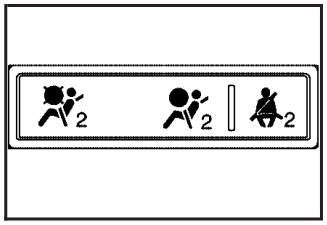

Canada

The words ON and OFF, or the symbol for on and off, will be visible during the system check. If you are using remote start to start your vehicle from a distance, if equipped, you may not see the system check. When the system check is complete, either the word ON or the word OFF, or the symbol for on or the symbol for off, will be visible. See *Passenger Airbag Status Indicator on page 3-43*.

The passenger sensing system will turn off the right front passenger's frontal airbag under certain conditions. The driver's airbags are not part of the passenger sensing system.

The passenger sensing system works with sensors that are part of the right front passenger's seat. The sensors are designed to detect the presence of a properly-seated occupant and determine if the right front passenger's frontal airbag should be enabled (may inflate) or not.

Accident statistics show that children are safer if they are restrained in the rear rather than the front seat.

We recommend that children be secured in a rear seat, including: an infant or a child riding in a rear-facing child restraint; a child riding in a forward-facing child seat; an older child riding in a booster seat; and children, who are large enough, using safety belts.

A label on your sun visor says, "Never put a rear-facing child seat in the front." This is because the risk to the rear-facing child is so great, if the airbag deploys.

Downloaded from www.Manualslib.com manuals search engine

⚠ CAUTION:

A child in a rear-facing child restraint can be seriously injured or killed if the right front passenger's airbag inflates. This is because the back of the rear-facing child restraint would be very close to the inflating airbag.

Even though the passenger sensing system is designed to turn off the right front passenger's frontal airbag if the system detects a rear-facing child restraint, no system is fail-safe, and no one can guarantee that an airbag will not deploy under some unusual circumstance, even though it is turned off. We recommend that rear-facing child restraints be secured in a rear seat, even if the airbag is off.

If you secure a forward-facing child restraint in the right front seat, always move the front passenger seat as far back as it will go. It is better to secure the child restraint in a rear seat.

The passenger sensing system is designed to turn off the right front passenger's frontal airbag if:

- The right front passenger seat is unoccupied.
- The system determines that an infant is present in a rear-facing infant seat.
- The system determines that a small child is present in a child restraint.
- The system determines that a small child is present in a booster seat.
- A right front passenger takes his/her weight off of the seat for a period of time.
- The right front passenger seat is occupied by a smaller person, such as a child who has outgrown child restraints.
- Or, if there is a critical problem with the airbag system or the passenger sensing system.

When the passenger sensing system has turned off the right front passenger's frontal airbag, the off indicator will light and stay lit to remind you that the airbag is off. See *Passenger Airbag Status Indicator on page 3-43*.

If a child restraint has been installed and the on indicator is lit, turn the vehicle off. Remove the child restraint from the vehicle and reinstall the child restraint following the child restraint manufacturer's directions and refer to *Securing a Child Restraint in the Right Front Seat Position on page 1-49*.

Downloaded from www.Manualslib.com manuals search engine

If, after reinstalling the child restraint and restarting the vehicle, the on indicator is still lit, check to make sure that the vehicle's seatback is not pressing the child restraint into the seat cushion. If this happens, slightly recline the vehicle's seatback and adjust the seat cushion if possible. Also make sure the child restraint is not trapped under the vehicle head restraint. If this happens, adjust the head restraint. See *Head Restraints on page 1-7*.

Remove any additional material from the seat such as blankets, cushions, seat covers, seat heaters, or seat massagers before reinstalling or securing the child restraint.

If the on indicator is still lit, secure the child in the child restraint in a rear seat position in the vehicle, and check with your dealer/retailer.

The passenger sensing system is designed to enable (may inflate) the right front passenger's frontal airbag anytime the system senses that a person of adult size is sitting properly in the right front passenger's seat. When the passenger sensing system has allowed the airbag to be enabled, the on indicator will light and stay lit to remind you that the airbag is active.

For some children who have outgrown child restraints and for very small adults, the passenger sensing system may or may not turn off the right front passenger's frontal airbag, depending upon the person's seating posture and body build. Everyone in your vehicle who has outgrown child restraints should wear a safety belt properly — whether or not there is an airbag for that person.

If a person of adult-size is sitting in the right front passenger's seat, but the off indicator is lit, it could be because that person is not sitting properly in the seat. If this happens, turn the vehicle off, remove any additional material from the seat, such as blankets, cushions, seat covers, seat heaters or seat massagers and ask the person to place the seatback in the fully upright position, then sit upright in the seat, centered on the seat cushion, with the person's legs comfortably extended. Restart the vehicle and have the person remain in this position for two to three minutes. This will allow the system to detect that person and then enable the right front passenger's frontal airbag.

Downloaded from www.Manualslib.com manuals search engine

Safety belts help keep the passenger in position on the seat during vehicle maneuvers and braking, which helps the passenger sensing system maintain the passenger airbag status. See “Safety Belts” and “Child Restraints” in the Index for additional information about the importance of proper restraint use.

⚠ CAUTION:

If the airbag readiness light in the instrument panel cluster ever comes on and stays on, it means that something may be wrong with the airbag system. If this ever happens, have the vehicle serviced promptly, because an adult-size person sitting in the right front passenger’s seat may not have the protection of the airbag(s). See *Airbag Readiness Light on page 3-42* for more on this, including important safety information.

A thick layer of additional material, such as a blanket or cushion, or aftermarket equipment such as seat covers, seat heaters, and seat massagers can affect how well the passenger sensing system operates. We recommend that you not use seat covers or other aftermarket equipment other than any that GM has approved for your specific vehicle. See *Adding Equipment to Your Airbag-Equipped Vehicle on page 1-65* for more information about modifications that can affect how the system operates.

Downloaded from www.Manualslib.com manuals search engine

The passenger sensing system may suppress the airbag deployment when liquid soaks into the seat. If this happens, the off indicator in the passenger airbag status indicator and the airbag readiness light on the instrument panel will be lit. The system should resume normal operation after the seat is allowed to dry. If the system operates incorrectly after the seat has dried, have your dealer/retailer check the system.

⚠ CAUTION:

Stowing of articles under the passenger's seat or between the passenger's seat cushion and seatback may interfere with the proper operation of the passenger sensing system.

Servicing Your Airbag-Equipped Vehicle

Airbags affect how your vehicle should be serviced. There are parts of the airbag system in several places around your vehicle. Your dealer/retailer and the service manual have information about servicing your vehicle and the airbag system. To purchase a service manual, see *Service Publications Ordering Information on page 7-15*.

⚠ CAUTION:

For up to 10 seconds after the ignition is turned off and the battery is disconnected, an airbag can still inflate during improper service. You can be injured if you are close to an airbag when it inflates. Avoid yellow connectors. They are probably part of the airbag system. Be sure to follow proper service procedures, and make sure the person performing work for you is qualified to do so.

Downloaded from www.Manualslib.com manuals search engine

Adding Equipment to Your Airbag-Equipped Vehicle

Q: Is there anything I might add to or change about the vehicle that could keep the airbags from working properly?

A: Yes. If you add things that change your vehicle's frame, bumper system, height, front end or side sheet metal, they may keep the airbag system from working properly. Changing or moving any parts of the front seats, safety belts, the airbag sensing and diagnostic module, steering wheel, instrument panel, roof-rail airbag modules, ceiling headliner or pillar garnish trim, front sensors, or airbag wiring can affect the operation of the airbag system.

In addition, your vehicle has a passenger sensing system for the right front passenger's position, which includes sensors that are part of the passenger's seat. The passenger sensing system may not operate properly if the original seat trim is replaced with non-GM covers, upholstery or trim, or with GM covers, upholstery or trim designed for a different vehicle. Any object, such as an aftermarket seat heater or a comfort enhancing pad or device, installed under or on top of the seat fabric, could also interfere with the operation of the passenger sensing system. This could either prevent proper deployment of the passenger airbag(s) or prevent the passenger sensing system from properly turning off the passenger airbag(s). See *Passenger Sensing System on page 1-60*.

If you have any questions about this, you should contact Customer Assistance before you modify your vehicle. The phone numbers and addresses for Customer Assistance are in Step Two of the Customer Satisfaction Procedure in this manual. See *Customer Satisfaction Procedure on page 7-2*.

Q: Because I have a disability, I have to get my vehicle modified. How can I find out whether this will affect my airbag system?

A: If you have questions, call Customer Assistance. The phone numbers and addresses for Customer Assistance are in Step Two of the Customer Satisfaction Procedure in this manual. See *Customer Satisfaction Procedure on page 7-2*.

In addition, your dealer/retailer and the service manual have information about the location of the airbag sensors, sensing and diagnostic module and airbag wiring.

Downloaded from www.Manualslib.com manuals search engine

Restraint System Check

Checking the Restraint Systems

Safety Belts

Now and then, make sure the safety belt reminder light and all your belts, buckles, latch plates, retractors and anchorages are working properly.

Look for any other loose or damaged safety belt system parts. If you see anything that might keep a safety belt system from doing its job, have it repaired. Torn or frayed safety belts may not protect you in a crash. They can rip apart under impact forces. If a belt is torn or frayed, get a new one right away.

Make sure the safety belt reminder light is working. See *Safety Belt Reminders on page 3-41* for more information.

Keep safety belts clean and dry. See *Care of Safety Belts on page 5-114*.

Airbags

The airbag system does not need regularly scheduled maintenance or replacement. Make sure the airbag readiness light is working. See *Airbag Readiness Light on page 3-42* for more information.

Notice: **If an airbag covering is damaged, opened, or broken, the airbag may not work properly. Do not open or break the airbag coverings. If there are any opened or broken airbag covers, have the airbag covering and/or airbag module replaced. For the location of the airbag modules, see *What Makes an Airbag Inflate? on page 1-58*. See your dealer/retailer for service.**

Downloaded from www.Manualslib.com manuals search engine

Replacing Restraint System Parts After a Crash

⚠ CAUTION:

A crash can damage the restraint systems in your vehicle. A damaged restraint system may not properly protect the person using it, resulting in serious injury or even death in a crash. To help make sure your restraint systems are working properly after a crash, have them inspected and any necessary replacements made as soon as possible.

If you have had a crash, do you need new belts or LATCH system (if equipped) parts?

After a very minor crash, nothing may be necessary. But the belt assemblies that were used during any crash may have been stressed or damaged. See your dealer/retailer to have your safety belt assemblies inspected or replaced.

If your vehicle has the LATCH system and it was being used during a crash, you may need new LATCH system parts.

New parts and repairs may be necessary even if the belt or LATCH system (if equipped), was not being used at the time of the crash.

If an airbag inflates, you will need to replace airbag system parts. See the part on the airbag system earlier in this section.

Have your safety belt pretensioners checked if your vehicle has been in a crash, if your airbag readiness light stays on after you start your vehicle, or while you are driving. See *Airbag Readiness Light on page 3-42*.

Downloaded from www.Manualslib.com manuals search engine

NOTES

Downloaded from www.Manualslib.com manuals search engine

Section 2 Features and Controls

Keys 2-2
Remote Keyless Entry (RKE) System 2-3
Remote Keyless Entry (RKE) System Operation 2-4
Remote Vehicle Start 2-7

Doors and Locks 2-10
Door Locks 2-10
Power Door Locks 2-11
Delayed Locking 2-11
Programmable Automatic Door Locks 2-12
Rear Door Security Locks 2-12
Lockout Protection 2-13
Trunk 2-14

Windows 2-16
Power Windows 2-17
Sun Visors 2-18

Theft-Deterrent Systems 2-18
Content Theft-Deterrent 2-18
PASS-Key® III Electronic Immobilizer 2-20
PASS-Key® III Electronic Immobilizer Operation 2-21

Starting and Operating Your Vehicle 2-23
New Vehicle Break-In 2-23
Ignition Positions 2-23
Retained Accessory Power (RAP) 2-24
Starting the Engine 2-25
Engine Coolant Heater 2-26
Active Fuel Management™ 2-28
Automatic Transmission Operation 2-28
Parking Brake 2-33
Shifting Into PARK (P) 2-34
Shifting Out of PARK (P) 2-35
Parking Over Things That Burn 2-36
Engine Exhaust 2-36
Running the Vehicle While Parked 2-37

Mirrors 2-38
Manual Rearview Mirror 2-38
Manual Rearview Mirror with OnStar® 2-38
Outside Power Mirrors 2-39
Outside Convex Mirror 2-39

OnStar® System 2-40

Storage Areas 2-43
Glove Box 2-43
Cupholder(s) 2-43
Sunglasses Storage Compartment 2-44
Center Console Storage 2-44
Convenience Net 2-44

Sunroof 2-44

Downloaded from www.Manualslib.com manuals search engine

Keys

⚠ CAUTION:

Leaving children in a vehicle with the ignition key is dangerous for many reasons, children or others could be badly injured or even killed. They could operate the power windows or other controls or even make the vehicle move. The windows will function with the keys in the ignition and they could be seriously injured or killed if caught in the path of a closing window. Do not leave the keys in a vehicle with children.

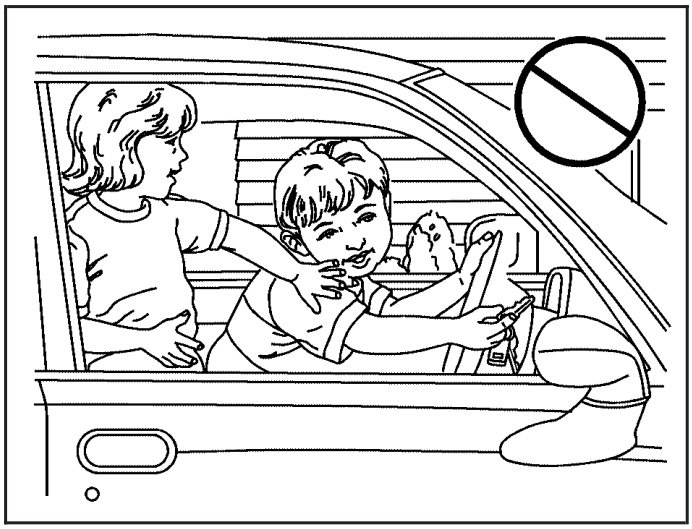

The key can be used for the ignition, as well as the driver's door lock and storage compartments.

The key comes with a bar coded tag attached to the key ring. Keep this bar coded tag and give it to your dealer/retailer if a new key needs to be made.

The vehicle has the PASS-Key® III vehicle theft system. The key has a transponder in the key head that matches a decoder in the vehicle's instrument panel.

Downloaded from www.Manualslib.com manuals search engine

The key will have PK3 stamped on it. If a replacement key or an additional key is needed, it must be purchased from your dealer/retailer.

Any new PASS-Key® III key must be programmed before it will start the vehicle. See *PASS-Key® III Electronic Immobilizer on page 2-20* for more information on programming a new key.

In an emergency, contact Roadside Assistance. See *Roadside Assistance Program on page 7-6* for more information.

Notice: **If you ever lock your keys in your vehicle, you may have to damage the vehicle to get in. Be sure you have spare keys.**

Remote Keyless Entry (RKE) System

Your Remote Keyless Entry (RKE) system operates on a radio frequency subject to Federal Communications Commission (FCC) Rules and with Industry Canada.

This device complies with Part 15 of the FCC Rules. Operation is subject to the following two conditions:

1. This device may not cause interference.
2. This device must accept any interference received, including interference that may cause undesired operation of the device.

This device complies with RSS-210 of Industry Canada. Operation is subject to the following two conditions:

1. This device may not cause interference.
2. This device must accept any interference received, including interference that may cause undesired operation of the device.

Changes or modifications to this system by other than an authorized service facility could void authorization to use this equipment.

At times you may notice a decrease in operating range. This is normal for any RKE system. If the transmitter does not work or if you have to stand closer to your vehicle for the transmitter to work, try this:

- Check the distance. You may be too far from your vehicle. You may need to stand closer during rainy or snowy weather.
- Check the location. Other vehicles or objects may be blocking the signal. Take a few steps to the left or right, hold the transmitter higher, and try again.
- Check to determine if battery replacement is necessary. See “Battery Replacement” later in this section.
- If you are still having trouble, see your dealer/retailer or a qualified technician for service.

Downloaded from www.Manualslib.com manuals search engine

Remote Keyless Entry (RKE) System Operation

The Remote Keyless Entry (RKE) transmitter functions will work up to 195 feet (60 m) away, however, the operating range may be less while the vehicle is running.

There are other conditions which can affect the performance of the transmitter. See *Remote Keyless Entry (RKE) System on page 2-3*.

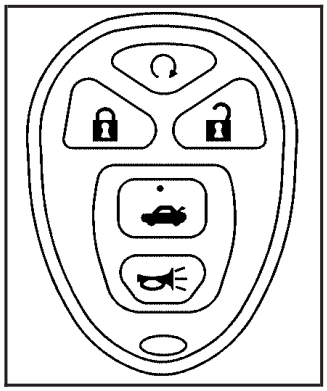

With Remote Start Shown, Without Remote Start Similar

The following functions may be available with your vehicle's RKE system:

(Remote Vehicle Start): If your vehicle has this feature, press to start the engine from outside the vehicle using the RKE transmitter. See *Remote Vehicle Start on page 2-7* for additional information.

(Lock): Press to lock all the doors. If enabled through the Driver Information Center (DIC), the parking lamps may flash once and the horn may chirp once to indicate locking has occurred. See "REMOTE LOCKS FEEDBACK" under *DIC Operation and Displays (Uplevel DIC with Trip Computer) on page 3-55* or *DIC Operation and Displays (Base Level DIC) on page 3-62* for programming information.

Pressing will arm the content theft-deterrent system. See *Content Theft-Deterrent on page 2-18* for more information.

Downloaded from www.Manualslib.com manuals search engine

(Unlock): Press one time to unlock the driver's door. Press again within five seconds to unlock the other doors. The interior lamps will come on and stay on for 20 seconds or until the ignition is turned on. If enabled through the DIC, the parking lamps may flash once and the horn may chirp once to indicate unlocking has occurred. See "REMOTE LOCKS FEEDBACK" under *DIC Operation and Displays (Uplevel DIC with Trip Computer) on page 3-55* or *DIC Operation and Displays (Base Level DIC) on page 3-62*.

Pressing on the RKE transmitter will disarm the content theft-deterrent system. See *Content Theft-Deterrent on page 2-18* for more details.

(Trunk Release): Press and hold for about one second to release the trunk lid. The transaxle must be in PARK (P) for this feature to operate.

(Panic Alarm): Press to activate the alarm. The ignition must be in LOCK/OFF for the remote alarm to work. When is pressed, the headlamps will flash and the horn will sound repeatedly for two minutes. The alarm will turn off when the ignition is moved to ON/RUN or the is pressed again.

Matching Transmitter(s) to Your Vehicle

Each RKE transmitter is coded to prevent another transmitter from unlocking your vehicle. If a transmitter is lost or stolen, a replacement can be purchased through your dealer/retailer. All transmitters need to be re-coded to match the new transmitter. The lost transmitter will no longer work after the new transmitters are re-coded. The vehicle can have a maximum of four transmitters matched to it.

Downloaded from www.Manualslib.com manuals search engine

Battery Replacement

Replace the battery if the KEY FOB BATTERY LOW message displays in the DIC. See “KEY FOB BATTERY LOW” under *DIC Warnings and Messages on page 3-67* for additional information.

Notice: **When replacing the battery, use care not to touch any of the circuitry. Static from your body transferred to these surfaces may damage the transmitter.**

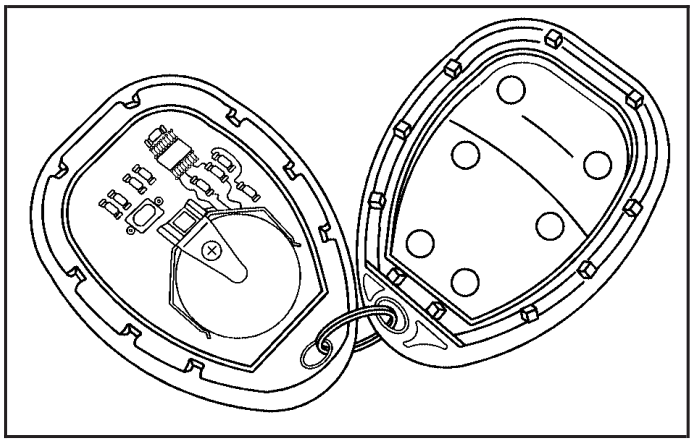

To replace the battery in the RKE transmitter:

1. Separate the halves of the transmitter with a flat, thin object inserted into the notch on the side.
2. Remove the old battery. Do not use a metal object.
3. Insert the new battery, positive side facing up. Replace with a CR2032 or equivalent battery.
4. Put the transmitter back together tightly.

Downloaded from www.Manualslib.com manuals search engine

Remote Vehicle Start

Your vehicle may have a remote starting feature that allows you to start the engine from outside the vehicle. It may also start the vehicle's heating or air conditioning systems and rear window defogger. When the remote start system is active and the vehicle has an automatic climate control system, it will automatically regulate the inside temperature. Normal operation of these systems will return after the ignition key is turned to ON/RUN.

Laws in some communities may restrict the use of remote starters. For example, some laws may require a person using remote start to have the vehicle in view when doing so. Check local regulations for any requirements on remote starting of vehicles.

Do not use the remote start feature if your vehicle is low on fuel. Your vehicle may run out of fuel.

If your vehicle has the remote start feature, the RKE transmitter functions will have an increased range of operation. However, the range may be less while the vehicle is running.

There are other conditions which can affect the performance of the transmitter, see *Remote Keyless Entry (RKE) System on page 2-3* for additional information.

(Remote Start): This button will be on the RKE transmitter if you have remote start.

To start the vehicle using the remote start feature:

1. Aim the transmitter at the vehicle.
2. Press and release the transmitter's lock button, then immediately press and hold the transmitter's remote start button for about four seconds or until the vehicle's turn signal lamps flash. The doors will lock.

   When the vehicle starts, the parking lamps turn on and remain on while the engine is running, and the DIC will display REMOTE START ACTIVE PRESS HAZARD SWITCH TO CANCEL.

The remote start feature provides two separate starts per ignition cycle, each with 10 minutes of engine running time, or one start with a time extension. The first start must expire or be canceled to get two separate 10 minute starts.

Downloaded from www.Manualslib.com manuals search engine

If it is the first remote start since the vehicle has been driven, repeat the previous steps, while the engine is still running, to extend the engine running time by 10 minutes from the time you repeat the steps for remote starting. The remote start running time can be extended one time and only after the first remote start.

After entering the vehicle during a remote start, insert and turn the key to ON/RUN to drive the vehicle.

The engine will shut off automatically after 10 minutes, unless a time extension has been done or the vehicle's key is inserted into the ignition switch and turned to ON/RUN.

To manually shut off a remote start, do any of the following.

- Aim the RKE transmitter at the vehicle and press and release the remote start button.
- Turn on the hazard warning flashers.
- Turn the ignition switch out of LOCK/OFF position and then back to LOCK/OFF.

The parking lamps turn off to indicate the engine is off.

After the engine has been started two times, or one time with a time extension, the vehicle's ignition must be turned to ON/RUN using the key before the remote start procedure can be used again. See *Ignition Positions on page 2-23* for information regarding the ignition positions on your vehicle.

The remote vehicle start feature will not operate if any of the follow occur:

- The remote start system is disabled through the DIC.
- The vehicle's key is in the ignition.
- A door on the vehicle is open.
- The vehicle's hood is open.
- The hazard warning flashers are on.
- There is an emission control system malfunction.
- The engine coolant temperature is too high.
- The oil pressure is low.
- Two remote vehicle starts, or one start with a time extension, have already been provided for that ignition cycle.

Downloaded from www.Manualslib.com manuals search engine

If a remote start is attempted and is unsuccessful, the Driver Information Center (DIC) will display REMOTE START DISABLED.

Vehicles that have the remote start feature are shipped from the factory with the remote vehicle start system enabled. The system may be enabled or disabled through the DIC. See “REMOTE START” under *DIC Operation and Displays (Uplevel DIC with Trip Computer) on page 3-55* or *DIC Operation and Displays (Base Level DIC) on page 3-62* for additional information. If your vehicle does not have the DIC feature, and remote vehicle start was installed at the dealer/retailer, you will need to have the dealer/retailer enable or disable the system.

Remote Start Ready

If your vehicle does not have the remote vehicle start feature, it may have the remote start ready feature. This feature allows your dealer/retailer to add the manufacturer’s remote vehicle start feature.

See your dealer/retailer if you would like to add the manufacturer’s remote vehicle start feature to your vehicle.

Downloaded from www.Manualslib.com manuals search engine

Doors and Locks

Door Locks

⚠ CAUTION:

Unlocked doors can be dangerous.

- **Passengers, especially children, can easily open the doors and fall out of a moving vehicle. When a door is locked, the handle will not open it. You increase the chance of being thrown out of the vehicle in a crash if the doors are not locked. So, wear safety belts properly and lock the doors whenever you drive.**
- **Young children who get into unlocked vehicles may be unable to get out. A child can be overcome by extreme heat and can suffer permanent injuries or even death from heat stroke. Always lock your vehicle whenever you leave it.**
- **Outsiders can easily enter through an unlocked door when you slow down or stop your vehicle. Locking your doors can help prevent this from happening.**

There are several ways to lock and unlock the vehicle.

From the outside, use the key or remote keyless entry transmitter.

From the inside, use the manual or power door locks.

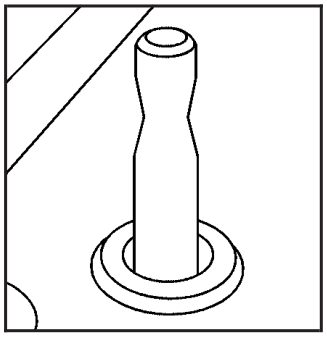

To manually lock or unlock the doors from inside the vehicle, push down or pull up on the door lock pin located on the top of each door panel.

Downloaded from www.Manualslib.com manuals search engine

Power Door Locks

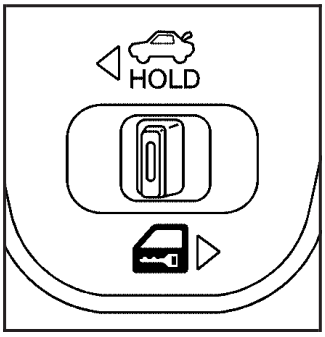

Driver's Side

To lock or unlock all doors from inside the vehicle, use the power door lock switch located on either front door.

Move the switch on the driver's door to the right to lock or to the left to unlock the doors. Move the switch on the passenger's door to the left to lock or to the right to unlock the doors.

If the vehicle has the content theft-deterrent system, the vehicle may be programmed to arm the system with the power door lock switch. See "Lock Switch Arm" under *DIC Vehicle Customization on page 3-89* for more information on programming the system.

Delayed Locking

This feature delays the locking of the vehicle's doors for five seconds after the last door is closed. Two chimes will sound when the power door lock switch or the LOCK button on the remote keyless entry transmitter is pressed when a door is open. The chimes indicate that the delayed locking feature is on.

The doors can be locked immediately by pressing the power door lock switch or the LOCK button on the transmitter a second time.

The delayed locking feature will not activate when the ignition is in ON/RUN or ACC/ACCESSORY.

You can program this feature on or off through the Driver Information Center (DIC) See "Personal Programming Mode Screens" under *DIC Vehicle Customization on page 3-89*.

Downloaded from www.Manualslib.com manuals search engine

Programmable Automatic Door Locks

The vehicle's doors are programmed from the factory to lock when the shift lever is moved into a forward gear, and to unlock when the shift lever is moved into PARK (P).

If someone needs to get in or out of the vehicle after the doors have been locked, place the shift lever into PARK (P). You may also unlock all doors using the power door lock switch or unlock one door using the inside manual door lock.

To program the door unlocking feature, see "Personal Programming Mode Screens" under *DIC Vehicle Customization on page 3-89*. The locking feature cannot be disabled or programmed.

Rear Door Security Locks

Your vehicle has rear door security locks, that prevent passengers from opening the rear doors from the inside.

The rear door security locks are located on the inside edge of each rear door. You must open the rear doors to access them.

To assist you in finding the lock, your vehicle will have one of the following:

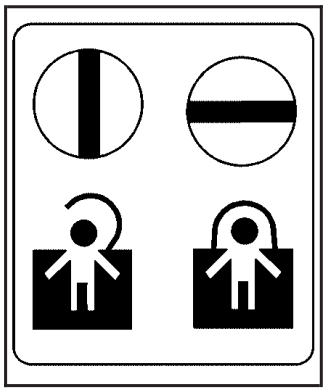

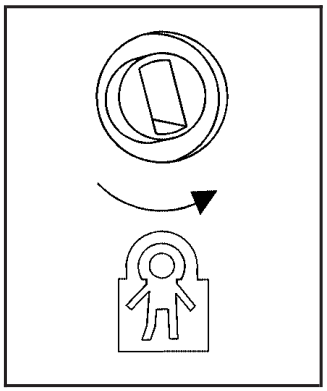

To use these locks, do the following:

1. Insert the key into the security lock slot and turn it so the slot is in the horizontal position.
2. Close the door.
3. Do the same for the other rear door.

Downloaded from www.Manualslib.com manuals search engine

When you want to open a rear door when the security lock is on, do the following:

1. Unlock the door using the remote keyless entry transmitter, if the vehicle has one, the power door lock switch, or by lifting the rear door manual lock.
2. Open the door from the outside.

To cancel the rear door security lock, do the following:

1. Unlock the door and open it from the outside.
2. Insert the key into the security lock slot and turn it so the slot is in the vertical position.
3. Do the same for the other rear door.

Lockout Protection

The lockout protection feature makes it more difficult to lock the key in the vehicle. If the driver's door is open while the key is in the ignition, the door cannot be locked with the power door lock switch.

This feature cannot guarantee that you will never be locked out of the vehicle. If the key is not left in the ignition, or, if the manual door lock pin is used, the key could still be locked inside the vehicle. Always remember to take the key with you.

Downloaded from www.Manualslib.com manuals search engine

Trunk

⚠ CAUTION:

It can be dangerous to drive with the trunk lid open because carbon monoxide (CO) gas can come into your vehicle. You cannot see or smell CO. It can cause unconsciousness and even death. If you must drive with the trunk lid open or if electrical wiring or other cable connections must pass through the seal between the body and the trunk lid:

- **Make sure all other windows are shut.**
- **Turn the fan on your heating or cooling system to its highest speed and select the control setting that will force outside air into your vehicle. See Climate Control System.**
- **If you have air outlets on or under the instrument panel, open them all the way.**

See *Engine Exhaust on page 2-36*.

To unlock and open the trunk from the outside, press the trunk button on the remote keyless entry transmitter. See *Remote Keyless Entry (RKE) System Operation on page 2-4*.

To open the trunk from the inside, use the power door lock switch located on the driver's or front passenger's door. See "Remote Trunk Release" following.

The vehicle must be in PARK (P) in order for the trunk to open.

Downloaded from www.Manualslib.com manuals search engine

Remote Trunk Release

This feature is used to unlock the trunk from inside the vehicle using the power door lock switch.

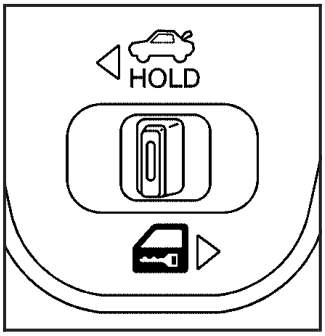

Driver's Side

Press and hold the driver's side power door lock switch to unlock the trunk.

Emergency Trunk Release Handle

Notice: **Do not use the emergency trunk release handle as a tie-down or anchor point when securing items in the trunk as it could damage the handle. The emergency trunk release handle is only intended to aid a person trapped in a latched trunk, enabling them to open the trunk from the inside.**

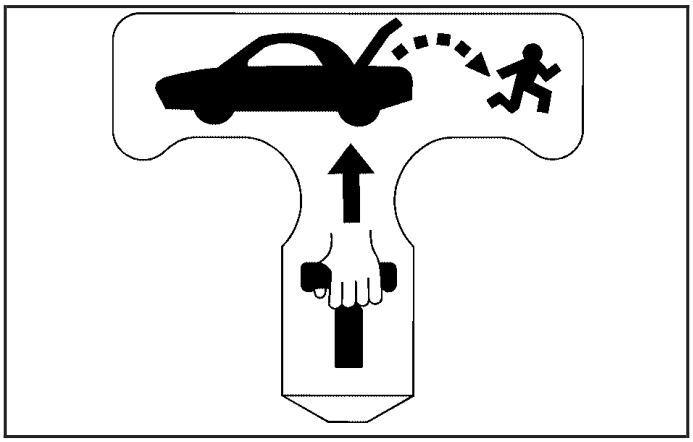

There is a glow-in-the-dark emergency trunk release handle located on the trunk latch of the trunk lid. This handle will glow following exposure to light. If ever needed, pull the emergency trunk release handle to open the trunk from the inside.

Downloaded from www.Manualslib.com manuals search engine

Windows

⚠ CAUTION:

Leaving children, helpless adults, or pets in a vehicle with the windows closed is dangerous. They can be overcome by the extreme heat and suffer permanent injuries or even death from heat stroke. Never leave a child, a helpless adult, or a pet alone in a vehicle, especially with the windows closed in warm or hot weather.

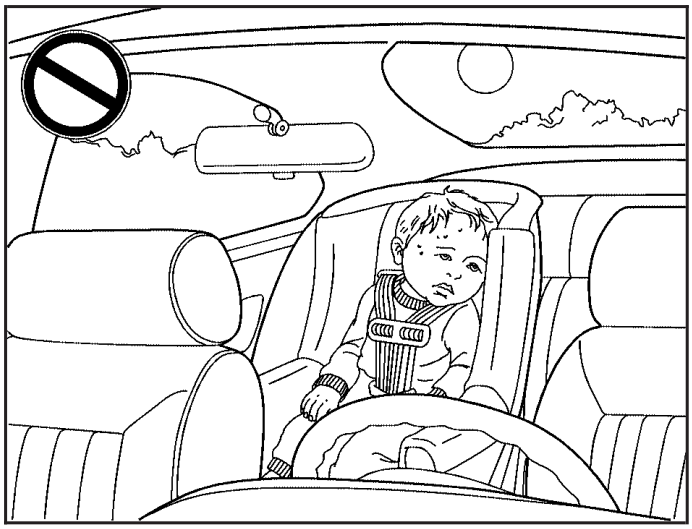

Downloaded from www.Manualslib.com manuals search engine

Power Windows

⚠ CAUTION:

Leaving children in a vehicle with the keys is dangerous for many reasons, children or others could be badly injured or even killed. They could operate the power windows or other controls or even make the vehicle move. The windows will function and they could be seriously injured or killed if caught in the path of a closing window. Do not leave keys in a vehicle with children.

When there are children in the rear seat use the window lockout button to prevent unintentional operation of the windows.

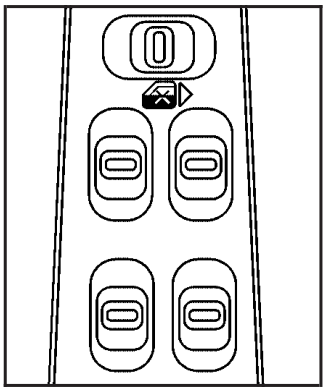

Use the switches on the driver's door to operate each of the windows.

Push the switch down or up to open or close the window. The top switches operate the front windows, and the bottom switches operate the rear windows.

Each passenger door also has a switch, located on the armrest, that operates that window. Push the switch rearward or forward to open or close the window.

The power window switches only work if the ignition is on or in ACC/ACCESSORY, or while Retained Accessory Power (RAP) is active. See *Retained Accessory Power (RAP) on page 2-24* for more information.

Downloaded from www.Manualslib.com manuals search engine

Express-Down Window

The driver's window switch has an express-down feature. This allows the window to open fully without having to continuously hold the switch. Tap the switch down, and the driver's window will open a small amount. Press the switch fully down and release and the window will go all the way down.

To stop the window while it is lowering, press the bottom of the switch. To raise the window, press and hold the bottom of the switch.

Window Lockout

(Window Lockout): The driver's window switch includes a lockout feature located above the power window switches on the driver's door. Move the switch to the right to prevent the passengers sitting in the rear from using their window switches. The driver can still control all the windows with the lockout on. Move the switch to the left to disengage the lockout feature.

Sun Visors

To help block out glare, pull the sun visors down. Pull on the inside edges of the sun visors to swing them from the front windshield to the side window.

Visor Vanity Mirror

Raise the cover on the top of the sun visor to expose the vanity mirror. If the vehicle has lighted vanity mirrors, the lamps come on when the cover is opened.

Theft-Deterrent Systems

Vehicle theft is big business, especially in some cities. Although your vehicle has a number of theft-deterrent features, we know that nothing we put on it can make it impossible to steal.

Content Theft-Deterrent

The vehicle has a content theft-deterrent alarm system.

Downloaded from www.Manualslib.com manuals search engine

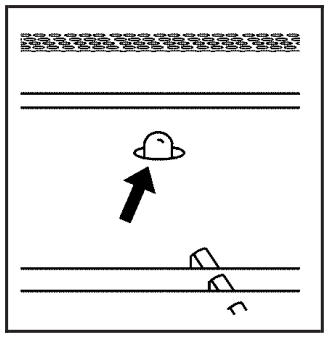

Your vehicle may have a red light located on top of the instrument panel, toward the center of the vehicle and near the windshield, that will flash slowly when the system is armed.

The theft-deterrent alarm system needs to be activated through the Driver's Information Center (DIC). See "Theft Deterrent" under the Personal Programming Mode Screens in *DIC Vehicle Customization on page 3-89*. While armed, the doors will not unlock with the power door lock switch. The remote alarm will sound if someone tampers with the trunk or enters the vehicle without using the Remote Keyless Entry (RKE) transmitter or key to unlock the doors. The horn will sound and the headlamps will flash for up to two minutes. The system will also cut off the fuel supply, preventing the vehicle from being driven.

Arming with the Power Lock Switch

The vehicle's content theft-deterrent alarm system can be activated when the key is removed from the ignition and the power door lock switch of either the driver's or front passenger's door is used to lock the vehicle. The door needs to be in the open position when pressing the power door lock switch. The alarm system will not activate if the door is closed and the power door lock switch is pressed. This system can be activated through the Driver's Information Center (DIC). See "Lock Switch Arm" under the Personal Programming Mode Screens in *DIC Vehicle Customization on page 3-89*.

When the doors are locked using the power door lock switch of either front door, the red light, if your vehicle has one, will start flashing indicating that the system is arming. After all the doors are closed there will be a time delay and then the red light, if your vehicle has one, will begin to flash at a very slow rate indicating the system is armed.

Downloaded from www.Manualslib.com manuals search engine

Arming with the RKE Transmitter

The alarm system will arm when the RKE transmitter is used to lock the doors after the key is removed from the ignition. The red light, if your vehicle has one, will come on to indicate that the system is arming. After all doors are closed and locked, and after a time delay, the red light, if your vehicle has one, will begin flashing at a very slow rate to show the system is armed.

Arming Confirmation

Your vehicle may have a red light located on top of the instrument panel, towards the center of the vehicle and near the windshield, that will flash slowly to confirm when the system is armed.

Disarming with the RKE Transmitter

The alarm system will disarm when the RKE transmitter is used to unlock the doors. The red light, if your vehicle has one, will go out to show that the system is disarmed.

Disarming with Your Key

The alarm system will disarm when the key is used to unlock the doors. The red light, if your vehicle has one, will stop flashing when the system is disarmed. If you would like the key to disarm the alarm system, see “Personal Programming Mode Screens” under *DIC Vehicle Customization on page 3-89* for more information.

PASS-Key® III Electronic Immobilizer

Your PASS-Key III system operates on a radio frequency subject to Federal Communications Commission (FCC) Rules and with Industry Canada.

This device complies with Part 15 of the FCC Rules. Operation is subject to the following two conditions:

1. This device may not cause harmful interference.
2. This device must accept any interference received, including interference that may cause undesired operation.

Downloaded from www.Manualslib.com manuals search engine

This device complies with RSS-210 of Industry Canada. Operation is subject to the following two conditions:

1. This device may not cause interference.
2. This device must accept any interference received, including interference that may cause undesired operation of the device.

Changes or modifications to this system by other than an authorized service facility could void authorization to use this equipment.

PASS-Key III uses a radio frequency transponder in the key that matches a decoder in your vehicle.

PASS-Key® III Electronic Immobilizer Operation

The vehicle is equipped with PASS-Key® III (Personalized Automotive Security System) theft-deterrent system. PASS-Key® III is a passive theft-deterrent system.

The system is automatically armed when the key is removed from the ignition.

You do not have to manually arm or disarm the system.

The security light will come on if there is a problem with arming or disarming the theft-deterrent system.

PASS-Key® III uses a transponder in the ignition key that matches a decoder in the vehicle.

When the PASS-Key® III system senses that the wrong key has been inserted into the ignition, it shuts down the vehicle's starter and fuel systems. The starter will not work and fuel will stop flowing to the engine. If someone tries to start the vehicle again with the wrong key, the vehicle will not start. Anyone using a trial-and-error method to start the vehicle will be discouraged to do so because of the high number of electrical key codes.

When trying to start the vehicle, if the engine does not start and the STARTING DISABLED DUE TO THEFT SYSTEM warning message on the Driver Information Center (DIC) comes on, there may be a problem with your theft-deterrent system. Turn the ignition off and try again.

If the engine still does not start, and the key appears to be undamaged, try another ignition key. At this time, you may also want to check the fuse. See *Fuses and Circuit Breakers on page 5-121*. If the engine still does not start with the other key, the vehicle needs service.

Downloaded from www.Manualslib.com manuals search engine

If the vehicle does start, the first key may be faulty. See your dealer/retailer who can service the PASS-Key® III to have a new key made. In an emergency, contact Roadside Assistance. See *Roadside Assistance Program on page 7-6* for more information.

It is possible for the PASS-Key® III decoder to accept the transponder value of a new or replacement key. Up to 10 keys may be programmed for the vehicle. If all the programmed keys are lost or do not operate, see your dealer/retailer or a locksmith who can service PASS-Key® III to have keys made and programmed to the system.

Canadian Owners: If all the keys are lost or damaged, only a dealer/retailer can service PASS-Key® III to have new keys made and programmed to the system.

The following procedure is for programming a new or replacement key when you have at least one already programmed key. To program the new key do the following:

1. Verify that the new key has PK3 stamped on it.
2. Insert the master key in the ignition and start the engine. If the engine will not start, see your dealer/retailer for service.
3. After the engine has started, turn the key to LOCK/OFF, and remove the key.
4. Insert the key to be programmed and turn it to ON/RUN within five seconds of removing the original key.
5. The STARTING DISABLED DUE TO THEFT SYSTEM warning message on the DIC will turn off, once the key has been programmed. It may not be apparent that the SERVICE THEFT SYSTEM warning message went on due to how quickly the key is programmed.
6. Repeat Steps 1 through 5 if additional keys are to be programmed.

If the STARTING DISABLED DUE TO THEFT SYSTEM warning message appears and stays on the DIC while the vehicle is being driven, the engine will be able to be restarted if it is turned off. Your PASS-Key® III system, however, is not working properly and must be serviced by your dealer/retailer. The vehicle is not protected by the PASS-Key® III system at this time.

If the PASS-Key® III key is lost or stolen, see your dealer/retailer or a locksmith who can service PASS-Key® III to have a new key made.

Do not leave the key or device that disarms or deactivates the theft deterrent system in the vehicle.

Downloaded from www.Manualslib.com manuals search engine

Starting and Operating Your Vehicle

New Vehicle Break-In

Notice: **Your vehicle does not need an elaborate break-in. But it will perform better in the long run if you follow these guidelines:**

- **Do not drive at any one constant speed, fast or slow, for the first 500 miles (805 km). Do not make full-throttle starts. Avoid downshifting to brake or slow the vehicle.**
- **Avoid making hard stops for the first 200 miles (322 km) or so. During this time the new brake linings are not yet broken in. Hard stops with new linings can mean premature wear and earlier replacement. Follow this breaking-in guideline every time you get new brake linings.**
- **Do not tow a trailer during break-in. See** ***Towing a Trailer on page 4-29*** **for the trailer towing capabilities of your vehicle and more information.**

Following break-in, engine speed and load can be gradually increased.

Ignition Positions

The ignition switch is located on the instrument panel, to the right of the steering column.

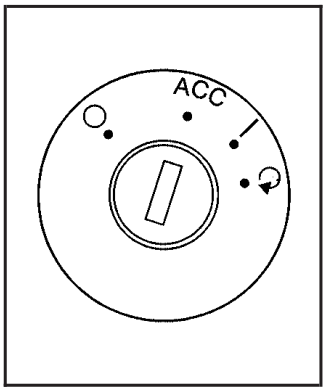

There are four different positions. Insert the key in the ignition and turn it to the right for each position.

In order to shift out of PARK (P), ignition must be in the ON/RUN and the regular brake pedal must be applied.

Notice: **Using a tool to force the key from the ignition switch could cause damage or break the key. Use the correct key and turn the key only with your hand. Make sure the key is all the way in. If none of this works, then your vehicle needs service.**

◯ **(LOCK/OFF):** This position locks the ignition, steering wheel and transmission. It is a theft-deterrent feature. This is the only position from which the key can be removed.

Downloaded from www.Manualslib.com manuals search engine

If the steering wheel is locked, move it from right to left and turn the key to ACC/ACCESSORY. If none of this works, then your vehicle needs service.

ACC (ACC/ACCESSORY): This position allows things like the radio and windshield wipers to operate while the engine is off.

(ON/RUN): This position is where the key returns to after the vehicle is started. With the engine off, the ON/RUN position displays some of the warning and indicator lights.

The battery could be drained if you leave the key in the ACC/ACCESSORY or ON/RUN position with the engine off. You may not be able to start your vehicle if the battery is allowed to drain for an extended period of time.

(START): This position starts the engine. Let go of the key when the engine starts. The key will return to the ON/RUN for normal driving.

A continuous warning chime will sound and a KEY IN IGNITION message will display on the Driver Information Center (DIC) if the key is turned to LOCK/OFF or ACC/ACCESSORY and the driver's door is opened.

Key In the Ignition

Never leave your vehicle with the keys inside, as it is an easy target for joy riders or thieves. If you leave the key in the ignition and park your vehicle, a chime will sound, when you open the driver's door. Always remember to remove your key from the ignition and take it with you. This will lock your ignition and transmission. Also, always remember to lock the doors.

The battery could be drained if you leave the key in the ignition while your vehicle is parked. You may not be able to start your vehicle after it has been parked for an extended period of time.

Retained Accessory Power (RAP)

These vehicle accessories can be used for up to 10 minutes after the engine is turned off:

- Audio System
- Power Windows
- Sunroof (if equipped)

Power to these features will continue to operate for up to 10 minutes after the key is turned to LOCK/OFF until a door is opened.

Downloaded from www.Manualslib.com manuals search engine

Starting the Engine

Move your shift lever to PARK (P) or NEUTRAL (N). Your engine will not start in any other position – this is a safety feature. To restart when you are already moving, use NEUTRAL (N) only.

Notice: **Do not try to shift to PARK (P) if your vehicle is moving. If you do, you could damage the transmission. Shift to PARK (P) only when your vehicle is stopped.**

Starting Procedure

1. With your foot off the accelerator pedal, turn the ignition key to START. When the engine starts, let go of the key. The idle speed will go down as your engine gets warm. Do not race the engine immediately after starting it. Operate the engine and transmission gently to allow the oil to warm up and lubricate all moving parts.

   Your vehicle has a Computer-Controlled Cranking System. This feature assists in starting the engine and protects components. If the ignition key is turned to the START position, and then released when the engine begins cranking, the engine will continue cranking for a few seconds or until the vehicle starts. If the engine does not start and the key is held in START for many seconds, cranking will be stopped after 15 seconds to prevent cranking motor damage. To prevent gear damage, this system also prevents cranking if the engine is already running. Engine cranking can be stopped by turning the ignition switch to the ACC/ACCESSORY or LOCK/OFF position.

Notice: **Cranking the engine for long periods of time, by returning the key to the START position immediately after cranking has ended, can overheat and damage the cranking motor, and drain the battery. Wait at least 15 seconds between each try, to let the cranking motor cool down.**

Downloaded from www.Manualslib.com manuals search engine

2. If the engine does not start after 5-10 seconds, especially in very cold weather (below 0°F or –18°C), it could be flooded with too much gasoline. Try pushing the accelerator pedal all the way to the floor and holding it there as you hold the key in START for up to a maximum of 15 seconds. Wait at least 15 seconds between each try, to allow the cranking motor to cool down. When the engine starts, let go of the key and accelerator. If the vehicle starts briefly but then stops again, do the same thing. This clears the extra gasoline from the engine. Do not race the engine immediately after starting it. Operate the engine and transmission gently until the oil warms up and lubricates all moving parts.

Notice: **The engine is designed to work with the electronics in your vehicle. If you add electrical parts or accessories, you could change the way the engine operates. Before adding electrical equipment, check with your dealer/retailer. If you do not, your engine might not perform properly. Any resulting damage would not be covered by your vehicle's warranty.**

Engine Coolant Heater

The engine coolant heater, if available, can help in cold weather conditions at or below 0°F (–18°C) for easier starting and better fuel economy during engine warm-up. Plug in the coolant heater at least four hours before starting your vehicle. An internal thermostat in the plug-end of the cord may exist which will prevent engine coolant heater operation at temperatures above 0°F (–18°C).

Downloaded from www.Manualslib.com manuals search engine

To Use the Engine Coolant Heater

1. Turn off the engine.
2. Open the hood and unwrap the electrical cord. The cord is located above the engine air cleaner/filter. See *Engine Compartment Overview on page 5-12* for more information on location.
3. Plug the cord into a normal, grounded 110-volt AC outlet.

⚠ CAUTION:

Plugging the cord into an ungrounded outlet could cause an electrical shock. Also, the wrong kind of extension cord could overheat and cause a fire. You could be seriously injured. Plug the cord into a properly grounded three-prong 110-volt AC outlet. If the cord will not reach, use a heavy-duty three-prong extension cord rated for at least 15 amps.

4. Before starting the engine, be sure to unplug and store the cord as it was before, making sure to keep it away from moving engine parts. If this is not done, the cord could be damaged.

How long should the coolant heater be kept plugged in? The answer depends on the outside temperature, the kind of oil that is in the vehicle, and some other things. Instead of trying to list everything here, we ask that you contact your dealer/retailer in the area where the vehicle will be parked. The dealer/retailer can give you the best advice for that particular area.

Downloaded from www.Manualslib.com manuals search engine

Active Fuel Management™

Your vehicle's engine may be equipped with Active Fuel Management™. This system allows the engine to operate on either all or half of its cylinders, depending on your driving conditions.

When less power is required, such as cruising at a constant vehicle speed, the system will operate in the half cylinder mode, allowing your vehicle to achieve better fuel economy. When greater power demands are required, such as accelerating from a stop, passing, or merging onto a freeway, the system will maintain full-cylinder operation.

Automatic Transmission Operation

The shift lever for the automatic transmission is located on the console between the seats.

Maximum engine speed is limited when the vehicle is in PARK (P) or NEUTRAL (N) to protect driveline components from improper operation.

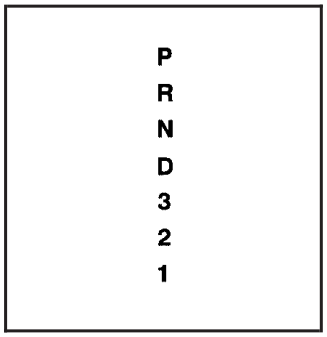

3800 V6 Engine

There are several different positions for the shift lever.

PARK (P): This position locks the front wheels. It is the best position to use when the engine is started because the vehicle cannot move easily.

Downloaded from www.Manualslib.com manuals search engine

⚠ CAUTION:

It is dangerous to get out of your vehicle if the shift lever is not fully in PARK (P) with the parking brake firmly set. Your vehicle can roll.

Do not leave your vehicle when the engine is running unless you have to. If you have left the engine running, the vehicle can move suddenly. You or others could be injured. To be sure your vehicle will not move, even when you are on fairly level ground, always set your parking brake and move the shift lever to PARK (P). See *Shifting Into PARK (P) on page 2-34*. If you are pulling a trailer, see *Towing a Trailer on page 4-29*.

Make sure the shift lever is fully in PARK (P) before starting the engine. The vehicle has an automatic transmission shift lock control system. You must fully apply your regular brakes first and then press the shift lever button, located on the front of the shift lever, before you can shift from PARK (P) when the ignition key is in RUN. If the vehicle cannot be shifted out of PARK (P), ease pressure on the shift lever by pushing it all the way into PARK (P) as you maintain brake application. Then press the shift lever button and move the shift lever into another gear. See *Shifting Out of PARK (P) on page 2-35*.

REVERSE (R): Use this gear to back up.

Notice: **Shifting to REVERSE (R) while your vehicle is moving forward could damage the transmission. The repairs would not be covered by your warranty. Shift to REVERSE (R) only after your vehicle is stopped.**

To rock the vehicle back and forth to get out of snow, ice or sand without damaging the transmission, see *If Your Vehicle is Stuck in Sand, Mud, Ice, or Snow on page 4-21*.

Downloaded from www.Manualslib.com manuals search engine

NEUTRAL (N): In this position, the engine does not connect with the wheels. To restart when the vehicle is already moving, use NEUTRAL (N) only. Also, use NEUTRAL (N) when the vehicle is being towed.

⚠ CAUTION:

Shifting into a drive gear while the engine is running at high speed is dangerous. Unless your foot is firmly on the brake pedal, your vehicle could move very rapidly. You could lose control and hit people or objects. Do not shift into a drive gear while your engine is running at high speed.

Notice: **Shifting out of PARK (P) or NEUTRAL (N) with the engine running at high speed may damage the transmission. The repairs would not be covered by your warranty. Be sure the engine is not running at high speed when shifting your vehicle.**

DRIVE (D): This position is for normal driving. It provides the best fuel economy for your vehicle. If the vehicle needs more power for passing, and it is:

- Going less than 35 mph (55 km/h), push the accelerator pedal about halfway down.
- Going about 35 mph (55 km/h) or more, push the accelerator pedal all the way down.

The vehicle will shift down to the next gear and have more power.

Downshifting the transmission in slippery road conditions could result in skidding, see Skidding under *Loss of Control on page 4-12*.

Notice: **If your vehicle seems to start up rather slowly or not shift gears when you go faster, and you continue to drive your vehicle that way, you could damage the transmission. Have your vehicle serviced right away. You can drive in SECOND (2) when you are driving less than 35 mph (55 km/h) and DRIVE (D) for higher speeds until then.**

THIRD (3): This position is also used for normal driving. However, it reduces vehicle speed more than DRIVE (D) without using your brakes. You might choose THIRD (3) instead of DRIVE (D) when driving on hilly, winding roads, when towing a trailer, so there is less shifting between gears, when going down a steep hill and when driving on non-highway scenarios (i.e. city streets etc.).

Downloaded from www.Manualslib.com manuals search engine

SECOND (2): This position reduces vehicle speed even more than THIRD (3) without using your brakes. You can use SECOND (2) on hills. It can help control the vehicle's speed as it goes down steep mountain roads, but then you would also want to use the brakes off and on.

Notice: **Driving in SECOND (2) for more than 25 miles (40 km) or at speeds over 55 mph (90 km/h), can cause damage to your engine and/or transmission. Also, shifting into SECOND (2) at speeds above 65 mph (105 km/h) can cause damage. Drive in DRIVE (D) instead of SECOND (2).**

FIRST (1): This position reduces vehicle speed even more than SECOND (2) without using your brakes. It can be used on very steep hills, or in deep snow or mud. If the shift lever is moved to FIRST (1), while the vehicle is moving forward, the transmission will not shift into first gear until the vehicle is going slowly enough.

Notice: **Spinning the tires or holding the vehicle in one place on a hill using only the accelerator pedal may damage the transmission. The repair will not be covered by your warranty. If you are stuck, do not spin the tires. When stopping on a hill, use the brakes to hold the vehicle in place.**

Performance Shifting with TAP-Shift®

If the vehicle is equipped with a 5.3L V8 engine, it may have this feature. It allows you to change gears similar to a manual transmission.

To fully use this feature, do the following:

1. The MANUAL (M) position can be selected while the vehicle is moving. The current transmission position will continue to be displayed on the Driver Information Center (DIC) and Head-Up Display (HUD), if equipped.

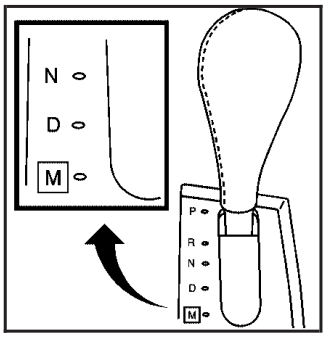

2. Move the shift lever to the MANUAL (M).

Downloaded from www.Manualslib.com manuals search engine

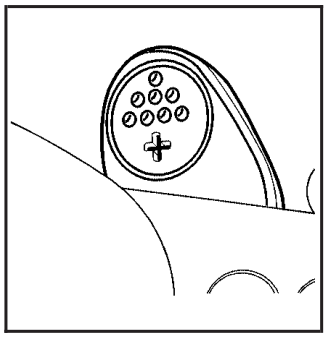

3. The paddles are located on the steering wheel. They are used to up-shift or down-shift the transmission.

4. Push either paddle once to up-shift to the next gear. Pull either paddle once to down-shift to the next gear.

   The vehicle will begin moving in first gear upon acceleration. For better control in icy or slippery conditions, the vehicle may start out in SECOND (2), rather than FIRST (1). This will only occur if you have “tapped up” to second gear.

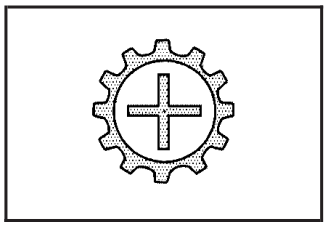

The up-shift light on the instrument panel cluster, or the up-shift symbol on the HUD, if equipped, is given as a prompt to use the TAP-Shift® paddle.

For more information, see *Up-Shift Light on page 3-45*

The up-shift light will only appear in the instrument panel cluster if the HUD is off or if the vehicle does not have HUD.

This prompt to up-shift, as needed, will be given throughout acceleration. If up-shifting does not occur when prompted, the vehicle speed will be limited to protect the engine.

The gear position will display on the DIC and HUD, if equipped, when in manual mode.

Pressing the accelerator while driving in the highest gear (FOURTH (4)) between 20 mph (32 km/h) and 50 mph (80 km/h), will make the transmission automatically downshift. As your speed gets closer to 50 mph (80 km/h), you will need to increase accelerator pedal travel to get the vehicle to downshift. At 50 mph (80 km/h), even with the accelerator fully depressed, the transmission will always remain in FOURTH (4). The transmission will also automatically downshift as the vehicle decelerates and comes to a stop.

If a paddle is pushed or pulled and the vehicle cannot respond to a transmission gear change, a chime will sound. The system will not allow either an up-shift or a down-shift if the vehicle speed is too fast or too slow, nor will it allow a start from THIRD (3) or higher gear.

Downloaded from www.Manualslib.com manuals search engine

Parking Brake

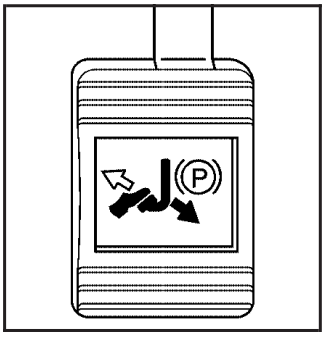

The parking brake is located to the left of the brake pedal near the driver's door. To set the parking brake, hold the regular brake pedal down with the right foot. Push down on the parking brake pedal, with the left foot.

To release the parking brake, hold the regular brake pedal down with the right foot and push the parking brake pedal with the left foot. When the left foot is lifted, the parking brake pedal will lift to the released position.

A warning chime will sound if the parking brake is set, the ignition is on, and the shift lever is not in PARK (P) or NEUTRAL (N).

The brake light will also appear on the instrument panel cluster when the parking brake is set. It will stay on if the parking brake does not release fully.

The PARKING BRAKE ON message will also appear in the Driver Information Center (DIC) when the parking brake is set. See *DIC Warnings and Messages on page 3-67* for more information.

Notice: **Driving with the parking brake on can overheat the brake system and cause premature wear or damage to brake system parts. Make sure that the parking brake is fully released and the brake warning light is off before driving.**

If the vehicle is towing a trailer and parked on a hill, see *Towing a Trailer on page 4-29*. That section shows what to do first to keep the trailer from moving.

Downloaded from www.Manualslib.com manuals search engine

Shifting Into PARK (P)

⚠ CAUTION:

It can be dangerous to get out of your vehicle if the shift lever is not fully in PARK (P) with the parking brake firmly set. Your vehicle can roll. If you have left the engine running, the vehicle can move suddenly. You or others could be injured. To be sure your vehicle will not move, even when you are on fairly level ground, use the steps that follow. If you are pulling a trailer, see *Towing a Trailer on page 4-29*.

1. Hold the brake pedal down with your right foot and set the parking brake. See *Parking Brake on page 2-33* for more information.
2. Move the shift lever into PARK (P) by holding in the button on the shift lever and pushing the shift lever all the way toward the front of the vehicle.
3. Turn the ignition key to LOCK/OFF.
4. Remove the key and take it with you. If you can leave your vehicle with the ignition key in your hand, your vehicle is in PARK (P).

Leaving Your Vehicle With the Engine Running

⚠ CAUTION:

It can be dangerous to leave your vehicle with the engine running. Your vehicle could move suddenly if the shift lever is not fully in PARK (P) with the parking brake firmly set. And, if you leave the vehicle with the engine running, it could overheat and even catch fire. You or others could be injured. Do not leave your vehicle with the engine running.

If you have to leave your vehicle with the engine running, be sure your vehicle is in PARK (P) and your parking brake is firmly set before you leave it. After you have moved the shift lever into PARK (P), hold the regular brake pedal down. Then, see if you can move the shift lever away from PARK (P) without first pushing the button.

If you can, it means that the shift lever was not fully locked in PARK (P).

Downloaded from www.Manualslib.com manuals search engine

Torque Lock

If you are parking on a hill and you do not shift your transmission into PARK (P) properly, the weight of the vehicle may put too much force on the parking pawl in the transmission. You may find it difficult to pull the shift lever out of PARK (P). This is called torque lock. To prevent torque lock, set the parking brake and then shift into PARK (P) properly before you leave the driver's seat. To find out how, see *Shifting Into PARK (P) on page 2-34*.

When you are ready to drive, move the shift lever out of PARK (P) *before* you release the parking brake.

If torque lock does occur, you may need to have another vehicle push your vehicle a little uphill to take some of the pressure from the parking pawl in the transmission, so you can pull the shift lever out of PARK (P).

Shifting Out of PARK (P)

This vehicle has an electronic shift lock release system. The shift lock release is designed to:

- Prevent ignition key removal unless the shift lever is in PARK (P) with the shift lever button fully released, and
- Prevent movement of the shift lever out of PARK (P), unless the ignition is in ON/RUN and the regular brake pedal is applied.

The shift lock release is always functional except in the case of an uncharged or low voltage (less than 9 volt) battery.

If your vehicle has an uncharged battery or a battery with low voltage, try charging or jump starting the battery. See *Jump Starting on page 5-46* for more information.

To shift out of PARK (P) use the following:

1. Apply the brake pedal.
2. Press the shift lever button.
3. Move the shift lever to the desired position.

Downloaded from www.Manualslib.com manuals search engine

If you still are unable to shift out of PARK (P):

1. Fully release the shift lever button.
2. Hold the brake pedal down and press the shift lever button again.
3. Move the shift lever to the desired position.

If you still cannot move the shift lever from PARK (P), consult your dealer/retailer or a professional towing service.

Parking Over Things That Burn

⚠ CAUTION:

Things that can burn could touch hot exhaust parts under your vehicle and ignite. Do not park over papers, leaves, dry grass, or other things that can burn.

Engine Exhaust

⚠ CAUTION:

Engine exhaust can kill. It contains the gas carbon monoxide (CO), which you cannot see or smell. It can cause unconsciousness and death.

You might have exhaust coming in if:

- **The exhaust system sounds strange or different.**
- **Your vehicle gets rusty underneath.**
- **Your vehicle was damaged in a collision.**
- **Your vehicle was damaged when driving over high points on the road or over road debris.**
- **Repairs were not done correctly.**
- **Your vehicle or the exhaust system has been modified improperly.**

If you ever suspect exhaust is coming into your vehicle:

- **Drive it only with all the windows down to blow out any CO; and**
- **Have your vehicle fixed immediately.**

Downloaded from www.Manualslib.com manuals search engine

Running the Vehicle While Parked

It is better not to park with the engine running.
But if you ever have to, here are some things to know.

⚠ CAUTION:

Idling the engine with the climate control system off could allow dangerous exhaust into your vehicle. See the earlier caution under *Engine Exhaust on page 2-36*.

Also, idling in a closed-in place can let deadly carbon monoxide (CO) into your vehicle even if the climate control fan is at the highest setting. One place this can happen is a garage. Exhaust — with CO — can come in easily. NEVER park in a garage with the engine running.

Another closed-in place can be a blizzard. See *Winter Driving on page 4-17*.

⚠ CAUTION:

It can be dangerous to get out of your vehicle if the shift lever is not fully in PARK (P) with the parking brake firmly set. Your vehicle can roll. Do not leave your vehicle when the engine is running unless you have to. If you have left the engine running, the vehicle can move suddenly. You or others could be injured. To be sure your vehicle will not move, even when you are on fairly level ground, always set the parking brake and move the shift lever to PARK (P).

Follow the proper steps to be sure your vehicle will not move. See *Shifting Into PARK (P) on page 2-34*.

If you are parking on a hill and if you are pulling a trailer, also see *Towing a Trailer on page 4-29*.

Downloaded from www.Manualslib.com manuals search engine

Mirrors

Manual Rearview Mirror

When you are sitting in a comfortable driving position, adjust the mirror so you can see clearly behind your vehicle. Grip the mirror in the center to move it up or down and side to side. The day/night adjustment allows you to adjust the mirror to avoid glare from the lamps behind you. Push the tab forward for daytime use and pull it for nighttime use.

The mirror may have lights located on the bottom of the mirror. Press the button next to each light to turn it on or off.

Manual Rearview Mirror with OnStar®

If your vehicle has this feature, this mirror has a knob located at the bottom of the mirror. It is used to change the mirror from day to night position. To reduce glare from headlamps behind you while driving at night, turn the knob counterclockwise. For daytime driving, turn the knob clockwise.

There are also three OnStar® buttons located at the bottom of the mirror face. See your dealer/retailer for more information on the system and how to subscribe to OnStar®. See *OnStar® System on page 2-40* for more information about the services OnStar® provides.

Downloaded from www.Manualslib.com manuals search engine

Outside Power Mirrors

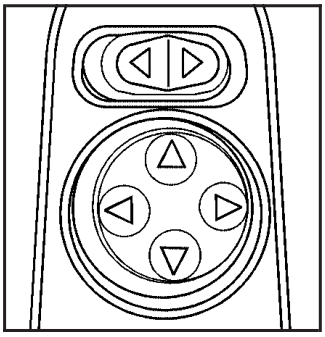

The power mirror controls are located near the driver's window, on the driver's door armrest.

Move the top control to the left to adjust the driver's side outside mirror. Move the control to the right to adjust the passenger's side mirror. The center position turns the power control off and will not allow the mirrors to move if the control pad is touched.

The round control pad adjusts the angle of the selected outside mirror. Press the arrows on the control pad to adjust the angle of the mirror. Adjust each mirror so that the sides and the area behind the vehicle can be seen.

Outside Convex Mirror

⚠ CAUTION:

A convex mirror can make things (like other vehicles) look farther away than they really are. If you cut too sharply into the right lane, you could hit a vehicle on your right. Check your inside mirror or glance over your shoulder before changing lanes.

The passenger side mirror is convex shaped. A convex mirror's surface is curved so more can be seen from the driver seat. It also makes things, like other vehicles, look farther away than they really are.

Downloaded from www.Manualslib.com manuals search engine

OnStar® System

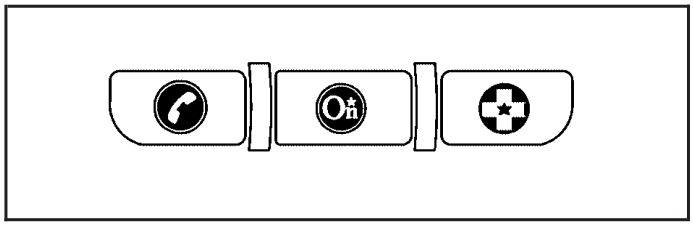

OnStar uses several innovative technologies and live advisors to provide you with a wide range of safety, security, information, and convenience services. If your airbags deploy, the system is designed to make an automatic call to OnStar Emergency advisors who can request emergency services be sent to your location. If you lock your keys in the vehicle, call OnStar at 1-888-4-ONSTAR and they can send a signal to unlock your doors. If you need roadside assistance, press the OnStar button and they can contact Roadside Service for you.

OnStar service is provided to you subject to the OnStar Terms and Conditions. You may cancel your OnStar service at any time by contacting OnStar.

A complete OnStar Owner's Guide and the OnStar Terms and Conditions are included in the vehicle's OnStar Subscriber glove box literature. For more information, visit onstar.com or onstar.ca, contact OnStar at 1-888-4-ONSTAR (1-888-466-7827) or TTY 1-877-248-2080, or press the OnStar button to speak with an OnStar advisor 24 hours a day, 7 days a week.

Not all OnStar features are available on all vehicles. To check if your vehicle is equipped to provide the services described below, or for a full description of OnStar services and system limitations, see the OnStar Owner's Guide in your glove box or visit onstar.com.

OnStar Services

For new vehicles with OnStar, the Safe & Sound Plan, or the Directions & Connections Plan is included for one year from the date of purchase. You can extend this plan beyond the first year, or upgrade to the Directions & Connections Plan. For more information, press the OnStar button to speak with an advisor. Some OnStar services (such as Remote Door Unlock or Stolen Vehicle Location Assistance) may not be available until you register with OnStar.

Downloaded from www.Manualslib.com manuals search engine

Available Services with Safe & Sound Plan

- Automatic Notification of Airbag Deployment
- Advanced Automatic Crash Notification (AACN) (If equipped)
- Link to Emergency Services
- Roadside Assistance
- Stolen Vehicle Location Assistance
- AccidentAssist
- Remote Door Unlock/Vehicle Alert
- OnStar Vehicle Diagnostics
- GM Goodwrench On Demand Diagnostics
- OnStar Hands-Free Calling with 30 complimentary minutes
- OnStar Virtual Advisor (U.S. Only)

Available Services included with Directions & Connections Plan

- All Safe and Sound Plan Services
- Driving Directions - Advisor delivered or OnStar Turn-by-Turn Navigation (If equipped)
- RideAssist
- Information and Convenience Services

OnStar Hands-Free Calling

OnStar Hands-Free Calling allows eligible OnStar subscribers to make and receive calls using voice commands. Hands-Free Calling is fully integrated into the vehicle, and can be used with OnStar Pre-Paid Minute Packages. Hands-Free Calling may also be linked to a Verizon Wireless service plan in the U.S. or a Bell Mobility service plan in Canada, depending on eligibility. To find out more, refer to the OnStar Owner's Guide in the vehicle's glove box, visit www.onstar.com or www.onstar.ca, or speak with an OnStar advisor by pressing the OnStar button or calling 1-888-4-ONSTAR (1-888-466-7827).

OnStar Virtual Advisor

OnStar Virtual Advisor is a feature of OnStar Hands-Free Calling that uses your minutes to access location-based weather, local traffic reports, and stock quotes. By pressing the phone button and giving a few simple voice commands, you can browse through the various topics. See the OnStar Owner's Guide for more information (Only available in the continental U.S.).

Downloaded from www.Manualslib.com manuals search engine

OnStar Steering Wheel Controls

Your vehicle may have a Talk/Mute button that can be used to interact with OnStar Hands-Free Calling. See *Audio Steering Wheel Controls on page 3-115* for more information.

On some vehicles, you may have to hold the button for a few seconds and give the command “ONSTAR” to activate the OnStar Hands-Free Calling.

On some vehicles, the mute button can be used to dial numbers into voicemail systems, or to dial phone extensions. See the OnStar Owner’s Guide for more information.

How OnStar Service Works

Your vehicle’s OnStar system has the capability of recording and transmitting vehicle information. This information is automatically sent to an OnStar Call Center at the time of an OnStar button press, Emergency button press or if your airbags or AACN system deploys. The vehicle information usually includes your GPS location and, in the event of a crash, additional information regarding the accident that your vehicle has been involved in (e.g. the direction from which your vehicle was hit).

When you use the Virtual Advisor feature of OnStar Hands-Free Calling, your vehicle also sends OnStar your GPS location so that we can provide you with location-based services.

OnStar service cannot work unless your vehicle is in a place where OnStar has an agreement with a wireless service provider for service in that area. OnStar service also cannot work unless you are in a place where the wireless service provider OnStar has hired for that area has coverage, network capacity and reception when the service is needed, and technology that is compatible with the OnStar service. Not all services are available everywhere, particularly in remote or enclosed areas, or at all times.

Location information about your vehicle is only available if the GPS satellite signals are unobstructed and available.

Your vehicle must have a working electrical system (including adequate battery power) for the OnStar equipment to operate. There are other problems OnStar cannot control that may prevent OnStar from providing OnStar service to you at any particular time or place. Some examples are damage to important parts of your vehicle in an accident, hills, tall buildings, tunnels, weather or wireless phone network congestion.

Downloaded from www.Manualslib.com manuals search engine

Your Responsibility

Increase the radio volume if you cannot hear the OnStar advisor. If the light next to the OnStar buttons is red, this means that your system is not functioning properly and should be checked by your dealer/retailer. If the light appears clear (no light is appearing), your OnStar subscription has expired. You can always press the OnStar button to confirm that your OnStar equipment is active.

Storage Areas

Glove Box

To open the glove box, lift up on the lever.

Cupholder(s)

There are two cupholders in the front of the center console.

Cupholder Installation and Removal

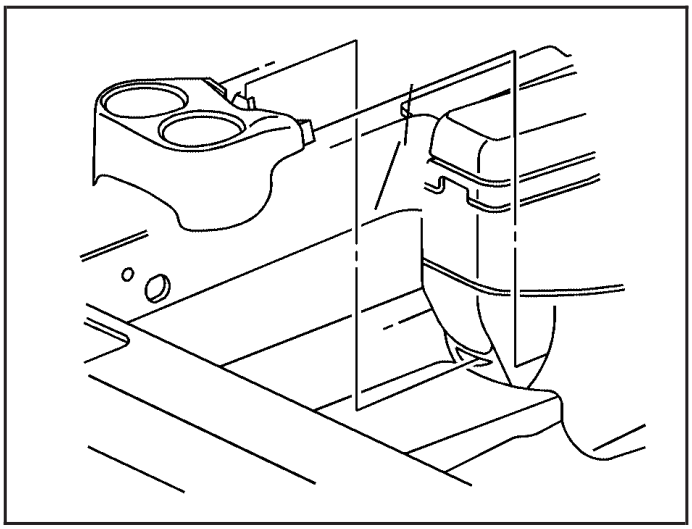

Your vehicle may also have a rear cupholder that can be installed by aligning it to the console and snapping it into place. To remove, pull it up from the console.

Downloaded from www.Manualslib.com manuals search engine

Sunglasses Storage Compartment

Your vehicle may have a storage compartment located to the rear on the overhead console. To open the sunglasses storage compartment, press the release latch forward and pull the compartment down.

Center Console Storage

To open the armrest storage area, pull up on the latch located on the front drivers side of the storage area. The storage area may have a cassette/compact disc holder. A storage pocket is located on the passenger side of the console.

Convenience Net

Your vehicle may have a convenience net in the rear of the vehicle. Store small loads as far forward as possible. The net should not be used to store heavy loads.

Sunroof

If the vehicle has a sunroof, it includes a sliding glass panel and a sunshade.

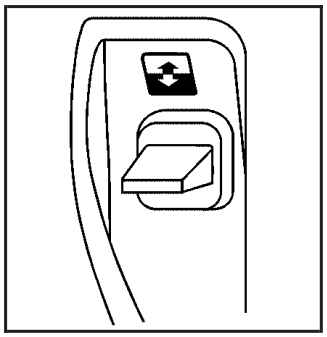

The switch to control the sunroof is located in the headliner.

The switch works only while the ignition is in ON/RUN, or in ACC/ACCESSORY, or Retained Accessory Power (RAP) is on. See *Retained Accessory Power (RAP) on page 2-24*.

Vent: Open the sunshade by hand. Push the switch toward the rear of the vehicle once and the sunroof will open to the vent position. Push the switch forward to close.

Open/Express-Open: Push the switch toward the rear of the vehicle a second time and the sunroof will open the remainder of the way. The sunshade will open with the sunroof. To stop the sunroof from opening, push the switch toward the front of the vehicle.

Close: Push and hold the front of the switch until the sunroof motor stops. The sunshade must be closed by hand.

Downloaded from www.Manualslib.com manuals search engine

Section 3 Instrument Panel

Instrument Panel Overview 3-4
Hazard Warning Flashers 3-6
Other Warning Devices 3-6
Horn 3-6
Tilt Wheel 3-7
Turn Signal/Multifunction Lever 3-7
Turn and Lane-Change Signals 3-8
Headlamp High/Low-Beam Changer 3-9
Flash-to-Pass 3-9
Windshield Wiper Lever 3-10
Cruise Control 3-12
Exterior Lamps 3-16
Headlamps on Reminder 3-17
Daytime Running Lamps (DRL) 3-17
Fog Lamps 3-18
Exterior Lighting Battery Saver 3-19
Interior Lamps 3-19
Instrument Panel Brightness 3-19
Courtesy Lamps 3-19
Dome Lamp 3-20
Entry Lighting 3-20
Delayed Entry Lighting 3-20
Delayed Exit Lighting 3-21
Front Reading Lamps 3-21
Overhead Console Reading Lamps 3-21
Rear Assist Handle Reading Lamps 3-21
Electric Power Management 3-22
Battery Run-Down Protection 3-22
Head-Up Display (HUD) 3-23
Accessory Power Outlet(s) 3-26
Ashtray(s) and Cigarette Lighter 3-27
Climate Controls 3-28
Climate Control System 3-28
Dual Automatic Climate Control System 3-32
Outlet Adjustment 3-36
Passenger Compartment Air Filter 3-36
Warning Lights, Gages, and Indicators 3-38
Instrument Panel Cluster 3-39
Speedometer and Odometer 3-40
Tachometer 3-40
Safety Belt Reminders 3-41
Airbag Readiness Light 3-42
Passenger Airbag Status Indicator 3-43
Up-Shift Light 3-45
Brake System Warning Light 3-45
Anti-lock Brake System (ABS) Warning Light 3-47
Traction Control System (TCS) Warning Light ...3-47
Enhanced Traction System Warning Light 3-48
Engine Coolant Temperature Warning Light 3-48
Engine Coolant Temperature Gage 3-49
Tire Pressure Light 3-49
Malfunction Indicator Lamp 3-50
Oil Pressure Light 3-52

Downloaded from www.Manualslib.com manuals search engine

Section 3 Instrument Panel

Fog Lamp Light 3-53
Cruise Control Light 3-53
Highbeam On Light 3-54
Fuel Gage 3-54

Driver Information Center (DIC) 3-55
DIC Operation and Displays (Uplevel DIC with Trip Computer) 3-55
DIC Operation and Displays (Base Level DIC) 3-62
DIC Compass (Uplevel DIC) 3-65
DIC Warnings and Messages 3-67
DIC Vehicle Customization 3-89

Audio System(s) 3-94
Setting the Clock 3-95
Radio(s) 3-95
Using an MP3 3-109
XM Radio Messages 3-114
Theft-Deterrent Feature 3-115
Audio Steering Wheel Controls 3-115
Radio Reception 3-116
Backglass Antenna 3-117
XM™ Satellite Radio Antenna System 3-118
Chime Level Adjustment 3-118

Downloaded from www.Manualslib.com manuals search engine

✍ NOTES

Downloaded from www.Manualslib.com manuals search engine

Instrument Panel Overview

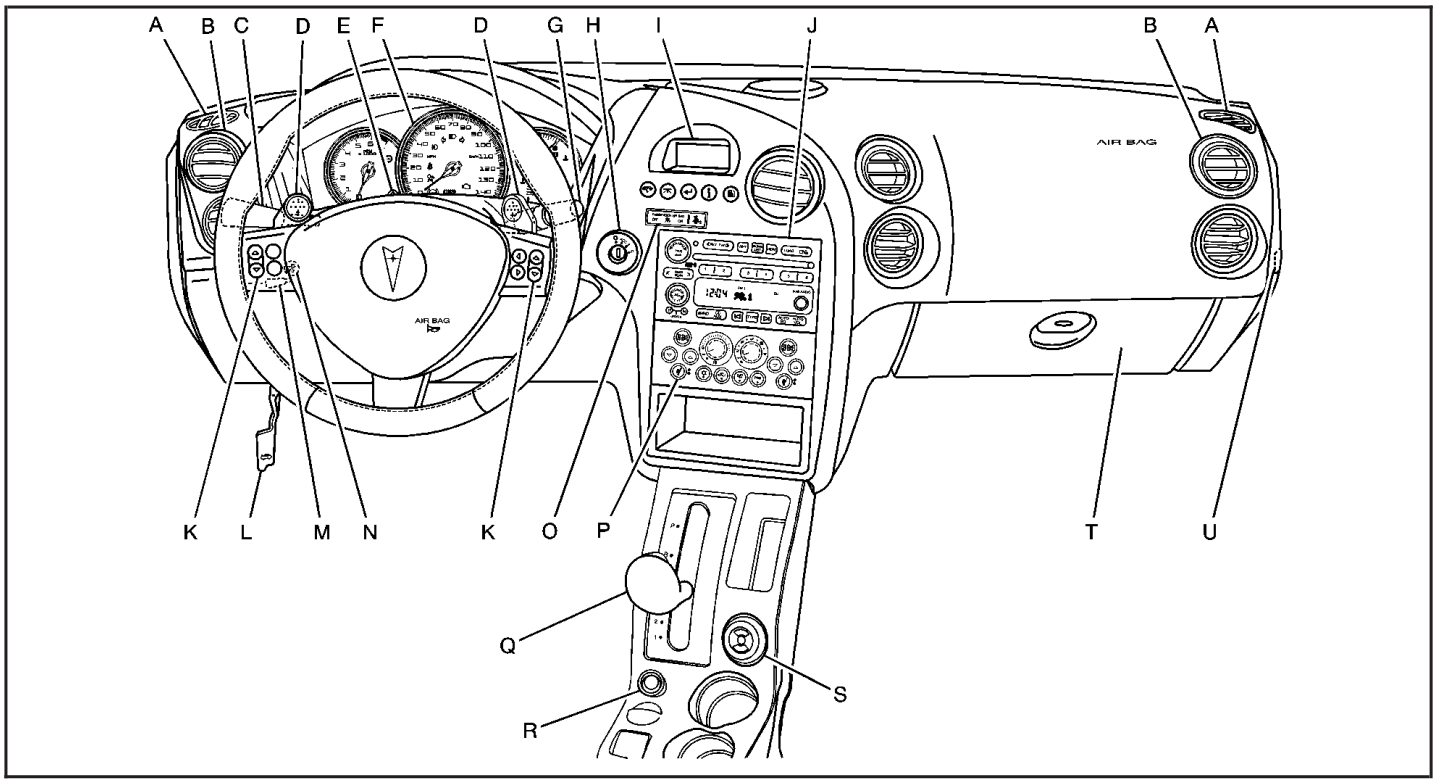

Downloaded from www.Manualslib.com manuals search engine

The main components of the instrument panel are the following:

A. Side Window Defogger Outlets. See *Outlet Adjustment on page 3-36*.

B. Air Outlets. See *Outlet Adjustment on page 3-36*.

C. Turn Signal/Multifunction Lever and Cruise Controls. See *Turn Signal/Multifunction Lever on page 3-7* and *Cruise Control on page 3-12*.

D. TAP-Shift® Control (If Equipped). See *Automatic Transmission Operation on page 2-28*.

E. Hazard Warning Flashers Button. See *Hazard Warning Flashers on page 3-6*.

F. Instrument Panel Cluster. See *Instrument Panel Cluster on page 3-39*.

G. Windshield Wiper Lever. See *Windshield Wiper Lever on page 3-10*.

H. Ignition. See *Ignition Positions on page 2-23*.

I. Driver Information Center (DIC) (If Equipped). See *Driver Information Center (DIC) on page 3-55*.

J. Audio System. See *Audio System(s) on page 3-94*.

K. Audio Steering Wheel Controls (If Equipped). See *Audio Steering Wheel Controls on page 3-115*.

L. Hood Release. See *Hood Release on page 5-11*.

M. Tilt Steering Wheel Lever, on Steering Column. See *Tilt Wheel on page 3-7*.

N. Interior Lamps Brightness Control. See *Interior Lamps on page 3-19*.

O. Passenger Air Bag Status Indicator. See *Passenger Airbag Status Indicator on page 3-43*.

P. Climate Controls. See *Climate Control System on page 3-28*.

Q. Shift Lever. See *Automatic Transmission Operation on page 2-28*.

R. Traction Control Button (If Equipped). See *Traction Control System (TCS) on page 4-6*.

S. Head Up Display (HUD) Control (If Equipped). See *Head-Up Display (HUD) on page 3-23*.

T. Glove Box. See *Glove Box on page 2-43*.

U. Instrument Panel Fuse Block. See *Instrument Panel Fuse Block on page 5-122*.

Downloaded from www.Manualslib.com manuals search engine

Hazard Warning Flashers

The hazard warning flashers warn others. They also let the police and other emergency vehicles know you have a problem.

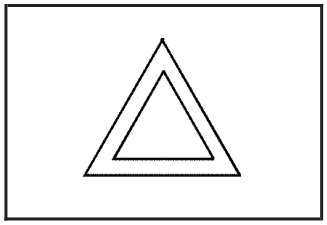

The hazard warning flasher button is located on top of the steering column.

Press the button to make the front and rear turn signal lamps flash on and off. Press the button again to turn the flashers off.

The hazard warning flashers work no matter what ignition position the key is in, and even if the key is not in the ignition.

When the hazard warning flashers are on, your vehicle's turn signals will not work.

Other Warning Devices

If you carry reflective triangles, you can set them up at the side of the road about 300 feet (100 m) behind your vehicle.

Horn

Press on or near the horn symbols on the steering wheel pad to sound the horn.

Downloaded from www.Manualslib.com manuals search engine

Tilt Wheel

A tilt wheel enables the position of the steering wheel to be adjusted. The lever that lets the steering wheel tilt is located on the outboard side of the steering column.

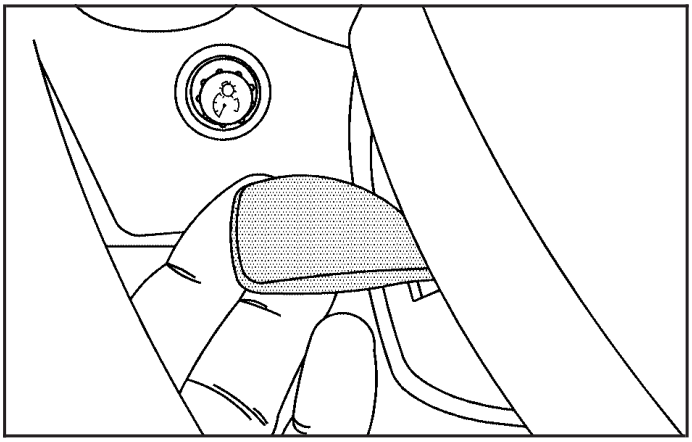

To tilt the steering wheel, hold it and pull the lever. Move the steering wheel to a comfortable driving position and release the lever to lock it into place.

Tilt the steering wheel to the highest position to give more room when exiting and entering the vehicle.

Turn Signal/Multifunction Lever

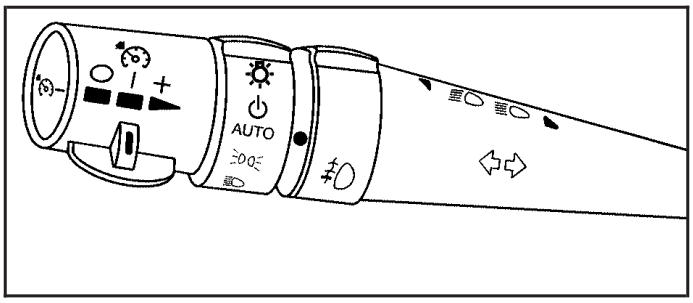

The lever on the left side of the steering column includes the following:

- Turn and Lane-Change Signals. See *Turn and Lane-Change Signals on page 3-8*.
- Headlamp High/Low-Beam Changer. See *Headlamp High/Low-Beam Changer on page 3-9*.
- Fog Lamps. See *Fog Lamps on page 3-18*.
- Flash-to-Pass Feature. See *Flash-to-Pass on page 3-9*.
- Cruise Control. See *Cruise Control on page 3-12*.
- Exterior Lamps Control. See *Exterior Lamps on page 3-16*.

Downloaded from www.Manualslib.com manuals search engine

Turn and Lane-Change Signals

To signal a turn, move the turn signal lever located on the left side of the steering column all the way up or down. The lever returns automatically when the turn is complete.

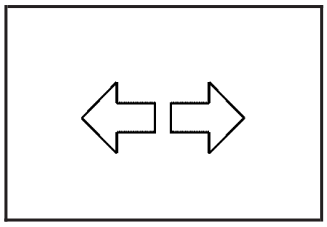

An arrow on the instrument panel cluster will flash in the direction of the turn or lane change.

If the vehicle is equipped with the Head-Up-Display (HUD), a right or left turn signal will appear in the HUD area when making turns or lane changes. See *Head-Up Display (HUD) on page 3-23* for more information.

Raise or lower the lever until the arrow starts to flash to signal a lane change. Hold it there until the lane change is complete. The lever returns to its original position when it is released.

Arrows that flash rapidly when signaling for a turn or lane change may be caused by a burned-out signal bulb. Other drivers will not see the signal.

Replace burned-out bulbs to help avoid possible accidents. See *Replacement Bulbs on page 5-60*, *Front Turn Signal, Parking and Fog Lamps on page 5-57*, and *Taillamps, Turn Signal, and Stoplamps on page 5-58*. Also, check the fuse for burned-out bulbs if a turn signal arrow fails to work when signaling a turn. See *Fuses and Circuit Breakers on page 5-121* for location information.

Turn Signal On Chime

If the turn signal is left on for more than 0.75 of a mile (1.21 km), a warning chime will sound and the TURN SIGNAL ON warning message will appear on the Driver Information Center (DIC) display. See “Turn Signal On” under *DIC Warnings and Messages on page 3-67*.

Downloaded from www.Manualslib.com manuals search engine

Headlamp High/Low-Beam Changer

Push forward on the exterior lamps control lever to change the headlamps from low to high-beam. Pull the lever back and then release it to change from high to low-beam.

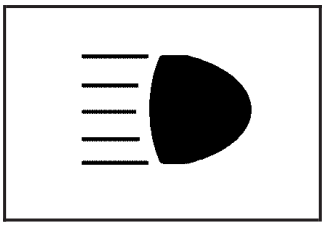

This symbol appears on the instrument panel cluster when the high-beam headlamps are on.

When the high-beam headlamps are on, the fog lamps will not be on. If the vehicle is equipped with the Head-Up-Display (HUD) an arrow will appear in the HUD area indicating that the high-beams are on. See *Head-Up Display (HUD) on page 3-23* for more information.

Flash-to-Pass

This feature allows the use of the high-beam headlamps to signal the driver in front of you that you want to pass.

Pull and hold the exterior lamps control lever to use this feature. When this is done, the following will occur:

- The high-beam headlamps will turn on, while the headlamps are off, in low-beam, or in Daytime Running Lamps (DRL) mode. They will stay on as long as the lever is held in this position. Release the lever to turn them off.
- The headlamps will switch to low beam if the headlamps had been in the high-beam mode. To return to high-beam, push the lever.

If the vehicle is equipped with the Head-Up Display (HUD), an arrow will appear on the display to indicate that the high beams are on.

Downloaded from www.Manualslib.com manuals search engine

Windshield Wiper Lever

Be sure to clear ice and snow from the wiper blades before using them. If they are frozen to the windshield, gently loosen or thaw them. Damaged wiper blades may not clear the windshield well, making it harder to see and drive safely. If the blades do become damaged, install new blades or blade inserts. For more information, see *Windshield Wiper Blade Replacement on page 5-61*.

Heavy snow or ice can overload the wiper motor. A circuit breaker will stop the motor until it cools down. Clear away snow or ice to prevent an overload.

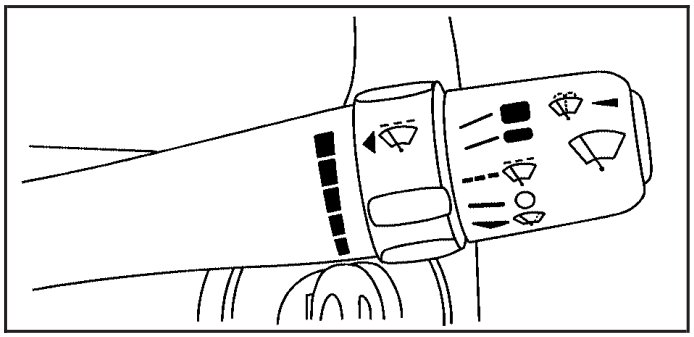

(Windshield Wipers): The lever with this symbol, located on the right side of the steering column, operates the windshield wipers.

(Off): Lower the lever to its original position to turn the wipers off.

(Delay): Push the lever up once to this position to set a delay between wiping cycles. Turn the delay adjustment band to set the length of the delay.

Downloaded from www.Manualslib.com manuals search engine

(Delay Adjustment): Turn the band, located on the left of the windshield wiper lever, to set the length of the delay between wiper cycles when using the delay feature. There are five delay adjustment settings. Turn the band up to make the delays shorter in between wiper cycles. Turn the band down to make the delays longer between wiper cycles. The windshield wiper lever must be in delay for this feature to work.

(Low Speed): Push the lever up to the second position for steady wiping cycles at a slow speed.

(High Speed): Push the lever up to the third position for steady wiping cycles at a high speed.

(Mist): For a single wiping cycle, push the lever down once and let go. The wipers will stop after one cycle. For additional cycles, hold the lever down. About 30 seconds after the wipers are on, the headlamps, taillamps, and instrument panel lighting will come on, and the Driver Information Center (DIC) back lighting will decrease to the night time mode. About ten seconds after the wipers are turned off, all the lamps will go back to the AUTO (Automatic) mode. See *Exterior Lamps on page 3-16*.

Windshield Washer

⚠ CAUTION:

In freezing weather, do not use your washer until the windshield is warmed. Otherwise the washer fluid can form ice on the windshield, blocking your vision.

The windshield washer button is located at the end of the windshield wiper lever.

(Washer Fluid): Press this button to activate the washer fluid to spray onto the windshield. The wipers will run for a few cycles to clear the windshield. For more wash cycles, press and hold the button.

If the vehicle is low on washer fluid, the LOW WASHER FLUID message will appear on the Driver Information Center (DIC) display. See “LOW WASHER FLUID” under *DIC Warnings and Messages on page 3-67* for more information.

Downloaded from www.Manualslib.com manuals search engine

Cruise Control

⚠ CAUTION:

Cruise control can be dangerous where you cannot drive safely at a steady speed. So, do not use your cruise control on winding roads or in heavy traffic.

Cruise control can be dangerous on slippery roads. On such roads, fast changes in tire traction can cause excessive wheel slip, and you could lose control. Do not use cruise control on slippery roads.

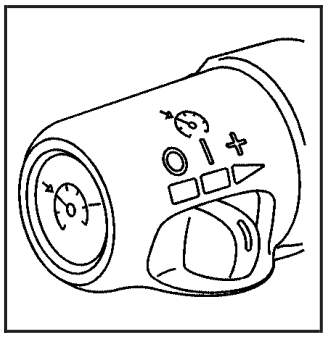

○ **(Off):** This position turns the system off.

| **(On):** This position activates the system.

+ (Resume/Accelerate): This position to makes the vehicle accelerate or resume to a previously set speed.

(Set): Press this button to set the speed.

With cruise control, you can maintain a speed of about 25 mph (40 km/h) or more without keeping your foot on the accelerator. This can really help on long trips. Cruise control does not work at speeds below about 25 mph (40 km/h).

Downloaded from www.Manualslib.com manuals search engine

Cruise control will not work if your parking brake is set, or if the master cylinder brake fluid level is low.

⚠ CAUTION:

Cruise control can be dangerous where you cannot drive safely at a steady speed. So, do not use your cruise control on winding roads or in heavy traffic.

Cruise control can be dangerous on slippery roads. On such roads, fast changes in tire traction can cause excessive wheel slip, and you could lose control. Do not use cruise control on slippery roads.

If cruise control is on when the Traction Control System (TCS), if your vehicle has one, begins to limit wheel spin, the cruise control will automatically disengage. See *Traction Control System (TCS) on page 4-6*. When road conditions allow you to safely use it again, you may turn cruise control back on.

Setting Cruise Control

⚠ CAUTION:

If you leave your cruise control on when you are not using cruise, you might hit a button and go into cruise when you do not want to. You could be startled and even lose control. Keep the cruise control switch off until you want to use cruise control.

1. Move the cruise control switch to on.
2. Get up to the speed desired.
3. Press in the set button at the end of the lever and release it.
4. Take your foot off the accelerator pedal.

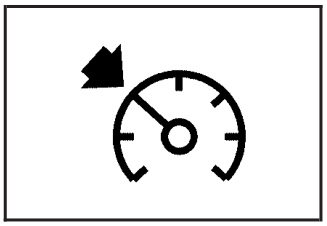

This symbol, along with the CRUISE SET message, will briefly appear in the Driver Information Center (DIC) when the cruise control is set.

Downloaded from www.Manualslib.com manuals search engine

The CRUISE SET message will also appear briefly on the Head-Up Display (HUD), if your vehicle has one, when the cruise control lever is pushed to the minus (set) or the plus (resume/accelerate) positions.

A cruise control light will also appear on the instrument panel cluster when the cruise control is on. This light will disappear when the brakes are applied or the cruise control is cancelled. It will reappear when the set cruise speed is resumed. The light will go out when the cruise control is turned off. See *Cruise Control Light on page 3-53*.

Resuming a Set Speed

Once you are going about 25 mph (40 km/h) or more, you can move the cruise control switch briefly from on to resume/accelerate.

Your vehicle will go back up to your previously chosen speed and stay there.

If you hold the switch at resume/accelerate the vehicle will keep going faster until you release the switch or apply the brake. Do not hold the switch at resume/accelerate, unless you want the vehicle to go faster.

Increasing Speed While Using Cruise Control

There are two ways to go to a higher speed:

- Use the accelerator pedal to get to the higher speed. Press the set button at the end of the lever, then release the button and the accelerator pedal. You will now cruise at the higher speed. If the accelerator pedal is held longer than 60 seconds, cruise control will turn off.
- Move the cruise switch from on to resume/accelerate. Hold it there until you get up to the speed desired, and then release the switch. To increase the vehicle speed in very small amounts, move the switch briefly to resume/accelerate. Each time this is done, the vehicle will go about 1 mph (1.6 km/h) faster.

The acceleration feature will only work after the cruise control speed has been set by pushing the cruise control set button.

Downloaded from www.Manualslib.com manuals search engine

Reducing Speed While Using Cruise Control

There are two ways to reduce the vehicle's speed while using cruise control:

- Press and hold the set button until you reach the lower speed desired, then release it.
- To slow down in very small amounts, briefly press the set button. Each time this is done, the vehicle will slow down about one mph (1.6 km/h).

Passing Another Vehicle While Using Cruise Control

Use the accelerator pedal to increase the vehicle's speed. When you take your foot off the pedal, the vehicle will slow down to the cruise control speed set earlier.

Using Cruise Control on Hills

How well the cruise control will work on hills depends upon the vehicle's speed, its load, and the steepness of the hills. When going up steep hills, the accelerator pedal might have to be used in order to maintain the vehicle's speed. When going downhill, the brakes might have to be applied, or the transmission might have to be shifted to a lower gear to keep the vehicle's speed down. Doing either of these things will take the vehicle out of cruise. It may be better not to use the cruise control if the brakes constantly have to be applied, or the vehicle continuously needs to be shifted to a lower gear.

Ending Cruise Control

There are two ways to turn off the cruise control:

- Step lightly on the brake pedal.
- Move the cruise control switch to off.

Erasing Speed Memory

The cruise control set speed memory is erased when the cruise control or the ignition is turned off.

Downloaded from www.Manualslib.com manuals search engine

Exterior Lamps

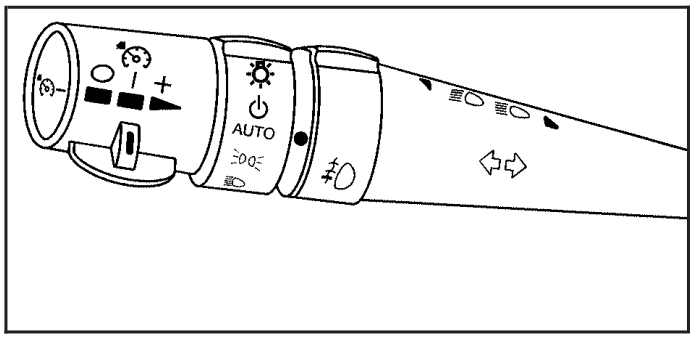

The exterior lamp control is located to the left of the steering wheel on the multifunction lever.

It controls the following systems:

- Headlamps
- Taillamps
- Parking Lamps
- License Plate Lamps
- Instrument Panel Lights

(Exterior Lamp Control): Turn the band with this symbol on it to operate the exterior lamps.

The exterior lamp band has four positions:

(Off): Turn the band to this position to turn off all lamps.

AUTO (Automatic): Turn the control to this position to automatically turn on the headlamps at normal brightness, together with the following:

- Parking Lamps
- Taillamps
- License Plate Lamps
- Instrument Panel Lights

To override AUTO mode, turn the control to off.

To reset to AUTO mode turn the control to exterior lamps and then back to AUTO. Automatic mode will also reset when the vehicle is turned off and then back on again while the control is left in the AUTO position.

Downloaded from www.Manualslib.com manuals search engine

(Parking Lamp): Turn the band to this position to turn on the parking lamps together with the following:

- Taillamps
- License Plate Lamps
- Instrument Panel Lights

The parking brake indicator light comes on and stays on when the parking lamps are on with the engine in LOCK/OFF and the ignition to ACC/ACCESSORY.

(Headlamps): Turn the control to this position to turn on the headlamps together with the following lamps listed below. A warning chime sounds if the driver's door is opened while the ignition switch is off and the headlamps are on.

- Parking Lamps
- Taillamps
- License Plate Lamps
- Instrument Panel Lights

Headlamps on Reminder

A warning chime will sound if the vehicle's ignition is off and the driver's door is opened when the exterior lamp control is left on in either the headlamp or parking lamp position.

Daytime Running Lamps (DRL)

Daytime Running Lamps (DRL) can make it easier for others to see the front of your vehicle during the day. DRL can be helpful in many different driving conditions, but they can be especially helpful in the short periods after dawn and before sunset. Daytime running lamps are required to function at all times on all vehicles first sold in Canada.

A light sensor on top of the instrument panel makes the DRL work, so be sure it is not covered.

The DRL system will make the low-beam headlamps come on at reduced brightness when the following conditions are met:

- The ignition is on.
- The exterior lamps control is off.
- The parking brake is released.

While the DRL are on, only the vehicle's low-beam headlamps will be on at reduced brightness. The turn signal, taillamps, sidemarker and other lamps will not be on. The instrument panel cluster will not be lit up either.

Downloaded from www.Manualslib.com manuals search engine

When it is dark enough outside, the DRL will turn off and the vehicle's headlamps and parking lamps will turn on. The other lamps that come on with the headlamps will also come on.

When it is bright enough outside, the headlamps will go off and the DRL will come on.

To idle the vehicle with the DRL off, turn the exterior lamp control off and then do one of the following:

- Turn the exterior lamp control to the parking lamp position.
- Turn the exterior lamp control to the headlamp position.
- Turn the exterior lamp control from AUTO to off and back to AUTO.

This feature is not available for vehicles first sold in Canada.

To turn off the automatic headlamp feature when it is dark outside, move the exterior lamp control to the parking lamp position. The parking lamps will remain illuminated and the headlamps will turn off. The fog lamps will also go on if they were on previously.

As with any vehicle, the regular headlamp system should be turned on when needed.

Fog Lamps

If equipped, fog lamps provide brighter roadway lighting for better vision in foggy or misty conditions.

(Fog Lamps): Turn the second band on the exterior lamps control lever to this position to turn the fog lamps on. The band will return to its original position.

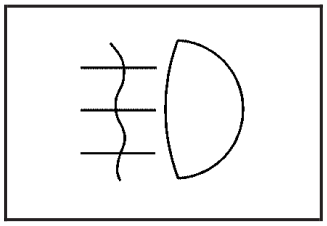

This symbol appears on the instrument panel cluster when the fog lamps are on.

To turn the fog lamps off, turn the band up to the fog lamp symbol and release it. The band will return to its original position. If the high-beam headlamps are on, the fog lamps will turn off. The fog lamps will go on again when the low-beam headlamps are turned back on.

The parking lamps must be on for the fog lamps to work.

Some localities have laws that require the headlamps to be on along with the fog lamps.

Downloaded from www.Manualslib.com manuals search engine

Exterior Lighting Battery Saver

If the parking lamps or headlamps have been left on after the ignition has been turned to off, the exterior lamps will turn off after about 10 minutes. This protects the battery from being drained.

Use the exterior lamp control to turn the lamps back on, if they are still needed.

Interior Lamps

The interior lamps can be controlled, or automatically turn on or off under certain conditions. They are explained in the following text.

Instrument Panel Brightness

This feature controls the brightness of the instrument panel lights.

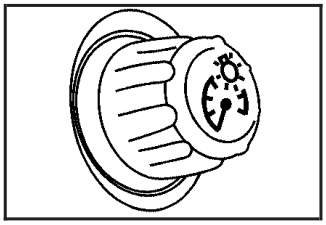

The interior lamps control is located on the instrument panel, to the left of the steering column.

Turn the control to adjust the brightness of the instrument panel lights.

Courtesy Lamps

When a door is opened, the courtesy lamps will automatically come on. These lamps will also come on when the interior lamps control is fully turned clockwise.

Downloaded from www.Manualslib.com manuals search engine

Dome Lamp

If the vehicle does not have an overhead console, it will have a dome light located in the front of the headliner.

The switch on this lamp has three positions. The on position will turn on the lamp anytime. The door position will turn on the lamp whenever a door is opened. The off position will shut off the lamp completely, even while a door is opened.

Entry Lighting

The entry lighting feature turns the interior lights on before anyone enters the vehicle. The interior lamps will come on for 40 seconds when the doors are unlocked using the remote keyless entry transmitter and the ignition is in LOCK/OFF. After 40 seconds have elapsed, the interior lamps will slowly fade out. The lamps will fade out before 40 seconds have elapsed if one of the following is done:

- Lock all doors using the remote keyless entry transmitter.
- Lock the doors using the power door lock switch.

When any door is opened, entry lighting is cancelled. The interior lamps will stay on while any door is opened and slowly fade out when all doors are closed. The interior lamps may stay on for up to 25 seconds after all doors have been closed if they have not been locked.

Delayed Entry Lighting

The delayed lighting feature will continue to light the interior of the vehicle for 25 seconds after all the doors have been closed. Delayed lighting will not occur while the ignition is in ON/RUN or ACC/ACCESSORY. After 25 seconds have elapsed, the interior lamps will slowly fade out. The lamps will fade out before the 25 seconds have elapsed if one of the following is done:

- The ignition is turned to ON/RUN or ACC/ACCESSORY.
- The doors are locked using the remote keyless entry transmitter.
- The doors are locked using the power door lock switch.

To turn the delayed lighting feature off or on, see “Personal Programming Modes” under *DIC Vehicle Customization on page 3-89*.

Downloaded from www.Manualslib.com manuals search engine

Delayed Exit Lighting

For exiting the vehicle at night, the vehicle is equipped with the delayed exit lighting feature. After the key is removed from the ignition, the interior lamps will light for up the amount of seconds set in the Driver Information Center (DIC). See “Personal Programming Mode Screens” under *DIC Vehicle Customization on page 3-89*. After the set time has elapsed, the interior lamps will slowly fade. The lamps will fade before the set time has elapsed if one of the following is done:

- The ignition is turned to ON/RUN or ACC/ACCESSORY.
- The doors are locked using the remote keyless entry transmitter.
- The doors are locked using the power door lock switch.

When any door is opened, delayed exit lighting is cancelled. The interior lamps will stay on while any door is opened and will slowly fade out when all the doors are closed. The interior lamps will stay on for the set time after all the doors have been closed if they have not been locked.

To turn the delayed exit lighting feature off or on, see “Personal Programming Mode Screens” under *DIC Vehicle Customization on page 3-89*.

Front Reading Lamps

If the vehicle has a sunroof, there are reading lamps in front of the sunroof switch located on the headliner. These lamps will come on when the doors are opened. Press the side of each reading lamp to turn them on and off when the doors are closed.

Overhead Console Reading Lamps

The vehicle may have reading lamps on the overhead console. These lamps will turn on when the doors are opened. When the doors are closed, press the side of each lamp to turn them on and off.

Rear Assist Handle Reading Lamps

If the vehicle has a reading lamp on each rear assist handle, press the side of each lamp to turn it on or off.

Downloaded from www.Manualslib.com manuals search engine

Electric Power Management

The vehicle has Electric Power Management (EPM) that estimates the battery's temperature and state of charge. It then adjusts the voltage for best performance and extended life of the battery.

When the battery's state of charge is low, the voltage is raised slightly to quickly put the charge back in. When the state of charge is high, the voltage is lowered slightly to prevent overcharging. If the vehicle has a voltmeter gage or voltage display on the Driver Information Center (DIC), you may see the voltage move up or down. This is normal. If there is a problem, an alert will be displayed.

The battery can be discharged at idle if the electrical loads are very high. This is true for all vehicles. This is because the generator (alternator) may not be spinning fast enough at idle to produce all the power that is needed for very high electrical loads.

A high electrical load occurs when several of the following loads are on: headlamps, high beams, fog lamps, rear window defogger, climate control fan at high speed, heated seats, engine cooling fans, trailer loads, and loads plugged into accessory power outlets.

EPM works to prevent excessive discharge of the battery. It does this by balancing the generator's output and the vehicle's electrical needs. It can increase engine idle speed to generate more power, whenever needed. It can temporarily reduce the power demands of some accessories.

Normally, these actions occur in steps or levels, without being noticeable. In rare cases at the highest levels of corrective action, this action may be noticeable to the driver. If so, a Driver Information Center (DIC) message might be displayed, such as Battery Saver Active. If this message is displayed, it is recommended that the driver reduce the electrical loads as much as possible. See *DIC Warnings and Messages on page 3-67*.

Battery Run-Down Protection

The vehicle has a feature to help prevent the battery from draining in case the interior, trunk, or underhood lamps are accidentally left on. If any of these lamps are left on while the ignition is in LOCK/OFF, they will automatically turn off after 10 minutes. The lamps will not come back on again until any of the following are done:

- The ignition is turned to ON/RUN or ACC/ACCESSORY.
- The interior lamps control is turned completely to the right, then back slightly to the left.
- Open, or close and reopen, a door that is closed.

If the vehicle has less than 15 miles (25 km) on the odometer, the battery saver will turn off the lamps after only three minutes.

Downloaded from www.Manualslib.com manuals search engine

Head-Up Display (HUD)

⚠ CAUTION:

If the HUD image is too bright or too high in your field of view, it may take you more time to see things you need to see when it is dark outside. Be sure to keep the HUD image dim and placed low in your field of view.

If the vehicle has the Head-Up Display (HUD), some information concerning the operation of the vehicle is projected onto the windshield. This includes the speedometer reading, transmission positions, compass direction, outside air temperature, the tap shift gear and the upshift symbol if active, and a brief display of the current radio station, including XM information or CD track. It will also display turn-by-turn guidance information if the vehicle has a navigation radio. The images are projected by the HUD lens located on the driver's side of the instrument panel.

The tap shift gear and the upshift symbol will also appear on the HUD if the vehicle has tap shift and it is active.

The HUD information can be displayed in one of three languages, English, French, or Spanish. The speedometer reading and other numerical values can be displayed in either English or metric units.

The language selection and the units of measurement are changed through the trip computer in the Driver Information Center (DIC). See "Options" under *DIC Operation and Displays (Uplevel DIC with Trip Computer) on page 3-55* or *DIC Operation and Displays (Base Level DIC) on page 3-62*.

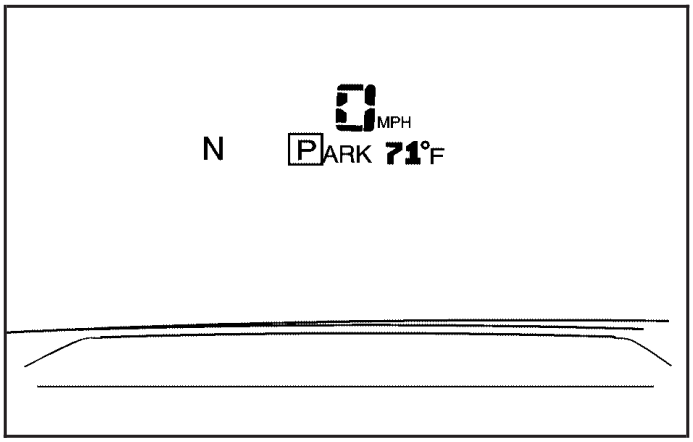

The HUD information appears as an image focused out toward the front of the vehicle.

Downloaded from www.Manualslib.com manuals search engine

When the ignition key is turned to ON/RUN, the HUD will display an introductory message for a short time, until the HUD has warmed up.

The following indicator lights come on the instrument panel when activated and will also appear on the HUD:

- Turn Signal Indicators
- High-Beam Indicator Symbol

The HUD will temporarily display CHECK TRIP COMPUTER when there are messages on the DIC trip computer.

The HUD will also display the following messages when these systems, if the vehicle has them, are active:

- TRACTION CONTROL ACTIVE
- STABILITY CONTROL ACTIVE

The HUD will temporarily display the TRACTION CONTROL OFF message when the traction control system is turned off.

The HUD will temporarily display the CRUISE SET message when cruise control is activated or cruise speed is increased.

Notice: **If you try to use the HUD image as a parking aid, you may misjudge the distance and damage your vehicle. Do not use the HUD image as a parking aid.**

When the HUD is on, the speedometer reading will continually be displayed. The current radio station or CD track number will display for a short period of time after the radio or CD track status changes. This will happen whenever one of the radio controls is pressed.

The speedometer size will be reduced when radio, CD information, warnings, or turn-by-turn guidance information are displayed on the HUD.

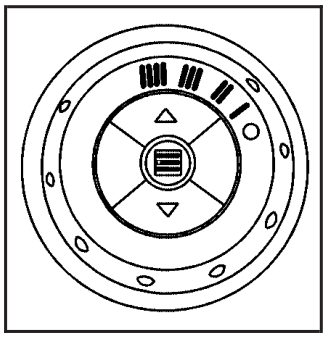

The HUD control is located on the console.

To adjust the HUD image so that items are properly displayed, do the following:

1. Adjust the driver's seat to a comfortable position.
2. Start the engine.
3. Adjust the HUD controls.

Downloaded from www.Manualslib.com manuals search engine

Use the following settings to adjust the HUD.

◯ **(Off):** Turn the outer ring on the HUD control to this position to turn the HUD off.

I II III IIII (Brightness): Turn the outer ring on the HUD control clockwise to dim the display and counterclockwise to brighten it.

△ **(Up):** Press this portion of the switch on the HUD control to move the image up.

▽ **(Down):** Press this portion of the switch on the HUD control to move the image down. Move the image as low as possible on the windshield, keeping it in full view.

(Page): Press this button to select the display formats. Release the page button when the format number with the desired display is shown on the HUD.

- **Format One:** This display gives the speedometer reading (in English or metric units), transmission positions, compass direction, and the outside air temperature.
- **Format Two:** This display includes the information in Format One without the compass direction and the outside air temperature.
- **Format Three:** This display includes all the information in Format One, but turns the instrument cluster lighting off. Format three is only available at night.

All formats will show the turn-by-turn guidance information. It will display the next turn, direction, street name, and distance to the selected destination. When you near your destination, the HUD will display a distance bar that will fill in the closer you get to your destination. All navigation information is provided to the HUD by the navigation radio, if the vehicle has one.

The warning indicators still appear on the instrument panel when required. The HUD will display Stealth Mode On.

The HUD will store the last display format selected. If the last format displayed was Format One or Format Three, then Format One will be displayed when the vehicle is started.

If the last format was Format Two, then Format Two will be displayed.

The HUD image displayed on the windshield will automatically dim and brighten to compensate for outside lighting.

The HUD image can temporarily light up depending on the angle and position of the sunlight on the HUD display. This is normal and will change when the angle of the sunlight on the HUD display changes.

Polarized sunglasses could make the HUD image harder to see.

Downloaded from www.Manualslib.com manuals search engine

Care of the HUD

Clean the inside of the windshield as needed to remove any dirt or film that could reduce the sharpness or clarity of the HUD image.

To clean the HUD lens, use a soft, clean cloth that has household glass cleaner sprayed on it. Wipe the HUD lens gently, then dry it. Do not spray cleaner directly on the lens because the cleaner could leak into the unit.

If You Cannot See the HUD Image When the Ignition Is On

- Is anything covering the HUD lens?
- Is the HUD dimmer setting bright enough?
- Is the HUD image adjusted to the proper height?
- Are you wearing polarized sunglasses?
- Still no HUD image? Check the fuse in the instrument panel fuse block. See *Instrument Panel Fuse Block on page 5-122*.

If the HUD Image Is Not Clear

- Is the HUD image too bright?
- Are the windshield and HUD lens clean?

If the HUD image is not correct, contact your dealer/retailer.

Keep in mind that the windshield is part of the HUD system. See *Windshield Replacement on page 5-61*.

Accessory Power Outlet(s)

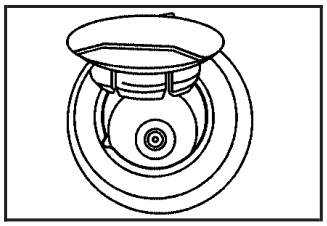

The vehicle has two 12-volt outlets which can be used to plug in electrical equipment.

One accessory power outlet is located on the center console, below the front edge of the storage console. The other is located inside the console.

Remove the tethered cap to use the outlet. When not using the outlet, be sure to cover it with the protective cap.

Downloaded from www.Manualslib.com manuals search engine

Notice: **Leaving electrical equipment plugged in for an extended period of time while the vehicle is off will drain the battery. Power is always supplied to the outlets. Always unplug electrical equipment when not in use and do not plug in equipment that exceeds the maximum 20 ampere rating.**

Certain electrical accessories may not be compatible with the accessory power outlet and could result in blown vehicle or adapter fuses. See your dealer/retailer for additional information on accessory power outlets.

Notice: **Adding any electrical equipment to your vehicle may damage it or keep other components from working as they should. The repairs would not be covered by your warranty. Do not use equipment exceeding maximum amperage rating of 20 amperes. Check with your dealer/retailer before adding electrical equipment.**

When adding electrical equipment, be sure to follow the proper installation instructions included with it.

Notice: **Improper use of the power outlet can cause damage not covered by your warranty. Do not hang any type of accessory or accessory bracket from the plug because the power outlets are designed for accessory power plugs only.**

Ashtray(s) and Cigarette Lighter

Your vehicle may have a removable muffin tin ashtray and cigarette lighter. The muffin tin ashtray can be placed into the front center console cupholder. To use the lighter, located on the center console, push it in all the way and let go. When it is ready, it will pop back out by itself.

Notice: **Holding a cigarette lighter in while it is heating does not let the lighter back away from the heating element when it is hot. Damage from overheating can occur to the lighter or heating element, or a fuse could be blown. Do not hold a cigarette lighter in while it is heating.**

Notice: **If you put papers, pins, or other flammable items in the ashtray, hot cigarettes or other smoking materials could ignite them and possibly damage your vehicle. Never put flammable items in the ashtray.**

Downloaded from www.Manualslib.com manuals search engine

Climate Controls

Climate Control System

The climate control system allows manual control of the heating, cooling, and ventilation in the vehicle.

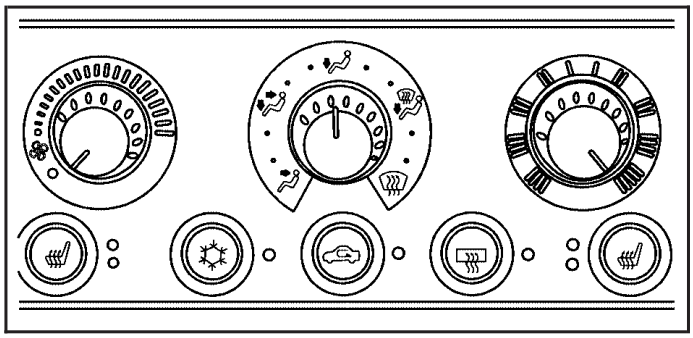

Fan

(Fan): Turn the knob by this symbol, located on the left side of the climate control panel, clockwise or counterclockwise to increase or decrease the fan speed. The fan speed will be temporarily reduced between the transition to a new mode. The fan will resume the original speed when the transition to the new mode is complete.

(Off): Turn the knob to this position to turn the climate control system off. Only the heated seat and/or rear defrost can be operated when the fan is off.

Mode

Turn the middle knob to select the following modes:

(Vent) (Outside Air): This mode directs outside air to the instrument panel outlets. If driving in city traffic, and the vehicle is stopped and idling, or the weather is hot, press the recirculation button. To prevent the air inside the vehicle from becoming stale, be sure to turn off recirculation periodically.

(Bi-Level): This mode directs half of the air to the instrument panel outlets, and the remaining air to the floor outlets. Some air may be directed toward the windshield. Slightly cooler air is directed to the instrument panel outlets and warmer air is directed to the floor outlets.

(Floor): This mode directs most of the air to the floor outlets with some air directed toward the side window outlets and a little air directed to the windshield.

In this mode, the system will automatically use outside air. The air conditioning compressor will be engaged unless the outside temperature is 40°F (4°C) or below.

Downloaded from www.Manualslib.com manuals search engine

Recirculation cannot be selected when in this mode even though the indicator light comes on when the recirculation button is pressed.

The middle knob on the climate control panel can also be used to select the defog or defrost mode.

Defogging and Defrosting

Fog on the inside of the vehicle is a result of high humidity causing moisture to condense on the cool window glass. This can be minimized if the climate control system is used properly. There are two modes to clear frost or fog from the windshield. Use the defog mode to clear the windows of condensation and to warm the vehicle's occupants. Use the defrost mode to remove frost or condensation from the windshield quickly.

See "Rear Window Defogger" later in this section for information on clearing the rear window of fog or ice.

(Floor/Defog): Use the floor/defog mode to clear the windows of fog or moisture and to warm the passengers. This mode directs the air equally between the windshield and the floor outlets, along with some directed to the side window outlets.

This mode will automatically use outside air. The air conditioning compressor will be engaged unless the outside temperature is 40°F (4°C) or below. Recirculation cannot be selected when in this mode even though the indicator light comes on when the recirculation button is pressed.

(Defrost): Use the defrost mode to remove fog or frost from the windshield more quickly. This mode directs most of the air to the windshield and the side window outlets, with some air directed to the floor outlets. This mode has a timer and will shut off after five minutes.

This mode will automatically use outside air. The air conditioning compressor will be engaged unless the outside temperature is 40°F (4°C) or below. Recirculation cannot be selected when in this mode even though the indicator light comes on when the recirculation button is pressed.

Downloaded from www.Manualslib.com manuals search engine

Temperature

The knob on the right of the climate control panel is the temperature adjustment that can be used with any of the climate control modes.

Turn the knob clockwise for warmer settings and counterclockwise for colder settings.

Air Conditioning

(Air Conditioner): Press this button to turn the air conditioning compressor on or off. An indicator light to the right of the button will come on. This button has no control over the air conditioning compressor when in Floor/Defog and Defrost modes. The instrument panel brightness control may have to be adjusted to the highest setting in order to see the indicator. See *Instrument Panel Brightness on page 3-19* for additional information.

On hot days during the vehicle's initial start-up, open the windows to let hot inside air escape; then close them. This helps to reduce the time it takes for the vehicle to cool down. It also helps the system to operate more efficiently.

For quicker cool down on hot days, do the following:

1. Select any mode setting between vent and the setting before defrost.
2. Select the air conditioner.
3. Select the coolest temperature.
4. Select the highest climate control fan speed.

Using these settings will set recirculation for quicker cool down (the light indicator will not turn on). If outside air is desired, press the recirculation button twice.

Using these settings together for long periods of time may cause the air inside the vehicle to become too dry. To prevent this from happening, after five minutes the recirculation door will open slightly to allow some outside air into the vehicle.

The air conditioning system removes moisture from the air, so sometimes there may be a small amount of water dripping underneath the vehicle while it is idling or after the engine is turned off. This is normal.

Downloaded from www.Manualslib.com manuals search engine

Recirculation

(Recirculation): Press this button to activate the recirculation mode. With this selection, inside air is recirculated into the vehicle. This mode reduces outside air and odors from entering the vehicle. It may also help to heat or cool the air inside the vehicle more quickly.

An indicator light to the right of the button will come on to show that the recirculation button has been pressed. The instrument panel brightness control may have to be adjusted to the highest setting to see the indicator.

The recirculation mode has a timer. After five minutes, the system's air inlet door will move slightly to allow for ten percent fresh outside air to maintain interior air quality. The only way to reset the system to full recirculation is to restart the five minute timer by selecting vent/outside air and recirculation again.

Rear Window Defogger

The rear window defogger uses a warming grid to remove fog or frost from the rear window. Be sure to clear as much snow from the rear window as possible.

Notice: **Do not use a razor blade or sharp object to clear the inside rear window. Do not adhere anything to the defogger grid lines in the rear glass. These actions may damage the rear defogger. Repairs would not be covered by your warranty.**

(Rear Window Defogger): Press this button to turn the rear window defogger on or off.

An indicator light to the right of the button will come on to show that the rear window defogger is on. The instrument panel brightness control may have to be adjusted to the highest setting during the daytime in order to see the indicator light.

The rear window defogger will turn off about 20 minutes after the button is pressed. If the button is pressed again, it will run another 20 minutes. The defogger can be turned off by pressing the button again or by turning off the engine.

Do not drive the vehicle until all windows are clear.

(Heated Seats): Press this button to turn the heated seats on and off. The button on the left controls the driver's seat and the button on the right controls the passenger's seat. See *Heated Seats on page 1-4* for additional information.

Downloaded from www.Manualslib.com manuals search engine

Dual Automatic Climate Control System

With this system you can control the heating, cooling, and ventilation for your vehicle.

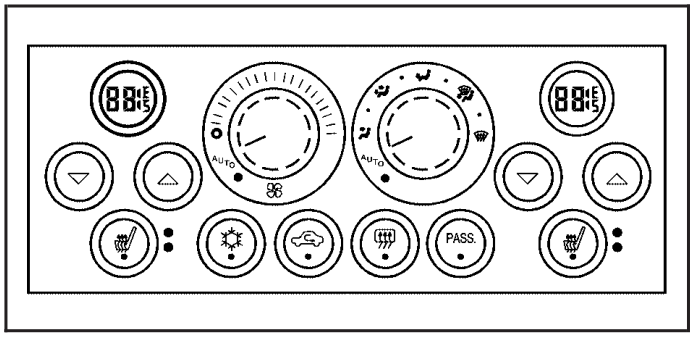

Automatic Operation

AUTO (Automatic): Turn both the fan and mode knob to AUTO for automatic control of the inside temperature, the air delivery mode and the fan speed. You may notice a delay of two to three minutes before the fan comes on when the automatic operation is used in cold weather.

For the automatic system to function, the temperature must be set between 60°F (15°C) and 90°F (32°C).

1. Adjust the temperature to a comfortable setting.
2. Press the PASS button to turn the passenger climate control system on and off. When the passenger system is off, the driver's temperature setting is also used for the passenger and the passenger display is off.

   In cold weather, the system will start at reduced fan speeds to avoid blowing cold air into your vehicle until warmer air is available. The system will start out blowing air at the floor but may change modes automatically as the vehicle warms up to maintain the chosen temperature setting. The length of time needed for the air to warm up will depend on the outside temperature and the length of time that has elapsed since your vehicle was last driven.
3. Wait for the system to regulate. This may take from 10 to 30 minutes. Then adjust the temperature, if necessary.

Do not cover the solar sensor located in the center of the instrument panel, near the windshield. For more information on the solar sensor, see "Sensors" later in this section.

Downloaded from www.Manualslib.com manuals search engine

Manual Operation

▽ △ **(Temperature):** To manually adjust the temperature inside the vehicle, press the up arrow on the temperature control to raise the temperature and press the down arrow to lower the temperature. The display will show your selection.

When one temperature is displayed, the driver temperature is set. When both temperatures are displayed, the temperature for both the driver and passenger are set. Pressing PASS will turn the passenger temperature setting on and off. If only the driver temperature is set, the driver temperature is used for the passenger and the passenger display is off.

(Fan): Turn the fan knob clockwise to increase the fan speed and counterclockwise to decrease the fan speed. Turning the fan knob cancels the automatic fan operation and places the system in manual. Turn the knob to AUTO to return to automatic fan operation. If the airflow seems low when the fan is at the highest setting, the passenger compartment air filter, if equipped, may need to be replaced. See *Passenger Compartment Air Filter on page 3-36* for additional information.

(Off): Turning the fan knob off will turn the controller completely off.

Mode: This control has several settings to control the direction of airflow.

To change the current mode, select one of the following:

AUTO: This mode is automatically set depending on the temperature in the vehicle and solar sensor information.

(Vent): This mode directs air to the instrument panel outlets.

(Bi-Level): This mode directs airflow to the instrument panel outlets and to the floor outlets. A small amount of air is also directed to the windshield and the side window outlets.

(Floor): This mode directs most of the air to the floor outlets with some air directed to the side window outlets, and a little air directed to the windshield.

(Air Conditioning): Press this button to turn the air conditioning compressor on or off. The indicator light on the button will come on when the air conditioning is on.

Downloaded from www.Manualslib.com manuals search engine

(Recirculation): Press this button to turn the recirculation mode on or off. This mode keeps outside air from coming in the vehicle. It can be used to help reduce the outside air and odors that may enter the vehicle or help to cool the air inside the vehicle quicker.

Recirculation is not available in defrost or floor/defog mode. Pressing the recirculation button will turn on the indicator light.

Using recirculation for long periods of time may cause the air inside your vehicle to become too dry. To prevent this from happening, after the air in your vehicle has cooled, turn the recirculation mode off.

(Heated Seats): Press this button to turn the heated seats on and off. The button on the left controls the driver's seat and the button on the right controls the passenger's seat. See *Heated Seats on page 1-4* for additional information.

Sensors

The solar sensor on your vehicle monitors the solar radiation and the air inside of your vehicle, then uses the information to maintain the selected temperature by initiating needed adjustments to the temperature, the fan speed and the air delivery system. The system may also supply cooler air to the side of the vehicle facing the sun. The recirculation mode will also be activated, as necessary. Do not cover the solar sensor located in the center of the instrument panel, near the windshield, or the system will not work properly.

Defogging and Defrosting

Fog on the inside of windows is a result of high humidity (moisture) condensing on the cool window glass. This can be minimized if the climate control system is used properly. There are two modes to clear fog or frost from your windshield. Use the floor/defog mode to clear the windows of fog or moisture and warm the passengers. Use the defrost mode to remove fog or frost from the windshield more quickly.

Downloaded from www.Manualslib.com manuals search engine

(Floor/Defog): This mode directs the air between the windshield, floor outlets and side windows. When you select this mode, the system turns off recirculation and runs the air-conditioning compressor unless the outside temperature is near or below freezing. Pressing the recirculation button, while in this mode, will have no effect other than turning on the indicator light.

(Defrost): This mode directs most of the air to the windshield, with some air directed to the side windows. In this mode, the system will automatically turn off the recirculation and run the air conditioning compressor, unless the outside temperature is near or below freezing. Pressing the recirculation button, while in this mode, will have no affect other than turning on the indicator light.

Rear Window Defogger

The rear window defogger uses a warming grid to remove fog or frost from the rear window.

The rear window defogger will only work when the engine is running.

(Rear Window Defogger): Press this button to turn the rear window defogger on and off. Be sure to clear as much snow from the rear window as possible.

The rear window defogger will turn off about 20 minutes after the button is pressed. If turned on again, the defogger will only run for about 20 minutes before turning off. The defogger can also be turned off by pressing the button again or by turning off the engine.

Do not drive the vehicle until all the windows are clear.

Notice: **Do not use anything sharp on the inside of the rear window. If you do, you could cut or damage the warming grid, and the repairs would not be covered by your warranty. Do not attach a temporary vehicle license, tape, a decal or anything similar to the defogger grid.**

Downloaded from www.Manualslib.com manuals search engine

Outlet Adjustment

Turn the air outlets, located in the middle and at each outboard side of the instrument panel, to adjust the direction of the airflow.

Operation Tips

- Clear away any ice, snow, or leaves from the air inlets at the base of the windshield that may block the flow of air into the vehicle.
- Use of non-GM approved hood deflectors may adversely affect the performance of the system.
- Keep the path under the front seats clear of objects to help circulate the air inside of the vehicle more effectively.
- If the airflow seems low when the fan is at the highest setting, the passenger compartment air filter may need to be replaced. See “Passenger Compartment Air Filter” following, for more information.

Passenger Compartment Air Filter

The passenger compartment air filter is located near the passenger’s side windshield wiper arm, under the inlet grille.

The filter traps most of the pollen from entering the climate control system. Similar to the engine’s air filter, it may need to be changed periodically to insure system performance. See *Scheduled Maintenance on page 6-4* for more information.

To change the passenger compartment air filter,

1. Turn the ignition to ACC/ACCESSORY and the windshield wipers on.
2. Turn the ignition to LOCK/OFF when the windshield wipers are in the upright position.
3. Raise the hood.
4. Disconnect the windshield washer pump hose from the fender rail and the air inlet grille.
5. Remove the hood weather-strip from the passenger’s side of the vehicle, peeling it back halfway.

Downloaded from www.Manualslib.com manuals search engine

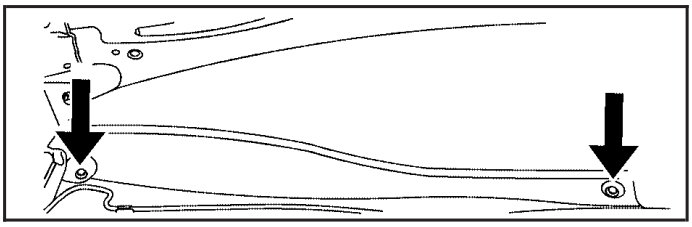

6. Remove the two air inlet grille retainers using a flat tool to first pry up on the center post and then the remainder of the fastener can be pulled out.
7. Remove the air inlet grille by sliding it down to disengage the two tabs that hold it to the bottom of the windshield glass. Place the grille on the windshield while you remove the filter. Do not try to remove the grille from the vehicle because it is still attached on the right side of the vehicle by a fastener.

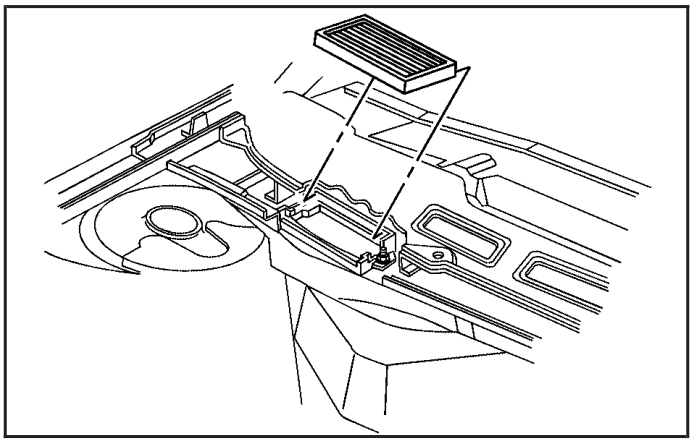

8. Remove the water deflector.
9. Remove the passenger compartment air filter.
10. Install a new passenger compartment air filter. Make sure it slides under the compartment retainers. Be sure the long rubber water deflector above the filter stays in place.
11. Reverse steps 1 through 8.

Downloaded from www.Manualslib.com manuals search engine

Warning Lights, Gages, and Indicators

This part describes the warning lights and gages on your vehicle. The pictures help to locate them.

Warning lights and gages can signal that something is wrong before it becomes serious enough to cause an expensive repair or replacement. Paying attention to the warning lights and gages could also save you or others from injury.

Warning lights come on when there may be or is a problem with one of your vehicle's functions. As the details show on the next few pages, some warning lights come on briefly when you start the engine just to let you know they are working. If you are familiar with this section, you should not be alarmed when this happens.

Gages can indicate when there may be or is a problem with one of your vehicle's functions. Often gages and warning lights work together to let you know when there is a problem with your vehicle.

When one of the warning lights comes on and stays on as you are driving, or when one of the gages shows there may be a problem, check the section that tells you what to do about it. Please follow this manual's advice. Waiting to do repairs can be costly and even dangerous. So please get to know your vehicle's warning lights and gages. They can be a big help.

Your vehicle may also have a Driver Information Center (DIC) that works along with the warning lights and gages. See *Driver Information Center (DIC) on page 3-55* for more information.

Downloaded from www.Manualslib.com manuals search engine

Instrument Panel Cluster

The instrument panel cluster is designed to show at a glance how the vehicle is running. It will show how fast the vehicle is going, about how much fuel is in the fuel tank, and many other things needed to drive the vehicle safely and economically.

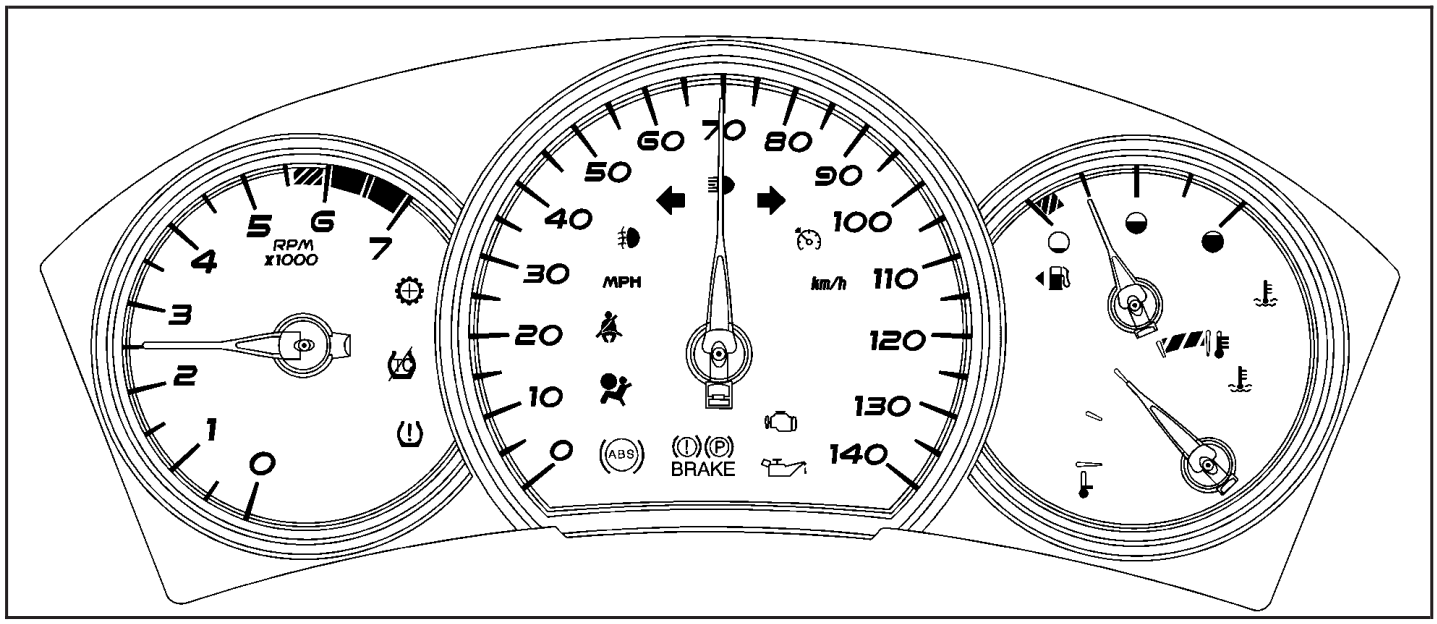

United States version shown, Canada similar

The vehicle is equipped with this cluster or one very similar to it. It has indicator warning lights that are explained on the following pages. Be sure to read about them.

Downloaded from www.Manualslib.com manuals search engine

Speedometer and Odometer

The speedometer shows the vehicle's speed in both miles per hour (mph) and kilometers per hour (km/h). The odometer, located on the Driver Information Center (DIC) display, shows how far the vehicle has been driven, in either miles or kilometers. See *DIC Operation and Displays (Uplevel DIC with Trip Computer) on page 3-55* or *DIC Operation and Displays (Base Level DIC) on page 3-62* for more information.

If the vehicle has the Head-Up Display (HUD) the speed will also be displayed on the HUD screen.

If a vehicle has to have a new odometer installed, a new one can be set to the mileage total of the old odometer, if that can be done. If it cannot, than it will be set at zero and a label must be put on the driver's door to show the old mileage reading when the new odometer was installed.

Tachometer

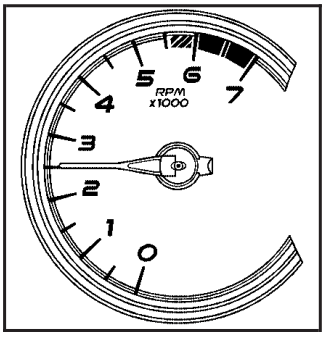

The tachometer displays the engine speed in revolutions per minute (rpm).

Notice: **If you operate the engine with the tachometer in the shaded warning area, your vehicle could be damaged, and the damages would not be covered by your warranty. Do not operate the engine with the tachometer in the shaded warning area.**

Downloaded from www.Manualslib.com manuals search engine

Safety Belt Reminders

Safety Belt Reminder Light

When the engine is started, a chime will come on for several seconds to remind people to fasten their safety belts, unless the driver's safety belt is already buckled.

The safety belt light will also come on and stay on for several seconds, then it will flash for several more.

This chime and light is repeated if the driver remains unbuckled and the vehicle is in motion. If the driver's belt is already buckled, neither the chime nor the light will come on.

Passenger Safety Belt Reminder Light

Several seconds after the engine is started, a chime will sound for several seconds to remind the front passenger to buckle their safety belt. This would only occur if the passenger airbag is enabled. See *Passenger Sensing System on page 1-60* for more information. The passenger safety belt light, located on the instrument panel, will come on and stay on for several seconds and then flash for several more.

This chime and light are repeated if the passenger remains unbuckled and the vehicle is in motion.

If the passenger's safety belt is buckled, neither the chime nor the light will come on.

Downloaded from www.Manualslib.com manuals search engine

Airbag Readiness Light

There is an airbag readiness light on the instrument panel cluster, which shows the airbag symbol. The system checks the airbag's electrical system for malfunctions. The light tells you if there is an electrical problem. The system check includes the airbag sensor, the pretensioners, the airbag modules, the wiring and the crash sensing and diagnostic module. For more information on the airbag system, see *Airbag System on page 1-52*.

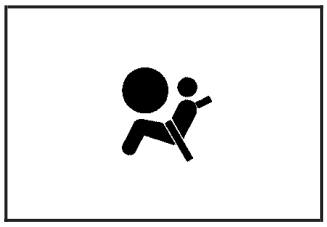

This light will come on when you start your vehicle, and it will flash for a few seconds. The light should go out and the system is ready.

If the airbag readiness light stays on after you start the vehicle or comes on when you are driving, your airbag system may not work properly. Have your vehicle serviced right away.

⚠ CAUTION:

If the airbag readiness light stays on after you start your vehicle, it means the airbag system may not be working properly. The airbags in your vehicle may not inflate in a crash, or they could even inflate without a crash. To help avoid injury to yourself or others, have your vehicle serviced right away if the airbag readiness light stays on after you start your vehicle.

The airbag readiness light should flash for a few seconds when you start the engine. If the light does not come on then, have it fixed immediately. If there is a problem with the airbag system, an airbag Driver Information Center (DIC) message may also come on. See *DIC Warnings and Messages on page 3-67* for more information.

Downloaded from www.Manualslib.com manuals search engine

Passenger Airbag Status Indicator

Your vehicle has the passenger sensing system. Your instrument panel has a passenger airbag status indicator.

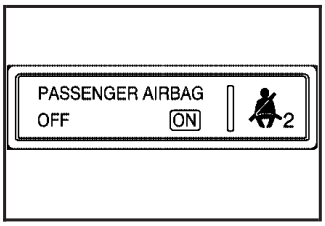

United States

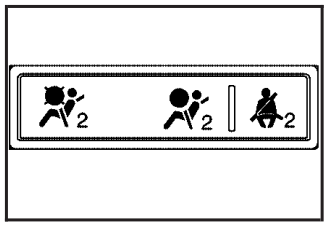

Canada

When you start the vehicle, the passenger airbag status indicator will light ON and OFF, or the symbol for on and off, for several seconds as a system check. If you use remote start to start your vehicle from a distance, if equipped, you may not see the system check. Then, after several more seconds, the status indicator will light either ON or OFF, or either the on or off symbol to let you know the status of the right front passenger's frontal airbag.

If the word ON or the on symbol is lit on the passenger airbag status indicator, it means that the right front passenger's frontal airbag is enabled (may inflate).

⚠ CAUTION:

If the on indicator comes on when you have a rear-facing child restraint installed in the right front passenger's seat, it means that the passenger sensing system has not turned off the passenger's frontal airbag. A child in a rear-facing child restraint can be seriously injured or killed if the right front passenger's airbag inflates. This is because the back of the rear-facing child restraint would be very close to the inflating airbag. Do not use a rear-facing child restraint in the right front passenger's seat if the airbag is turned on.

Downloaded from www.Manualslib.com manuals search engine

⚠ CAUTION:

Even though the passenger sensing system is designed to turn off the right front passenger's frontal airbag if the system detects a rear-facing child restraint, no system is fail-safe, and no one can guarantee that an airbag will not deploy under some unusual circumstance, even though it is turned off. We recommend that rear-facing child restraints be secured in the rear seat, even if the airbag is off.

If the word OFF or the off symbol is lit on the airbag status indicator, it means that the passenger sensing system has turned off the right front passenger's frontal airbag. See *Passenger Sensing System on page 1-60* for more on this, including important safety information.

If, after several seconds, both status indicator lights remain on, or if there are no lights at all, there may be a problem with the lights or the passenger sensing system. See your dealer/retailer for service.

⚠ CAUTION:

If the airbag readiness light in the instrument panel cluster ever comes on and stays on, it means that something may be wrong with the airbag system. If this ever happens, have the vehicle serviced promptly, because an adult-size person sitting in the right front passenger's seat may not have the protection of the airbag(s). See *Airbag Readiness Light on page 3-42* for more on this, including important safety information.

Downloaded from www.Manualslib.com manuals search engine

Up-Shift Light

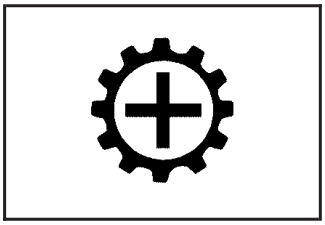

If your vehicle has this light, it will come on when the shift lever is in the manual transmission position.

It will appear as a prompt to up-shift to the next gear using one of the Tap-Shift® paddles located on the steering wheel.

If your vehicle has the Head-Up Display (HUD), it will only appear on it.

See *Automatic Transmission Operation on page 2-28* and *Head-Up Display (HUD) on page 3-23* for more information.

Brake System Warning Light

The vehicle's hydraulic brake system is divided into two parts. If one part is not working, the other part can still work and stop the vehicle. For good braking, though, both parts should be working well.

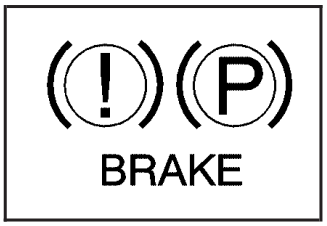

United States

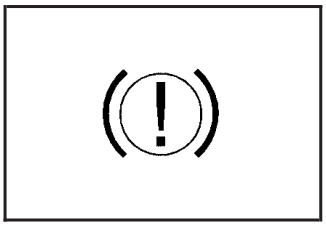

Canada

This light should come on briefly when the engine is started. If it does not come on then, have it fixed so it will be ready to warn you if there is a problem.

Downloaded from www.Manualslib.com manuals search engine

When the ignition is on, the brake system warning light will also come on when the parking brake is set. The light will stay on if the parking brake does not release fully. If it stays on after the parking brake is fully released, it means the vehicle has a brake problem.

The PARKING BRAKE ON message will also appear in the Driver Information Center (DIC) when the parking brake is set and the vehicle is going faster than 5 mph. See *DIC Warnings and Messages on page 3-67* for more information.

The brake warning light may also come on when the brake fluid is low. If this occurs, the LOW BRAKE FLUID message will also appear in the Driver Information Center (DIC). See *DIC Warnings and Messages on page 3-67* for more information.

If the brake warning light comes on while the vehicle is being driven, pull off the road and stop carefully. The brake pedal may be harder to push, or it may go closer to the floor. It may also take the vehicle longer to stop. If the light is still on, have the vehicle towed for service. See *Towing Your Vehicle on page 4-27*.

⚠ CAUTION:

Your brake system may not be working properly if the brake system warning light is on. Driving with the brake system warning light on can lead to an accident. If the light is still on after you have pulled off the road and stopped carefully, have the vehicle towed for service.

Downloaded from www.Manualslib.com manuals search engine

Anti-lock Brake System (ABS) Warning Light

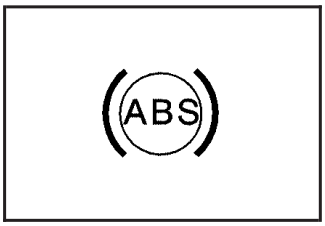

For vehicles with the Antilock Brake System (ABS), this light comes on briefly when the engine is started.

That is normal. If the light does not come on then, have it fixed so it will be ready to warn you if there is a problem.

If the ABS light stays on, turn the ignition off, if the light comes on when you are driving, stop as soon as it is safely possible and turn the ignition off. Then start the engine again to reset the system. If the ABS light still stays on, or comes on again while you are driving, your vehicle needs service. If the regular brake system warning light is not on, your vehicle still has brakes, but not antilock brakes. If the regular brake system warning light is also on, your vehicle does not have antilock brakes and there is a problem with the regular brakes. See *Brake System Warning Light on page 3-45*.

For vehicles with a Driver Information Center (DIC), see *DIC Warnings and Messages on page 3-67* for all brake related DIC messages.

Traction Control System (TCS) Warning Light

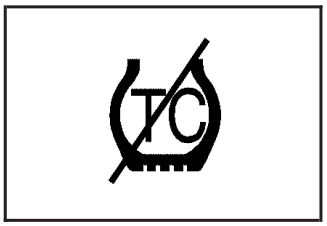

If the vehicle has the Traction Control System (TCS), this light may come on for the following reasons:

- The traction control button, located on the center console, is pressed, turning the system off. The light will stay on. To turn the system back on, press the button again and the warning light should go out. See *Traction Control System (TCS) on page 4-6* for more information.
- If there is a brake system problem that is specifically related to traction control, the TCS will turn off and the warning light will come on.
- If the brakes begin to overheat, the TCS will turn off and the warning light will come on until the brakes cool down.

If the TCS warning light comes on and stays on for an extended period of time when the system is turned on, the vehicle needs service.

Downloaded from www.Manualslib.com manuals search engine

Enhanced Traction System Warning Light

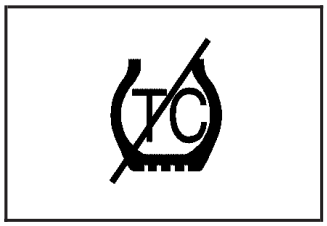

For vehicles with the Enhanced Traction System (ETS), this light may come on for the following reasons:

- If the traction control button located on the center console is pressed, turning the system off. This light will come on and stay on. To turn the system back on, press the button again and the warning light should turn off. See *Enhanced Traction System (ETS) on page 4-7*.
- If the system is affected by an engine-related problem, the system will turn off and the warning light will come on.

If the light comes on and stays on for an extended period of time when the system is turned on, the vehicle needs service.

Engine Coolant Temperature Warning Light

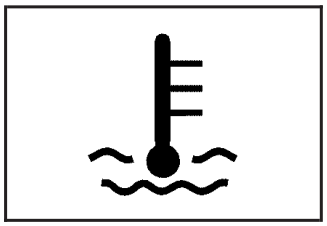

This light indicates that the engine coolant has overheated or the radiator cooling fan is not working.

If the vehicle has been operating under normal driving conditions, pull off the road, stop the vehicle, and turn off the engine as soon as possible.

See *Cooling System on page 5-30* for more information.

Downloaded from www.Manualslib.com manuals search engine

Engine Coolant Temperature Gage

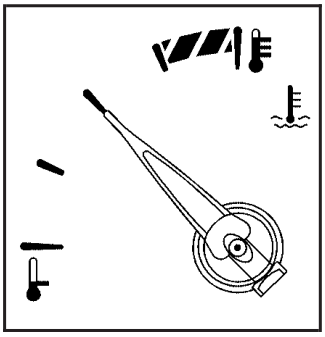

The vehicle has a gage that shows the engine coolant temperature.

If the gage pointer moves into the shaded area, the engine is too hot. That reading means the engine coolant has overheated. If you have been operating the vehicle under normal driving conditions, you should pull off the road, stop the vehicle, and turn off the engine as soon as possible.

See *Cooling System on page 5-30* for more information.

Tire Pressure Light

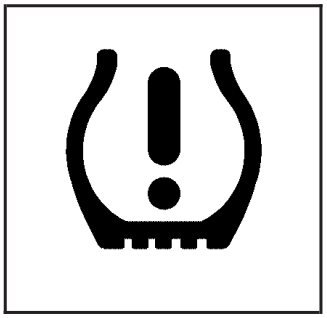

This light comes on briefly when the engine is started.

This light will also come on when one or more of your tires are significantly underinflated.

A tire pressure message in the Driver Information Center (DIC), may accompany the light. See *DIC Warnings and Messages on page 3-67* for more information.

Stop and check your tires as soon as it is safe to do so. If underinflated, inflate to the proper pressure. See *Tires on page 5-62* for more information.

If a problem is detected with the Tire Pressure Monitor System, this light will flash for approximately 60 seconds and then stay on solid for the remainder of the ignition cycle. See *Tire Pressure Monitor System on page 5-71* for more information.

Downloaded from www.Manualslib.com manuals search engine

Malfunction Indicator Lamp

Check Engine Light

A computer system called OBD II (On-Board Diagnostics-Second Generation) monitors operation of the fuel, ignition, and emission control systems. It makes sure that emissions are at acceptable levels for the life of the vehicle, helping to produce a cleaner environment.

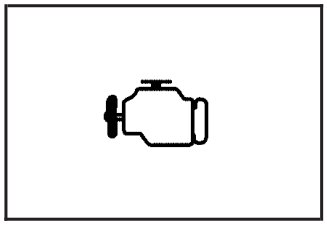

The check engine light comes on to indicate that there is an OBD II problem and service is required.

Malfunctions often are indicated by the system before any problem is apparent. This can prevent more serious damage to your vehicle. This system is also designed to assist your service technician in correctly diagnosing any malfunction.

Notice: **If you keep driving your vehicle with this light on, after a while, the emission controls might not work as well, your vehicle's fuel economy might not be as good, and the engine might not run as smoothly. This could lead to costly repairs that might not be covered by your warranty.**

Notice: **Modifications made to the engine, transmission, exhaust, intake, or fuel system of your vehicle or the replacement of the original tires with other than those of the same Tire Performance Criteria (TPC) can affect your vehicle's emission controls and can cause this light to come on. Modifications to these systems could lead to costly repairs not covered by your warranty. This could also result in a failure to pass a required Emission Inspection/Maintenance test. See *Accessories and Modifications on page 5-3*.**

This light comes on, as a check to show it is working, when the ignition is turned ON/RUN but the engine is not running. If the light does not come on, have it repaired. This light also comes on during a malfunction in one of two ways:

- **Light Flashing** — A misfire condition has been detected. A misfire increases vehicle emissions and could damage the emission control system on your vehicle. Diagnosis and service might be required.
- **Light On Steady** — An emission control system malfunction has been detected on your vehicle. Diagnosis and service might be required.

Downloaded from www.Manualslib.com manuals search engine

If the Light is Flashing

The following can prevent more serious damage to your vehicle:

- Reduce vehicle speed.
- Avoid hard accelerations.
- Avoid steep uphill grades.
- If you are towing a trailer, reduce the amount of cargo being hauled as soon as it is possible.

If the light stops flashing and remains on steady, see "If the Light Is On Steady" following.

If the light continues to flash, when it is safe to do so, stop the vehicle. Find a safe place to park the vehicle. Turn the ignition off, wait at least 10 seconds, and restart the engine. If the light remains on steady, see "If the Light Is On Steady" following. If the light is still flashing, follow the previous steps and see your dealer/retailer for service as soon as possible.

If the Light Is On Steady

You might be able to correct the emission system malfunction by considering the following:

Did you recently put fuel into your vehicle?

If so, reinstall the fuel cap, making sure to fully install the cap. See *Filling the Tank on page 5-8*. The diagnostic system can determine if the fuel cap has been left off or improperly installed. A loose or missing fuel cap allows fuel to evaporate into the atmosphere. A few driving trips with the cap properly installed should turn the light off.

Did you just drive through a deep puddle of water?

If so, your vehicle's electrical system might be wet. The condition is usually corrected when the electrical system dries out. A few driving trips should turn the light off.

Have you recently changed brands of fuel?

If so, be sure to fuel your vehicle with quality fuel. See *Gasoline Octane on page 5-5*. Poor fuel quality causes the engine not to run as efficiently as designed. You might notice this as stalling after start-up, stalling when you put the vehicle into gear, misfiring, hesitation on acceleration, or stumbling on acceleration — these conditions might go away once the engine is warmed up. This will be detected by the system and cause the light to turn on.

Downloaded from www.Manualslib.com manuals search engine

If you experience one or more of these conditions, change the fuel brand you use. It will require at least one full tank of the proper fuel to turn the light off.

If none of the above steps have made the light turn off, your dealer/retailer can check the vehicle. Your dealer/retailer has the proper test equipment and diagnostic tools to fix any mechanical or electrical problems that might have developed.

Emissions Inspection and Maintenance Programs

Some state/provincial and local governments have or might begin programs to inspect the emission control equipment on your vehicle. Failure to pass this inspection could prevent you from getting a vehicle registration.

Here are some things you need to know to help your vehicle pass an inspection:

Your vehicle will not pass this inspection if the check engine light is on or not working properly.

Your vehicle will not pass this inspection if the OBD (on-board diagnostic) system determines that critical emission control systems have not been completely diagnosed by the system. The vehicle would be considered not ready for inspection. This can happen if you have recently replaced the battery or if the battery has run down. The diagnostic system is designed to evaluate critical emission control systems during normal driving. This can take several days of routine driving. If you have done this and your vehicle still does not pass the inspection for lack of OBD system readiness, your dealer/retailer can prepare the vehicle for inspection.

Oil Pressure Light

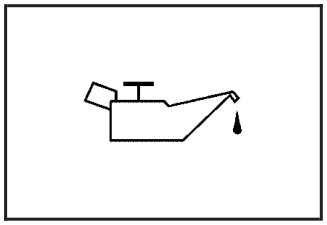

If there is a problem with the vehicle's oil pressure, this light may stay on when the engine is started.

It may also come on while the vehicle is being driven. This indicates that the engine could be low on oil or could have some other oil problem. Have it fixed right away.

Downloaded from www.Manualslib.com manuals search engine

The oil light could also come on in two other situations:

- When the ignition is on but the engine is not running, the light will come on as a test to indicate it is working. The light will go out when the engine is started. If it does not come on while the ignition is in the on position, there may be a problem with the fuse or bulb. See *Fuses and Circuit Breakers on page 5-121*.
- If the brakes are applied quickly and the vehicle makes a hard stop, the light may come on for a moment. This is normal.

⚠ CAUTION:

Do not keep driving if the oil pressure is low. If you do, your engine can become so hot that it catches fire. You or others could be burned. Check your oil as soon as possible and have your vehicle serviced.

Notice: **Lack of proper engine oil maintenance may damage the engine. The repairs would not be covered by your warranty. Always follow the maintenance schedule in this manual for changing engine oil.**

Fog Lamp Light

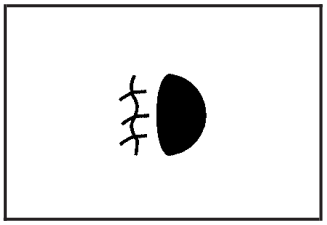

The fog lamp light will come on when the fog lamps are in use.

The light will go out when the fog lamps are turned off. See *Fog Lamps on page 3-18* for more information.

Cruise Control Light

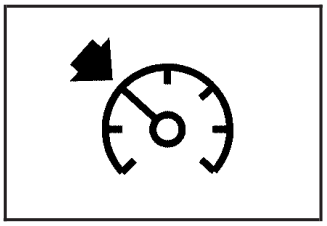

This light comes on whenever you set the cruise control.

The light goes out when the cruise control is turned off. See *Cruise Control on page 3-12* for more information.

Downloaded from www.Manualslib.com manuals search engine

Highbeam On Light

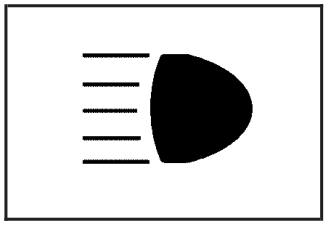

This light comes on when the high-beam headlamps are in use.

See *Headlamp High/Low-Beam Changer on page 3-9* for more information.

Fuel Gage

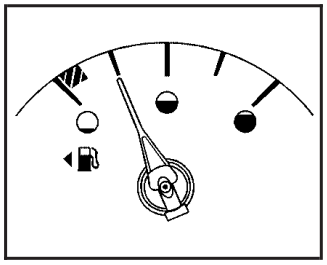

The fuel gage shows about how much fuel is left in the fuel tank when the ignition is on.

When the indicator nears empty, there is still a little fuel left, but you should get more soon.

Here are four things owners usually ask about the fuel gage. All these situations are normal and do not indicate a problem with the fuel gage:

- At the gas station the pump shuts off before the gage reads full.
- It takes more or less fuel to fill up than the gage indicates. For example, the gage reads half full, but it took more or less than half the tank's capacity to fill it.
- The gage pointer may move while cornering, braking or speeding up.
- The gage may not indicate full when the ignition is turned off.

Downloaded from www.Manualslib.com manuals search engine

Driver Information Center (DIC)

The Driver Information Center (DIC) gives important safety and maintenance facts. When the vehicle's ignition is turned on, all of the DIC lights illuminate for a few seconds and an introductory message will appear. After this, the DIC will begin working.

DIC Operation and Displays (Uplevel DIC with Trip Computer)

The Driver Information Center (DIC) control buttons and the message display screen are located above the radio. The DIC gives important safety and maintenance facts concerning the vehicle. The status of many of the vehicle's systems along with driver personalization menus and warning messages about the vehicle's systems may display on the DIC screen.

The outside temperature automatically appears on the bottom right corner of the DIC display screen. If the outside temperature is below 38°F (3°C), the temperature reading will toggle between displaying the outside temperature and the word ICE for two minutes. If there is a problem with the system that controls the temperature display, the letters OC (Open Circuit) or SC (Short Circuit) will appear on the display. If this occurs, have the vehicle serviced by your dealer/retailer.

The vehicle's shift lever position and the direction the vehicle is traveling will also appear on the DIC screen.

The compass is self-calibrating, which eliminates the need to manually set the compass. However, under certain circumstances, such as during a long distance cross-country trip, it will be necessary to compensate for compass variance and reset the zone through the DIC. See *DIC Compass (Uplevel DIC) on page 3-65* for more information.

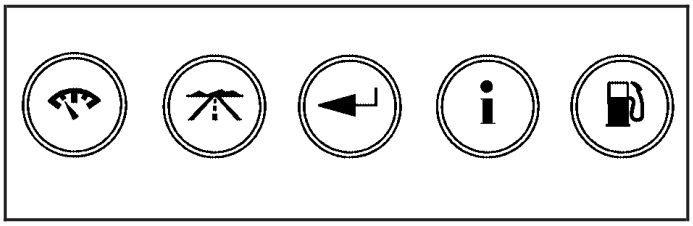

The buttons on the DIC trip computer are gages, trip odometer, set/reset, options, and fuel.

Gages

(Gages): Press this button to access the OIL LIFE REMAINING, TRANSMISSION FLUID TEMPERATURE, BATTERY, ENGINE HOURS, and MAXIMUM Gs modes.

Downloaded from www.Manualslib.com manuals search engine

OIL LIFE REMAINING: Press the gages button until OIL LIFE REMAINING is displayed. This screen indicates the percentage of oil life in the vehicle's engine that has not degraded. See *Engine Oil on page 5-15* for more information.

After the oil has been changed in the vehicle, reset the ENGINE OIL MONITOR screen in the options menu. To reset the engine oil monitor system, see *Engine Oil Life System on page 5-18*.

Press the gages button again to advance to the next screen.

TRANSMISSION FLUID TEMP: This screen displays this message along with the temperature (F° or C°) of the transmission fluid.

Press the gages button again to advance to the next screen.

BATTERY: This screen displays the amount of volts the battery is generating.

Your vehicle's charging system regulates voltage based on the state of the battery. The battery voltage may fluctuate when viewing this information on the DIC. This is normal.

See *Electric Power Management on page 3-22* for more information.

Press the gages button again to advance to the next screen.

ENGINE HOURS: This screen shows the number of cumulative hours the engine has operated while the key was in ON/RUN. This screen cannot be reset.

Press the gages button to advance to the next screen.

MAXIMUM Gs: If you have the GXP option, this screen will appear. The DIC monitors and keeps track of the maximum levels for acceleration, deceleration, and lateral-acceleration achieved since the screen was last reset. When trying to select this screen while the vehicle is moving, the message MAXIMUM Gs NOT AVAILABLE WHILE MOVING will display. To view the maximum accelerations achieved since last reset, stop the vehicle. The values will then display. To reset the values to zero, press and hold the set/reset button.

Press the gages button again to advance to the next screen.

Downloaded from www.Manualslib.com manuals search engine

Trip Odometer

(Trip Odometer): Press this button to access the Odometer, Trip Distances, AVERAGE SPEED, and TIME ELAPSED modes.

Odometer: When the trip odometer button is pressed, the first menu displayed on the DIC screen is the odometer reading, or cumulative mileage of the vehicle. The odometer cannot be reset.

Press the trip odometer button again to advance to the next menu.

Trip Distances: This menu shows the distances that the vehicle has driven between specific points. The trip odometer will record the number of miles up to 9,999.9 miles or 9 999.9 km travelled for up to two trips. When 9,999.9 miles or 9 999.9 km is reached for either trip, the odometer for that trip will go back to zero.

To reset the trip distances:

1. Press the trip odometer button again to access TRIP A. Press the trip odometer button again to access TRIP B. To reset the trip odometer(s) back to zero miles or to zero kilometers, access the trip that needs to be reset and press the set/reset button.
2. Press the trip odometer button again to advance to the next screen.

The trip odometer has a feature called the retro-active reset. This can be used to set the trip odometer to the number of miles (kilometers) driven since the ignition was last turned on. This can be used if the trip odometer is not reset at the beginning of the trip.

To use the retro-active reset feature, press and hold the set/reset button for at least three seconds. The trip odometer will display the number of miles or kilometers driven since the ignition was last turned on and the vehicle was moving. Once the vehicle begins moving, the trip odometer will accumulate mileage. For example, if the vehicle was driven 5.0 miles (8.0 km) before it is started again, and then the retro-active reset feature is activated, the display will show 5.0 miles (8.0 km). As the vehicle begins moving, the display will then increase to 5.1 miles (8.2 km), 5.2 miles (8.4 km), etc.

If the retro-active reset feature is activated after the vehicle is started, but before it begins moving, the display will show the number of miles or kilometers that were driven during the last ignition cycle.

Downloaded from www.Manualslib.com manuals search engine

AVERAGE SPEED: The average speed is displayed in miles per hour (mph) or kilometers per hour (km/h). The average speed is calculated from the various vehicle speeds recorded since the last reset of this menu item. To reset the average speed, press the set/reset button. The display will return to zero.

Press the trip odometer button again to advance to the next screen.

TIME ELAPSED: This screen can be used as a stopwatch. The display can show the hours, minutes and seconds. The elapsed time indicator will record up to 99 hours, 59 minutes and 59 seconds, then it will reset to zero and continue counting.

To set the time elapsed function:

1. Press the set/reset button for less than two seconds to start or stop the timer.
2. Press and hold the set/reset button for more than two seconds to reset the timer back to zero.

Press the trip odometer button again to advance to the next screen.

Set/Reset

(Set/Reset): Press this button to set or reset a mode item when using the trip odometer or option buttons.

Options

(Options): Press this button to access the Date, Language, Display Units, Daytime Display Enhancement, Engine Oil Monitor System, Compass Calibration, Personal Programming modes, and Tire Pressure readings.

Date: This menu sets the date.

The time is set through the radio. See *Setting the Clock on page 3-95* for more information.

To set the date:

1. Press the options button until the date is displayed on the DIC.
2. Press the set/reset button to access the RESET YEAR screen. The second position in the year will be selected. Press and hold the set/reset button to scroll through the available digits. Release the button when the correct digit appears.
3. Press the options button to advance to the first position in the year. Press and hold the set/reset button to scroll through the available digits. Release the button when the correct digit appears.
4. Press the options button to advance to the months of the year.

Downloaded from www.Manualslib.com manuals search engine

5. Press the set/reset button to scroll through the months of the year, releasing the button when the correct month appears.
6. Press the options button to advance to the days of the month.
7. Press the set/reset button to scroll through the days of the month, releasing the button when the correct day appears.
8. Press the options button again to advance to the main date screen. The screen will now display the new date.
9. Press the options button to advance to the next screen.

Language: This menu allows selection of the language in which the DIC messages will appear. The DIC can be programmed in one of three languages: English, French, or Spanish. The message on the HUD, if equipped, will also appear in the language selected. See *Head-Up Display (HUD) on page 3-23*.

To change the language:

1. Press the options button to enter the language screen.
2. Press the set/reset button to scroll through and set the language choice.
3. Press the options button again to advance to the next screen.

DISPLAY UNITS: This menu allows selection of measurements to be displayed in English or metric units. The messages on the HUD, if equipped, and the instrument panel cluster will also appear in the type of measurement selected.

To set the display units function:

1. Press the set/reset button to select ENGLISH or METRIC.
2. Press the options button to advance to the next screen.

DAYTIME DISPLAY ENHANCEMENT: This menu allows selection of the color of the display message. When ON is selected for the daytime enhancement, the messages will appear black on a red screen. This combination makes it easier to see the DIC messages during the daytime. When OFF is selected, or when the headlamps are on, the messages will appear red on a black background.

To set the daytime display enhancement function:

1. Press the set/reset button to select OFF or ON.
2. Press the options button to advance to the next screen.

Downloaded from www.Manualslib.com manuals search engine

ENGINE OIL MONITOR SYSTEM: This menu allows the engine oil monitor system to be reset. To reset the engine oil monitor system, see *Engine Oil Life System on page 5-18*.

Press the options button to advance to the next screen.

COMPASS CALIBRATION MODE: This menu allows you to adjust for compass variance. See *DIC Compass (Uplevel DIC) on page 3-65* for more information.

Press the options button again to advance to the next screen.

PERSONAL PROGRAMMING MODE: This menu allows you to customize several features on your vehicle. See *DIC Vehicle Customization on page 3-89* for more information.

Press the options button again to advance to the next screen.

TIRE PRESSURE: This menu shows the tire pressure for each tire. The tire pressure will be shown in either pounds per square inch (psi) or kilopascals (kPa). Press the options button until the DIC shows the tire pressure for the front tires. Press the options button again to view the pressure for the rear tires.

If a low tire pressure condition is detected by the system while driving, a message advising you to check the pressure in a specific tire will appear in the display. See *Inflation - Tire Pressure on page 5-69* and *DIC Warnings and Messages on page 3-67* for more information.

If the tire pressure display shows dashes instead of a value, there may be a problem with your vehicle. If this consistently occurs, see your dealer/retailer for service.

Press the options button to advance to the next screen.

DISPLAY OFF will appear on the next screen. The screen will count down and then go blank.

Press the options button to return to the main (date) screen.

Downloaded from www.Manualslib.com manuals search engine

Fuel

(Fuel): Press this button to access the Average Fuel Economy, Instantaneous Fuel Economy, and Fuel Range modes.

AVG ECONOMY (Average Fuel Economy): This screen will display the approximate average miles per gallon (mpg) or liters per 100 kilometers (L/100 km). This number is calculated based on the number of mpg (L/100 km) recorded since the last time this menu item was reset.

To reset the average fuel economy for the vehicle, follow this procedure:

1. Press the set/reset button to reset to zero.
2. Press the fuel button again to advance to the next screen.

INST ECONOMY (Instantaneous Fuel Economy): This screen displays the current fuel economy at a particular moment and will change frequently as driving conditions change. Unlike average fuel economy, this screen cannot be reset.

Press the fuel button again to advance to the next screen.

RANGE: This screen displays the approximate number of remaining miles or kilometers the vehicle can be driven without refueling. This estimate is based on the average fuel economy for the amount of fuel remaining in the fuel tank and the current driving conditions. This estimate will change if driving conditions change. For example, if driving in traffic and making frequent stops, the display may read one number, but if the vehicle is driven on a freeway the number may change even though the same amount of fuel is in the fuel tank. This is because different driving conditions produce different fuel economies. Generally, freeway driving produces better fuel economy than city driving.

If the fuel tank contains less than 2 gallons (7.6 L), the LOW FUEL message will appear on the DIC screen. Fill the fuel tank as soon as possible to avoid running out of fuel. See “Low Fuel” under *DIC Warnings and Messages on page 3-67*.

Press the fuel button again to advance to the next screen.

Downloaded from www.Manualslib.com manuals search engine

DIC Operation and Displays (Base Level DIC)

The Driver Information Center (DIC) control buttons and the message display screen are located above the radio. The DIC gives important safety and maintenance facts concerning the vehicle. The status of many of the vehicle's systems along with driver personal programming mode menus and warning messages about the vehicle's systems may display on the DIC screen.

The vehicle's shift lever position will also appear.

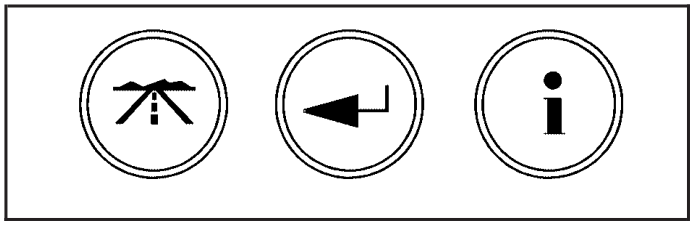

The buttons on the base level are trip odometer, set/reset, and options.

Trip Odometer

(Trip Odometer): Press this button to access the odometer and trip distance modes.

The first menu on the DIC screen will be the odometer reading, or cumulative mileage of the vehicle. The odometer cannot be reset.

Press the trip odometer button to advance to the next menu.

Trip Distances: This menu shows the distances that the vehicle has driven between specific points. The trip odometer will record the number of miles up to 9,999.9 miles or 9 999.9 km travelled for up to two trips. When 9,999.9 miles or 9 999.9 km is reached for either trip, the odometer for that trip will go back to zero.

Press the trip odometer button again to access TRIP A. Press the trip odometer button again to access TRIP B. To reset the trip odometer(s) back to zero miles or kilometers, access the trip to reset and press the set/reset button.

The trip odometer has a feature called the retro-active reset. This can be used to set the trip odometer to the number of miles or kilometers driven since the ignition was last turned on. This can be used if the trip odometer was not reset at the beginning of the trip.

Downloaded from www.Manualslib.com manuals search engine

To use the retro-active reset feature, press and hold the set/reset button for at least three seconds. The trip odometer will display the number of miles or kilometers driven since the ignition was last turned on and the vehicle began moving. Once the vehicle has begun moving, the trip odometer will accumulate mileage. For example, if the vehicle was driven 5.0 miles (8.0 km) before the vehicle is started again, and then the retro-active reset feature is activated, the display will show 5.0 miles (8.0 km). As the vehicle begins moving, the display will increase to 5.1 miles (8.2 km), 5.2 miles (8.4 km), etc.

If the retro-active reset feature is activated after the vehicle is started, but before it begins moving, the display will show the number of miles or kilometers that were driven during the last ignition cycle.

Press the trip odometer button again to access the odometer.

Set/Reset

(Set/Reset): Press this button to set or reset a menu item when using the trip odometer or options buttons.

Options

(Options): Press this button to access the Date, Language, Display Units, Daytime Display Enhancement, Engine Oil Monitor System, Personal Programming modes, and Tire Pressure readings.

Date: This menu sets the date.

The time is set through the radio. See *Setting the Clock on page 3-95* for more information.

To set the date:

1. Press the options button until the date is displayed on the DIC.
2. Press the set/reset button to access the RESET YEAR screen. The second position in the year will be selected. Press and hold the set/reset button to scroll through the available digits. Release the button when the correct digit appears.
3. Press the options button to advance to the first position in the year. Press and hold the set/reset button to scroll through the available digits. Release the button when the correct digit appears.
4. Press the options button to advance to the months of the year.

Downloaded from www.Manualslib.com manuals search engine

5. Press the set/reset button to scroll through the months of the year, releasing the button when the correct month appears.
6. Press the options button to advance to the days of the month.
7. Press the set/reset button to scroll through the days of the month, releasing the button when the correct day appears.
8. Press the options button again to advance to the main date screen. The screen will now display the new date.

Language: This menu allows the selection of the language in which the DIC messages will appear. The DIC can be programmed to one of three languages: English, French, or Spanish. The message on the HUD, if equipped, will also appear in the language selected. See *Head-Up Display (HUD) on page 3-23*.

To change the language:

1. Press the options button to enter the language screen.
2. Press the set/reset button to scroll through and set the language choice.
3. Press the options button again to advance to the next screen.

DISPLAY UNITS: This menu allows selection of measurements to be displayed in English or metric units. The messages on the HUD, if equipped, and the instrument panel cluster will also appear with the type of measurement selected.

To set the measurement when Display Units is shown:

1. Press the set/reset button to select ENGLISH or METRIC.
2. Press the options button again to advance to the next screen.

DAYTIME DISPLAY ENHANCEMENT: This menu allows selection of the color of the display message. When ON is selected for the daytime enhancement, the messages will appear black on a red screen. This combination makes it easier to see the DIC messages during the daytime. When OFF is selected, or when the headlamps are on, the messages will appear red on a black background.

To set the daytime display enhancement:

1. Press the set/reset button to select OFF or ON.
2. Press the options button again to advance to the next screen.

Downloaded from www.Manualslib.com manuals search engine

ENGINE OIL MONITOR SYSTEM: This menu allows the engine oil monitor system to be reset. To reset the engine oil monitor system, see *Engine Oil Life System on page 5-18*.

PERSONAL PROGRAMMING MODE: This menu allows you to customize several features on your vehicle. See *DIC Vehicle Customization on page 3-89* for more information.

Press the options button again to advance to the next screen.

TIRE PRESSURE: This menu shows the tire pressure for each tire. The tire pressure will be shown in either pounds per square inch (psi) or kilopascals (kPa). Press the options button until the DIC shows the tire pressure for the front tires. Press the options button again to view the pressure for the rear tires.

If a low tire pressure condition is detected by the system while driving, a message advising you to check the pressure in a specific tire will appear in the display. See *Inflation - Tire Pressure on page 5-69* and *DIC Warnings and Messages on page 3-67* for more information.

If the tire pressure display shows dashes instead of a value, there may be a problem with your vehicle. If this consistently occurs, see your dealer/retailer for service.

DISPLAY OFF will appear on the next screen. The screen will count down and then go blank. Press the options button to advance to a new screen.

Press the options button to return to the main (date) screen.

DIC Compass (Uplevel DIC)

Your vehicle may have a compass in the Driver Information Center (DIC).

Compass Zone

The zone is set to zone eight upon leaving the factory. Your dealer/retailer will set the correct zone for your location.

Under certain circumstances, such as during a long distance cross-country trip or moving to a new state or province, it will be necessary to compensate for compass variance by resetting the zone through the DIC if the zone is not set correctly.

Compass variance is the difference between the earth's magnetic north and true geographic north. If the compass is not set to the zone where you live, the compass may give false readings. The compass must be set to the variance zone in which the vehicle is traveling.

Downloaded from www.Manualslib.com manuals search engine

Compass Calibration

The compass can be manually calibrated. Only calibrate the compass in a magnetically clean and safe location, such as an open parking lot, where driving the vehicle in circles is not a danger. It is suggested to calibrate away from tall buildings, utility wires, manhole covers, or other industrial structures, if possible.

If the DIC display does not show a heading, for example, N for North, or the heading does not change after making turns, there may be a strong magnetic field interfering with the compass. Such interference may be caused by a magnetic CB or cell phone antenna mount, a magnetic emergency light, magnetic note pad holder, or any other magnetic item. Turn off the vehicle, move the magnetic item, then turn on the vehicle and calibrate the compass.

To adjust for compass variance and to calibrate the compass, use the following procedure:

Compass Variance (Zone) and Calibration Procedure

1. Do not set the compass zone when the vehicle is moving. Only set it when the vehicle is in PARK (P).

   Press the options button until COMPASS CALIBRATION MODE displays.

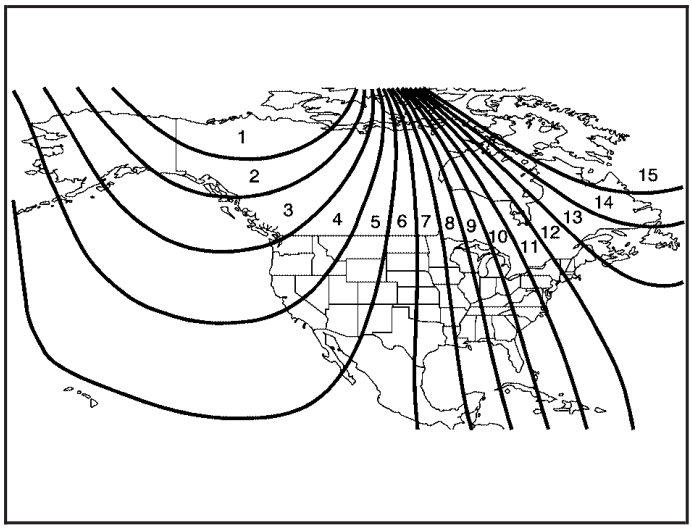

2. Find the vehicle's current location and variance zone number on the map.

   Zones 1 through 15 are available.

3. Press the set/reset button to scroll through and select the appropriate variance zone.

4. Press the options button to advance to the calibration screen.

   Do not operate any switches such as window, sunroof, climate controls, seats, etc. during the calibration procedure.

Downloaded from www.Manualslib.com manuals search engine

5. The DIC will display COMPASS CALIBRATION MODE - DRIVE CAR IN CIRCLE. Drive the vehicle in tight circles at less than 5 mph (8 km/h) to complete the calibration.

The direction the vehicle is moving will be displayed in the bottom left corner of the screen, and will appear in the gages, fuel, trip, and some of the options modes.

DIC Warnings and Messages

These messages display if there is a problem in one of the vehicle's systems. They override any other mode or screen the Driver Information Center (DIC) may be in.

Some messages can be cleared from the DIC screen. In order to do this, the message must be acknowledged. To acknowledge or clear the message from the screen, press the set/reset button on the DIC. See *DIC Operation and Displays (Uplevel DIC with Trip Computer) on page 3-55* or *DIC Operation and Displays (Base Level DIC) on page 3-62* for DIC button descriptions.

Other warning messages are not allowed to be cleared until the problem indicated by the warning message is taken care of. When the problem indicated by the message is resolved, it can be acknowledged and the screen can be reset.

Be sure to take any message that appears on the DIC screen seriously and remember that clearing the messages that are able to be acknowledged, will only make the message disappear, not correct the problem.

A/C OFF FOR ENGINE PROTECTION

This message displays when the engine coolant becomes hotter than the normal operating temperature. To avoid added strain on a hot engine, the air conditioning compressor is automatically turned off. When the coolant temperature returns to normal, the air conditioning compressor turns back on. The vehicle can then continue to be driven.

This message comes on while the ignition is in ON/RUN. A chime sounds for two seconds when this message is displayed. Press the set/reset button to acknowledge this warning message and to clear it from the screen.

This message continues to display for three seconds if it has not been acknowledged when the engine is turned off. It also re-displays for three seconds if the message has been acknowledged, but the condition still exists when the engine is turned off.

If the condition still exists, the message re-appears when the engine is turned on.

Downloaded from www.Manualslib.com manuals search engine

AJAR

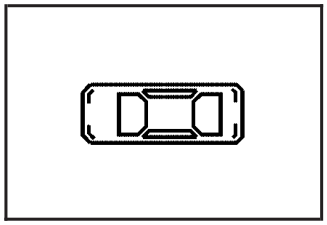

This symbol appears with this message.

This message displays when a door or the trunk is not closed properly. If your vehicle has the remote start feature, this message also displays when the hood is not closed properly. The graphic highlights the area that is not closed properly. Make sure that the area indicated is closed completely.

This message displays while the ignition is in ON/RUN. A chime sounds for two seconds when the gear position is shifted out of PARK (P). Press the set/reset button to acknowledge this message and to clear it from the screen.

This message continues to display for three seconds if it has not been acknowledged when the engine is turned off. It also re-displays for three seconds if the message has been acknowledged, but the condition still exists when the engine is turned off.

If the condition still exists, the message re-appears when the engine is turned on.

BATTERY SAVER ACTIVE

This message displays when the system detects that the battery voltage is dropping beyond a reasonable level. The battery saver system starts reducing certain features of the vehicle which you may be able to notice. At the point that the features are disabled, this message is displayed. It means that the vehicle is trying to save the charge in the battery. Turn off all unnecessary accessories to allow the battery to recharge. The normal battery voltage range is 11.5 to 15.5 volts. If your vehicle has the uplevel DIC, you can monitor battery voltage on the DIC by pressing the gages button until BATTERY appears.

CHANGE OIL SOON

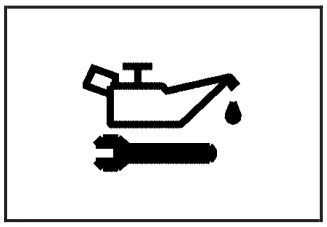

This symbol comes on with this message.

This message displays when service is required for the vehicle. See your dealer/retailer. See *Engine Oil on page 5-15* and *Scheduled Maintenance on page 6-4* for more information.

Downloaded from www.Manualslib.com manuals search engine

The CHANGE OIL SOON message is reset by acknowledging the message. The ENGINE OIL MONITOR SYSTEM screen under the options menu on the DIC must also be reset. See “Engine Oil Monitor System” in options under *DIC Operation and Displays (Uplevel DIC with Trip Computer) on page 3-55* or *DIC Operation and Displays (Base Level DIC) on page 3-62* for more information.

This message displays while the ignition is in ON/RUN. Press the set/reset button to acknowledge this message and to clear it from the screen.

This message continues to display for three seconds if it has not been acknowledged when the engine is turned off. It also re-displays for three seconds if the message has been acknowledged, but the condition still exists when the engine is turned off.

If the condition still exists, the message re-appears when the engine is turned on.

CHARGING SYSTEM FAILURE

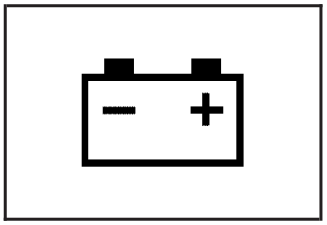

This symbol comes on with this message.

This message displays when there is a problem with the generator and battery charging systems. Driving with this problem could drain the battery. Turn off all unnecessary accessories. Stop and turn off the vehicle as soon as it is safe to do so. Have the electrical system checked by your dealer/retailer as soon as possible.

This message displays while the ignition is in ON/RUN. A chime sounds for two seconds when this message is displayed. Press the set/reset button to acknowledge this message and to clear it from the screen.

This message continues to display if it has not been acknowledged when the engine is turned off. It also re-displays for three seconds if the message has been acknowledged, but the condition still exists when the engine is turned off.

If the condition still exists, the message re-appears when the engine is turned on.

Downloaded from www.Manualslib.com manuals search engine

CHECK GAS CAP

This message displays when the fuel cap is not on, or is not fully tightened. Check the fuel cap to ensure it is on and properly tightened. The diagnostic system can determine if the fuel cap has been left off or improperly installed. A loose or missing fuel cap allows fuel to evaporate into the atmosphere. A few driving trips with the cap properly installed should turn this message off. See *Filling the Tank on page 5-8* for more information.

This message displays while the ignition is in ON/RUN. A chime sounds for two seconds when this message is displayed and then the message continues to display. Press the set/reset button to acknowledge this message and to clear it from the screen.

This message continues to display for three seconds if it has not been acknowledged when the engine is turned off. It also re-displays for three seconds if the message has been acknowledged, but the condition still exists when the engine is turned off.

If the condition still exists, the message re-appears when the engine is turned on.

CHECK TIRE PRESSURE

This message displays when the pressure in one or more of the vehicle's tires needs to be checked. This message also displays LEFT FRONT, RIGHT FRONT, LEFT REAR, or RIGHT REAR to indicate which tire needs to be checked. You can receive more than one tire pressure message at a time. To read the other messages that may have been sent at the same time, press the set/reset button. If a tire pressure message appears on the DIC, stop as soon as you can. Have the tire pressures checked and set to those shown on the Tire Loading Information label. See *Tires on page 5-62*, *Loading Your Vehicle on page 4-22*, and *Inflation - Tire Pressure on page 5-69*. The DIC also shows the tire pressure values. See *DIC Operation and Displays (Uplevel DIC with Trip Computer) on page 3-55* or *DIC Operation and Displays (Base Level DIC) on page 3-62*. If the tire pressure is low, the low tire pressure warning light comes on. See *Tire Pressure Light on page 3-49*.

This message displays while the ignition is in ON/RUN. Press the set/reset button to acknowledge this message and to clear it from the screen.

This message continues to display for three seconds if it has not been acknowledged when the engine is turned off. It also re-displays for three seconds if the message has been acknowledged, but the condition still exists when the engine is turned off.

If the condition still exists, the message re-appears when the engine is turned on.

Downloaded from www.Manualslib.com manuals search engine

CRUISE SET

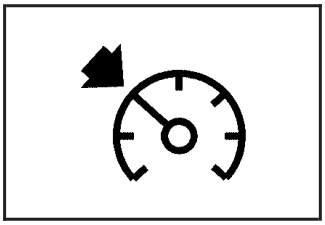

This symbol comes on with this message.

This message and symbol display briefly whenever the cruise control is set. The cruise control light on the instrument panel cluster also comes on when cruise control is set. See *Cruise Control Light on page 3-53*. CRUISE SET also appears briefly in the Head-Up Display (HUD), if your vehicle has this feature. This message displays when the ignition is in ON/RUN. See *Cruise Control on page 3-12* for more information.

This message does not need to be acknowledged.

DELAYED LOCKING

This message displays when the doors of the vehicle are closed and the delayed locking feature has been programmed through the DIC. See “DELAYED LOCKING” under *DIC Vehicle Customization on page 3-89* for more information.

This message displays when the ignition is in LOCK/OFF. A chime sounds for two seconds when this message is displayed.

This message cannot be acknowledged.

HEADLAMPS SUGGESTED

This message displays when the amount of available light outside the vehicle is low and the exterior lamps control has been turned off. This condition happens when the headlamps are turned off at night or the Daytime Running Lamps (DRL) are turned off during the day. This message informs the driver that it has become dark enough outside to require the headlamps to be turned on. When the headlamps are turned on, this message clears from the screen. See *Exterior Lamps on page 3-16* and *Daytime Running Lamps (DRL) on page 3-17* for more information.

This message displays while the ignition is in ON/RUN. A chime sounds for two seconds when this message is displayed. Press the set/reset button to acknowledge this warning message and to clear it from the screen.

This message continues to display if it has not been acknowledged when the engine is turned off. It also re-displays for three seconds if the message has been acknowledged, but the condition still exists when the engine is turned off.

If the condition still exists, the message re-appears when the engine is turned on.

Downloaded from www.Manualslib.com manuals search engine

HOT COOLANT

Notice: **If the HOT COOLANT warning message appears on the DIC display, stop the vehicle as soon as possible. Do not increase the engine speed above normal idling speed. Severe engine damage can result from driving a vehicle with an overheated engine. See *Engine Overheating on page 5-27* for more information.**

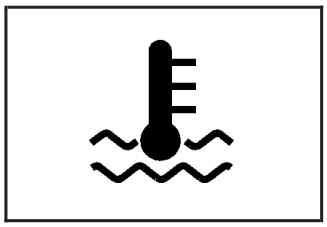

This symbol comes on with this message.

This message displays when the engine coolant temperature is too hot. The engine coolant temperature warning light also appears on the instrument panel cluster. Also, the engine coolant temperature gage will read in the red or hot area. See *Engine Coolant Temperature Warning Light on page 3-48* and *Engine Coolant Temperature Gage on page 3-49* for more information.

To avoid added strain, turn off the air conditioner if it is on. When the coolant temperature returns to normal, the air conditioner can be turned back on.

This message displays only while the ignition is in ON/RUN. A chime sounds continuously when this message is displayed. Press the set/reset button to acknowledge this message and to clear it from the screen.

This message continues to display if it has not been acknowledged when the engine is turned off. It also re-displays for three seconds if the message has been acknowledged, but the condition still exists when the engine is turned off.

If the condition still exists, the message re-appears when the engine is turned on.

HOT ENGINE OIL. REDUCE SPEED

On some vehicles, this message displays when the vehicle's engine oil is above the proper engine operating temperature. Reduce the speed of the vehicle. If this message continues to display, have the vehicle serviced by your dealer/retailer as soon as possible. A chime sounds continuously when this message is displayed. Press the set/reset button to acknowledge this message and to clear it from the screen.

If the condition still exists, the message re-appears when the engine is turned on.

Downloaded from www.Manualslib.com manuals search engine

HOT TRANS (Transmission) FLUID

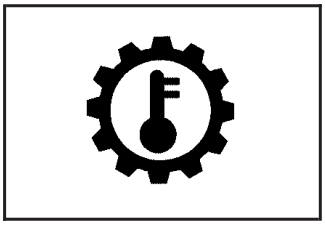

This symbol comes on with this message.

This message displays when the transmission fluid in the vehicle is too hot. Stop the vehicle and allow it to idle until it cools down. If this message continues to display, have the vehicle serviced by your dealer/retailer as soon as possible.

If the vehicle has the Uplevel Trip Computer DIC, you can determine the actual temperature of the transmission fluid using the vehicle's gages button. See *DIC Operation and Displays (Uplevel DIC with Trip Computer) on page 3-55* or *DIC Operation and Displays (Base Level DIC) on page 3-62* for more information.

This message displays while the ignition is in ON/RUN. A chime sounds for two seconds when this message is displayed. Press the set/reset button to acknowledge this message and to clear it from the screen.

This message continues to display if it has not been acknowledged when the engine is turned off. It also re-displays for three seconds if the message has been acknowledged, but the condition still exists when the engine is turned off.

If the condition still exists, the message re-appears when the engine is turned on.

KEY FOB BATTERY LOW

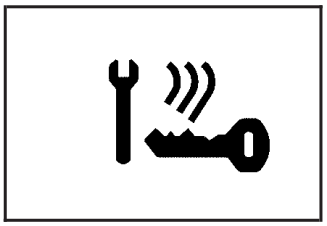

This symbol comes on with this message.

This message displays when the battery in the Remote Keyless Entry (RKE) transmitter needs to be replaced. To replace the battery, see "Battery Replacement" under *Remote Keyless Entry (RKE) System Operation on page 2-4*.

This message displays while the ignition is in ON/RUN. A chime sounds for two seconds when this message is displayed. Press the set/reset button to acknowledge this message and to clear it from the screen.

Downloaded from www.Manualslib.com manuals search engine

This message continues to display if it has not been acknowledged when the engine is turned off. It also re-displays for three seconds if the message has been acknowledged, but the condition still exists when the engine is turned off.

The message re-appears when the engine is turned on and the condition still exists.

KEY IN IGNITION

This message displays and a chime sounds continuously when the driver exits the vehicle while the key is in the ignition after the engine is turned off.

This message cannot be acknowledged.

This message disappears and the chiming stops when the key is removed from the ignition.

LEFT FRONT TURN LAMP OUT

This message displays when the left front turn signal lamp needs to be replaced. See *Taillamps, Turn Signal, and Stoplamps on page 5-58* for replacement procedures.

This message displays while the ignition is in ON/RUN. A chime sounds for two seconds when this message is displayed. Press the set/reset button to acknowledge this message and to clear it from the screen.

This message continues to display if it has not been acknowledged when the engine is turned off. It also re-displays for three seconds if the message has been acknowledged, but the condition still exists when the engine is turned off.

If the condition still exists, the message re-appears when the engine is turned on.

LEFT REAR TURN LAMP OUT

This message displays when the left rear turn signal lamp needs to be replaced. See *Taillamps, Turn Signal, and Stoplamps on page 5-58* for replacement procedures.

This message displays while the ignition is in ON/RUN. A chime sounds for two seconds when this message is displayed. Press the set/reset button to acknowledge this message and to clear it from the screen.

This message continues to display if it has not been acknowledged when the engine is turned off. It also re-displays for three seconds if the message has been acknowledged, but the condition still exists when the engine is turned off.

If the condition still exists, the message re-appears when the engine is turned on.

Downloaded from www.Manualslib.com manuals search engine

LOW BRAKE FLUID

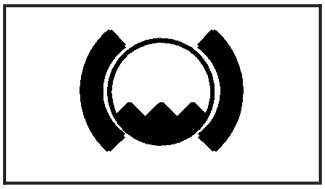

This symbol comes on with this message.

This message displays when the brake fluid level is low. Have the brake system serviced by your dealer/retailer as soon as possible. See *Brakes on page 5-41*.

The brake system warning light also appears on the instrument panel cluster when this message appears on the DIC. See *Brake System Warning Light on page 3-45*.

This message displays only while the ignition is in ON/RUN. A chime sounds for two seconds while this message is displayed. Press the set/reset button to acknowledge this message and to clear it from the screen.

This message continues to display if it has not been acknowledged when the engine is turned off. It also re-displays for three seconds if the message has been acknowledged, but the condition still exists when the engine is turned off.

If the condition exists, the message re-appears when the engine is turned on.

LOW FUEL

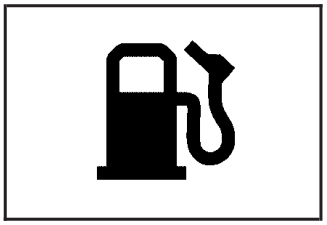

This symbol comes on with this message.

This message displays when the vehicle is low on fuel. Refill the fuel tank as soon as possible.

This message displays while the ignition is in ON/RUN. A chime sounds for two seconds when this message is displayed. Press the set/reset button to acknowledge this message and to clear it from the screen.

This message continues to display if it has not been acknowledged when the engine is turned off. It also re-displays for three seconds if the message has been acknowledged, but the condition still exists when the engine is turned off.

If the condition still exists, the message re-appears when the engine is turned on.

Downloaded from www.Manualslib.com manuals search engine

LOW OIL LEVEL

On some vehicles, this message displays when the vehicle's engine oil is low.

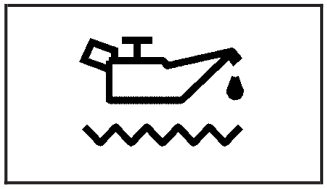

This symbol comes on with this message.

If this message comes on, fill the oil to the proper level as soon as possible. See *Engine Compartment Overview on page 5-12* for engine oil fill location. Also, see *Engine Oil on page 5-15* for information on the kind of oil to use and proper oil level.

This message displays while the ignition is in ON/RUN. A chime sounds for two seconds when this message is displayed. Press the set/reset button to acknowledge this message and to clear it from the screen.

This message continues to display if it has not been acknowledged when the engine is turned off. It also re-displays for three seconds if the message has been acknowledged, but the condition still exists when the engine is turned off.

If the condition still exists, the message re-appears when the engine is turned on.

LOW OIL PRESSURE

Notice: **If the LOW OIL PRESSURE warning message appears on the DIC display, stop the vehicle immediately. Do not drive the vehicle until the cause of the low oil pressure is corrected. Severe engine damage can result from driving a vehicle with low oil pressure. See *Engine Oil on page 5-15* for more information.**

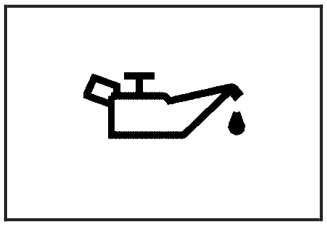

This symbol comes on with this message.

This message displays when the vehicle's engine oil pressure is low. The low oil pressure warning light also appears on the instrument panel cluster. See *Oil Pressure Light on page 3-52*.

Downloaded from www.Manualslib.com manuals search engine

Stop the vehicle immediately, as engine damage can result from driving a vehicle with low oil pressure. Have the vehicle serviced by your dealer/retailer as soon as possible when this warning message is displayed.

This message displays only while the ignition is in ON/RUN. A chime sounds continuously when this message is displayed. Press the set/reset button to acknowledge this message and to clear it from the screen.

This message continues to display if it has not been acknowledged when the engine is turned off. It also re-displays for three seconds if the message has been acknowledged, but the condition still exists when the engine is turned off.

If the condition still exists, the message re-appears when the engine is turned on.

LOW WASHER FLUID

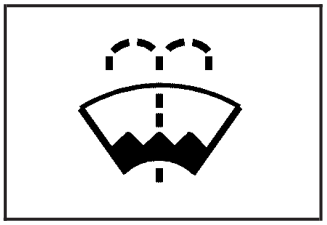

This symbol comes on with this message.

This message displays when the windshield washer fluid is low. Fill the windshield washer fluid reservoir as soon as possible. See *Engine Compartment Overview on page 5-12* for location of the windshield washer fluid reservoir. Also, see *Windshield Washer Fluid on page 5-40* for more information.

This message displays only while the ignition is in ON/RUN. A chime sounds for two seconds when this message is displayed. Press the set/reset button to acknowledge this message and to clear it from the screen.

This message continues to display if it has not been acknowledged when the engine is turned off. It also re-displays for three seconds if the message has been acknowledged, but the condition still exists when the engine is turned off.

If the condition still exists, the message re-appears when the engine is turned on.

Downloaded from www.Manualslib.com manuals search engine

PARKING BRAKE ON

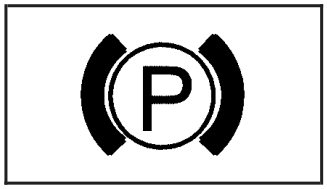

This symbol comes on with this message.

This message displays to alert the driver when the vehicle's parking brake is on, the ignition is in ON/RUN, and the vehicle speed is greater than 5 mph (8 km/h). See *Parking Brake on page 2-33* for more information.

The brake system warning light also appears on the instrument panel cluster when this message appears on the DIC. See *Brake System Warning Light on page 3-45*.

A chime sounds continuously while this message is displayed if driving above 5 mph (8 km/h). Press the set/reset button to acknowledge this message and to clear it from the screen.

This message continues to display for three seconds if it has not been acknowledged when the engine is turned off. It also re-displays for three seconds if the message has been acknowledged, but the condition still exists when the engine is turned off.

If the condition still exists, the message re-appears when the engine is turned on.

PARK LAMPS ON

This message displays to alert the driver when the parking lamps are on, the ignition is in LOCK/OFF, and the key is removed. A chime sounds continuously while this message is displayed. This message cannot be acknowledged.

REDUCED ENGINE POWER

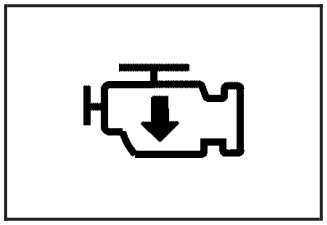

This symbol comes on with this message.

This message displays when the vehicle's engine power is reduced. If this happens during driving conditions, such as climbing a steep hill, the transmission may overwork in a gear that may cause damage to the vehicle's engine or transmission. Reduced engine power can affect the vehicle's ability to accelerate. If this message is on, but there is no reduction in performance, proceed to your destination. The performance may be reduced the next time the vehicle is driven.

Downloaded from www.Manualslib.com manuals search engine

The vehicle may be driven at a reduced speed while this message is on, but acceleration and speed may be reduced. Anytime this message stays on, the vehicle should be taken to your dealer/retailer for service as soon as possible.

This message displays only when the ignition is in ON/RUN. A chime sounds for two seconds while this message is displayed. Press the set/reset button to acknowledge this message and to clear it from the screen.

This message continues to display if it has not been acknowledged when the engine is turned off. It also re-displays for three seconds if the message has been acknowledged, but the condition still exists when the engine is turned off.

If the condition still exists, the message re-appears when the engine is turned on.

REMOTE START ACTIVE PRESS HAZARD SWITCH TO CANCEL

If your vehicle has the remote start feature, this message displays when a remote start is initiated. If you would like to cancel the remote start, turn on the hazard warning flashers. See *Hazard Warning Flashers on page 3-6*.

REMOTE START DISABLED

If your vehicle has the remote start feature, this message displays if a remote start attempt is unsuccessful. This may be caused if any of the following conditions are true when a remote start attempt is made:

- The remote start system is disabled through the DIC.
- The key is in the ignition.
- The hood or the doors are not closed.
- There is an emission control system malfunction.
- The engine coolant temperature is too high.
- The oil pressure is low.
- The hazard warning flashers are turned on.
- The maximum number of remote starts or remote start attempts between ignition cycles has been reached.
- The content theft-deterrent alarm is on while attempting to remote start the vehicle.

See “REMOTE START” under *DIC Vehicle Customization on page 3-89* and *Remote Vehicle Start on page 2-7* for more information.

Downloaded from www.Manualslib.com manuals search engine

RIGHT FRONT TURN LAMP OUT

This message displays when the vehicle's right front turn signal needs to be replaced. See *Front Turn Signal, Parking and Fog Lamps on page 5-57* for bulb replacement procedures.

This message displays only while the ignition is in ON/RUN. A chime sounds for two seconds while this message is displayed. Press the set/reset button to acknowledge this message and to clear it from the screen.

This message continues to display if it has not been acknowledged when the engine is turned off. It also re-displays for three seconds if the message has been acknowledged, but the condition still exists when the engine is turned off.

If the condition still exists, the message re-appears when the engine is turned on.

RIGHT REAR TURN LAMP OUT

This message displays when the vehicle's right rear turn signal needs to be replaced. See *Taillamps, Turn Signal, and Stoplamps on page 5-58* for bulb replacement procedures.

This message displays only while the ignition is in ON/RUN. A chime sounds for two seconds while this message is displayed. Press the set/reset button to acknowledge this message and to clear it from the screen.

This message continues to display if it has not been acknowledged when the engine is turned off. It also re-displays for three seconds if the message has been acknowledged, but the condition still exists when the engine is turned off.

If the condition still exists, the message re-appears when the engine is turned on.

Downloaded from www.Manualslib.com manuals search engine

SERVICE ABS SYSTEM

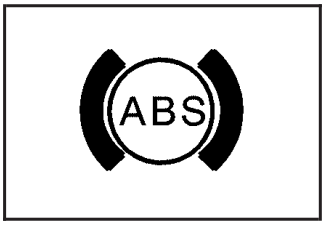

This symbol comes on with this message.

If the vehicle has the Antilock Brake System (ABS), this message displays when the vehicle's brakes are not functioning properly. Have the brake system serviced by your dealer/retailer as soon as possible.

This message displays only while the ignition is in ON/RUN. A chime sounds for two seconds while this message is displayed. Press the set/reset button to acknowledge this message and to clear it from the screen.

This message continues to display if it has not been acknowledged when the engine is turned off. It also re-displays for three seconds if the message has been acknowledged, but the condition still exists when the engine is turned off.

If the condition still exists, the message re-appears when the engine is turned on.

SERVICE BRAKE SYSTEM

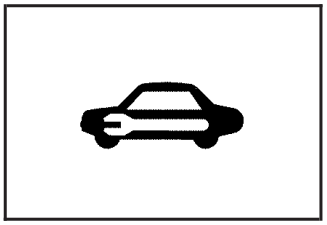

This symbol comes on with this message.

This message displays when the vehicle's brakes are not functioning properly. Have the brake system serviced by your dealer/retailer as soon as possible.

This message displays only while the ignition is in ON/RUN. A chime sounds for two seconds while this message is displayed. Press the set/reset button to acknowledge this message and to clear it from the screen.

This message continues to display if it has not been acknowledged when the engine is turned off. It also re-displays for three seconds if the message has been acknowledged, but the condition still exists when the engine is turned off.

If the condition still exists, the message re-appears when the engine is turned on.

Downloaded from www.Manualslib.com manuals search engine

SERVICE BRAKE APPLY SENSOR

This message displays when the brake apply sensor is not functioning properly. The vehicle still has brakes when this warning message displays, but you should have the vehicle serviced by your dealer/retailer as soon as possible.

This message displays only while the ignition is in ON/RUN. A chime sounds for two seconds while this message is displayed. Press the set/reset button to acknowledge this message and to clear it from the screen.

This message continues to display if it has not been acknowledged when the engine is turned off. It also re-displays for three seconds if the message has been acknowledged, but the condition still exists when the engine is turned off.

If the condition still exists, the message re-appears when the engine is turned on.

SERVICE PARK LAMPS

This message displays if one of the vehicle's parking lamps needs to be replaced. See *Front Turn Signal, Parking and Fog Lamps on page 5-57* for bulb replacement procedures.

This message displays only while the ignition is in ON/RUN. A chime sounds for two seconds while this message is displayed. Press the set/reset button to acknowledge this message and to clear it from the screen.

This message continues to display if it has not been acknowledged when the engine is turned off. It also re-displays for three seconds if the message has been acknowledged, but the condition still exists when the engine is turned off.

If the condition still exists, the message re-appears when the engine is turned on.

Downloaded from www.Manualslib.com manuals search engine

SERVICE STABILITY SYSTEM

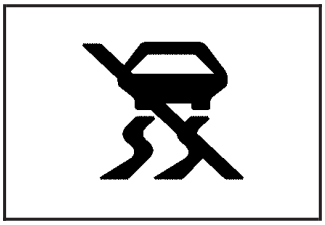

This symbol comes on with this message.

If the vehicle has the StabiliTrak® Plus system, this message displays when it is not functioning properly. A warning light also appears on the instrument panel cluster. See *Traction Control System (TCS) Warning Light on page 3-47*. See *StabiliTrak® Plus System on page 4-8* for more information. Have the StabiliTrak® Plus system serviced by your dealer/retailer as soon as possible.

This message displays only while the ignition is in ON/RUN. A chime sounds for two seconds while this message is displayed. Press the set/reset button to acknowledge this message and to clear it from the screen.

This message continues to display if it has not been acknowledged when the engine is turned off. It also re-displays for three seconds if the message has been acknowledged, but the condition still exists when the engine is turned off.

If the condition still exists, the message re-appears when the engine is turned on.

SERVICE THEFT SYSTEM

This message displays if there is a problem with the theft-deterrent system programmed in the key. A fault has been detected in the system which means that the system is disabled and it is not protecting the vehicle. The vehicle usually restarts; however, you may want to take the vehicle to your dealer/retailer before turning off the engine. See *Keys on page 2-2* for information on the PASS-Key III system.

This message displays only while the ignition is in ON/RUN. A chime sounds for two seconds while this message is displayed. Press the set/reset button to acknowledge this message and to clear it from the screen.

This message continues to display if it has not been acknowledged when the engine is turned off. It also re-displays for three seconds if the message has been acknowledged, but the condition still exists when the engine is turned off.

If the condition still exists, the message re-appears when the engine is turned on.

Downloaded from www.Manualslib.com manuals search engine

SERVICE TIRE MONITOR SYSTEM

This message displays if a part on the Tire Pressure Monitor System (TPMS) is not working properly. The tire pressure light also flashes and then remains on during the same ignition cycle. See *Tire Pressure Light on page 3-49*. Several conditions may cause this message to appear. See *Tire Pressure Monitor Operation on page 5-72* for more information. If the warning comes on and stays on, there may be a problem with the TPMS. See your dealer/retailer.

This message displays only while the ignition is in ON/RUN. Press the set/reset button to acknowledge this message and to clear it from the screen.

This message continues to display if it has not been acknowledged when the engine is turned off. It also re-displays for three seconds if the message has been acknowledged, but the condition still exists when the engine is turned off.

If the condition still exists, the message re-appears when the engine is turned on.

SERVICE TRACTION SYSTEM

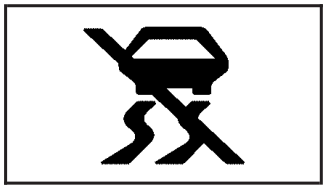

This symbol comes on with this message.

If the vehicle has the traction system, this message displays when the system is not functioning properly. A warning light also appears on the instrument panel cluster. See *Traction Control System (TCS) Warning Light on page 3-47*. See *Traction Control System (TCS) on page 4-6* or *Enhanced Traction System (ETS) on page 4-7* for more information. Have the system serviced by your dealer/retailer as soon as possible.

This message displays only while the ignition is in ON/RUN. A chime sounds for two seconds while this message is displayed. Press the set/reset button to acknowledge this message and to clear it from the screen.

This message continues to display if it has not been acknowledged when the engine is turned off. It also re-displays for three seconds if the message has been acknowledged, but the condition still exists when the engine is turned off.

If the condition still exists, the message re-appears when the engine is turned on.

Downloaded from www.Manualslib.com manuals search engine

SERVICE VARIABLE EFFORT STEERING

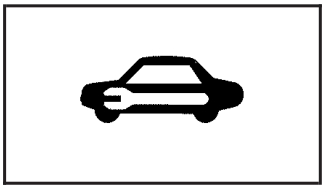

This symbol comes on with this message.

If the vehicle has the variable effort steering system, this message displays if this system is not functioning properly. See *Steering on page 4-10* for more information. Have the system serviced by your dealer/retailer as soon as possible.

This message displays only while the ignition is in ON/RUN. A chime sounds for two seconds while this message is displayed. Press the set/reset button to acknowledge this message and to clear it from the screen.

This message continues to display if it has not been acknowledged when the engine is turned off. It also re-displays for three seconds if the message has been acknowledged, but the condition still exists when the engine is turned off.

If the condition still exists, the message re-appears when the engine is turned on.

SERVICE VEHICLE SOON

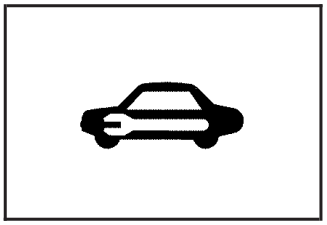

This symbol comes on with this message.

This message displays when a non-emissions related malfunction occurs. Have the vehicle serviced by your dealer/retailer as soon as possible.

This message displays only while the ignition is in ON/RUN. A chime sounds for two seconds while this message is displayed. Press the set/reset button to acknowledge this message and to clear it from the screen.

This message continues to display if it has not been acknowledged when the engine is turned off. It also re-displays for three seconds if the message has been acknowledged, but the condition still exists when the engine is turned off.

If the condition still exists, the message re-appears when the engine is turned on.

Downloaded from www.Manualslib.com manuals search engine

STABILITY CONTROL ACTIVE

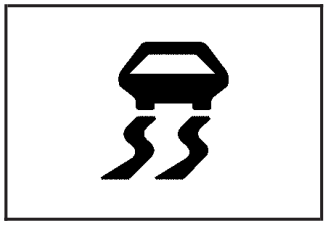

This symbol comes on with this message.

If the vehicle has the StabiliTrak® Plus system, this message displays when the system is engaged and actively assisting the driver with directional control of the vehicle. Slippery road conditions may exist when this warning message is displayed, so driving should be adjusted accordingly. STABILITY CONTROL ACTIVE also appears in the Head-Up Display (HUD), if your vehicle has this feature.

This message displays only while the ignition is in ON/RUN. This message stays on until road conditions change and StabiliTrak® Plus is not active.

This message cannot be acknowledged and cleared from the screen.

STABILITY CONTROL OFF

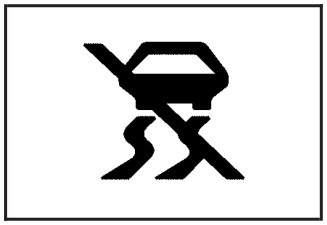

This symbol comes on with this message.

If the vehicle has the StabiliTrak® Plus system, this message displays when the system turns off. This message displays only while the ignition is in ON/RUN. A chime sounds once and the message stays on for three seconds and then disappears. A warning light indicating that this system is deactivated also appears on the instrument panel cluster. See *Traction Control System (TCS) Warning Light on page 3-47*.

When the StabiliTrak® Plus system is off, the system will not be engaged and will not actively assist the driver with directional control of the vehicle. See *StabiliTrak® Plus System on page 4-8*.

Downloaded from www.Manualslib.com manuals search engine

Any of the following conditions may cause the StabiliTrak® Plus system to turn off:

- The StabiliTrak® Plus system on the GXP option is manually turned off. See *StabiliTrak® Plus System on page 4-8* for more information.
- The battery is low.
- There is a StabiliTrak® Plus system failure. See your dealer/retailer for service.

STARTING DISABLED DUE TO ELECTRONIC THROTTLE CONTROL

This message displays when there is a malfunction with the electronic throttle control which prevents the vehicle from starting. Have the vehicle serviced by your dealer/retailer.

This message only appears while the ignition is in ON/RUN, and will not disappear until the problem is resolved. A chime sounds for two seconds. This message cannot be acknowledged.

STARTING DISABLED DUE TO THEFT SYSTEM

This message displays when the system detects a malfunction in the content theft-deterrent system and prevents the vehicle from starting.

This message only appears while the ignition is in ON/RUN, and will not disappear until the problem is resolved. A chime sounds for two seconds. This message cannot be acknowledged.

TRACTION CONTROL ACTIVE

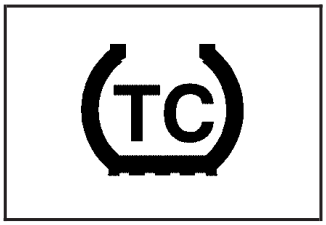

This symbol comes on with this message.

If the vehicle has the traction system, this message displays when the system is on. TRACTION CONTROL ACTIVE also appears in the Head-Up Display (HUD), if your vehicle has this feature.

This message only displays while the ignition is in ON/RUN and will not disappear until driving conditions change and the system is no longer active.

This message cannot be acknowledged or cleared from the screen.

Downloaded from www.Manualslib.com manuals search engine

TRACTION CONTROL OFF

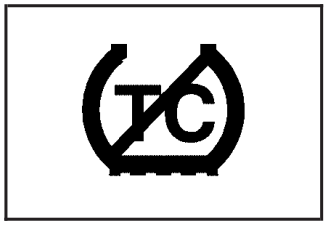

This symbol comes on with this message.

If the vehicle has the traction system, this message displays when the system turns off. TRACTION CONTROL OFF also appears in the Head-Up Display (HUD), if your vehicle has this feature. This message only displays while the ignition is in ON/RUN and disappears after three seconds. A chime sounds once and the message stays on for three seconds and then disappears. A warning light indicating that this system is deactivated also appears on the instrument panel cluster. See *Traction Control System (TCS) Warning Light on page 3-47*.

Any of the following conditions may cause the system to turn off:

- The system is turned off by pressing the TC (traction control) button located on the center console. See *Traction Control System (TCS) on page 4-6* or *Enhanced Traction System (ETS) on page 4-7* for more information.
- The battery is low.
- There is a system failure. See your dealer/retailer for service.

TURN SIGNAL ON

This message displays if the vehicle is driven for more than 0.75 mile (1.21 km) while one of the turn signals are on. It appears as a reminder to turn off the turn signal.

This message only displays when the ignition is in ON/RUN. A chime sounds for two seconds and the message will not disappear until the turn signal is manually turned off, or a turn is completed.

Downloaded from www.Manualslib.com manuals search engine

DIC Vehicle Customization

Your vehicle may have customization capabilities that allow you to program certain features to one preferred setting. Customization features can only be programmed to one setting on the vehicle and cannot be programmed to a preferred setting for two different drivers.

All of the customization options may not be available on your vehicle. Only the options available will be displayed on the DIC.

The default settings for the customization features were set when your vehicle left the factory, but may have been changed from their default state since then. The customization preferences are automatically recalled.

To change customization preferences, use the following procedure.

Entering the Personal Programming Mode

1. Turn the ignition on and make sure the vehicle is in PARK (P).

   To avoid excessive drain on the battery, it is recommended that the headlamps are turned off.
2. Press the options button until PERSONAL PROGRAMMING MODE appears on the DIC.
3. Press the set/reset button to display the first screen.
4. Press the options button to access these modes:

Personal Programming Mode Screens

EXTERIOR LIGHTING DELAY: This screen allows this feature to be turned off, or allows the selection of the number of seconds the exterior lamps are turned on after the key is removed from the ignition, or the vehicle is unlocked using the Remote Keyless Entry (RKE) transmitter.

If OFF is selected, the exterior lamps will not turn on.

If a time delay is chosen, the lamps will turn on for the selected time. The time delay will be cancelled and the exterior lamps will turn on automatically when the key is removed from the ignition, or the vehicle is unlocked using the RKE transmitter.

To program this mode:

1. Press and release the set/reset button to scroll to the selection you want to program. Choose from OFF, 15, 30, 60, or 90 seconds.
2. Press the options button again to advance to the next screen.

Downloaded from www.Manualslib.com manuals search engine

INTERIOR LIGHTS WHEN DOOR CLOSED: This screen allows this feature to be turned OFF or ON.

If OFF is selected, the interior lamps will turn off immediately when the ignition is turned off and the last open door is closed.

If ON is selected, the interior lamps will stay on for about 25 seconds after the vehicle's ignition is turned off and the last open door is closed.

To program this mode:

1. Press and release the set/reset button to scroll to either OFF or ON.
2. Press the options button again to advance to the next screen.

INTERIOR LIGHTS WHEN KEY REMOVED: This screen allows this feature to be turned OFF or ON. This feature enables the interior lamps in the vehicle to turn on for about 25 seconds after the key is removed from the ignition.

If OFF is selected, removing the key from the ignition will not cause the interior lamps to turn on.

If ON is selected, removing the key from the ignition will cause the interior lamps to be turned on for about 25 seconds.

To program this mode:

1. Press and release the set/reset button to scroll to either OFF or ON.
2. Press the options button again to advance to the next screen.

AUTO DOOR UNLOCK: This screen allows this feature to be turned off, used for the driver's door only, or for all the doors.

If OFF is selected, none of the doors will unlock when the vehicle is shifted into PARK (P).

If DRIVER is selected, only the driver's door will unlock when the vehicle is shifted into PARK (P).

If ALL is selected, all the doors will unlock when the vehicle is shifted into PARK (P).

To program this mode:

1. Press and release the set/reset button to scroll to either OFF, DRIVER, or ALL.
2. Press the options button again to advance to the next screen.

Downloaded from www.Manualslib.com manuals search engine

AUTO DOOR UNLOCK ON: If DRIVER or ALL was selected on the AUTO DOOR UNLOCK screen, this screen allows selection of when the vehicle's doors will unlock. The choices are when the key is removed from the ignition or when the vehicle is shifted into PARK (P).

If KEY-OUT is selected, the auto door unlock will function when the key is taken out of the ignition.

If PARK is selected, the auto door unlock will function when the vehicle is shifted into PARK (P).

To program this mode:

1. Press and release the set/reset button to scroll to either KEY-OUT or PARK.
2. Press the options button again to advance to the next screen.

DELAYED LOCKING: This screen allows this feature to be turned OFF or ON. The key must be out of the ignition for this feature to work.

If OFF is selected, there will be no delayed locking of the vehicle's doors.

If ON is selected, the locking of the vehicle's doors will be delayed by five seconds after a power door lock switch is pressed while the door is open, or the LOCK button on the RKE transmitter is pressed while any door is open.

To program this mode:

1. Press and release the set/reset button to scroll to either OFF or ON.
2. Press the options button again to advance to the next screen.

REMOTE LOCKS FEEDBACK: This screen allows selection for this option to be turned OFF, or gives the choice of two methods of verification; LIGHTS or LIGHTS and HORN; that indicate the vehicle's doors are locked when the LOCK button on the RKE transmitter is pressed.

If OFF is selected, this feature will not be programmed.

If LIGHTS is selected, the exterior lamps will flash when the LOCK button on the RKE transmitter is pressed.

If LIGHTS and HORN is selected, the exterior lamps will flash when the LOCK button on the RKE transmitter is pressed, and the horn will sound when the LOCK button on the RKE transmitter is pressed again within five seconds of the previous command.

To program this mode:

1. Press the set/reset button to scroll to OFF, LIGHTS, or LIGHTS and HORN.
2. Press the options button again to advance to the next screen.

Downloaded from www.Manualslib.com manuals search engine

If the vehicle does not have a content theft-deterrent system, the next screens with PROGRAMMING FINISHED and DISPLAY OFF will appear.

If the vehicle does have a content theft-deterrent system, the next screen will appear.

THEFT DETERRENT: The vehicle may have a content theft-deterrent system. Once it is turned on, the system will activate if someone tries to enter the vehicle without using the RKE transmitter or the correct key. This screen allows this feature to be turned OFF or ON.

If OFF is selected, the content theft-deterrent system will not function.

If ON is selected, the content theft-deterrent system will be activated.

To program this mode:

1. Press the set/reset button to scroll to OFF or ON.
2. Press the options button again to advance to the next screen.

KEY CYLINDER DISARM: If the vehicle has a content theft-deterrent system, and ON was selected on the THEFT DETERRENT screen, this screen allows this feature to be turned OFF or ON. This feature determines whether the driver's door key cylinder may be used to disarm the content theft-deterrent system.

If OFF is selected, the vehicle's content theft-deterrent system can not be disarmed by unlocking the driver's door using the driver's door key cylinder. Selecting OFF prevents a thief from disarming the vehicle's content theft-deterrent system by attacking the driver's door key cylinder, and may make the vehicle more secure. However, if OFF is selected, unlocking an armed vehicle by using the driver's door key cylinder and opening the door will cause the content theft alarm to activate. For this reason, it is recommended that the vehicle be unlocked using the remote keyless entry system when this feature is set to OFF.

If ON is selected, the vehicle's content theft-deterrent system can be disarmed by unlocking the driver's door using the driver's door key cylinder.

To program this mode:

1. Press the set/reset button to scroll to OFF or ON.
2. Press the options button again to advance to the next screen.

Downloaded from www.Manualslib.com manuals search engine

LOCK SWITCH ARM: If the vehicle has the content theft-deterrent system and ON was selected on the THEFT DETERRENT screen, this screen allows this feature to be turned OFF or ON. This feature controls whether the vehicle's content theft system can be activated using a door lock switch.

If OFF is selected, locking the vehicle using a door lock switch will not cause the vehicle's content theft system to arm.

If ON is selected, the content theft-deterrent system can be armed using the driver's door lock switch by pressing the driver's door lock switch while the driver's door is open and the key is not in the ignition, or by pressing the front passenger's door lock switch while the front passenger's door is open and the key is not in the ignition.

To program this mode:

1. Press the set/reset button to scroll to OFF or ON.
2. Press the options button again to advance to the next screen.

REMOTE START: If your vehicle has the remote start feature, this screen allows this feature to be turned OFF or ON. The remote start feature allows you to start the engine from outside of the vehicle using the RKE transmitter. See *Remote Vehicle Start on page 2-7* for more information.

If OFF is selected, the remote start feature will be disabled.

If ON is selected, the remote start feature will be enabled.

To program this mode:

1. Press the set/reset button to scroll to OFF or ON.
2. Press the options button again to advance to the next screen.

PROGRAMMING FINISHED will appear on the next screen. This confirms that the personal options programming is complete.

Downloaded from www.Manualslib.com manuals search engine

Audio System(s)

Determine which radio your vehicle has and then read the pages following to familiarize yourself with its features.

⚠ CAUTION:

This system provides you with far greater access to audio stations and song listings. Giving extended attention to entertainment tasks while driving can cause a crash and you or others can be injured or killed. Always keep your eyes on the road and your mind on the drive — avoid engaging in extended searching while driving.

Keeping your mind on the drive is important for safe driving. See *Defensive Driving on page 4-2*. Here are some ways in which you can help avoid distraction while driving.

While your vehicle is parked:

- Familiarize yourself with all of its controls.
- Familiarize yourself with its operation.
- Set up your audio system by presetting your favorite radio stations, setting the tone, and adjusting the speakers. Then, when driving conditions permit, you can tune to your favorite radio stations using the presets and steering wheel controls if the vehicle has them.

Notice: **Before adding any sound equipment to your vehicle, such as an audio system, CD player, CB radio, mobile telephone, or two-way radio, make sure that it can be added by checking with your dealer/retailer. Also, check federal rules covering mobile radio and telephone units. If sound equipment can be added, it is very important to do it properly. Added sound equipment may interfere with the operation of your vehicle's engine, radio, or other systems, and even damage them. Your vehicle's systems may interfere with the operation of sound equipment that has been added.**

Notice: **The chime signals related to safety belts, parking brake, and other functions of your vehicle operate through the radio/entertainment system. If that equipment is replaced or additional equipment is added to your vehicle, the chimes may not work. Make sure that replacement or additional equipment is compatible with your vehicle before installing it. See *Accessories and Modifications on page 5-3*.**

Downloaded from www.Manualslib.com manuals search engine

Your vehicle may have a feature called Retained Accessory Power (RAP). With RAP, the audio system can be played even after the ignition is turned off. See *Retained Accessory Power (RAP) on page 2-24* for more information.

Setting the Clock

The radio may have a button marked with an H or HR to represent hours and an M or MN to represent minutes.

Press and hold the hour button until the correct hour displays. AM or PM displays for morning or evening hours. Press and hold the minute button until the correct minute displays. The time can be set with the ignition on or off.

To synchronize the time with an FM station broadcasting Radio Data System (RDS) information, press and hold the hour and minute buttons at the same time until UPDATED and the clock symbol appear on the display. If the time is not available from the station, NO UPDATE or NO UPDAT will appear on the display.

RDS time is broadcast once a minute. After tuning to an RDS broadcast station, it could take a few minutes for the time to update.

Radio(s)

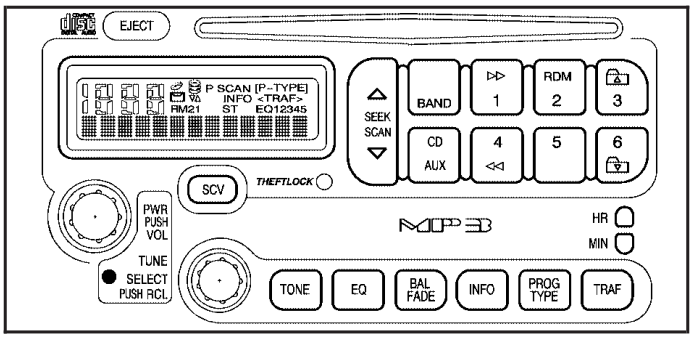

Radio with CD (MP3) shown,
Radio with CD (Base) similar

Your vehicle has one of these radios as its audio system.

Downloaded from www.Manualslib.com manuals search engine

Radio Data System (RDS)

The audio system has a Radio Data System (RDS). RDS features are available for use only on FM stations that broadcast RDS information.

With RDS, the radio can do the following:

- Seek to stations broadcasting the selected type of programming
- Receive announcements concerning local and national emergencies
- Display messages from radio stations
- Seek to stations with traffic announcements

This system relies upon receiving specific information from these stations and only works when the information is available. In rare cases, a radio station may broadcast incorrect information that causes the radio features to work improperly. If this happens, contact the radio station.

While the radio is tuned to an RDS station, the station name or the call letters appear on the display instead of the frequency. RDS stations may also provide the time of day, a program type (PTY) for current programming, and the name of the program being broadcast.

XM™ Satellite Radio Service

XM™ is a satellite radio service that is based in the 48 contiguous United States and 10 Canadian provinces. XM™ Satellite Radio has a wide variety of programming and commercial-free music, coast-to-coast, and in digital-quality sound. During your trial or when you subscribe, you will get unlimited access to XM™ Radio Online for when you are not in your vehicle. A service fee is required to receive the XM™ service. For more information, contact XM™ at www.xmradio.com or call 1-800-929-2100 in the U.S. and www.xmradio.ca or call 1-877-438-9677 in Canada.

Playing the Radio

PWR (Power): Push this knob to turn the system on and off.

VOL (Volume): Turn this knob clockwise or counterclockwise to increase or to decrease the volume.

RCL (Recall): Push this knob to switch the display between the radio station frequency and the time. When the ignition is turned off, push this knob to display the time.

For RDS, push the RCL knob to change what appears on the display while using RDS. The display options are station name, RDS station frequency, PTY, and the name of the program (if available).

Downloaded from www.Manualslib.com manuals search engine

For XM™ (if equipped), push the RCL knob while in XM™ mode to retrieve four different categories of information related to the current song or channel: Artist, Song Title, Category or PTY, Channel Number/Channel Name.

To change the default on the display, push the RCL knob until you see the desired display, then hold the knob until the display flashes. The selected display is now the default.

SCV (Speed-Compensated Volume): Vehicles with the SCV feature, automatically lets the audio system adjust volume to make up for road and wind noise while driving.

Set the volume at the desired level. Press this button to select MIN (minimum), MED (medium), or MAX (maximum). Each higher setting allows for more volume compensation at faster vehicle speeds. Then, as you drive, SCV automatically increases the volume, as necessary, to overcome noise at any speed. The volume level should always sound the same while driving. To turn SCV off, press this button until OFF displays.

AUTO VOL (Automatic Volume): Vehicles with automatic volume, automatically lets the audio system adjust volume to make up for road and wind noise as you drive.

Set the volume at the desired level. Press this button to select MIN (minimum), MED (medium), or MAX (maximum). Each higher setting allows for more volume compensation at faster vehicle speeds. Then, as you drive, automatic volume increases the volume, as necessary, to overcome noise at any speed. The volume level should always sound the same to you as you drive. To turn automatic volume off, press this button until OFF displays.

Finding a Station

BAND: Press this button to switch between FM1, FM2, AM, or XM1 or XM2 (if equipped). The display shows the selection.

TUNE: Turn this knob to select radio stations.

△▽ **or** ⊲ ⊳ **SEEK:** Press the up or the down arrow to go to the next or to the previous station and stay there.

The radio only seeks stations with a strong signal that are in the selected band.

△▽ **or** ⊲ ⊳ **SCAN:** Press and hold either SCAN arrow for two seconds until SCAN or SC displays and a beep sounds. The radio goes to a station, plays for a few seconds, then goes to the next station. Press either SCAN arrow again to stop scanning.

Downloaded from www.Manualslib.com manuals search engine

To scan preset stations, press and hold either SCAN arrow for more than four seconds until PSCAN or PRESET SCAN and the preset number displays and a double beep sounds. The radio goes to the first preset station, plays for a few seconds, then goes to the next preset station. Press either SCAN arrow again to stop scanning presets.

The radio scans stations only with a strong signal that are in the selected band.

Setting Preset Stations

Up to 30 stations (six FM1, six FM2, and six AM, six XM1 and six XM2 (if equipped)), can be programmed on the six numbered pushbuttons, by performing the following steps:

1. Turn the radio on.
2. Press BAND to select FM1, FM2, AM, or XM1 or XM2.
3. Tune in the desired station.
4. Press EQ, or depending on the radio, AUTO EQ, to select the equalization.
5. Press and hold one of the six numbered pushbuttons until a beep sounds. When that numbered pushbutton is pressed, the station that was set returns and the equalization that was selected is stored for that pushbutton.
6. Repeat the steps for each pushbutton.

Setting the Tone (Bass/Midrange/Treble)

TONE: Press and release the TONE button until BASS, MID (midrange), or TREB (treble) displays. The SELECT LED indicator lights to show that the tone control can be adjusted. Turn the SELECT knob to increase or to decrease. If a station is weak or has static, decrease the treble.

To return all of the tone controls to the middle position, press and hold the TONE button until FLAT displays.

AUDIO (Radio with Six-Disc CD Player): Push the AUDIO knob until BASS, MID (midrange), or TREB (treble) displays. Turn the knob to increase or to decrease. If a station is weak or noisy, decrease the treble.

To adjust bass, midrange, or treble to the middle position, select BASS, MID, or TREB and push and hold the AUDIO knob. The display level adjusts to the middle position and a beep sounds.

To adjust all tone and speaker controls to the middle position, push and hold the AUDIO knob when no tone or speaker control is displayed. CENTERED displays and one beep sounds.

Downloaded from www.Manualslib.com manuals search engine

EQ or AUTO EQ (Equalization): Press this button to select customized equalization settings.

Up to six customized equalization settings, can be programmed on the six numbered pushbuttons, by performing the following steps:

1. Turn the radio on.
2. Use the TONE button and the SELECT knob to create the desired equalization.
3. Press and hold the EQ or AUTO EQ button for two seconds. SELECT EQ # displays and the EQ symbol flashes.
4. Press EQ or turn the SELECT knob to select the desired EQ number.
5. Press and hold the EQ or AUTO EQ button or push the SELECT knob to store the equalization setting and the number. A beep sounds and EQ SAVED displays.
6. Repeat the steps for the other EQ settings and numbers.

EQ 5 has been programmed at the factory for use with talk radio, but it can be set to a different tone.

Adjusting the Speakers (Balance/Fade)

BAL (Balance): Press this button until BAL displays, to adjust the balance between the right and the left speakers. The SELECT LED indicator lights to show that the speakers can be adjusted. Turn the SELECT knob to move the sound toward the right or the left speakers.

FADE: Press this button until FADE displays, to adjust the fade between the front and the rear speakers. The SELECT LED indicator lights to show that the speakers can be adjusted. Turn the SELECT knob to move the sound toward the front or the rear speakers.

Press and hold the BAL FADE button for two seconds to return all speaker settings to the middle position.

AUDIO (Radio with Six-Disc CD Player): Push the AUDIO knob until BAL (balance) displays, to adjust the balance between the right and the left speakers. Turn the knob to move the sound toward the right or the left speakers.

To adjust the fade between the front and rear speakers, push and hold the AUDIO knob until FAD (fade) displays. Turn the knob to move the sound toward the front or the rear speakers.

To adjust the balance and the fade to the middle position, select balance or fade and push and hold the AUDIO knob. The display level adjusts to the middle position and a beep sounds.

Downloaded from www.Manualslib.com manuals search engine

To adjust all tone and speaker controls to the middle position, push and hold the AUDIO knob when no tone or speaker controls are displayed. CENTERED displays and one beep sounds.

Finding a Program Type (PTY) Station (RDS and XM™)

To select and find a desired PTY perform the following:

1. Press PROG TYPE, or depending on the radio, P-TYPE, to activate program type select mode. The PTY symbol displays.
2. Turn the SELECT, or depending on the radio, P-TYPE, knob to select a PTY.
3. Press either SEEK arrow, once the desired PTY displays, to select the PTY and to go to the PTY's first station.
4. To go to another station within that PTY, and the PTY displays, press either SEEK arrow once. If the PTY is not displayed, press either SEEK arrow twice to display the PTY and then to go to another station.
5. Press PROG TYPE, or depending on the radio, P-TYPE, to exit program type select mode.

   If PTY times out and is no longer on the display, go back to Step 1.

If both PTY and TRAF are on, the radio searches for stations with the selected PTY and traffic announcements.

The Radio with Six-Disc CD player has the PTY interrupt feature. To use this feature, press and hold the P-TYPE button until a beep sounds on the PTY used to interrupt. When selected, an asterisk displays beside that PTY on the display. Select multiple interrupts if desired. When listening to a CD, the last selected RDS station interrupts play if that selected program type format is broadcast.

△▽ or ⊲ ⊳ SCAN: Scan the stations within a PTY by performing the following:

1. Press PROG TYPE, or depending on the radio, P-TYPE, to activate program type select mode. The PTY symbol displays.
2. Turn the SELECT, or depending on the radio, P-TYPE, knob to select a PTY.
3. Press and hold either SCAN arrow, once the desired PTY is displayed, and the radio begins scanning the stations in the PTY.
4. Press either SCAN arrow to stop at a station.

If both PTY and TRAF are on, the radio scans for stations with the selected PTY and traffic announcements.

Downloaded from www.Manualslib.com manuals search engine

BAND (Alternate Frequency): Alternate frequency allows the radio to switch to a stronger station with the same program type. To turn alternate frequency on, press and hold BAND for two seconds. AF ON displays. The radio can switch to stations with a stronger frequency.

To turn alternate frequency off, press and hold BAND again for two seconds. AF OFF displays. The radio does not switch to other stations.

This function does not apply for XM™ Satellite Radio Service.

Setting Preset PTYs (RDS Only)

These pushbuttons have factory PTY presets. Up to 12 PTYs (six FM1 and six FM2), can be programmed on the six numbered pushbuttons, by performing the following steps:

1. Press BAND, or depending on the radio, AM/FM to select FM1 or FM2.
2. Press PROG TYPE, or depending on the radio, P-TYPE, to activate program type select mode. The PTY symbol displays.
3. Turn the SELECT, or depending on the radio, P-TYPE, knob to select a PTY.
4. Press and hold one of the six numbered pushbuttons until a beep sounds. When that numbered pushbutton is pressed, the PTY that was set, returns, if program type select mode is activated.
5. Repeat the steps for each pushbutton.

RDS Messages

ALERT!: Alert warns of local or national emergencies. When an alert announcement comes on the current radio station, ALERT! displays. The announcement is heard, even if the volume is low or a CD is playing. If a CD is playing, play stops during the announcement. Alert announcements cannot be turned off.

ALERT! is not affected by tests of the emergency broadcast system. This feature is not supported by all RDS stations.

INFO (Information): If the current station has a message, INFO displays. Press this button to see the message. The message can display the artist, song title, call in phone numbers, etc.

Downloaded from www.Manualslib.com manuals search engine

If the entire message is not displayed, parts of the message appears every three seconds. To scroll through the message, press and release the INFO button. A new group of words appear on the display after every press of this button. Once the complete message has been displayed, the information symbol disappears from the display until another new message is received. The last message can be displayed by pressing the INFO button. The last message can be viewed until a new message is received or a different station is tuned to.

TRAF (Traffic): If TRAF displays, the tuned station broadcasts traffic announcements. To receive the traffic announcement from the tuned station, press this button. Brackets are displayed around TRAF and when a traffic announcement broadcasts on the tuned radio station, you will hear it.

If the station does not broadcast traffic announcements, press the TRAF button and the radio seeks to a station that does. When a station that broadcasts traffic announcements is found, the radio stops seeking and brackets are displayed around TRAF. If no station is found that broadcasts traffic announcements, NO TRAFFIC displays.

If the brackets are on the display and TRAF is not, press the TRAF button to remove the brackets or use the TUNE knob or the SEEK arrows to go to a station that supports traffic announcements. If no station is found that broadcasts traffic announcements, NO TRAFFIC may display.

The radio plays the traffic announcement if the volume is low. The radio interrupts the play of a CD if the last tuned station broadcasts traffic announcements and the brackets are displayed.

This function does not apply to XM™ Satellite Radio Service.

Radio Messages

CALIBRATE: The audio system has been calibrated for your vehicle from the factory. If CALIBRATE displays it means that the radio has not been configured properly for your vehicle and it must be returned to your dealer/retailer for service.

LOCKED: Vehicles with the Theft-Deterrent Feature may display LOCKED when the THEFTLOCK® system has locked up. Take the vehicle to your dealer/retailer for service.

If any error occurs repeatedly or if an error cannot be corrected, contact your dealer/retailer.

Downloaded from www.Manualslib.com manuals search engine

Radio Messages for XM™ Only

See *XM Radio Messages on page 3-114* later in this section for further detail.

Playing a CD

Radio with CD (Base)

Insert a CD partway into the slot, label side up. The player pulls it in and the CD should begin playing. If you want to insert a CD when the ignition is off, first press the eject button or push the RCL knob. If you insert a CD with the radio off and the ignition on, it starts to play.

Radio with CD (MP3)

Insert a CD partway into the slot, label side up. The player pulls it in and READING DISC and the CD symbol appears on the display. If you want to insert a CD with the ignition off, first press the EJECT button or push the RCL knob.

When a CD is inserted, the CD symbol appears on the display. As each new track starts to play, the track number appears on the display.

If the ignition or radio is turned off with a CD in the player it stays in the player. When the ignition or radio is turned on, the CD starts to play where it stopped, if it was the last selected audio source.

For vehicles that have a radio with a Six-Disc CD player, see the following:

LOAD / CD ⏏ : Press the LOAD side of this button to load CDs into the CD player. This CD player holds up to six CDs.

To insert one CD, do the following:

1. Turn the ignition on.
2. Press and release the LOAD button.
3. Wait for the indicator light, located to the right of the slot, to turn green.
4. Load a CD. Insert the CD partway into the slot, label side up. The player pulls the CD in.

To insert multiple CDs, do the following:

1. Turn the ignition on.
2. Press and hold the LOAD button for two seconds.

   A beep sounds and the indicator light, located to the right of the slot, begins to flash.
3. Once the light stops flashing and turns green, load a CD. Insert the CD partway into the slot, label side up. The player pulls the CD in.

   Once the CD is loaded, the light begins flashing again. Once the light stops flashing and turns green you can load another CD. The CD player takes up to six CDs. Do not try to load more than six.

Downloaded from www.Manualslib.com manuals search engine

To load more than one CD but less than six, complete Steps 1 through 3. When finished loading CDs, the radio begins to play the last CD loaded.

If more than one CD has been loaded, a number for each CD displays.

Playing a Specific Loaded CD

For every CD loaded, a number appears on the display. To play a specific CD, first press the CD AUX button, then press the numbered pushbutton that corresponds to the CD. A small bar appears under the CD number that is playing and the track number displays.

If an error appears on the display, see “CD Messages” later in this section.

LOAD / CD ⏏ (Eject): Press the CD eject side of this button to eject a CD(s). A beep sounds and the indicator light flashes to indicate when a CD is being ejected.

REMOVE CD displays. The CD can be removed.
If the CD is not removed, after 25 seconds, the CD is automatically pulled back into the player. If the CD is pushed back into the player, before the 25 second time period is complete, the player senses an error and tries to eject the CD several times before stopping.

Do not repeatedly press the CD eject button to eject a CD after trying to push it in manually. The player’s 25-second eject timer resets at each press of eject, causing the player to not eject the CD until the 25-second time period has elapsed.

Once the player stops and the CD is ejected, remove the CD. After removing the CD, push the PWR knob off and then on again, or wait for the system to reset. This clears the CD-sensing feature and enables CDs to be loaded into the player again.

▷▷ 1 (Forward) or FWD ≫ (Forward): Depending on the radio that your vehicle has, the reverse arrows will look different, but they function the same. Press and hold this button to advance quickly within a track. Sound is heard at a reduced volume. Release this pushbutton to play the passage. The elapsed time of the track displays.

RPT (Repeat): For the Radio with Six-Disc CD player, use this feature to repeat one track or an entire CD.

To use repeat, do the following:

- To repeat the track you are listening to, press and release the RPT button. RPT displays. Press RPT again to turn off repeat play.
- To repeat the CD you are listening to, press and hold the RPT button for two seconds. RPT displays. Press RPT again to turn off repeat play.

Downloaded from www.Manualslib.com manuals search engine

RDM 2 / RDM 3 / RDM (Random): Depending on the radio, press this button to hear the tracks in random, rather than sequential, order. RDM and the track number displays. Press RDM again to turn off random play.

For the Radio with Six-Disc CD player, the tracks can be listened to in random order, on one CD or on all of the CDs.

To use random on the Radio with Six-Disc CD player, do one of the following:

- To play the tracks on the CD in random order, press and release the RDM button. RANDOM ONE displays. Press RDM again to turn off random play.
- To play the tracks on all of the CDs that are loaded in random order, press and hold RDM for more than two seconds. A beep sounds and RANDOM ALL displays. Press RDM again to turn off random play.

3 (Next Folder): This button does not have a function for non-MP3 CDs. Press this button to go to the next MP3 folder.

4 ◁◁ or ≪ REV (Reverse): Depending on the radio that your vehicle has, the reverse arrows will look different, but they function the same. Press and hold this button to reverse quickly within a track. Sound is heard at a reduced volume. Release this pushbutton to play the passage. The elapsed time of the track displays.

6 (Previous Folder): This button does not have a function for non-MP3 CDs. Press this button to go to the previous MP3 folder.

EQ or AUTO EQ (Equalization): Press EQ, or depending on the radio, AUTO EQ, to select the desired customized equalization setting while playing a CD. The equalization is automatically set when a CD is played. See “EQ” or “AUTO EQ” listed previously for more information.

△ SEEK ▽ (Radios with CD): Press the SEEK arrows to go to the previous or to the next track. Press either arrow for more than two seconds to search the previous or next tracks at two tracks per second. When the desired track number displays, release the arrow to stop searching and to play the track.

⊲ SEEK ⊳ (Radio with Six-Disc CD Player): Press the left arrow to go to the start of the current track, if more than ten seconds have played. Press the right arrow to go to the next track. If either arrow is held or pressed more than once, the player continues moving backward or forward through the CD.

△ SCAN ▽ (Radios with CD): Press and hold either arrow for more than two seconds until SCAN and the track number displays and a beep sounds. The CD goes to the next track, plays for a few seconds, then goes to the next track. Press either arrow again to stop scanning.

Downloaded from www.Manualslib.com manuals search engine

⊲ SCAN ⊳ (Radio with Six-Disc CD Player): To scan one CD, press and hold either SCAN arrow for more than two seconds until SCAN displays and a beep sounds. The radio goes to the next track, plays for 10 seconds, then goes to the next track. Press either SCAN arrow again, to stop scanning.

To scan all loaded CDs, press and hold either SCAN arrow for more than four seconds until CD SCAN displays and a beep sounds. Use this feature to listen to 10 seconds of the first track of each loaded CD. Press either SCAN arrow again, to stop scanning.

RCL (Recall): Push this button, or depending on the radio, press the RCL knob, to see how long the current track has been playing. To change the default on the display, track and elapsed time, push the button until the desired option displays, then hold the button until the display flashes. The selected display is now the default.

BAND: Depending on the radio, press this button to listen to the radio when a CD is playing. The inactive CD(s) remains inside the radio for future listening.

CD AUX (Auxiliary): Press this button to play a CD while listening to the radio.

Care of Your CDs

If playing a CD-R, the sound quality can be reduced due to CD-R quality, the method of recording, the quality of the music that has been recorded, and the way the CD-R has been handled. Handle them carefully. Store CD-R(s) in their original cases or other protective cases and away from direct sunlight and dust. The CD player scans the bottom surface of the disc. If the surface of a CD is damaged, such as cracked, broken, or scratched, the CD does not play properly or not at all. Do not touch the bottom side of a CD while handling it; this could damage the surface. Pick up CDs by grasping the outer edges or the edge of the hole and the outer edge.

If the surface of a CD is soiled, take a soft, lint free cloth or dampen a clean, soft cloth in a mild, neutral detergent solution mixed with water, and clean it. Make sure the wiping process starts from the center to the edge.

If there is no apparent damage, try a known good CD.

Downloaded from www.Manualslib.com manuals search engine

Care of Your CD Player

Do not add any label to a CD, it could get caught in the CD player. If a CD is recorded on a personal computer and a description label is needed, try labeling the top of the recorded CD with a marking pen instead.

The use of CD lens cleaners for CDs is not advised, due to the risk of contaminating the lens of the CD optics with lubricants internal to the CD player mechanism.

Notice: **If a label is added to a CD, or more than one CD is inserted into the slot at a time, or an attempt is made to play scratched or damaged CDs, the CD player could be damaged. While using the CD player, use only CDs in good condition without any label, load one CD at a time, and keep the CD player and the loading slot free of foreign materials, liquids, and debris.**

If an error displays, see “CD Messages” later in this section.

Using Song List Mode (Radio with Six-Disc CD Player)

This type of radio has a feature called song list. This feature is capable of saving 20 track selections.

To save tracks into the song list feature, perform the following steps:

1. Turn the CD player on and load it with at least one CD. See “LOAD CD” listed previously in this section for more information.
2. Check to see that the CD changer is not in song list mode. S-LIST should not display. If S-LIST displays, press the SONG LIST button to turn it off.
3. Select the desired CD by pressing the numbered pushbutton and then use the SEEK SCAN right arrow to locate the track to be saved. The track begins to play.
4. Press and hold the SONG LIST button to save the track into memory. When SONG LIST is pressed, one beep sounds. After two seconds of continuously pressing the SONG LIST button, two beeps sound to confirm the track has been saved.
5. Repeat Steps 3 and 4 for saving other selections.

S-LIST FULL displays if you try to save more than 20 selections.

Downloaded from www.Manualslib.com manuals search engine

To play the song list, press the SONG LIST button. One beep sounds and S-LIST displays. The recorded tracks begins to play in the order they were saved.

Seek through the song list by using the SEEK SCAN arrows. Seeking past the last saved track returns to the first saved track.

To delete tracks from the song list, perform the following steps:

1. Turn the CD player on.
2. Press the SONG LIST button to turn song list on. S-LIST displays.
3. Press the SEEK SCAN arrows to select the desired track to be deleted.
4. Press and hold the SONG LIST button for two seconds. When SONG LIST is pressed, one beep sounds. After two seconds of continuously pressing the SONG LIST button, two beeps sound to confirm the track has been deleted.

After a track has been deleted, the remaining tracks are moved up the list. When another track is added to the song list, the track is added to the end of the list.

To delete the entire song list, perform the following steps:

1. Turn the CD player on.
2. Press the SONG LIST button to turn song list on. S-LIST displays.
3. Press and hold the SONG LIST button for more than four seconds. One beep sounds, followed by two beeps after two seconds, and a final beep sounds after four seconds. S-LIST EMPTY displays indicating the song list has been deleted.

If a CD is ejected, and the song list contains saved tracks from that CD, those tracks are automatically deleted from the song list. Any tracks saved to the song list again are added to the bottom of the list.

To end song list mode, press the SONG LIST button. One beep sounds and S-LIST is removed from the display.

Playing an MP3 CD-R Disc

Your vehicle's radio system may have the MP3 feature. If it has this feature, it is capable of playing an MP3 CD-R disc. For more information on how to play an MP3 CD-R disc, see *Using an MP3 on page 3-109* later in this section.

Downloaded from www.Manualslib.com manuals search engine

CD Messages

CHECK CD: If this message appears on the display and/or the CD comes out, it could be for one of the following reasons:

- It is very hot. When the temperature returns to normal, the CD should play.
- You are driving on a very rough road. When the road becomes smoother, the CD should play.
- The CD is dirty, scratched, wet, or upside down.
- The air is very humid. If so, wait about an hour and try again.
- The format of the CD may not be compatible. See *Using an MP3 on page 3-109* later in this section.
- There may have been a problem while burning the CD.
- The label may be caught in the CD player.

If the CD is not playing correctly, for any other reason, try a known good CD.

If any error occurs repeatedly or if an error cannot be corrected, contact your dealer/retailer. If the radio displays an error message, write it down and provide it to your dealer/retailer when reporting the problem.

Using an MP3

MP3 CD-R Disc

MP3 Format

If you burn your own MP3 disc on a personal computer:

- Make sure the MP3 files are recorded on a CD-R disc.
- Do not mix standard audio and MP3 files on one disc.
- Make sure playlists have a .m3u or .wpl extension, other file extensions may not work.
- Files can be recorded with a variety of fixed or variable bit rates. Song title, artist name, and album are available for display by the radio when recorded using ID3 tags version 1 and 2.
- Create a folder structure that makes it easy to find songs while driving. Organize songs by albums using one folder for each album. Each folder or album should contain 18 songs or less.
- Make sure to finalize the disc when burning an MP3 disc, using multiple sessions. It is usually better to burn the disc all at once.

Downloaded from www.Manualslib.com manuals search engine

The player is able to read and play a maximum of 50 folders, 50 playlists, 10 sessions, and 255 files. Long file names, folder names, or playlist names may use more disc memory space than necessary. To conserve space on the disc, minimize the length of the file, folder or playlist names. You can also play an MP3 CD that was recorded using no file folders. The system can support up to 11 folders in depth, though, keep the depth of the folders to a minimum in order to keep down the complexity and confusion in trying to locate a particular folder during playback. If a CD contains more than the maximum of 50 folders, 50 playlists, 10 sessions, and 255 files the player lets you access and navigate up to the maximum, but all items over the maximum are ignored.

Root Directory

The root directory is treated as a folder. If the root directory has compressed audio files, the directory is displayed as F1 ROOT. All files contained directly under the root directory are accessed prior to any root directory folders. However, playlists (Px) are always be accessed before root folders or files.

Empty Directory or Folder

If a root directory or a folder exists somewhere in the file structure that contains only folders/subfolders and no compressed files directly beneath them, the player advances to the next folder in the file structure that contains compressed audio files. The empty folder does not display.

No Folder

When the CD contains only compressed files, the files are located under the root folder. The next and previous folder functions do not function on a CD that was recorded without folders or playlists. When displaying the name of the folder the radio displays ROOT.

When the CD contains only playlists and compressed audio files, but no folders, all files are located under the root folder. The folder down and the folder up buttons search playlists (Px) first and then go to the root folder. When the radio displays the name of the folder the radio displays ROOT.

Downloaded from www.Manualslib.com manuals search engine

Order of Play

Tracks are played in the following order:

- Play begins from the first track in the first playlist and continues sequentially through all tracks in each playlist. When the last track of the last playlist has played, play continues from the first track of the first playlist.
- If the CD does not contain any playlists, then play begins from the first track under the root directory. When all tracks from the root directory have played, play continues from files according to their numerical listing. After playing the last track from the last folder, play begins again at the first track of the first folder or root directory.

When play enters a new folder, the display does not automatically show the new folder name unless you have chosen the folder mode as the default display. See RCL later in this section for more information. The new track name appears on the display.

File System and Naming

The song name that is displayed is the song name that is contained in the ID3 tag. If the song name is not present in the ID3 tag, then the radio displays the file name without the extension (such as .mp3) as the track name.

Track names longer than 32 characters or four pages are shortened. Parts of words on the last page of text and the extension of the filename does not display.

Preprogrammed Playlists

Preprogrammed playlists that were created by WinAmp™, MusicMatch™, or Real Jukebox™ software can be accessed, however, they cannot be edited using the radio. These playlists are treated as special folders containing compressed audio song files.

Playing an MP3

Insert a CD partway into the slot, label side up. The player pulls it in, and READING displays. The CD should begin playing and the CD symbol appears on the display. If you want to insert a CD with the ignition off, first press the EJECT button or the RCL knob.

If the ignition or radio is turned off with a CD in the player it stays in the player. When the ignition or radio is turned on, the CD starts to play where it stopped, if it was the last selected audio source.

As each new track starts to play, the track number appears on the display.

Downloaded from www.Manualslib.com manuals search engine

▷▷ **1 (Forward):** Press and hold this pushbutton to advance quickly within a track. Press and hold this pushbutton for less than two seconds to advance at 10 times the normal playing speed. Press and hold it for more than two seconds to advance at 20 times the normal playing speed. Release this pushbutton to play the track. FWD and the elapsed time of the track appears on the display.

RDM 2 (Random): To repeat the tracks in the current folder or playlist, press and release this pushbutton. FOLDER RANDOM displays. Once all of the tracks in the current folder or playlist have been played, the system moves on to the next folder or playlist and plays all of the tracks in random order.

To repeat the tracks on the CD, press and hold this pushbutton for two seconds. A beep sounds and DISC RANDOM displays. This feature does not work with playlists.

When in random, pressing and releasing either SEEK arrow takes you to the next or previous random track.

Press and release this pushbutton again to turn off random play. NO RANDOM displays.

3 (Next Folder): Press this pushbutton to go to the first track in the next folder or playlist. If the disc contains playlists, it goes through the playlist, then the folders. Pressing this button while in folder random mode takes you to the next folder and random the tracks in that folder. This function does not work on a CD that does not contain folders or playlists.

4 REV (Reverse): Press and hold this pushbutton to reverse quickly within a track. Press and hold this pushbutton for less than two seconds to reverse at 10 times the normal playing speed. Press and hold it for more than two seconds to reverse at 20 times the normal playing speed. Release this pushbutton to play the track. REV and the elapsed time of the track appears on the display. If this pushbutton is pressed for more than 20 seconds, the radio stops reversing and begins to play.

6 (Previous Folder): Press this pushbutton to go to the first track in the previous folder or playlist. If the disc contains playlists, it goes through the playlist, then the folders. Pressing this pushbutton while in folder random mode takes you to the previous folder and random the tracks in that folder. This function does not work on a CD that does not contain folders or playlists.

Downloaded from www.Manualslib.com manuals search engine

△ **SEEK** ▽ **:** Press the up arrow to go to the start of the next track. Press the down arrow to go to the start of the previous track. Pressing either arrow for more than two seconds searches the previous or next tracks at two tracks per second. When the track number that you would like to play appears on the display, release the arrow to stop searching and to play the track.

TUNE: Turn this knob to fast track reverse or advance through tracks in all folders or playlists. The track number and file name appears on the display for each track. Turn this knob while in random to fast track reverse or advance the tracks in sequential order.

RCL (Recall): Push this knob to switch between track mode, folder/playlist mode, and time of day mode. The display shows only 13 characters, but there can be up to three pages of text. If there are more than 13 characters in the song, folder, or playlist name pushing this knob within two seconds takes you to the next page of text. If there are no other pages to be shown, pushing this knob within two seconds takes you to the next display mode.

Track mode displays the current track number and the ID3 tag song name.

Folder/playlist mode displays the current folder or playlist number and the folder/playlist name.

Time of day mode displays the time of day and the ID3 tag song name.

To change the default on the display, push this knob until you see the desired display, then hold this knob for two seconds. The radio produces one beep and the selected display is now the default.

INFO (Information): INFO displays whenever a current track has ID3 tag information. Press this button to display the artist name and album contained in the tag. INFO disappears from the display when the information in the ID3 tag has finished.

BAND: Press this button to listen to the radio when a CD is playing. The inactive CD remains inside the radio for future listening.

CD AUX (Auxiliary): Press this button to play a CD when listening to the radio. The CD symbol appears on the display when a CD is loaded.

EJECT: Press this button to eject a CD. Eject may be activated with either the ignition or radio off. CDs may be loaded with the radio and ignition off if this button is pressed first.

Downloaded from www.Manualslib.com manuals search engine

XM Radio Messages

XL (Explicit Language Channels): These channels, or any others, can be blocked at a customer's request, by calling 1-800-852-XMXM (9696).

Updating: The encryption code in the receiver is being updated, and no action is required. This process should take no longer than 30 seconds.

No Signal: The system is functioning correctly, but the vehicle is in a location that is blocking the XM™ signal. When the vehicle is moved into an open area, the signal should return.

Loading XM: The audio system is acquiring and processing audio and text data. No action is needed. This message should disappear shortly.

CH Off Air: This channel is not currently in service. Tune to another channel.

CH Unavail: This previously assigned channel is no longer assigned. Tune to another station. If this station was one of the presets, choose another station for that preset button.

No Info: No artist, song title, category, or text information is available at this time on this channel. The system is working properly.

No Info: No text or informational messages are available at this time on this channel. The system is working properly.

Not Found: There are no channels available for the selected category. The system is working properly.

XM Locked: The XM™ receiver in your vehicle may have previously been in another vehicle. For security purposes, XM™ receivers cannot be swapped between vehicles. If this message is received after having your vehicle serviced, check with your dealer/retailer.

Radio ID: If tuned to channel 0, this message alternates with the XM™ Radio eight digit radio ID label. This label is needed to activate the service.

Unknown: If this message is received when tuned to channel 0, there may be a receiver fault. Consult with your dealer/retailer.

Chk XMRcvr: If this message does not clear within a short period of time, the receiver may have a fault. Consult with your dealer/retailer.

Downloaded from www.Manualslib.com manuals search engine

Theft-Deterrent Feature

THEFTLOCK® is designed to discourage theft of your vehicle's radio. The feature works automatically by learning a portion of the Vehicle Identification Number (VIN). If the radio is moved to a different vehicle, it does not operate and LOCKED displays.

When the radio and vehicle are turned off, the blinking red light indicates that THEFTLOCK® is armed.

With THEFTLOCK® activated, the radio does not operate if stolen.

Audio Steering Wheel Controls

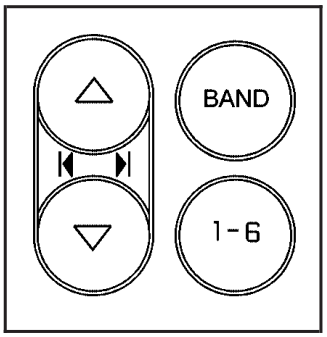

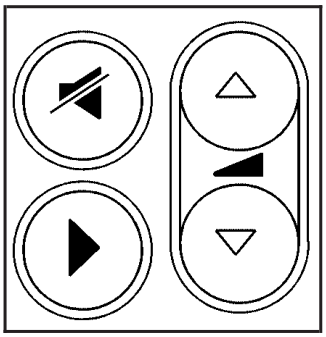

If your vehicle has this feature, some audio controls can be adjusted at the steering wheel. They include the following:

△|◀ ▶|▽ **(Seek/Scan):** Press the seek arrows to go to the previous or the next station and stay there.

To scan stations, press and hold either scan arrow for two seconds until FREQUENCY SCAN displays. The radio goes to a station, plays for a few seconds, then goes to the next station. Press either scan arrow again to stop scanning.

The sound mutes while seeking or scanning.
The radio seeks or scans stations only with a strong signal that are in the selected band.

Downloaded from www.Manualslib.com manuals search engine

When a CD is playing, press either scan arrow to go to the previous or next track, if more than eight seconds have played. If either scan arrow is held or pressed more than once, the player continues moving backward or forward through the CD.

BAND: Press this button to switch between FM1, FM2, AM, or XM1 or XM2 (if equipped).

1–6 (Preset Pushbuttons): Press this button to play stations that are programmed on the radio preset pushbuttons. The radio seeks preset stations only with a strong signal that are in the selected band.

(Mute//OnStar®): Press this button to silence the system. Press this button again, to turn the sound on.

If your vehicle is equipped with OnStar®, press and hold this button to interact with the OnStar® system. See the *OnStar® System on page 2-40* in this manual for more information.

(Play): When listening to the radio, press this button to play a CD.

(Volume): Press the volume arrows to increase or decrease the volume.

Radio Reception

Frequency interference and static during normal radio reception can occur if items such as cellphone chargers, vehicle convenience accessories, and external electronic devices are plugged into the accessory power outlet. If there is interference or static, unplug the item from the accessory power outlet.

AM

The range for most AM stations is greater than for FM, especially at night. The longer range can cause station frequencies to interfere with each other. For better radio reception, most AM radio stations boost the power levels during the day, and then reduce these levels during the night. Static can also occur when things like storms and power lines interfere with radio reception. When this happens, try reducing the treble on your radio.

FM Stereo

FM stereo gives the best sound, but FM signals reach only about 10 to 40 miles (16 to 65 km). Tall buildings or hills can interfere with FM signals, causing the sound to fade in and out.

Downloaded from www.Manualslib.com manuals search engine

XM™ Satellite Radio Service

XM™ Satellite Radio Service gives digital radio reception from coast-to-coast in the 48 contiguous United States, and in Canada. Just as with FM, tall buildings or hills can interfere with satellite radio signals, causing the sound to fade in and out. In addition, traveling or standing under heavy foliage, bridges, garages, or tunnels may cause loss of the XM™ signal for a period of time. The radio may display NO SIGNAL to indicate interference.

Backglass Antenna

The AM-FM antenna is integrated with the rear window defogger, located in the rear window. Make sure that the inside surface of the rear window is not scratched and that the lines on the glass are not damaged. If the inside surface is damaged, it could interfere with radio reception. Also, for proper radio reception, the antenna connector at the top-center of the rear window needs to be properly attached to the post on the glass.

Notice: **Using a razor blade or sharp object to clear the inside rear window may damage the rear window antenna and/or the rear window defogger. Repairs would not be covered by your warranty. Do not clear the inside rear window with sharp objects.**

Notice: **Do not apply aftermarket glass tinting with metallic film. The metallic film in some tinting materials will interfere with or distort the incoming radio reception. Any damage caused to your backglass antenna due to metallic tinting materials will not be covered by your warranty.**

Because this antenna is built into the rear window, there is a reduced risk of damage caused by car washes and vandals.

If static is heard on the radio, when the rear window defogger is turned on, it could mean that a defogger grid line has been damaged and the grid line must be repaired.

If adding a cellular telephone to your vehicle, and the antenna needs to be attached to the glass, make sure that you do not damage the grid lines for the AM-FM antenna. There is enough space between the lines to attach a cellular telephone antenna without interfering with radio reception.

Downloaded from www.Manualslib.com manuals search engine

XM™ Satellite Radio Antenna System

The XM™ Satellite Radio antenna is located on the roof of the vehicle. Keep this antenna clear of snow and ice build up for clear radio reception.

If the vehicle has a sunroof, the performance of the XM™ system may be affected if the sunroof is open.

Loading items onto the roof of the vehicle can interfere with the performance of the XM™ system. Make sure the XM™ Satellite Radio antenna is not obstructed.

Chime Level Adjustment

The radio is used to adjust the vehicle's chime level. To change the volume level of the chime, press and hold pushbutton 6 with the ignition on and the radio power off. The volume level will change from the normal level to loud, and LOUD will appear on the radio display. To change back to the default or normal setting, press and hold pushbutton 6 again. The volume level will change from the loud level to normal, and NORMAL will appear on the radio display. Each time the chime volume is changed, three chimes will sound to indicate the new volume selected. Removing the radio and not replacing it with a factory radio or chime module will disable vehicle chimes.

Downloaded from www.Manualslib.com manuals search engine

Section 4 Driving Your Vehicle

Your Driving, the Road, and Your Vehicle 4-2
Defensive Driving 4-2
Drunk Driving 4-2
Control of a Vehicle 4-3
Braking 4-3
Antilock Brake System (ABS) 4-4
Braking in Emergencies 4-5
Traction Control System (TCS) 4-6
Enhanced Traction System (ETS) 4-7
StabiliTrak® Plus System 4-8
Steering 4-10
Off-Road Recovery 4-12
Passing 4-12
Loss of Control 4-12
Driving at Night 4-14
Driving in Rain and on Wet Roads 4-14
Before Leaving on a Long Trip 4-15
Highway Hypnosis 4-16
Hill and Mountain Roads 4-16
Winter Driving 4-17
If Your Vehicle is Stuck in Sand, Mud, Ice, or Snow 4-21
Rocking Your Vehicle to Get It Out 4-22
Loading Your Vehicle 4-22
Towing 4-27
Towing Your Vehicle 4-27
Recreational Vehicle Towing 4-27
Towing a Trailer 4-29

Downloaded from www.Manualslib.com manuals search engine

Your Driving, the Road, and Your Vehicle

Defensive Driving

Defensive driving means “always expect the unexpected.” The first step in driving defensively is to wear your safety belt — See *Safety Belts: They Are for Everyone on page 1-10*.

⚠ CAUTION:

Assume that other road users (pedestrians, bicyclists, and other drivers) are going to be careless and make mistakes. Anticipate what they might do and be ready. In addition:

- **Allow enough following distance between you and the driver in front of you.**
- **Focus on the task of driving.**

Driver distraction can cause collisions resulting in injury or possible death. These simple defensive driving techniques could save your life.

Drunk Driving

⚠ CAUTION:

Drinking and then driving is very dangerous. Your reflexes, perceptions, attentiveness, and judgment can be affected by even a small amount of alcohol. You can have a serious — or even fatal — collision if you drive after drinking. Do not drink and drive or ride with a driver who has been drinking. Ride home in a cab; or if you are with a group, designate a driver who will not drink.

Death and injury associated with drinking and driving is a global tragedy.

Alcohol affects four things that anyone needs to drive a vehicle: judgment, muscular coordination, vision, and attentiveness.

Police records show that almost 40 percent of all motor vehicle-related deaths involve alcohol. In most cases, these deaths are the result of someone who was drinking and driving. In recent years, more than 17,000 annual motor vehicle-related deaths have been associated with the use of alcohol, with about 250,000 people injured.

Downloaded from www.Manualslib.com manuals search engine

For persons under 21, it is against the law in every U.S. state to drink alcohol. There are good medical, psychological, and developmental reasons for these laws.

The obvious way to eliminate the leading highway safety problem is for people never to drink alcohol and then drive.

Medical research shows that alcohol in a person's system can make crash injuries worse, especially injuries to the brain, spinal cord, or heart. This means that when anyone who has been drinking — driver or passenger — is in a crash, that person's chance of being killed or permanently disabled is higher than if the person had not been drinking.

Control of a Vehicle

The following three systems help to control your vehicle while driving — brakes, steering, and accelerator. At times, as when driving on snow or ice, it is easy to ask more of those control systems than the tires and road can provide. Meaning, you can lose control of your vehicle. See *Traction Control System (TCS) on page 4-6* and *Enhanced Traction System (ETS) on page 4-7*.

Adding non-dealer/non-retailer accessories can affect your vehicle's performance. See *Accessories and Modifications on page 5-3*.

Braking

See *Brake System Warning Light on page 3-45*.

Braking action involves perception time and reaction time. First, you have to decide to push on the brake pedal. That is perception time. Then you have to bring up your foot and do it. That is reaction time.

Average reaction time is about three-fourths of a second. But that is only an average. It might be less with one driver and as long as two or three seconds or more with another. Age, physical condition, alertness, coordination, and eyesight all play a part. So do alcohol, drugs, and frustration. But even in three-fourths of a second, a vehicle moving at 60 mph (100 km/h) travels 66 feet (20 m). That could be a lot of distance in an emergency, so keeping enough space between your vehicle and others is important.

And, of course, actual stopping distances vary greatly with the surface of the road, whether it is pavement or gravel; the condition of the road, whether it is wet, dry, or icy; tire tread; the condition of the brakes; the weight of the vehicle; and the amount of brake force applied.

Downloaded from www.Manualslib.com manuals search engine

Avoid needless heavy braking. Some people drive in spurts — heavy acceleration followed by heavy braking — rather than keeping pace with traffic. This is a mistake. The brakes might not have time to cool between hard stops. The brakes will wear out much faster if you do a lot of heavy braking. If you keep pace with the traffic and allow realistic following distances, you will eliminate a lot of unnecessary braking. That means better braking and longer brake life.

If your vehicle's engine ever stops while you are driving, brake normally but do not pump the brakes. If you do, the pedal could get harder to push down. If the engine stops, you will still have some power brake assist. But you will use it when you brake. Once the power assist is used up, it can take longer to stop and the brake pedal will be harder to push.

Adding non-dealer/non-retailer accessories can affect your vehicle's performance. See *Accessories and Modifications on page 5-3*.

Antilock Brake System (ABS)

Your vehicle might have the Antilock Brake System (ABS), an advanced electronic braking system that will help prevent a braking skid.

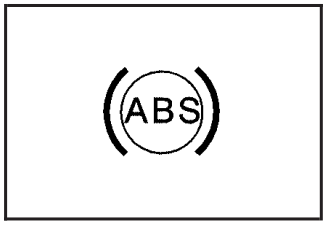

If your vehicle has ABS, this warning light on the instrument panel will come on briefly when you start your vehicle.

When you start the engine, or when you begin to drive away, ABS will check itself. You might hear a momentary motor or clicking noise while this test is going on, and you might even notice that the brake pedal moves or pulses a little. This is normal.

Let us say the road is wet and you are driving safely. Suddenly, an animal jumps out in front of you. You slam on the brakes and continue braking. Here is what happens with ABS:

A computer senses that wheels are slowing down. If one of the wheels is about to stop rolling, the computer will separately work the brakes at each wheel.

Downloaded from www.Manualslib.com manuals search engine

ABS can change the brake pressure faster than any driver could. The computer is programmed to make the most of available tire and road conditions. This can help you steer around the obstacle while braking hard.

As you brake, the computer keeps receiving updates on wheel speed and controls braking pressure accordingly.

Remember: ABS does not change the time you need to get your foot up to the brake pedal or always decrease stopping distance. If you get too close to the vehicle in front of you, you will not have time to apply the brakes if that vehicle suddenly slows or stops. Always leave enough room up ahead to stop, even though you have ABS.

Using ABS

Do not pump the brakes. Just hold the brake pedal down firmly and let antilock work for you. You might feel a slight brake pedal pulsation or notice some noise, but this is normal.

Braking in Emergencies

At some time, nearly every driver gets into a situation that requires hard braking.

If you have ABS, you can steer and brake at the same time. However, if you do not have ABS, your first reaction — to hit the brake pedal hard and hold it down — might be the wrong thing to do. Your wheels can stop rolling. Once they do, the vehicle cannot respond to your steering. Momentum will carry it in whatever direction it was headed when the wheels stopped rolling. That could be off the road, into the very thing you were trying to avoid, or into traffic.

If you do not have ABS, use a “squeeze” braking technique. This will give you maximum braking while maintaining steering control. You can do this by pushing on the brake pedal with steadily increasing pressure.

In an emergency, you will probably want to squeeze the brakes hard without locking the wheels. If you hear or feel the wheels sliding, ease off the brake pedal. This will help you retain steering control. If you do have ABS, it is different. See *Antilock Brake System (ABS) on page 4-4*.

In many emergencies, steering can help you more than even the very best braking.

Downloaded from www.Manualslib.com manuals search engine

Traction Control System (TCS)

If the vehicle has a 5.3L V8 engine, it has a Traction Control System (TCS) that limits wheel spin. This is especially useful in slippery road conditions. The system operates only if it senses that one or both of the front wheels are spinning or beginning to lose traction. When this happens, the system works the front brakes and reduces engine power to limit wheel spin.

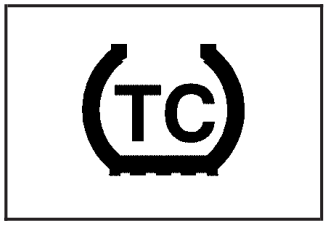

This symbol, along with the TRACTION CONTROL ACTIVE message, comes on the DIC screen when the system is active.

You may feel or hear the system working, but this is normal.

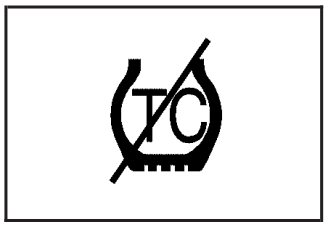

This symbol, along with the message TRACTION CONTROL OFF will display in the DIC for three seconds when the traction control system is disabled.

If there is a problem with the system, the service traction system will also appear on the DIC. When these symbols and messages appear on the instrument panel and the DIC, the system will not limit wheel spin. Adjust driving accordingly.

The traction control system automatically comes on whenever the vehicle is started. To limit wheel spin, especially in slippery road conditions, always leave the system on. But the traction control system can be turned off if needed. The system should be turned off if the vehicle ever gets stuck in sand, mud, or snow and rocking the vehicle is required. See *Rocking Your Vehicle to Get It Out on page 4-22* and *If Your Vehicle is Stuck in Sand, Mud, Ice, or Snow on page 4-21* for more information.

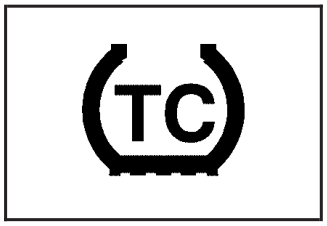

Press the traction control button located on the console to turn the system off.

If the system is limiting wheel spin when the traction control button is pressed, the system will turn off instantly. Turn the system back on at any time by pressing the button again.

Downloaded from www.Manualslib.com manuals search engine

If the vehicle is in cruise control when the traction control system begins to limit wheel spin, the cruise control will automatically disengage. When road conditions allow safe use of it, the cruise control can be used again. See *Cruise Control on page 3-12*.

Adding non-GM accessories can affect your vehicle's performance. See *Accessories and Modifications on page 5-3* for more information.

Enhanced Traction System (ETS)

If the vehicle has the 3.8L V6 engine and Antilock brakes, it has an Enhanced Traction System (ETS) that limits wheel spin. This is especially useful in slippery road conditions. The system operates only if it senses that one or both of the front wheels are spinning or beginning to lose traction. When this happens, the system reduces engine power and may also upshift the transmission to limit wheel spin.

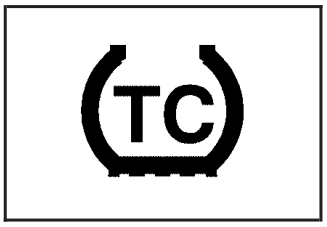

This symbol comes on the Driver Information Center (DIC) when the ETS is limiting wheel spin.

If the vehicle is in cruise control when ETS begins to limit wheel spin, the cruise control will automatically disengage. When road conditions allow safe use of it, the cruise control can be used again. See *Cruise Control on page 3-12*.

ETS operates in all transmission shift lever positions. But the system can upshift the transmission only as high as the chosen shift lever position, so use the lower gears only when necessary. See *Automatic Transmission Operation on page 2-28*.

Downloaded from www.Manualslib.com manuals search engine

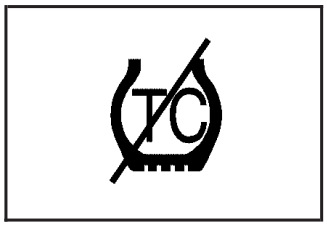

This symbol, along with the message TRACTION CONTROL OFF will display on the DIC for three seconds when the ETS is not on.

If there is a problem with the system, the service traction system will also come on in the DIC. See *Enhanced Traction System Warning Light on page 3-48*. When this warning light is on, the system will not limit wheel spin. Adjust driving accordingly.

To limit wheel spin, especially in slippery road conditions, the ETS should always be left on. But the system can be turned off. The system should be turned off if the vehicle ever gets stuck in sand, mud, or snow and rocking the vehicle is required. See *Rocking Your Vehicle to Get It Out on page 4-22* and *If Your Vehicle is Stuck in Sand, Mud, Ice, or Snow on page 4-21* for more information.

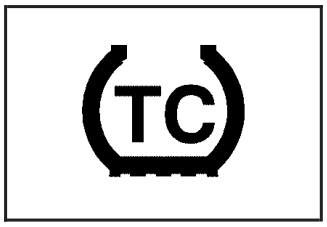

Press the traction control button located on the console to turn the system off.

If the system is limiting wheel spin when the button is pressed, the system will turn off instantly. Press the traction control button again to turn the system on.

StabiliTrak® Plus System

The vehicle may have a vehicle stability enhancement system called Stabilitrak® Plus. It is an advanced computer controlled system that assists with directional control of the vehicle in difficult driving conditions.

Stabilitrak® Plus comes on whenever the vehicle is started. It activates when the computer senses a discrepancy between the intended path and the direction the vehicle is actually traveling. Stabilitrak® Plus selectively applies braking pressure at any one of the vehicle's brakes to help control the vehicle in the steering direction.

Downloaded from www.Manualslib.com manuals search engine

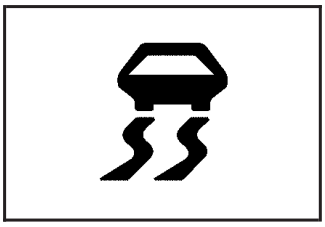

This symbol, along with the STABILITY CONTROL ACTIVE message comes on the Driver Information Center (DIC).

See *DIC Warnings and Messages on page 3-67*. You may also hear a noise or feel vibration in the brake pedal. This is normal. Continue to steer the vehicle in the desired direction.

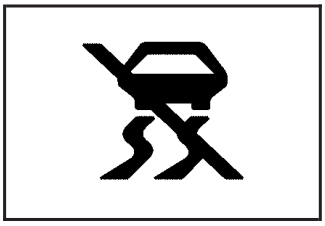

This symbol will appear on the DIC.

If there is a problem detected with Stabilitrak® Plus, this symbol along with the SERVICE STABILITY SYSTEM warning message will come on the DIC.

See *DIC Warnings and Messages on page 3-67*. When this message is displayed, the system is not operational. Driving should be adjusted accordingly.

To turn the Stabilitrak® system off (GXP only), press and hold the traction control button for more than five seconds. A message will appear on the DIC indicating that Stabilitrak® has been turned off. You can turn the system back on at any time by pressing the button again.

If the vehicle is in cruise control when Stabilitrak® Plus activates, the cruise control will automatically disengage. When road conditions allow safe use of it, the cruise control can be used again. See *Cruise Control on page 3-12* for more information.

Downloaded from www.Manualslib.com manuals search engine

Steering

Power Steering

If you lose power steering assist because the engine stops or the system is not functioning, you can steer but it will take much more effort.

Variable Effort Steering

If your vehicle has this steering system, the system provides less steering effort for parking and when driving at speeds below 20 mph (32 km/h). Steering effort will increase at higher speeds for improved road feel.

Steering Tips

It is important to take curves at a reasonable speed.

A lot of the “driver lost control” accidents mentioned on the news happen on curves. Here is why:

Experienced driver or beginner, each of us is subject to the same laws of physics when driving on curves. The traction of the tires against the road surface makes it possible for the vehicle to change its path when you turn the front wheels. If there is no traction, inertia will keep the vehicle going in the same direction. If you have ever tried to steer a vehicle on wet ice, you will understand this.

The traction you can get in a curve depends on the condition of the tires and the road surface, the angle at which the curve is banked, and your speed. While you are in a curve, speed is the one factor you can control.

Suppose you are steering through a sharp curve. Then you suddenly apply the brakes. Both control systems — steering and braking — have to do their work where the tires meet the road. Unless you have antilock brakes, adding the hard braking can demand too much of those places. You can lose control.

The same thing can happen if you are steering through a sharp curve and you suddenly accelerate. Those two control systems — steering and acceleration — can overwhelm those places where the tires meet the road and make you lose control. See *Traction Control System (TCS) on page 4-6* or *Enhanced Traction System (ETS) on page 4-7*.

What should you do if this ever happens? Ease up on the brake or accelerator pedal, steer the vehicle the way you want it to go, and slow down.

Speed limit signs near curves warn that you should adjust your speed. Of course, the posted speeds are based on good weather and road conditions. Under less favorable conditions you will want to go slower.

If you need to reduce your speed as you approach a curve, do it before you enter the curve, while the front wheels are straight ahead.

Downloaded from www.Manualslib.com manuals search engine

Try to adjust your speed so you can drive through the curve. Maintain a reasonable, steady speed. Wait to accelerate until you are out of the curve, and then accelerate gently into the straightaway.

Adding non-dealer/non-retailer accessories can affect your vehicle's performance. See *Accessories and Modifications on page 5-3*.

Steering in Emergencies

There are times when steering can be more effective than braking. For example, you come over a hill and find a truck stopped in your lane, or a car suddenly pulls out from nowhere, or a child darts out from between parked cars and stops right in front of you. You can avoid these problems by braking — if you can stop in time. But sometimes you cannot; there is not room. That is the time for evasive action — steering around the problem.

Your vehicle can perform very well in emergencies like these. First apply the brakes. See *Braking on page 4-3*. It is better to remove as much speed as you can from a possible collision. Then steer around the problem, to the left or right depending on the space available.

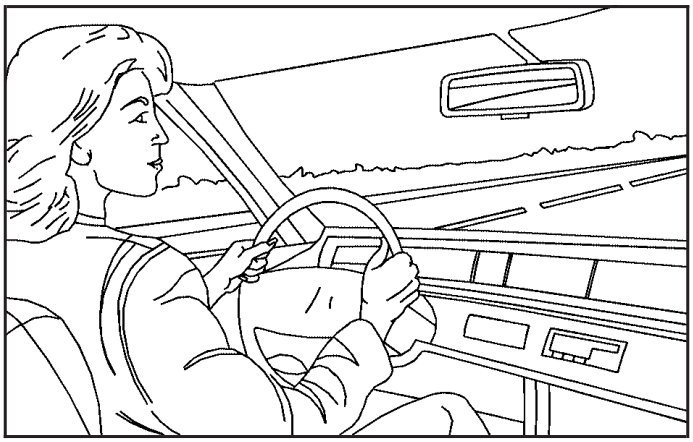

An emergency like this requires close attention and a quick decision. If you are holding the steering wheel at the recommended 9 and 3 o'clock positions, you can turn it a full 180 degrees very quickly without removing either hand. But you have to act fast, steer quickly, and just as quickly straighten the wheel once you have avoided the object.

The fact that such emergency situations are always possible is a good reason to practice defensive driving at all times and wear safety belts properly.

Downloaded from www.Manualslib.com manuals search engine

Off-Road Recovery

You may find that your vehicle's right wheels have dropped off the edge of a road onto the shoulder while you are driving.

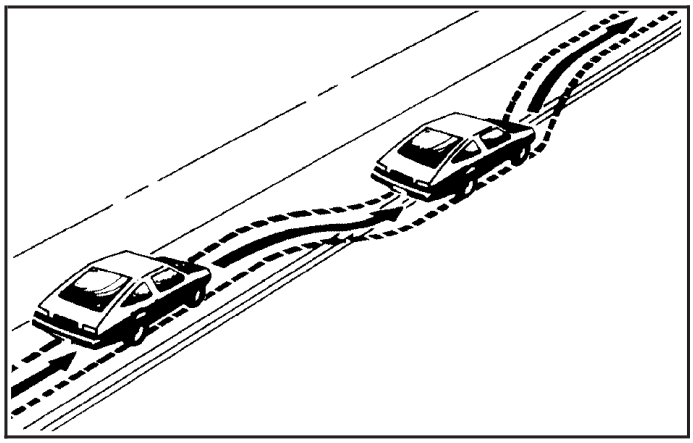

If the level of the shoulder is only slightly below the pavement, recovery should be fairly easy. Ease off the accelerator and then, if there is nothing in the way, steer so that your vehicle straddles the edge of the pavement. You can turn the steering wheel up to one-quarter turn until the right front tire contacts the pavement edge. Then turn the steering wheel to go straight down the roadway.

Passing

Passing another vehicle on a two-lane road can be dangerous. To reduce the risk of danger while passing, we suggest the following tips:

- Look down the road, to the sides, and to crossroads for situations that might affect a successful pass. If in doubt, wait.
- Watch for traffic signs, pavement markings, and lines that could indicate a turn or an intersection. Never cross a solid or double-solid line on your side of the lane.
- Do not get too close to the vehicle you want to pass. Doing so can reduce your visibility.
- Wait your turn to pass a slow vehicle.
- When you are being passed, ease to the right.

Loss of Control

Let us review what driving experts say about what happens when the three control systems — brakes, steering, and acceleration — do not have enough friction where the tires meet the road to do what the driver has asked.

In any emergency, do not give up. Keep trying to steer and constantly seek an escape route or area of less danger.

Downloaded from www.Manualslib.com manuals search engine

Skidding

In a skid, a driver can lose control of the vehicle. Defensive drivers avoid most skids by taking reasonable care suited to existing conditions, and by not overdriving those conditions. But skids are always possible.

The three types of skids correspond to your vehicle's three control systems. In the braking skid, the wheels are not rolling. In the steering or cornering skid, too much speed or steering in a curve causes tires to slip and lose cornering force. And in the acceleration skid, too much throttle causes the driving wheels to spin.

A cornering skid is best handled by easing your foot off the accelerator pedal.

If you do not have the Enhanced Traction System (ETS) or the Traction Control System (TCS), or if the system is off, then an acceleration skid is also best handled by easing your foot off the accelerator pedal. See *Enhanced Traction System (ETS) on page 4-7* or *Traction Control System (TCS) on page 4-6*.

If your vehicle starts to slide, ease your foot off the accelerator pedal and quickly steer the way you want the vehicle to go. If you start steering quickly enough, your vehicle may straighten out. Always be ready for a second skid if it occurs.

Of course, traction is reduced when water, snow, ice, gravel, or other material is on the road. For safety, you will want to slow down and adjust your driving to these conditions. It is important to slow down on slippery surfaces because stopping distance will be longer and vehicle control more limited.

While driving on a surface with reduced traction, try your best to avoid sudden steering, acceleration, or braking, including reducing vehicle speed by shifting to a lower gear. Any sudden changes could cause the tires to slide. You may not realize the surface is slippery until your vehicle is skidding. Learn to recognize warning clues — such as enough water, ice, or packed snow on the road to make a mirrored surface — and slow down when you have any doubt.

If you have the Antilock Brake System (ABS), remember: It helps avoid only the braking skid. If you do not have ABS, then in a braking skid, where the wheels are no longer rolling, release enough pressure on the brakes to get the wheels rolling again. This restores steering control. Push the brake pedal down steadily when you have to stop suddenly. As long as the wheels are rolling, you will have steering control.

Downloaded from www.Manualslib.com manuals search engine

Driving at Night

Night driving is more dangerous than day driving because some drivers are likely to be impaired — by alcohol or drugs, with night vision problems, or by fatigue.

Night driving tips include:

- Drive defensively.
- Do not drink and drive.
- Reduce headlamp glare by adjusting the inside rearview mirror.
- Slow down and keep more space between you and other vehicles because your headlamps can only light up so much road ahead.
- Watch for animals.
- When tired, pull off the road.
- Do not wear sunglasses.
- Avoid staring directly into approaching headlamps.
- Keep the windshield and all glass on your vehicle clean — inside and out.
- Keep your eyes moving, especially during turns or curves.

No one can see as well at night as in the daytime. But, as we get older, these differences increase. A 50-year-old driver might need at least twice as much light to see the same thing at night as a 20-year-old.

Driving in Rain and on Wet Roads

Rain and wet roads can reduce vehicle traction and affect your ability to stop and accelerate. Always drive slower in these types of driving conditions and avoid driving through large puddles and deep-standing or flowing water.

⚠ CAUTION:

Wet brakes can cause crashes. They might not work as well in a quick stop and could cause pulling to one side. You could lose control of the vehicle.

After driving through a large puddle of water or a car/vehicle wash, lightly apply the brake pedal until the brakes work normally.

Flowing or rushing water creates strong forces. Driving through flowing water could cause your vehicle to be carried away. If this happens, you and other vehicle occupants could drown. Do not ignore police warnings and be very cautious about trying to drive through flowing water.

Downloaded from www.Manualslib.com manuals search engine

Hydroplaning

Hydroplaning is dangerous. Water can build up under your vehicle's tires so they actually ride on the water. This can happen if the road is wet enough and you are going fast enough. When your vehicle is hydroplaning, it has little or no contact with the road.

There is no hard and fast rule about hydroplaning. The best advice is to slow down when the road is wet.

Other Rainy Weather Tips

Besides slowing down, other wet weather driving tips include:

- Allow extra following distance.
- Pass with caution.
- Keep windshield wiping equipment in good shape.
- Keep the windshield washer fluid reservoir filled.
- Have good tires with proper tread depth. See *Tires on page 5-62*.

Before Leaving on a Long Trip

To prepare your vehicle for a long trip, consider having it serviced by your dealer/retailer before departing.

Things to check on your own include:

- *Windshield Washer Fluid:* Reservoir full? Windows clean — inside and outside?
- *Wiper Blades:* In good shape?
- *Fuel, Engine Oil, Other Fluids:* All levels checked?
- *Lamps:* Do they all work and are lenses clean?
- *Tires:* Are treads good? Are tires inflated to recommended pressure?
- *Weather and Maps:* Safe to travel? Have up-to-date maps?

Downloaded from www.Manualslib.com manuals search engine

Highway Hypnosis

Always be alert and pay attention to your surroundings while driving. If you become tired or sleepy, find a safe place to park your vehicle and rest.

Other driving tips include:

- Keep the vehicle well ventilated.
- Keep interior temperature cool.
- Keep your eyes moving — scan the road ahead and to the sides.
- Check the rearview mirror and vehicle instruments often.

Hill and Mountain Roads

Driving on steep hills or through mountains is different than driving on flat or rolling terrain. Tips for driving in these conditions include:

- Keep your vehicle serviced and in good shape.
- Check all fluid levels and brakes, tires, cooling system, and transmission.
- Going down steep or long hills, shift to a lower gear.

⚠ CAUTION:

If you do not shift down, the brakes could get so hot that they would not work well. You would then have poor braking or even none going down a hill. You could crash. Shift down to let the engine assist the brakes on a steep downhill slope.

Downloaded from www.Manualslib.com manuals search engine

⚠ CAUTION:

Coasting downhill in NEUTRAL (N) or with the ignition off is dangerous. The brakes will have to do all the work of slowing down and they could get so hot that they would not work well. You would then have poor braking or even none going down a hill. You could crash. Always have the engine running and your vehicle in gear when you go downhill.

- Stay in your own lane. Do not swing wide or cut across the center of the road. Drive at speeds that let you stay in your own lane.
- Top of hills: Be alert — something could be in your lane (stalled car, accident).
- Pay attention to special road signs (falling rocks area, winding roads, long grades, passing or no-passing zones) and take appropriate action.

Winter Driving

Here are some tips for winter driving:

- Have your vehicle in good shape for winter.
- You might want to put winter emergency supplies in your trunk.

Include an ice scraper, a small brush or broom, a supply of windshield washer fluid, a rag, some winter outer clothing, a small shovel, a flashlight, a red cloth, and a couple of reflective warning triangles. And, if you will be driving under severe conditions, include a small bag of sand, a piece of old carpet, or a couple of burlap bags to help provide traction. Be sure you properly secure these items in your vehicle.

Also see *Tires on page 5-62*.

Downloaded from www.Manualslib.com manuals search engine

Driving on Snow or Ice

Most of the time, those places where the tires meet the road probably have good traction.

However, if there is snow or ice between the tires and the road, you can have a very slippery situation. You have a lot less traction, or grip, and need to be very careful.

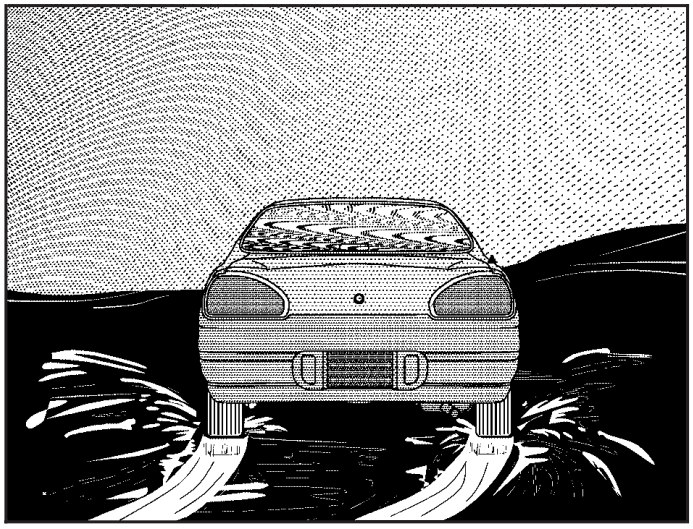

What is the worst time for this? Wet ice. Very cold snow or ice can be slick and hard to drive on.

But wet ice can be even more trouble because it can offer the least traction of all. You can get wet ice when it is about freezing, 32°F (0°C), and freezing rain begins to fall. Try to avoid driving on wet ice until salt and sand crews can get there.

Whatever the condition — smooth ice, packed, blowing, or loose snow — drive with caution.

If your vehicle has the Traction Control System (TCS) or the Enhanced Traction System (ETS), it will improve your ability to accelerate when driving on a slippery road. Even though your vehicle has a traction system, slow down and adjust your driving to the road conditions. Under certain conditions, you might want to turn the TCS or ETS off, such as when driving through deep snow and loose gravel, to help maintain vehicle motion at lower speeds. See *Traction Control System (TCS) on page 4-6* or *Enhanced Traction System (ETS) on page 4-7*.

If your vehicle does not have TCS or ETS, accelerate gently. Try not to break the fragile traction. If you accelerate too fast, the drive wheels will spin and polish the surface under the tires even more.

Downloaded from www.Manualslib.com manuals search engine

Unless your vehicle has the Antilock Brake System (ABS), you will want to brake very gently, too. If you do have ABS, see *Antilock Brake System (ABS) on page 4-4*. ABS improves your vehicle's stability when you make a hard stop on a slippery road. Whether your vehicle has ABS or not, begin stopping sooner than you would on dry pavement. Without ABS, if you feel your vehicle begin to slide, let up on the brakes a little. Push the brake pedal down steadily to get the most traction you can.

Remember, unless your vehicle has ABS, if you brake so hard that the wheels stop rolling, you will just slide. Brake so the wheels always keep rolling and you can still steer.

- Whatever your vehicle's braking system, allow greater following distance on any slippery road.
- Watch for slippery spots. The road might be fine until you hit a spot that is covered with ice. On an otherwise clear road, ice patches can appear in shaded areas where the sun cannot reach, such as around clumps of trees, behind buildings, or under bridges. Sometimes the surface of a curve or an overpass can remain icy when the surrounding roads are clear. If you see a patch of ice ahead of you, brake before you are on it. Try not to brake while you are actually on the ice, and avoid sudden steering maneuvers.

If You Are Caught in a Blizzard

If you are stopped by heavy snow, you could be in a serious situation. You should probably stay with your vehicle unless you know for sure that you are near help and you can hike through the snow. Here are some things to do to summon help and keep yourself and your passengers safe:

- Turn on the hazard warning flashers.
- Tie a red cloth to your vehicle to alert police that you have been stopped by the snow.
- Put on extra clothing or wrap a blanket around you. If you do not have blankets or extra clothing, make body insulators from newspapers, burlap bags, rags, floor mats — anything you can wrap around yourself or tuck under your clothing to keep warm.

Downloaded from www.Manualslib.com manuals search engine

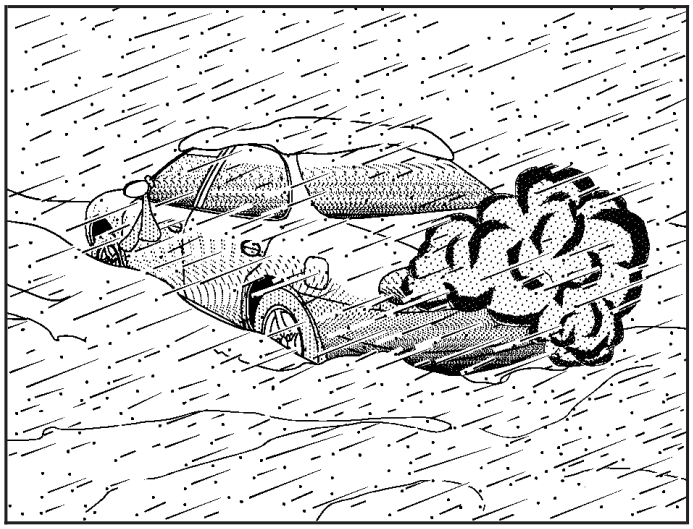

You can run the engine to keep warm, but be careful.

⚠ CAUTION:

Snow can trap exhaust gases under your vehicle. This can cause deadly CO (carbon monoxide) gas to get inside. CO could overcome you and kill you. You cannot see it or smell it, so you might not know it is in your vehicle. Clear away snow from around the base of your vehicle, especially any that is blocking the exhaust pipe. And check around again from time to time to be sure snow does not collect there.

Open a window just a little on the side of the vehicle that is away from the wind. This will help keep CO out.

Run your engine only as long as you must. This saves fuel. When you run the engine, make it go a little faster than just idle. That is, push the accelerator slightly. This uses less fuel for the heat that you get and it keeps the battery charged. You will need a well-charged battery to restart the vehicle, and possibly for signaling later on with the headlamps. Let the heater run for a while.

Downloaded from www.Manualslib.com manuals search engine

Then, shut the engine off and close the window almost all the way to preserve the heat. Start the engine again and repeat this only when you feel really uncomfortable from the cold. But do it as little as possible. Preserve the fuel as long as you can. To help keep warm, you can get out of the vehicle and do some fairly vigorous exercises every half hour or so until help comes.

If Your Vehicle is Stuck in Sand, Mud, Ice, or Snow

Slowly and cautiously spin the wheels to free your vehicle when stuck in sand, mud, ice, or snow. See *Rocking Your Vehicle to Get It Out on page 4-22*.

If your vehicle has a traction system, it can often help to free a stuck vehicle. Refer to your vehicle's traction system in the Index. If the stuck condition is too severe for the traction system to free the vehicle, turn the traction system off and use the rocking method.

⚠ CAUTION:

If you let your vehicle's tires spin at high speed, they can explode, and you or others could be injured. The vehicle can overheat, causing an engine compartment fire or other damage. Spin the wheels as little as possible and avoid going above 35 mph (55 km/h) as shown on the speedometer.

For information about using tire chains on your vehicle, see *Tire Chains on page 5-84*.

Downloaded from www.Manualslib.com manuals search engine

Rocking Your Vehicle to Get It Out

First, turn the steering wheel left and right to clear the area around the front wheels. Turn off any traction or stability system. See *Traction Control System (TCS) on page 4-6*, *Enhanced Traction System (ETS) on page 4-7*, and *StabiliTrak® Plus System on page 4-8*. Then shift back and forth between REVERSE (R) and a forward gear, spinning the wheels as little as possible. To prevent transmission wear, wait until the wheels stop spinning before shifting gears. Release the accelerator pedal while you shift, and press lightly on the accelerator pedal when the transmission is in gear. By slowly spinning the wheels in the forward and reverse directions, you will cause a rocking motion that could free your vehicle. If that does not get your vehicle out after a few tries, it might need to be towed out. If your vehicle does need to be towed out, see *Towing Your Vehicle on page 4-27*.

Loading Your Vehicle

It is very important to know how much weight your vehicle can carry. Two labels on your vehicle show how much weight it may properly carry, the Tire and Loading Information label and the Vehicle Certification label.

⚠ CAUTION:

Do not load your vehicle any heavier than the Gross Vehicle Weight Rating (GVWR), or either the maximum front or rear Gross Axle Weight Rating (GAWR). If you do, parts on your vehicle can break, and it can change the way your vehicle handles. These could cause you to lose control and crash. Also, overloading can shorten the life of your vehicle.

Downloaded from www.Manualslib.com manuals search engine

Tire and Loading Information Label

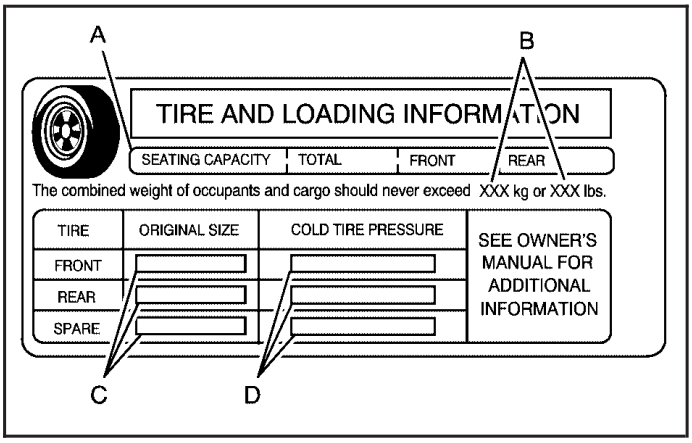

Label Example

A vehicle specific Tire and Loading Information label is attached to the vehicle's center pillar (B-pillar). With the driver's door open, you will find the label attached below the door lock post (striker). The Tire and Loading Information label lists the number of occupant seating positions (A), and the maximum vehicle capacity weight (B) in kilograms and pounds. The vehicle capacity weight includes the weight of all occupants, cargo, and all nonfactory-installed options.

The Tire and Loading Information label also lists the tire size of the original equipment tires (C) and the recommended cold tire inflation pressures (D). For more information on tires and inflation, see *Tires on page 5-62* and *Inflation - Tire Pressure on page 5-69*.

There is also important loading information on the Certification label. It tells you the Gross Vehicle Weight Rating (GVWR) and the Gross Axle Weight Rating (GAWR) for the front and rear axle, see "Certification Label" later in this section.

Steps for Determining Correct Load Limit

1. Locate the statement "The combined weight of occupants and cargo should never exceed XXX kg or XXX lbs" on your vehicle's placard.
2. Determine the combined weight of the driver and passengers that will be riding in your vehicle.
3. Subtract the combined weight of the driver and passengers from XXX kg or XXX lbs.

Downloaded from www.Manualslib.com manuals search engine

4. The resulting figure equals the available amount of cargo and luggage load capacity. For example, if the “XXX” amount equals 1400 lbs and there will be five 150 lb passengers in your vehicle, the amount of available cargo and luggage load capacity is 650 lbs (1400 – 750 (5 x 150) = 650 lbs).
5. Determine the combined weight of luggage and cargo being loaded on the vehicle. That weight may not safely exceed the available cargo and luggage load capacity calculated in Step 4.
6. If your vehicle will be towing a trailer, the load from your trailer will be transferred to your vehicle. Consult this manual to determine how this reduces the available cargo and luggage load capacity for your vehicle.

If your vehicle can tow a trailer, see *Towing a Trailer on page 4-29* for important information on towing a trailer, towing safety rules, and trailering tips.

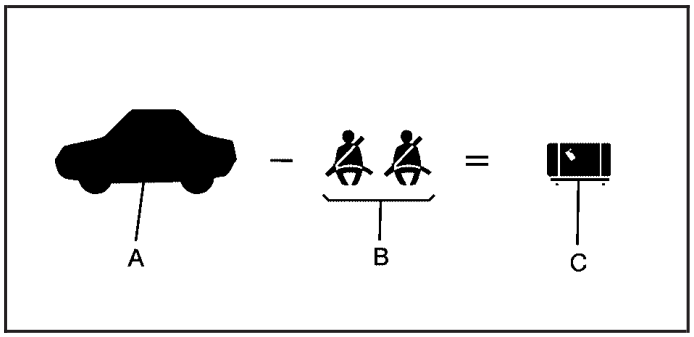

Example 1

Item	Description	Total
A	Maximum Vehicle Capacity Weight for Example 1 =	1,000 lbs (453 kg)
B	Subtract Occupant Weight 150 lbs (68 kg) × 2 =	300 lbs (136 kg)
C	Available Occupant and Cargo Weight =	700 lbs (317 kg)

Downloaded from www.Manualslib.com manuals search engine

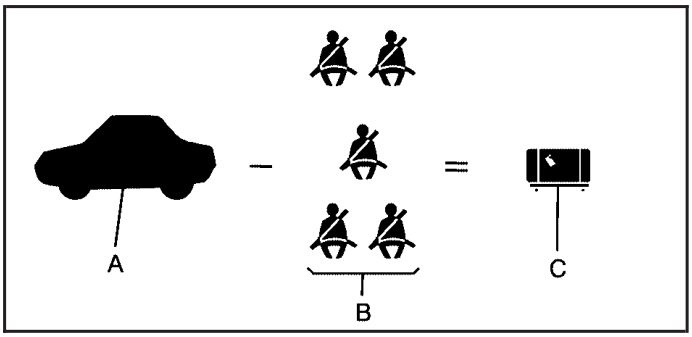

Example 2

Item	Description	Total
A	Maximum Vehicle Capacity Weight for Example 2 =	1,000 lbs (453 kg)
B	Subtract Occupant Weight 150 lbs (68 kg) × 5 =	750 lbs (340 kg)
C	Available Cargo Weight =	250 lbs (113 kg)

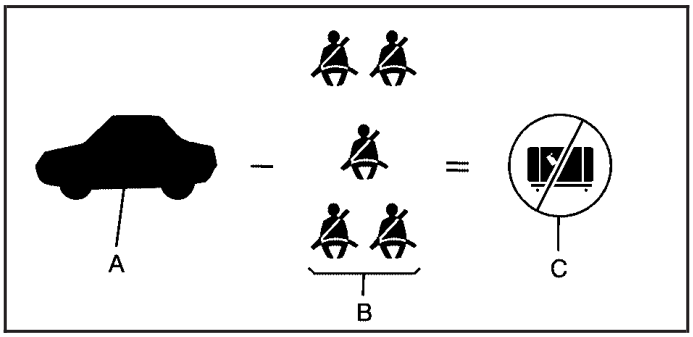

Example 3

Item	Description	Total
A	Maximum Vehicle Capacity Weight for Example 3 =	1,000 lbs (453 kg)
B	Subtract Occupant Weight 200 lbs (91 kg) × 5 =	1,000 lbs (453 kg)
C	Available Cargo Weight =	0 lbs (0 kg)

Refer to your vehicle's Tire and Loading Information label for specific information about your vehicle's maximum vehicle capacity weight and seating positions. The combined weight of the driver, passengers, and cargo should never exceed your vehicle's maximum vehicle capacity weight.

Downloaded from www.Manualslib.com manuals search engine

Certification Label

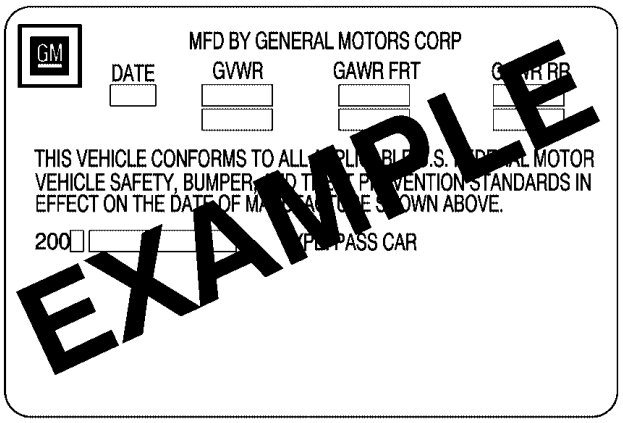

A vehicle specific Certification label is found on the rear edge of the driver's door.

The label shows the gross weight capacity of your vehicle, called the Gross Vehicle Weight Rating (GVWR). The GVWR includes the weight of the vehicle, all occupants, fuel, and cargo.

Never exceed the GVWR for your vehicle or the Gross Axle Weight Rating (GAWR) for either the front or rear axle.

If the vehicle is going to carry a heavy load, spread it out. See "Steps for Determining Correct Load Limit" earlier in this section.

⚠ CAUTION:

Do not load your vehicle any heavier than the Gross Vehicle Weight Rating (GVWR), or either the maximum front or rear Gross Axle Weight Rating (GAWR). If you do, parts on your vehicle can break, and it can change the way your vehicle handles. These could cause you to lose control and crash. Also, overloading can shorten the life of your vehicle.

Notice: **Overloading your vehicle may cause damage. Repairs would not be covered by your warranty. Do not overload your vehicle.**

If things like suitcases, tools, packages, or anything else are put inside the vehicle, they will go as fast as the vehicle goes. If you have to stop or turn quickly, or if there is a crash, they will keep going.

Downloaded from www.Manualslib.com manuals search engine

⚠ CAUTION:

Things you put inside your vehicle can strike and injure people in a sudden stop or turn, or in a crash.

- **Put things in the trunk of your vehicle. In a trunk, put them as far forward as you can. Try to spread the weight evenly.**
- **Never stack heavier things, like suitcases, inside the vehicle so that some of them are above the tops of the seats.**
- **Do not leave an unsecured child restraint in your vehicle.**
- **When you carry something inside the vehicle, secure it whenever you can.**
- **Do not leave a seat folded down unless you need to.**

Towing

Towing Your Vehicle

Consult your dealer/retailer or a professional towing service if you need to have your disabled vehicle towed. See *Roadside Assistance Program on page 7-6*.

If you want to tow your vehicle behind another vehicle for recreational purposes (such as behind a motorhome), see “Recreational Vehicle Towing” following.

Recreational Vehicle Towing

Recreational vehicle towing means towing your vehicle behind another vehicle – such as behind a motorhome. The two most common types of recreational vehicle towing are known as dinghy towing, towing your vehicle with all four wheels on the ground, and dolly towing, towing your vehicle with two wheels on the ground and two wheels up on a device known as a dolly.

With the proper preparation and equipment, many vehicles can be towed in these ways. See “Dinghy Towing” and “Dolly Towing,” following.

Downloaded from www.Manualslib.com manuals search engine

Here are some important things to consider before you do recreational vehicle towing:

- What is the towing capacity of the towing vehicle? Be sure to read the tow vehicle manufacturer's recommendations.
- How far will the vehicle be towed? Some vehicles have restrictions on how far and how long they can tow.
- Do you have the proper towing equipment? See your dealer/retailer or trailering professional for additional advice and equipment recommendations.
- Is the vehicle ready to be towed? Just as you would prepare your vehicle for a long trip, you will want to make sure the vehicle is prepared to be towed. See *Before Leaving on a Long Trip on page 4-15*.

Dinghy Towing

Notice: **If you tow your vehicle with all four wheels on the ground, the drivetrain components could be damaged. The repairs would not be covered by your warranty. Do not tow your vehicle with all four wheels on the ground.**

The vehicle was not designed to be towed with all four wheels on the ground. If the vehicle must be towed, use a dolly. See "Dolly Towing" following for more information.

Dolly Towing

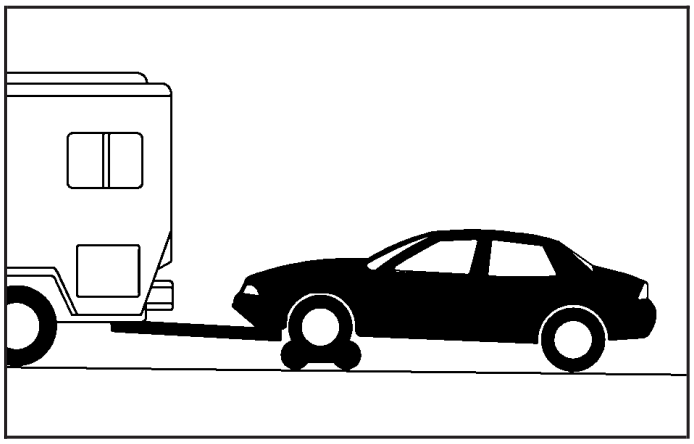

The vehicle can be towed using a dolly. To tow your vehicle using a dolly, follow these steps:

1. Put the front wheels on the dolly.
2. Put the vehicle in PARK (P).
3. Set the parking brake and then remove the key.
4. Clamp the steering wheel in a straight-ahead position.
5. Release the parking brake.

Downloaded from www.Manualslib.com manuals search engine

Towing a Trailer

⚠ CAUTION:

If you do not use the correct equipment and drive properly, you can lose control when you pull a trailer. For example, if the trailer is too heavy, the brakes may not work well — or even at all. You and your passengers could be seriously injured. You may also damage your vehicle; the resulting repairs would not be covered by your warranty. Pull a trailer only if you have followed all the steps in this section. Ask your dealer/retailer for advice and information about towing a trailer with your vehicle.

The vehicle can tow a trailer if it is equipped with the proper trailer towing equipment. To identify the trailering capacity of the vehicle, read the information in "Weight of the Trailer" that appears later in this section. Trailering is different than just driving the vehicle by itself. Trailering means changes in handling, durability, and fuel economy. Successful, safe trailering takes correct equipment, and it has to be used properly.

That is the reason for this part. In it are many time-tested, important trailering tips and safety rules. Many of these are important for your safety and that of your passengers. So please read this section carefully before pulling a trailer.

Load-pulling components such as the engine, transmission, wheel assemblies, and tires are forced to work harder against the drag of the added weight. The engine is required to operate at relatively higher speeds and under greater loads, generating extra heat. The trailer also adds considerably to wind resistance, increasing the pulling requirements.

Downloaded from www.Manualslib.com manuals search engine

If You Do Decide To Pull A Trailer

Here are some important points:

- There are many different laws, including speed limit restrictions, having to do with trailering. Make sure your rig will be legal, not only where you live but also where you will be driving. A good source for this information can be state or provincial police.
- Consider using a sway control. Ask a hitch dealer/retailer about sway controls.
- Do not tow a trailer at all during the first 1,000 miles (1 600 km) the new vehicle is driven. The engine, axle, or other parts could be damaged.
- Then, during the first 500 miles (800 km) that the vehicle tows a trailer, do not drive over 50 mph (80 km/h) and do not make starts at full throttle. This helps the engine and other parts of the vehicle wear in at the heavier loads.
- Obey speed limit restrictions when towing a trailer. Do not drive faster than the maximum posted speed for trailers, or no more than 55 mph (90 km/h), to save wear on the vehicle's parts.

Three important considerations have to do with weight:

- The weight of the trailer
- The weight of the trailer tongue
- The total weight on your vehicle's tires

Weight of the Trailer

How heavy can a trailer safely be?

It should never weigh more than 1,000 lbs (454 kg). But even that can be too heavy.

It depends on how you plan to use your rig. For example, speed, altitude, road grades, outside temperature, and how much the vehicle is used to pull a trailer are all important. It can also depend on any special equipment that is on the vehicle, and the amount of tongue weight the vehicle can carry. See "Weight of the Trailer Tongue" later in this section for more information.

Maximum trailer weight is calculated assuming only the driver is in the tow vehicle and it has all the required trailering equipment. The weight of additional optional equipment, passengers and cargo in the tow vehicle must be subtracted from the maximum trailer weight.

Ask your dealer/retailer for our trailering information or advice, or write us at our Customer Assistance Offices. See *Customer Assistance Offices on page 7-5* for more information.

Downloaded from www.Manualslib.com manuals search engine

Weight of the Trailer Tongue

The tongue load (A) of any trailer is an important weight to measure because it affects the total or gross weight of the vehicle. The Gross Vehicle Weight (GVW) includes the curb weight of the vehicle, any cargo in it, and the people who will be riding in the vehicle. If there are a lot of options, equipment, passengers and cargo in the vehicle, it will reduce the tongue weight the vehicle can carry, which will also reduce the trailer weight the vehicle can tow. And if towing a trailer, the tongue load must be added to the GVW because the vehicle will be carrying that weight, too. See *Loading Your Vehicle on page 4-22* for more information about your vehicle's maximum load capacity.

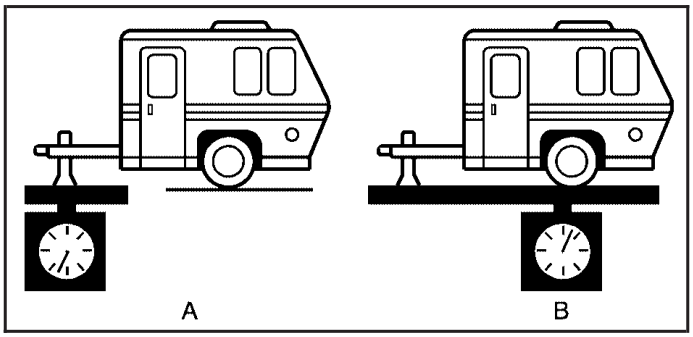

When using a weight-carrying hitch or a weight-distributing hitch, the trailer tongue (A) should weigh 10 to 15 percent of the total loaded trailer weight (B).

After the trailer is loaded, weigh the trailer and then the tongue, separately, to see if the weights are proper. The correct weight could be achieved simply by moving some items around in the trailer.

Downloaded from www.Manualslib.com manuals search engine

Total Weight on Your Vehicle's Tires

Be sure the vehicle's tires are inflated to the upper limit for cold tires. These numbers can be found on the Tire and Loading Information label, that is located on the driver's side center B-pillar. See *Loading Your Vehicle on page 4-22*. Be sure not to go over the GVW limit for the vehicle, or the GAWR, including the weight of the trailer tongue. If a weight distribution hitch is used, make sure not to go over the rear axle limit before applying the weight distribution spring bars.

Hitches

It is important to have the correct hitch equipment. Crosswinds, large trucks going by, and rough roads are a few reasons why the correct hitch is needed. Here are some rules to follow:

- The rear bumper on the vehicle is not intended for hitches. Do not attach rental hitches or other bumper-type hitches to it. Use only a frame-mounted hitch that does not attach to the bumper.
- If any holes need to be made in the body of the vehicle to install a trailer hitch, then be sure to seal the holes later when the hitch is removed. If the holes are not sealed, deadly carbon monoxide (CO) from the exhaust can get into the vehicle. See *Engine Exhaust on page 2-36*. Dirt and water can, too.

Safety Chains

Always attach chains between the vehicle and the trailer. Cross the safety chains under the tongue of the trailer so that the tongue will not drop to the road if it becomes separated from the hitch. Instructions about safety chains may be provided by the hitch manufacturer or by the trailer manufacturer. Follow the manufacturer's recommendation for attaching safety chains and do not attach them to the bumper. Always leave just enough slack so the rig can be turned around. And, never allow safety chains to drag on the ground.

Downloaded from www.Manualslib.com manuals search engine

Trailer Brakes

Does your trailer have its own brakes? Be sure to read and follow the instructions for the trailer brakes so you'll be able to install, adjust and maintain them properly.

- If your vehicle has anti-lock brakes, do not try to tap into your vehicle's brake system. If you do, both brake systems won't work well, or at all.
- Even if your vehicle doesn't have anti-lock brakes, don't tap into your vehicle's brake system if the trailer's brake system will use more than 0.02 cubic inch (0.3 cc) of fluid from your vehicle's master cylinder. If it does, both braking systems won't work well. You could even lose your brakes.
- Will the trailer brake parts take 3,000 psi (20 650 kPa) of pressure? If not, the trailer brake system must not be used with your vehicle.
- If everything checks out this far, then make the brake fluid tap at the upper rear master cylinder port. But don't use copper tubing for this. If you do, it will bend and break off. Use steel brake tubing.

Driving with a Trailer

Towing a trailer requires a certain amount of experience. Before setting out for the open road, get to know the rig. Acquaint yourself with the feel of handling and braking with the added weight of the trailer. And always keep in mind that the vehicle is now a good deal longer and not nearly as responsive as the vehicle is by itself.

Before starting, check the trailer hitch and platform (and attachments), safety chains, electrical connector, lamps, tires, and mirror adjustment. If the trailer has electric brakes, start the vehicle and trailer moving and then apply the trailer brake controller by hand to be sure the brakes are working. This lets you check the electrical connection at the same time.

During your trip, check occasionally to be sure that the load is secure, and that the lamps and any trailer brakes are still working.

Downloaded from www.Manualslib.com manuals search engine

Following Distance

Stay at least twice as far behind the vehicle ahead as when driving the vehicle without a trailer. This can prevent situations that require heavy braking and sudden turns.

Passing

More passing distance is needed up ahead when towing a trailer. And, because the vehicle and trailer are a good deal longer, distances between any vehicles that are passed must be greater, before returning to the proper lane.

Backing Up

Hold the bottom of the steering wheel with one hand. Then, to move the trailer to the left, move that hand to the left. To move the trailer to the right, move that hand to the right. Always back up slowly and, if possible, have someone guide you.

Making Turns

Notice: **Making very sharp turns while trailering could cause the trailer to come in contact with the vehicle. Your vehicle could be damaged. Avoid making very sharp turns while trailering.**

When turning with a trailer, make wider turns than normal. Do this so the trailer will not strike soft shoulders, curbs, road signs, trees, or other objects. Avoid jerky or sudden maneuvers. Signal well in advance.

Turn Signals When Towing a Trailer

When towing a trailer, the vehicle may need a different turn signal flasher and/or extra wiring. Check with your dealer/retailer. The arrows on the instrument panel will flash whenever signaling a turn or lane change. Properly hooked up, the trailer lamps will also flash, telling other drivers the vehicle and trailer are about to turn, change lanes, or stop.

When towing a trailer, the arrows on the instrument panel will flash for turns even if the bulbs on the trailer are burned out. You may think drivers behind you are seeing the turn signal when they are not. It is important to check occasionally to be sure the trailer bulbs are still working.

Downloaded from www.Manualslib.com manuals search engine

The vehicle has bulb warning lights. When a trailer lighting system is plugged into the vehicle's lighting system, its bulb warning lights may not indicate if one of the lamps goes out. So, when a trailer lighting system is plugged in, be sure to check the vehicle and trailer lamps from time to time to be sure they are all working. Once the trailer lamps have been disconnected, the bulb warning lights can once again indicate if one of the vehicle lamps is out.

Driving On Grades

Reduce speed and shift to a lower gear before starting down a long or steep downgrade. If the vehicle is not shifted down, the brakes may have to be used so much that they would get hot and no longer work well.

On a long uphill grade, shift down and reduce the vehicle's speed to around 45 mph (70 km/h) to reduce the possibility of engine and transmission overheating.

If the vehicle has overdrive, it may be driven in THIRD (3) instead of DRIVE (D).

Parking on Hills

⚠ CAUTION:

You really should not park your vehicle, with a trailer attached, on a hill. If something goes wrong, your rig could start to move. People can be injured, and both your vehicle and the trailer can be damaged.

But if the rig ever has to be parked on a hill, here is how to do it:

1. Apply the regular brakes, but do not shift into PARK (P) yet.
2. Have someone place chocks under the trailer wheels.
3. When the wheel chocks are in place, release the regular brakes until the chocks absorb the load.
4. Reapply the regular brakes. Then apply the parking brake, and then shift to PARK (P).
5. Release the regular brakes.

Downloaded from www.Manualslib.com manuals search engine

When You Are Ready to Leave After Parking on a Hill

1. Apply the regular brakes and hold the pedal down while you:
   - Start the engine
   - Shift into a gear
   - Release the parking brake
2. Let up on the brake pedal.
3. Drive slowly until the trailer is clear of the chocks.
4. Stop and have someone pick up and store the chocks.

Maintenance When Trailer Towing

The vehicle will need service more often when it pulls a trailer. See *Scheduled Maintenance on page 6-4* for more information. Things that are especially important in trailer operation are automatic transmission fluid, which should not be overfilled, engine oil, drive belts, cooling, and brake systems. Each of these is covered in this manual, and the Index will help locate them quickly. If trailering, it is a good idea to review this information before starting on a trip.

Check periodically to see that all hitch nuts and bolts are tight.

Engine Cooling When Trailer Towing

The cooling system may temporarily overheat during severe operating conditions. See *Engine Overheating on page 5-27*.

Downloaded from www.Manualslib.com manuals search engine

Section 5 Service and Appearance Care

Service 5-3
Accessories and Modifications 5-3
California Proposition 65 Warning 5-3
California Perchlorate Materials Requirements 5-4
Doing Your Own Service Work 5-4
Adding Equipment to the Outside of Your Vehicle 5-5

Fuel 5-5
Gasoline Octane 5-5
Gasoline Specifications 5-6
California Fuel 5-6
Additives 5-6
Fuels in Foreign Countries 5-7
Filling the Tank 5-8
Filling a Portable Fuel Container 5-10

Checking Things Under the Hood 5-10
Hood Release 5-11
Engine Compartment Overview 5-12
Engine Oil 5-15
Engine Oil Life System 5-18
Engine Air Cleaner/Filter 5-20
Automatic Transmission Fluid 5-22
Engine Coolant 5-24
Pressure Cap 5-27
Engine Overheating 5-27
Overheated Engine Protection Operating Mode 5-29
Cooling System 5-30
Power Steering Fluid 5-39
Windshield Washer Fluid 5-40
Brakes 5-41
Battery 5-45
Jump Starting 5-46

Headlamp Aiming 5-51

Bulb Replacement 5-54
Halogen Bulbs 5-54
Headlamps and Sidemarker Lamps 5-54
Front Turn Signal, Parking and Fog Lamps 5-57
Taillamps, Turn Signal, and Stoplamps 5-58
Back-Up Lamps 5-59
License Plate Lamp 5-60
Replacement Bulbs 5-60

Windshield Replacement 5-61

Windshield Wiper Blade Replacement 5-61

Tires 5-62
Tire Sidewall Labeling 5-63
Tire Terminology and Definitions 5-66
Inflation - Tire Pressure 5-69
Tire Pressure Monitor System 5-71

Downloaded from www.Manualslib.com manuals search engine

Section 5 Service and Appearance Care

Tire Pressure Monitor Operation 5-72
Tire Inspection and Rotation 5-75
When It Is Time for New Tires 5-77
Buying New Tires 5-78
Different Size Tires and Wheels 5-80
Uniform Tire Quality Grading 5-80
Wheel Alignment and Tire Balance 5-82
Wheel Replacement 5-82
Tire Chains 5-84
If a Tire Goes Flat 5-85
Tire Sealant and Compressor Kit (GXP) 5-86
Changing a Flat Tire 5-96
Removing the Spare Tire and Tools 5-98
Removing the Flat Tire and Installing the Spare Tire 5-100
Storing a Flat or Spare Tire and Tools 5-107
Compact Spare Tire 5-109

Appearance Care 5-109
Interior Cleaning 5-109
Fabric/Carpet 5-111
Leather 5-112
Ultra Lux Suede 5-113
Instrument Panel, Vinyl, and Other Plastic Surfaces 5-113
Care of Safety Belts 5-114
Weatherstrips 5-114
Washing Your Vehicle 5-114
Cleaning Exterior Lamps/Lenses 5-115
Finish Care 5-115
Windshield and Wiper Blades 5-116
Aluminum Wheels 5-116
Tires 5-117
Sheet Metal Damage 5-117
Finish Damage 5-117
Underbody Maintenance 5-117
Chemical Paint Spotting 5-118
Vehicle Care/Appearance Materials 5-118

Vehicle Identification 5-119
Vehicle Identification Number (VIN) 5-119
Service Parts Identification Label 5-120

Electrical System 5-120
Add-On Electrical Equipment 5-120
Headlamp Wiring 5-120
Windshield Wiper Fuses 5-121
Power Windows and Other Power Options 5-121
Fuses and Circuit Breakers 5-121
Instrument Panel Fuse Block 5-122
Underhood Fuse Block 5-124

Capacities and Specifications 5-128

Downloaded from www.Manualslib.com manuals search engine

Service

For service and parts needs, visit your dealer/retailer. You will receive genuine GM parts and GM-trained and supported service people.

Genuine GM parts have one of these marks:

Accessories and Modifications

When non-dealer/non-retailer accessories are added to your vehicle they can affect your vehicle's performance and safety, including such things as, airbags, braking, stability, ride and handling, emissions systems, aerodynamics, durability, and electronic systems like antilock brakes, traction control and stability control. Some of these accessories could even cause malfunction or damage not covered by warranty.

GM Accessories are designed to complement and function with other systems on your vehicle. Your GM dealer/retailer can accessorize your vehicle using genuine GM Accessories. When you go to your GM dealer/retailer and ask for GM Accessories, you will know that GM-trained and supported service technicians will perform the work using genuine GM Accessories.

Also, see *Adding Equipment to Your Airbag-Equipped Vehicle on page 1-65*.

California Proposition 65 Warning

Most motor vehicles, including this one, contain and/or emit chemicals known to the State of California to cause cancer and birth defects or other reproductive harm. Engine exhaust, many parts and systems (including some inside the vehicle), many fluids, and some component wear by-products contain and/or emit these chemicals.

Downloaded from www.Manualslib.com manuals search engine

California Perchlorate Materials Requirements

Certain types of automotive applications, such as airbag initiators, seat belt pretensioners, and lithium batteries contained in remote keyless entry transmitters, may contain perchlorate materials. Special handling may be necessary. For additional information, see www.dtsc.ca.gov/hazardouswaste/perchlorate.

Doing Your Own Service Work

⚠ CAUTION:

You can be injured and your vehicle could be damaged if you try to do service work on a vehicle without knowing enough about it.

CAUTION: (Continued)

CAUTION: (Continued)

- **Be sure you have sufficient knowledge, experience, the proper replacement parts, and tools before you attempt any vehicle maintenance task.**
- **Be sure to use the proper nuts, bolts, and other fasteners. English and metric fasteners can be easily confused. If you use the wrong fasteners, parts can later break or fall off. You could be hurt.**

If you want to do some of your own service work, you should use the proper service manual. It tells you much more about how to service your vehicle than this manual can. To order the proper service manual, see *Service Publications Ordering Information on page 7-15*.

Your vehicle has an airbag system. Before attempting to do your own service work, see *Servicing Your Airbag-Equipped Vehicle on page 1-64*.

You should keep a record with all parts receipts and list the mileage and the date of any service work you perform. See *Maintenance Record on page 6-15*.

Downloaded from www.Manualslib.com manuals search engine

Adding Equipment to the Outside of Your Vehicle

Things you might add to the outside of your vehicle can affect the airflow around it. This can cause wind noise and can affect fuel economy and windshield washer performance. Check with your dealer/retailer before adding equipment to the outside of your vehicle.

Fuel

Use of the recommended fuel is an important part of the proper maintenance of your vehicle. To help keep the engine clean and maintain optimum vehicle performance, we recommend the use of gasoline advertised as TOP TIER Detergent Gasoline.

The 8th digit of the Vehicle Identification Number (VIN) shows the code letter or number that identifies your vehicle's engine. The VIN is at the top left of the instrument panel. See *Vehicle Identification Number (VIN) on page 5-119*.

Gasoline Octane

If your vehicle has the 3.8L V6 engine (VIN Code 2), use regular unleaded gasoline with a posted octane rating of 87 or higher. If the octane rating is less than 87, you might notice an audible knocking noise when you drive, commonly referred to as spark knock. If this occurs, use a gasoline rated at 87 octane or higher as soon as possible. If you are using gasoline rated at 87 octane or higher and you hear heavy knocking, the engine needs service.

If your vehicle has the 5.3L V8 engine (VIN Code C), use premium unleaded gasoline with a posted octane rating of 91 or higher. You can also use regular unleaded gasoline rated at 87 octane or higher, but your vehicle's acceleration could be slightly reduced, and you might notice a slight audible knocking noise, commonly referred to as spark knock. If the octane is less than 87, you might notice a heavy knocking noise when you drive. If this occurs, use a gasoline rated at 87 octane or higher as soon as possible. Otherwise, you could damage the engine. If you are using gasoline rated at 87 octane or higher and you hear heavy knocking, the engine needs service.

Downloaded from www.Manualslib.com manuals search engine

Gasoline Specifications

At a minimum, gasoline should meet ASTM specification D 4814 in the United States or CAN/CGSB-3.5 or 3.511 in Canada. Some gasolines contain an octane-enhancing additive called methylcyclopentadienyl manganese tricarbonyl (MMT). We recommend against the use of gasolines containing MMT. See *Additives on page 5-6* for additional information.

California Fuel

If your vehicle is certified to meet California Emissions Standards, it is designed to operate on fuels that meet California specifications. See the underhood emission control label. If this fuel is not available in states adopting California emissions standards, your vehicle will operate satisfactorily on fuels meeting federal specifications, but emission control system performance might be affected. The malfunction indicator lamp could turn on and your vehicle might fail a smog-check test. See *Malfunction Indicator Lamp on page 3-50*. If this occurs, return to your authorized dealer/retailer for diagnosis. If it is determined that the condition is caused by the type of fuel used, repairs might not be covered by your warranty.

Additives

To provide cleaner air, all gasolines in the United States are now required to contain additives that help prevent engine and fuel system deposits from forming, allowing the emission control system to work properly. In most cases, you should not have to add anything to the fuel. However, some gasolines contain only the minimum amount of additive required to meet U.S. Environmental Protection Agency regulations. To help keep fuel injectors and intake valves clean, or if your vehicle experiences problems due to dirty injectors or valves, look for gasoline that is advertised as TOP TIER Detergent Gasoline. Also, your dealer/retailer has additives that will help correct and prevent most deposit-related problems.

Gasolines containing oxygenates, such as ethers and ethanol, and reformulated gasolines might be available in your area. We recommend that you use these gasolines, if they comply with the specifications described earlier. However, E85 (85% ethanol) and other fuels containing more than 10% ethanol must not be used in vehicles that were not designed for those fuels.

Downloaded from www.Manualslib.com manuals search engine

Notice: **Your vehicle was not designed for fuel that contains methanol. Do not use fuel containing methanol. It can corrode metal parts in the fuel system and also damage plastic and rubber parts. That damage would not be covered under your warranty.**

Some gasolines that are not reformulated for low emissions can contain an octane-enhancing additive called methylcyclopentadienyl manganese tricarbonyl (MMT); ask the attendant where you buy gasoline whether the fuel contains MMT. We recommend against the use of such gasolines. Fuels containing MMT can reduce the life of spark plugs and the performance of the emission control system could be affected. The malfunction indicator lamp might turn on. If this occurs, return to your dealer/retailer for service.

Fuels in Foreign Countries

If you plan on driving in another country outside the United States or Canada, the proper fuel might be hard to find. Never use leaded gasoline or any other fuel not recommended in the previous text on fuel. Costly repairs caused by use of improper fuel would not be covered by your warranty.

To check the fuel availability, ask an auto club, or contact a major oil company that does business in the country where you will be driving.

Downloaded from www.Manualslib.com manuals search engine

Filling the Tank

⚠ CAUTION:

Fuel vapor burns violently and a fuel fire can cause bad injuries. To help avoid injuries to you and others, read and follow all the instructions on the pump island. Turn off your engine when you are refueling. Do not smoke if you are near fuel or refueling your vehicle. Do not use cellular phones. Keep sparks, flames, and smoking materials away from fuel. Do not leave the fuel pump unattended when refueling your vehicle. This is against the law in some places. Do not re-enter the vehicle while pumping fuel. Keep children away from the fuel pump; never let children pump fuel.

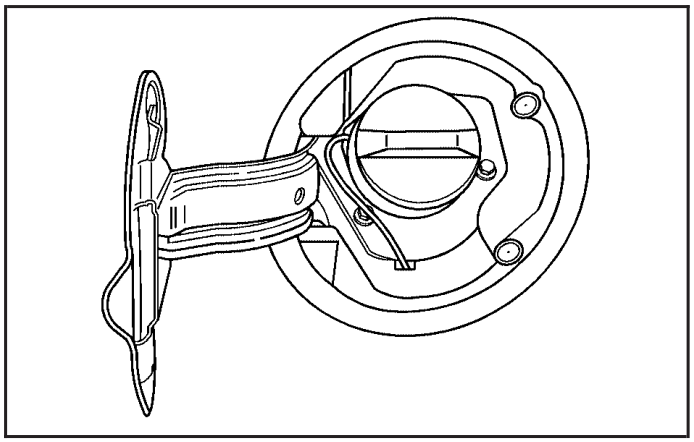

The tethered fuel cap is located behind a hinged fuel door on the driver's side of the vehicle.

To remove the fuel cap, turn it slowly counterclockwise.

While refueling, let the fuel cap hang by the tether below the fuel fill opening.

Downloaded from www.Manualslib.com manuals search engine

⚠ CAUTION:

Fuel can spray out on you if you open the fuel cap too quickly. If you spill fuel and then something ignites it, you could be badly burned. This spray can happen if your tank is nearly full, and is more likely in hot weather. Open the fuel cap slowly and wait for any hiss noise to stop. Then unscrew the cap all the way.

Be careful not to spill fuel. Do not top off or overfill the tank and wait a few seconds after you have finished pumping before removing the nozzle. Clean fuel from painted surfaces as soon as possible. See *Washing Your Vehicle on page 5-114*.

When replacing the fuel cap, turn it clockwise until it clicks. Make sure the cap is fully installed. The diagnostic system can determine if the fuel cap has been left off or improperly installed. This would allow fuel to evaporate into the atmosphere. See *Malfunction Indicator Lamp on page 3-50*.

The CHECK GAS CAP message will be displayed on the Driver Information Center (DIC) if the fuel cap is not properly installed. See *DIC Warnings and Messages on page 3-67* for more information.

⚠ CAUTION:

If a fire starts while you are refueling, do not remove the nozzle. Shut off the flow of fuel by shutting off the pump or by notifying the station attendant. Leave the area immediately.

Notice: **If you need a new fuel cap, be sure to get the right type. Your dealer/retailer can get one for you. If you get the wrong type, it may not fit properly. This may cause your malfunction indicator lamp to light and may damage your fuel tank and emissions system. See *Malfunction Indicator Lamp on page 3-50*.**

Downloaded from www.Manualslib.com manuals search engine

Filling a Portable Fuel Container

⚠ CAUTION:

Never fill a portable fuel container while it is in your vehicle. Static electricity discharge from the container can ignite the fuel vapor. You can be badly burned and your vehicle damaged if this occurs. To help avoid injury to you and others:

- **Dispense fuel only into approved containers.**
- **Do not fill a container while it is inside a vehicle, in a vehicle's trunk, pickup bed, or on any surface other than the ground.**
- **Bring the fill nozzle in contact with the inside of the fill opening before operating the nozzle. Contact should be maintained until the filling is complete.**
- **Do not smoke while pumping fuel.**
- **Do not use a cellular phone while pumping fuel.**

Checking Things Under the Hood

⚠ CAUTION:

An electric fan under the hood can start up and injure you even when the engine is not running. Keep hands, clothing, and tools away from any underhood electric fan.

⚠ CAUTION:

Things that burn can get on hot engine parts and start a fire. These include liquids like fuel, oil, coolant, brake fluid, windshield washer and other fluids, and plastic or rubber. You or others could be burned. Be careful not to drop or spill things that will burn onto a hot engine.

Downloaded from www.Manualslib.com manuals search engine

Hood Release

To open the hood, do the following:

1. Pull the hood release handle with this symbol on it. It is located inside the vehicle near the parking brake pedal.

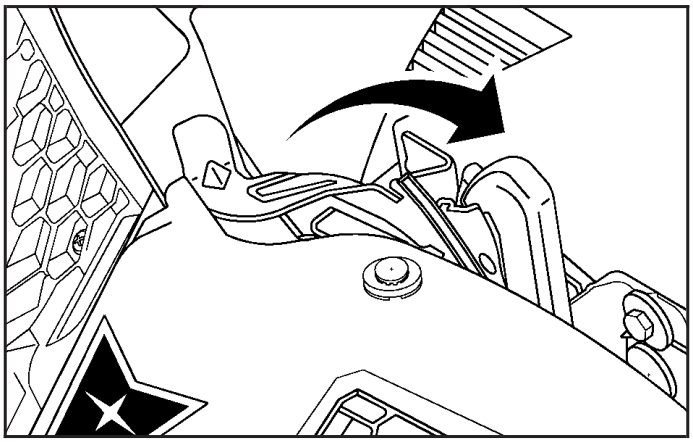

2. Go to the front of the vehicle and release the secondary hood latch, located near the center front of the engine compartment, by moving it to the right.
3. Lift the hood.

Before closing the hood, be sure all the filler caps are on properly. Then pull the hood down and close it firmly.

Downloaded from www.Manualslib.com manuals search engine

Engine Compartment Overview

When you open the hood on the 3.8L V6 engine, this is what you will see:

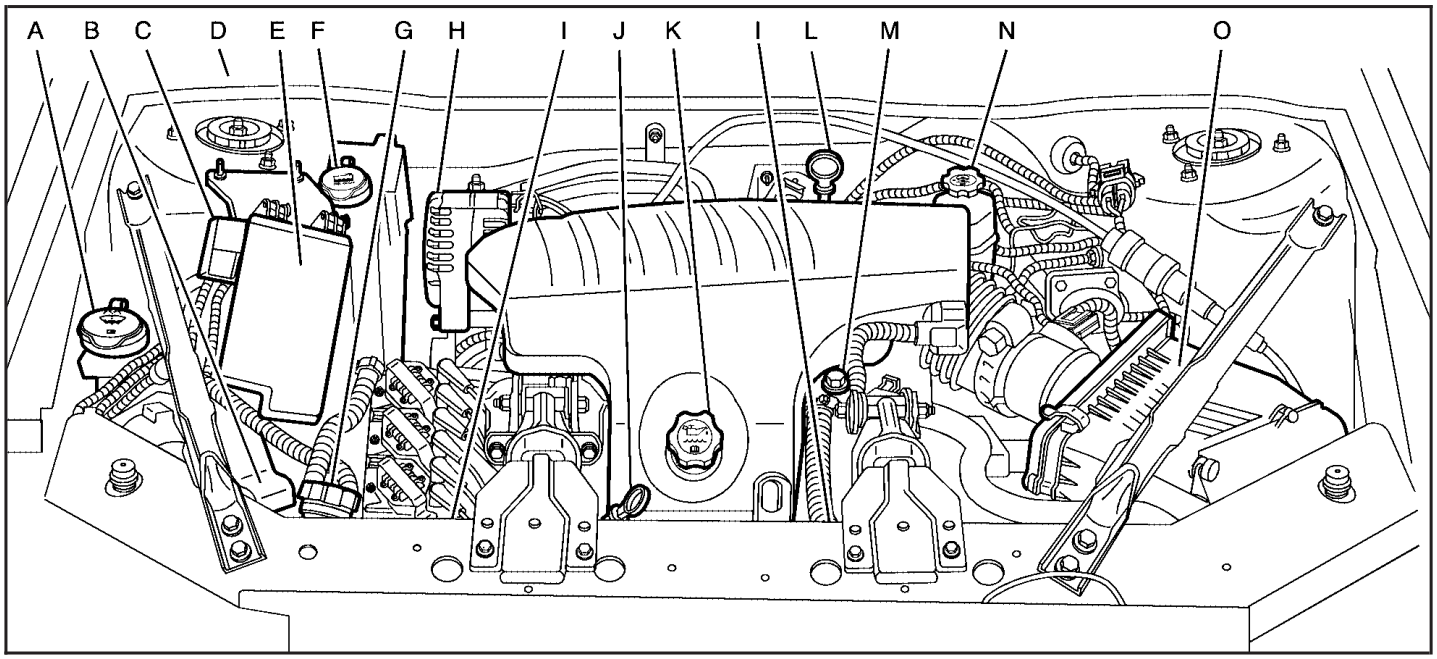

Downloaded from www.Manualslib.com manuals search engine

A. Windshield Washer Fluid Reservoir. See “Adding Washer Fluid” under *Windshield Washer Fluid on page 5-40*

B. Battery. See *Battery on page 5-45*.

C. Remote Positive (+) Terminal. See *Jump Starting on page 5-46*.

D. Passenger Compartment Air Filter. See *Passenger Compartment Air Filter on page 3-36*.

E. Underhood Fuse Block. See *Underhood Fuse Block on page 5-124*.

F. Engine Coolant Recovery Tank. See *Cooling System on page 5-30*.

G. Pressure Cap. See *Pressure Cap on page 5-27*.

H. Power Steering Fluid Reservoir (Out of View). See *Power Steering Fluid on page 5-39*.

I. Electric Engine Cooling Fans. See *Cooling System on page 5-30*.

J. Engine Oil Dipstick. See “Checking Engine Oil” under *Engine Oil on page 5-15*.

K. Engine Oil Fill Cap. See “When to Add Engine Oil” under *Engine Oil on page 5-15*.

L. Automatic Transmission Fluid Dipstick. See “Checking the Fluid Level” under *Automatic Transmission Fluid on page 5-22*.

M. Engine Coolant Bleed Valve. See “How to Add Coolant to the Radiator” under *Cooling System on page 5-30*.

N. Brake Master Cylinder Reservoir. See “Brake Fluid” under *Brakes on page 5-41*.

O. Engine Air Cleaner/Filter. See *Engine Air Cleaner/Filter on page 5-20*.

Downloaded from www.Manualslib.com manuals search engine

When you open the hood on the 5.3L V8 engine, here is what you will see:

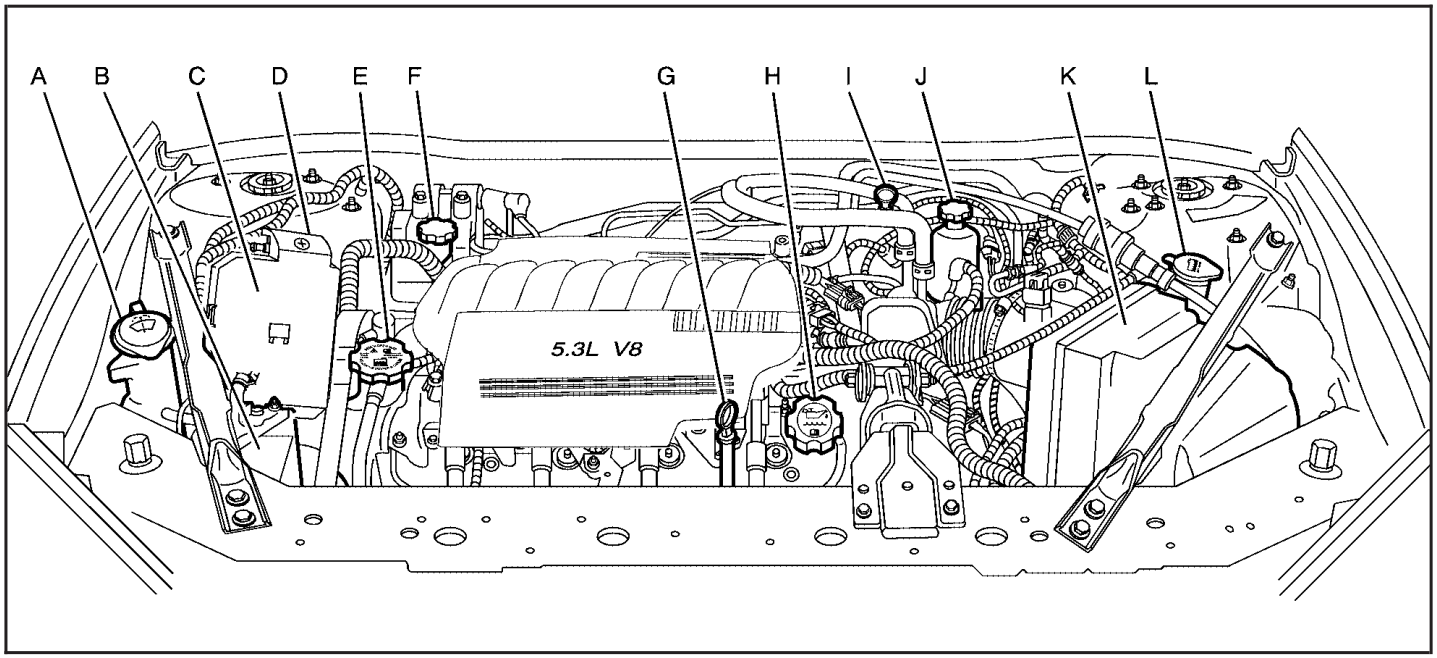

Downloaded from www.Manualslib.com manuals search engine

A. Windshield Washer Fluid Reservoir. See “Adding Washer Fluid” under *Windshield Washer Fluid on page 5-40*.

B. Battery. See *Battery on page 5-45*.

C. Underhood Fuse Block. See *Underhood Fuse Block on page 5-124*.

D. Remote Positive (+) Terminal. See *Jump Starting on page 5-46*.

E. Pressure Cap. See *Pressure Cap on page 5-27*.

F. Power Steering Fluid Reservoir. See *Power Steering Fluid on page 5-39*.

G. Engine Oil Dipstick. See “Checking Engine Oil” under *Engine Oil on page 5-15*.

H. Engine Oil Fill Cap. See “When to Add Engine Oil” under *Engine Oil on page 5-15*.

I. Automatic Transmission Fluid Dipstick. See “Checking the Fluid Level” under *Automatic Transmission Fluid on page 5-22*.

J. Brake Master Cylinder Reservoir. See “Brake Fluid” under *Brakes on page 5-41*.

K. Engine Air Cleaner/Filter. See *Engine Air Cleaner/Filter on page 5-20*.

L. Engine Coolant Recovery Tank. See *Cooling System on page 5-30*.

Engine Oil

Checking Engine Oil

It is a good idea to check the engine oil every time you get fuel. In order to get an accurate reading, the oil must be warm and the vehicle must be on level ground.

The engine oil dipstick handle is a yellow loop. See *Engine Compartment Overview on page 5-12* for the location of the engine oil dipstick.

1. Turn off the engine and give the oil several minutes to drain back into the oil pan. If you do not do this, the oil dipstick might not show the actual level.
2. Pull out the dipstick and clean it with a paper towel or cloth, then push it back in all the way. Remove it again, keeping the tip down, and check the level.

Downloaded from www.Manualslib.com manuals search engine

When to Add Engine Oil

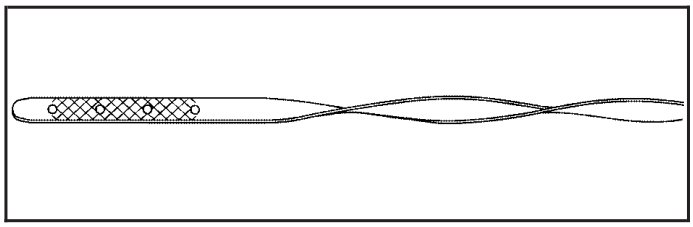

V6 Engine

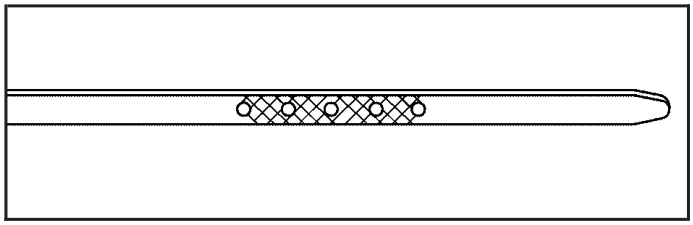

V8 Engine

If the oil is below the cross-hatched area at the tip of the dipstick, add at least one quart/liter of the recommended oil. This section explains what kind of oil to use. For engine oil crankcase capacity, see *Capacities and Specifications on page 5-128*.

Notice: **Do not add too much oil. If the engine has so much oil that the oil level gets above the cross-hatched area that shows the proper operating range, the engine could be damaged.**

See *Engine Compartment Overview on page 5-12* for the location of the engine oil fill cap.

Be sure to add enough oil to put the level somewhere in the proper operating range in the cross-hatched area. Push the dipstick all the way back in when you are through.

Downloaded from www.Manualslib.com manuals search engine

What Kind of Engine Oil to Use

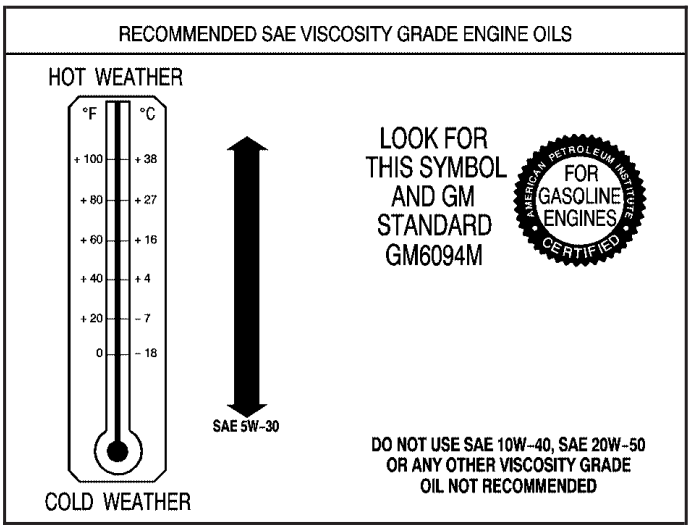

Look for three things:

- GM6094M

  Your vehicle's engine requires oil meeting GM Standard GM6094M. Look for and use only an oil that meets GM Standard GM6094M.

- SAE 5W-30

  As shown in the viscosity chart, SAE 5W-30 is best for your vehicle.

  These numbers on an oil container show its viscosity, or thickness. Do not use other viscosity oils such as SAE 20W-50.

- Oils meeting these requirements should have the starburst symbol on the container. This symbol indicates that the oil has been certified by the American Petroleum Institute (API).

Look for this information on the oil container, and use only those oils that are identified as meeting GM Standard GM6094M and have the starburst symbol on the front of the oil container.

Notice: **Use only engine oil identified as meeting GM Standard GM6094M and showing the American Petroleum Institute Certified For Gasoline Engines starburst symbol. Failure to use the recommended oil can result in engine damage not covered by your warranty.**

If you are in an area of extreme cold, where the temperature falls below –20°F (–29°C), it is recommended that you use either an SAE 5W-30 synthetic oil or an SAE 0W-30 oil. Both provide easier cold starting and better protection for the engine at extremely low temperatures.

Downloaded from www.Manualslib.com manuals search engine

Engine Oil Additives

Do not add anything to the oil. The recommended oils with the starburst symbol that meet GM Standard GM6094M are all you need for good performance and engine protection.

Engine Oil Life System

When to Change Engine Oil

Your vehicle has a computer system that lets you know when to change the engine oil and filter. This is based on engine revolutions and engine temperature, and not on mileage. Based on driving conditions, the mileage at which an oil change will be indicated can vary considerably. For the oil life system to work properly, you must reset the system every time the oil is changed.

When the system has calculated that oil life has been diminished, it will indicate that an oil change is necessary. A CHANGE OIL SOON message will come on. See *DIC Warnings and Messages on page 3-67*. Change the oil as soon as possible within the next 600 miles (1 000 km). It is possible that, if you are driving under the best conditions, the oil life system might not indicate that an oil change is necessary for over a year. However, the engine oil and filter must be changed at least once a year and at this time the system must be reset. Your dealer/retailer has trained service people who will perform this work using genuine parts and reset the system. It is also important to check the oil regularly and keep it at the proper level.

If the system is ever reset accidentally, you must change the oil at 3,000 miles (5 000 km) since the last oil change. Remember to reset the oil life system whenever the oil is changed.

Downloaded from www.Manualslib.com manuals search engine

How to Reset the Engine Oil Life System

The Engine Oil Life System calculates when to change the engine oil and filter based on vehicle use. Whenever the oil is changed, reset the system so it can calculate when the next oil change is required. If a situation occurs where you change the oil prior to a CHANGE OIL SOON message appearing on the DIC, reset the system.

To reset the oil life system, after the oil has been changed:

1. Press the options button on the DIC until ENGINE OIL MONITOR appears on the DIC screen.
2. Press the set/reset button to reset the system.

   The next screen indicates that the engine oil monitor system has been reset.

   If the vehicle is equipped with the trip computer DIC, when the gage button is pressed and the OIL LIFE REMAINING mode appears, it should read 100 percent OIL LIFE REMAINING.
3. Turn the key to LOCK/OFF.

If the CHANGE OIL SOON message comes back on when you start your vehicle, the engine oil life system has not reset. Repeat the procedure.

What to Do with Used Oil

Used engine oil contains certain elements that can be unhealthy for your skin and could even cause cancer. Do not let used oil stay on your skin for very long. Clean your skin and nails with soap and water, or a good hand cleaner. Wash or properly dispose of clothing or rags containing used engine oil. See the manufacturer's warnings about the use and disposal of oil products.

Used oil can be a threat to the environment. If you change your own oil, be sure to drain all the oil from the filter before disposal. Never dispose of oil by putting it in the trash, pouring it on the ground, into sewers, or into streams or bodies of water. Instead, recycle it by taking it to a place that collects used oil. If you have a problem properly disposing of used oil, ask your dealer/retailer, a service station, or a local recycling center for help.

Downloaded from www.Manualslib.com manuals search engine

Engine Air Cleaner/Filter

The engine air cleaner/filter is located in the engine compartment on the driver's side of the vehicle. See *Engine Compartment Overview on page 5-12* for more information on location.

When to Inspect the Engine Air Cleaner/Filter

Inspect the air cleaner/filter at the Maintenance II intervals and replace it at the first oil change after each 50,000 mile (80 000 km) interval. See *Scheduled Maintenance on page 6-4* for more information. If you are driving in dusty/dirty conditions, inspect the filter at each engine oil change.

How to Inspect the Engine Air Cleaner/Filter

To inspect the air cleaner/filter, remove the filter from the vehicle and lightly shake the filter to release loose dust and dirt. If the filter remains caked with dirt, a new filter is required.

To inspect or replace the engine air cleaner/filter do the following:

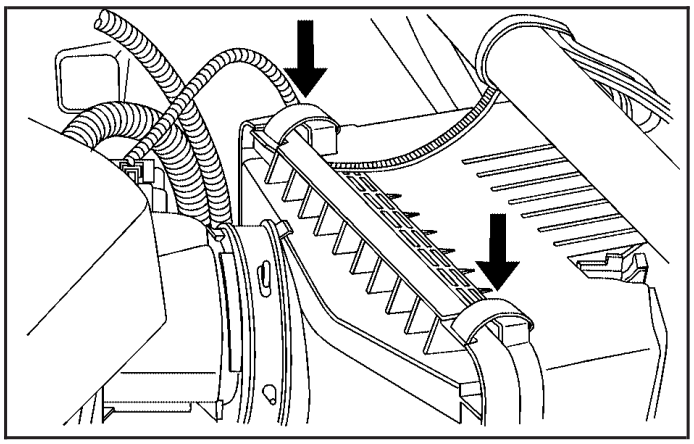

3.8L V6 Engine

Downloaded from www.Manualslib.com manuals search engine

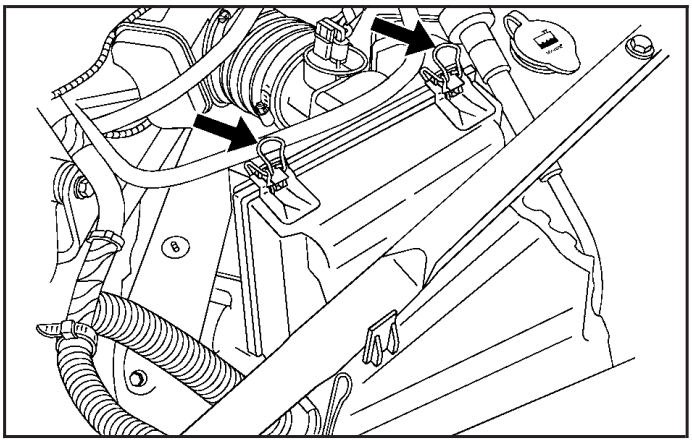

5.3L V8 Engine

1. Lift the filter cover tabs on top of the engine air cleaner/filter housing.
2. Push the filter cover housing toward the engine.
3. Pull out the filter.
4. Inspect or replace the engine air cleaner/filter.
5. To reinstall the cover, position the tabs through the slots on the housing. If your vehicle has one of the 3800 V6 engines, a notch on the sides of the filter cover will indicate the correct engagement.
6. Push the cover tabs on top of the housing to lock the cover in place.

⚠ CAUTION:

Operating the engine with the air cleaner/filter off can cause you or others to be burned. The air cleaner not only cleans the air; it helps to stop flames if the engine backfires. If it is not there and the engine backfires, you could be burned. Do not drive with it off, and be careful working on the engine with the air cleaner/filter off.

Notice: **If the air cleaner/filter is off, a backfire can cause a damaging engine fire. And, dirt can easily get into your engine, which will damage it. Always have the air cleaner/filter in place when you are driving.**

Downloaded from www.Manualslib.com manuals search engine

Automatic Transmission Fluid

When to Check and Change Automatic Transmission Fluid

A good time to check the automatic transmission fluid level is when the engine oil is changed.

Change the fluid and filter at the intervals listed in *Additional Required Services on page 6-6*, and be sure to use the transmission fluid listed in *Recommended Fluids and Lubricants on page 6-12*.

How to Check Automatic Transmission Fluid

Because this operation can be a little difficult, you may choose to have this done at the dealer/retailer service department.

If you do it yourself, be sure to follow all the instructions here, or you could get a false reading on the dipstick.

Notice: **Too much or too little fluid can damage your transmission. Too much can mean that some of the fluid could come out and fall on hot engine parts or exhaust system parts, starting a fire. Too little fluid could cause the transmission to overheat. Be sure to get an accurate reading if you check your transmission fluid.**

Wait at least 30 minutes before checking the transmission fluid level if you have been driving:

- When outside temperatures are above 90°F (32°C).
- At high speed for quite a while.
- In heavy traffic — especially in hot weather.
- While pulling a trailer.

To get the right reading, the fluid should be at normal operating temperature, which is 180°F to 200°F (82°C to 93°C).

Get the vehicle warmed up by driving about 15 miles (24 km) when outside temperatures are above 50°F (10°C). If it is colder than 50°F (10°C), you may have to drive longer.

Downloaded from www.Manualslib.com manuals search engine

Checking the Fluid Level

Prepare the vehicle as follows:

1. Park the vehicle on a level place. Keep the engine running.
2. With the parking brake applied, place the shift lever in PARK (P).
3. With your foot on the brake pedal, move the shift lever through each gear, pausing for about three seconds in each one. Then, position the shift lever in PARK (P).
4. Let the engine run at idle for three to five minutes.

Then, without shutting off the engine, follow these steps:

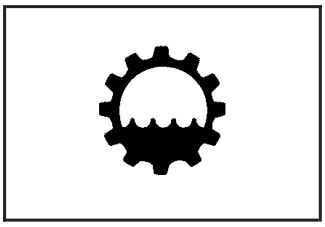

The transmission fluid dipstick handle has this symbol on it, and is located near the rear of the engine compartment.

See *Engine Compartment Overview on page 5-12* for more information on location.

1. Pull out the dipstick and wipe it with a clean rag or paper towel.
2. Push it back in all the way, wait three seconds and then pull it back out again.

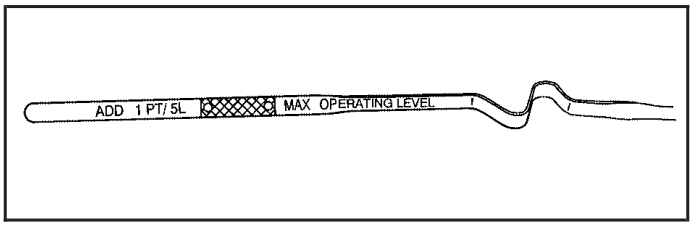

3. Check both sides of the dipstick, and read the lower level. The fluid level must be in the crosshatched area.
4. If the fluid level is in the acceptable range, push the dipstick back in all the way.

How to Add Automatic Transmission Fluid

Refer to the Maintenance Schedule to determine what kind of transmission fluid to use. See *Recommended Fluids and Lubricants on page 6-12*.

Downloaded from www.Manualslib.com manuals search engine

If the fluid level is low, add only enough of the proper fluid to bring the level into the crosshatched area on the dipstick.

1. Pull out the dipstick.
2. Using a long-neck funnel, add enough fluid at the dipstick hole to bring it to the proper level.

   It does not take much fluid, generally less than one pint (0.5 L). Do not overfill.

Notice: **Use of the incorrect automatic transmission fluid may damage your vehicle, and the damages may not be covered by your warranty. Always use the automatic transmission fluid listed in *Recommended Fluids and Lubricants on page 6-12*.**

3. After adding fluid, recheck the fluid level as described under "How to Check Automatic Transmission Fluid," earlier in this section.
4. When the correct fluid level is obtained, push the dipstick back in all the way.

Engine Coolant

The cooling system in the vehicle is filled with DEX-COOL® engine coolant. This coolant is designed to remain in the vehicle for five years or 150,000 miles (240 000 km), whichever occurs first, if only DEX-COOL® extended life coolant is added.

The following explains the cooling system and how to add coolant when it is low. If there is a problem with engine overheating or if coolant needs to be added to the radiator, see *Engine Overheating on page 5-27*.

A 50/50 mixture of clean, drinkable water and DEX-COOL® engine coolant will:

- Give freezing protection down to –34°F (–37°C).
- Give boiling protection up to 265°F (129°C).
- Protect against rust and corrosion.
- Help keep the proper engine temperature.
- Let the warning lights and gages work as they should.

Notice: **Using coolant other than DEX-COOL® may cause premature engine, heater core, or radiator corrosion. In addition, the engine coolant may require changing sooner, at the first maintenance service after each 30,000 miles (50 000 km) or 24 months, whichever occurs first. Any repairs would not be covered by your warranty. Always use DEX-COOL® (silicate-free) coolant in your vehicle.**

Downloaded from www.Manualslib.com manuals search engine

What to Use

Use a mixture of one-half clean, drinkable water and one-half DEX-COOL® engine coolant which will not damage aluminum parts. If this coolant mixture is used, nothing else needs to be added.

⚠ CAUTION:

Adding only plain water to your cooling system can be dangerous. Plain water, or some other liquid such as alcohol, can boil before the proper coolant mixture will. Your vehicle's coolant warning system is set for the proper coolant mixture. With plain water or the wrong mixture, your engine could get too hot but you would not get the overheat warning. Your engine could catch fire and you or others could be burned. Use a 50/50 mixture of clean, drinkable water and DEX-COOL® coolant.

Notice: **If you use an improper coolant mixture, your engine could overheat and be badly damaged. The repair cost would not be covered by your warranty. Too much water in the mixture can freeze and crack the engine, radiator, heater core, and other parts.**

If coolant needs to be added more than four times a year, have your dealer/retailer check the cooling system.

Notice: **If you use extra inhibitors and/or additives in your vehicle's cooling system, you could damage your vehicle. Use only the proper mixture of the engine coolant listed in this manual for the cooling system. See *Recommended Fluids and Lubricants on page 6-12* for more information.**

Downloaded from www.Manualslib.com manuals search engine

Checking Coolant

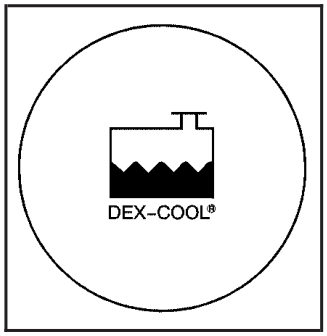

The coolant recovery tank cap has this symbol on it.

See *Engine Compartment Overview on page 5-12* for more information on the location of the coolant recovery tank.

The vehicle must be on a level surface when checking the coolant level.

When the engine is cold, the coolant level should be at the cold fill line or a little higher. The cold fill line is marked with the same symbol as the coolant recovery tank cap.

Adding Coolant

If more coolant is needed, add the proper DEX-COOL® coolant mixture at the coolant recovery tank, but be careful not to spill it.

If the coolant recovery tank is completely empty, add coolant to the radiator. See *Engine Overheating on page 5-27*.

⚠ CAUTION:

Turning the pressure cap when the engine and radiator are hot can allow steam and scalding liquids to blow out and burn you badly. With the coolant recovery tank, you will almost never have to add coolant at the radiator. Never turn the pressure cap — even a little — when the engine and radiator are hot.

Downloaded from www.Manualslib.com manuals search engine

⚠ CAUTION:

You can be burned if you spill coolant on hot engine parts. Coolant contains ethylene glycol, and it will burn if the engine parts are hot enough. Do not spill coolant on a hot engine.

Occasionally check the coolant level in the radiator. For information on how to add coolant to the radiator, see *Cooling System on page 5-30*.

Pressure Cap

Notice: **If the pressure cap is not tightly installed, coolant loss and possible engine damage may occur. Be sure the cap is properly and tightly secured.**

See *Engine Compartment Overview on page 5-12* for more information on location.

Engine Overheating

There is a coolant temperature gage and a warning light on the instrument panel that indicate an overheated engine condition. See *Engine Coolant Temperature Gage on page 3-49* and *Engine Coolant Temperature Warning Light on page 3-48*.

Downloaded from www.Manualslib.com manuals search engine

If Steam Is Coming From Your Engine

⚠ CAUTION:

Steam from an overheated engine can burn you badly, even if you just open the hood. Stay away from the engine if you see or hear steam coming from it. Turn it off and get everyone away from the vehicle until it cools down. Wait until there is no sign of steam or coolant before you open the hood.

If you keep driving when the vehicles engine is overheated, the liquids in it can catch fire. You or others could be badly burned. Stop your engine if it overheats, and get out of the vehicle until the engine is cool.

See *Overheated Engine Protection Operating Mode on page 5-29* for information on driving to a safe place in an emergency.

Notice: **If your engine catches fire because you keep driving with no coolant, your vehicle can be badly damaged. The costly repairs would not be covered by your warranty. See *Overheated Engine Protection Operating Mode on page 5-29* for information on driving to a safe place in an emergency.**

If No Steam is Coming From Your Engine

An overheat warning can indicate a serious problem.

If you get an engine overheat warning but see or hear no steam, the problem may not be too serious. Sometimes the engine can get a little too hot when you:

- Climb a long hill on a hot day.
- Stop after high-speed driving.
- Idle for long periods in traffic.
- Tow a trailer.

Downloaded from www.Manualslib.com manuals search engine

If an overheat warning occurs without any sign of steam, try this for a minute or so:

1. In heavy traffic, let the engine idle in NEUTRAL (N) while stopped. If it is safe to do so, pull off the road, shift to PARK (P) or NEUTRAL (N) and let the engine idle.
2. Set the heater at the highest setting and the fan at the highest speed and open the windows as necessary.

If the overheat warning no longer exists, the vehicle can be driven. Just to be safe, drive slower for about 10 minutes. If the warning does not come back on, the vehicle can be driven normally.

If the warning continues, and you have not stopped, pull over, stop, and park the vehicle right away.

If there is still no sign of steam, idle the engine for three minutes while parked. If the warning is still there, turn off the engine and get everyone out of the vehicle until it cools down. Also, see "Overheated Engine Protection Operating Mode" later in this section.

You may decide not to lift the hood but to get service help right away.

Overheated Engine Protection Operating Mode

The overheated engine protection operating mode allows the vehicle to be driven to a safe place in an emergency situation. If an overheated engine condition exists, this protection mode alternates firing groups of cylinders to help prevent engine damage. In this mode, there will be a significant loss in power and engine performance. The engine coolant temperature gage indicator will move to the shaded area, and the engine coolant temperature warning light will come on, showing that an overheated engine condition exists. Driving extended miles (km) and/or towing a trailer in the overheated engine protection mode should be avoided.

Notice: **After driving in the overheated engine protection operating mode, to avoid engine damage, allow the engine to cool before attempting any repair. The engine oil will be severely degraded. Repair the cause of coolant loss, change the oil and reset the oil life system. See *Engine Oil on page 5-15*.**

Downloaded from www.Manualslib.com manuals search engine

Cooling System

When you decide it is safe to lift the hood, here is what you will see:

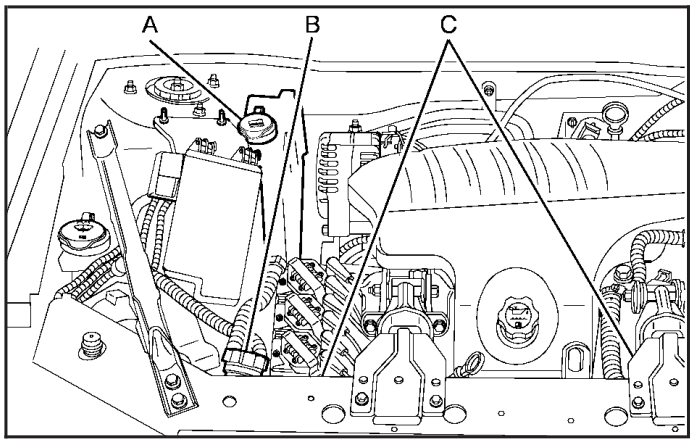

3.8L V6 Engine

A. Coolant Recovery Tank
B. Pressure Cap
C. Electric Engine Cooling Fan(s)

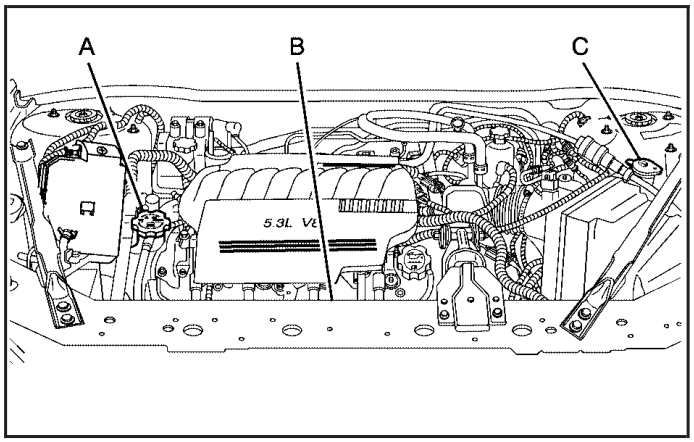

5.3L V8 Engine

A. Pressure Cap
B. Electric Engine Cooling Fans
C. Coolant Recovery Tank

Downloaded from www.Manualslib.com manuals search engine

⚠ CAUTION:

An electric engine cooling fan under the hood can start up even when the engine is not running and can injure you. Keep hands, clothing, and tools away from any underhood electric fan.

If the coolant inside the coolant recovery tank is boiling, do not do anything else until it cools down. The vehicle should be parked on a level surface.

The coolant recovery tank is located in the rear of the engine compartment on the passenger's side of the vehicle on the 3.8L V6 engine. The coolant recovery tank on the 5.3L V8 engine is located in the rear of the engine compartment on the driver's side of the vehicle, behind the engine air cleaner/filter.

When the engine is cold, the coolant level should be at or above the COLD FILL line on the coolant recovery tank. To check the coolant level, look for the COLD FILL line on the side of the coolant recovery tank that faces the engine. If the level is not correct, there may be a leak at the pressure cap or in the radiator hoses, heater hoses, radiator, water pump, or somewhere else in the cooling system.

Downloaded from www.Manualslib.com manuals search engine

⚠ CAUTION:

Heater and radiator hoses, and other engine parts, can be very hot. Do not touch them. If you do, you can be burned.

Do not run the engine if there is a leak. If you run the engine, it could lose all coolant. That could cause an engine fire, and you could be burned. Get any leak fixed before you drive the vehicle.

If there seems to be no leak, with the engine on, check to see if the electric engine cooling fan(s) are running. If the engine is overheating, the fan(s) should be running. If the fan(s) are not running, the vehicle needs service.

Notice: **Engine damage from running your engine without coolant is not covered by your warranty. See *Overheated Engine Protection Operating Mode on page 5-29* for information on driving to a safe place in an emergency.**

Notice: **Using coolant other than DEX-COOL® may cause premature engine, heater core, or radiator corrosion. In addition, the engine coolant could require changing sooner, at 30,000 miles (50 000 km) or 24 months, whichever occurs first. Any repairs would not be covered by the warranty. Always use DEX-COOL® (silicate-free) coolant in the vehicle.**

How to Add Coolant to the Coolant Recovery Tank

⚠ CAUTION:

Adding only plain water to the cooling system can be dangerous. Plain water, or some other liquid such as alcohol, can boil before the proper coolant mixture will. The vehicle's coolant warning system is set for the proper coolant mixture. With plain water or the wrong mixture, the engine could get too hot but you would not get the overheat warning. The engine could catch fire and you or others could be burned. Use a 50/50 mixture of clean, drinkable water and DEX-COOL® coolant.

If you have not found a problem yet, but the coolant level is not at the COLD FILL line, add a 50/50 mixture of clean, drinkable water and DEX-COOL® engine coolant at the coolant recovery tank. See *Engine Coolant on page 5-24* for more information.

Downloaded from www.Manualslib.com manuals search engine

Notice: **In cold weather, water can freeze and crack the engine, radiator, heater core and other parts. Use the recommended coolant and the proper coolant mixture.**

⚠ CAUTION:

You can be burned if you spill coolant on hot engine parts. Coolant contains ethylene glycol and it will burn if the engine parts are hot enough. Do not spill coolant on a hot engine.

When the coolant level in the coolant recovery tank is at the COLD FILL line, start the vehicle.

If the overheat warning continues, there is one more thing you can try. You can add the proper coolant mixture directly to the radiator, but be sure the system is cool before you do it.

⚠ CAUTION:

Steam and scalding liquids from a hot cooling system can blow out and burn you badly. They are under pressure, and if you turn the pressure cap — even a little — they can come out at high speed. Never turn the cap when the cooling system, including the pressure cap, is hot. Wait for the cooling system and pressure cap to cool if you ever have to turn the pressure cap.

Downloaded from www.Manualslib.com manuals search engine

How to Add Coolant to the Radiator (3.8L V6 Engine)

Notice: **Your engine has a specific radiator fill procedure. Failure to follow this procedure could cause your engine to overheat and be severely damaged.**

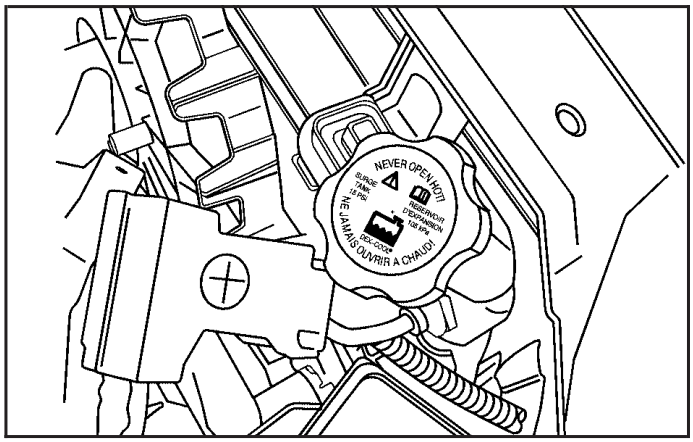

3.8L V6 Engine

1. You can remove the pressure cap when the cooling system, including the pressure cap and upper radiator hose, is no longer hot. Turn the cap slowly counterclockwise.

   If you hear a hiss, wait for that to stop. A hiss means there is still some pressure left.

2. Then keep turning the pressure cap and remove it.

⚠ CAUTION:

You can be burned if you spill coolant on hot engine parts. Coolant contains ethylene glycol and it will burn if the engine parts are hot enough. Do not spill coolant on a hot engine.

3. Remove the engine cover to access the bleed valve.
   3.1. Clean the area around the engine oil fill tube and cap before removing. Twist the oil fill tube, with cap attached, counterclockwise and remove it.

Downloaded from www.Manualslib.com manuals search engine

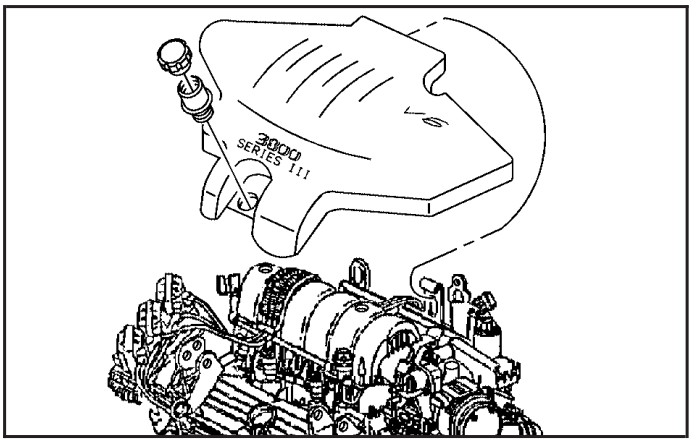

3.8L V6 Engine

3.2. Lift the engine cover at the front, slide the catch tab out of the engine bracket and remove the cover.

3.3. Put the oil fill tube, with cap attached, in the valve cover oil fill hole until you are ready to replace the cover.

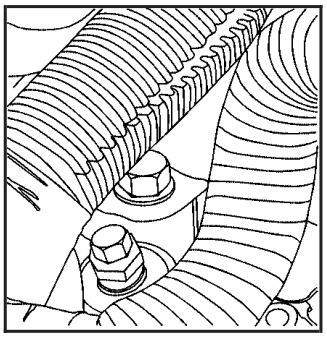

Thermostat Housing

4. After the engine cools, open the coolant air bleed valve located on the thermostat housing near the upper radiator hose.

Downloaded from www.Manualslib.com manuals search engine

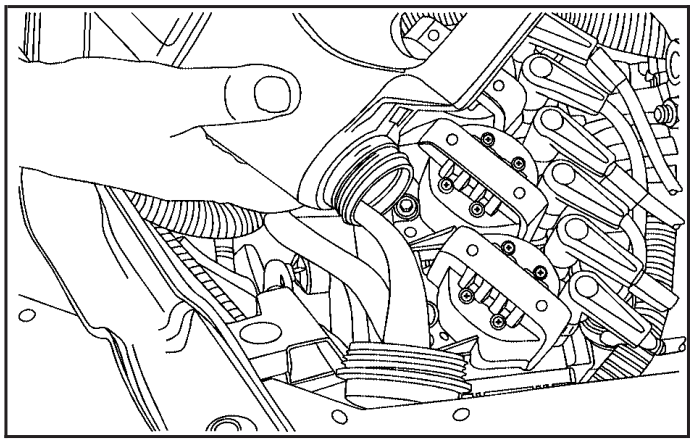

3.8L V6 Engine

5. Fill the radiator with the proper DEX-COOL® coolant mixture, up to the base of the filler neck. See *Engine Coolant on page 5-24* for more information about the proper coolant mixture.

   If you see a stream of coolant coming from the air bleed valve, close the valve. Otherwise, close the valve after the radiator is filled.

6. Rinse or wipe any spilled coolant from the engine and the compartment.

7. Replace the engine cover.
   - 7.1. Remove the oil fill tube, with cap attached, from the valve cover.
   - 7.2. Insert the catch tab on the engine cover under the bracket on the engine.
   - 7.3. Place the hole in the engine cover over the hole in the valve cover. Install oil fill tube and cap by twisting clockwise.

8. Then fill the coolant recovery tank to the COLD FILL line.

9. Put the cap back on the coolant recovery tank, but leave the pressure cap off.

Downloaded from www.Manualslib.com manuals search engine

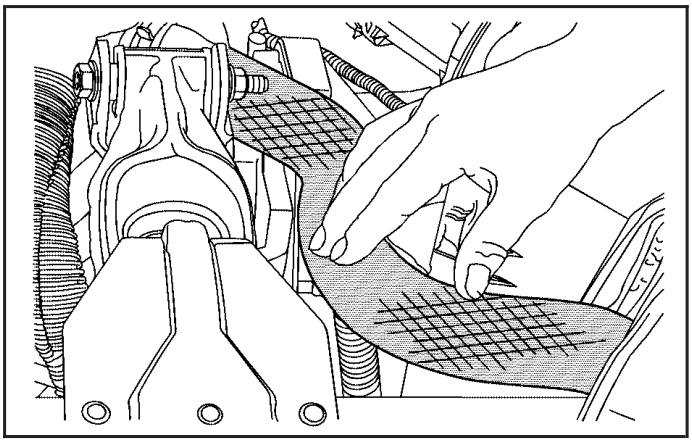

3.8L V6 Engine

10. Start the engine and let it run until you can feel the upper radiator hose getting hot. Watch out for the engine cooling fan(s).
11. By this time, the coolant level inside the radiator filler neck may be lower. If the level is lower, add more of the proper DEX-COOL® coolant mixture through the filler neck until the level reaches the base of the filler neck.
12. Then replace the pressure cap. At any time during this procedure if coolant begins to flow out of the filler neck, reinstall the pressure cap. Be sure the pressure cap is hand-tight and fully seated.
13. Check the coolant in the recovery tank. The level in the coolant recovery tank should be at the COLD FILL line when the engine is cold.

Downloaded from www.Manualslib.com manuals search engine

How to Add Coolant to the Cooling System (5.3L V8 Engine)

Notice: **The engine has a specific cooling system drain and fill procedure. Failure to follow this procedure could cause the engine to overheat and be severely damaged. If the engine's cooling system needs to be drained and re-filled, please see the dealer/retailer.**

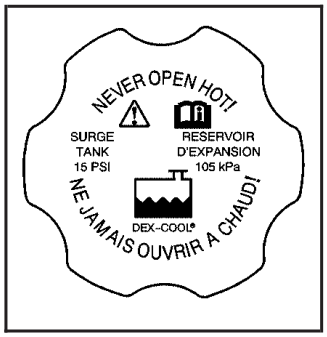

You can remove the pressure cap when the cooling system, including the pressure cap and upper radiator hose is no longer hot. Turn the pressure cap slowly counterclockwise.

1. If you hear a hiss, wait for that to stop. A hiss means that there is still some pressure left.
2. Then keep turning the pressure cap to remove the pressure cap.

⚠ CAUTION:

You can be burned if you spill coolant on hot engine parts. Coolant contains ethylene glycol and it will burn if the engine parts are hot enough. Do not spill coolant on a hot engine.

3. Fill the cooling system with the proper DEX-COOL® coolant mixture, up to the base of the filler neck. See *Engine Coolant on page 5-24* for more information about the proper coolant mixture.
4. Rinse or wipe any spilled coolant from the engine and the compartment.
5. Then fill the coolant recovery tank to the COLD FILL line.
6. Install the coolant recovery tank cap and the pressure cap.
7. If the coolant in the recovery tank is constantly low, you should have a dealer/retailer service department inspect your vehicle for leaks.

Downloaded from www.Manualslib.com manuals search engine

Power Steering Fluid

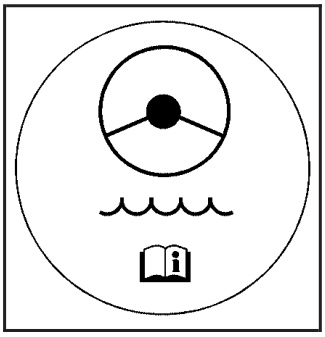

See *Engine Compartment Overview on page 5-12* for reservoir location.

When to Check Power Steering Fluid

It is not necessary to regularly check power steering fluid unless a leak is suspected in the system, or an unusual noise is heard. A fluid loss in this system could indicate a problem. Have the system inspected and repaired.

How to Check Power Steering Fluid

To check the power steering fluid, do the following:

1. Turn the key off and let the engine compartment cool down.
2. Wipe the cap and the top of the reservoir clean.
3. Unscrew the cap and wipe the dipstick with a clean rag.
4. Replace the cap and completely tighten it.
5. Remove the cap again and look at the fluid level on the dipstick

The fluid level should be between the ADD and HOT marks when the engine is cold.

When the engine compartment is hot, the level should be at the HOT mark.

If the fluid is at the ADD mark when the engine is cold or hot, power steering fluid should be added.

What to Use

To determine what kind of fluid to use, see *Recommended Fluids and Lubricants on page 6-12*. Always use the proper fluid.

Notice: **Use of the incorrect fluid may damage your vehicle and the damages may not be covered by your warranty. Always use the correct fluid listed in *Recommended Fluids and Lubricants on page 6-12*.**

Downloaded from www.Manualslib.com manuals search engine

Windshield Washer Fluid

What to Use

When you need windshield washer fluid, be sure to read the manufacturer's instructions before use. If you will be operating the vehicle in an area where the temperature may fall below freezing, use a fluid that has sufficient protection against freezing.

Adding Washer Fluid

When the windshield washer fluid reservoir is low, a LOW WASHER FLUID message along with the washer symbol, comes on in the Driver Information Center (DIC). See *DIC Warnings and Messages on page 3-67* for more information.

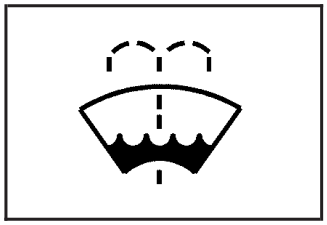

Open the cap with the washer symbol on it. Add washer fluid until the tank is full. See *Engine Compartment Overview on page 5-12* for reservoir location.

Notice:

- **When using concentrated washer fluid, follow the manufacturer's instructions for adding water.**
- **Do not mix water with ready-to-use washer fluid. Water can cause the solution to freeze and damage your washer fluid tank and other parts of the washer system. Also, water does not clean as well as washer fluid.**
- **Fill the washer fluid tank only three-quarters full when it is very cold. This allows for fluid expansion if freezing occurs, which could damage the tank if it is completely full.**
- **Do not use engine coolant (antifreeze) in your windshield washer. It can damage the vehicle's windshield washer system and paint.**

Downloaded from www.Manualslib.com manuals search engine

Brakes

Brake Fluid

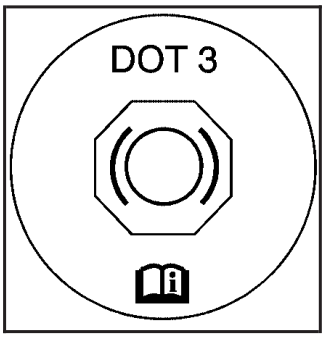

The brake master cylinder reservoir is filled with DOT-3 brake fluid. See *Engine Compartment Overview on page 5-12* for the location of the reservoir.

There are only two reasons why the brake fluid level in the reservoir might go down. The first is that the brake fluid goes down to an acceptable level during normal brake lining wear. When new linings are put in, the fluid level goes back up. The other reason is that fluid is leaking out of the brake hydraulic system. If it is, you should have the brake hydraulic system fixed, since a leak means that sooner or later the brakes will not work well.

It is not a good idea to top off the brake fluid. Adding brake fluid will not correct a leak. If fluid is added when the linings are worn, there will be too much fluid when new brake linings are installed. Add or remove brake fluid, as necessary, only when work is done on the brake hydraulic system.

⚠ CAUTION:

If your vehicle has too much brake fluid, it can spill on the engine. The fluid will burn if the engine is hot enough. You or others could be burned, and your vehicle could be damaged. Add brake fluid only when work is done on the brake hydraulic system.

When the brake fluid falls to a low level, the brake warning light comes on. See *Brake System Warning Light on page 3-45*.

Downloaded from www.Manualslib.com manuals search engine

What to Add

When you need brake fluid, use only DOT-3 brake fluid. Use new brake fluid from a sealed container only. See *Recommended Fluids and Lubricants on page 6-12*.

Always clean the brake fluid reservoir cap and the area around the cap before removing it. This helps keep dirt from entering the reservoir.

⚠ CAUTION:

With the wrong kind of fluid in the brake hydraulic system, the brakes might not work well. This could cause a crash. Always use the proper brake fluid.

Notice:

- **Using the wrong fluid can badly damage brake hydraulic system parts. For example, just a few drops of mineral-based oil, such as engine oil, in the brake hydraulic system can damage brake hydraulic system parts so badly that they will have to be replaced. Do not let someone put in the wrong kind of fluid.**
- **If you spill brake fluid on your vehicle's painted surfaces, the paint finish can be damaged. Be careful not to spill brake fluid on your vehicle. If you do, wash it off immediately. See *Washing Your Vehicle on page 5-114*.**

Downloaded from www.Manualslib.com manuals search engine

Brake Wear

Your vehicle has disc brakes. Disc brake pads have built-in wear indicators that make a high-pitched warning sound when the brake pads are worn and new pads are needed. The sound can come and go or be heard all the time your vehicle is moving, except when you are pushing on the brake pedal firmly.

⚠ CAUTION:

The brake wear warning sound means that soon the brakes will not work well. That could lead to an accident. When you hear the brake wear warning sound, have your vehicle serviced.

Notice: **Continuing to drive with worn-out brake pads could result in costly brake repair.**

Some driving conditions or climates can cause a brake squeal when the brakes are first applied or lightly applied. This does not mean something is wrong with the brakes.

Properly torqued wheel nuts are necessary to help prevent brake pulsation. When tires are rotated, inspect brake pads for wear and evenly tighten wheel nuts in the proper sequence to torque specifications in *Capacities and Specifications on page 5-128*.

Brake linings should always be replaced as complete axle sets.

Downloaded from www.Manualslib.com manuals search engine

Brake Pedal Travel

See your dealer/retailer if the brake pedal does not return to normal height, or if there is a rapid increase in pedal travel. This could be a sign that brake service might be required.

Brake Adjustment

Every time you apply the brakes, with or without the vehicle moving, the brakes adjust for wear.

Replacing Brake System Parts

The braking system on a vehicle is complex. Its many parts have to be of top quality and work well together if the vehicle is to have really good braking. Your vehicle was designed and tested with top-quality brake parts. When you replace parts of the braking system — for example, when the brake linings wear down and you need new ones put in — be sure you get new approved replacement parts. If you do not, the brakes might not work properly. For example, if someone puts in brake linings that are wrong for your vehicle, the balance between the front and rear brakes can change — for the worse. The braking performance you have come to expect can change in many other ways if someone puts in the wrong replacement brake parts.

Downloaded from www.Manualslib.com manuals search engine

Battery

Your vehicle has a maintenance free battery. When it is time for a new battery, see your dealer/retailer for one that has the replacement number shown on the original battery's label. See *Engine Compartment Overview on page 5-12* for battery location.

Warning: Battery posts, terminals, and related accessories contain lead and lead compounds, chemicals known to the State of California to cause cancer and reproductive harm. Wash hands after handling.

If the battery has a very low charge or is dead, you might not be able to remove the ignition key from the ignition switch or shift out of PARK (P). See *Shifting Out of PARK (P) on page 2-35*.

Vehicle Storage

⚠ CAUTION:

Batteries have acid that can burn you and gas that can explode. You can be badly hurt if you are not careful. See *Jump Starting on page 5-46* for tips on working around a battery without getting hurt.

Infrequent Usage: If you drive your vehicle infrequently, remove the black, negative (–) cable from the battery. This will help keep the battery from running down.

Extended Storage: For extended storage of your vehicle, remove the black, negative (–) cable from the battery or use a battery trickle charger. This will help maintain the charge of the battery over an extended period of time.

Downloaded from www.Manualslib.com manuals search engine

Jump Starting

If your vehicle's battery has run down, you may want to use another vehicle and some jumper cables to start your vehicle. Be sure to use the following steps to do it safely.

⚠ CAUTION:

Batteries can hurt you. They can be dangerous because:

- **They contain acid that can burn you.**
- **They contain gas that can explode or ignite.**
- **They contain enough electricity to burn you.**

If you do not follow these steps exactly, some or all of these things can hurt you.

Notice: **Ignoring these steps could result in costly damage to your vehicle that would not be covered by your warranty.**

Trying to start your vehicle by pushing or pulling it will not work, and it could damage your vehicle.

1. Check the other vehicle. It must have a 12-volt battery with a negative ground system.

Notice: **If the other vehicle's system is not a 12-volt system with a negative ground, both vehicles can be damaged. Only use vehicles with 12-volt systems with negative grounds to jump start your vehicle.**

2. Get the vehicles close enough so the jumper cables can reach, but be sure the vehicles are not touching each other. If they are, it could cause a ground connection you do not want. You would not be able to start your vehicle, and the bad grounding could damage the electrical systems.

   To avoid the possibility of the vehicles rolling, set the parking brake firmly on both vehicles involved in the jump start procedure. Put an automatic transmission in PARK (P) or a manual transmission in NEUTRAL before setting the parking brake.

Notice: **If you leave your radio or other accessories on during the jump starting procedure, they could be damaged. The repairs would not be covered by your warranty. Always turn off your radio and other accessories when jump starting your vehicle.**

Downloaded from www.Manualslib.com manuals search engine

3. Turn off the ignition on both vehicles. Unplug unnecessary accessories plugged into the cigarette lighter or the accessory power outlet. Turn off the radio and all lamps that are not needed. This will avoid sparks and help save both batteries. And it could save the radio!
4. Open the hood on the other vehicle and locate the positive (+) and negative (–) terminal locations on that vehicle.

   You will not use your vehicle's battery for jump starting. It has a remote positive (+) jump starting terminal, located on the underhood fuse block, for that purpose.

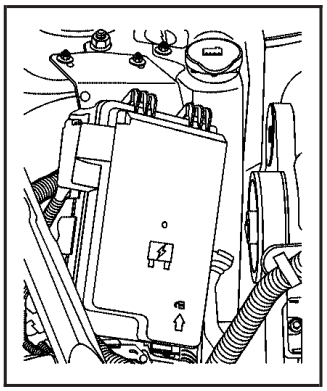

3.8L V6 Engine

If your vehicle has one of the 3.8L V6 engines, to uncover the remote positive (+) terminal, press the tab at the bottom of the fuse block and lift the cover up.

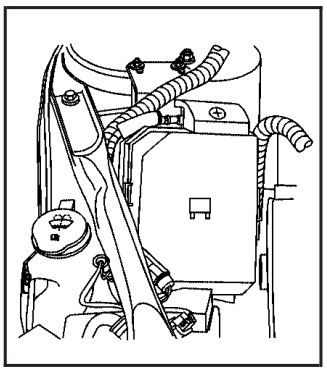

5.3L V8 Engine

If your vehicle has the 5.3L V8 engine, to uncover the remote positive (+) terminal, remove the fuse block cover.

Downloaded from www.Manualslib.com manuals search engine

Always use the remote positive (+) terminal instead of the positive (+) terminal on the battery. See *Engine Compartment Overview on page 5-12* for more information on location.

⚠ CAUTION:

An electric fan can start up even when the engine is not running and can injure you. Keep hands, clothing and tools away from any underhood electric fan.

⚠ CAUTION:

Fans or other moving engine parts can injure you badly. Keep your hands away from moving parts once the engine is running.

⚠ CAUTION:

Using a match near a battery can cause battery gas to explode. People have been hurt doing this, and some have been blinded. Use a flashlight if you need more light.

Be sure the battery has enough water. You do not need to add water to the battery installed in your new vehicle. But if a battery has filler caps, be sure the right amount of fluid is there. If it is low, add water to take care of that first. If you do not, explosive gas could be present.

Battery fluid contains acid that can burn you. Do not get it on you. If you accidentally get it in your eyes or on your skin, flush the place with water and get medical help immediately.

Downloaded from www.Manualslib.com manuals search engine

5. Check that the jumper cables do not have loose or missing insulation. If they do, you could get a shock. The vehicles could be damaged too.

   Before you connect the cables, here are some basic things you should know. Positive (+) will go to positive (+) or to a remote positive (+) terminal if the vehicle has one. Negative will go to a heavy, unpainted metal engine part or to a remote negative (–) terminal if the vehicle has one.

   Do not connect positive (+) to negative (–), or you will get a short that would damage the battery and maybe other parts too. And do not connect the negative (–) cable to the negative (–) terminal on the dead battery because this can cause sparks.

6. Connect the red positive (+) cable to the positive (+) terminal location on the vehicle with the dead battery. Use a remote positive (+) terminal if the vehicle has one.

7. Do not let the other end touch metal. Connect it to the positive (+) terminal location on the vehicle with the good battery. Use a remote positive (+) terminal if the vehicle has one.

8. Now connect the black negative (–) cable to the negative (–) terminal location on the vehicle with the good battery. Use a remote negative (–) terminal if the vehicle has one.

   Do not let the other end touch anything until the next step. The other end of the negative (–) cable does not go to the dead battery. It goes to a heavy, unpainted metal engine part or to a remote negative (–) terminal on the vehicle with the dead battery.

9. Connect the other end of the negative (–) cable at least 18 inches (45 cm) away from the dead battery, but not near engine parts that move. The electrical connection is just as good there, and the chance of sparks getting back to the battery is much less.

10. Now start the vehicle with the good battery and run the engine for a while.

11. Try to start the vehicle that had the dead battery. If it will not start after a few tries, it probably needs service.

Downloaded from www.Manualslib.com manuals search engine

Notice: **If the jumper cables are connected or removed in the wrong order, electrical shorting may occur and damage the vehicle. The repairs would not be covered by your warranty. Always connect and remove the jumper cables in the correct order, making sure that the cables do not touch each other or other metal.**

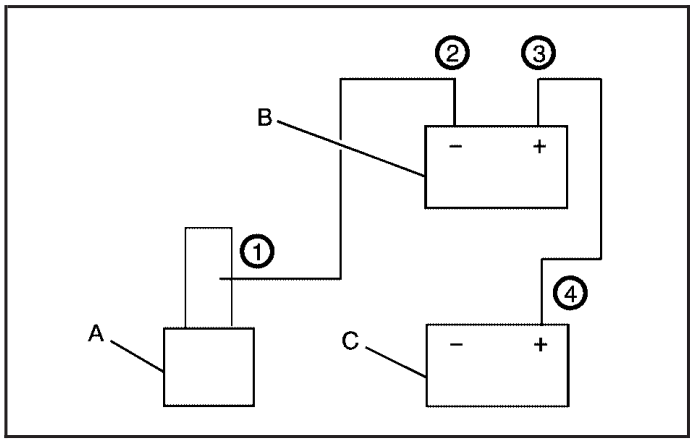

Jumper Cable Removal

A. Heavy, Unpainted Metal Engine Part or Remote Negative (–) Terminal

B. Good Battery or Remote Positive (+) and Remote Negative (–) Terminals

C. Dead Battery or Remote Positive (+) Terminal

To disconnect the jumper cables from both vehicles, do the following:

1. Disconnect the black negative (–) cable from the vehicle that had the dead battery.
2. Disconnect the black negative (–) cable from the vehicle with the good battery.
3. Disconnect the red positive (+) cable from the vehicle with the good battery.
4. Disconnect the red positive (+) cable from the other vehicle.
5. Return the remote positive (+) terminal cover to its original position.

Downloaded from www.Manualslib.com manuals search engine

Headlamp Aiming

The visual optical headlamp aiming system has been preset at the factory and should need no further adjustment.

However, If the vehicle is damaged in an accident, the headlamp aim may be affected and adjustment may be necessary.

If oncoming vehicles flash their high beams at you, this may also mean the vertical aim needs to be adjusted.

It is recommended that the vehicle is taken to your dealer/retailer for service if the headlamps need to be re-aimed. It is possible however, to re-aim the headlamps as described in the following procedure.

The vehicle should be properly prepared as follows:

- The vehicle should be placed so the headlamps are 25 ft. (7.6 m) from a light colored wall.
- The vehicle must have all four tires on a perfectly level surface which is level all the way to the wall.
- The vehicle should be placed so it is perpendicular to the wall.
- The vehicle should not have any snow, ice, or mud on it.
- The vehicle should be fully assembled and all other work stopped while headlamp aiming is being done.
- The vehicle should be normally loaded with a full tank of fuel and one person or 160 lbs (75 kg) sitting on the driver's seat.
- Tires should be properly inflated.

Downloaded from www.Manualslib.com manuals search engine

Headlamp aiming is done with the low-beam headlamps. The high-beam headlamps will be correctly aimed if the low-beam headlamps are aimed properly.

To adjust the vertical aim, do the following:

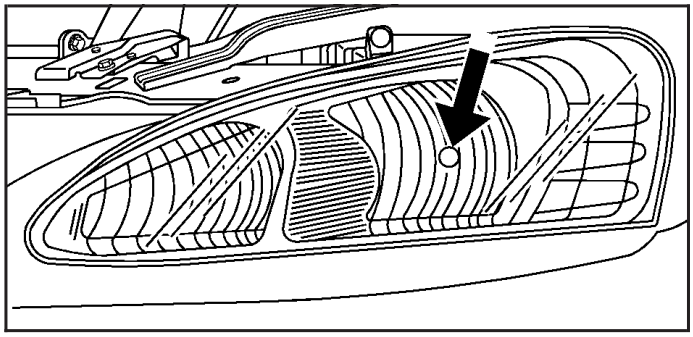

1. Open the hood. See *Hood Release on page 5-11* for more information.

   Find the aim dot on the lens of the low-beam lamp.
2. Locate the aim dot on the lens of the low-beam headlamp.
3. Measure the distance from the ground to the aim dot on the lamp. Record the distance.

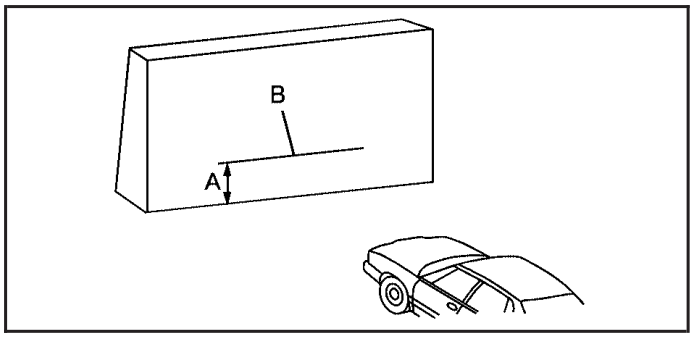

4. At the wall measure from the ground upward (A) to the recorded distance from Step 3 and mark it.
5. Draw or tape a horizontal line (B) on the wall the width of the vehicle at the height of the mark in Step 4.
6. Turn on the low-beam headlamps and place a piece of cardboard or equivalent in front of the headlamp not being aimed. This should allow only the beam of light from the headlamp being aimed to be seen on the flat surface.

Notice: **Do not cover a headlamp to improve beam cut-off when aiming. Covering a headlamp may cause excessive heat build-up which may cause damage to the headlamp.**

Downloaded from www.Manualslib.com manuals search engine

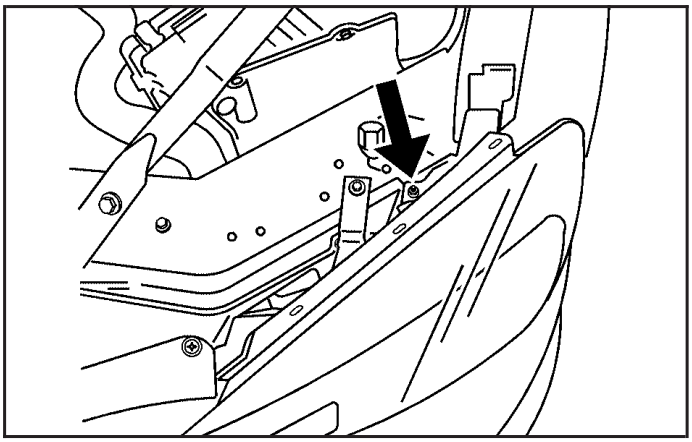

Driver's Side shown

7. Locate the vertical headlamp aiming screws, which are under the hood, near the headlamps. Turn the vertical aiming screw until the headlamp beam is aimed to the horizontal tape line.

   The adjustment screws can be turned with a 6 mm hex key bit socket or a 6 mm hex key.

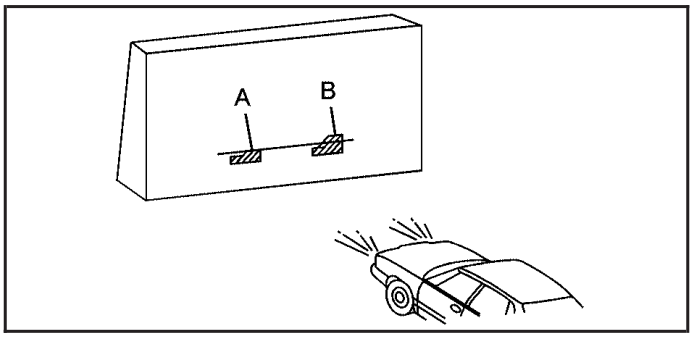

8. Turn the vertical aiming screw until the headlamp beam is aimed to the horizontal tape line. Turn it clockwise or counterclockwise to raise or lower the angle of the beam.
9. Make sure that the light from the headlamp is positioned at the bottom edge of the horizontal tape line. The lamp on the left (A) shows the correct headlamp aim. The lamp on the right (B) shows the incorrect headlamp aim.
10. Repeat Steps 7 through 9 for the opposite headlamp.

Downloaded from www.Manualslib.com manuals search engine

Bulb Replacement

For the proper type of replacement bulbs, see *Replacement Bulbs on page 5-60*.

For any bulb changing procedure not listed in this section, contact your dealer/retailer.

Halogen Bulbs

⚠ CAUTION:

Halogen bulbs have pressurized gas inside and can burst if you drop or scratch the bulb. You or others could be injured. Be sure to read and follow the instructions on the bulb package.

Headlamps and Sidemarker Lamps

To replace a headlamp or sidemarker bulb:

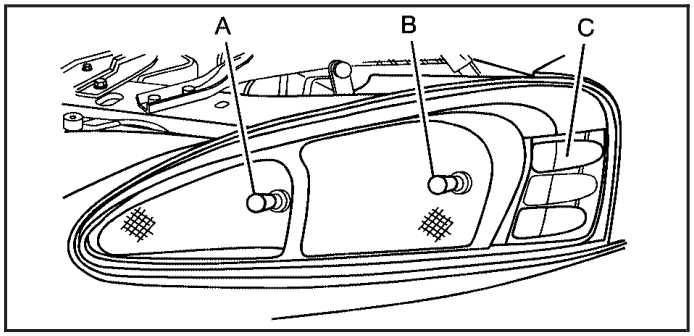

A. High-Beam Headlamp
B. Low-Beam Headlamp
C. Sidemarker Lamp

1. Open the hood. See *Hood Release on page 5-11* for more information.

Downloaded from www.Manualslib.com manuals search engine

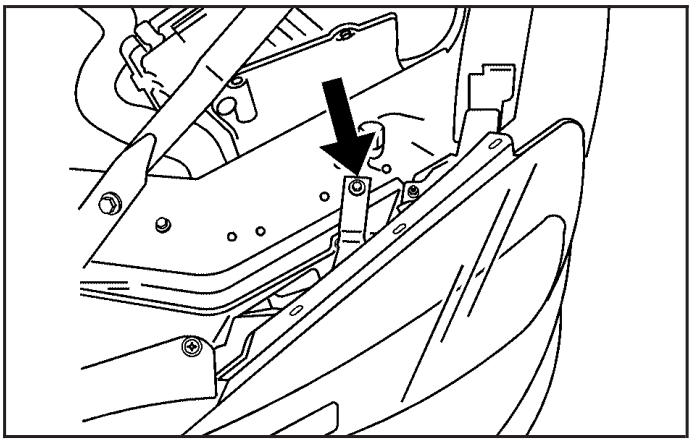

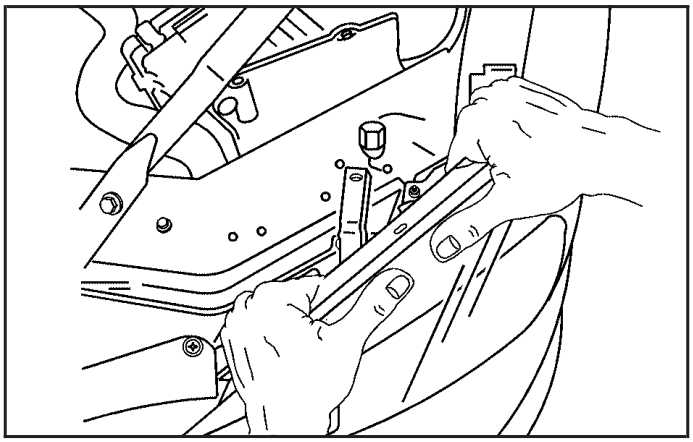

2. Locate the metal retaining clip. Remove the bolt.
3. Pull up half-way on the metal retaining clip while pushing rearward on the headlamp.

   Align the square cut-out on the retaining clip with the notch on the headlamp.
4. Pull the headlamp assembly straight out from the vehicle. Moving the headlamp up and down slightly may help with its removal.

Downloaded from www.Manualslib.com manuals search engine

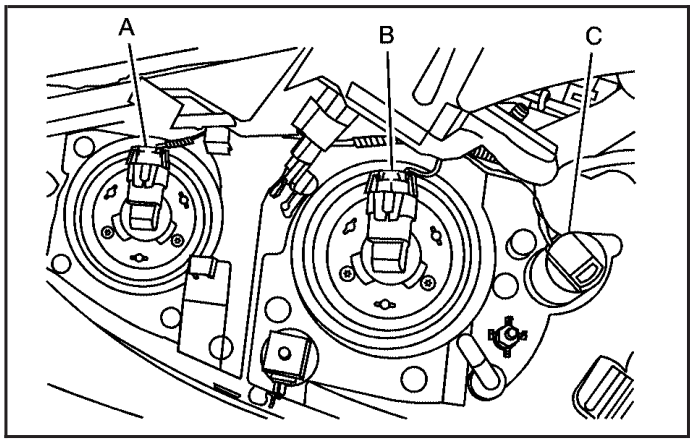

A. High-Beam Headlamp
B. Low-Beam Headlamp
C. Sidemarker Lamp

5. Turn the bulb socket ring one-quarter of a turn counterclockwise to remove it from the headlamp assembly.
6. Pull the old bulb from the socket.
7. Place the new bulb into the socket.
8. Turn the bulb socket ring one-quarter turn clockwise to reinstall it back into the headlamp assembly.
9. Carefully reinstall the headlamp assembly.
10. Push down on the metal retaining clip while pushing rearward on the headlamp, making sure the headlamp assembly is secure.
11. Reinstall the bolt and tighten to secure.

Downloaded from www.Manualslib.com manuals search engine

Front Turn Signal, Parking and Fog Lamps

The front turn signal, parking, and fog lamps, if the vehicle has them, are located below the headlamp assembly.

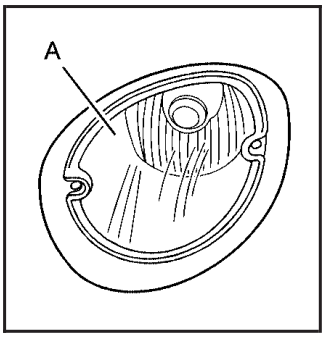

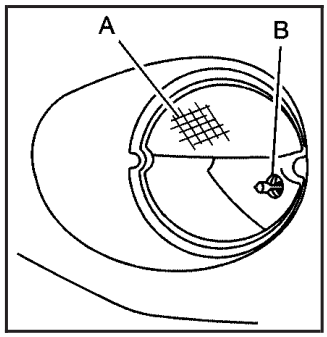

A. Front Turn Signal/Parking Lamp

B. Fog Lamp (If Equipped)

To replace one of these bulbs, do the following:

1. Follow Steps 1 through 4 of the headlamp replacement procedure. See *Headlamps and Sidemarker Lamps on page 5-54* for more information.

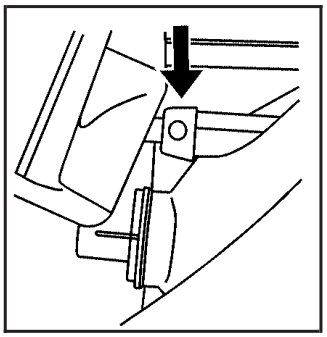

2. Locate the front turn signal/parking lamp (all models) and fog lamp bulbs (if equipped), which are located below the headlamp assembly.

   The arrow indicates which is the turn signal/parking lamp bulb. The fog lamp bulb is below it, if your vehicle has this bulb. If you need to have fog lamp bulb replaced, see your dealer/retailer for service.

3. Turn the bulb socket one-quarter of a turn counterclockwise to remove it from its assembly.
4. Pull the old bulb from the socket and replace it with a new one.
5. Turn the bulb socket a quarter turn clockwise to reinstall it.
6. Reinstall the headlamp assembly.
7. Push down on the metal retaining clip while pushing rearward on the headlamp, making sure the headlamp assembly is secure.
8. Reinstall the bolt and tighten to secure.

Downloaded from www.Manualslib.com manuals search engine

Taillamps, Turn Signal, and Stoplamps

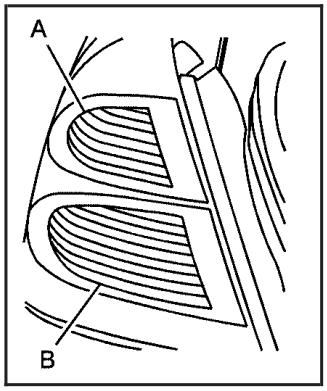

A. Taillamp
B. Taillamps, Turn Signal and Stoplamps

1. Open the trunk. See *Trunk on page 2-14* for more information.
2. Remove the convenience net, if equipped, by removing the net hook attachments.
3. Remove the plastic cap from the trunk trim.
4. Pull the trunk trim and carpet away from the back of the trunk.
5. Remove the bottom bolt and two nuts.

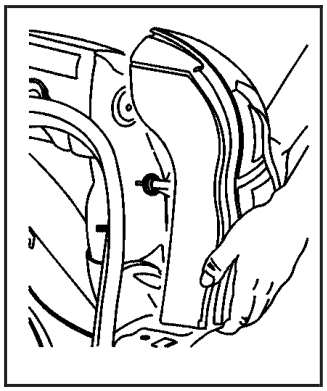

6. Remove the taillamp assembly by pulling it out from the vehicle.

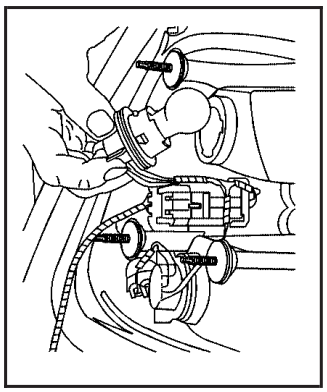

7. Turn the appropriate lamp socket a quarter turn counterclockwise and remove it.

8. Remove the old bulb.

Downloaded from www.Manualslib.com manuals search engine

9. Replace with a new bulb into the socket and turn the lamp socket clockwise to install it.
10. Reinstall the taillamp assembly by reversing Steps 2 through 5.

Back-Up Lamps

The back-up lamps are located on the trunk lid.

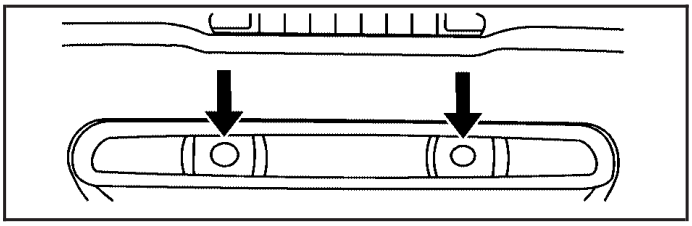

To replace the back-up lamp bulb(s):

1. Open the trunk. See *Trunk on page 2-14* for more information.

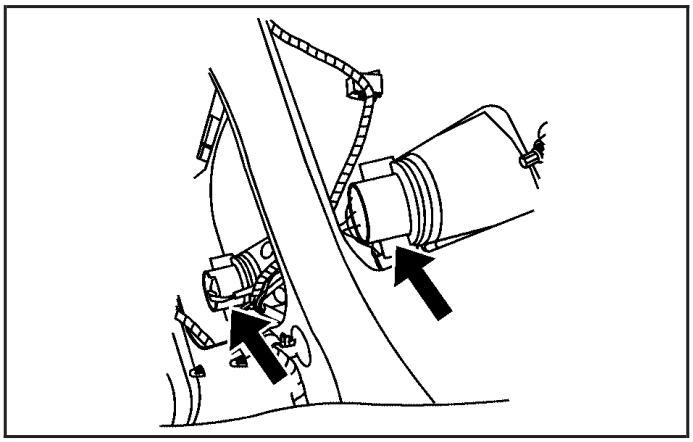

2. Turn the appropriate lamp socket a quarter turn counterclockwise and remove it.
3. Remove the old bulb.
4. Put the new bulb into the lamp socket.
5. Turn the bulb a quarter turn clockwise to reinstall it.

Downloaded from www.Manualslib.com manuals search engine

License Plate Lamp

To replace one of these bulbs:

1. Open the trunk. See *Trunk on page 2-14*

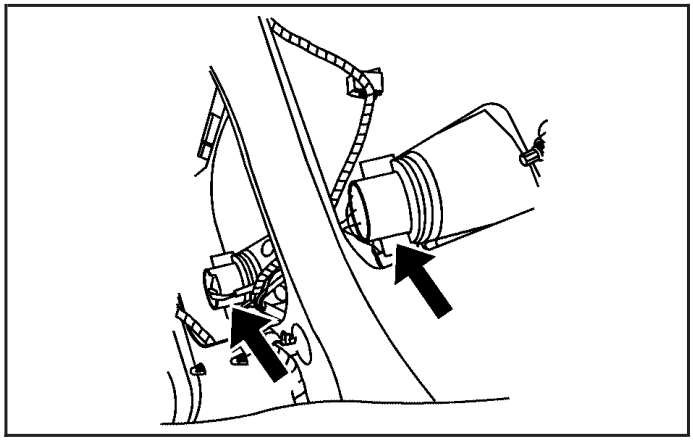

2. Turn the appropriate lamp socket a quarter turn counterclockwise and remove it.
3. Remove the old bulb.
4. Put the new bulb into the lamp socket.
5. Turn the bulb a quarter turn clockwise to reinstall it.

Replacement Bulbs

Exterior Lamps	Bulb Number
Back-Up Lamp	3157
Front Parking/Turn Signal Lamp	3757 NAK* or 5702 KA**
Front Sidemarker and License Plate Lamp	194
Headlamps	
High-Beam Halogen	9005
Low-Beam Halogen	9006
Stop/Taillamp/Turn Signal Lamps	3057
* Base Models with the Optional Fog Lamps ** For Lamps Not Equipped with the Fog Function and GXP Models	

For replacement bulbs not listed here, contact your dealer/retailer.

Downloaded from www.Manualslib.com manuals search engine

Windshield Replacement

If your vehicle is equipped with the Head-Up Display (HUD) system, keep in mind that your windshield is part of the HUD system. If you ever have to get your windshield replaced, be sure to get one that is designed for HUD or your HUD image may look blurred or out of focus.

Windshield Wiper Blade Replacement

Windshield wiper blades should be inspected for wear or cracking. See *Scheduled Maintenance on page 6-4* for more information on wiper blade inspection.

Replacement blades come in different types and are removed in different ways. For the proper type and length, see *Maintenance Replacement Parts on page 6-13*. Here is how to remove the wiper blade:

1. Pull the windshield wiper arm connector away from the windshield.

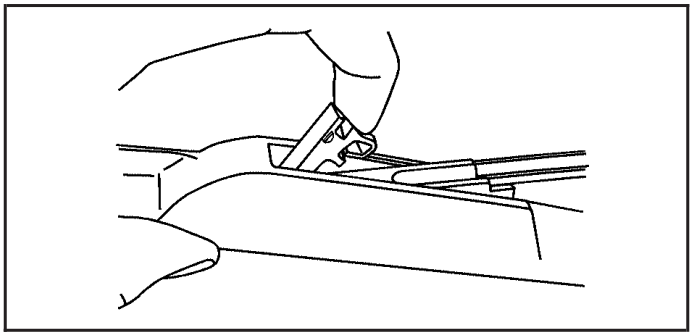

2. While holding the wiper arm, pull the clip up from the blade connecting point, and pull the blade assembly down toward the windshield to remove it from the wiper arm.
3. Install the new wiper blade onto the wiper arm and snap the clip into place.

Downloaded from www.Manualslib.com manuals search engine

Tires

Your new vehicle comes with high-quality tires made by a leading tire manufacturer. If you ever have questions about your tire warranty and where to obtain service, see your vehicle Warranty booklet for details.

⚠ CAUTION:

Poorly maintained and improperly used tires are dangerous.

- **Overloading your vehicle's tires can cause overheating as a result of too much flexing. You could have an air-out and a serious accident. See *Loading Your Vehicle on page 4-22*.**

CAUTION: (Continued)

CAUTION: (Continued)

- **Underinflated tires pose the same danger as overloaded tires. The resulting accident could cause serious injury. Check all tires frequently to maintain the recommended pressure. Tire pressure should be checked when your vehicle's tires are cold. See *Inflation - Tire Pressure on page 5-69*.**
- **Overinflated tires are more likely to be cut, punctured, or broken by a sudden impact — such as when you hit a pothole. Keep tires at the recommended pressure.**
- **Worn, old tires can cause accidents. If the tire's tread is badly worn, or if your vehicle's tires have been damaged, replace them.**

Downloaded from www.Manualslib.com manuals search engine

Low-Profile Performance Tire (GXP)

If your vehicle has P255/45R18 size tires on the front wheels and P225/50R18 size tires on the rear wheels, they are classified as low-profile performance tires. These tires are designed for very responsive driving on wet or dry pavement. You may also notice more road noise with low-profile performance tires and that they tend to wear faster.

Notice: **If your vehicle has low-profile tires, they are more susceptible to damage from road hazards or curb impact than standard profile tires. Tire and/or wheel assembly damage can occur when coming into contact with road hazards like, potholes, or sharp edged objects, or when sliding into a curb. Your vehicle warranty does not cover this type of damage. Keep tires set to the correct inflation pressure and, when possible avoid contact with curbs, potholes, and other road hazards.**

Tire Sidewall Labeling

Useful information about a tire is molded into its sidewall. The examples below show a typical passenger vehicle tire and a compact spare tire sidewall.

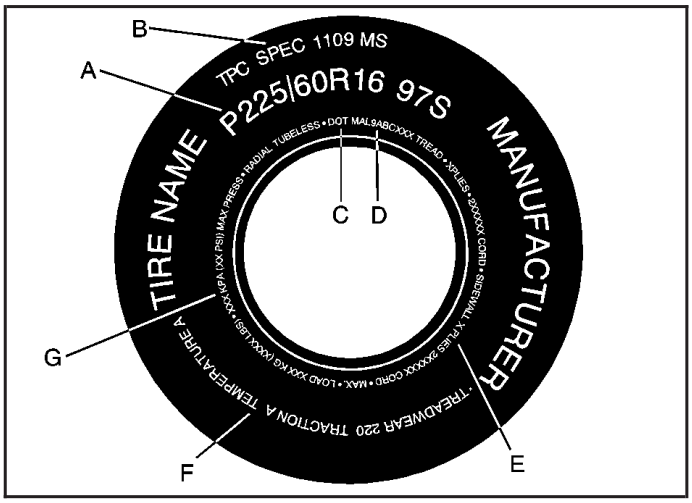

Passenger (P-Metric) Tire Example

(A) Tire Size: The tire size is a combination of letters and numbers used to define a particular tire's width, height, aspect ratio, construction type, and service description. See the "Tire Size" illustration later in this section for more detail.

(B) TPC Spec (Tire Performance Criteria Specification): Original equipment tires designed to GM's specific tire performance criteria have a TPC specification code molded onto the sidewall. GM's TPC specifications meet or exceed all federal safety guidelines.

Downloaded from www.Manualslib.com manuals search engine

(C) DOT (Department of Transportation): The Department of Transportation (DOT) code indicates that the tire is in compliance with the U.S. Department of Transportation Motor Vehicle Safety Standards.

(D) Tire Identification Number (TIN): The letters and numbers following DOT (Department of Transportation) code is the Tire Identification Number (TIN). The TIN shows the manufacturer and plant code, tire size, and date the tire was manufactured. The TIN is molded onto both sides of the tire, although only one side may have the date of manufacture.

(E) Tire Ply Material: The type of cord and number of plies in the sidewall and under the tread.

(F) Uniform Tire Quality Grading (UTQG): Tire manufacturers are required to grade tires based on three performance factors: treadwear, traction, and temperature resistance. For more information see *Uniform Tire Quality Grading on page 5-80*.

(G) Maximum Cold Inflation Load Limit: Maximum load that can be carried and the maximum pressure needed to support that load.

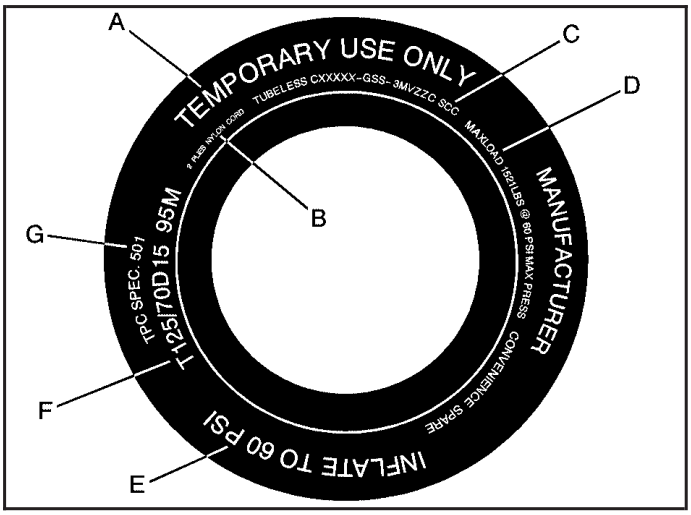

Compact Spare Tire Example

(A) Temporary Use Only: The compact spare tire or temporary use tire has a tread life of approximately 3,000 miles (5 000 km) and should not be driven at speeds over 65 mph (105 km/h). The compact spare tire is for emergency use when a regular road tire has lost air and gone flat. If your vehicle has a compact spare tire, see *Compact Spare Tire on page 5-109* and *If a Tire Goes Flat on page 5-85*.

Downloaded from www.Manualslib.com manuals search engine

(B) Tire Ply Material: The type of cord and number of plies in the sidewall and under the tread.

(C) Tire Identification Number (TIN): The letters and numbers following the DOT (Department of Transportation) code is the Tire Identification Number (TIN). The TIN shows the manufacturer and plant code, tire size, and date the tire was manufactured. The TIN is molded onto both sides of the tire, although only one side may have the date of manufacture.

(D) Maximum Cold Inflation Load Limit: Maximum load that can be carried and the maximum pressure needed to support that load.

(E) Tire Inflation: The temporary use tire or compact spare tire should be inflated to 60 psi (420 kPa). For more information on tire pressure and inflation see *Inflation - Tire Pressure on page 5-69*.

(F) Tire Size : A combination of letters and numbers define a tire's width, height, aspect ratio, construction type, and service description. The letter T as the first character in the tire size means the tire is for temporary use only.

(G) TPC Spec (Tire Performance Criteria Specification): Original equipment tires designed to GM's specific tire performance criteria have a TPC specification code molded onto the sidewall. GM's TPC specifications meet or exceed all federal safety guidelines.

Tire Size

The following illustration shows an example of a typical passenger vehicle tire size.

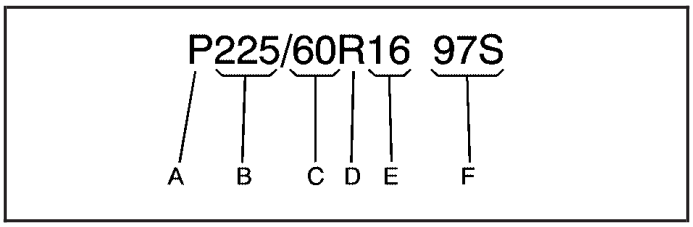

(A) Passenger (P-Metric) Tire: The United States version of a metric tire sizing system. The letter P as the first character in the tire size means a passenger vehicle tire engineered to standards set by the U.S. Tire and Rim Association.

Downloaded from www.Manualslib.com manuals search engine

(B) Tire Width: The three-digit number indicates the tire section width in millimeters from sidewall to sidewall.

(C) Aspect Ratio: A two-digit number that indicates the tire height-to-width measurements. For example, if the tire size aspect ratio is 60, as shown in item C of the illustration, it would mean that the tire's sidewall is 60 percent as high as it is wide.

(D) Construction Code: A letter code is used to indicate the type of ply construction in the tire. The letter R means radial ply construction; the letter D means diagonal or bias ply construction; and the letter B means belted-bias ply construction.

(E) Rim Diameter: Diameter of the wheel in inches.

(F) Service Description: These characters represent the load range and speed rating of the tire. The load index represents the load carry capacity a tire is certified to carry. The load index can range from 1 to 279. The speed rating is the maximum speed a tire is certified to carry a load. Speed ratings range from A to Z.

Tire Terminology and Definitions

Air Pressure: The amount of air inside the tire pressing outward on each square inch of the tire. Air pressure is expressed in pounds per square inch (psi) or kilopascal (kPa).

Accessory Weight: This means the combined weight of optional accessories. Some examples of optional accessories are, automatic transmission, power steering, power brakes, power windows, power seats, and air conditioning.

Aspect Ratio: The relationship of a tire's height to its width.

Belt: A rubber coated layer of cords that is located between the plies and the tread. Cords may be made from steel or other reinforcing materials.

Bead: The tire bead contains steel wires wrapped by steel cords that hold the tire onto the rim.

Bias Ply Tire: A pneumatic tire in which the plies are laid at alternate angles less than 90 degrees to the centerline of the tread.

Downloaded from www.Manualslib.com manuals search engine

Cold Tire Pressure: The amount of air pressure in a tire, measured in pounds per square inch (psi) or kilopascals (kPa) before a tire has built up heat from driving. See *Inflation - Tire Pressure on page 5-69*.

Curb Weight: The weight of a motor vehicle with standard and optional equipment including the maximum capacity of fuel, oil, and coolant, but without passengers and cargo.

DOT Markings: A code molded into the sidewall of a tire signifying that the tire is in compliance with the U.S. Department of Transportation (DOT) motor vehicle safety standards. The DOT code includes the Tire Identification Number (TIN), an alphanumeric designator which can also identify the tire manufacturer, production plant, brand, and date of production.

GVWR: Gross Vehicle Weight Rating. See *Loading Your Vehicle on page 4-22*.

GAWR FRT: Gross Axle Weight Rating for the front axle. See *Loading Your Vehicle on page 4-22*.

GAWR RR: Gross Axle Weight Rating for the rear axle. See *Loading Your Vehicle on page 4-22*.

Intended Outboard Sidewall: The side of an asymmetrical tire, that must always face outward when mounted on a vehicle.

Kilopascal (kPa): The metric unit for air pressure.

Light Truck (LT-Metric) Tire: A tire used on light duty trucks and some multipurpose passenger vehicles.

Load Index: An assigned number ranging from 1 to 279 that corresponds to the load carrying capacity of a tire.

Maximum Inflation Pressure: The maximum air pressure to which a cold tire can be inflated. The maximum air pressure is molded onto the sidewall.

Maximum Load Rating: The load rating for a tire at the maximum permissible inflation pressure for that tire.

Downloaded from www.Manualslib.com manuals search engine

Maximum Loaded Vehicle Weight: The sum of curb weight, accessory weight, vehicle capacity weight, and production options weight.

Normal Occupant Weight: The number of occupants a vehicle is designed to seat multiplied by 150 lbs (68 kg). See *Loading Your Vehicle on page 4-22*.

Occupant Distribution: Designated seating positions.

Outward Facing Sidewall: The side of an asymmetrical tire that has a particular side that faces outward when mounted on a vehicle. The side of the tire that contains a whitewall, bears white lettering, or bears manufacturer, brand, and/or model name molding that is higher or deeper than the same moldings on the other sidewall of the tire.

Passenger (P-Metric) Tire: A tire used on passenger cars and some light duty trucks and multipurpose vehicles.

Recommended Inflation Pressure: Vehicle manufacturer's recommended tire inflation pressure as shown on the tire placard. See *Inflation - Tire Pressure on page 5-69* and *Loading Your Vehicle on page 4-22*.

Radial Ply Tire: A pneumatic tire in which the ply cords that extend to the beads are laid at 90 degrees to the centerline of the tread.

Rim: A metal support for a tire and upon which the tire beads are seated.

Sidewall: The portion of a tire between the tread and the bead.

Speed Rating: An alphanumeric code assigned to a tire indicating the maximum speed at which a tire can operate.

Traction: The friction between the tire and the road surface. The amount of grip provided.

Tread: The portion of a tire that comes into contact with the road.

Downloaded from www.Manualslib.com manuals search engine

Treadwear Indicators: Narrow bands, sometimes called wear bars, that show across the tread of a tire when only 1/16 inch (1.6 mm) of tread remains. See *When It Is Time for New Tires on page 5-77*.

UTQGS (Uniform Tire Quality Grading Standards): A tire information system that provides consumers with ratings for a tire's traction, temperature, and treadwear. Ratings are determined by tire manufacturers using government testing procedures. The ratings are molded into the sidewall of the tire. See *Uniform Tire Quality Grading on page 5-80*.

Vehicle Capacity Weight: The number of designated seating positions multiplied by 150 lbs (68 kg) plus the rated cargo load. See *Loading Your Vehicle on page 4-22*.

Vehicle Maximum Load on the Tire: Load on an individual tire due to curb weight, accessory weight, occupant weight, and cargo weight.

Vehicle Placard: A label permanently attached to a vehicle showing the vehicle's capacity weight and the original equipment tire size and recommended inflation pressure. See "Tire and Loading Information Label" under *Loading Your Vehicle on page 4-22*.

Inflation - Tire Pressure

Tires need the correct amount of air pressure to operate effectively.

Notice: **Do not let anyone tell you that under-inflation or over-inflation is all right. It is not. If your tires do not have enough air (under-inflation), you can get the following:**

- **Too much flexing**
- **Too much heat**
- **Tire overloading**
- **Premature or irregular wear**
- **Poor handling**
- **Reduced fuel economy**

If your tires have too much air (over-inflation), you can get the following:

- **Unusual wear**
- **Poor handling**
- **Rough ride**
- **Needless damage from road hazards**

Downloaded from www.Manualslib.com manuals search engine

A vehicle specific Tire and Loading Information label is attached to your vehicle. This label shows your vehicle's original equipment tires and the correct inflation pressures for your tires when they are cold. The recommended cold tire inflation pressure, shown on the label, is the minimum amount of air pressure needed to support your vehicle's maximum load carrying capacity.

For additional information regarding how much weight your vehicle can carry, and an example of the Tire and Loading Information label, see *Loading Your Vehicle on page 4-22*. How you load your vehicle affects vehicle handling and ride comfort. Never load your vehicle with more weight than it was designed to carry.

When to Check

Check your tires once a month or more. Do not forget to check the compact spare tire, it should be at 60 psi (420 kPa). For additional information regarding the compact spare tire, see *Compact Spare Tire on page 5-109*.

How to Check

Use a good quality pocket-type gage to check tire pressure. You cannot tell if your tires are properly inflated simply by looking at them. Radial tires may look properly inflated even when they are under-inflated. Check the tire's inflation pressure when the tires are cold. Cold means your vehicle has been sitting for at least three hours or driven no more than 1 mile (1.6 km).

Remove the valve cap from the tire valve stem. Press the tire gage firmly onto the valve to get a pressure measurement. If the cold tire inflation pressure matches the recommended pressure on the Tire and Loading Information label, no further adjustment is necessary. If the inflation pressure is low, add air until you reach the recommended amount.

If you overfill the tire, release air by pushing on the metal stem in the center of the tire valve. Re-check the tire pressure with the tire gage.

Be sure to put the valve caps back on the valve stems. They help prevent leaks by keeping out dirt and moisture.

Downloaded from www.Manualslib.com manuals search engine

Tire Pressure Monitor System

The Tire Pressure Monitor System (TPMS) uses radio and sensor technology to check tire pressure levels. The TPMS sensors monitor the air pressure in your vehicle's tires and transmit tire pressure readings to a receiver located in the vehicle.

Each tire, including the spare (if provided), should be checked monthly when cold and inflated to the inflation pressure recommended by the vehicle manufacturer on the vehicle placard or tire inflation pressure label. (If your vehicle has tires of a different size than the size indicated on the vehicle placard or tire inflation pressure label, you should determine the proper tire inflation pressure for those tires.)

As an added safety feature, your vehicle has been equipped with a tire pressure monitoring system (TPMS) that illuminates a low tire pressure telltale when one or more of your tires is significantly under-inflated.

Accordingly, when the low tire pressure telltale illuminates, you should stop and check your tires as soon as possible, and inflate them to the proper pressure. Driving on a significantly under-inflated tire causes the tire to overheat and can lead to tire failure. Under-inflation also reduces fuel efficiency and tire tread life, and may affect the vehicle's handling and stopping ability.

Please note that the TPMS is not a substitute for proper tire maintenance, and it is the driver's responsibility to maintain correct tire pressure, even if under-inflation has not reached the level to trigger illumination of the TPMS low tire pressure telltale.

Your vehicle has also been equipped with a TPMS malfunction indicator to indicate when the system is not operating properly. The TPMS malfunction indicator is combined with the low tire pressure telltale. When the system detects a malfunction, the telltale will flash for approximately one minute and then remain continuously illuminated. This sequence will continue upon subsequent vehicle start-ups as long as the malfunction exists.

When the malfunction indicator is illuminated, the system may not be able to detect or signal low tire pressure as intended. TPMS malfunctions may occur for a variety of reasons, including the installation of replacement or alternate tires or wheels on the vehicle that prevent the TPMS from functioning properly. Always check the TPMS malfunction telltale after replacing one or more tires or wheels on your vehicle to ensure that the replacement or alternate tires and wheels allow the TPMS to continue to function properly.

See *Tire Pressure Monitor Operation on page 5-72* for additional information.

Downloaded from www.Manualslib.com manuals search engine

Federal Communications Commission (FCC) and Industry and Science Canada

The Tire Pressure Monitor System (TPMS) operates on a radio frequency and complies with Part 15 of the FCC Rules. Operation is subject to the following two conditions:

1. This device may not cause harmful interference.
2. This device must accept any interference received, including interference that may cause undesired operation.

The Tire Pressure Monitor System (TPMS) operates on a radio frequency and complies with RSS-210 of Industry and Science Canada. Operation is subject to the following two conditions:

1. This device may not cause interference.
2. This device must accept any interference received, including interference that may cause undesired operation of the device.

Changes or modifications to this system by other than an authorized service facility could void authorization to use this equipment.

Tire Pressure Monitor Operation

The Tire Pressure Monitor System (TPMS) is designed to warn the driver when a low tire pressure condition exists. TPMS sensors are mounted onto each tire and wheel assembly, excluding the spare tire and wheel assembly. The TPMS sensors monitor the air pressure in the vehicle's tires and transmits the tire pressure readings to a receiver located in the vehicle.

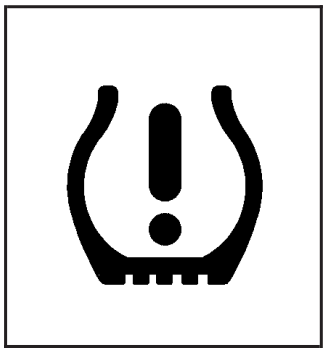

When a low tire pressure condition is detected, the TPMS illuminates the low tire pressure warning light, located in the instrument panel cluster.

Downloaded from www.Manualslib.com manuals search engine

At the same time a message to check the pressure in a specific tire appears on the Driver Information center (DIC) display. The low tire pressure warning light and the DIC warning message come on at each ignition cycle until the tires are inflated to the correct inflation pressure. Using the DIC buttons, tire pressure readings can be viewed by the driver. For additional information and details about the DIC operation and displays see *DIC Operation and Displays (Uplevel DIC with Trip Computer) on page 3-55* or *DIC Operation and Displays (Base Level DIC) on page 3-62* and *DIC Warnings and Messages on page 3-67*.

The low tire pressure warning light may come on in cool weather when the vehicle is first started, and then turn off as you start to drive. This could be an early indicator that the air pressure in the tire(s) are getting low and need to be inflated to the proper pressure.

A tire and Loading Information label, attached to your vehicle, shows the size of your vehicle's original equipment tires and the correct inflation pressure for your vehicle's tires when they are cold. See *Loading Your Vehicle on page 4-22*, for an example of the Tire and Loading Information label and its location on your vehicle. Also see *Inflation - Tire Pressure on page 5-69*.

Your vehicle's TPMS system can warn you about a low tire pressure condition but it does not replace normal tire maintenance. See *Tire Inspection and Rotation on page 5-75* and *Tires on page 5-62*.

Your vehicle, when new, may have included a factory-installed Tire Inflator Kit. This kit uses a GM approved liquid tire sealant. See *Tire Sealant and Compressor Kit (GXP) on page 5-86*.

Notice: **Using non-approved tire sealants could damage the Tire Pressure Monitor System (TPMS) sensors. TPMS sensor damage caused by using an incorrect tire sealant is not covered by the vehicle warranty. Always use the GM approved tire sealant available through your dealer/retailer.**

Downloaded from www.Manualslib.com manuals search engine

TPMS Malfunction Light and Message

The TPMS will not function properly if one or more of the TPMS sensors are missing or inoperable. When the system detects a malfunction, the low tire warning light flashes for about one minute and then stays on for the remainder of the ignition cycle. A DIC warning message is also displayed. The low tire warning light and DIC warning message come on at each ignition cycle until the problem is corrected. Some of the conditions that can cause the malfunction light and DIC message to come on are:

- One of the road tires has been replaced with the spare tire and wheel. The spare, if your vehicle has one, does not have a TPMS sensor. The TPMS malfunction light and DIC message should go off once you re-install the road tire containing the TPMS sensor.
- The TPMS sensor matching process was started but not completed or not completed successfully after rotating the vehicle's tires. The DIC message and TPMS malfunction light should go off once the TPMS sensor matching process is performed successfully. See "TPMS Sensor Matching Process" later in this section.
- One or more TPMS sensors are missing or damaged. The DIC message and the TPMS malfunction light should go off when the TPMS sensors are installed and the sensor matching process is performed successfully. See your dealer/retailer for service.
- Replacement tires or wheels do not match your vehicle's original equipment tires or wheels. Tire and wheels other than those recommended for your vehicle could prevent the TPMS from functioning properly. See *Buying New Tires on page 5-78*.
- Operating electronic devices or being near facilities using radio wave frequencies similar to the TPMS could cause the TPMS sensors to malfunction.

If the TPMS is not functioning it cannot detect or signal a low tire condition. See your dealer/retailer for service if the TPMS malfunction light and DIC message comes on and stays on.

TPMS Sensor Matching Process

Each TPMS sensor has a unique identification code. Any time you replace one or more of the TPMS sensors or rotate the vehicle's tires, the identification codes need to be matched to the new tire/wheel position. The sensors are matched, to the tire/wheel positions, in the following order: driver side front tire, passenger side front tire, passenger side rear tire, and driver side rear tire using a TPMS diagnostic tool. See your dealer for service.

The TPMS sensors may also be matched to each tire/wheel position by increasing or decreasing the tire's air pressure. When increasing the tire's pressure, do not exceed the maximum inflation pressure indicated on the tire's sidewall. To decrease the tire's air-pressure use the pointed end of the valve cap, a pencil-style air pressure gage, or a key.

Downloaded from www.Manualslib.com manuals search engine

You have two minutes to match each tire and wheel position. If it takes longer than two minutes to match any tire and wheel position, the matching process stops and you need to start over.

The TPMS matching process is outlined below:

1. Set the parking brake.
2. Turn the ignition switch to ON/RUN with the engine off.
3. Press the Remote Keyless Entry (RKE) transmitter's LOCK and UNLOCK buttons at the same time for approximately five seconds. The horn sounds twice to signal the receiver is in relearn mode.
4. Start with the driver side front tire.
5. Remove the valve cap from the tire's valve stem. Activate the TPMS sensor by increasing or decreasing the tire's air pressure for 10 seconds, or until a horn chirp sounds. The horn chirp, which may take up to 30 seconds to sound, confirms that the sensor identification code has been matched to the tire/wheel position.
6. Proceed to the passenger side front tire, and repeat the procedure in Step 5.
7. Proceed to the passenger side rear tire, and repeat the procedure in Step 5.
8. Proceed to the driver side rear tire, and repeat the procedure in Step 5. The horn sounds two times to indicate the sensor identification code has been matched to the driver side rear tire, and the TPMS sensor matching process is no longer active.
9. Turn the ignition switch to LOCK/OFF.
10. Set all four tires to the recommended air pressure level as indicated on the tire and loading information label.
11. Put the valve caps back on the valve stems.

Tire Inspection and Rotation

We recommend that you regularly inspect your vehicle's tires, including the spare tire, for signs of wear or damage. See *When It Is Time for New Tires on page 5-77* for more information.

Tire rotation is not recommended if your vehicle is a GXP model equipped with P255/45R18 size tires on the front wheels and P225/50R18 size tires on the rear wheels. Different tire sizes front to rear should not be rotated.

Tire rotation is recommended if the original equipment tires installed on your vehicle are of the same size and type on all four tire/wheel positions. Original equipment tires of the same size and type should be rotated every 5,000 to 8,000 miles (8 000 to 13 000 km). See *Scheduled Maintenance on page 6-4*.

Downloaded from www.Manualslib.com manuals search engine

The purpose of a regular tire rotation is to achieve a uniform wear for all tires on the vehicle. This will ensure that your vehicle continues to perform most like it did when the tires were new.

Any time you notice unusual wear, rotate your vehicle's tires as soon as possible and check the wheel alignment. Also check for damaged tires or wheels. See *When It Is Time for New Tires on page 5-77* and *Wheel Replacement on page 5-82* for more information.

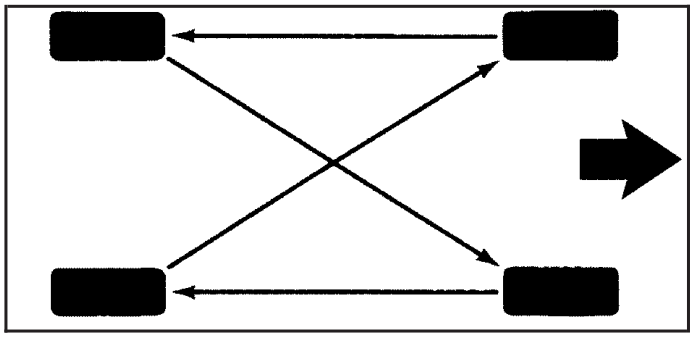

Rotation Pattern for Non-GXP Tires Only

The correct rotation pattern shown here is only for non-GXP tires.

Do not include a compact spare tire, if your vehicle has one, in the vehicle's tire rotation.

After the tires have been rotated, adjust the front and rear inflation pressures as shown on the Tire and Loading Information label, and reset the Tire Pressure Monitor System. See *Tire Pressure Monitor System on page 5-71* for additional information.

Make certain that all wheel nuts are properly tightened. See "Wheel Nut Torque" under *Capacities and Specifications on page 5-128*.

⚠ CAUTION:

Rust or dirt on a wheel, or on the parts to which it is fastened, can make wheel nuts become loose after time. The wheel could come off and cause an accident. When you change a wheel, remove any rust or dirt from places where the wheel attaches to the vehicle. In an emergency, you can use a cloth or a paper towel to do this; but be sure to use a scraper or wire brush later, if needed, to get all the rust or dirt off. See *Changing a Flat Tire on page 5-96*.

Downloaded from www.Manualslib.com manuals search engine

When It Is Time for New Tires

Various factors, such as maintenance, temperatures, driving speeds, vehicle loading, and road conditions influence when you need new tires.

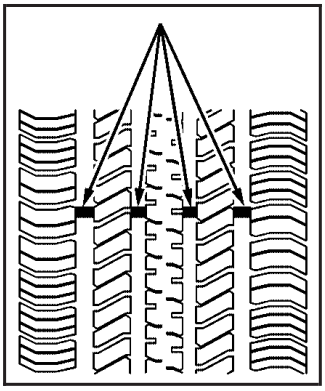

One way to tell when it is time for new tires is to check the treadwear indicators, which will appear when your tires have only 1/16 inch (1.6 mm) or less of tread remaining.

You need new tires if any of the following statements are true:

- You can see the indicators at three or more places around the tire.
- You can see cord or fabric showing through the tire's rubber.
- The tread or sidewall is cracked, cut, or snagged deep enough to show cord or fabric.
- The tire has a bump, bulge, or split.
- The tire has a puncture, cut, or other damage that cannot be repaired well because of the size or location of the damage.

The rubber in tires degrades over time, even if they are not being used. This is also true for the spare tire, if your vehicle has one. Multiple conditions affect how fast this aging takes place, including temperatures, loading conditions, and inflation pressure maintenance. With proper care and maintenance tires will typically wear out before they degrade due to age. If you are unsure about the need to replace your tires as they get older, consult the tire manufacturer for more information.

Downloaded from www.Manualslib.com manuals search engine

Buying New Tires

GM has developed and matched specific tires for your vehicle. The original equipment tires installed on your vehicle, when it was new, were designed to meet General Motors Tire Performance Criteria Specification (TPC Spec) system rating. If you need replacement tires, GM strongly recommends that you get tires with the same TPC Spec rating. This way, your vehicle will continue to have tires that are designed to give the same performance and vehicle safety, during normal use, as the original tires.

GM's exclusive TPC Spec system considers over a dozen critical specifications that impact the overall performance of your vehicle, including brake system performance, ride and handling, traction control, and tire pressure monitoring performance. GM's TPC Spec number is molded onto the tire's sidewall near the tire size. If the tires have an all-season tread design, the TPC Spec number will be followed by an MS for mud and snow. See *Tire Sidewall Labeling on page 5-63* for additional information.

GM recommends replacing tires in sets of four. This is because uniform tread depth on all tires will help keep your vehicle performing most like it did when the tires were new. Replacing less than a full set of tires can affect the braking and handling performance of your vehicle. See *Tire Inspection and Rotation on page 5-75* for information on proper tire rotation.

⚠ CAUTION:

Mixing tires could cause you to lose control while driving. If you mix tires of different sizes (other than those originally installed on your vehicle), brands, or types (radial and bias-belted tires), the vehicle may not handle properly, and you could have a crash. Using tires of different sizes (other than those originally installed on your vehicle) may also cause damage to your vehicle. Be sure to use the correct size, brand, and type tires on all wheels. If your vehicle has a compact spare tire, it is all right to drive your vehicle with the compact spare temporarily. It was developed for use on your vehicle. See *Compact Spare Tire on page 5-109*.

Downloaded from www.Manualslib.com manuals search engine

⚠ CAUTION:

If you use bias-ply tires on your vehicle, the wheel rim flanges could develop cracks after many miles of driving. A tire and/or wheel could fail suddenly, causing a crash. Use only radial-ply tires with the wheels on your vehicle.

If you must replace your vehicle's tires with those that do not have a TPC Spec number, make sure they are the same size, load range, speed rating, and construction type (radial and bias-belted tires) as your vehicle's original tires.

Vehicles that have a tire pressure monitoring system could give an inaccurate low-pressure warning if non-TPC Spec rated tires are installed on your vehicle. Non-TPC Spec rated tires may give a low-pressure warning that is higher or lower than the proper warning level you would get with TPC Spec rated tires. See *Tire Pressure Monitor System on page 5-71*.

Your vehicle's original equipment tires are listed on the Tire and Loading Information Label. See *Loading Your Vehicle on page 4-22*, for more information about the Tire and Loading Information Label and its location on your vehicle.

Downloaded from www.Manualslib.com manuals search engine

Different Size Tires and Wheels

If you add wheels or tires that are a different size than your original equipment wheels and tires, this may affect the way your vehicle performs, including its braking, ride and handling characteristics, stability, and resistance to rollover. Additionally, if your vehicle has electronic systems such as, anti-lock brakes, traction control, and electronic stability control, the performance of these systems can be affected.

⚠ CAUTION:

If you add different sized wheels, your vehicle may not provide an acceptable level of performance and safety if tires not recommended for those wheels are selected. You may increase the chance that you will crash and suffer serious injury. Only use GM specific wheel and tire systems developed for your vehicle, and have them properly installed by a GM certified technician.

See *Buying New Tires on page 5-78* and *Accessories and Modifications on page 5-3* for additional information.

Uniform Tire Quality Grading

Quality grades can be found where applicable on the tire sidewall between tread shoulder and maximum section width. For example:

Treadwear 200 Traction AA Temperature A

The following information relates to the system developed by the United States National Highway Traffic Safety Administration (NHTSA), which grades tires by treadwear, traction, and temperature performance. This applies only to vehicles sold in the United States. The grades are molded on the sidewalls of most passenger car tires. The Uniform Tire Quality Grading (UTQG) system does not apply to deep tread, winter-type snow tires, space-saver, or temporary use spare tires, tires with nominal rim diameters of 10 to 12 inches (25 to 30 cm), or to some limited-production tires.

While the tires available on General Motors passenger cars and light trucks may vary with respect to these grades, they must also conform to federal safety requirements and additional General Motors Tire Performance Criteria (TPC) standards.

Downloaded from www.Manualslib.com manuals search engine

Treadwear

The treadwear grade is a comparative rating based on the wear rate of the tire when tested under controlled conditions on a specified government test course. For example, a tire graded 150 would wear one and a half (1.5) times as well on the government course as a tire graded 100. The relative performance of tires depends upon the actual conditions of their use, however, and may depart significantly from the norm due to variations in driving habits, service practices, and differences in road characteristics and climate.

Traction – AA, A, B, C

The traction grades, from highest to lowest, are AA, A, B, and C. Those grades represent the tire's ability to stop on wet pavement as measured under controlled conditions on specified government test surfaces of asphalt and concrete. A tire marked C may have poor traction performance.

Warning: **The traction grade assigned to this tire is based on straight-ahead braking traction tests, and does not include acceleration, cornering, hydroplaning, or peak traction characteristics.**

Temperature – A, B, C

The temperature grades are A (the highest), B, and C, representing the tire's resistance to the generation of heat and its ability to dissipate heat when tested under controlled conditions on a specified indoor laboratory test wheel. Sustained high temperature can cause the material of the tire to degenerate and reduce tire life, and excessive temperature can lead to sudden tire failure. The grade C corresponds to a level of performance which all passenger car tires must meet under the Federal Motor Vehicle Safety Standard No. 109. Grades B and A represent higher levels of performance on the laboratory test wheel than the minimum required by law.

Warning: **The temperature grade for this tire is established for a tire that is properly inflated and not overloaded. Excessive speed, underinflation, or excessive loading, either separately or in combination, can cause heat buildup and possible tire failure.**

Downloaded from www.Manualslib.com manuals search engine

Wheel Alignment and Tire Balance

The tires and wheels on your vehicle were aligned and balanced carefully at the factory to give you the longest tire life and best overall performance. Adjustments to wheel alignment and tire balancing will not be necessary on a regular basis. However, if you notice unusual tire wear or your vehicle pulling to one side or the other, the alignment might need to be checked. If you notice your vehicle vibrating when driving on a smooth road, the tires and wheels might need to be rebalanced. See your dealer/retailer for proper diagnosis.

Wheel Replacement

Replace any wheel that is bent, cracked, or badly rusted or corroded. If wheel nuts keep coming loose, the wheel, wheel bolts, and wheel nuts should be replaced. If the wheel leaks air, replace it (except some aluminum wheels, which can sometimes be repaired). See your dealer/retailer if any of these conditions exist.

Your dealer/retailer will know the kind of wheel you need.

Each new wheel should have the same load-carrying capacity, diameter, width, offset, and be mounted the same way as the one it replaces.

If you need to replace any of your wheels, wheel bolts, wheel nuts, or Tire Pressure Monitor System (TPMS) sensors, replace them only with new GM original equipment parts. This way, you will be sure to have the right wheel, wheel bolts, wheel nuts, and TPMS sensors for your vehicle.

Downloaded from www.Manualslib.com manuals search engine

⚠ CAUTION:

Using the wrong replacement wheels, wheel bolts, or wheel nuts on your vehicle can be dangerous. It could affect the braking and handling of your vehicle, make your tires lose air and make you lose control. You could have a collision in which you or others could be injured. Always use the correct wheel, wheel bolts, and wheel nuts for replacement.

Notice: **The wrong wheel can also cause problems with bearing life, brake cooling, speedometer or odometer calibration, headlamp aim, bumper height, vehicle ground clearance, and tire or tire chain clearance to the body and chassis.**

See *Changing a Flat Tire on page 5-96* for more information.

Used Replacement Wheels

⚠ CAUTION:

Putting a used wheel on your vehicle is dangerous. You cannot know how it has been used or how far it has been driven. It could fail suddenly and cause a crash. If you have to replace a wheel, use a new GM original equipment wheel.

Downloaded from www.Manualslib.com manuals search engine

Tire Chains

⚠ CAUTION:

If your vehicle has P225/55R17, P255/45R18 or P225/50R18 size tires, do not use tire chains, there is not enough clearance.

Tire chains used on a vehicle without the proper amount of clearance can cause damage to the brakes, suspension or other vehicle parts. The area damaged by the tire chains could cause you to lose control of your vehicle and you or others may be injured in a crash.

Use another type of traction device only if its manufacturer recommends it for use on your vehicle and tire size combination and road conditions. Follow that manufacturer's instructions.

CAUTION: (Continued)

CAUTION: (Continued)

To help avoid damage to your vehicle, drive slowly, readjust or remove the device if it is contacting your vehicle, and do not spin your wheels.

If you do find traction devices that will fit, install them on the front tires.

Notice: **If your vehicle does not have P225/55R17, P255/45R18 or P225/50R18 size tires, use tire chains only where legal and only when you must. Use only SAE Class S-type chains that are the proper size for your tires. Install them on the front tires and tighten them as tightly as possible with the ends securely fastened. Drive slowly and follow the chain manufacturer's instructions. If you can hear the chains contacting your vehicle, stop and retighten them. If the contact continues, slow down until it stops. Driving too fast or spinning the wheels with chains on will damage your vehicle.**

Downloaded from www.Manualslib.com manuals search engine

If a Tire Goes Flat

It is unusual for a tire to blowout while you are driving, especially if you maintain your tires properly. See *Tires on page 5-62*. If air goes out of a tire, it is much more likely to leak out slowly. But if you should ever have a blowout, here are a few tips about what to expect and what to do:

If a front tire fails, the flat tire will create a drag that pulls the vehicle toward that side. Take your foot off the accelerator pedal and grip the steering wheel firmly. Steer to maintain lane position, and then gently brake to a stop well out of the traffic lane.

A rear blowout, particularly on a curve, acts much like a skid and may require the same correction you'd use in a skid. In any rear blowout, remove your foot from the accelerator pedal. Get the vehicle under control by steering the way you want the vehicle to go. It may be very bumpy and noisy, but you can still steer. Gently brake to a stop, well off the road if possible.

If a tire goes flat, and your vehicle has a spare tire, see *Changing a Flat Tire on page 5-96*. This information shows you how to use your vehicle's tire changing equipment and how to change a flat tire safely.

⚠ CAUTION:

Lifting a vehicle and getting under it to do maintenance or repairs is dangerous without the appropriate safety equipment and training. The jack provided with your vehicle is designed only for changing a flat tire. If it is used for anything else, you or others could be badly injured or killed if the vehicle slips off the jack. Use the jack provided with your vehicle only for changing a flat tire.

Downloaded from www.Manualslib.com manuals search engine

If a Tire Goes Flat (GXP)

GXP models have no spare tire, no tire changing equipment, and no place for storing a spare or flat tire. If a tire goes flat, avoid further tire and wheel damage by driving slowly to a level place and stopping.
Then do this:

1. Turn on the hazard warning flashers. See *Hazard Warning Flashers on page 3-6*.
2. Park your vehicle. Set the parking brake firmly and put the shift lever in PARK (P). See *Shifting Into PARK (P) on page 2-34* for additional information.
3. Turn off the engine.
4. Inspect the flat tire.

If the tire has been separated from the wheel or has damaged sidewalls or large tears that allow rapid air loss, call a tire repair facility. See *Roadside Assistance Program on page 7-6*.

If the flat tire is due to a slow leak caused by a nail or other similar road hazard, the tire inflator kit may be used to temporarily repair the damaged tire. The kit uses a liquid tire sealant to seal small punctures in the tread area of the tire. The flat tire is then inflated to at least 30 psi (207 kPa) and driven to evenly distribute the tire sealant. The tire pressure is checked after driving for a maximum of five miles (8.0 km) to see if the slow leak has been stopped. If the tire pressure is 19 psi (131 kPa) or more, inflate the tire up to the standard operating pressure as shown on the tire and loading information label. This label is attached to the vehicle's center-pillar below the driver's door latch. See *Inflation - Tire Pressure on page 5-69*.

Notice: **If the tire pressure has dropped below 19 psi (131 kPa), the vehicle should not be driven. Damage to the tire may be severe and the sealant will not be effective. Contact Roadside Assistance, see *Roadside Assistance Program on page 7-6*.**

You should have the damaged tire repaired as soon as possible. The tire sealant is a temporary repair only. If the tire has been filled with tire sealant, take the tire to a GM dealer/retailer for inspection and repair. See *Tire Sealant and Compressor Kit (GXP) on page 5-86* for additional information.

Tire Sealant and Compressor Kit (GXP)

Your vehicle may have a tire inflator kit. The kit uses a liquid tire sealant and air at the same time to seal small punctures in the tread area of the tire. Be sure to read and follow all the tire inflator kit instructions.

Downloaded from www.Manualslib.com manuals search engine

The kit includes:

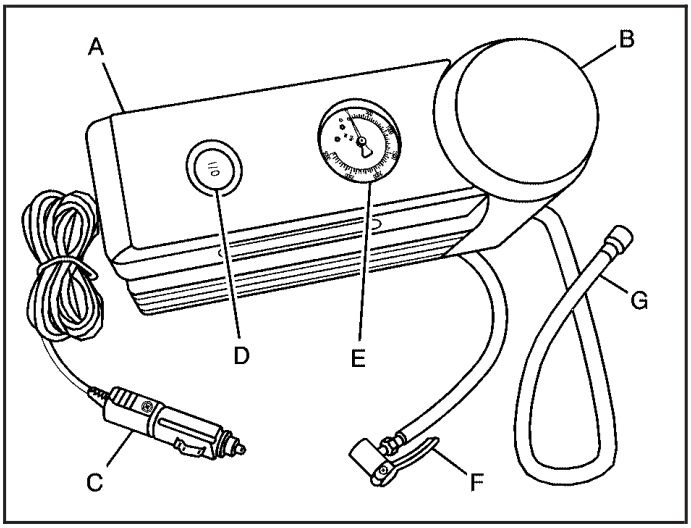

A. Air Compressor
B. Tire Sealant Canister
C. Air Compressor Accessory Plug
D. On/Off Switch
E. Air Pressure Gage
F. Air Compressor Inflator Hose
G. Sealant Filling Hose

If the flat tire is due to a slow leak caused by a nail or other similar road hazard, the tire inflator kit may be used to temporarily repair the damaged tire.

After temporarily repairing a tire using the tire inflator kit, it is recommended to take your vehicle to your dealer/retailer within 100 miles (161 kilometers) of driving to have the tire inspected and repaired. If the sealant is not removed from the tire within a 100 miles (161 kilometers) of driving, it is more likely that the tire and tire pressure monitoring sensor may get damaged and have to be replaced.

Downloaded from www.Manualslib.com manuals search engine

Accessing the Tire Inflator Kit

To access the tire inflator kit:

1. Open the trunk. See *Trunk on page 2-14* for more information.
2. Locate the tire inflator kit by lifting up the carpet.

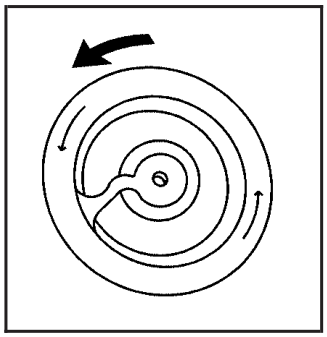

3. Remove the inflator kit cover by turning the center nut counterclockwise.

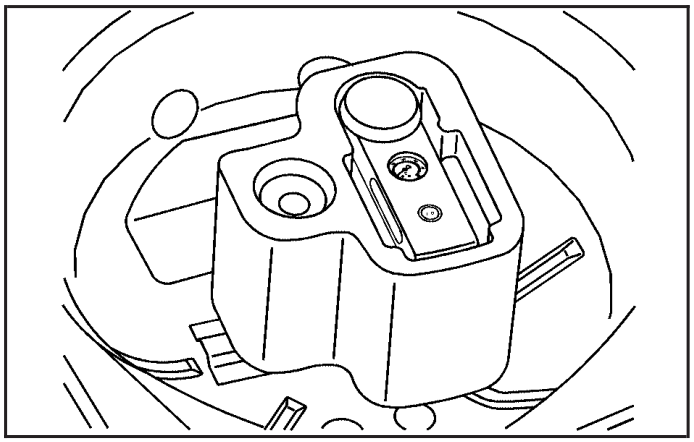

4. Remove the inflator kit by pulling it straight out of the foam container.

Downloaded from www.Manualslib.com manuals search engine

Tire Sealant

The kit contains a liquid sealant that when injected into a flat tire, may temporarily repair nail holes or cuts in the tread area of the tire. The tire sealant cannot repair tire damage caused while driving on a flat tire or a tire that has had a “blow out” or a tire that has punctures in the sidewall areas. The tire sealant solution is to be used for a single tire and can only be used once.

Check the tire sealant expiration date on the sealant canister. The sealant may not be as effective beyond the expiration date. If needed, see your dealer/retailer for a replacement canister.

After temporarily repairing a tire using the tire sealant, take your vehicle to your dealer/retailer to have the tire inspected and repaired.

Using the Tire Inflator Kit

To use the tire inflator kit:

1. Place the inflator kit on the ground and unwrap the sealant filling hose from the compressor.
2. Remove the air compressor accessory plug from the unit. To do this, pull the top portion of the wrapped cord out first, then the bottom, then unsnap the plug. Do not insert the plug into an accessory outlet yet.
3. Remove the valve stem cap from the flat tire by turning it counterclockwise.

   If an object, such as a nail, has penetrated the tire, do not remove it.

Downloaded from www.Manualslib.com manuals search engine

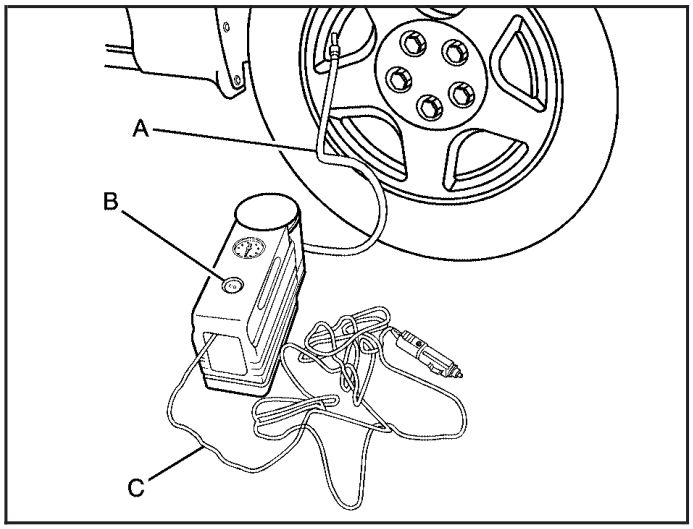

4. Attach the sealant filling hose (A) onto the tire valve stem. Turn it clockwise until it is tight.

   Make sure the inflator kit on/off switch (B) is in the O (off) position.

5. Plug the air compressor accessory plug (C) into an accessory power outlet in the vehicle. See *Accessory Power Outlet(s) on page 3-26* for more information.

⚠ CAUTION:

Idling the engine in a closed-in place or with the climate control system off can cause deadly carbon monoxide (CO). See *Engine Exhaust on page 2-36*.

6. Start the vehicle. See *Starting the Engine on page 2-25* for more information. The vehicle must be running while using the air compressor.

⚠ CAUTION:

Inflating something too much can make it explode, and you or others could be injured. Be sure to read the inflator instructions, and inflate the tire to its recommended pressure. Do not exceed 36 psi (248 kPa).

7. Move the inflator kit switch to the I (on) position.

   The inflator kit will force sealant and air into the tire. Sealant may leak from the puncture hole until the vehicle is driven and the hole has sealed.

Downloaded from www.Manualslib.com manuals search engine

8. Make sure there is a proper connection between the tire valve stem and the sealant filling hose by looking at the air pressure gage. If there is not a pressure reading while the compressor is running, the connection between the inflator kit and the tire is bad.

   Check the attachment between the sealant filling hose and the tire valve stem.

9. Inflate the tire up to the recommended inflation pressure, found on the Tire and Loading Information label located on the vehicle's center pillar (B-pillar) below the vehicle's door latch, using the air pressure gage on the top of the unit as a guide.

   The pressure gage reading is slightly high while the compressor is on. Turn the compressor off to get an accurate pressure reading.

Notice: **If the recommended pressure cannot be reached after 15 minutes, the vehicle should not be driven. The tire is too severely damaged and cannot be inflated or sealed with the tire sealant and compressor kit. Remove the air compressor accessory plug from the accessory power outlet and unscrew the sealant/air hose from the tire valve or tire pressure monitoring sensor valve. See *Roadside Assistance Program on page 7-6*.**

10. Move the inflator kit switch to the O (off) position once the correct tire pressure is obtained.

11. Turn off the engine.

12. Unplug the air compressor accessory plug from the accessory power outlet in the vehicle.

13. Disconnect the sealant filling hose from the tire valve stem, by turning it counterclockwise, and replace the tire valve stem cap.

    Be careful when handling the tire inflator components as they may be hot after usage.

14. Wrap the sealant filling hose around the air compressor channel to stow it in its original location.

Downloaded from www.Manualslib.com manuals search engine

15. Stow the air compressor accessory plug back in the air compressor. To do this, wrap the air compressor accessory plug, snap in the plug, and then push in the bottom and then the top of the wrapped air compressor accessory plug.

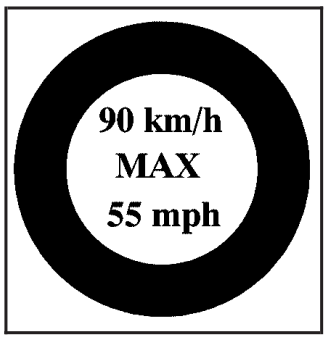

16. If the flat tire was able to inflate to the recommended inflation pressure, remove the maximum speed label from the sealant canister.

    Place it in a highly visible location such as the inside of the upper left corner of the windshield or to the face of the radio/clock.

    The maximum speed label reminds you to drive cautiously and not to exceed 55 mph (90 km/h) until you have the damaged tire inspected and repaired.

⚠ CAUTION:

Storing the tire sealant and compressor kit or other equipment in the passenger compartment of the vehicle could cause injury. In a sudden stop or collision, loose equipment could strike someone. Store the tire sealant and compressor kit in the proper place.

17. Return the equipment to the proper storage location in the trunk of your vehicle.
18. Immediately drive the vehicle 5 miles (8 km) to distribute the sealant evenly in the tire. Stop at a safe location and check the tire pressure. Refer to Steps 1 through 8 under “Using the Air Compressor without Sealant” next in this section. If the tire pressure has fallen more than 10 psi (68 kPa) below the recommended inflation pressure, stop driving the vehicle. The tire is too damaged for the sealant to work. See *Roadside Assistance Program on page 7-6*.

    If the tire pressure has not dropped more than 10 psi (68 kPa) from the recommended inflation pressure, you can inflate the tire back up to the recommended inflation pressure.

Downloaded from www.Manualslib.com manuals search engine

19. Dispose of the sealant canister at your dealer/retailer or in accordance with your local state codes and practices.

    After using the sealant canister, replace it with a new canister from your dealer/retailer.

20. After temporarily repairing a tire with the emergency flat tire repair kit, take your vehicle to your dealer/retailer to have the tire inspected and repaired.

Using the Air Compressor without Sealant

To use the air compressor by itself to inflate a tire:

1. Remove the air compressor accessory plug from the air compressor.

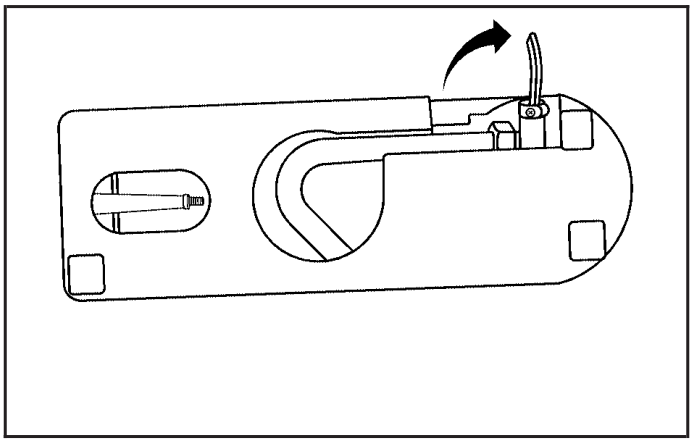

2. Unlock the air compressor hose from the sealant canister by pulling up on the lever.
3. Pull the air compressor inflator hose from the sealant canister.
4. Push the air compressor inflator hose onto the tire valve stem and push the lever down to secure in place.

Downloaded from www.Manualslib.com manuals search engine

5. Plug the air compressor accessory plug into an accessory power outlet in the vehicle. See *Accessory Power Outlet(s) on page 3-26* for more information.

⚠ CAUTION:

Idling the engine in a closed-in place or with the climate control system off can cause deadly carbon monoxide (CO). See *Engine Exhaust on page 2-36*.

6. Start the vehicle. See *Starting the Engine on page 2-25* for more information. The vehicle must be running while using the air compressor.

⚠ CAUTION:

Inflating something too much can make it explode, and you or others could be injured. Be sure to read the inflator instructions, and inflate the tire to its recommended pressure. Do not exceed 36 psi (248 kPa).

7. Move the inflator kit switch to the I (on) position.
8. Make sure there is a proper connection between the tire valve stem and the air compressor hose by looking at the air pressure gage. If there is not a pressure reading while the compressor is running, the connection between the inflator kit and the tire is bad.

   Check the attachment between the air compressor hose and the tire valve stem.

Downloaded from www.Manualslib.com manuals search engine

9. Inflate the tire up to the recommended inflation pressure using the air pressure gage on the top of the unit as a guide.
10. Turn off the air compressor by moving the switch to the O (off) position.

⚠ CAUTION:

Storing the tire sealant and compressor kit or other equipment in the passenger compartment of the vehicle could cause injury. In a sudden stop or collision, loose equipment could strike someone. Store the tire sealant and compressor kit in the proper place.

11. Disconnect the compressor inflator hose and wrap the hose in the bottom of the inflator kit.
12. Place the equipment in the original location in the trunk of your vehicle.

Removal and Installation of the Sealant Canister

To remove the sealant canister:

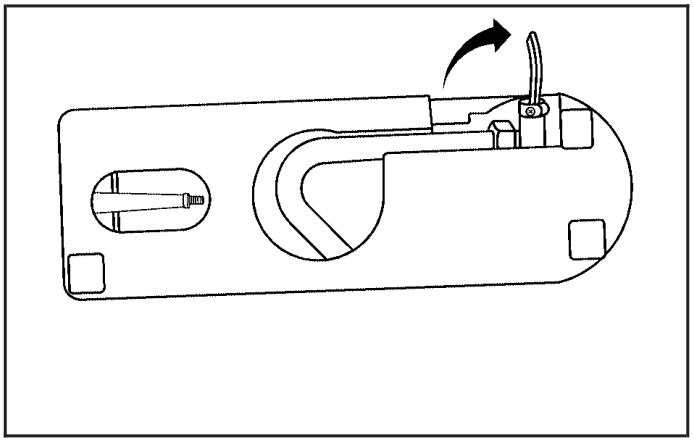

1. Unlock the air compressor inflator hose from the sealant canister by pulling the lever up.
2. Disconnect the air compressor inflator hose from the sealant canister.
3. Unwrap the sealant filling hose from the compressor.

Downloaded from www.Manualslib.com manuals search engine

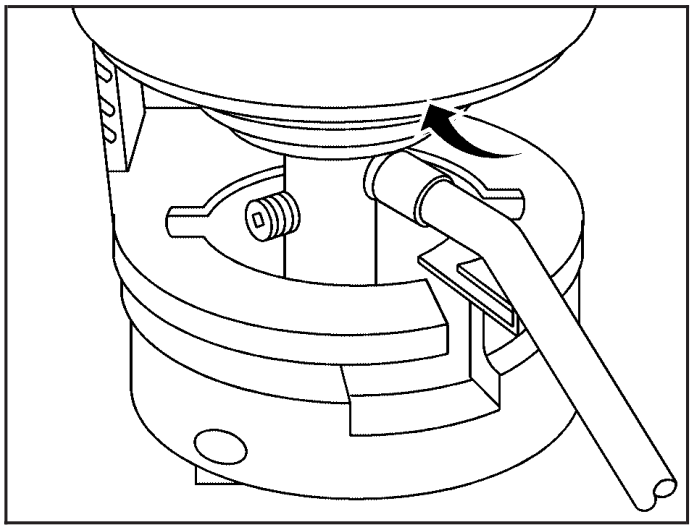

4. Turn the sealant canister so the inflator filling hose is aligned with the slot in the compressor.
5. Lift the sealant canister from the air compressor and replace with a new sealant canister. See your dealer/retailer for more information.

To install a new sealant canister:

1. Align the sealant filling hose with the slot in the air compressor.
2. Push the sealant canister down and turn it clockwise.
3. Wrap the sealant filling hose around the air compressor channel to stow it in its original location.
4. Push the air compressor inflator hose onto the sealant canister inlet and push the lever down.

Changing a Flat Tire

If a tire goes flat, avoid further tire and wheel damage by driving slowly to a level place. Turn on your vehicle's hazard warning flashers. See *Hazard Warning Flashers on page 3-6* for more information.

Downloaded from www.Manualslib.com manuals search engine

⚠ CAUTION:

Changing a tire can be dangerous. The vehicle can slip off the jack and roll over or fall on you or other people. You and they could be badly injured or even killed. Find a level place to change your tire. To help prevent the vehicle from moving:

1. **Set the parking brake firmly.**
2. **Put the shift lever in PARK (P).**
3. **Turn off the engine and do not restart while the vehicle is raised.**
4. **Do not allow passengers to remain in the vehicle.**

To be even more certain the vehicle will not move, you should put blocks at the front and rear of the tire farthest away from the one being changed. That would be the tire, on the other side, at the opposite end of the vehicle.

When your vehicle has a flat tire, use the following example as a guide to assist you in the placement of wheel blocks.

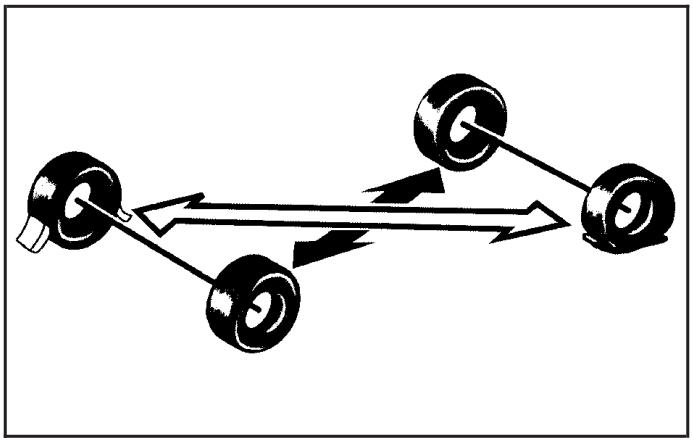

The following information tells you how to use the jack and change a tire.

Downloaded from www.Manualslib.com manuals search engine

Removing the Spare Tire and Tools

The equipment needed to change a tire is located in the trunk.

1. Open the trunk. See *Trunk on page 2-14* for more information.
2. Remove the convenience net, if equipped, by removing the net hook attachments.
3. Lift up the carpet.

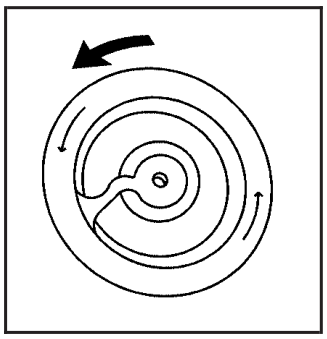

4. Turn the center nut on the compact spare tire cover counterclockwise to remove it.
5. Remove the cover.
6. Remove the compact spare tire. See *Compact Spare Tire on page 5-109* for more information.

Downloaded from www.Manualslib.com manuals search engine

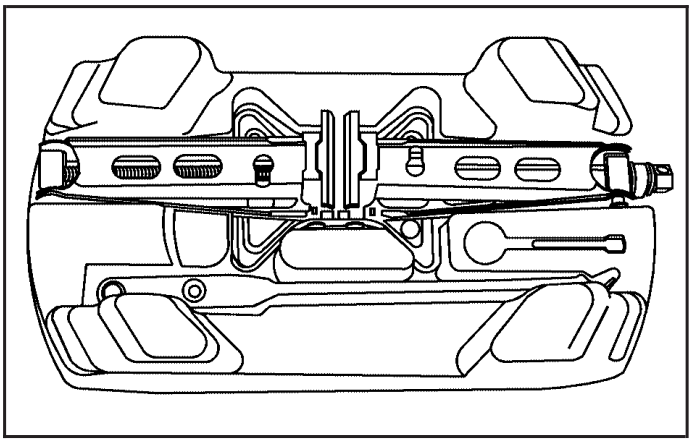

7. Turn the nut holding the jack counterclockwise and remove it. Then remove the jack and wrench.

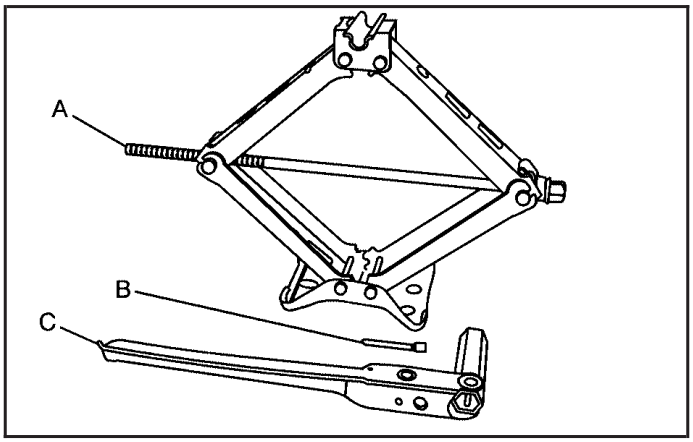

8. The tools you will be using include the jack (A), extension and protector/guide (B) and the wheel wrench (C).

Downloaded from www.Manualslib.com manuals search engine

Removing the Flat Tire and Installing the Spare Tire

Your vehicle may have aluminum wheels. If so, you will see exposed stainless steel wheel nuts. Use the wheel wrench to loosen all the wheel nuts. Do not remove them yet.

Or, your vehicle may have steel wheel covers.

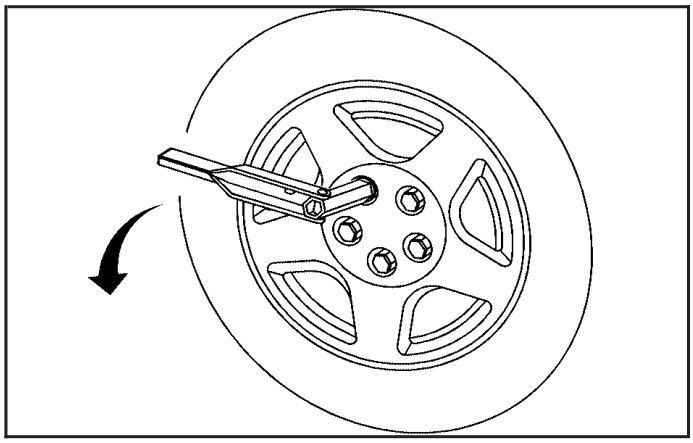

To remove the steel wheel covers and wheel nut caps, loosen the plastic nut caps with the wheel wrench in a counterclockwise direction. If needed, you can finish loosening them with your fingers. The plastic nut caps will not come off.

Use the flat end of the wheel wrench and pry along the edge of the cover until it comes off. The edge of the wheel cover could be sharp, so do not try to remove it with your bare hands. Do not drop the cover or lay it face down, as it could become scratched or damaged. Store the wheel cover in the trunk until the flat tire is repaired or replaced.

Downloaded from www.Manualslib.com manuals search engine

Once you have removed the wheel cover, use the following procedure to remove the flat tire and install the spare tire.

1. It is recommended that you do a safety check before preceding. See *Changing a Flat Tire on page 5-96* for more information.

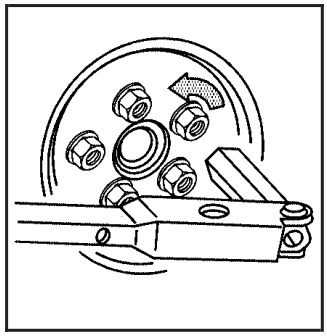

2. Set the park brake firmly.
3. Turn the wheel wrench once on each wheel nut to loosen them. Do not remove them yet.

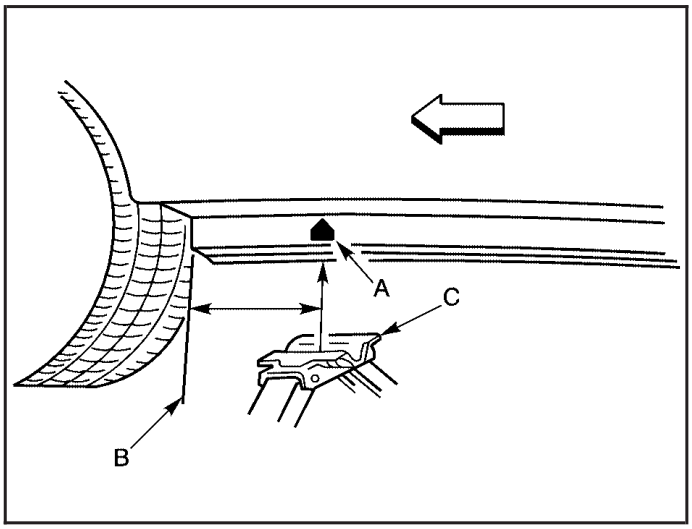

4. Find the jacking location located on the underside of the rocker trim using the diagram. For jacking at the vehicle's front location, put the jack lift head (C) about 6 inches (15 cm) from the rear edge of the front wheel opening (B). Line up the jack with the arrow (A) as shown.

Downloaded from www.Manualslib.com manuals search engine

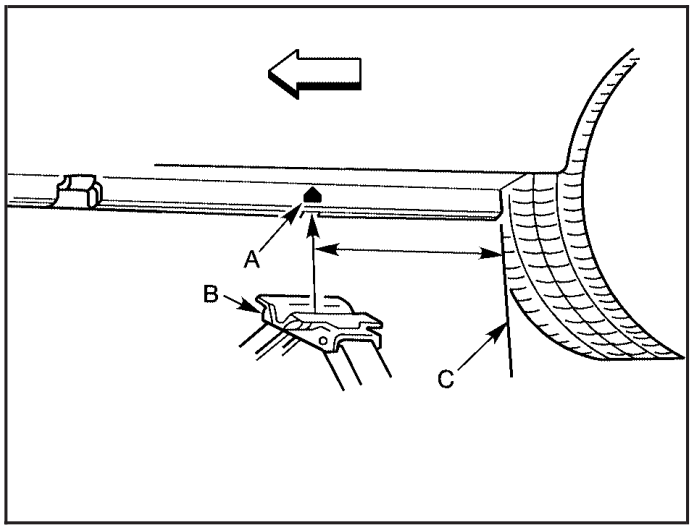

For jacking at the vehicle's rear location, put the jack lift head (B) about 9 inches (23 cm) from the front edge of the rear wheel opening (C). Line up the jack with the arrow (A) as shown.

5. Put the compact spare tire near you.

⚠ CAUTION:

Getting under a vehicle when it is jacked up is dangerous. If the vehicle slips off the jack you could be badly injured or killed. Never get under a vehicle when it is supported only by a jack.

⚠ CAUTION:

Raising your vehicle with the jack improperly positioned can damage the vehicle and even make the vehicle fall. To help avoid personal injury and vehicle damage, be sure to fit the jack lift head into the proper location before raising the vehicle.

Downloaded from www.Manualslib.com manuals search engine

⚠ CAUTION:

Lifting a vehicle and getting under it to do maintenance or repairs is dangerous without the appropriate safety equipment and training. The jack provided with your vehicle is designed only for changing a flat tire. If it is used for anything else, you or others could be badly injured or killed if the vehicle slips off the jack. Use the jack provided with your vehicle only for changing a flat tire.

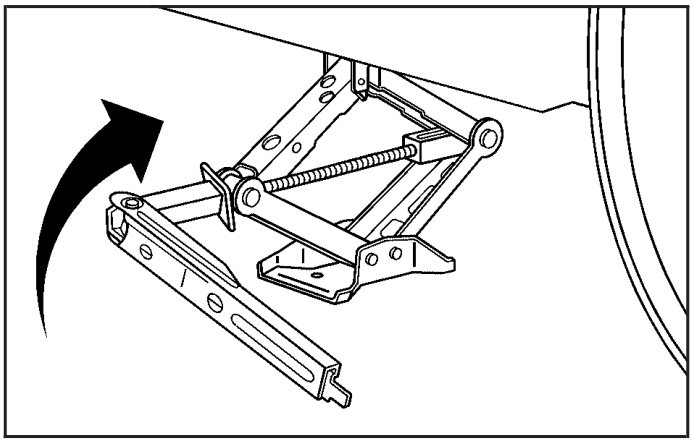

6. Raise the vehicle by turning the jack handle clockwise. Raise the vehicle far enough off the ground for the compact spare tire to attach to the vehicle.
7. Remove all wheel nuts and take off the flat tire.

Downloaded from www.Manualslib.com manuals search engine

⚠ CAUTION:

Rust or dirt on a wheel or other parts to which it is fastened, can make the wheel nuts become loose and eventually the wheel could come off and cause a crash. Always remove all rust and dirt from wheels and other parts.

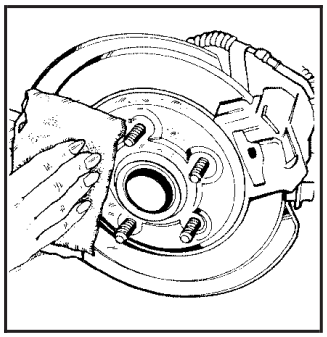

8. Remove any rust or dirt from the wheel bolts, mounting surfaces and spare wheel.

9. Install the compact spare tire.

Downloaded from www.Manualslib.com manuals search engine

⚠ CAUTION:

Never use oil or grease on studs or nuts. Because the nuts might come loose. The vehicle's wheel could fall off, causing a crash.

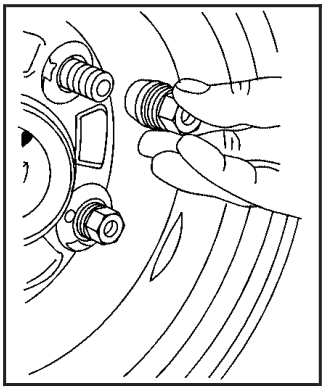

10. Reinstall the wheel nuts with the rounded end of the nuts toward the wheel. Tighten each nut by hand until the wheel is held against the hub.

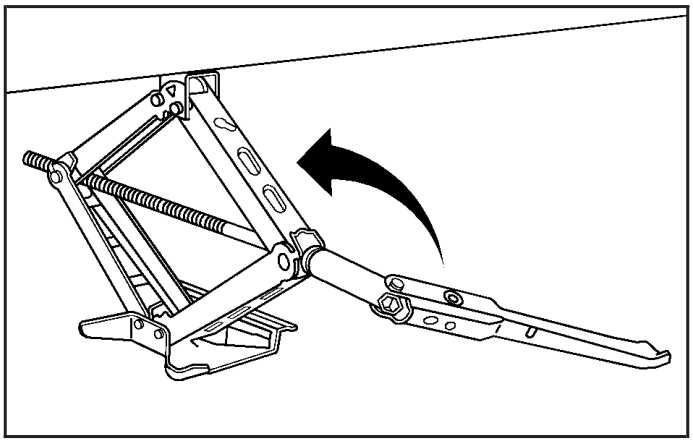

11. Lower the vehicle by turning the jack handle counterclockwise. Lower the jack completely.

Downloaded from www.Manualslib.com manuals search engine

⚠ CAUTION:

Incorrect or improperly tightened wheel nuts can cause the wheel to come loose and even come off. This could lead to a crash. If you have to replace them, be sure to get new original equipment wheel nuts. Stop somewhere as soon as you can and have the nuts tightened with a torque wrench to the proper torque specification. See *Capacities and Specifications on page 5-128* for wheel nut torque specification.

Notice: **Improperly tightened wheel nuts can lead to brake pulsation and rotor damage. To avoid expensive brake repairs, evenly tighten the wheel nuts in the proper sequence and to the proper torque specification. See *Capacities and Specifications on page 5-128* for the wheel nut torque specification.**

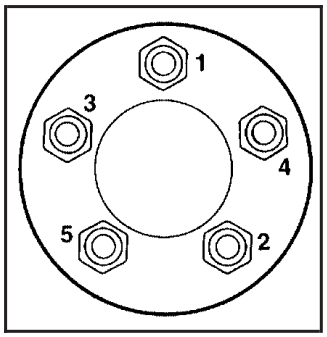

12. Tighten the wheel nuts firmly in a crisscross sequence as shown.

Notice: **Wheel covers will not fit on your vehicle's compact spare. If you try to put a wheel cover on the compact spare, the cover or the spare could be damaged.**

Downloaded from www.Manualslib.com manuals search engine

Storing a Flat or Spare Tire and Tools

⚠ CAUTION:

Storing a jack, a tire, or other equipment in the passenger compartment of the vehicle could cause injury. In a sudden stop or collision, loose equipment could strike someone. Store all these in the proper place.

After the compact spare tire is put on the vehicle, store the flat tire in the trunk. Use the following procedure to secure it in the trunk. When storing a full-size tire, use the extension and protector/guide, located in the foam holder, to help avoid wheel surface damage.

To store a full-size tire:

1. Install the tools in their original location in the trunk area and secure.
2. Place the tire in the trunk with the valve stem facing down, and the protector/guide placed through a wheel bolt hole.
3. Remove the protector and attach the retainer securely.
4. Place the protector/guide back in the foam holder when putting the compact spare back in the trunk. Store the cover as far forward as possible.

The compact spare tire is for temporary use only. Replace the compact spare tire with a full-size tire as soon as possible. See *Compact Spare Tire on page 5-109* for more information. Use the following as a guide for storing the compact spare tire and tools.

Downloaded from www.Manualslib.com manuals search engine

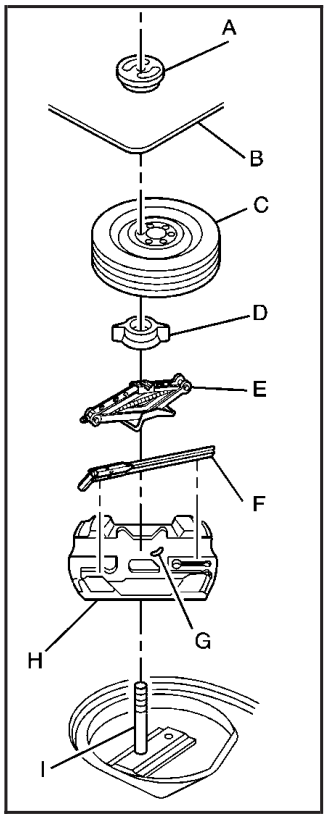

Compact Spare Tire

A. Retainer
B. Cover
C. Compact Spare Tire
D. Nut
E. Jack
F. Wheel Wrench
G. Extension and Protective Guide
H. Foam Holder
I. Bolt Screw

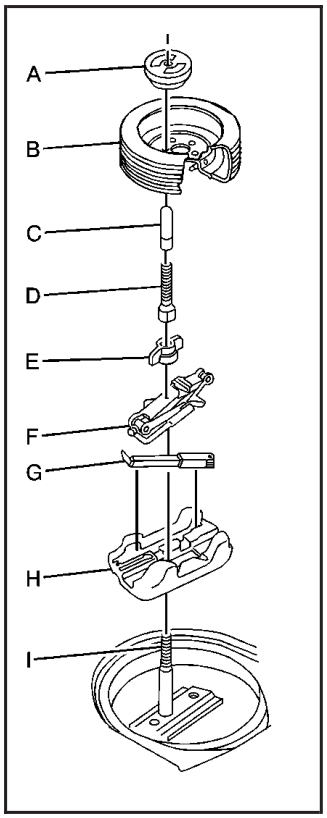

Full-Sized Spare Tire

A. Retainer
B. Spare Tire
C. Protector
D. Bolt Extension
E. Nut
F. Jack
G. Wheel Wrench
H. Foam Holder
I. Bolt Screw

Downloaded from www.Manualslib.com manuals search engine

Compact Spare Tire

Although the compact spare tire was fully inflated when the vehicle was new, it can lose air after a time. Check the inflation pressure regularly. It should be 60 psi (420 kPa).

After installing the compact spare on the vehicle, you should stop as soon as possible and make sure the spare tire is correctly inflated. The compact spare is made to perform well at speeds up to 65 mph (105 km/h) for distances up to 3,000 miles (5 000 km), so you can finish your trip and have the full-size tire repaired or replaced where you want. You must calibrate the tire inflation monitor system, if your vehicle has this feature, after installing or removing the compact spare. See *Tire Pressure Monitor System on page 5-71*. The system may not work correctly when the compact spare is installed on the vehicle. Of course, it's best to replace the spare with a full-size tire as soon as you can. The spare will last longer and be in good shape in case you need it again.

Notice: **When the compact spare is installed, do not take your vehicle through an automatic car wash with guide rails. The compact spare can get caught on the rails. That can damage the tire and wheel, and maybe other parts of your vehicle.**

Do not use the compact spare on other vehicles.

And do not mix the compact spare tire or wheel with other wheels or tires. They will not fit. Keep the spare tire and its wheel together.

Notice: **Tire chains will not fit your compact spare. Using them can damage your vehicle and can damage the chains too. Do not use tire chains on your compact spare.**

Appearance Care

Interior Cleaning

Your vehicle's interior will continue to look its best if it is cleaned often. Although not always visible, dust and dirt can accumulate on your upholstery. Dirt can damage carpet, fabric, leather, and plastic surfaces. Regular vacuuming is recommended to remove particles from your upholstery. It is important to keep your upholstery from becoming and remaining heavily soiled. Soils should be removed as quickly as possible. Your vehicle's interior may experience extremes of heat that could cause stains to set rapidly.

Lighter colored interiors may require more frequent cleaning. Use care because newspapers and garments that transfer color to your home furnishings may also transfer color to your vehicle's interior.

Downloaded from www.Manualslib.com manuals search engine

When cleaning your vehicle's interior, only use cleaners specifically designed for the surfaces being cleaned. Permanent damage may result from using cleaners on surfaces for which they were not intended. Use glass cleaner only on glass. Remove any accidental over-spray from other surfaces immediately. To prevent over-spray, apply cleaner directly to the cleaning cloth.

Notice: **If you use abrasive cleaners when cleaning glass surfaces on your vehicle, you could scratch the glass and/or cause damage to the rear window defogger. When cleaning the glass on your vehicle, use only a soft cloth and glass cleaner.**

Many cleaners contain solvents that may become concentrated in your vehicle's breathing space. Before using cleaners, read and adhere to all safety instructions on the label. While cleaning your vehicle's interior, maintain adequate ventilation by opening your vehicle's doors and windows.

Dust may be removed from small buttons and knobs using a small brush with soft bristles.

Your dealer/retailer has a product for cleaning your vehicle's glass. Should it become necessary, you can also obtain a product from your dealer/retailer to remove odors from your vehicle's upholstery.

Do not clean your vehicle using:

- A knife or any other sharp object to remove a soil from any interior surface.
- A stiff brush. It can cause damage to your vehicle's interior surfaces.
- Heavy pressure or aggressive rubbing with a cleaning cloth. Use of heavy pressure can damage your interior and does not improve the effectiveness of soil removal.
- Laundry detergents or dishwashing soaps with degreasers can leave residue that streaks and attracts dirt. For liquid cleaners, about 20 drops per gallon (3.78 L) of water is a good guide. Use only mild, neutral-pH soaps.
- Too much cleaner that saturates the upholstery.
- Organic solvents such as naptha, alcohol, etc. that can damage your vehicle's interior.

Downloaded from www.Manualslib.com manuals search engine

Fabric/Carpet

Cleaning Fabric/Carpet

Use a vacuum cleaner often to get rid of dust and loose dirt. Wipe vinyl, leather, plastic, and painted surfaces with a clean, damp cloth.

Your dealer/retailer has cleaners for the cleaning of fabric and carpet. They will clean normal spots and stains very well.

If the vehicle has the Ultra Lux® suede fabric, follow the listed procedures except do not use any solvents or dry cleaning products.

Here are some cleaning tips:

- Always read the instructions on the cleaner label.
- Clean up stains as soon as you can, before they set.
- Carefully scrape off any excess stain.
- Use a clean cloth or sponge, and change to a clean area often. A soft brush may be used if stains are stubborn.
- To avoid forming a ring on fabric after spot cleaning, clean the entire area immediately or it will set.

Most stains can be removed with club soda water. To clean, use the following instructions:

1. For liquids: blot with a clean, soft white cloth.

   For solids: remove as much as possible and then vacuum or brush.
2. Apply club soda water to a clean, soft white cloth. Do not over-saturate; the cloth should not drip water.
3. Clean the entire area. Avoid getting the fabric too wet.
4. Start cleaning from the seams into the stain to avoid a ring effect.
5. Continue cleaning, using a clean area of the cloth each time it becomes soiled.
6. When the stain is removed, blot the cleaned area with another dry clean, soft white cloth.

Downloaded from www.Manualslib.com manuals search engine

Using Cleaner on Fabric

1. First, try the cleaner in an inconspicuous area to make sure the cleaner does not affect the color of the fabric.
2. For liquids: blot the stain with a clean, soft white cloth.

   For solids: remove as much as possible and then vacuum or brush.
3. Spray a small amount of the cleaner onto a clean, soft white cloth. Do not apply spray directly to the fabric.
4. Start cleaning from the seams into the stain to avoid a ring effect.
5. Continue cleaning, using a clean area of the cloth each time it becomes soiled.
6. When the stain is removed, blot the cleaned area with another dry clean, soft white cloth.
7. If the cleaner leaves a ring effect, follow up with the club soda water instructions given earlier in this section.

Special Fabric Cleaning Problems

Stains caused by such things as catsup, coffee, tea, milk, fruit, fruit juice, jelly, cheese, chocolate, vomit, urine, and blood can be removed using the club soda water instructions given earlier in this section.

If an odor lingers after cleaning vomit or urine, treat the area with a water and baking soda solution: 1 teaspoon (5 ml) of baking soda to 1 cup (250 ml) of lukewarm water. Let dry.

Stains caused by oil and grease can be cleaned with an approved GM cleaner and a clean, white cloth.

1. Carefully scrape off excess stain.
2. Clean with cool water and allow to dry completely.
3. If a stain remains, follow the cleaner instructions described earlier.

Leather

A soft cloth dampened with water can be used to remove dust. If a more thorough cleaning is necessary, a soft cloth dampened with a mild soap solution can be used. Allow the leather to dry naturally. Do not use heat to dry. Never use steam to clean leather. Never use spot lifters or spot removers on leather. Many commercial leather cleaners and coatings that are sold to preserve and protect leather may permanently change the appearance and feel of your leather and are not recommended. Do not use silicone or wax-based products, or those containing organic solvents to clean your vehicle's interior because they can alter the appearance by increasing the gloss in a non-uniform manner. Never use shoe polish on leather.

Downloaded from www.Manualslib.com manuals search engine

Ultra Lux Suede

Cleaning Ultra Lux Suede

Use a mild solution of lukewarm water and a neutral dish soap on a soft cloth or sponge. For the following stains, follow these instructions:

Coffee, Tea, and Milk: Blot with a clean, soft, white cloth. Then clean with mild soapy water and a clean white cloth.

Cosmetics: Clean with mild soapy water and a clean white cloth.

Jelly, Syrup, and Fruit: Remove most of the solids, then clean with warm tap water and a clean white cloth.

Oil and Grease: Sprinkle baking soda on the spot, brush, then wipe with a clean white cloth.

Instrument Panel, Vinyl, and Other Plastic Surfaces

A soft cloth dampened with water may be used to remove dust. If a more thorough cleaning is necessary, a clean soft cloth dampened with a mild soap solution can be used to gently remove dust and dirt. Never use spot lifters or removers on plastic surfaces. Many commercial cleaners and coatings that are sold to preserve and protect soft plastic surfaces may permanently change the appearance and feel of your interior and are not recommended. Do not use silicone or wax-based products, or those containing organic solvents to clean your vehicle's interior because they can alter the appearance by increasing the gloss in a non-uniform manner.

Some commercial products may increase gloss on your instrument panel. The increase in gloss may cause annoying reflections in the windshield and even make it difficult to see through the windshield under certain conditions.

Downloaded from www.Manualslib.com manuals search engine

Care of Safety Belts

Keep belts clean and dry.

⚠ CAUTION:

Do not bleach or dye safety belts. If you do, it may severely weaken them. In a crash, they might not be able to provide adequate protection. Clean safety belts only with mild soap and lukewarm water.

Weatherstrips

Silicone grease on weatherstrips will make them last longer, seal better, and not stick or squeak. Apply silicone grease with a clean cloth. During very cold, damp weather frequent application may be required. See *Recommended Fluids and Lubricants on page 6-12*.

Washing Your Vehicle

The best way to preserve your vehicle's finish is to keep it clean by washing it often.

Notice: **Certain cleaners contain chemicals that can damage the emblems or nameplates on your vehicle. Check the cleaning product label. If it states that it should not be used on plastic parts, do not use it on your vehicle or damage may occur and it would not be covered by the warranty.**

Do not wash the vehicle in direct sunlight. Use a car washing soap. Do not use cleaning agents that are petroleum based or that contain acid or abrasives, as they can damage the paint, metal or plastic on your vehicle. Approved cleaning products can be obtained from your dealer/retailer. See *Vehicle Care/Appearance Materials on page 5-118*. Follow all manufacturers' directions regarding correct product usage, necessary safety precautions and appropriate disposal of any vehicle care product.

Rinse the vehicle well, before washing and after to remove all cleaning agents completely. If they are allowed to dry on the surface, they could stain.

Downloaded from www.Manualslib.com manuals search engine

Dry the finish with a soft, clean chamois or an all-cotton towel to avoid surface scratches and water spotting.

High pressure car washes may cause water to enter the vehicle. Avoid using high pressure washes closer than 12 inches (30 cm) to the surface of the vehicle. Use of power washers exceeding 1,200 psi (8 274 kPa) can result in damage or removal of paint and decals.

Cleaning Exterior Lamps/Lenses

Use only lukewarm or cold water, a soft cloth and a car washing soap to clean exterior lamps and lenses. Follow instructions under *Washing Your Vehicle on page 5-114*.

Finish Care

Occasional waxing or mild polishing of your vehicle by hand may be necessary to remove residue from the paint finish. You can get approved cleaning products from your dealer/retailer. See *Vehicle Care/Appearance Materials on page 5-118*.

If your vehicle has a basecoat/clearcoat paint finish, the clearcoat gives more depth and gloss to the colored basecoat. Always use waxes and polishes that are non-abrasive and made for a basecoat/clearcoat paint finish.

Notice: **Machine compounding or aggressive polishing on a basecoat/clearcoat paint finish may damage it. Use only non-abrasive waxes and polishes that are made for a basecoat/clearcoat paint finish on your vehicle.**

Foreign materials such as calcium chloride and other salts, ice melting agents, road oil and tar, tree sap, bird droppings, chemicals from industrial chimneys, etc., can damage your vehicle's finish if they remain on painted surfaces. Wash the vehicle as soon as possible. If necessary, use non-abrasive cleaners that are marked safe for painted surfaces to remove foreign matter.

Exterior painted surfaces are subject to aging, weather and chemical fallout that can take their toll over a period of years. You can help to keep the paint finish looking new by keeping your vehicle garaged or covered whenever possible.

Protecting Exterior Bright Metal Parts

Bright metal parts should be cleaned regularly to keep their luster. Washing with water is all that is usually needed. However, you may use chrome polish on chrome or stainless steel trim, if necessary.

Use special care with aluminum trim. To avoid damaging protective trim, never use auto or chrome polish, steam or caustic soap to clean aluminum. A coating of wax, rubbed to high polish, is recommended for all bright metal parts.

Downloaded from www.Manualslib.com manuals search engine

Windshield and Wiper Blades

Clean the outside of the windshield with glass cleaner.

Clean the rubber blades using a lint free cloth or paper towel soaked with windshield washer fluid or a mild detergent. Wash the windshield thoroughly when cleaning the blades. Bugs, road grime, sap, and a buildup of vehicle wash/wax treatments may cause wiper streaking. Replace the wiper blades if they are worn or damaged.

Wipers can be damaged by:

- Extreme dusty conditions
- Sand and salt
- Heat and sun
- Snow and ice, without proper removal

Aluminum Wheels

Notice: **If you use strong soaps, chemicals, abrasive polishes, cleaners, brushes, or cleaners that contain acid on aluminum or chrome-plated wheels, you could damage the surface of the wheel(s). The repairs would not be covered by your warranty. Use only approved cleaners on aluminum or chrome-plated wheels.**

Keep the wheels clean using a soft clean cloth with mild soap and water. Rinse with clean water. After rinsing thoroughly, dry with a soft clean towel. A wax may then be applied.

Notice: **Using chrome polish on aluminum wheels could damage the wheels. The repairs would not be covered by your warranty. Use chrome polish on chrome wheels only.**

The surface of these wheels is similar to the painted surface of the vehicle. Do not use strong soaps, chemicals, abrasive polishes, abrasive cleaners, cleaners with acid, or abrasive cleaning brushes on them because the surface could be damaged. Do not use chrome polish on aluminum wheels.

Notice: **If you drive your vehicle through an automatic car wash that has silicone carbide tire cleaning brushes, you could damage the aluminum or chrome-plated wheels. The repairs would not be covered by your warranty. Never drive a vehicle equipped with aluminum or chrome-plated wheels through an automatic car wash that uses silicone carbide tire cleaning brushes.**

Downloaded from www.Manualslib.com manuals search engine

Tires

To clean the tires, use a stiff brush with tire cleaner.

Notice: **Using petroleum-based tire dressing products on your vehicle may damage the paint finish and/or tires. When applying a tire dressing, always wipe off any overspray from all painted surfaces on your vehicle.**

Sheet Metal Damage

If the vehicle is damaged and requires sheet metal repair or replacement, make sure the body repair shop applies anti-corrosion material to parts repaired or replaced to restore corrosion protection.

Original manufacturer replacement parts will provide the corrosion protection while maintaining the warranty.

Finish Damage

Any stone chips, fractures or deep scratches in the finish should be repaired right away. Bare metal will corrode quickly and may develop into major repair expense.

Minor chips and scratches can be repaired with touch-up materials available from your dealer/retailer. Larger areas of finish damage can be corrected in your dealer's/retailer's body and paint shop.

Underbody Maintenance

Chemicals used for ice and snow removal and dust control can collect on the underbody. If these are not removed, corrosion and rust can develop on the underbody parts such as fuel lines, frame, floor pan, and exhaust system even though they have corrosion protection.

At least every spring, flush these materials from the underbody with plain water. Clean any areas where mud and debris can collect. Dirt packed in close areas of the frame should be loosened before being flushed. Your dealer/retailer or an underbody car washing system can do this for you.

Downloaded from www.Manualslib.com manuals search engine

Chemical Paint Spotting

Some weather and atmospheric conditions can create a chemical fallout. Airborne pollutants can fall upon and attack painted surfaces on the vehicle. This damage can take two forms: blotchy, ring-shaped discolorations, and small, irregular dark spots etched into the paint surface.

Although no defect in the paint job causes this, we will repair, at no charge to the owner, the surfaces of new vehicles damaged by this fallout condition within 12 months or 12,000 miles (20 000 km) of purchase, whichever occurs first.

Vehicle Care/Appearance Materials

Description	Usage
Polishing Cloth	Interior and exterior polishing cloth.
Tar and Road Oil Remover	Removes tar, road oil, and asphalt.
Chrome Cleaner and Polish	Use on chrome or stainless steel.
White Sidewall Tire Cleaner	Removes soil and black marks from whitewalls and raised white lettering.
Vinyl Cleaner	Cleans vinyl.
Glass Cleaner	Removes dirt, grime, smoke and fingerprints.
Chrome Wheel Cleaner	Removes dirt and grime from chrome wheels.
Finish Enhancer	Removes dust, fingerprints, and surface contaminants. Spray on and wipe off.

Downloaded from www.Manualslib.com manuals search engine

Description	Usage
Swirl Remover Polish	Removes swirl marks, fine scratches, and other light surface contamination.
Cleaner Wax	Removes light scratches and protects finish.
Foaming Tire Shine Low Gloss	Cleans, shines, and protects tires. No wiping necessary.
Wash Wax Concentrate	Medium foaming shampoo. Cleans and lightly waxes. Biodegradable and phosphate free.
Spot Lifter	Quickly removes spots and stains from carpets, vinyl, and cloth upholstery.
Odor Eliminator	Odorless spray odor eliminator used on fabrics, vinyl, leather and carpet.

Vehicle Identification

Vehicle Identification Number (VIN)

This is the legal identifier for your vehicle. It appears on a plate in the front corner of the instrument panel, on the driver side. You can see it if you look through the windshield from outside your vehicle. The VIN also appears on the Vehicle Certification and Service Parts labels and the certificates of title and registration.

Engine Identification

The eighth character in the VIN is the engine code. This code helps you identify your vehicle's engine, specifications, and replacement parts. See *Capacities and Specifications on page 5-128* for your vehicle's engine code.

Downloaded from www.Manualslib.com manuals search engine

Service Parts Identification Label

This label is in the trunk. It is very helpful if you ever need to order parts. The label has the following information:

- Vehicle Identification Number (VIN)
- Model designation
- Paint information
- Production options and special equipment

Do not remove this label from the vehicle.

Electrical System

Add-On Electrical Equipment

Notice: **Do not add anything electrical to your vehicle unless you check with your dealer/retailer first. Some electrical equipment can damage your vehicle and the damage would not be covered by your warranty. Some add-on electrical equipment can keep other components from working as they should.**

Add-on equipment can drain your vehicle's battery, even if your vehicle is not operating.

Your vehicle has an airbag system. Before attempting to add anything electrical to your vehicle, see *Servicing Your Airbag-Equipped Vehicle on page 1-64*.

Headlamp Wiring

The headlamp wiring is protected by fuses in the fuse block. An electrical overload will cause the lamps to turn off. If this happens, have your headlamp wiring checked right away.

Downloaded from www.Manualslib.com manuals search engine

Windshield Wiper Fuses

The windshield wiper motor is protected by a circuit breaker and a fuse. If the motor overheats due to heavy snow, etc., the wiper will stop until the motor cools. If the overload is caused by some electrical problem, have it fixed.

Power Windows and Other Power Options

Circuit breakers in the fuse block protect the power windows and other power accessories. When the current load is too heavy, the circuit breaker opens and closes, protecting the circuit until the problem is fixed or goes away.

Fuses and Circuit Breakers

The wiring circuits in your vehicle are protected from short circuits by a combination of fuses, circuit breakers and fusible thermal links. This greatly reduces the chance of fires caused by electrical problems.

Look at the silver-colored band inside the fuse. If the band is broken or melted, replace the fuse. Be sure you replace a bad fuse with a new one of the identical size and rating.

If you ever have a problem on the road and don't have a spare fuse, you can borrow one that has the same amperage. Just pick some feature of your vehicle that you can get along without – like the radio or cigarette lighter – and use its fuse, if it is the correct amperage. Replace it as soon as you can.

Downloaded from www.Manualslib.com manuals search engine

Instrument Panel Fuse Block

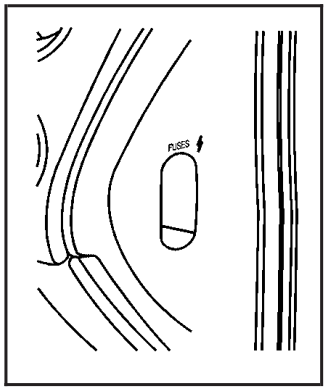

Some fuses are in a fuse block located on the end of the instrument panel on the passenger side.

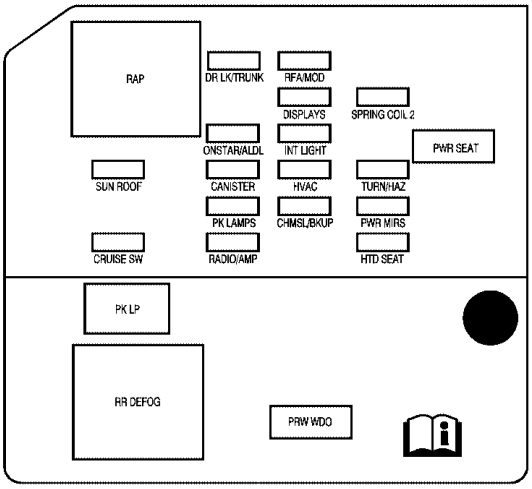

To get to the fuse block lift up on the side panel. A fuse usage chart is on the inside of this panel.

Downloaded from www.Manualslib.com manuals search engine

Fuse	Usage
RAP	Retained Accessory Power
SUN ROOF	Sunroof
CRUISE SW	Cruise Switch
PK LP	Parking Lamps
RR DEFOG	Rear Window Defogger
DR LK/TRUNK	Door Lock/Trunk
ONSTAR/ALDL	Onstar®/Diagnostic Link
CANISTER	Fuel Tank Solenoid Canister
PK LAMPS	Parking Lamps
RADIO/AMP	Radio Amplifier
RFA/MOD	Remote Function Activator (Remote Keyless Entry)
DISPLAYS	Instrument Panel Displays/Head-Up Display (HUD), Driver Information Center (DIC)

Fuse	Usage
INT LIGHT	Interior Lamps
HVAC	Climate Controls
CHMSL/BKUP	Center High Mounted Stop Lamp/Back-Up Lamps
PWR WDO	Power Windows
SPRING COIL 2	Steering Wheel Control Switches
PWR SEAT	Power Seat
TURN/HAZ	Turn Signals/Hazard Warning Lamps
PWR MIRS	Power Mirrors
HTD SEAT	Heated Seat

To reinstall the end panel, position the lower section with the edge of the instrument panel, and press the sides of the panel until it snaps into place.

Downloaded from www.Manualslib.com manuals search engine

Underhood Fuse Block

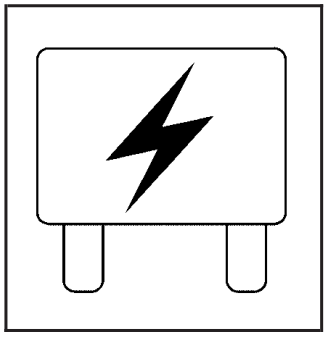

The underhood fuse block is located on the passenger's side of the vehicle in the engine compartment.

To remove the fuse block cover, press in on the tab at the bottom of the cover and pull up.

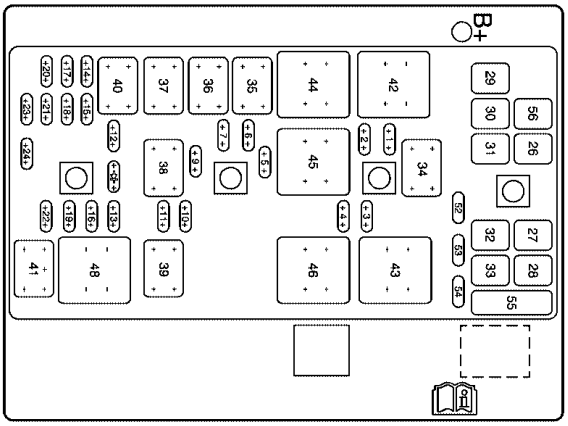

3.8L V6 Engine

Fuses	Usage
1	Driver Side High-Beam Headlamp
2	Passenger Side High-Beam Headlamp
3	Driver Side Low-Beam Headlamp
4	Passenger Side Low-Beam Headlamp
5	Windshield Wipers/Washer

Downloaded from www.Manualslib.com manuals search engine

Fuses	Usage
6	Washer/Regulated Voltage Control
7	Fog Lamps (Option)
9	Airbag
10	Accessory Power
11	Horn
12	Emission
13	Air Conditioning Clutch
14	Oxygen Sensor
15	Powertrain Control Module
16	Powertrain Control Module/Electronic Throttle Control
17	Electronic Throttle Control
18	Display
19	Antilock Brake Solenoid

Fuses	Usage
20	Fuel Injection
21	Transmission Solenoid
22	Fuel Pump
23	Antilock Brakes
24	Electronic Ignition
26	Battery Main 1
27	Battery Main 2
28	Battery Main 3
29	Fan 1
30	Battery Main 4
31	Antilock Brake Motor
32	Fan 2
33	Starter
56	Air Pump

Downloaded from www.Manualslib.com manuals search engine

Relays	Usage
34	High-Beam Headlamps
35	Low-Beam Headlamps, Headlamp Driver Module
36	Fog Lamps (Option)
37	Ignition 1
38	Air Conditioner Compressor
39	Horn
40	Powertrain
41	Fuel Pump
42	Fan 1
43	Fan 3
44	Windshield Wiper/High
45	Windshield Wiper
46	Fan 2
48	Crank
52	Blank
53	Blank
54	Blank
55	Fuse Puller
	Air Conditioning Clutch

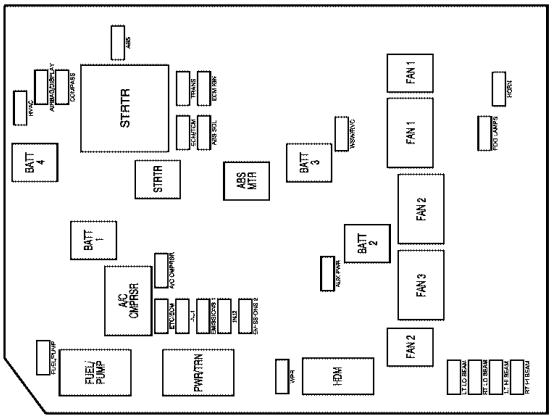

5.3L V8 Engine

Fuses	Usage
HVAC	Climate Control System
FUEL/PUMP	Fuel Pump
AIRBAG/ DISPLAY	Airbag, Display
COMPASS	Compass
ABS	Antilock Brake System
ETC/ECM	Electronic Throttle Control, Engine Control Module
A/C CMPRSR	Air Conditioning Compressor

Downloaded from www.Manualslib.com manuals search engine

Fuses	Usage
INJ 1	Injectors 1
ECM/TCM	Engine Control Module, Transmission Control Module
TRANS	Transmission
EMISSIONS1	Emissions 1
ABS SOL	Antilock Brake Solenoid
ECM IGN	Engine Control Module, Ignition
INJ 2	Injectors 2
EMISSIONS2	Emissions 2
WPR	Windshield Wipers
AUX PWR	Auxiliary Power
WSW/RVC	Windshield Washer, Regulated Voltage Control
LT LO BEAM	Driver Side Low-Beam Headlamp
RT LO BEAM	Passenger Side Low-Beam Headlamp
FOG LAMPS	Fog Lamps
LT HI BEAM	Driver Side High-Beam Headlamp
HORN	Horn
RT HI BEAM	Passenger Side High-Beam Headlamp

Fuses	Usage
BATT 4	Battery 4
BATT 1	Battery 1
STRTR	Starter
ABS MTR	Antilock Brake System Motor
BATT 3	Battery 3
BATT 2	Battery 2
FAN 2	Cooling Fan 2
FAN 1	Cooling Fan 1

Relays	Usage
FUEL/PUMP	Fuel Pump
A/C CMPRSR	Air Conditioning Compressor
STRTR	Starter
PWR/TRN	Powertrain
FAN 3	Cooling Fan 3
FAN 2	Cooling Fan 2
FAN 1	Cooling Fan 1
HDM	Headlamp Driver Module

Downloaded from www.Manualslib.com manuals search engine

Capacities and Specifications

The following approximate capacities are given in English and metric conversions. See *Recommended Fluids and Lubricants on page 6-12* for more information.

Application	Capacities	
	English	Metric
Air Conditioning Refrigerant R134a	For the air conditioning system refrigerant charge amount, see the refrigerant caution label located under the hood. See your dealer/retailer for more information.	
Automatic Transmission (Drain and Refill)	7.4 qt	7.0 L
Cooling System Including Reservoir		
3.8LV6 Engine	11.2 qt	10.6 L
5.3L V8 Engine	13.3 qt	12.6 L
Engine Oil with Filter		
3.8L V6 Engine	4.5 qt	4.3 L
5.3L V8 Engine	6 qt	5.7 L

Downloaded from www.Manualslib.com manuals search engine

Application	Capacities	
	English	Metric
Fuel Tank		
3.8L Engine (with NU6 emissions) sold new in CA, ME, VT, NY, MA (see your dealer/retailer for bordering states)	17.0 gal	64.4 L
3.8L Engine (without NU6 emissions) sold new in all other states (see your dealer/retailer for more information)	17.5 gal	66.2 L
5.3L V8 Engine sold new in all states	17.5 gal	66.2 L
Wheel Nut Torque	100 ft lb	140 N•m
All capacities are approximate. When adding fluid, be sure to fill to the appropriate level, as recommended in this manual. Recheck fluid level after filling.		

Engine Specifications

Engine	VIN Code	Transmission	Spark Plug Gap
3.8 V6 Engine	2	Automatic	.060 inches (1.52 mm)
5.3 V8 Engine with Active Fuel Management™	C	Automatic	.040 inches (1.01 mm)

Downloaded from www.Manualslib.com manuals search engine

NOTES

Downloaded from www.Manualslib.com manuals search engine

Section 6 Maintenance Schedule

Maintenance Schedule 6-2
Introduction 6-2
Maintenance Requirements 6-2
Your Vehicle and the Environment 6-2
Using the Maintenance Schedule 6-3
Scheduled Maintenance 6-4
Additional Required Services 6-6
Maintenance Footnotes 6-7
Owner Checks and Services 6-8
At Each Fuel Fill 6-8
At Least Once a Month 6-9
At Least Once a Year 6-9
Recommended Fluids and Lubricants 6-12
Maintenance Replacement Parts 6-13
Engine Drive Belt Routing 6-14
Maintenance Record 6-15

Downloaded from www.Manualslib.com manuals search engine

Maintenance Schedule

Introduction

Important: Keep engine oil at the proper level and change as recommended.

Have you purchased the GM Protection Plan? The Plan supplements your new vehicle warranties. See your Warranty and Owner Assistance booklet or your dealer/retailer for details.

Maintenance Requirements

Notice: **Maintenance intervals, checks, inspections, replacement parts, and recommended fluids and lubricants as prescribed in this manual are necessary to keep your vehicle in good working condition. Any damage caused by failure to follow scheduled maintenance might not be covered by warranty.**

Your Vehicle and the Environment

Proper vehicle maintenance not only helps to keep your vehicle in good working condition, but also helps the environment. All recommended maintenance is important. Improper vehicle maintenance can even affect the quality of the air we breathe. Improper fluid levels or the wrong tire inflation can increase the level of emissions from your vehicle. To help protect our environment, and to keep your vehicle in good condition, be sure to maintain your vehicle properly.

Downloaded from www.Manualslib.com manuals search engine

Using the Maintenance Schedule

We want to help you keep your vehicle in good working condition. But we do not know exactly how you will drive it. You might drive very short distances only a few times a week. Or you might drive long distances all the time in very hot, dusty weather. You might use your vehicle in making deliveries. Or you might drive it to work, to do errands, or in many other ways.

Because of all the different ways people use their vehicles, maintenance needs vary. You might need more frequent checks and replacements. So please read the following and note how you drive. If you have any questions on how to keep your vehicle in good condition, see your dealer/retailer.

This schedule is for vehicles that:

- carry passengers and cargo within recommended limits. You will find these limits on the Tire and Loading Information label. See *Loading Your Vehicle on page 4-22*.
- are driven on reasonable road surfaces within legal driving limits.
- use the recommended fuel. See *Gasoline Octane on page 5-5*.

The services in *Scheduled Maintenance on page 6-4* should be performed when indicated. See *Additional Required Services on page 6-6* and *Maintenance Footnotes on page 6-7* for further information.

⚠ CAUTION:

Performing maintenance work on a vehicle can be dangerous. In trying to do some jobs, you can be seriously injured. Do your own maintenance work only if you have the required know-how and the proper tools and equipment for the job. If you have any doubt, see your dealer/retailer to have a qualified technician do the work. See *Doing Your Own Service Work on page 5-4*.

Some maintenance services can be complex. So, unless you are technically qualified and have the necessary equipment, you should have your dealer/retailer do these jobs.

When you go to your dealer/retailer for your service needs, you will know that trained and supported service technicians will perform the work using genuine parts.

If you want to purchase service information, see *Service Publications Ordering Information on page 7-15*.

Downloaded from www.Manualslib.com manuals search engine

Owner Checks and Services on page 6-8 tells you what should be checked, when to check it, and what you can easily do to help keep your vehicle in good condition.

The proper replacement parts, fluids, and lubricants to use are listed in *Recommended Fluids and Lubricants on page 6-12* and *Maintenance Replacement Parts on page 6-13*. When your vehicle is serviced, make sure these are used. All parts should be replaced and all necessary repairs done before you or anyone else drives the vehicle. We recommend the use of genuine parts from your dealer/retailer.

Scheduled Maintenance

When the CHANGE OIL SOON message comes on, it means that service is required for your vehicle. See *DIC Warnings and Messages on page 3-67*. Have your vehicle serviced as soon as possible within the next 600 miles (1 000 km). It is possible that, if you are driving under the best conditions, the engine oil life system may not indicate that vehicle service is necessary for over a year. However, your engine oil and filter must be changed at least once a year and at this time the system must be reset. Your dealer/retailer has trained service technicians who will perform this work using genuine parts and reset the system.

If the engine oil life system is ever reset accidentally, you must service your vehicle within 3,000 miles (5 000 km) since your last service. Remember to reset the oil life system whenever the oil is changed. See *Engine Oil Life System on page 5-18* for information on the Engine Oil Life System and resetting the system.

When the CHANGE OIL SOON message appears, certain services, checks, and inspections are required. Required services are described in the following for “Maintenance I” and “Maintenance II.” Generally, it is recommended that your first service be Maintenance I, your second service be Maintenance II, and that you alternate Maintenance I and Maintenance II thereafter. However, in some cases, Maintenance II may be required more often.

Maintenance I — Use Maintenance I if the CHANGE OIL SOON message comes on within 10 months since the vehicle was purchased or Maintenance II was performed.

Maintenance II — Use Maintenance II if the previous service performed was Maintenance I. Always use Maintenance II whenever the message comes on 10 months or more since the last service or if the message has not come on at all for one year.

Downloaded from www.Manualslib.com manuals search engine

Scheduled Maintenance

Service	Maintenance I	Maintenance II
Change engine oil and filter. See *Engine Oil on page 5-15*. Reset oil life system. See *Engine Oil Life System on page 5-18*. *An Emission Control Service.*	•	•
Visually check for any leaks or damage. *See footnote (k).*	•	•
Inspect engine air cleaner filter. If necessary, replace filter. See *Engine Air Cleaner/Filter on page 5-20*. *See footnote (m).*		•
Rotate tires and check inflation pressures and wear. See *Tire Inspection and Rotation on page 5-75* and "Tire Wear Inspection" in *At Least Once a Month on page 6-9*.	•	•
Inspect brake system. *See footnote (a).*	•	•
Check engine coolant and windshield washer fluid levels and add fluid as needed.	•	•
Perform any needed additional services. See "Additional Required Services" in this section.	•	•
Inspect suspension and steering components. *See footnote (b).*		•
Inspect engine cooling system. *See footnote (c).*		•
Inspect wiper blades. *See footnote (d).*		•
Inspect restraint system components. *See footnote (e).*		•
Lubricate body components. *See footnote (f).*		•
Check transmission fluid level and add fluid as needed.		•
Replace passenger compartment air filter. *See footnote (g).*		•
V6 Only: Inspect throttle system. *See footnote (j).*		•

Downloaded from www.Manualslib.com manuals search engine

Additional Required Services

The following services should be performed at the first maintenance service (I or II) after the indicated miles (kilometers) shown for each item.

Additional Required Services

Service and Miles (Kilometers)	25,000 (40 000)	50,000 (80 000)	75,000 (120 000)	100,000 (160 000)	125,000 (200 000)	150,000 (240 000)
Inspect fuel system for damage or leaks.	•	•	•	•	•	•
Inspect exhaust system for loose or damaged components.	•	•	•	•	•	•
Replace engine air cleaner filter. See *Engine Air Cleaner/Filter on page 5-20*.		•		•		•
Change automatic transmission fluid and filter (severe service). *See footnote (h).*		•		•		•
Change automatic transmission fluid and filter (normal service).				•		
Replace spark plugs and inspect spark plug wires. *An Emission Control Service.*				•		
Engine cooling system service (or every five years, whichever occurs first). *An Emission Control Service. See footnote (i).*						•
Inspect engine accessory drive belt. *An Emission Control Service. See footnote (n).*						•

Downloaded from www.Manualslib.com manuals search engine

Maintenance Footnotes

† *The U.S. Environmental Protection Agency or the California Air Resources Board has determined that the failure to perform this maintenance item will not nullify the emission warranty or limit recall liability prior to the completion of the vehicle's useful life. We, however, urge that all recommended maintenance services be performed at the indicated intervals and the maintenance be recorded.*

(a) *Visually inspect brake lines and hoses for proper hook-up, binding, leaks, cracks, chafing, etc. Inspect disc brake pads for wear and rotors for surface condition. Inspect other brake parts, including calipers, parking brake, etc.*

(b) *Visually inspect front and rear suspension and steering system for damaged, loose, or missing parts or signs of wear. Inspect power steering lines and hoses for proper hook-up, binding, leaks, cracks, chafing, etc.*

(c) *Visually inspect hoses and have them replaced if they are cracked, swollen, or deteriorated. Inspect all pipes, fittings, and clamps; replace with genuine parts as needed. To help ensure proper operation, a pressure test of the cooling system and pressure cap and cleaning the outside of the radiator and air conditioning condenser is recommended at least once a year.*

(d) *Inspect wiper blades for wear, cracking, or contamination. Clean the windshield and wiper blades, if contaminated. Replace wiper blades that are worn or damaged. See Windshield Wiper Blade Replacement on page 5-61* and *Windshield and Wiper Blades on page 5-116* for more information.

(e) *Make sure the safety belt reminder light and safety belt assemblies are working properly. Look for any other loose or damaged safety belt system parts. If you see anything that might keep a safety belt system from doing its job, have it repaired. Have any torn or frayed safety belts replaced. Also see Checking the Restraint Systems on page 1-66*.

(f) *Lubricate all key lock cylinders. Lubricate all hinges and latches, including those for the body doors, hood, secondary latch, pivots, spring anchor, release pawl, rear compartment, glove box door, console door, and any folding seat hardware. More frequent lubrication may be required when exposed to a corrosive environment. Applying silicone grease on weatherstrips with a clean cloth will make them last longer, seal better, and not stick or squeak.*

(g) *If you drive regularly under dusty conditions, the filter may require replacement more often.*

Downloaded from www.Manualslib.com manuals search engine

(h) *Change automatic transmission fluid and filter if the vehicle is mainly driven under one or more of these conditions:*

- *In heavy city traffic where the outside temperature regularly reaches 90°F (32°C) or higher.*
- *In hilly or mountainous terrain.*
- *When doing frequent trailer towing.*
- *Uses such as found in taxi, police, or delivery service.*

(i) *Drain, flush, and refill cooling system. This service can be complex; you should have your dealer/retailer perform this service. See Engine Coolant on page 5-24 for what to use. Inspect hoses. Clean radiator, condenser, pressure cap, and filler neck. Pressure test the cooling system and pressure cap.*

(j) *Check throttle system for interference or binding and for damaged or missing parts. Replace parts as needed. Replace any components that have high effort or excessive wear. Do not lubricate accelerator or cruise control cables.*

(k) *A fluid loss in any vehicle system could indicate a problem. Have the system inspected and repaired and the fluid level checked. Add fluid if needed.*

(m) *If you drive regularly under dusty conditions, inspect the filter at each engine oil change.*

(n) *Visually inspect belt for fraying, excessive cracks, or obvious damage. Replace belt if necessary.*

Owner Checks and Services

These owner checks and services should be performed at the intervals specified to help ensure the safety, dependability, and emission control performance of your vehicle. Your dealer/retailer can assist you with these checks and services.

Be sure any necessary repairs are completed at once. Whenever any fluids or lubricants are added to your vehicle, make sure they are the proper ones, as shown in *Recommended Fluids and Lubricants on page 6-12*.

At Each Fuel Fill

It is important to perform these underhood checks at each fuel fill.

Engine Oil Level Check

Notice: **It is important to check the engine oil regularly and keep it at the proper level. Failure to keep the engine oil at the proper level can cause damage to the engine not covered by your warranty.**

Check the engine oil level and add the proper oil if necessary. See *Engine Oil on page 5-15*.

Downloaded from www.Manualslib.com manuals search engine

Engine Coolant Level Check

Check the engine coolant level and add DEX-COOL® coolant mixture if necessary. See *Engine Coolant on page 5-24*.

Windshield Washer Fluid Level Check

Check the windshield washer fluid level in the windshield washer fluid reservoir and add the proper fluid if necessary.

At Least Once a Month

Tire Inflation Check

Inspect your vehicle's tires and make sure they are inflated to the correct pressures. Do not forget to check the spare tire. See *Inflation - Tire Pressure on page 5-69*. Check to make sure the spare tire is stored securely. See *Changing a Flat Tire on page 5-96*.

Tire Wear Inspection

Tire rotation may be required for high mileage highway drivers prior to the Engine Oil Life System service notification. Check the tires for wear and, if necessary, rotate the tires. See *Tire Inspection and Rotation on page 5-75*.

At Least Once a Year

Starter Switch Check

⚠ CAUTION:

When you are doing this inspection, the vehicle could move suddenly. If the vehicle moves, you or others could be injured.

1. Before you start, be sure you have enough room around the vehicle.
2. Firmly apply both the parking brake and the regular brake. See *Parking Brake on page 2-33*.

   Do not use the accelerator pedal, and be ready to turn off the engine immediately if it starts.
3. Try to start the engine in each gear. The vehicle should start only in PARK (P) or NEUTRAL (N). If the vehicle starts in any other position, contact your dealer/retailer for service.

Downloaded from www.Manualslib.com manuals search engine

Automatic Transmission Shift Lock Control System Check

⚠ CAUTION:

When you are doing this inspection, the vehicle could move suddenly. If the vehicle moves, you or others could be injured.

1. Before you start, be sure you have enough room around the vehicle. It should be parked on a level surface.
2. Firmly apply the parking brake. See *Parking Brake on page 2-33*.

   Be ready to apply the regular brake immediately if the vehicle begins to move.
3. With the engine off, turn the ignition to ON/RUN, but do not start the engine. Without applying the regular brake, try to move the shift lever out of PARK (P) with normal effort. If the shift lever moves out of PARK (P), contact your dealer/retailer for service.

Ignition Transmission Lock Check

While parked, and with the parking brake set, try to turn the ignition to LOCK/OFF in each shift lever position.

- The ignition should turn to LOCK/OFF only when the shift lever is in PARK (P).
- The ignition key should come out only in LOCK/OFF.

Contact your dealer/retailer if service is required.

Downloaded from www.Manualslib.com manuals search engine

Parking Brake and Automatic Transmission Park (P) Mechanism Check

⚠ CAUTION:

When you are doing this check, your vehicle could begin to move. You or others could be injured and property could be damaged. Make sure there is room in front of your vehicle in case it begins to roll. Be ready to apply the regular brake at once should the vehicle begin to move.

Park on a fairly steep hill, with the vehicle facing downhill. Keeping your foot on the regular brake, set the parking brake.

- To check the parking brake's holding ability: With the engine running and the transmission in NEUTRAL (N), slowly remove foot pressure from the regular brake pedal. Do this until the vehicle is held by the parking brake only.
- To check the PARK (P) mechanism's holding ability: With the engine running, shift to PARK (P). Then release the parking brake followed by the regular brake.

Contact your dealer/retailer if service is required.

Underbody Flushing Service

At least every spring, use plain water to flush any corrosive materials from the underbody. Take care to clean thoroughly any areas where mud and other debris can collect.

Downloaded from www.Manualslib.com manuals search engine

Recommended Fluids and Lubricants

Fluids and lubricants identified below by name, part number, or specification can be obtained from your dealer/retailer.

Usage	Fluid/Lubricant
Engine Oil	Engine oil which meets GM Standard GM6094M and displays the American Petroleum Institute Certified for Gasoline Engines starburst symbol. To determine the proper viscosity for your vehicle's engine, see *Engine Oil on page 5-15*.
Engine Coolant	50/50 mixture of clean, drinkable water and use only DEX-COOL® Coolant. See *Engine Coolant on page 5-24*.
Hydraulic Brake System	Delco® Supreme 11 Brake Fluid or equivalent DOT-3 brake fluid.
Windshield Washer	Optikleen® Washer Solvent.

Usage	Fluid/Lubricant
Power Steering System	GM Power Steering Fluid (GM Part No. U.S. 89021184, in Canada 89021186).
Automatic Transmission	DEXRON®-VI Automatic Transmission Fluid.
Key Lock Cylinders	Multi-Purpose Lubricant, Superlube (GM Part No. U.S. 12346241, in Canada 10953474).
Hood Latch Assembly, Secondary Latch, Pivots, Spring Anchor, and Release Pawl	Lubriplate Lubricant Aerosol (GM Part No. U.S. 12346293, in Canada 992723) or lubricant meeting requirements of NLGI #2, Category LB or GC-LB.
Hood and Door Hinges	Multi-Purpose Lubricant, Superlube (GM Part No. U.S. 12346241, in Canada 10953474).
Weatherstrip Conditioning	Weatherstrip Lubricant (GM Part No. U.S. 3634770, in Canada 10953518) or Dielectric Silicone Grease (GM Part No. U.S. 12345579, in Canada 992887).

Downloaded from www.Manualslib.com manuals search engine

Maintenance Replacement Parts

Replacement parts identified below by name, part number, or specification can be obtained from your dealer/retailer.

Part	GM Part Number	ACDelco Part Number
Engine Air Cleaner/Filter		
3800 V6 Engine	15221217	A1614C
5.3L V8 Engine	10350737	A2962C
Engine Oil Filter		
3800 V6 Engine	25010792	PF47
5.3L V8 Engine	89017524	PF48
Passenger Compartment Air Filter	15284938	CF132
Spark Plugs		
3800 V6 Engine	12568387	41-101
5.3L V8 Engine	12571164	41-985
Windshield Wiper Blade Assembly 22.0 in (55.0 cm)		
Driver Side	15941733	—
Passenger Side	15941734	—

Downloaded from www.Manualslib.com manuals search engine

Engine Drive Belt Routing

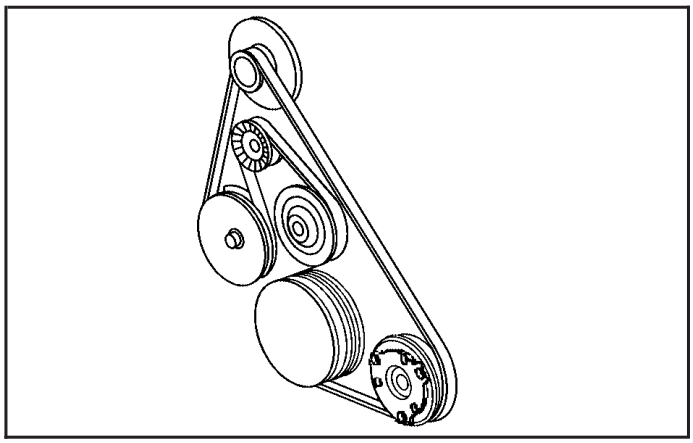

3.8L V6 Engine

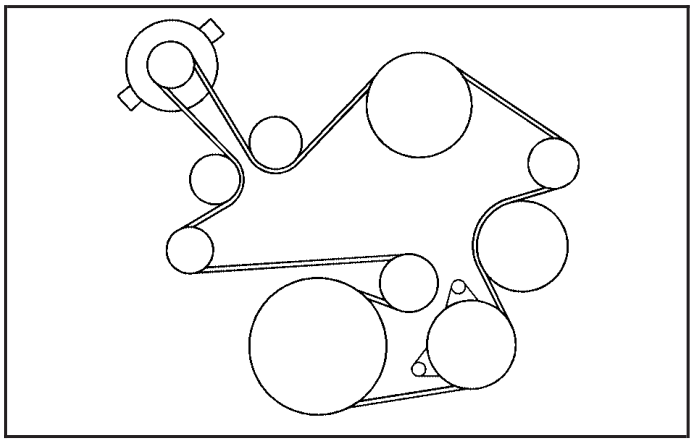

5.3L V8 Engine

Downloaded from www.Manualslib.com manuals search engine

Maintenance Record

After the scheduled services are performed, record the date, odometer reading, who performed the service, and the type of services performed in the boxes provided. See *Maintenance Requirements on page 6-2*. Any additional information from *Owner Checks and Services on page 6-8* can be added on the following record pages. You should retain all maintenance receipts.

Maintenance Record

Date	Odometer Reading	Serviced By	Maintenance I or Maintenance II	Services Performed

Downloaded from www.Manualslib.com manuals search engine

Maintenance Record (cont'd)

Date	Odometer Reading	Serviced By	Maintenance I or Maintenance II	Services Performed

Downloaded from www.Manualslib.com manuals search engine

Maintenance Record (cont'd)

Date	Odometer Reading	Serviced By	Maintenance I or Maintenance II	Services Performed

Downloaded from www.Manualslib.com manuals search engine

Maintenance Record (cont'd)

Date	Odometer Reading	Serviced By	Maintenance I or Maintenance II	Services Performed

Downloaded from www.Manualslib.com manuals search engine

Section 7 Customer Assistance Information

Customer Assistance and Information 7-2
Customer Satisfaction Procedure 7-2
Online Owner Center 7-4
Customer Assistance for Text Telephone (TTY) Users 7-5
Customer Assistance Offices 7-5
GM Mobility Reimbursement Program 7-6
Roadside Assistance Program 7-6
Scheduling Service Appointments 7-9
Courtesy Transportation 7-9
Collision Damage Repair 7-11
Reporting Safety Defects 7-14
Reporting Safety Defects to the United States Government 7-14
Reporting Safety Defects to the Canadian Government 7-14
Reporting Safety Defects to General Motors 7-14
Service Publications Ordering Information 7-15
Vehicle Data Recording and Privacy 7-16
Event Data Recorders 7-16
OnStar® 7-17
Navigation System 7-17
Radio Frequency Identification (RFID) 7-17

Downloaded from www.Manualslib.com manuals search engine

Customer Assistance and Information

Customer Satisfaction Procedure

Your satisfaction and goodwill are important to your dealer and to Pontiac. Normally, any concerns with the sales transaction or the operation of your vehicle will be resolved by your dealer's sales or service departments. Sometimes, however, despite the best intentions of all concerned, misunderstandings can occur. If your concern has not been resolved to your satisfaction, the following steps should be taken:

STEP ONE: Discuss your concern with a member of dealership management. Normally, concerns can be quickly resolved at that level. If the matter has already been reviewed with the sales, service, or parts manager, contact the owner of the dealership or the general manager.

STEP TWO: If after contacting a member of dealership management, it appears your concern cannot be resolved by the dealership without further help, in the U.S., contact the Pontiac Customer Assistance Center by calling 1-800-762-2737. In Canada, contact General Motors of Canada Customer Communication Centre in Oshawa by calling 1-800-263-3777 (English) or 1-800-263-7854 (French).

We encourage you to call the toll-free number in order to give your inquiry prompt attention. Please have the following information available to give the Customer Assistance Representative:

- Vehicle Identification Number (VIN). This is available from the vehicle registration or title, or the plate at the top left of the instrument panel and visible through the windshield.
- Dealership name and location.
- Vehicle delivery date and present mileage.

When contacting Pontiac, please remember that your concern will likely be resolved at a dealer's facility. That is why we suggest you follow Step One first if you have a concern.

STEP THREE — U.S. Owners: Both General Motors and your dealer are committed to making sure you are completely satisfied with your new vehicle. However, if you continue to remain unsatisfied after following the procedure outlined in Steps One and Two, you should file with the BBB Auto Line Program to enforce your rights.

The BBB Auto Line Program is an out of court program administered by the Council of Better Business Bureaus to settle automotive disputes regarding vehicle repairs or the interpretation of the New Vehicle Limited Warranty.

Downloaded from www.Manualslib.com manuals search engine

Although you may be required to resort to this informal dispute resolution program prior to filing a court action, use of the program is free of charge and your case will generally be heard within 40 days. If you do not agree with the decision given in your case, you may reject it and proceed with any other venue for relief available to you.

You can contact the BBB Auto Line Program using the toll-free telephone number or write them at the following address:

BBB Auto Line Program
Council of Better Business Bureaus, Inc.
4200 Wilson Boulevard
Suite 800
Arlington, VA 22203-1838

Telephone: 1-800-955-5100

This program is available in all 50 states and the District of Columbia. Eligibility is limited by vehicle age, mileage and other factors. General Motors reserves the right to change eligibility limitations and/or discontinue its participation in this program.

STEP THREE — Canadian Owners: In the event that you do not feel your concerns have been addressed after following the procedure outlined in Steps One and Two, General Motors of Canada Limited wants you to be aware of its participation in a no-charge Mediation/Arbitration Program. General Motors of Canada Limited has committed to binding arbitration of owner disputes involving factory-related vehicle service claims. The program provides for the review of the facts involved by an impartial third party arbiter, and may include an informal hearing before the arbiter. The program is designed so that the entire dispute settlement process, from the time you file your complaint to the final decision, should be completed in approximately 70 days. We believe our impartial program offers advantages over courts in most jurisdictions because it is informal, quick, and free of charge.

For further information concerning eligibility in the Canadian Motor Vehicle Arbitration Plan (CAMVAP), call toll-free 1-800-207-0685. Alternatively, you can call the General Motors Customer Communication Centre, 1-800-263-3777 (English), 1-800-263-7854 (French), or write to:

Mediation/Arbitration Program
c/o Customer Communication Centre
General Motors of Canada Limited
Mail Code: CA1-163-005
1908 Colonel Sam Drive
Oshawa, Ontario L1H 8P7

Your inquiry should be accompanied by your Vehicle Identification Number (VIN).

Downloaded from www.Manualslib.com manuals search engine

Online Owner Center

(United States only)

The Owner Center is a resource for your GM ownership needs. Specific vehicle information can be found in one place.

The Online Owner Center allows you to:

- Get e-mail service reminders.
- Access information about your specific vehicle, including tips and videos and an electronic version of this owner manual.
- Keep track of your vehicle's service history and maintenance schedule.
- Find GM dealers/retailers for service nationwide.
- Receive special promotions and privileges only available to members.

Refer to www.MyGMLink.com on the web for updated information and to register your vehicle.

My GM Canada (Canada only)

My GM Canada is a password-protected section of gmcanada.com where you can save information on GM vehicles, get personalized offers, and use handy tools and forms with greater ease.

Here are a few of the valuable tools and services you will have access to:

- My Showroom: Find and save information on vehicles and current offers in your area.
- My Dealers/Retailers: Save details such as address and phone number for each of your preferred GM Dealers or Retailers.
- My Driveway: Receive service reminders and helpful advice on owning and maintaining your vehicle.
- My Preferences: Manage your profile, subscribe to E-News and use tools and forms with greater ease.

To sign up to My GM Canada, visit the My GM Canada section within www.gmcanada.com.

Downloaded from www.Manualslib.com manuals search engine

Customer Assistance for Text Telephone (TTY) Users

To assist customers who are deaf, hard of hearing, or speech-impaired and who use Text Telephones (TTYs), Pontiac has TTY equipment available at its Customer Assistance Center. Any TTY user in the U.S. can communicate with Pontiac by dialing: 1-800-833-PONT (7668). (TTY users in Canada can dial 1-800-263-3830.)

Customer Assistance Offices

Pontiac encourages customers to call the toll-free number for assistance. However, if a customer wishes to write or e-mail Pontiac, the letter should be addressed to:

United States — Customer Assistance

Pontiac Customer Assistance Center
P.O. Box 33172
Detroit, MI 48232-5172

www.Pontiac.com
1-800-762-2737 or
1-800-833-7668 (For Text Telephone devices (TTYs))
Roadside Assistance: 1-800-ROADSIDE (762-3743)
Fax Number: 313-381-0022

From Puerto Rico:
1-800-496-9992 (English)
1-800-496-9993 (Spanish)
Fax Number: 313-381-0022

From U.S. Virgin Islands:
1-800-496-9994
Fax Number: 313-381-0022

Canada — Customer Assistance

General Motors of Canada Limited
Customer Communication Centre, CA1-163-005
1908 Colonel Sam Drive
Oshawa, Ontario L1H 8P7

www.gmcanada.com
1-800-263-3777 (English)
1-800-263-7854 (French)
1-800-263-3830 (For Text Telephone devices (TTYs))
Roadside Assistance: 1-800-268-6800

Overseas — Customer Assistance

Please contact the local General Motors Business Unit.

Mexico, Central America and Caribbean Islands/Countries (Except Puerto Rico and U.S. Virgin Islands) — Customer Assistance

General Motors de Mexico, S. de R.L. de C.V.
Customer Assistance Center
Paseo de la Reforma #2740
Col. Lomas de Bezares
C.P. 11910, Mexico, D.F.
01-800-508-0000
Long Distance: 011-52-53 29 0 800

Downloaded from www.Manualslib.com manuals search engine

GM Mobility Reimbursement Program

GM MOBILITY℠

This program, available to qualified applicants, can reimburse you up to $1,000 of the cost of eligible aftermarket adaptive equipment required for your vehicle, such as hand controls or a wheelchair/scooter lift.

The offer is available for a very limited period of time from the date of vehicle purchase/lease. For more details, or to determine your vehicle's eligibility, visit gmmobility.com or call the GM Mobility Assistance Center at 1-800-323-9935. Text telephone (TTY) users, call 1-800-833-9935.

General Motors of Canada also has a Mobility Program. Call 1-800-GM-DRIVE (463-7483) for details. TTY users call 1-800-263-3830.

Roadside Assistance Program

For vehicles purchased in the U.S., call **1-800-ROADSIDE (762-3743); (Text telephone (TTY): 1-888-889-2438)**.

For vehicles purchased in Canada, call **1-800-268-6800**.

Service is available 24 hours a day, 365 days a year.

As the owner of a new Pontiac vehicle, you are automatically enrolled in the Pontiac Roadside Assistance program.

Who is Covered?

Roadside Assistance coverage is for the vehicle operator, regardless of ownership. In Canada, a person driving this vehicle without the consent of the owner is not eligible for coverage.

Downloaded from www.Manualslib.com manuals search engine

Services Provided

The following services are provided in the U.S. and Canada up to 5 years/100,000 miles (160 000 km), whichever occurs first, and, in Canada only, up to a maximum coverage of $100.

- **Fuel Delivery:** Delivery of enough fuel for the vehicle to get to the nearest service station (approximately $5 in Canada). In Canada, service to provide diesel may be restricted. For safety reasons, propane and other alternative fuels will not be provided through this service.
- **Lock-out Service:** Lock-out service is covered at no charge if you are unable to gain entry into your vehicle. A remote unlock may be available if you have an active OnStar® subscription. To ensure security, the driver must present personal identification before lock-out service is provided. In Canada, the vehicle registration is also required.
- **Emergency Tow From a Public Roadway or Highway:** Tow to the nearest dealership for warranty service or in the event of a vehicle-disabling crash. Winch-out assistance is provided when the vehicle is mired in sand, mud, or snow.
- **Flat Tire Change:** Installation of a spare tire in good condition, when equipped and properly inflated, is covered at no charge. The customer is responsible for the repair or replacement of the tire if not covered by a warrantable failure.
- **Jump Start:** A battery jump start is covered at no charge if the vehicle does not start.
- **Trip Routing Service (Canada only):** Upon request, Roadside Assistance will send you detailed, computer personalized maps, highlighting your choice of either the most direct route or the most scenic route to your destination, anywhere in North America, along with helpful travel information pertaining to your trip.

  Please allow three weeks before your planned departure date. Trip routing requests will be limited to six per calendar year.

Downloaded from www.Manualslib.com manuals search engine

- **Trip Interruption Benefits and Assistance (Canada only):** In the event of a warranty related vehicle disablement, while en route and over 250 kilometres from the original point of departure, you may qualify for trip interruption expense assistance. This assistance covers reasonable reimbursement of up to a maximum of $500 (Canadian) for (A) meals (maximum of $50/day), (B) lodging (maximum of $100/night) and (C) alternate ground transportation (maximum of $40/day). This benefit is to assist you with some of the unplanned expense you may incur while waiting for your vehicle to be repaired.

  Pre-authorization, original detailed receipts and a copy of the repair order are required.

  Once authorization has been given, your advisor will help you make any necessary arrangements and explain how to claim for trip interruption expense assistance.

- **Alternative Service (Canada only):** There may be times, when Roadside Assistance cannot provide timely assistance. Your advisor may authorize you to secure local emergency road service, and you will be reimbursed up to $100 upon submission of the original receipt to Roadside Assistance.

In many instances, mechanical failures may be covered. However, any cost for parts and labor for non-warranty repairs are the responsibility of the driver.

Pontiac and General Motors of Canada Limited reserve the right to limit services or reimbursement to an owner or driver when, in their sole discretion, the claims become excessive in frequency or type of occurrence.

Calling For Assistance

For prompt and efficient assistance when calling, please provide the following to the Roadside Assistance Representative:

- Your name, home address, and home telephone number
- Telephone number of your location
- Location of the vehicle
- Model, year, color, and license plate number of the vehicle
- Odometer reading, Vehicle Identification Number (VIN), and delivery date of the vehicle
- Description of the problem

Downloaded from www.Manualslib.com manuals search engine

Towing and Road Service Exclusions

Specifically excluded from Roadside Assistance coverage are towing or services for vehicles operated on a non-public roadway or highway, fines, impound towing caused by a violation of local, Municipal, State, Provincial, or Federal law, and mounting, dismounting or changing of snow tires, chains, or other traction devices.

Roadside Assistance is not part of or included in the coverage provided by the New Vehicle Limited Warranty. Pontiac and General Motors of Canada Limited reserve the right to make any changes or discontinue the Roadside Assistance program at any time without notification.

Scheduling Service Appointments

When your vehicle requires warranty service, contact your dealer/retailer and request an appointment. By scheduling a service appointment and advising your service consultant of your transportation needs, your dealer/retailer can help minimize your inconvenience.

If your vehicle cannot be scheduled into the service department immediately, keep driving it until it can be scheduled for service, unless, of course, the problem is safety-related. If it is, please call your dealership/retailer, let them know this, and ask for instructions.

If the dealer/retailer requests that you simply drop the vehicle off for service, you are urged to do so as early in the work day as possible to allow for the same day repair.

Courtesy Transportation

To enhance your ownership experience, we and our participating dealers are proud to offer Courtesy Transportation, a customer support program for vehicles with the Bumper to Bumper (Base Warranty Coverage period in Canada) and extended powertrain warranty in both the U.S. and Canada.

Several courtesy transportation options are available to assist in reducing your inconvenience when warranty repairs are required.

Courtesy Transportation is not a part of the New Vehicle Limited Warranty. A separate booklet entitled “Warranty and Owner Assistance Information” furnished with each new vehicle provides detailed warranty coverage information.

Downloaded from www.Manualslib.com manuals search engine

Transportation Options

Warranty service can generally be completed while you wait. However, if you are unable to wait, GM helps to minimize your inconvenience by providing several transportation options. Depending on the circumstances, your dealer can offer you one of the following:

Shuttle Service

Shuttle service is the preferred means of offering Courtesy Transportation. Dealers may provide you with shuttle service to get you to your destination with minimal interruption of your daily schedule. This includes one-way or round trip shuttle service within reasonable time and distance parameters of the dealer's area.

Public Transportation or Fuel Reimbursement

If your vehicle requires overnight warranty repairs, and public transportation is used instead of the dealer's shuttle service, the expense must be supported by original receipts and can only be up to the maximum amount allowed by GM for shuttle service. In addition, for U.S. customers, should you arrange transportation through a friend or relative, limited reimbursement for reasonable fuel expenses may be available. Claim amounts should reflect actual costs and be supported by original receipts. See your dealer for information regarding the allowance amounts for reimbursement of fuel or other transportation costs.

Courtesy Rental Vehicle

Your dealer may arrange to provide you with a courtesy rental vehicle or reimburse you for a rental vehicle that you obtain if your vehicle is kept for an overnight warranty repair. Rental reimbursement will be limited and must be supported by original receipts.
This requires that you sign and complete a rental agreement and meet state/provincial, local, and rental vehicle provider requirements. Requirements vary and may include minimum age requirements, insurance coverage, credit card, etc. You are responsible for fuel usage charges and may also be responsible for taxes, levies, usage fees, excessive mileage, or rental usage beyond the completion of the repair.

It may not be possible to provide a like-vehicle as a courtesy rental.

Additional Program Information

All program options, such as shuttle service, may not be available at every dealer. Please contact your dealer for specific information about availability. All Courtesy Transportation arrangements will be administered by appropriate dealer personnel.

General Motors reserves the right to unilaterally modify, change or discontinue Courtesy Transportation at any time and to resolve all questions of claim eligibility pursuant to the terms and conditions described herein at its sole discretion.

Downloaded from www.Manualslib.com manuals search engine

Collision Damage Repair

If your vehicle is involved in a collision and it is damaged, have the damage repaired by a qualified technician using the proper equipment and quality replacement parts. Poorly performed collision repairs diminish your vehicle's resale value, and safety performance can be compromised in subsequent collisions.

Collision Parts

Genuine GM Collision parts are new parts made with the same materials and construction methods as the parts with which your vehicle was originally built. Genuine GM Collision parts are your best choice to ensure that your vehicle's designed appearance, durability, and safety are preserved. The use of Genuine GM parts can help maintain your GM New Vehicle Warranty.

Recycled original equipment parts may also be used for repair. These parts are typically removed from vehicles that were total losses in prior crashes. In most cases, the parts being recycled are from undamaged sections of the vehicle. A recycled original equipment GM part, may be an acceptable choice to maintain your vehicle's originally designed appearance and safety performance, however, the history of these parts is not known. Such parts are not covered by your GM New Vehicle Limited Warranty, and any related failures are not covered by that warranty.

Aftermarket collision parts are also available. These are made by companies other than GM and may not have been tested for your vehicle. As a result, these parts may fit poorly, exhibit premature durability/corrosion problems, and may not perform properly in subsequent collisions. Aftermarket parts are not covered by your GM New Vehicle Limited Warranty, and any vehicle failure related to such parts are not covered by that warranty.

Repair Facility

We recommend that you choose a collision repair facility that meets your needs before you ever need collision repairs. Your dealer/retailer may have a collision repair center with GM-trained technicians and state of the art equipment, or be able to recommend a collision repair center that has GM-trained technicians and comparable equipment.

Downloaded from www.Manualslib.com manuals search engine

Insuring Your Vehicle

Protect your investment in your GM vehicle with comprehensive and collision insurance coverage. There are significant differences in the quality of coverage afforded by various insurance policy terms. Many insurance policies provide reduced protection to your GM vehicle by limiting compensation for damage repairs by using aftermarket collision parts. Some insurance companies will not specify aftermarket collision parts. When purchasing insurance, we recommend that you assure your vehicle will be repaired with GM original equipment collision parts. If such insurance coverage is not available from your current insurance carrier, consider switching to another insurance carrier.

If your vehicle is leased, the leasing company may require you to have insurance that assures repairs with Genuine GM Original Equipment Manufacturer (OEM) parts or Genuine Manufacturer replacement parts. Read your lease carefully, as you may be charged at the end of your lease for poor quality repairs.

If a Crash Occurs

Here is what to do if you are involved in a crash.

- Check to make sure that you are all right. If you are uninjured, make sure that no one else in your vehicle, or the other vehicle, is injured.
- If there has been an injury, call emergency services for help. Do not leave the scene of a crash until all matters have been taken care of. Move your vehicle only if its position puts you in danger or you are instructed to move it by a police officer.
- Give only the necessary and requested information to police and other parties involved in the crash. Do not discuss your personal condition, mental frame of mind, or anything unrelated to the crash. This will help guard against post-crash legal action.
- If you need roadside assistance, call GM Roadside Assistance. See *Roadside Assistance Program on page 7-6* for more information.
- If your vehicle cannot be driven, know where the towing service will be taking it. Get a card from the tow truck operator or write down the driver's name, the service's name, and the phone number.
- Remove any valuables from your vehicle before it is towed away. Make sure this includes your insurance information and registration if you keep these items in your vehicle.

Downloaded from www.Manualslib.com manuals search engine

- Gather the important information you will need from the other driver. Things like name, address, phone number, driver's license number, vehicle license plate, vehicle make, model and model year, Vehicle Identification Number (VIN), insurance company and policy number, and a general description of the damage to the other vehicle.
- If possible, call your insurance company from the scene of the crash. They will walk you through the information they will need. If they ask for a police report, phone or go to the police department headquarters the next day and you can get a copy of the report for a nominal fee. In some states/provinces with "no fault" insurance laws, a report may not be necessary. This is especially true if there are no injuries and both vehicles are driveable.
- Choose a reputable collision repair facility for your vehicle. Whether you select a dealer/retailer or a private collision repair facility to fix the damage, make sure you are comfortable with them. Remember, you will have to feel comfortable with their work for a long time.
- Once you have an estimate, read it carefully and make sure you understand what work will be performed on your vehicle. If you have a question, ask for an explanation. Reputable shops welcome this opportunity.

Managing the Vehicle Damage Repair Process

In the event that your vehicle requires damage repairs, GM recommends that you take an active role in its repair. If you have a pre-determined repair facility of choice, take your vehicle there, or have it towed there. Specify to the facility that any required replacement collision parts be original equipment parts, either new Genuine GM parts or recycled original GM parts. Remember, recycled parts will not be covered by your GM vehicle warranty.

Insurance pays the bill for the repair, but you must live with the repair. Depending on your policy limits, your insurance company may initially value the repair using aftermarket parts. Discuss this with your repair professional, and insist on Genuine GM parts. Remember if your vehicle is leased you may be obligated to have the vehicle repaired with Genuine GM parts, even if your insurance coverage does not pay the full cost.

If another party's insurance company is paying for the repairs, you are not obligated to accept a repair valuation based on that insurance company's collision policy repair limits, as you have no contractual limits with that company. In such cases, you can have control of the repair and parts choices as long as cost stays within reasonable limits.

Downloaded from www.Manualslib.com manuals search engine

Reporting Safety Defects

Reporting Safety Defects to the United States Government

If you believe that your vehicle has a defect which could cause a crash or could cause injury or death, you should immediately inform the National Highway Traffic Safety Administration (NHTSA) in addition to notifying General Motors.

If NHTSA receives similar complaints, it may open an investigation, and if it finds that a safety defect exists in a group of vehicles, it may order a recall and remedy campaign. However, NHTSA cannot become involved in individual problems between you, your dealer/retailer, or General Motors.

To contact NHTSA, you may call the Vehicle Safety Hotline toll-free at 1-888-327-4236 (TTY: 1-800-424-9153); go to http://www.safercar.gov; or write to:

Administrator, NHTSA
400 Seventh Street, SW.
Washington D.C., 20590

You can also obtain other information about motor vehicle safety from http://www.safercar.gov.

Reporting Safety Defects to the Canadian Government

If you live in Canada, and you believe that your vehicle has a safety defect, notify Transport Canada immediately, in addition to notifying General Motors of Canada Limited. Call them at 1-800-333-0510 or write to:

Transport Canada
Road Safety Branch
2780 Sheffield Road
Ottawa, Ontario K1B 3V9

Reporting Safety Defects to General Motors

In addition to notifying NHTSA (or Transport Canada) in a situation like this, please notify General Motors.

Call 1-800-762-2737, or write:

Pontiac Customer Assistance Center
P.O. Box 33172
Detroit, MI 48232-5172

In Canada, call 1-800-263-3777 (English) or 1-800-263-7854 (French), or write:

General Motors of Canada Limited
Customer Communication Centre, CA1-163-005
1908 Colonel Sam Drive
Oshawa, Ontario L1H 8P7

Downloaded from www.Manualslib.com manuals search engine

Service Publications Ordering Information

Service Manuals

Service Manuals have the diagnosis and repair information on engines, transmission, axle suspension, brakes, electrical, steering, body, etc.

Service Bulletins

Service Bulletins' give additional technical service information needed to knowledgeably service General Motors cars and trucks. Each bulletin contains instructions to assist in the diagnosis and service of your vehicle.

Owner Information

Owner publications are written specifically for owners and intended to provide basic operational information about the vehicle. The owner manual includes the Maintenance Schedule for all models.

In-Portfolio: Includes a Portfolio, Owner Manual, and Warranty Booklet.

RETAIL SELL PRICE: $35.00 (U.S.) plus processing fee

Without Portfolio: Owner Manual only.

RETAIL SELL PRICE: $25.00 (U.S.) plus processing fee

Current and Past Model Order Forms

Technical Service Bulletins and Manuals are available for current and past model GM vehicles. To request an order form, specify year and model name of the vehicle.

ORDER TOLL FREE: 1-800-551-4123 Monday-Friday 8:00 AM - 6:00 PM Eastern Time

For Credit Card Orders Only (VISA-MasterCard-Discover), visit Helm, Inc. on the World Wide Web at: www.helminc.com

Or you can write to:

Helm, Incorporated
P.O. Box 07130
Detroit, MI 48207

Prices are subject to change without notice and without incurring obligation. Allow ample time for delivery.

Note to Canadian Customers: All listed prices are quoted in U.S. funds. Canadian residents are to make checks payable in U.S. funds.

Downloaded from www.Manualslib.com manuals search engine

Vehicle Data Recording and Privacy

Your GM vehicle has a number of sophisticated computers that record information about the vehicle's performance and how it is driven. For example, your vehicle uses computer modules to monitor and control engine and transmission performance, to monitor the conditions for airbag deployment and deploy airbags in a crash and, if so equipped, to provide antilock braking to help the driver control the vehicle. These modules may store data to help your dealer/retailer technician service your vehicle. Some modules may also store data about how you operate the vehicle, such as rate of fuel consumption or average speed. These modules may also retain the owner's personal preferences, such as radio pre-sets, seat positions, and temperature settings.

Event Data Recorders

This vehicle has an Event Data Recorder (EDR). The main purpose of an EDR is to record, in certain crash or near crash-like situations, such as an airbag deployment or hitting a road obstacle, data that will assist in understanding how a vehicle's systems performed. The EDR is designed to record data related to vehicle dynamics and safety systems for a short period of time, typically 30 seconds or less. The EDR in this vehicle is designed to record such data as:

- How various systems in your vehicle were operating
- Whether or not the driver and passenger safety belts were buckled/fastened
- How far, if at all, the driver was pressing the accelerator and/or brake pedal
- How fast the vehicle was traveling

This data can help provide a better understanding of the circumstances in which crashes and injuries occur.

Downloaded from www.Manualslib.com manuals search engine

Important: EDR data is recorded by your vehicle only if a non-trivial crash situation occurs; no data is recorded by the EDR under normal driving conditions and no personal data (e.g., name, gender, age, and crash location) is recorded. However, other parties, such as law enforcement, could combine the EDR data with the type of personally identifying data routinely acquired during a crash investigation.

To read data recorded by an EDR, special equipment is required, and access to the vehicle or the EDR is needed. In addition to the vehicle manufacturer, other parties, such as law enforcement, that have the special equipment, can read the information if they have access to the vehicle or the EDR.

GM will not access this data or share it with others except: with the consent of the vehicle owner or, if the vehicle is leased, with the consent of the lessee; in response to an official request of police or similar government office; as part of GM's defense of litigation through the discovery process; or, as required by law. Data that GM collects or receives may also be used for GM research needs or may be made available to others for research purposes, where a need is shown and the data is not tied to a specific vehicle or vehicle owner.

OnStar®

If your vehicle has OnStar and you subscribe to the OnStar services, please refer to the OnStar Terms and Conditions for information on data collection and use. See also *OnStar® System on page 2-40* in this manual for more information.

Navigation System

If your vehicle has a navigation system, use of the system may result in the storage of destinations, addresses, telephone numbers, and other trip information. Refer to the navigation system operating manual for information on stored data and for deletion instructions.

Radio Frequency Identification (RFID)

RFID technology is used in some vehicles for functions such as tire pressure monitoring and ignition system security, as well as in connection with conveniences such as key fobs for remote door locking/unlocking and starting, and in-vehicle transmitters for garage door openers. RFID technology in GM vehicles does not use or record personal information or link with any other GM system containing personal information.

Downloaded from www.Manualslib.com manuals search engine

NOTES

Downloaded from www.Manualslib.com manuals search engine

A

Accessories and Modifications 5-3
Adding Equipment to Your Airbag-Equipped
  Vehicle 1-65
Additives, Fuel 5-6
Add-On Electrical Equipment 5-120
Air Cleaner/Filter, Engine 5-20
Air Conditioning 3-28, 3-32
Airbag
  Passenger Status Indicator 3-43
  Readiness Light 3-42
Airbag System 1-52
  What Will You See After an Airbag Inflates? 1-58
  When Should an Airbag Inflate? 1-57
  Where Are the Airbags? 1-55
Airbag Systems
  Adding Equipment to Your Airbag-Equipped
    Vehicle 1-65
  How Does an Airbag Restrain? 1-58
  Passenger Sensing System 1-60
  Servicing Your Airbag-Equipped Vehicle 1-64
  What Makes an Airbag Inflate? 1-58
Antenna, Backglass 3-117
Antenna, XM™ Satellite Radio Antenna
  System 3-118
Antilock Brake System (ABS) 4-4
Anti-lock Brake, System Warning Light 3-47
Appearance Care
  Aluminum Wheels 5-116
  Care of Safety Belts 5-114
  Chemical Paint Spotting 5-118
  Cleaning Exterior Lamps/Lenses 5-115
  Fabric/Carpet 5-111
  Finish Care 5-115
  Finish Damage 5-117
  Instrument Panel, Vinyl, and Other
    Plastic Surfaces 5-113
  Interior Cleaning 5-109
  Leather 5-112
  Sheet Metal Damage 5-117
  Tires 5-117
  Ultra Lux Suede 5-113
  Underbody Maintenance 5-117
  Vehicle Care/Appearance Materials 5-118
  Washing Your Vehicle 5-114
  Weatherstrips 5-114
  Windshield and Wiper Blades 5-116
Appointments, Scheduling Service 7-9
Ashtray 3-27
Audio System 3-94
  Audio Steering Wheel Controls 3-115
  Backglass Antenna 3-117
  Chime Level Adjustment 3-118
  Radio Reception 3-116
  Setting the Clock 3-95

Downloaded from www.Manualslib.com manuals search engine

Audio System (cont.)
Theft-Deterrent Feature 3-115
XM™ Satellite Radio Antenna System 3-118
Audio System(s) 3-95
Automatic Transmission
Fluid 5-22
Operation 2-28

B

Backglass Antenna 3-117
Battery 5-45
Electric Power Management 3-22
Exterior Lighting Battery Saver 3-19
Run-Down Protection 3-22
Brake
Emergencies 4-5
Brakes 5-41
System Warning Light 3-45
Braking 4-3
Braking in Emergencies 4-5
Break-In, New Vehicle 2-23
Bulb Replacement 5-54
Back-Up Lamps 5-59
Front Turn Signal, Parking and Fog Lamps 5-57
Halogen Bulbs 5-54
Headlamp Aiming 5-51
Bulb Replacement (cont.)
License Plate Lamps 5-60
Replacement Bulbs 5-60
Taillamps, Turn Signal, and Stoplamps 5-58
Buying New Tires 5-78

C

Calibration 3-65
California Fuel 5-6
California Perchlorate Materials Requirements 5-4
California Proposition 65 Warning 5-3
Canadian Owners ii
Capacities and Specifications 5-128
Carbon Monoxide 2-14, 2-36, 4-17, 4-29
Care of
Safety Belts 5-114
CD, MP3 3-109
Center Console Storage Area 2-44
Chains, Tire 5-84
Check
Engine Light 3-50
Checking Things Under the Hood 5-10
Chemical Paint Spotting 5-118
Child Restraints
Child Restraint Systems 1-35
Infants and Young Children 1-32

Downloaded from www.Manualslib.com manuals search engine

Child Restraints (cont.)
Lower Anchors and Tethers for Children 1-39
Older Children 1-29
Securing a Child Restraint in a Rear Seat Position 1-46
Securing a Child Restraint in the Right Front Seat Position 1-49
Where to Put the Restraint 1-38
Chime Level Adjustment 3-118
Cigarette Lighter 3-27
Cleaning
Aluminum Wheels 5-116
Exterior Lamps/Lenses 5-115
Fabric/Carpet 5-111
Finish Care 5-115
Instrument Panel, Vinyl, and Other Plastic Surfaces 5-113
Interior 5-109
Leather 5-112
Tires 5-117
Ultra Lux Suede 5-113
Underbody Maintenance 5-117
Washing Your Vehicle 5-114
Weatherstrips 5-114
Windshield and Wiper Blades 5-116
Climate Control System 3-28
Air Filter, Passenger Compartment 3-36
Dual Automatic 3-32
Outlet Adjustment 3-36
Clock, Setting 3-95
Collision Damage Repair 7-11
Compact Spare Tire 5-109
Compass 3-65
Compressor Kit, Tire Sealant 5-86
Content Theft-Deterrent 2-18
Control of a Vehicle 4-3
Convenience Net 2-44
Coolant
Engine Temperature Gage 3-49
Engine Temperature Warning Light 3-48
Heater, Engine 2-26
Cooling System 5-30
Courtesy Lamps 3-19
Cruise Control 3-12
Cruise Control Light 3-53
Cupholder(s) 2-43
Customer Assistance Information
Courtesy Transportation 7-9
Customer Assistance for Text Telephone (TTY) Users 7-5

Downloaded from www.Manualslib.com manuals search engine

Customer Assistance Information (cont.)
Customer Assistance Offices 7-5
Customer Satisfaction Procedure 7-2
GM Mobility Reimbursement Program 7-6
Reporting Safety Defects to General Motors 7-14
Reporting Safety Defects to the Canadian Government 7-14
Reporting Safety Defects to the United States Government 7-14
Roadside Assistance Program 7-6
Service Publications Ordering Information 7-15

D

Daytime Running Lamps 3-17
Defensive Driving 4-2
Delayed Entry Lighting 3-20
Delayed Exit Lighting 3-21
Delayed Locking 2-11
DIC Compass 3-65
Diesel
Running Out of Fuel 2-37
Disc, MP3 3-109
Doing Your Own Service Work 5-4
Dome Lamp 3-20
Door
Delayed Locking 2-11
Locks 2-10
Power Door Locks 2-11
Programmable Automatic Door Locks 2-12
Rear Door Security Locks 2-12
Driver Information Center (DIC) 3-55
DIC Operation and Displays 3-55, 3-62
DIC Vehicle Customization 3-89
DIC Warnings and Messages 3-67
Driving
At Night 4-14
Before a Long Trip 4-15
Defensive 4-2
Drunken 4-2
Highway Hypnosis 4-16
Hill and Mountain Roads 4-16
In Rain and on Wet Roads 4-14
Rocking Your Vehicle to Get it Out 4-22
Winter 4-17
Dual Automatic Climate Control System 3-32

Downloaded from www.Manualslib.com manuals search engine

E

EDR 7-16
Electrical System
Add-On Equipment 5-120
Fuses and Circuit Breakers 5-121
Headlamp Wiring 5-120
Instrument Panel Fuse Block 5-122
Power Windows and Other Power Options 5-121
Underhood Fuse Block 5-124
Windshield Wiper Fuses 5-121
Electronic Immobilizer
PASS-Key® III 2-20
Engine
Air Cleaner/Filter 5-20
Check and Service Engine Soon Light 3-50
Coolant 5-24
Coolant Heater 2-26
Coolant Temperature Gage 3-49
Coolant Temperature Warning Light 3-48
Drive Belt Routing 6-14
Engine Compartment Overview 5-12
Exhaust 2-36
Oil 5-15
Engine (cont.)
Oil Life System 5-18
Overheated Protection Operating Mode 5-29
Overheating 5-27
Starting 2-25
Enhanced Traction System (ETS) 4-7
Warning Light 3-48
Entry Lighting 3-20
Event Data Recorders 7-16
Extender, Safety Belt 1-28
Exterior Lamps 3-16
Exterior Lighting Battery Saver 3-19

F

Filter
Engine Air Cleaner 5-20
Finish Damage 5-117
Flashers, Hazard Warning 3-6
Flash-to-Pass 3-9
Flat Tire 5-85
Flat Tire, Changing 5-96
Flat Tire, Storing 5-107

Downloaded from www.Manualslib.com manuals search engine

Fluid
Automatic Transmission 5-22
Power Steering 5-39
Windshield Washer 5-40
Fog Lamp
Fog 3-18
Fog Lamp Light 3-53
Folding Rear Seat 1-9
Folding Seatback, Passenger 1-8
Front Reading Lamps 3-21
Fuel 5-5
Additives 5-6
California Fuel 5-6
Filling a Portable Fuel Container 5-10
Filling the Tank 5-8
Fuels in Foreign Countries 5-7
Gage 3-54
Gasoline Octane 5-5
Gasoline Specifications 5-6
Running Out of 2-37
Fuses
Fuses and Circuit Breakers 5-121
Instrument Panel Fuse Block 5-122
Underhood Fuse Block 5-124
Windshield Wiper 5-121

G

Gage
Engine Coolant Temperature 3-49
Fuel 3-54
Speedometer 3-40
Tachometer 3-40
Gasoline
Octane 5-5
Specifications 5-6
Glove Box 2-43
GM Mobility Reimbursement Program 7-6

H

Hazard Warning Flashers 3-6
Head Restraints 1-7
Headlamp
Aiming 5-51
Headlamp Wiring 5-120
Headlamps
Bulb Replacement 5-54
Daytime Running Lamps 3-17
Exterior Lamps 3-16
Flash-to-Pass 3-9
Front Turn Signal, Parking and Fog Lamps 5-57
Halogen Bulbs 5-54
Headlamps and Sidemarker Lamps 5-54

Downloaded from www.Manualslib.com manuals search engine

Headlamps (cont.)
High/Low Beam Changer 3-9
On Reminder 3-17
Headlamps and Sidemarker Lamps 5-54
Head-Up Display (HUD) 3-23
Heated Seats 1-4
Heater 3-28
Heater 3-32
Highbeam On Light 3-54
Highway Hypnosis 4-16
Hill and Mountain Roads 4-16
Hood
Checking Things Under 5-10
Release 5-11
Horn 3-6
How to Wear Safety Belts Properly 1-15

I

Ignition Positions 2-23
Infants and Young Children, Restraints 1-32
Inflation - Tire Pressure 5-69
Inflator Kit, Tire 5-86
Instrument Panel
Overview 3-4
Instrument Panel (I/P)
Brightness 3-19
Cluster 3-39
Interior Lamps 3-19

J

Jump Starting 5-46

K

Keyless Entry System 2-3
Keys 2-2

L

Labeling, Tire Sidewall 5-63
Lamps
Courtesy 3-19
Dome 3-20
Exterior Lighting Battery Saver 3-19
Front Reading 3-21
Overhead Console Reading 3-21
Rear Assist Handle Reading 3-21
Lap-Shoulder Belt 1-22
LATCH System
Child Restraints 1-39
License Plate Lamps 5-60
Light
Airbag Readiness 3-42
Anti-lock Brake System (ABS) Warning 3-47
Brake System Warning 3-45
Cruise Control 3-53

Downloaded from www.Manualslib.com manuals search engine

Light (cont.)
Engine Coolant Temperature Warning 3-48
Enhanced Traction System (ETS)
Warning Light 3-48
Fog Lamp 3-53
Highbeam On 3-54
Malfunction Indicator 3-50
Oil Pressure 3-52
Passenger Airbag Status Indicator 3-43
Safety Belt Reminders 3-41
TCS Warning Light 3-47
Tire Pressure 3-49
Traction Control System (TCS) Warning 3-47
Up-Shift 3-45
Lighting
Delayed Entry 3-20
Delayed Exit 3-21
Entry 3-20
Lights
Exterior Lamps 3-16
Flash-to-Pass 3-9
High/Low Beam Changer 3-9
Interior Lamps 3-19
On Reminder 3-17
Loading Your Vehicle 4-22
Lockout Protection 2-13
Locks
Delayed Locking 2-11
Door 2-10
Lockout Protection 2-13
Power Door 2-11
Programmable Automatic Door Locks 2-12
Rear Door Security Locks 2-12
Loss of Control 4-12
Lumbar
Power Controls 1-4

M

Maintenance Schedule
Additional Required Services 6-6
At Each Fuel Fill 6-8
At Least Once a Month 6-9
At Least Once a Year 6-9
Introduction 6-2
Maintenance Footnotes 6-7
Maintenance Record 6-15
Maintenance Replacement Parts 6-13
Maintenance Requirements 6-2
Owner Checks and Services 6-8
Recommended Fluids and Lubricants 6-12

Downloaded from www.Manualslib.com manuals search engine

Maintenance Schedule (cont.)
Scheduled Maintenance 6-4
Using 6-3
Your Vehicle and the Environment 6-2
Malfunction Indicator Light 3-50
Manual Seats 1-2
Manual, Using iii
Message
DIC Warnings and Messages 3-67
Mirrors
Manual Rearview Mirror 2-38
Manual Rearview Mirror with OnStar® 2-38
Outside Convex Mirror 2-39
Outside Power Mirrors 2-39
MP3 3-109
MyGMLink.com 7-4

N

Navigation System, Privacy 7-17
New Vehicle Break-In 2-23

O

Odometer 3-40
Off-Road Recovery 4-12
Oil
Engine 5-15
Pressure Light 3-52
Oil, Engine Oil Life System 5-18
Older Children, Restraints 1-29
Online Owner Center 7-4
OnStar, Privacy 7-17
OnStar® System, see OnStar® Manual 2-40
Other Warning Devices 3-6
Outlet Adjustment 3-36
Outlets
Accessory Power 3-26
Outside
Convex Mirror 2-39
Power Mirrors 2-39
Overhead Console Reading Lamps 3-21
Overheated Engine Protection Operating Mode 5-29
Owner Checks and Services 6-8
Owners, Canadian ii

Downloaded from www.Manualslib.com manuals search engine

P

Paint, Damage 5-117
Park Brake 2-33
Park (P)
  Shifting Into 2-34
  Shifting Out of 2-35
Parking
  Over Things That Burn 2-36
Passenger Airbag Status Indicator 3-43
Passenger Compartment Air Filter 3-36
Passenger Sensing System 1-60
Passing 4-12
PASS-KEY® III Electronic Immobilizer 2-20
PASS-KEY® III Operation 2-21
Perchlorate Materials Requirements, California 5-4
Power
  Door Locks 2-11
  Electrical System 5-121
  Lumbar Controls 1-4
  Retained Accessory (RAP) 2-24
  Seat 1-3
  Steering Fluid 5-39
  Windows 2-17
Pressure Cap 5-27
Privacy 7-16
  Event Data Recorders 7-16
  Navigation System 7-17
Privacy (cont.)
  OnStar 7-17
  Radio Frequency Identification 7-17
Programmable Automatic Door Locks 2-12

R

Radio Frequency Identification (RFID),
  Privacy 7-17
Radio(s) 3-95
Radios
  Reception 3-116
  Setting the Clock 3-95
  Theft-Deterrent 3-115
Rear Assist Handle Reading Lamps 3-21
Rear Door Security Locks 2-12
Rearview Mirror with OnStar® 2-38
Rearview Mirrors 2-38
Reclining Seatbacks 1-5
Recommended Fluids and Lubricants 6-12
Recreational Vehicle Towing 4-27
Remote Keyless Entry (RKE) System 2-3
Remote Keyless Entry (RKE) System,
  Operation 2-4
Remote Vehicle Start 2-7
Removing the Flat Tire and Installing
  the Spare Tire 5-100

Downloaded from www.Manualslib.com manuals search engine

Removing the Spare Tire and Tools 5-98
Replacement Bulbs 5-60
Replacement Parts, Maintenance 6-13
Replacement, Windshield 5-61
Reporting Safety Defects
  Canadian Government 7-14
  General Motors 7-14
  United States Government 7-14
Restraint System Check
  Checking the Restraint Systems 1-66
  Replacing Restraint System Parts
    After a Crash 1-67
Retained Accessory Power (RAP) 2-24
Roadside
  Assistance Program 7-6
Rocking Your Vehicle to Get it Out 4-22
Routing, Engine Drive Belt 6-14
Running Out of Fuel 2-37

S

Safety Belt
  Reminder Light 3-41
Safety Belts
  Care of 5-114
  How to Wear Safety Belts Properly 1-15
  Lap-Shoulder Belt 1-22
Safety Belts (cont.)
  Safety Belt Extender 1-28
  Safety Belt Use During Pregnancy 1-28
  Safety Belts Are for Everyone 1-10
Safety Warnings and Symbols iii
Scheduled Maintenance 6-4
Seatback, Folding Passenger 1-8
Seats
  Head Restraints 1-7
  Heated Seats 1-4
  Passenger Folding Seatback 1-8
  Power Lumbar 1-4
  Power Seat 1-3
  Reclining Seatbacks 1-5
  Split Folding Rear Seat 1-9
Securing a Child Restraint
  Rear Seat Position 1-46
  Right Front Seat Position 1-49
Service 5-3
  Accessories and Modifications 5-3
  Adding Equipment to the Outside
    of Your Vehicle 5-5
  California Perchlorate Materials Requirements 5-4
  California Proposition 65 Warning 5-3
  Doing Your Own Work 5-4
  Engine Soon Light 3-50
  Publications Ordering Information 7-15

Downloaded from www.Manualslib.com manuals search engine

Service, Scheduling Appointments 7-9
Servicing Your Airbag-Equipped Vehicle 1-64
Setting the Clock 3-95
Sheet Metal Damage 5-117
Shifting Into Park (P) 2-34
Shifting Out of Park (P) 2-35
Signals, Turn and Lane-Change 3-8
Spare Tire
  Compact 5-109
  Installing 5-100
  Removing 5-98
  Storing 5-107
Specifications, Capacities 5-128
Speedometer 3-40
Split Folding Rear Seat 1-9
Stabilitrak® Plus System 4-8
Start Vehicle, Remote 2-7
Starting the Engine 2-25
Steering 4-10
Steering Wheel Controls, Audio 3-115
Steering Wheel, Tilt Wheel 3-7
Storage Areas
  Center Console Storage Area 2-44
  Convenience Net 2-44
  Cupholder(s) 2-43
  Glove Box 2-43
  Sunglasses Storage Compartment 2-44
Stuck in Sand, Mud, Ice, or Snow 4-21
Sun Visors 2-18
Sunroof 2-44

T

Tachometer 3-40
Taillamps
  Turn Signal, and Stoplamps 5-58
TCS Warning Light 3-47
Theft-Deterrent, Radio 3-115
Theft-Deterrent Systems 2-18
  Content Theft-Deterrent 2-18
  PASS-Key® III Electronic Immobilizer 2-20
  PASS-Key® III Operation 2-21
Tilt Wheel 3-7
Time, Setting 3-95
Tire
  Pressure Light 3-49
Tires 5-62
  Aluminum Wheels, Cleaning 5-116
  Buying New Tires 5-78
  Chains 5-84
  Changing a Flat Tire 5-96
  Cleaning 5-117
  Compact Spare Tire 5-109

Downloaded from www.Manualslib.com manuals search engine

Tires (cont.)
Different Size 5-80
If a Tire Goes Flat 5-85
Inflation - Tire Pressure 5-69
Inspection and Rotation 5-75
Installing the Spare Tire 5-100
Pressure Monitor Operation 5-72
Pressure Monitor System 5-71
Removing the Flat Tire 5-100
Removing the Spare Tire and Tools 5-98
Storing a Flat or Spare Tire and Tools 5-107
Tire Sealant and Compressor Kit 5-86
Tire Sidewall Labeling 5-63
Tire Terminology and Definitions 5-66
Uniform Tire Quality Grading 5-80
Wheel Alignment and Tire Balance 5-82
Wheel Replacement 5-82
When It Is Time for New Tires 5-77
Towing
Recreational Vehicle 4-27
Towing a Trailer 4-29
Your Vehicle 4-27
Traction
Control System (TCS) 4-6
Control System Warning Light 3-47
Enhanced Traction System (ETS) 4-7
Enhanced Traction System (ETS)
Warning Light 3-48
Stabilitrak® Plus System 4-8
Transmission
Fluid, Automatic 5-22
Up-Shift Light 3-45
Transmission Operation, Automatic 2-28
Trunk 2-14
Turn and Lane-Change Signals 3-8
Turn Signal/Multifunction Lever 3-7

U

Uniform Tire Quality Grading 5-80
Up-Shift Light 3-45
Using this Manual iii

Downloaded from www.Manualslib.com manuals search engine

V

Vehicle
Control 4-3
Damage Warnings iv
Loading 4-22
Symbols iv
Vehicle Customization, DIC 3-89
Vehicle Data Recording and Privacy 7-16
Vehicle Identification
Number (VIN) 5-119
Service Parts Identification Label 5-120
Vehicle, Remote Start 2-7
Ventilation Adjustment 3-36
Visors 2-18

W

Warning Lights, Gages and Indicators 3-38
Warnings
DIC Warnings and Messages 3-67
Hazard Warning Flashers 3-6
Other Warning Devices 3-6
Safety and Symbols iii
Vehicle Damage iv
Wheels
Alignment and Tire Balance 5-82
Different Size 5-80
Replacement 5-82
Where to Put the Restraint 1-38
Windows 2-16
Power 2-17
Windshield
Replacement 5-61
Washer Fluid 5-40
Wiper Blade Replacement 5-61
Wiper Blades, Cleaning 5-116
Wiper Fuses 5-121
Wiper Lever 3-10
Winter Driving 4-17

X

XM Radio Messages 3-114
XM™ Satellite Radio Antenna System 3-118

Y

Your Vehicle and the Environment 6-2

Downloaded from www.Manualslib.com manuals search engine