Important information about this manual

Safety and vehicle damage warnings

Throughout this manual, you will see safety and vehicle damage warnings. You must follow these warnings carefully to avoid possible injury or damage.

The types of warnings, what they look like, and how they are used in this manual are explained as follows:

⚠ CAUTION

This is a warning against anything which may cause injury to people if the warning is ignored. You are informed about what you must or must not do in order to reduce the risk of injury to yourself and others.

NOTICE

This is a warning against anything which may cause damage to the vehicle or its equipment if the warning is ignored. You are informed about what you must or must not do in order to avoid or reduce the risk of damage to your vehicle and its equipment.

Safety symbol

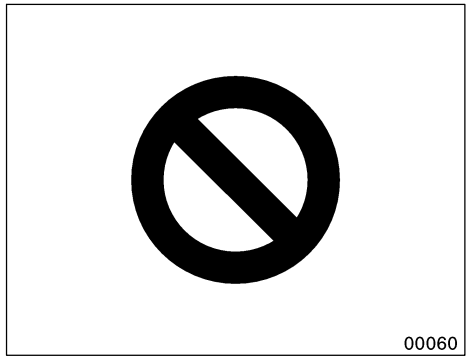

When you see the safety symbol shown above, it means: “Do not...”; “Do not do this”; or “Do not let this happen”.

Important information about your Toyota

Occupant restraint systems

Toyota encourages you and your family to take the time to read Section 1–3 of this Owner's Manual carefully. In terms of helping you understand how you can receive the maximum benefit of the occupant restraint systems this vehicle provides, Section 1–3 of this Owner's Manual is the most important Section for you and your family to read.

Section 1–3 describes the function and operation concerning seats, seat belts, SRS airbags and child restraint systems of this vehicle and some potential hazards you should be aware of. These systems work together along with the overall structure of this vehicle in order to provide occupant restraint in the event of a crash. The effect of each system is enhanced when it is used properly and together with other systems. No single occupant restraint system can, by itself, provide you or your family with the equal level of restraint which these systems can provide when used together. That is why it is important for you and your family to understand the purpose and proper use of each of these systems and how they relate to each other.

The purpose of all occupant restraint systems is to help reduce the possibility of death or serious injury in the event of a collision. None of these systems, either individually or together, can ensure that there is no injury in the event of collision. However, the more you know about these systems and how to use them properly, the greater your chances become of surviving an accident without death or serious injury.

Seat belts provide the primary restraint to all occupants of the vehicle, and every occupant of the vehicle should wear seat belts properly at all times. Children should always be secured in child restraint systems that are appropriate for their age and size. SRS (Supplemental Restraint System) airbags are, as their names imply, designed to work with, and be supplemental to, seat belts and are not substitutes for them. SRS airbags can be very effective in reducing the risk of head and chest injuries by preventing contact of the head and chest with interior portions of the vehicle.

In order to be effective, the SRS airbags must deploy with tremendous speed. The rapid deployment of the SRS airbags makes the SRS airbags themselves potential sources of death or serious injury if an occupant is too close to an airbag, or if an object or some part of his or her body has been placed between the occupant and the airbag at the time of deployment. This is just one example of how the instructions in Section 1–3 of this Owner's Manual will help ensure proper use of the occupant restraint systems, and increase the safety they can provide to you and your family in the event of an accident.

Toyota recommends you to read the provisions in Section 1–3 carefully and refer to them as needed during your time of ownership of this vehicle.

Event data recorder

Your vehicle has computers that monitor and control certain aspects of your vehicle. These computers assist in driving and maintaining optimal vehicle performance. Besides storing data useful for troubleshooting, there is a system to record data in a crash or a near car crash event. This is called an Event Data Recorder (EDR).

The SRS airbag sensor assembly contains the EDR. In a crash or a near car crash event, this device may record some or all of the following information:

- Engine speed
- Whether the brake pedal was applied or not
- Vehicle speed
- To what extent the accelerator pedal was depressed
- Position of the transmission selector lever
- Whether the driver and front passenger wore the seat belts or not
- Driver's seat position
- Front passenger's occupant classification

- SRS airbag deployment data
- SRS airbag system diagnostic data

If your vehicle is equipped with a vehicle stability control (VSC) system, its Electronic Control Unit (ECU) may contain another EDR. There are a variety of driving situations which include activating the VSC under which the VSC EDR will record certain information. The VSC EDR may record some or all of the following information:

- Behavior of the vehicle
- Steering wheel angle
- Vehicle speed
- To what extent the accelerator pedal was depressed
- To what extent the brake pedal was applied
- To what extent the ECU controlled the condition of the 4 wheels
- vehicle stability control system diagnostic data

The information above is intended to be used for the purpose of improving vehicle safety performance. Unlike general data recorders, the EDR does not record sound data such as conversation between passengers.

Toyota will not disclose the data recorded in an EDR to a third party except when:

- An agreement from the vehicle's owner (or the leasing company for a leased vehicle) is obtained
- Officially requested by the police or other authorities
- Used as a defense for Toyota in a law suit
- Ordered by the court

However, if necessary Toyota will:

- Use the data for research on Toyota vehicle safety performance
- Disclose the data to a third party for research purposes without disclosing details of the vehicle owner, and only when it is deemed necessary
- Disclose summarized data cleared of vehicle identification information to a non–Toyota organization for research purposes

New vehicle warranty

Your new vehicle is covered by the following Toyota limited warranties:

- New vehicle warranty
- Emission control systems warranty
- Others

For further information, please refer to the “Owner’s Warranty Information Booklet” or “Owner’s Manual Supplement”.

Your responsibility for maintenance

It is the owner’s responsibility to make sure that the specified maintenance is performed. Section 6 gives details of these maintenance requirements. Also included in Section 6 is general maintenance. For scheduled maintenance information, please refer to the “Scheduled Maintenance Guide” or “Owner’s Manual Supplement”.

Important health and safety information about your Toyota

⚠CAUTION

- **WARNING: Engine exhaust, some of its constituents, and a wide variety of automobile components contain or emit chemicals known to the State of California to cause cancer and birth defects and other reproductive harm. In addition, oils, fuels and fluids contained in vehicles as well as waste produced by component wear contain or emit chemicals known to the State of California to cause cancer and birth defects or other reproductive harm.**
- **Battery posts, terminals and related accessories contain lead and lead compounds. Wash your hands after handling. Used engine oil contains chemicals that have caused cancer in laboratory animals. Always protect your skin by washing thoroughly with soap and water.**

Accessories, spare parts and modification of your Toyota

A wide variety of non–genuine spare parts and accessories for Toyota vehicles are currently available in the market. You should know that Toyota does not warrant these products and is not responsible for their performance, repair, or replacement, or for any damage they may cause to, or adverse effect they may have on, your Toyota vehicle.

This vehicle should not be modified with non–genuine Toyota products. Modification with non–genuine Toyota products could affect its performance, safety or durability, and may even violate governmental regulations. In addition, damage or performance problems resulting from the modification may not be covered under warranty.

Spark ignition system of your Toyota

The spark ignition system in your Toyota meets all requirements of the Canadian Interference–Causing Equipment Standard.

Installation of a mobile two–way radio system

As the installation of a mobile two–way radio system in your vehicle could affect the following electronic systems, be sure to check with your Toyota dealer for precautionary measures or special instructions regarding installation.

- Multiport fuel injection system/sequential multiport fuel injection system
- SRS airbag system
- Seat belt pretensioner system

- Traction control system
- “AUTO LSD” system
- Vehicle stability control system
- Cruise control system
- Anti–lock brake system
- Electronic throttle control system
- Tire pressure warning system

Tires and loading on your Toyota

Underinflated or overinflated tire inflation pressure and the excess load may result in the deterioration of steering ability and braking ability, leading to an accident. Check the tire inflation pressure periodically and be sure to keep the load limits given in this Owner’s Manual. For details about tire inflation pressure and load limits, see “Checking tire inflation pressure” on page 548 in Section 7–2 and “Vehicle load limits” on page 463 in Section 2.

Scrapping of your Toyota

The SRS airbag and seat belt pretensioner devices in your Toyota contain explosive chemicals. If the vehicle is scrapped with the airbags and pretensioners left as they are, this may cause an accident such as fire. Be sure to have the systems of the SRS airbag and seat belt pretensioner removed and disposed of by a qualified service shop or by your Toyota dealer before you dispose of your vehicle.

On–pavement and off–road driving tips

This vehicle will handle and maneuver differently from an ordinary passenger car because it is also designed for off–road use. It has a significantly higher rollover rate than other types of vehicles. In addition, this vehicle has a higher ground clearance and center of gravity than that of an ordinary passenger car. This vehicle design feature causes this type of vehicle to be more likely to rollover. Failure to operate this vehicle correctly may result in loss of control, accidents or vehicle rollover causing death or serious injury. Be sure to read “Off–road vehicle precautions” on page 436 in Section 2 and “Off–road driving precautions” on page 472 in Section 3.

Leak detection pump

This pump performs fuel evaporation leakage check. This check is done approximately five hours after the engine is turned off. So you may hear sound coming from underneath the deck for several minutes. It does not indicate a malfunction.

Perchlorate Material

Special handling may apply,
See www.dtsc.ca.gov/hazardouswaste/perchlorate.

Your vehicle has components that may contain perchlorate. These components may include airbag, seat belt pretensioners, and wireless remote control batteries.

SECTION 1 – 1

OPERATION OF INSTRUMENTS AND CONTROLS

Overview of instruments and controls

Instrument panel overview 2
Steering switches and overhead console overview 10
Instrument cluster overview 12
Indicator symbols on the instrument panel 14

Instrument panel overview

▶Bench seat (view A)

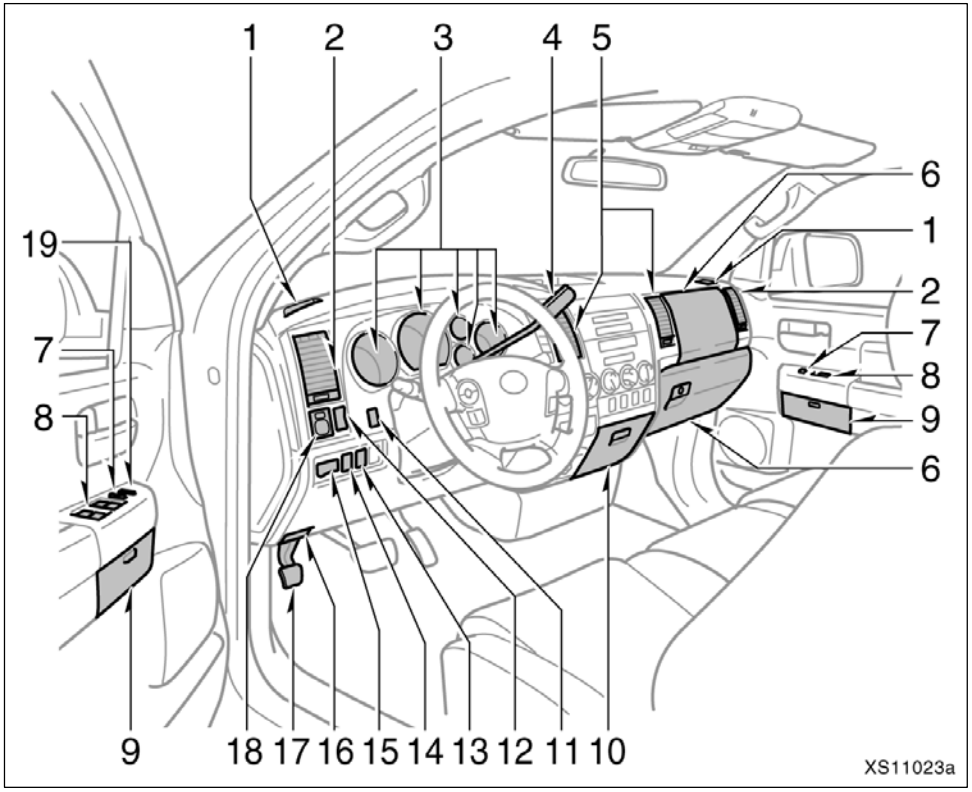

1. Side defroster outlet
2. Instrument panel vents (side vents)
3. Instrument cluster
4. Automatic transmission selector lever
5. Instrument panel vents (center vents)
6. Glove boxes
7. Power door lock switches
8. Power window switches
9. Auxiliary boxes
10. Bottle holders
11. Instrument panel light control dial
12. Interior light/personal light main switch
13. Roll sensing of curtain shield airbags off switch (“RSCA OFF” switch)
14. Power back window switch (Crew Max models)
15. Cargo lamp switch
16. Hood lock release lever
17. Parking brake pedal
18. Power rear view mirror control switch
19. Window lock switch

▶**Separate seat (view A)**

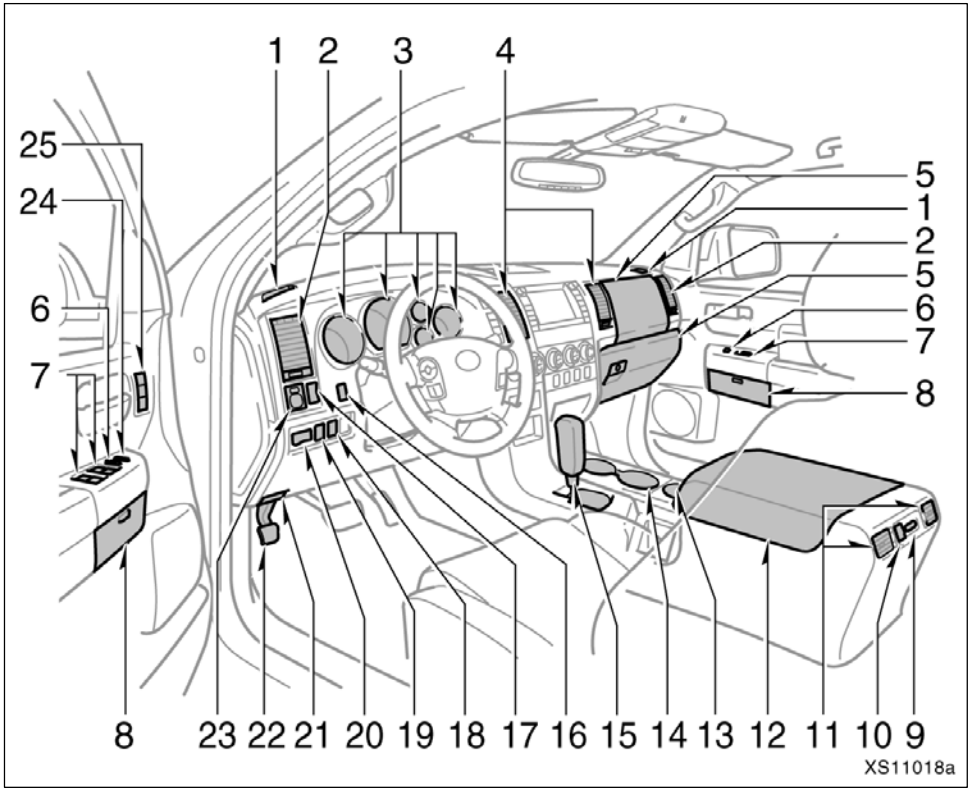

1. Side defroster outlet
2. Instrument panel vents (side vents)
3. Instrument cluster
4. Instrument panel vents (center vents)
5. Glove boxes
6. Power door lock switches
7. Power window switches
8. Auxiliary boxes
9. A/V input adapter (with rear seat entertainment system)
10. Power outlet
11. Rear vents (Crew Max models)
12. Center console box
13. Ashtray
14. Cup holders
15. Automatic transmission selector lever
16. Instrument panel light control dial
17. Interior light/personal light main switch
18. Roll sensing of curtain shield airbags off switch (“RSCA OFF” switch)
19. Power back window switch (Crew Max models)
20. Cargo lamp switch
21. Hood lock release lever
22. Parking brake pedal

23. Power rear view mirror control switch
24. Window lock switch
25. Driving position memory switch

▶**Bench seat (view B)**

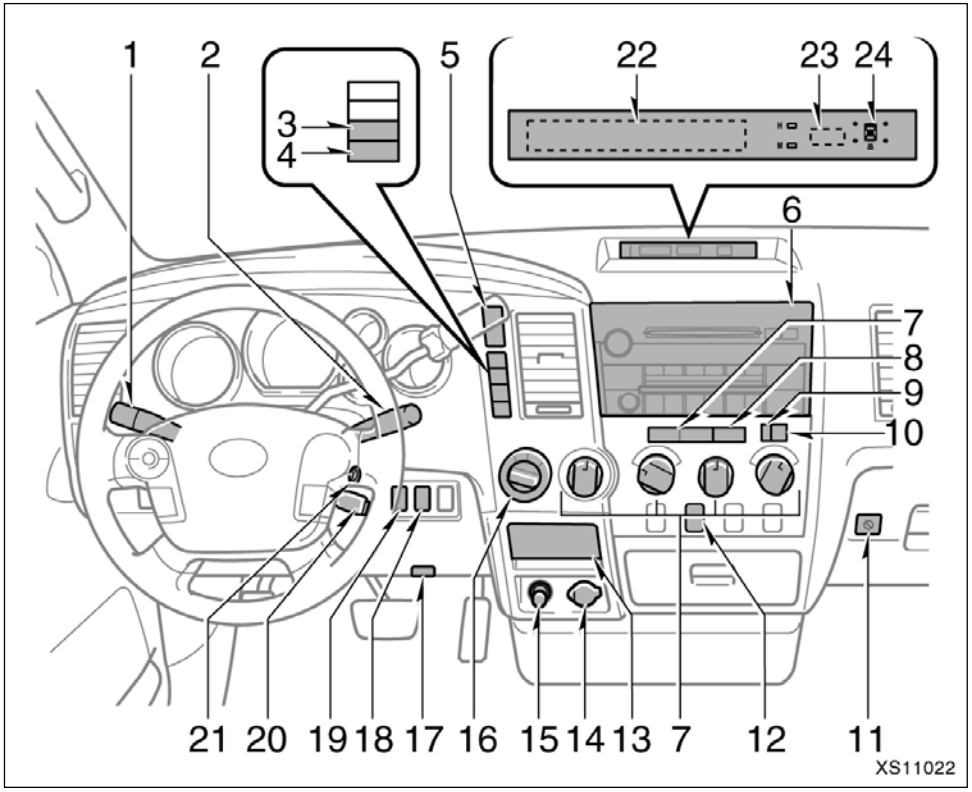

1. Headlight, turn signal and front fog light switches
2. Wiper and washer switches
3. Accessory meter control switch
4. Intuitive parking assist switch
5. Emergency flasher switch
6. Audio system or navigation system including audio system (For the navigation system, see the separate “Navigation System Owner’s Manual”.)
7. Air conditioning controls
8. Outside rear view mirror defogger switch/Back window and outside rear view mirror defogger switch
9. Front passenger’s seat belt reminder light
10. Passenger airbag on–off indicator light
11. Passenger airbag off switch (Regular cab models)
12. AUX adapter
13. Ashtray
14. Power outlet
15. Cigarette lighter
16. Front drive control switch knob (four–wheel drive models)
17. Tire pressure warning reset switch

18. “VSC OFF” switch
19. Power outlet main switch
    (with rear seat entertainment system)
20. Cruise control switch
21. Ignition switch
22. Accessory meter
23. Engine immobilizer/theft deterrent
    system indicator light
24. Intuitive parking assist indicator lights

▶Separate seat with manual air conditioning system (view B)

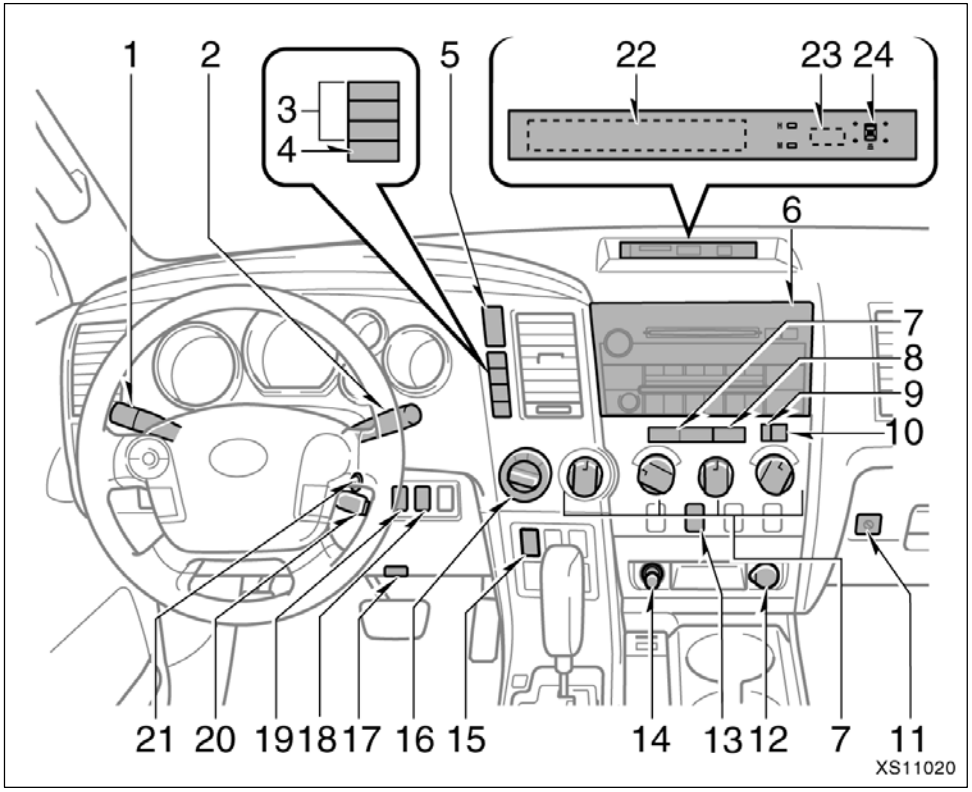

1. Headlight, turn signal and front fog light switches
2. Wiper and washer switches
3. Accessory meter control switches
4. Intuitive parking assist switch
5. Emergency flasher switch
6. Audio system or navigation system including audio system (For the navigation system, see the separate “Navigation System Owner’s Manual”.)
7. Air conditioning controls
8. Outside rear view mirror defogger switch/Back window and outside rear view mirror defogger switch
9. Front passenger’s seat belt reminder light
10. Passenger airbag on–off indicator light
11. Passenger airbag off switch (Regular cab models)
12. Power outlet
13. AUX adapter
14. Cigarette lighter
15. “TOW/HAUL” switch
16. Front drive control switch knob (four–wheel drive models)
17. Tire pressure warning reset switch

18. “VSC OFF” switch
19. Power outlet main switch
    (with rear seat entertainment system)
20. Cruise control switch
21. Ignition switch
22. Accessory meter
23. Engine immobilizer/theft deterrent
    system indicator light
24. Intuitive parking assist indicator lights

▶Separate seat with automatic air conditioning system (view B)

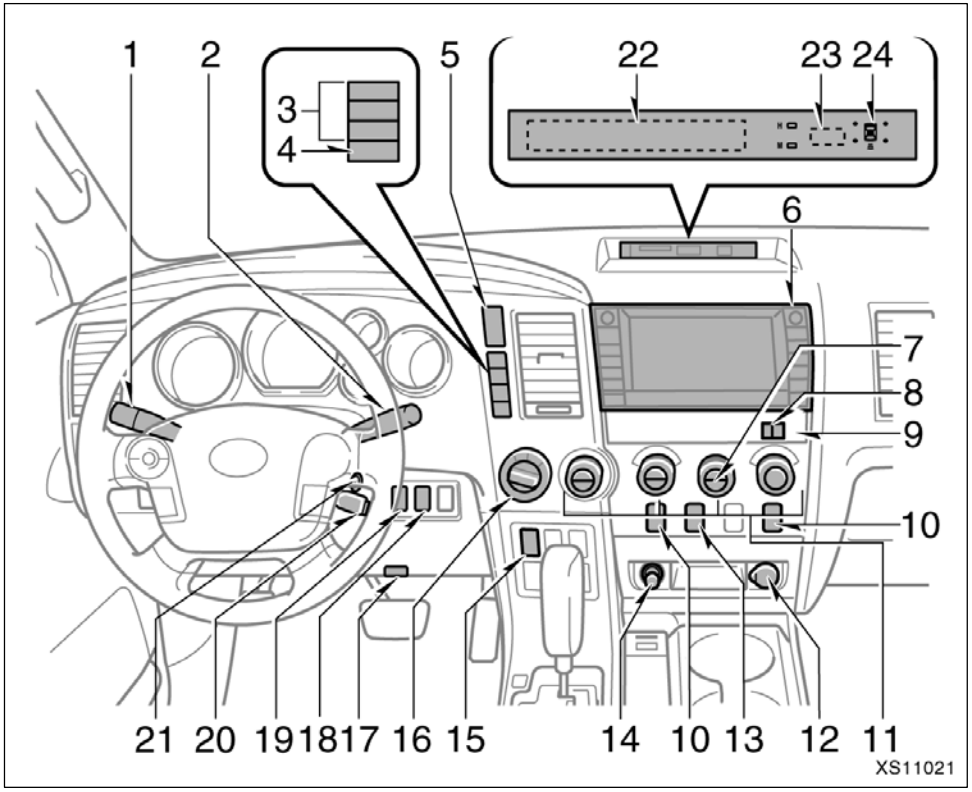

1. Headlight, turn signal and front fog light switches
2. Wiper and washer switches
3. Multi–information display/accessory meter control switches
4. Intuitive parking assist switch
5. Emergency flasher switch
6. Audio system or navigation system including audio system (For the navigation system, see the separate “Navigation System Owner’s Manual”.)
7. Outside rear view mirror defogger switch/Back window and outside rear view mirror defogger switch
8. Front passenger’s seat belt reminder light
9. Passenger airbag on–off indicator light
10. Seat heater dials
11. Air conditioning controls
12. Power outlet
13. AUX adapter
14. Cigarette lighter
15. “TOW/HAUL” switch
16. Front drive control switch knob (four–wheel drive models)
17. Tire pressure warning reset switch

18. “VSC OFF” switch
19. Power outlet main switch (with rear seat entertainment system)
20. Cruise control switch
21. Ignition switch
22. Accessory meter
23. Engine immobilizer/theft deterrent system indicator light
24. Intuitive parking assist indicator lights

Steering switches and overhead console overview

▶Steering switches

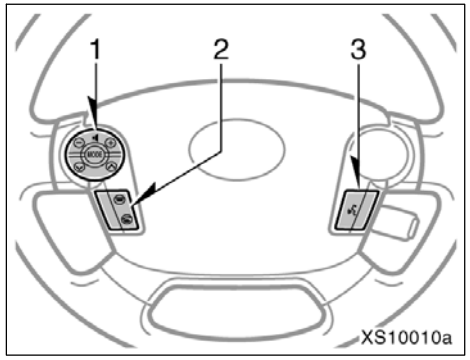

1. Audio remote control switches
2. Telephone switches
3. Talk switch

▶Overhead console

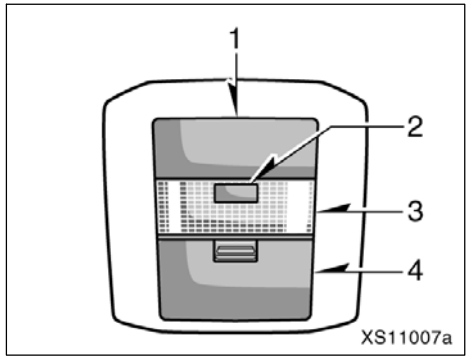

Type A

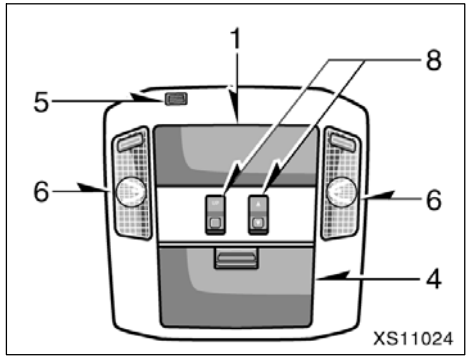

Type B

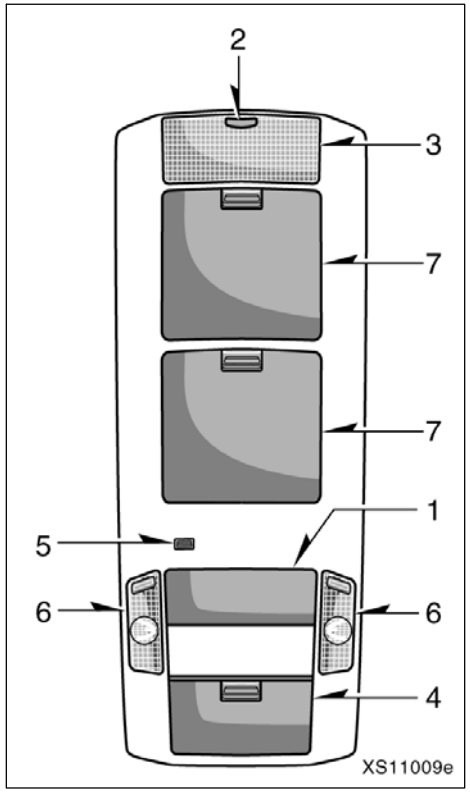

Type C

1. Card holder
2. Interior light switch
3. Interior light
4. Sunglass holder
5. Microphone
6. Personal lights
7. Auxiliary boxes
8. Moon roof switches
   (on some Crew Max models)

Instrument cluster overview

▶Type A

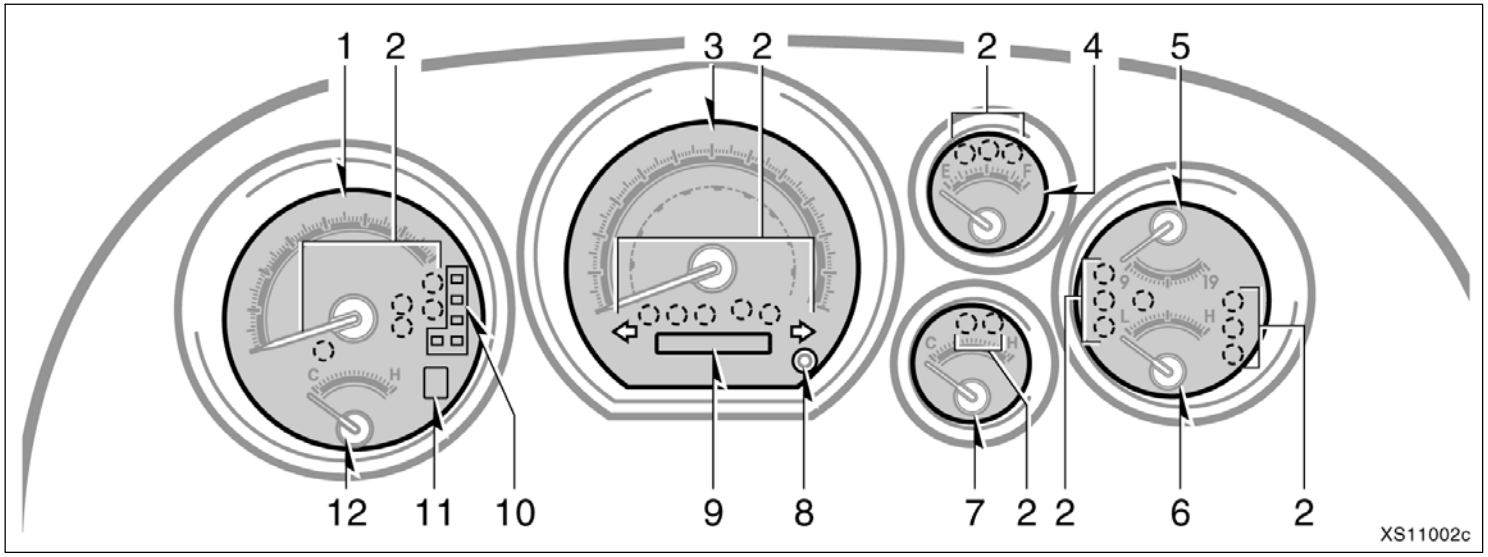

1. Tachometer
2. Service reminder indicators and indicator lights
3. Speedometer
4. Fuel gauge
5. Voltmeter
6. Oil pressure gauge
7. Engine coolant temperature gauge
8. Trip meter reset knob
9. Odometer and two trip meters
10. Automatic transmission shift position indicator lights
11. Automatic transmission shift range display
12. Automatic transmission fluid temperature gauge

▶Type B

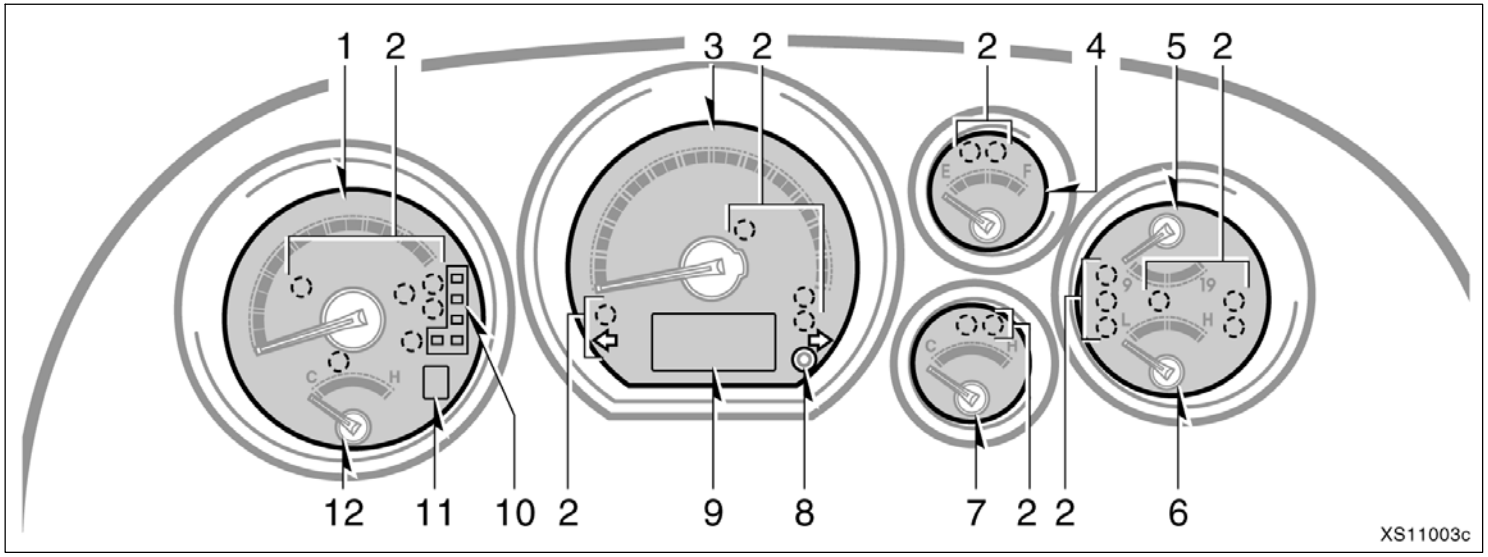

1. Tachometer
2. Service reminder indicators and indicator lights
3. Speedometer
4. Fuel gauge
5. Voltmeter
6. Oil pressure gauge
7. Engine coolant temperature gauge
8. Trip meter reset knob
9. Multi–information display
10. Automatic transmission shift position indicator lights
11. Automatic transmission shift range display
12. Automatic transmission fluid temperature gauge

Indicator symbols on the instrument panel

BRAKE or	Brake system warning light*1
	Driver's seat belt reminder light*1
PASSENGER	Front passenger's seat belt reminder light*1
PASSENGER AIRBAG ON OFF	Passenger airbag on–off indicator light
	Charging system warning light*1
	Low engine oil pressure warning light*1
CHECK	Malfunction indicator lamp*1
	Low fuel level warning light*1

	Master warning light*1
MAINT REQD	Engine oil replacement reminder light*1 (for vehicles sold in U.S.A.)
ABS or ABS	Anti–lock brake system warning light*1
	Open door warning light*1
	SRS warning light*1
	Tire pressure warning light*1
	Low windshield washer fluid level warning light*1
A/T OIL TEMP	Automatic transmission fluid temperature warning light*1
	Engine immobilizer/theft deterrent system indicator light

RSCA OFF	Roll sensing of curtain shield airbags off indicator light*4
	Headlight low beam indicator light
	Tail light indicator light
	Headlight high beam indicator light
	Turn signal indicator lights
4HI	High speed four–wheel drive indicator light*3 (four–wheel drive models)
4LO	Low speed four–wheel drive indicator light*3 (four–wheel drive models)
	Slip indicator light
VSC OFF	Vehicle stability control system off indicator/warning light*1

TOW HAUL	Tow/haul mode indicator light
AUTO LSD	“AUTO LSD” indicator light
CRUISE	Cruise control indicator light*2

*1: For details, see “Service reminder indicators and warning buzzers” on page 197 in Section 1–6.

*2: If this light flashes, see “Cruise control” on page 259 in Section 1–7.

*3: If this light flashes, see “Four–wheel drive system” on page 239 in Section 1–7.

*4: For details, see “—Roll sensing of curtain shield airbags off switch” on page 113 in Section 1–3.

SECTION 1 – 2

OPERATION OF INSTRUMENTS AND CONTROLS

Keys and Doors

Keys 18
Engine immobilizer system 21
Wireless remote control 22
Side doors 27
Power windows 30
Back window 33
Power back window 34
Tailgate 35
Hood 39
Theft deterrent system 39
Fuel tank cap 41
Electric moon roof 43

Keys (without engine immobilizer system)

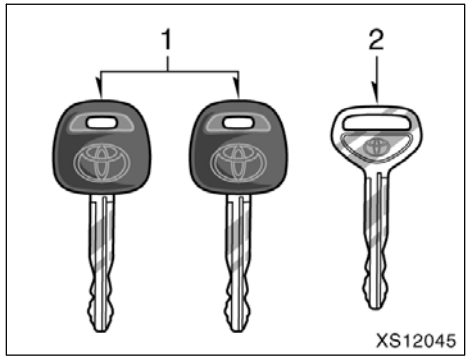

These keys work in every lock.

Your vehicle is supplied with two kinds of keys.

1. Master keys—These keys work in every lock.
2. Sub key—This key will not work in the glove box and tailgate.

To protect items locked in the glove box when using valet parking, leave the sub key with the attendant.

Since the side doors can be locked without a key, you should always carry a spare key in case you accidentally lock your keys inside the vehicle.

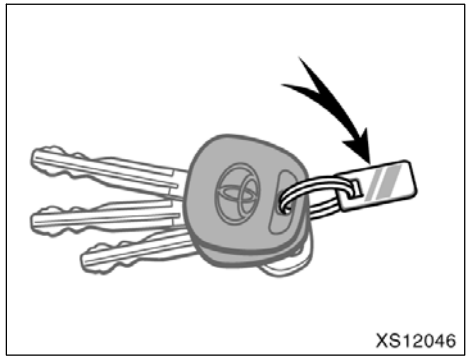

KEY NUMBER PLATE

Your key number is shown on the plate. Keep the plate in a safe place such as your wallet, not in the vehicle.

If you should lose your keys or if you need additional keys, duplicates can be made by a Toyota dealer using the key number.

We recommend writing down the key number and storing it in a safe place.

Keys (with engine immobilizer system)

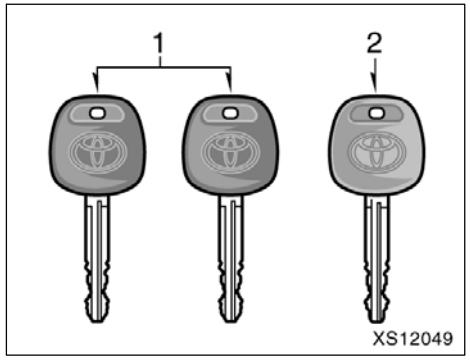

Your vehicle is supplied with the two kinds of keys.

1. Master keys (black)—These keys work in every lock. Your Toyota dealer will need one of them to make a new key with a built–in transponder chip.
2. Sub key (gray)—This key will not work in the glove box and tailgate.

A transponder chip for engine immobilizer system has been placed in the head of the master and sub keys. These chips are needed to enable the system to function correctly, so be careful not to lose these keys. If you make your own duplicate key, you will not be able to cancel the system or start the engine.

To protect items locked in the glove box when using valet parking, leave the sub key with the attendant.

Since the side doors can be locked without a key, you should always carry a spare key in case you accidentally lock your keys inside the vehicle.

NOTICE

When using a key containing a transponder chip, observe the following precautions:

- ***When starting the engine, do not use the key with a key ring resting on the key grip and do not press the key ring against the key grip. Otherwise the engine may not start, or may stop soon after it starts.***
- ***When starting the engine, do not use the key with other transponder keys around (including keys of other vehicles) and do not press other key plates against the key grip. Otherwise the engine may not start, or may stop soon after it starts. If this happens, remove the key once and then insert it again after removing other transponder keys (including keys of other vehicles) from the ring or while gripping or covering them with your hand to start the engine.***

◆*Do not bend the key grip.*

◆*Do not cover the key grip with any material that cuts off electromagnetic waves.*

◆*Do not knock the key hard against other objects.*

◆*Do not leave the key exposed to high temperatures for a long period, such as on the dashboard and hood under direct sunlight.*

◆*Do not put the key in water or wash it in an ultrasonic washer.*

◆*Do not use the key with electromagnetic materials.*

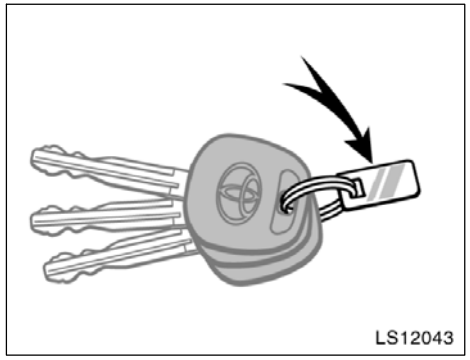

KEY NUMBER PLATE

Your key number is shown on the plate. Keep the plate in a safe place such as your wallet, not in the vehicle.

If you should lose your keys or if you need additional keys, duplicates can be made by a Toyota dealer using the key number.

We recommend writing down the key number and storing it in a safe place.

Engine immobilizer system

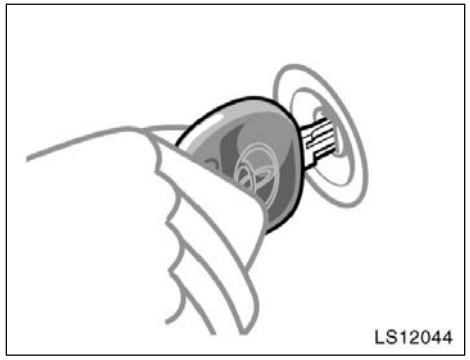

The engine immobilizer system is a theft prevention system. When you insert the key in the ignition switch, the transponder chip in the key's head transmits an electronic code to the vehicle. The engine will start only when the electronic code in the chip corresponds to the registered ID code for the vehicle.

Never leave the keys inside the vehicle when you leave the vehicle.

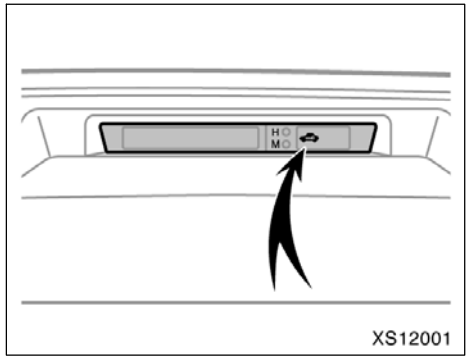

The system is automatically set when the key is removed from the ignition switch. The indicator light will start flashing to show the system is set.

If any of the following indicator conditions occurs, contact your Toyota dealer.

- The indicator light stays on except when the theft deterrent system is setting or activating. (See "Theft deterrent system" on page 39 in this Section.)
- The indicator light does not start flashing when the key is removed from the ignition switch.
- The indicator light flashes inconsistently.

Inserting the registered key in the ignition switch automatically cancels the system, which enables the engine to start. The indicator light will go off.

The system is maintenance–free.

For your Toyota dealer to make you a new key with built–in transponder chip, your dealer will need your key number and master key. However, there is a limit to the number of additional keys your Toyota dealer can make for you.

If you make your own duplicate key, you will not be able to cancel the system or start the engine.

NOTICE
Do not modify, remove or disassemble the engine immobilizer system. If any unauthorized changes or modifications are made, proper operation of the system cannot be guaranteed.

For vehicles sold in U.S.A.

FCCID:MOZRI–21BTY

This device complies with Part 15 of the FCC Rules. Operation is subject to the following two conditions:

(1) this device may not cause harmful interference, and (2) this device must accept any interference received, including interference that may cause undesired operation.

CAUTION

Changes or modifications not expressly approved by the party responsible for compliance could void the user's authority to operate the equipment.

For vehicles sold in Canada

This device complies with RSS–210 of Industry Canada. Operation is subject to the following two conditions:

(1) this device may not cause interference, and (2) this device must accept any interference, including interference that may cause undesired operation of the device.

Wireless remote control—

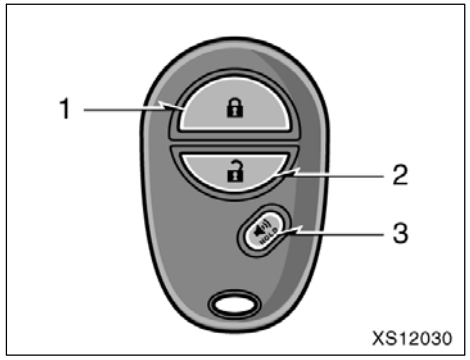

1. "🔒" (lock) switch
2. "🔓" (unlock) switch
3. "🔊" (alarm) switch

The wireless remote control system is designed to lock or unlock all doors or activate the alarm from a distance within approximately 1 m (3 ft.) of the vehicle.

When you operate any switch, push it slowly and securely.

The wireless remote control transmitter is an electronic component. Observe the following instructions in order not to cause damage to the transmitter.

- Do not leave the transmitter in places where the temperature becomes high such as on the dashboard.
- Do not disassemble it.
- Avoid knocking it hard against other objects or dropping it.
- Avoid putting it in water.

You can use up to 4 wireless remote control transmitters for the same vehicle. Contact your Toyota dealer for detailed information.

If the wireless remote control transmitter does not actuate the doors or alarm, or operate from a normal distance:

- Check for closeness to a radio transmitter such as a radio station or an airport which can interfere with normal operation of the transmitter.
- The battery may be depleted. Check the battery in the transmitter. To replace the battery, see "—Replacing battery" on page 25.

If you lose your transmitter, contact your Toyota dealer as soon as possible to avoid the possibility of theft, or an accident. (See "If you lose your wireless remote control transmitter" on page 518 in Section 4.)

For vehicles sold in U.S.A.

This device complies with Part 15 of the FCC rules. Operation is subject to the following two conditions:

(1) this device may not cause harmful interference, and (2) this device must accept any interference received, including interference that may cause undesired operation.

For vehicles sold in Canada

NOTE
Operation is subject to the following two conditions:

(1) this device may not cause interference, and (2) this device must accept any interference, including interference that may cause undesired operation of the device.

—Locking and unlocking doors

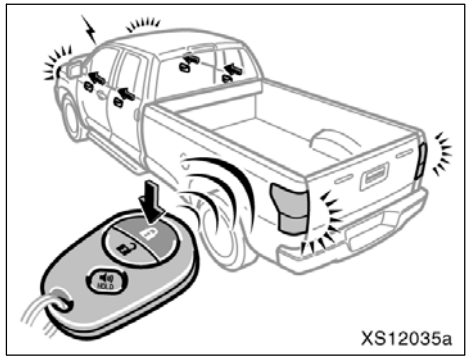

Locking operation

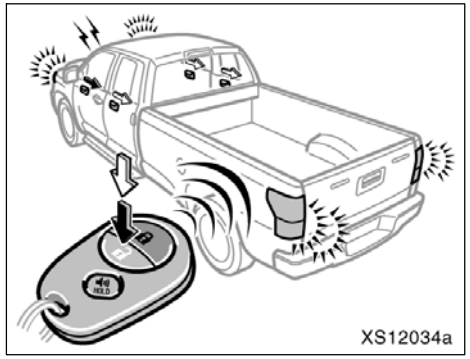

Unlocking operation

To lock and unlock all doors, push the switches of the transmitter slowly and securely.

To lock: Push the "🔒" (lock) switch. All the doors are locked simultaneously. At this time one beep will be heard, and the turn signal lights flash once.

Check to see that all the doors are securely locked after locking.

If any of the doors is not securely closed, locking cannot be performed by the "🔒" (lock) switch and a beep will sound continuously for 10 seconds. However, if the key is in the ignition switch, a beep will not sound.

To stop the beep, close all the doors securely or push the "🔓" (unlock) switch.

The beep and flashing turn signal lights can be disabled. If your vehicle is equipped with the multi–information display (For further information, see "Multi–information display" on page 187 in Section 1–6.), these can be changed by yourself. For details, contact your Toyota dealer.

To unlock: Push the "🔓" (unlock) switch once to unlock the driver's door alone. Pushing the switch twice within 3 seconds unlocks all the side doors and back door simultaneously. Each time the "🔓" (unlock) switch is pushed, two beeps will be heard, and the turn signal lights flash twice.

This double switch operation to unlock all the doors can be changed to a single switch operation. If your vehicle is equipped with the multi–information display (For further information, see "Multi–information display" on page 187 in Section 1–6.), it can be changed by yourself. For details, contact your Toyota dealer.

When you unlock all the doors using the wireless remote control, the Illuminated entry system, interior lights, personal lights and cargo lamp will be activated. (For further information, see "Interior lights" on page 170, "Personal lights" on page 171, "Illuminated entry system" on page 173 and "Cargo lamp" on page 174 in Section 1–5.)

You have 30 seconds to open a door after using the wireless remote unlock feature. If a door is not opened by then, all the doors will be automatically locked again.

The time for automatic door lock function can be changed. If your vehicle is equipped with the multi–information display (For further information, see "Multi–information display" on page 187 in Section 1–6.), it can be changed by yourself. For details, contact your Toyota dealer.

If the "🔒" (lock) or "🔓" (unlock) switch is kept pressed in, the locking the unlocking operation is not repeated. Release the switch and then push again.

—Activating alarm

Holding the "🔊" (alarm) switch blows the horn intermittently and flashes the headlights, tail lights, turn signal lights, interior light and personal lights.

The "🔊" switch is used to deter vehicle theft when you witness anyone attempting to break into or damage your vehicle.

The alarm will last for one minute. To stop alarm midway, push the "🔊" switch once again, lock or unlock a door with transmitter, or turn the ignition switch from the "LOCK" to "ON" position.

The alarm does not work when the ignition switch is in the "ON" position.

—Replacing battery

For replacement, use a CR2032 lithium battery or equivalent.

⚠ CAUTION

Special care should be taken to prevent small children from swallowing the removed transmitter battery or components.

NOTICE

- ***When replacing the battery, be careful not to lose the components.***
- ***Replace only with the same or equivalent type recommended by a Toyota dealer.***
- ***Dispose of used batteries according to the local laws.***

Replace the transmitter battery by following these procedures:

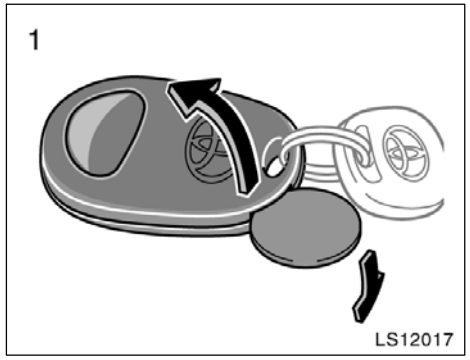

1. Using a coin or equivalent, open the transmitter case.

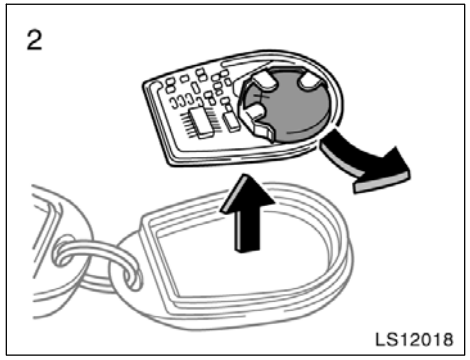

2. Remove the circuit board, then remove the discharged transmitter battery.

NOTICE

- ***Take care not to damage the circuit board.***
- ***Do not bend the terminals.***

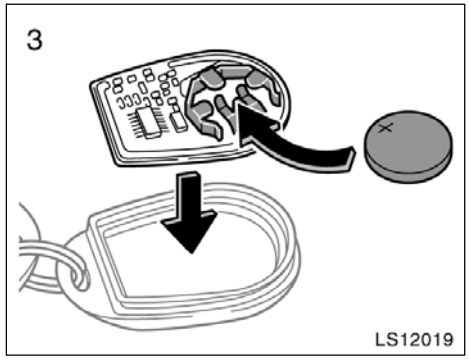

3. Put in a new transmitter battery with positive (+) side up. Install the circuit board into the transmitter case.

Close the transmitter case securely.

NOTICE

- ***Make sure the positive side and negative side of the transmitter battery are faced correctly.***
- ***Do not replace the battery with wet hands. Water may cause unexpected rust.***
- ***Do not touch or move any components inside the transmitter, or it may interfere with proper operation.***
- ***Be careful not to bend the electrode when inserting the transmitter battery and that dust or oils do not adhere to the transmitter case.***
- ***Close the transmitter case securely.***

After replacing the battery, check that the transmitter operates properly. If the transmitter still does not operate properly, contact your Toyota dealer.

Side doors

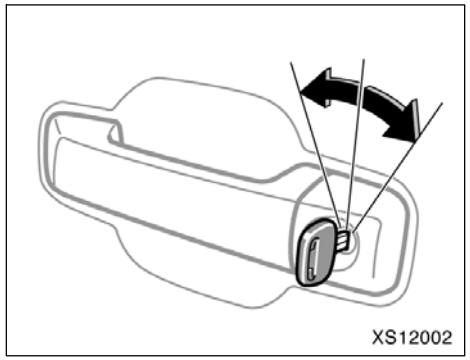

LOCKING AND UNLOCKING WITH KEY

Insert the key into the keyhole and turn it.

To lock: Turn the key forward.
To unlock: Turn the key backward.

Vehicles with power door lock system—All the doors lock and unlock simultaneously with the driver's door. In the driver's door lock, turning the key once will unlock the driver's door and twice in succession will unlock all the door simultaneously.

Vehicles with power door lock system—When the interior light/personal light main switch and cargo lamp switch is in the "DOOR" position and the driver's door is unlocked using the key, the Illuminated entry system, interior lights, personal lights and cargo lamp will be activated. (For further information, see "Interior lights" on page 170, "Personal lights" on page 171, "Illuminated entry system" on page 173 and "Cargo lamp" on page 174 in Section 1–5.)

When the interior light/personal light main switch and cargo lamp switch is in the "DOOR" position and any of the doors is opened, the light will come on. After all the doors are closed, the light remains on for about 15 seconds before fading out. (For further information, see "Interior lights" on page 170, "Personal lights" on page 171, "Illuminated entry system" on page 173 and "Cargo lamp" on page 174 in Section 1–5.)

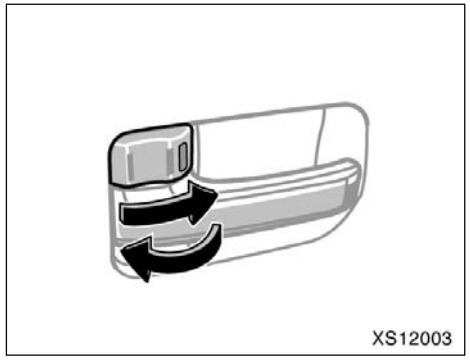

LOCKING AND UNLOCKING WITH INSIDE LOCK KNOB

Move the lock knob.

To lock: Push the knob forward.
To unlock: Pull the knob backward.

The front doors can be opened by pulling the inside handles even if the lock knobs are in the locked position.

⚠ CAUTION

Do not pull the inside handle of the front doors while driving. The doors will open and an accident may occur. Toyota strongly recommends that all children be placed in the rear seat of the vehicle.

Closing the door with the lock knob in the lock position will also lock the door. Be careful not to lock your keys in the vehicle.

Vehicles with power door lock system— The door will not lock if the key is left in the ignition switch when closing the front doors.

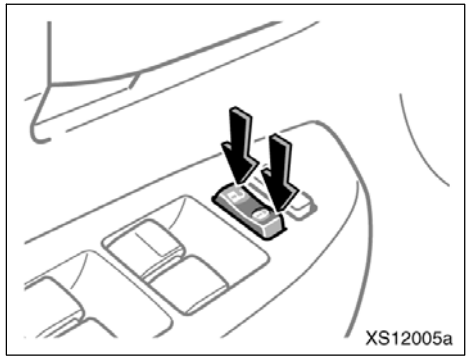

Driver's side

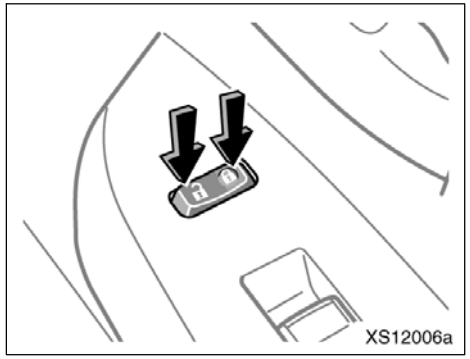

Passenger's side

LOCKING AND UNLOCKING WITH POWER DOOR LOCK SWITCH

Push the switch.

🔒 To lock: Push the switch down on the right side.
🔓 To unlock: Push the switch down on the left side.

Operating the switch simultaneously locks or unlocks all the doors.

If you do either of the following, no door can be unlocked with the power door lock switch.

- Lock all the doors with the key or wireless remote control transmitter when all the doors are closed.
- Open the driver's door or front passenger's door and move the inside lock knobs of both front doors to the lock position, then close the doors.

The power door lock switch can be reset in the following ways.

- Turn the ignition switch to the "ON" position.
- Unlock all the doors with the key or wireless remote control transmitter.

- Unlock the driver's door or front passenger's door with the inside lock knob, and then unlock all the doors with the power door lock switch.

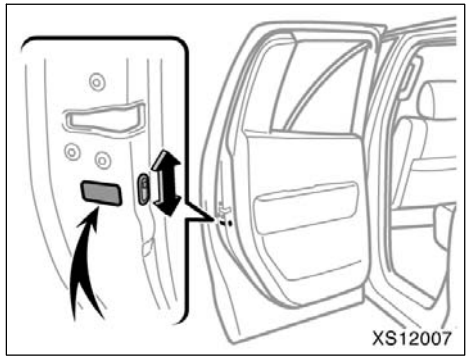

REAR DOOR CHILD–PROTECTORS (Double cab and Crew Max models)

Move the lock lever to the "LOCK" position as shown on the label.

When the child–protector is locked, you cannot open the rear door by the inside door handle. We recommend using this feature whenever small children are in the vehicle.

⚠ CAUTION

Before driving, be sure that the doors are closed and locked, especially when small children are in the vehicle. Along with the proper use of seat belts, locking the doors helps prevent the driver and passengers from being thrown out from the vehicle in an accident. It also helps prevent the doors from being opened unintentionally.

—Automatic door locking and unlocking functions

Vehicles with power door lock system—

Locking function—All doors are automatically locked when the vehicle speed goes above about 20 km/h (12 mph).

Unlocking function—All doors are automatically unlocked when the selector lever is moved to the “P” position with the engine started.

The following functions can be changed:

- Shift position linked auto lock.
- Driver’s door open linked auto unlock.

If your vehicle is equipped with the multi–information display (For further information, see “Multi–information display” on page 187 in Section 1–6.), these can be changed by yourself.

For details, contact your Toyota dealer.

Power windows

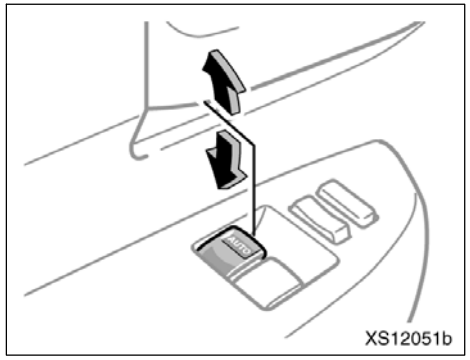

Regular cab models

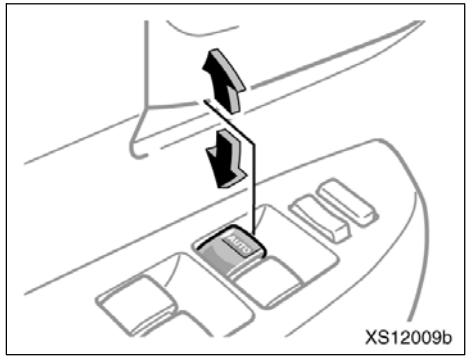

Double cab and Crew Max models

The windows can be operated with the switch on either front door (Regular cab models)/each door (Double cab and Crew Max models).

The power windows work when the ignition switch is in the “ON” position.

Key off operation: If both front doors are closed, they work for 43 seconds even after the ignition switch is turned off. They stop working when either front door is opened.

The indicator light (“AUTO”) on the switch tells you the switch can be operated.

OPERATING THE DRIVER’S WINDOW

Use the switch on the driver’s door.

Normal operation: The window moves as long as you hold the switch.

To open: Lightly push down the switch.
To close: Pull up the switch.

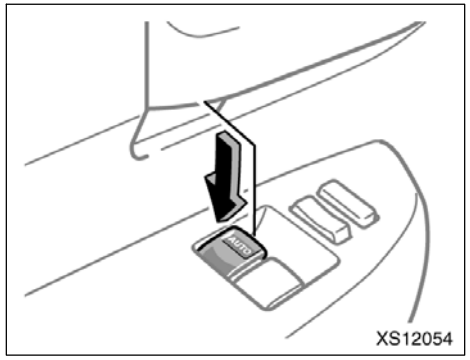

Regular cab models

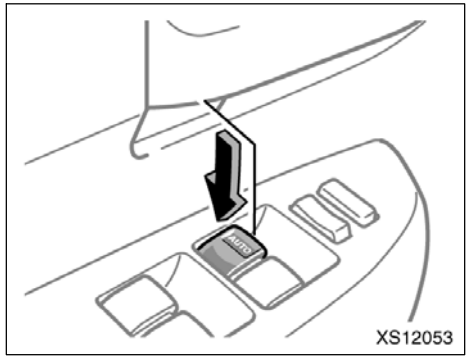

Double cab and Crew Max models

Automatic operation (to open only): Push the switch completely down and then release it. The window will fully open. To stop the window partway, lightly pull the switch up and then release it.

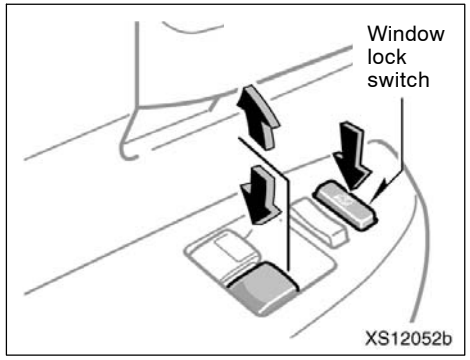

Driver's door switch (Regular cab models)

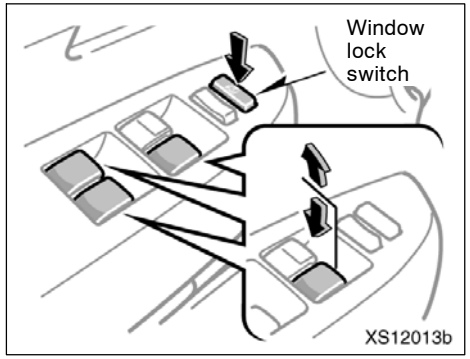

Driver's door switches (Double cab and Crew Max models)

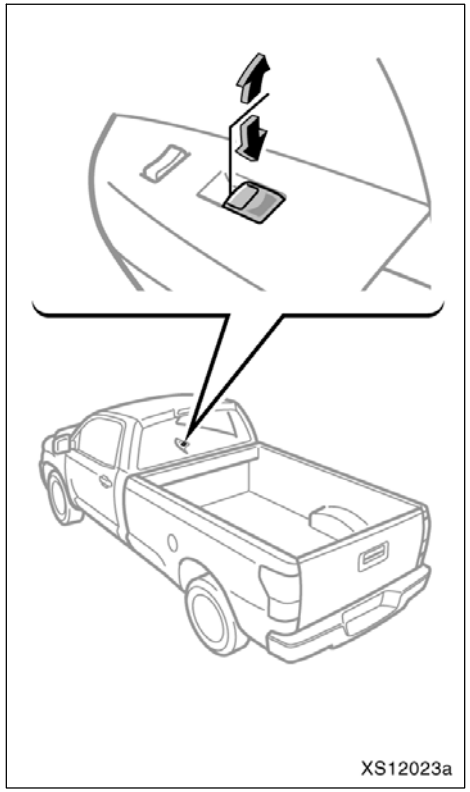

Passenger's door switch (Regular cab models)

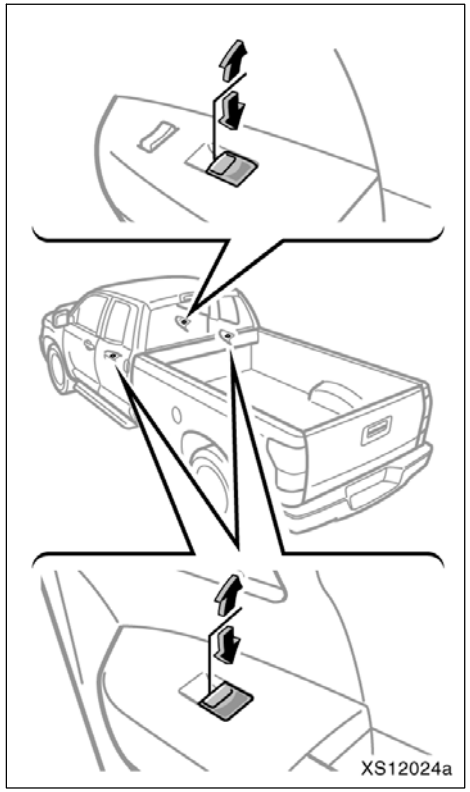

Passenger's door switches (Double cab and Crew Max models)

OPERATING THE PASSENGERS' WINDOWS

Use the switches on the passenger's door (Regular cab models)/passenger's doors (Double cab and Crew Max models) or the switch on the driver's door that controls each passenger's window.

The window moves as long as you hold the switch.

To open: Push down the switch.
To close: Pull up the switch.

If you push in the window lock switch on the driver's door, the passenger's window (Regular cab models)/passenger's windows (Double cab and Crew Max models) cannot be operated.

⚠ CAUTION

To avoid death or serious personal injury, you must do the following.

- **Before you close the power windows, always make sure there is nobody around the power windows. You must also make sure the heads, hands and other parts of the bodies of all occupants are kept completely inside the vehicle. If someone's neck, head or hands get caught in a closing window, it could result in death or serious injury. When anyone closes the power windows, make sure he or she operates the windows safely.**
- **When small children are in the vehicle, never let them use the power window switches without supervision. Use the window lock switch to prevent them from making unexpected use of the switches.**

- **Be sure to remove the ignition key when you leave your vehicle.**
- **Never leave anyone (particularly a small child) alone in your vehicle, especially with the ignition key still inserted. Otherwise, he/she could use the power window switches and get trapped in a window. Unattended person (particularly a small child) can be involved in a serious accident.**

Back window (on some models)

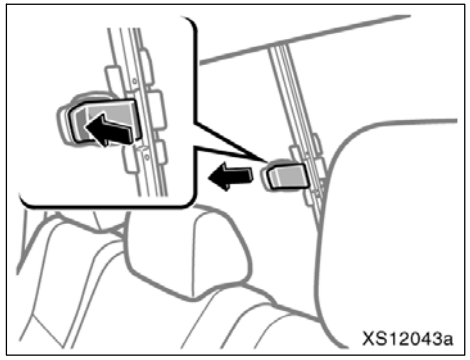

To open the rear window, push the lever and slide the window.

After closing the window, make sure it is completely closed.

Power back window (Crew Max models)

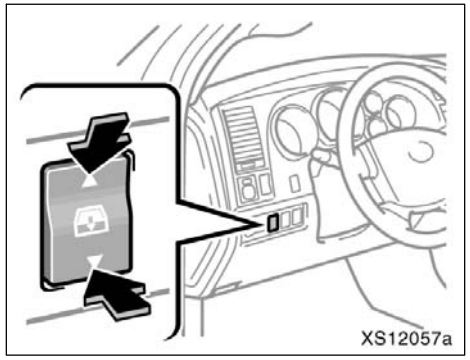

The back window can be operated with the switch on the instrument panel.

The ignition switch must be in the "ON" position.

Normal operation: The window moves as long as you hold the switch.

To open: Push the switch on the "▼" side.
To close: Push the switch on the "▲" side.

⚠ CAUTION

To avoid serious personal injury, you must do the following.

- **Before you close the power back window, always make sure there is nobody around the power back window. You must also make sure the heads, hands and other parts of the bodies of all occupants are kept completely inside the vehicle. If someone's neck, head or hands get caught in a closing window, it could result in death or serious injury. When anyone closes the power back window, make sure he or she operates the window safely.**
- **When small children are in the vehicle, never let them use the power back window switch without supervision.**
- **Be sure to remove the ignition key when you leave your vehicle.**
- **Never leave anyone (particularly a small child) alone in your vehicle, especially with the ignition key still inserted. Otherwise, he/she could use the power back window switch and get trapped in a window. Unattended person (particularly a small child) can be involved in a serious accident.**
- **Keep the back window closed while driving. This not only keeps the luggage from being thrown out but also prevents exhaust gases from entering the vehicle.**

Tailgate—

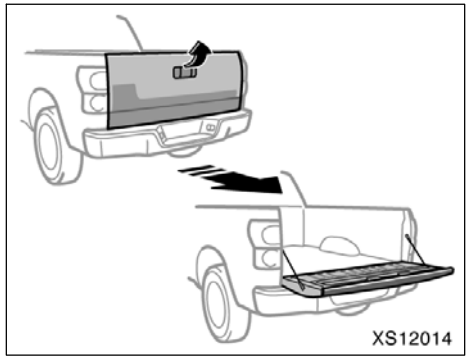

To open the tailgate, pull the handle up.

The support cables will hold the tailgate horizontal.

See "—Stowage precautions" on page 464 in Section 2 for precautions when loading luggage.

After closing the tailgate, try pulling it toward you to make sure it is securely locked.

NOTICE
Avoid driving with the tailgate open.

—Before removing the tailgate (with rear view monitor system only)

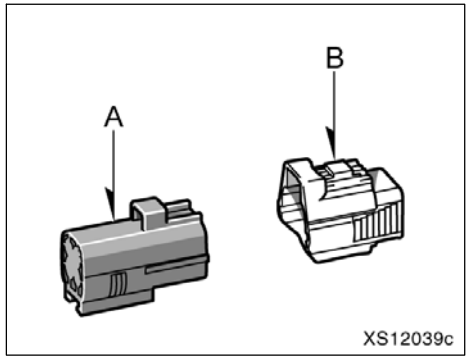

These connector covers are used when removing the tailgate, to prevent the wire harness connectors from being contaminated. Store the connector covers in the glove box in the plastic bag when not using.

Connector cover A—Gray connector cover
Connector cover B—White connector cover

⚠ CAUTION
Prior to removing the tailgate, disconnect the wire harnesses between the rear view monitor system camera and the vehicle. Failure to do so could cause damage to the vehicle and may result in personal injury.

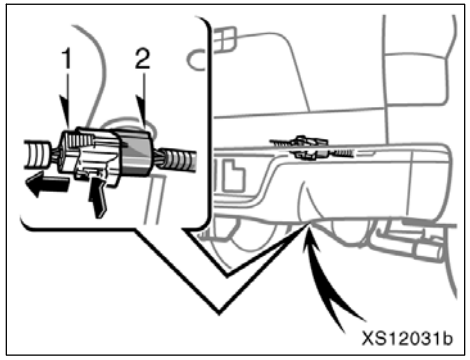

1. To disconnect the wire harness connectors, press and hold the lock of the connector 1 and pull apart. The connectors are located on the vehicle body frame, behind the bumper.

   Connector 1—Rear view monitor system camera wire harness connector (white)
   Connector 2—Vehicle wire harness connector (gray)

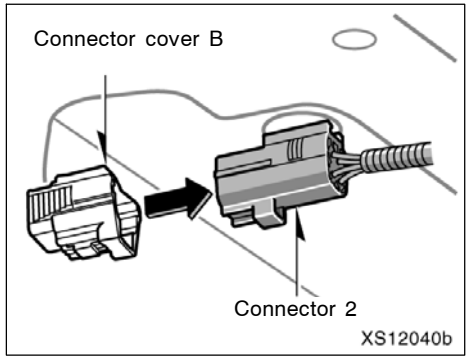

2. Attach the connector cover B (white) to the connector 2.

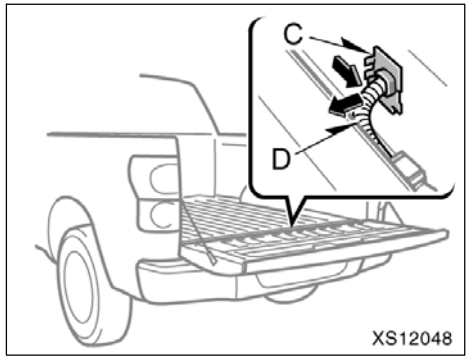

3. Lower the tailgate. Remove the protector C located in the vehicle bed by pressing the tabs and pulling the protector. Pull the wire harness D through the hole.

   C: Plastic wire protector
   D: Rear view monitor system camera wire harness

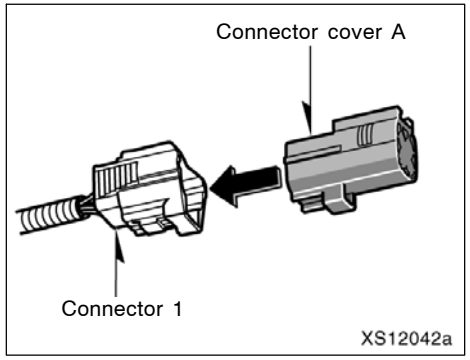

4. Attach the connector cover A (gray) to the connector 1 (white).

—Removal

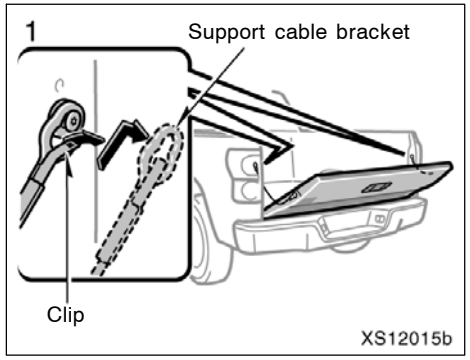

1. **Open the tailgate to the angle where you can release the brackets on the support cables from the lugs on both sides.**

To unhook the support cable bracket, keep pulling up the clip on the bracket and unhook the bracket.

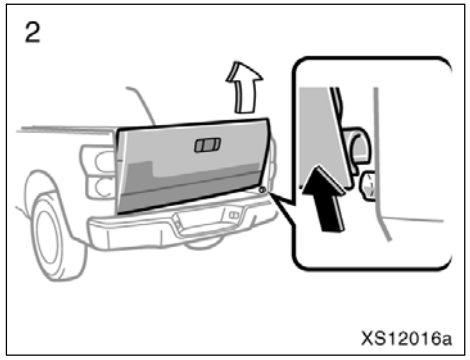

2. **Tilt the tailgate to about 45° from vertical and pull up the right side of the tailgate to unhook the right side.**

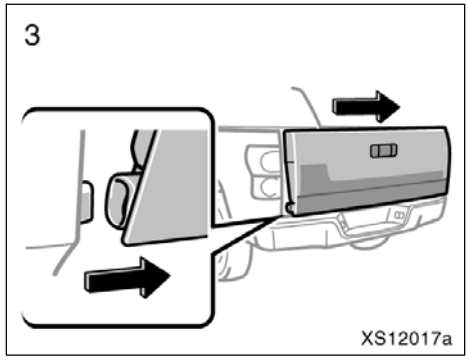

3. Tilt the tailgate up to about 15° open and slide the tailgate a little to the right to unhook the left side.

To attach the tailgate, follow the removal procedure in reverse order.

After closing the tailgate, try pulling it toward you to make sure it is securely closed.

We recommend you keep the tailgate closed when not in use.

NOTICE

- ***Make sure the support brackets are securely latched on both side panels when installing the tailgate.***
- ***With rear view monitor system— Store the removed tailgate with the back–up camera lens facing upward. Failure to do so could cause damage to the camera lens.***

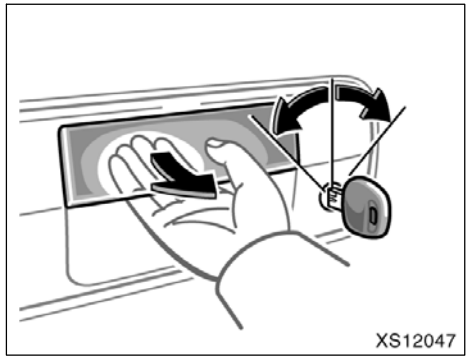

LOCKING AND UNLOCKING WITH KEY

Insert the master key into the keyhole and turn it to lock or unlock the tailgate.

To lock: Turn the key clockwise.

To unlock: Turn the key counterclockwise.

Hood

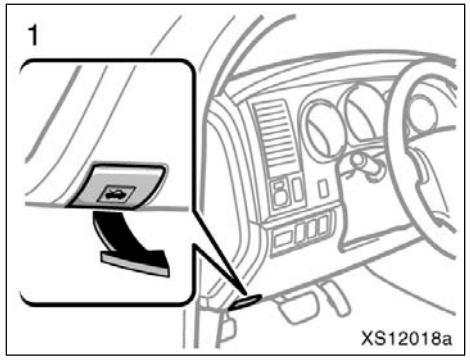

To open the hood:

1. **Pull the hood lock release lever. The hood will spring up slightly.**

⚠ CAUTION

Before driving, be sure that the hood is securely closed and locked. Otherwise, the hood may open unexpectedly while driving and an accident may occur.

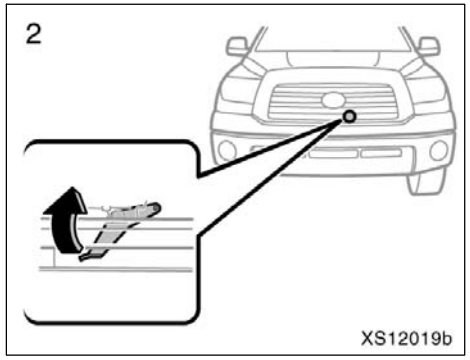

2. **In front of the vehicle, pull up the auxiliary catch lever and lift the hood.**

Before closing the hood, check to see that you have not forgotten any tools, rags, etc. Then lower the hood and make sure it locks into place. If necessary, press down gently on the front edge to lock it.

Theft deterrent system

The system sounds alarm and flashes lights when forcible entry is detected. The alarm is triggered if any of the doors or hood is forcibly unlocked or opened or the battery terminal is disconnected and then reconnected when the vehicle is locked.

On some models, the alarm also sounds, when someone attempts to break the side windows.

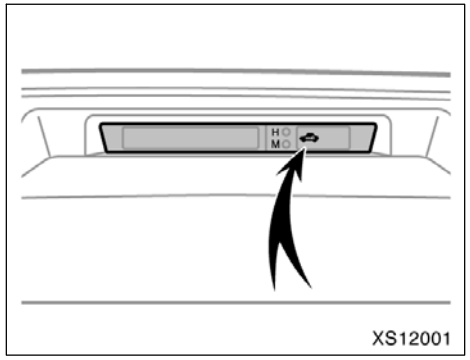

Indicator light

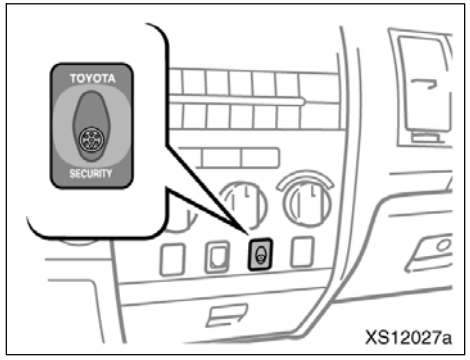

Glass breakage sensor (on some models)

SETTING THE SYSTEM

1. Turn the ignition key to the “LOCK” position and remove it.

The indicator light will start flashing when the key is removed from the ignition switch. (See “Engine immobilizer system” on page 21 in this Section for details.)

2. Have all passengers get out of the vehicle.
3. Close and lock all the doors and hood.

The indicator light will remain on when all the doors and hood are closed and locked.

The system will automatically be set after 30 seconds. When the system is set, the indicator light will start flashing again.

4. After making sure the indicator light starts flashing, you may leave the vehicle.

Never leave anyone in the vehicle when you set the system, because unlocking from the inside will activate the system.

WHEN THE SYSTEM IS SET

Activating the system

The system will sound the alarm under the following conditions:

- If any of the doors is unlocked or opened without the key or wireless remote control transmitter, or if the hood is forcibly opened
- If the battery terminal is disconnected and then reconnected

Vehicles with the glass breakage sensor—

- The side windows are tapped or broken.

The indicator light will come on when the system is activated.

If the alarm has been activated and the key is not in the ignition switch, all the doors will re–lock automatically.

After one minute, the alarm will automatically stop and the indicator light will start flashing again.

Reactivating the alarm

Once set, the system automatically resets the alarm after the alarm stops.

The alarm will activate again under the same circumstances described in “Activating the system”.

Stopping the alarm

The alarm will be stopped by the following two ways:

- Turn the ignition switch from the “LOCK” to “ON” position.
- Unlock any of the doors with the key or wireless remote control transmitter.

These ways cancel the system at the same time.

TESTING THE SYSTEM

1. Open all the windows.
2. Set the system as described above. The side doors should be locked with the key or wireless remote control transmitter. Be sure to wait until the indicator light goes off or starts flashing.
3. Unlock any door from the inside. The system should activate the alarm.
4. Stop the alarm as described above.
5. Repeat this operation for the other doors and hood. When testing the hood, also check that the system is activated when the battery terminal is disconnected and then reconnected.

If the system does not work properly, have it checked by your Toyota dealer.

Fuel tank cap

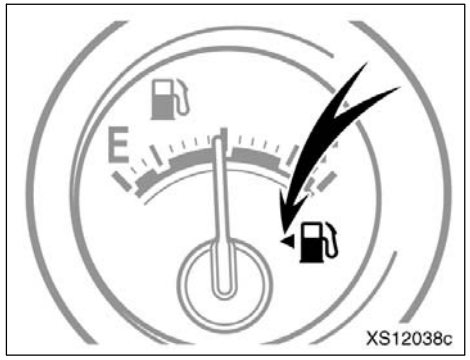

This indicates that the fuel filler door is on the left side of your vehicle.

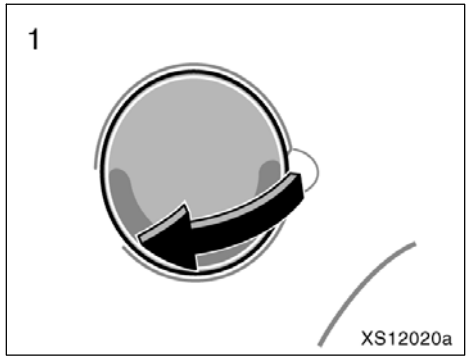

1. **To open the fuel filler door, pull the door toward out as shown.**

   When refueling, turn off the engine.

⚠ CAUTION

- **Do not smoke, cause sparks or allow open flames when refueling. The fumes are flammable.**
- **When opening the cap, do not remove the cap quickly. In hot weather, fuel under pressure could cause injury by spraying out of the filler neck if the cap is suddenly removed.**

- **Do not fill a fuel container in the bed under any circumstances. A static electricity charge could cause a spark and fire hazard. The proper procedure is to place an approved fuel container on the ground away from the truck for filling.**

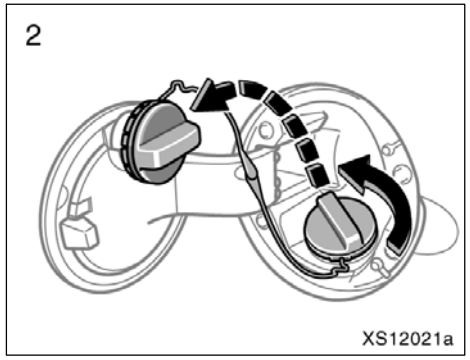

2. **To remove the fuel tank cap, turn the cap slowly counterclockwise, then pause slightly before removing it. After removing the cap, hang it on the cap hanger.**

It is not unusual to hear a slight swoosh when the cap is opened.

When installing the cap, turn it clockwise until one click is heard, in order to fully close it. The cap returns slightly when your hand is released from the cap after closure, however this does not cause any problems.

If the cap is not tightened securely, the malfunction indicator lamp comes on. Make sure the cap is tightened securely.

The indicator lamp goes off after driving several times. If the indicator lamp does not go off, contact your Toyota dealer as soon as possible.

⚠ CAUTION

- **Make sure the cap is installed securely to prevent fuel spillage in the event of an accident.**
- **Use only a genuine Toyota fuel tank cap for replacement. It is designed to regulate fuel tank pressure.**

Electric moon roof (on some Crew Max models)

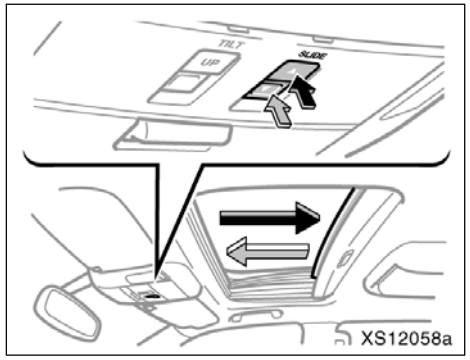

Sliding operation

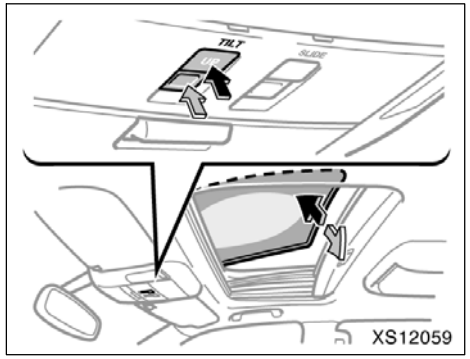

Tilting operation

To operate the moon roof, use the switches on the overhead console.

The moon roof works when the ignition switch is in the “ON” position.

The sun shade can be opened or closed by hand.

Sliding operation—

To open: Push and hold the “SLIDE” switch for 1 second on the “▲” (rear) side.

The roof will fully open automatically. To stop the roof partway, push one of the moon roof switches briefly.

When you quickly push and release the switch, the moon roof will open while the switch is being pushed and stop when released.

The sun shade will be opened together with the roof.

When the moon roof is opened fully, the deflector will raise to reduce the entering of the strong wind. The angle of the deflector will be adjusted according to the vehicle speed.

To close: Push and hold the “SLIDE” switch for 1 second on the “▼” (front) side.

The roof will fully close automatically. To stop the roof partway, push one of the moon roof switches briefly.

When you quickly push and release the switch, the moon roof will close while the switch is being pushed and stop when released.

Tilting operation—

To tilt up: Push and hold the “TILT” switch for 1 second on the “UP” side.

The roof will fully tilt up automatically. To stop the roof partway, push one of the moon roof switches briefly.

When you quickly push and release the switch, the moon roof will tilt up while the switch is being pushed and stop when released.

To tilt down: Push and hold the “TILT” switch for 1 second on the indented (front) side.

The roof will fully tilt down automatically. To stop the roof partway, push one of the moon roof switches briefly.

When you quickly push and release the switch, the moon roof will tilt down while the switch is being pushed and stop when released.

Key off operation: If both front doors are closed, the moon roof works for about 43 seconds even after the ignition switch is turned off. It stops working when either door is opened.

Jam protection function:

- If something gets caught between the moon roof and frame during slide closing operation, the moon roof stops and opens, and the deflector stops and raises fully.
- If something gets caught between the moon roof and frame during tilting down operation, the moon roof stops and opens fully.

If the moon roof receives a strong impact, this function may work even if nothing is caught.

If the moon roof does not operate automatically or the jam protection function does not operate correctly, you should normalize the moon roof.

To normalize the moon roof, push and hold the switch toward the “UP” (tilt up) side or “▼” (sliding close) side. The moon roof will tilt up and down, then release the switch.

Make sure that the moon roof opens and closes automatically. If the moon roof cannot be operated properly, have it checked by your Toyota dealer.

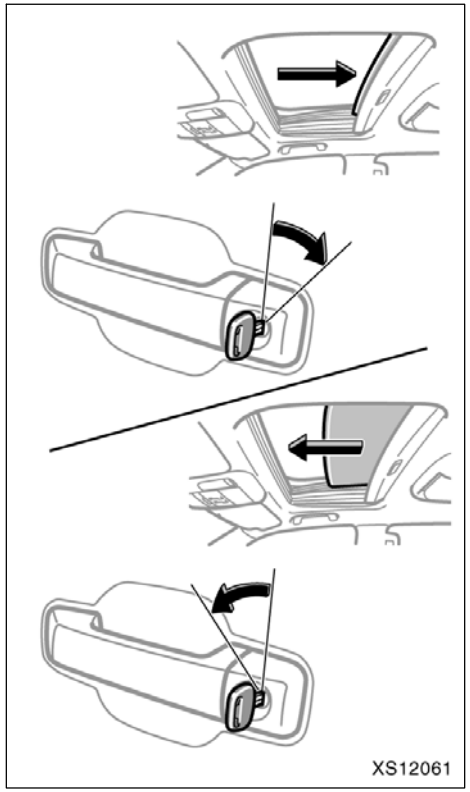

OPERATING FROM OUTSIDE

The moon roof can be opened and closed with the key operation in the driver's door keyhole.

To open: Turn the key fully backward and hold it.

After the door is unlocked, the moon roof begins to open. To stop in the middle, return the key.

To close: Turn the key fully forward and hold it.

After the door is locked, the moon roof begins to close. To stop in the middle, return the key.

⚠ CAUTION

To avoid death or serious personal injury, you must do the following.

- **While the vehicle is moving, always keep the heads, hands and other parts of the bodies of all occupants away from the roof opening. Otherwise, they could be killed or seriously injured if the vehicle stops suddenly or if the vehicle is involved in an accident.**
- **Before you close the moon roof, always make sure there is nobody around the moon roof. You must also make sure nobody places his or her head, hands and other parts of the body in the roof opening. If someone's neck, head or hands get caught in the closing roof, it could result in death or serious injury. When anyone closes the moon roof, first make sure it is safe to do so.**
- **Be sure to remove the ignition key when you leave your vehicle.**
- **Never leave anyone (particularly a small child) alone in your vehicle, especially with the ignition key still inserted. Otherwise, he/she could use the moon roof switch and get trapped in the roof opening. Unattended person (particularly a small child) can be involved in a serious accident.**
- **Never sit on top of the vehicle around the roof opening.**
- **Never try jamming any part of your body to activate the jam protection function intentionally, as it could result in death or serious injury.**

- **The jam protection function may not work if something gets caught just before the moon roof is fully closed.**

SECTION 1 – 3

OPERATION OF INSTRUMENTS AND CONTROLS

Occupant restraint systems

Seats 48
Front seats 48
Driving position memory system 56
Rear seats 58
Head restraints 62
Armrest 64
Seat heaters 64
Seat belts 65
SRS airbags 75
Child restraint 114

Seats

While the vehicle is being driven, all vehicle occupants should have the seatback upright, sit well back in the seat and properly wear the seat belts provided.

⚠ CAUTION

- **Do not drive the vehicle unless the occupants are properly seated. Do not allow any passengers to sit on top of a folded–down seatback, or in the luggage compartment or cargo area. Persons not properly seated and/or not properly restrained by seat belts can be killed or severely injured in the event of emergency braking or a collision.**
- **During driving, do not allow any passengers to stand up or move around between seats. Otherwise, death or severe injuries can occur in the event of emergency braking or a collision.**

Front seats—
—Front seat precautions

Driver seat

⚠ CAUTION

The SRS driver airbag deploys with considerable force, and can cause death or serious injury especially if the driver is very close to the airbag. The National Highway Traffic Safety Administration ("NHTSA") advises:

Since the risk zone for driver airbag is the first 50—75 mm (2—3 in.) of inflation, placing yourself 250 mm (10 in.) from your driver airbag provides you with a clear margin of safety. This distance is measured from the center of the steering wheel to your breastbone. If you sit less than 250 mm (10 in.) away now, you can change your driving position in several ways:

- **Move your seat to the rear as far as you can while still reaching the pedals comfortably.**
- **Slightly recline the back of the seat. Although vehicle designs vary, many drivers can achieve the 250 mm (10 in.) distance, even with the driver seat all the way forward, simply by reclining the back of the seat somewhat. If reclining the back of your seat makes it hard to see the road, raise yourself by using a firm, non–slippery cushion, or raise the seat if your vehicle has that feature.**
- **If your steering wheel is adjustable, tilt it downward. This points the airbag toward your chest instead of your head and neck.**

The seat should be adjusted as recommended by NHTSA above, while still maintaining control of the foot pedals, steering wheel, and your view of the instrument panel controls.

Front passenger seats

CAUTION

The SRS front passenger airbag also deploys with considerable force, and can cause death or serious injury especially if the front passenger is very close to the airbag. The front passenger seat should be as far from the airbag as possible with the seatback adjusted, so the front passenger sits upright.

Front seats

CAUTION

The SRS side airbags are installed in the driver and front passenger seats. Observe the following precautions.

- **Do not lean against the front door when the vehicle is in use, since the side airbag inflates with considerable speed and force. Otherwise, you may be killed or seriously injured.**
- **Do not use seat accessories which cover the area where the side airbags inflate. Such accessories may prevent the side airbags from activating correctly, causing death or serious injury.**
- **Do not modify or replace the seats or upholstery of the seats with side airbags. Such change may prevent the side airbag system from activating correctly, disable the system, or cause the side airbags to inflate accidentally, resulting in death or serious injury.**

—Seat adjustment precautions

CAUTION

- **Do not adjust the seat while the vehicle is moving as the seat may unexpectedly move and cause the driver to lose control of the vehicle.**
- **Be careful that the seat does not hit a passenger or luggage.**
- **After adjusting the seat position, release the lever and try sliding the seat forward and backward to make sure it is locked in position.**
- **After adjusting the seatback, push your body back against the seat to make sure the seat is locked in position.**
- **Do not put objects under the seats. Otherwise, the objects may interfere with the seat–lock mechanism or unexpectedly push up the seat position adjusting lever and the seat may suddenly move, causing the driver to lose control of the vehicle.**

—Adjusting front seats (manual seat)

- **While adjusting the seat, do not put your hands under the seat or near the moving parts. Otherwise, your hands or fingers may be caught and injured.**

Separate seats (Regular cab models)

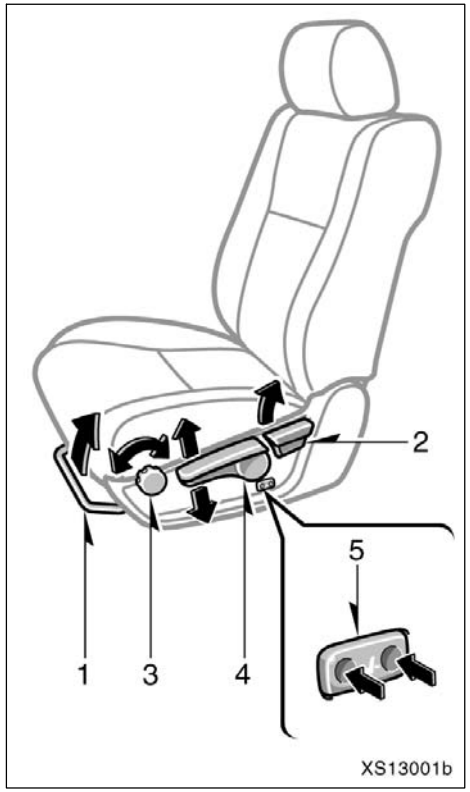

Separate seats (Double cab and Crew Max models)

1. **SEAT POSITION ADJUSTING LEVER**

   Hold the center of the lever and pull it up. Then slide the seat to the desired position with slight body pressure and release the lever.

2. **SEATBACK ANGLE ADJUSTING LEVER**

   Lean forward and pull the lever up. Then lean back to the desired angle and release the lever.

3. **DRIVER'S SEAT CUSHION ANGLE ADJUSTING KNOB**

   To change the angle of the seat cushion on the front side, turn the knob either way.

4. **DRIVER'S SEAT HEIGHT ADJUSTING LEVER**

   To change the height of the seat, pull up or push down the lever.

5. **DRIVER'S SEAT LUMBAR SUPPORT ADJUSTING SWITCH**

   Push the switch on either side.

   The amount of lumbar support will change while the switch is pushed.

⚠ CAUTION

Avoid reclining the seatback any more than needed. The seat belts provide maximum protection in a frontal or rear collision when the driver and the front passenger are sitting up straight and well back in the seats. If you are reclined, the lap belt may slide past your hips and apply restraint forces directly to the abdomen or your neck may contact the shoulder belt. In the event of a frontal collision, the more the seat is reclined, the greater the risk of death or personal injury.

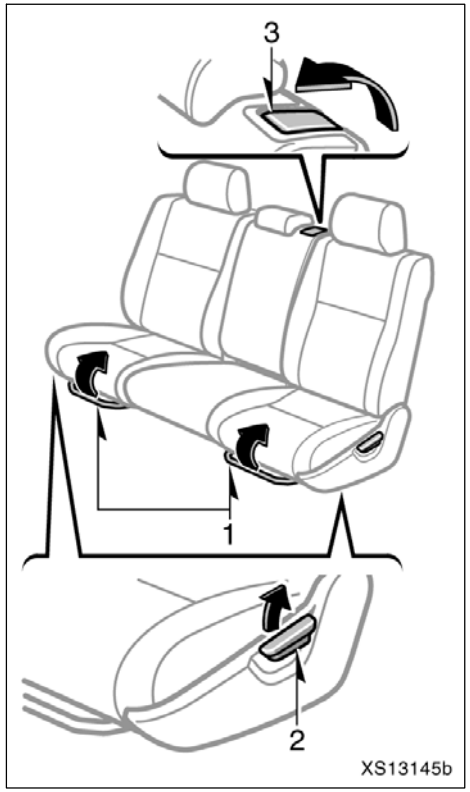

Bench seats (Regular cab models)

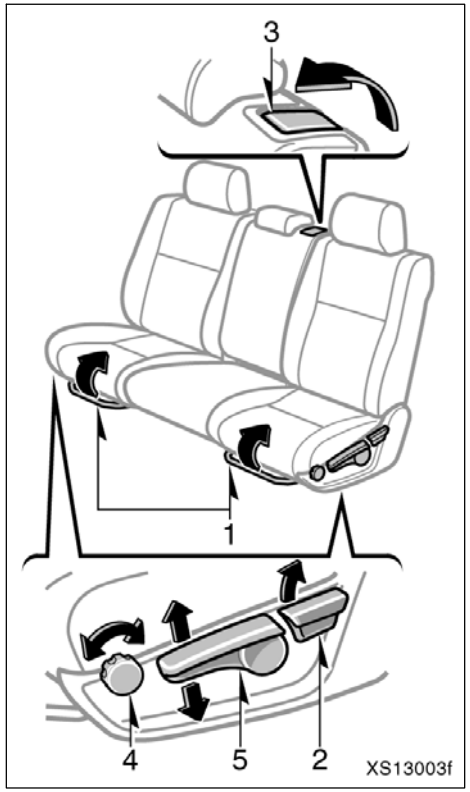

Bench seats (Double cab and Crew Max models)

1. **SIDE SEAT POSITION ADJUSTING LEVERS**

   Hold the center of the lever and pull it up. Then slide the seat to the desired position with slight body pressure and release the lever.

2. **SIDE SEATBACK ANGLE ADJUSTING LEVERS**

   Lean forward and pull the lever up. Then lean back to the desired angle and release the lever.

3. **CENTER SEAT SEATBACK ANGLE ADJUSTING LEVER**

   Pull the lever up. Then lean back to the desired angle and release the lever.

4. **DRIVER'S SEAT CUSHION ANGLE ADJUSTING KNOB**

   To change the angle of the seat cushion on the front side, turn the knob either way.

5. **DRIVER'S SEAT HEIGHT ADJUSTING LEVER**

   To change the height of the seat, pull up or push down the lever.

⚠ CAUTION

Avoid reclining the seatback any more than needed. The seat belts provide maximum protection in a frontal or rear collision when the driver and the front passenger are sitting up straight and well back in the seats. If you are reclined, the lap belt may slide past your hips and apply restraint forces directly to the abdomen or your neck may contact the shoulder belt. In the event of a frontal collision, the more the seat is reclined, the greater the risk of death or personal injury.

—Adjusting front seats (power seat)

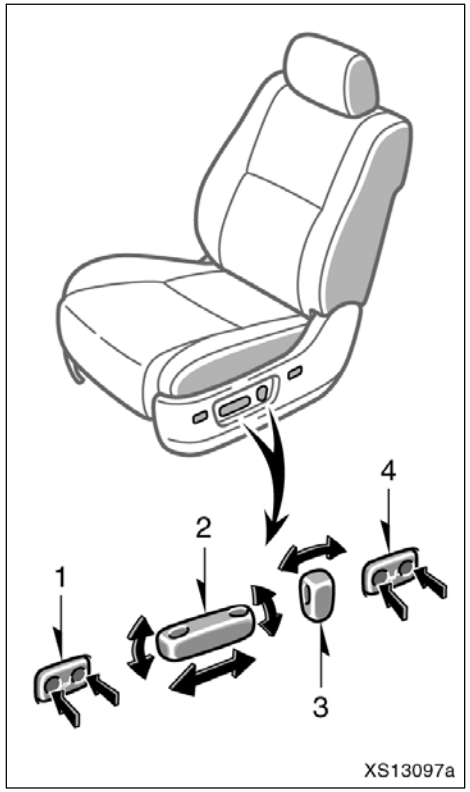

Driver's seat

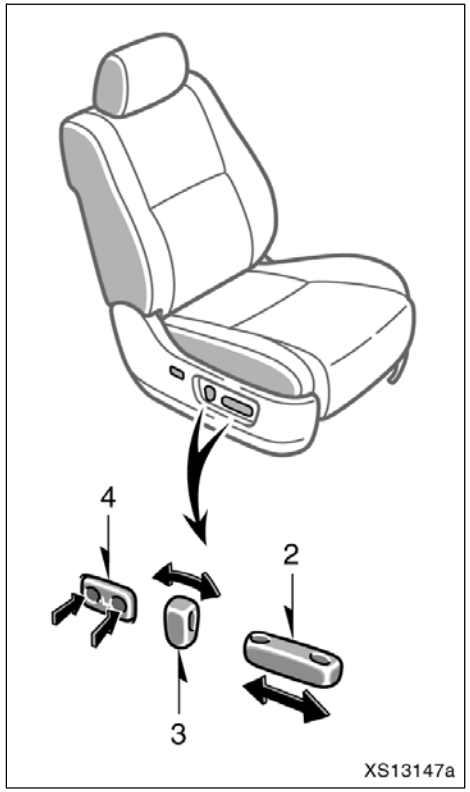

Front passenger's seat

1. **DRIVER'S SEAT LEG SUPPORT ADJUSTING SWITCH (on some models)**

   Operating this switch raises the front edge of the seat cushion.

   Push the switch on either side.

   Releasing the switch will stop the seat cushion at that position.

   Do not place anything under the front seats, as this might interfere with the seat movement.

2. **DRIVER'S SEAT: SEAT POSITION, SEAT HEIGHT AND SEAT CUSHION ANGLE ADJUSTING SWITCH**

   PASSENGER'S SEAT: SEAT POSITION ADJUSTING SWITCH

   Move the control switch in the desired direction.

   Releasing the switch will stop the seat at that position.

   Do not place anything under the front seats, as this might interfere with the seat movement.

3. **SEATBACK ANGLE ADJUSTING SWITCH**

   Move the control switch in the desired direction.

   Releasing the switch will stop the seatback at that position.

⚠ CAUTION

Avoid reclining the seatback any more than needed. The seat belts provide maximum protection in a frontal or rear collision when the driver and the front passenger are sitting up straight and well back in the seats. If you are reclined, the lap belt may slide past your hips and apply restraint forces directly to the abdomen or your neck may contact the shoulder belt. In the event of a frontal collision, the more the seat is reclined, the greater the risk of death or serious injury.

4. **SEAT LUMBER SUPPORT ADJUSTING SWITCH**

   Push the switch on either side.

   The amount of lumbar support will change while the switch is pushed.

—Folding front passenger's seat (Regular cab models)

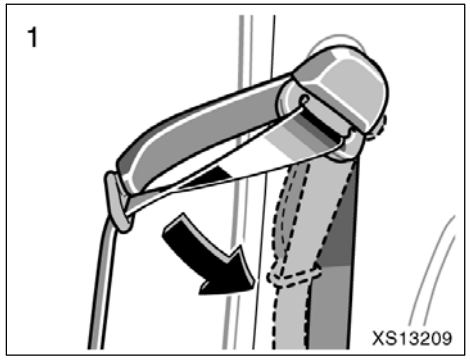

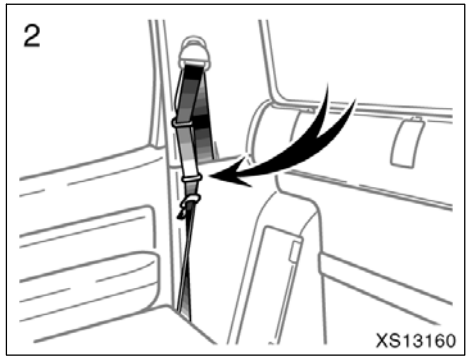

BEFORE FOLDING FRONT PASSENGER'S SEAT

1. **Push the seat belt hanger down as far as it will go when it is in the raised position.**

2. **Make sure the shoulder belt passes through the hanger when folding the front passenger's seat.**

   This prevents the shoulder belt from being damaged.

⚠ CAUTION

The seat belt must be removed from the hanger when the seat belt is in use.

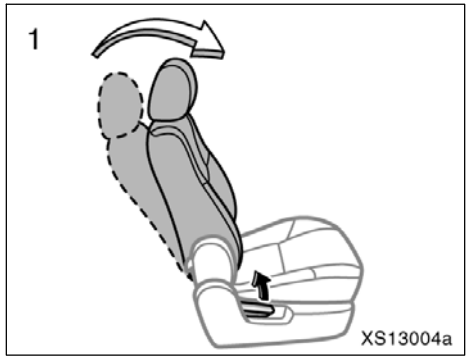

1. **Pull the seatback angle adjusting lever and raise the seatback to its upright position.**

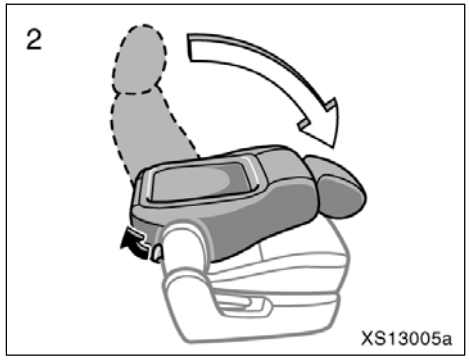

2. **Pull the seatback folding lever and fold the seatback down.**

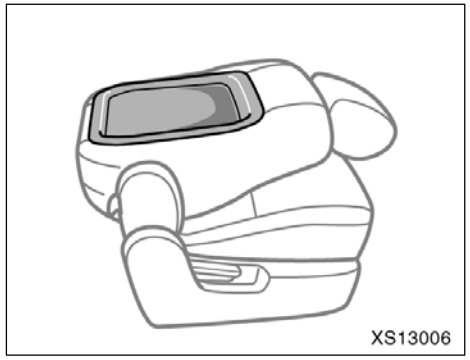

You should use the seatback as a temporary table only when the vehicle is stopped.

⚠ CAUTION

To avoid death or serious injury:

- **Do not set up the seatback table while the vehicle is moving.**
- **Do not sit on the folded seatback.**
- **Make sure the front passenger's seat is securely locked in sliding position when you set the seat as a temporary table.**

NOTICE

To prevent damage to the seat, avoid putting heavy loads on the temporary table.

Driving position memory system (on some models)

This system can memorize the position of the driver's seat, the tilt and telescopic steering and outside rear view mirrors, and recall them at the touch of a button.

Buttons "1" and "2" can memorize two separate positions.

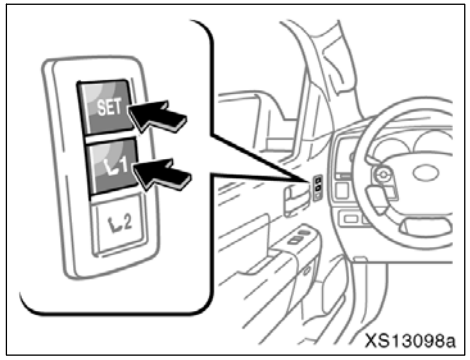

SETTING THE DRIVING POSITION

The ignition switch must be in the "ON" position and the selector lever is in the "P" position.

1. **Adjust the driver's seat, tilt and telescopic steering and outside rear view mirrors to the desired position.**
2. **While pushing the "SET" button, push button "1" or "2" until a beep in heard.**

The system can memorize up to 2 positions by repeating the above steps. If step 2 is performed when both buttons "1" and "2" are memorized, the previous position will be erased and a new position will be set.

To make only slight changes to an already memorized position, the easiest way is to first activate the memorized position, then make the desired changes and perform step 2 above.

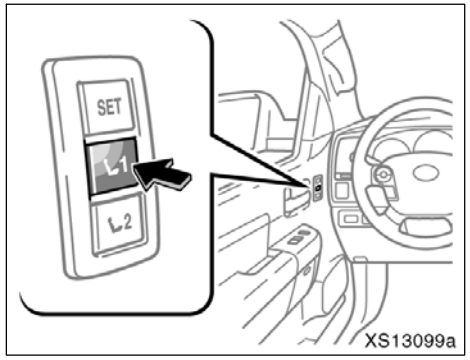

RECALLING THE MEMORIZED POSITION

When you push button "1" or "2", a beep will sound and the driving position will be automatically adjusted to the position recorded for that button.

The memorized position can be recalled under the following conditions:

- The ignition switch is in the "ON" position and the selector lever is in the "P" position.
- The key is not in the ignition switch and less than 30 seconds have passed since opening the driver's door.

To stop the operation, push any driving position memory button.

To reactivate the system, push the button "1" or "2" again.

If the vehicle's battery is disconnected, the memory will be erased and the positions will have to be set again.

⚠ CAUTION

- **Do not start the vehicle while the adjustment are being made.**
- **Take care not to select the wrong button, or the seat could strike the rear passenger or hit your body against the steering wheel. If this happens, you can stop the movement by pressing another driving position memory switch, or depressing the brake pedal.**

Rear seats—
—Rear seat precautions

⚠ CAUTION

- **Do not adjust the seat while the vehicle is moving.**
- **Be careful that the seat does not hit a passenger or luggage.**
- **Be careful not to get your hands or feet pinched in the seat.**
- **After adjusting the seat position, release the lever and try sliding the seat forward and backward to make sure it is locked in position.**
- **After adjusting the seatback, push your body back against the seat to make sure the seat is locked in position.**

- **When returning the seatback to the upright position, observe the following precautions in order to prevent personal injury in a collision or sudden stop:**

  Make sure the seatback is securely locked by pushing forward and rearward on the top of the seatback. Failure to do so will prevent the seat belt from operating properly.

  Make sure the seat belts are not twisted or caught in the seatback and are arranged in their proper position and are ready to use.

Folding down the rear seatbacks will enlarge the luggage compartment. See "—Stowage precautions" on page 464 in Section 2 for precautions when loading luggage.

—Adjusting rear seats (Crew Max models)

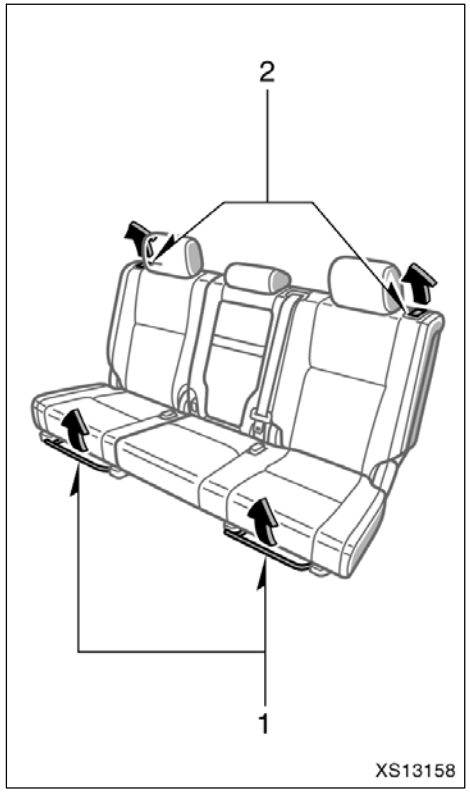

1. SEAT POSITION ADJUSTING LEVERS

Hold the center of the lever and pull it up. Then slide the seat to the desired position with slight body pressure and release the lever.

2. SEATBACK ANGLE ADJUSTING LEVERS

Pull the lever up. Then lean back to the desired angle and release the lever.

⚠ CAUTION

- Do not adjust the seat while the vehicle is moving.
- Be careful that the seat does not hit a passenger or luggage.

- Avoid reclining the seatback any more than needed. The seat belts provide maximum protection in a frontal or rear collision when the passengers are sitting up straight and well back in the seats. If you are reclined, the lap belt may slide past your hips and apply restraint forces directly to the abdomen or your neck may contact the shoulder belt. In the event of a frontal collision, the more the seat is reclined, the greater the risk of death or serious injury.
- After adjusting the seat position, release the lever and try sliding the seat forward and backward to make sure it is locked in position.
- After adjusting the seatback, push your body back against the seat to make sure the seat is locked in position.

NOTICE

Do not fold the rear seat seatback forward with the luggage cover hooks attached.

—Raising rear seat cushion (Double cab models)

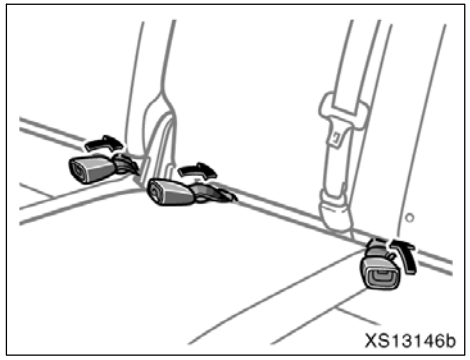

BEFORE RAISING REAR SEAT CUSHION

1. Stow the rear seat belt buckles as shown in the illustration.

This prevents the seat belt buckles from falling out when you fold the seatback.

NOTICE

The seat belt and buckles must be stowed before you raise the rear seats cushion.

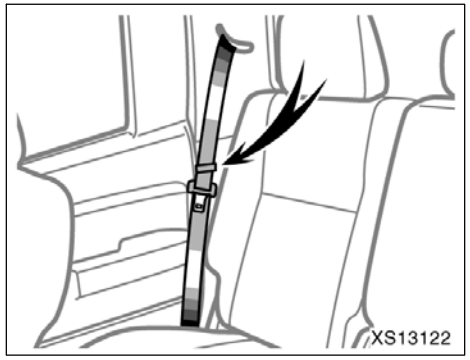

2. Make sure the shoulder belt passes through the hanger when folding the rear seat.

This prevents the shoulder belt from being damaged.

⚠ CAUTION

The seat belt must be removed from the hanger when the seat belt is in use.

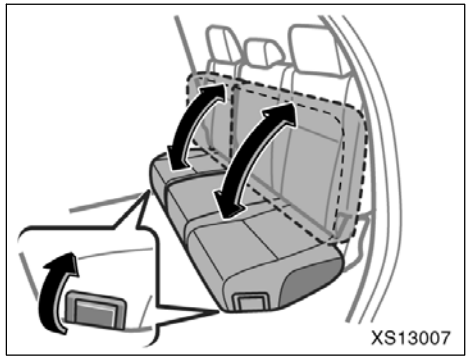

3. Raising rear seat cushion.

Pull the lever on the side of the bottom cushion and lift up the cushion until it locks.

When returning the rear seat, pull the lever on the back of the bottom cushion and pull the cushion downward until it locks.

Folding down the rear seats will enlarge the luggage compartment. See "—Stowage precautions" on page 464 in Section 2 for precautions when loading luggage.

NOTICE

To prevent damage to the box under the seat, do not sit on the box when the bottom cushion is in the raised position.

⚠ CAUTION

When returning seats to their original position, observe the following precautions in order to prevent death or serious injury in a collision or sudden stop:

- **Make sure the bottom cushion is securely locked by trying to pull up the edge of the bottom cushion. Failure to do so will prevent the seat belt from operation properly.**
- **Make sure the seat belts are not twisted or caught under the bottom cushion and are arranged in their proper position and are ready to use.**

—Folding down rear seats (Crew Max models)

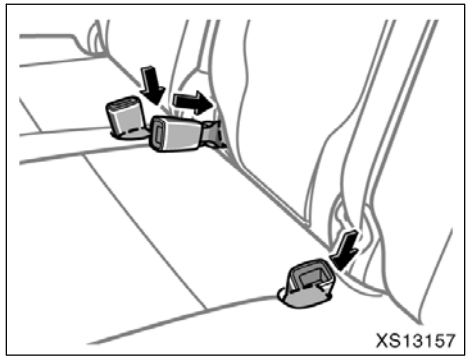

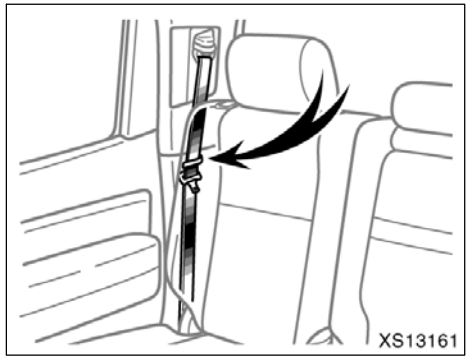

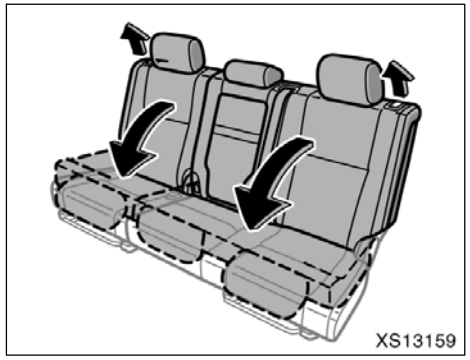

BEFORE FOLDING DOWN REAR SEATS

1. **Stow the rear seat belt buckles as shown in the illustration.**

This prevents the seat belt buckles from falling out when you fold the seatback.

NOTICE
To prevent damage to the seat belt buckles, the seat belt buckles must be stowed before you fold the seat-back.

2. **Make sure the shoulder belt passes through the hanger when folding the rear seat.**

This prevents the shoulder belt from being damaged.

⚠ **CAUTION**
The seat belt must be removed from the hanger when the seat belt is in use.

FOLDING DOWN REAR SEATS

Pull the seatback angle adjusting lever to unlock the seatback and fold the seatback down until it locks.

⚠ **CAUTION**
Be careful that the seat does not hit a passenger or luggage.

NOTICE
Do not fold the rear seat seatback forward with the luggage cover hooks attached.

Folding down the rear seats will enlarge the luggage compartment. See "—Stowage precautions" on page 464 in Section 2 for precautions when loading luggage.

⚠ CAUTION

When returning the seatback to the upright position, observe the following precautions in order to prevent death or serious injury in a collision or sudden stop:

- **Make sure the seatback is securely locked by pushing forward and rearward on the top of the seatback. Failure to do so will prevent the seat belt from operating properly.**
- **Make sure the seat belts are not twisted or caught in the seatback and are arranged in their proper position and are ready to use.**

Head restraints

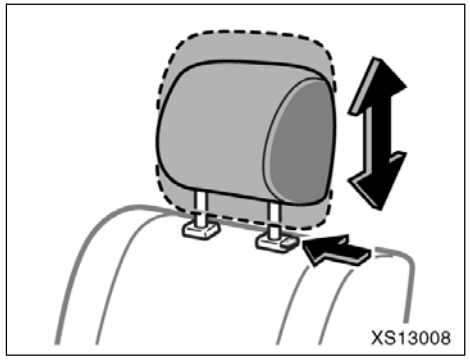

Front separate seats

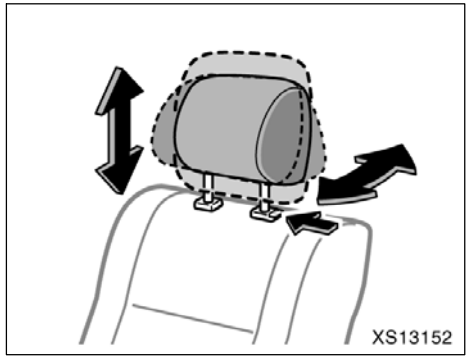

Front separate seats (with seat heater)

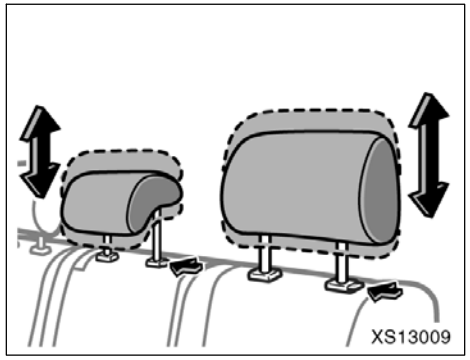

Front bench seat

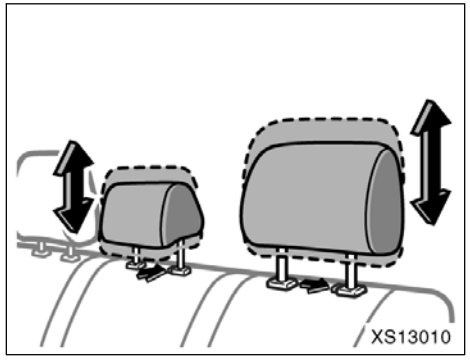

Rear seats (Double cab models)

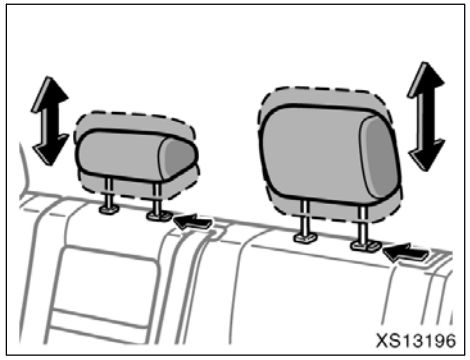

Rear seats (Crew Max models)

For your safety and comfort, adjust the head restraint before driving.

To raise: Pull it up.
To lower: Push it down while pressing the lock release button.

Front separate seats (with seat heater) only—
You can pull up or push down the head restraint. You can also move the front head restraint forward or backward. If such adjustment is desired, pull or push the base of the head restraint.

Rear center head restraint and front center head restraint (bench seats)—When an occupant sits on the center position of the rear seats (Double cab and Crew Max models) or the front seats (bench seats), always pull up the center head restraint to the lock position.

The head restraint is most effective when it is close to your head. Therefore, using a cushion on the seatback is not recommended.

⚠ CAUTION

- **Adjust the center of the head restraint so that it is closest to the top of your ears.**
- **After adjusting the head restraint, make sure it is locked in position.**
- **Do not drive with the head restraints removed.**

Armrest (Crew Max models)

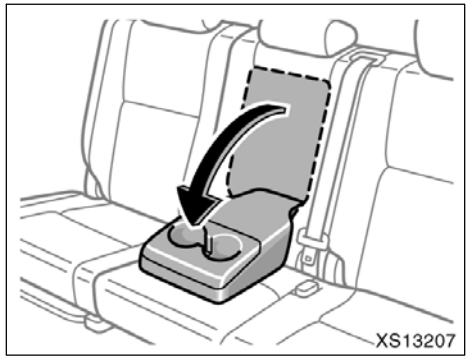

To use the armrest, pull it down as shown in the illustrations.

NOTICE
To prevent damage to the armrest, avoid putting heavy loads on it.

Seat heaters

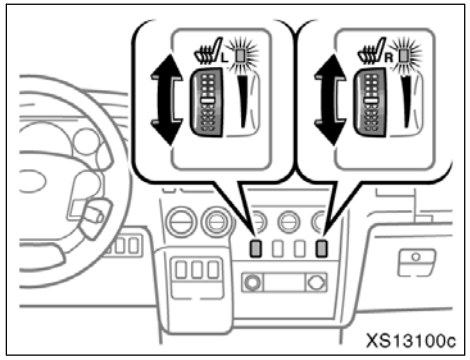

To turn on the seat heater, move the dial upward ("L" dial for the left front seat or "R" dial for the right front seat). At this time, the indicator light will illuminate to indicate the seat heater is operating.

Move the dial upward or downward to adjust to the desired temperature.

To turn it off, move the dial downward until it stops.

When the seat heater is not in use, move the dial fully downward.

The ignition switch must be in the "ON" position to operate seat heaters.

⚠ CAUTION

Occupants must use caution when operating the seat heater because it may make them feel too hot or cause burns at low temperatures (erythema, varicella). Use extra caution for;

- **Babies, small children, elderly persons, sick persons or persons with physical disabilities**
- **Persons who have sensitive skin**
- **Persons who are exhausted**
- **Persons who have taken alcohol or drugs which induce sleep (sleeping drug, cold remedy, etc.)**

To prevent the seat from overheating, do not use the seat heater with a blanket, cushion, or other insulating objects which cover the seat.

NOTICE

- ***Do not put unevenly weighed objects on the seat and do not stick sharp objects (needles, nails, etc.) into the seat.***
- ***When cleaning the seats, do not use organic substances (paint thinner, benzine, alcohol, gasoline, etc.). They may damage the heater and seat surface.***
- ***To prevent the battery from being discharged, turn the switch off when the engine is not running.***

Seat belts—
—Seat belt precautions

Toyota strongly urges that the driver and passengers in the vehicle be properly restrained at all times with the seat belts provided. Failure to do so could increase the chance of injury and/or the severity of injury in accidents.

The seat belts provided for your vehicle are designed for people of adult size, large enough to properly wear them.

Child. Use a child restraint system appropriate for the child until the child becomes large enough to properly wear the vehicle's seat belts. See "Child restraint" on page 114 in this Section for details.

REGULAR CAB MODELS—
If a child is too large for a child restraint system, the child should sit in the seat and must be restrained using the vehicle's seat belt.

DOUBLE CAB AND CREW MAX MODELS—
If a child is too large for a child restraint system, the child should sit in the rear seat and must be restrained using the vehicle's seat belt. According to accident statistics, the child is safer when properly restrained in the rear seat than in the front seat.

If a child must sit in the front seat, the seat belts should be worn properly. If an accident occurs and the seat belts are not worn properly, the force of the rapid inflation of the airbag may cause death or serious injury to the child.

Do not allow any children to stand up or kneel on either rear or front seats. An unrestrained child could suffer serious injury or death during emergency braking or a collision. Also, do not let the child sit on your lap. Holding a child in your arms does not provide sufficient restraint.

Pregnant woman. Toyota recommends the use of a seat belt. Ask your doctor for specific recommendations. The lap belt should be worn securely and as low as possible over the hips and not on the waist.

Injured person. Toyota recommends the use of a seat belt. Depending on the injury, first check with your doctor for specific recommendations

⚠ CAUTION

Persons should ride in their seats properly wearing their seat belts whenever the vehicle is moving. Otherwise, they are much more likely to suffer serious bodily injury or death in the event of sudden braking or a collision.

When using the seat belts, observe the following:

- **Use the belt for only one person at a time. Do not use a single belt for two or more people—even children.**
- **Avoid reclining the seatback any more than needed. The seat belts provide maximum protection in a frontal or rear collision when the driver and the front passenger are sitting up straight and well back in the seats. If you are reclined, the lap belt may slide past your hips and apply restraint forces directly to the abdomen or your neck may contact the shoulder belt. In the event of a frontal collision, the more the seat is reclined, the greater the risk of death or serious injury.**
- **Be careful not to damage the belt webbing or hardware. Take care that they do not get caught or pinched in the seat or side doors.**
- **Inspect the belt system periodically. Check for cuts, fraying, and loose parts. Damaged parts should be replaced. Do not disassemble or modify the system.**
- **Keep the belts clean and dry. If they need cleaning, use a mild soap solution or lukewarm water. Never use bleach, dye, or abrasive cleaners, or allow them to come into contact with the belts—they may severely weaken the belts. (See "Cleaning the interior" on page 524 in Section 5.)**
- **Replace the belt assembly (including bolts) if it has been used in a severe impact. The entire assembly should be replaced even if damage is not obvious.**

—Fastening front and rear seat belts

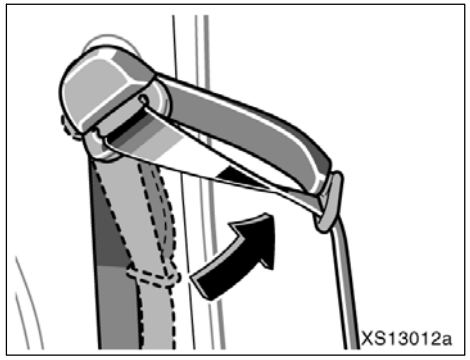

USING FRONT SEAT BELT HANGERS (Regular cab models)

Raise the front seat belt hanger until it locks before you fasten the front seat belt.

You will hear a click when the seat belt hanger locks in raised position.

⚠ CAUTION

Make sure the seat belt hanger is secured in the raised position before you fasten the seat belt. If it is not, the seat belt may not work properly.

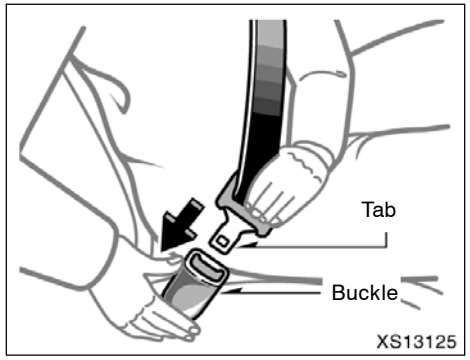

Adjust the seat as needed and sit up straight and well back in the seat. To fasten your belt, pull it out of the retractor and insert the tab into the buckle.

You will hear a click when the tab locks into the buckle.

The seat belt length automatically adjusts to your size and the seat position.

The retractor will lock the belt during a sudden stop or on impact. It also may lock if you lean forward too quickly. A slow, easy motion will allow the belt to extend, and you can move around freely.

When a passenger's shoulder belt is completely extended and is then retracted even slightly, the belt is locked in that position and cannot be extended. This feature is used to hold the child restraint system securely. (For details, see "Child restraint" on page 114 in this Section.) To free the belt again, fully retract the belt and then pull the belt out once more.

If the seat belt cannot be pulled out of the retractor, firmly pull the belt and release it. You will then be able to smoothly pull the belt out of the retractor.

CAUTION

- **After inserting the tab, make sure the tab and buckle are locked and that the belt is not twisted.**
- **Do not insert coins, clips, etc. in the buckle as this may prevent you from properly latching the tab and buckle.**
- **If the seat belt does not function normally, immediately contact your Toyota dealer. Do not use the seat until the seat belt is fixed, because it cannot protect an adult occupant or your child from death or serious injury.**

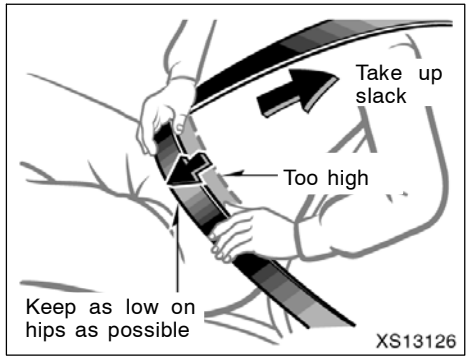

Adjust the position of the lap and shoulder belts.

Position the lap belt as low as possible on your hips—not on your waist, then adjust it to a snug fit by pulling the shoulder portion upward through the latch plate.

⚠ CAUTION

- **Both high–positioned lap belts and loose–fitting belts could cause death or serious injuries due to sliding under the lap belt during a collision or other unintended event. Keep the lap belt positioned as low on hips as possible.**
- **Do not place the shoulder belt under your arm.**

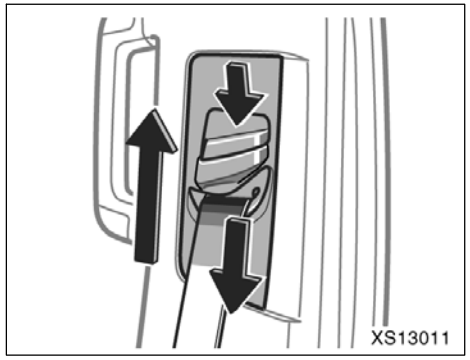

Seat belts with an adjustable shoulder anchor (Double cab and Crew Max models)—

Adjust the shoulder anchor position to your size.

To raise: Slide the anchor up.
To lower: Push in the lock release button and slide the anchor down.

After adjustment, make sure the anchor is locked in position.

⚠ CAUTION

Always make sure the shoulder belt is positioned across the center of your shoulder. The belt should be kept away from your neck, but not falling off your shoulder. Failure to do so could reduce the amount of protection in an accident and cause death or serious injuries in a collision.

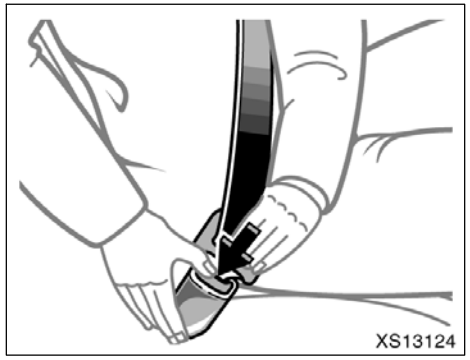

To release the belt, press the buckle release button and allow the belt to retract.

If the belt does not retract smoothly, pull it out and check for kinks or twists. Then make sure it remains untwisted as it retracts.

—Stowing the rear seat belt buckles (Double cab and Crew Max models)

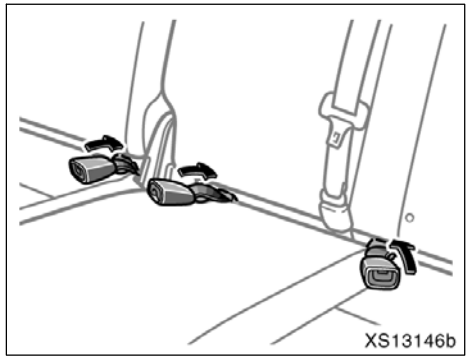

Double cab models

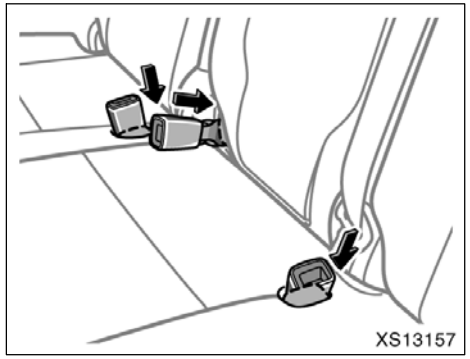

Crew Max models

The rear seat belt buckles can be stowed when not in use.

Seat belt buckles must be stowed before you fold the seatback.

—Seat belt extender

If your seat belts cannot be fastened securely because they are not long enough, a personalized seat belt extender is available from your Toyota dealer free of charge.

Please contact your local Toyota dealer so that the dealer can order the proper required length for the extender. Bring the heaviest coat you expect to wear for proper measurement and selection of length. Additional ordering information is available at your Toyota dealer.

⚠ CAUTION

When using the seat belt extender, observe the following precautions. Failure to follow these instructions could reduce the effectiveness of the seat belt restraint system in case of an accident, increasing the chance of death or serious injury.

- **Remember that the extender provided for you may not be safe when used on a different vehicle, for another person, or at a different seating position than the one originally intended.**

- **If the seat belt extender has been connected to the driver's seat belt buckle without the driver actually wearing the seat belt, the SRS driver's airbag system will judge that the driver is wearing it. In this case, the driver's airbag may not activate correctly, causing death or serious injury in the event of collision. Be sure to wear the seat belt with the seat belt extender.**

- **Make sure the passenger airbag on–off indicator light indicates "ON" when using the seat belt extender for the front passenger seat. If the indicator light indicates "OFF", disconnect the extender tongue from the seat belt buckle, then reconnect the seat belt. Reconnect the seat belt extender after making sure the indicator light indicates "ON". If you use the seat belt extender while the indicator light indicates "OFF", the front passenger airbag and side airbag on the front passenger side may not activate correctly, which could cause death or serious injury in the event of collision.**
- **Do not use the seat belt extender if it is not absolutely necessary.**

- **Do not use the seat belt extender when installing a child restraint system on the front or rear passenger seat. If installing a child restraint system with the seat belt extender connected to the seat belt, the seat belt will not securely hold the child restraint system, which could cause death or serious injury to the child or other passengers in the event of collision.**

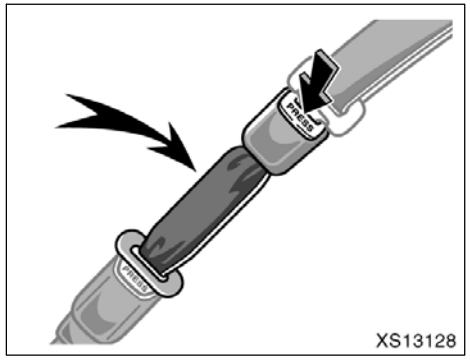

To connect the extender to the seat belt, insert the tab into the seat belt buckle so that the "PRESS" signs on the buckle release buttons of the extender and the seat belt are both facing outward as shown.

You will hear a click when the tab locks into the buckle.

When releasing the seat belt, press on the buckle release button on the extender, not on the seat belt. This helps prevent damage to the vehicle interior and extender itself.

As far as the seat belt extender on the front passenger side is concerned, do not fail to disconnect the extender from the seat belt after the above operation in order to activate the front passenger airbag correctly when getting into the vehicle next time.

When not in use, remove the extender and store in the vehicle for future use.

⚠ CAUTION

- **After inserting the tab, make sure the tab and buckle are locked and that the lap and shoulder portions of the belt and the seat belt extender are not twisted.**
- **Do not insert coins, clips, etc. in the buckle as this may prevent you from properly latching the tab and buckle.**
- **If the seat belt does not function normally, immediately contact your Toyota dealer. Do not use the seat until the seat belt is fixed, because it cannot protect an adult occupant or your child from death or serious injury.**

—Seat belt pretensioners

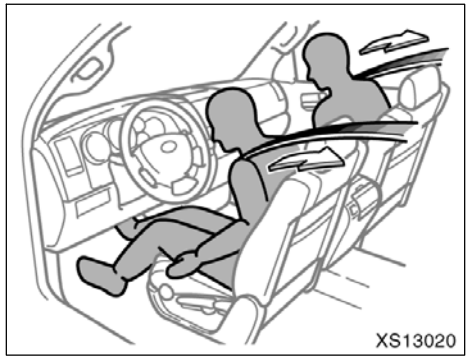

The driver and front passenger seat belt pretensioners are designed to be activated in response to a severe frontal impact. On vehicles equipped with curtain shield airbags, the pretensioners are also activated during vehicle roll over.

When the sensor detects a severe frontal impact or a vehicle roll over, the front seat belts are quickly drawn back by the retractors so that the belts snugly restrain the occupants.

The front passenger's seat belt pretensioner will not activate if no passenger is detected in the front passenger seat by the front passenger occupant classification system. However, the front passenger's seat belt pretensioner may activate if luggage is put on the seat, or the seat belt is buckled up regardless of the presence of an occupant in the seat. (As for the front passenger occupant classification system, see "—Front passenger occupant classification system" on page 104 in this Section.)

The seat belt pretensioners and SRS airbags may not operate together in all collisions.

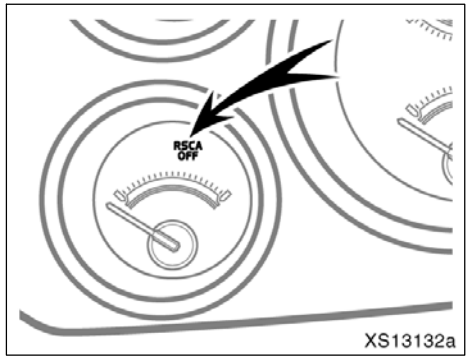

The seat belt pretensioners will not operate in a vehicle rollover if the "RSCA OFF" indicator light is on. For details, see "—Roll sensing of curtain shield airbags off switch" on page 113 in this Section.

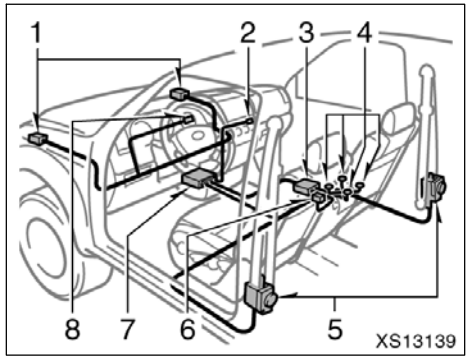

The seat belt pretensioner system consists mainly of the following components and their locations are shown in the illustration.

1. Front airbag sensors
2. Passenger airbag on–off indicator light
3. Front passenger occupant classification ECU
4. Load sensor
5. Seat belt pretensioner assemblies
6. Front passenger's seat belt buckle switch
7. Airbag sensor assembly
8. SRS warning light

The seat belt pretensioners are controlled by the airbag sensor assembly. The airbag sensor assembly consists of a safing sensor and airbag sensor.

When the seat belt pretensioners are activated, an operating noise may be heard and a small amount of non–toxic gas may be released. This does not indicate that a fire is occurring. This gas is normally harmless.

Once the seat belt pretensioners have been activated, the seat belt retractors remain locked.

⚠ CAUTION

- **Do not modify, remove, strike or open the seat belt pretensioner assemblies, airbag sensor or surrounding area or wiring. Failure to follow these instructions may prevent the seat belt pretensioners from activating correctly, cause sudden operation of the system or disable the system, which could result in death or serious injury. Consult your Toyota dealer about any repair and modification.**

- **Do not modify or change the suspension system. Such changes may cause the driver airbag, front passenger airbag, seat belt pretensioners and curtain shield airbags to inflate accidentally, which could result in death or serious injury.**
- **Do not use tires or wheels other than the manufacturer's recommended size. Such a use may cause the driver airbag, front passenger airbag, seat belt pretensioners and curtain shield airbags to inflate accidentally, which could result in death or serious injury. For details, see "Checking and replacing tires" on page 551 in Section 7–2.**

NOTICE

Do not perform any of the following changes without consulting your Toyota dealer. Such changes can interfere with proper operation of the seat belt pretensioners in some cases.

- ***Installation of electronic devices such as a mobile two-way radio, cassette tape player or compact disc player***
- ***Repairs on or near the front seat belt pretensioner assemblies***
- ***Modification of the suspension system***
- ***Modification of the front end structure***
- ***Attachment of a grille guard (bull bar, kangaroo bar, etc.), snowplow, winches or any other equipment to the front end***
- ***Repairs made on or near the front fenders, front end structure or console***

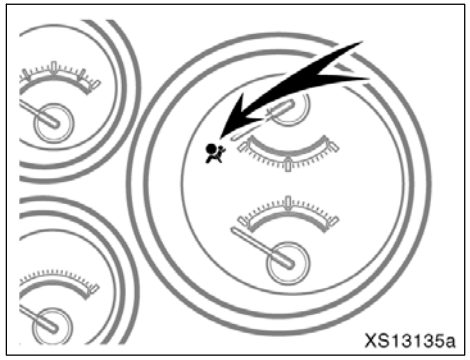

This indicator comes on when the ignition switch is turned to the "ON" position. It goes off after about 6 seconds. This means the seat belt pretensioners are operating properly.

This warning light system monitors the airbag sensor assembly, front airbag sensors, side and curtain shield airbag sensors, curtain shield airbag sensors, driver's seat position sensor, driver's seat belt buckle switch, front passenger occupant classification system*, passenger airbag off switch, passenger airbag on-off indicator light, seat belt pretensioner assemblies, inflators, "RSCA OFF" indicator light, interconnecting wiring and power sources. (For details, see "Service reminder indicators and warning buzzers" on page 197 in Section 1-6.)

*: The front passenger occupant classification system includes the front passenger occupant classification ECU, load sensor, front passenger's seat belt buckle switch.

If any of the following conditions occurs, this indicates a malfunction of the airbags or seat belt pretensioners. Contact your Toyota dealer as soon as possible.

- The light does not come on when the ignition switch is turned to the "ON" position or remains on for more than 6 seconds.
- The light comes on while driving.

- If any seat belt does not retract or can not be pulled out due to a malfunction or activation of the relevant seat belt pretensioner.
- The seat belt pretensioner assembly or surrounding area has been damaged.

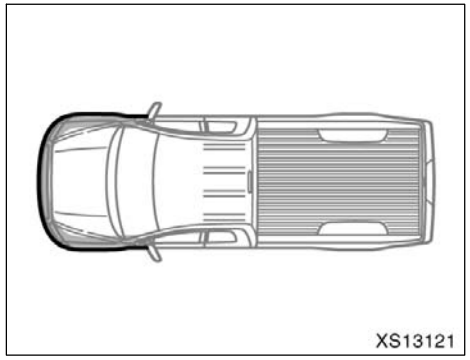

In the following cases, contact your Toyota dealer as soon as possible:

- The front of the vehicle (shaded in the illustration) was involved in an accident that was not severe enough to cause the seat belt pretensioners to operate.
- Either seat belt pretensioner assembly or surrounding area is scratched, cracked, or otherwise damaged.

SRS airbags—
—SRS driver airbag and front passenger airbag (Regular cab models)

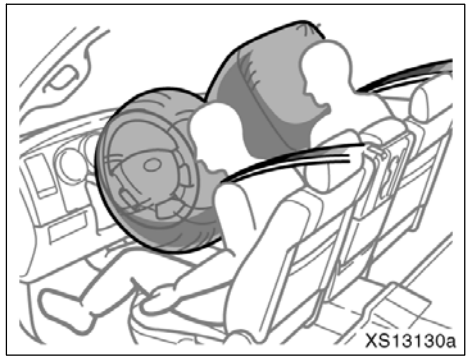

The SRS (Supplemental Restraint System) front airbags are designed to provide further protection for the driver and right front passenger in addition to the primary safety protection provided by the seat belts.

Your vehicle is equipped with “ADVANCED AIRBAGS” designed based on US motor vehicle safety standards (FMVSS208). The airbag system controls airbag deployment power for the driver and right front passenger. The driver airbag system consists of the driver seat’s position sensor etc. The front passenger’s airbag system consists of the front passenger occupant classification sensor etc.

Vehicles with bench seats—The SRS airbags are designed to protect the driver and right front passenger and they are not designed to protect an occupant in the front center seating position.

In response to a severe frontal impact, the SRS front airbags work with the seat belts to help reduce injury by inflating. The SRS front airbags help reduce injuries mainly to the driver's or front passenger's head or chest caused by hitting the vehicle interior.

The SRS front passenger airbag will not activate if there is no passenger sitting in the right front passenger seat. However, the front passenger airbag may deploy if luggage is put in the seat. (As for the front passenger occupant classification system, see "—Front passenger occupant classification system" on page 104 in this Section.)

Always wear your seat belt properly.

⚠ CAUTION

- **The SRS front airbag system is designed only as a supplement to the primary protection of the driver and front passenger seat belt systems. The driver and front passenger can be killed or seriously injured by the inflating airbags if they do not wear the available seat belts properly. During sudden braking just before a collision, an unrestrained driver or front passenger can move forward into direct contact with or close proximity to the airbag which may then deploy during the collision. To ensure maximum protection in an accident, the driver and all passengers in the vehicle must wear their seat belts properly. Wearing a seat belt properly during an accident reduces the chances of death or serious injury or being thrown out of the vehicle. For instructions and precautions concerning the seat belt system, see "Seat belts" on page 65 in this Section.**

- **Improperly seated and/or restrained infants and children can be killed or seriously injured by the deploying airbags. An infant or child who is too small to use a seat belt should be properly secured using a child restraint system. For instructions concerning the installation of a child restraint system, see "Child restraint" on page 114 in this Section.**

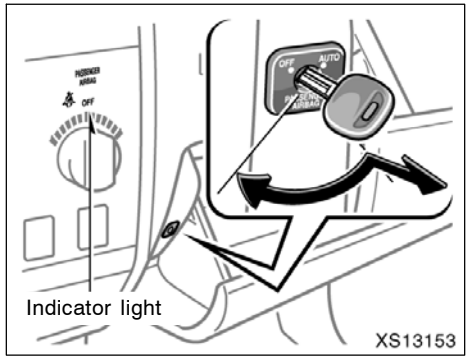

The passenger airbag system is equipped with a off switch and indicator light. Turning the passenger airbag off switch clockwise to the "AUTO" position makes the front passenger airbag system operational. To disable the front passenger airbag system, turn the off switch counterclockwise to the "OFF" position and remove the key. The "OFF" indicator light on the passenger airbag off switch will come on when the front passenger airbag system has been disabled.

See "—Passenger airbag off switch" on page 85 in this Section for detail.

⚠ CAUTION

- **Do not turn off the passenger airbag off switch except when a member of a passenger risk group identified in TABLE 1 is occupying the right front passenger seating position.**
- **When the passenger airbag off switch is turned off, the front passenger airbag will not inflate in a collision and turning off the front passenger airbag can reduce the occupant protection which your vehicle safety systems can provide to you in certain accidents and increase the likelihood of death or serious injuries.**

TABLE 1: A PASSENGER RISK GROUP
Infant. An infant (less than 1 year old) who must ride in the front seat because: ● Vehicle has no rear seat; ● Vehicle has a rear seat too small to accommodate a rear–facing infant seat; or ● The infant has a medical condition which, according to the infant's physician, makes it necessary for the infant to ride in the front seat so that the driver can constantly monitor the child's condition.
Child age 1 to 12. A child age 1 to 12 must ride in the front seat because: ● Vehicle has no rear seat: ● Although children ages 1 to 12 ride in the rear seat(s) whenever possible, children ages 1 to 12 sometimes must ride in the front because no space is available in the rear seat(s) of vehicle; or ● The child has a medical condition which, according to the child's physician, makes it necessary for the child to ride in the front seat so that the driver can constantly monitor the child's condition.
Medical condition. A passenger has a medical condition which according to his or her physician: ● Causes the passenger airbag to pose a special risk for the passenger: and ● Makes the potential harm from the passenger airbag in a crash greater than the potential harm from turning off the airbag and allowing the passenger, even if belted, to hit the dashboard, or windshield in a crash.

For more detailed information concerning about the passenger risk group, please contact NHTSA at 1–888–327–4236 or Transport Canada at 1–800–333–0371.

The SRS front airbags are designed to deploy in severe (usually frontal) collisions where the magnitude and duration of the forward deceleration of the vehicle exceeds the designed threshold level.

The SRS front airbags will deploy if the severity of the impact is above the designed threshold level, comparable to an approximate 25 km/h (15 mph) collision when the vehicle has the impact straight into a fixed barrier that does not move or deform.

However, this threshold velocity will be considerably higher if the vehicle strikes an object, such as a parked vehicle or sign pole, which can move or deform on impact, or if the vehicle is involved in an underride collision (e.g. a collision in which the front of the vehicle "underrides", or goes under, the bed of a truck, etc.).

It is possible that in some collisions where the forward deceleration of the vehicle is very close to the designed threshold level, the SRS front airbags and seat belt pretensioners may not activate together.

Always wear your seat belts properly.

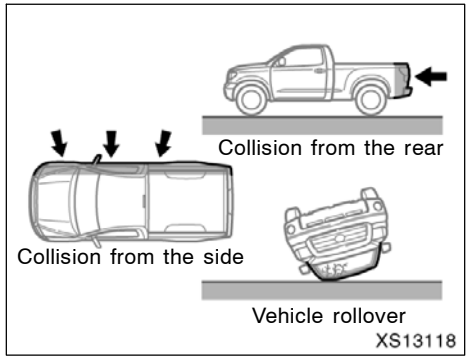

The SRS front airbags are not generally designed to inflate if the vehicle is involved in a side or rear collision, if it rolls over, or if it is involved in a low–speed frontal collision. But, whenever a collision of any type causes sufficient forward deceleration of the vehicle, deployment of the SRS front airbags may occur.

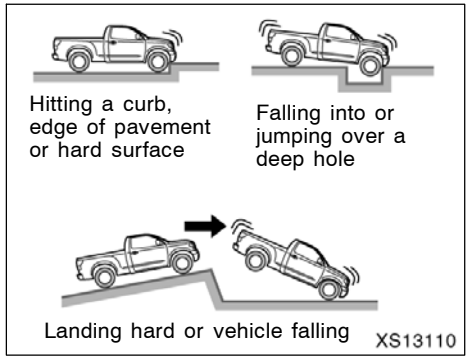

The SRS front airbags may also deploy if a serious impact occurs to the underside of your vehicle. Some examples are shown in the illustration.

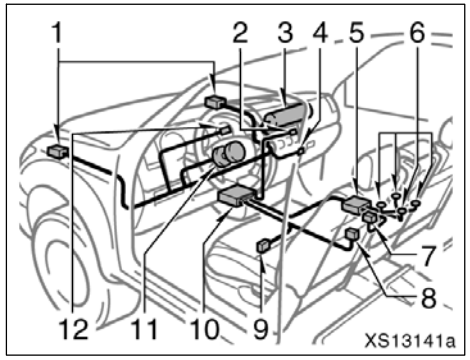

The SRS front airbag system consists mainly of the following components, and their locations are shown in the illustration.

1. Front airbag sensors
2. Passenger airbag on–off indicator light
3. Airbag module for front passenger (airbag and inflator)
4. Passenger airbag off switch
5. Front passenger occupant classification ECU
6. Load sensor
7. Front passenger's seat belt buckle switch
8. Driver's seat belt buckle switch

9. Driver's seat position sensor
10. Airbag sensor assembly
11. Airbag module for driver (airbag and inflator)
12. SRS warning light

The airbag sensor assembly consists of a safing sensor and airbag sensor.

The airbag sensors constantly monitor the forward deceleration of the vehicle. If an impact results in a forward deceleration beyond the designed threshold level, the system triggers the airbag inflators. At this time a chemical reaction in the inflators very quickly fills the airbags with non–toxic gas to help restrain the forward motion of the occupants. The front airbags then quickly deflate, so that there is no obstruction of the driver's vision should it be necessary to continue driving.

When the airbags inflate, they produce a loud noise and release some smoke and residue along with non–toxic gas. This does not indicate a fire. This smoke may remain inside the vehicle for some time, and may cause some minor irritation to the eyes, skin or breathing. Be sure to wash off any residue as soon as possible to prevent any potential skin irritation with soap and water. If you can safely exit from the vehicle, you should do so immediately.

Deployment of the airbags happens in a fraction of a second, so the airbags must inflate with considerable force. While the system is designed to reduce serious injuries, primarily to the head and chest, it may also cause other, less severe injuries to the face, chest, arms and hands. These are usually in the nature of minor burns or abrasions and swelling, but the force of a deploying airbag can cause more serious injuries, especially if an occupant's hands, arms, chest or head is in close proximity to the airbag module at the time of deployment. This is why it is important for the occupant to: avoid placing any object or part of the body between the occupant and the airbag module; sit straight and well back into the seat; wear the available seat belt properly; and sit as far as possible from the airbag module, while still maintaining control of the vehicle.

Parts of the airbag module (steering wheel hub, airbag cover and inflator) may be hot for several minutes after deployment, so do not touch! The airbags inflate only once. The windshield may be damaged by absorbing some of the force of the inflating airbag.

⚠ CAUTION

The driver or front passenger who is too close to the steering wheel or dashboard during airbag deployment can be killed or seriously injured. Toyota strongly recommends that:

- **The driver sit as far back as possible from the steering wheel while still maintaining control of the vehicle.**
- **The front passenger sit as far back as possible from the dashboard.**
- **All vehicle occupants be properly restrained using the available seat belts.**
- **If the seat belt extender has been connected to the driver's seat belt buckle without the driver actually wearing the seat belt, the SRS driver's airbag system will judge that the driver is wearing it. In this case, the driver's airbag may not activate correctly, causing death or serious injury in the event of collision. Be sure to wear the seat belt with the seat belt extender.**

For instructions and precautions concerning the seating position, see "—Front seat precautions" on page 48 in this Section.

⚠ CAUTION

A member of a passenger risk group should never sit or be occupied in the right front passenger seat with airbag off switch in the "AUTO" position. (For details, see "—SRS driver airbag and front passenger airbag" on page 75 in this Section.)

- **Do not sit on the edge of the seat or lean against the dashboard when the vehicle is in use, since the front passenger airbag could inflate with considerable speed and force. Anyone who is up against, or very close to, an airbag when it inflates, can be killed or seriously injured. Sit up straight and well back in the seat, and always use your seat belt properly.**

- **Toyota strongly recommends that all infants and children be placed in the rear seat of the vehicle and be properly restrained.**
- **Do not hold a child on your lap or in your arms. Use a child restraint system in the seat. For instructions concerning the installation of a child restraint system, see "Child restraint" on page 114 in this Section.**

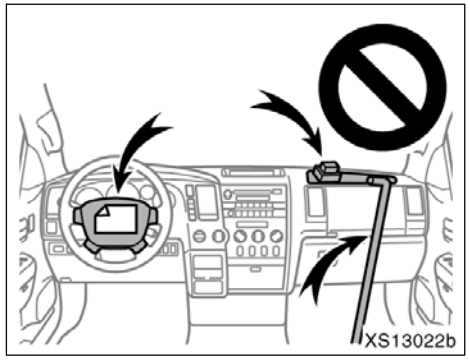

- **Do not put anything or any part of your body on or in front of the dashboard or steering wheel pad that houses the front airbag system. They might restrict inflation or cause death or serious injury as they are projected rearward by the force of the deploying airbags. Likewise, the driver and front passenger should not hold objects in their arms or on their knees.**

- **Do not modify or remove any wiring. Do not modify, remove, strike or open any components such as the steering wheel pad, steering wheel, column cover, dashboard near the front passenger airbag, front passenger airbag cover, front passenger airbag or airbag sensor assembly. Doing so may prevent the front airbag system from activating correctly, cause sudden activation of the system or disable the system, which could result in death or serious injury.**
- **Do not modify or change the suspension system. Such changes may cause the driver airbag, front passenger airbag, seat belt pretensioners and curtain shield airbags to inflate accidentally, which could result in death or serious injury.**

- **Do not use tires or wheels other than the manufacturer's recommended size. Such a use may cause the driver airbag, front passenger airbag, seat belt pretensioners and curtain shield airbags to inflate accidentally, which could result in death or serious injury. For details, see "Checking and replacing tires" on page 551 in Section 7–2.**

Failure to follow these instructions can result in death or serious injury. Consult your Toyota dealer about any repair and modification.

If you wish to modify your vehicle for a person with a physical disability, consult your Toyota dealer. It may dangerously interfere with the SRS front airbags operation.

NOTICE

Do not perform any of the following changes without consulting your Toyota dealer. Such changes can interfere with proper operation of the SRS airbag system in some cases.

- ***Installation of electronic devices such as a mobile two–way radio, cassette tape player or compact disc player***
- ***Modification of the suspension system***
- ***Modification of the front end structure***
- ***Attachment of a grille guard (bull bar, kangaroo bar, etc.), snowplow, winches or any other equipment to the front end***
- ***Repairs made on or near the front fenders, front end structure, console, steering column, steering wheel, front passenger's seat or dashboard near the front passenger airbag***

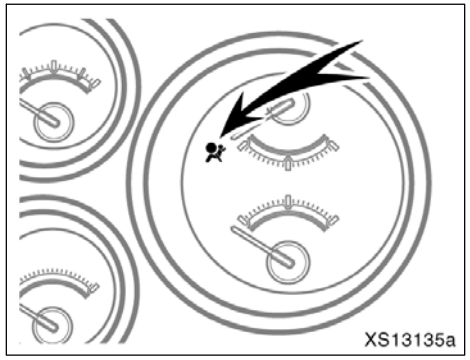

This indicator comes on when the ignition switch is turned to the “ON” position. It goes off after about 6 seconds. This means the SRS airbags are operating properly.

This warning light system monitors the airbag sensor assembly, front airbag sensors, side and curtain shield airbag sensors, driver’s seat position sensor, driver’s seat belt buckle switch, front passenger occupant classification system*, passenger airbag off switch, passenger airbag on–off indicator light, seat belt pretensioner assemblies, inflators, “RSCA OFF” indicator light, interconnecting wiring and power sources. (For details, see “Service reminder indicators and warning buzzers” on page 197 in Section 1–6.)

*: The front passenger occupant classification system includes the front passenger occupant classification ECU, load sensor and front passenger’s seat belt buckle switch.

If either of the following conditions occurs, this indicates a malfunction of the airbags or seat belt pretensioners. Contact your Toyota dealer as soon as possible.

- The light does not come on when the ignition switch is turned to the “ON” position or remains on for more than 6 seconds.
- The light comes on while driving.

The SRS warning light will come on and passenger airbag on–off indicator light will indicate “OFF” if there is a malfunction in the front passenger occupant classification system.

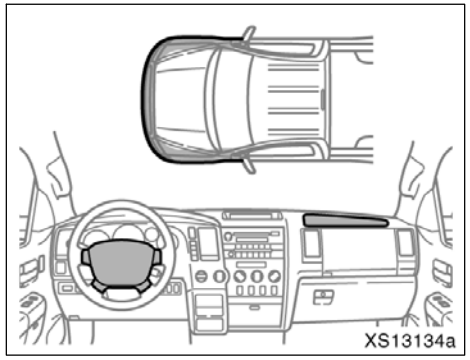

In the following cases, contact your Toyota dealer as soon as possible:

- The SRS airbags have been inflated.
- The front of the vehicle (shaded in the illustration) was involved in an accident that was not severe enough to cause the SRS airbags to inflate.
- The pad section of the steering wheel or front passenger airbag cover (shaded in the illustration) is scratched, cracked, or otherwise damaged.

NOTICE
Do not disconnect the battery cables before contacting your Toyota dealer.

—Passenger airbag off switch (Regular cab models)

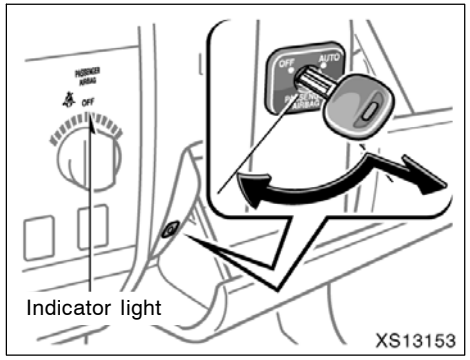

This off switch is designed to disable the front passenger airbag in order to allow usage, if necessary, of a member of a passenger risk group identified in TABLE 1 is occupying the right front passenger seating position. (For details, see "—SRS driver airbag and front passenger airbag" on page 75 in this Section.)

Operate off switch as follows:

Insert key into the keyhole.

To turn the front passenger airbag on—Turn the key clockwise to the "AUTO" position. At this time, the indicator light condition varies depending on the occupant in the right front passenger seat. (For details, see "—Front passenger occupant classification system" on page 104 in this Section.)

To turn the front passenger airbag off—Turn the key counterclockwise to the "OFF" position and remove it. At this time, the "OFF" indicator light comes on. If the key is removed at any other position than "OFF", the switch will automatically return to the "AUTO" position.

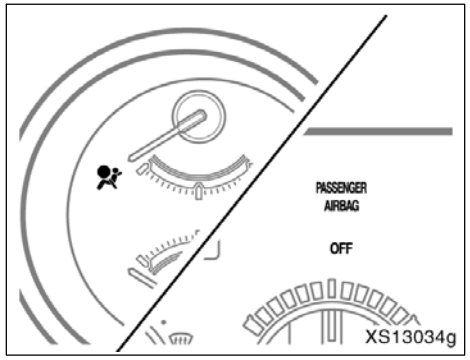

The SRS warning light and the passenger airbag on–off indicator light will indicate "OFF" if there is a malfunction in the passenger airbag off switch.

⚠ CAUTION

- Do not turn off the passenger airbag off switch except when a member of a passenger risk group identified in TABLE 1 is occupying the right front passenger seating position.

- When the passenger airbag off switch is turned off, the front passenger airbag will not inflate in a collision and turning off the front passenger airbag can reduce the occupant protection which your vehicle safety systems can provide to you in certain accidents and increase the likelihood of death or serious personal injuries.

For details, see "—SRS driver airbag and front passenger airbag" on page 75 in this Section.

—SRS driver airbag and front passenger airbag (Double cab and Crew Max models)

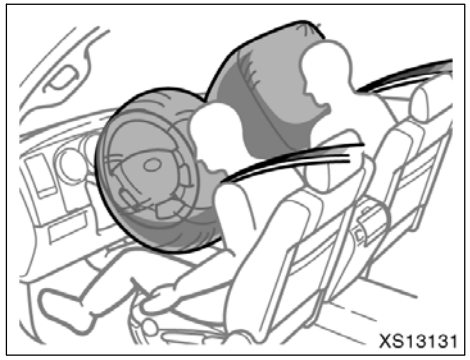

The SRS (Supplemental Restraint System) front airbags are designed to provide further protection for the driver and right front passenger in addition to the primary safety protection provided by the seat belts.

Your vehicle is equipped with “ADVANCED AIRBAGS” designed based on US motor vehicle safety standards (FMVSS208). The airbag system controls airbag deployment power for the driver and front passenger. The driver airbag system consists of the driver seat’s position sensor etc. The front passenger’s airbag system consists of the front passenger occupant classification sensor etc.

Vehicles with bench seats—The SRS airbags are designed to protect the driver and right front passenger, and they are not designed to protect an occupant in the front center seating position.

In response to a severe frontal impact, the SRS front airbags work with the seat belts to help reduce injury by inflating. The SRS front airbags help reduce injuries mainly to the driver’s or front passenger’s head or chest caused by hitting the vehicle interior.

The SRS front passenger airbag will not activate if there is no passenger sitting in the right front passenger seat. However, the front passenger airbag may deploy if luggage is put in the seat. (As for the front passenger occupant classification system, see “—Front passenger occupant classification system” on page 109 in this Section.)

Always wear your seat belt properly.

⚠ CAUTION

- **The SRS front airbag system is designed only as a supplement to the primary protection of the driver and front passenger seat belt systems. The driver and front passenger can be killed or seriously injured by the inflating airbags if they do not wear the available seat belts properly. During sudden braking just before a collision, an unrestrained driver or front passenger can move forward into direct contact with or close proximity to the airbag which may then deploy during the collision. To ensure maximum protection in an accident, the driver and all passengers in the vehicle must wear their seat belts properly. Wearing a seat belt properly during an accident reduces the chances of death or serious injury or being thrown out of the vehicle. For instructions and precautions concerning the seat belt system, see “Seat belts” on page 65 in this Section.**

- **Improperly seated and/or restrained infants and children can be killed or seriously injured by the deploying airbags. An infant or child who is too small to use a seat belt should be properly secured using a child restraint system. Toyota strongly recommends that all infants and children be placed in the rear seat of the vehicle and properly restrained. The rear seat is the safest for infants and children. For instructions concerning the installation of a child restraint system, see "Child restraint" on page 114 in this Section.**

The SRS front airbags are designed to deploy in severe (usually frontal) collisions where the magnitude and duration of the forward deceleration of the vehicle exceeds the designed threshold level.

The SRS front airbags will deploy if the severity of the impact is above the designed threshold level, comparable to an approximate 25 km/h (15 mph) collision when the vehicle has the impact straight into a fixed barrier that does not move or deform.

However, this threshold velocity will be considerably higher if the vehicle strikes an object, such as a parked vehicle or sign pole, which can move or deform on impact, or if the vehicle is involved in an underride collision (e.g. a collision in which the front of the vehicle "underrides", or goes under, the bed of a truck, etc.).

It is possible that in some collisions where the forward deceleration of the vehicle is very close to the designed threshold level, the SRS front airbags and the seat belt pretensioners may not activate together.

Always wear your seat belts properly.

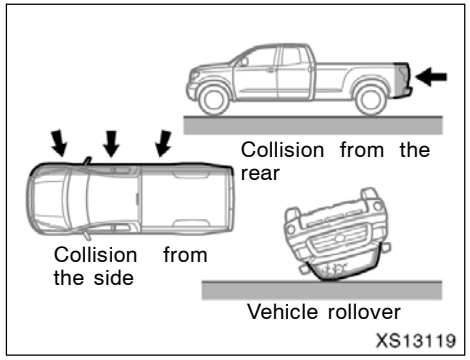

The SRS front airbags are not generally designed to inflate if the vehicle is involved in a side or rear collision, if it rolls over, or if it is involved in a low–speed frontal collision. But, whenever a collision of any type causes sufficient forward deceleration of the vehicle, deployment of the SRS front airbags may occur.

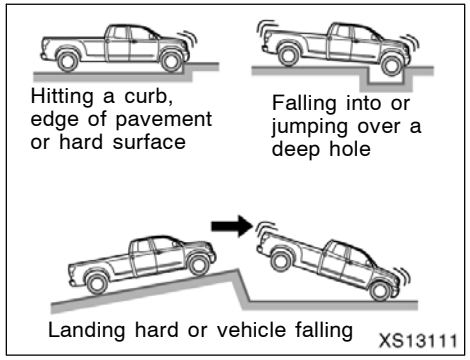

The SRS front airbags may also deploy if a serious impact occurs to the underside of your vehicle. Some examples are shown in the illustration.

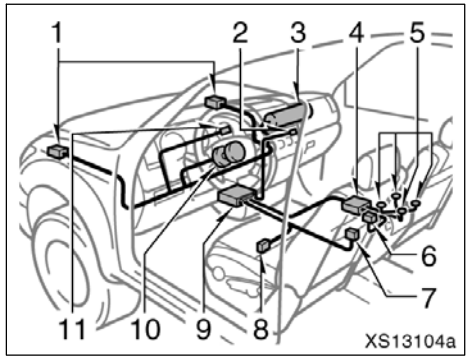

The SRS front airbag system consists mainly of the following components, and their locations are shown in the illustration.

1. Front airbag sensors
2. Passenger airbag on–off indicator light
3. Airbag module for front passenger (airbag and inflator)
4. Front passenger occupant classification ECU
5. Load sensor
6. Front passenger's seat belt buckle switch
7. Driver's seat belt buckle switch
8. Driver's seat position sensor
9. Airbag sensor assembly
10. Airbag module for driver (airbag and inflator)
11. SRS warning light

The airbag sensor assembly consists of a safing sensor and airbag sensor.

The airbag sensors constantly monitor the forward deceleration of the vehicle. If an impact results in a forward deceleration beyond the designed threshold level, the system triggers the airbag inflators. At this time a chemical reaction in the inflators very quickly fills the airbags with non–toxic gas to help restrain the forward motion of the occupants. The front airbags then quickly deflate, so that there is no obstruction of the driver's vision should it be necessary to continue driving.

When the airbags inflate, they produce a loud noise and release some smoke and residue along with non–toxic gas. This does not indicate a fire. This smoke may remain inside the vehicle for some time, and may cause some minor irritation to the eyes, skin or breathing. Be sure to wash off any residue as soon as possible to prevent any potential skin irritation with soap and water. If you can safely exit from the vehicle, you should do so immediately.

Deployment of the airbags happens in a fraction of a second, so the airbags must inflate with considerable force. While the system is designed to reduce serious injuries, primarily to the head and chest, it may also cause other, less severe injuries to the face, chest, arms and hands. These are usually in the nature of minor burns or abrasions and swelling, but the force of a deploying airbag can cause more serious injuries, especially if an occupant's hands, arms, chest or head is in close proximity to the airbag module at the time of deployment. This is why it is important for the occupant to: avoid placing any object or part of the body between the occupant and the airbag module; sit straight and well back into the seat; wear the available seat belt properly; and sit as far as possible from the airbag module, while still maintaining control of the vehicle.

Parts of the airbag module (steering wheel hub, airbag cover and inflator) may be hot for several minutes after deployment, so do not touch! The airbags inflate only once. The windshield may be damaged by absorbing some of the force of the inflating airbag.

⚠ CAUTION

The driver or front passenger who is too close to the steering wheel or dashboard during airbag deployment can be killed or seriously injured. Toyota strongly recommends that:

- **The driver sit as far back as possible from the steering wheel while still maintaining control of the vehicle.**
- **The front passenger sit as far back as possible from the dashboard.**
- **All vehicle occupants be properly restrained using the available seat belts.**
- **If the seat belt extender has been connected to the driver's seat belt buckle without the driver actually wearing the seat belt, the SRS driver's airbag system will judge that the driver is wearing it. In this case, the driver's airbag may not activate correctly, causing death or serious injury in the event of collision. Be sure to wear the seat belt with the seat belt extender.**

For instructions and precautions concerning the seating position, see "—Front seat precautions" on page 48 in this Section.

- **Do not sit on the edge of the seat or lean against the dashboard when the vehicle is in use, since the front passenger airbag could inflate with considerable speed and force. Anyone who is up against, or very close to, an airbag when it inflates, can be killed or seriously injured. Sit up straight and well back in the seat, and always use your seat belt properly.**

- **Toyota strongly recommends that all infants and children be placed in the rear seat of the vehicle and be properly restrained.**
- **Do not hold a child on your lap or in your arms. Use a child restraint system in the rear seat. For instructions concerning the installation of a child restraint system, see "Child restraint" on page 114 in this Section.**

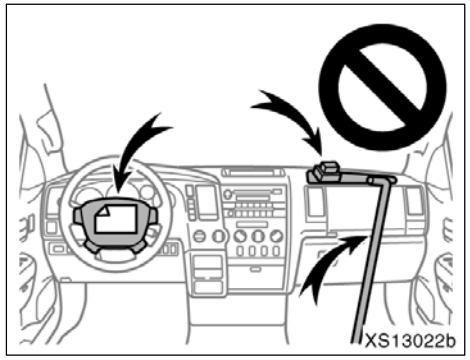

- **Do not put anything or any part of your body on or in front of the dashboard or steering wheel pad that houses the front airbag system. They might restrict inflation or cause death or serious injury as they are projected rearward by the force of the deploying airbags. Likewise, the driver and front passenger should not hold objects in their arms or on their knees.**

- **Do not modify or remove any wiring. Do not modify, remove, strike or open any components such as the steering wheel pad, steering wheel, column cover, dashboard near the front passenger airbag, front passenger airbag cover, front passenger airbag or airbag sensor assembly. Doing so may prevent the front airbag system from activating correctly, cause sudden activation of the system or disable the system, which could result in death or serious injury.**
- **Do not modify or change the suspension system. Such changes may cause the driver airbag, front passenger airbag, seat belt pretensioners and curtain shield airbags to inflate accidentally, which could result in death or serious injury.**

- **Do not use tires or wheels other than the manufacturer's recommended size. Such a use may cause the driver airbag, front passenger airbag, seat belt pretensioners and curtain shield airbags to inflate accidentally, which could result in death or serious injury. For details, see "Checking and replacing tires" on page 551 in Section 7–2.**

Failure to follow these instructions can result in death or serious injury. Consult your Toyota dealer about any repair and modification.

If you wish to modify your vehicle for a person with a physical disability, consult your Toyota dealer. It may dangerously interfere with the SRS front airbags operation.

NOTICE

Do not perform any of the following changes without consulting your Toyota dealer. Such changes can interfere with proper operation of the SRS front airbag system in some cases.

- ***Installation of electronic devices such as a mobile two–way radio, cassette tape player or compact disc player***
- ***Modification of the suspension system***
- ***Modification of the front end structure***
- ***Attachment of a grille guard (bull bar, kangaroo bar, etc.), snowplow, winches or any other equipment to the front end***
- ***Repairs made on or near the front fenders, front end structure, console, steering column, steering wheel, front passenger's seat or dashboard near the front passenger airbag***

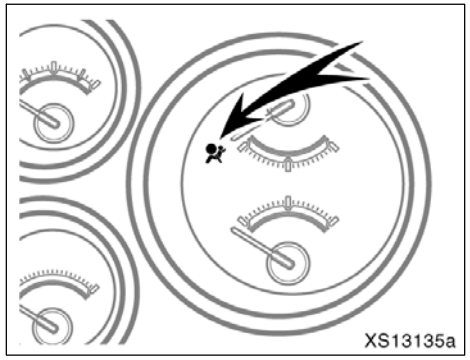

This indicator comes on when the ignition switch is turned to the “ON” position. It goes off after about 6 seconds. This means the SRS front airbags are operating properly.

This warning light system monitors the airbag sensor assembly, front airbag sensors, side and curtain shield airbag sensors, curtain shield airbag sensors, driver’s seat position sensor, driver’s seat belt buckle switch, front passenger occupant classification system*, passenger airbag on–off indicator light, seat belt pretensioner assemblies, inflators, “RSCA OFF” indicator light, interconnecting wiring and power sources. (For details, see “Service reminder indicators and warning buzzers” on page 197 in Section 1–6.)

*: The front passenger occupant classification system includes the front passenger occupant classification ECU, load sensor and front passenger’s seat belt buckle switch.

If either of the following conditions occurs, this indicates a malfunction of the airbags or seat belt pretensioners. Contact your Toyota dealer as soon as possible.

- The light does not come on when the ignition switch is turned to the “ON” position or remains on for more than 6 seconds.
- The light comes on while driving.

The SRS warning light will come on and passenger airbag on–off indicator light will indicate “OFF” if there is a malfunction in the front passenger occupant classification system.

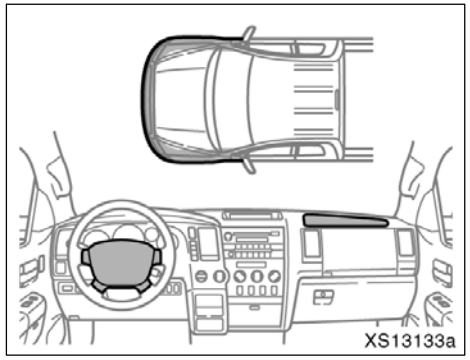

In the following cases, contact your Toyota dealer as soon as possible:

- The SRS front airbags have been inflated.
- The front of the vehicle (shaded in the illustration) was involved in an accident that was not severe enough to cause the SRS front airbags to inflate.
- The pad section of the steering wheel or front passenger airbag cover (shaded in the illustration) is scratched, cracked, or otherwise damaged.

NOTICE

Do not disconnect the battery cables before contacting your Toyota dealer.

—SRS side airbags and curtain shield airbags

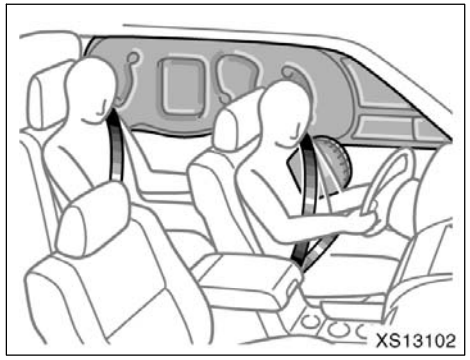

The SRS (Supplemental Restraint System) side airbags and curtain shield airbags are designed to provide further protection for the driver and all window–side passengers in addition to the primary safety protection provided by the seat belts.

In response to a severe side impact, the SRS side airbags and curtain shield airbags in the impacted side work with the seat belts to help reduce injury by inflating. The SRS side airbags help reduce injuries mainly to the driver's or right front passenger's chest. The SRS curtain shield airbags help reduce injuries mainly to the driver's and all window–side passenger's head and help prevent them from being thrown out of the vehicle.

The SRS side airbag on the passenger seat will not activate if there is no passenger sitting in the right front passenger seat. However, the side airbag on the passenger seat may deploy if luggage is put in the seat. (As for the front passenger occupant classification system, see "—Front passenger occupant classification system" on page 109 in this Section.)

The SRS curtain shield airbag on the passenger side are activated even with no passenger in the front seat or rear outside seat.

Roll sensing function:
In response to a vehicle rollover, the curtain shield airbags on both sides work with the seat belts to help reduce injury by inflating. The curtain shield airbags help reduce injuries mainly to the driver's, all window–side passenger's head and help prevent them from being thrown out of the vehicle. (This function can be turned off if inflation is not desired. See "—Roll sensing of curtain shield airbags off switch" on page 113 in this Section.)

The SRS curtain shield airbags may activate even when the side airbags are not activated.

Always wear your seat belt properly.

CAUTION

- **The SRS side airbag and curtain shield airbag system is designed only as a supplement to the primary protection of the driver, right front passenger and rear outside passenger seat belt systems. To ensure maximum protection in an accident, the driver and all passenger in the vehicle must wear their seat belts properly. Wearing a seat belt properly during an accident reduces the chances of death or serious injury or being thrown out of the vehicle. For instructions and precautions concerning the seat belt system, see "Seat belts" on page 65 in this Section.**

- **Do not allow anyone to lean his/her head or any part of his/her body against the door or the area of the seat, front pillar, rear pillar or roof side rail from which the SRS side airbag and curtain shield airbag deploy even if he/she is a child seated in the child restraint system. It is dangerous if the SRS side airbag and curtain shield airbag inflate, and the impact of the deploying airbag could cause death or serious injury to the occupant.**
- **Improperly seated and/or restrained infants and children can be killed or seriously injured by the deploying airbags. An infant or child who is too small to use a seat belt should be properly secured using a child restraint system. Toyota strongly recommends that all infants and children be placed in the rear seats of the vehicle and properly restrained. The rear seats are the safest for infants and children. For instructions concerning the installation of a child restraint system, see "Child restraint" on page 114 in this Section.**

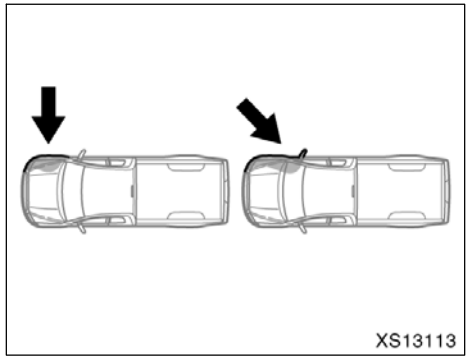

The SRS side airbags and curtain shield airbag system may not activate if the vehicle is subjected to a collision from the side at certain angles, or a collision to the side of the vehicle body other than the passenger compartment as shown in the illustration.

The SRS side airbags are designed to inflate when the passenger compartment area suffers a severe impact from the side.

The curtain shield airbags are designed to inflate when the passenger compartment area suffers a severe impact from the side or vehicle rollover.

Always wear your seat belts properly.

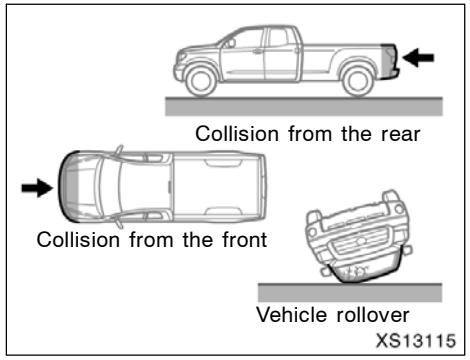

The SRS side airbags are not generally designed to inflate if the vehicle is involved in a front or rear collision, if it rolls over, or if it is involved in a low–speed side collision.

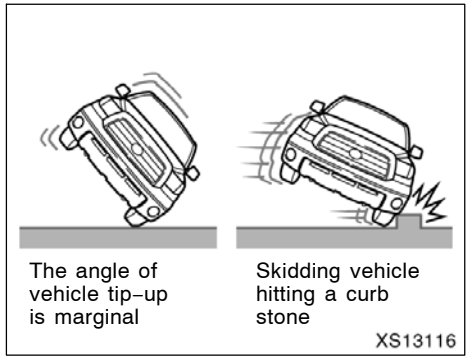

The SRS curtain shield airbags may inflate if the angle of vehicle tip–up is marginal or if the skidding vehicle's tires hit a curb stone laterally as shown in the illustration.

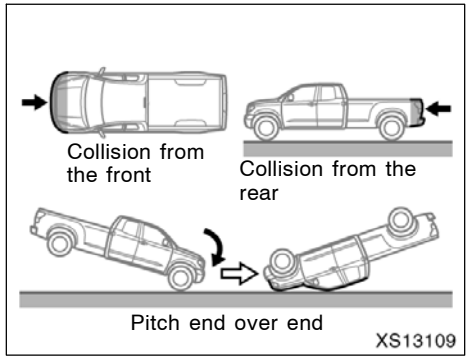

The SRS curtain shield airbags are not generally designed to inflate if the vehicle is involved in a front or rear collision, if it pitches end over end, or if it is involved in a low–speed side collision.

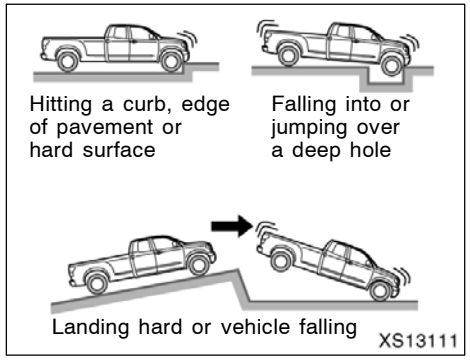

The SRS side and curtain shield airbags may deploy if a serious impact occurs to the underside of your vehicle. Some examples are shown in the illustration.

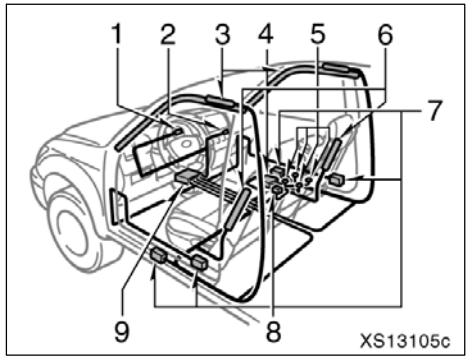

Regular cab models

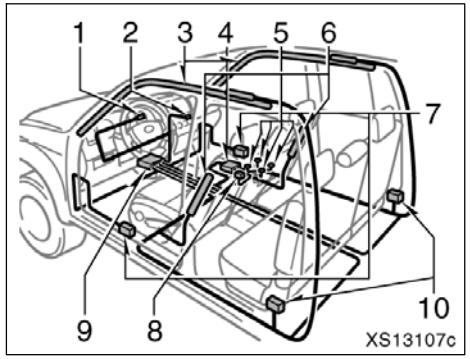

Double cab models

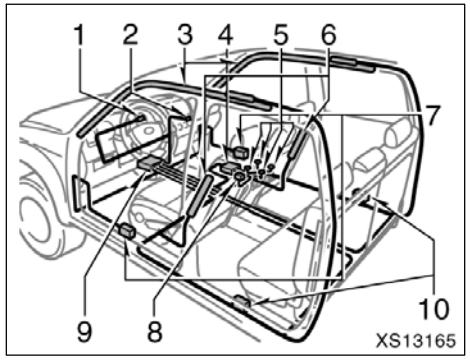

Crew Max models

The SRS side airbag and curtain shield airbag system consists mainly of the following components, and their locations are shown in the illustration.

1. SRS warning light
2. Passenger airbag on–off indicator light
3. Curtain shield airbag modules (airbag and inflator)
4. Front passenger occupant classification ECU
5. Load sensor
6. Side airbag modules (airbag and inflator)
7. Side and curtain shield airbag sensors
8. Front passenger's seat belt buckle switch
9. Airbag sensor assembly
10. Curtain shield airbag sensors

The SRS side airbag and curtain shield airbag system is controlled by the airbag sensor assembly.

In a severe side impact, the side and curtain shield airbag sensor and/or the curtain shield airbag sensor trigger(s) the side airbag inflators and/or the curtain shield airbag inflators. At this time a chemical reaction in the inflators quickly fills the airbags with non–toxic gas to help restrain the lateral motion of the occupants.

In a vehicle rollover, the airbag sensor assembly triggers the curtain shield airbag inflator. At this time, a chemical reaction in the inflators quickly fills the airbags with non–toxic gas to help restrain the lateral motion of the occupants.

When the airbags inflate, they produce a fairly loud noise and release some smoke and residue along with non–toxic gas. This does not indicate a fire. This smoke may remain inside the vehicle for some time, and may cause some minor irritation to the eyes, skin or breathing. Be sure to wash off any residue as soon as possible to prevent any potential skin irritation with soap and water. If you can safely exit from the vehicle, you should do so immediately.

Deployment of the airbags happens in a fraction of a second, so the airbags must inflate with considerable force. While the system is designed to reduce serious injuries, it may also cause minor burns or abrasions and swelling.

Front seats as well as parts of the front and rear pillars, and roof side rail may be hot for several minutes, but the airbags themselves will not be hot. The airbags are designed to inflate only once.

⚠ CAUTION

SRS side airbags and curtain shield airbags inflate with considerable force. To reduce the possibility of death or serious injury when they inflate, the driver, front passenger and rear outside passengers must:

- **Wear their seat belts properly.**
- **Remain properly seated with their backs upright and against the seats at all times.**

Improper sitting and wearing of the seat belts may not retain you inside the vehicle.

- **Do not allow anyone to lean against the door when the vehicle is in use, since the side airbag and curtain shield airbag could inflate with considerable speed and force. Otherwise, he/she may be killed or seriously injured. Special care should be taken especially when you have a small child in the vehicle.**
- **Sit up straight and well back in the seat, distributing your weight evenly in the seat. Do not apply excessive weight to the outer side of the seats with a side airbag, and to the front pillar, rear pillar and roof side rail with a curtain shield airbag.**

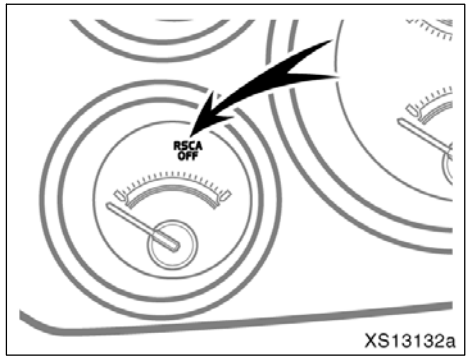

- **Make sure the "RSCA OFF" indicator light is off. The curtain shield airbags will not inflate in a vehicle rollover if this indicator light is on and you may be killed or seriously injured. For details, see "—Roll sensing of curtain shield airbags off switch" on page 113 in this Section.**

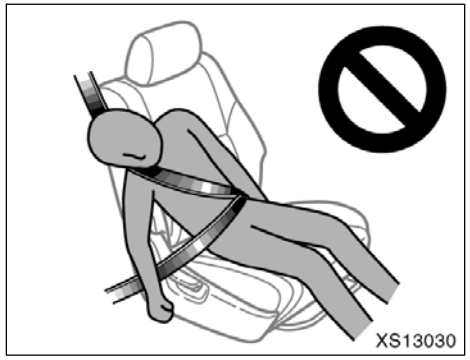

- **Do not allow anyone to get his/her head closer to the area where the side airbag and curtain shield airbag inflate, since these airbags could inflate with considerable speed and force. Otherwise, he/she may be killed or seriously injured. Special care should be taken especially when you have a small child in the vehicle.**

- **Do not allow anyone to kneel on the passenger seat, facing the passenger's side door, since the side airbag and curtain shield airbag could inflate with considerable speed and force. Otherwise, he/she may be killed or seriously injured. Special care should be taken especially when you have a small child in the vehicle.**

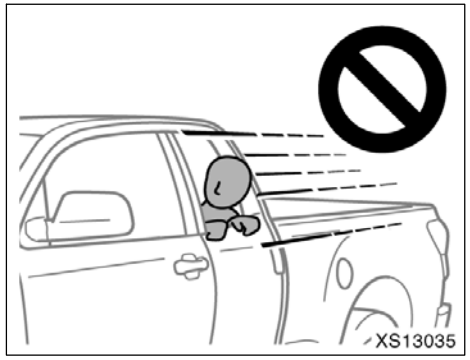

- **Do not allow anyone to get his/her head or hands out of windows since the curtain shield airbags could inflate with considerable speed and force. Otherwise, he/she may be killed or seriously injured. Special care should be taken especially when you have a small child in the vehicle.**

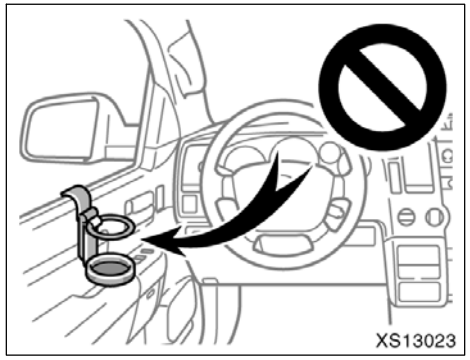

- **Do not attach a cup holder or any other device or object on or around the door. When the side airbag inflates, the cup holder or any other device or object will be thrown with great force or the side airbag may not activate correctly, resulting in death or serious injury. Likewise, the driver and front passenger should not hold objects in their arms or on their knees.**

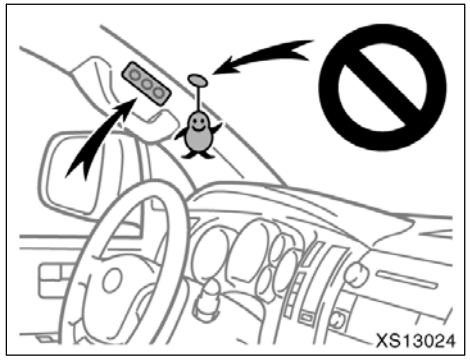

- **Do not attach a microphone or any other device or object around the area where the curtain shield airbag activates such as on the windshield glass, side door glass, front and rear pillars, roof side rail and assist grips. When the curtain shield airbags inflate, the microphone or other device or object will be thrown away with great force or the curtain shield airbags may not activate correctly, resulting in death or serious injury.**

- **Do not hook a hanger, heavy or sharp pointed objects on the coat hook. If the curtain shield airbag inflates, those items will be thrown away with great force or the curtain shield airbag may not activate correctly, resulting in death or serious injury. When you hang clothes, hang them on the coat hook directly.**
- **Do not use seat accessories which cover the parts where the side airbags inflate. Such accessories may prevent the side airbags from activating correctly, causing death or serious injury.**
- **Do not modify or replace the seats or upholstery of the seats with side airbags. Such changes may prevent the side airbag system from activating correctly, disable the system or cause the side airbags to inflate accidentally, resulting in death or serious injury.**

- **Do not disassemble or repair the front and rear pillars and roof side rail containing the curtain shield airbags. Such changes may disable the system or cause the curtain shield airbags to inflate accidentally, resulting in death or serious injury.**
- **Do not modify or change the suspension system. Such changes may cause the driver airbag, front passenger airbag, seat belt pretensioners and curtain shield airbags to inflate accidentally, which could result in death or serious injury.**
- **Do not use tires or wheels other than the manufacturer's recommended size. Such a use may cause the driver airbag, front passenger airbag, seat belt pretensioners and curtain shield airbags to inflate accidentally, which could result in death or serious injury. For details, see "Checking and replacing tires" on page 551 in Section 7–2.**

Failure to follow these instructions can result in death or serious injury. Consult your Toyota dealer about any repair and modification.

If you wish to modify your vehicle for a person with a physical disability, consult your Toyota dealer. It may dangerously interfere with the SRS side airbags and curtain shield airbags operation.

NOTICE

Do not perform any of the following changes without consulting your Toyota dealer. Such changes can interfere with proper operation of the SRS side airbag and curtain shield airbag system in some cases.

- ***Installation of electronic devices such as a mobile two–way radio, cassette tape player or compact disc player***
- ***Modification of the suspension system***
- ***Modification of the side structure of the passenger compartment***
- ***Repairs made on or near the console or front seat***

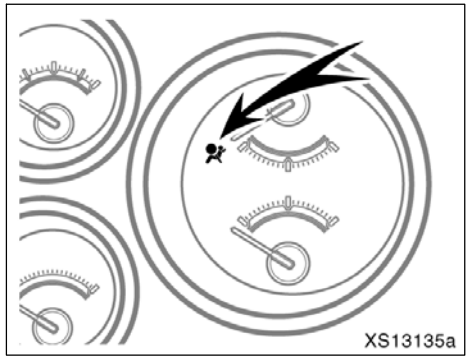

This indicator comes on when the ignition switch is turned to the "ON" position. It goes off after about 6 seconds. This means the SRS side airbags and curtain shield airbags are operating properly.

This warning light system monitors the airbag sensor assembly, front airbag sensors, side and curtain shield airbag sensors, curtain shield airbag sensors, driver's seat position sensor, driver's seat belt buckle switch, front passenger occupant classification system*, passenger airbag off switch, passenger airbag on–off indicator light, seat belt pretensioner assemblies, inflators, "RSCA OFF" indicator light, interconnecting wiring and power sources. (For details, see "Service reminder indicators and warning buzzers" on page 197 in Section 1–6.)

*: The front passenger occupant classification system includes the front passenger occupant classification ECU, load sensor and front passenger's seat belt buckle switch.

If either of the following conditions occurs, this indicates a malfunction of the airbags or seat belt pretensioners. Contact your Toyota dealer as soon as possible.

- The light does not come on when the ignition switch is turned to the "ON" position or remains on for more than 6 seconds.
- The light comes on while driving.

The SRS warning light will come on and passenger airbag on–off indicator light will indicate "OFF" if there is a malfunction in the front passenger occupant classification system.

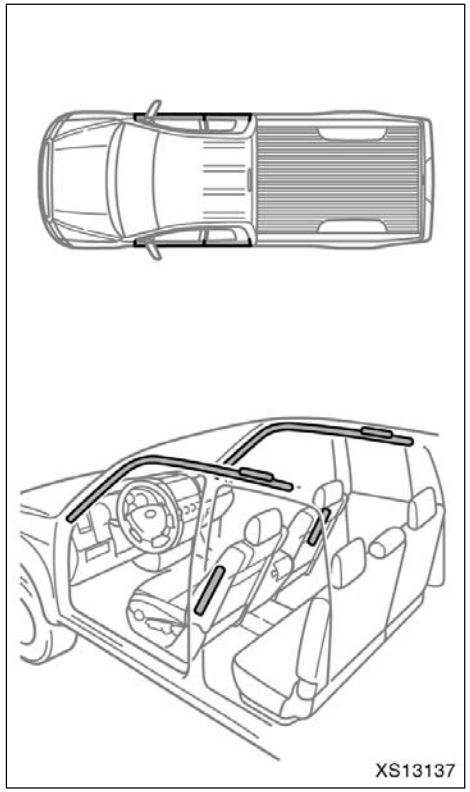

In the following cases, contact your Toyota dealer as soon as possible:

- Any of the SRS side airbags and curtain shield airbags have been inflated.
- The portion of the doors (shaded in the illustration) was involved in an accident that was not severe enough to cause the SRS side airbags and curtain shield airbags to inflate.
- The surface of the seats with the side airbag (shaded in the illustration) is scratched, cracked, or otherwise damaged.
- The portion of the front pillars, rear pillars or headlining (padding) containing the curtain shield airbag inside (shaded in the illustration) is scratched, cracked, or otherwise damaged.

NOTICE
Do not disconnect the battery cables before contacting your Toyota dealer.

—Front passenger occupant classification system (Regular cab models)

Your vehicle is equipped with a front passenger occupant classification system. The system detects conditions 1—4 (Shown in the table on page 106) Based on these conditions, the systems below are activated or deactivated:

- Front passenger airbag
- Side airbag on the right front passenger seat
- Front passenger's seat belt pretensioner

The system monitors the weight and load on the right front passenger seat, and the seat belt buckle switch to determine conditions 1—4.

In order to ensure that the system detects the conditions correctly:

- Do not place a heavy load on the right front passenger seat or the seatback table, etc.
- Do not attach a commercial seatback table or other heavy item to the back of the right front passenger seat.
- Do not apply pressure to the right front passenger seat by resting hands or legs on the seatback.

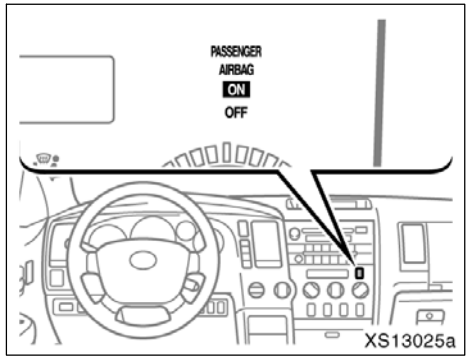

The passenger airbag on–off indicator light indicates the actuation of the front passenger airbag, side airbag on the front passenger seat and front passenger seat belt pretensioner.

The passenger airbag on–off indicator light will indicate "ON" and "OFF" when the ignition switch is turned to the "ON" position. After about four seconds, it will go off. After that, the front passenger occupant classification system operates and judges whether to indicate "ON" or "OFF".

The indicator light will indicate “OFF” when the ignition switch is in the “ON” position with the condition 2 in the table shown below.

If the front passenger occupant classification system determines that a person of adult size sits in the front passenger seat but the “OFF” indicator is illuminated, one of the following is likely to have occurred:

- Objects are placed under the front passenger seat.
- The front passenger seatback is in contact with the back wall.

To ensure that the system correctly detects the presence or absence of a person of adult size sitting in the right front passenger seat, make sure that none of the above occur.

Make sure that the “ON” indicator is illuminated when a person of adult size is seated in the right front passenger seat. If the “OFF” indicator is illuminated, follow the procedure below:

1. Turn the ignition off.
2. Make sure the airbag off switch is set to the “AUTO” position.
3. Make sure the right front passenger seat belt is worn correctly.
4. Ask the front passenger to adjust the seatback to the upright position and to sit up straight on the center of the seat cushion, with his/her legs comfortably extended forward.
5. Turn the ignition on, having the passenger remain in that position until the passenger airbag on–off indicator light indicates “ON”.

If the “OFF” indicator remains illuminated, move the right front passenger seat fully rearward.

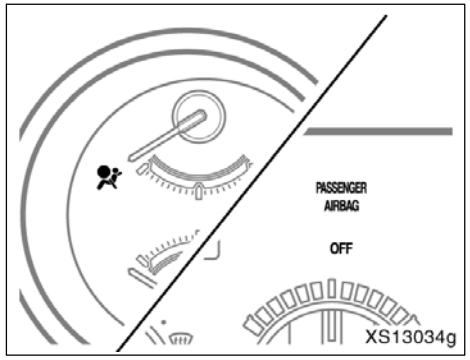

The SRS warning light will come on and the passenger airbag on–off indicator light will indicate “OFF” if there is a malfunction in the front passenger occupant classification system. Contact your Toyota dealer as soon as possible.

Condition and operation in the front passenger occupant classification system

<table>
<tr><th rowspan="2">Condition detected by the front passenger occupant classification system*1</th><th rowspan="2">Passenger airbag off switch position</th><th colspan="3">Indicator/warning light</th><th colspan="4">Devices</th></tr>
<tr><th>Passenger airbag on–off indicator light</th><th>SRS warning light</th><th>Front passenger's seat belt reminder light</th><th>Front passenger airbag</th><th>Side airbag on the right front passenger seat</th><th>Curtain shield airbag in the front passenger side</th><th>Front passenger's seat belt pretensioner</th></tr>
<tr><td rowspan="2">1. Adult*2</td><td>"AUTO"</td><td>"ON"</td><td rowspan="2">Off</td><td rowspan="2">Flashing*5</td><td colspan="2">Activated</td><td colspan="2" rowspan="2">Activated</td></tr>
<tr><td>"OFF"</td><td>"OFF"</td><td colspan="2">Deactivated</td></tr>
<tr><td rowspan="2">2. Child*3 or child restraint system*4</td><td>"AUTO"</td><td rowspan="2">"OFF"*6</td><td rowspan="2">Off</td><td rowspan="2">Flashing*5</td><td colspan="2" rowspan="2">Deactivated</td><td rowspan="4">Activated</td><td rowspan="2">Activated</td></tr>
<tr><td>"OFF"</td></tr>
<tr><td rowspan="2">3. Unoccupied</td><td>"AUTO"</td><td>Not illuminated</td><td rowspan="2">Off</td><td rowspan="2">Off</td><td colspan="2" rowspan="2">Deactivated</td><td rowspan="2">Deactivated</td></tr>
<tr><td>"OFF"</td><td>"OFF"</td></tr>
<tr><td rowspan="2">4. There is a malfunction in the system</td><td>"AUTO"</td><td rowspan="2">"OFF"</td><td rowspan="2">On</td><td rowspan="2">Off</td><td colspan="2" rowspan="2">Deactivated</td><td rowspan="2">Activated</td></tr>
<tr><td>"OFF"</td></tr>
</table>

*1: The right front passenger on the bench seat

*2: The system judges a person of adult size as an adult. When a smaller adult sits in the front passenger seat, the system may recognize him/her as a child depending on his/her physique and posture.

*3: When a larger child who has outgrown a child restraint system sits in the front passenger seat, the system may recognize him/her as an adult depending on his/her physique or posture.

*4: Never install a rear–facing child restraint system on the front passenger seat. A forward–facing child restraint system should only be installed on the front passenger seat when it is unavoidable. (See “Child restraint” on page 114 in this Section as for installing the child restraint system.)

*5: In the event the front passenger does not wear a seat belt.

*6: In case the indicator is not illuminated, see “Child restraint” on page 114 as for installing the child restraint system properly.

⚠ CAUTION

To avoid potential death or serious injury when the front passenger occupant classification system does not detect the conditions correctly, observe the following.

- **Make sure the passenger airbag on–off indicator light indicates "ON" when using the seat belt extender for the front passenger seat. If the indicator light indicates "OFF", disconnect the extender tongue from the seat belt buckle, then reconnect the seat belt. Reconnect the seat belt extender after making sure the indicator light indicates "ON". If you use the seat belt extender while the indicator light indicates "OFF", the front passenger airbag and side airbag on the front passenger side may not activate correctly, which could cause death or serious injury in the event of collision.**

- **Do not recline the front passenger seatback so far that it touches a backwall. This may cause the "OFF" indicator to be illuminated, which indicates that the passenger's airbags will not deploy in the event of a severe accident. If the seatback touches the backwall, return the seatback to a position where it does not touch the backwall.**

  Keep the front passenger seatback as upright as possible when the vehicle is moving. Reclining the seatback excessively may lessen the effectiveness of the seat belt system.

- **If an adult sits in the front passenger seat, the passenger airbag on–off indicator light should indicate "ON". If the "OFF" indicator is illuminated, ask the passenger to sit up straight, well back in the seat, feet on the floor and with the seat belt worn correctly. If the "OFF" indicator still remains illuminated, move the front passenger seat fully rearward.**

- **Wear the seat belt properly.**
- **Make sure the front passenger's seat belt tab has not been left inserted in the buckle before someone sits in the front passenger seat.**
- **Do not place a heavy load on the front passenger seat, etc.**
- **Do not apply pressure to the front passenger seat by resting hands or legs on the seatback.**
- **Do not put objects under the front passenger seat.**
- **Do not attach any heavy items to the back of the front passenger seat.**
- **When it is unavoidable to install the forward–facing child restraint system on the front passenger seat, install the child restraint system on the front passenger seat in the proper order. (As for the installation order, see "—Installation with seat belt" on page 117 in this Section.)**

- **Do not modify or remove the front seats.**
- **Do not kick the front passenger seat or subject it to severe impact. Otherwise, the SRS warning light may come on to indicate a malfunction of the detection system. In this case, contact your Toyota dealer immediately.**

The passenger airbag on–off indicator light may indicate “ON” (the front passenger airbag and side airbag on the front passenger seat may deploy) even if observing the above cautions, when a child sits in, or a forward–facing child restraint system is installed on the front passenger seat. Refer to all the cautions in “—SRS driver airbag and front passenger airbag” on page 75, “—SRS side airbags and curtain shield airbags” on page 94 and “Child restraint” on page 114 in this Section.

—Front passenger occupant classification system (Double cab and Crew Max models)

Your vehicle is equipped with a front passenger occupant classification system. The system detects conditions 1—4 (Shown in the table on page 111) Based on these conditions, the systems below are activated or deactivated:

- Front passenger airbag
- Side airbag on the right front passenger seat
- Front passenger’s seat belt pretensioner

The system monitors the weight and load on the right front passenger seat, and the seat belt buckle switch to determine conditions 1—4.

In order to ensure the system detects the conditions correctly:

- Do not place a heavy load on the right front passenger seat or the seatback table, etc.
- Do not attach a commercial seatback table or other heavy item to the back of the right front passenger seat.
- Do not apply pressure to the right front passenger seat by resting hands or legs on the seatback.

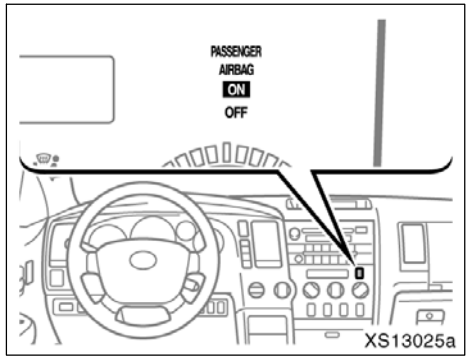

The passenger airbag on–off indicator light indicates the actuation of the front passenger airbag, side airbag on the front passenger seat and front passenger seat belt pretensioner.

The passenger airbag on–off indicator light will indicate “ON” and “OFF” when the ignition switch is turned to the “ON” position. After about four seconds, it will go off. After that, the front passenger occupant classification system operates and judges whether to indicate “ON” or “OFF”.

The indicator light will indicate “OFF” when the ignition switch is in the “ON” position with the condition 2 in the table shown below.

If the front passenger occupant classification system determines that a person of adult size sits in the right front passenger seat but the “OFF” indicator is illuminated, one of the following is likely to have occurred:

- A rear passenger lifts the front passenger seat cushion with their legs.
- Objects are placed under the front passenger seat.
- The front passenger seatback is in contact with the rear seat.

To ensure that the system correctly detects the presence or absence of a person of adult size sitting in the right front passenger seat, make sure that none of the above occur.

Make sure that the “ON” indicator is illuminated when a person of adult size is seated in the right front passenger seat. If the “OFF” indicator is illuminated, ask the passenger to sit up straight, well back in the seat, and with the seat belt worn correctly. If the “OFF” indicator remains illuminated, either ask the passenger to move to the rear seat, or if that is not possible, move the right front passenger seat fully rearward.

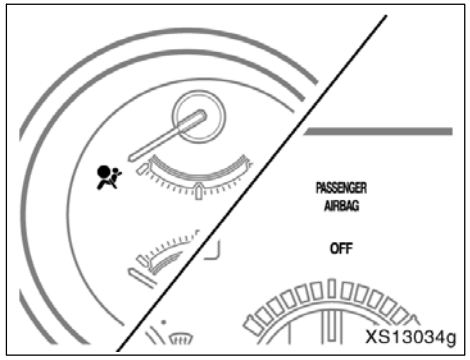

The SRS warning light will come on and the passenger airbag on–off indicator light will indicate “OFF” if there is a malfunction in the front passenger occupant classification system. Contact your Toyota dealer as soon as possible.

Condition and operation in the front passenger occupant classification system

Condition detected by the front passenger occupant classification system*1	Indicator/warning light			Devices			
	Passenger airbag on–off indicator light	SRS warning light	Front passenger's seat belt reminder light	Front passenger airbag	Side airbag on the right front passenger seat	Curtain shield airbag in the front passenger side	Front passenger's seat belt pretensioner
1. Adult*2	"ON"	Off	Flashing*5	Activated			
2. Child*3 or child restraint system*4	"OFF"*6	Off	Flashing*5	Deactivated		Activated	Activated
3. Unoccupied	Not illuminated	Off	Off	Deactivated			Deactivated
4. There is a malfunction in the system	"OFF"	On	Off	Deactivated			Activated

*1: The right front passenger on the bench seat.

*2: The system judges a person of adult size as an adult. When a smaller adult sits in the front passenger seat, the system may recognize him/her as a child depending on his/her physique and posture.

*3: When a larger child who has outgrown a child restraint system sits in the front passenger seat, the system may recognize him/her as an adult depending on his/her physique or posture.

*4: Never install a rear–facing child restraint system on the front passenger seat. A forward–facing child restraint system should only be installed on the front passenger seat when it is unavoidable. (See "Child restraint" on page 114 in this Section as for installing the child restraint system.)

*5: In the event the front passenger does not wear a seat belt.

*6: In case the indicator is not illuminated, see "Child restraint" on page 114 as for installing the child restraint system properly.

⚠ CAUTION

To avoid potential death or serious injury when the front passenger occupant classification system does not detect the conditions correctly, observe the following.

- **Make sure the passenger airbag on–off indicator light indicates "ON" when using the seat belt extender for the front passenger seat. If the indicator light indicates "OFF", disconnect the extender tongue from the seat belt buckle, then reconnect the seat belt. Reconnect the seat belt extender after making sure the indicator light indicates "ON". If you use the seat belt extender while the indicator light indicates "OFF", the front passenger airbag and side airbag on the front passenger side may not activate correctly, which could cause death or serious injury in the event of collision.**
- **Do not recline the front passenger seatback so far that it touches a rear seat. This may cause the "OFF" indicator to be illuminated, which indicates that the passenger's airbags will not deploy in the event of a severe accident. If the seatback touches the rear seat return the seatback to a position where it does not touches the rear seat.**

  Keep the front passenger seatback as upright as possible when the vehicle is moving. Reclining the seatback excessively may lessen the effectiveness of the seat belt system.
- **If an adult sits in the front passenger seat, the passenger airbag on–off indicator light should indicate "ON". If the "OFF" indicator is illuminated, ask the passenger to sit up straight, well back in the seat, feet on the floor and with the seat belt worn correctly. If the "OFF" indicator still remains illuminated, either ask the passenger to move to the rear seat, or if that is not possible, move the front passenger seat fully rearward.**
- **Wear the seat belt properly.**
- **Make sure the front passenger's seat belt tab has not been left inserted in the buckle before someone sits in the right front passenger seat.**
- **Do not place a heavy load on the front passenger seat or the seatback table, etc.**
- **Do not apply pressure to the front passenger seat by resting hands or legs on the seatback.**
- **Do not let a rear passenger lift the front passenger seat with their feet or press on the seatback with their legs.**
- **Do not put objects under the front passenger seat.**
- **Do not attach a commercial seatback table or other heavy item to the back of the right front passenger seat.**
- **Child restraint systems installed on the rear seat should not contact the front seatbacks.**

- **When it is unavoidable to install the forward–facing child restraint system on the front passenger seat, install the child restraint system on the right front passenger seat in the proper order. (As for the installation order, see "—Installation with seat belt" on page 127 in this Section.)**
- **Do not modify or remove the front seats.**
- **Do not kick the front passenger seat or subject it to severe impact. Otherwise, the SRS warning light may come on to indicate a malfunction of the detection system. In this case, contact your Toyota dealer immediately.**

The passenger airbag on–off indicator light may indicate "ON" (the front passenger airbag and side airbag on the front passenger seat may deploy) even if observing the above cautions, when a child sits in, or a forward–facing child restraint system is installed on the front passenger seat. Refer to all the cautions in "—SRS driver airbag and front passenger airbag" on page 86, "—SRS side airbags and curtain shield airbags" on page 94 and "Child restraint" on page 114.

—Roll sensing of curtain shield airbags off switch

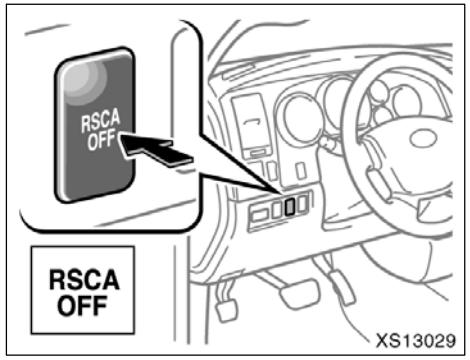

The roll sensing of curtain shield airbags off switch ("RSCA OFF" switch) can turn off the curtain shield airbags and seat belt pretensioners in a vehicle rollover. This switch should only be used if inflation is not desired (such as extreme off–road driving).

When you push the “RSCA OFF” switch for a few seconds with the ignition switch on, the “RSCA OFF” indicator light comes on and the roll sensing function is turned off. When you push the switch again, the indicator light goes off and the roll sensing function is turned on. (For details about the roll sensing function, see “—SRS side airbags and curtain shield airbags” on page 94 in this Section.)

In a severe side impact, the curtain shield airbags on impacted side will inflate even if the roll sensing function is turned off. (For details about the curtain shield airbags, see “—SRS side airbags and curtain shield airbags” on page 94 in this Section.)

In a severe frontal impact, the seat belt pretensioners will work even if the roll sensing function is turned off. (For details about the seat belt pretensioners, see “—Seat belt pretensioners” on page 72 in this Section.)

If the ignition switch is turned to “ACC” or “LOCK” with the roll sensing function off and then the ignition switch is turned back to “ON”, the roll sensing function will turn back on automatically.

⚠ CAUTION

- **Before normal driving, make sure the “RSCA OFF” indicator light is off.**
- **When the roll sensing function is turned off (and the “RSCA OFF” indicator light is on), the curtain shield airbags and seat belt pretensioners will not work in a vehicle rollover. Turning off the curtain shield airbags and seat belt pretensioners reduces occupant protection which your vehicle safety systems can provide in accidents and increase the likelihood of death or serious injuries.**

Child restraint—
—Child restraint precautions

Toyota strongly urges the use of appropriate child restraint systems for children.

The laws of all 50 states in the U.S.A. and Canada now require the use of a child restraint system.

Your vehicle conforms to SAEJ1819.

If a child is too large for a child restraint system, the child should sit in the rear seat and must be restrained using the vehicle’s seat belt. See “Seat belts” on page 65 in this Section for details.

⚠ CAUTION

- **For effective protection in automobile accidents and sudden stops, a child must be properly restrained, using a seat belt or child restraint system depending on the age and size of the child. Holding a child in your arms is not a substitute for a child restraint system. In an accident, the child can be crushed against the windshield, or between you and the vehicle’s interior.**

- **Regular cab models—**
  Toyota strongly urges use of a proper child restraint system which conforms to the size of the child.

  Double cab and Crew Max models—Toyota strongly urges use of a proper child restraint system which conforms to the size of the child, installed on the rear seat. According to accident statistics, the child is safer when properly restrained in the rear seat than in the front seat.
- **Regular cab models—**
  Never put infant or child age 1 to 12 in a passenger risk group on the right front passenger seat with the passenger airbag off switch in the "AUTO" position. In the event of an accident, the force of the rapid inflation of the front passenger airbag can cause death or serious injury to the child.

  If you must put infant or child age 1 to 12 in a passenger risk group on the right front seat, make sure that the passenger airbag off switch is in the "OFF" position with the key removed and that the indicator light is on. (For details, see "—SRS driver airbag and front passenger airbag" on page 75 in this Section.)
- **Never install a rear–facing child restraint system on the front passenger seat even if the passenger airbag on–off indicator light indicates "OFF". In the event of an accident, the impact of the rapid inflation of the front passenger airbag could cause death or serious injury to the child if the rear–facing child restraint system is installed on the front passenger seat.**
- **A forward–facing child restraint system should be allowed to be installed on the front passenger seat only when it is unavoidable. Always move the seat as far back as possible even if the passenger airbag on–off indicator light indicates "OFF", because the front passenger airbag could inflate with considerable speed and force. Otherwise, the child may be killed or seriously injured.**
- **Do not allow the child to lean his/her head or any part of his/her body against the door or the area of the seat, front or rear pillar or roof side rail from which the side airbags or curtain shield airbags deploy even if the child is seated in the child restraint system. It is dangerous if the side airbag and curtain shield airbag inflate, and the impact could cause death or serious injury to the child.**

- **Do not use the seat belt extender when installing a child restraint system on the front or rear passenger seat. If installing a child restraint system with the seat belt extender connected to the seat belt, the seat belt will not securely hold the child restraint system, which could cause death or serious injury to the child or other passengers in the event of collision.**
- **Make sure you have complied with all installation instructions provided by the child restraint manufacturer and that the system is properly secured. If it is not secured properly, it may cause death or serious injury to the child in the event of a sudden stop or accident.**

—Child restraint system

A child restraint system for a small child or baby must itself be properly restrained on the seat with the lap portion of the lap/shoulder belt. You must carefully consult the manufacturer's instructions which accompany the child restraint system.

To provide proper restraint, use a child restraint system following the manufacturer's instructions about the appropriate age and size of the child for the child restraint system.

Install the child restraint system correctly following the instructions provided by its manufacturer. General directions are also provided under the following illustrations.

The child restraint system should be installed in the rear seat if your vehicle is equipped with rear seats. According to accident statistics, the child is safer when properly restrained in the rear seat than in the front seat.

When not using the child restraint system, keep it secured with the seat belt or place it somewhere other than the passenger compartment. This will prevent it from injuring passengers in the event of a sudden stop or accident.

—Types of child restraint system

Child restraint systems are classified into the following 3 types depending on the child's age and size.

(A) Infant seat
(B) Convertible seat
(C) Booster seat

Install the child restraint system following the instructions provided by its manufacturer.

Your vehicle has anchor brackets for securing the top strap of a child restraint system.

For instructions about how to use the anchor bracket, see "—Using a top strap" on page 138 or 141 in this Section.

The child restraint lower anchorages approved for your vehicle may also be used. See "—Installation with child restraint lower anchorages" on page 146 or 148 in this Section.

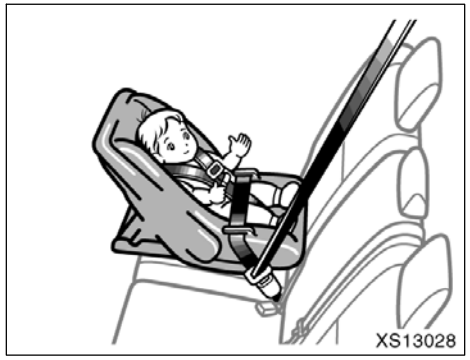

(A) Infant seat

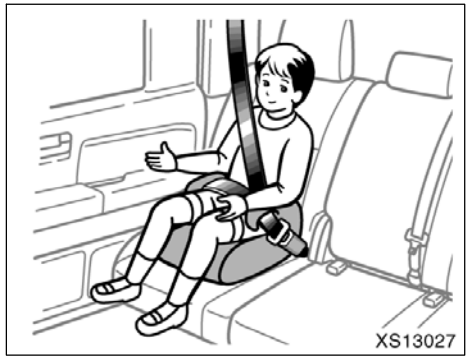

(C) Booster seat

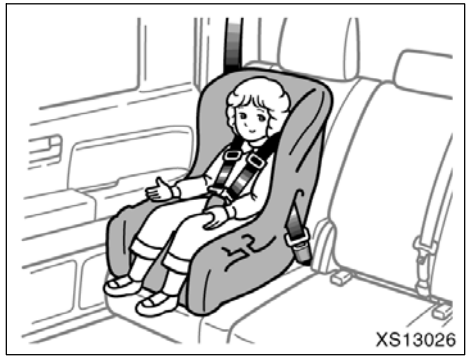

(B) Convertible seat

—Installation with seat belt (Regular cab models)

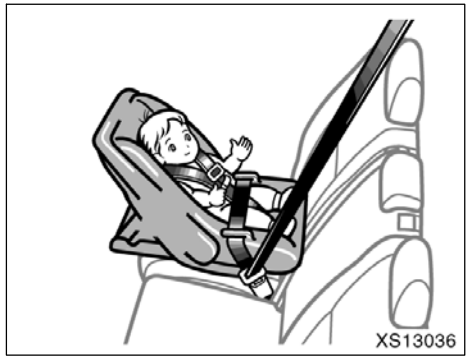

(A) INFANT SEAT INSTALLATION

An infant seat must be used in rear–facing position only.

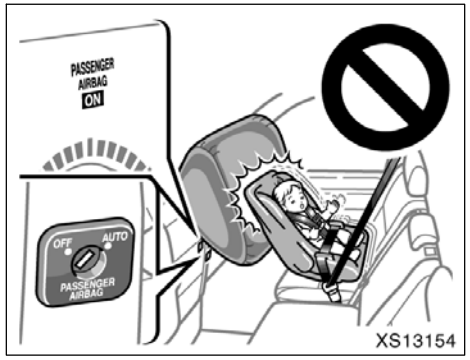

⚠ CAUTION

Never install a rear-facing child restraint system on the front passenger seat with the passenger airbag off switch in the "AUTO" position. In the event of an accident, the force of the rapid inflation of the front passenger airbag can cause death or serious injury to the child if the rear-facing child restraint system is installed on the front passenger seat.

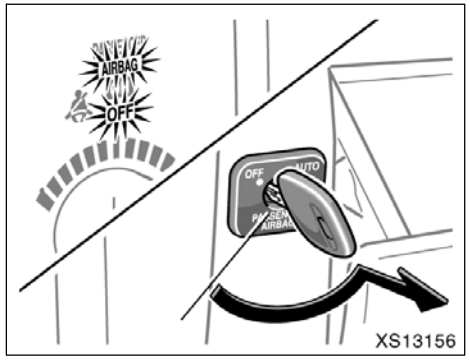

When you install a rear-facing child restraint system which belongs to a passenger risk group on the right front passenger seat, turn the passenger airbag off switch counterclockwise to the "OFF" position and remove the key. (For details, see "—SRS driver airbag and front passenger airbag" on page 75 in this Section.)

The indicator light comes on when the system is off.

⚠ CAUTION

- **If you must install a rear-facing child restraint system on the right front passenger seat, make sure that the front passenger airbag off switch is in the "OFF" position with the key removed and that the indicator light is on.**
- **Never install a rear-facing child restraint system on the center front seat.**

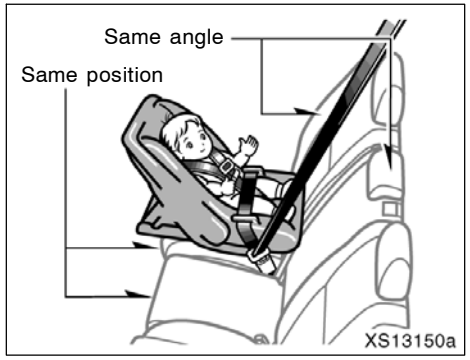

- **Bench seat: In order to firmly secure the child restraint system to the right front passenger seat, align the seatback angle and seat position of the right front passenger seat to match the center front passenger seat. Otherwise, it could cause death or injury in a collision.**

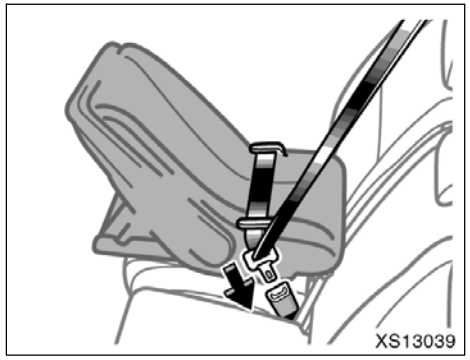

To install the infant seat:

1. Run the lap and shoulder belt through or around the infant seat following the instructions provided by its manufacturer and insert the tab into the buckle taking care not to twist the belt. Keep the lap portion of the belt tight.

⚠ CAUTION

- **After inserting the tab, make sure the tab and buckle are locked and that the lap and shoulder portions of the belt are not twisted.**
- **Do not insert coins, clips, etc. in the buckle as this may prevent your child from properly latching the tab and buckle.**
- **If the seat belt does not function normally, it cannot protect your child from death or serious injury. Contact your Toyota dealer immediately. Do not install the child restraint system on the seat until the seat belt is fixed.**

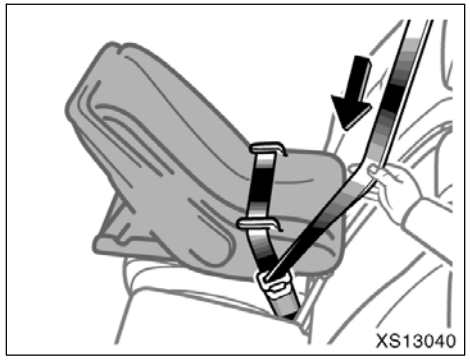

2. Fully extend the shoulder belt to put it in the lock mode. When the belt is then retracted even slightly, it cannot be extended.

To hold the infant seat securely, make sure the belt is in the lock mode before letting the belt retract.

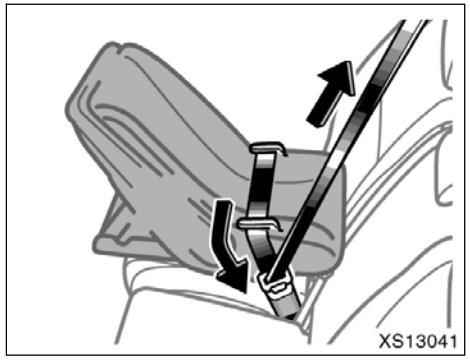

3. While pressing the infant seat firmly against the seat cushion and seatback, let the shoulder belt retract as far as it will go to hold the infant seat securely.

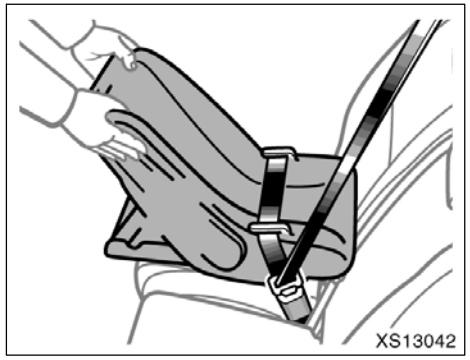

⚠ CAUTION

Push and pull the child restraint system in different directions to be sure it is secure. Follow all the installation instructions provided by its manufacturer.

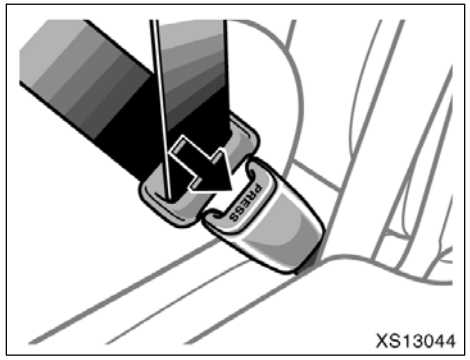

To remove the infant seat:
Press the buckle release button and allow the belt to retract completely. The belt will move freely again and be ready to work for an adult or older child passenger.

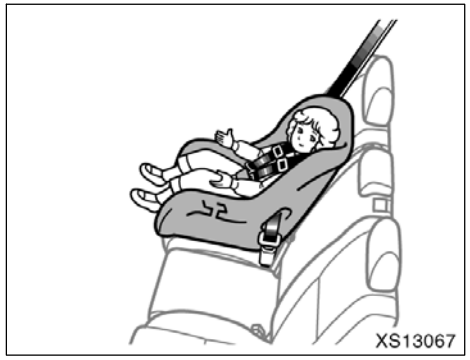

(B) CONVERTIBLE SEAT INSTALLATION

A convertible seat must be used in forward–facing or rear–facing position depending on the child's age and size of the child. When installing, follow the manufacturer's instructions about the applicable age and size of the child as well as directions for installing the child restraint system.

⚠ CAUTION

Rear–facing child restraint system: Never install a rear–facing child restraint system on the front passenger seat with the passenger airbag off switch in the "AUTO" position. In the event of an accident, the force of the rapid inflation of the front passenger airbag can cause death or serious injury to the child if the rear–facing child restraint system is installed on the front passenger seat.

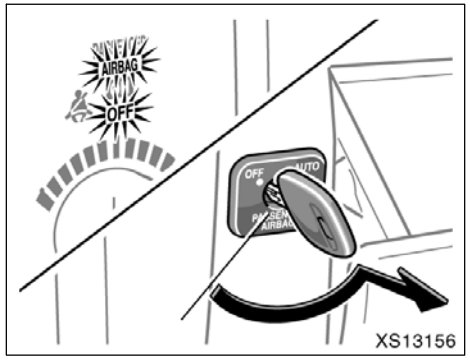

When you install a rear–facing child restraint system which belongs to a passenger risk group on the right front passenger seat, turn the passenger airbag off switch counterclockwise to the "OFF" position and remove the key. (For details, see "—SRS driver airbag and front passenger airbag" on page 75 in this Section.)

The indicator light comes on when the system is off.

⚠ CAUTION

- **If you must install a rear–facing child restraint system on the right front passenger seat, make sure that the passenger airbag off switch is in the "OFF" position with the key removed and that the indicator light is on.**
- **Never install a rear–facing child restraint system on the center front seat.**

⚠ CAUTION

Forward–facing child restraint system: A forward–facing child restraint system which belongs to a passenger risk group should never be installed on the right front passenger seat with the passenger airbag off switch in the "AUTO" position, because the force of the deploying airbag could cause death or serious injury to the child in forward seating position. (For details, see "—SRS driver airbag and front passenger airbag" on page 75 in this Section.)

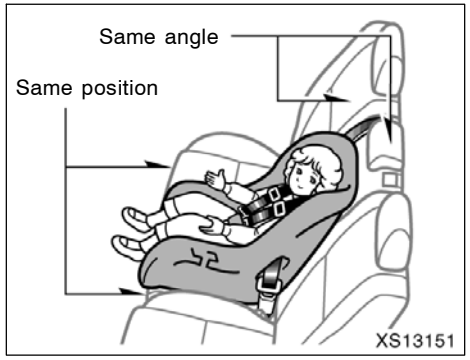

- **Bench seat: In order to firmly secure the child restraint system to the center front passenger seat, align the seatback angle and seat position of the right front passenger seat to match the center front passenger seat. If the child restraint system cannot be firmly secured, install it onto the right front passenger seat. Otherwise, it could cause death or injury in a collision.**
- **Bench seat: If the child restraint system installed on the center front passenger seat interferes with the driver, install it onto the right front passenger seat.**

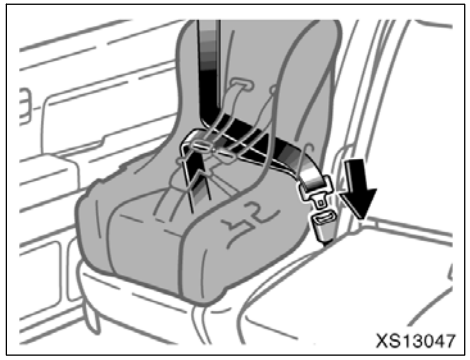

To install the forward–facing convertible seat:

1. Run the lap and shoulder belt through or around the convertible seat following the instructions provided by its manufacturer and insert the tab into the buckle taking care not to twist the belt. Keep the lap portion of the belt tight.

For instructions concerning the installation of the rear–facing convertible seat, see “(A) INFANT SEAT INSTALLATION” on page 117.

⚠ CAUTION

- **After inserting the tab, make sure the tab and buckle are locked and that the lap and shoulder portions of the belt are not twisted.**
- **Do not insert coins, clips, etc. in the buckle as this may prevent your child from properly latching the tab and buckle.**
- **If the seat belt does not function normally, it cannot protect your child from death or serious injury. Contact your Toyota dealer immediately. Do not install the child restraint system on the seat until the seat belt is fixed.**

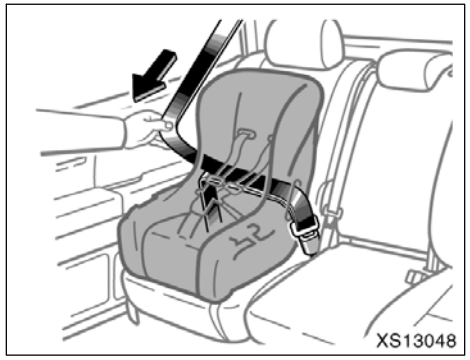

2. Fully extend the shoulder belt to put it in the lock mode. When the belt is then retracted even slightly, it cannot be extended.

To hold the convertible seat securely, make sure the belt is in the lock mode before letting the belt retract.

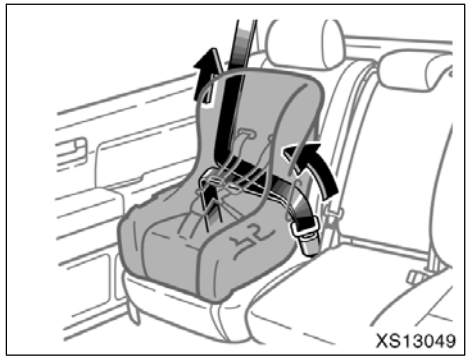

3. While pressing the convertible seat firmly against the seat cushion and seatback, let the shoulder belt retract as far as it will go to hold the convertible seat securely.

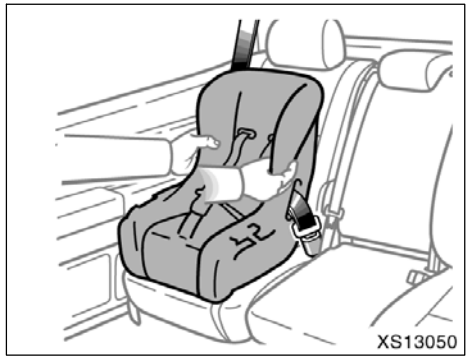

⚠ CAUTION

Push and pull the child restraint system in different directions to be sure it is secure. Follow all the installation instructions provided by its manufacturer.

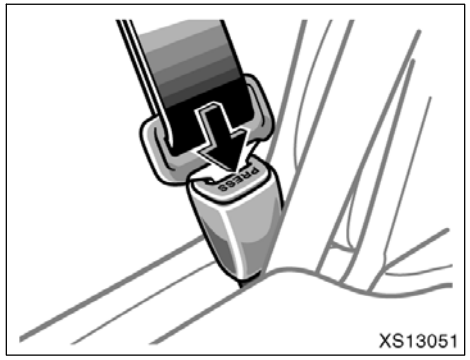

To remove the convertible seat:
Press the buckle release button and allow the belt to retract completely. The belt will move freely again and be ready to work for an adult or older child passenger.

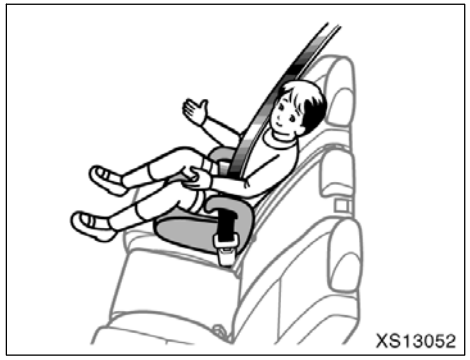

(C) BOOSTER SEAT INSTALLATION

A booster seat must be used in forward–facing position only.

⚠ CAUTION

A forward–facing child restraint system which belongs to a passenger risk group should never be installed on the right front passenger seat with the passenger airbag off switch in the "AUTO" position, because the force of the deploying airbag could cause death or serious injury to the child in forward seating position. (For details, see "—SRS driver airbag and front passenger airbag" on page 75 in this Section.)

To install the booster seat:

Sit the child on a booster seat. Run the lap and shoulder belt through or around the booster seat and across the child following the instructions provided by its manufacturer and insert the tab into the buckle taking care not to twist the belt.

Make sure the shoulder belt is correctly across the child's shoulder and that the lap belt is positioned as low as possible on the child's hips. See "Seat belts" on page 65 in this Section for details.

⚠ CAUTION

- **Always make sure the shoulder belt is positioned across the center of child's shoulder. The belt should be kept away from child's neck, but not falling off child's shoulder. Otherwise, the child may be killed or seriously injured in case of sudden braking or a collision.**
- **Both high–positioned lap belts and loose–fitting belts could cause death or serious injuries due to sliding under the lap belt during a collision or other unintended event. Keep the lap belt positioned as low on a child's hips as possible.**
- **For child's safety, do not place the shoulder belt under child's arm.**
- **After inserting the tab, make sure the tab and buckle are locked and that the lap and shoulder portions of the belt are not twisted.**
- **Do not insert coins, clips, etc. in the buckle as this may prevent your child from properly latching the tab and buckle.**

- **If the seat belt does not function normally, it cannot protect your child from death or serious injury. Contact your Toyota dealer immediately. Do not install the child restraint system on the seat until the seat belt is fixed.**

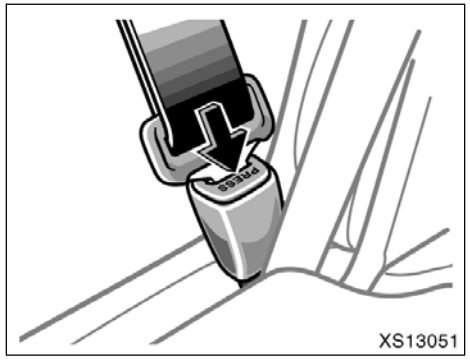

To remove the booster seat:
Press the buckle release button and allow the belt to retract.

—Installation with seat belt (Double cab and Crew Max models)

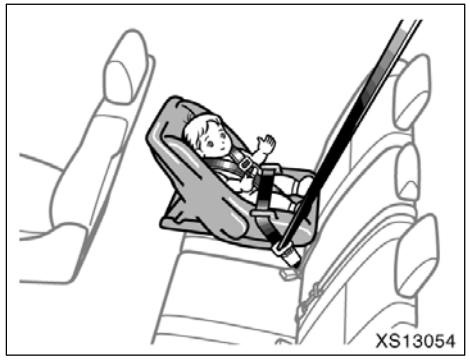

(A) INFANT SEAT INSTALLATION

An infant seat must be used in rear–facing position only.

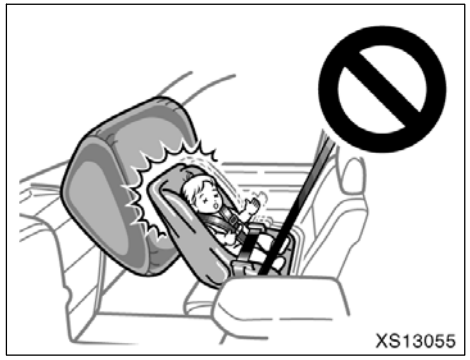

⚠ CAUTION

- **Never install a rear–facing child restraint system on the front passenger seat even if the passenger airbag on–off indicator light indicates "OFF". In the event of an accident, the force of the rapid inflation of the front passenger airbag could cause death or serious injury to the child if the rear–facing child restraint system is installed on the front passenger seat.**

- **Do not install a child restraint system on the rear seat if it interferes with the lock mechanism of the front seats. Otherwise, the child or front seat occupant, may be killed or seriously injured in case of sudden braking or a collision.**
- **If the driver's seat position does not allow sufficient space for safe installation, install the child restraint system on the rear right seat. Child restraint system installed on the rear seat should not contact the front seatbacks.**

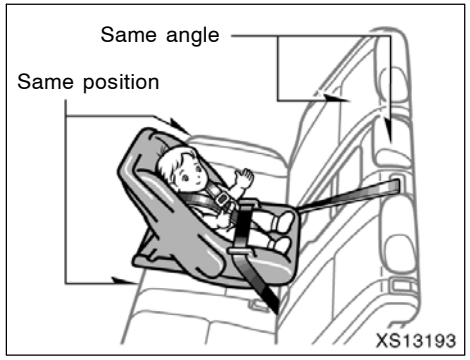

- **Crew Max models: When installing a child restraint system in the rear seat center position, adjust both seat cushions to the same position and align both seatbacks at the same angle. Otherwise, the child restraint system cannot be securely restrained and this may cause death or serious injuries in a collision.**

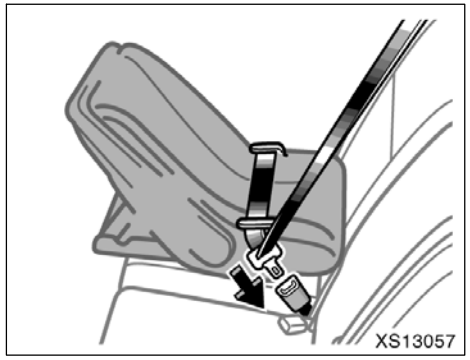

To install the infant seat:

1. Run the lap and shoulder belt through or around the infant seat following the instructions provided by its manufacturer and insert the tab into the buckle taking care not to twist the belt. Keep the lap portion of the belt tight.

⚠ CAUTION

- **After inserting the tab, make sure the tab and buckle are locked and that the lap and shoulder portions of the belt are not twisted.**
- **Do not insert coins, clips, etc. in the buckle as this may prevent your child from properly latching the tab and buckle.**
- **If the seat belt does not function normally, it cannot protect your child from death or serious injury. Contact your Toyota dealer immediately. Do not install the child restraint system on the seat until the seat belt is fixed.**

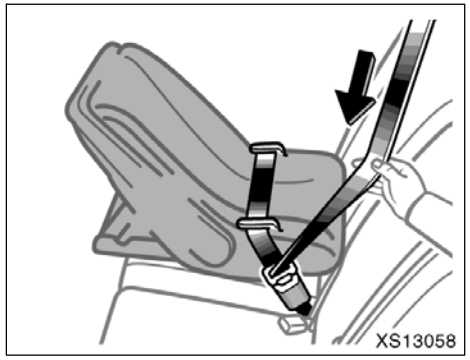

2. Fully extend the shoulder belt to put it in the lock mode. When the belt is then retracted even slightly, it cannot be extended.

To hold the infant seat securely, make sure the belt is in the lock mode before letting the belt retract.

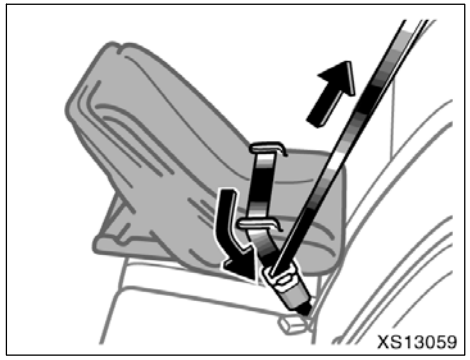

3. While pressing the infant seat firmly against the seat cushion and seatback, let the shoulder belt retract as far as it will go to hold the infant seat securely.

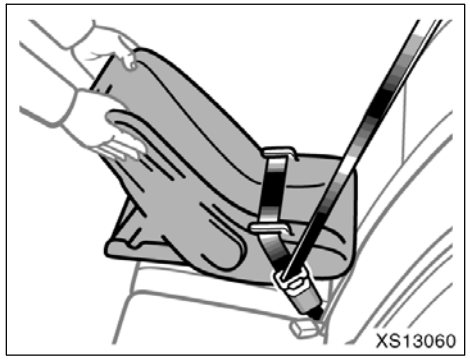

⚠ CAUTION

Push and pull the child restraint system in different directions to be sure it is secure. Follow all the installation instructions provided by its manufacturer.

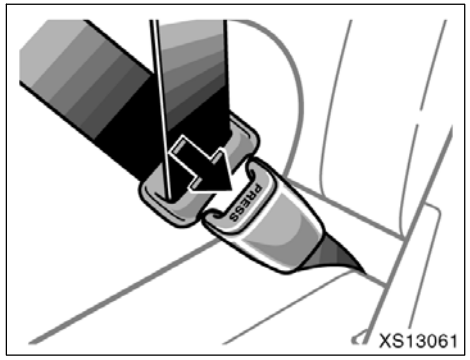

To remove the infant seat:
Press the buckle release button and allow the belt to retract completely. The belt will move freely again and be ready to work for an adult or older child passenger.

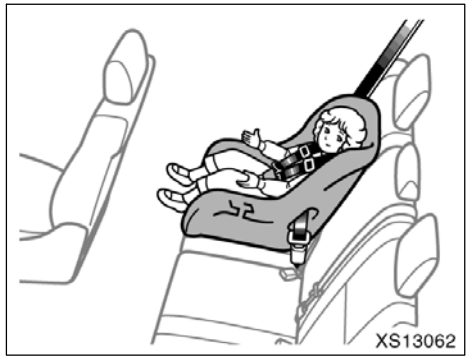

(B) CONVERTIBLE SEAT INSTALLATION

A convertible seat must be used in forward–facing or rear–facing position depending on the age and size of the child. When installing, follow the manufacturer's instructions about the applicable age and size of the child as well as directions for installing the child restraint system.

Install the child restraint system on the front passenger seat only when it is unavoidable. Your vehicle is equipped with a front passenger occupant classification system. In order to activate the occupant classification system correctly, install the forward–facing child restraint system on the front passenger seat in the following order:

1. Turn the ignition switch to the “ON” position.
2. Move the right front passenger seat to the rearward position.
3. When it is unavoidable, put the child restraint system on the front passenger seat without putting your weight on the front passenger seat.
4. Insert the seat belt tab into the seat belt buckle.
5. Fully extend the shoulder belt to put it in the lock mode. When the belt is then retracted even slightly, it cannot be extended. To hold the seat securely, make sure the belt is in the lock mode before letting the belt retract.
6. While pressing the convertible seat firmly against the seat cushion and seatback, let the shoulder belt retract as far as it will go to hold the convertible seat securely.

CAUTION

Push and pull the child restraint system in different directions to be sure it is secure. Follow all the installation instructions provided by its manufacturer.

7. Put a child on the child restraint system and secure the child, complying with the instructions provided by the child restraint system manufacturer.

The passenger airbag on–off indicator light should indicate “OFF” when the ignition switch is in the “ON” position and the child is in the child restraint system after following these procedures. The “OFF” indicator indicates the SRS front passenger airbag and side airbag on the passenger side will not deploy. if the indicator light indicates “ON”, do the following procedure:

1. Turn the ignition off.
2. Remove the child restraint system.
3. When reinstalling a child restraint system, make sure the seatback does not press the child restraint system into the seat cushion. If this occurs, adjust the seatback angle slightly.
4. Then make sure the head restraint is not pressing the child restraint system into the seat cushion. If this occurs, raise the head restraint.
5. Turn the ignition on again.

The passenger airbag on–off indicator light should indicate “OFF”. If the indicator light still indicates “ON” when the ignition switch is turned to the “ON” position, then the SRS front passenger airbag and side airbag on the passenger side may deploy in an accident. Do not drive the vehicle in this condition. Remove the child restraint system and contact your Toyota dealer.

⚠ CAUTION

- **Never install a rear-facing child restraint system on the front passenger seat. A forward-facing child restraint system should only be installed on the front passenger seat when unavoidable. If you must install the child restraint system on the front passenger seat, put the seat in its most rearward position, and install the forward-facing child restraint system in the proper order. Otherwise, the front passenger occupant classification system can not detect the presence of the child restraint system and the front passenger airbag and side airbag on the front passenger seat could deploy, and the impact could cause death or serious injury to the child.**

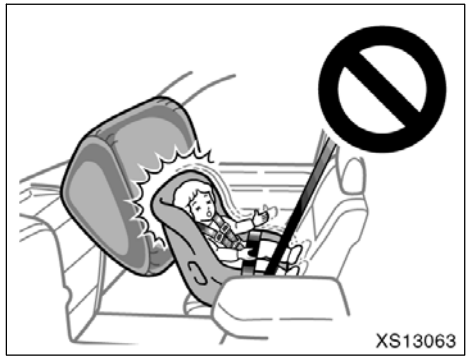

⚠ CAUTION

- **Never install a rear-facing child restraint system on the front passenger seat even if the passenger airbag on-off indicator light indicates "OFF". In the event of an accident, the impact of the rapid inflation of the front passenger airbag could cause death or serious injury to the child if the rear-facing child restraint system is installed on the front passenger seat.**

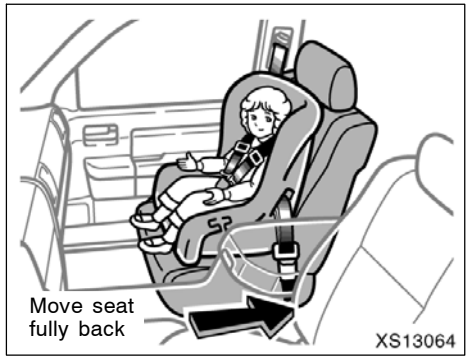

- **A forward-facing child restraint system should be allowed to be installed on the front passenger seat only when it is unavoidable. Always move the seat as far back as possible even if the passenger airbag on-off indicator light indicates "OFF", because the front passenger airbag could inflate with considerable speed and force. Otherwise, the child may be killed or seriously injured.**

- **Do not allow the child to lean his/her head or any part of his/her body against the door or the area of the seat, front or rear pillar or roof side rail from which the side airbags or curtain shield airbags deploy even if the child is seated in the child restraint system. It is dangerous if the side airbag and curtain shield airbag inflate, and the impact could cause death or serious injury to the child.**

- **Do not install a child restraint system on the rear seat if it interferes with the lock mechanism of the front seats. Otherwise, the child or front seat occupants may be killed or seriously injured in case of sudden braking or a collision.**
- **If the driver's seat position does not allow sufficient space for safe installation, install the child restraint system on the rear right seat. Child restraint system installed on the rear seat should not contact the front seatbacks.**

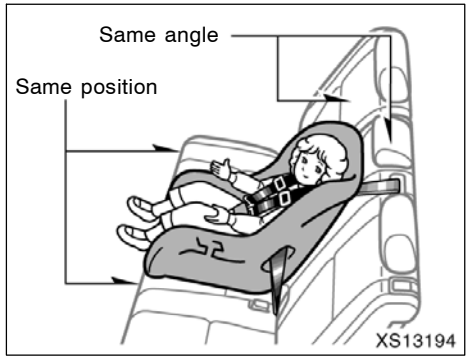

- **Crew Max models: When installing a child restraint system in the rear seat center position, adjust both seat cushions to the same position and align both seatbacks at the same angle. Otherwise, the child restraint system cannot be securely restrained and this may cause death or serious injuries in a collision.**

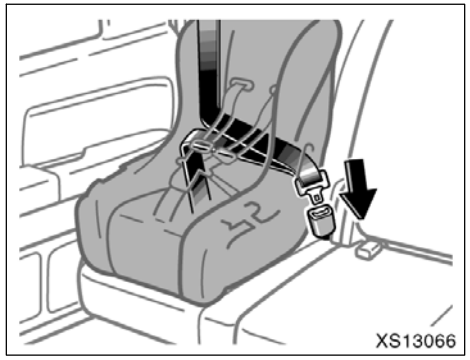

To install the forward–facing convertible seat:

1. Run the lap and shoulder belt through or around the convertible seat following the instructions provided by its manufacturer and insert the tab into the buckle taking care not to twist the belt. Keep the lap portion of the belt tight.

For instructions concerning the installation of the rear–facing convertible seat, see “(A) INFANT SEAT INSTALLATION” on page 127.

⚠ CAUTION

- **After inserting the tab, make sure the tab and buckle are locked and that the lap and shoulder portions of the belt are not twisted.**
- **Do not insert coins, clips, etc. in the buckle as this may prevent your child from properly latching the tab and buckle.**
- **If the seat belt does not function normally, it cannot protect your child from death or serious injury. Contact your Toyota dealer immediately. Do not install the child restraint system on the seat until the seat belt is fixed.**

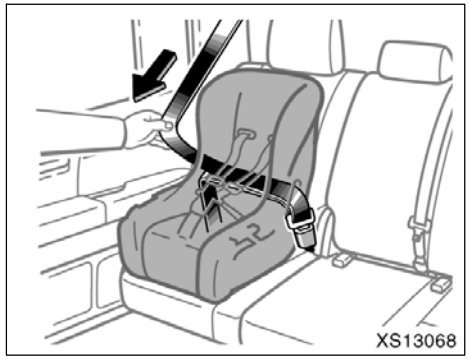

2. Fully extend the shoulder belt to put it in the lock mode. When the belt is then retracted even slightly, it cannot be extended.

To hold the convertible seat securely, make sure the belt is in the lock mode before letting the belt retract.

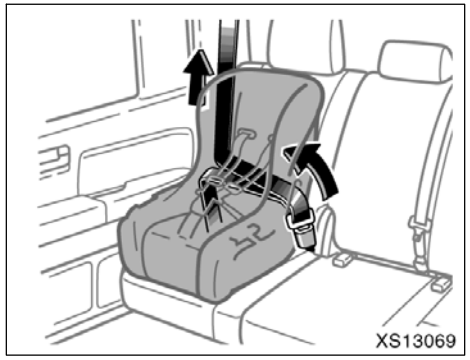

3. While pressing the convertible seat firmly against the seat cushion and seatback, let the shoulder belt retract as far as it will go to hold the convertible seat securely.

⚠ CAUTION

Push and pull the child restraint system in different directions to be sure it is secure. Follow all the installation instructions provided by its manufacturer.

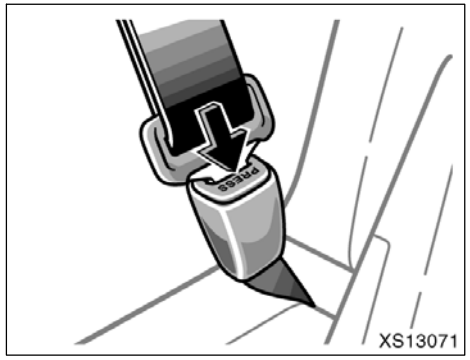

To remove the convertible seat:
Press the buckle release button and allow the belt to retract completely. The belt will move freely again and be ready to work for an adult or older child passenger.

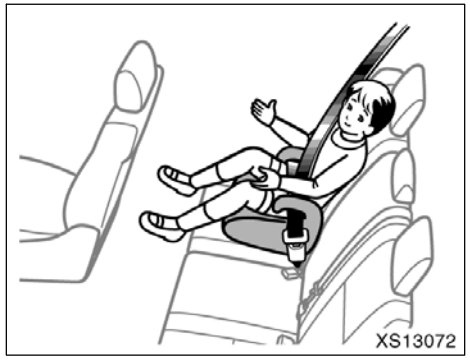

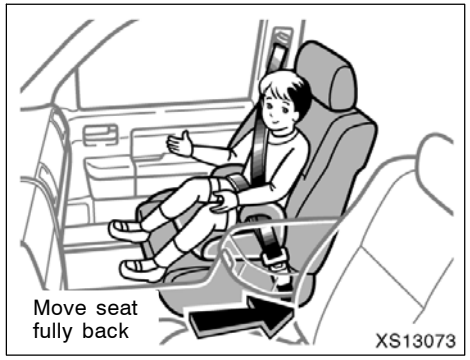

- **Do not allow the child to lean his/her head or any part of his/her body against the door or the area of the seat, front or rear pillar or roof side rail from which the side airbags or curtain shield airbags deploy even if the child is seated in the child restraint system. It is dangerous if the side airbag and curtain shield airbag inflate, and the impact could cause death or serious injury to the child.**

(C) BOOSTER SEAT INSTALLATION

A booster seat must be used in forward–facing position only.

⚠ CAUTION

- **A forward–facing child restraint system should be allowed to be installed on the front passenger seat only when it is unavoidable. Always move the seat as far back as possible even if the passenger airbag on–off indicator light indicates "OFF", because the front passenger airbag could inflate with considerable speed and force. Otherwise, the child may be killed or seriously injured.**

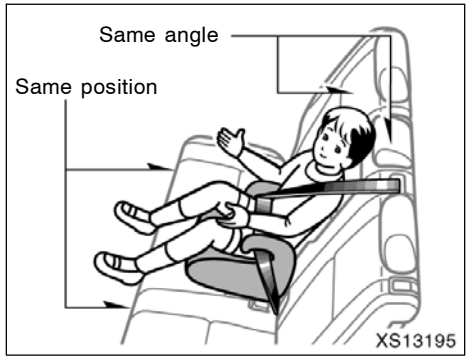

- **Crew Max models: When installing a child restraint system in the rear seat center position, adjust both seat cushions to the same position and align both seatbacks at the same angle. Otherwise, the child restraint system cannot be securely restrained and this may cause death or serious injuries in a collision.**

To install the booster seat:

Sit the child on a booster seat. Run the lap and shoulder belt through or around the booster seat and across the child following the instructions provided by its manufacturer and insert the tab into the buckle taking care not to twist the belt.

Make sure the shoulder belt is correctly across the child's shoulder and that the lap belt is positioned as low as possible on the child's hips. See "Seat belts" on page 65 in this Section for details.

⚠ CAUTION

- **Always make sure the shoulder belt is positioned across the center of child's shoulder. The belt should be kept away from child's neck, but not falling off child's shoulder. Otherwise, the child may be killed or seriously injured in case of sudden braking or a collision.**
- **Both high–positioned lap belts and loose–fitting belts could cause death or serious injuries due to sliding under the lap belt during a collision or other unintended event. Keep the lap belt positioned as low on a child's hips as possible.**
- **For child's safety, do not place the shoulder belt under child's arm.**
- **After inserting the tab, make sure the tab and buckle are locked and that the lap and shoulder portions of the belt are not twisted.**
- **Do not insert coins, clips, etc. in the buckle as this may prevent your child from properly latching the tab and buckle.**

- **If the seat belt does not function normally, it cannot protect your child from death or serious injury. Contact your Toyota dealer immediately. Do not install the child restraint system on the seat until the seat belt is fixed.**

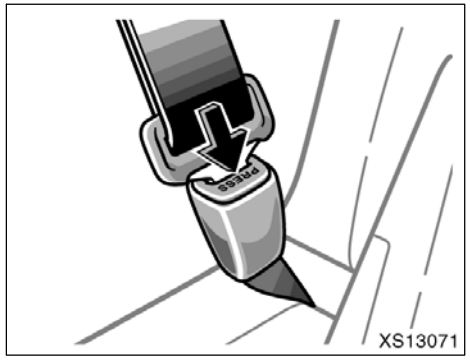

To remove the booster seat:
Press the buckle release button and allow the belt to retract.

—Using a top strap (Regular cab models)

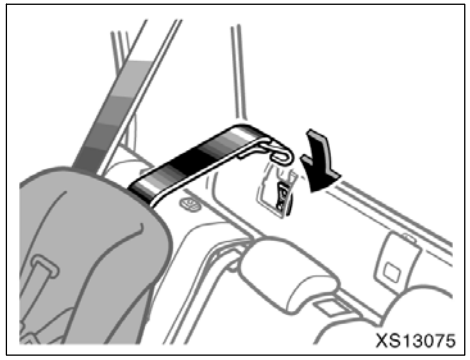

Follow the procedure below for a child restraint system that requires the use of a top strap.

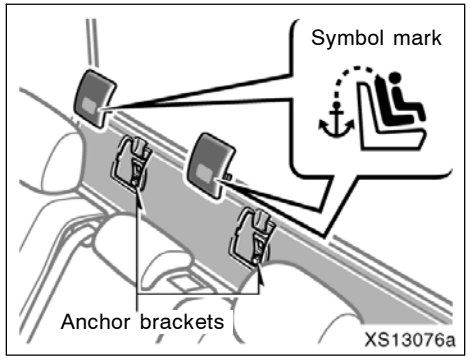

Bench seats

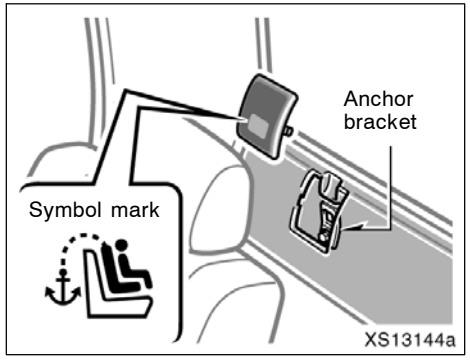

Separate seats

Use the anchor bracket on the back panel to attach the top strap.

Anchor brackets are installed for each passenger seating position.

This symbol indicates the locations of the anchor brackets.

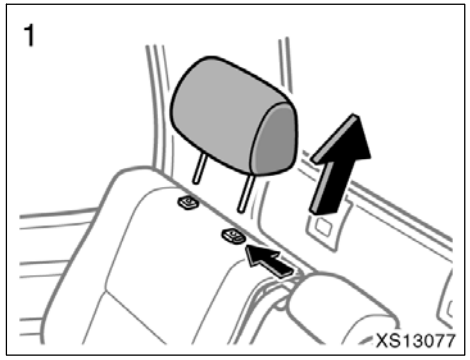

TO USE THE ANCHOR BRACKET:

1. **Remove the passenger head restraint.**

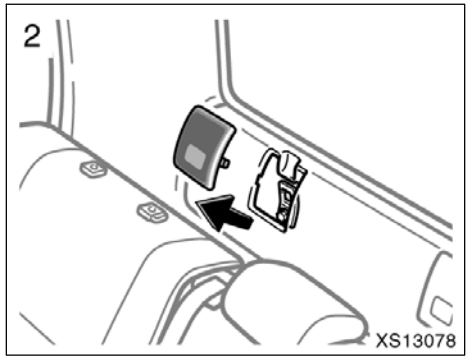

2. **Lightly push down on the top surface of the anchor bracket cover, then pull it forward to remove.**

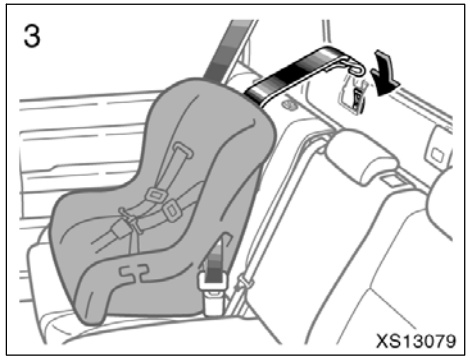

3. **Fix the child restraint system with the seat belt.**

   Latch the hook onto the anchor bracket and tighten the top strap.

For instructions on installing the child restraint system, see “Child restraint” on page 114 in this Section.

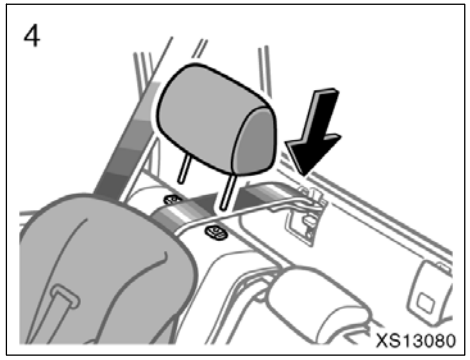

4. **Replace the passenger head restraint.**

Store any removed covers in a safe place such as the glove box.

Be sure to replace all covers when the anchor bracket is not in use.

—Using a top strap (Double cab models)

⚠ CAUTION

- **When returning the seatback to its original position, make sure the seatback is securely locked by pushing forward and rearward on the top of the seatback.**
- **Make sure the top strap is securely latched, and check that the child restraint system is secure by pushing and pulling it in different directions. Follow all the installation instructions provided by its manufacturer.**

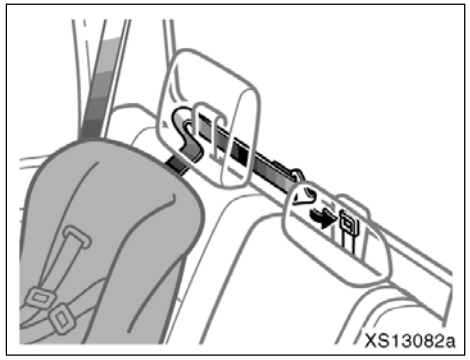

Right position

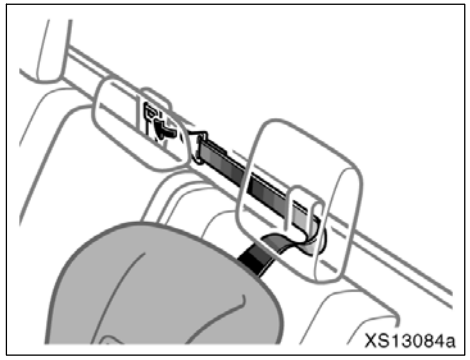

Left position

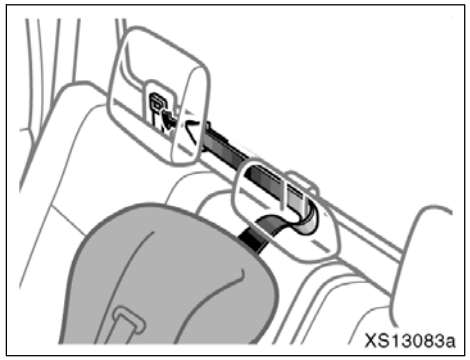

Center position

Follow the procedure below for a child restraint system that requires the use of a top strap.

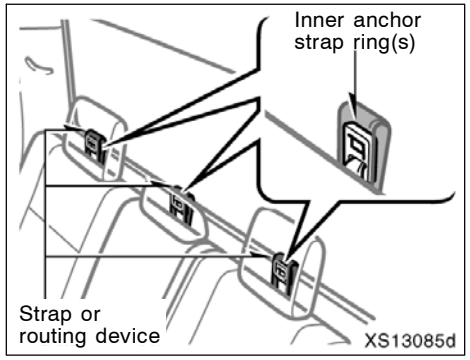

Use the strap or routing device and the inner anchor strap rings to attach the top strap.

Anchor strap ring are installed for each rear seating position.

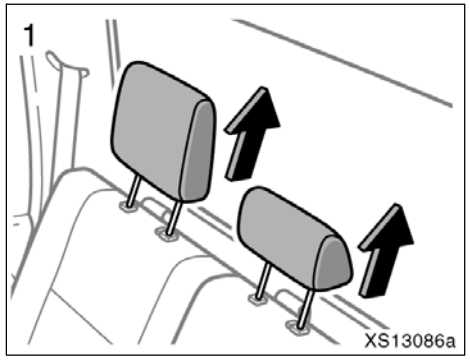

TO USE THE ANCHOR BRACKET:

1. Raise the head restraints.

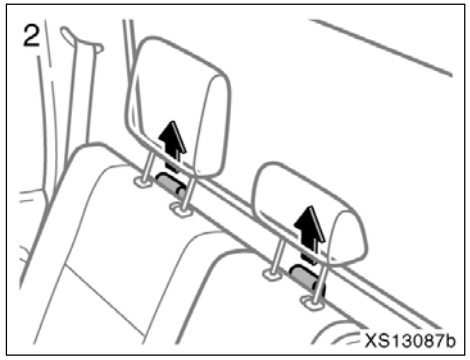

2. Pull up the strap.

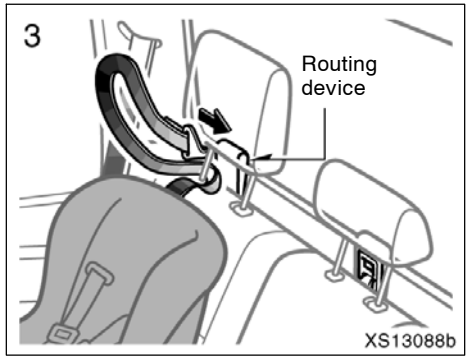

3. **Fix the child restraint system with the seat belt.**

   Route the top strap through the routing device as shown in the illustration.

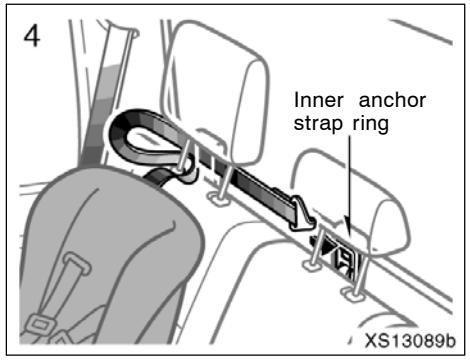

4. **Latch the hook onto the inner anchor strap ring and tighten the top strap.**

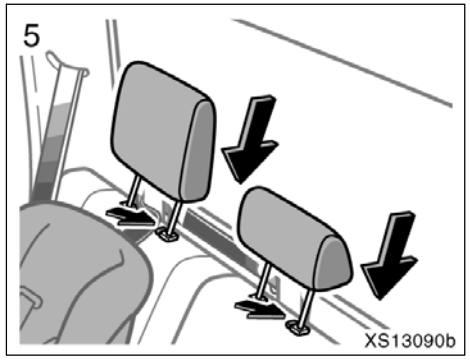

5. **Lower the head restraints.**

For instructions on installing the child restraint system, see “Child restraint” on page 114 in this Section.

⚠ CAUTION

Make sure the top strap is securely latched, and check that the child restraint system is secure by pushing and pulling it in different directions. Follow all the installation instructions provided by its manufacturer.

6. **If two child seats will be installed, use the outboard seating positions.**

—Using a top strap (Crew Max models)

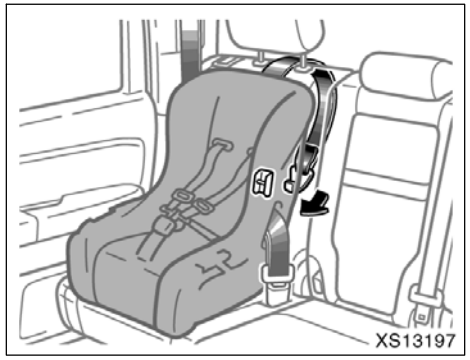

Follow the procedure below for a child restraint system that requires the use of a top strap.

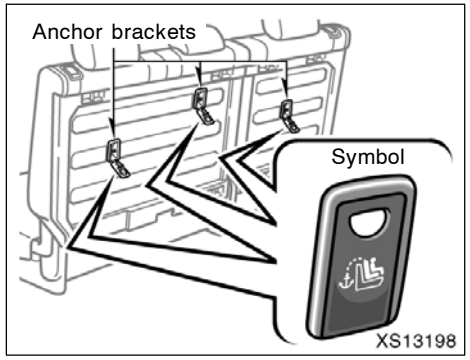

Use the anchor brackets behind the rear seat seatbacks to secure the top strap.

Anchor brackets are installed for each seating position of the rear seat.

This symbol indicates the locations of user ready anchor brackets.

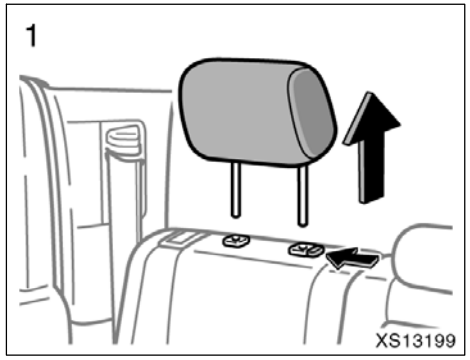

TO USE THE ANCHOR BRACKET:

1. Remove the head restraint.

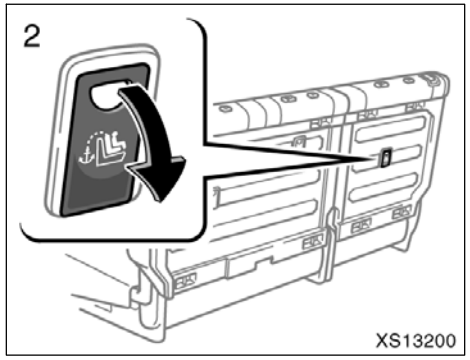

2. **Open the anchor bracket cover with the symbol as shown in the illustration.**

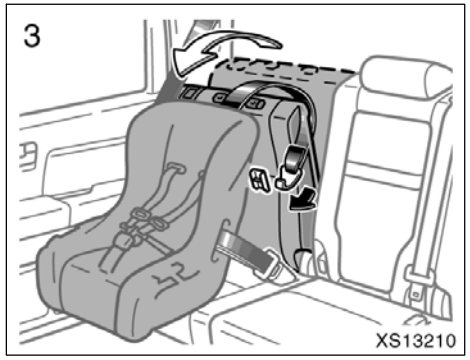

3. **Pull the seatback release lever and swing the seatback forward slightly, then latch the hook onto the anchor bracket. Return the seatback to its original position.**

   Fix the child restraint system with the seat belt and tighten the top strap.

For instructions on installing the child restraint system, see “Child restraint” on page 114 in this Section.

⚠ CAUTION

- **When returning the seatback to its original position, make sure the seatback is securely locked by pushing forward and rearward on the top of the seatback. Failure to do so will prevent the seat belt from operating properly.**
- **Make sure the top strap is securely latched, and check that the child restraint system is secure by pushing and pulling it in different directions. Follow all the installation instructions provided by its manufacturer.**

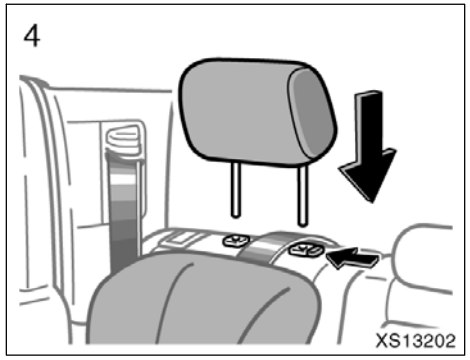

4. **Replace the head restraint.**
5. **If two child seats will be installed, use the outboard seating positions.**

—Installation with child restraint lower anchorages (Regular cab models)

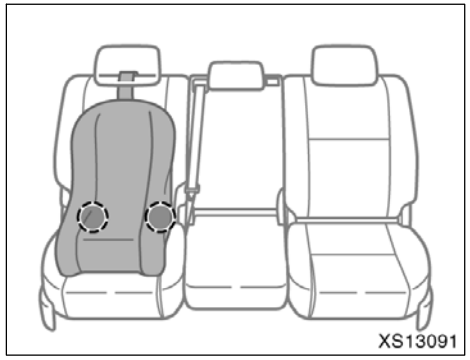

Lower anchorages for the child restraint systems complying with the FMVSS225 or CMVSS210.2 specifications are installed in the front seat.

The anchorages are installed in the gap between the seat cushion and seatback of the right side of the seat as shown in the illustration.

Child restraint systems complying with the FMVSS213 or CMVSS213 specification can be fixed to these anchorages. In this case, it is not necessary to fix the child restraint system with a seat belt on the vehicle.

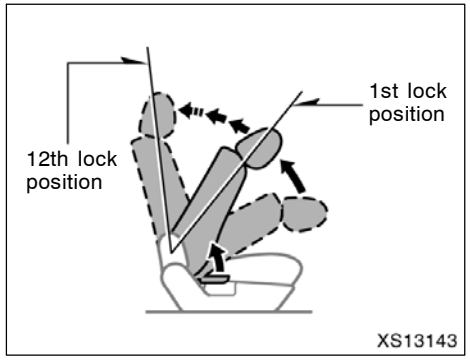

CHILD RESTRAINT SYSTEM INSTALLATION

1. **Fold down the seatback and back to the 1st lock position until it locks into place. Adjust the seatback to the 12th lock position.**

Make sure the seatback is locked securely.

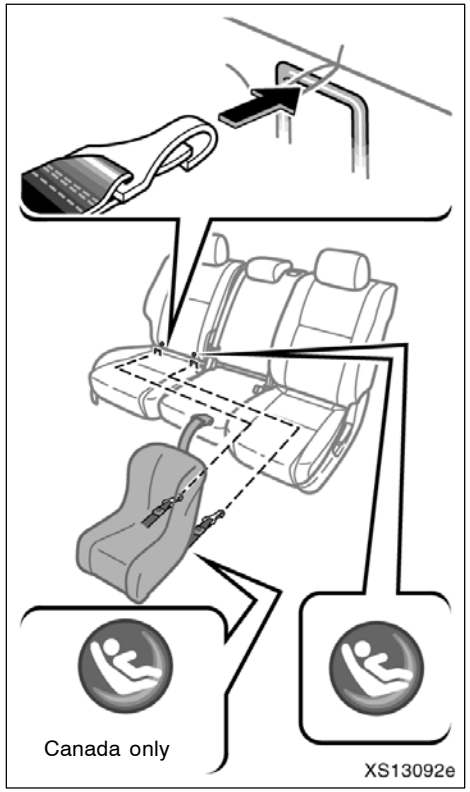

Type A

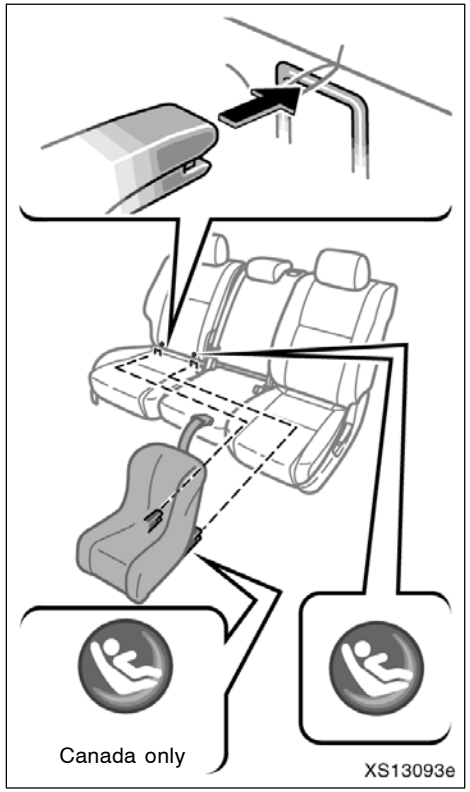

Type B

2. **Widen the slits of the seat cushion slightly and confirm the position of the lower anchorages near the button on the seat cushion.**
3. **Type A—Latch the hooks of lower straps onto the anchorages and tighten the lower straps.**

   Type B—Latch the buckles onto the anchorages.

For owners in Canada—The symbol on a child restraint system indicates the presence of a lower connector system.

If your child restraint system has a top strap, it should be anchored. (For the installation of the top strap, see "—Using a top strap" on page 138 in this Section.)

For installation details, refer to the instruction manual equipped with each product.

CAUTION

- **When using the lower anchorages for the child restraint system, be sure that there are no irregular objects around the anchorages or that the seat belt is not caught.**
- **Push and pull the child restraint system in different directions to be sure it is secure. Follow all the installation instructions provided by its manufacturer.**
- **After securing the child restraint system, never slide or recline the seat.**

—Installation with child restraint lower anchorages (Double cab models)

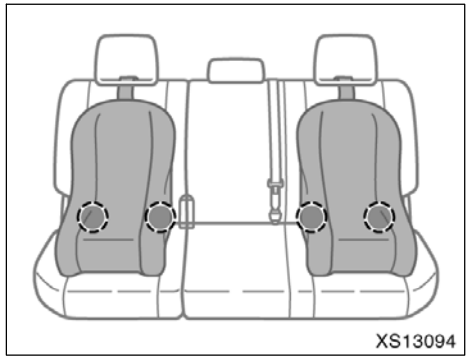

Lower anchorages for the child restraint systems complying with the FMVSS225 or CMVSS210.2 specifications are installed in the rear seat.

The anchorages are installed in the gap between the seat cushion and seatback of both outside rear seats as shown in the illustration.

Child restraint systems complying with the FMVSS213 or CMVSS213 specification can be fixed to these anchorages. In this case, it is not necessary to fix the child restraint system with a seat belt on the vehicle.

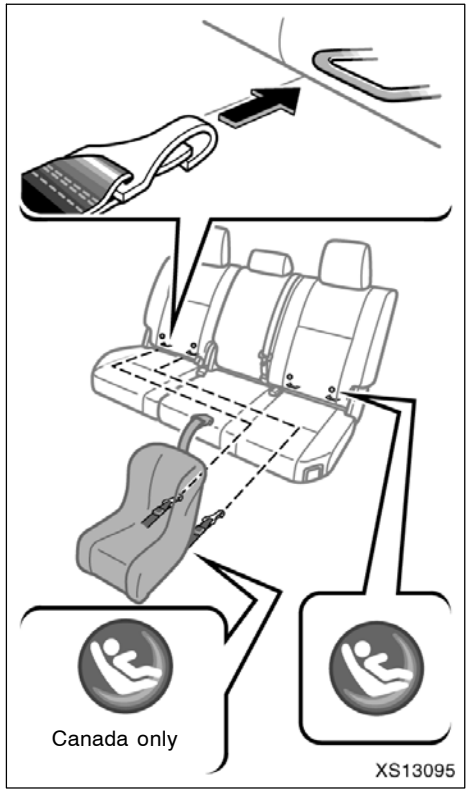

Type A

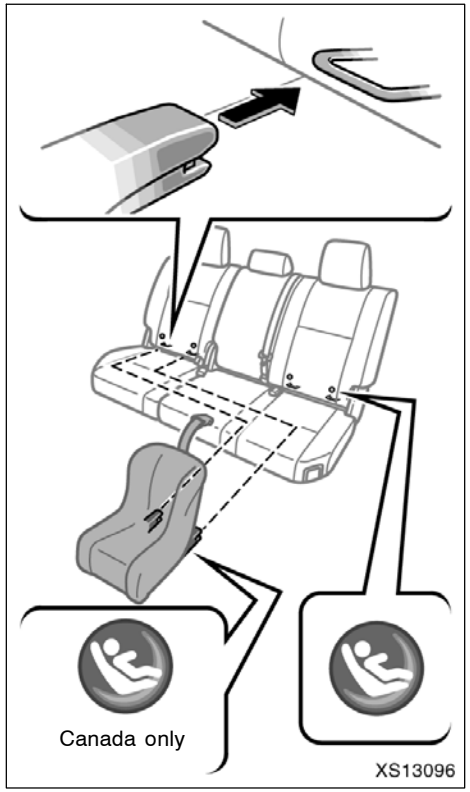

Type B

CHILD RESTRAINT SYSTEM INSTALLATION

1. **Widen the gap between the seat cushion and seatback slightly and confirm the position of the lower anchorages near the button on the seatback.**
2. **Type A—Latch the hooks of lower straps onto the anchorages and tighten the lower straps.**

   Type B—Latch the buckles onto the anchorages.

For owners in Canada—The symbol on a child restraint system indicates the presence of a lower connector system.

If your child restraint system has a top strap, it should be anchored. (For the installation of the top strap, see "—Using a top strap" on page 141 in this Section.)

For installation details, refer to the instruction manual equipped with each product.

⚠ CAUTION

- **When using the lower anchorages for the child restraint system, be sure that there are no irregular objects around the anchorages or that the seat belt is not caught.**
- **Push and pull the child restraint system in different directions to be sure it is secure. Follow all the installation instructions provided by its manufacturer.**
- **After securing the child restraint system, never lift up the seat cushion.**
- **Do not install a child restraint system on the rear seat if it interferes with the lock mechanism of the front seats. Otherwise, the child or front seat occupant(s) may be killed or seriously injured in case of sudden braking or a collision.**

—Installation with child restraint lower anchorages (Crew Max models)

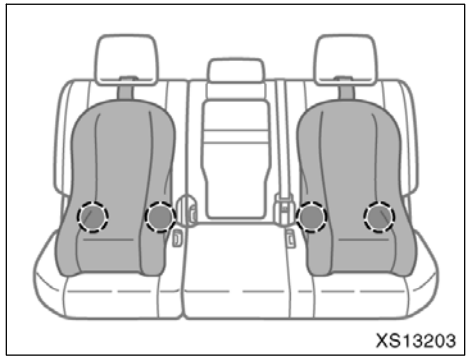

Lower anchorages for the child restraint systems complying with the FMVSS225 or CMVSS210.2 specifications are installed in the rear seat.

The anchorages are installed in the gap between the seat cushion and seatback of both outside rear seats as shown in the illustration.

Child restraint systems complying with the FMVSS213 or CMVSS213 specification can be fixed to these anchorages. In this case, it is not necessary to fix the child restraint system with a seat belt on the vehicle.

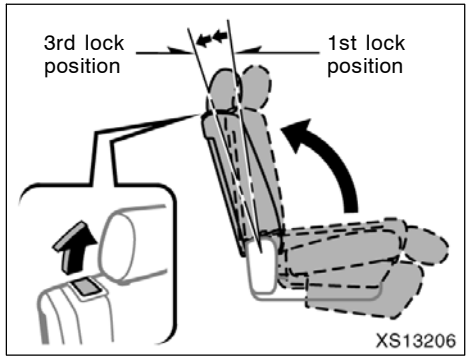

CHILD RESTRAINT SYSTEM INSTALLATION

1. **Fold down the seatback and back to the 1st lock position (most upright position) until it locks into place. Adjust the seatback to the 3rd lock position.**

Make sure the seatback is locked securely.

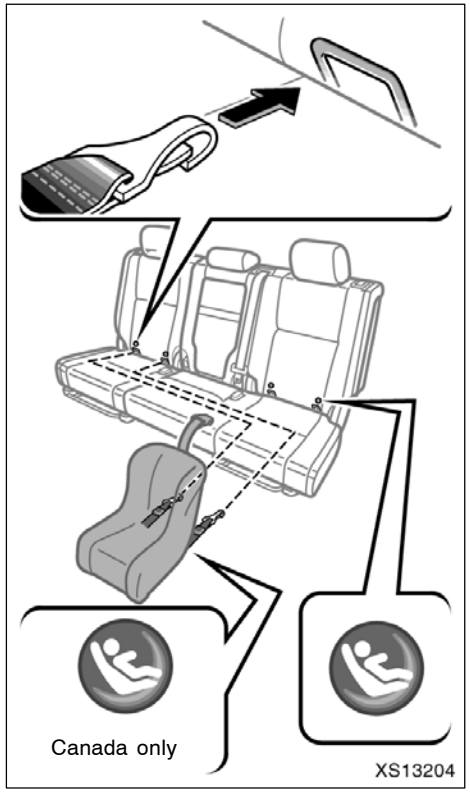

Type A

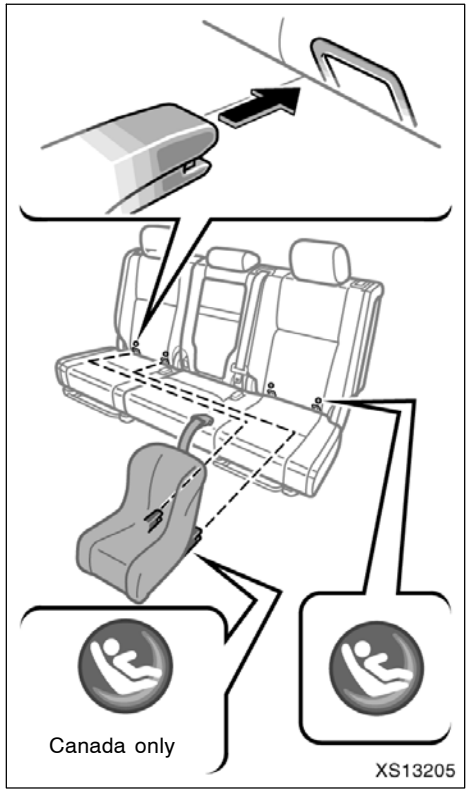

Type B

2. **Widen the gap between the seat cushion and seatback slightly and confirm the position of the lower anchorages near the button on the seatback.**
3. **Type A—Latch the hooks of lower straps onto the anchorages and tighten the lower straps.**

   Type B—Latch the buckles onto the anchorages.

For owners in Canada—The symbol on a child restraint system indicates the presence of a lower connector system.

If your child restraint system has a top strap, it should be anchored. (For the installation of the top strap, see "—Using a top strap" on page 144 in this Section.)

For installation details, refer to the instruction manual equipped with each product.

⚠ CAUTION

- **When using the lower anchorages for the child restraint system, be sure that there are no irregular objects around the anchorages or that the seat belt is not caught.**
- **Push and pull the child restraint system in different directions to be sure it is secure. Follow all the installation instructions provided by its manufacturer.**
- **When using the lower anchorages for the child restraint system, ensure that the seat is moved to the rear–most position, with the seatback close to the child restraint system.**
- **After securing the child restraint system, never slide or recline the seat.**
- **Do not install a child restraint system on the rear seat if it interferes with the lock mechanism of the front seats. Otherwise, the child or front seat occupant(s) may be killed or seriously injured in case of sudden braking or a collision.**

SECTION 1 – 5

OPERATION OF INSTRUMENTS AND CONTROLS

Lights and Wipers

Headlights and turn signals 164
Emergency flashers 169
Instrument panel light control 169
Front fog lights 170
Interior lights 170
Personal lights 171
Illuminated entry system 173
Cargo lamp 174
Exterior foot lights 175
Windshield wipers and washer 176
Outside rear view mirror defogger 177
Back window and outside rear view mirror defoggers 178

Headlights and turn signals (without automatic light control system)

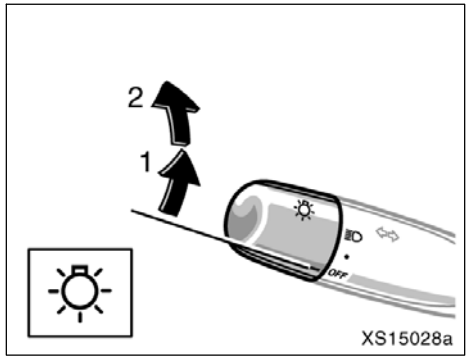

For the U.S.A.

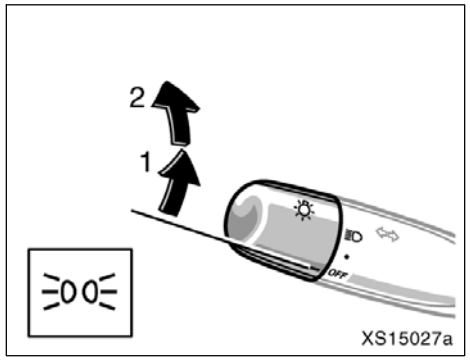

For Canada

HEADLIGHTS

To turn on the following lights: Twist the headlight/turn signal lever knob.

Position 1—Parking, tail, license plate and instrument panel lights

For Canada—The tail light indicator (green light) on the instrument panel will tell you that the tail lights are on.

Position 2—Headlights and all of the above

For the U.S.A.—The headlight low beam indicator light (green light) on the instrument panel will tell you that the low beams are on.

Automatic light cut off system

The lights automatically turn off after 30 seconds when all the doors are closed with the ignition switch in the “ACC” or “LOCK” position and the lever at position 2.

The lights also automatically turn off when the driver’s door is opened with the lever at position 1.

If the doors are locked by the wireless remote control transmitter, the lights automatically turn off immediately.

To turn them on again, turn the ignition switch to the “ON” position or actuate the headlight switch.

If you are going to park for over one week, make sure the headlight switch is off.

The timing for the headlights turning off can be changed. For details, contact your Toyota dealer.

NOTICE

To prevent the battery from being discharged, do not leave the lights on for a long period when the engine is not running.

Daytime running light (DRL) system (on some models)

The Daytime Running Light (DRL) system can make it easier for others to see the front of your vehicle during the day. The DRL system can be helpful in many different driving conditions, but they can be especially helpful in the short periods after dawn and before sunset.

The DRL system will make your front turn signal lights come on when:

- The ignition switch is on with the engine running.
- The knob is in the “OFF” position or position 1.
- The parking brake is released.

To turn off the DRL system, twist the knob to position 2, flashing the high beam headlights or turn the ignition switch to the “ACC” or “LOCK” position.

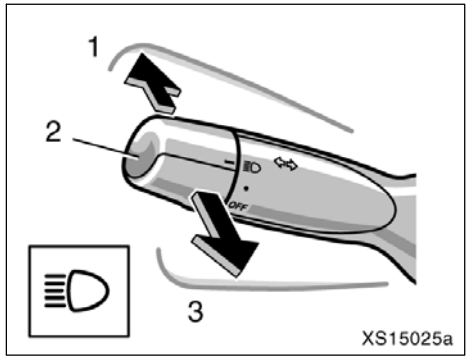

High–Low beams—For high beams, turn the headlights on and push the lever away from you (position 1). Pull the lever toward you (position 2) for low beams.

The headlight high beam indicator light (blue light) on the instrument panel will tell you that the high beams are on.

Flashing the high beam headlights (position 3)—Pull the lever all the way back. The high beam headlights turn off when you release the lever.

You can flash the high beam headlights with the knob turned to “OFF”.

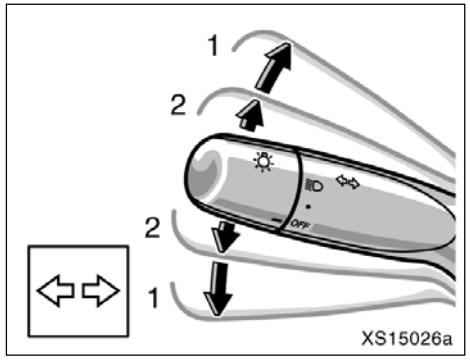

TURN SIGNALS

To signal a turn, push the headlight/turn signal lever up or down to position 1.

The ignition switch must be in the “ON” position.

The lever automatically returns after you make a turn, but you may have to return it by hand after you change lanes.

To signal a lane change, move the lever up or down to the pressure point (position 2) and hold it.

If the turn signal indicator lights (green lights) on the instrument panel flash faster than normal, a front or rear turn signal bulb is burned out.

Headlights and turn signals (with automatic light control system)

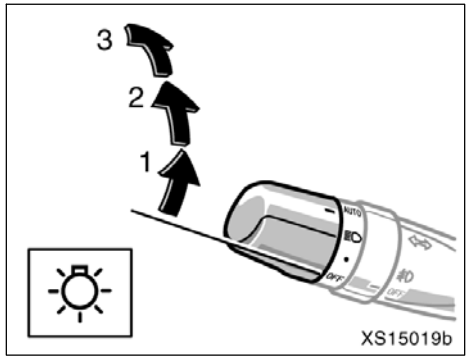

For the U.S.A.

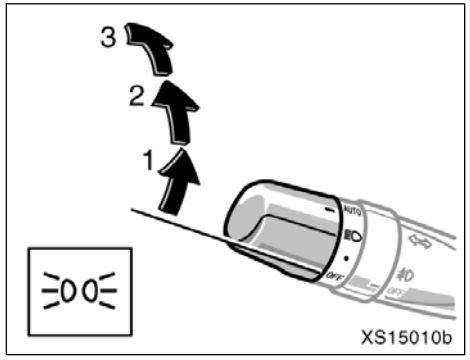

For Canada

HEADLIGHTS

To turn on the following lights: Twist the headlight/turn signal lever knob.

Position 1—Parking, tail, license plate, side marker and instrument panel lights

For Canada—The tail light indicator lights up in the instrument cluster.

Position 2—Headlights and all of the above

For the U.S.A.—The headlight indicator lights up in the instrument cluster.

Position 3 (“AUTO”)—Headlights and/or all of the lights in position 1

They automatically turn on or off depending on the darkness of the surroundings.

Manually twist the knob to the position 2 to turn on the headlights if they are needed immediately when entering a dark tunnel, parking structure, etc.

When the tail lights/headlights are turned on, the brightness of the instrument cluster will be reduced slightly unless the instrument panel light control knob is turned fully upward.

However, the brightness of the instrument cluster, air conditioning controls indicator lights and passenger airbag on–off indicator light will not be reduced in daytime even when the tail lights/headlights are turned on.

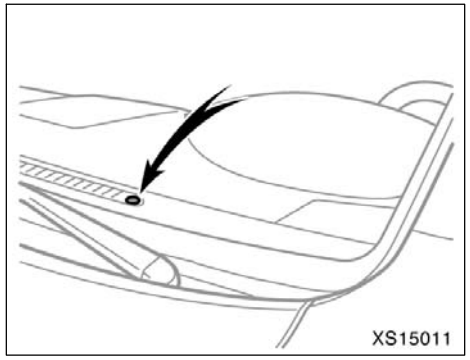

The automatic light control sensor is on the top of the driver's side instrument panel.

Do not place anything on the instrument panel, and/or do not affix anything on the windshield to block this sensor.

If you feel that the automatic light control comes into operation too early or too late, have the sensor adjusted by your Toyota dealer.

Automatic light cut off system

Position 1 or position 3 with the tail lights on—

The lights automatically turn off when the driver's door is opened with the ignition switch in the "ACC" or "LOCK" position.

Position 2 or 3 with the headlights on—

The lights automatically turn off after 30 seconds when all the doors are closed with the ignition switch in the "ACC" or "LOCK" position.

If the lock switch of the wireless remote control transmitter is pushed when all the doors are already locked, the lights automatically turn off immediately.

The time before the headlights turn off can be changed. If your vehicle is equipped with the multi–information display, it can be changed by yourself. For details, contact your Toyota dealer.

If any of the doors is left open, the lights automatically turn off after 20 minutes.

To turn them on again, turn the ignition switch to the "ON" position or actuate the headlight switch.

If you are going to park for over one week, make sure the headlight switch is off.

NOTICE

To prevent the battery from being discharged, do not leave the lights on for a long period when the engine is not running.

Daytime Running Light (DRL) system (on some models)

The Daytime Running Light (DRL) system can make it easier for others to see the front of your vehicle during the day. The DRL system can be helpful in many different driving conditions, but they can be especially helpful in the short periods after dawn and before sunset.

The DRL system will make the front turn signal lights come on when:

- The ignition is on with the engine running.
- The knob is in the "OFF" position, position 1 or position 3 with the tail lights on.
- The parking brake is released.

To turn off the DRL system, twist the knob to position 2 or position 3 with the headlights on, flashing the high beam headlights or turn the ignition switch to the "ACC" or "LOCK" position.

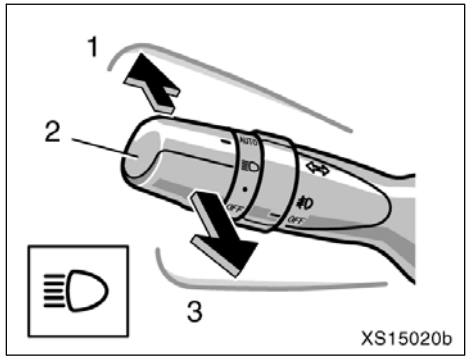

High–Low beams—For high beams, turn the headlights on and push the lever away from you (position 1). Pull the lever toward you (position 2) for low beams.

The headlight high beam indicator light (blue light) on the instrument panel will tell you that the high beams are on.

Flashing the high beam headlights (position 3)—Pull the lever all the way back. The high beam headlights turn off when you release the lever.

You can flash the high beam headlights with the knob turned to “OFF”.

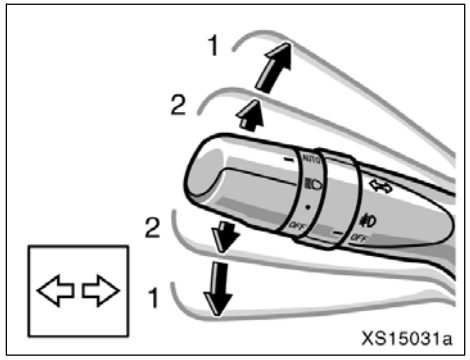

TURN SIGNALS

To signal a turn, push the headlight/turn signal lever up or down to position 1.

The ignition switch must be in the “ON” position.

The lever automatically returns after you make a turn, but you may have to return it by hand after you change lanes.

To signal a lane change, move the lever up or down to the pressure point (position 2) and hold it.

If the turn signal indicator lights (green lights) on the instrument panel flash faster than normal, a front or rear turn signal bulb is burned out. See “Replacing light bulbs” on page 564 in Section 7–3.

Emergency flashers

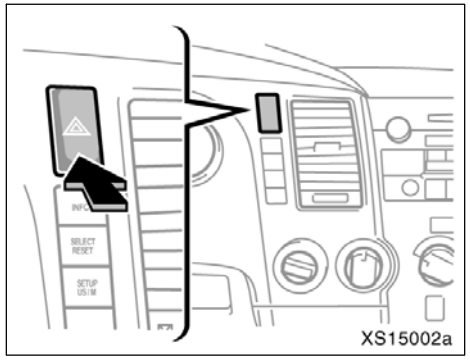

To turn on the emergency flashers, push the switch.

All the turn signal lights will flash. To turn them off, push the switch once again.

Turn on the emergency flashers to warn other drivers if your vehicle must be stopped where it might be a traffic hazard.

Always pull as far off the road as possible.

The turn signal light switch will not work when the emergency flashers are operating.

NOTICE

To prevent the battery from being discharged, do not leave the switch on longer than necessary when the engine is not running.

Instrument panel light control

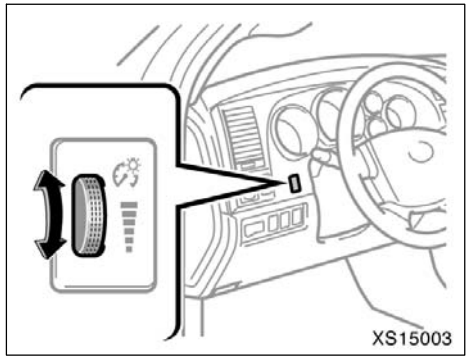

To adjust the brightness of the instrument panel lights, turn the dial.

With the dial set in the full intensity position, the intensity of the instrument panel lights will not be reduced even when the tail lights/headlights are turned on.

Front fog lights

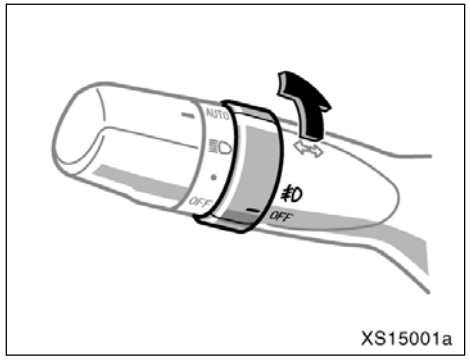

To turn on the front fog lights, twist the band of the headlight and turn signal switch lever. They will come on only when the headlights are on low beam.

Interior lights

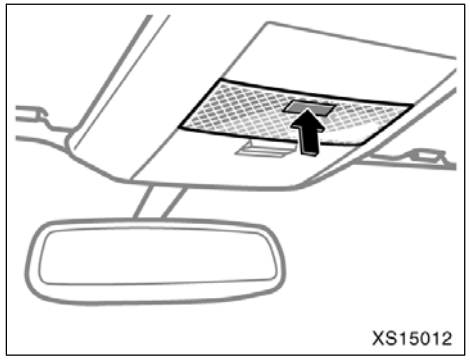

Type A (front)

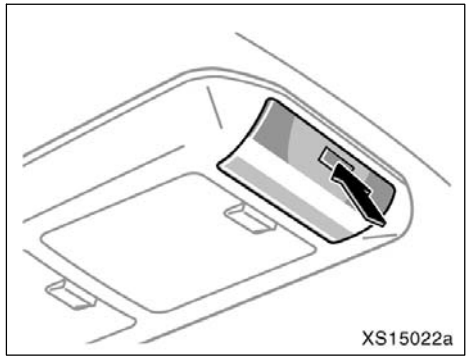

Type C (rear)

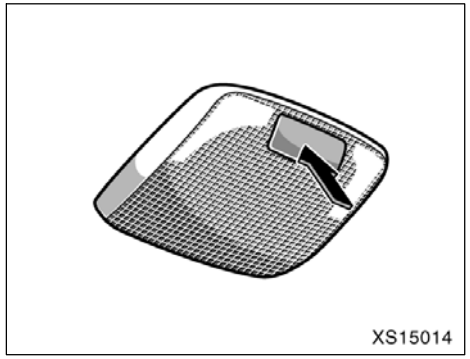

Type B (rear)

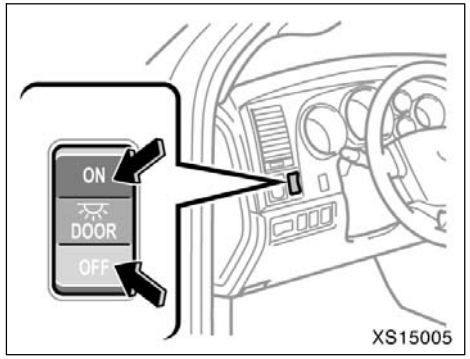

Interior/personal light main switch

Personal lights (with power door lock system) —Front personal lights

To turn on the interior lights, operate the interior/personal light main switch. The lights can be turned on or off by pushing each switch when the interior/ personal light main switch is in the "DOOR" or "OFF" position.

The interior/personal light main switch has the following positions:

"ON"—Keeps the light on all the time.

"OFF"— The lights can be turned on or off by pushing each switch.

"DOOR"—Turn the light on when any of the doors is opened.

If all the doors are closed, when the ignition switch is turned to the "LOCK" position, the lights will come on and remain on for about 15 seconds.

If all the doors are closed and the ignition switch is in the "ACC" position interior light will go off immediately.

Type B and Type C—For details, see "Illuminated entry system" on page 173 in this Section.

To prevent the battery being discharged, the lights will automatically turn off when the key is removed and the door is left opened with the switch at the "DOOR" position for 20 minutes or more.

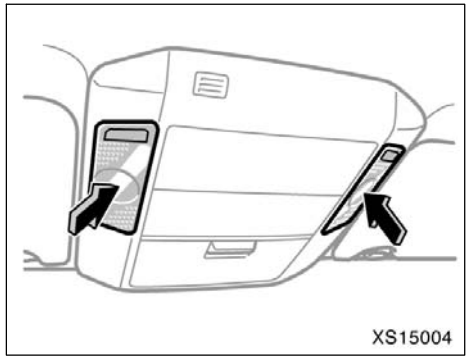

Type A

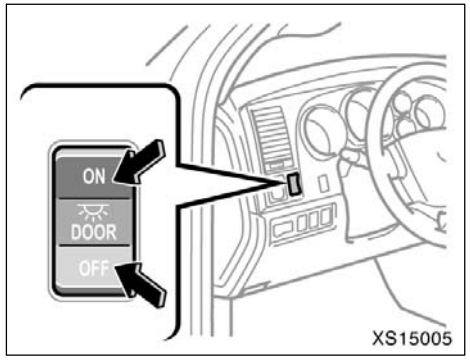

Interior/personal light main switch

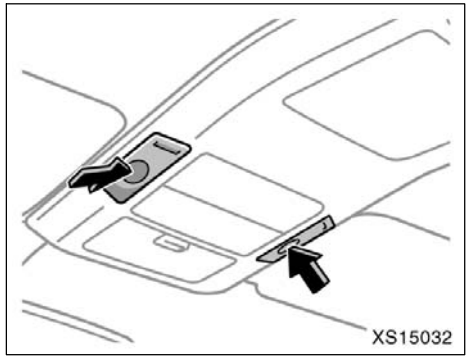

Type B

To turn on the front personal lights, operate the interior/personal light main switch.

The lights on your side can be turned on or off by pushing each lens when the interior/personal light main switch is in the "DOOR" or "OFF" position.

The interior/personal light main switch has the following positions:

"ON"—Keeps the light on all the time.

"OFF"—The lights can be turned on or off by pushing each lens.

"DOOR"—Turns the light on when any of the doors is opened. For details, see "Illuminated entry system" on page 173 in this Section.

To prevent the battery being discharged, the lights will automatically turn off when the key is removed and the door is left opened with the switch at the "DOOR" position for 20 minutes or more.

—Rear personal lights (Crew Max models)

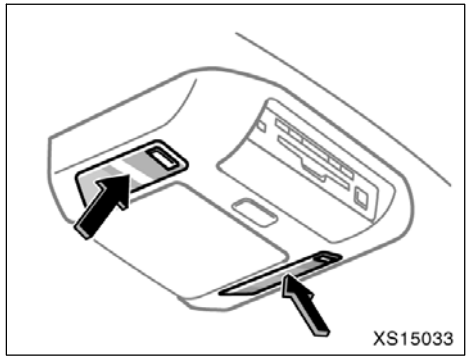

Type A

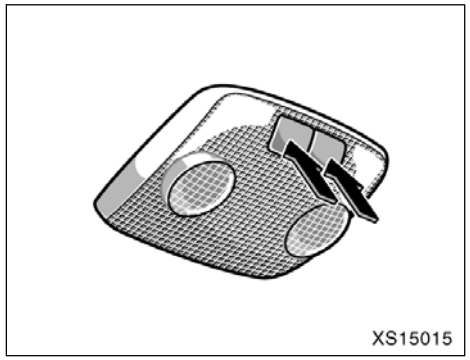

Type B

To turn on the rear personal lights, operate the interior/personal light main switch.

The lights on your side can be turned on or off by pushing each lens or switch when the interior/personal light main switch is in the "DOOR" or "OFF" position.

The interior/personal light main switch has the following position:

"ON"—Keeps the light on all the time.

"OFF"—The lights can be turned on or off by pushing each lens or switch.

"DOOR"—Turns the light on when any of the doors is opened. For details, see "Illuminated entry system" on page 173 in this Section.

To prevent the battery being discharged, the lights will automatically turn off when the key is removed and the door is left opened with the switch at the "DOOR" position for 20 minutes or more.

Illuminated entry system (with power door lock system)

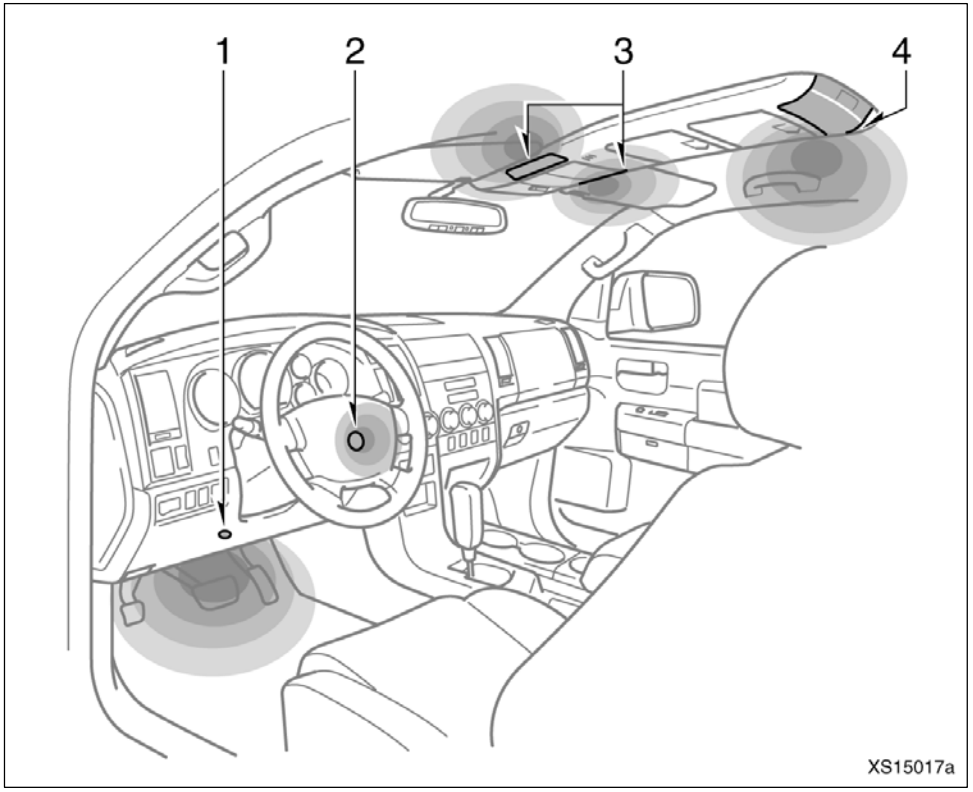

The following lights will come on when any of the doors are opened. After all the doors are closed, the lights remain on for about 15 seconds before fading out.

1. Foot light
2. Ignition switch light
3. Front personal lights—with the “DOOR” position
4. Rear personal lights/Interior light (rear)—with the “DOOR” position

When any of the doors are unlocked, the lights will come on and remain on for about 15 seconds before fading out.

If all the doors are closed, when the ignition switch is turned to the “LOCK” position, the lights will come on and remain on for about 15 seconds.

The duration of the lighting can be changed. If your vehicle is equipped with the multi–information display, it can be changed by yourself. For details, contact your Toyota dealer.

If all the doors are closed and the ignition switch is in the “ACC” position, the ignition switch light, interior light, foot light and personal lights will go off immediately.

If all the doors are locked, all the lights will fade out.

To prevent the battery being discharged, the lights will automatically turn off when the ignition key is removed and the door is left opened for about 20 minutes.

Cargo lamp

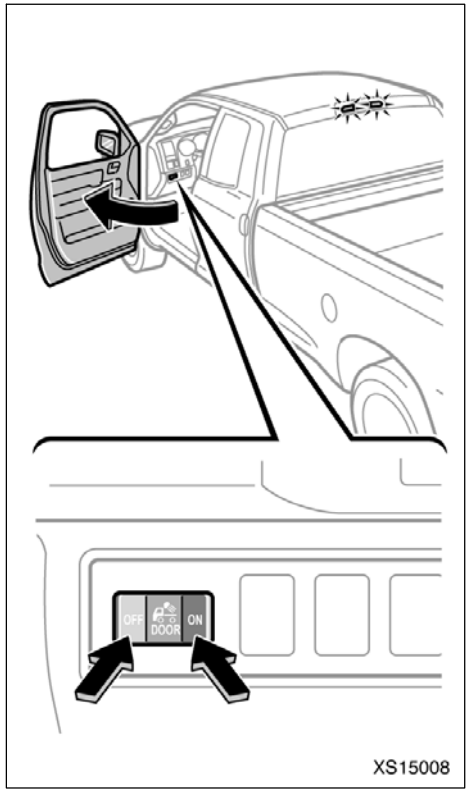

The cargo lamp is designed to light up the rear deck of your vehicle.

CARGO LAMP OPERATION

The cargo lamp should only be kept on during cargo loading or unloading.

The cargo lamp switch has the following positions:

“ON” position—Keeps the light on all the time.
“OFF” position—Keeps the light off all the time.

“DOOR” position—The cargo lamp comes on under the following cases:

- When locking and unlocking the doors (vehicles with the power door lock system)

  You can operate the cargo lamp by this method when all the doors are closed and the ignition switch is in the “LOCK” position or the key is removed.

  To turn on: Unlock the door with the key or the wireless remote control transmitter.

  The cargo lamp will automatically turn off after 15 seconds.

  To turn off: Lock the doors with the key, the power door lock switch or the wireless remote control transmitter.

- When opening and closing the doors

  To turn on: Open any of the doors.
  To turn off: Close all the doors.
- When the ignition switch is in the “ON” position, the cargo lamp will go off immediately.
- When the ignition switch is in the “LOCK” position or the key is removed, the cargo lamp will automatically go off after 15 seconds.

To prevent the battery being discharged, the lights will automatically turn off in about 20 minutes after the ignition key is removed.

This feature is deactivated when the ignition switch is in the “ON” position.

Exterior foot lights (with driving position memory system)

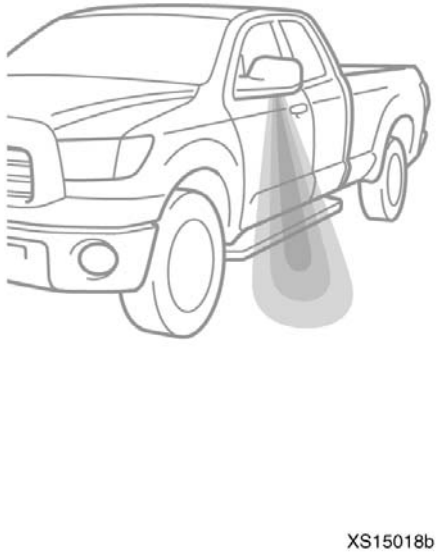

The lights will come on when the doors are unlocked simultaneously using either the power door lock switches or the wireless remote control. This light remains on for 15 seconds before fading out when any door is opened, and additional 15 seconds after all the doors are closed.

However, in the following cases, the light goes off immediately.

- Doors are locked with wireless remote control.
- The selector lever is put in a position other than “P” with the ignition switch on.
- The doors are locked via the driver’s door key cylinder.
- The doors are locked via the switches either inside the driver’s or front passenger’s door.

Windshield wipers and washer (type A)

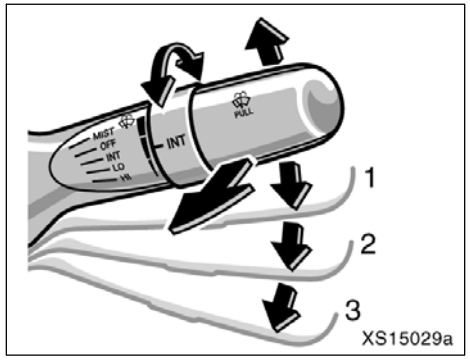

To turn on the windshield wipers, move the lever to the desired setting.

The ignition switch must be in the “ON” position.

Lever position	Speed setting
Position 1	Intermittent
Position 2	Slow
Position 3	Fast

For a single sweep of the windshield, push the lever up and release it.

The “INT TIME” band lets you adjust the wiping time interval when the wiper lever is in the intermittent position (position 1). Twist the band upward to increase the time between sweeps, and downward to decrease it.

To squirt washer fluid, pull the lever toward you and release it.

If the windshield wipers are off, they will operate a couple of times after the washer squirts.

For instructions on adding washer fluid, see “Adding washer fluid” on page 563 in Section 7–3.

In freezing weather, warm the windshield with the defroster before using the washer. This will help prevent the washer fluid from freezing on your windshield, which can block your vision.

NOTICE

Do not operate the wipers if the windshield is dry. It may scratch the glass.

When waxing your vehicle, make sure that the washer nozzles do not become blocked. If a nozzle becomes blocked, contact your Toyota dealer to have the vehicle serviced.

NOTICE

If a nozzle becomes blocked, do not try to clear it with a pin or other object. The nozzle will be damaged.

Windshield wipers and washer (type B)

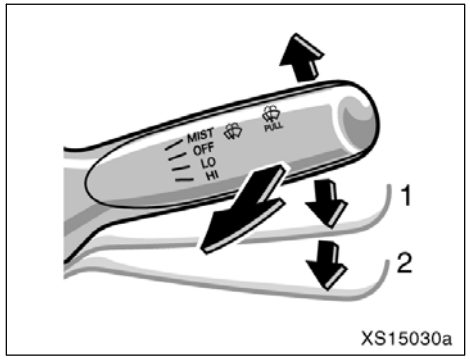

To turn on the windshield wipers, move the lever to the desired setting.

The ignition switch must be in the “ON” position.

Lever position	Speed setting
Position 1	Slow
Position 2	Fast

For a single sweep of the windshield, push the lever up and release it.

To squirt washer fluid, pull the lever toward you and release it.

For instructions on adding washer fluid, see “Adding washer fluid” on page 563 in Section 7–3.

In freezing weather, warm the windshield with the defroster before using the washer. This will help prevent the washer fluid from freezing on your windshield, which can block your vision.

NOTICE

Do not operate the wipers if the windshield is dry. It may scratch the glass.

When waxing your vehicle, make sure that the washer nozzles do not become blocked. If a nozzle becomes blocked, contact your Toyota dealer to have the vehicle serviced.

NOTICE

If a nozzle becomes blocked, do not try to clear it with a pin or other object. The nozzle will be damaged.

Outside rear view mirror defoggers and front windshield de–icer (on some models)

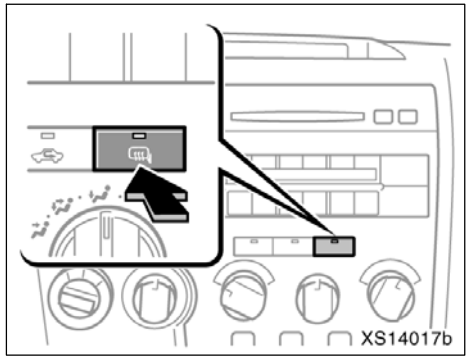

Type A

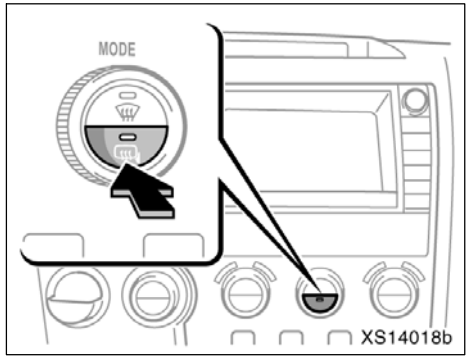

Type B

To defog or defrost the outside rear view mirrors, push the switch.

The ignition switch must be in the “ON” position.

The heater panels in the outside rear view mirrors will quickly clear the mirror surfaces. An indicator light will illuminate to indicate the mirror heaters are operating.

On some models, the front windshield wiper de–icer also operates simultaneously by this switch. On vehicles with the front windshield wiper de–icer, the front windshield wiper blades will be de–iced.

Push the switch once again to turn the mirror heaters off.

The system will automatically shut off after the defogger have operated about 15 minutes.

⚠ CAUTION

Since the mirror surfaces can get hot, do not touch them when the switch is on.

Make sure you turn the mirror heaters off when the mirror surfaces are clear. Leaving the mirror heaters on for a long time could cause the battery to discharge, especially during stop–and–go driving. The mirror heaters are not designed for drying rain water or for melting snow.

If the outside rear view mirrors are heavily coated with ice, use a spray de–icer before operating the switch.

Back window and outside rear view mirror defoggers and front windshield de–icer (Crew Max models)

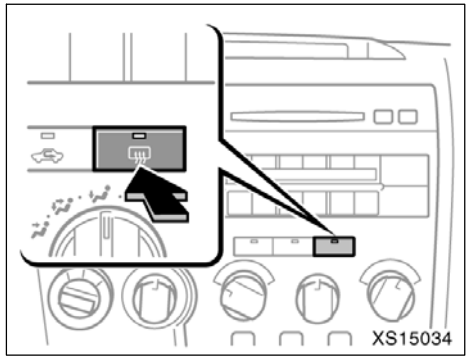

Type A

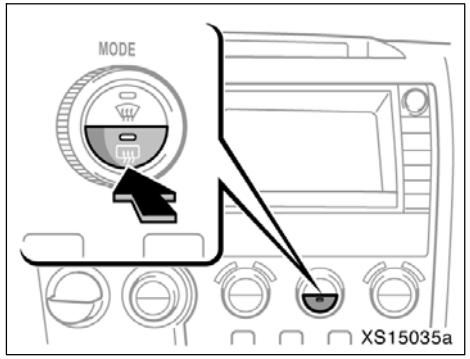

Type B

To defog or defrost the back window, push the switch with the back window closed.

The key must be in the “ON” position.

The thin heater wires on the inside of the back window will quickly clear the surface. An indicator light will illuminate to indicate the defogger is operating.

On some models, the outside rear view mirror defoggers and/or the front windshield wiper de–icer also operate simultaneously by this switch. On vehicles with the outside rear view mirror defoggers, the heater panel in the outside rear view mirrors will quickly clear the mirror surfaces. On vehicles with the front windshield wiper de–icer, the front windshield wiper blades will be de–iced.

Push the switch once again to turn the defogger off.

The system will automatically shut off after the defoggers have operated about 15 minutes.

CAUTION

On some models, since the mirror surfaces can get hot, do not touch them when the defogger switch is on.

Make sure you turn the defoggers off when the surfaces are clear. Leaving the defoggers on for a long time could cause the battery to discharge, especially during stop–and–go driving. The defoggers are not designed for drying rain water or for melting snow.

On some models, if the outside rear view mirrors are heavily coated with ice, use a spray de–icer before operating the switch.

NOTICE

When cleaning the inside of the back window, be careful not to scratch or damage the heater wires or connectors.

SECTION 1 – 6

OPERATION OF INSTRUMENTS AND CONTROLS

Gauges, Meters and Service reminder indicators

Fuel gauge 182
Engine coolant temperature gauge 182
Oil pressure gauge 183
Automatic transmission fluid temperature gauge 184
Voltmeter 185
Tachometer 185
Odometer and two trip meters 186
Multi–information display 187
Service reminder indicators and warning buzzers 197

Fuel gauge

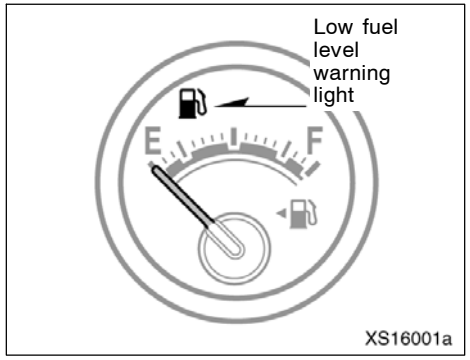

Type A

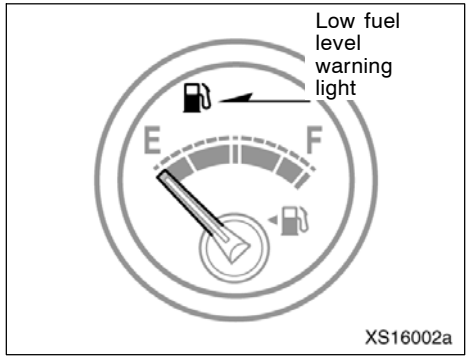

Type B

The gauge indicates the approximate quantity of fuel remaining in the tank when the ignition switch is on.

Nearly full—Needle at “F”
Nearly empty—Needle at “E”

It is a good idea to keep the tank over 1/4 full.

The needle moves when braking, accelerating or making turns. This is caused by the movement of the fuel in the tank.

If the fuel level approaches “E” or the low fuel level warning light comes on, fill the fuel tank as soon as possible.

On inclines or curves, due to the movement of fuel in the tank, the fuel gauge needle may fluctuate or the low fuel level warning light may come on earlier than usual.

If the fuel tank is completely empty, the malfunction indicator lamp comes on. Fill the fuel tank immediately.

The indicator lamp will go off after driving several times. If the indicator lamp does not go off, contact your Toyota dealer as soon as possible.

Engine coolant temperature gauge

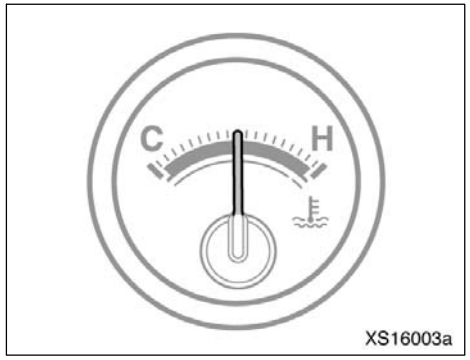

Type A

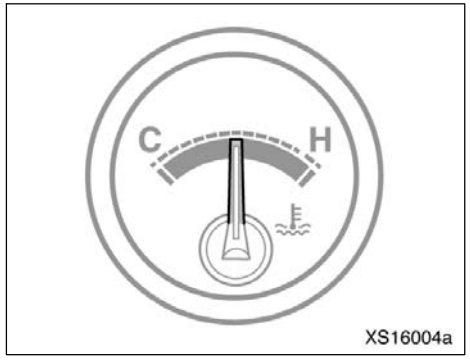

Type B

The gauge indicates the engine coolant temperature when the ignition switch is on. The engine operating temperature will vary with changes in weather and engine load.

If the needle moves into the red zone, your engine is too hot. If your vehicle overheats, stop your vehicle and allow the engine to cool.

Your vehicle may overheat during severe operating conditions, such as:

- Driving up a long hill on a hot day.
- Reducing speed or stopping after high speed driving.
- Idling for a long period with the air conditioning on in stop–and–go traffic.
- Towing a trailer.

NOTICE

- ***Do not remove the thermostat in the engine cooling system as this may cause the engine to overheat. The thermostat is designed to control the flow of coolant to keep the temperature of the engine within the specified operating range.***
- ***Do not continue driving with an overheated engine. See "If your vehicle overheats" in Section 4.***

Oil pressure gauge

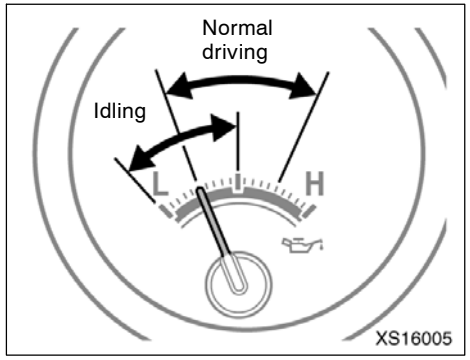

Type A

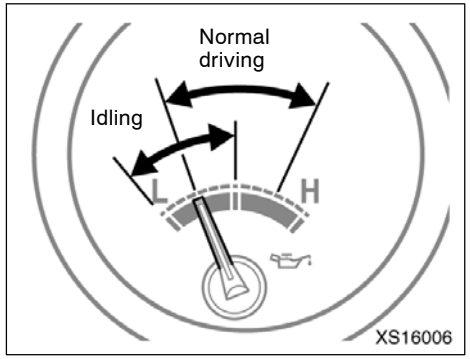

Type B

The oil pressure gauge indicates engine oil pressure when the ignition switch is on. Check it while driving to make sure that the needle is in the proper range.

If the oil pressure should stay below the normal range, pull off the road to a safe place and stop the engine immediately. Call a Toyota dealer or qualified repair shop for assistance.

Oil pressure may not build up when the oil level is too low. The oil pressure gauge is not designed to indicate oil level, and the oil level must be checked using the level dipstick.

NOTICE
Do not drive the vehicle with the oil pressure below the normal range until the cause is fixed—it may ruin the engine.

Automatic transmission fluid temperature gauge (with towing package)

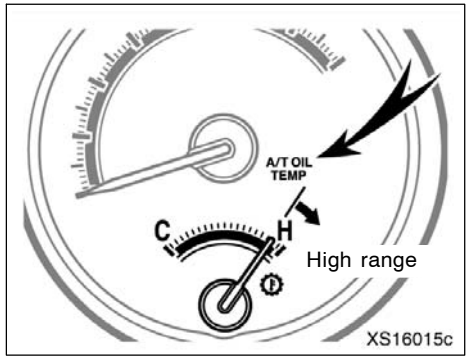

Type A

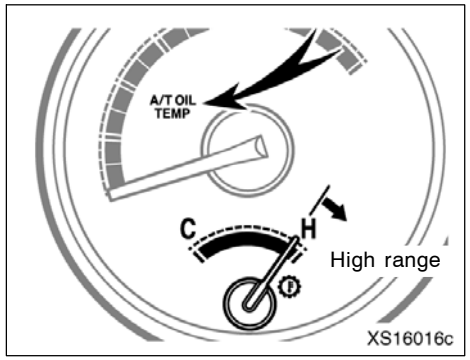

Type B

Automatic transmission fluid temperature gauge indicates automatic transmission fluid temperature when the ignition switch is on. Check it while driving to make sure that the needle is in the proper range.

The gauge displays the current temperature of the automatic transmission fluid. The gauge informs the driver of changes in the automatic transmission fluid temperature especially if it becomes too high while towing a heavy trailer or hauling a heavy load.

If the needle reads high range while you are driving, slow down and pull off the road. Stop the vehicle at a safe place and put the selector lever in “P”. With the engine idling, wait until the needle reads below the high range. If the needle reads below the high range, you may start the vehicle again. If the needle reads the high range, call a Toyota dealer or qualified repair shop for assistance.

NOTICE
Continued driving with reading in the high range may damage the automatic transmission.

Voltmeter

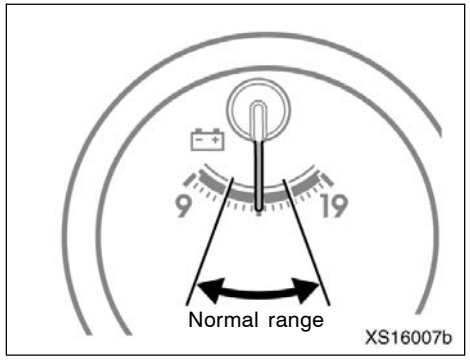

Type A

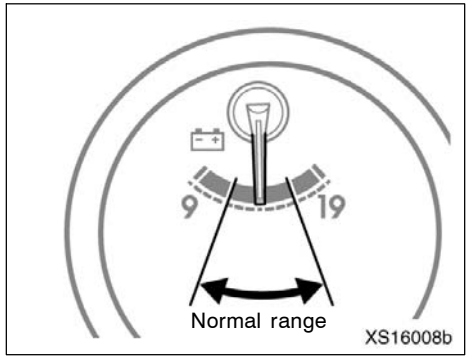

Type B

The voltmeter tells whether the battery is charged or discharged. Check it while the engine is running—the needle should always indicate as shown above.

If the needle reads below or above the normal range while the engine is running, it indicates the charging system needs immediate repair.

However, it is normal for the needle to drop below the normal range during engine starting.

Tachometer

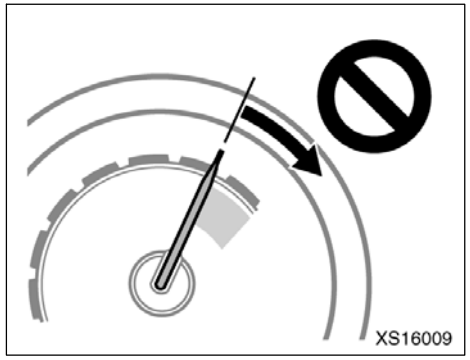

Type A

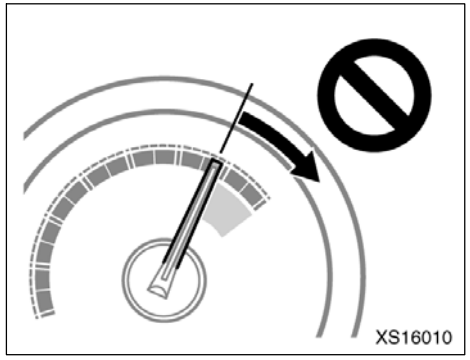

Type B

The tachometer indicates engine speed in thousands of rpm (revolutions per minute). Use it while driving to select correct shift points and to prevent engine lugging and over–revving.

Driving with the engine running too fast causes excessive engine wear and poor fuel economy. Remember, in most cases the slower the engine speed, the greater the fuel economy.

NOTICE
Do not let the indicator needle get into the red zone. This may cause severe engine damage.

Odometer and two trip meters (without multi–information display)

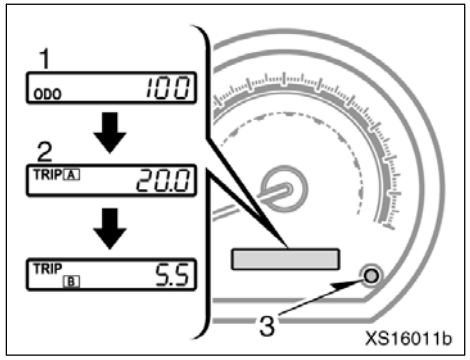

This meter displays the odometer and two trip meters.

1. Odometer—Shows the total distance the vehicle has been driven.
2. Two trip meters—Show two different distances independently driven since the last time each trip meter was set to zero.

   You can use one trip meter to calculate the fuel economy and the other to measure the distance on each trip. All trip meter data is cancelled if the electrical power source is disconnected.
3. Trip meter reset knob—Resets the two trip meters to zero, and also change the meter display.

   To change the meter display, quickly push and release the knob. The meter display changes in the order from the odometer to trip meter A to trip meter B, then back to the odometer each time you push.

   To reset the trip meter A to zero, display the meter A reading, then push and hold the knob until the meter is set to zero. The same process can be applied for resetting the trip meter B.

Multi–information display—

The following information is displayed on the multi–information display when the ignition switch is turned to the "ON" position.

- **Cruise information**
- **Odometer and two trip meters**
- **Warning messages**
- **Feature customization**

During ordinary driving, cruise information is displayed. However, in case the vehicle has a system malfunction or if there is some information that the driver should be informed of, a warning message appears on the display. See "—Warning messages" on page 193 for details.

If the electrical power source has been disconnected from the cruise information display, the display will automatically be set to the initial mode.

When the instrument panel lights are turned on, the brightness of the display will be reduced.

At extremely low temperatures, the multi–information display may respond slowly, and the display changes may be delayed.

CAUTION

Do not adjust the display while the vehicle is moving. Be sure to adjust the display only when the vehicle is stopped.

SELECTING UNIT

You can select the unit between English/U.S. customary system and metric unit.

To select unit A (English/U.S. customary system) or unit B (metric unit), push "SELECT RESET" button to display "UNITS" screen, and push "SETUP US/M" button while the screen is displayed.

The unit variations are as follows;

Information	Unit A	Unit B
Average fuel consumption and Instantaneous fuel consumption	MPG	L/100 km
Driving range	MILES	km
Average vehicle speed	MPH	km/h

—Cruise information

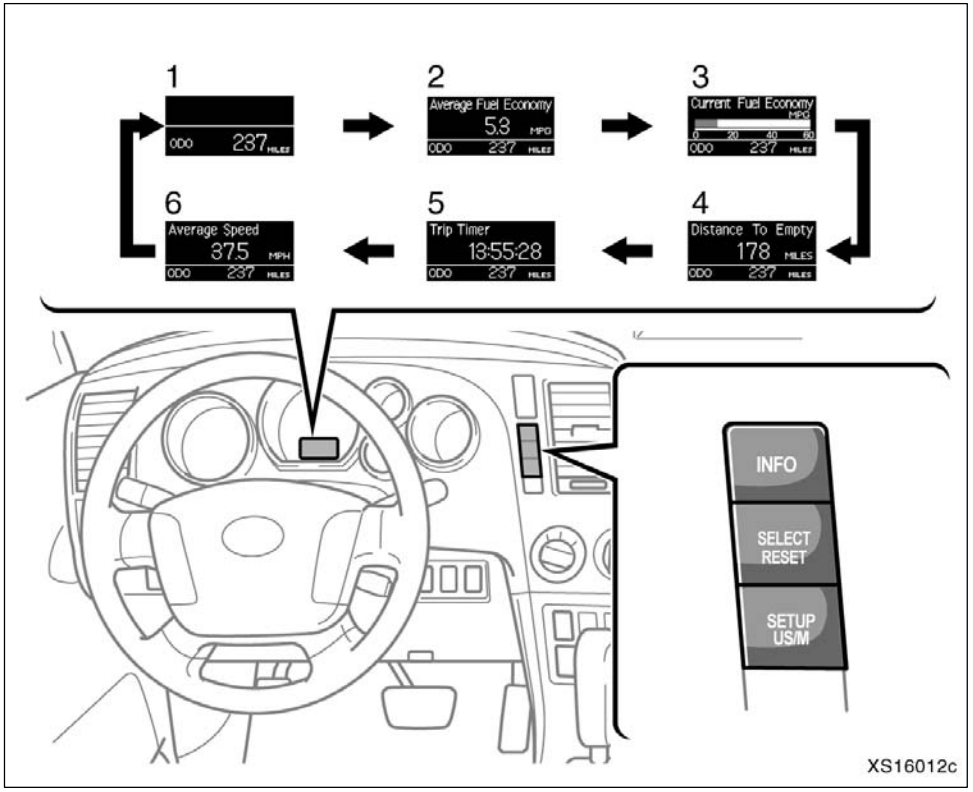

Each time you push the "INFO" button, the display toggles through the following

1. Zoom display of odometer and trip meter
2. Average fuel consumption
3. Instantaneous fuel consumption
4. Driving range
5. Driving time
6. Average vehicle speed

The displayed values in the cruise information display indicate general driving conditions. Accuracy varies with driving habits and road conditions.

When the ignition switch is on, the last previously used mode displayed just before the ignition switch is off will appear.

1. Zoom display of odometer and trip meter

The odometer and one of the trip meters are displayed simultaneously. See "—Odometer and two trip meters".

2. Average fuel consumption ("Average Fuel Economy")

Average fuel consumption is calculated and displayed based on total driving distance and total fuel consumption with the engine running.

The displayed value is updated every 10 seconds.

To reset the calculations, push and hold the "SELECT RESET" button for more than 2 seconds.

3. Instantaneous fuel consumption ("Current Fuel Economy")

The instantaneous fuel consumption is calculated and displayed based on distance and fuel consumption at 20 revolutions of the engine.

The displayed value is updated for a short time.

An accurate figure may not be shown if the vehicle is driving down a long slope, and engine brake is applied. (The display will indicate the extremely low fuel consumption.)

The display indicates 0 when the vehicle is stopped with the engine running.

The calculation is reset when the ignition switch is turned off.

4. Driving range ("Distance To Empty")

The distance the vehicle can travel with the remaining fuel is calculated and displayed based on the quantity of remaining fuel and past fuel consumption.

The driving range display indicates the approximate distance that you can drive until the fuel gauge reaches "E". It is different from the actual distance traveled.

The displayed value is updated every time the fuel equivalent for 1 mile or 1 km is consumed.

Every time you refuel the vehicle, the calculation is reset. However, when only a small amount of fuel is added to the tank, the display may not be reset.

The actual driving range varies with driving habits and road conditions. If fuel consumption is good, the driving range will be longer than indicated. If fuel consumption is poor, the driving range will be shorter than indicated.

If the low fuel level warning light comes on, refuel the vehicle even if the display indicates that the vehicle can be driven further.

5. Driving time ("Trip Timer")

To calculate the driving time, display the "Trip Timer" after the engine has been started. Then press the "SELECT RESET" button. To stop the calculation, press the "SELECT RESET" button again.

Driving time is counted from 00:00:00. Up to 99:59:59 (99 hours, 59 minutes and 59 seconds) can be displayed. When the driving time exceeds 99:59:59, the counter returns to 00:00:00.

If the ignition switch is turned off while the driving time is being calculated, the calculation will cease. When the engine is next started, it will automatically resume from the previous value.

If the "SELECT RESET" button is pressed to cease the calculation and then the ignition switch is turned off, the calculation will not resume when the engine is next started. In this case, press the "SELECT RESET" button to start the calculation.

To reset the calculation, push and hold the "SELECT RESET" button for more than 2 seconds.

6. Average vehicle speed (“Average Speed”)

Average vehicle speed is calculated and displayed based on total driving distance and total driving time with the engine running.

The displayed value is updated every 10 seconds.

To rest the calculations, push and hold the “SELECT RESET” button for more than 2 seconds.

—Feature customization

Your vehicle includes a variety of electronic features that can be personalized to your preferences. The vehicle can be customized while the vehicle is stopped.

“KEYLESS ENTRY” is used for some customization item names in the screen display. It means “Wireless door lock” in this owner’s manual.

1. Select the item you want to customize unit with the “SETUP US/M” button.

UNITS
↓
KEYLESS ENTRY FEEDBACK
↓
KEYLESS ENTRY RELOCK TIMER
↓
KEYLESS ENTRY ALL DOORS UNLOCK
↓
DOOR AUTO LOCKING
↓
DOOR AUTO UNLOCKING
↓
HEADLAMPS AUTO OFF TIMER
↓
COURTESY LAMPS OFF TIMER
↓
DEFAULT SETTING

2. Customize the item with the “SELECT RESET” button.

- Door lock and unlock warning function

  Screen text: KEYLESS ENTRY FEEDBACK

“LAMPS + TONE”* → “LAMPS” → “TONE” → “OFF” → “LAMPS + TONE”*

- Time for automatic door lock function

  Screen text: KEYLESS ENTRY RELOCK TIMER

“60 SECONDS”* → “120 SECONDS” → “OFF” → “30 SECONDS” → “60 SECONDS”*

- Double switch operation to unlock all the doors

  Screen text: KEYLESS ENTRY ALL DOORS UNLOCK

“2 PRESSES”* ⇔ “1 PRESS”

- Automatic door locking function

  Screen text: DOOR AUTO LOCKING

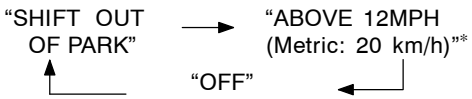

- Automatic door unlocking function

  Screen text: DOOR AUTO UNLOCKING

- Time period before lights turn off (if a door is opened and closed, and ignition switch is in ACC or LOCK)

  Screen text: HEADLAMPS AUTO OFF TIMER

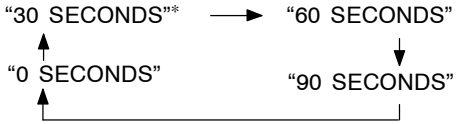

- Time period before lights turn off

  Screen text: COURTESY OFF TIMER

*: Default setting

After customizing is complete, press the "SET UP" button to set the selected item. If the customization fails, the previously set item will be displayed. If no button is pressed for 10 seconds, the display switches to INFO mode.

As for any items except "UNITS", the settings cannot be changed at a vehicle speed of 5 km/h (3 mph) or more. A message, "PLEASE STOP VEHICLE TO CHANGE SETTINGS", will be indicated on the screen and customizing operation cannot be accomplished.

If the "SYSTEM ERROR" message is indicated on the screen, the customizing operation cannot be performed due to a communication error. In such cases, turn the ignition switch off and then on again. When the communication returns to normal, the customizing operation can then be performed. If the "SYSTEM ERROR" message is indicated again, contact your Toyota dealer.

—Odometer and two trip meters

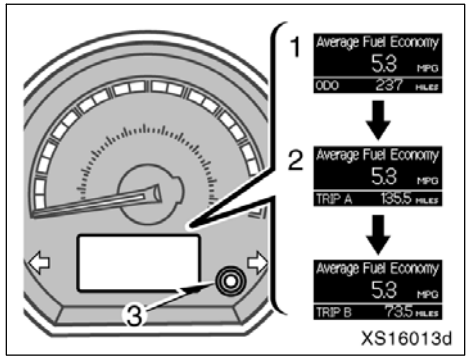

Normal display

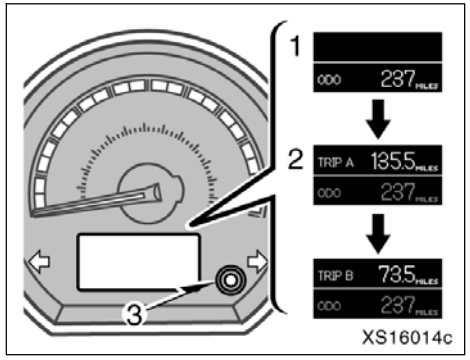

Zoom display

This meter displays the odometer and two trip meters.

Selecting the zoom display of the odometer and trip meter when the cruise information is displayed causes the odometer and one of the trip meters to be displayed simultaneously.

1. Odometer—Shows the total distance the vehicle has been driven.
2. Two trip meters—Show two different distances independently driven since the last time each trip meter was set to zero.

   You can use one trip meter to calculate the fuel economy and the other to measure the distance on each trip. All trip meter data is cancelled if the electrical power source is disconnected.
3. Trip meter reset knob—Resets the two trip meters to zero, and also changes the meter display.

   To change the meter display, quickly push and release the knob. The meter display changes in the order from the odometer to trip meter A to trip meter B, then back to the odometer each time you push.

To reset the trip meter A to zero, display the meter A reading, then push and hold the knob until the meter is set to zero. The same process can be applied for resetting the trip meter B.

—Warning messages

	Message	Status	Action
(a)	PARKING BRAKE ENGAGED	Parking brake is not released.	Release parking brake.
(b)	ENGINE COOLANT HOT	Engine coolant temperature is too high.	Stop your vehicle and allow engine to cool.
(c)	DRIVER DOOR OPEN PASSENGER DOOR OPEN LEFT REAR DOOR OPEN RIGHT REAR DOOR OPEN	Any of doors are opened.	Close doors completely.

Message		Status	Action
(d)	LOW FUEL LEVEL	Fuel in tank becomes nearly empty.	Fill up tank.
(e)	TRANSMISSION HOT	Automatic transmission fluid temperature is too high.	Stop and check.
(f)	MAINT REQD SOON	Oil change is nearly due.	Check engine oil.
(g)	MAINT REQD	Oil change is due.	Replace engine oil.
(h)	LOW WASHER FLUID	Washer fluid level is low.	Add washer fluid.

(a) PARKING BRAKE ENGAGED

This message is to warn the driver that the parking brake is not completely released at the vehicle speed of 5 km/h (3 mph) or more.

Stop the vehicle and release the parking brake fully.

The message appears with the master warning light flashes, brake system warning light and a warning tone sounds.

(b) ENGINE COOLANT HOT

This message is to warn the driver that the engine coolant temperature is too high.

Stop the vehicle and allow the engine to cool.

The message appears with the master warning light flashes and a warning tone sounds.

NOTICE
Do not continue driving with an overheated engine. See "If your vehicle overheats" on page 497 in Section 4.

(c) DRIVER DOOR OPEN | PASSENGER DOOR OPEN | LEFT REAR DOOR OPEN | RIGHT REAR DOOR OPEN

This message is to remind the driver that any of the doors are opened.

Close the door securely.

The message appears with the master warning light flashes, open door warning light and a warning tone sounds when the vehicle speed rises above 5 km/h (3 mph).

(d) LOW FUEL LEVEL

This message is to remind the driver that the fuel level in the tank becomes nearly empty.

If the message appears with the low fuel level warning light comes on and a warning tone sounds, fill up the tank as soon as possible.

The message disappears by pressing "SELECT RESET" button when the ignition switch is in the "ON" position. However, the low fuel level warning light remains on.

(e) TRANSMISSION HOT

This message is to warn the driver that automatic transmission fluid temperature is too high.

If the automatic transmission fluid temperature is too high, the message appears with the automatic transmission fluid temperature warning light comes on and a warning tone sounds.

If this message appears while you are driving, slow down and pull off the road. Stop the vehicle at a safe place and put the selector lever in "P". With the engine idling, wait until the message goes off. If the message goes off, you may start the vehicle again. If the message does not go off, call a Toyota dealer or qualified repair shop for assistance.

NOTICE

Continue driving with the warning message on may result in damage of the automatic transmission.

(f) MAINT REQD SOON **(U.S.A. only)**

This message is to remind the driver to change the engine oil. The message is a prior notice.

Toyota recommends that the engine oil be changed as soon as possible.

If the driving range after the previous oil change reaches 7200 km (4500 miles), the message appears for about 15 seconds with the master warning light and a warning tone sounds.

The engine oil maintenance data must be reset after the engine oil change. See following “Resetting the engine oil maintenance data”.

(g) MAINT REQD **(U.S.A. only)**

This message is to remind the driver to change the engine oil.

Change the engine oil as soon as possible.

If the driving range after the previous oil change reaches 8000 km (5000 miles), the message appears with the master warning light and a warning tone sounds. The message stays on with the ignition switch is turned to the “ON” position.

The engine oil maintenance data must be reset after the engine oil change. See “Resetting the engine oil maintenance data” below for the procedure to reset the system.

Resetting the engine oil maintenance data

The engine oil maintenance data must be reset after replacement of the engine oil. Reset the data by the following procedure:

1. Turn the ignition switch to the “ACC” or “LOCK” position with the trip meter A reading shown. (For details, see “Odometer and two trip meters” on page 186 in this Section.)
2. Turn the ignition switch to the “ON” position while holding down the trip meter reset knob.

Hold down the knob for at least 5 seconds. The information display indicates “MAINT REQD RESET MODE COMPLETE”, the master warning light turns on and the tone sounds.

If the system fails to reset, perform the above procedure again.

(h) LOW WASHER FLUID

This message appears when the washer fluid level becomes very low.

Fill the tank as soon as possible.

The message appears with the master warning light, low windshield washer fluid level warning light and a warning tone sounds.

If the message appears, fill the washer tank as soon as possible. For instructions, see “Adding washer fluid” on page 563 in Section 7–3.

Service reminder indicators and warning buzzers

If the indicator or buzzer comes on...		Do this.
(a)	**BRAKE** or (indicator and buzzer)	If parking brake is off, stop immediately and contact Toyota dealer.
(b)	(indicator and buzzer)	Fasten driver's seat belt.
(c)	PASSENGER (indicator and buzzer)	Fasten front passenger's seat belt.
(d)		Stop immediately and contact Toyota dealer.
(e)		Stop and check.
(f)	CHECK	Take vehicle to Toyota dealer.

If the indicator or buzzer comes on...		Do this.
(g)	MAINT REQD	Replace engine oil.
(h)		Fill up tank.
(i)	ABS or ABS	Take vehicle to Toyota dealer. If brake system warning light is also on, stop immediately and contact Toyota dealer.
(j)	VSC OFF	If the light flashes, take vehicle to Toyota dealer.
(k)		Close all doors.
(l)		Take vehicle to Toyota dealer immediately.
(m)		Adjust tire inflation pressure. If the warning light comes on after blinking for 1 minute, contact Toyota dealer.

If the indicator or buzzer comes on...		Do this.
(n)	**A/T OIL TEMP**	Stop and check.
(o)	⚠	Read a warning message on multi-information display.
(p)		Add washer fluid.
(q)	Key reminder buzzer	Remove key.
(r)	Parking brake reminder buzzer	Release parking brake.
(s)	Four-wheel drive system warning buzzer	Shift the transfer mode correctly.
(t)	Open moon roof reminder buzzer	Close moon roof.

(a) Brake System Warning Light and buzzer

This light comes on in the following cases when the ignition switch is in the “ON” position.

- **When the parking brake is applied...**

This light comes on for a few seconds when the ignition switch is turned to the “ON” position even after the parking brake is released.

- **When the brake fluid level is low...**

CAUTION

It is dangerous to continue driving normally when the brake fluid level is low.

Have your vehicle checked at your Toyota dealer in the following case:

- The light does not come on even if the parking brake is applied when the ignition switch is in the “ON” position.
- The light does not come on even if the ignition switch is turned on with the parking brake released.

A warning light turning on briefly during operation does not indicate a problem.

CAUTION

If either of the following conditions occurs, immediately stop your vehicle at a safe place and contact your Toyota dealer.

- **The light does not turn off even after the parking brake is released while the engine is running.**

  In this case, the brakes may not work properly and your stopping distance will become longer. Depress the brake pedal firmly and bring the vehicle to an immediate stop.

- **The brake system warning light remains on together with the “ABS” warning light.**

  In this case, not only the anti–lock brake system will fail but also the vehicle will become extremely unstable during braking.

(b) Driver’s Seat Belt Reminder Light and Buzzer

The light and buzzer act as a reminder to buckle up the driver’s seat belt.

Once the ignition switch is turned to “ON” or “START”, the reminder light flashes and buzzer sounds if the driver’s seat belt is not fastened. Unless the driver fastens the belt, the light continues flashing and the buzzer stops after about 4 to 8 seconds.

If the vehicle speed rises above 20 km/h (12 mph) with the seat belt unfastened, the buzzer will sound for about 10 seconds. Then, if the seat belt is still unfastened, the buzzer will sound in a different tone for 20 seconds. Even if the vehicle speed drops below 20 km/h (12 mph), the buzzer will continue to sound. To stop the buzzer, fasten the seat belt. If the buzzer still sounds, make sure the front passenger’s seat belt is fastened.

(c) Front Passenger's Seat Belt Reminder Light and Buzzer

The light and buzzer act as a reminder to have the front passenger buckle up the seat belt.

Once the ignition switch is turned to the "ON" position, the reminder light flashes if a passenger sits in the right front passenger seat and does not fasten the seat belt.

If the vehicle speed rises above 20 km/h (12 mph) with the seat belt unfastened, the buzzer will sound for 10 seconds. Then, if the seat belt is still unfastened, the buzzer will sound in a different tone for 20 seconds. Even if the vehicle speed drops below 20 km/h (12 mph), the buzzer will continue to sound. To stop the buzzer, fasten the seat belt. If the buzzer still sounds, make sure the driver's seat belt is fastened.

The buzzer can be disabled. For details, contact your Toyota dealer.

If luggage or other load is placed on the front passenger seat, depending on its weight, the reminder light to flash and buzzer to sounds.

(d) Charging System Warning Light

This warning light comes on when the ignition switch is turned to the "ON" position, and goes off when the engine is started.

When there are problems in the charging system while the engine is running, the warning light comes on.

NOTICE

When the charging system warning light comes on while the engine is running, malfunctions such as the engine drive belt being broken may have occurred. If the warning light comes on, immediately stop the vehicle in a safe place and contact your Toyota dealer.

(e) Low Engine Oil Pressure Warning Light

This light warns that the engine oil pressure is too low.

If it flickers or stays on while you are driving, pull off the road to a safe place and stop the engine immediately. Call a Toyota dealer or qualified repair shop for assistance.

The light may occasionally flicker when the engine is idling or it may come on briefly after a hard stop. There is no cause for concern if it then goes out when the engine is accelerated slightly.

The light may come on when the oil level is extremely low. It is not designed to indicate low oil level, and the oil level must be checked using the level dipstick.

NOTICE

Do not drive the vehicle with the warning light on—even for one block. It may ruin the engine.

(f) Malfunction Indicator Lamp

This lamp comes on when the ignition switch is turned to the "ON" position and goes off after the engine starts. This means that the warning light system is operating properly.

If the lamp remains on, or the lamp comes on while driving, first check the followings.

- Empty fuel tank

  If the fuel tank is empty, refuel immediately.

- Loose fuel tank cap

  If the fuel tank cap is loose, securely tighten it.

These cases are temporary malfunctions. The malfunction indicator lamp will go off after taking several driving trips.

If the lamp does not go off even after several trips, contact your Toyota dealer as soon as possible.

If the fuel tank is not empty or the fuel tank cap is not loose...

- There is a problem somewhere in the engine, emission control system, electronic throttle control system, automatic transmission electrical system or warning light system itself.

Contact your Toyota dealer as soon as possible to service the vehicle.

If engine speed does not increase when the accelerator pedal is depressed, there may be a problem somewhere in the electronic throttle control system.

At this time, vibration may occur. However, if you depress the accelerator pedal more firmly and slowly, you can drive your vehicle at low speeds. Have your vehicle checked by your Toyota dealer as soon as possible.

Even if the abnormality of the electronic throttle control system is corrected during low speed driving, the system may not be recovered until the engine is stopped and the ignition switch is turned to the "ACC" or "LOCK" position.

⚠ CAUTION

Be especially careful to prevent erroneous pedal operation.

Emissions Inspection and Maintenance (I/M) programs

Your vehicle may not pass a state emission inspection if the malfunction indicator lamp remains on. Contact your Toyota dealer to check your vehicle's emission control system and OBD (On–Board Diagnostics) system before taking your vehicle for the inspection.

For details, see "Emissions Inspection and Maintenance (I/M) programs" in Section 6.

(g) Engine Oil Replacement Reminder Light (for vehicles sold in U.S.A.)

This light acts as a reminder to replace the engine oil.

This light will come on when the ignition switch is turned to the "ON" position and will go off after about a few seconds.

When you drive for about 7200 km (4500 miles) after the engine oil replacement, this light illuminates for about 3 seconds and then flashes for about 12 seconds with the ignition switch turned to the "ON" position. If you continue driving without replacing the engine oil, and if the distance driven exceeds 8000 km (5000 miles), the light will come on after the ignition switch is turned to "ON" position. The light will remain on thereafter.

If the light is flashing, we recommend that you replace the engine oil at an early opportunity depending on the driving and road conditions. If the light comes on, replace it as soon as possible.

The system must be reset after the engine oil replacement. Reset the system by the following procedure:

1. Turn the ignition switch to the “OFF” position with the trip meter A reading shown. (For details, see “Odometer and two trip meters” on page 186 in this Section.)
2. Turn the ignition switch to the “ON” position while holding down the trip meter reset knob.

Hold down the knob for at least 5 seconds. The trip meter A indicates “000000” and the light goes off.

If the system fails to reset, the light will continue flashing.

(h) Low Fuel Level Warning Light

This light comes on when the fuel level in the tank becomes nearly empty. Fill up the tank as soon as possible.

On inclines or curves, due to the movement of fuel in the tank, the low fuel level warning light may come on earlier than usual.

(i) “ABS” Warning Light

The light comes on when the ignition switch is turned to the “ON” position. If the anti–lock brake system and the brake assist system work properly, the light turns off after a few seconds. Thereafter, if either of the systems malfunctions, the light comes on again.

When the “ABS” warning light is on (and the brake system warning light is off), the following systems do not operate, but the brake system still operates conventionally.

- Anti–lock brake system
- Brake assist system
- Traction control system
- “AUTO LSD” system
- Vehicle stability control system

When the “ABS” warning light is on (and the brake system warning light is off), the anti–lock brake system does not operate, so that the wheels will lock up during a sudden braking or braking on slippery road surfaces.

If either of the following conditions occurs, this indicates a malfunction somewhere in the components monitored by the warning light system. Contact your Toyota dealer as soon as possible to service the vehicle.

- The light does not come on when the ignition switch is turned to the “ON” position, or remains on.
- The light comes on while you are driving.

A warning light turning on briefly during operation does not indicate a problem.

⚠ CAUTION

If the “ABS” warning light remains on together with the brake system warning light, immediately stop your vehicle at a safe place and contact your Toyota dealer.

In this case, not only the anti–lock brake system will fail but also the vehicle will become extremely unstable during braking.

(j) "VSC OFF" warning light

The light flashing warns that there is a problem somewhere in the following.

- Vehicle stability control system
- Traction control system
- "AUTO LSD" system

The light will come on when the ignition switch is turned to the "ON" position, and will go off after a few seconds.

If the light flashes on while driving, the above mentioned systems do not work. However, as conventional braking operates when applied, there is no problem to continue your driving.

In the following cases, contact your Toyota dealer:

- The warning light does not come on after the ignition switch is turned to the "ON" position.
- The warning light remains on after the ignition switch is turned to the "ON" position.
- The warning light flashes while driving.

(k) Open Door Warning Light

This light remains on until all the doors are completely closed.

The buzzer also sounds once when any of the doors is not completely closed at the vehicle speed 5 km/h (3 mph) or more. Stop the vehicle and close all the door completely.

(l) SRS Warning Light

This light will come on when the ignition switch is turned to the "ON" position. After about 6 seconds, the light will go off. This means the systems of the airbag and front seat belt pretensioners are operating properly.

This warning light system monitors the airbag sensor assembly, front airbag sensors, side and curtain shield airbag sensors, curtain shield airbag sensors, driver's seat position sensor, driver's seat belt buckle switch, front passenger occupant classification system*, passenger airbag off switch, passenger airbag on–off indicator light, seat belt pretensioner assemblies, inflators, "RSCA OFF" indicator light, interconnecting wiring and power sources.

*: The front passenger occupant classification system includes the front passenger occupant classification ECU, load sensor and front passenger's seat belt buckle switch.

If either of the following conditions occurs, this indicates a malfunction somewhere in the parts monitored by the warning light system. Contact your Toyota dealer as soon as possible to service the vehicle.

- The light does not come on when the ignition switch is turned to the "ON" position or remains on for more than 6 seconds.
- The light comes on while driving.

(m) Tire Pressure Warning Light

This light warns that the tire inflation pressure of one or more of your tires (except for the temporary spare tire) is low. The light comes on when the ignition switch is turned to the "ON" position. It goes off after a few seconds. This indicates that the tire pressure warning system is functioning properly.

If the light comes on, stop your vehicle in a safe place as soon as possible and check that the tire inflation pressure of all four tires is as specified on the tire and loading information label. (See “Checking tire inflation pressure” on page 548 in Section 7–2.) The light should go off 3 to 6 minutes after the tire inflation pressure is adjusted.

If the warning light comes on after blinking for 1 minute, the tire pressure warning system may be malfunctioning. Contact your Toyota dealer.

For details, see “Tire pressure warning system” on page 251 in Section 1–7.

(n) Automatic Transmission Fluid Temperature Warning Light

This light warns that the automatic transmission fluid temperature is too high.

If this light comes on while you are driving, slow down and pull off the road. Stop the vehicle at a safe place and put the selector lever in “P”. With the engine idling, wait until the light goes off. If the light goes off, you may start the vehicle again. If the light does not go off, call a Toyota dealer or qualified repair shop for assistance.

NOTICE

Continued driving with the warning light on may damage the automatic transmission.

(o) Master Warning Light

If the master warning light comes on, a message appears on the multi–information display. Depending on the conditions a warning tone may sound. (See “—Warning messages” on page 193 in this Section for instructions.)

(p) Low Windshield Washer Fluid Level Warning Light

The light warns that the windshield washer fluid level is too low. Add washer fluid at your earliest opportunity. (For instructions, see “Adding washer fluid” on page 563 in Section 7–3.)

The light will come on when the ignition switch is turned to the “ON” position and will go off after a few seconds.

(q) Key Reminder Buzzer

This buzzer acts as a reminder to remove the key when you open the driver’s door with the ignition switch in the “ACC” or “LOCK” position.

(r) Parking Brake Reminder Buzzer

The buzzer acts once when the parking brake is not completely released at the vehicle speed of 5 km/h (3 mph) or more. Stop the vehicle and release the parking brake fully.

(s) Four–wheel Drive System Warning Buzzer (four–wheel drive models)

This buzzer reminds you that the transfer mode is not selected correctly.

If the buzzer sounds when you shift the transfer from “2WD” to “4H”, “4L” to “4H”, “4H” to “4L”, or “4L” to “2WD” mode, follow the instructions in “Four–wheel drive system” on page 239 in Section 1–7.

(t) Open Moon Roof Reminder Buzzer

This buzzer acts as a reminder to close the moon roof when you turn the ignition switch off and open the driver’s door.

CHECKING SERVICE REMINDER INDICATORS (except the low fuel level warning light)

Without multi–information display—

1. Apply the parking brake.
2. Open one of the doors.
   The open door warning light should come on.
3. Close the door.
   The open door warning light should go off.
4. Turn the ignition switch to the “ON” position, but do not start the engine.
   All the service reminder indicators except the open door warning light should come on.

   The following service reminder indicators go off after a few seconds:

- Engine oil replacement reminder light
- “ABS” warning light
- “RSCA OFF” indicator light
- “VSC OFF” indicator/warning light
- “AUTO LSD” indicator light
- Tire pressure warning light
- Slip indicator light
- Low windshield washer fluid level warning light

   The SRS warning light goes off after about 6 seconds.

With multi–information display—

1. Apply the parking brake.
2. Open one of the doors.
   The open door warning light should come on.
3. Close the door.
   The open door warning light should go off.
4. Turn the ignition switch to the “ON” position, but do not start the engine.
   All the service reminder indicators except the open door warning light should come on.

   The following service reminder indicators go off after a few seconds:

- Engine oil replacement reminder light
- “ABS” warning light
- “RSCA OFF” indicator light
- “VSC OFF” indicator/warning light
- “AUTO LSD” indicator light
- Tire pressure warning light
- Slip indicator light
- Master warning light

   The SRS warning light goes off after about 6 seconds.

If any service reminder indicator or warning buzzer does not function as described above, have it checked by your Toyota dealer as soon as possible.

SECTION 1 – 7

OPERATION OF INSTRUMENTS AND CONTROLS

Ignition switch, Transmission and Parking brake

Ignition switch 208
Automatic transmission 209
Four–wheel drive system 239
Traction control system 242
”AUTO LSD” system 244
Vehicle stability control system 248
Tire pressure warning system 251
Parking brake 258
Cruise control 259

Ignition switch

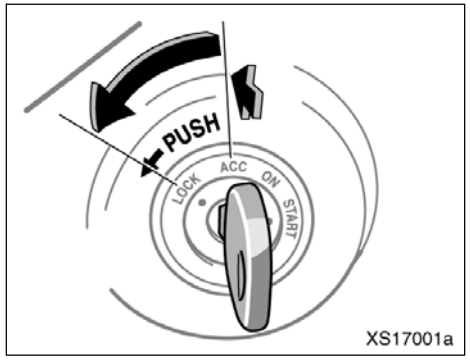

“START”—Starter motor on. The key will return to the “ON” position when released.

For starting tips, see page 468 in Section 3.

“ON”—Engine on and all accessories on.

This is the normal driving position.

“ACC”—Accessories such as the radio operate, but the engine is off.

If you leave the key in the “ACC” or “LOCK” position and open the driver’s door, a buzzer will remind you to remove the key.

“LOCK”—Engine is off and the steering wheel is locked. The key can be removed only at this position.

You must push in the key to turn the key from “ACC” to the “LOCK” position. The selector lever must be put in the “P” position before pushing the key.

Vehicles with engine immobilizer system—Once you remove the key, the engine immobilizer system is automatically set. (See “Engine immobilizer system” on page 21 in Section 1–2.)

When starting the engine, the key may seem stuck at the “LOCK” position. To free it, first be sure the key is pushed all the way in, and then rock the steering wheel slightly while turning the key gently.

Approximately five hours after the engine is turned off, you may hear sound coming from underneath the deck for several minutes. This is normal operation and does not indicate a malfunction. (See “Leak detection pump” on page ix.)

It is not a malfunction if the needles on all meters and gauges move slightly when the ignition switch is turned to the “ACC”, “ON” or “START” position.

NOTICE

Do not leave the key in the “ON” position if the engine is not running. The battery will discharge and the ignition could be damaged.

Automatic transmission (floor shift type)

▶5–speed models

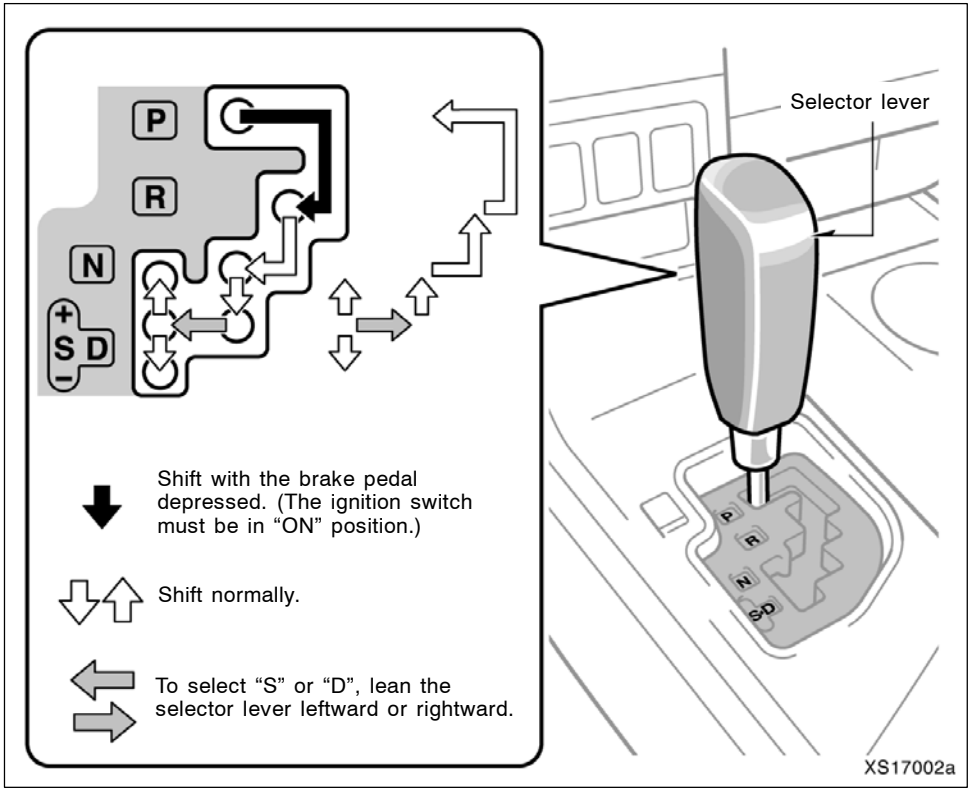

Your automatic transmission has a shift lock system to minimize the possibility of incorrect operation. This means you can only shift out of “P” position when the brake pedal is depressed (with the ignition switch in “ON” position).

(a) Selector lever

The shift position is also displayed on the instrument cluster.

P: Parking, engine starting and key removal

R: Reverse

N: Neutral

D: Normal driving

S: “S” mode driving
+: Upshift range
–: Downshift range

(b) Normal driving

1. Start the engine as instructed in “How to start the engine” on page 468 in Section 3. The transmission must be in “P” or “N”.

When the front drive control switch knob is in “4L” (low–speed position, four–wheel drive), the driving pattern selector setting has no effect on gear shift timing. (See “Four–wheel drive system” on page 239 in this Section for information of the front drive control lever.)

2. With your foot holding down the brake pedal, shift the selector lever to “D”.

When the lever is in the “D” position, the automatic transmission system will select the most suitable gear for running conditions such as normal cruising, hill climbing, hard towing, etc.

Always use the “D” position for better fuel economy and quieter driving. If the engine coolant temperature is low or when the front drive control switch knob is in “4L” (low–speed position, four–wheel drive), the transmission will not shift into the overdrive gear even in the “D” position. (See “Four–wheel drive system” on page 239 in this Section for information of the front drive control.)

⚠ CAUTION

Never put your foot on the accelerator pedal while shifting.

3. Release the parking brake and brake pedal. Depress the accelerator pedal slowly for smooth starting.

AI (Artificial Intelligence) shifting control—

AI shifting control selects the most suitable shift range automatically according to the driver’s operation and driving condition.

AI shifting control operates automatically with the selector lever in the “D” position. When the lever is moved to the “S” position, this function will be cancelled.

- **Shifting control on the slope:**
  On inclines, you can drive smoothly with reduced shifting quantity. On declines, the vehicle will shift down automatically to obtain optimum engine braking and reduce the driver’s foot braking load.
- **Automatic shifting point change control:**
  The most suitable shift range is selected depending on the driver’s accelerator pedal operation and vehicle condition.

(c) Driving in “S” mode

The shift range position can be changed in “S” mode. When the selector lever is in the “S” position, the shift range position can be switched between “5” (fifth range) and “1” (first range) by shifting the selector lever to the “+” (up) or “–” (down) position. By shifting the lever to the “+” (up) position and holding it for at least 1 second, the highest shift range position can be obtained. However, it cannot be changed while cruise control is activated. When the selector lever is shifted to the “S” position, shift range position “4” (fourth range) is selected automatically.

However, if the selector lever is shifted to the “S” position when AI shifting control is being performed, the initial shift range position may be “3” (third range). This is because the suitable shift range is selected depending on the driving condition.

The “S” mode indicator light and the current shift range position are shown on the instrument cluster.

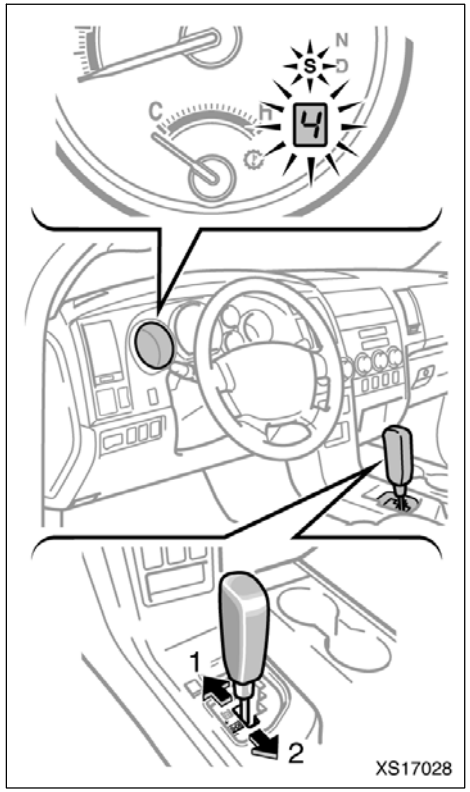

1: Upshift range
2: Downshift range

Shift range positions

- **“5” (Fifth range):**
  The most suitable gear is selected automatically between first and overdrive (fifth) gears according to the vehicle speed and driving conditions.
- **“4” (Fourth range):**
  The most suitable gear is selected automatically between first and fourth gears according to the vehicle speed and driving conditions. Slight engine braking will be obtained on a downhill road. Smooth running with less shifting will be obtained on an uphill road.
- **“3” (Third range):**
  The most suitable gear is selected automatically between first and third gears according to the vehicle speed and driving conditions. This range is to be used when stronger engine braking is necessary.
- **“2” (Second range):**
  First or second gear will be selected automatically according to the vehicle speed and driving conditions. This range is to be used when engine braking stronger than that of the “3” range position is necessary.

- **“1” (First range):**
  The gear is fixed in first regardless of vehicle speed and driving conditions. This range is to be used when maximum engine braking is necessary.

If you attempt to downshift the transmission when it is not possible to downshift due to high vehicle speed, a warning tone sounds twice.

NOTICE

Do not drive in the “3”, “2” or “1” range when driving at high speed or climbing a gentle slope for a long time. Otherwise the transmission or engine may overheat causing damage.

Maximum allowable speeds

To get on a highway or to pass slower traffic, maximum acceleration may be necessary. Make sure you observe the following maximum allowable speed in each range:

4.0 L V6 (1GR–FE) engine

range	km/h	(mph)
1	59	(36)
2	102	(63)
3	148	(91)

4.7 L V8 (2UZ–FE) engine

Without towing package

range	km/h	(mph)
1	61	(37)
2	105	(65)
3	154	(95)

With towing package

range	km/h	(mph)
1	58	(36)
2	100	(62)
3	147	(91)

Four–wheel drive models without towing package

—Front drive control switch knob at “4L”

range	km/h	(mph)
1	23	(14)
2	40	(24)
3	58	(36)
4	68	(42)
5	68	(42)

Four–wheel drive models with towing package

—Front drive control switch knob at “4L”

range	km/h	(mph)
1	22	(13)
2	38	(23)
3	56	(34)
4	64	(39)
5	64	(39)

NOTICE

Do not downshift if you are going faster than the maximum allowable speed for the next lower range.

When the “S” mode indicator light does not come on even with the selector lever moved to the “S” position, there may be a problem somewhere in the system. Have your vehicle checked/repaired by your Toyota dealer as soon as possible. In this case, you can drive in the same condition as in the “D” position.

(d) Using engine braking

To use engine braking, you can downshift the transmission as follows:

- When driving in the “D” position—
  Shift the selector lever to “S” position.

  When driving in the “5” range within the “S” position—
  Move the selector lever down to the “–” side to select the “4” range. The transmission will downshift to fourth range when the vehicle speed drops down to or lower than the following speed, and engine braking will be enabled.

  4.7 L V8 (2UZ–FE) engine
  Four–wheel drive models without towing package
  —Front drive control switch knob at “4L”
  . . . . . 75 km/h (46 mph)
  Four–wheel drive models with towing package
  —Front drive control switch knob at “4L”
  . . . . . 72 km/h (44 mph)

  When the cruise control is being used, engine braking can not be enabled because the cruise control is not cancelled. However, engine braking will be automatically enabled if the vehicle speed is higher than the set speed of the cruise control depending on the driving conditions.

  For decreasing the vehicle speed, see “Cruise control” on page 259 in this Section.

- Move the selector lever down to the “–” side to select the “3” range. The transmission will downshift to third range when the vehicle speed drops down to or lower than the following speed, and stronger engine braking will be enabled.

  4.0 L V6 (1GR–FE) engine
  . . . . . 136 km/h (84 mph)
  4.7 L V8 (2UZ–FE) engine
  Two–wheel drive models
  —without towing package
  . . . . . 138 km/h (85 mph)
  —with towing package
  . . . . . 132 km/h (82 mph)
  Four–wheel drive models without towing package
  —Front drive control switch knob at “2WD” or “4H”
  . . . . . 138 km/h (85 mph)
  —Front drive control switch knob at “4L”
  . . . . . 52 km/h (32 mph)
  Four–wheel drive models with towing package
  —Front drive control switch knob at “2WD” or “4H”
  . . . . . 132 km/h (82 mph)
  —Front drive control switch knob at “4L”
  . . . . . 50 km/h (31 mph)

- Move the selector lever down to the "–" side to select the "2" range. The transmission will downshift to second range when the vehicle speed drops down to or lower than the following speed, and more powerful engine braking than that of the "3" range position will be enabled.

  4.0 L V6 (1GR–FE) engine
  . . . . . 92 km/h (57 mph)

  4.7 L V8 (2UZ–FE) engine
  Two–wheel drive models

  —without towing package
  . . . . . 93 km/h (57 mph)

  —with towing package
  . . . . . 89 km/h (55 mph)

  Four–wheel drive models without towing package

  —Front drive control switch knob at "2WD" or "4H"
  . . . . . 93 km/h (57 mph)

  —Front drive control switch knob at "4L"
  . . . . . 35 km/h (21 mph)

  Four–wheel drive models with towing package

  —Front drive control switch knob at "2WD" or "4H"
  . . . . . 89 km/h (55 mph)

  —Front drive control switch knob at "4L"
  . . . . . 33 km/h (20 mph)

- Move the selector lever down to the "–" side to select the "1" range. The transmission will downshift to first range when the vehicle speed drops down to or lower than the following speed, and maximum engine braking will be enabled.

  4.0 L V6 (1GR–FE) engine
  . . . . . 39 km/h (24 mph)

  4.7 L V8 (2UZ–FE) engine
  Two–wheel drive models

  —without towing package
  . . . . . 40 km/h (24 mph)

  —with towing package
  . . . . . 38 km/h (23 mph)

  Four–wheel drive models without towing package

  —Front drive control switch knob at "2WD" or "4H"
  . . . . . 40 km/h (24 mph)

  —Front drive control switch knob at "4L"
  . . . . . 15 km/h (9 mph)

  Four–wheel drive models with towing package

  —Front drive control switch knob at "2WD" or "4H"
  . . . . . 38 km/h (23 mph)

  —Front drive control switch knob at "4L"
  . . . . . 14 km/h (8 mph)

⚠ CAUTION

Be careful when downshifting on a slippery surface. The abrupt change in engine speed could cause the vehicle to skid or spin.

(e) Backing up

1. Bring the vehicle to a complete stop.
2. With the brake pedal held down with your foot, shift the selector lever to the “R” position.

NOTICE

Never shift into reverse while the vehicle is moving.

(f) Parking

1. Bring the vehicle to a complete stop.
2. With the brake pedal pressed down, fully depress the parking brake pedal to apply the parking brake securely.
3. With the brake pedal pressed down, shift the selector lever to the “P” position.

CAUTION

Never attempt to move the selector lever into “P” position under any circumstances while the vehicle is moving. Serious mechanical damage and loss of vehicle control may result.

(g) Good driving practice

- If the transmission repeatedly shifts up and down between third gear and overdrive when climbing a gentle slope, shift the selector lever into “S” position.
- When towing a trailer, in order to maintain engine braking efficiency, do not use the transmission in “D”. Select an appropriate shift range in “S” mode.

CAUTION

Always keep your foot on the brake pedal while stopped with the engine running. This prevents the vehicle from creeping.

NOTICE

Always use the brake pedal or the parking brake to hold the vehicle on an upgrade. Do not attempt to hold the vehicle using the accelerator pedal, as this can cause the transmission to overheat.

(h) If you cannot shift the selector lever out of “P” position

If you cannot shift the selector lever from the “P” position even though the brake pedal is depressed, use the shift lock override button. For instructions, see “If you cannot shift automatic transmission selector lever” on page 516 in Section 4.

▶6–speed models

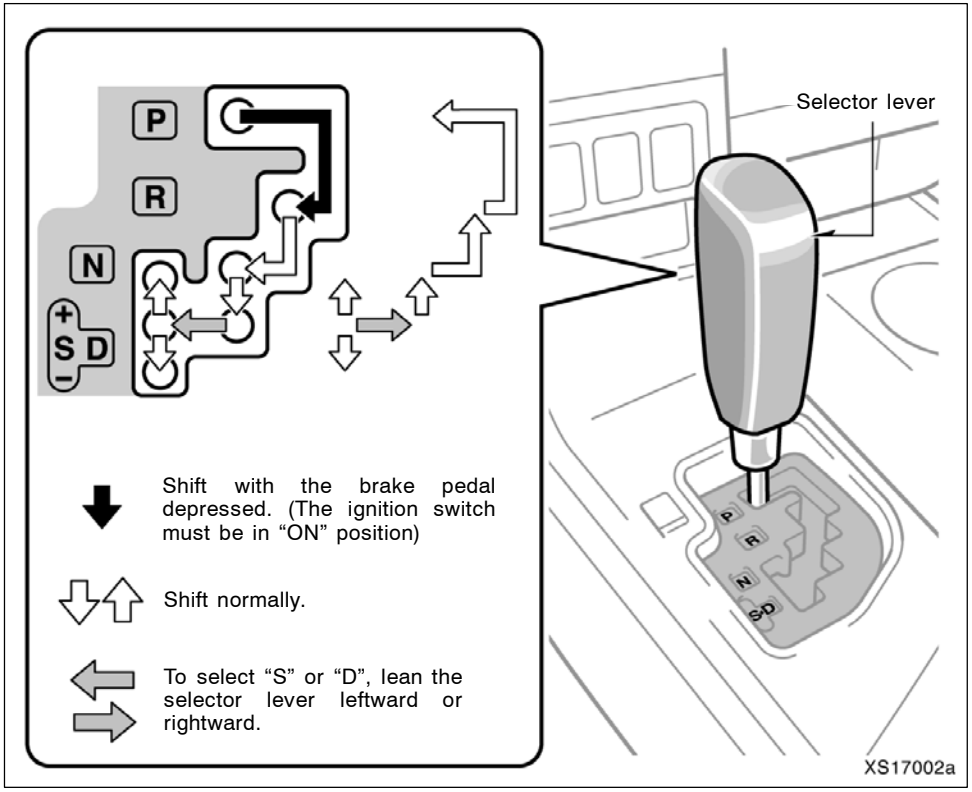

Your automatic transmission has a shift lock system to minimize the possibility of incorrect operation. This means you can only shift out of “P” position when the brake pedal is depressed (with the ignition switch in “ON” position).

(a) Selector lever

The shift position is also displayed on the instrument cluster.

P: Parking, engine starting and key removal

R: Reverse

N: Neutral

D: Normal driving

S: “S” mode driving
+: Upshift range
–: Downshift range

(b) Normal driving

1. Start the engine as instructed in “How to start the engine” on page 468 in Section 3. The transmission must be in “P” or “N”.

When the front drive control switch knob is in “4L” (low–speed position, four–wheel drive), the driving pattern selector setting has no effect on gear shift timing. (See “Four–wheel drive system” on page 239 in this Section for information of the front drive control lever.)

2. With your foot holding down the brake pedal, shift the selector lever to “D”.

When the lever is in the “D” position, the automatic transmission system will select the most suitable gear for running conditions such as normal cruising, hill climbing, hard towing, etc.

Always use the “D” position for better fuel economy and quieter driving. If the engine coolant temperature is low or when the front drive control switch knob is in “4L” (low–speed position, four–wheel drive), the transmission will not shift into the overdrive gear even in the “D” position. (See “Four–wheel drive system” on page 239 in this Section for information of the front drive control.)

⚠ CAUTION

Never put your foot on the accelerator pedal while shifting.

3. Release the parking brake and brake pedal. Depress the accelerator pedal slowly for smooth starting.

AI (Artificial Intelligence) shifting control—

AI shifting control selects the most suitable shift range automatically according to the driver’s operation and driving condition.

AI shifting control operates automatically with the selector lever in the “D” position. When the lever is moved to the “S” position, this function will be cancelled.

- **Shifting control on the slope:**
  On inclines, you can drive smoothly with reduced shifting quantity. On declines, the vehicle will shift down automatically to obtain optimum engine braking and reduce the driver’s foot braking load.
- **Automatic shifting point change control:**
  The most suitable shift range is selected depending on the driver’s accelerator pedal operation and vehicle condition.

(c) Driving in “S” mode

The shift range position can be changed in “S” mode. When the selector lever is in the “S” position, the shift range position can be switched between “6” (sixth range) and “1” (first range) by shifting the selector lever to the “+” (up) or “–” (down) position. By shifting the lever to the “+” (up) position and holding it for at least 1 second, the highest shift range position can be obtained. However, it cannot be changed while cruise control is activated. When the selector lever is shifted to the “S” position, shift range position “4” (fourth range) or “5” (fifth range) is selected depending on the vehicle speed.

However, if the selector lever is shifted to the "S" position when AI shifting control is being performed, the initial shift range position may be "2" (second range) or "3" (third range). This is because the suitable shift range is selected depending on the driving condition.

The "S" mode indicator light and the current shift range position are shown on the instrument cluster.

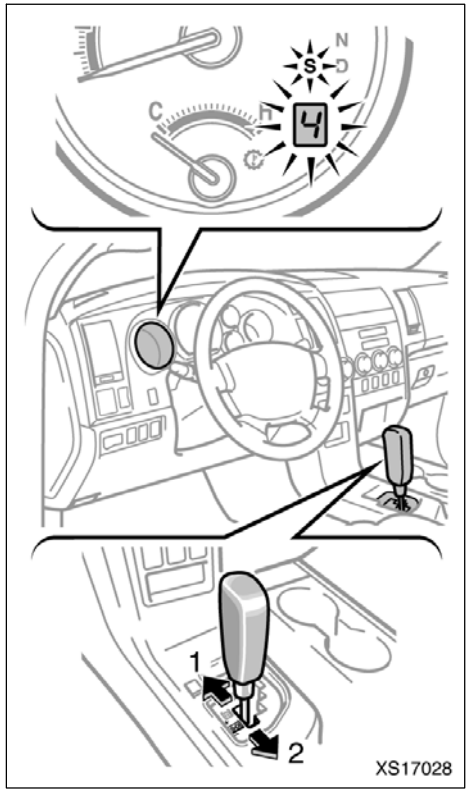

1: Upshift range
2: Downshift range

Shift range positions

- **"6" (Sixth range):**
  The most suitable gear is selected automatically between first and overdrive (sixth) gears according to the vehicle speed and driving conditions.
- **"5" (Fifth range):**
  The most suitable gear is selected automatically between first and fifth gears according to vehicle speed and driving conditions. This range is suitable for acceleration such as when you want to pass a vehicle running ahead of you during high speed driving.
- **"4" (Fourth range):**
  The most suitable gear is selected automatically between first and fourth gears according to the vehicle speed and driving conditions. Slight engine braking will be obtained on a downhill road. Smooth running with less shifting will be obtained on an uphill road.
- **"3" (Third range):**
  The most suitable gear is selected automatically between first and third gears according to the vehicle speed and driving conditions. This range is to be used when stronger engine braking is necessary.

- **“2” (Second range):**
  First or second gear will be selected automatically according to the vehicle speed and driving conditions. This range is to be used when engine braking stronger than that of the “3” range position is necessary.
- **“1” (First range):**
  The gear is fixed in first regardless of vehicle speed and driving conditions. This range is to be used when maximum engine braking is necessary.

If you attempt to downshift the transmission when it is not possible to downshift due to high vehicle speed, a warning tone sounds twice.

Maximum allowable speeds

To get on a highway or to pass slower traffic, maximum acceleration may be necessary. Make sure you observe the following maximum allowable speeds in each range:

5.7 L V8 (3UR–FE) engine

Without towing package

range	km/h	(mph)
1	62	(38)
2	106	(65)
3	154	(95)

With towing package

range	km/h	(mph)
1	59	(36)
2	101	(62)
3	147	(91)

Four–wheel drive models without towing package

—Front drive control switch knob at “4L”

range	km/h	(mph)
1	23	(14)
2	40	(24)
3	58	(36)
4	68	(42)
5	68	(42)
6	68	(42)

Four–wheel drive models with towing package

—Front drive control switch knob at “4L”

range	km/h	(mph)
1	22	(13)
2	38	(23)
3	56	(34)
4	64	(39)
5	64	(39)
6	64	(39)

NOTICE

Do not downshift if you are going faster than the maximum allowable speed for the next lower range.

When the “S” mode indicator light does not come on even with the selector lever moved to the “S” position, there may be a problem somewhere in the system. Have your vehicle checked/repaired by your Toyota dealer as soon as possible. In this case, you can drive in the same condition as in the “D” position.

(d) Using engine braking

To use engine braking, you can downshift the transmission as follows:

- When driving in the “D” position—
  Shift the selector lever to the “S” position.

  When driving in the “6” range within the “S” position—
  Move the selector lever down to the “–” side to select the “5” range. The transmission will downshift to fifth range when the vehicle speed drops down to or lower than the following speed, and engine braking will be enabled.

  5.7 L V8 (3UR–FE) engine

  Four–wheel drive models

  —Front drive control switch knob at “4L”
  . . . . . 79 km/h (49 mph)

  When the cruise control is being used, even if you downshift the transmission, engine braking will not be enabled because the cruise control is not cancelled. However, engine braking will be automatically enabled if the vehicle speed is higher than the set speed of the cruise control depending on the driving conditions.

  For ways to decrease the vehicle speed, see “Cruise control” on page 259 in this Section.

- Move the selector lever down to the “–” side to select the “4” range. The transmission will downshift to fourth range when the vehicle speed drops down to or lower than the following speed, and stronger engine braking will be enabled.

  5.7 L V8 (3UR–FE) engine

  Four–wheel drive models

  —Front drive control switch knob at “4L”
  . . . . . 79 km/h (49 mph)

  When the cruise control is being used, even if you downshift the transmission, engine braking will not be enabled because the cruise control is not cancelled. However, engine braking will be automatically enabled if the vehicle speed is higher than the set speed of the cruise control depending on the driving conditions.

- Move selector lever down to the “–” side to select the “3” range. The transmission will downshift to third range when the vehicle speed drops down to or lower than the following speed, and more powerful engine braking than that of the “4” range position will be enabled.

5.7 L V8 (3UR–FE) engine
Two–wheel drive models

—without towing package
. . . . . 138 km/h (85 mph)

—with towing package
. . . . . 131 km/h (81 mph)

Four–wheel drive models without towing package

—Front drive control switch knob at “2WD” or “4H”
. . . . . 138 km/h (85 mph)

—Front drive control switch knob at “4L”
. . . . . 55 km/h (34 mph)

Four–wheel drive models with towing package

—Front drive control switch knob at “2WD” or “4H”
. . . . . 131 km/h (81 mph)

—Front drive control switch knob at “4L”
. . . . . 52 km/h (32 mph)

- Move the selector lever down to the “–” side to select the “2” range. The transmission will downshift to second range when the vehicle speed drops down to or lower than the following speed, and more powerful engine braking will be enabled.

5.7 L V8 (3UR–FE) engine
Two–wheel drive models

—without towing package
. . . . . 94 km/h (58 mph)

—with towing package
. . . . . 90 km/h (55 mph)

Four–wheel drive models without towing package

—Front drive control switch knob at “2WD” or “4H”
. . . . . 94 km/h (58 mph)

—Front drive control switch knob at “4L”
. . . . . 37 km/h (22 mph)

Four–wheel drive models with towing package

—Front drive control switch knob at “2WD” or “4H”
. . . . . 90 km/h (55 mph)

—Front drive control switch knob at “4L”
. . . . . 36 km/h (22 mph)

- Move selector lever down to the “–” side to select the “1” range. The downshift to first range when the vehicle speed drops down to or lower than the following speed, and maximum engine braking will be enabled.

5.7 L V8 (3UR–FE) engine
Two–wheel drive models

—without towing package
. . . . . 41 km/h (25 mph)

—with towing package
. . . . . 39 km/h (24 mph)

Four–wheel drive models without towing package

—Front drive control switch knob at “2WD” or “4H”
. . . . . 41 km/h (25 mph)

—Front drive control switch knob at “4L”
. . . . . 15 km/h (9 mph)

Four–wheel drive models with towing package

—Front drive control switch knob at “2WD” or “4H”
. . . . . 39 km/h (24 mph)

—Front drive control switch knob at “4L”
. . . . . 14 km/h (8 mph)

⚠ CAUTION

Be careful when downshifting on a slippery surface. The abrupt change in engine speed could cause the vehicle to skid or spin.

(e) Backing up

1. Bring the vehicle to a complete stop.
2. With the brake pedal held down with your foot, shift the selector lever to the "R" position.

NOTICE

Never shift into reverse while the vehicle is moving.

(f) Parking

1. Bring the vehicle to a complete stop.
2. With the brake pedal pressed down, fully depress the parking brake pedal to apply the parking brake securely.
3. With the brake pedal pressed down, shift the selector lever to the "P" position.

⚠ CAUTION

Never attempt to move the selector lever into "P" position under any circumstances while the vehicle is moving. Serious mechanical damage and loss of vehicle control may result.

(g) Good driving practice

- If the transmission repeatedly shifts up and down between fourth gear and overdrive when climbing a gentle slope, shift the selector lever into "S" position.
- When towing a trailer, in order to maintain engine braking efficiency, do not use the transmission in "D". Select an appropriate shift range in "S" mode.

⚠ CAUTION

Always keep your foot on the brake pedal while stopped with the engine running. This prevents the vehicle from creeping.

NOTICE

Always use the brake pedal or the parking brake to hold the vehicle on an upgrade. Do not attempt to hold the vehicle using the accelerator pedal, as this can cause the transmission to overheat.

(h) If you cannot shift the selector lever out of "P" position

If you cannot shift the selector lever from the "P" position even though the brake pedal is depressed, use the shift lock override button. For instructions, see "If you cannot shift automatic transmission selector lever" on page 516 in Section 4.

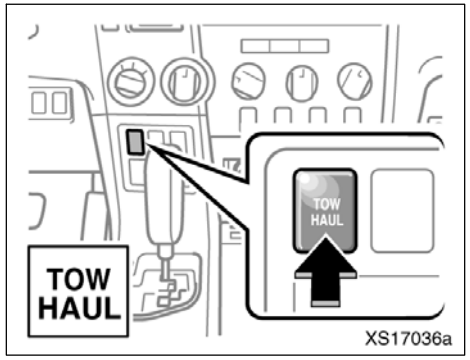

(i) “TOW/HAUL” switch (on some models)

Use “TOW/HAUL” mode when pulling a trailer or hauling a heavy load. In this mode, the driving and engine braking performance is improved in accordance with towing conditions or increased load.

To turn on: Push “TOW/HAUL” switch

“TOW/HAUL” mode is activated and “TOW/HAUL” mode indicator light comes on by pressing “TOW/HAUL” switch.

To turn off: Push “TOW/HAUL” switch once again and the “TOW/HAUL” mode indicator light goes off.

“TOW/HAUL” mode is canceled by pressing “TOW/HAUL” switch again or by turning the ignition switch to “OFF”.

Even when “TOW/HAUL” mode is used during normal driving, no damage is caused to the engine or the transmission. However, fuel economy is reduced and the transmission and/or engine driving characteristics may feel unusual.

Toyota recommends using “TOW/HAUL” mode only when a heavy trailer or a large heavy load is towed.

Automatic transmission (column–shift type)

▶5–speed models

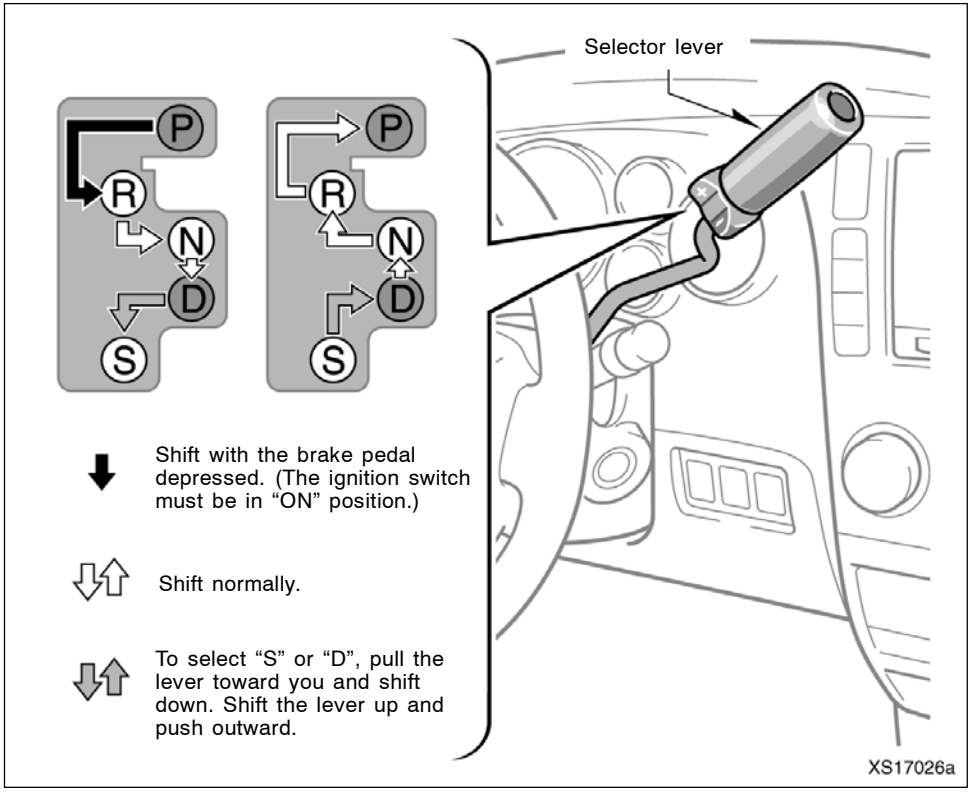

Your automatic transmission has a shift lock system to minimize the possibility of incorrect operation. This means you can only shift out of “P” position when the brake pedal is depressed (with the ignition switch in “ON” position).

(a) Selector lever

The shift position is also displayed on the instrument cluster.

P: Parking, engine starting and key removal

R: Reverse

N: Neutral

D: Normal driving

S: “S” mode driving

+: Upshift range

–: Downshift range

(b) Normal driving

1. Start the engine as instructed in “How to start the engine” on page 468 in Section 3. The transmission must be in “P” or “N”.

When the front drive control switch knob is in “4L” (low–speed position, four–wheel drive), the driving pattern selector setting has no effect on gear shift timing. (See “Four–wheel drive system” on page 239 in this Section for information of the front drive control lever.)

2. With your foot holding down the brake pedal, shift the selector lever to “D”.

When the lever is in the “D” position, the automatic transmission system will select the most suitable gear for running conditions such as normal cruising, hill climbing, hard towing, etc.

Always use the “D” position for better fuel economy and quieter driving. If the engine coolant temperature is low or when the front drive control switch knob is in “4L” (low–speed position, four–wheel drive), the transmission will not shift into the overdrive gear even in the “D” position. (See “Four–wheel drive system” on page 239 in this Section for information of the front drive control.)

⚠ CAUTION

Never put your foot on the accelerator pedal while shifting.

3. Release the parking brake and brake pedal. Depress the accelerator pedal slowly for smooth starting.

AI (Artificial Intelligence) shifting control—

AI shifting control selects the most suitable shift range automatically according to the driver’s operation and driving condition.

AI shifting control operates automatically with the selector lever in the “D” position. When the lever is moved to the “S” position, this function will be cancelled.

- **Shifting control on the slope:**
  On inclines, you can drive smoothly with reduced shifting quantity. On declines, the vehicle will shift down automatically to obtain optimum engine braking and reduce the driver’s foot braking load.
- **Automatic shifting point change control:**
  The most suitable shift range is selected depending on the driver’s accelerator pedal operation and vehicle condition.

(c) Driving in “S” mode

The shift range position can be changed in “S” mode. When the selector lever is in the “S” position, the shift range position can be switched between “5” (fifth range) and “1” (first range) by turning the “S” mode switch of the selector lever to the “+” (up) or “–” (down) direction. By turning the “S” mode switch to the “+” (up) direction and holding it for at least 1 second, the highest shift range position can be obtained. However, it cannot be changed while cruise control is activated. When the selector lever is shifted to the “S” position, shift range position “4” (fourth range) is selected automatically.

However, if the selector lever is shifted to the “S” position when AI shifting control is being performed, the initial shift range position may be “3” (third range). This is because the suitable shift range is selected depending on the driving condition.

The “S” mode indicator light and the current shift range position are shown on the instrument cluster.

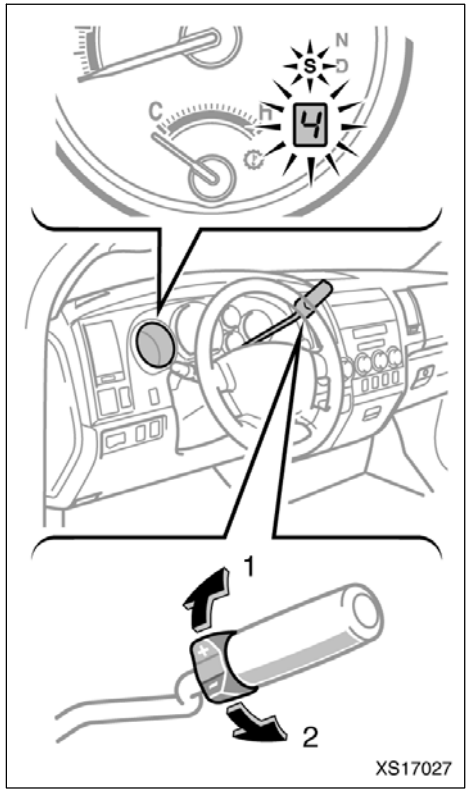

1: Upshift range
2: Downshift range

Shift range positions

- **“5” (Fifth range):**
  The most suitable gear is selected automatically between first and overdrive (fifth) gears according to the vehicle speed and driving conditions.
- **“4” (Fourth range):**
  The most suitable gear is selected automatically between first and fourth gears according to the vehicle speed and driving conditions. Slight engine braking will be obtained on a downhill road. Smooth running with less shifting will be obtained on an uphill road.
- **“3” (Third range):**
  The most suitable gear is selected automatically between first and third gears according to the vehicle speed and driving conditions. This range is to be used when stronger engine braking is necessary.
- **“2” (Second range):**
  First or second gear will be selected automatically according to the vehicle speed and driving conditions. This range is to be used when engine braking stronger than that of the “3” range position is necessary.

- **“1” (First range):**
  The gear is fixed in first regardless of vehicle speed and driving conditions. This range is to be used when maximum engine braking is necessary.

If you attempt to downshift the transmission when it is not possible to downshift due to high vehicle speed, a warning tone sounds twice.

NOTICE

Do not drive in the “3”, “2” or “1” range when driving at high speed or climbing a gentle slope for a long time. Otherwise the transmission or engine may overheat causing damage.

Maximum allowable speeds

To get on a highway or to pass slower traffic, maximum acceleration may be necessary. Make sure you observe the following maximum allowable speed in each range:

4.0 L V6 (1GR–FE) engine

range	km/h	(mph)
1	59	(36)
2	102	(63)
3	148	(91)

4.7 L V8 (2UZ–FE) engine
without towing package

range	km/h	(mph)
1	61	(37)
2	105	(65)
3	154	(95)

with towing package

range	km/h	(mph)
1	58	(36)
2	100	(62)
3	147	(91)

Four–wheel drive models without towing package

—Front drive control switch knob at “4L”

range	km/h	(mph)
1	23	(14)
2	40	(24)
3	58	(36)
4	68	(42)
5	68	(42)

Four–wheel drive models with towing package

—Front drive control switch knob at “4L”

range	km/h	(mph)
1	22	(13)
2	38	(23)
3	56	(34)
4	64	(39)
5	64	(39)

NOTICE

Do not downshift if you are going faster than the maximum allowable speed for the next lower range.

When the “S” mode indicator light does not come on even with the selector lever moved to the “S” position, there may be a problem somewhere in the system. Have your vehicle checked/repaired by your Toyota dealer as soon as possible. In this case, you can drive in the same condition as in the “D” position.

(d) Using engine braking

To use engine braking, you can downshift the transmission as follows:

- When driving in the “D” position—
  Shift the selector lever to “S” position.

  When driving in the “5” range within the “S” position—
  Turn the “S” mode switch of the selector lever to the “–” side to select the “4” range. The transmission will downshift to fourth range when the vehicle speed drops down to or lower than the following speed, and engine braking will be enabled.

  4.7 L V8 (2UZ–FE) engine

  Four–wheel drive models without towing package

  —Front drive control switch knob at “4L”
  . . . . . 75 km/h (46 mph)

  Four–wheel drive models with towing package

  —Front drive control switch knob at “4L”
  . . . . . 72 km/h (44 mph)

  When the cruise control is being used, engine braking can not be enabled because the cruise control is not cancelled. However, engine braking will be automatically enabled if the vehicle speed is higher than the set speed of the cruise control depending on the driving conditions.

  For decreasing the vehicle speed, see “Cruise control” on page 259 in this Section.

- Turn the “S” mode switch of the selector lever to the “–” side to select the “3” range. The transmission will downshift to third range when the vehicle speed drops down to or lower than the following speed, and stronger engine braking will be enabled.

  4.0 L V6 (1GR–FE) engine
  . . . . . 136 km/h (84 mph)

  4.7 L V8 (2UZ–FE) engine
  Two–wheel drive models

  —without towing package
  . . . . . 138 km/h (85 mph)

  —with towing package
  . . . . . 132 km/h (82 mph)

  Four–wheel drive models without towing package

  —Front drive control switch knob at “2WD” or “4H”
  . . . . . 138 km/h (85 mph)

  —Front drive control switch knob at “4L”
  . . . . . 52 km/h (32 mph)

Four–wheel drive models with towing package

—Front drive control switch knob at “2WD” or “4H”
. . . . . 132 km/h (82 mph)

—Front drive control switch knob at “4L”
. . . . . 50 km/h (31 mph)

- Turn the “S” mode switch of the selector lever to the “–” side to select the “2” range. The transmission will downshift to second range when the vehicle speed drops down to or lower than the following speed, and more powerful engine braking than that of the “3” range position will be enabled.

4.0 L V6 (1GR–FE) engine
. . . . . 92 km/h (57 mph)

4.7 L V8 (2UZ–FE) engine
Two–wheel drive models

—without towing package
. . . . . 93 km/h (57 mph)

—with towing package
. . . . . 89 km/h (55 mph)

Four–wheel drive models without towing package

—Front drive control switch knob at “2WD” or “4H”
. . . . . 93 km/h (57 mph)

—Front drive control switch knob at “4L”
. . . . . 35 km/h (21 mph)

Four–wheel drive models with towing package

—Front drive control switch knob at “2WD” or “4H”
. . . . . 89 km/h (55 mph)

—Front drive control switch knob at “4L”
. . . . . 33 km/h (20 mph)

- Turn the “S” mode switch of the selector lever to the “–” side to select the “1” range. The transmission will downshift to first range when the vehicle speed drops down to or lower than the following speed, and maximum engine braking will be enabled.

4.0 L V6 (1GR–FE) engine
. . . . . 39 km/h (24 mph)

4.7 L V8 (2UZ–FE) engine
Two–wheel drive models

—without towing package
. . . . . 40 km/h (24 mph)

—with towing package
. . . . . 38 km/h (23 mph)

Four–wheel drive models without towing package

—Front drive control switch knob at “2WD” or “4H”
. . . . . 40 km/h (24 mph)

—Front drive control switch knob at “4L”
. . . . . 15 km/h (9 mph)

Four–wheel drive models with towing package

—Front drive control switch knob at “2WD” or “4H”
. . . . . 38 km/h (23 mph)

—Front drive control switch knob at “4L”
. . . . . 14 km/h (8 mph)

⚠ CAUTION

Be careful when downshifting on a slippery surface. The abrupt change in engine speed could cause the vehicle to skid or spin.

(e) Backing up

1. Bring the vehicle to a complete stop.
2. With the brake pedal held down with your foot, shift the selector lever to the "R" position.

NOTICE

Never shift into reverse while the vehicle is moving.

(f) Parking

1. Bring the vehicle to a complete stop.
2. With the brake pedal pressed down, fully depress the parking brake pedal to apply the parking brake securely.
3. With the brake pedal pressed down, shift the selector lever to the "P" position.

⚠ CAUTION

Never attempt to move the selector lever into "P" position under any circumstances while the vehicle is moving. Serious mechanical damage and loss of vehicle control may result.

(g) Good driving practice

- If the transmission repeatedly shifts up and down between third gear and overdrive when climbing a gentle slope, shift the selector lever into "S" position.
- When towing a trailer, in order to maintain engine braking efficiency, do not use the transmission in "D". Select an appropriate shift range in "S" mode.

⚠ CAUTION

Always keep your foot on the brake pedal while stopped with the engine running. This prevents the vehicle from creeping.

NOTICE

Always use the brake pedal or the parking brake to hold the vehicle on an upgrade. Do not attempt to hold the vehicle using the accelerator pedal, as this can cause the transmission to overheat.

(h) If you cannot shift the selector lever out of "P" position

If you cannot shift the selector lever from the "P" position even though the brake pedal is depressed, use the shift lock override button. For instructions, see "If you cannot shift automatic transmission selector lever" on page 516 in Section 4.

▶6 speed models

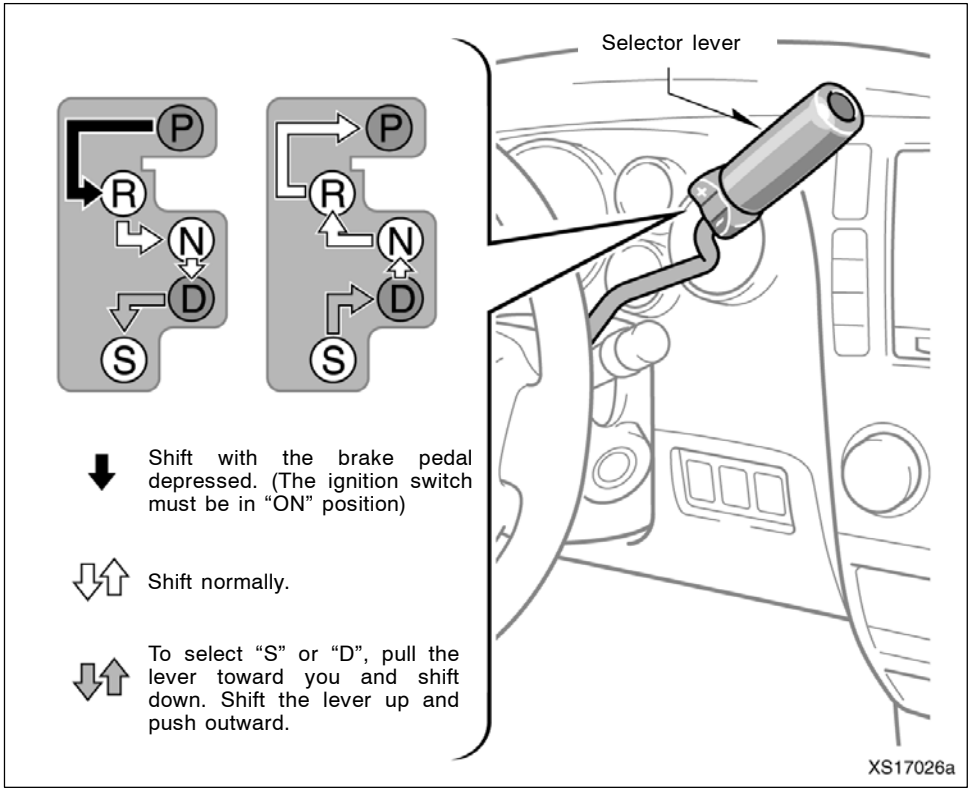

Your automatic transmission has a shift lock system to minimize the possibility of incorrect operation. This means you can only shift out of “P” position when the brake pedal is depressed (with the ignition switch in “ON” position).

(a) Selector lever

The shift position is also displayed on the instrument cluster.

P: Parking, engine starting and key removal

R: Reverse

N: Neutral

D: Normal driving

S: “S” mode driving
+: Upshift range
–: Downshift range

(b) Normal driving

1. Start the engine as instructed in “How to start the engine” on page 468 in Section 3. The transmission must be in “P” or “N”.

When the front drive control switch knob is in “4L” (low–speed position, four–wheel drive), the driving pattern selector setting has no effect on gear shift timing. (See “Four–wheel drive system” on page 239 in this Section for information of the front drive control lever.)

2. With your foot holding down the brake pedal, shift the selector lever to “D”.

When the lever is in the “D” position, the automatic transmission system will select the most suitable gear for running conditions such as normal cruising, hill climbing, hard towing, etc.

Always use the “D” position for better fuel economy and quieter driving. If the engine coolant temperature is low or when the front drive control switch knob is in “4L” (low–speed position, four–wheel drive), the transmission will not shift into the overdrive gear even in the “D” position. (See “Four–wheel drive system” on page 239 in this Section for information of the front drive control.)

⚠ CAUTION

Never put your foot on the accelerator pedal while shifting.

3. Release the parking brake and brake pedal. Depress the accelerator pedal slowly for smooth starting.

AI (Artificial Intelligence) shifting control—

AI shifting control selects the most suitable shift range automatically according to the driver’s operation and driving condition.

AI shifting control operates automatically with the selector lever in the “D” position. When the lever is moved to the “S” position, this function will be cancelled.

- **Shifting control on the slope:**
  On inclines, you can drive smoothly with reduced shifting quantity. On declines, the vehicle will shift down automatically to obtain optimum engine braking and reduce the driver’s foot braking load.
- **Automatic shifting point change control:**
  The most suitable shift range is selected depending on the driver’s accelerator pedal operation and vehicle condition.

(c) Driving in “S” mode

The shift range position can be changed in “S” mode. When the selector lever is in the “S” position, the shift range position can be switched between “6” (sixth range) and “1” (first range) by turning the “S” mode switch of the selector lever to the “+” (up) or “–” (down) direction. By turning the “S” mode switch to the “+” (up) direction and holding it for at least 1 second, the highest shift range position can be obtained. However, it cannot be changed while cruise control is activated. When the selector lever is shifted to the “S” position, shift range position “4” (fourth range) or “5” (fifth range) is selected depending on the vehicle speed.

However, if the selector lever is shifted to the "S" position when AI shifting control is being performed, the initial shift range position may be "2" (second range) or "3" (third range). This is because the suitable shift range is selected depending on the driving condition.

The "S" mode indicator light and the current shift range position are shown on the instrument cluster.

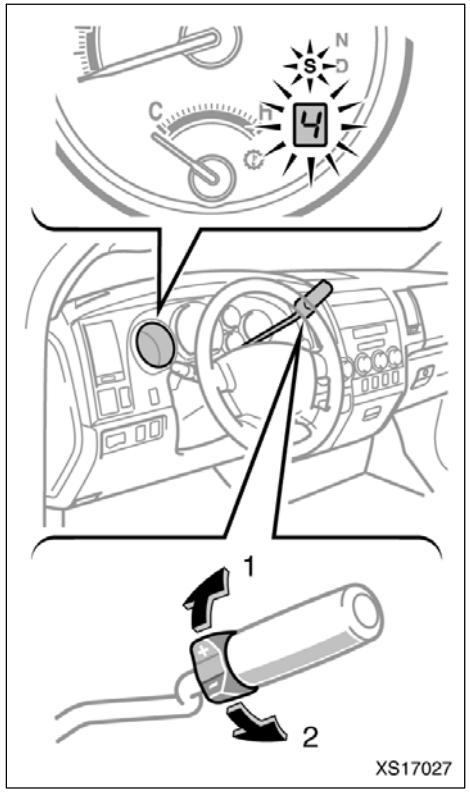

1: Upshift range
2: Downshift range

Shift range positions

- **"6" (Sixth range):**
  The most suitable gear is selected automatically between first and overdrive (sixth) gears according to the vehicle speed and driving conditions.
- **"5" (Fifth range):**
  The most suitable gear is selected automatically between first and fifth gears according to vehicle speed and driving conditions. This range is suitable for acceleration such as when you want to pass a vehicle running ahead of you during high speed driving.
- **"4" (Fourth range):**
  The most suitable gear is selected automatically between first and fourth gears according to the vehicle speed and driving conditions. Slight engine braking will be obtained on a downhill road. Smooth running with less shifting will be obtained on an uphill road.
- **"3" (Third range):**
  The most suitable gear is selected automatically between first and third gears according to the vehicle speed and driving conditions. This range is to be used when stronger engine braking is necessary.

- **“2” (Second range):**
  First or second gear will be selected automatically according to the vehicle speed and driving conditions. This range is to be used when engine braking stronger than that of the “3” range position is necessary.
- **“1” (First range):**
  The gear is fixed in first regardless of vehicle speed and driving conditions. This range is to be used when maximum engine braking is necessary.

If you attempt to downshift the transmission when it is not possible to downshift due to high vehicle speed, a warning tone sounds twice.

Maximum allowable speeds

To get on a highway or to pass slower traffic, maximum acceleration may be necessary. Make sure you observe the following maximum allowable speeds in each range:

5.7 L V8 (3UR–FE) engine

Two–wheel drive models without towing package

range	km/h	(mph)
1	62	(38)
2	106	(65)
3	154	(95)

Two–wheel drive models with towing package

range	km/h	(mph)
1	59	(36)
2	101	(62)
3	147	(91)

Four–wheel drive models without towing package

—Front drive control switch knob at “4L”

range	km/h	(mph)
1	23	(14)
2	40	(24)
3	58	(36)
4	68	(42)
5	68	(42)
6	68	(42)

Four–wheel drive models with towing package

—Front drive control switch knob at “4L”

range	km/h	(mph)
1	22	(13)
2	38	(23)
3	56	(34)
4	64	(39)
5	64	(39)
6	64	(39)

NOTICE

Do not downshift if you are going faster than the maximum allowable speed for the next lower range.

When the “S” mode indicator light does not come on even with the selector lever moved to the “S” position, there may be a problem somewhere in the system. Have your vehicle checked/repaired by your Toyota dealer as soon as possible. In this case, you can drive in the same condition as in the “D” position.

(d) Using engine braking

To use engine braking, you can downshift the transmission as follows:

- When driving in the “D” position—
  Shift the selector lever to the “S” position.

  When driving in the “6” range within the “S” position—
  Turn the “S” mode switch of the selector to the “–” side to select the “5” range. The transmission will downshift to fifth range when the vehicle speed drops down to or lower than the following speed, and engine braking will be enabled.

  5.7 L V8 (3UR–FE) engine

  Four–wheel drive models

  —Front drive control switch knob at “4L”
  . . . . . 79 km/h (49 mph)

  When the cruise control is being used, even if you downshift the transmission, engine braking will not be enabled because the cruise control is not cancelled. However, engine braking will be automatically enabled if the vehicle speed is higher than the set speed of the cruise control depending on the driving conditions.

  For ways to decrease the vehicle speed, see “Cruise control” on page 259 in this Section.

- Turn the “S” mode switch of the selector to the “–” side to select the “4” range. The transmission will downshift to fourth range when the vehicle speed drops down to or lower than the following speed, and stronger engine braking will be enabled.

  5.7 L V8 (3UR–FE) engine

  Four–wheel drive models

  —Front drive control switch knob at “4L”
  . . . . . 79 km/h (49 mph)

  When the cruise control is being used, even if you downshift the transmission, engine braking will not be enabled because the cruise control is not cancelled. However, engine braking will be automatically enabled if the vehicle speed is higher than the set speed of the cruise control depending on the driving conditions.

- Turn the “S” mode switch of the selector to the “–” side to select the “3” range. The transmission will downshift to third range when the vehicle speed drops down to or lower than the following speed, and more powerful engine braking than that of the “4” range position will be enabled.

5.7 L V8 (3UR–FE) engine
Two–wheel drive models
—without towing package
. . . . . 138 km/h (85 mph)
—with towing package
. . . . . 131 km/h (81 mph)
Four–wheel drive models without towing package
—Front drive control switch knob at “2WD” or “4H”
. . . . . 138 km/h (85 mph)
—Front drive control switch knob at “4L”
. . . . . 55 km/h (34 mph)
Four–wheel drive models with towing package
—Front drive control switch knob at “2WD” or “4H”
. . . . . 131 km/h (81 mph)
—Front drive control switch knob at “4L”
. . . . . 52 km/h (32 mph)

- Turn the “S” mode switch of the selector to the “–” side to select the “2” range. The transmission will downshift to second range when the vehicle speed drops down to or lower than the following speed, and more powerful engine braking will be enabled.

5.7 L V8 (3UR–FE) engine
Two–wheel drive models
—without towing package
. . . . . 94 km/h (58 mph)
—with towing package
. . . . . 90 km/h (55 mph)
Four–wheel drive models without towing package
—Front drive control switch knob at “2WD” or “4H”
. . . . . 94 km/h (58 mph)
—Front drive control switch knob at “4L”
. . . . . 37 km/h (22 mph)
Four–wheel drive models with towing package
—Front drive control switch knob at “2WD” or “4H”
. . . . . 90 km/h (55 mph)
—Front drive control switch knob at “4L”
. . . . . 36 km/h (22 mph)

- Turn the “S” mode switch of the selector to the “–” side to select the “1” range. The downshift to first range when the vehicle speed drops down to or lower than the following speed, and maximum engine braking will be enabled.

5.7 L V8 (3UR–FE) engine
Two–wheel drive models
—without towing package
. . . . . 41 km/h (25 mph)
—with towing package
. . . . . 39 km/h (24 mph)
Four–wheel drive models without towing package
—Front drive control switch knob at “2WD” or “4H”
. . . . . 41 km/h (25 mph)
—Front drive control switch knob at “4L”
. . . . . 15 km/h (9 mph)
Four–wheel drive models with towing package
—Front drive control switch knob at “2WD” or “4H”
. . . . . 39 km/h (24 mph)
—Front drive control switch knob at “4L”
. . . . . 14 km/h (8 mph)

⚠ CAUTION

Be careful when downshifting on a slippery surface. The abrupt change in engine speed could cause the vehicle to skid or spin.

(e) Backing up

1. Bring the vehicle to a complete stop.
2. With the brake pedal held down with your foot, shift the selector lever to the "R" position.

NOTICE

Never shift into reverse while the vehicle is moving.

(f) Parking

1. Bring the vehicle to a complete stop.
2. With the brake pedal pressed down, fully depress the parking brake pedal to apply the parking brake securely.
3. With the brake pedal pressed down, shift the selector lever to the "P" position.

⚠ CAUTION

Never attempt to move the selector lever into "P" position under any circumstances while the vehicle is moving. Serious mechanical damage and loss of vehicle control may result.

(g) Good driving practice

- If the transmission repeatedly shifts up and down between fourth gear and overdrive when climbing a gentle slope, shift the selector lever into "S" position.
- When towing a trailer, in order to maintain engine braking efficiency, do not use the transmission in "D". Select an appropriate shift range in "S" mode.

⚠ CAUTION

Always keep your foot on the brake pedal while stopped with the engine running. This prevents the vehicle from creeping.

NOTICE

Always use the brake pedal or the parking brake to hold the vehicle on an upgrade. Do not attempt to hold the vehicle using the accelerator pedal, as this can cause the transmission to overheat.

(h) If you cannot shift the selector lever out of "P" position

If you cannot shift the selector lever from the "P" position even though the brake pedal is depressed, use the shift lock override button. For instructions, see "If you cannot shift automatic transmission selector lever" on page 516 in Section 4.

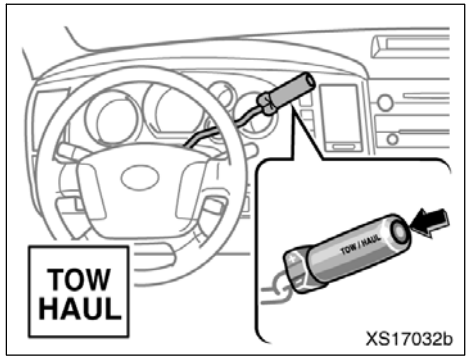

(i) "TOW/HAUL" switch (on some models)

Use "TOW/HAUL" mode when pulling a trailer or hauling a heavy load. In this mode, the driving and engine braking performance is improved in accordance with towing conditions or increased load.

To turn on: Push "TOW/HAUL" switch

"TOW/HAUL" mode is activated and "TOW/HAUL" mode indicator light comes on by pressing "TOW/HAUL" switch.

To turn off: Push "TOW/HAUL" switch once again and the "TOW/HAUL" mode indicator light goes off.

"TOW/HAUL" mode is canceled by pressing "TOW/HAUL" switch again or by turning the ignition switch to "OFF".

Even when "TOW/HAUL" mode is used during normal driving, no damage is caused to the engine or the transmission. However, fuel economy is reduced and the transmission and/or engine driving characteristics may feel unusual.

Toyota recommends using "TOW/HAUL" mode only when a heavy trailer or a large heavy load is towed.

Four–wheel drive system
(a) Front drive control

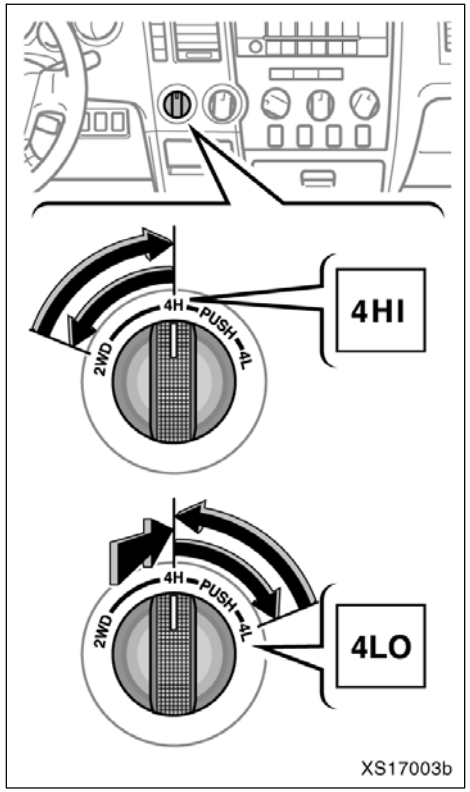

Use the front drive control switch knob to select the following transfer modes.

"2WD" (high speed position, two–wheel drive): Front drive control switch knob at "2WD"

Use this for normal driving on dry hard–surfaced roads. This position gives greater economy, quietest ride, least wear and better vehicle control.

"4H" (high speed position, four–wheel drive): Front drive control switch knob at "4H"

The "4HI" (high speed four–wheel drive) indicator light comes on when the "4H" mode is selected.

Use this for greater traction than two–wheel drive. (When you experience a loss of power, such as wheel spinning.) This position provides greater traction than two–wheel drive.

In this mode, the vehicle stability control system is off. (See "Vehicle stability control system" on page 248 in this Section.)

"4L" (low speed position, four–wheel drive): Front drive control switch knob at "4L"

The "4LO" (low speed four–wheel drive) indicator light comes on when the "4L" mode is selected.

Use this for maximum power and traction. Use "4L" position for climbing or descending steep hills, off–road driving, and hard pulling in sand, mud or deep snow.

See "(c) Shifting procedure" for further instructions.

In this mode, the vehicle stability control system is off. (See "Vehicle stability control system" on page 248 in this Section.)

(b) A.D.D. (automatic disconnecting differential)

The A.D.D. can be engaged or disengaged by the shifting operations described in "(c) Shifting procedure".

You should drive in four–wheel drive for at least 16 km (10 miles) each month. This will assure that the front drive components are lubricated.

(c) Shifting procedure

SHIFTING BETWEEN "2WD" AND "4H"

To shift from "2WD" to "4H", reduce the vehicle speed to less than 100 km/h (62 mph) and turn the front drive control switch knob fully clockwise.

When the ambient temperature is –15°C (5.0°F) or lower, shifting can be performed with the vehicle speed below 70 km/h (43 mph).

If the "4HI" (high speed four–wheel drive) indicator light continues to blink when you operate the front drive control switch knob from the "2WD" to the "4H" position, this reminds you that the transfer mode is not securely in "4H" mode. Drive straight ahead while accelerating or decelerating.

If the "4HI" (high speed four–wheel drive) indicator light continues to blink and the buzzer sounds when you operate the front drive control switch knob from the "2WD" to the "4H" position, this reminds you that the transfer mode is not in "4H" mode. Stop the vehicle or reduce the vehicle speed to less than 100 km/h (62 mph). (When the ambient temperature is –15°C (5.0°F) or lower, it needs to be reduced to below 70 km/h (43 mph).) Operate the switch knob again.

⚠ CAUTION

Never operate the front drive control switch knob if the wheels are slipping. Stop the slipping or spinning before operating.

To shift from "4H" to "2WD", reduce the vehicle speed to less than 100 km/h (62 mph) and turn the front drive control switch knob fully counterclockwise.

When you operate the front drive control switch knob from "4H" to "2WD" with the vehicle speed at 100 km/h (62 mph) or higher, the "4HI" indicator light continues to blink and buzzer sounds. When the switch knob is returned from "2WD" to "4H", the indicator light turns off and the buzzer stops sounding.

If the "4HI" (high speed four–wheel drive) indicator light continues to blink when you operate the front drive control switch knob from the "4H" to the "2WD" position, this reminds you that the transfer mode is not securely in "2WD" mode. Drive straight ahead while accelerating or decelerating, or drive forward or backward in a short distance.

If there is any malfunction within the brake system, “4HI” or “4LO” indicator light blinks and the transfer mode may not be able to be shifted from “4H” to “2WD”.

If the indicator light continues to blink even if doing so, contact your Toyota dealer as soon as possible. There may be a trouble in the four–wheel drive system.

⚠ CAUTION

Never operate the front drive control switch knob if the wheels are slipping. Stop the slipping or spinning before operating.

SHIFTING BETWEEN “4H” AND “4L”

To shift between “4H” and “4L”

1. Bring the vehicle to a complete stop with the brake pedal held down.
2. Shift the automatic transmission selector lever into “N”.
3. To shift from “4H” to “4L”, push and turn the front drive control switch knob fully clockwise.
   To shift from “4L” to “4H”, turn the front drive control switch knob counterclockwise.
4. Maintain this condition until the “4LO” or “4HI” indicator light comes on.

If the “4LO” indicator light continues to blink...

If this indicator light continues to blink when you operate the front drive control switch knob to the “4H” or “4L” position, stop the vehicle completely, shift the automatic transmission selector lever securely into “N” and operate the switch knob again.

INFORMATION

- ***If the engine coolant temperature is too low the transfer mode may not be able to be shifted. When the engine is warmer operate the switch knob again.***
- ***If the automatic transmission selector lever is moved before the indicator comes on, the transfer mode may not be shifted completely. In this case, stop the vehicle completely, return the automatic transmission selector lever to “N” and operate the switch knob again.***

If there is any malfunction in the brake system or the engine, “4HI” or “4LO” indicator light blinks and the transfer mode may not be able to be shifted from “4H” to “4L”.

If the indicator continues to blink even if doing so, contact your Toyota dealer as soon as possible. There may be a trouble in the four–wheel drive system.

Traction control system

The traction control system automatically helps prevent the spinning of rear wheels (two–wheel drive models) or 4 wheels (four–wheel drive models) when the vehicle is started or accelerated on slippery road surfaces.

When the ignition switch is turned to the "ON" position, the system automatically turns on.

⚠ CAUTION

Under certain slippery road conditions, full traction of the vehicle and power to the rear wheels (two–wheel drive models) or 4 wheels (four–wheel drive models) cannot be maintained, even though the traction control system is in operation. Do not drive the vehicle under any speed or maneuvering conditions which may cause the vehicle to lose traction control. In situations where the road surface is covered with ice or snow, your vehicle should be fitted with snow tires or tire chains. Always drive at an appropriate and cautious speed for the present road conditions.

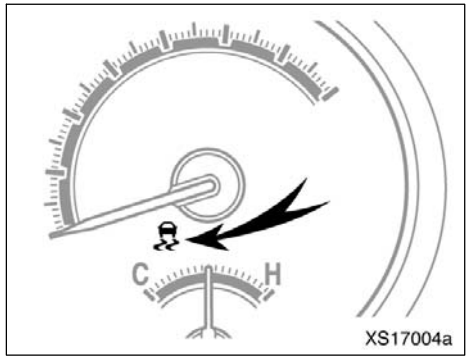

Type A

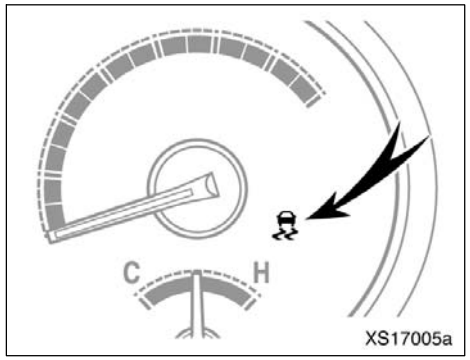

Type B

NORMAL DRIVING MODE

Leave the system on during the ordinary driving so that it can operate when needed.

You may hear a sound in the engine compartment for a few seconds when the engine is started or just after the vehicle begins to move. This means that the traction control system is in the self–check mode, but does not indicate a malfunction.

When the traction control system is operating, the following conditions occur:

- The system controls the spinning of the rear wheels (two–wheel drive models) or 4 wheels (four–wheel drive models). At this time, the slip indicator light blinks.
- You may feel vibration or noise in your vehicle, caused by operation of the brakes. This indicates the system is functioning properly.

The slip indicator light comes on for a few seconds when the ignition switch is turned to the "ON" position. If the indicator light does not come on when the ignition is turned on, contact your Toyota dealer.

The brake actuator temperature increases during continuous operation of the following systems under conditions such as on slippery roads.

- Traction control system
- “AUTO LSD” system

If the brake actuator temperature becomes too high while any of the systems is operating, a buzzer will start to sound intermittently to indicate that the traction control system can no longer operate. In this case, immediately stop your vehicle at a safe place.

If the system continues to operate, the buzzer sound changes from intermittent to continuous. (The continuous buzzer sounds for about 3 seconds.)

At the time, the slip indicator light will come on and the traction control system temporarily stops operating in order to protect the brake actuator. (Although the traction control system does not operate, it is no problem to continue driving.) The system will be automatically restored after a short time and the slip indicator light goes off.

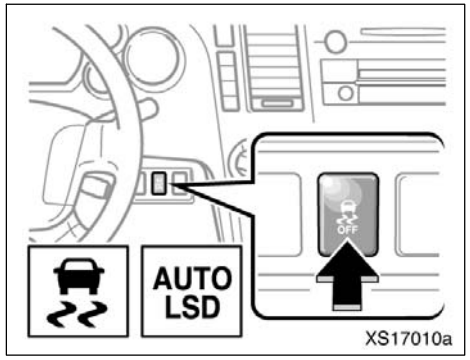

TRACTION CONTROL OFF MODE (two–wheel drive mode only)

When getting the vehicle out of mud or newly fallen snow, etc., it may be beneficial to turn off the traction control system. This system that controls engine performance interferes with the process of freeing rear wheels.

To turn off: Briefly push the “VSC OFF” switch.

The “AUTO LSD” and slip indicator lights will come on.

The vehicle stability control system is always activated, even if the traction control system is turned off.

To turn on: Briefly push the “VSC OFF” switch once again.

The “AUTO LSD” and slip indicator lights will go off.

If the engine is turned off while the “AUTO LSD” and slip indicator lights are on and then restarted, the indicator lights will turn off automatically.

When you push and hold the “VSC OFF” switch for 3 seconds or more with the vehicle stopped, turn off the vehicle stability control system. See “Vehicle stability control system” on page 248 in this Section.

“AUTO LSD” and slip indicator lights come on for a few seconds when the ignition switch is turned to the “ON” position. If the indicator lights do not come on when the ignition switch is turned to the “ON” position, contact your Toyota dealer.

⚠ CAUTION

Do not drive with the traction control system continuously turned off.

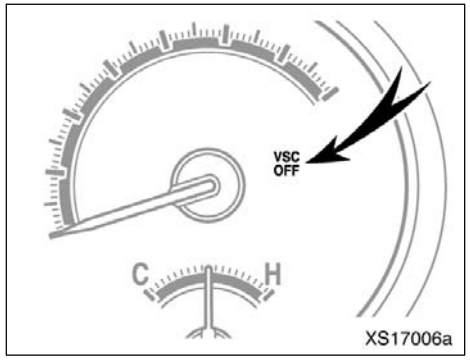

Type A

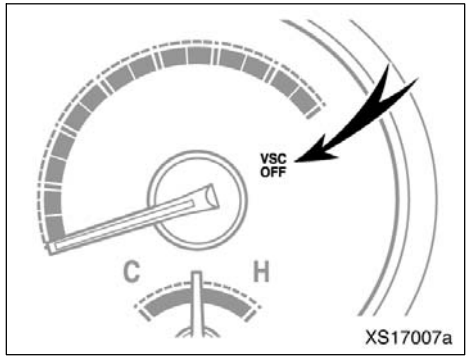

Type B

“VSC OFF” warning light

The light flashing warns that there is a problem somewhere in the following.

- Traction control system
- Vehicle stability control system
- “AUTO LSD” system

When the system is normal and the ignition switch is turned to the “ON” position, the light will come on and will go off after a few seconds.

If the “VSC OFF” warning light flashes while driving, the traction control system does not work. However, if the brakes operate normally when applied, it is no problem to continue your driving.

In the following cases, contact your Toyota dealer:

- The warning light does not come on after the ignition switch is turned to the “ON” position.
- The warning light remains on after the ignition switch is turned to the “ON” position.
- The warning light flashes while driving

“AUTO LSD” system

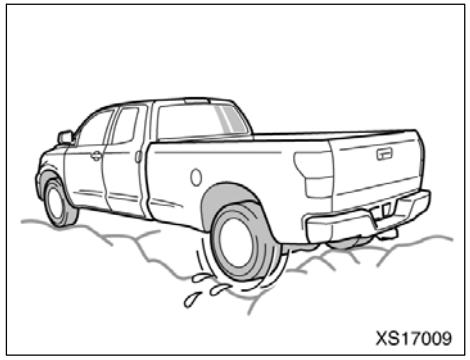

The “AUTO LSD” system aids traction by using the traction control system to control engine performance and braking when one of the rear wheels begins to spin.

This system should be used only when wheel spinning occurs in a ditch or rough surface.

This system is effective in case one of the rear wheels is spinning.

⚠ CAUTION

Do not use the "AUTO LSD" system in conditions other than the above. A much greater steering effort and more careful cornering control will be required.

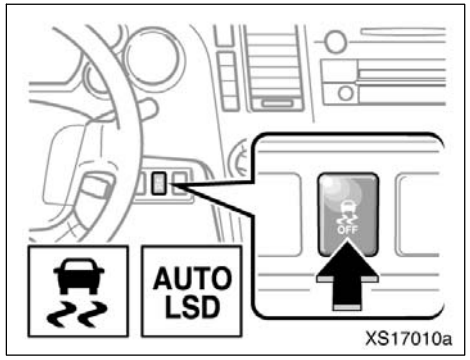

To turn on the system, briefly push the "VSC OFF" switch.

The "AUTO LSD" is activated under the following condition. At this time, the "AUTO LSD" and slip indicator lights will come on.

- The driving mode is set in the two–wheel drive mode (In the four–wheel drive mode, the system does not work.)
- Driving at a speed under 100 km/h (62 mph)

To turn off the system, briefly push the "VSC OFF" switch again and the "AUTO LSD" and slip indicator lights will go off.

If the engine is turned off while the "AUTO LSD" and slip indicator lights are on and then restarted, the indicator light will turn off automatically.

When you push and hold the "VSC OFF" switch for 3 seconds or more with the vehicle stopped, turn off the vehicle stability control system. See "Vehicle stability control system" on page 248 in this Section.

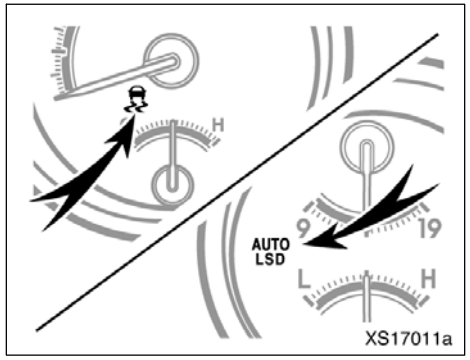

Type A

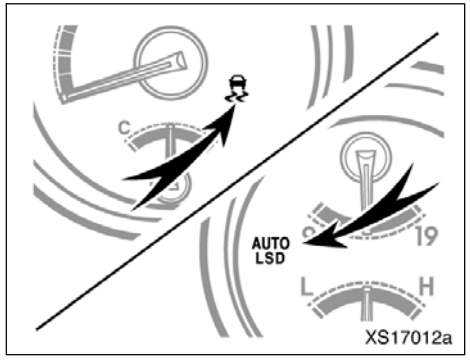

Type B

Make sure the “AUTO LSD” and slip indicator lights come on under the above condition when you use the “AUTO LSD” system.

The slip indicator light blinks when the system is controlling the spinning of the rear wheels.

The “AUTO LSD” and slip indicator lights come on for a few seconds when the ignition switch is turned to the “ON” position. If the indicator lights does not come on when the ignition switch is turned to the “ON” position, contact your Toyota dealer.

The brake actuator temperature increases during continuous operation of the following systems under conditions such as on slippery roads.

- “AUTO LSD” system
- Traction control system

If the brake actuator temperature becomes too high while any of the systems is operating, a buzzer will start to sound intermittently to indicate that the “AUTO LSD” system can no longer operate. In this case, immediately stop your vehicle at a safe place.

If the system continues to operate, the buzzer sound changes from intermittent to continuous. (The continuous buzzer sounds for about 3 seconds.)

At the time the slip indicator light will come on and the “AUTO LSD” system temporarily stops operating in order to protect the brake actuator. (Although the “AUTO LSD” system does not operate, it is no problem to continue driving.) The system will be automatically restored after a short time.

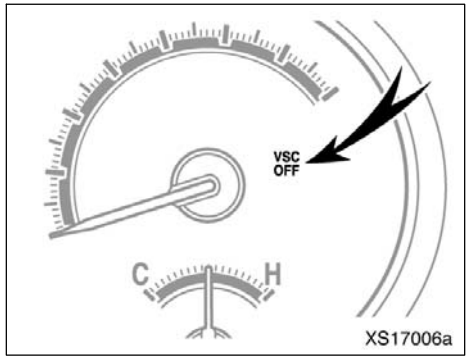

Type A

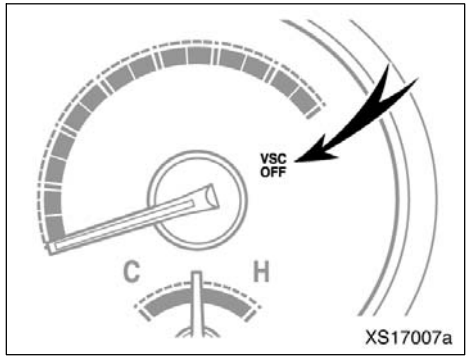

Type B

"VSC OFF" warning light

The light flashing warns that there is a problem somewhere in the following.

- "AUTO LSD" system
- Traction control system
- Vehicle stability control system

When the system is normal and the ignition switch is turned to the "ON" position, the light will come on and will go off after a few seconds.

If the "VSC OFF" warning light flashes while driving, the "AUTO LSD" system does not work. However, as the brakes operate normally when applied, it is no problem to continue your driving.

In the following cases, contact your Toyota dealer:

- The warning light does not come on after the ignition switch is turned to the "ON" position.
- The warning light remains on after the ignition switch is turned to the "ON" position.
- The warning light flashes while driving.

⚠ CAUTION

Do not drive with the "AUTO LSD" system continuously turned on.

Vehicle stability control system

The vehicle stability control system helps provide integrated control of the systems such as anti–lock brake system, traction control, engine control, etc. This system automatically controls the output of the brakes or engine to help prevent the vehicle from skidding when cornering on a slippery road surface or operating steering wheel abruptly.

The vehicle stability control system is activated when the vehicle speed is more than 15 km/h (9 mph).

You may hear a sound in the engine compartment for a few seconds when the engine is started or just after the vehicle begins to move. This means that the system is in the self–check mode, but does not indicate a malfunction.

⚠ CAUTION

- **Do not rely excessively on the vehicle stability control system. Even if the vehicle stability control system is operating, you must always drive carefully and attentively to avoid serious injury. Reckless driving will result in an unexpected accident. If the slip indicator light blinks and an alarm sounds, special care should be taken while driving.**
- **Only use tires of specified size. The size, manufacturer, brand and tread pattern for all 4 tires should be the same. If you use the tires other than specified, or different type or size, the vehicle stability control system may not function correctly. When replacing the tires or wheels, contact your Toyota dealer. (See "Checking and replacing tires" on page 551 in Section 7–2.)**

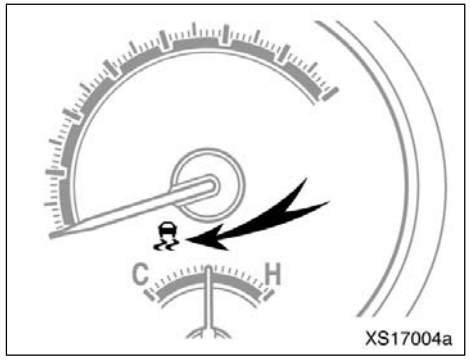

Type A

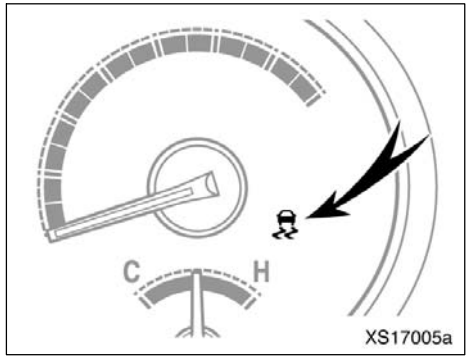

Type B

If the vehicle is going to skid during driving, the slip indicator light blinks and an alarm sounds intermittently. Special care should be taken while driving.

The slip indicator light comes on for a few seconds when the ignition switch is turned to the “ON” position. If the indicator light does not come on when the ignition is turned on, contact your Toyota dealer.

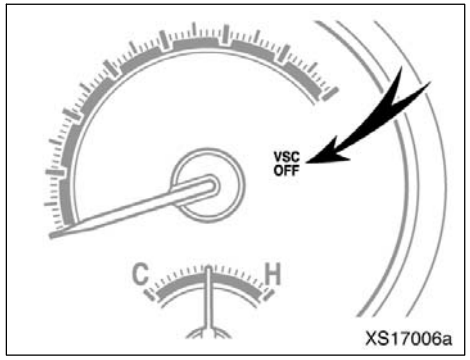

Type A

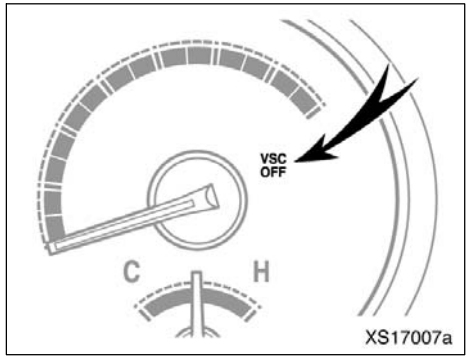

Type B

The vehicle stability control system automatically turns off, and the “VSC OFF” indicator light is illuminated, when the four–wheel drive mode is set.

The “VSC OFF” indicator light comes on for a few seconds when the ignition switch is turned to the “ON” position, and then turns off. If either one of the above conditions applies, the indicator light is illuminated again.

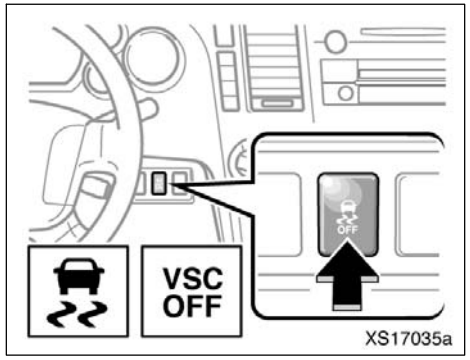

When getting the vehicle out of mud or newly fallen snow, etc., it may be beneficial to turn off the vehicle stability control system. This system that controls engine performance interferes with the process of freeing rear wheels (two–wheel drive models) or 4 wheels (four–wheel drive models).

To turn off: First, push the "VSC OFF" switch to turn off the traction control system and check that the "AUTO LSD" and slip indicator lights come on. Then, push and hold the "VSC OFF" switch for 3 seconds or more with the vehicle stopped.

The "VSC OFF" and slip indicator lights will come on.

To turn on: Briefly push the "VSC OFF" switch once again.

The "VSC OFF" and slip indicator lights will go off.

If the engine is turned off while the "VSC OFF" and slip indicator lights are on and then restarted, the indicator lights will turn off automatically.

When you briefly push the "VSC OFF" switch, turn off the vehicle stability control system. See "Traction control system" on page 242 in this Section.

The "VSC OFF" and slip indicator lights come on for a few seconds when the ignition switch is turned to the "ON" position. If the indicator lights do not come on when the ignition switch is turned to the "ON" position, contact your Toyota dealer.

⚠ CAUTION

Do not drive with the vehicle stability control system continuously turned off.

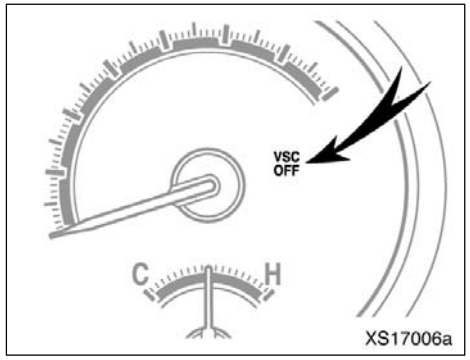

Type A

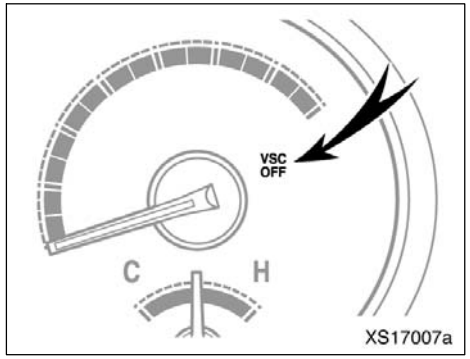

Type B

“VSC OFF” warning light

The light flashing warns that there is a problem somewhere in the following.

- Vehicle stability control system
- Traction control system
- “AUTO LSD” system

The light comes on when the ignition switch is turned to the “ON” position, and will go off after a few seconds.

If the light flashes while driving, the vehicle stability control system does not work. However, if the brakes operate normally when applied, it is no problem to continue your driving.

In the following cases, contact your Toyota dealer:

- The warning light does not come on after the ignition switch is turned to the “ON” position.
- The warning light remains on after the ignition switch is turned to the “ON” position.
- The warning light flashes while driving.

Tire pressure warning system

The tire pressure warning system warns you that the tire inflation pressure is low.

The tire pressure warning system is not a substitute for checking normal tire inflation pressure. Check the tire inflation pressure with a tire pressure gauge regularly.

⚠ CAUTION

The warning system may not activate immediately if blowout or sudden air loss should occur.

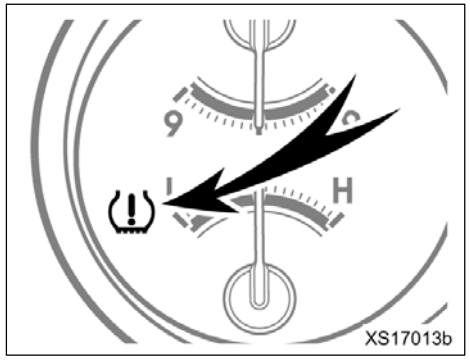

Type A

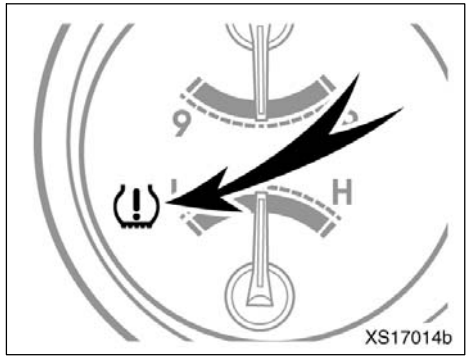

Type B

The tire pressure warning light comes on when the ignition switch is turned to the "ON" position and goes off after a few seconds. This means the tire pressure warning system is operating properly. If the tire inflation pressure becomes low, the light comes on again. In this case, adjusting the tire inflation pressure will turn off the light after 3 to 6 minutes. If the light comes on after blinking for 1 minute, the tire pressure warning system is not working properly.

Indicator status	Meanings	Do this
ON	Tire inflation pressure is low	Adjust the tire inflation pressure
ON after blinking for 1 minute	Tire pressure warning system malfunction	Have the system checked at your Toyota dealer

⚠ CAUTION

If the tire pressure warning light comes on, be sure to observe the following precautions. Failure to do so could cause loss of vehicle control and result in death or serious injury.

- **Stop your vehicle in a safe place as soon as possible. Adjust the tire inflation pressure immediately.**
- **If the tire pressure warning light comes on even after tire inflation pressure adjustment, it is probable that you have a flat tire. Check the tires. If the tire is flat, change to the temporary spare tire and have the flat tire repaired by the nearest Toyota dealer.**
- **Avoid abrupt maneuvering and braking. If the vehicle tires deteriorate, you could lose control of the steering wheel or the brakes.**

The tire pressure warning light may turn on due to natural causes such as natural air leaks or tire inflation pressure changes caused by temperature. In this case, adjusting the tire inflation pressure will turn off the light after 3 to 6 minutes.

Pushing the tire pressure warning reset switch should not turn off the tire pressure warning light. Adjusting the tire inflation pressure will turn off the light.

The temporary spare tire is not equipped with the tire pressure warning valve and transmitter. If a tire goes flat, the warning light will not turn off even though the flat tire is replaced with the temporary spare tire. Replace the temporary spare tire with the repaired tire and adjust the proper tire inflation pressure. The tire pressure warning light will turn off after 3 to 6 minutes.

⚠ CAUTION

Each tire, including the spare (if provided), should be checked monthly when cold and inflated to the inflation pressure recommended by the vehicle manufacturer on the vehicle placard or tire inflation pressure label (tire and load information label). (If your vehicle has tires of a different size than the size indicated on the vehicle placard or tire inflation pressure label (tire and load information label), you should determine the proper tire inflation pressure for those tires.)

As an added safety feature, your vehicle has been equipped with a tire pressure monitoring system (TPMS–tire pressure warning system) that illuminates a low tire pressure telltale (tire pressure warning light) when one or more of your tires is significantly under–inflated. Accordingly, when the low tire pressure telltale (tire pressure warning light) illuminates, you should stop and check your tires as soon as possible, and inflate them to the proper pressure. Driving on a significantly under–inflated tire causes the tire to overheat and can lead to tire failure. Under–inflation also reduces fuel efficiency and tire tread life, and may affect the vehicle's handling and stopping ability.

Please note that the TPMS (tire pressure warning system) is not a substitute for proper tire maintenance, and it is the driver's responsibility to maintain correct tire pressure, even if under–inflation has not reached the level to trigger illumination of the TPMS low tire pressure telltale (tire pressure warning light).

Your vehicle has also been equipped with a TPMS (tire pressure warning system) malfunction indicator to indicate when the system is not operating properly. The TPMS (tire pressure warning system) malfunction indicator is combined with the low tire pressure telltale (tire pressure warning light). When the system detects a malfunction, the telltale will flash for approximately one minute and then remain continuously illuminated. This sequence will continue upon subsequent vehicle start–ups as long as the malfunction exists. When the malfunction indicator is illuminated, the system may not be able to detect or signal low tire pressure as intended.

TPMS (tire pressure warning system) malfunction may occur for a variety of reasons, including the installation of replacement or alternate tires or wheels on the vehicle that prevent the TPMS (tire pressure warning system) from functioning properly. Always check the TPMS (tire pressure warning system) malfunction telltale after replacing one or more tires or wheels on your vehicle to ensure that the replacement or alternate tires and wheels allow the TPMS (tire pressure warning system) to continue to function properly.

NOTICE

- ***Do not use liquid sealants for a flat tire as tire pressure warning valve and transmitter will be damaged.***
- ***When the tires must be repaired or replaced, have them repaired or replaced by the nearest Toyota dealer or an authorized tire dealer. The tire pressure warning valves and transmitters will be affected by the installation or removal of tires.***

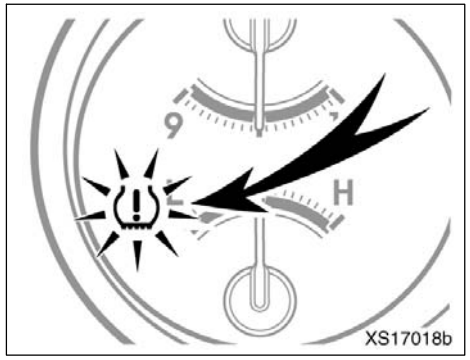

Type A

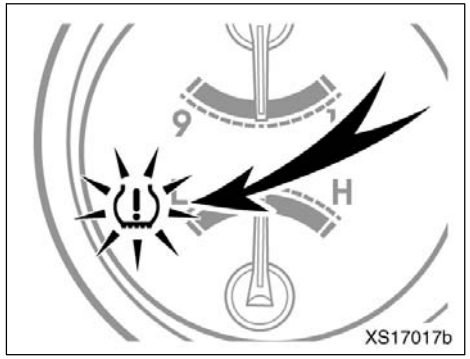

Type B

IF THE TIRE PRESSURE WARNING LIGHT COMES ON AFTER BLINKING FOR 1 MINUTE...

If the tire pressure warning light comes on after blinking for 1 minute when the ignition switch is turned to the "ON" position, the tire pressure warning system is not working properly.

The system will be disabled in the following conditions:
(When the condition becomes normal, the system will work properly.)

- If tires not equipped with tire pressure warning valves and transmitters are used.
- If the ID code on the tire pressure warning valves and transmitters is not registered in the tire pressure warning computer.

The system may be disabled in the following conditions:
(When the condition becomes normal, the system will work properly.)

- If electronic devices or facilities using similar radio wave frequencies are nearby.
- If a radio set at similar frequencies is in use in the vehicle.
- If a window tint that affects the radio wave signals is installed.
- If there is a lot of snow or ice on the vehicle, in particular around the wheels or wheel housings.
- If non–genuine Toyota wheels are used.
- If tire chains are used.

If the tire pressure warning light continues to come on after blinking for 1 minute when the ignition switch is turned to the "ON" position, have the system checked by your Toyota dealer.

Even if you use genuine wheels, the tire pressure warning system may not work properly with some types of tires.

Pushing the tire pressure warning reset switch should not turn off the tire pressure warning light.

For vehicles sold in U.S.A.

This device complies with Part 15 of the FCC Rules. Operation is subject to the following two conditions:

(1) This device may not cause harmful interference, and (2) this device must accept any interference received, including interference that may cause undesired operation.

NOTICE:
This equipment has been tested and found to comply with the limits for a Class B digital device, pursuant to Part 15 of the FCC Rules. These limits are designed to provide reasonable protection against harmful interference in a residential installation. This equipment generates, uses and can radiate radio frequency energy and, if not installed and used in accordance with the instructions, may cause harmful interference to radio communications. However, there is no guarantee that interference will not occur in a particular installation. If this equipment does cause harmful interference to radio or television reception, which can be determined by turning the equipment off and on, the user is encouraged to try to correct the interference by one or more of the following measures:

- Reorient or relocate the receiving antenna.
- Increase the separation between the equipment and receiver.
- Connect the equipment into an outlet on a circuit different from that to which the receiver is connected.
- Consult the dealer or an experienced radio/TV technician for help.

FCC WARNING:
Changes or modifications not expressly approved by the party responsible for compliance could void the user's authority to operate the equipment.

For vehicles sold in Canada

Operation is subject to the following two conditions:

(1) this device may not cause interference, and (2) this device must accept any interference, including interference that may cause undesired operation of the device.

REPLACING TIRES AND WHEELS

When replacing the tires and wheels, be sure to install tire pressure warning valves and transmitters. ID codes on the tire pressure warning valves and transmitters are registered in the tire pressure warning computer. When replacing a tire pressure warning valve and transmitter, it is necessary to register the ID code of tire pressure warning valve and transmitter. Have the ID code registered by your Toyota dealer.

If the ID code is not registered, the system will not work properly. After driving for 20 minutes, the tire pressure warning light comes on after blinking for 1 minute to indicate a system malfunction.

NOTICE

When the tires or tire pressure warning valves and transmitters must be replaced, have them replaced by your Toyota dealer. The tire pressure warning valves and transmitters will be affected by the installation or removal of tires.

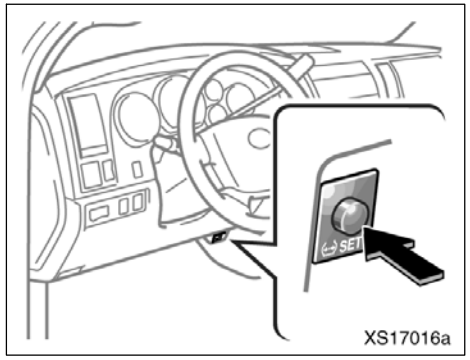

TIRE PRESSURE WARNING RESET SWITCH

When initializing the system, the present tire inflation pressure is stored as standard. The tire pressure warning system determines decreased air pressure by comparing the present and the standard tire inflation pressures. When you change the set tire inflation pressure, it is necessary to initialize the tire pressure warning system.

- When rotating the tires on vehicles differing with front and rear tire inflation pressures.

- When changing the tire inflation pressure according to the instruction for traveling speed, load weight or tire size.

To initialize the system, perform the following:

1. Park the vehicle in a safe place and turn the ignition switch to the “ACC” or “LOCK” position.
2. Adjust the pressure of all the installed tires to the specified cold tire inflation pressure level. (See “Tires” on page 586 in Section 8.)
3. Turn the ignition switch to the “ON” position.
4. Push and hold the tire pressure warning reset switch until the tire pressure warning light blinks slowly three times.
5. Wait for 7 minutes with the ignition switch “ON”, and then turn the ignition switch to the “ACC” or “LOCK” position.

If you push the tire pressure warning reset switch while the vehicle is moving, initialization is not performed.

If you push the tire pressure warning reset switch accidentally and initialization is performed, adjust the tire inflation pressure to the specified level and initialize the system again.

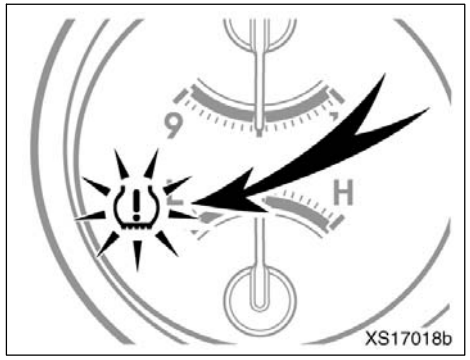

Type A

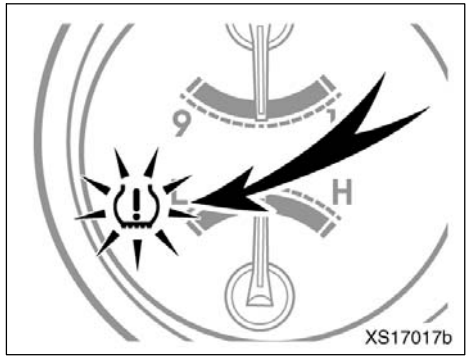

Type B

If the tire pressure warning light does not blink slowly three times when you push and hold the tire pressure warning reset switch, initialization has failed and the tire pressure warning system may not work properly. In this case, initialize the system again. If initialization cannot be performed, have the system checked at your Toyota dealer.

⚠ CAUTION

Do not push the tire pressure warning reset switch without first adjusting the tire inflation pressure to the specified level. Otherwise, the tire pressure warning light may not come on even if the tire inflation pressure is low, or it may come on when the tire inflation pressure is actually normal.

Parking brake

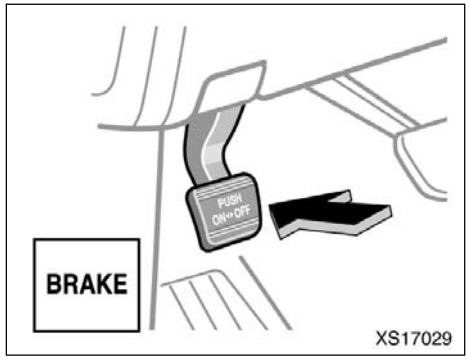

Type A

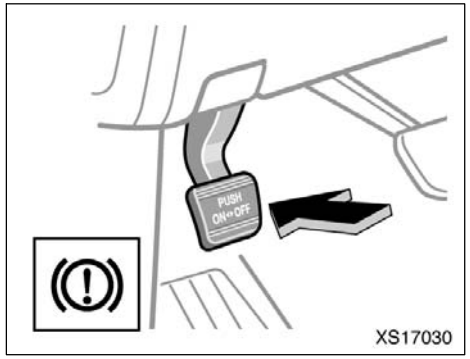

Type B

When parking, firmly apply the parking brake to avoid inadvertent creeping.

To set: Fully depress the parking brake pedal. For better holding power, first depress the brake pedal and hold it while setting the parking brake.
To release: Depress the parking brake pedal once again.

To remind you that the parking brake is set, the parking brake reminder light in the instrument panel remains on until you release the parking brake.

⚠ CAUTION

Before driving, be sure the parking brake is fully released and the parking brake reminder light is off.

Cruise control

The cruise control is designed to maintain a set cruising speed without requiring the driver to operate the accelerator. Cruising speed can be set to any speed above 40 km/h (25 mph).

Within the limits of the engine's capabilities, cruising speed can be maintained up or down grades. However, changes in vehicle speed may occur on steeper grades.

⚠ CAUTION

- **To help maintain maximum control of your vehicle, do not use the cruise control when driving in heavy or varying traffic, or on slippery (rainy, icy or snow–covered) or winding roads.**
- **Be careful about vehicle speed as it may increase when driving downhill with the cruise control on.**

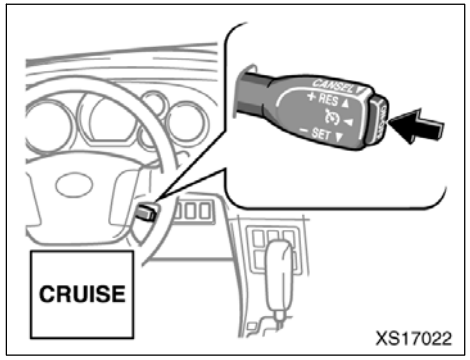

TURNING THE SYSTEM ON AND OFF

To turn the cruise control on, press the "ON–OFF" button. The "CRUISE" indicator light on the instrument panel will come on to indicate that the cruise control is operational. Pressing the "ON–OFF" button again turns the system off.

When the system is turned off, cruising speed must be reset when the cruise control is turned on again.

When the ignition switch is turned off, the system is also automatically turned off. To use the cruise control again, press the "ON–OFF" button again to turn it on.

⚠ CAUTION

To avoid accidentally engaging the cruise control, turn the system off when it is not in use. Make sure the "CRUISE" indicator light is off.

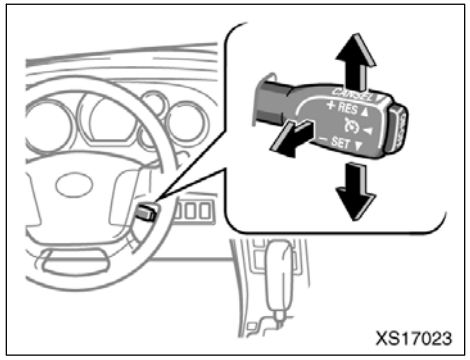

SETTING THE CRUISING SPEED

5–speed models—The transmission must be in the “D” position or the shift range position must be in “4” (fourth range) or “5” (fifth range) in “S” mode before you set the cruising speed.

6–speed models—The transmission must be in the “D” position or the shift range position must be in between “4” (fourth range) and “6” (sixth range) in “S” position before you set the cruising speed.

Bring your vehicle to the desired speed, push the lever down in the “–SET” direction and release it. This sets the vehicle at that speed. If the speed is not satisfactory, tap the lever up for a faster speed, or tap it down for a slower speed. Each tap changes the set speed by 1.6 km/h (1.0 mph). You can now take your foot off the accelerator pedal.

If you need acceleration—for example, when passing—depress the accelerator pedal enough for the vehicle to exceed the set speed. When you release it, the vehicle will return to the speed set prior to the acceleration.

CANCELLING THE CRUISE CONTROL

The cruise control may be temporarily cancelled by the driver or by the system itself under certain circumstances. Temporary cancellation allows the set cruising speed to remain in memory.

The cruise control can be temporarily cancelled by doing the following:

- Pulling the lever in the “CANCEL” direction and releasing it
- Depressing the brake pedal

Under certain circumstances, the cruise control is temporarily cancelled:

- When vehicle speed falls below 40 km/h (25 mph)
- When vehicle stability control is activated

When vehicle speed drops 16 km/h (10 mph) below the set speed, the cruise control is cancelled and the set speed is erased from memory.

The “CRUISE” indicator light remains on to indicate that the system is still in operation.

To turn the cruise control off, press the “ON–OFF” button. Make sure the “CRUISE” indicator light is off.

If the cruise control automatically cancels out other than for the above cases, have your vehicle checked by your Toyota dealer at the earliest opportunity.

RESUMING THE CRUISE CONTROL

If the cruise control is temporarily cancelled, the cruising speed can be resumed by pushing the lever up in the “+ RES” direction.

Vehicle speed must be above 40 km/h (25 mph).

RESETTING TO A FASTER SPEED

Push the lever up in the "+RES" direction and hold it. Release the lever when the desired speed is attained. While the lever is held up, the vehicle will gradually gain speed.

However, a faster way to reset is to accelerate the vehicle and then push the lever down in the "–SET" direction.

RESETTING TO A SLOWER SPEED

Push the lever down in the "–SET" direction and hold it. Release the lever when the desired speed is attained. While the lever is held down, the vehicle speed will gradually decrease.

However, a faster way to reset is to depress the brake pedal and then push the lever down in the "–SET" direction.

Even if you downshift from "D" to "S" with the cruise control on, engine braking will not be enabled because the cruise control is not cancelled. To decrease the vehicle speed, reset to a slower speed with the cruise control lever or depress the brake pedal. If you use the brake pedal, cruise control is cancelled.

CRUISE CONTROL FAILURE WARNING

If the "CRUISE" indicator light flashes when using the cruise control, press the "ON–OFF" button to turn the system off and then press it again to turn it on.

If any of the following conditions then occurs, there is some trouble in the cruise control system.

- The indicator light does not come on.
- The indicator light flashes again.
- The indicator light goes out after it comes on.

If this is the case, contact your Toyota dealer and have your vehicle inspected.

SECTION 1 – 8

OPERATION OF INSTRUMENTS AND CONTROLS

Audio and hands–free phone systems

Reference 264
Using your audio system 265
Audio remote controls 293
AUX adapter 295
Rear seat entertainment system 296
Audio/video system operating hints 339
Hands–free phone system 347

For vehicle equipped with Navigation system, please refer to the separate “Navigation System Owner’s Manual.”

Reference

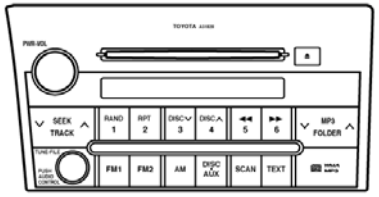

XS18005a

Type 1: AM·FM radio/compact disc player (with compact disc changer controller)

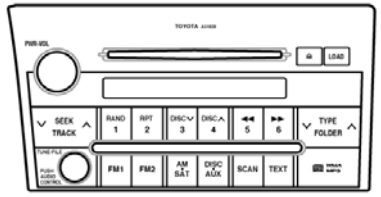

XS18001a

Type 2: AM·FM radio/compact disc player with changer (with XM® Satellite Radio* controller)

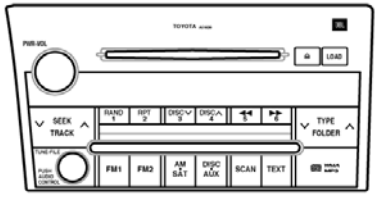

XS18002a

Type 3: AM·FM radio/compact disc player with changer (with XM® Satellite Radio* controller)

*: Use of satellite radio requires XM® tuner and service. Contact your Toyota dealer for details.

NOTICE
To clean radio panel, wipe it with a soft, lint–free cloth (for avoidance of damage to radio panel's paint).

Using your audio system——Some basics

This section describes some of the basic features on Toyota audio systems. Some information may not pertain to your system.

Your audio system works when the ignition switch is in the “ACC” or “ON” position.

NOTICE

To prevent the battery from being discharged, do not leave the audio system on longer than necessary when the engine is not running.

⚠ CAUTION

For vehicle sold in U.S.A. and Canadas:

- **Part 15 of the FCC Rules**

FCC Warning:
Any unauthorized changes or modifications to this equipment will void the user’s authority to operate this device.

- **Laser products**
  - **Do not take this unit apart or attempt to make any changes yourself. This is an intricate unit that uses a laser pickup to retrieve information from the surface of compact discs. The laser is carefully shielded so that its rays remain inside the cabinet. Therefore, never try to disassemble the player or alter any of its parts since you may be exposed to laser rays and dangerous voltages.**
  - **This product utilizes a laser. Use of controls or adjustments or performance of procedures other than those specified herein may result in hazardous radiation exposure.**

TURNING THE SYSTEM ON AND OFF

Push “PWR·VOL” to turn the audio system on and off.

Push “AM”, “DISC·AUX”, “FM1”, “FM2”, “AM·SAT”* or “LOAD” to turn on that function without pushing “PWR·VOL”. To turn on the compact disc player, a compact disc must be loaded in the player.

You can turn on the compact disc player by inserting a compact disc.

You can turn off the compact disc player by ejecting the compact disc. If the audio system was previously off, then the entire audio system will be turned off when you eject the compact disc. If the radio was previously on, it will come on again.

*: Use of satellite radio requires XM® tuner and service. Contact your Toyota dealer for details.

SWITCHING BETWEEN FUNCTIONS

Push “AM”, “DISC·AUX”, “FM1”, “FM2”, “AM·SAT”* or “LOAD” if the system is already on but you want to switch from one function to another.

*: Use of satellite radio requires XM® tuner and service. Contact your Toyota dealer for details.

LISTENING TO THE XM® SATELLITE RADIO BROADCAST* (type 2 and type 3)

To listen to a satellite radio broadcast in your vehicle, an additional genuine Toyota satellite receiver and antenna (or equivalents) must be purchased and installed. A subscription to the XM® Satellite Radio service is also necessary.

How to subscribe to an XM® Satellite Radio

An XM® Satellite Radio is a tuner designed exclusively to receive broadcasts provided under a separate subscription. Availability is limited to the 48 contiguous states.

How to subscribe:
You must enter into a separate service agreement with the XM® Satellite Radio in order to receive satellite broadcast programming in the vehicle. Additional activation and service subscription fees apply that are not included in the purchase price of the vehicle and optional digital satellite tuner. For complete information on subscription rates and terms, or to subscribe to the XM® radio, visit XM® on the web at www.xmradio.com or call an XM®’s Listener Care at (800) 967–2346. The XM® Satellite Radio is solely responsible for the quality, availability and content of the satellite radio services provided, which are subject to the terms and conditions of the XM® Satellite Radio customer service agreement.

Customers should have their radio ID ready; the radio ID can be found by tuning to “channel 000” on the radio. For details, see “Displaying the radio ID” below.

All fees and programming are the responsibility of the XM® Satellite Radio and are subject to change.

Satellite tuner technology notice:
Toyota's satellite radio tuners are awarded Type Approval Certificates from XM® Satellite Radio Inc. as proof of compatibility with the services offered by the XM® Satellite Radio.

Displaying the radio ID

Each XM® tuner is identified with a unique radio ID. You will need the radio ID when activating XM® service or when reporting a problem.

If you select the "CH 000" using the "TUNE·FILE" knob, the ID code of 8 alphanumeric characters appears. If you select another channel, display of the ID code is canceled. The channel (000) alternates the display between the radio ID and the specific radio ID code.

*: Use of satellite radio requires XM® tuner and service. Contact your Toyota dealer for details.

TONE AND BALANCE

For details about your system's tone and balance controls, see the description of your own system.

Tone

How good an audio program sounds to you is largely determined by the mix of the treble, midrange (JBL brand audio system* only), and bass levels. In fact, different kinds of music and vocal programs usually sound better with different mixes of treble, midrange, and bass.

You can adjust sound characteristics. Different sound characteristics can be recorded for each audio source.

*: If a JBL brand audio system is installed, the "JBL" logo is shown on the panel.

Balance

A good balance of the left and right stereo channels and of the front and rear sound levels is also important.

Keep in mind that if you are listening to a stereo recording or broadcast, changing the right/left balance will increase the volume of one group of sounds while decreasing the volume of another.

YOUR RADIO ANTENNA

To remove an antenna, carefully turn it counterclockwise.

NOTICE

To prevent damage to the antenna, make sure it is removed before driving your Toyota through an automatic car wash.

YOUR COMPACT DISC PLAYER (type 1)

When you insert a disc, gently push it in with the label side up. The player will play from track 1 through to the end of the disc. Then it will play from track 1 again.

NOTICE

Never try to disassemble or oil any part of the compact disc player. Do not insert anything other than compact discs into the slot.

8 cm (3 in.) compact disc singles

Your compact disc player does not need an adaptor to play compact disc singles. Compact disc singles are about 8 cm (3 in.) in diameter–smaller than standard discs.

After you eject a compact disc single, do not insert a standard 12 cm (4.7 in.) disc until “DISC” disappears from the display.

NOTICE

Do not use an adaptor for compact disc singles—it could cause tracking errors or interfere with the ejection of compact discs.

YOUR COMPACT DISC PLAYER WITH CHANGER (type 2 and type 3)

When you insert a disc, push the “LOAD” button, wait for the load/eject status light to turn green, then gently push the disc in with the label side up. This compact disc player can store up to six discs. The player will play from track 1 through to the end of the disc. Then it will play from track 1 of the next disc.

The player is intended for use with 12 cm (4.7 in.) discs only.

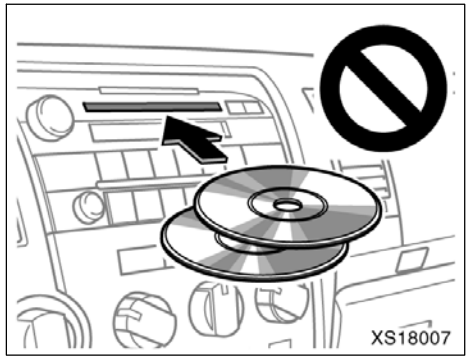

NOTICE

- ***Do not stack up two discs for insertion, or it will cause damage to the compact disc player or changer. Insert only one compact disc into slot at a time.***
- ***Never try to disassemble or oil any part of the compact disc player. Do not insert anything other than compact discs into the slot.***

—Controls and features

▶Type 1

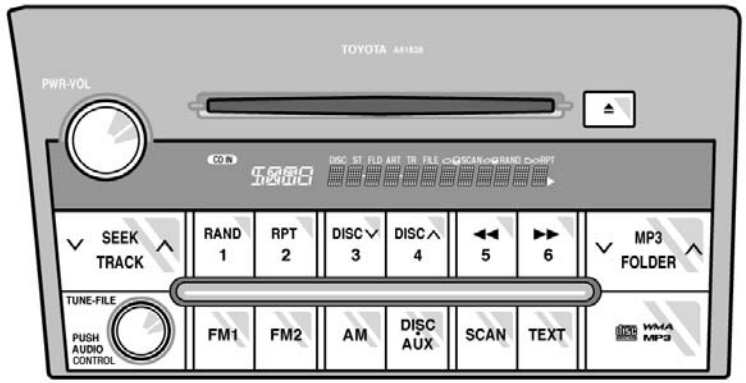

XS18006a

Details of specific buttons, controls and features are described in the alphabetical list that follows.

1 2 3 4 5 6 (Preset buttons)

These buttons are used to preset and tune in radio stations.

To preset a station to a button: Tune in the desired station. (See “TUNE·FILE” or “SEEK/TRACK”.) Push and hold down the button until you hear a beep—this will set the station to the button. The preset button number will appear on the display.

To recall a preset station: Push the button for the station you want. The preset button number and station frequency will appear on the display.

This radio can store one AM and two FM stations for each button. (The display will show “AM”, “FM1” or “FM2” when you push “AM”, “FM1” or “FM2” button.)

⏏ (Eject button)

Push the compact disc eject button to eject a compact disc.

◀◀/▶▶ (Reverse/Fast–forward button)

Push and hold “▶▶” (preset button 6) or “◀◀” (preset button 5) to fast forward or reverse within a compact disc. When you release the button, the compact disc player will resume playing.

AM

Push the “AM” button to turn on the radio and select the AM band. “AM” will appear on the display.

AUDIO/CONTROL (Tone and sound balance adjustment function)

Each time you push the “AUDIO/CONTROL” knob, the mode changes. To adjust the tone and balance, turn the knob.

BAS: Adjusts low–pitched tones. The display ranges from –5 to 5.

TRE: Adjusts high–pitched tones. The display ranges from –5 to 5.

FAD: Adjusts the sound balance between the front and rear speakers. The display ranges from F7 to R7.

BAL: Adjusts the sound balance between the right and left speakers. The display ranges from L7 to R7.

Switching over the Speed Automatic Sound Levelizer (ASL) level

ASL: The Automatic Sound Levelizer can be turned on by turning the knob. In addition, turning the knob allows you to select from LOW, MID, and HIGH volume and tone settings. The ASL system automatically adjusts volume and tone in accordance with the driving speed. This helps ensure an optimal listening experience even if noise levels rise while driving.

DISC·AUX (Compact disc)

Push the “DISC·AUX” button to play a compact disc.

When the audio system is set into compact disc operation, the display shows the track number currently being played.

To switch between CD and AUX (external device) modes, press the “DISC·AUX” button. The AUX mode is only available when AUX adapter is connected to the system. When the AUX adapter is in use, “AUX” will appear on the display.

Error messages

If the player malfunctions, your audio system will display following error messages.

“WAIT”: The compact disc player unit may be too hot. Allow the player to cool down.

“ERROR 1”: The disc may be dirty, damaged or inserted incorrectly (up–side down). Clean the disc and re–insert it.

“NO DISC”: Eject the disc or magazine. Set the disc or magazine again.

“ERROR 3”: There is a problem inside the system. Eject the disc or magazine. Set the disc or magazine again.

“ERROR 4”: Over–current. Ask your Toyota dealer to inspect.

“CD OPEN”: The compact disc changer lid of separate unit is open. Close the compact disc changer lid.

If “NO MUSIC” appears on the display, it indicates that a disc with no MP3/WMA data has been inserted. Remove the disc from the player and insert an MP3/WMA data disc.

If the malfunction still exists, take your vehicle to your Toyota dealer.

∨ DISC ∧

With compact disc changer only—

Use these buttons to select a disc you want to listen to.

Push “∨” (preset button 3) or “∧” (preset button 4) until the number of the disc you want to listen appears on the display.

FM1 FM2

Push the “FM1” or “FM2” button to turn on the radio and select the FM band. “FM1” or “FM2” will appear on the display. This system allows you to set twelve FM stations, two for each of the preset button.

MP3/FOLDER (Folder up/down)

To skip up or down to a different folder: Push “∧” or “∨” side of the “MP3/FOLDER” several times until the number of the folder you want to listen to appears on the display.

To jump to the first file in the first folder: Push and hold the “∨” side of the button until you hear a beep.

When playing a disc featuring both audio data (CD–DA) and MP3/WMA files, audio data (CD–DA) is played.

PWR·VOL (Power and Volume)

Push “PWR·VOL” to turn the audio system on and off. Turn “PWR·VOL” to adjust the volume.

RAND (Random)

Compact disc player

There are two random features—you can either listen to the tracks on one compact disc in random order, or listen to the tracks on all the compact discs in the magazine in random order.

To play the tracks on one disc in random order:
Quickly push and release “RAND” (preset button 1). “RAND” will appear on the display and the player will perform the tracks on the disc you are listening to in random order. To turn off the random feature, push this button again.

With compact disc changer only—

To play all the tracks in the magazine in random order:
Push and hold “RAND” (preset button 1) until you hear a beep. “RAND” will appear on the display and the player will perform all the tracks on all the discs in the magazine in random order. To turn off the random feature, push this button again.

MP3/WMA player

There are two random playback features—you can either listen to all of the files on the compact discs in random order. You can also listen to the files in a single folder in random order.

To randomly play the files in a folder:
Quickly push and release “RAND” (preset button 1). “RAND” will appear on the display.

To randomly play all of the files on the compact disc:
Push and hold “RAND” (preset button 1) until you hear a beep. “RAND” will appear on the display and the player will play all of the files on the disc in random order. To turn off the random playback feature, push this button again.

RPT (Repeat)

Compact disc player

There are two repeat features—you can either replay a disc track or a whole compact disc.

Repeating a track:
Quickly push and release “RPT” (preset button 2) while the track is playing. “RPT” will appear on the display. When the track ends, it will automatically replay. To turn off the repeat feature, push this button again.

With compact disc changer only—

Repeating a disc:
Push and hold “RPT” (preset button 2) until you hear a beep. “RPT” will appear on the display. The player will repeat all the tracks on the disc you are listening to. When the disc ends, the player will automatically go back to the first track on the disc and replay. To turn off the repeat feature, push this button again.

MP3/WMA player

There are two repeat features—you can repeat a single file or an entire folder.

Repeating a file:
Quickly push and release “RPT” (preset button 2) while the file is playing. “RPT” will appear on the display. When the file ends, it will repeat automatically. This process will be continued until you push the button again to turn off the repeat feature.

Repeating a folder:
Push and hold “RPT” (preset button 2) until you hear a beep. “RPT” will appear on the display. The player will repeat all of the files in the folder. When the last file in the folder ends, the folder will repeat from the beginning. To turn off the repeat feature, push this button again.

SCAN

Radio

You can either scan all the frequencies on a band or scan only the preset stations for that band.

To scan the preset stations:
Push and hold the “SCAN” button until you hear a beep. The radio will tune in the next preset station up the band, stay there for 5 seconds, and then move to the next preset station. To stop scanning, push this button again.

To scan all the frequencies:
Quickly push and release the “SCAN” button. The radio will find the next station up the station band, stay there for 5 seconds, and then scan again to the next station. To stop scanning, push this button again.

Compact disc player

There are two scan features—you can either scan the tracks on a specific disc or scan the first tracks of all the discs in the magazine.

Scanning the tracks on a disc:
Quickly push and release the “SCAN” button. “SCAN” will appear on the display and the player will scan all the tracks on the disc you are listening to. To stop scanning, push this button again. If the player scanned all the tracks on the disc, it will stop scanning.

With compact disc changer only—

Scanning the first tracks of all the discs in the magazine:
Push and hold the “SCAN” button until you hear a beep. “SCAN” will appear on the display and the player will scan the first track of the next disc. To stop scanning, push this button again. If the player has scanned all the discs, it will stop scanning.

MP3/WMA player

There are two scan features—you can either scan the files in a folder on a specific disc or scan the first file of all the folder.

Scanning the files on a folder:
Quickly push and release “SCAN”. “SCAN” will appear on the display and the player will scan all the files in the folder you are listening to. To select a file, push the “SCAN” again. After all the tracks on the disc have been scanned in one pass, normal play resumes.

Scanning the first file of all the folders:
Push “SCAN” until you hear a beep. “SCAN” will appear on the display and the player will scan the first file of the next folder. To select a folder, push the “SCAN” again. After all the folders have been scanned in one pass, normal play resumes.

SEEK/TRACK (Seeking/Track up/down)

Radio

In the seek mode, the radio finds and plays the next station up or down the station band.

To seek the next station, quickly push and release "∧" or "∨" side of the "SEEK/TRACK" button. Do this again to find the station after that.

Compact disc player

Use this button to skip up or down to a different track.

Push "∧" or "∨" side of the "SEEK/TRACK" button until the number of the track you want to listen to appears on the display. If you want to return to the beginning of the current track, quickly push the down side of the button one time.

MP3/WMA player

Use this button to file up or down to a different file.

Push "∧" or "∨" side of the "SEEK/TRACK" several times until the file you want to listen to appears on the display. If you want to return to the beginning of the current file, push the "∨" side of the button one time.

ST (Stereo reception) display

Your radio automatically changes to stereo reception when a stereo broadcast is received. "ST" appears on the display. If the signal becomes weak, the radio reduces the amount of channel separation to prevent the weak signal from creating noise. If the signal becomes extremely weak, the radio switches from stereo to mono reception.

TEXT

Compact disc player

This button is used to change the display for the compact disc that contains text data.

To change the display, quickly push and release the "TEXT" button while the compact disc is playing. The display changes in the order from the elapsed time to disc title to track title, then back to the elapsed time.

If this button is pushed while a compact disc that does not contain text data is playing, "NO TITLE" will appear on the display.

If the entire disc or track title does not appear on the display, push and hold the button until you hear a beep. The rest of the title will appear.

MP3/WMA player

This button is used to change the display for the MP3/WMA file that contains text data.

To change the display, quickly push and release the “TEXT” button while the MP3/WMA file is playing. The display changes in the order from the elapsed time to folder name to file name to album title to track title to artist name, then back to the elapsed time.

If this button is pushed while an MP3/WMA file that does not contain text data is playing, “NO TITLE” will appear on the display.

If the entire text data is not displayed, push and hold it until you hear a beep. The rest of the text data will appear.

TUNE·FILE (Tuning and File up/down)

Radio

Turn the “TUNE·FILE” knob clockwise to step up the frequency. Turn the knob counterclockwise to step down the frequency.

MP3/WMA player

Turn the “TUNE·FILE” knob clockwise to file up. Turn the knob counterclockwise to file down.

▶Type 2

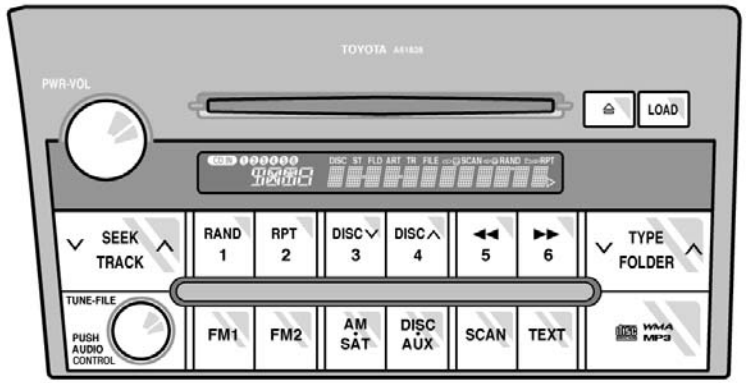

XS18003a

Details of specific buttons, controls and features are described in the alphabetical list that follows.

1 2 3 4 5 6 (Preset buttons)

These buttons are used to preset and tune in radio stations.

To preset a station to a button: Tune in the desired station. (See “TUNE·FILE” or “SEEK/TRACK”.) Push and hold down the button until you hear a beep—this will set the station to the button. The preset button number will appear on the display.

To recall a preset station: Push the button for the station you want. The preset button number and station frequency will appear on the display.

This radio can store one AM and two FM stations for each button. (The display will show “AM”, “FM1” or “FM2” when you push “AM·SAT”*, “FM1” or “FM2” button.)

XM® Satellite Radio*—

These buttons are used to preset and tune in radio channels.

To preset a channel to a button: Tune in the desired channel. (See “TUNE·FILE” or “SEEK/TRACK”.) Push and hold down the button until you hear a beep—this will set the channel to the button. The preset button number will appear on the display.

To recall a preset channel: Push the button for the channel you want. The preset button number and channel number will appear on the display.

This radio can store three XM® channels for each button. (The display will show “SAT1”, “SAT2” or “SAT3” when you push “AM·SAT”* button.)

*: Use of satellite radio requires XM® tuner and service. Contact your Toyota dealer for details.

⏏ (Eject button)

This button is used to eject one or all compact discs.

To eject the current compact disc, push and release the compact disc eject button.

To eject a specific disc, push “∨” (preset button 3) or “∧” (preset button 4) until the number of the disc you want to eject is displayed. Push and release the eject button.

To eject all discs at a time, press and hold the eject button until you hear a beep. The last compact disc played before pushing the button will be ejected first. If the ejected disc is not removed for a long time, the eject function will be cancelled.

◀◀/▶▶ (Reverse/Fast–forward button)

Push and hold “▶▶” (preset button 6) or “◀◀” (preset button 5) to fast forward or reverse within a compact disc. When you release the button, the compact disc player will resume playing.

AM·SAT (AM band and XM® Satellite Radio*)

Push the “AM·SAT”* button to turn on the radio and select the AM or XM® band. “AM”, “SAT1”, “SAT2” or “SAT3” will appear on the display.

Error messages

If the satellite radio tuner malfunctions, your audio system will display following error messages.

“ANTENNA”:

- The XM® antenna is not connected. Check whether the XM® antenna cable is attached securely.
- A short–circuit occurs in the antenna or the surrounding antenna cable. See a Toyota certified dealer.

“UPDATING”:

- You have not subscribed to the XM® Satellite Radio. The radio is being updated with the latest encryption code. Contact the XM® Satellite Radio for subscription information. When a contact is canceled, you can choose the “CH000” and all free–to–air channels.
- The premium channel you selected is not authorized. Wait for about 2 seconds until the radio returns to the previous channel or “CH001”. If it does not change automatically, select another channel. If you want to listen to the premium channel, contact the XM® Satellite Radio.

“NO SIGNAL”: The XM® signal is too weak at the current location. Wait until your vehicle reaches a location with a stronger signal.

“LOADING”: The unit is acquiring audio or program information. Wait until the unit has received the information.

“OFF AIR”: The channel you selected is not broadcasting any programming. Select another channel.

“– – –”: The channel you selected is no longer available. Wait for about 2 seconds until the radio returns to the previous channel or “CH001”. If it does not change automatically, select another channel.

The XM® Listener Care Center is also available on the phone, please call (800) 967–2346 during the following hours:
Monday—Saturday: 6 a.m.—2 a.m. Eastern Time
Sunday: 8 a.m.—8 p.m. Eastern Time

*: Use of satellite radio requires XM® tuner and service. Contact your Toyota dealer for details.

AUDIO/CONTROL (Tone and sound balance adjustment function)

Each time you push the “AUDIO/CONTROL” knob, the mode changes. To adjust the tone and balance, turn the knob.

BAS: Adjusts low–pitched tones. The display ranges from –5 to 5.

TRE: Adjusts high–pitched tones. The display ranges from –5 to 5.

FAD: Adjusts the sound balance between the front and rear speakers. The display ranges from F7 to R7.

BAL: Adjusts the sound balance between the right and left speakers. The display ranges from L7 to R7.

Switching over the Speed Automatic Sound Levelizer (ASL) level

ASL: The Automatic Sound Levelizer can be turned on by turning the knob. In addition, turning the knob allows you to select from LOW, MID and HIGH volume and tone settings. The ASL system automatically adjusts volume and tone in accordance with the driving speed. This helps ensure an optimal listening experience even if noise levels rise while driving.

DISC·AUX (Compact disc)

Push the “DISC·AUX” button to play a compact disc.

When the audio system is set into compact disc operation, the display shows the track, or track and disc number currently being played.

To switch between CD and AUX (external device) modes, press the “DISC·AUX” button. The AUX mode is only available when AUX adapter is connected to the system. When the AUX adapter is in use, “AUX” will appear on the display.

Error messages

If the player malfunctions, your audio system will display following error messages.

"WAIT": The compact disc player unit may be too hot. Allow the player to cool down.

"ERROR 1": The disc may be dirty, damaged or inserted incorrectly (up–side down). Clean the disc and re–insert it.

"NO DISC": Eject the disc. Set the disc again.

"ERROR 3": There is a problem inside the system. Eject the disc. Set the disc again.

"ERROR 4": Over–current. Ask your Toyota dealer to inspect.

If "NO MUSIC" appears on the display, it indicates that a disc with no MP3/WMA data has been inserted. Remove the disc from the player and insert an MP3/WMA data disc.

If the malfunction still exists, take your vehicle to your Toyota dealer.

∨ DISC ∧

Use these buttons to select a disc you want to listen to.

Push "∨" (preset button 3) or "∧" (preset button 4) until the number of the disc you want to listen appears on the display.

FM1 FM2

Push the "FM1" or "FM2" button to turn on the radio and select the FM band. "FM1" or "FM2" will appear on the display. This system allows you to set twelve FM stations, two for each of the preset button.

TYPE/FOLDER (Type/Folder up/down)

XM® Satellite Radio*—

When you push the "∨" or "∧" side of the "TYPE/FOLDER" button while receiving a XM® channel, the current channel category appears on the display.

When the channel category appears, push either "∨" or "∧" side of the "TYPE/FOLDER" button to switch to the next or previous category.

*: Use of satellite radio requires XM® tuner and service. Contact your Toyota dealer for details.

MP3/WMA player

To skip up or down to a different folder: Push "∧" or "∨" side of the "TYPE/FOLDER" several times until the number of the folder you want to listen to appears on the display.

To jump to the first file in the first folder: Push and hold the "∨" side of the button until you hear a beep.

When playing a disc featuring both audio data (CD–DA) and MP3/WMA files, audio data (CD–DA) is played.

LOAD

This button is used to load the compact discs in the compact disc player. This player can store up to six discs.

To load one compact disc only, quickly push and release the button. When the indicators on both sides of the slot turn green, insert a compact disc. After the disc is loaded, the shutter of the slot will close.

If no compact disc is inserted, the shutter will close after 15 seconds.

To load multiple compact discs, push and hold the button (until you hear a beep when the audio system is on). When the indicators on both sides of the slot turn green, insert a compact disc. After the disc is loaded, the shutter of the slot will close. After a few seconds, the shutter will automatically open again and the indicators will turn green so the next disc can be inserted. The same process can be applied for loading the rest of the discs. If the player is full of discs, “DISC FULL” will appear on the display.

If no compact disc is inserted, the shutter will close after 15 seconds.

PWR·VOL (Power and Volume)

Push “PWR·VOL” to turn the audio system on and off. Turn “PWR·VOL” to adjust the volume.

RAND (Random)

Compact disc player

There are two random features—you can either listen to the tracks on one compact disc in random order, or listen to the tracks on all the compact discs in the magazine in random order.

To play the tracks on one disc in random order:
Quickly push and release “RAND” (preset button 1). “RAND” will appear on the display and the player will perform the tracks on the disc you are listening to in random order. To turn off the random feature, push this button again.

To play all the tracks in the magazine in random order:
Push and hold “RAND” (preset button 1) until you hear a beep. “·RAND” will appear on the display and the player will perform all the tracks on all the discs in the magazine in random order. To turn off the random feature, push this button again.

MP3/WMA player

There are two random playback features—you can either listen to all of the files on the compact discs in random order. You can also listen to the files in a single folder in random order.

To randomly play the files in a folder: Quickly push and release “RAND” (preset button 1). “RAND” will appear on the display.

To randomly play all of the files on the compact disc:
Push and hold “RAND” (preset button 1) until you hear a beep. “RAND” will appear on the display and the player will play all of the files on the disc in random order. To turn off the random playback feature, push this button again.

RPT (Repeat)

Compact disc player

There are two repeat features—you can either replay a disc track or a whole compact disc.

Repeating a track:
Quickly push and release “RPT” (preset button 2) while the track is playing. “RPT” will appear on the display. When the track ends, it will automatically replay. To turn off the repeat feature, push this button again.

Repeating a disc:
Push and hold “RPT” (preset button 2) until you hear a beep. “RPT” will appear on the display. The player will repeat all the tracks on the disc you are listening to. When the disc ends, the player will automatically go back to the first track on the disc and replay. To turn off the repeat feature, push this button again.

MP3/WMA player

There are two repeat features—you can repeat a single file or an entire folder.

Repeating a file:
Quickly push and release “RPT” (preset button 2) while the file is playing. “RPT” will appear on the display. When the file ends, it will repeat automatically. This process will be continued until you push the button again to turn off the repeat feature.

Repeating a folder:
Push and hold “RPT” (preset button 2) until you hear a beep. “RPT” will appear on the display. The player will repeat all of the files in the folder. When the last file in the folder ends, the folder will repeat from the beginning. To turn off the repeat feature, push this button again.

SCAN

Radio

You can either scan all the frequencies on a band or scan only the preset stations for that band.

To scan the preset stations:
Push and hold the “SCAN” button until you hear a beep. The radio will tune in the next preset station up the band, stay there for 5 seconds, and then move to the next preset station. To stop scanning, push this button again.

To scan all the frequencies:
Quickly push and release the “SCAN” button. The radio will find the next station up the station band, stay there for 5 seconds, and then scan again to the next station. To stop scanning, push this button again.

XM® Satellite Radio*—

You can either scan the currently selected channel category or scan only the preset channels for the band.

To scan the preset channels:
Push and hold the “SCAN” button until you hear a beep. “SCAN” appears on the display. The radio will tune in the next preset channel up the band, stay there for 5 seconds, and then move to the next preset channel. To stop scanning, push this button again.

To scan the currently selected channel category:
Quickly push and release the “SCAN” button. “SCAN” appears on the display. The radio will find the next channel in the same channel category up the band, stay there for 5 seconds, and then scan again. To stop scanning, push this button again.

*: Use of satellite radio requires XM® tuner and service. Contact your Toyota dealer for details.

Compact disc player

There are two scan features—you can either scan the tracks on a specific disc or scan the first tracks of all the discs in the magazine.

Scanning the tracks on a disc:
Quickly push and release the “SCAN” button. “SCAN” will appear on the display and the player will scan all the tracks on the disc you are listening to. To stop scanning, push this button again. If the player scanned all the tracks on the disc, it will stop scanning.

Scanning the first tracks of all the discs in the magazine:
Push and hold the “SCAN” button until you hear a beep. “·SCAN” will appear on the display and the player will scan the first track of the next disc. To stop scanning, push this button again. If the changer has scanned all the discs, it will stop scanning.

MP3/WMA player

There are two scan features—you can either scan the files in a folder on a specific disc or scan the first file of all the folder.

Scanning the files on a folder:
Quickly push and release “SCAN”. “SCAN” will appear on the display and the player will scan all the files in the folder you are listening to. To select a file, push the “SCAN” again. After all the tracks on the disc have been scanned in one pass, normal play resumes.

Scanning the first file of all the folders:
Push “SCAN” until you hear a beep. “ SCAN” will appear on the display and the player will scan the first file of the next folder. To select a folder, push the “SCAN” again. After all the folders have been scanned in one pass, normal play resumes.

SEEK/TRACK (Seeking/Track up/down)

Radio

In the seek mode, the radio finds and plays the next station up or down the station band.

To seek the next station, quickly push and release “∧” or “∨” side of the “SEEK/TRACK” button. Do this again to find the station after that.

XM® Satellite Radio*—

To select the next channel within the current channel category, push the “∧” or “∨” side of the “SEEK/TRACK” button. Repeat until a desired channel is found.

*: Use of satellite radio requires XM® tuner and service. Contact your Toyota dealer for details.

Compact disc player

Use this button to skip up or down to a different track.

Push "∧" or "∨" side of the "SEEK/TRACK" button until the number of the track you want to listen to appears on the display. If you want to return to the beginning of the current track, quickly push the down side of the button one time.

MP3/WMA player

Use this button to file up or down to a different file.

Push "∧" or "∨" side of the "SEEK/TRACK" several times until the file you want to listen to appears on the display. If you want to return to the beginning of the current file, push the "∨" side of the button one time.

ST (Stereo reception) display

Your radio automatically changes to stereo reception when a stereo broadcast is received. "ST" appears on the display. If the signal becomes weak, the radio reduces the amount of channel separation to prevent the weak signal from creating noise. If the signal becomes extremely weak, the radio switches from stereo to mono reception.

TEXT

XM® Satellite Radio*1—

When you push the "TEXT" button, the display changes as follows:
CH NAME → TITLE (SONG/PROGRAM TITLE) → NAME (ARTIST NAME/FEATURE) → CH NUMBER → CH NAME

Up to 10 alphanumeric characters can be displayed. (Some information will not be fully displayed.)

The message display will be canceled if any button that affects the display is pushed.

If there is no song/program title or artist name/feature associated with the channel at that time, "– – – – –" will appear on the display.

This XM® tuner supports "Audio Services" (Music and Talk) of only XM® Satellite Radio and "Text Information"*2 linked to the respective audio services.

*1: Use of satellite radio requires XM® tuner and service. Contact your Toyota dealer for details.

*2: Text Information includes, Channel Name, (Artist) Name, (Song) Title and Category Name.

Compact disc player

This button is used to change the display for the compact disc that contains text data.

To change the display, quickly push and release the "TEXT" button while the compact disc is playing. The display changes in the order from the elapsed time to disc title to track title, then back to the elapsed time.

If this button is pushed while a compact disc that does not contain text data is playing, "NO TITLE" will appear on the display.

If the entire disc or track title does not appear on the display, push and hold the button until you hear a beep. The rest of the title will appear.

MP3/WMA player

This button is used to change the display for the MP3/WMA file that contains text data.

To change the display, quickly push and release the “TEXT” button while the MP3/WMA file is playing. The display changes in the order from the elapsed time to folder name to file name to album title to track title to artist name, then back to the elapsed time.

If this button is pushed while an MP3/WMA file that does not contain text data is playing, “NO TITLE” will appear on the display.

If the entire text data is not displayed, push and hold it until you hear a beep. The rest of the text data will appear.

TUNE·FILE (Tuning and File up/down)

Radio

Turn the “TUNE·FILE” knob clockwise to step up the frequency. Turn the knob counterclockwise to step down the frequency.

XM® Satellite Radio*—

Turn the “TUNE·FILE” knob clockwise to step up the channel. Turn the knob counterclockwise to step down the channel.

*: Use of satellite radio requires XM® tuner and service. Contact your Toyota dealer for details.

MP3/WMA player

Turn the “TUNE·FILE” knob clockwise to file up. Turn the knob counterclockwise to file down.

▶Type 3

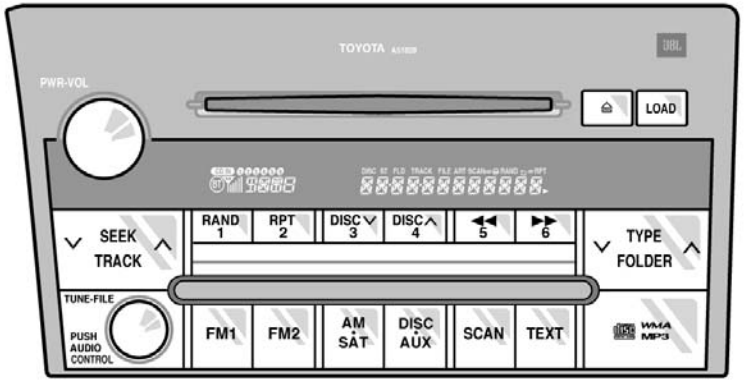

XS18004a

Details of specific buttons, controls and features are described in the alphabetical list that follows.

1 2 3 4 5 6 (Preset buttons)

These buttons are used to preset and tune in radio stations.

To preset a station to a button: Tune in the desired station. (See “TUNE·FILE” or “SEEK/TRACK”.) Push and hold down the button until you hear a beep—this will set the station to the button. The preset button number will appear on the display.

To recall a preset station: Push the button for the station you want. The preset button number and station frequency will appear on the display.

This radio can store one AM and two FM stations for each button. (The display will show “AM”, “FM1” or “FM2” when you push “AM·SAT”*, “FM1” or “FM2” button.)

XM® Satellite Radio*—

These buttons are used to preset and tune in radio channels.

To preset a channel to a button: Tune in the desired channel. (See “TUNE·FILE” or “SEEK/TRACK”.) Push and hold down the button until you hear a beep—this will set the channel to the button. The preset button number will appear on the display.

To recall a preset channel: Push the button for the channel you want. The preset button number and channel number will appear on the display.

This radio can store three XM® channels for each button. (The display will show “SAT1”, “SAT2” or “SAT3” when you push “AM·SAT”* button.)

*: Use of satellite radio requires XM® tuner and service. Contact your Toyota dealer for details.

⏏ (Eject button)

This button is used to eject one or all compact discs.

To eject the current compact disc, push and release the compact disc eject button.

To eject a specific disc, push “∨” (preset button 3) or “∧” (preset button 4) until the number of the disc you want to eject is displayed. Push and release the eject button.

To eject all discs at a time, press and hold the eject button until you hear a beep. The last compact disc played before pushing the button will be ejected first. If the ejected disc is not removed for a long time, the eject function will be cancelled.

◀◀/▶▶ (Reverse/Fast–forward button)

Push and hold “▶▶” (preset button 6) or “◀◀” (preset button 5) to fast forward or reverse within a compact disc. When you release the button, the compact disc player will resume playing.

AM·SAT (AM band and XM® Satellite Radio*)

Push the “AM·SAT”* button to turn on the radio and select the AM or XM® band. “AM”, “SAT1”, “SAT2” or “SAT3” will appear on the display.

Error messages

If the satellite radio tuner malfunctions, your audio system will display following error messages.

“ANTENNA”:

- The XM® antenna is not connected. Check whether the XM® antenna cable is attached securely.
- A short–circuit occurs in the antenna or the surrounding antenna cable. See a Toyota certified dealer.

“UPDATING”:

- You have not subscribed to the XM® Satellite Radio. The radio is being updated with the latest encryption code. Contact the XM® Satellite Radio for subscription information. When a contact is canceled, you can choose the “CH000” and all free–to–air channels.
- The premium channel you selected is not authorized. Wait for about 2 seconds until the radio returns to the previous channel or “CH001”. If it does not change automatically, select another channel. If you want to listen to the premium channel, contact the XM® Satellite Radio.

“NO SIGNAL”: The XM® signal is too weak at the current location. Wait until your vehicle reaches a location with a stronger signal.

“LOADING”: The unit is acquiring audio or program information. Wait until the unit has received the information.

“OFF AIR”: The channel you selected is not broadcasting any programming. Select another channel.

“– – –”: The channel you selected is no longer available. Wait for about 2 seconds until the radio returns to the previous channel or “CH001”. If it does not change automatically, select another channel.

The XM® Listener Care Center is also available on the phone, please call (800) 967–2346 during the following hours:
Monday—Saturday: 6 a.m.—2 a.m. Eastern Time
Sunday: 8 a.m.—8 p.m. Eastern Time

*: Use of satellite radio requires XM® tuner and service. Contact your Toyota dealer for details.

AUDIO/CONTROL (Tone and sound balance adjustment function)

Each time you push the “AUDIO/CONTROL” knob, the mode changes. To adjust the tone and balance, turn the knob.

BAS: Adjusts low–pitched tones. The display ranges from –5 to 5.

TRE: Adjusts high–pitched tones. The display ranges from –5 to 5.

FAD: Adjusts the sound balance between the front and rear speakers. The display ranges from F7 to R7.

BAL: Adjusts the sound balance between the right and left speakers. The display ranges from L7 to R7.

Switching over the Speed Automatic Sound Levelizer (ASL) level

ASL: The Automatic Sound Levelizer can be turned on by turning the knob. In addition, turning the knob allows you to select from LOW, MID and HIGH volume and tone settings. The ASL system automatically adjusts volume and tone in accordance with the driving speed. This helps ensure an optimal listening experience even if noise levels rise while driving.

DISC·AUX (Compact disc)

Push the “DISC·AUX” button to play a compact disc.

When the audio system is set into compact disc operation, the display shows the track, or track and disc number currently being played.

To switch between CD and AUX (external device) modes, press the “DISC·AUX” button. The AUX mode is only available when AUX adapter is connected to the system. When the AUX adapter is in use, “AUX” will appear on the display.

Error messages

If the player malfunctions, your audio system will display following error messages.

“WAIT”: The compact disc player unit may be too hot. Allow the player to cool down.

“ERROR 1”: The disc may be dirty, damaged or inserted incorrectly (up–side down). Clean the disc and re–insert it.

“NO DISC”: Eject the disc. Set the disc again.

“ERROR 3”: There is a problem inside the system. Eject the disc. Set the disc again.

“ERROR 4”: Over–current. Ask your Toyota dealer to inspect.

If “NO MUSIC” appears on the display, it indicates that a disc with no MP3/WMA data has been inserted. Remove the disc from the player and insert an MP3/WMA data disc.

If the malfunction still exists, take your vehicle to your Toyota dealer.

∨ DISC ∧

Use these buttons to select a disc you want to listen to.

Push “∨” (preset button 3) or “∧” (preset button 4) until the number of the disc you want to listen appears on the display.

FM1 FM2

Push the “FM1” or “FM2” button to turn on the radio and select the FM band. “FM1” or “FM2” will appear on the display. This system allows you to set twelve FM stations, two for each of the preset button.

TYPE/FOLDER (Type/Folder up/down)

XM® Satellite Radio*—

When you push the “∨” or “∧” side of the “TYPE/FOLDER” button while receiving a XM® channel, the current channel category appears on the display.

When the channel category appears, push either “∨” or “∧” side of the “TYPE/FOLDER” button to switch to the next or previous category.

*: Use of satellite radio requires XM® tuner and service. Contact your Toyota dealer for details.

MP3/WMA player

To skip up or down to a different folder: Push “∧” or “∨” side of the “TYPE/FOLDER” several times until the number of the folder you want to listen to appears on the display.

To jump to the first file in the first folder: Push and hold the “∨” side of the button until you hear a beep.

When playing a disc featuring both audio data (CD–DA) and MP3/WMA files, audio data (CD–DA) is played.

LOAD

This button is used to load the compact discs in the compact disc player. This player can store up to six discs.

To load one compact disc only, quickly push and release the button. When the indicators on both sides of the slot turn green, insert a compact disc. After the disc is loaded, the shutter of the slot will close.

If no compact disc is inserted, the shutter will close after 15 seconds.

To load multiple compact discs, push and hold the button (until you hear a beep when the audio system is on). When the indicators on both sides of the slot turn green, insert a compact disc. After the disc is loaded, the shutter of the slot will close. After a few seconds, the shutter will automatically open again and the indicators will turn green so the next disc can be inserted. The same process can be applied for loading the rest of the discs. If the player is full of discs, “DISC FULL” will appear on the display.

If no compact disc is inserted, the shutter will close after 15 seconds.

PWR·VOL (Power and Volume)

Push “PWR·VOL” to turn the audio system on and off. Turn “PWR·VOL” to adjust the volume.

RAND (Random)

Compact disc player

There are two random features—you can either listen to the tracks on one compact disc in random order, or listen to the tracks on all the compact discs in the magazine in random order.

To play the tracks on one disc in random order:
Quickly push and release “RAND” (preset button 1). “RAND” will appear on the display and the player will perform the tracks on the disc you are listening to in random order. To turn off the random feature, push this button again.

To play all the tracks in the magazine in random order:
Push and hold “RAND” (preset button 1) until you hear a beep. “·RAND” will appear on the display and the player will perform all the tracks on all the discs in the magazine in random order. To turn off the random feature, push this button again.

MP3/WMA player

There are two random playback features—you can either listen to all of the files on the compact discs in random order. You can also listen to the files in a single folder in random order.

To randomly play the files in a folder: Quickly push and release “RAND” (preset button 1). “RAND” will appear on the display.

To randomly play all of the files on the compact disc:
Push and hold “RAND” (preset button 1) until you hear a beep. “RAND” will appear on the display and the player will play all of the files on the disc in random order. To turn off the random playback feature, push this button again.

RPT (Repeat)

Compact disc player

There are two repeat features—you can either replay a disc track or a whole compact disc.

Repeating a track:
Quickly push and release “RPT” (preset button 2) while the track is playing. “RPT” will appear on the display. When the track ends, it will automatically replay. To turn off the repeat feature, push this button again.

Repeating a disc:
Push and hold “RPT” (preset button 2) until you hear a beep. “RPT” will appear on the display. The player will repeat all the tracks on the disc you are listening to. When the disc ends, the player will automatically go back to the first track on the disc and replay. To turn off the repeat feature, push this button again.

MP3/WMA player

There are two repeat features—you can repeat a single file or an entire folder.

Repeating a file:
Quickly push and release “RPT” (preset button 2) while the file is playing. “RPT” will appear on the display. When the file ends, it will repeat automatically. This process will be continued until you push the button again to turn off the repeat feature.

Repeating a folder:
Push and hold “RPT” (preset button 2) until you hear a beep. “RPT” will appear on the display. The player will repeat all of the files in the folder. When the last file in the folder ends, the folder will repeat from the beginning. To turn off the repeat feature, push this button again.

SCAN

Radio

You can either scan all the frequencies on a band or scan only the preset stations for that band.

To scan the preset stations:
Push and hold the “SCAN” button until you hear a beep. The radio will tune in the next preset station up the band, stay there for 5 seconds, and then move to the next preset station. To stop scanning, push this button again.

To scan all the frequencies:
Quickly push and release the “SCAN” button. The radio will find the next station up the station band, stay there for 5 seconds, and then scan again to the next station. To stop scanning, push this button again.

XM® Satellite Radio*—

You can either scan the currently selected channel category or scan only the preset channels for the band.

To scan the preset channels:
Push and hold the “SCAN” button until you hear a beep. “SCAN” appears on the display. The radio will tune in the next preset channel up the band, stay there for 5 seconds, and then move to the next preset channel. To stop scanning, push this button again.

To scan the currently selected channel category:
Quickly push and release the “SCAN” button. “SCAN” appears on the display. The radio will find the next channel in the same channel category up the band, stay there for 5 seconds, and then scan again. To stop scanning, push this button again.

*: Use of satellite radio requires XM® tuner and service. Contact your Toyota dealer for details.

Compact disc player

There are two scan features—you can either scan the tracks on a specific disc or scan the first tracks of all the discs in the magazine.

Scanning the tracks on a disc:
Quickly push and release the “SCAN” button. “SCAN” will appear on the display and the player will scan all the tracks on the disc you are listening to. To stop scanning, push this button again. If the player scanned all the tracks on the disc, it will stop scanning.

Scanning the first tracks of all the discs in the magazine:
Push and hold the “SCAN” button until you hear a beep. “·SCAN” will appear on the display and the player will scan the first track of the next disc. To stop scanning, push this button again. If the changer has scanned all the discs, it will stop scanning.

MP3/WMA player

There are two scan features—you can either scan the files in a folder on a specific disc or scan the first file of all the folder.

Scanning the files on a folder:
Quickly push and release “SCAN”. “SCAN” will appear on the display and the player will scan all the files in the folder you are listening to. To select a file, push the “SCAN” again. After all the tracks on the disc have been scanned in one pass, normal play resumes.

Scanning the first file of all the folders:
Push “SCAN” until you hear a beep. “ SCAN” will appear on the display and the player will scan the first file of the next folder. To select a folder, push the “SCAN” again. After all the folders have been scanned in one pass, normal play resumes.

SEEK/TRACK (Seeking/Track up/down)

Radio

In the seek mode, the radio finds and plays the next station up or down the station band.

To seek the next station, quickly push and release “∧” or “∨” side of the “SEEK/TRACK” button. Do this again to find the station after that.

XM® Satellite Radio*—

To select the next channel within the current channel category, push the “∧” or “∨” side of the “SEEK/TRACK” button. Repeat until a desired channel is found.

*: Use of satellite radio requires XM® tuner and service. Contact your Toyota dealer for details.

Compact disc player

Use this button to skip up or down to a different track.

Push "∧" or "∨" side of the "SEEK/TRACK" button until the number of the track you want to listen to appears on the display. If you want to return to the beginning of the current track, quickly push the down side of the button one time.

MP3/WMA player

Use this button to file up or down to a different file.

Push "∧" or "∨" side of the "SEEK/TRACK" several times until the file you want to listen to appears on the display. If you want to return to the beginning of the current file, push the "∨" side of the button one time.

ST (Stereo reception) display

Your radio automatically changes to stereo reception when a stereo broadcast is received. "ST" appears on the display. If the signal becomes weak, the radio reduces the amount of channel separation to prevent the weak signal from creating noise. If the signal becomes extremely weak, the radio switches from stereo to mono reception.

TEXT

XM® Satellite Radio*1—

When you push the "TEXT" button, the display changes as follows:
CH NAME → TITLE (SONG/PROGRAM TITLE) → NAME (ARTIST NAME/FEATURE) → CH NUMBER → CH NAME

Up to 10 alphanumeric characters can be displayed. (Some information will not be fully displayed.)

The message display will be canceled if any button that affects the display is pushed.

If there is no song/program title or artist name/feature associated with the channel at that time, "– – – – –" will appear on the display.

This XM® tuner supports "Audio Services" (Music and Talk) of only XM® Satellite Radio and "Text Information"*2 linked to the respective audio services.

*1: Use of satellite radio requires XM® tuner and service. Contact your Toyota dealer for details.

*2: Text Information includes, Channel Name, (Artist) Name, (Song) Title and Category Name.

Compact disc player

This button is used to change the display for the compact disc that contains text data.

To change the display, quickly push and release the "TEXT" button while the compact disc is playing. The display changes in the order from the elapsed time to disc title to track title, then back to the elapsed time.

If this button is pushed while a compact disc that does not contain text data is playing, "NO TITLE" will appear on the display.

If the entire disc or track title does not appear on the display, push and hold the button until you hear a beep. The rest of the title will appear.

MP3/WMA player

This button is used to change the display for the MP3/WMA file that contains text data.

To change the display, quickly push and release the “TEXT” button while the MP3/WMA file is playing. The display changes in the order from the elapsed time to folder name to file name to album title to track title to artist name, then back to the elapsed time.

If this button is pushed while an MP3/WMA file that does not contain text data is playing, “NO TITLE” will appear on the display.

If the entire text data is not displayed, push and hold it until you hear a beep. The rest of the text data will appear.

TUNE·FILE (Tuning and File up/down)

Radio

Turn the “TUNE·FILE” knob clockwise to step up the frequency. Turn the knob counterclockwise to step down the frequency.

XM® Satellite Radio*—

Turn the “TUNE·FILE” knob clockwise to step up the channel. Turn the knob counterclockwise to step down the channel.

*: Use of satellite radio requires XM® tuner and service. Contact your Toyota dealer for details.

MP3/WMA player

Turn the “TUNE·FILE” knob clockwise to file up. Turn the knob counterclockwise to file down.

Audio remote controls (steering switches)

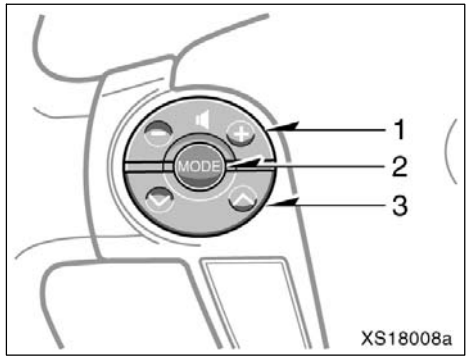

Some parts of the audio system can be adjusted using the switches on the steering wheel.

Details of the specific switches, controls, and features are described below.

1. Volume control switch
2. “MODE” switch
3. “∧∨” switch

1. Volume control switch

Push "+" side to increase the volume. The volume continues to increase while the switch is being pushed.

Push "–" side to decrease the volume. The volume continues to decrease while the switch is being pushed.

2. "MODE" switch

Push "MODE" switch to select an audio mode. Each push changes the mode sequentially if the desired mode is ready to use.

To turn the audio system on, push the "MODE" switch.

To turn the audio system off, push and hold the "MODE" switch until the system turns off.

3. "∧∨" switch

Radio

This switch has the following features—

To select a preset station:
Quickly push and release the "∧" or "∨" side of the switch. Do this again to select the next preset station.

To seek a station:
Push and hold the "∧" or "∨" side of the switch until you hear a beep. Do this again to find the next station. If you push the switch on either side during the seek mode, seeking will be cancelled.

To step up or down the frequency, push and hold the switch even after you hear a beep. When you release from the switch, the radio will begin seeking up or down for a station. Do this again to find the next station.

XM® Satellite Radio*—

To select a preset channel, push the "∧" or "∨" side of the switch. Repeat until a desired channel is found.

*: Use of satellite radio requires XM® tuner and service. Contact your Toyota dealer for details.

Compact disc player

Use this switch to skip up or down to a different track in either direction.

Quickly push and release the "∧" or "∨" side of the switch until the track you want to listen to is set. If you want to return to the beginning of the current track, push the "∨" side of the switch once, quickly.

With compact disc changer only—

Push and hold the "∧" or "∨" side of the switch until the disc you want to listen to is set.

MP3/WMA player

To select a desired file:
Quickly push and release the "∧" or "∨" side of the switch until the file you want to listen to is set. If you want to return to the beginning of the current file, push the "∨" side of the switch once, quickly.

To select a desired folder:
Push and hold the "∧" or "∨" side of the switch until you hear a beep. Repeat this until the folder you want to listen to is set.

With compact disc changer only—

To select a desired disc:
Push and hold the "∧" or "∨" side of the switch until you hear a beep. Repeat this until the disc you want to listen to is set.

AUX adapter

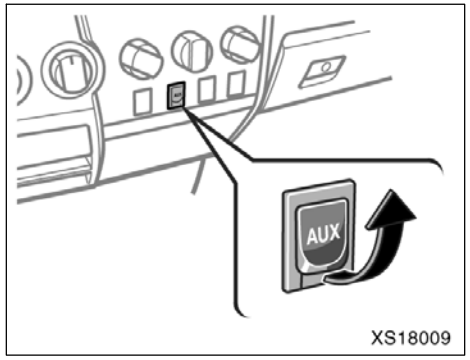

An AUX adapter is installed on the instrument panel.

By inserting a mini plug into the AUX adapter, you can listen to music from a portable audio device through the vehicle's speaker system.

To use the AUX adapter, switch to the AUX mode (external device mode) by pressing the "DISC·AUX" button. When the AUX adapter is in use, "AUX" will appear on the display. To adjust the volume, turn the "PWR·VOL" knob.

When using a portable audio device connected to the power outlet or cigarette lighter, noise may occur during playback. If this happens, use the power source of the portable audio device.

If you install an audio system other than a genuine audio system, you will not be able to use the AUX adapter.

NOTICE
To reduce the chance of audio noise, do not leave mini plug connected to AUX adapter without auxiliary playback device connected.

Rear seat entertainment system—

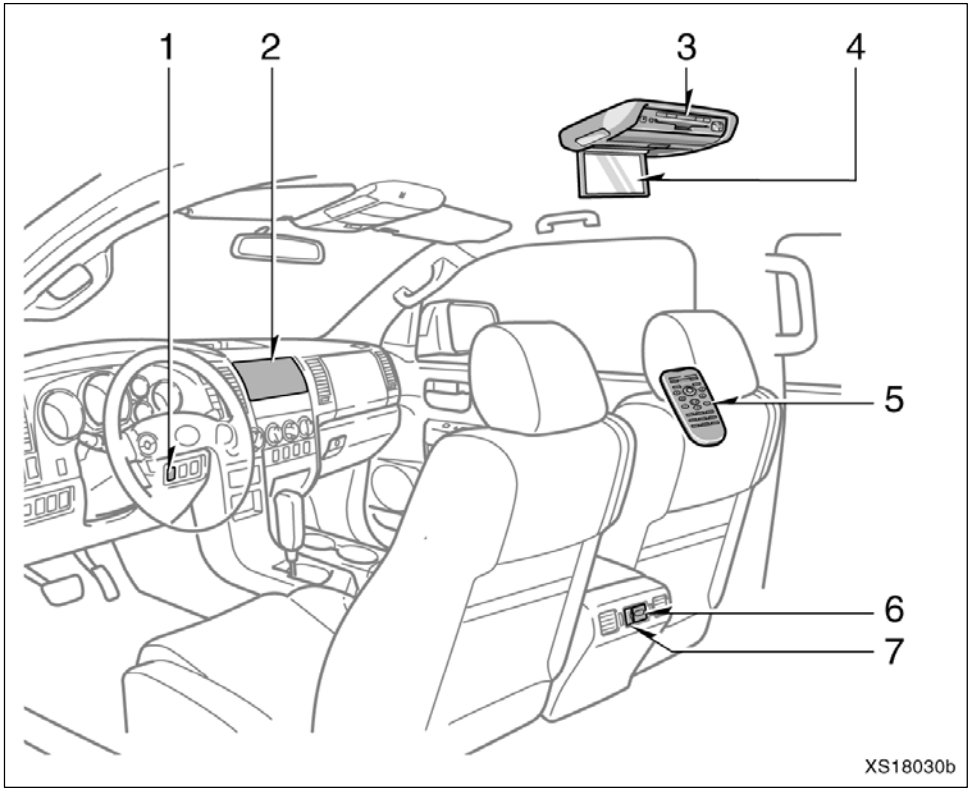

Separate seats type

The rear seat entertainment system consists of the following components.

1. Power outlet main switch
2. Front audio system
3. DVD player
4. Rear seat entertainment system display
5. Rear seat entertainment system controller
6. A/V input adapter
7. Power outlet

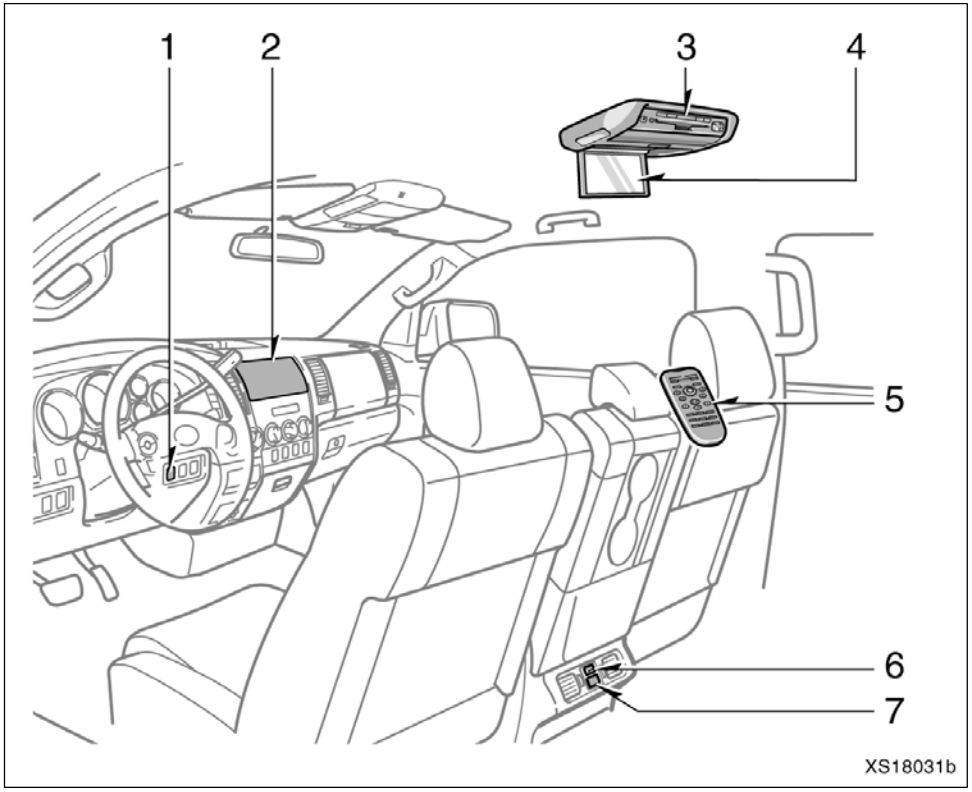

Bench seat type

The rear seat entertainment system consists of the following components.

1. Power outlet main switch
2. Front audio system
3. DVD player
4. Rear seat entertainment system display
5. Rear seat entertainment system controller
6. Power outlet
7. A/V input adapter

The rear seat entertainment system is designed for the rear passengers to enjoy audio and DVD video separately from the front audio system.

The rear seat entertainment system can be operated when the ignition switch is in the “ACC” or “ON” position.

The rear passengers can enjoy DVD video, audio CD, video CD, CD text, dts–CD and MP3.

The rear seat entertainment system can play DVD video, audio CD, video CD, CD text, dts–CD or MP3 only when a disc is loaded in the DVD player.

You can enjoy videos and sound when your personal audio system is connected to the input terminal adapter. For details, refer to the manufacturer’s instructions.

You can enjoy the rear seat entertainment system with a wireless headphone. The wireless headphone can be used within rear seat. If the signal becomes weak, the headphone will mute. For details, refer to the manufacturer’s instructions.

With some wireless headphone generally available in the market, it may be difficult to catch sound properly. Toyota recommends the use of Toyota genuine wireless headphone.

You can purchase a wireless headphone at a Toyota dealer.

⚠ CAUTION

- **Do not operate a motor vehicle while using headphones. Doing so may cause an accident, resulting in death or serious injury.**
- **With DVD player:**

  Conversational speech on some DVDs is recorded at a low volume to emphasize the impact of sound effects. If you adjust the volume assuming that the conversations represent the maximum volume level that the DVD will play, you may be startled by louder sound effects or when you change to a different audio source. Be sure to adjust the volume with this in mind.

  Make sure the volume is not increased, before you turn on the headphone.

—Display

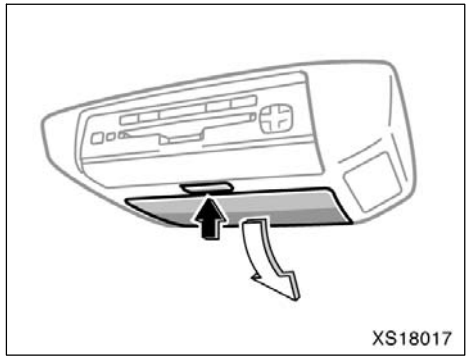

To open the display, push the lock release button.

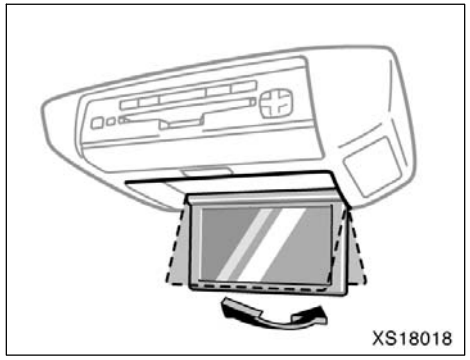

Pull the display down to an easily viewable angle (between 90° and 125°)

NOTICE

The screen should be cleaned with a dry soft cloth. If the screen is pushed by hand or wiped with a hard cloth, the surface of the screen may be scratched.

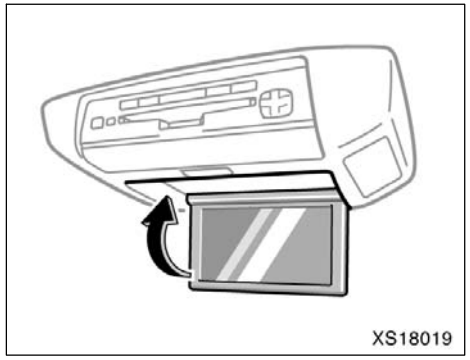

To close, push the display up until you hear a click.

The illumination of the screen is automatically turned off when the display is closed. However, the rear seat entertainment system is not turned off.

⚠ CAUTION

To reduce the chance of injury in case of an accident or sudden stop while driving, close the display when it is not in use.

NOTICE

- ***Benzene or alkaline solutions may damage the coated surface of the screen.***
- ***To prevent the battery from being discharged, do not turn on the rear seat entertainment system longer than necessary when the engine is not running.***

INFORMATION

- ***Wipe off fingerprints on the surface of the display using a glass cleaning cloth.***
- ***The displayed image may become darker and moving images may be slightly distorted when the display is cold.***
- ***When you look at the screen through polarized material such as polarized sunglasses, the screen may be dark and hard to see. If so, change the angle of the screen, look at the screen from different angles, adjust the screen settings on the "Display" screen, or take off your sunglasses.***

—Rear seat entertainment system controller

The rear seat entertainment system can be operated with the rear seat entertainment system controller and buttons on the DVD player unit. The system cannot be operated by touching the switches on the screen directly.

⚠ CAUTION

Do not disassemble or modify the controller. It may cause an accident, fire or electric shock.

NOTICE

Keep the controller away from direct sunlight, high heat and high humidity. These conditions could cause the case to deform or the battery to explode or leak.

BEFORE USING THE CONTROLLER (for new vehicle owners)

A battery is already set in the controller with an insulating sheet, which prevents the battery from being discharged. Before using the controller, remove the insulating sheet according to the following procedure.

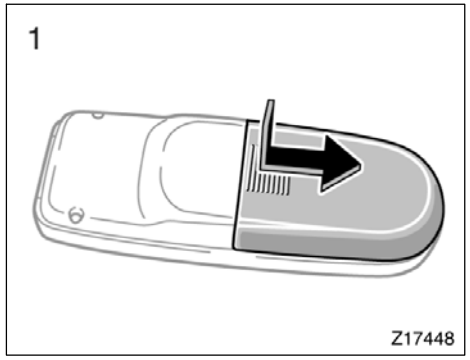

1. Remove the cover of the controller as shown.

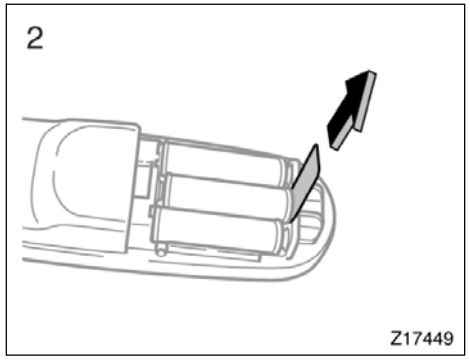

2. Remove the insulating sheet.

USING THE CONTROLLER

To use the rear seat entertainment system controller, direct the signal output portion of the controller to the signal reception portion of the rear seat entertainment system display.

The controller does not operate properly when the signal reception portion of the display is exposed to direct sunlight. Block the display from direct sunlight.

⚠ CAUTION

To reduce the chance of injury in case of an accident or a sudden stop while driving, stow the controller in the seatback pocket when it is not in use.

NOTICE

Observe the followings, otherwise the controller may be damaged.

- ***Do not drop or strongly knock the controller against hard objects.***
- ***Do not sit on or place heavy objects on the controller.***
- ***Do not leave the controller exposed to high temperatures (such as on the instrument panel) for a long time.***

—Control buttons

▶Controller

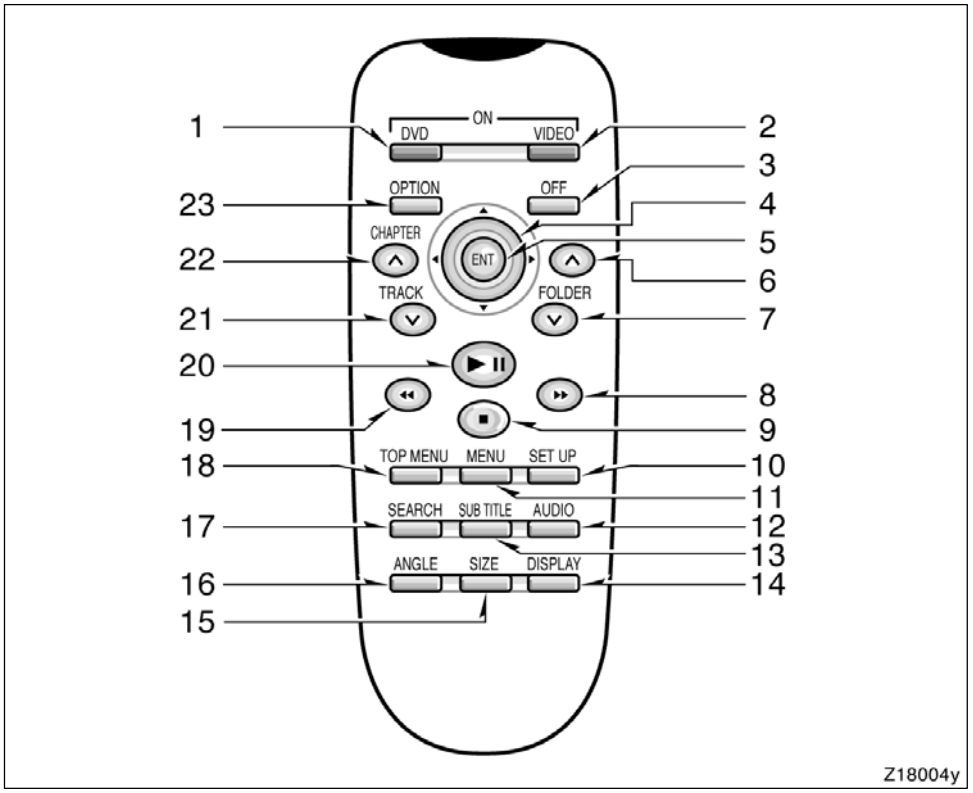

1. “DVD” button

   This button turns on the DVD mode.

2. “VIDEO” button

   This button causes the display to use the video signal from an external video device.

3. “OFF” button

   This button turns off the rear seat entertainment system.

4. Joystick

   This joystick selects a control switch, mode switch on the screen or the menu for the disc.

5. “ENT” button

   This button inputs the selected switch or the selected menu for the disc.

6. “FOLDER ∧” button

   This button selects a desired folder.

7. “FOLDER ∨” button

   This button selects a desired folder.

8. “▶▶” button

   This button fast forwards a screen when the DVD player is operated.

9. "■" button

   This button stops a screen when the DVD player is operated.

10. "SET UP" button

    This button indicates the initial set up screen when the DVD player is operated.

11. "MENU" button

    This button indicates the menu screen for DVD video when the DVD player is operated.

12. "AUDIO" button

    This button indicates the changing audio screen when the DVD player is operated.

13. "SUB TITLE" button

    This button indicates the changing subtitle screen when the DVD player is operated.

14. "DISPLAY" button

    This button adjusts the color, tone, contrast and brightness of the screen.

15. "SIZE" button

    This button changes the display mode when the DVD player is operated or the video mode is on.

16. "ANGLE" button

    This button selects the angle of the screen when the DVD player is operated.

17. "SEARCH" button

    This button indicates the title search screen when the DVD player is operated.

18. "TOP MENU" button

    This button indicates the title selection screen for DVD video when the DVD player is operated.

19. "◀◀" button

    This button reverse a screen when the DVD player is operated.

20. "▶ II" button

    This button plays or pauses a screen when the DVD player is operated.

21. "TRACK/CHAPTER ∨" button

    This button selects track/chapter.

22. "TRACK/CHAPTER ∧" button

    This button selects track/chapter.

23. "OPTION" button

    This button indicates the control switches on the screen when the DVD player is operated.

REPLACING CONTROLLER BATTERY

For replacement, use 3 AA batteries.

⚠ CAUTION

Special care should be taken to prevent small children from swallowing the removed battery or components.

NOTICE

- ***When replacing the battery, be careful not to lose the components.***
- ***Replace only with the same or equivalent type recommended by a Toyota dealer.***
- ***Dispose of used batteries according to the local laws.***

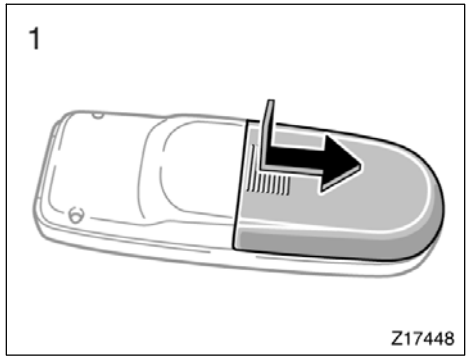

Replace the battery according to the following procedure:

1. Remove the cover of the controller as shown.

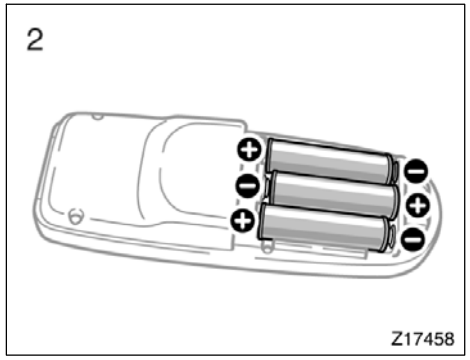

2. Remove the discharged batteries and put in the new batteries as shown. Install the cover.

NOTICE

- ***Be sure that the positive side and negative side of the controller battery should be faced correctly.***
- ***Do not replace the battery with wet hands. Water may cause rust.***
- ***Do not touch or move any components inside of the controller, or it may interfere with proper operation.***
- ***Be careful not to bend the electrode of the controller battery insertion.***
- ***Close the battery case securely.***

After replacing the battery, check that the controller operates properly. If the controller still does not operate properly, contact your Toyota dealer.

▶Buttons on the DVD player unit

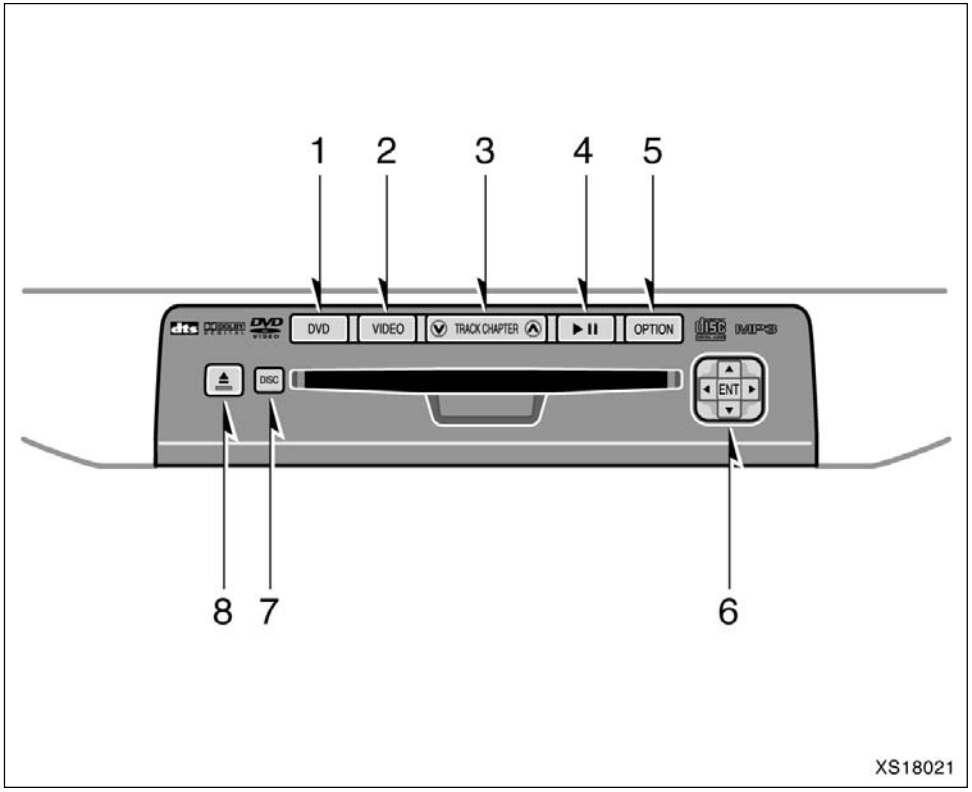

1. “DVD” button

   This button turns on the rear seat entertainment system and selects the mode.

2. “VIDEO” button

   This button causes the display to use the video signal from an external video device.

3. “∨TRACK·CHAPTER∧” button

   This button skips directly to a desire track or chapter.

4. “▶ II” button

   This button plays or pauses a screen when the DVD player is operated.

5. “OPTION” button

   This button indicates the control switches on the screen when the DVD player is operated.

6. Joystick/“ENT” button

   The joystick selects a control switch mode switch on the screen or the menu for the disc.

   The “ENT” button inputs the selected switch or the selected menu for the disc.

7. “DISC” indicator light

   This light indicates that the disc is loaded.

8. “⏏” button

   This button ejects a disc.

—Turning the rear seat entertainment system on and off

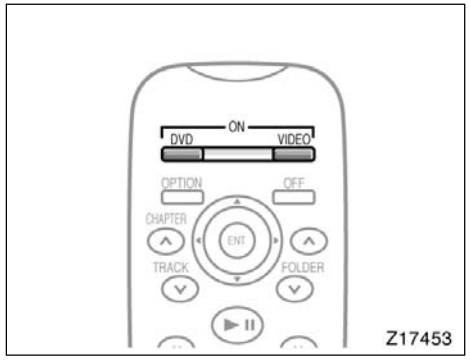

Controller

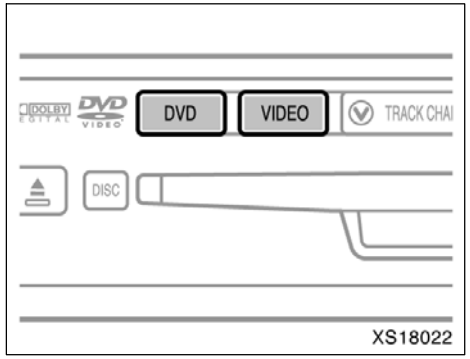

DVD player unit

To turn on the system, push the “DVD” button or “VIDEO” button.

When the “DVD” button is pushed, the disc load screen changes to the DVD player operation screen.

When the “VIDEO” button is pushed, the images and sounds from the personal audio machine are output.

The “DVD” button is effective only when a disc is inserted.

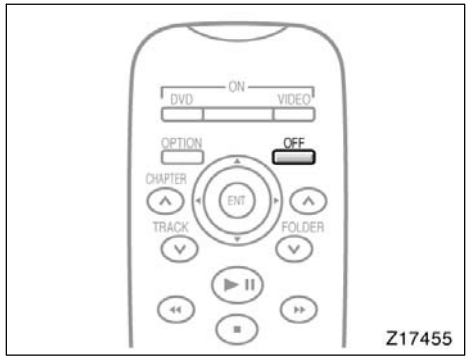

To turn off the system, push the "OFF" button.

When the front audio system is turned off, the rear audio system and the DVD player will be turned off simultaneously.

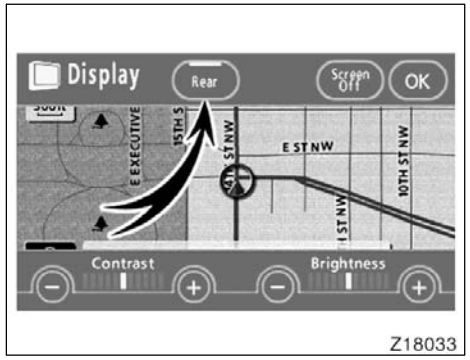

Vehicles with navigation system—The rear seat entertainment system can be switched ON and OFF by pushing the "Rear" switch on the front audio system.

—Front audio system operation

The rear DVD player can be operated through the front audio system.

—Rear system lock

The audio system controls in the instrument panel allow the operation of the rear seat entertainment system by rear seat passengers to be disabled.

Turning on the rear system lock prevents small children from using the remote controller or operation panel of the DVD player unit to operate the rear seat entertainment system during driving.

Turn the audio system on. Push the “AUDIO CONTROL” knob repeatedly until “RSE” is displayed. Then, turn the “AUDIO CONTROL” knob until “ON” is displayed, and then push the “AUDIO CONTROL” knob.

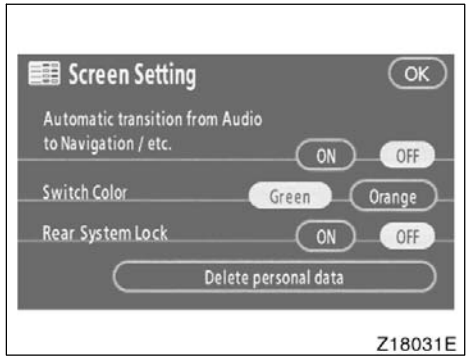

Vehicles with navigation system—

Push the “INFO” button to change the screen to “Screen Setting”.

Push the “ON” switch on the “Screen Setting” screen to turn on the “Rear system lock”. Then push “OK”.

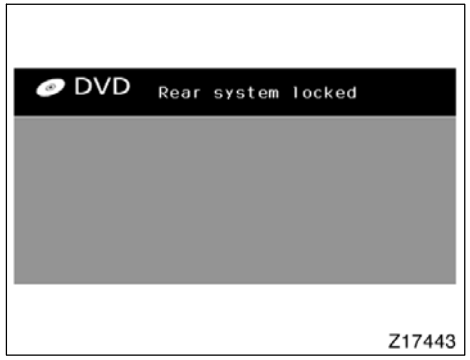

When the rear system lock is on and any button is pushed on the remote controller or the operation panel, the screen shown above is displayed for approximately 6 seconds.

Even when the rear system lock is turned on during play mode, the images and sounds continue without interruption.

The condition of the rear system lock is maintained, even when the ignition switch is turned off.

—DVD player

The DVD player can play audio CDs/ MP3 CDs, DVD video discs, CD texts, dts–CDs and video CDs.

For appropriate discs for this player, see “Audio/video system operating hints” on page 339 in this Section.

The DVD player works when the ignition switch is in the “ACC” or “ON” position.

To turn on the DVD player, a disc must be loaded in the player.

To turn off the player, eject the disc.

Error messages

If the player malfunctions, your audio system will display following error messages.

If “DISC CHECK” appears on the screen: It indicates that the disc is dirty, damaged or it was inserted upside down. Clean the disc or insert it correctly.

If “REGION ERROR” appears on the screen: It indicates that the DVD region code is not set properly.

If “DVD ERROR” appears on the screen: There is a problem inside the player. Eject the disc. Set the disc again.

If the malfunction still exists, take your vehicle to your Toyota dealer.

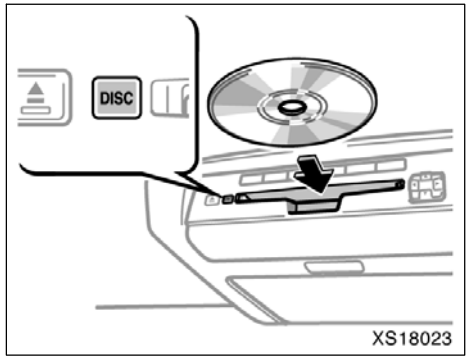

INSERTING THE DISC

Insert the compact disc into the slot with the label side up.

“DISC” indicator light turns on while the disc is loaded.

If the label faces down, the disc cannot be played. In this case, “DISC CHECK” and disc number appear on the screen.

If a disc which is not playable is inserted, “DISC CHECK” will also appear on the screen. For appropriate discs for this player, see “Audio/video system operating hints” on page 339 in this Section.

The player will play the track or chapter, and it will play from the beginning of the track or chapter again after it reaches the end.

⚠ CAUTION

This product is a class 1 laser product. Use of controls or adjustments or performance of procedures other than those specified herein may result in hazardous radiation exposure. Do not open covers and do not repair by yourself. Refer servicing to qualified personnel.

NOTICE

Never try to disassemble or oil any part of the DVD player. Do not insert anything other than a disc into the slot.

8 cm (3 in.) compact disc singles

Your compact disc player needs an adaptor to play compact disc singles. Compact disc singles are about 8 cm (3 in.) in diameter–smaller than standard discs.

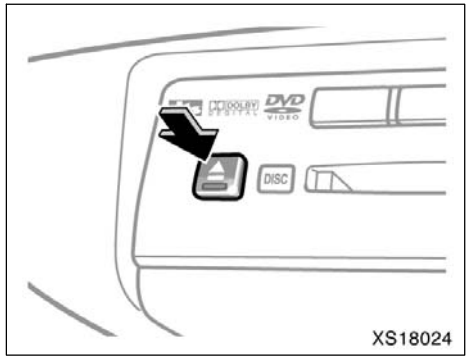

EJECTING THE DISC

Push the "⏏" button.

—DVD player operation switches

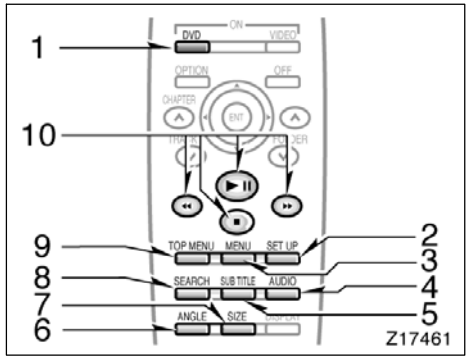

The DVD player can be operated with the controller buttons directly.

1. "DVD" button
2. "SET UP" button
3. "MENU" button
4. "AUDIO" button
5. "SUB TITLE" button
6. "ANGLE" button
7. "SIZE" button
8. "SEARCH" button
9. "TOP MENU" button
10. "▶ II", "■", "◀◀" and "▶▶" buttons

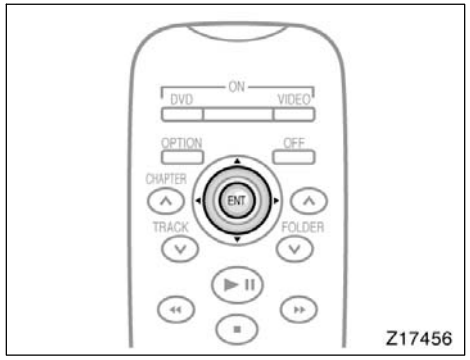

Controller

The player can also be operated with the switches on the screen.

To operate the switches on the screen, select the switch by the joystick and push the “ENT” button. You cannot select the switches on the screen by touching them directly.

When the switch is selected by the joystick, the outline of the switch changes to blue. Push the “ENT” button, and the switch will be highlighted in green.

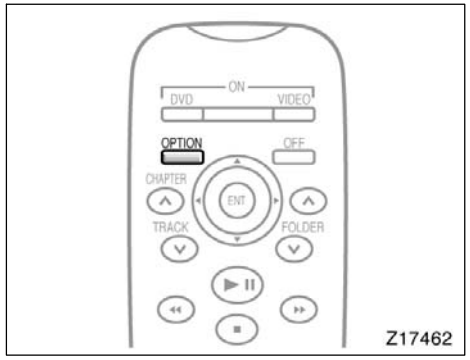

Controller

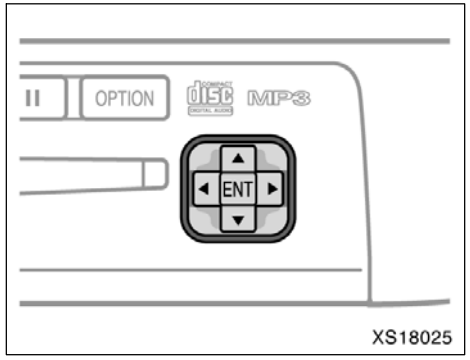

DVD player unit

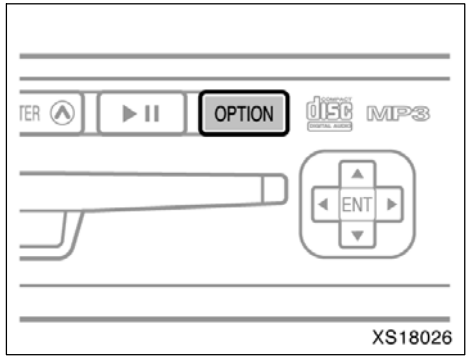

DVD player unit

TURNING THE OPERATION SWITCHES ON AND OFF

To turn on the operation switches, push the “OPTION” button on the controller.

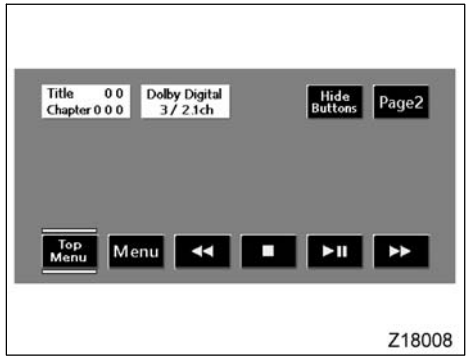

Top page (DVD video operation switch)

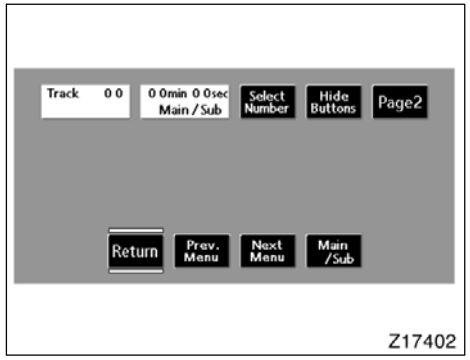

Top page (video CD)

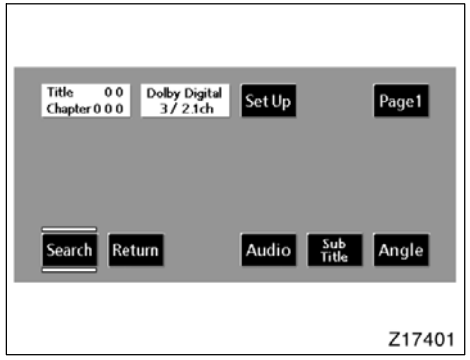

Second page (DVD video operation switch)

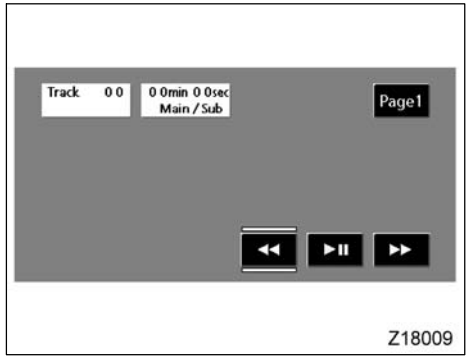

Second page (video CD)

There are operation switches on the “Page 1” and “Page 2” screens.

To change the screen, push the “Page 1” or “Page 2” switch on the screen.

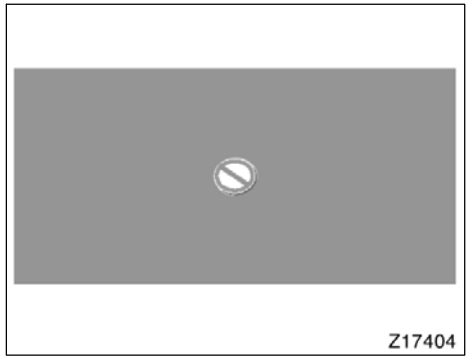

If “⊘” appears on the screen when you select a switch, it indicates that the switch cannot work.

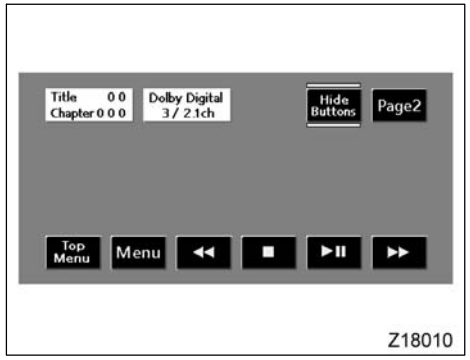

On the screen

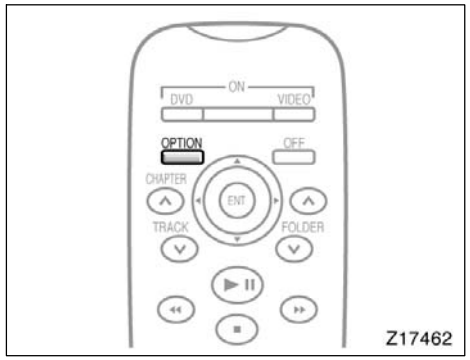

Controller

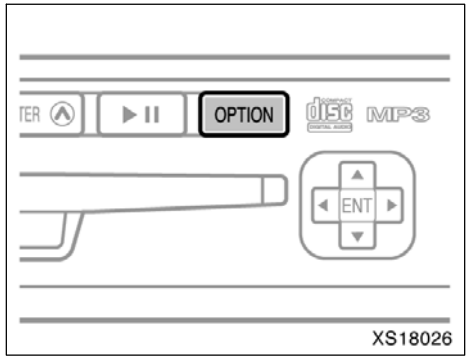

DVD player unit

To turn off the switches on the screen, push the “OPTION” button on the controller once again or push the “Hide Buttons” on the screen.

—DVD player operation

NOTE: The playback condition of some DVD video discs may be determined by the DVD video software producer. This DVD player plays discs as the software producer intended. Therefore, some functions may not work properly. Be sure to read the instruction manual for the DVD video disc separately provided. For detailed information about DVD video discs, see “—DVD video disc information” on page 335 in this Section.

Precautions for DVD video discs

When recording on a DVD video, video CD or audio tracks may not record in some cases while the menu is displayed. As audio will not play in this case, verify that the video tracks are playing and then activate playback.

The title/chapter number and playback time display may not appear while playing back certain DVD video discs.

⚠ CAUTION

Conversational speech on some DVDs is recorded at a low volume to emphasize the impact of sound effects. If you adjust the volume assuming that the conversations represent the maximum volume level available for the DVD, you may be startled by louder sound effects or when you change to a different audio source. Loud sounds may have a significant impact on the human body or pose a driving hazard. Keep this in mind when you adjust the volume.

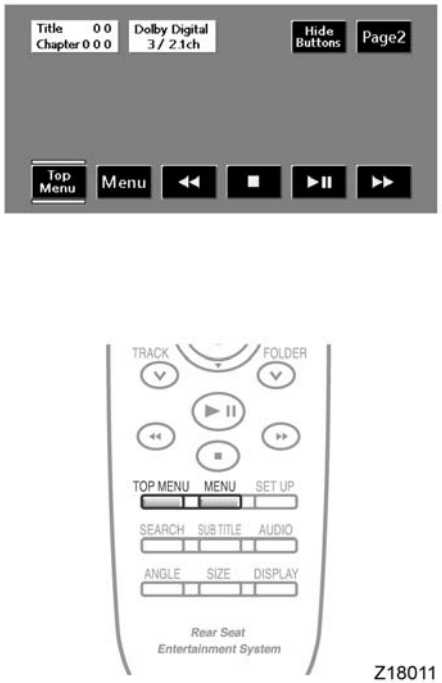

Z18011

TURNING THE MENU SCREEN FOR THE DISC ON OR OFF

To turn on the menu screen for the disc, push the “Top Menu” or the “Menu” switch on the screen. You can also turn on the menu screen by pushing the “MENU” or “TOP MENU” button on the controller.

For the operation of the menu screen, see the separate manual for the DVD disc.

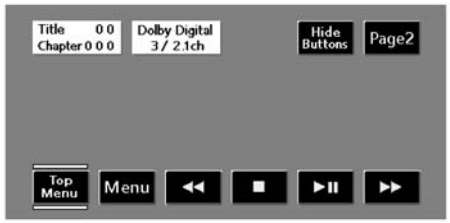

Z18012

You can select the menu for the disc by the joystick and the “ENT” button on the controller.

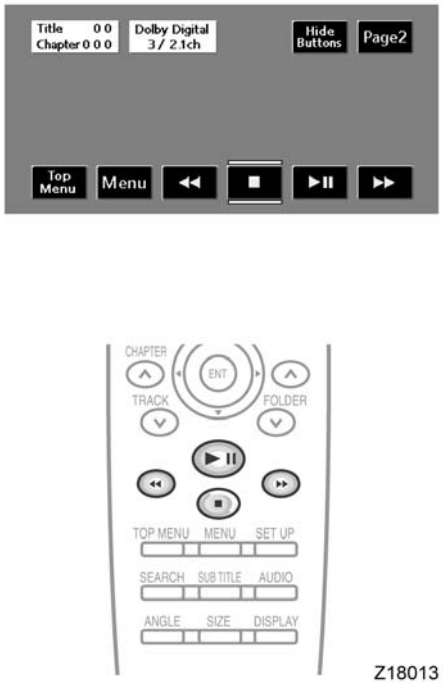

Z18013

OPERATING THE "▶ II", "■", "◀◀" AND "▶▶" SWITCHES/BUTTONS

"▶ II" switch/button: Push this switch/button to pause the disc or to cancel the pause and return to normal playing.

"■" switch/button: This switch/button stops a screen when the DVD player is operated.

"◀◀" and "▶▶" switches/buttons: Push and hold the "◀◀" or "▶▶" switch/button to fast forward or reverse. When you release the switch/button, the DVD player will resume playing.

Push the "▶▶" switch/button while pausing, the DVD video plays the slow–motion video replay.

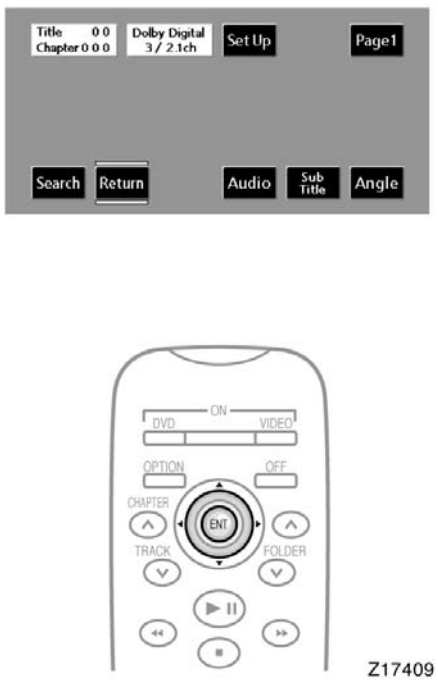

Z17409

SKIPPING TO THE PREDETERMINED SCREEN

To skip to the predetermined screen, push the “Return” switch. The DVD player starts playing from the beginning of the predetermined screen.

For further details of the predetermined screen, see the separate manual for the DVD disc.

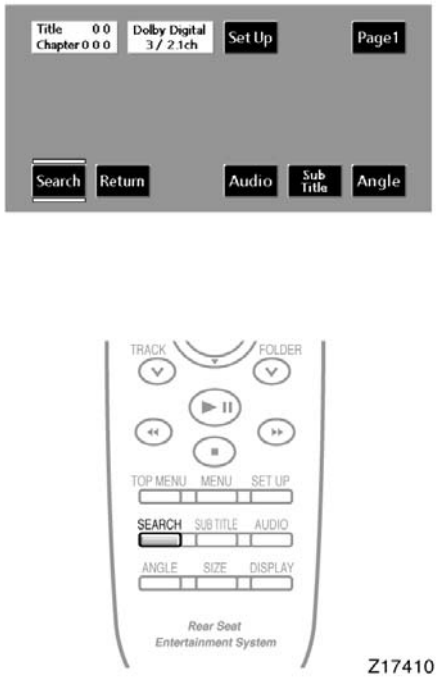

SELECTING THE TITLE

To display the searching title screen, push the “Search” switch on the screen. You can also display the screen by pushing the “SEARCH” button on the controller.

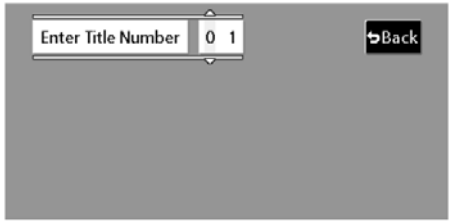

Z17411

Select the title number by using the joystick and push the “ENT” button to enter the number. The player starts playing disc for that title number. The selected title number will appear on the screen.

Push the “Back” switch to return to the menu screen.

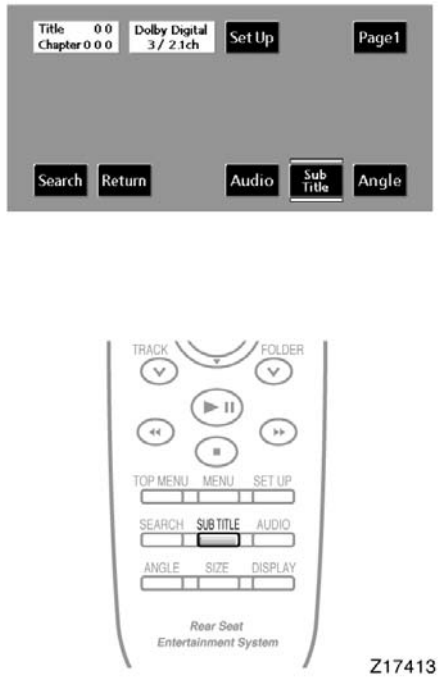

Z17413

CHANGING THE SUBTITLE LANGUAGE

Push the “Sub Title” switch on the screen, and then the changing subtitle language screen will appear. You can also display the screen by pushing the “SUB TITLE” button on the controller.

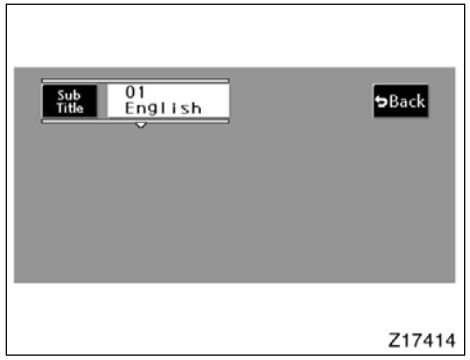

Each time you push the “Sub Title” switch, another language stored on the disc is selected.

To turn off the subtitles, push the “Hide Buttons” switch.

Push the “Back” switch to return to the previous screen.

The selected subtitle language will appear on the screen.

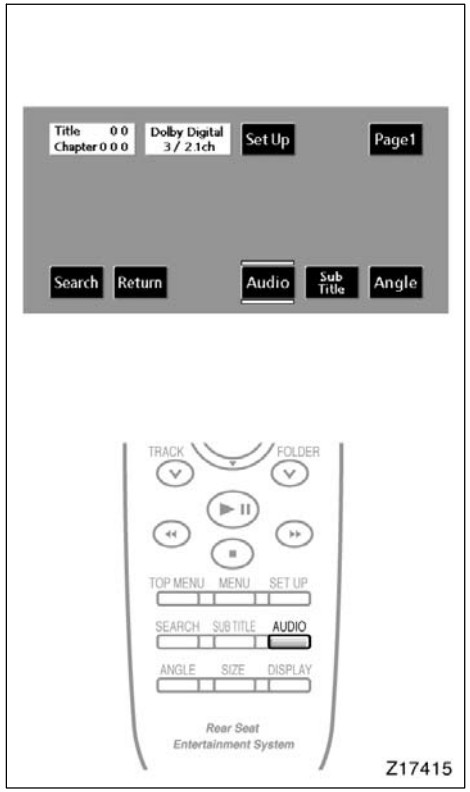

CHANGING AUDIO LANGUAGE

Push the “Audio” switch on the screen and then the changing audio language screen will appear. You can also display the screen by pushing the “AUDIO” button on the controller.

Z17416

Each time you push the “Audio” switch, another language stored on the disc is selected.

To turn off the audio language screen, push the “Hide Buttons” switch.

Push the “Back” switch to return to the previous screen.

The selected audio language will appear on the screen.

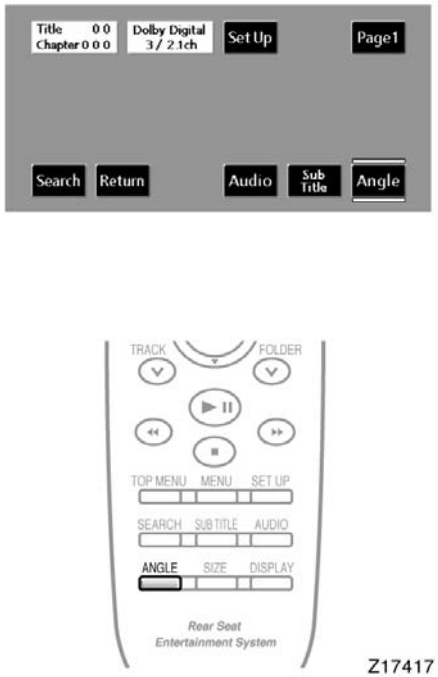

Z17417

CHANGING ANGLE SCREEN

Push the “Angle” switch on the screen, and then the changing angle screen will appear. You can also display the screen by pushing the “ANGLE” button on the controller.

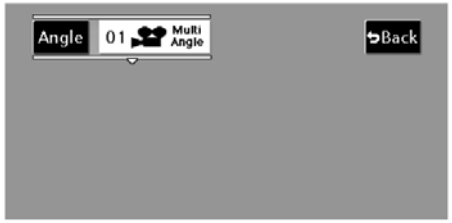

Z17418

The angle can be selected for discs that are multi–angle compatible when the "" mark appears on the screen. Each time you push the "Angle" switch, the angle changes. The angle number which you can select will appear on the screen.

To turn off the screen, push the "Hide Buttons" switch.

Push the "Back" switch to return to the previous screen.

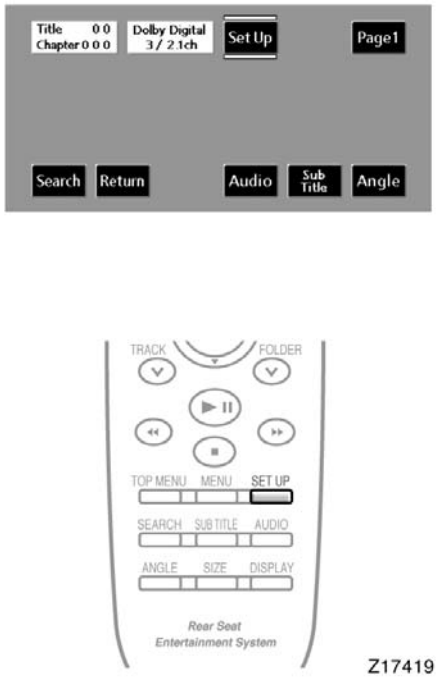

Z17419

CHANGING THE INITIAL SETTING

Push the "Set Up" switch on the screen, and then the initial setting screen will appear. You can also display the screen by pushing the "SET UP" button on the controller. You can change the initial setting.

After the setting is done, the player plays from the beginning of the chapter or the track.

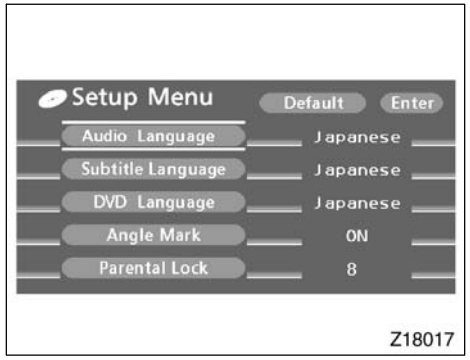

Setup Menu screen

There are initial setting switches on the “Setup Menu” screen.

After you change the initial setting, push the “Enter” switch. The initial setting switch will be turned off and return to the picture previously.

When the “Default” switch is pushed, all menus are initialized.

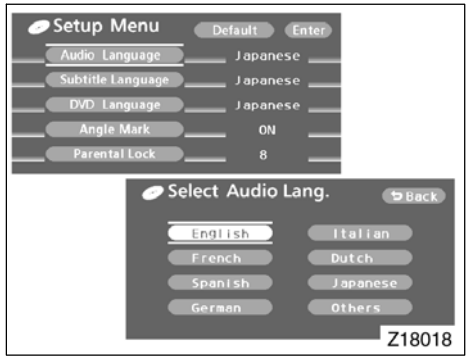

CHANGING THE AUDIO LANGUAGE

Push the “Audio Language” switch on the “Setup Menu” and the “Select Audio Lang.” screen appears.

Select the language you want to hear by pushing the appropriate switch on the screen.

To return to the “Setup Menu” screen, push the “Back” switch.

If you cannot find the language you want to hear, push the “Others” switch. The “Enter Audio Lang. Code” screen will appear.

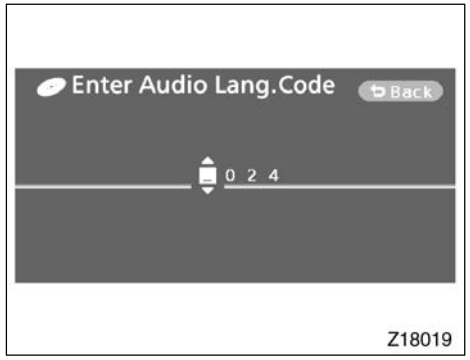

To select an audio language, use the joystick to enter the appropriate 4–digit language code. For details of the language codes, see the language code list.

If a code which is not on the list is entered and the “ENT” button is pushed, the “Incorrect Code” screen will appear. Enter the code of the language you want to hear again.

To return to the “Select Audio Lang.” screen, push the “Back” switch.

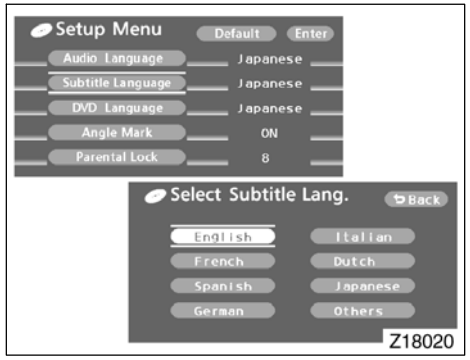

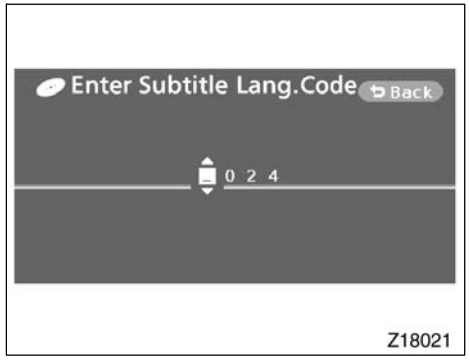

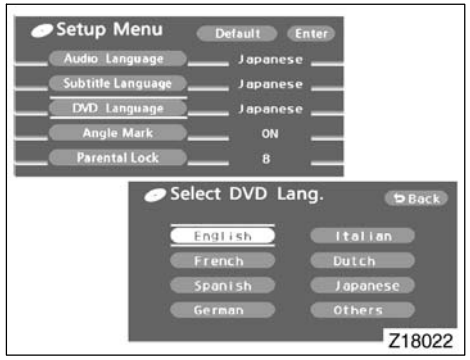

CHANGING THE SUBTITLE LANGUAGE

To display the “Select Subtitle Lang.” screen, push the “Subtitle Language” switch on the “Setup Menu” screen.

Select the language you want to read by pushing the appropriate switch on the screen.

To return to the “Setup Menu” screen, push the “Back” switch.

If you cannot find the language you want to read, push the “Others” switch. The “Enter Subtitle Lang. Code” screen will appear.

To enter the code of the language you want to read, use the joystick to enter the appropriate 4–digit language code. For details about the language codes, see the language code list.

Push the “ENT” button on the controller. If numbers which are not on the list are entered and the “ENT” button is pushed, the “Incorrect code” screen will appear. Enter the language code you want to read again.

To return to the “Select Subtitle Lang.” screen, push the “Back” switch on the screen.

CHANGING THE DVD LANGUAGE

To display the “Select DVD Lang.” screen, push the “DVD Language” switch on the “Setup Menu” screen.

Select the language you want to read on the screen.

To return to the “Setup Menu” screen, push the “Back” switch.

If you cannot find a language you want to read, push the “Others” switch. The “Enter DVD Lang. Code” screen will appear.

Z18023

To enter the code of the language you want to read, use the joystick to enter the appropriate 4–digit language code. For details about the language codes, see the language code list.

Push the “ENT” button on the controller. If numbers which are not on the list are entered and the “ENT” button is pushed, the “Incorrect code” screen will appear. Enter the language code you want to read again.

To return to the “Select DVD Lang.” screen, push the “Back” switch on the screen.

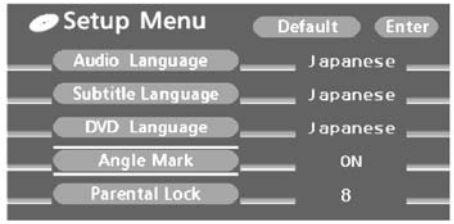

Z18024

TURNING THE ANGLE MARK ON OR OFF

The angle mark can be turned on for discs that are multi–angle compatible.

Each time you push the “Angle Mark” switch on the screen, the angle mark turns on or off alternately.

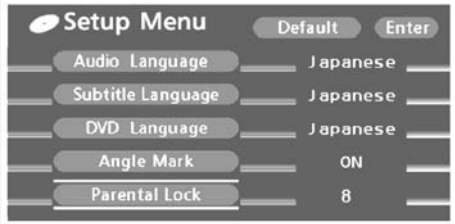

Z18025

SETTING LEVEL OF VIEWER RESTRICTIONS

You can restrict the play back screen by setting the viewer restrictions. You can prevent the restriction with a password. Some discs do not supply a restriction.

To set the level of viewer restriction, push the “Parental Lock” switch on the “Setup Menu” screen. The “Enter Personal Code” screen will appear.

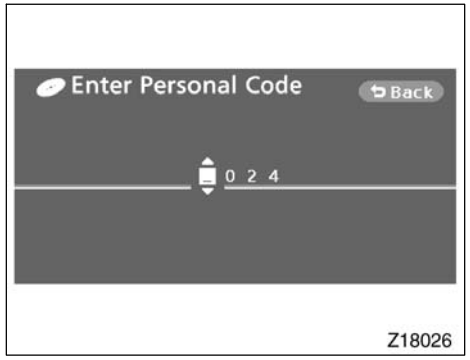

Enter the password and push the “ENT” button. The “Select Restriction Level” screen will appear.

You cannot change the setting without inputting the password. When you forget or change the password, push the “◀” side of the joystick ten times to initialize the password.

To return to the “Setup Menu” screen, push the “Back” switch.

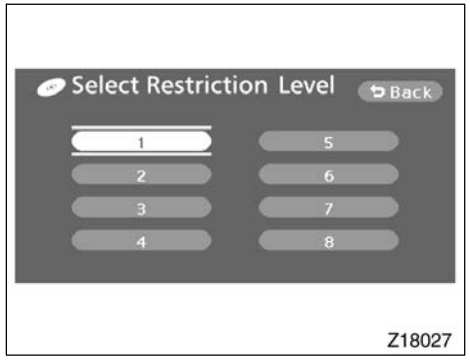

Push a parental level (1—8). The smaller the level number, the stricter the age limit. Push the “Back” switch to return to the “Setup Menu” screen.

SETTING THE DISPLAY MODE

Pushing the “SIZE” button on the controller causes the display modes to change sequentially as follows:

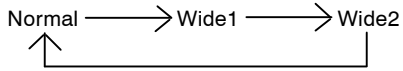

LANGUAGE CODE LIST

Code	Language
0514	English
1001	Japanese
0618	French
0405	German
0920	Italian
0519	Spanish
2608	Chinese
1412	Dutch
1620	Portuguese
1922	Swedish
1821	Russian
1115	Korean
0512	Greek
0101	Afar
0102	Abkhazian
0106	Afrikaans
0113	Amharic
0118	Arabic
0119	Assamese

0125	Aymara
0126	Azerbaijani
0201	Bashkir
0205	Byelorussian
0207	Bulgarian
0208	Bihari
0209	Bislama
0214	Bengali
0215	Tibetan
0218	Breton
0301	Catalan
0315	Corsican
0319	Czech
0325	Welsh
0401	Danish
0426	Bhutani
0515	Esperanto
0520	Estonian
0521	Basque
0601	Persian
0609	Finnish

0610	Fiji
0615	Faroese
0625	Frisian
0701	Irish
0704	Scots–Gaelic
0712	Galician
0714	Guarani
0721	Gujarati
0801	Hausa
0809	Hindi
0818	Croatian
0821	Hungarian
0825	Armenian
0901	Interlingua
0905	Interlingue
0911	Inupiak
0914	Indonesian
0919	Icelandic
0923	Hebrew
1009	Yiddish
1023	Javanese

1101	Georgian
1111	Kazakh
1112	Greenlandic
1113	Cambodian
1114	Kannada
1119	Kashmiri
1121	Kurdish
1125	Kirghiz
1201	Latin
1214	Lingala
1215	Laothian
1220	Lithuanian
1222	Latvian
1307	Malagasy
1309	Maori
1311	Macedonian
1312	Malayalam
1314	Mongolian
1315	Moldavian
1318	Marathi
1319	Malay

1320	Maltese
1325	Burmese
1401	Nauru
1405	Nepali
1415	Norwegian
1503	Occitan
1513	(Afan) Oromo
1518	Oriya
1601	Punjabi
1612	Polish
1619	Pashto, Pushto
1721	Quechua
1813	Rhaeto-Romance
1814	Kirundi
1815	Romanian
1823	Kinyarwanda
1901	Sanskrit
1904	Sindhi
1907	Sangho
1908	Serbo-Croatian
1909	Sinhalese

1911	Slovak
1912	Slovenian
1913	Samoan
1914	Shona
1915	Somali
1917	Albanian
1918	Serbian
1919	Siswati
1920	Sesotho
1921	Sundanese
1923	Swahili
2001	Tamil
2005	Telugu
2007	Tajik
2008	Thai
2009	Tigrinya
2011	Turkmen
2012	Tagalog
2014	Setswana
2015	Tonga
2018	Turkish

2019	Tsonga
2020	Tatar
2023	Twi
2111	Ukrainian
2118	Urdu
2126	Uzbek
2209	Vietnamese
2215	Volapük
2315	Wolof
2408	Xhosa
2515	Yoruba
2621	Zulu

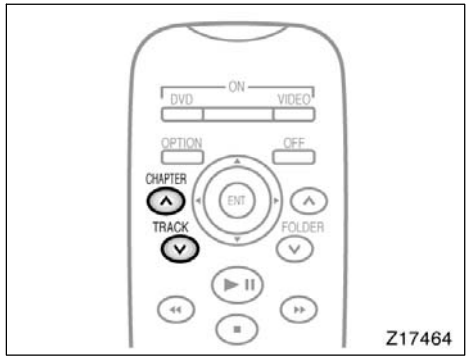

SELECTING THE CHAPTER/TRACK

To select the chapter/track, push the “CHAPTER/TRACK ∧” button or “CHAPTER/TRACK ∨” button on the controller until the number of the chapter/track you want to select appears on the screen.

USING THE CONTROL SCREEN

When playing a disc, push the “DVD” button on the controller. The status screen will appear on the screen.

—DVD player operation (video CD/audio CD/CD text/MP3)

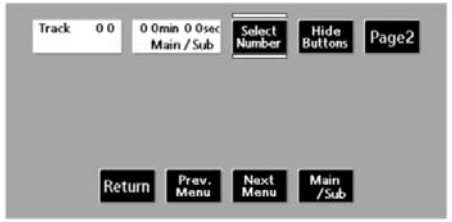

Z17489

SELECTING THE DISC MENU NUMBER (video CD only)

Push the “Select Number” switch and then the disc menu number search screen will appear. You can also display the screen by pushing the “SEARCH” button on the controller.

Z17433

Enter the disc menu number by using the joystick and push the “ENT” button. The player starts playing the disc from the entered disc menu number. The entered disc menu number will appear on the screen.

Push the “Back” switch to return to the menu screen.

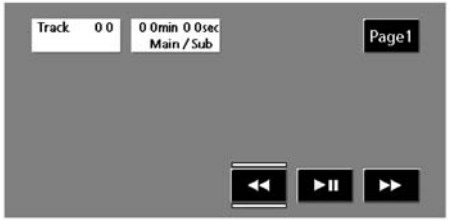

Z18009

OPERATING THE “▶ II”, “◀◀” AND “▶▶” SWITCHES (video CD only)

“▶ II” switch: Push this switch to pause the disc or to cancel the pause and return to normal playing.

“◀◀” and “▶▶” switches: Push this switch to fast forward or reverse. If you want to return to the beginning of the current track, release the switch.

Video CD only—

Push the “▶▶” switch/button while pausing, the DVD video plays the slow–motion video replay.

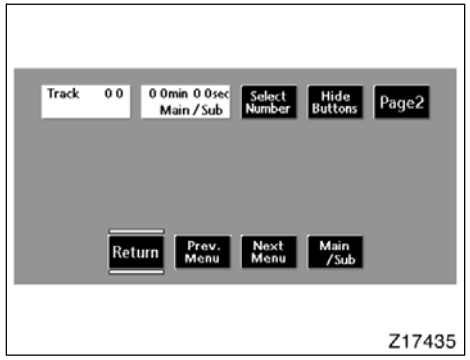

TURNING ON THE DISC MENU (video CD only)

Push the “Return” switch to turn on the menu screen for the disc.

For the operation of the menu screen, see the manual for the video CD.

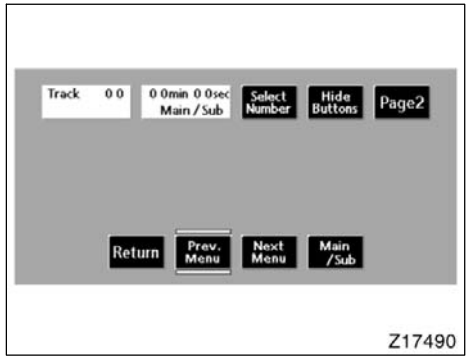

CHANGING MENU PAGE OR TRACK (video CD only)

Push the “Next Menu” or “Prev. Menu” switch while the disc menu is displayed. The next or previous page will appear on the screen.

Push the “Next Menu” or “Prev. Menu” switch while the player is playing video. The next or previous track will be searched and played.

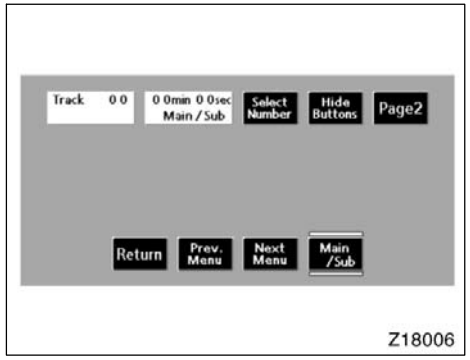

CHANGING A MULTIPLEX TRANSMISSION (video CD only)

Push the “Main/Sub” switch to change a multiplex transmission. The mode changes from Main/Sub to Main to Sub and back to Main/Sub by pushing the “Main/Sub” switch.

CHANGING THE INITIAL SETTING (video CD only)

Push the “Set Up” switch on the screen and then the initial setting screen will appear. You can also display the screen by pushing the “SET UP” button on the controller. You can change the initial setting. (See “CHANGING THE INITIAL SETTING” on page 322 in this Section for details.)

After the setting is done, the player plays from the beginning of the chapter or the track.

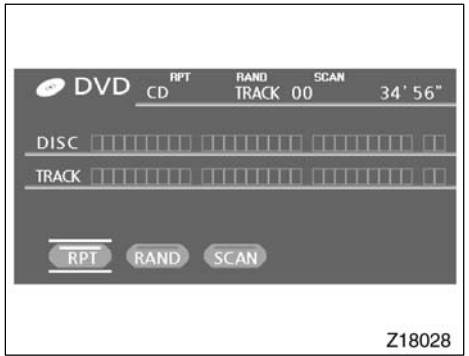

CD Text

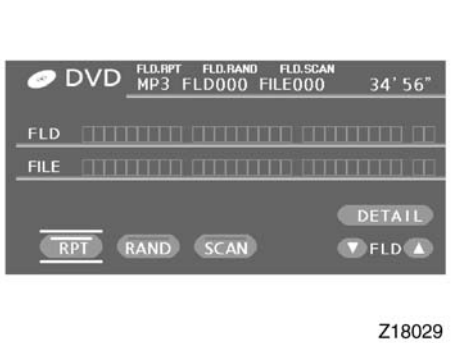

CD MP3

USING THE CONTROL SCREEN

When playing a disc, push the “DVD” button on the controller. The control screen will appear on the screen.

CD text only—

The disc title and track title will appear on the screen when pushing the “DVD” button.

Details of the specific switches, controls and features are described below.

1. “RPT” switch (audio CD and CD text)

   Push the “RPT” switch while the track is playing. When the track ends, it will automatically replay. To turn off the repeat feature, push this switch again.

2. “RAND” switch (audio CD and CD text)

   Push the “RAND” switch. The player will play the tracks on the disc in random order. To turn off the random feature, push this switch again.

3. “SCAN” switch (audio CD and CD text)

   Push the “SCAN” switch. The player will scan all the tracks on the disc. To stop scanning, push this switch again. When the player has scanned all the tracks on the disc, it will stop scanning.

MP3 only—

Folder and file names will appear on the screen when the “DVD” button is pushed.

The details of the specific switches, controls, and features are described below.

1. “RPT” switch

   When the “RPT” switch is pushed while a track is played, the track file will be played repeatedly until the switch is pushed again. When the switch is pushed for at least 0.8 seconds, all the files in a folder will be played repeatedly. To turn off repeat play mode, push the switch again.

2. “RAND” switch

   When the “RAND” switch is pushed, the files in a current folder will be played in random order. When the switch is pushed for at least 0.8 seconds, all the files in the disk will be played in random. To turn off random play mode, push the switch again.

3. “SCAN” switch

   When the “SCAN” switch is pushed, all the files in a current folder will be scanned. Only the first 10 seconds of each file are played sequentially until all the files are scanned. When the switch is pushed for at least 0.8 seconds, the first 10 seconds of each initial file of all the folders in the disk will be played sequentially until the entire initial files are scanned. To stop scanning, push the switch again.

4. “FLD▲” switch

   When the switch is pushed, the initial file of the next folder will be played.

5. “▼FLD” switch

   When the switch is pushed, the initial file of the previous folder will be played.

6. “DETAIL” switch

   When the switch is pushed while a track is played, the detailed file information of the track will be displayed.

—Screen adjustment

You can adjust the color, contrast, tone and brightness of the screen.

Push the “DISPLAY” button on the controller and the “Display” screen will appear.

The screen may turn purple to deflect the sunlight. This is not a malfunction.

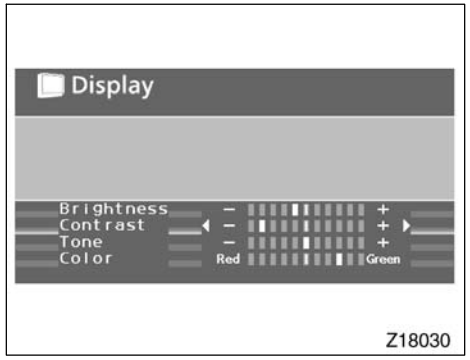

Operate the joystick up and down to select Brightness, Contrast, Tone, or Color and left and right to make adjustments.

	– or “RED”	+ or “GREEN”
Brightness	Darkens	Brightens
Contrast	Weakens the contrast	Strengthens the contrast
Tone	Weakens the tone	Strengthens the tone
Color	Strengthens the red color	Strengthens the green color

After adjusting the screen, push the “ENT” button or “DISPLAY” button to return to the previous screen.

—Selecting the video mode

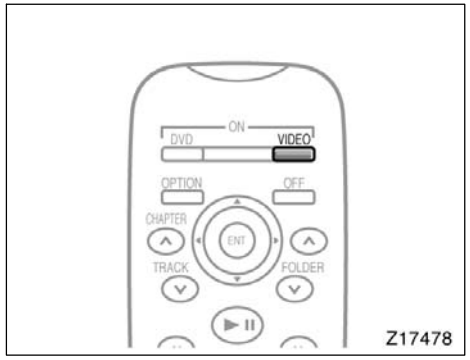

The audio machine connected to the input terminal adapter can be played in the video mode.

To select the video mode, push the “VIDEO” button on the controller.

—DVD video disc information

DVD PLAYER AND DVD VIDEO DISCS

This DVD player conforms to NTSC color TV formats. DVD video discs conforming to other formats such as PAL or SECAM cannot be used.

Region codes: Some DVD video discs have a region code indicating where you can use. If the DVD video disc is not labeled “ALL” or “1”, you cannot use it in this DVD player. If you attempt to play an inappropriate DVD video disc in this player, “REGION CODE ERROR” appears on the screen. Even if the DVD video disc does not have a region code, in some cases you cannot use it.

Marks shown on DVD video discs:

NTSC	Indicates NTSC format of color TV.
2	Indicates the number of audio tracks.
2	Indicates the number of language subtitles.
3	Indicates the number of angles.
16:9 LB 4:3	Indicates the screen to be selected. Wide screen: 16:9 Standard: 4:3
ALL 1	Indicates regions in which this video disc can be played. ALL: all countries Number: region code

DVD VIDEO DISC GLOSSARY

DVD video discs: Digital Versatile Disc that holds video. DVD video discs have adopted “MPEG2”, one of the world standards of digital compression technologies. The picture data is compressed by 1/40 on average and stored. Variable rate encoded technology in which the volume of data assigned to the picture is changed depending on the picture format has also been adopted. Audio data is stored using PCM and Dolby digital, which enables higher quality of sound. Furthermore, multi–angle and multi–language features will also help you enjoy the more advanced technology of DVD video.

Viewer restrictions: This feature limits what can be viewed in conformity with the level of restrictions of the country. The level of restrictions varies depending on the DVD video disc. Some DVD video discs cannot be played at all, or violent scenes are skipped or replaced with other scenes.

Level 1: DVD video discs for children can be played.

Level 2—7: DVD video discs for children and G–rated movies can be played.

Level 8: All types of DVD video discs can be played.

Multi–angle feature: You can enjoy the same scene at different angles.

Multi–language feature: You can select the language of the subtitles and audio.

Region codes: Region codes are provided on DVD players and DVD discs. If the DVD video disc does not have the same region code as the DVD player, you cannot play the disc on the DVD player. For region codes, see page 335.

Audio: This DVD player can play liner PCM, Dolby digital, dts and MPEG audio format DVD. Other decoded type cannot be played.

Title and chapter: Video and audio programs stored on DVD video discs are divided in parts by title and chapter.

Title: The largest unit of the video and audio programs stored on DVD video discs. Usually, one piece of a movie, one album, or one audio program is assigned as a title.

Chapter: A unit smaller than a title. A title comprises plural chapters.

Manufactured under license from Dolby Laboratories. “Dolby”, “Dolby Digital”, “Pro Logic”, and the double–D symbol are trademarks of Dolby Laboratories. Confidential unpublished works. ©1992–1997 Dolby Laboratories. All rights reserved.

This product incorporates copyright protection technology that is protected by method claims of certain U.S. patents and other intellectual property rights owned by Macrovision Corporation and other rights owners. Use of this copyright protection technology must be authorized by Macrovision Corporation, and is intended for home and other limited viewing uses only unless otherwise authorized by Macrovision Corporation. Reverse engineering or disassembly is prohibited.

“dts” is a trademark of Digital Theater Systems, Inc.

—A/V input adapter

The rear entertainment system plays videos and sound when an audio–video equipment is connected to the A/V input adapter. For details, refer to the manufacturer’s instructions.

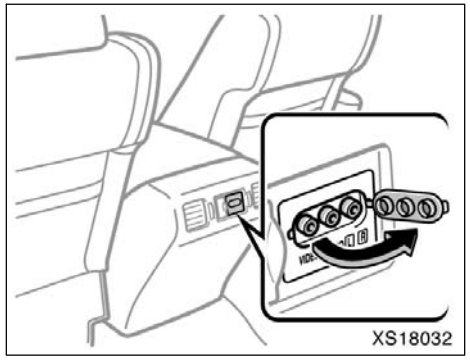

Separate seats type

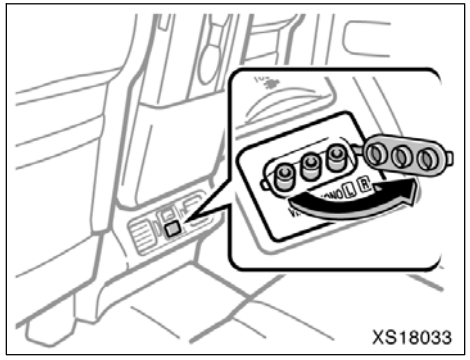

Bench seat type

To use the adapter, open the cover.

The A/V input adapter is composed of 3 input adapters.

Yellow: Image input adapter
Red: Audio input adapter
White: Audio input adapter

NOTICE

Close the cover when the A/V input adapter is not in use. Inserting a foreign object other than the appropriate plug may cause electrical failure or short circuit.

—Power outlet

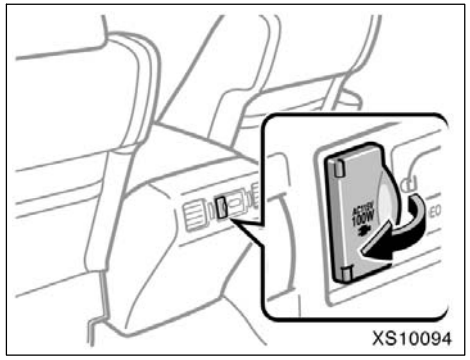

Separate seats type

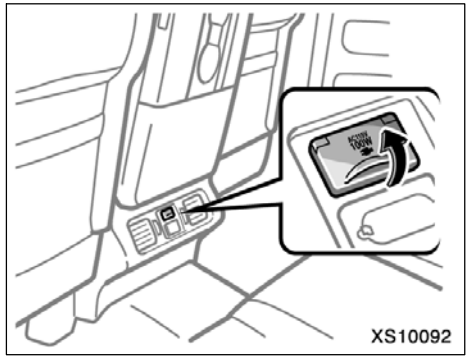

Bench seat type

This power outlet is designed for use as a power supply for the audio device connected to the input terminal adapter.

The key must be in the “ON” position for the power outlet to be used.

The maximum capacity for this power outlet is 115 VAC/100W. If you attempt to use an appliance that requires more than 115 VAC or 100W, the protection circuit will activate and cut the power supply. The power supply will restart automatically when you use an appliance that operates within the 115 VAC/100W limits.

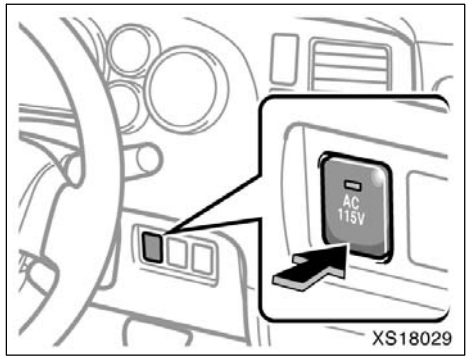

To use the power outlet, push the main switch on the instrument panel.

An indicator light will illuminate to indicate that the power outlet is ready for use.

Push the main switch once again to turn the power outlet off. When the power outlet is not in use, make sure that the main switch is turned off.

NOTICE

- ***To prevent the battery from being discharged, do not use the power outlet longer than necessary when the engine is not running.***
- ***Close the power outlet lid when the power outlet is not in use. Inserting a foreign object other than the appropriate plug that fits the outlet may cause electrical failure or short circuit.***

The power outlet is not designed for the following electric appliances even if their power consumption is under 115 VAC/100W. These appliances may not operate properly.

- Appliances with high initial peak wattage: cathode–ray tube type televisions, compressor–driven refrigerators, electric pumps, electric tools, etc.
- Measuring devices which process precise data: medical equipment, measuring instruments, etc.

- Other appliances requiring an extremely stable power supply: microcomputer–controlled electric blankets, touch sensor lamps, etc.

Certain electrical appliances may cause radio noise.

Audio/video system operating hints

NOTICE

To ensure correct audio system operation:

- ***Be careful not to spill beverages over the system.***
- ***Do not put anything other than a compact disc into the slot.***
- ***Do not put anything other than a DVD video, DVD audio, video CD, dts–CD or audio CD into the DVD player.***
- ***The use of a cellular phone inside or near the vehicle may cause a noise from the speakers of the system which you are listening to. However, this does not indicate a malfunction.***

RADIO RECEPTION

Usually, a problem with radio reception does not mean there is a problem with your radio—it is just the normal result of conditions outside the vehicle.

For example, nearby buildings and terrain can interfere with FM reception. Power lines or telephone wires can interfere with AM signals. And of course, radio signals have a limited range. The farther you are from a station, the weaker its signal will be. In addition, reception conditions change constantly as your vehicle moves.

Here are some common reception problems that probably do not indicate a problem with your radio:

FM

Fading and drifting stations—Generally, the effective range of FM is about 40 km (25 miles). Once outside this range, you may notice fading and drifting, which increase with the distance from the radio transmitter. They are often accompanied by distortion.

Multi–path—FM signals are reflective, making it possible for two signals to reach your antenna at the same time. If this happens, the signals will cancel each other out, causing a momentary flutter or loss of reception.

Static and fluttering—These occur when signals are blocked by buildings, trees, or other large objects. Increasing the bass level may reduce static and fluttering.

Station swapping—If the FM signal you are listening to is interrupted or weakened, and there is another strong station nearby on the FM band, your radio may tune in the second station until the original signal can be picked up again.

AM

Fading—AM broadcasts are reflected by the upper atmosphere—especially at night. These reflected signals can interfere with those received directly from the radio station, causing the radio station to sound alternately strong and weak.

Station interference—When a reflected signal and a signal received directly from a radio station are very nearly the same frequency, they can interfere with each other, making it difficult to hear the broadcast.

Static—AM is easily affected by external sources of electrical noise, such as high tension power lines, lightening, or electrical motors. This results in static.

XM®*

Alternation or modifications carried out without appropriate authorization may invalidate the user's right to operate the equipment.

*: Use of satellite radio requires XM® tuner and service. Contact your Toyota dealer for details.

NOTICE

This equipment has been tested and found to comply with the limits for a class B digital device, pursuant to Part 15 of the FCC Rules. These limits are designed to provide reasonable protection against harmful interference in a residential installation. This equipment generates, uses and can radiate radio frequency energy and, if not installed and used in accordance with the instructions, may cause harmful interference to radio communications. However, there is no guarantee that interference will not occur in a particular installation.

If this equipment does cause harmful interference to radio or television reception, which can be determined by turning the equipment off and on, the user is encouraged to try to correct the interference by one or more of the following measures:

—Reorient or relocate the receiving antenna.

—Increase the separation between the equipment and receiver.

—Connect the equipment into an outlet on a circuit different from that to which the receiver is connected.

—Consult the dealer or an experienced radio/TV technician for help.

CARING FOR YOUR COMPACT DISC PLAYER, DVD PLAYER AND DISCS

- Type 2 and type 3—The player is intended for use with 12 cm (4.7 in.) discs only.
- Extremely high temperatures can keep your compact disc player and DVD player from working. On hot days, use the air conditioning to cool the vehicle interior before you use the players.
- Bumpy roads or other vibrations may make your compact disc player and DVD player skip.
- If moisture gets into your compact disc player and DVD player, the players may not play even though they appear to be working. Remove the disc from the player and wait until it dries.

⚠ CAUTION

Compact disc players and DVD players use an invisible laser beam which could cause hazardous radiation exposure if directed outside the unit. Be sure to operate the player correctly.

Compact disc player

- Use only compact discs marked as shown above. The following products may not be playable on your compact disc player.

  SACD
  dts–CD
  Copy–protected CD
  CD–ROM

Audio CDs	COMPACT disc DIGITAL AUDIO; COMPACT disc DIGITAL AUDIO TEXT; dts; COMPACT disc DIGITAL AUDIO Recordable; COMPACT disc DIGITAL AUDIO ReWritable
DVD video discs	DVD VIDEO; DVD VIDEO
Video CDs	VIDEO CD; COMPACT disc DIGITAL VIDEO

DVD player

- Use only discs marked as shown above. The following products may not be playable on your DVD player.

  SACD
  Copy–protected CD
  CD–ROM
  DVD–R
  DVD+R
  DVD–RW
  DVD+RW
  DVD–ROM
  DVD–RAM

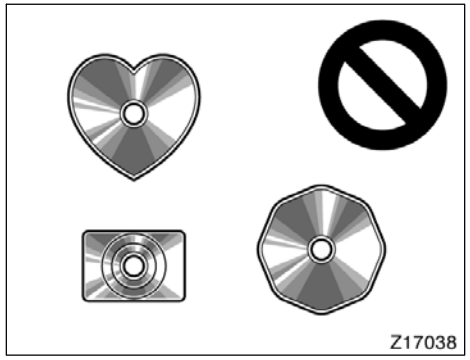

Special shaped discs

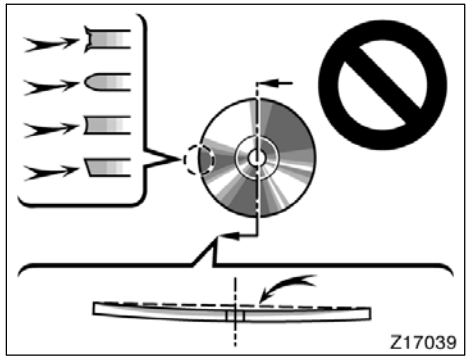

Low quality discs

NOTICE

- ***Do not use special shaped, transparent/translucent, low quality or labeled discs such as those shown in the illustrations. The use of such discs may damage the player or changer, or it may be impossible to eject the disc.***
- ***This system is not designed for use of Dual Disc. Do not use Dual Disc because it may cause damage to the player or changer.***

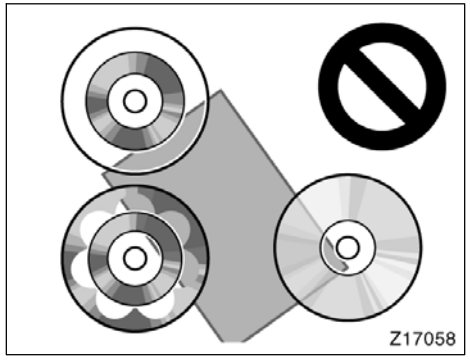

Transparent/translucent discs

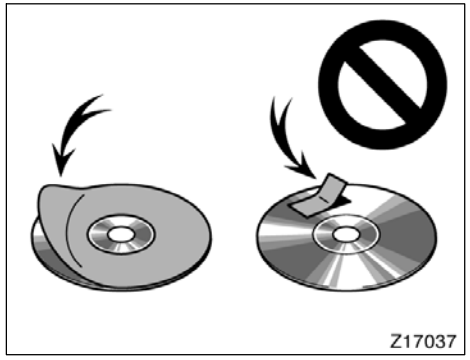

Labeled discs

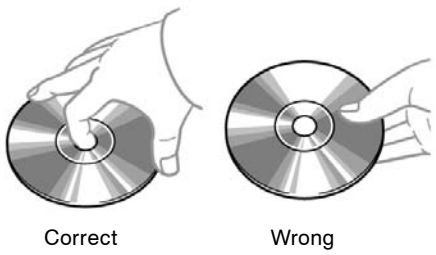

- Handle the discs carefully, especially when you are inserting them. Hold them on the edge and do not bend them. Avoid getting fingerprints on them, particularly on the shiny side.
- Dirt, scratches, warping, pin holes, or other disc damage could cause the player to skip or to repeat a section of a track. (To see a pin hole, hold the disc up to the light.)
- Remove discs from the compact disc player when you are not playing them. Store them in their plastic cases away from moisture, heat, and direct sunlight.

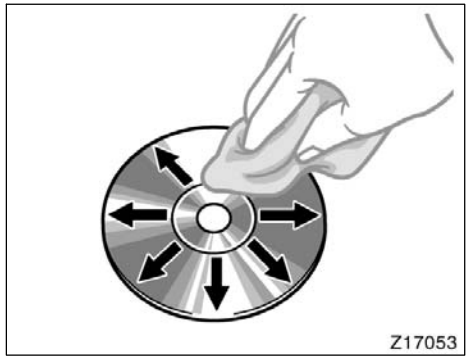

To clean a disc: Wipe it with a soft, lint–free cloth that has been dampened with water. Wipe in a straight line from the center to the edge of the disc (not in circles). Dry it with another soft, lint–free cloth. Do not use a conventional record cleaner or anti–static device.

MP3/WMA FILES

- MP3 (MPEG Audio Layer 3) and WMA (Windows Media Audio) are audio compression standards.
- The MP3/WMA player can play MP3 and WMA files on CD–ROM, CD–R and CD–RW discs.

  The unit can play disc recordings compatible with ISO 9660 level 1 and level 2 and with the Romeo and Joliet file system.
- When naming an MP3 or WMA file, add the appropriate file extension (.mp3 or .wma).
- The MP3/WMA player plays back files with .mp3 or .wma file extensions as MP3 or WMA files. To prevent noise and playback errors, use the appropriate file extensions.
- Multi–session compatible CDs can also be played.
- MP3 files are compatible with the ID3 Tag Ver.1.0, Ver.1.1 and Ver.2.2, and Ver. 2.3 formats. The unit cannot display disc title, track title and artist name in other formats.

- WMA files can contain a WMA tag that is used in the same way as an ID3 tag. WMA tags carry information such as track title, artist name.
- The emphasis function is available only when playing MP3/WMA files recorded at 32, 44.1 and 48 kHz. (The system can play MP3 files with sampling frequencies of 16, 22.05, and 24 kHz. However, the emphasis function is not available for files recorded at these frequencies.)
- The sound quality of MP3/WMA files generally improves with higher bit rates. In order to achieve a reasonable level of sound quality, discs recorded with a bit rate of at least 128 kbps are recommended.

  Playable bit rates
  MP3 files:
  MPEG1 LAYER3—64 to 320 kbps
  MPEG2 LSF LAYER3—64 to 160 kbps
  WMA files:
  Ver7, 8 CBR—48 to 192 kbps
  Ver9 CBR—48 to 320 kbps

- The MP3/WMA player does not play back MP3/WMA files from discs recorder using packet write data transfer (UDF format). Discs should be recorded using “pre–mastering” software rather than packet–write software.
- M3u playlists are not compatible with the audio player.
- MP3i (MP3 interactive) and MP3PRO formats are not compatible with the audio player.
- The MP3 player is compatible with VBR (Variable Bit Rate).
- When playing back files recorded as VBR (Variable Bit Rate) files, the play time will not be correctly displayed if fast–forward or reverse operations are used.
- It is not possible to check folders that do not include MP3/WMA files.
- MP3/WMA files in folders up to 8 levels deep can be played. However, the start of playback may be delayed when using discs containing numerous levels of folders. For this reason, we recommend creating discs with no more than two levels of folders.
- It is possible to play up to 192 folders or 255 files on one disc.

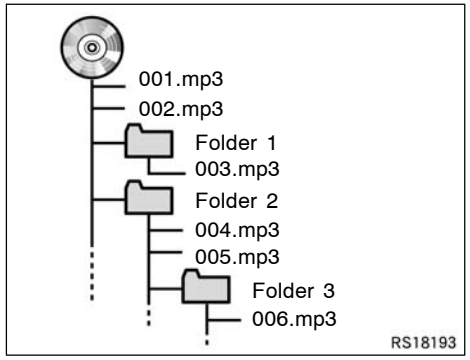

MP3 player (rear seat entertainment system)

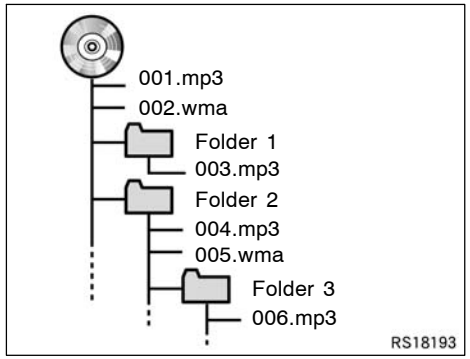

MP3/WMA player (front audio system)

- The play order of the compact disc with the structure shown on the left is as follows:

MP3 player (rear seat entertainment system)

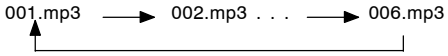

MP3/WMA player (front audio system)

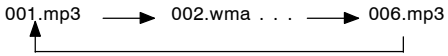

- MP3 player (rear seat entertainment system)—It is possible to play up to 253 folders on one disc.
- MP3/WMA player (front audio system)—It is possible to play up to 192 folders or 255 files on one disc.
- The order changes depending on the PC and MP3/WMA encoding software you use.

CD–R and CD–RW discs

- CD–R/CD–RW discs that have not been subject to the “finalizing process” (a process that allows discs to be played on a conventional CD player) cannot be played.
- It may not be possible to play CD–R/CD–RW discs recorded on a music CD recorder or a personal computer because of disc characteristics, scratches or dirt on the disc, or dirt, condensation, etc. on the lens of the unit.
- It may not be possible to play discs recorded on a personal computer depending on the application settings and the environment. Record with the correct format. (For details, contact the appropriate application manufacturers of the applications.)
- CD–R/CD–RW discs may be damaged by direct exposure to sunlight, high temperatures or other storage conditions. The unit may be unable to play some damaged discs.
- If you insert a CD–RW disc into the MP3/WMA player, playback will begin more slowly than with a conventional CD or CD–R disc.
- Recordings on CD–R/CD–RW cannot be played using the DDCD (Double Density CD) system.

TERMS

Packet write—

This is a general term that describes the process of writing data on–demand to CD–R, etc., in the same way that data is written to floppy or hard discs.

ID3 Tag—

This is a method of embedding track–related information in an MP3 file. This embedded information can include the track title, the artist's name, the album title, the music genre, the year of production, comments and other data. The contents can be freely edited using software with ID3 tag editing functions. Although the tags are restricted to the number of characters, the information can be viewed when the track is played back.

WMA Tag—

WMA files can contain a WMA tag that is used in the same way as an ID3 tag. WMA tags carry information such as track title, artist name.

ISO 9660 format—

This is the international standard for the formatting of CD–ROM folders and files. For the ISO 9660 format, there are two levels of regulations.

Level 1:

The file name is in 8.3 format (8 character file names, with a 3 character file extension. File names must be composed of one–byte capital letters and numbers. The "_" symbol may also be included.)

Level 2:

The file name can have up to 31 characters (including the separation mark "." and file extension). Each folder must contain fewer than 8 hierarchies.

m3u—

Playlists created using "WINAMP" software have a playlist file extension (.m3u).

MP3—

MP3 is an audio compression standard determined by a working group (MPEG) of the ISO (International Standard Organization). MP3 compresses audio data to about 1/10 the size of that on conventional discs.

WMA—

WMA (Windows Media Audio) is an audio compression format developed by Microsoft. It compresses files into a size smaller than that of MP3 files. The decoding formats for WMA files are Ver. 7, 8, and 9.

Hands–free phone system——Reference

Phone Setup (see page 353)

- **Pair phone**

  To use the hands–free system, you need to register your phone in the system.
- **Change name**

  The registered phone names can be changed.
- **Delete**

  The registered phone can be deleted.
- **List phone**

  The registered phone names can be checked.
- **Select phone**

  The registered phones can be selected.
- **Set passkey**

  The passkey can be changed.

Security (see page 358)

- **Set PIN**

  The PIN can be set or changed.
- **Phone book lock**

  The phone book can be locked.
- **Phone book unlock**

  The locked phone book can be unlocked.

System Setup (see page 362)

- **Adjust Guidance Volume**

  Guidance volume can be adjusted.
- **Initialize**

Phone Book (see page 362)

- **Add Entry**

  Phone numbers and voice tags can be registered.
- **Change Name**

  The registered names can be changed.
- **Delete Entry**

  The registered names can be deleted.
- **Delete Speed Dial**

  The registered speed dial can be deleted.
- **List names**

  The registered names can be checked.
- **Set Speed Dial**

  Speed dials can be set

Redial (see page 370)

Callback (see page 371)

Making a phone call (see page 373)

Receiving a phone call (see page 375)

Talking on the phone (see page 376)

—Some basics

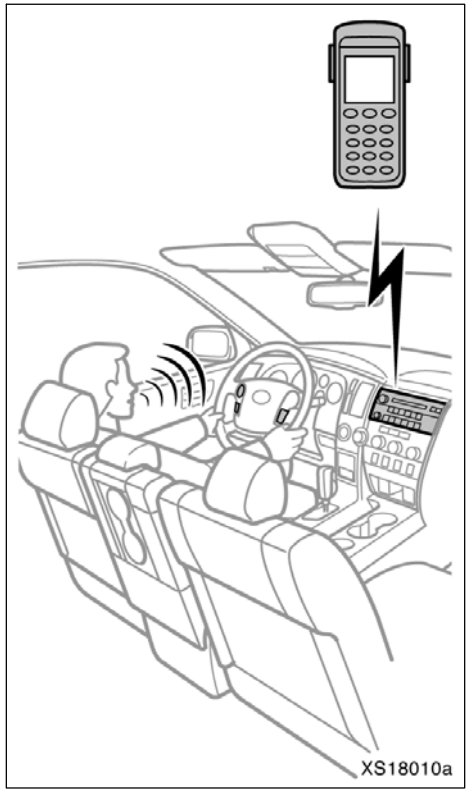

This system supports Bluetooth®, a wireless system that allows you to make or receive calls without taking your hands from the steering wheel and without using cables to connect the phone and system.

The phone must be paired to the system before using the hands–free feature. If your cellular phone does not support Bluetooth®, this system will not function.

⚠ CAUTION

While you are driving, do not use a cellular phone or connect the Bluetooth® phone.

NOTICE

Do not leave your cellular phone in the car. The temperature indoor may be high and damage the phone.

The system may not function in the following conditions and places:

- The cellular phone is turned off.
- The current position is outside the communication area.
- The cellular phone is not connected.
- The cellular phone has a low battery.
- The cellular phone is hiding behind the seat or in the glove box and console box.
- The cellular phone touches or is covered with metal materials.

This system supports the following service.

- HFP (Hands Free Profile) Ver.1.0.
- OPP (Object Push Profile) Ver.1.1.

If your cellular phone does not support HFP, you cannot enter the Bluetooth® phone, and take OPP service individually.

Bluetooth is a registered trademark of Bluetooth SIG. Inc.

When transferring ownership of the vehicle:

A lot of personal data is registered when you use the hands–free system. When transferring ownership of the vehicle, initialize the system.

If you initialize it, the former state will never come back again. Pay much attention when initializing the data.

You can initialize the following data in the system.

- Phone book data
- Dialed numbers and received calls
- Speed dial
- Bluetooth® phone data
- Security code

FCC ID: HYQBTAU01A
IC ID: 1551A–BTAU01A
MADE IN MEXICO

This device complies with Part 15 of the FCC Rules and RSS–210. Operation is subject to the following two conditions: (1) This device may not cause harmful interference, and (2) this device must accept any interference received, including interference that may cause undesired operation.

⚠ CAUTION

Changes or modifications not expressly approved by the party responsible for compliance could void the user's authority to operate the equipment.

NOTE: This equipment has been tested and found to comply with the limits for a Class B digital device, pursuant to part 15 of the FCC Rules. These limits are designed to provide reasonable protection against harmful interference in a residential installation. This equipment generates, uses and can radiate radio frequency energy and, if not installed and used in accordance with the instructions, may cause harmful interference to radio communications. However, there is no guarantee that interference will not occur in a particular installation. If this equipment does cause harmful interference to radio or television reception, which can be determined by turning the equipment off and on, the user is encouraged to try to correct the interference by one or more of the following measures:
—Reorient or relocate the receiving antenna.
—Increase the separation between the equipment and receiver.
—Connect the equipment into an outlet on a circuit different from that to which the receiver is connected.
—Consult the dealer or an experienced radio/TV technician for help.

CAUTION: Radio Frequency Radiation Exposure
This equipment complies with FCC radiation exposure limits set forth for uncontrolled equipment and meets the FCC radio frequency (RF) Exposure Guidelines in Supplement C to OET65. This equipment has very low levels of RF energy that it deemed to comply without maximum permissive exposure evaluation (MPE). But it is desirable that it should be installed and operated with at least 20 cm and more between the radiator and person's body (excluding extremities: hands, wrists, feet and legs).

Co–location: This transmitter must not be co–located or operated in conjunction with any other antenna or transmitter.

—Control and features

▶Steering switches and microphone

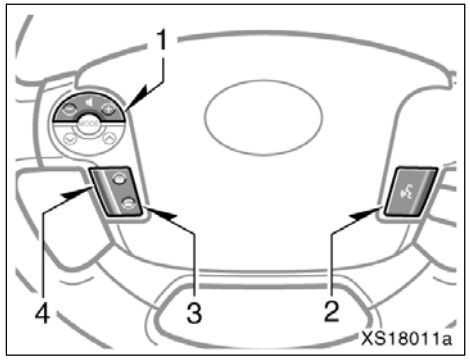

Steering switches

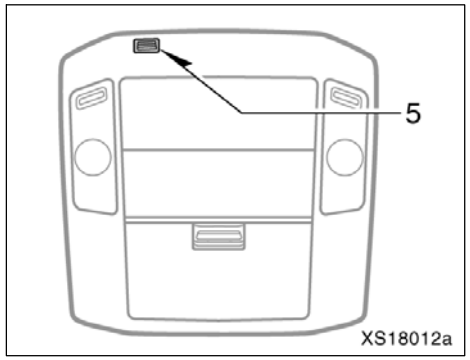

Overhead console (Type A)

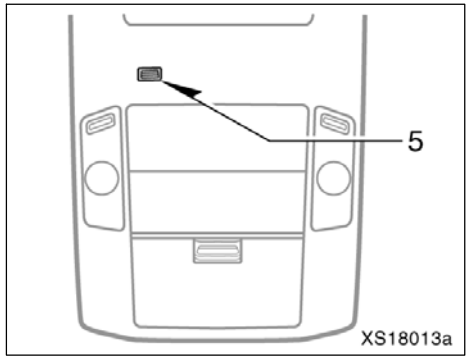

Overhead console (Type B)

1. Volume control switch

To increase the volume: Push "+".
To decrease the volume: Push "–".

The volume continues increasing or decreasing while the switch is being pushed.

When driving at 80 km/h (50 mph) or more, the volume automatically increases without switch adjustment. When your speed falls below 70 km/h (43 mph), the volume automatically returns to its original level.

2. Talk switch

Pushing the talk switch turns the hands–free system on and initiates the speech command system.

Pushing and holding the talk switch ends the speech command system.

3. Off–hook switch

Pushing the off–hook switch turns the hands–free system on.

When receiving a call, pushing the off–hook switch allows you to talk on the phone.

4. On–hook switch

When the hands–free system is on, pushing the on–hook switch turns the hands–free system off.

5. Microphone

The microphone is used when talking on the phone or using the speech command system.

▶**Audio unit**

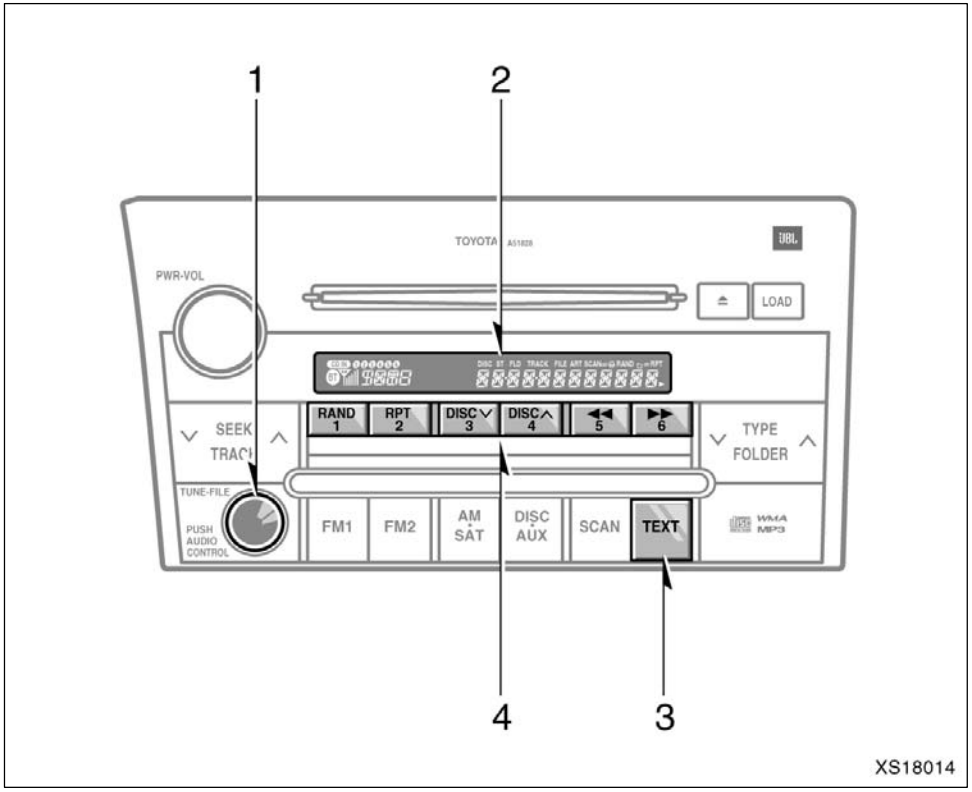

1. "AUDIO/CONTROL" knob

Turning the "AUDIO/CONTROL" knob displays the menu items, names, numbers, etc. to be selected. To select an item, push the "AUDIO/CONTROL" knob. Due to safety concerns, the "AUDIO/CONTROL" knob does not function while the vehicle is in motion.

2. Display

Displays such items as the reception level, a party's name and phone number. See "DISPLAY" described on the following page for further details about the display.

3. "TEXT" button

When the party's name or phone number is too long to be displayed, pushing and holding the "TEXT" button displays the remaining characters.

4. Preset buttons

Pushing the preset button displays the registered speed dial numbers.

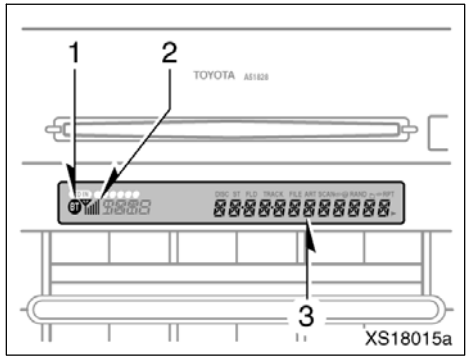

DISPLAY

1. Bluetooth® display

Displays when a Bluetooth® connection is made. If there is no display, the Bluetooth® connection has not been made and communication between the phone and system is not possible. When using the hands–free system, make sure that “BT” is displayed. The display is updated in real time.

2. Reception level display

Displays the reception level of the radio wave signals. This may not match the display on the cellular phone. The reception level of some cellular phones may not be displayed.

The number of bars is greater when the signal received is stronger.

3. Message display

Displays phone numbers, names, comments, menu items, etc.

—Phone Setup

The phone setup menu includes the following:

- Pair Phone

To use the hands–free system, you need to register your phone in the system. Once you have registered it, you can make a hands–free call. Up to 6 phones can be registered.

- Select Phone

When the system connects to Bluetooth®, the phone previously used is automatically selected. Select a different phone if necessary. Only the selected phone can be used with the hands–free system.

- Change Name

The registered phone names can be changed.

- List Phones

The registered phone names can be checked.

The following can be performed during the name playback:

- **Select phone**
- **Change name**
- **Delete**

- Set Passkey

The passkey can be changed. A 4 to 8 digit code can be input as a passkey.

- Delete

The registered phones can be deleted.

To enter the phone setup menu

1. Push the off–hook switch to turn the hands–free system on.
2. Follow voice guidance instructions, or turn the “AUDIO/CONTROL” knob until “Setup” is displayed and push the knob.

“Setup. Please push the talk switch and say security, or phone setup.” is heard.

3. Follow voice guidance instructions, or turn the “AUDIO/CONTROL” knob until “Phone Setup” is displayed and push the knob.

“Phone setup. Push the talk switch and say pair phone, select phone, change name, list phones, set passkey or delete.” is heard.

“XXX (phone name) already selected.” is heard and “XXX (phone name)” is displayed.

If no phone has been registered, the system may not function properly.

To pair phones

1. Push the talk switch and say “Pair phone”, or turn the “AUDIO/CONTROL” knob until “Pair Phone” is displayed and push the knob.

“Pair. Push the talk switch and say a name for the phone.” is heard.

2. Follow voice guidance instructions, or turn the “AUDIO/CONTROL” knob until “Record Name” is displayed, push the knob and say “XXX (desired phone name)”.

“Push the talk switch and say confirm. Otherwise, say go back.” is heard.

3. Follow voice guidance instructions, or turn the “AUDIO/CONTROL” knob until “Confirm” is displayed and push the knob.

“XXX Ready for phone pairing. Please use the phone to connect it to the hands–free system. The passkey for the phone is....” is heard.

After “HANDS FREE” is displayed, a passkey* is displayed and “Searching.” is heard.

4. Input the passkey displayed on the screen into the phone.

“The phone is paired and ready for use. Returning to the main menu.” is heard and “Paired” is displayed.

The system may not function in the following cases:

- If 6 phones have already been registered.
- If the vehicle is moving.
- If the system cannot communicate with the phone.

*: Passkey is a password required to register a phone to the system.

INFORMATION

- ***To use the hands–free system, you need to register your phone in the system. Once you have registered it, you can make a hands–free call. Up to 6 phones can be registered.***
- ***For the operation of the phone, see the manual that comes with your cellular phone.***
- ***The passkey can be changed. See page 357 for changing the passkey.***

To select a phone

1. Push the talk switch and say “Select phone”, or turn the “AUDIO/CONTROL” knob until “Select Phone” is displayed and push the knob.

“Select phone. Push the talk switch and say the phone name or say list phones.” is heard.

2. Follow voice guidance instructions, or turn the “AUDIO/CONTROL” knob until the desired phone name is displayed and push the knob.

When the phone is selected by a voice command:

“XXX Push the talk switch and say confirm. Otherwise, say go back.” is heard and “XXX” is displayed.

Follow voice guidance instructions, or turn the “AUDIO/CONTROL” knob until “Confirm” is displayed and push the knob.

“XXX selected. Returning to the phone setup.” is heard.

When the phone is selected by using the knob:

“XXX selected. Returning to the phone setup.” is heard.

The system may not function in the following cases:

- If the phone is not found.
- If the system does not recognize the voice command.

To change a name

1. Push the talk switch and say “Change name”, or turn the “AUDIO/CONTROL” knob until “Change Name” is displayed and push the knob.

“Change name. Push the talk switch and say the phone name to change.” is heard.

2. Follow voice guidance instructions, or turn the “AUDIO/CONTROL” knob until the phone name that you want to change is displayed and push the knob.

When the phone is selected by a voice command:

“XXX Push the talk switch and say confirm. Otherwise, say go back.” is heard and “XXX” is displayed.

1. Follow voice guidance instructions, or turn the “AUDIO/CONTROL” knob until “Confirm” is displayed and push the knob.

“Push the talk switch and say a new name.” is heard.

2. Follow voice guidance instructions, or turn the “AUDIO/CONTROL” knob until “Record Name” is displayed, push the knob and say “XXX (desired phone name)”.

“XXX Push the talk switch and say confirm. Otherwise, say go back.” is heard.

3. Follow voice guidance instructions, or turn the “AUDIO/CONTROL” knob until “Confirm” is displayed and push the knob.

“Name changed. Returning to the phone setup.” is heard and “Changed” is displayed.

When the phone is selected by using the knob:

“XXX Push the talk switch and say confirm. Otherwise, say go back.” is heard and “XXX” is displayed.

1. Follow voice guidance instructions, or turn the “AUDIO/CONTROL” knob until “Confirm” is displayed and push the knob.

“Push the talk switch and say a new name.” is heard.

2. Follow voice guidance instructions, or turn the “AUDIO/CONTROL” knob until “Record Name” is displayed, push the knob and say “XXX (desired phone name)”.

“XXX Push the talk switch and say confirm. Otherwise, say go back.” is heard.

3. Follow voice guidance instructions, or turn the “AUDIO/CONTROL” knob until “Confirm” is displayed and push the knob.

“Name changed. Returning to the phone setup.” is heard and “Changed” is displayed.

The system may not function in the following cases:

- If no phone has been registered.
- If the system does not recognize the voice command.

To list phones

1. Push the talk switch and say “List phones”, or turn the “AUDIO/CONTROL” knob until “List Phones” is displayed and push the knob.

“List phones. To select a name, push the talk switch during the name playback.” is heard.

2. Follow voice guidance instructions.

“Push the talk switch and say select phone, change name, or delete.” is heard.

Select one of the following:

Select phone

Push the talk switch and say “Select phone”, or turn the “AUDIO/CONTROL” knob until “Select Phone” is displayed and push the knob.

For further details on selecting a phone, see page 355.

Change name

Push the talk switch and say “Change name”, or turn the “AUDIO/CONTROL” knob until “Change Name” is displayed and push the knob.

For further details on changing a name, see page 355.

Delete

Push the talk switch and say “Delete”, or turn the “AUDIO/CONTROL” knob until “Delete” is displayed and push the knob.

For further details on deleting a phone, see page 358.

If no phone has been registered, the system may not function properly.

To set a passkey

1. Push the talk switch and say “Set passkey”, or turn the “AUDIO/CONTROL” knob until “Set Passkey” is displayed and push the knob.

“Set Passkey. The passkey is required for the phone pairing process. Push the talk switch and say a new passkey.” is heard and passkey is displayed.

2. Follow voice guidance instructions, or turn the “AUDIO/CONTROL” knob to select a number.

When using a voice command:

“XXXX (new passkey) Push the talk switch and say confirm. Otherwise, continue adding numbers, or say go back or delete.” is heard and “XXXX (new passkey)” is displayed.

Follow voice guidance instructions, or turn the “AUDIO/CONTROL” knob until “Confirm” is displayed and push the knob.

“Passkey changed. Returning to the phone setup.” is heard.

When using the knob:

1. Turn the “AUDIO/CONTROL” knob to select a number. Push the “AUDIO/CONTROL” knob to set.
2. When the passkey is set, push the “AUDIO/CONTROL” knob.

“Passkey changed. Returning to the phone setup.” is heard.

The system may not function in the following cases:

- If the passkey has less than 4 digits.
- If the passkey has more than 8 digits.

To delete a phone

1. Push the talk switch and say “Delete”, or turn the “AUDIO/CONTROL” knob until “Delete” is displayed and push the knob.

“Delete. Push the talk switch and say the phone name to delete.” is heard.

2. Follow voice guidance instructions, or turn the “AUDIO/CONTROL” knob until the phone name you want to delete is displayed and push the knob.

When using a voice command:

“XXX Push the talk switch and say confirm. Otherwise, say go back.” is heard and “XXX” is displayed.

Follow voice guidance instructions, or turn the “AUDIO/CONTROL” knob until “Confirm” is displayed and push the knob.

“Deleted. Returning to the phone setup.” is heard and “Deleted” is displayed.

When using the knob:

“Deleted. Returning to the phone setup.” is heard and “Deleted” is displayed.

The system may not function in the following cases:

- If no phone has been registered.
- If the system does not recognize the voice command.

—Security

The security menu includes the following:

- **Set PIN (Personal Identification Number)**

The PIN can be set or changed.

- **Phone book lock**

The phone book can be locked.

When the phone book is locked, the following functions cannot be used:

- Dial by name and number
- Redial
- Callback
- Speed Dial
- Phone Setup
- PhoneBook
- Set PIN
- **Phone book unlock**

The locked phone book can be unlocked.

To enter the security menu

1. Push the off–hook switch to turn the hands–free system on.
2. Follow voice guidance instructions, or turn the “AUDIO/CONTROL” knob until “Setup” is displayed and push the knob.

“Setup. Please push the talk switch and say security, or phone setup.” is heard.

3. Follow voice guidance instructions, or turn the “AUDIO/CONTROL” knob until “Security” is displayed and push the knob.

“Security. Push the talk switch and say set PIN, phone book lock, or phone book unlock.” is heard.

To set a PIN

Push the talk switch and say “Set PIN”, or turn the “AUDIO/CONTROL” knob until “Set PIN” is displayed and push the knob.

“There is no PIN number set. Please register a PIN number. Please push the talk switch and say a four–digit PIN number.” is heard.

When using a voice command:

1. Push the talk switch and say “XXX (new PIN number)”.
2. Follow voice guidance instructions, or turn the “AUDIO/CONTROL” knob until “Confirm” is displayed and push the knob.

“The PIN number has been set. Returning to the security.” is heard and “Completed” is displayed.

When using the knob:

1. Turn the “AUDIO/CONTROL” knob to select a number. Push the “AUDIO/CONTROL” knob to set.
2. Repeat the above procedure until the entire four–digit number is set.
3. When the PIN is set, push the “AUDIO/CONTROL” knob.
4. Follow voice guidance instructions, or turn the “AUDIO/CONTROL” knob until “Confirm” is displayed and push the knob.

“The PIN number has been set. Returning to the security.” is heard and “Completed” is displayed.

If the PIN is to be changed:

“There is a PIN number in place. Push the talk switch and say the correct PIN number.” is heard and “Current PIN?” is displayed.

1. Follow voice guidance instructions, or use the “AUDIO/CONTROL” knob to input the current PIN number.

“Please push the talk switch and say a four–digit PIN number.” is heard.

2. Push the talk switch and say “XXXX (new PIN number)”.

“The PIN number has been set. Returning to the security.” is heard and “Completed” is displayed.

If the current number is not correct, the system may not function properly.

To lock the phone book

1. Push the talk switch and say “Phone book lock”, or turn the “AUDIO/CONTROL” knob until “Phbk Lock” is displayed and push the knob.

“There is a PIN number in place. Push the talk switch and say the correct PIN number.” is heard and “PIN?” is displayed.

2. Follow voice guidance instructions, or turn the “AUDIO/CONTROL” knob to select a number.

When using a voice command:

“XXXX Push the talk switch and say confirm. Otherwise, say go back.” is heard and “XXXX” is displayed.

Follow voice guidance instructions, or turn the “AUDIO/CONTROL” knob until “Confirm” is displayed and push the knob.

“PIN number accepted. The phone book is now locked. Returning to the main menu.” is heard and “Locked” is displayed.

When using the knob:

1. Turn the “AUDIO/CONTROL” knob to select a number. Push the “AUDIO/CONTROL” knob to set.
2. When the PIN number is set, push the “AUDIO/CONTROL” knob.

“XXXX Push the talk switch and say confirm. Otherwise, say go back.” is heard and “XXXX” is displayed.

3. Follow voice guidance instructions, or turn the “AUDIO/CONTROL” knob until “Confirm” is displayed and push the knob.

“PIN number accepted. The phone book is now locked. Returning to the main menu.” is heard and “Locked” is displayed.

The system may not function in the following cases:

- If the current number is not correct.
- If the phone book has already been locked.
- If the PIN number does not exist.

To unlock the phone book

1. Push the talk switch and say “Phone book unlock”, or turn the “AUDIO/CONTROL” knob until “Phbk Unlock” is displayed and push the knob.

“Phonebook unlock. There is PIN number in place. Push the talk switch and say the correct PIN number.” is heard and “Current PIN?” is displayed.

2. Follow voice guidance instructions, or turn the “AUDIO/CONTROL” knob to select a number.

When using a voice command:

“XXXX Push the talk switch and say confirm. Otherwise, say go back.” is heard and “XXXX” is displayed.

Follow voice guidance instructions, or turn the “AUDIO/CONTROL” knob until “Confirm” is displayed and push the knob.

“PIN number accepted. The phone book is now unlocked. Returning to the main menu.” is heard and “Unlocked” is displayed.

When using the knob:

1. Turn the “AUDIO/CONTROL” knob to select a number. Push the “AUDIO/CONTROL” knob to set.
2. When the PIN number is set, push the “AUDIO/CONTROL” knob.

“XXXX Push the talk switch and say confirm. Otherwise, say go back.” is heard and “XXXX” is displayed.

3. Follow voice guidance instructions, or turn the “AUDIO/CONTROL” knob until “Confirm” is displayed and push the knob.

“PIN number accepted. The phone book is now unlocked. Returning to the main menu.” is heard and “Unlocked” is displayed.

The system may not function in the following cases:

- If the current number is not correct.
- If the phone book has already been unlocked.

INFORMATION

A shortcut to each of the following functions is available. Enter the phone book menu, push the off–hook switch, and say either of the following:

- ***Phone book lock***
- ***Phone book unlock***

—System Setup

The system setup menu includes the following:

- Adjust Guidance Volume
- Initialize

To enter the system setup menu

1. Push the off–hook switch to turn the hands–free system on.
2. Follow voice guidance instructions, or turn the “AUDIO/CONTROL” knob until “Setup” is displayed and push the knob.
3. Turn the “AUDIO/CONTROL” knob until “System Setup” is displayed and push the knob.

“System setup. Please select guidance volume or initialize.” is heard.

To adjust the guidance volume

1. Turn the “AUDIO/CONTROL” knob until “Guidance Vol” is displayed and push the knob.

“Guidance will be at this volume” is heard and the present volume level is displayed.

2. Turn the “AUDIO/CONTROL” knob to adjust the volume and push the knob.

To initialize

1. Turn the “AUDIO/CONTROL” knob until “Initialize” is displayed and push the knob.

“System initialization. This will erase all user information in the hands free system; including paired phones, phone book entries, and call history. Select confirm to initialize. Otherwise, select go back.” is heard.

2. Turn the “AUDIO/CONTROL” knob until “Confirm” is displayed and push the knob.

“System initialization. This will erase all user information in the hands free system; including paired phones, pone book entries, and call history. Select confirm to initialize. Otherwise, select go back.” is heard.

3. Turn the “AUDIO/CONTROL” knob until “Confirm” is displayed and push the knob.

“Initialized. Returning to the main menu.” is heard.

—Phone Book

The phone book menu includes the following:

- Add Entry

Phone numbers and voice tags can be registered.

- Change Name

The registered names can be changed.

- Delete Entry

The registered names can be deleted.

- Delete Speed Dial

The registered speed dial can be deleted.

- List Names

The registered names can be checked.

- Set Speed Dial

Speed dials can be set.

To enter the phone book menu

1. Push the off–hook switch to turn the hands–free system on.
2. Follow voice guidance instructions, or turn the “AUDIO/CONTROL” knob until “Phonebook” is displayed and push the knob.

“Phone book. Please push the talk switch and say add entry, change name, delete entry, list names set speed dial or delete speed dial.” is heard.

If the phone book is locked, the system may not function properly.

To add entry

The add entry includes the following:

(a) By Voice

(b) By Phone

(c) Call History

(d) Manual Input

Push the talk switch and say “Add entry”, or turn the “AUDIO/CONTROL” knob until “Add Entry” is displayed and push the knob.

“Add Entry. How will the number be entered. Push the talk switch and say by voice, by phone, or call history.” is heard.

(a) By voice

1. Push the talk switch and say “By voice”, or turn the “AUDIO/CONTROL” knob until “By Voice” is displayed and push the knob.

“Voice entry. Push the talk switch and say the number.” is heard.

2. Push the talk switch and say the dial number that you want to register.

“To store, push the talk switch and say confirm. Otherwise, continue adding numbers, or say go back or delete.” is heard and number is displayed.

3. Follow voice guidance instruction.

If “Confirm” is said, then input a voice tag.

“Push the talk switch and say a name.” is heard.

1. Push the talk switch and say the name of the dial number that you want to register.

“XXXX Push the talk switch and say confirm. Otherwise, say go back.” is heard.

2. Follow voice guidance instructions, or turn the “AUDIO/CONTROL” knob until “Confirm” is displayed and push the knob.

“Stored. To register this as a speed dial entry, push the talk switch and say set speed dial. Otherwise, say confirm.” is heard and “Stored” is displayed.

3. Select one of the following:

- **Confirm**
- **Speed Dial**

Confirm

Push the talk switch and say “Confirm”, or turn the “AUDIO/CONTROL” knob until “Confirm” is displayed and push the knob.

“Returning to the phone book.” is heard.

Speed Dial

1. Push the talk switch and say “Set speed dial”, or turn the “AUDIO/CONTROL” knob until “Speed Dial” is displayed and push the knob.

“Set speed dial. Push the preset button to assign to XXXX” is heard.

2. Push the desired preset button.

“Preset... is now assigned. Returning to the phone book.” is heard.

The system may not function in the following cases:

- If the phone book is full.
- If the dial number has more than 24 digits.

(b) By Phone

1. Push the talk switch and say “By phone”, or turn the “AUDIO/CONTROL” knob until “By Phone” is displayed and push the knob.

“Phone entry. Prepare to send the information from the phone. When ready, push the talk switch and say confirm.” is heard.

2. Follow voice guidance instructions, or turn the “AUDIO/CONTROL” knob until “Confirm” is displayed and push the knob.

“Send the information at this time.” is heard.

After the system has received the name and phone number, “Push the talk switch and say confirm. To select an alternate number, say next or previous. Otherwise, say go back.” is heard and “XXX (name)” and “XXX (number)” is displayed.

3. Follow voice guidance instructions, push the talk switch and say “Confirm”, or turn the “AUDIO/CONTROL” knob until the dial number that you want to register is displayed and push the knob.

Next, input a voice tag.

For further details, see page 363.

(c) Call History

1. Push the talk switch and say “Call history”, or turn the “AUDIO/CONTROL” knob until “Call history” is displayed and push the knob.

“Call history. Push the talk switch and say incoming or outgoing.” is heard and “Call History” is displayed.

2. Select one of the following:

- **Incoming**
- **Outgoing**

Incoming

1. Push the talk switch and say “Incoming”, or turn the “AUDIO/CONTROL” knob until “Incoming” is displayed and push the knob.

“Most recent incoming call was XXXX” is heard and the incoming number is displayed.

“Push the talk switch and say confirm. Otherwise, say previous, or go back.” is heard.

2. Follow voice guidance instructions, or turn the “AUDIO/CONTROL” knob until the dial number that you want to register is displayed and push the knob.

Next, input a voice tag.

For further details, see page 363.

Outgoing

1. Push the talk switch and say “Outgoing”, or turn the “AUDIO/CONTROL” knob until “Outgoing” is displayed and push the knob.

“Most recent outgoing call was XXXX” is heard and the outgoing number is displayed.

“Push the talk switch and say confirm. Otherwise, say previous, or go back.” is heard.

2. Follow voice guidance instructions, or turn the “AUDIO/CONTROL” knob until the dial number that you want to register is displayed and push the knob.

Next, input a voice tag.

For further details, see 363.

(d) Manual Input

1. Turn the “AUDIO/CONTROL” knob until “Manual Input” is displayed and push the knob.
2. Turn the “AUDIO/CONTROL” knob to select a number. Push the “AUDIO/CONTROL” knob to set.
3. When the number is set, push the “AUDIO/CONTROL” knob.

Next, input a voice tag.

For further details, see page 363.

INFORMATION

- ***The system can recognize single digits from zero to nine # (pound), ∗ (star), and + (plus). Numbers that are ten or greater are not recognized.***
- ***To speed up input, it is a good idea to group all digits into a continuous string. However, you can enter each digit individually or group digits together in preferred string lengths.***

The display corresponding to each operation appears on the screen as follows:

Input operation—

You say: "Nine, nine, five"

Voice output: "995 to store push the talk switch and say confirm. Otherwise, continue adding numbers, or say go back, or delete."

Display: "995"

You say: "Seven, three, four"

Voice output: "734 to store push the talk switch and say confirm. Otherwise, continue adding numbers, or say go back, or delete."

Display: "995734"

Repeat the above procedure until the entire number that you want to register is input.

Go back operation—

You say: "Go back"

Voice output: "Go back. The last numbers said have been removed. Push the talk switch and say the number."

Display: "995"

Repeating the above operation deletes the last digits in reverse order of input.

Delete operation—

You say: "Delete"

Voice output: "Deleted. Push the talk switch and say the number."

Display: "Delete"

The display will return to the initial screen that allows a number to be input.

To list names

The voice tags can be edited during the name playback.

1. Push the talk switch and say "List names", or turn the "AUDIO/CONTROL" knob until "List Names" is displayed and push the knob.

"List names. To select a name, push the talk switch during the name playback." is heard.

2. Follow voice guidance instructions.

"XXXX selected." is heard and "Selected" is displayed.

If you push the off–hook switch during the name playback, you can dial the number of the selected name.

Editing the voice tags

The following can be performed:

- **Dial**
- **Change Name**
- **Delete Entry**
- **Speed Dial**

“Push the talk switch and say dial, change name, delete entry, or set speed dial.” is heard and “Selected” is displayed.

Dial

Push the talk switch and say “Dial”, or turn the “AUDIO/CONTROL” knob until “Dial” is displayed and push the knob.

Change Name

Push the talk switch and say “Change name”, or turn the “AUDIO/CONTROL” knob until “Change Name” is displayed and push the knob.

For further details, see page 368.

Delete Entry

Push the talk switch and say “Delete entry”, or turn the “AUDIO/CONTROL” knob until “Delete Entry” is displayed and push the knob.

For further details, see page 367.

Speed dial

Push the talk switch and say “Set speed dial”, or turn the “AUDIO/CONTROL” knob until “Speed Dial” is displayed and push the knob.

For further details, see page 369.

To delete entry

1. Push the talk switch and say “Delete entry”, or turn the “AUDIO/CONTROL” knob until “Delete Entry” is displayed and push the knob.

“Delete entry. Push the talk switch and say the name to delete.” is heard.

2. Follow voice guidance instructions, or turn the “AUDIO/CONTROL” knob until the name that you want to delete is displayed and push the knob.

When using a voice command:

“XXXX Push the talk switch and say confirm. Otherwise, say go back.” is heard and “XXXX” is displayed.

Follow voice guidance instructions, or turn the “AUDIO/CONTROL” knob until “Confirm” is displayed and push knob.

“Deleted. Returning to the phone book.” is heard and “Deleted” is displayed.

When using the knob:

“Deleted. Returning to the phone book.” is heard and “Deleted” is displayed.

The system may not function is the following cases:

- If no name has been registered.
- If the system does not recognize the voice command.

To delete speed dial

1. Push the talk switch and say “Delete speed dial”, or turn the “AUDIO/CONTROL” knob until “Del Spd Dial” is displayed and push the knob.

“Delete speed dial. Push the preset button to delete from speed dial.” is heard.

2. Select the preset button that you want to delete.

“To delete preset... push the talk switch and say confirm. Otherwise, say go back.” is heard.

3. Follow voice guidance instructions, or turn the “AUDIO/CONTROL” knob until “Confirm” is displayed and push the knob.

“Deleted.” is heard and “Deleted” is displayed.

“Returning to the phone book.” is heard

The system may not function in the following cases:

- If not speed dial has been registered.
- If the preset button has not been assigned.

To change name

1. Push the talk switch and say “Change name”, or turn the “AUDIO/CONTROL” knob until “Change Name” is displayed and push the knob.

“Change name Push the talk switch and say the name to change” is heard.

2. Follow voice guidance instructions, or turn the “AUDIO/CONTROL” knob until the dial number that you want to change is displayed and push the knob.

When using a voice command:

“XXXX Push the talk switch and say confirm. Otherwise, say go back.” is heard and “XXXX” is displayed.

1. Follow voice guidance instruction, or turn the “AUDIO/CONTROL” knob until “Confirm” is displayed and push the knob.

“Push the talk switch and say a new name.” is heard.

2. Follow voice guidance instructions, or turn the “AUDIO/CONTROL” knob until “Record Name” is displayed, push the knob and say “XXX (new name)”.

“XXXX Push the talk switch and say confirm. Otherwise, say go back.” is heard.

3. Follow voice guidance instructions, or turn the “AUDIO/CONTROL” knob until “Confirm” is displayed and push the knob.

“Name changed. Returning to the phone book.” is heard and “Changed” is displayed.

When using the knob:

“Push the talk switch and say a new name.” is heard.

1. Follow voice guidance instructions, or turn the “AUDIO/CONTROL” knob until “Record Name” is displayed, push the knob and say “XXX (new name)”.

“XXXX Push the talk switch and say confirm. Otherwise, say go back.” is heard.

2. Follow voice guidance instruction, or turn the “AUDIO/CONTROL” knob until “Confirm” is displayed and push the knob.

“Name changed. Returning to the phone book.” is heard and “Changed” is displayed.

The system may not function is the following cases:

- If no name has been registered.
- If the system does not recognize the voice command.

To set speed dial

1. Push the talk switch and say “Set Speed dial”, or turn the “AUDIO/CONTROL” knob until “Speed Dial” is displayed and push the knob.

“Set speed dial. Push the talk switch and say a name.” is heard.

2. Follow voice guidance instructions, or turn the “AUDIO/CONTROL” knob until the dial number that you want to register is displayed and push the knob.

When using a voice command:

“XXXX To register this as a speed dial entry, push the talk switch and say confirm. Otherwise, push the talk switch and say go back.” is heard and “XXXX” is displayed.

1. Follow voice guidance instructions, or turn the “AUDIO/CONTROL” knob until “Confirm” is displayed and push the knob.

“Push and hold the preset button to assign to XXXX” is heard.

2. Push the desired preset button.

“preset... is now assigned. Returning to the phone book.” is heard.

When using the knob:

“Push the preset button to assign to XXXX” is heard.

Push and hold the desired preset button.

“preset... is now assigned. Returning to the phone book.” is heard.

The system may not function in the following cases:

- If not name has been registered.
- If the system does not recognize the voice command.

INFORMATION

A shortcut to each of the following functions is available. Push the off–hook switch and talk switch, and say one of the following:

- ***Phone book add entry***
- ***Phone book change name***
- ***Phone book delete entry***
- ***Phone book delete speed dial***
- ***Phone book list names***
- ***Phone book set speed dial***

—Redial

The following can be performed:

- Dial
- Delete
- Store

To enter the redial

1. Push the off–hook switch to turn the hands–free system on.
2. Follow voice guidance instructions, or turn the “AUDIO/CONTROL” knob until “Redial” is displayed and push the knob.

“Redial. Most recent outgoing call was XXXX” is heard and outgoing history is displayed.

“Please push the off–hook switch to dial. Otherwise, push the talk switch and say dial, previous, go back, store, or delete.” is heard.

Dial

Turn the “AUDIO/CONTROL” knob until the number that you want to dial is displayed and push the knob. After that, do the one of the following:

- Push the off–hook switch.
- Push the talk switch and say “dial”.
- Turn the “AUDIO/CONTROL” knob until “Dial” is displayed and push the knob.

Delete

1. Turn the “AUDIO/CONTROL” knob until the dial number that you want to delete is displayed and push the knob.
2. Push the talk switch and say “Delete”, or turn the “AUDIO/CONTROL” knob until “Delete” is displayed and push the knob.

“Delete. Push the talk switch and say confirm. Otherwise, say go back” is heard.

3. Follow voice guidance instructions, or turn the “AUDIO/CONTROL” knob until “Confirm” is displayed and push the knob.

“Deleted.” is heard.

Store

1. Turn the “AUDIO/CONTROL” knob until the dial number that you want to register is displayed and push the knob.
2. Push the talk switch and say “Store”, or turn the “AUDIO/CONTROL” knob until “Store” is displayed and push the knob.

“Store. Push the talk switch and say confirm. Otherwise, say go back.” is heard.

3. Follow voice guidance instructions, or turn the “AUDIO/CONTROL” knob until “Confirm” is displayed and push the knob.

Next, input a voice tag.

For further details, see page 363.

The system may not function in the following cases:

- If there is no outgoing history.
- If the phone book is locked.

INFORMATION

- ***Up to five outgoing calls can be stored in the system.***
- ***When five outgoing calls are stored in memory, the oldest outgoing call is deleted to make room in memory for new calls.***
- ***Only the latest outgoing call is stored when the same telephone number is dialed.***
- ***A shortcut to “Redial” is available. Push the off–hook switch twice.***

—Callback

The following can be performed:

- Dial
- Delete
- Store

To enter the callback

1. Push the off–hook switch to turn the hands–free system on.
2. Follow voice guidance instructions, or turn the “AUDIO/CONTROL” knob until “Callback” is displayed and push the knob.

“Callback. Most recent incoming call was XXXX” is heard and incoming history is displayed.

“Please push the off–hook switch to dial. Otherwise, push the talk switch and say dial, previous, go back, store, or delete.” is heard.

Dial

Turn the “AUDIO/CONTROL” knob until the number that you want to dial is displayed and push the knob. After that, do the one of the following:

- Push the off–hook switch.
- Push the talk switch and say “Dial”.
- Turn the “AUDIO/CONTROL” knob until “Dial” is displayed and push the knob.

Delete

1. Turn the “AUDIO/CONTROL” knob until the dial number that you want to delete is displayed and push the knob.
2. Push the talk switch and say “Delete”, or turn the “AUDIO/CONTROL” knob until “Delete” is displayed and push the knob.

“Delete. Push the talk switch and say confirm. Otherwise, say go back” is heard.

3. Follow voice guidance instructions, or turn the “AUDIO/CONTROL” knob until “Confirm” is displayed and push the knob.

“Deleted.” is heard.

Store

1. Turn the “AUDIO/CONTROL” knob until the dial number that you want to register is displayed and push the knob.
2. Push the talk switch and say “Store”, or turn the “AUDIO/CONTROL” knob until “Store” is displayed and push the knob.

“Store. Push the talk switch and say confirm. Otherwise, say go back.” is heard.

3. Follow voice guidance instructions, or turn the “AUDIO/CONTROL” knob until “Confirm” is displayed and push the knob.

Next, input a voice tag.

For further details, see page 363.

The system may not function in the following cases:

- If there is no incoming history.
- If the phone book is locked.

INFORMATION

- ***Up to five incoming calls can be stored in the system.***
- ***When five incoming calls are stored in memory, the oldest incoming call is deleted to make room in memory for new calls.***

—Making a phone call

If the cellular phone is not registered, this system cannot be used. See page 353 for registering a cellular phone. Make sure that “BT” is displayed and get the cellular phone ready to use.

There are 3 way to make a phone call with this system.

- **Speed dial**

A phone call can be made with a preset button in which a phone number is registered. See page 369 for setting the preset buttons.

- **Dial by Name**

The system dials the numbers corresponding to the spoken names registered in the system.

- **Dial by Number**

The system dials to the spoken numbers.

To make a phone call

Push the off–hook switch to turn the hands–free system on.

To speed dial

1. Push the preset button where the desired number is set. The name or telephone number is displayed.
2. Push the off–hook switch to dial.

To dial by Name

1. Push the talk switch and say “Dial by name”.

“Dial by name. Please push the talk switch and say the stored name, or say list names.” is heard and “Dial by Name” is displayed.

2. Push the talk switch and say “XXXX”, or turn the “AUDIO/CONTROL” knob until the phone name that you want to dial is displayed and push the knob.

When using a voice command:

“XXXX Push the off–hook switch to dial. Otherwise, push the talk switch and say dial, or go back.” is heard. After that, do the one of the following:

- Push the off–hook switch.
- Push the talk switch and say “Dial”.
- Turn the “AUDIO/CONTROL” knob until “Dial” is displayed and push the knob.

When using the knob:

It calls the number.

The system may not function in the following cases:

- If there is no number registered in the preset button.
- If the system does not recognize the voice command.

INFORMATION

- ***The phone numbers registered in the phone book can be retrieved.***
- ***The system does not recognize that the voice tag is not registered in the registered cellular phone. For details about voice tags, see "To add entry" on page 363.***
- ***A shortcut to "Dial by name" is available. Push the talk switch and say "Dial XXX (name you want to dial)".***

To dial by Number

1. Push the talk switch and say "Dial by Number".

"Dial by number. Please push the talk switch and say the number." is heard and "Dial by Num" is displayed.

2. Push talk switch and say "XXXX".

"Push the off–hook switch to dial. Otherwise, push the talk switch and say dial, go back, or delete." is heard.

To dial the number, do the one of the following:

- Push the off–hook switch.
- Push the talk switch and say "Dial".
- Turn the "AUDIO/CONTROL" knob until "Dial" is displayed and push the knob.

If the number exceeds 24 digits, the system may not function properly.

INFORMATION

- ***The system can recognize single digits from zero to nine, # (pound), * (star), and + (plus). Numbers that are ten or greater are not recognized.***
- ***To speed up input, it is a good idea to group all digits into a continuous string. However, you can enter each digit individually or group digits together in preferred string lengths.***

The display corresponding to each operation appears on the screen as follows:

Input operation—

You say: "Nine, nine, five"

Voice output: "995 push the off–hook switch to dial. Otherwise, push the talk switch and say dial, go back, or delete."

Display: "995"

You say: "Seven, three, four"

Voice output: "734 push the off–hook switch to dial. Otherwise, push the talk switch and say dial, go back, or delete."

Display "995734"

Repeat the above procedure until the entire number that you want to dial is input.

Go back operation—

You say: "Go back"

Voice output: "Go back, the last numbers entered have been removed. Push the talk switch and continue adding numbers otherwise say dial, go back, or delete."

Display: "995"

Repeating the above operation deletes the last digits in reverse order of input.

Delete operation—

You say: "Delete"

Voice output: "Deleted. The entire number to dial has been deleted. Please push the talk switch and say the number."

Display: "Dial by Num"

The display will return to the initial screen that allows a number to be input.

Cancel operation—

Do either one of the following:

- ***Push the on–hook switch at anytime during the operation.***
- ***Push the talk switch and say "Cancel" after the beep at anytime during the operation except while a call in connected.***

—Receiving a phone call

When receiving a phone call, a ring tone is audible and the system changes into the telephone mode.

When receiving a phone call, the display is as follows. The display differs depending on whether or not the vehicle is in motion.

When the vehicle is stopped:

Number, name, or "Incoming" is displayed.

When the vehicle is in motion:

"Incoming" is displayed.

Do either one of the following:

- Pushing the off–hook switch allows you to talk on the phone.
- Pushing the on–hook switch refuses the call.

To adjust the ring volume, push "+" or "–" on the steering volume controls. Volume adjustment cannot be done using the audio system.

Repeatedly pushing "–" on the steering volume controls mutes the ring.

When receiving an international phone call, the name of the party may not be displayed correctly depending on the cellular phone.

To transfer a call to the phone:

The received call can be transferred from the hands–free system to the cellular phone that is connected to Bluetooth®. For details, refer to the user's guide for the cellular phone.

—Talking on the phone

While talking on the phone, the display is as follows. The display differs depending on whether or not the vehicle is in motion.

When the vehicle is stopped:
Number is displayed.

When the vehicle is in motion:
"Talking" is displayed.

When the call is finished, push the on–hook switch.

In the following situations, your voice may not reach the party.

- Talk alternately with the other party on the phone. If you talk at the same time, the voice may not reach each other. (It is not a malfunction.)
- Keep the volume of receiving voice down. Otherwise, echo is coming up. When you talk on the phone, speak clearly towards the microphone.
- When driving on a rough road.
- When driving at high speeds.
- When the window is open.
- When the air conditioning vents face the microphone.
- When the sound of the air conditioning fan is loud.

To transfer a call from the phone:

Pushing the off–hook switch while talking on the cellular phone that is connected to Bluetooth® allows you to talk hands–free.

To transfer a call to the phone:

The call can be transferred from the hands–free system to the phone that is connected to Bluetooth®. For details, refer to the user's guide for the cellular phone.

SECTION 1 – 9

OPERATION OF INSTRUMENTS AND CONTROLS

Air conditioning system

Manual air conditioning system
Controls 378
Air flow selector settings 382
Operating tips 382
Automatic air conditioning system
Controls 386
Air flow selector settings 390
Operating tips 390
Instrument panel and rear vents 393
Air conditioning filter 394

Manual air conditioning system— —Controls

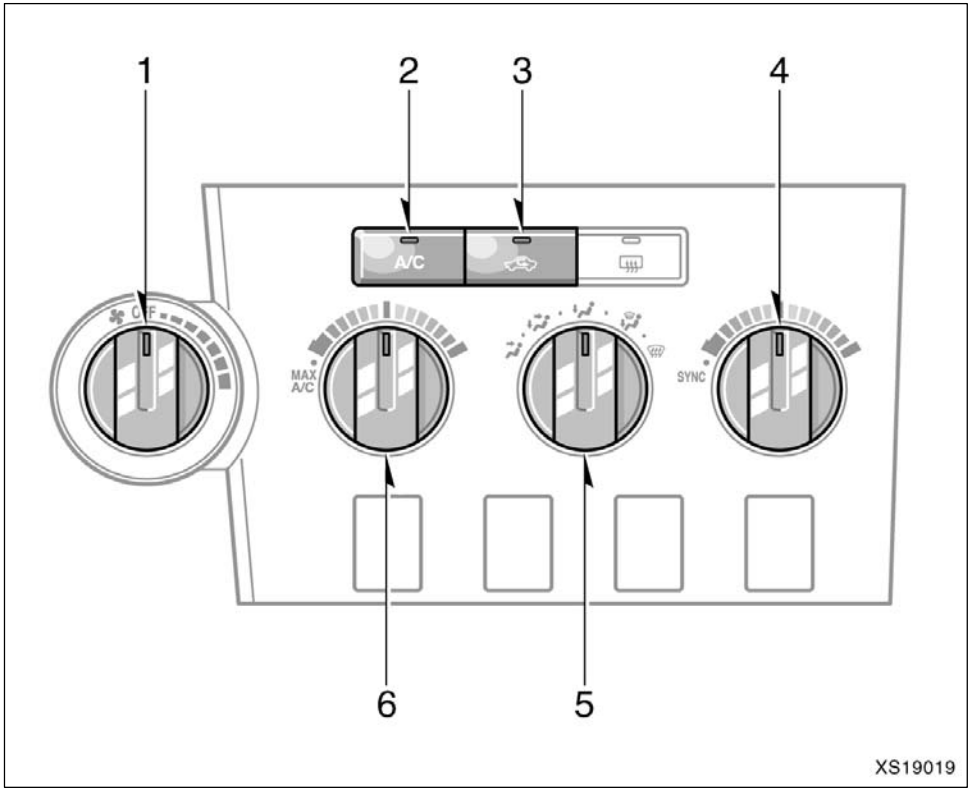

1. Fan speed selector
2. “A/C” button
3. Air intake selector
4. Temperature selector (passenger side temperature control)
5. Air flow selector
6. Temperature selector (driver side temperature control)

Fan speed selector

Turn the knob to adjust the fan speed—to the right to increase, to the left to decrease.

Temperature selector (driver side)

Turn the knob to adjust the temperature—to the right to warm, to the left to cool.

“MAX A/C” position—Turning the temperature selector knob to the “MAX A/C” position turns on the air conditioning and sets the air intake selector to RECIRCULATE for quick cooling.

Temperature selector (passenger side)

Turn the knob to adjust the temperature—to the right to warm, to the left to cool.

Independent setting—
When the passenger side selector is in a position other than the “SYNC” position, the temperature only on passenger side can be adjusted using the selector. This function is canceled when the passenger side temperature selector is turned to the “SYNC” position.

Simultaneous setting—
When the passenger side selector is in the “SYNC” position, the temperatures on both driver and passenger sides can be simultaneously adjusted using the driver side selector. This function is canceled when the passenger side temperature selector is turned to the right.

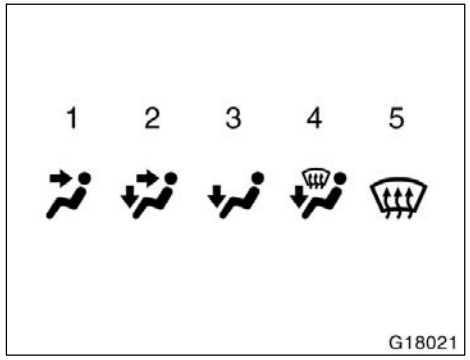

Air flow selector

Turn the knob to select the vents used for air flow.

1. **Panel—**Air flows mainly from the instrument panel vents and the rear vents.
2. **Bi–level—**Air flows from both the floor vents, the instrument panel vents and the rear vents.
3. **Floor—**Air flows mainly from the floor vents.

4. **Floor/Windshield—**Air flows mainly from the floor vents and windshield vents.

   Turning the air flow selector to the floor/windshield position turns on the defogging/defrosting function with the purpose of clearing the windshield.

   In this position, air intake selector mode changes to FRESH automatically to clear the windshield quickly. If you want to return the setting to RECIRCULATE mode, press the air intake selector button once again.

   Press the “A/C” button for dehumidified heating or cooling. This setting clears the windshield more quickly.

5. **Windshield—**Air flows mainly from the windshield vents.

   Turning the air flow selector to the windshield position turns on the defogging/defrosting function and the air conditioning with the purpose of clearing the windshield.

   In this position, air intake selector mode changes to FRESH automatically to clear the windshield quickly. It is not possible to return to RECIRCULATE in this position.

   In this position, the air conditioning turns on regardless of the “A/C button indicator comes on or goes off. This is not a malfunction.

For details about air flow selector settings, see “Air flow selector settings” described below.

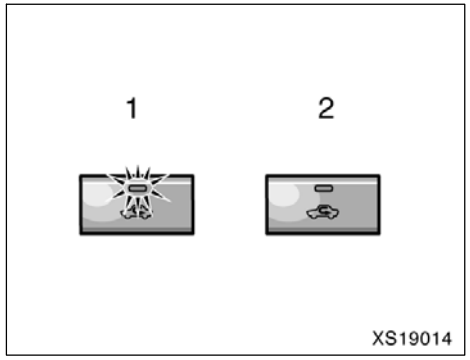

Air intake selector

Press the button to select the air source.

1. **Recirculate** (indicator light is on)—Recirculates the air inside the vehicle.
2. **Fresh** (indicator light is off)—Draws outside air into the system.

To prevent fogging up of the windshield, the air intake mode may change automatically to FRESH depending on the condition of the air conditioning system.

If the ambient temperature drops, the air intake mode will automatically change from RECIRCULATE to FRESH after a few minutes. This automatic change control mode can be cancelled by pushing and holding the button for longer than 2 seconds. The automatic change control mode will be reactivated if the ignition switch is turned to the “LOCK” or “ACC” position.

“A/C” button

To turn on the air conditioning, press the “A/C” button. The “A/C” button indicator will come on. To turn the air conditioning off, press the button again.

If the “A/C” button indicator flashes, there is a problem in the air conditioning system and the air conditioning automatically shuts off. If this happens, take your vehicle to a Toyota dealer for service.

—Air flow selector settings

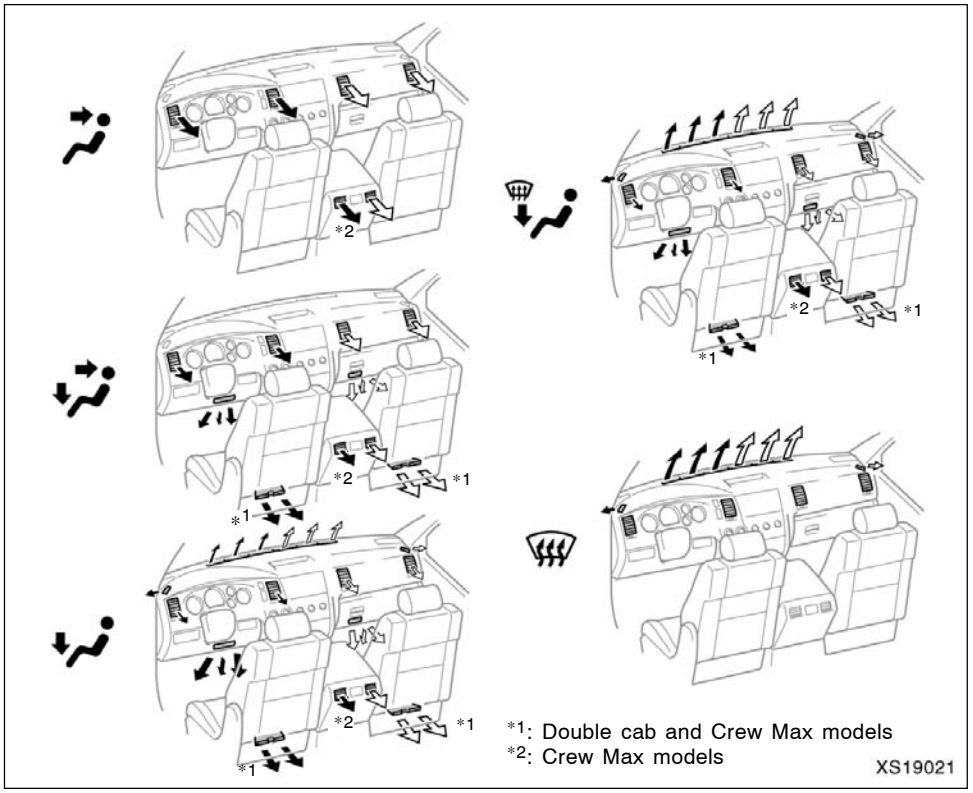

➡:driver side ⇨:passenger side

—Operating tips

- To cool off your Toyota after it has been parked in the hot sun, drive with the windows open long enough for the hot air to escape. This operation allows the air conditioning to cool the interior more quickly.
- Make sure the air intake grilles in front of the windshield are not blocked (by leaves or snow, for example).
- On humid days, do not blow cold air on the windshield. The windshield could fog up because of the difference in air temperature on the inside and outside of the windshield.
- Keep the area under the front seats clear to allow air to circulate throughout the vehicle.
- On cold days, set the fan speed to high for a minute to help clear the intake ducts of snow or moisture. This can reduce the amount of fogging on the windows.
- When driving on dusty roads, close all windows. If dust thrown up by the vehicle is still drawn into the vehicle after closing the windows, it is recommended that the air intake selector be set to FRESH and the fan speed selector to any setting except “OFF”.

- If following another vehicle on a dusty road, or driving in windy and dusty conditions, it is recommended that the air intake selector be temporarily set to RECIRCULATE, which will close off the outside passage and prevent outside air and dust from entering the vehicle interior.

Heating

For best results, set controls to:

Fan speed—Any setting except “OFF”
Temperature—Towards red zone
Air intake—FRESH (outside air)
Air flow—FLOOR
Air conditioning—OFF

- For quick heating, select recirculated air for a few minutes. To keep the windows from fogging, select fresh after the vehicle interior has been warmed.
- Press the “A/C” button on for dehumidified heating.
- Choose floor/windshield air flow to heat the vehicle interior while defrosting or defogging the windshield.

Air conditioning

For best results, set controls to:

Fan speed—Any setting except “OFF”
Temperature—Towards blue zone
Air intake—FRESH (outside air)
Air flow—PANEL
Air conditioning—ON

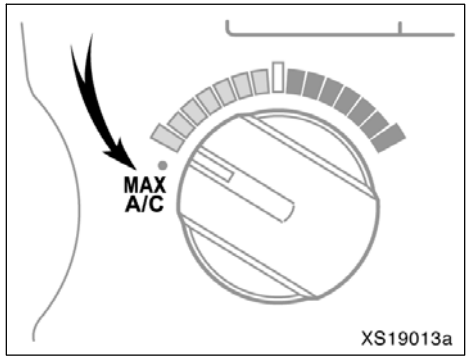

- For quick cooling, turn the temperature selector knob to the “MAX A/C” position. The air conditioning will automatically turn on and the air intake selector will be set to RECIRCULATE.

Ventilation

For best results, set controls to:

Fan speed—Any setting except “OFF”
Temperature—Towards blue zone
Air intake—FRESH (outside air)
Air flow—PANEL
Air conditioning—OFF

Defogging

Condition: Moisture is on the inside of the windshield.

For best results, set controls to:

Fan speed—Any setting except “OFF”
Temperature—Towards red zone to heat; blue zone to cool
Air intake—FRESH (outside air)
Air flow—WINDSHIELD

Turning the air flow selector to the windshield or floor/windshield position turns on the defogging function with the purpose of clearing the windshield.

When turning the air flow selector to windshield or floor/windshield position, air intake selector mode changes to FRESH automatically to clear the windshield quickly. If you want to return the setting to RECIRCULATE mode, press the air intake selector button once again. However, if the air flow selector is in the windshield position, it is not possible to return to RECIRCULATE.

Press the “A/C” button for dehumidified heating or cooling. This setting clears the front view more quickly.

- On humid days, do not blow cold air on the windshield—the difference between the outside and inside temperatures could make the fogging worse.
- When side windows fog up, turn the side vents toward the windows.

Defrosting

Condition: Moisture is on the outside of the windshield.

For best results, set controls to:

Fan speed—Any setting except “OFF”
Temperature—Towards red zone
Air intake—FRESH (outside air)
Air flow—WINDSHIELD

Turning the air flow selector to the windshield or floor/windshield position turns on the defrosting function with the purpose of clearing the windshield.

When turning the air flow selector to windshield or floor/windshield position, air intake selector mode changes to FRESH automatically to clear the windshield quickly. If you want to return the setting to RECIRCULATE mode, press the air intake selector button once again. However, if the air flow selector is in the windshield position, it is not possible to return to RECIRCULATE.

Press the “A/C” button for dehumidified heating or cooling. This setting clears the front view more quickly.

- To heat the vehicle interior while defrosting the windshield, choose floor/windshield air flow.

Automatic air conditioning system (on some Double cab and Crew Max models)— —Controls

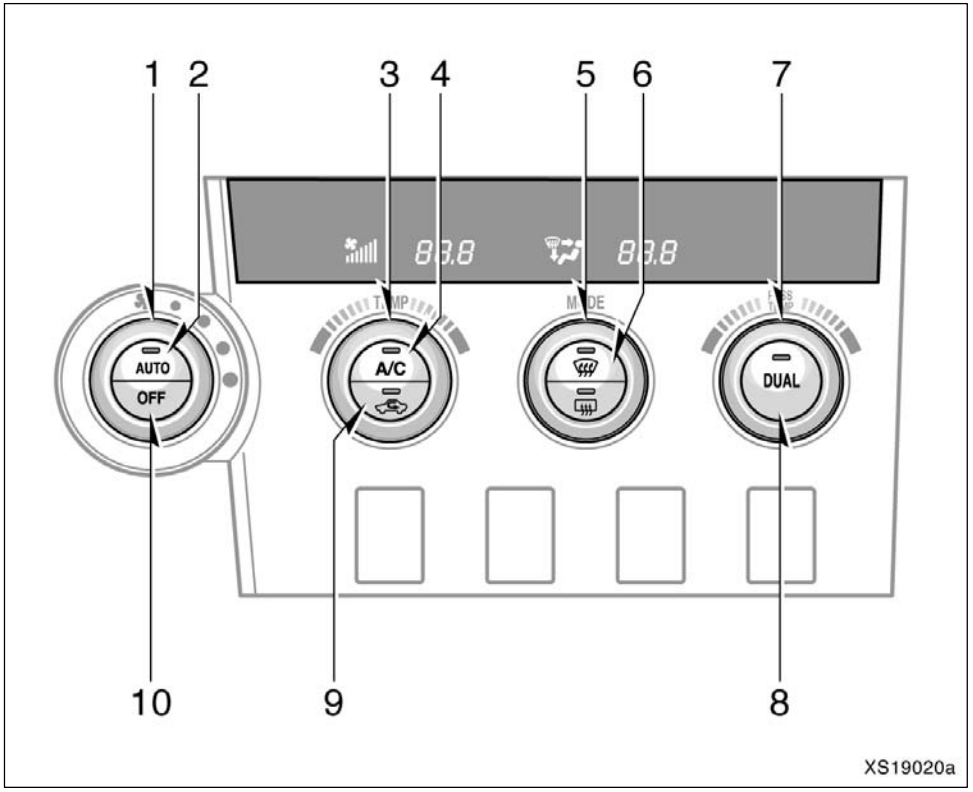

1. Fan speed selector
2. “AUTO” button
3. Temperature selector (“TEMP”) (with “DUAL” button indicator on—individual setting on driver and front passenger) (with “DUAL” button indicator off—simultaneous setting on driver and front passenger)
4. “A/C” button
5. Air flow selector
6. Windshield air flow button
7. Temperature selector (“PASS TEMP”) (individual setting on front passenger side only)
8. “DUAL” button
9. Air intake selector
10. “OFF” button

“AUTO” button

For automatic operation of the air conditioning, press the “AUTO” button. The “AUTO” button will turn on, indicating that the automatic operation mode has been selected.

In the automatic operation mode, the air conditioning selects the most suitable fan speed, air flow, air intake and on–off of the air conditioning according to the temperature.

When you press the “AUTO” button with the air intake mode at FRESH, internal circulation may be applied for maximum cooling.

You may use manual controls if you want to select your own settings.

Fan speed selector

Turn the knob to adjust the fan speed—to the right to increase, to the left to decrease.

In automatic operation, you do not have to adjust the fan speed unless you desire another fan speed mode.

“DUAL” button

Push the button to change the mode of the temperature setting.

With the indicator on—Individual temperature setting for driver and front passenger

With the indicator off—Simultaneous temperature setting for driver and front passenger

Temperature selectors

Turn the knob to adjust the temperature—to the right to warm, to the left to cool.

“LO” appears when you adjust to maximum cooling, and “HI” appears when you adjust to maximum warming.

—“TEMP” knob

With the “DUAL” button indicator on—This knob changes the temperature on the driver side only.

With the “DUAL” button indicator off—This knob changes the temperature on the driver side and front passenger side simultaneously. This function will be cancelled when the “PASS TEMP” knob is turned.

—“PASS TEMP” knob

This knob changes the temperature on the front passenger side only.

“OFF” button

Push the button to turn off the air conditioning system.

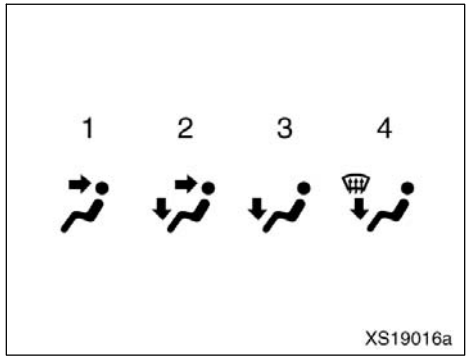

Air flow selector

Turn the knob to select the vents used for air flow.

In automatic operation, you do not have to select the air flow unless you desire another air flow mode.

1. **Panel—**Air flows mainly from the instrument panel vents and the rear vents.
2. **Bi–level—**Air flows from both the floor vents, the instrument panel vents and the rear vents.
3. **Floor—**Air flows mainly from the floor vents.
4. **Floor/Windshield—**Air flows mainly from the floor vents and windshield vents.

Windshield air flow button

When this button is pressed, air flows mainly from the windshield vents.

Pressing the button once again returns the air flow mode to the last one used.

Pressing the windshield button turns on the defroster–linked air conditioning. At this time, the air conditioning turns on regardless of the “A/C” button indicator comes on or goes off. This is not a malfunction. This is to clean up the front view more quickly.

For details about air flow selector settings, see “Air flow selector settings” described below.

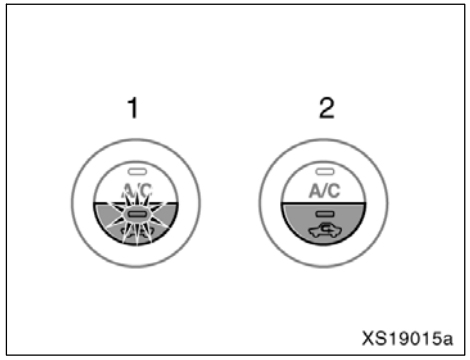

Air intake selector

Press the button to select the air source.

1. **RECIRCULATE** (indicator light is on)—Recirculates the air inside the vehicle.
2. **FRESH** (indicator light is off)—Draws outside air into the system.

To prevent fogging up of the windshield, the air intake mode may change automatically to FRESH depending on the condition of the air conditioning system.

“A/C” button

To turn on the air conditioning, press the “A/C” button. The “A/C” button indicator will come on. To turn the air conditioning off, press the button again.

If the “A/C” button indicator flashes, there is a problem in the air conditioning system and the air conditioning automatically shuts off. If this happens, take your vehicle to a Toyota dealer for service.

—Air flow selector settings

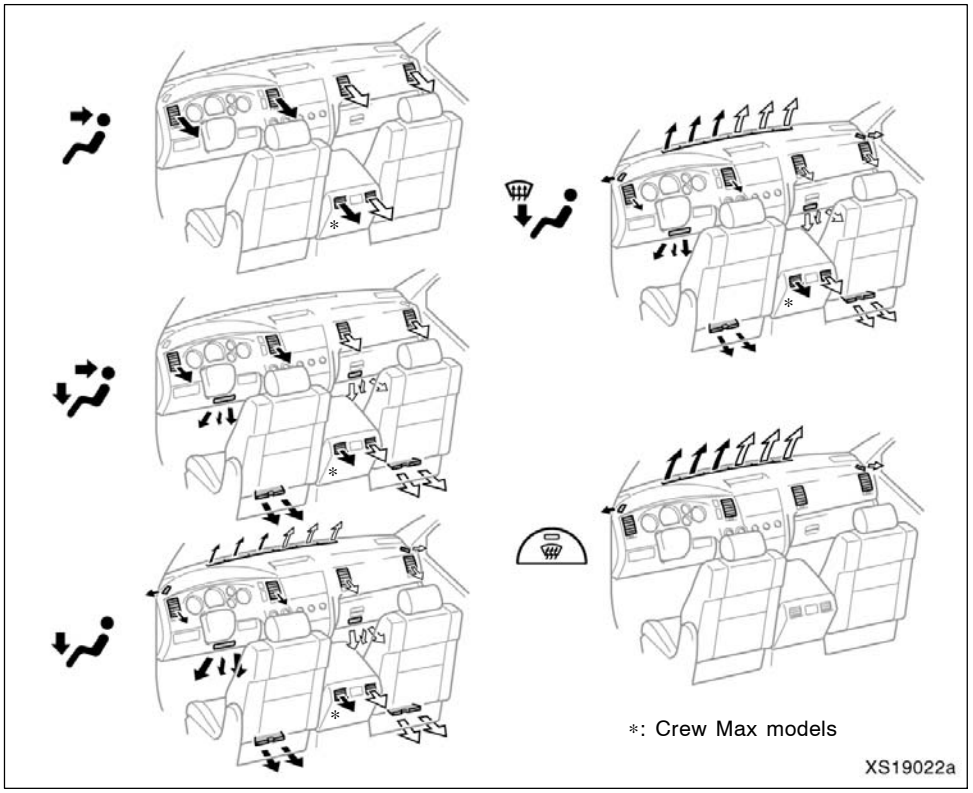

➡:driver side ⇨:passenger side

—Operating tips

- To cool off your Toyota after it has been parked in the hot sun, drive with the windows open for a few minutes. This vents the hot air, allowing the air conditioning to cool the interior more quickly.
- Make sure the air intake grilles in front of the windshield are not blocked (by leaves or snow, for example).
- On humid days, do not blow cold air on the windshield. The windshield could fog up because of the difference in air temperature on the inside and outside of windshield.
- Keep the area under the front seats clear to allow air to circulate throughout the vehicle.
- On cold days, set the fan speed to high for a minute to help clear the intake ducts of snow or moisture. This can reduce the amount of fogging on the windows.
- When driving on dusty roads, close all windows. If dust thrown up by the vehicle is still drawn into the vehicle after closing the windows, it is recommended that the air intake selector be set to FRESH and the fan speed to any setting except off.

- If following another vehicle on a dusty road, or driving in windy and dusty conditions, it is recommended that the air intake selector be temporarily set to RECIRCULATE, which will close off the outside passage and prevent outside air and dust from entering the vehicle interior.

Heating

For best results, set controls to:

For automatic operation—

Press in the "AUTO" button.
Temperature—To the desired temperature
Air intake—FRESH (outside air)
Air conditioning—OFF

For manual operation—

Fan speed—To the desired fan speed
Temperature—Towards red zone
Air intake—FRESH (outside air)
Air flow—FLOOR
Air conditioning—OFF

- For quick heating, select recirculated air for a few minutes. To keep the windows from fogging, select fresh after the vehicle interior has been warmed.
- Press the "A/C" button on for dehumidified heating.
- Choose floor/windshield air flow to heat the vehicle interior while defrosting or defogging the windshield.

Air conditioning

For best results, set controls to:

For automatic operation—

Press in the "AUTO" button.
Temperature—To the desired temperature
Air intake—FRESH (outside air)
Air conditioning—ON

For manual operation—

Fan speed—To the desired fan speed
Temperature—Towards blue zone
Air intake—FRESH (outside air)
Air flow—PANEL
Air conditioning—ON

- For quick cooling, select recirculated air for a few minutes.

Ventilation

For best results, set controls to:

For automatic operation—

Press in the "AUTO" button.
Temperature—Towards low temperature
Air intake—FRESH (outside air)
Air conditioning—OFF

For manual operation—

Fan speed—To the desired fan speed
Temperature—Towards blue zone
Air intake—FRESH (outside air)
Air flow—PANEL
Air conditioning—OFF

Defogging and defrosting

—The inside of the windshield

For best results, set controls to:

For automatic operation—

Temperature—Towards high temperature to heat; low temperature to cool
Air intake—FRESH (outside air)
Air flow—WINDSHIELD

For manual operation—

Fan speed—To the desired fan speed
Temperature—Towards high temperature to heat; low temperature to cool
Air intake—FRESH (outside air)
Air flow—WINDSHIELD

Pressing the windshield button turns on the defroster–linked air conditioning. At this time, the air conditioning turns on regardless of the "A/C" button indicator comes on or goes off. This is not a malfunction. This is to clean up the front view more quickly.

- On humid days, do not blow cold air on the windshield—the difference between the outside and inside temperatures could make the fogging worse.

—The outside of the windshield

For best results, set controls to:

For automatic operation—

Temperature—Towards high temperature
Air intake—FRESH (outside air)
Air flow—WINDSHIELD

For manual operation—

Fan speed—To the desired fan speed
Temperature—Towards high temperature
Air intake—FRESH (outside air)
Air flow—WINDSHIELD

Pressing the windshield button turns on the defroster–linked air conditioning. At this time, the air conditioning turns on regardless of the "A/C" button indicator comes on or goes off. This is not a malfunction. This is to clean up the front view more quickly.

- To heat the vehicle interior while defrosting the windshield, choose floor/windshield air flow.

Instrument panel and rear vents

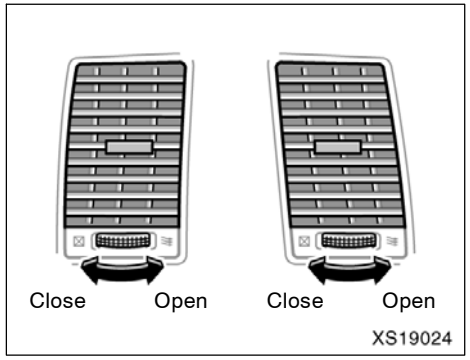

Side and center vents

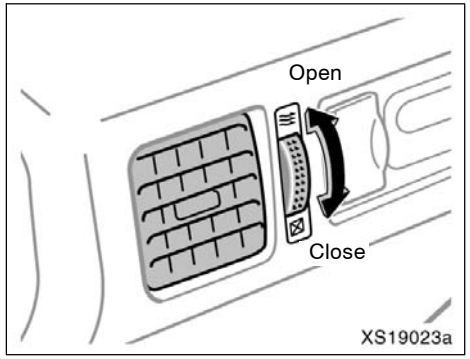

Rear vents (Crew Max models)

If air flow control is not satisfactory, check the instrument panel and rear vents. The instrument panel and rear vents may be opened or closed as shown.

Air conditioning filter—

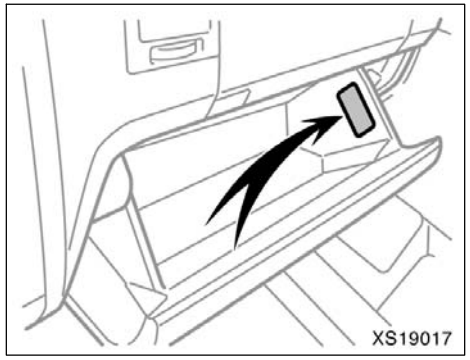

The air conditioning filter information label is placed inside of the glove box as shown and indicates that a filter has been installed.

The air conditioning filter prevents dust from entering the vehicle through the air conditioning vent.

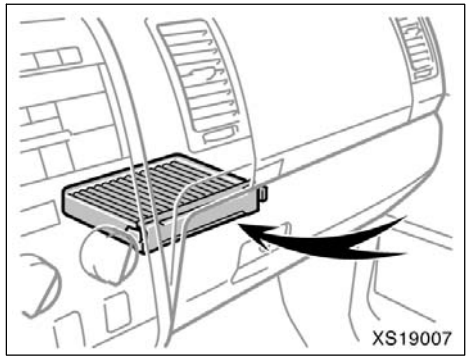

The air conditioning filter is behind the glove box.

—Checking and replacing the air conditioning filter

The air conditioning filter may clog after long use. The filter may need to be replaced if the air flow of the air conditioning and heater experiences extreme reductions in operating efficiency, or if the windows begin to fog up easily.

To maintain the air conditioning efficiency, inspect and replace the air conditioning filter according to the maintenance schedule. In dusty areas or areas with heavy traffic flow, such as inner city or desert areas, early replacement may be required. (For scheduled maintenance information, please refer to the “Scheduled Maintenance Guide” or “Owner’s Manual Supplement.”)

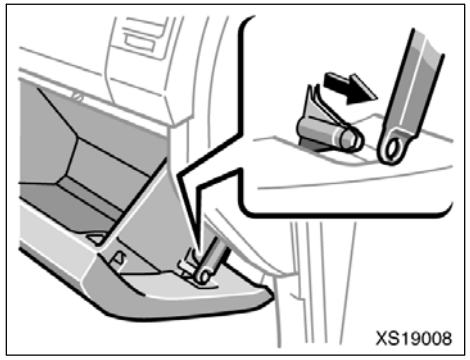

1. Open the glove box, and slide off the damper as shown.

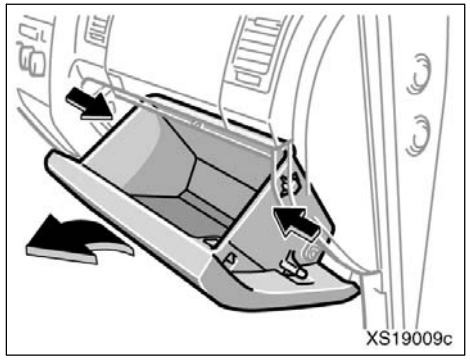

2. Push in each side of the glove box to disconnect the claws.

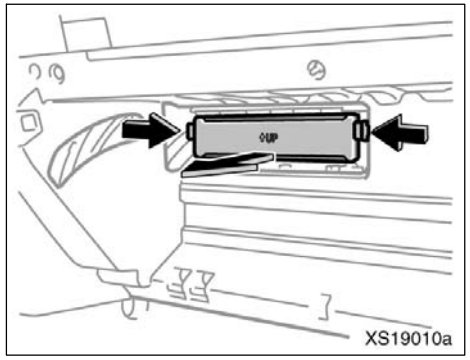

3. Remove the filter cover while pushing in both ends of the cover.

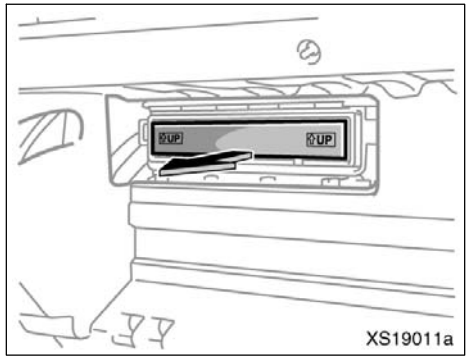

4. Pull the filter out of the filter outlet. Inspect the filter on the surface.

If it is dirty, it should be replaced.

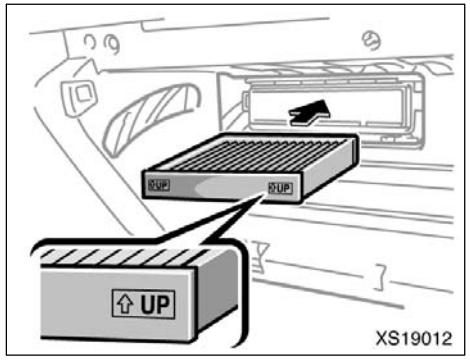

When installing the filter in the filter outlet, keep the arrow pointing up.

INFORMATION
The air filter should be installed properly in position. The use of air conditioning with the air filter removed may cause deteriorated dustproof performance and then affect air conditioning performance.

SECTION 1 – 10

OPERATION OF INSTRUMENTS AND CONTROLS

Other equipment

Accessory meter 398
Intuitive parking assist 402
Compass 407
Cigarette lighter and ashtray 411
Power outlets (12 VDC) 412
Power outlet (115 VAC) 414
Glove boxes 416
Garage door opener 416
Auxiliary boxes 420
Sunglass holder 421
Card holder 422
Map holder 423
Pen holder 425
Tissue pocket 425
Center console box 426
Front cup holders 428
Rear cup holders 429
Bottle holders 430
Storage box 431
Seatback table 432
Deck hooks 432
Grocery bag/cargo net hooks 433
Floor mat 433

Accessory meter—

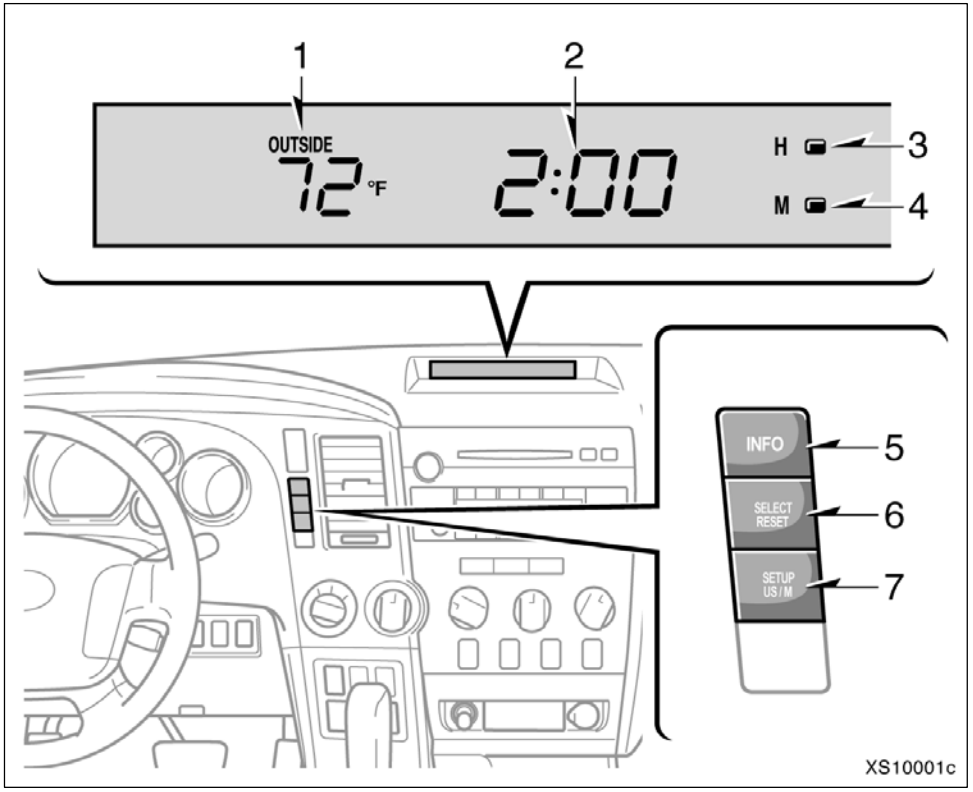

1. Outside temperature and cruise information display or outside temperature display
2. Clock
3. “H” button
4. “M” button
5. “INFO” button (with cruise information)
6. “SELECT RESET” button (with cruise information)
7. “SETUP US/M” button

—Before using the accessory meter

Operate the accessory meter with the ignition switch on.

When the ignition switch is turned to “ON”, the last previously used mode displayed just before the ignition switch is turned off will appear.

When the instrument panel lights are turned on, the brightness of the display will be reduced.

⚠ CAUTION

Do not adjust the display while the vehicle is moving. Be sure to adjust the display only when the vehicle is stopped.

SELECTING UNIT

You can select the unit between English/U.S. customary system and metric unit.

To select the unit A (English/U.S. customary system) or unit B (metric unit), push “SETUP US/M” button.

The unit variations are as follows:

Information	Unit A	Unit B
Average fuel consumption and Instantaneous fuel consumption	MPG	L/100 km
Driving range	MILES	km
Outside temperature	°F	°C

—Outside temperature display (without cruise information)

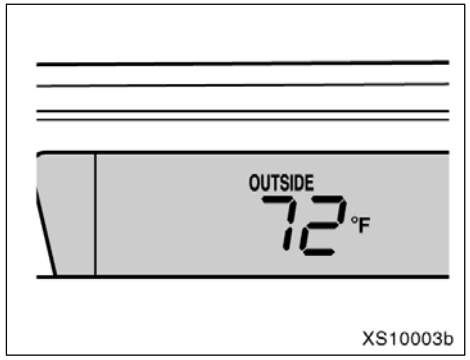

The displayed temperature ranges from –40°C (–40°F) up to 50°C (122°F).

The ignition switch must be in the “ON” position.

If an abnormality exists in the connection of the outside air temperature sensor, “–––°C” (“–––°F”) will appear on the display. If “–––°C” (“–––°F”) appears on the display, contact your Toyota dealer.

There may be a case that “–––°C” (“–––°F”) appears momentarily when the ignition switch is quickly turned to “ON”. It is normal if it goes out soon.

—Outside temperature and cruise information display

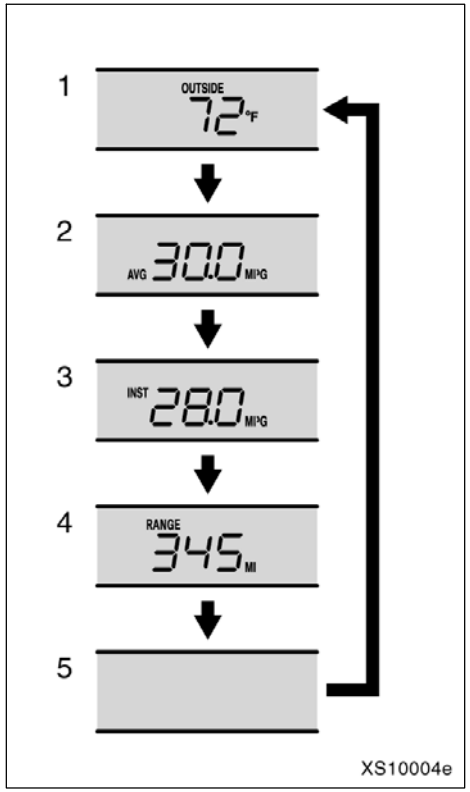

The outside temperature display and cruise information display indicates the following information.

Every time you push the "INFO" button, the display toggles through this information.

1. Outside temperature
2. Average fuel consumption
3. Instantaneous fuel consumption
4. Driving range
5. Display off

The displayed values in the cruise information display indicate general driving conditions. Accuracy varies with driving habits and road conditions.

To set the unit, push the "SETUP US/M" button until the desired unit display appears.

When the ignition switch is on, the last previously used mode displayed just before the ignition switch is off will appear.

1. **Outside temperature ("OUTSIDE °F" or "OUTSIDE °C")**

The outside temperature display indicates the outside air temperature.

The displayed temperature ranges from –40°C (–40°F) up to 50°C (122°F).

If an abnormality exists in the connection of the outside air temperature sensor, "–––°C" ("–––°F") will appear on the display. If "–––°C" ("–––°F") appears on the display, contact your Toyota dealer.

There may be a case that "–––°C" ("–––°F") appears momentarily when the ignition switch is quickly turned to the "ON" position. It is normal if it goes out soon.

2. **Average fuel consumption ("AVG MPG" or "AVG L/100 km")**

Average fuel consumption is calculated and displayed based on total driving distance and total fuel consumption with the engine running.

The displayed value is updated about every 10 seconds.

To reset the calculation, push the "SELECT RESET" button about 2 second.

3. **Instantaneous fuel consumption (“INST MPG” or “INST L/100 km”)**

The instantaneous fuel consumption is calculated and displayed based on distance and fuel consumption at 20 revolutions of the engine.

The displayed value is updated for a short time.

An accurate figure may not be shown if the vehicle is driving down a long slope, and engine brake is applied. (The display will indicate the extremely low fuel consumption.)

When the vehicle is stopped with the engine running, “––, –MPG” will be shown on the display.

The calculation is reset when the ignition switch is turned off.

4. **Driving range (“RANGE MI” or “RANGE km”)**

The distance the vehicle can travel with the remaining fuel is calculated and displayed based on the quantity of remaining fuel and past fuel consumption.

The driving range display indicates the approximate distance that you can drive until the fuel gauge reaches “E”. It is different from the actual distance traveled.

The displayed value is updated every time the fuel equivalent for 1 mile or 1 km is consumed.

Every time you refuel the vehicle, the calculation is reset.

The actual driving range varies with driving habits and road conditions. If fuel consumption is good, the driving range will be longer than indicated. If fuel consumption is poor, the driving range will be shorter than indicated.

If the low fuel level warning light comes on, refuel the vehicle even if the display indicates that the vehicle can be driven further.

—Clock

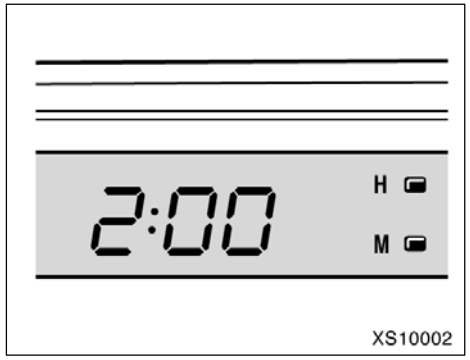

Type A (with cruise information)

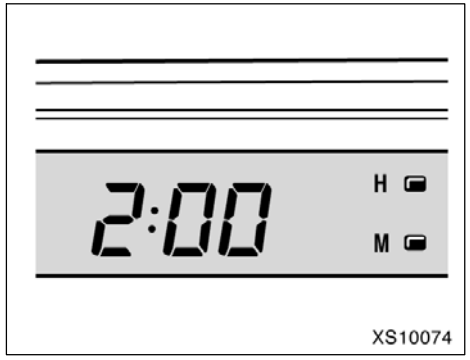

Type B (without cruise information)

To reset the hour: Push the “H” button.
To reset the minutes: Push the “M” button.

Vehicle with cruise information only—
For quicker adjustment of the clock, hold down “M” or “H” button continuously. This allows faster advancement of the minutes and hours while setting.

The ignition switch must be in the “ACC” or “ON” position.

If the electrical power source has been disconnected from the clock, the time display will automatically be set to 1:00 (one o’clock).

When the instrument panel lights are turned on, the brightness of the time indication will be reduced.

Intuitive parking assist

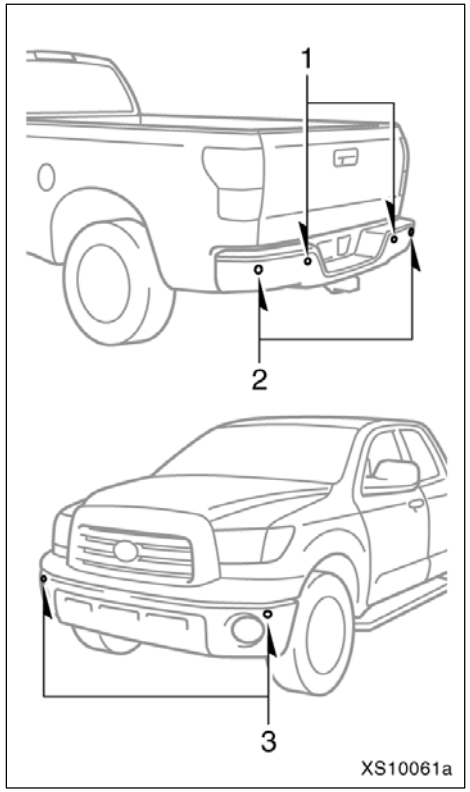

1: Rear sensors
2: Rear corner sensors
3: Front corner sensors

The intuitive parking assist is designed to inform you of the approximate distance between your vehicle and an obstruction by indicator and buzzer when parking the vehicle. This system uses sensors to detect obstructions.

This system works when the ignition switch is in the “ON” position and the transmission is not in the “P” position.

Rear and rear corner sensors work only when the transmission is in the “R” position.

Front corner sensors works when:

- Transmission is in the “R” position.
- Transmission is not in the “P” or “R” position and vehicle speed is approximate 10 km/h (6 mph) or less.

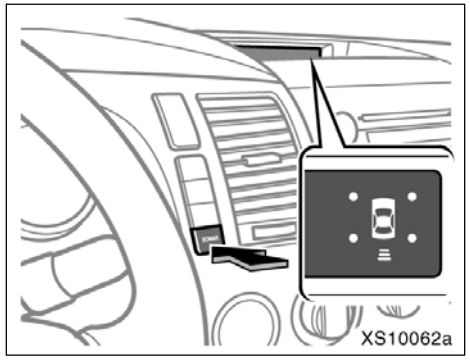

To turn on: Push the switch.

The indicator comes on and the buzzer will sound.

To turn off: Push the switch again.

In the following cases, the buzzer will sound several times and the indicator will stay on to indicate that the system is not working properly.

- When the temperature is extremely low.
- When any of the sensors are malfunction.

If the indicator is continuously on, have your Toyota dealer check the system.

If the indicator remains blinking but you do not hear the buzzer sound, clean the sensors with soft cloth.

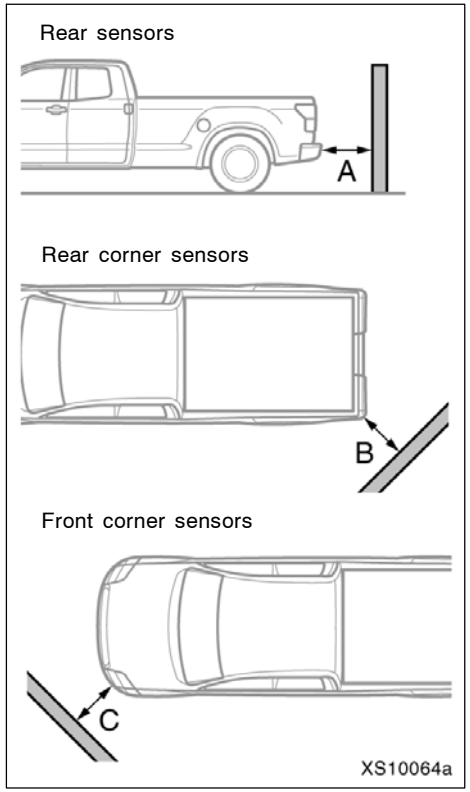

This system is designed to inform you of the approximate distance between your vehicle and an obstacle by indicator and buzzer.

Rear sensors

Distance shown as A in mm (in.)	Indicator and buzzer
Approximately 1800—1150 (70.9—45.7)	Intermittent
Approximately 1150—850 (45.7—33.5)	Fast intermittent
Approximately 850 (33.5) or less	Continuous

Rear corner sensors

Distance shown as B in mm (in.)	Indicator and buzzer
Approximately 850—520 (33.5—20.5)	Intermittent
Approximately 520—400 (20.5—15.7)	Fast intermittent
Approximately 400 (15.7) or less	Continuous

Front corner sensors

Distance shown as C in mm (in.)	Indicator and buzzer
Approximately 600—400 (23.6—15.7)	Intermittent
Approximately 400—250 (15.7—9.8)	Fast intermittent
Approximately 250 (9.8) or less	Continuous

How the buzzer sounds when obstacles are simultaneously detected at the front and rear of the vehicle.

The buzzer sounds as described below:

- When an obstacle is detected within approximately 400 mm (15.7 in.) of the front corner sensor or approximately 850 mm (33.5 in.) of the rear sensor (buzzer is sounding continuously) and another obstacle is detected at the other end of the vehicle, the buzzer sounds 7 times intermittently then sounds continuously and it continues to sound approximately every 1.5 seconds.
- When an obstacle is detected within approximately 400 mm (15.7 in.) of the front corner sensor or approximately 850 mm (33.5 in.) of the rear sensor (buzzer is sounding continuously) and another obstacle is detected in the same way at the other end of the vehicle, the buzzer sounds 3 times intermittently then sounds continuously and it continues to sound approximately every 0.5 seconds.

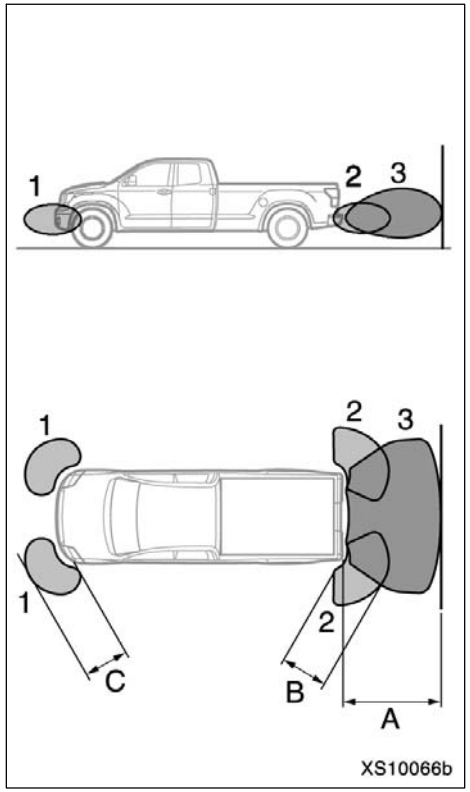

1: Front corner sensors
2: Rear corner sensors
3: Rear sensors

Perceptible area

A: Approximately	1800 mm (70.9 in.)
B: Approximately	850 mm (33.5 in.)
C: Approximately	600 mm (23.6 in.)

Perceptible area is limited as shown in the previous illustration. Check the area around the vehicle before driving and start driving slowly.

The maximum detection distance of the sensor varies depending on the size of the obstacle, the sensor can detect a large obstacle such as a wall, up to 1800 mm (70.9 in.) away. However, the detection distance of a thin obstacle such as a pole is less than 1800 mm (70.9 in.).

⚠ CAUTION

- **The intuitive parking assist is intended as an aid to assist you to park and is not a substitute for your personal judgment. Make your driving decisions based on your observations.**
- **Do not attach accessories or other objects to the vehicle within the sensor perceptible area. Doing so may cause the system to malfunction, which might result in an accident.**
- **In certain situations, the system will not function properly and when the vehicle approaches certain objects, the system will not detect those objects. Therefore, always observe the area around the vehicle and do not rely solely on the system.**

For vehicles sold in Canada

This ISM device compiles with Canadian ICES–001.

In the following cases, the system may not work properly.

- When ice, snow, mud or other objects build up on the sensor
- When the vehicle is parked in extremely high or extremely low temperature for a long period
- When driving on bumpy or graveled roads or on grass
- When a device such as a horn from another vehicle, motorcycle engine, or an air brake sound from a heavy–duty vehicle, issues ultrasonic waves, near your vehicle
- When attaching a two–way radio antenna
- When rain or water splashes on the sensor
- When operating the vehicle on an inclined surface
- When a radio antenna or fender pole is mounted on your vehicle
- When a towing hitch is mounted on your vehicle
- When a towing eyelet is mounted on your vehicle
- When the tail–gate is opened
- When the bumper is damaged

The system may not detect the following.

- Thin objects such as a wire or rope
- Objects with a surface area too small to reflect ultrasonic waves such as wire gauze or fence
- Sound wave absorbing objects or material such as cotton or snow
- A person near the vehicle (depending on the type of clothes worn)
- Objects with a sharp edge
- Small or short objects
- Tall objects with an upper part projecting toward the vehicle
- Objects just under the bumper
- Objects very close to your vehicle
- When the bumper is damaged

In the following cases, have your Toyota dealer check the system.

- When the bumper is damaged
- When the indicator is continuously on

Compass

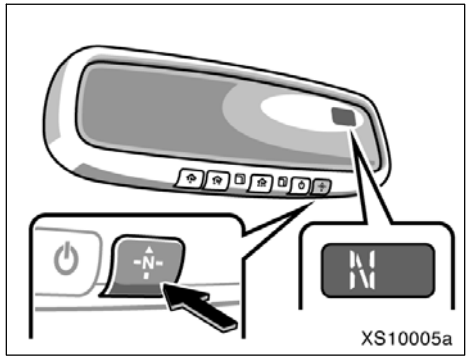

The direction is indicated on the inside rear view mirror.

If the ignition switch was turned off with the system on, the system will automatically turn back on when the ignition switch is turned on.

Push the " -N- " switch to turn the compass system on and off.

The compass indicates the direction that the vehicle is heading. In the above case, it shows that the vehicle is heading north.

Displays	Directions
N	North
NE	Northeast
E	East
SE	Southeast
S	South
SW	Southwest
W	West
NW	Northwest

The compass may not show the correct direction in the following conditions:

- The vehicle is stopped immediately after turning.
- The compass does not adjust while the vehicle is stopped.
- The ignition switch is turned off immediately after turning.
- The vehicle is on an inclined surface.
- The vehicle is in a place where the earth's magnetic field is subject to interference by artificial magnetic fields (underground parking, under a steel tower, between buildings, roof parking, near a crossing, near a large vehicle, etc.).
- The vehicle is magnetized. (There is a magnet or a metal object on or near the inside rear view mirror.)
- The battery has been disconnected.

If your vehicle is out of the set zone, refer to "CALIBRATING THE COMPASS" below to set the zone number.

If the deviation is small, the compass works to calibrate the direction automatically while the vehicle is in motion.

For additional precision or for complete calibrating, see "CALIBRATING THE COMPASS" below.

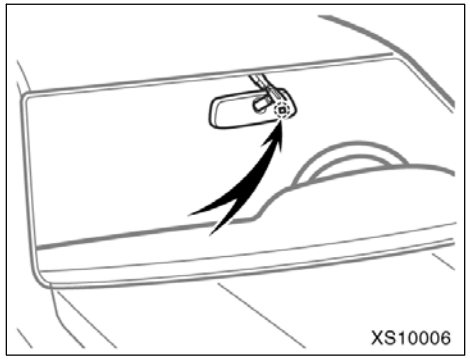

The compass sensor is in the inside rear view mirror.

NOTICE
Do not put magnets or a metal object on or near the inside rear view mirror of the vehicle. Doing this may cause malfunction of the compass sensor.

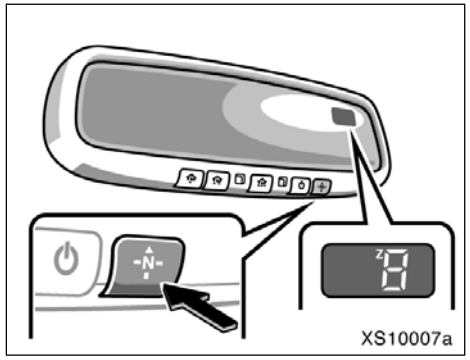

CALIBRATING THE COMPASS (deviation calibration)

The direction display on the compass deviates from the true direction determined by the earth's magnetic field. The angle of deviation varies according to the geographic position of the vehicle.

To adjust this deviation, stop the vehicle, then push and hold the " -N- " switch until the zone number appears on the display.

Then push the " -N- " switch, referring to the following map to select the number of the zone where the vehicle is.

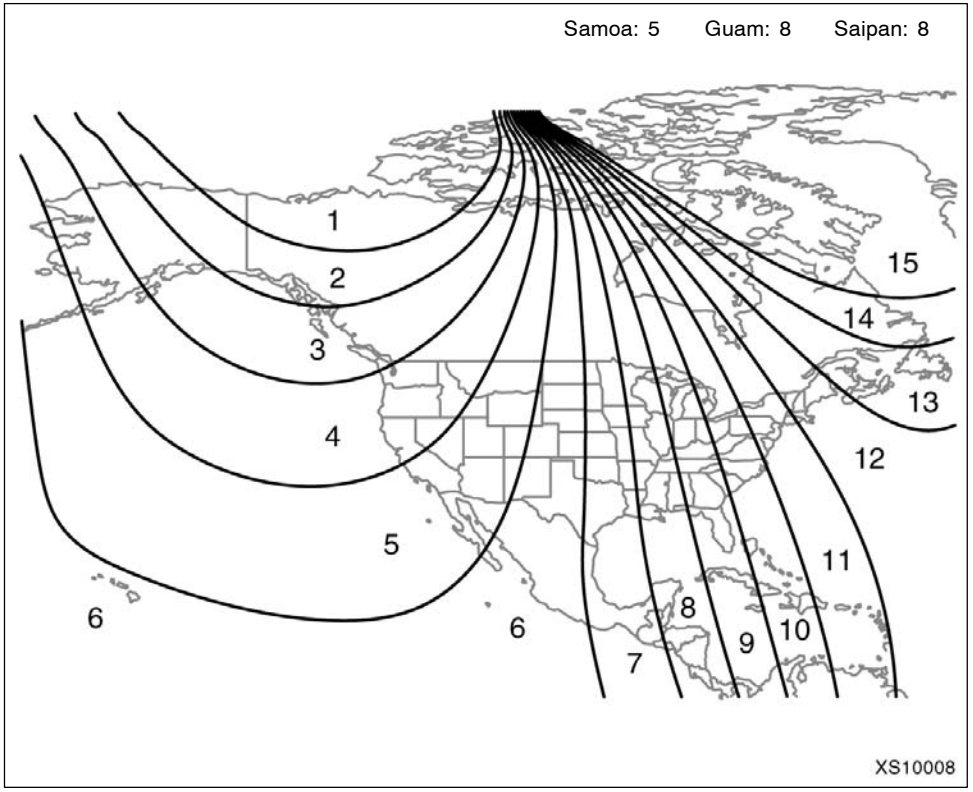

Zone number

After calibration, leaving the system for several seconds returns it to the compass mode.

⚠ CAUTION

Do not adjust the display while the vehicle is moving. Be sure to adjust the display only when the vehicle is stopped.

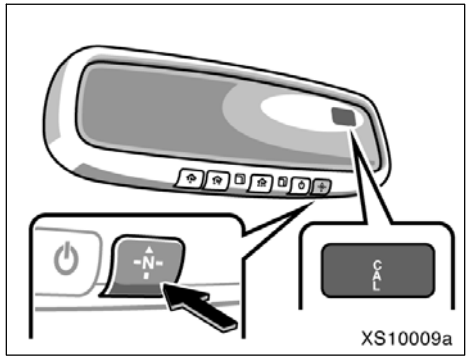

CALIBRATING THE COMPASS (circling calibration)

Sometimes the direction display on the compass may not change after a turn. To rectify this, stop the vehicle and push and hold the " -N- " switch until "CAL" appears on the display.

If "CAL" appears on the display because of a drastic change in the magnetic field, perform circling calibration.

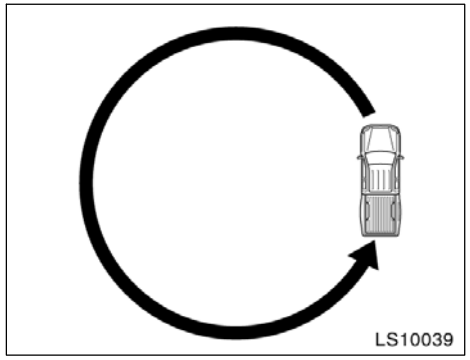

Drive the vehicle in a circle at 8 km/h (5 mph) or less. If there is not enough space to drive in a circle, drive around the block.

After driving 1 to 3 circles in the above method, calibration is completed when the direction is shown on the display.

If calibration cannot be performed because of the magnetized vehicle etc., take your vehicle to Toyota dealer.

Perform circling calibration just after you have purchased your Toyota. And then always perform circling calibration after the battery has been removed, replaced or disconnected.

- Do not perform circling calibration of the compass in a place where the earth's magnetic field is subject to interference by artificial magnetic fields (underground parking, under a steel tower, between buildings, roof parking, near a crossing, near a large vehicle, etc.).
- During calibration, do not operate electric systems (moon roof, power windows, etc.) as they may interfere with the calibration.

⚠ CAUTION

- **When doing the circling calibration, be sure to secure a wide space, and watch out for people and vehicles in the neighborhood. Do not violate any local traffic rules while performing circling calibration.**
- **Do not adjust the display while the vehicle is moving. Be sure to adjust the display only when the vehicle is stopped.**

Cigarette lighter and ashtray

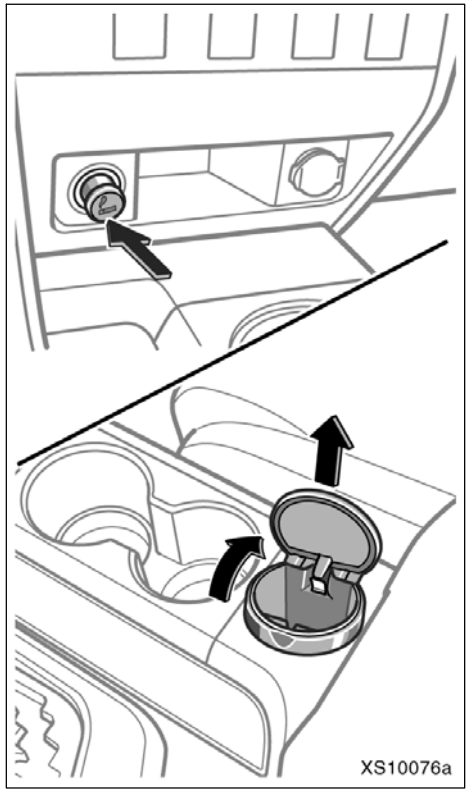

Type A (separate seats)

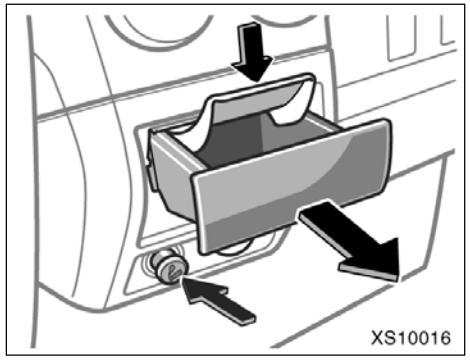

Type B (bench seats)

CIGARETTE LIGHTER

To use the cigarette lighter, press it in. After it finishes heating up, it automatically pops out ready for use.

If the engine is not running, the ignition switch must be in the “ACC” or “ON” position to use the lighter.

Do not hold the cigarette lighter pressed in.

Use a Toyota genuine cigarette lighter or equivalent for replacement.

ASHTRAY

Type A—

To use the ashtray, open the lid. The ashtray can be removed and used outside the vehicle.

When finished with your cigarette, thoroughly extinguish it in the ashtray to prevent other cigarette butts from catching fire. After using the ashtray, close the lid completely.

To remove the ashtray, pull it out from the front cup holder as shown in the illustration.

Type B—

To use the ashtray, pull it out.

When finished with your cigarette, thoroughly extinguish it in the ashtray to prevent other cigarette butts from catching fire. After using the ashtray, push it back completely.

To remove the ashtray, press down on the lock spring plate and pull out.

⚠ CAUTION

To reduce the chance of injury in case of an accident or sudden stop while driving, always completely close the ashtray after use.

Power outlets (12 VDC)

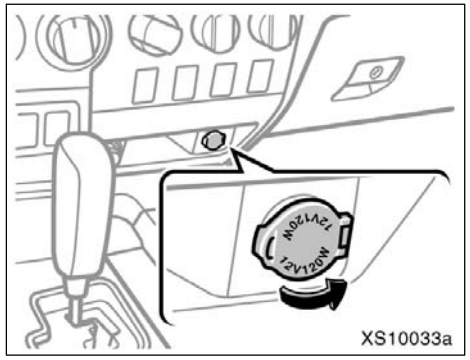

Type A (instrument panel)

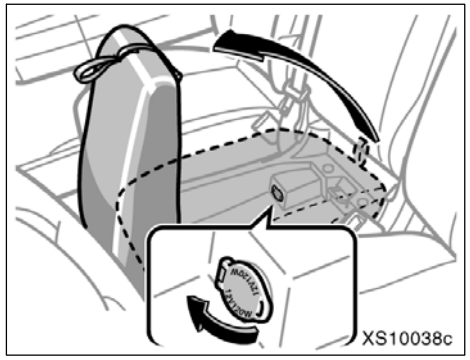

Type C (under the seat cushion of the front center seat)

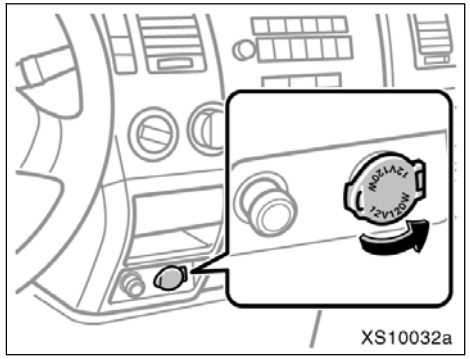

Type B (instrument panel)

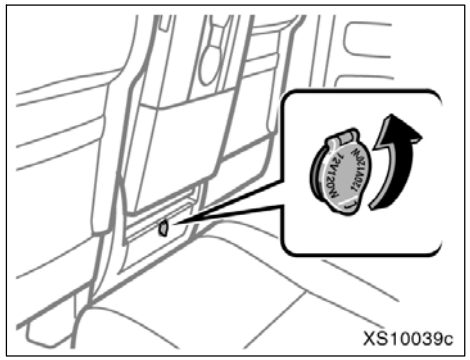

Type D (back of the front center seatback)

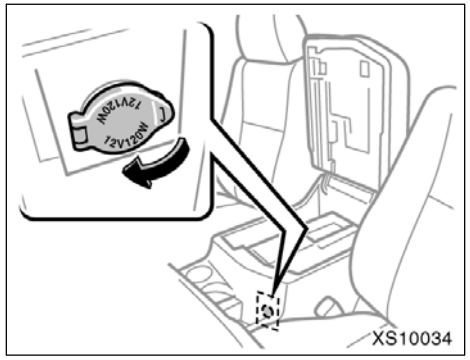

Type E (inside of the center console box)

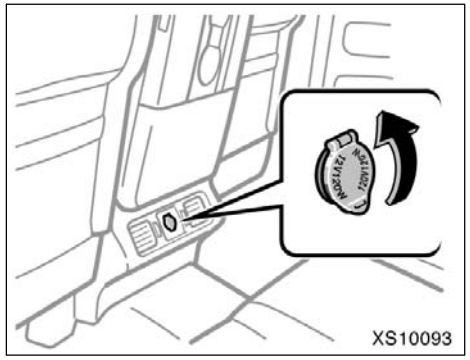

Type G (back of the front center seatback)

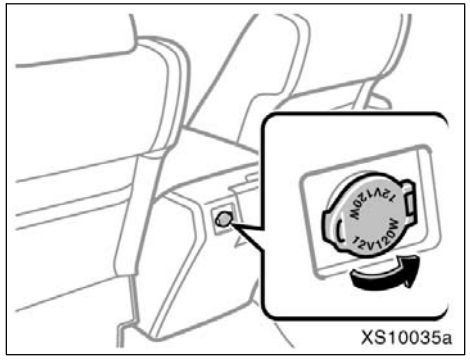

Type F (back of the center console box)

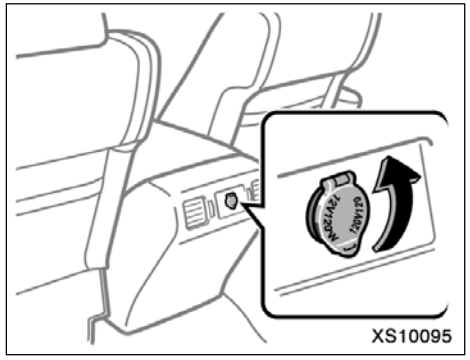

Type H (back of the center console box)

The power outlets (12 VDC) are designed for power supply for car accessories.

NOTICE

- ***To prevent the fuse from being blown, do not use the electricity over the total vehicle capacity of 12V/120W.***
- ***To prevent the battery from being discharged, do not use the power outlets longer than necessary when the engine is not running.***
- ***Close the power outlet lids when the power outlets are not in use. Inserting anything other than an appropriate plug that fits the outlet, or allowing any liquid to get into the outlet may cause electrical failure or short circuits.***

Power outlet (115 VAC)

INFORMATION
Depending on operating time and current consumption, the power outlets may not be used due to the electrical component protection function. Please start engine and use the power outlets again after turn off the ignition in this case.

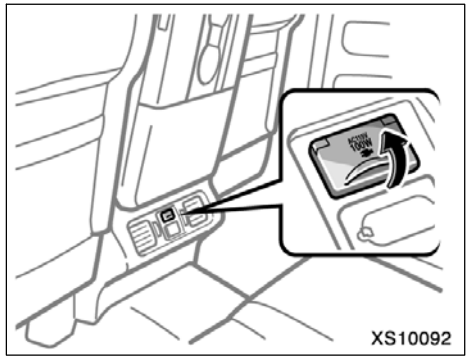

Type A (back of the front center seatback)

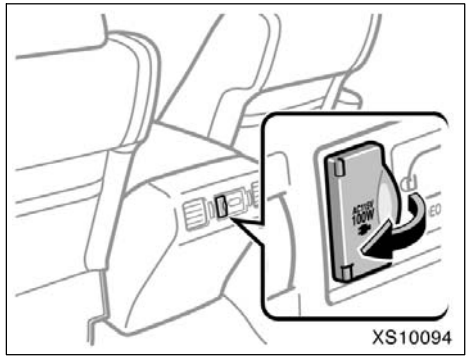

Type B (back of the center console box)

This power outlet (115 VAC) is designed for use as a power supply for electric appliances in the vehicle.

The key must be in the “ON” position for the power outlet to be used.

The maximum capacity for this power outlet is 115 VAC/100W. If you attempt to use an appliance that requires more than 115 VAC or 100W, the protection circuit will activate and cut the power supply. The power supply will restart automatically when you use an appliance that operates within the 115 VAC/100W limits.

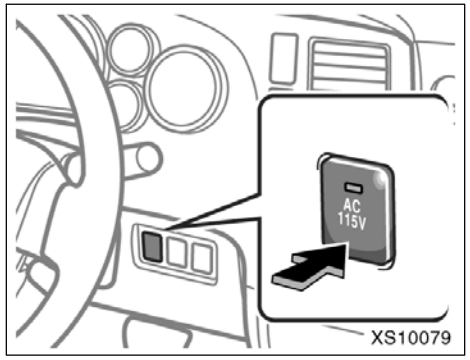

Main switch

To use the power outlet, push the main switch on the instrument panel.

An indicator light will illuminate to indicate that the power outlet is ready for use.

Push the main switch once again to turn the power outlet off. When the power outlet is not in use, make sure that the main switch is turned off.

NOTICE

- ***To prevent the battery from being discharged, do not use the power outlet longer than necessary when the engine is not running.***
- ***Close the power outlet lid when the power outlet is not in use. Inserting anything other than an appropriate plug that fits the outlet may cause electrical failure or short circuits.***

The power outlet is not designed for the following electric appliances even though their power consumption is under 115 VAC/100W. These appliances may not operate properly.

- Appliances with high initial peak wattage: cathode–ray tube type televisions, compressor–driven refrigerators, electric pumps, electric tools, etc.
- Measuring devices which process precise data: medical equipment, measuring instruments, etc.
- Other appliances requiring an extremely stable power supply: microcomputer–controlled electric blankets, touch sensor lamps, etc.

Certain electrical appliances may cause radio noise.

Glove boxes

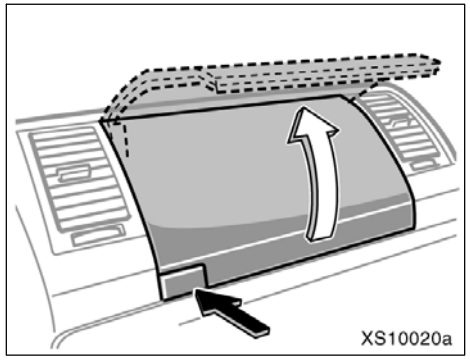

Upper glove box

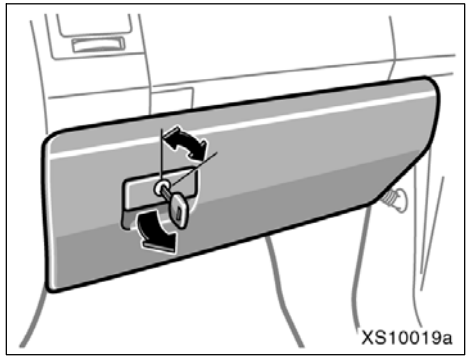

Lower glove box

Upper glove box—

To open the glove box, push the button.

Lower glove box—

Open by pulling the lever.

Lock by inserting the master key and turning it clockwise.

Unlock by inserting the master key and turning it counterclockwise.

On some model—With the tail lights are on, glove box light will come on when the globe box is open.

⚠ CAUTION

To reduce the chance of injury in case of an accident or a sudden stop, always keep the glove box door closed while driving.

NOTICE

Upper glove box: During hot weather, the interior of the vehicle becomes very hot. Do not leave anything flammable or deformable such as a lighter, glasses, etc. inside.

Garage door opener

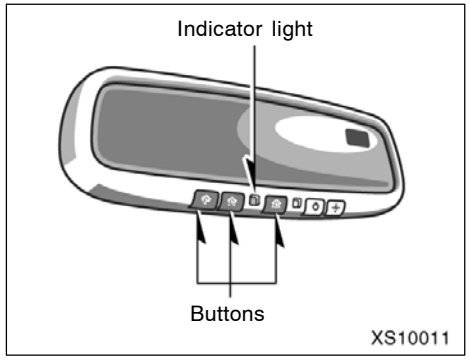

The garage door opener (HomeLink® Universal Transceiver) is manufactured under license from HomeLink® and can be programmed to operate garage doors, gates, entry doors, door locks, home lighting systems, and security systems, etc.

(a) Programming the HomeLink®

The HomeLink® in your vehicle has 3 buttons and you can store one program for each button.

To ensure correct programming into the HomeLink®, install a new battery in the hand–held transmitter prior to programming.

The battery side of the hand–held transmitter must be pointed away from the HomeLink® during the programming process.

For Canadian users, follow the procedure in “Programming an entrance gate/Programming all devices in the Canadian market”.

1. Decide which of 3 HomeLink® buttons you want to program.

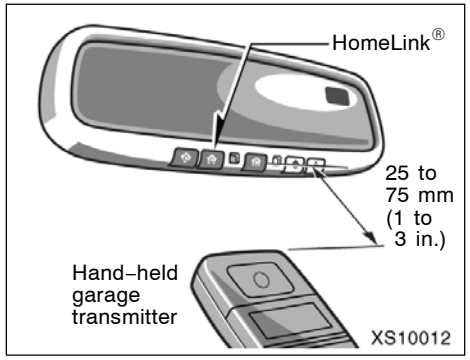

2. Place your hand–held garage transmitter 25 to 75 mm (1 to 3 in.) away from the surface of the HomeLink®.

Keep the indicator light on the HomeLink® in view while programming.

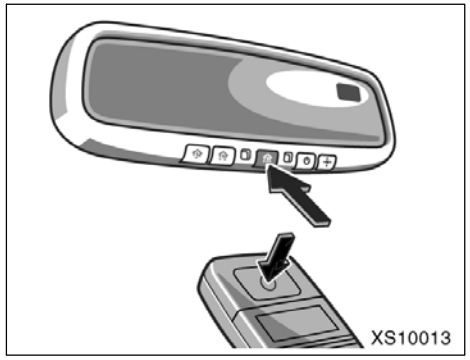

3. Simultaneously press and hold the hand–held garage transmitter button along with the selected HomeLink® button.

Do not release the buttons until step 4 has been completed.

4. When the indicator light on the HomeLink® changes from a slow to a rapid flash after 20 seconds, you can release both buttons.

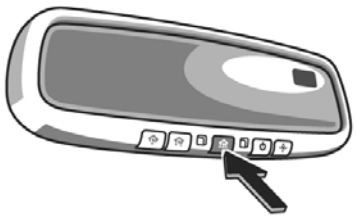

5. Test the operation of the HomeLink® by pressing the newly programmed button. If programming a garage door opener, check to see if the garage door opens and closes.

If the garage door does not operate, identify if your garage transmitter is of the “Rolling Code” type. Press and hold the programmed HomeLink® button. The garage door has the rolling code feature if the indicator light (on the HomeLink®) flashes rapidly and then remains lit after 2 seconds. If your garage transmitter is the “Rolling Code” type, proceed to the heading “Programming a rolling code system”.

6. Repeat steps 2 through 5 for each remaining HomeLink® button to program another device.

Programming a rolling code system

If your device is “Rolling Code” equipped, it is necessary to follow steps 1 through 4 under the heading “Programming the HomeLink®” before proceeding with the steps listed below.

1. Locate the “training” button on the ceiling mounted garage door opener motor. The exact location and color of the button may vary by brand of garage door opener. Refer to the owner’s guide supplied by the garage door opener manufacturer for the location of this “training” button.
2. Press the “training” button on the ceiling mounted garage door opener motor.

Following this step, you have 30 seconds in which to initiate step 3 below.

3. Press and release the vehicle’s programmed HomeLink® button twice. The garage door may open. If the door does open, the programming process is complete. If the door does not open, press and release the button a third time. This third press and release will complete the programming process by opening the garage door.

The ceiling mounted garage door opener motor should now recognize the HomeLink® unit and be able activate the garage door up/down.

4. Repeat steps 1 through 3 for each remaining HomeLink® button to program another rolling code system.

Programming an entrance gate/Programming all devices in the Canadian market

1. Decide which of the 3 HomeLink® buttons you want to program.
2. Place your hand–held gate/device transmitter 25 to 75 mm (1 to 3 in.) away from the surface of the HomeLink®.

Keep the indicator light on the HomeLink® in view while programming.

3. Press and hold the selected HomeLink® button.
4. Continuously press and release (cycle) the hand–held gate/device transmitter button every two seconds until step 5 is complete.
5. When the indicator light on the HomeLink® changes from a slow to a rapid flash after 20 seconds, you can release both buttons.

6. Test the operation of the HomeLink® by pressing the newly programmed button. Check to see if the gate/device operates correctly.
7. Repeat steps 1 through 6 for each remaining HomeLink® button to program another device.

Programming other devices

To program other devices such as home security systems, home door locks or lighting, contact your authorized Toyota dealer for assistance.

Reprogramming a button

Individual HomeLink® buttons cannot be erased, however, to reprogram a single button, follow the procedure "Programming the HomeLink®".

(b) Operating the HomeLink®

To operate the HomeLink®, press the appropriate HomeLink® button to activate the programmed device. The HomeLink® indicator light should come on. The HomeLink® continues to send the signal for up to 20 seconds as long as the button is pressed.

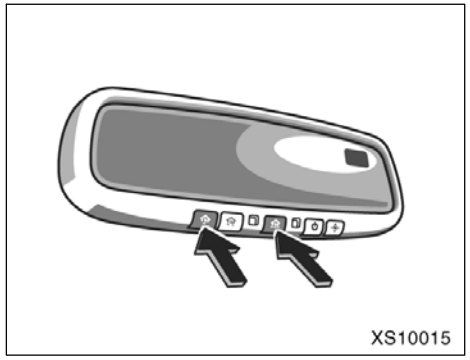

(c) Erasing the entire HomeLink® memory (all three programs)

To erase all previously programmed codes at one time, press and hold down the 2 outside buttons for 20 seconds until the indicator light flashes.

If you sell your vehicle, be sure to erase the programs stored in the HomeLink® memory.

For additional programming assistance with your HomeLink® Universal Transceiver call the:

- Toyota Customer Experience Center at 1–800–331–4331 (U.S.A.)
- Toyota Canada Customer Interaction Centre at 1–888–869–6828 (Canada)

Refer to HomeLink® on the internet at: WWW.HOMELINK.COM

⚠ CAUTION

- **When programming the HomeLink® Universal Transceiver, you may be operating a garage door or other device. Make sure people and objects are out of the way of the garage door or other device to prevent potential harm or damage.**
- **Do not use this HomeLink® Universal Transceiver with any garage door opener that lacks the safety stop and reverse feature as required by federal safety standards. (This includes any garage door opener model manufactured before April 1, 1982.) A garage door opener which cannot detect an object (signaling the door to stop and reverse), does not meet current federal safety standards. Using a garage door opener without these features increases risk of serious injury or death.**

This device complies with Part 15 of the FCC Rules and with RSS–210 of the IC Rules. Operation is subject to the following two conditions: (1) This device may not cause harmful interference, and (2) this device must accept any interference received, including interference that may cause undesired operation.

WARNING: This transmitter has been tested and complies with FCC and IC rules. Changes or modifications not expressly approved by the party responsible for compliance could void the user's authority to operate the device.

Auxiliary boxes

To use the auxiliary boxes, open the lids as shown in the following illustrations.

⚠ CAUTION

- **To reduce the chance of injury in case of an accident or a sudden stop, always keep the auxiliary box closed while driving.**
- **Type A only—As these holders are designed for holding a light object such as an eyeglass, do not place any heavy objects in them. Heavy objects may cause the holder to open and contents to fly out resulting in injuries.**

NOTICE

Type A only—During hot weather, the interior of the vehicle becomes very hot. Do not leave anything flammable or deformable such as a lighter, glasses, etc. inside.

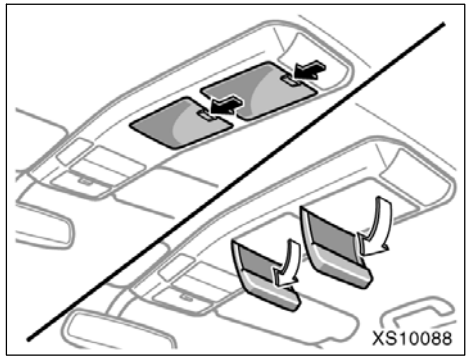

Type A (overhead console)

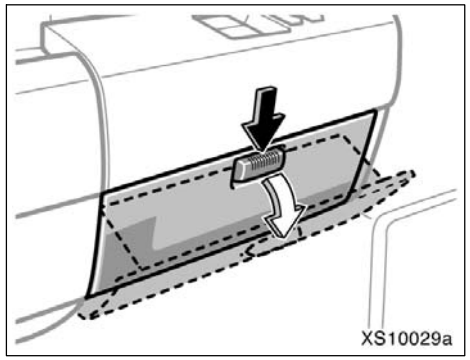

Type B (front door)

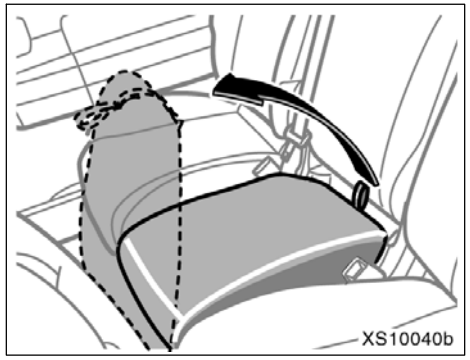

Type C (under the seat cushion of the front center seat)

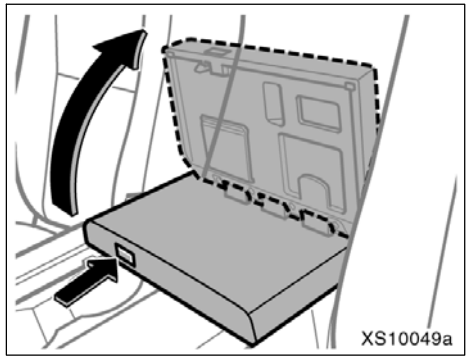

Type E (back of the front center seatback)

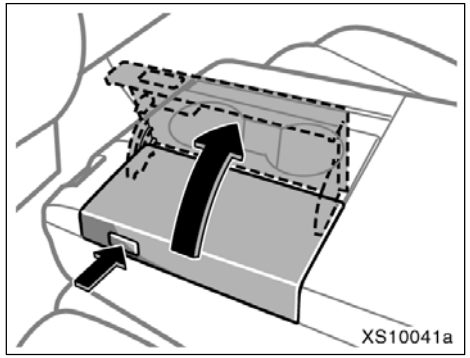

Type D (back of the front center seatback)

Sunglass holder

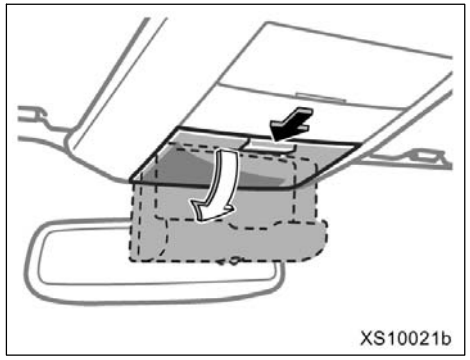

To use the holder, open the lid as shown in the illustration.

⚠ CAUTION

- **To reduce the chance of injury in case of an accident or a sudden stop, always keep the holder closed while driving.**
- **As this holder is designed for holding a light object such as an eyeglass, do not place any heavy objects in them. Heavy objects may cause the holder to open and contents to fly out resulting in injuries.**

Card holder

NOTICE

During hot weather, the interior of the vehicle becomes very hot. Do not leave anything flammable or deformable such as a lighter, glasses, etc. inside.

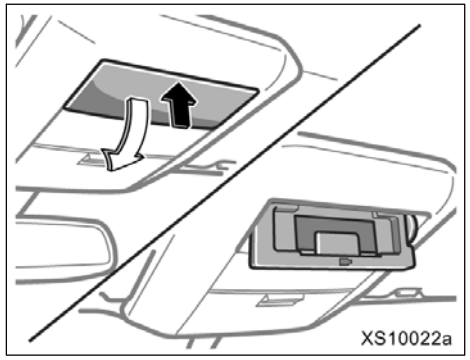

Type A (overhead console)

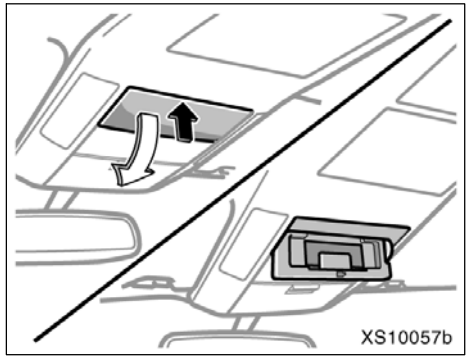

Type B (overhead console)

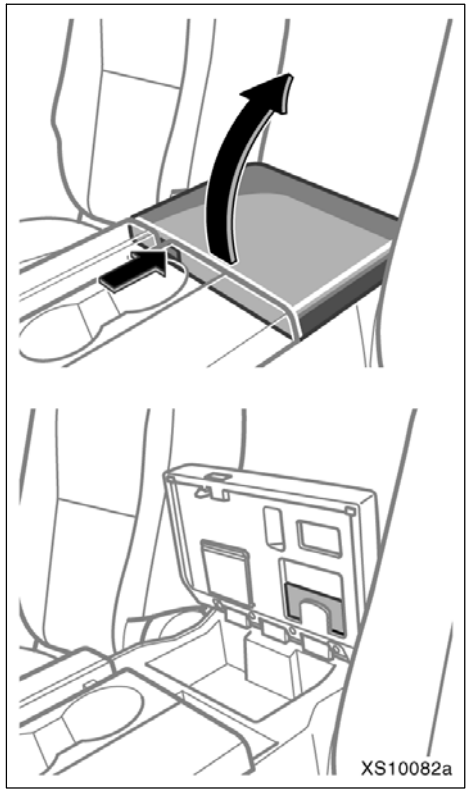

Type C (back of the front center seatback)

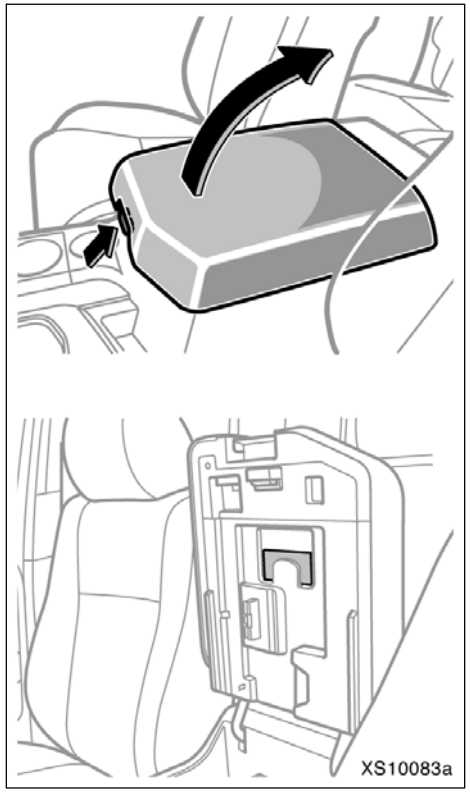

Type D (center console box)

The card holder is designed for holding cards, tickets, etc.

CAUTION

To reduce the chance of injury in case of an accident or a sudden stop, always keep the auxiliary box, console box or holder box closed while driving.

Map holder

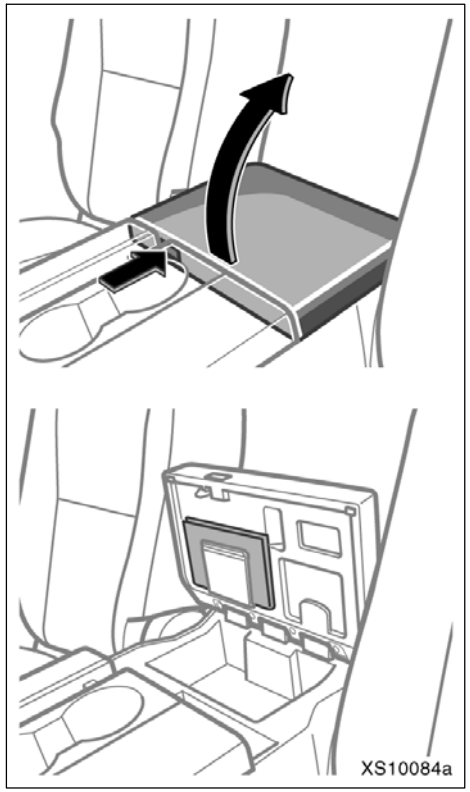

Type A (back of the front center seatback)

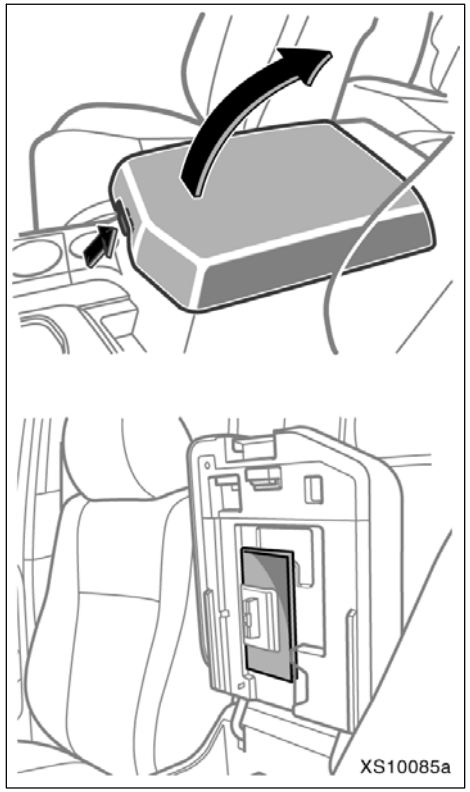

Type B (center console box)

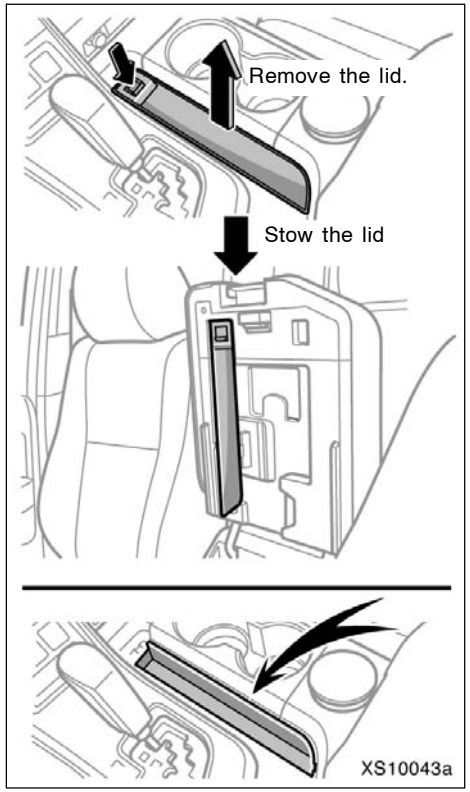

Type C (center console)

The map holder is designed for holding maps, magazines, etc.

Type C—

Remove the lid and stow it as shown in the illustration.

⚠ CAUTION

To reduce the chance of injury in case of an accident or a sudden stop, always keep the auxiliary or console box closed while driving.

Pen holder

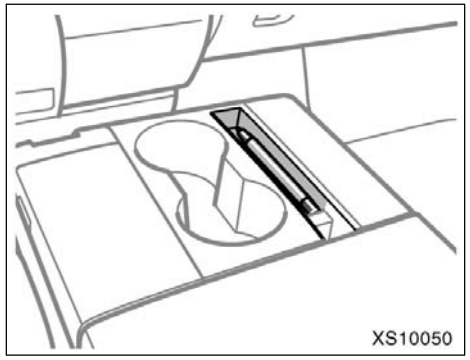

Type A (back of the front center seatback)

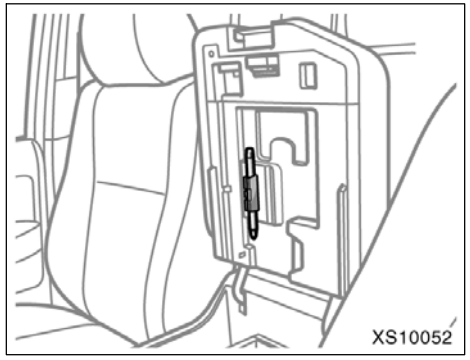

Type B (inside of the center console box)

The pen holder is designed for holding pens, pencils, etc.

CAUTION

Type B only—To reduce the chance of injury in case of an accident or a sudden stop, always keep the console box closed while driving.

Tissue pocket

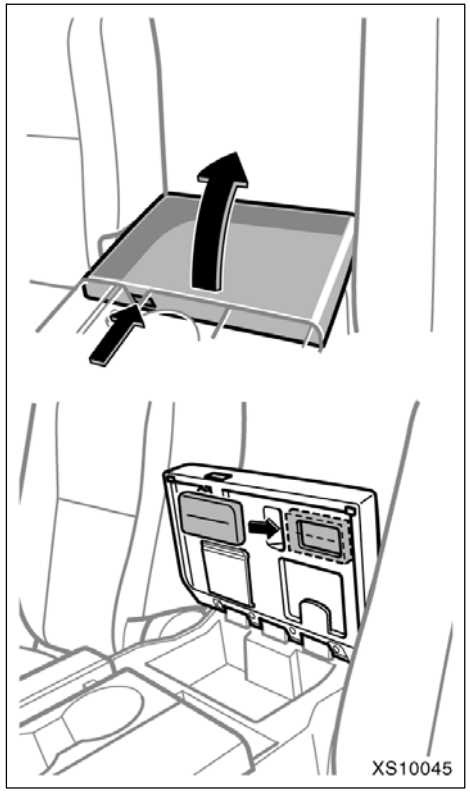

Type A (back of the front center seatback)

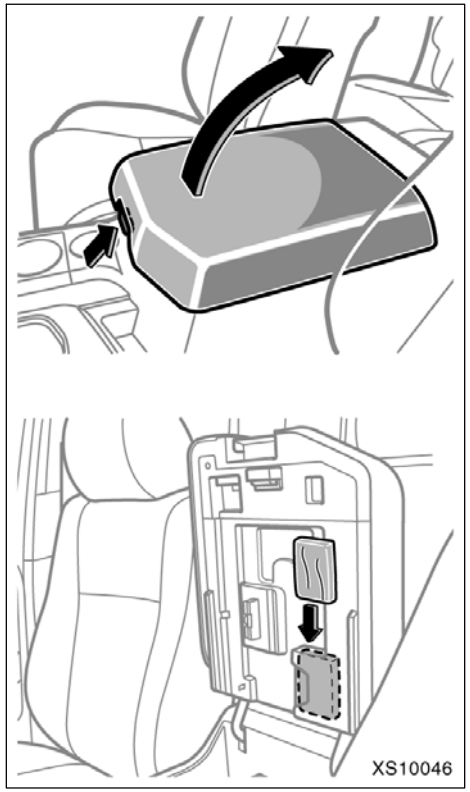

Type B (center console box)

The console box is equipped with a tissue pocket on the inside of the auxiliary or console box lid.

To use the tissue pocket:

1. Pull up the auxiliary or console box lid while pushing the lock release lever.
2. Place a tissue pack in the pocket.

⚠ CAUTION

To reduce the chance of injury in case of an accident or a sudden stop, always keep the auxiliary or console box lid closed while driving.

Center console box

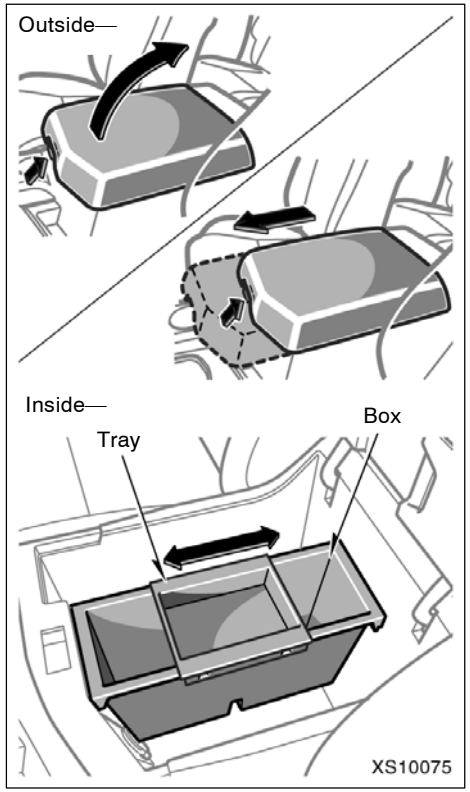

Outside—
To open or slide the console box lid, pull up on the lock release lever.

Inside—
The tray slides forward or backward. The tray and box can be removed.

⚠ CAUTION

To reduce the chance of injury in case of an accident or a sudden stop, always keep the console box closed while driving.

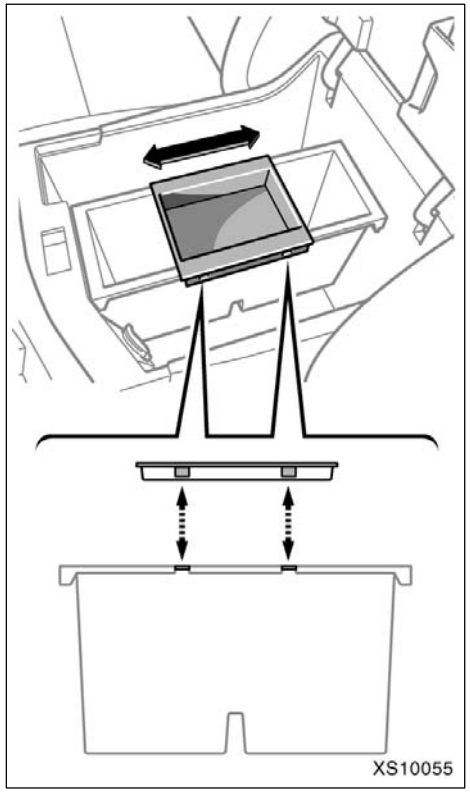

Tray

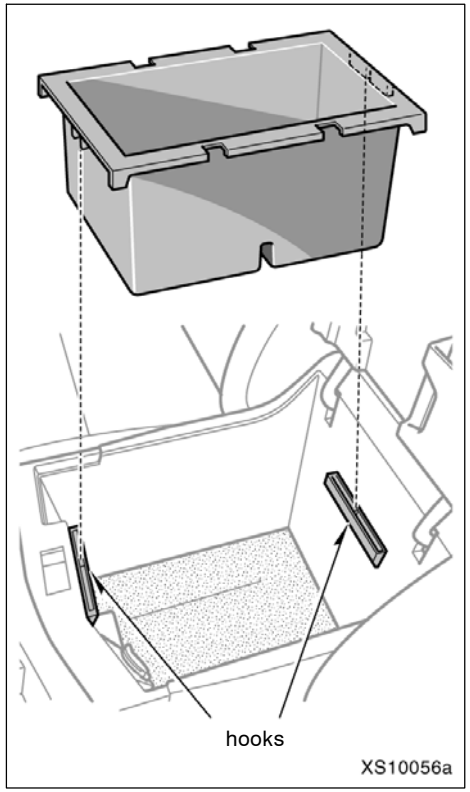

Box

Remove the tray and box as shown in the illustration.

Hanging file folders can be hung on the hooks when the tray and box are removed.

⚠ CAUTION

To reduce the chance on injury in case of an accident or a sudden stop, always keep the console box closed while driving.

Front cup holders

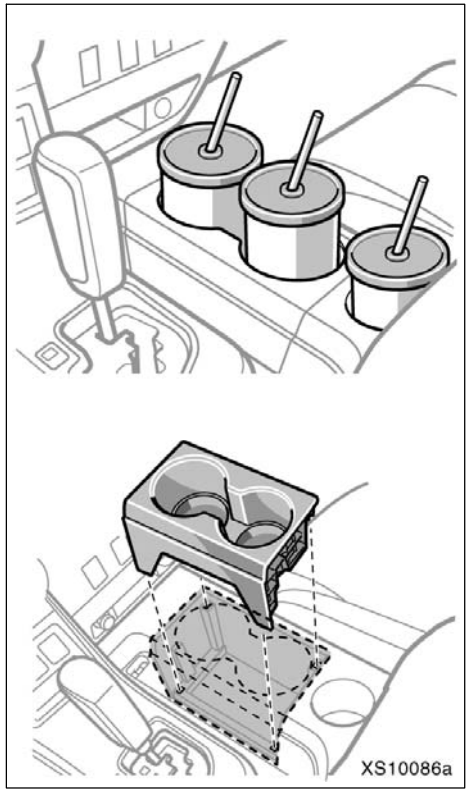

Type A (center console)

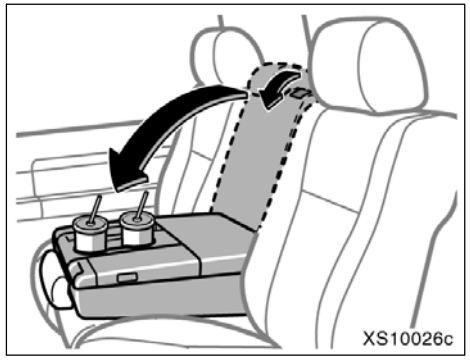

Type B (front center seat)

The cup holders are designed for holding cups or drink–cans securely.

Type A only—
Cup holder is detachable. Replace it in its original position when using the cup holder. The drink will not be held securely.

⚠ CAUTION

Do not place anything else other than cups or drink–cans in the cup holder, as such items may be thrown about in the compartment and possibly injure people in the vehicle during sudden braking or in an accident.

Rear cup holders (Double cab models)

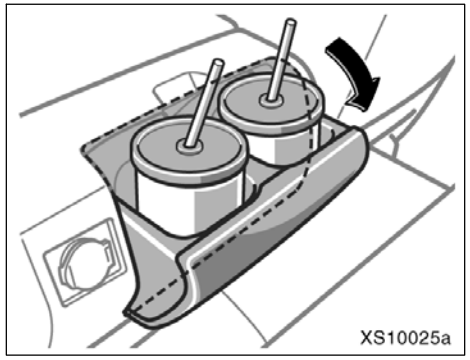

Type A (back of the center console box)

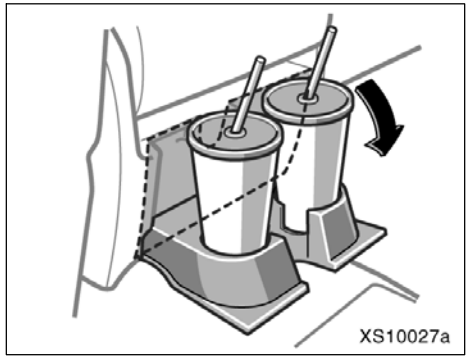

Type B (back of the front center seatback)

The cup holders are designed for holding cups or drink–cans securely.

⚠ CAUTION

Do not place anything else other than cups or drink–cans in the cup holder, as such items may be thrown about in the compartment and possibly injured people in the vehicle during sudden braking or in an accident.

Rear cup holders (Crew Max models)

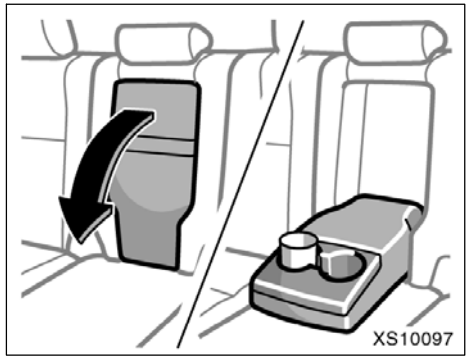

Rear center seat

The cup holders are designed for holding cups or drink–cans securely.

To use the holder, pull down the rear armrest as shown in the illustration.

⚠ CAUTION

Do not place anything else other than cups or drink–cans in the cup holder, as such items may be thrown about in the compartment and possibly injured people in the vehicle during sudden braking or in an accident.

Bottle holders

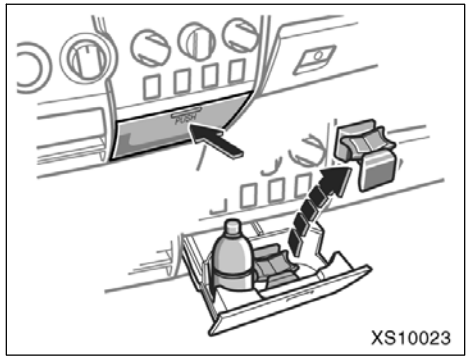

Type A (instrument panel)

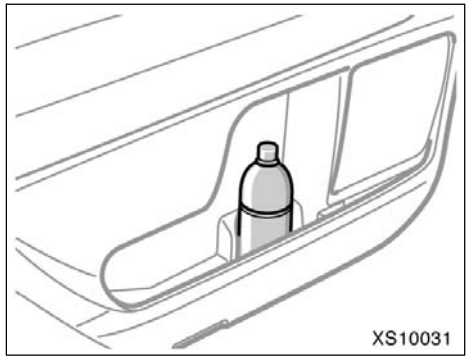

Type C (rear door)

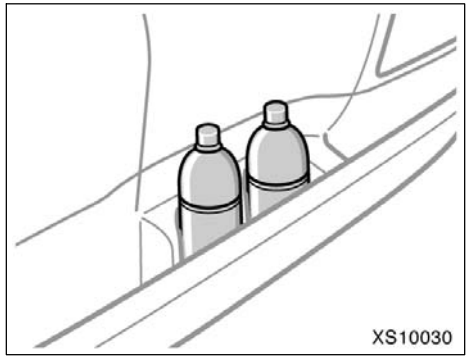

Type B (front door)

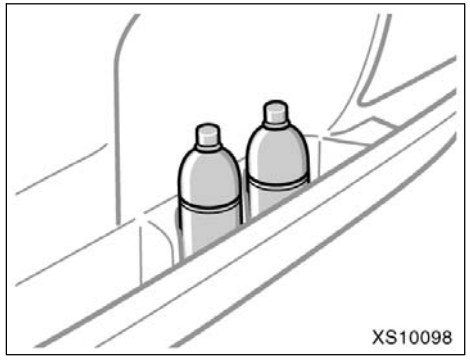

type D (rear door)

The bottle holders are designed to hold bottles securely.

Type A only—
The adapter for bottle holder is detachable. Replace it in its original position when using the bottle holder. Otherwise the drinks will not be held securely.

⚠ CAUTION

Do not attempt to use the holder for any other purpose for which it was intended. Inappropriately sized or shaped objects may be thrown about in the compartment and possibly injure people in the vehicle during a sudden braking or an accident.

NOTICE

Do not put a cup or open bottle in the bottle holder because the contents may spill when the door opens or closes.

Storage box (on some Double cab models)

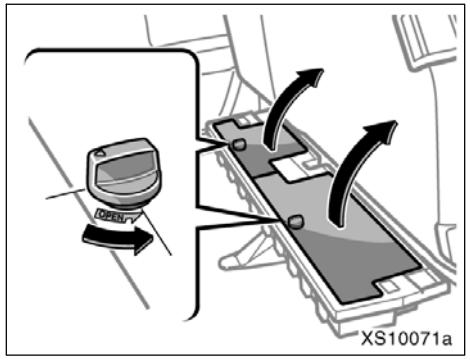

Before using the box, lift up the rear seats. (For detailed information, see "—Raising rear seat cushion (Double cab models)" on page 59 in Section 1–3.)

To open the storage box, turn the knobs "OPEN" direction indicated by the arrow and open the lid as shown in the illustration.

The storage box can be removed. For detailed information, see "—Removing the storage box" on page 431 in this Section.

⚠ CAUTION

To reduce the chance of injury in case of an accident or a sudden stop, always keep the storage box closed and locked while driving.

NOTICE

To prevent damage to the storage box, avoid putting heavy loads on the storage box lids.

—Removing the storage box

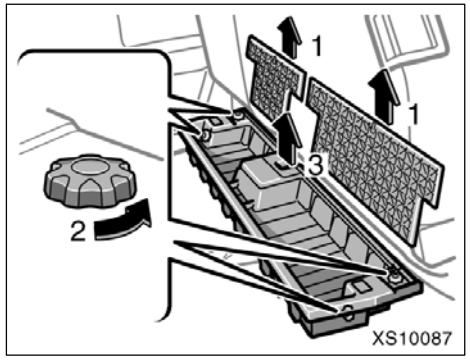

To remove the storage box:

1. Remove the storage box lids.
2. Remove the knobs by turning them counterclockwise.
3. Remove the storage box.

Seatback table (Regular cab models)

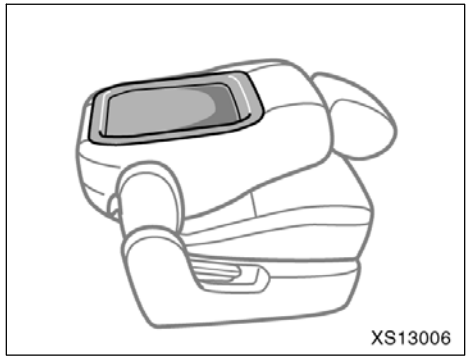

You should use the front passenger's seatback as a temporary table only when the vehicle is stopped.

To use the seatback table, fold the seatback down. (For detailed information, see "—Folding front passenger's seat" on page 54 in Section 1–3.)

⚠ CAUTION

To avoid serious injury:

- **Do not set up the seatback table while the vehicle is moving.**
- **Do not sit on the seatback table.**

NOTICE

To prevent damage to the seat, avoid putting heavy loads on the temporary table.

Deck hooks

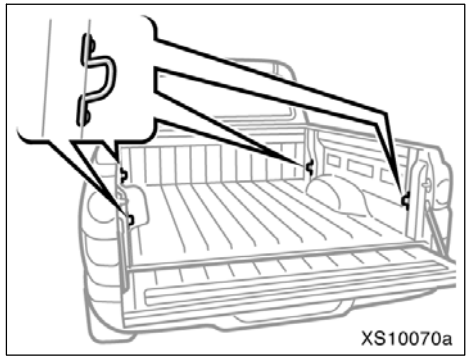

To secure your luggage, use the deck hooks.

See "—Stowage precautions" on page 464 in Section 2 for precautions when loading luggage.

Grocery bag/cargo net hooks (Crew Max models)

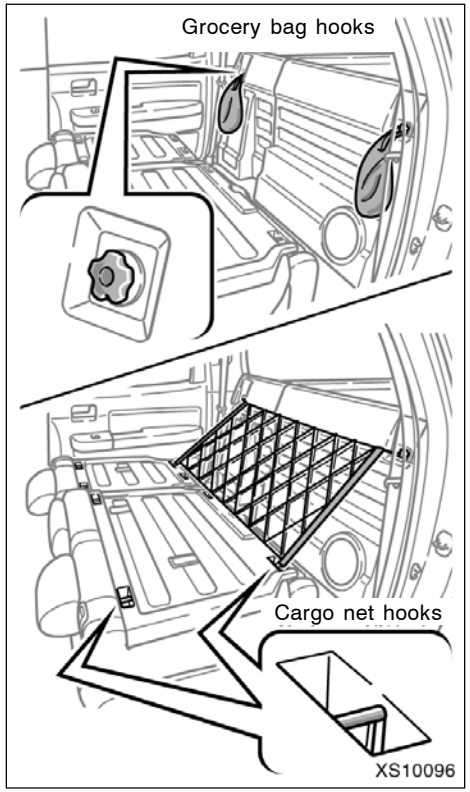

These hooks are designed to hang things like grocery bags or cargo net.

Although the cargo net itself is not included as an original equipment, these hooks can be used to hang the cargo net.

NOTICE

- ***To prevent damage to the hooks, avoid hanging heavy loads on them when using them as grocery bag hooks.***
- ***To prevent damage to the hooks, avoid hanging things other than a cargo net on it when using them as cargo net hooks.***

Floor mat

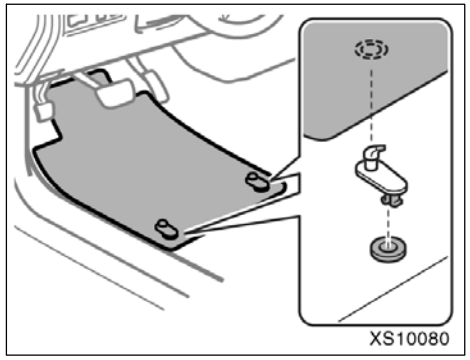

Use a floor mat of the correct size.

If the vehicle carpet and floor mat have two holes, then they are designed for use with two locking clips. Attach the floor mat to the vehicle carpet using the clips. Lock the clips into the holes in the vehicle carpet.

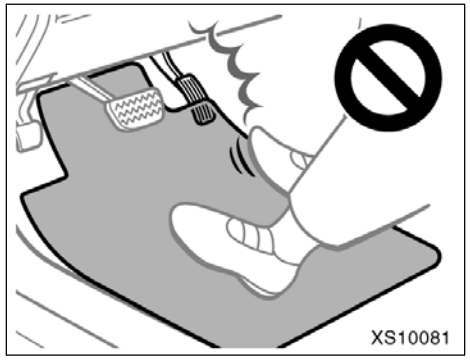

⚠ CAUTION

Make sure the floor mat is properly placed on the vehicle carpet and the correct side face upward. If the floor mat slips and interferes with the movement of the pedals during driving, it may cause an accident.

SECTION 2

INFORMATION BEFORE DRIVING YOUR TOYOTA

Information before driving your Toyota

Off–road vehicle precautions 436
Break–in period 437
Fuel 437
Fuel pump shut off system 439
Operation in foreign countries 440
Three–way catalytic converters 440
Engine exhaust cautions 441
Facts about engine oil consumption 442
Iridium–tipped spark plugs 443
Long reach iridium–tipped spark plugs 444
Brake system 444
Brake pad wear limit indicators 448
Rear step bumper 448
Your Toyota's identification 449
Theft prevention labels 450
Suspension and chassis 450
Tire information 451
Vehicle load limits 463
Cargo and luggage 464
Types of tires 466

Off–road vehicle precautions

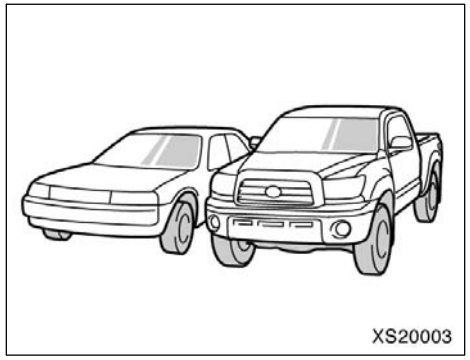

This vehicle has higher ground clearance and narrower tread in relation to the height of its center of gravity to make it capable of performing in a wide variety of off–road applications. Specific design characteristics give it a higher center of gravity than ordinary passenger cars. This vehicle design feature causes this type of vehicle to be more likely to rollover. And, it has a significantly higher rollover rate than other types of vehicles. An advantage of the higher ground clearance is a better view of the road allowing you to anticipate problems. It is not designed for cornering at the same speeds as ordinary passenger cars any more than low–slung sports cars are designed to perform satisfactorily under off–road conditions. Therefore, sharp turns at excessive speeds may cause rollover.

⚠ CAUTION

Always observe the following precautions to minimize the risk of serious personal injury or damage to your vehicle:

- **In a rollover crash, an unbelted person is significantly more likely to die than a person wearing a seat belt. Therefore, the driver and all passengers should fasten their seat belts whenever the vehicle is moving.**
- **Avoid sharp turns or abrupt maneuvers, if at all possible. Failure to operate this vehicle correctly may result in loss of control or vehicle rollover causing death or serious injury.**
- **Avoid loading any items on the roof that will raise the vehicle's center of gravity.**
- **Always slow down in gusty crosswinds. Because of its profile and higher center of gravity, your vehicle is more sensitive to side winds than an ordinary passenger car. Slowing down will allow you to have much better control.**

- **When driving off–road or in rugged terrain, do not drive at excessive speeds, jump, make sharp turns, strike objects, etc. This may cause loss of control or vehicle rollover causing death or serious injury. You are also risking expensive damage to your vehicle's suspension and chassis.**
- **Do not drive horizontally across steep slopes. Driving straight up or straight down is preferred. Your vehicle (or any similar off–road vehicle) can tip over sideways much more easily than forward or backward.**

Break–in period

Drive gently and avoid high speeds.

Your vehicle does not need an elaborate break–in. But following a few simple tips for the first 1600 km (1000 miles) can add to the future economy and long life of your vehicle:

- Avoid full throttle acceleration when starting and driving.
- Avoid racing the engine.
- Try to avoid hard stops during the first 300 km (200 miles).
- Do not drive for a long time at any single speed, either fast or slow.
- Do not tow a trailer during the first 800 km (500 miles).

Fuel

FUEL TYPE

Your new vehicle must use only unleaded gasoline.

To help prevent gas station mix–ups, your Toyota has a smaller fuel tank opening. The special nozzle on pumps with unleaded fuel will fit it, but the larger standard nozzle on pumps with leaded gas will not.

At a minimum, the gasoline you use should meet specifications of ASTM D4814 in the U.S.A. and CGSB 3.5–M93 in Canada.

NOTICE

Do not use leaded gasoline. Use of leaded gasoline will cause the three–way catalytic converter to lose its effectiveness and the emission control system to function improperly. Also, this can increase maintenance costs.

OCTANE RATING

Select Octane Rating 87 (Research Octane Number 91) or higher.

Use of unleaded gasoline with an Octane Rating lower than 87 may result in engine knocking. Persistent knocking can lead to engine damage.

If your engine knocks...

If you detect heavy knocking even when using the recommended fuel, or if you hear steady knocking while holding a steady speed on level roads, consult your Toyota dealer.

However, occasionally, you may notice light knocking for a short time while accelerating or driving up hills. This is normal and there is no need for concern.

GASOLINE CONTAINING DETERGENT ADDITIVES

Toyota recommends the use of gasoline that contains detergent additives to avoid build–up of engine deposits.

However, all gasoline sold in the U.S. contains detergent additives to keep clean and/or clean intake systems.

QUALITY GASOLINE

Automotive manufacturers in the U.S., Europe and Japan have developed a specification for quality fuel named World–Wide Fuel Charter (WWFC) that is expected to be applied world wide. The WWFC consists of four categories that depend on required emission levels. In the U.S., category 3 or 4 has been adopted. The WWFC improves air quality by providing for better emissions in vehicle fleets, and customer satisfaction through better vehicle performance.

CLEANER BURNING GASOLINE

Cleaner burning gasoline, including reformulated gasoline that contains oxygenates such as ethanol or MTBE is available in many areas.

Toyota recommends the use of cleaner burning gasoline and appropriately blended reformulated gasoline. These types of gasoline provide excellent vehicle performance, reduce vehicle emissions, and improve air quality.

OXYGENATES IN GASOLINE

Toyota allows the use of oxygenate blended gasoline where the oxygenate content is up to 10% ethanol or 15% MTBE. If you use gasohol in your Toyota, be sure that it has an octane rating no lower than 87.

Toyota does not recommend the use of gasoline containing methanol.

GASOLINE CONTAINING MMT

Some gasoline contain an octane enhancing additive called MMT (Methylcyclopentadienyl Manganese Tricarbonyl).

Toyota does not recommend the use of gasoline that contains MMT. If fuel containing MMT is used, your emission control system may be adversely affected. The Malfunction Indicator Lamp on the instrument cluster may come on. If this happens, contact your Toyota dealer for service.

GASOLINE QUALITY

In a very few cases, you may experience driveability problems caused by the particular gasoline that you are using. If you continue to have unacceptable driveability, try changing gasoline brands. If this does not rectify your problem, then consult your Toyota dealer.

NOTICE

- ***Do not use gasohol other than stated above. It will cause fuel system damage or vehicle performance problems.***
- ***If driveability problems occur (poor hot starting, vaporizing, engine knock, etc.), discontinue the use.***
- ***Take care not to spill gasohol during refueling. Gasohol may cause paint damage.***

FUEL TANK CAPACITY

100 L (26.4 gal., 22.0 Imp. gal.)

Fuel pump shut off system

The fuel pump shut off system stops supplying fuel to the engine to minimize the risk of fuel leakage when the engine stalls or an airbag inflates upon collision. To restart the engine after the fuel pump shut off system activates, turn the ignition switch to “ACC” or “LOCK” once and start it.

⚠ CAUTION

Inspect the ground under the vehicle before restarting the engine. If you find that fuel has leaked onto the ground, the fuel system has been damaged and is in need of repair. In this case, do not restart the engine.

Operation in foreign countries

If you plan to drive your Toyota in another country...

First, comply with the vehicle registration laws.

Second, confirm the availability of the correct fuel (unleaded and minimum octane number).

Three–way catalytic converters

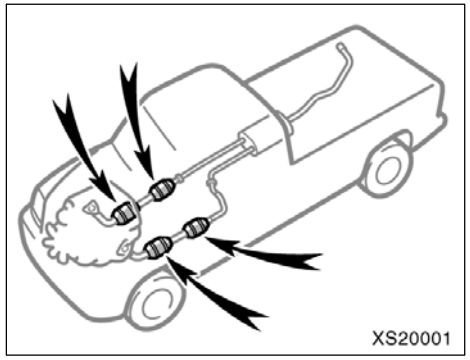

4.0 L V6 (1GR–FE) and 4.7 L V8 (2UZ–FE) engine

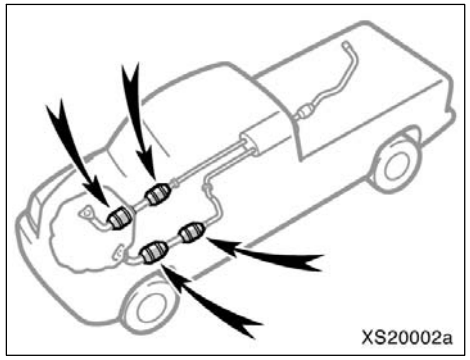

5.7 L V8 (3UR–FE) engine

The three–way catalytic converter is an emission control device installed in the exhaust system.

The purpose is to reduce pollutants in the exhaust gas.

⚠ CAUTION

- **Keep people and combustible materials away from the exhaust pipe while the engine is running. The exhaust gas is very hot.**
- **Do not idle or park your vehicle over anything that might burn easily such as grass, leaves, paper or rags.**

NOTICE

A large amount of unburned gases flowing into the three-way catalytic converter may cause it to overheat and create a fire hazard. To prevent this and other damage, observe the following precautions:

- *Use only unleaded gasoline.*
- *Do not drive with an extremely low fuel level; running out of fuel could cause the engine to misfire, creating an excessive load on the three-way catalytic converter.*
- *Do not allow the engine to run at idle speed for more than 20 minutes.*
- *Avoid racing the engine.*
- *Do not push-start or pull-start your vehicle.*
- *Do not turn off the ignition while the vehicle is moving.*

- *Keep your engine in good running order. Malfunctions in the engine electrical system, electronic ignition system/distributor ignition system or fuel systems could cause an extremely high three-way catalytic converter temperature.*
- *If the engine becomes difficult to start or stalls frequently, take your vehicle in for a check-up as soon as possible. Remember, your Toyota dealer knows your vehicle and its three-way catalytic converter system best.*
- *To ensure that the three-way catalytic converter and the entire emission control system operate properly, your vehicle must receive the periodic inspections required by the Toyota Maintenance Schedule. For scheduled maintenance information, refer to the "Scheduled Maintenance Guide" or "Owner's Manual Supplement".*

Engine exhaust cautions

⚠ CAUTION

- **Avoid inhaling the engine exhaust. It contains carbon monoxide, which is a colorless and odorless gas. It can cause unconsciousness or even death.**
- **Make sure the exhaust system has no holes or loose connections. The system should be checked from time to time. If you hit something, or notice a change in the sound of the exhaust, have the system checked immediately.**
- **Do not run the engine in a garage or enclosed area except for the time needed to drive the vehicle in or out. The exhaust gases cannot escape, making this a particularly dangerous situation.**
- **Do not remain for a long time in a parked vehicle with the engine running. If it is unavoidable, however, do so only in an unconfined area and adjust the heating or cooling system to force outside air into the vehicle.**

- **To allow proper operation of your vehicle's ventilation system, keep the inlet grilles in front of the windshield clear of snow, leaves, or other obstructions.**
- **If you smell exhaust fumes in the vehicle, open the windows and close the rear window to ensure plenty of fresh air enters the vehicle. If you can smell exhaust fumes even though there are no other vehicles in the surrounding area, have your vehicle checked by your Toyota dealer. Continued inhalation of exhaust fumes can lead to death by gas poisoning.**

- **Toyota does not recommend occupying the rear cargo area when it is fitted with a slide–in camper, camper shell or other type cover while the engine is running. This caution applies to both driving and stopped or parked situations with the engine running. Particular care should be taken to prevent exhaust gases from entering camper bodies, trailers or other enclosures on or around your vehicle. If exhaust fumes are detected, open all windows and thoroughly ventilate the area.**

Facts about engine oil consumption

FUNCTIONS OF ENGINE OIL

Engine oil has the primary functions of lubricating and cooling the inside of the engine, and plays a major role in maintaining the engine in proper working order.

ENGINE OIL CONSUMPTION

It is normal that an engine should consume some engine oil during normal engine operation. The causes of oil consumption in a normal engine are as follows.

- Oil is used to lubricate pistons, piston rings and cylinders. A thin film of oil is left on the cylinder wall when a piston moves downwards in the cylinder. High negative pressure generated when the vehicle is decelerating sucks some of this oil into the combustion chamber. This oil as well as some part of the oil film left on the cylinder wall is burned by the high temperature combustion gases during the combustion process.
- Oil is also used to lubricate the stems of the intake valves. Some of this oil is sucked into the combustion chamber together with the intake air and is burned along with the fuel. High temperature exhaust gases also burn the oil used to lubricate the exhaust valve stems.

The amount of engine oil consumed depends on the viscosity of the oil, the quality of the oil and the conditions the vehicle is driven under.

More oil is consumed by high–speed driving and frequent acceleration and deceleration.

A new engine consumes more oil, since its pistons, piston rings and cylinder walls have not become conditioned.

When judging the amount of oil consumption, note that the oil may become diluted and make it difficult to judge the true level accurately.

As an example, if a vehicle is used for repeated short trips, and consumes a normal amount of oil, the dipstick may not show any drop in the oil level at all, even after 1000 km (600 miles) or more. This is because the oil is gradually becoming diluted with fuel or moisture, making it appear that the oil level has not changed.

The diluting ingredients evaporate out when the vehicle is then driven at high speeds, as on an expressway, making it appear that oil is excessively consumed after driving at high speeds.

IMPORTANCE OF ENGINE OIL LEVEL CHECK

One of the most important points in proper vehicle maintenance is to keep the engine oil at the optimum level so that oil function will not be impaired. Therefore, it is essential that the oil level be checked regularly. Toyota recommends that the oil level be checked every time you refuel the vehicle.

NOTICE

Failure to check the oil level regularly could lead to serious engine trouble due to insufficient oil.

For detailed information on oil level check, see “Checking the engine oil level” on page 543 in Section 7–2.

Iridium–tipped spark plugs [4.7 L V8 (2UZ–FE) engine]

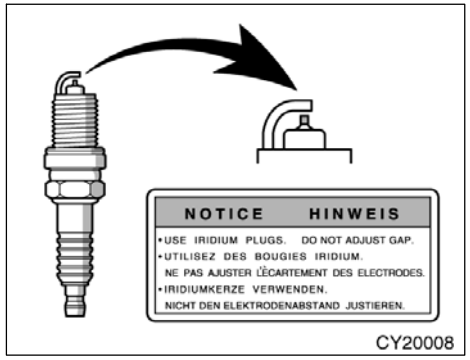

Your engine is fitted with iridium–tipped spark plugs.

NOTICE

Use only iridium–tipped spark plugs. Do not adjust gaps for engine performance smooth driveability.

Long reach iridium–tipped spark plugs [5.7 L V8 (3UR–FE) engine]

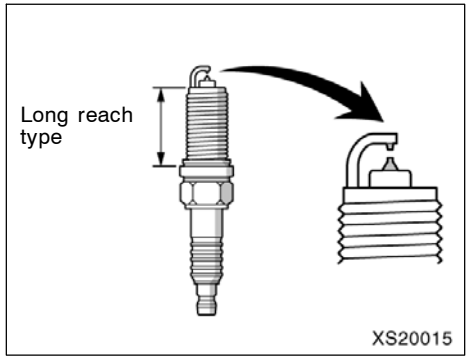

Your engine is fitted with long reach iridium–tipped spark plugs.

NOTICE
Use only iridium–tipped spark plugs. Do not adjust gaps for engine performance smooth driveability.

For details about the spark plug type, see “Service specifications” on page 582 in Section 8.

Brake system

The tandem master cylinder brake system is a hydraulic system with two separate sub–systems. If either sub–system should fail, the other will still work. However, the pedal will be harder to press, and your stopping distance will increase. Also, the brake system warning light may come on.

⚠ CAUTION
Do not drive your vehicle with only a single brake system. Have your brakes fixed immediately.

BRAKE BOOSTER

The brake booster uses engine vacuum to power–assist the brakes. If the engine should quit while you are driving, you can bring the vehicle to a stop with normal pedal pressure. There is enough reserved vacuum for one or two stops—but no more!

⚠ CAUTION
• **Do not pump the brake pedal if the engine stalls. Each push on the pedal uses up your reserved vacuum.** • **Even if the power assist is completely lost, the brakes will still work. But you will have to push the pedal hard, much harder than normal. And your braking distance will increase.**

ANTI–LOCK BRAKE SYSTEM

The anti–lock brake system is designed to help prevent lock–up of the wheels during a sudden braking or braking on slippery road surfaces. This assists in providing directional stability and steering performance of the vehicle under these circumstances.

Effective way to press the ABS brake pedal: When the anti–lock brake system function is in action, you may feel the brake pedal pulsating and hear a noise. In this situation, to let the anti–lock brake system work for you, just hold the brake pedal down more firmly. Do not pump the brake in a panic stop. This will result in reduced braking performance.

The anti–lock brake system becomes operative after the vehicle has accelerated to a speed in excess of approximately 10 km/h (6 mph). It stops operating when the vehicle decelerates to a speed below approximately 5 km/h (3 mph).

Depressing the brake pedal on slippery road surfaces such as on a manhole cover, a steel plate at a construction site, joints in a bridge, etc. on a rainy day tends to activate the anti–lock brake system.

You may hear a click or motor sound in the engine compartment for a few seconds when the engine is started or just after the vehicle begins to move. This means that the anti–lock brake system is in the self–check mode, and does not indicate a malfunction.

When the anti–lock brake system is activated, the following conditions may occur. They do not indicate a malfunction of the system:

- You may hear the anti–lock brake system operating and feel the brake pedal pulsating and the vibrations of the vehicle body and steering wheel. You may also hear the motor sound in the engine compartment even after the vehicle is stopped.
- At the end of the anti–lock brake system activation, the brake pedal may move a little forward.

⚠ CAUTION

Do not overestimate the anti–lock brake system: Although the anti–lock brake system assists in providing vehicle control, it is still important to drive with all due care and maintain a moderate speed and safe distance from the vehicle in front of you, because there are limits to the vehicle stability and effectiveness of steering wheel operation even with the anti–lock brake system on.

If tire grip performance exceeds its capability, or if hydroplaning occurs during high speed driving in the rain, the anti–lock brake system does not provide vehicle control.

Anti–lock brake system is not designed to shorten the stopping distance: Always drive at a moderate speed and maintain a safe distance from the vehicle in front of you. Compared with vehicles without an anti–lock brake system, your vehicle may require a longer stopping distance in the following cases:

- **Driving on rough, gravel or snow–covered roads.**

- **Driving with tire chains installed.**
- **Driving over the steps such as the joints on the road.**
- **Driving on roads where the road surface is pitted or has other differences in surface height.**

Install all 4 tires of specified size at appropriate pressure: The anti–lock brake system detects vehicle speeds using the speed sensors for respective wheels' turning speeds. The use of tires other than specified may fail to detect the accurate turning speed resulting in a longer stopping distance.

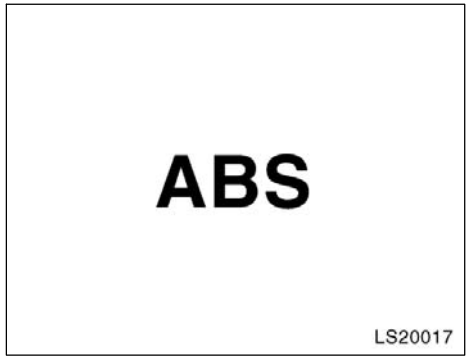

Type A

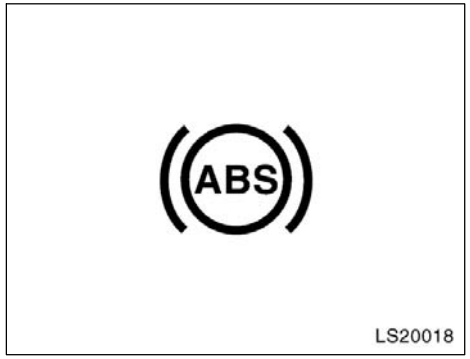

Type B

"ABS" warning light

The light comes on when the ignition switch is turned to the "ON" position. If the anti–lock brake system and the brake assist system work properly, the light turns off after a few seconds. Thereafter, if either of the systems malfunctions, the light comes on again.

When the "ABS" warning light is on (and the brake system warning light is off), the following systems do not operate, but the brake system still operates conventionally.

- Anti–lock brake system
- Brake assist system
- Traction control system
- "AUTO LSD" system
- Vehicle stability control system

When the "ABS" warning light is on (and the brake system warning light is off), the anti–lock brake system does not operate so that the wheels will lock up during a sudden braking or braking on slippery road surfaces.

If either of the following conditions occurs, this indicates a malfunction somewhere in the components monitored by the warning light system. Contact your Toyota dealer as soon as possible to service the vehicle.

- The light does not come on when the ignition switch is turned to the "ON" position, or remains on.
- The light comes on while you are driving.

A warning light turning on briefly during operation does not indicate a problem.

CAUTION

If the "ABS" warning light remains on together with the brake system warning light, immediately stop your vehicle at a safe place and contact your Toyota dealer.

In this case, not only the anti–lock brake system will fail but also the vehicle will become extremely unstable during braking.

DRUM–IN–DISC TYPE PARKING BRAKE SYSTEM

Your vehicle has a drum–in–disc type parking brake system. This type of brake system needs burnishing of the brake shoes periodically or whenever the parking brake shoes and/or drums are replaced.

Have your Toyota dealer perform the burnishing.

BRAKE ASSIST SYSTEM

When you slam the brakes on, the brake assist system judges as an emergency stop and provides more powerful braking for a driver who cannot hold down the brake pedal firmly.

When you slam the brakes on, more powerful braking will be applied. At this time, you may hear a sound in the engine compartment and feel the vibrations of the brake pedal. This does not indicate a malfunction.

The brake assist system becomes operative after the vehicle has accelerated to a speed in excess of approximately 10 km/h (6 mph). It stops operating when the vehicle decelerates to a speed below approximately 5 km/h (3 mph).

For an explanation of this system's warning light, see "Service reminder indicators and warning buzzers" on page 197 in Section 1–6.

Brake pad wear limit indicators

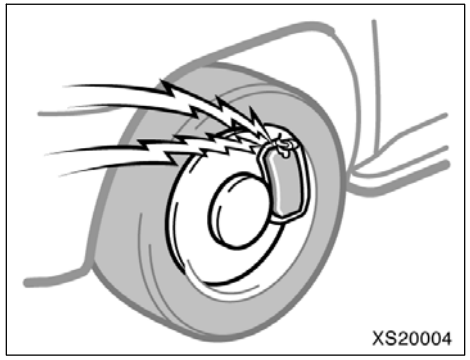

The brake pad wear limit indicators on your disc brakes give a warning noise when the brake pads are worn to where replacement is required.

If you hear a squealing or scraping noise while driving, have the brake pads checked and replaced by your Toyota dealer as soon as possible. Expensive rotor damage can result if the pads are not replaced when necessary.

Rear step bumper

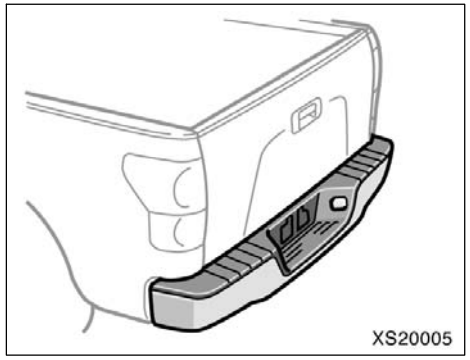

Type A

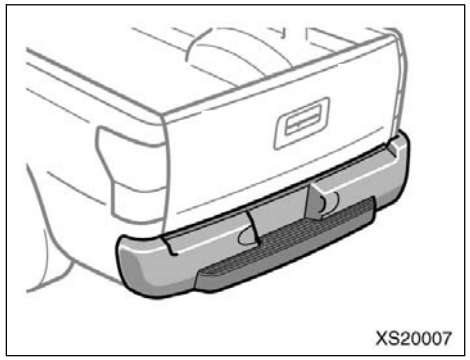

Type B

The rear step bumper is for rear end protection and easier step–up loading.

⚠ CAUTION

- **Do not allow more than one person to get on the rear step bumper at a time. It is designed for only one person.**
- **Never drive the vehicle with anyone on the rear step bumper.**
- **Do not stand on the rear step bumper while the vehicle is moving.**

Your Toyota's identification—
—Vehicle identification number

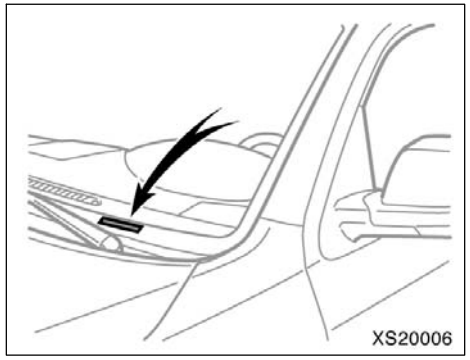

The vehicle identification number (VIN) is the legal identifier for your vehicle. This number is on the left top of the instrument panel, and can be seen through the windshield from outside.

This is the primary identification number for your Toyota. It is used in registering the ownership of your vehicle.

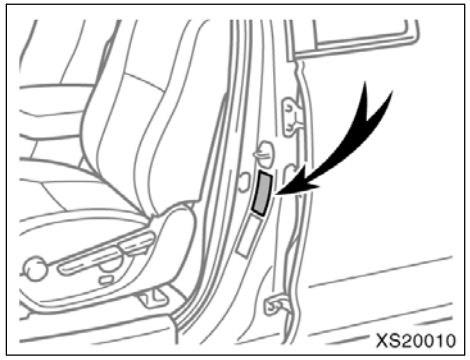

The vehicle identification number (VIN) is also on the Certification Label.

—Engine number

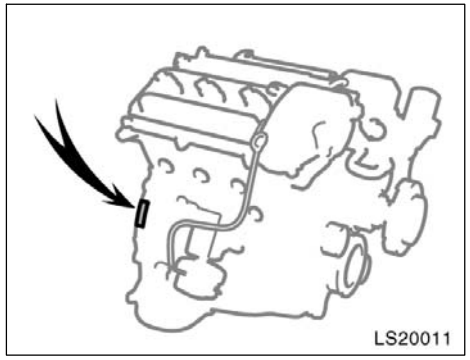

4.0 L V6 (1GR–FE) engine

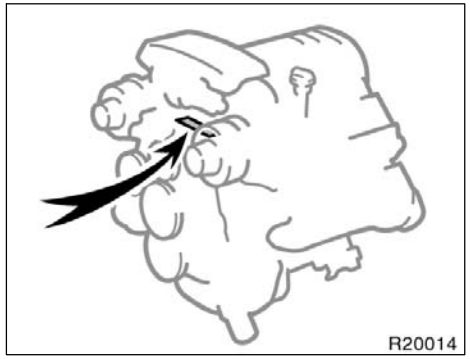

4.7 L V8 (2UZ–FE) engine

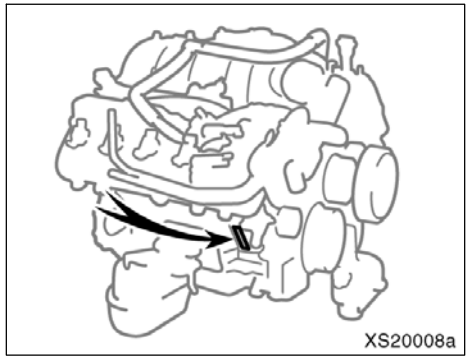

5.7 L V8 (3UR–FE) engine

The engine number is stamped on the engine block as shown.

Theft prevention labels

Your new vehicle carries theft prevention labels which are approximately 47 mm (1.85 in.) by 12 mm (0.47 in.).

The purpose of these labels is to reduce the incidence of vehicle thefts by facilitating the tracing and recovery of parts from stolen vehicles. The label is designed so that once it is applied to a surface, any attempt to remove it will result in destroying the integrity of the label. Transferring these labels intact from one part to another, will be impossible.

NOTICE

You should not attempt to remove the theft prevention labels as it may violate certain state or federal laws.

Suspension and chassis

⚠ CAUTION

Do not modify the suspension/chassis with lift kits, spacers, springs, etc. It can cause dangerous handling characteristics, resulting in loss of control.

Tire information—
—Tire symbols

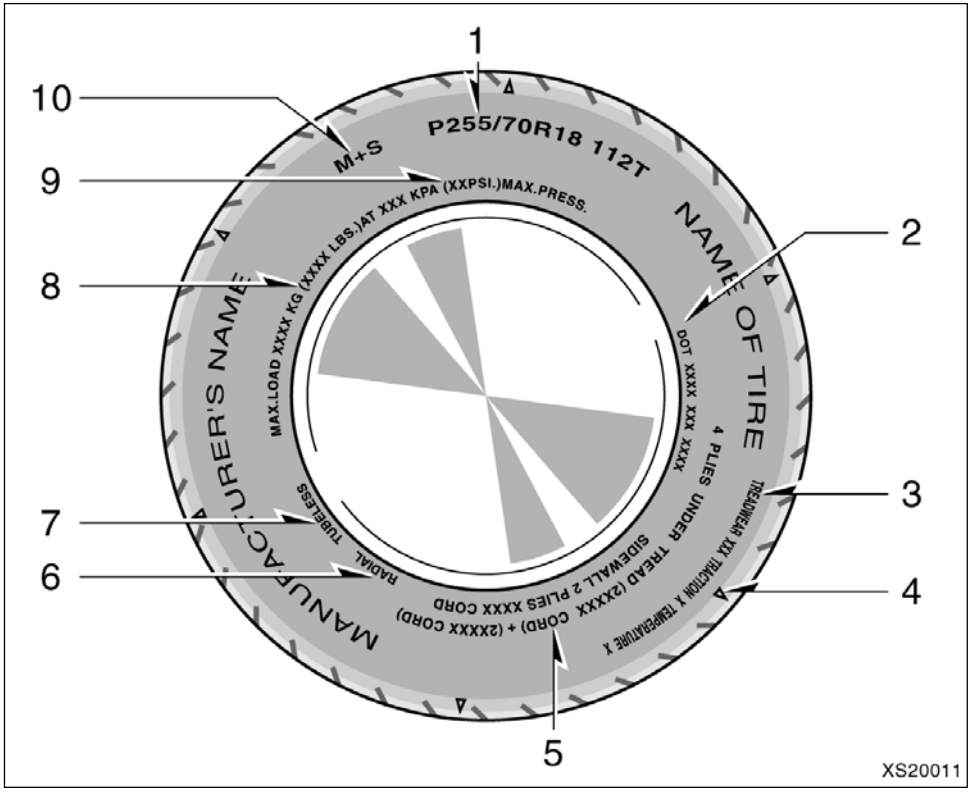

This illustration indicates typical tire symbols.

1. **Tire size—**For details, see "—Tire size" on page 453.
2. **DOT and Tire Identification Number (TIN)—**For details, see "—DOT and Tire Identification Number (TIN)" on page 452.
3. **Uniform tire quality grading—**For details, see "—Uniform tire quality grading" on page 454.
4. **The location of the treadwear indicators—**For details, see "Checking and replacing tires" on page 551.
5. **Tire ply composition and materials—**Plies mean a layer of rubber-coated parallel cords. Cords mean the strands forming the plies in the tire.
6. **Radial tires or bias-ply tires—**A radial tire has "RADIAL" on the sidewall. A tire not marked with "RADIAL" is a bias-ply tire.

7. **“TUBELESS” or “TUBE TYPE”—**A tubeless tire does not have a tube inside the tire and air is directly filled in the tire. A tube type tire has a tube inside the tire and the tube maintains the air pressure.
8. **Load limit at maximum cold tire inflation pressure—**For details, see “Checking and replacing tires” on page 551.
9. **Maximum cold tire inflation pressure—**This means the pressure to which a tire may be inflated. For details about recommended cold tire inflation pressure, see “Tires” on page 586.
10. **Summer tire or all season tire—**An all season tire has “M+S” on the sidewall. The tire not marked with “M+S” is a summer tire. For details, see “Types of tires” on page 466.

—DOT and Tire Identification Number (TIN)

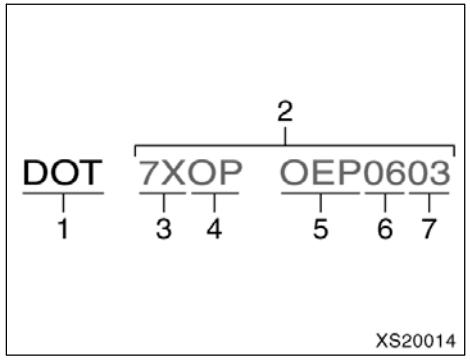

This illustration indicates typical DOT and Tire Identification Number (TIN).

1. “DOT” symbol
2. Tire Identification Number (TIN)
3. Tire manufacturer’s identification mark
4. Tire size code
5. Manufacturer’s optional tire type code (3 or 4 letters)
6. Manufacturing week
7. Manufacturing year

The “DOT” symbol certifies that the tire conforms to applicable Federal Motor Vehicle Safety Standards.

—Tire size

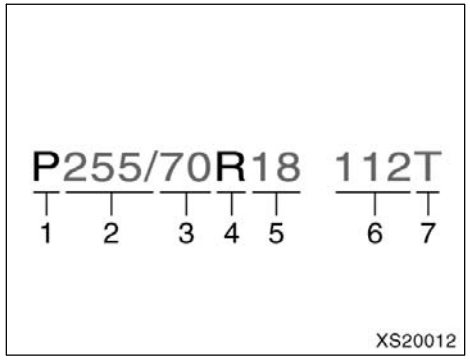

This illustration indicates typical tire size.

1. Tire use (P=Passenger car, T=Temporary use)
2. Section width (in millimeters)
3. Aspect ratio (tire height to section width)
4. Tire construction code (R=Radial, D=Diagonal)
5. Wheel diameter (in inches)
6. Load index (2 digits or 3 digits)
7. Speed symbol (alphabet with one letter)

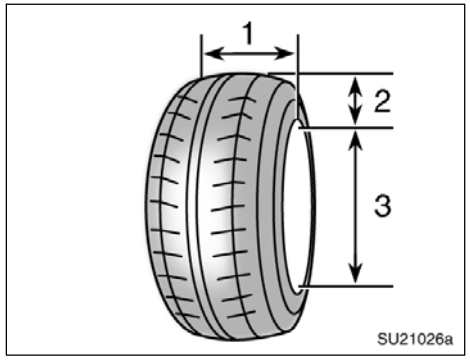

1. Section width
2. Tire height
3. Wheel diameter

—Name of each section of tire

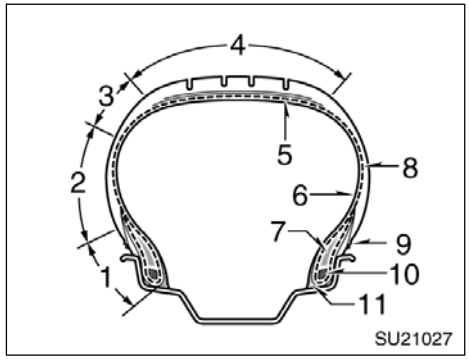

1. Bead
2. Sidewall
3. Shoulder
4. Tread
5. Belt
6. Inner liner
7. Reinforcing rubber
8. Carcass
9. Rim lines
10. Bead wires
11. Chafer

—Uniform tire quality grading

This information has been prepared in accordance with regulations issued by the National Highway Traffic Safety Administration of the U.S. Department of Transportation. It provides the purchasers and/or prospective purchasers of Toyota vehicles with information on uniform tire quality grading.

Your Toyota dealer will help answer any questions you may have as you read this information.

DOT quality grades—All passenger vehicle tires must conform to Federal Safety Requirements in addition to these grades. Quality grades can be found where applicable on the tire sidewall between tread shoulder and maximum section width. For example: Treadwear 200 Traction AA Temperature A

Treadwear—The treadwear grade is a comparative rating based on the wear rate of the tire when tested under controlled conditions on a specified government test course. For example, a tire graded 150 would wear one and a half (1–1/2) times as well on the government course as a tire graded 100. The relative performance of tires depends upon the actual conditions of their use, however, and may depart significantly from the norm due to variations in driving habits, service practices and differences in road characteristics and climate.

Traction AA, A, B, C—The traction grades, from highest to lowest, are AA, A, B, and C, and they represent the tire's ability to stop on wet pavement as measured under controlled conditions on specified government test surfaces of asphalt and concrete. A tire marked C may have poor traction performance.

Warning: The traction grade assigned to this tire is based on braking (straight ahead) traction tests and does not include cornering (turning) traction.

Temperature A, B, C—The temperature grades are A (the highest), B, and C, representing the tire's resistance to the generation of heat and its ability to dissipate heat when tested under controlled conditions on a specified indoor laboratory test wheel. Sustained high temperature can cause the material of the tire to degenerate and reduce tire life, and excessive temperature can lead to sudden tire failure. The grade C corresponds to a level of performance which all passenger car tires must meet under the Federal Motor Vehicle Safety Standard No.109. Grades B and A represent higher levels of performance on the laboratory test wheel than the minimum required by law.

Warning: The temperature grades for this tire are established for a tire that is properly inflated and not overloaded. Excessive speed, underinflation, or excessive loading, either separately or in combination, can cause heat buildup and possible tire failure.

—Glossary of tire terminology

Tire related term	Meaning
Cold tire inflation pressure	tire inflation pressure when the vehicle has been parked for at least 3 hours or more, or it has not been driven more than 1.5 km or 1 mile under that condition
Maximum inflation pressure	the maximum cold inflation pressure to which a tire may be inflated and it is shown on the sidewall of the tire
Recommended inflation pressure	cold tire inflation pressure recommended by a manufacturer
Accessory weight	the combined weight (in excess of those standard items which may be replaced) of automatic transmission, power steering, power brakes, power windows, power seats, radio, and heater, to the extent that these items are available as factory–installed equipment (whether installed or not)
Curb weight	the weight of a motor vehicle with standard equipment including the maximum capacity of fuel, oil, and coolant, and, if so equipped, air conditioning and additional weight optional engine
Maximum loaded vehicle weight	the sum of— (a) curb weight; (b) accessory weight; (c) vehicle capacity weight; and (d) production options weight
Normal occupant weight	68 kg (150 lb.) times the number of occupants specified in the second column of Table 1 that follows

Tire related term	Meaning
Occupant distribution	distribution of occupants in a vehicle as specified in the third column of Table 1 that follows
Production options weight	the combined weight of those installed regular production options weighing over 2.3 kg (5 lb.) in excess of those standard items which they replace, not previously considered in curb weight or accessory weight, including heavy duty brakes, ride levelers, roof rack, heavy duty battery, and special trim
Rim	a metal support for a tire or a tire and tube assembly upon which the tire beads are seated
Rim diameter (Wheel diameter)	nominal diameter of the bead seat
Rim size designation	rim diameter and width
Rim type designation	the industry of manufacturer's designation for a rim by style or code
Rim width	nominal distance between rim flanges
Vehicle capacity weight (Total load capacity)	the rated cargo and luggage load plus 68 kg (150 lb.) times the vehicle's designated seating capacity
Vehicle maximum load on the tire	the load on an individual tire that is determined by distributing to each axle its share of the maximum loaded vehicle weight and dividing by two
Vehicle normal load on the tire	the load on an individual tire that is determined by distributing to each axle its share of the curb weight, accessory weight, and normal occupant weight (distributed in accordance with Table 1 that follows) and dividing by two

Tire related term	Meaning
Weather side	the surface area of the rim not covered by the inflated tire
Bead	the part of the tire that is made of steel wires, wrapped or reinforced by ply cords and that is shaped to fit the rim
Bead separation	a breakdown of the bond between components in the bead
Bias ply tire	a pneumatic tire in which the ply cords that extend to the beads are laid at alternate angles substantially less than 90 degrees to the centerline of the tread
Carcass	the tire structure, except tread and sidewall rubber which, when inflated, bears the load
Chunking	the breaking away of pieces of the tread or sidewall
Cord	the strands forming the plies in the tire
Cord separation	the parting of cords from adjacent rubber compounds
Cracking	any parting within the tread, sidewall, or innerliner of the tire extending to cord material
CT	a pneumatic tire with an inverted flange tire and rim system in which the rim is designed with rim flanges pointed radially inward and the tire is designed to fit on the underside of the rim in a manner that encloses the rim flanges inside the air cavity of the tire
Extra load tire	a tire designed to operate at higher loads and at higher inflation pressures than the corresponding standard tire

Tire related term	Meaning
Groove	the space between two adjacent tread ribs
Innerliner	the layer(s) forming the inside surface of a tubeless tire that contains the inflating medium within the tire
Innerliner separation	the parting of the innerliner from cord material in the carcass
Intended outboard sidewall	(A) the sidewall that contains a whitewall, bears white lettering or bears manufacturer, brand, and/or model name molding that is higher or deeper than the same molding on the other sidewall of the tire, or (B) the outward facing sidewall of an asymmetrical tire that has a particular side that must always face outward when mounted on a vehicle
Light truck (LT) tire	a tire designated by its manufacturer as primarily intended for use on lightweight trucks or multipurpose passenger vehicles
Load rating	the maximum load that a tire is rated to carry for a given inflation pressure
Maximum load rating	the load rating for a tire at the maximum permissible inflation pressure for that tire
Maximum permissible inflation pressure	the maximum cold inflation pressure to which a tire may be inflated
Measuring rim	the rim on which a tire is fitted for physical dimension requirements
Open splice	any parting at any junction of tread, sidewall, or innerliner that extends to cord material

Tire related term	Meaning
Outer diameter	the overall diameter of an inflated new tire
Overall width	the linear distance between the exteriors of the sidewalls of an inflated tire, including elevations due to labeling, decorations, or protective bands or ribs
Passenger car tire	a tire intended for use on passenger cars, multipurpose passenger vehicles, and trucks, that have a gross vehicle weight rating (GVWR) of 10,000 lb. or less
Ply	a layer of rubber–coated parallel cords
Ply separation	a parting of rubber compound between adjacent plies
Pneumatic tire	a mechanical device made of rubber, chemicals, fabric and steel or other materials, that, when mounted on an automotive wheel, provides the traction and contains the gas or fluid that sustains the load
Radial ply tire	a pneumatic tire in which the ply cords that extend to the beads are laid at substantially 90 degrees to the centerline of the tread
Reinforced tire	a tire designed to operate at higher loads and at higher inflation pressures than the corresponding standard tire
Section width	the linear distance between the exteriors of the sidewalls of an inflated tire, excluding elevations due to labeling, decoration, or protective bands
Sidewall	that portion of a tire between the tread and bead
Sidewall separation	the parting of the rubber compound from the cord material in the sidewall

Tire related term	Meaning
Snow tire	a tire that attains a traction index equal to or greater than 110, compared to the ASTM E−1136 Standard Reference Test Tire, when using the snow traction test as described in ASTM F−1805−00, Standard Test Method for Single Wheel Driving Traction in a Straight Line on Snow−and Ice−Covered Surfaces, and which is marked with an Alpine Symbol ( ) on at least one sidewall
Test rim	the rim on which a tire is fitted for testing, and may be any rim listed as appropriate for use with that tire
Tread	that portion of a tire that comes into contact with the road
Tread rib	a tread section running circumferentially around a tire
Tread separation	pulling away of the tread from the tire carcass
Treadwear indicators(TWI)	the projections within the principal grooves designed to give a visual indication of the degrees of wear of the tread
Wheel−holding fixture	the fixture used to hold the wheel and tire assembly securely during testing

Table 1– Occupant loading and distribution for vehicle normal load for various designated seating capacities

Designated seating capacity, number of occupants	Vehicle normal load, number of occupants	Occupant distribution in a normally loaded vehicle
2 through 4	2	2 in front
5 through 10	3	2 in front, 1 in second seat
11 through 15	5	2 in front, 1 in second seat, 1 in third seat, 1 in fourth seat
16 through 20	7	2 in front, 2 in second seat, 2 in third seat, 1 in fourth seat

Vehicle load limits

Vehicle load limits include total load capacity, seating capacity, towing capacity and cargo capacity. Follow the load limits shown below. Total load capacity and seating capacity are also described on the tire and loading information label. For location of the tire and loading information label, see “Checking tire inflation pressure” on page 548.

Total load capacity:

Total load capacity means combined weight of occupants, cargo and luggage. Tongue load is included when trailer towing. For the total load capacity about your vehicle, see “Vehicle capacity weight” on page 576 in Section 8.

Seating capacity:

Regular cab models
- With separate seats
  - Total 2
- With bench seats
  - Total 3

Double cab and Crew Max models
- With separate seats
  - Total 5 (Front 2, Rear 3)
- With bench seats
  - Total 6 (Front 3, Rear 3)

Seating capacity means the maximum number of occupants whose estimated average weight is 68 kg (150 lb.) per person. Depending on the weight of each person, the seating capacity given may exceed the total load capacity.

NOTICE

Even if the number of occupants are within the seating capacity, do not exceed the total load capacity.

Towing capacity:

Towing capacity means the maximum allowable gross trailer weight (trailer weight plus its cargo weight) that your vehicle is able to tow. For the towing capacity about your vehicle, see “Towing capacity” on page 579 in Section 8.

Cargo capacity

Cargo capacity may increase or decrease depending on the size (weight) and the number of occupants. For details, see “Capacity and distribution” that follows.

⚠ CAUTION

Do not apply the load more than each load limit. That may cause not only damage to the tires, but also deterioration to the steering ability and braking ability, which may cause an accident.

Cargo and luggage—
—Stowage precautions

When stowing cargo and luggage in the vehicle, observe the following:

- Put cargo and luggage in the rear deck when at all possible. Be sure all items are secured in place.
- Be careful to keep the vehicle balanced. Locating the weight as far forward as possible helps maintain balance.
- For better fuel economy, do not carry unneeded weight.

⚠ CAUTION

- **To prevent cargo and luggage from sliding forward during braking, do not stack anything behind the front seats higher than the seatbacks. Keep cargo and luggage low, as close to the floor as possible.**

- **Never allow anyone to ride in the rear deck. It is not designed for passengers. They should ride in their seats with their seat belts properly fastened. Otherwise, they are much more likely to suffer death or serious bodily injury, in the event of sudden braking or a collision.**
- **Do not drive with objects left on top of the instrument panel. They may interfere with the driver's field of view. Or they may move during sharp vehicle acceleration or turning, and impair the driver's control of the vehicle. In an accident they may injure the vehicle occupants.**

—Capacity and distribution

Cargo capacity depends on the total weight of the occupants.

(Cargo capacity) = (Total load capacity) – (Total weight of occupants)

Steps for Determining Correct Load Limit—

(1) Locate the statement "The combined weight of occupants and cargo should never exceed XXX kg or XXX lbs." on your vehicle's placard.

(2) Determine the combined weight of the driver and passengers that will be riding in your vehicle.

(3) Subtract the combined weight of the driver and passengers from XXX kg or XXX lbs.

(4) The resulting figure equals the available amount of cargo and luggage load capacity. For example, if the "XXX" amount equals 1400 lbs. and there will be five 150 lb passengers in your vehicle, the amount of available cargo and luggage load capacity is 650 lbs. (1400–750 (5x150)=650 lbs.)

(5) Determine the combined weight of luggage and cargo being loaded on the vehicle. That weight may not safely exceed the available cargo and luggage load capacity calculated in Step 4.

(6) If your vehicle will be towing a trailer, load from your trailer will be transferred to your vehicle. Consult this manual to determine how this reduces the available cargo and luggage load capacity of your vehicle.

For details about trailer towing, see “Trailer towing” on page 475 in Section 3.

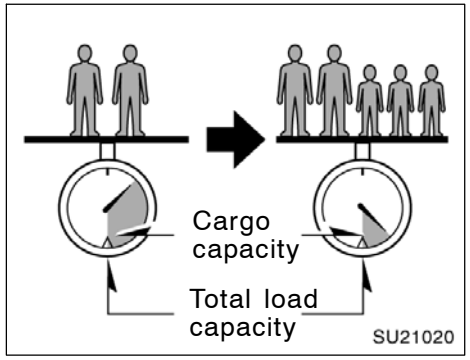

Example on Your Vehicle

In case that 2 people with the combined weight of A kg (lb.) are riding in your vehicle with the total load capacity of B kg (lb.), the available amount of cargo and luggage load capacity will be C kg (lb.) as follows:

B kg (lb.) – A kg (lb.) = C kg (lb.)

From this condition, if 3 more passengers with the combined weight of D kg (lb.) get on, the available cargo and luggage load will be reduced E kg (lb.) as follows:

C kg (lb.) – D kg (lb.) = E kg (lb.)

As shown in the above example, if the number of occupants increases, the cargo and luggage load equaling the combined weight of occupants who got on later must be reduced. In other words, if the increase in the number of occupants causes the excess of the total load capacity (combined weight of occupants plus cargo and luggage load), you have to reduce the cargo and luggage on your vehicle.

For details about total load capacity, see “Vehicle load limits” on page 463 in this Section.

⚠ CAUTION

Even if the total load of occupant’s weight and the cargo load is less than the total load capacity, do not apply the load unevenly. That may cause not only damage to the tire but also deterioration to the steering ability due to unbalance of the vehicle, causing an accident.

Types of tires

Determine what kind of tires your vehicle is originally equipped with.

1. Summer tires

Summer tires are high–speed capability tires best suited to highway driving under dry conditions.

Since summer tires do not have the same traction performance as snow tires, summer tires are inadequate for driving on snow–covered or icy roads. For driving on snow–covered or icy roads, we recommend using snow tires. If installing snow tires, be sure to replace all four tires.

2. All season tires

All season tires are designed to provide better traction in snow and to be adequate for driving in most winter conditions, as well as for use all year round.

All season tires, however, do not have adequate traction performance compared with snow tires in heavy or loose snow. Also, all season tires fall short in acceleration and handling performance compared with summer tires in highway driving.

The details about how to distinguish summer tires from all season tires are described on page 451.

⚠ CAUTION

- **Do not mix summer and all season tires on your vehicle as this can cause dangerous handling characteristics, resulting in loss of control.**
- **Do not use tires other than the manufacture's designated tires, and never mix tires or wheels of the sizes different from the originals.**

SECTION 3

STARTING AND DRIVING

Starting and driving

Before starting the engine 468
How to start the engine 468
Tips for driving in various conditions 469
Driving in the rain 471
Off–road driving precautions 472
Winter driving tips 473
Dinghy towing 474
Trailer towing 475
How to save fuel and make your vehicle last longer 490

Before starting the engine

1. Check the area around the vehicle before entering it.
2. Adjust seat position, seatback angle, seat cushion angle, head restraint height and steering wheel angle.
3. Adjust the inside and outside rear view mirrors.
4. Lock all doors.
5. Fasten seat belts.

How to start the engine——Cranking hold function

Once you turn the ignition switch to the “START” position and release it, the cranking hold function continues to crank the engine in “ON” position until it starts.

The function stops cranking the engine after about 25 seconds maximum if the engine has not started yet. When you crank the engine again, wait a few seconds and restart it.

If you hold the ignition switch in “START” position, the function will keep cranking for about 30 seconds maximum.

(a) Before cranking

1. Apply the parking brake firmly.
2. Turn off unnecessary lights and accessories.
3. Put the selector lever in “P”. If you need to restart the engine while the vehicle is moving, put the selector lever in “N”. A starter safety device will prevent the starter from operating if the selector lever is in any drive position.
4. Depress the brake pedal and hold it to the floor until driving off.

(b) Starting the engine

Before starting the engine, be sure to follow the instructions in "(a) Before cranking".

Normal starting procedure

The multiport fuel injection system/sequential multiport fuel injection system in your engine automatically controls the proper air–fuel mixture for starting. You can start a cold or hot engine as follows:

With your foot off the accelerator pedal, crank the engine by turning the ignition switch to the "START" position. Release it when the engine starts.

Engine should be warmed up by driving, not in idle. For warming up, drive with smoothly turning engine until engine coolant temperature is within normal range.

If the engine stalls...

Simply restart it, using the correct procedure given in normal starting.

If the engine will not start...

See "If your vehicle will not start" on page 493 in Section 4.

NOTICE

- ***Do not crank for more than 30 seconds at a time. This may overheat the starter and wiring systems.***
- ***Do not race a cold engine.***
- ***If the engine becomes difficult to start or stalls frequently, have the engine checked immediately.***

Tips for driving in various conditions

- Always slow down in gusty crosswinds. This will allow you much better control.
- Drive slowly onto curbs and, if possible, at a right angle. Avoid driving onto high, sharp–edged objects and other road hazards. Failure to do so can lead to severe tire damage such as a tire burst.

  Drive slowly when passing over bumps or travelling on a bumpy road. Otherwise, the impact could cause severe damage to the tires and/or wheels.
- When parking on a hill, turn the front wheels until they touch the curb so that the vehicle will not roll. Apply the parking brake, and place the transmission in "P". If necessary, block the wheels.

- Washing your vehicle or driving through deep water may get the brakes wet. To see whether they are wet, check that there is no traffic near you, and then press the pedal lightly. If you do not feel a normal braking force, the brakes are probably wet. To dry them, drive the vehicle cautiously while lightly pressing the brake pedal with the parking brake applied. If they still do not work safely, pull to the side of the road and call a Toyota dealer for assistance.
- Four–wheel drive models—Toyota recommends not using four–wheel drive on dry hard–surfaced roads, because four–wheel driving will cause unnecessary noise and wear, and poor fuel economy.
- Four–wheel drive models—In cold temperatures, noise may occur when driving in two–wheel drive before the transfer is warmed up. Therefore, first drive in four–wheel drive until the transfer is warmed up.

CAUTION

- **Before driving off, make sure that the parking brake is fully released and the brake system warning light (parking brake reminder light) is off.**
- **Do not leave your vehicle unattended while the engine is running.**
- **Do not rest your foot on the brake pedal while driving. It can cause dangerous overheating, needless wear, and poor fuel economy.**
- **To drive down a long or steep hill, reduce your speed and downshift. Remember, if you ride the brakes excessively, they may overheat and not work properly.**
- **Be careful when accelerating, upshifting, downshifting or braking on a slippery surface. Sudden acceleration or engine braking, could cause the vehicle to skid or spin.**
- **Do not drive in excess of the speed limit. Even if the legal speed limit permits it, do not drive over 140 km/h (85 mph) unless your vehicle has high–speed capability tires. Driving over 140 km/h (85 mph) may result in tire failure, loss of control and possible injury. Be sure to consult a tire dealer to determine whether the tires on your vehicle are high–speed capability tires or not before driving at such speeds.**
- **Do not continue normal driving when the brakes are wet. If they are wet, your vehicle will require a longer stopping distance, and it may pull to one side when the brakes are applied. Also, the parking brake will not hold the vehicle securely.**

Driving in the rain

Driving on a slippery road surface

Drive carefully when it is raining, because visibility will be reduced, the windows may become fogged–up, and the road will be slippery.

- Drive carefully when it starts to rain, because the road surface will be especially slippery.
- Refrain from high speeds when driving on an expressway in the rain, because there may be a layer of water between the tires and the road surface, preventing the steering and brakes from operating properly.

CAUTION

- **Sudden braking, acceleration and steering when driving on a slippery road surface may cause tire slippage and reduce your ability to control the vehicle, resulting in an accident.**
- **Sudden changes in engine speed, such as sudden engine braking, may cause the vehicle to skid, resulting in an accident.**
- **After driving through a puddle, lightly depress the brake pedal to make sure that the brakes are functioning properly. Wet brake pads may prevent the brakes from functioning properly. If the brakes on only one side are wet and not functioning properly, steering control may be affected, resulting in an accident.**

When encountering flooded roads

Do not drive on a road that has flooded after heavy rain etc. Doing so may cause serious damage to the vehicle.

NOTICE

Driving on a flooded road may cause the engine to stall as well as cause serious vehicle malfunctions such as shorts in electrical components and engine damage from water immersion. In the event that you drive on a flooded road and the vehicle is flooded, be sure to have your Toyota dealer check brake function, changes in quantity and quality of oil and fluid used for the engine, transmission, transfer (4WD vehicles), differentials, etc. and lubricant condition for the propeller shaft, bearings and suspension joints (where possible) and the function of all joints and bearings.

Off–road driving precautions

When driving your vehicle off–road, please observe the following precautions to ensure your driving enjoyment and to help prevent the closure of areas to off–road vehicles.

a. Drive your vehicle only in areas where off–road vehicles are permitted to travel.

b. Respect private property. Get owner's permission before entering private property.

c. Do not enter areas that are closed. Honor gates, barriers and signs that restrict travel.

d. Stay on established roads. When conditions are wet, driving techniques should be changed or travel delayed to prevent damage to roads.

For owners in U.S. mainland, Hawaii and Puerto Rico:

To obtain additional information pertaining to driving your vehicle off–road, consult the following organizations.

- State and Local Parks and Recreation Departments
- State Motor Vehicle Bureau
- Recreational Vehicle Clubs
- U.S. Forest Service and Bureau of Land Management

⚠ CAUTION

Always observe the following precautions to minimize the risk of serious personal injury or damage to your vehicle:

- **Drive carefully when off the road. Do not take unnecessary risks by driving in dangerous places.**
- **Do not grip the steering wheel spokes when driving off–road. A bad bump could jerk the wheel and injure your hands. Keep both hands and especially your thumbs on the outside of the rim.**
- **Always check your brakes for effectiveness immediately after driving in sand, mud, water or snow.**
- **After driving through tall grass, mud, rock, sand, rivers, etc., check that there is no grass, bush, paper, rags, stone, sand, etc. adhering or trapped on the underbody. Clear off any such matter from the underbody. If the vehicle is used with these materials trapped or adhering to the underbody, a breakdown or fire could occur.**
- **In a rollover crash, an unbelted person is significantly more likely to die than a person wearing a seat belt. Therefore, the driver and all passengers should fasten their seat belts whenever the vehicle is moving.**
- **When driving off–road or in rugged terrain, do not drive at excessive speeds, jump, make sharp turns, strike objects, etc. This may cause loss of control or vehicle rollover causing death or serious injury. You are also risking expensive damage to your vehicle's suspension and chassis.**

NOTICE

- ***If driving through water, such as when crossing shallow streams, first check the depth of the water and the bottom of the river bed for firmness. Drive slowly and avoid deep water.***
- ***Take all necessary safety measures to ensure that water damage to the engine or other components does not occur.***
- ***Water entering the engine air intake will cause severe engine damage.***
- ***Water entering the automatic transmission will cause deterioration in shift quality, locking up of your transmission accompanied by vibration, and ultimately damage.***
- ***Water can wash the grease from wheel bearings, causing rusting and premature failure, and may also enter the differentials, transmission and transfer case, reducing the gear oil's lubricating qualities.***

- ***Sand and mud that has accumulated in brake drums and around brake discs may affect braking efficiency and may damage brake system components.***
- ***Always perform a maintenance inspection after each day of off–road driving that has taken you through rough terrain, sand, mud, or water. For scheduled maintenance information, refer to the "Scheduled Maintenance Guide" or "Owner's Manual Supplement".***

Winter driving tips

Make sure your coolant is properly protected against freezing.

Only use "Toyota Super Long Life Coolant" or similar high quality ethylene glycol based non–silicate, non–amine, non–nitrite, and non–borate coolant with long–life hybrid organic acid technology. (Coolant with long–life hybrid organic acid technology is a combination of low phosphates and organic acids.)

See "Checking the engine coolant level" on page 546 in Section 7–2 for details of coolant type selection.

For the U.S.A.—"Toyota Super Long Life Coolant" is a mixture of 50% coolant and 50% deionized water. This coolant provides protection down to about –35°C (–31°F).

For Canada—"Toyota Super Long Life Coolant" is a mixture of 55% coolant and 45% deionized water. This coolant provides protection down to about –42°C (–44°F).

NOTICE

Do not use plain water alone.

Check the condition of the battery and cables.

Cold temperatures reduce the capacity of any battery, so it must be in top shape to provide enough power for winter starting. Section 7–3 tells you how to visually inspect the battery. Your Toyota dealer and most service stations will be pleased to check the level of charge.

Make sure the engine oil viscosity is suitable for the cold weather.

See page 544 in Section 7–2 for recommended viscosity. Leaving a heavy summer oil in your vehicle during winter months may cause harder starting. If you are not sure about which oil to use, call your Toyota dealer—they will be pleased to help.

Keep the door locks from freezing.

Squirt lock de–icer or glycerine into the locks to keep them from freezing. To open a frozen lock, try heating the key before inserting it.

Use a washer fluid containing an anti–freeze solution.

This product is available at your Toyota dealer and most auto parts stores. Follow the manufacturer's directions for how much to mix with water.

NOTICE

Do not use engine antifreeze or any other substitute because it may damage your vehicle's paint.

Do not use your parking brake when there is a possibility it could freeze.

When parking, put the transmission into "P" and block the front wheels. Do not use the parking brake, or snow or water accumulated in and around the parking brake mechanism may freeze, making it hard to release.

Keep ice and snow from accumulating under the fenders.

Ice and snow built up under your fenders can make steering difficult. During bad winter driving, stop and check under the fenders occasionally.

Depending on where you are driving, we recommend you carry some emergency equipment.

Some of the things you might put in the vehicle are tire chains, window scraper, bag of sand or salt, flares, small shovel, jumper cables, etc.

Dinghy towing

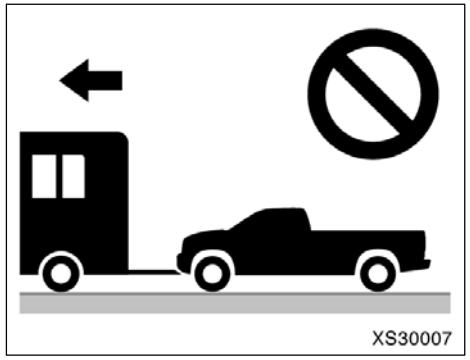

Your vehicle is not designed to be dinghy towed (with four wheels on the ground) behind a motorhome.

NOTICE

Do not tow your vehicle with four wheels on the ground. This may cause serious damage to your vehicle.

Trailer towing

Your vehicle is designed primarily as a passenger–and–load–carrying vehicle. Towing a trailer will have an adverse effect on handling, performance, braking, durability and driving economy (fuel consumption, etc.). Your safety and satisfaction depend on the proper use of correct equipment and cautious driving habits. For your safety and the safety of others, you must not overload your vehicle or trailer. Ask your local Toyota dealer for further details before towing.

NOTICE

When towing a trailer, be sure to consult your Toyota dealer for further information on additional requirements such as a towing kit, etc.

⚠ CAUTION

To tow a trailer safely, use extreme care and drive the vehicle in accordance with the trailer's characteristics and operating conditions.

The vehicle stability and braking performance are affected by trailer stability, brake setting and performance, and the hitch.

Follow all the instructions described in this section. Failure to do so could cause an accident resulting in death or serious injury.

WEIGHT LIMITS

Before towing, make sure the gross trailer weight, gross combination weight, gross vehicle weight, gross axle weight and trailer tongue load are all within the limits.

The gross trailer weight and tongue load can be measured with platform scales found at a highway weighing station, building supply company, trucking company, junk yard, etc.

Reference

Vehicle weight

GVWR (Gross Vehicle Weight Rating) is the maximum allowable **gross vehicle weight**.

The **gross vehicle weight** is the total weight of the vehicle. When towing a trailer, it is the sum of the vehicle weight (including the occupants, cargo and any optional equipment installed on the vehicle) and the tongue load (or the king pin weight).

GAWR (Gross Axle Weight Rating) is the maximum allowable **gross axle weight**.

The **gross axle weight** is the load placed on each axle (front and rear).

GCWR (Gross Combination Weight Rating) is the maximum allowable **gross combination weight**.

The **gross combination weight** is the sum of the total vehicle weight (including the occupants, cargo and any optional equipment installed on the vehicle) and the weight of the trailer being towed (including the cargo in the trailer).

The **gross trailer weight** is the sum of the trailer weight and the weight of the cargo in the trailer.

Towing Capacity is the maximum allowable **gross trailer weight**.

Towing Capacity is calculated considering base vehicle with necessary vehicle equipment and 150 pound driver.

Additional optional equipment, passengers and cargo in the vehicle will reduce the towing capacity, Gross Trailer weight includes the trailer, cargo and necessary equipment for towing.

The **tongue load** is the load placed on the trailer hitch ball.

The **king pin weight** is the load placed on the fifth wheel trailer hitch mount.

GCWR, Towing capacity

kg (lb.)

Model code*7	Engine	Cab type	Driving system	Bed type	GCWR		Towing capacity	
					With towing package	Without towing package	With towing package	Without towing package
GSK50L–TRADKA	1GR–FE*1	Regular	2WD*4	Standard	—	4535 (10000)	—	2310 (5100)
GSK51L–THADKA				Long	—	4535 (10000)	—	2265 (5000)
UCK50L–TRADKA	2UZ–FE*2		2WD*4	Standard	6120 (13500)	5440 (12000)	3855 (8500)	3175 (7000)
UCK51L–THAD-KA				Long	6120 (13500)	5440 (12000)	3810 (8400)	3125 (6900)
UCK55L–TRADKA			4WD*5	Standard	6120 (13500)	5440 (12000)	3715 (8200)	3035 (6700)
UCK56L–THAD-KA				Long	6120 (13500)	5440 (12000)	3670 (8100)	2990 (6600)
USK50L–TRTDKA	3UR–FE*3		2WD*4	Standard	7030 (15500)	6350 (14000)	4715 (10400)	4035 (8900)
					6800 (15000)*6		4490 (9900)*6	
USK51L–THTDKA				Long	7255 (16000)	6350 (14000)	4895 (10800)	3990 (8800)
USK55L–TRTDKA			4WD*5	Standard	7030 (15500)	6350 (14000)	4580 (10100)	3945 (8700)
					6800 (15000)*6		4350 (9600)*6	
USK56L–THTDKA				Long	7255 (16000)	6350 (14000)	4760 (10500)	3900 (8600)

*1: 4.0 L V6 (1GR–FE) engine
*2: 4.7 L V8 (2UZ–FE) engine
*3: 5.7 L V8 (3UR–FE) engine
*4: Two–wheel drive models
*5: Four–wheel drive models
*6: With P275/55R20 tires

*7: The model code is indicated on the Certification label. See “Your Toyota’s identification” on page 449 in Section 2 for the Certification label location.

kg (lb.)

Model code*6	Engine	Cab type	Driving system	Bed type	Grade	GCWR		Towing capacity	
						With towing package	Without towing package	With towing package	Without towing package
GSK51L–CRASKA	1GR–FE*1	Double	2WD*4	Standard	SR5	—	4535 (10000)	—	2175 (4800)
UCK51L–CRASKA	2UZ–FE*2		2WD*4	Standard	SR5	6120 (13500)	5440 (12000)	3670 (8100)	3035 (6700)
UCK51L–CRALKA					Limited	6120 (13500)	5440 (12000)	3670 (8100)	2990 (6600)
UCK52L–CHASKA				Long	SR5	6120 (13500)	—	3625 (8000)	—
UCK56L–CRASKA			4WD*5	Standard	SR5	6120 (13500)	5440 (12000)	3535 (7800)	2900 (6400)
UCK56L–CRALKA					Limited	6120 (13500)	5440 (12000)	3535 (7800)	2855 (6300)
UCK57L–CHASKA				Long	SR5	6120 (13500)	—	3490 (7700)	—
USK51L–CRTSKA	3UR–FE*3		2WD*4	Standard	SR5	7255 (16000)	6350 (14000)	4805 (10600)	3900 (8600)
USK51L–CRTLKA					Limited	7255 (16000)	6350 (14000)	4805 (10600)	3900 (8600)
USK52L–CHTSKA				Long	SR5	7255 (16000)	—	4760 (10500)	—
USK56L–CRTSKA			4WD*5	Standard	SR5	7255 (16000)	6350 (14000)	4670 (10300)	3760 (8300)
USK56L–CRTLKA					Limited	7255 (16000)	6350 (14000)	4670 (10300)	3760 (8300)
USK57L–CHTSKA				Long	SR5	7255 (16000)	—	4625 (10200)	—

*1: 4.0 L V6 (1GR–FE) engine
*2: 4.7 L V8 (2UZ–FE) engine
*3: 5.7 L V8 (3UR–FE) engine
*4: Two–wheel drive models
*5: Four–wheel drive models
*6: The model code is indicated on the Certification label. See “Your Toyota’s identification” on page 449 in Section 2 for the Certification label location.

kg (lb.)

Model code*5	Engine	Cab type	Driving system	Bed type	Grade	GCWR		Towing capacity	
						With towing package	Without towing package	With towing package	Without towing package
UCK51L–PSASKA	2UZ–FE*1	Crew Max	2WD*3	Short	SR5	6120 (13500)	5440 (12000)	3625 (8000)	2945 (6500)
UCK51L–PSALKA					Limited	6120 (13500)	5440 (12000)	3625 (8000)	2945 (6500)
UCK56L–PSASKA			4WD*4		SR5	6120 (13500)	5440 (12000)	3490 (7700)	2810 (6200)
UCK56L–PSALKA					Limited	6120 (13500)	5440 (12000)	3490 (7700)	2810 (6200)
USK51L–PSTSKA	3UR–FE*2		2WD*3		SR5	7255 (16000)	6350 (14000)	4715 (10400)	3810 (8400)
USK51L–PSTLKA					Limited	7255 (16000)	6350 (14000)	4715 (10400)	3810 (8400)
USK56L–PSTSKA			4WD*4		SR5	7255 (16000)	6350 (14000)	4580 (10100)	3670 (8100)
USK56L–PSTLKA					Limited	7255 (16000)	6350 (14000)	4580 (10100)	3670 (8100)

*1: 4.7 L V8 (2UZ–FE) engine
*2: 5.7 L V8 (3UR–FE) engine
*3: Two–wheel drive models
*4: Four–wheel drive models
*5: The model code is indicated on the Certification label. See “Your Toyota’s identification” on page 449 in Section 2 for the Certification label location.

⚠ CAUTION

- **The gross trailer weight must never exceed towing capacity described in the table on page 477.**
- **The gross combination weight must never exceed the GCWR described in the table on page 477.**
- **The gross vehicle weight must never exceed the GVWR indicated the Certification Label as shown.**
- **The gross axle weight on each axle must never exceed the GAWR indicated the Certification Label as shown.**
- **Exceeding the towing capacity, GVWR, GCWR or GAWR can cause an accident resulting in death or serious personal injuries.**

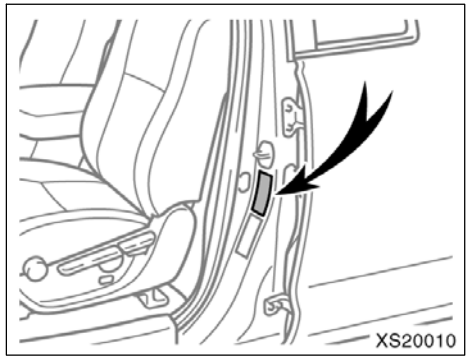

Certification Label

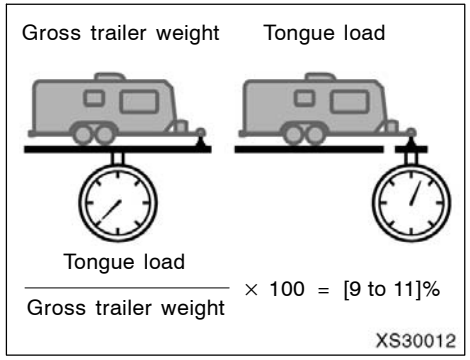

Conventional towing

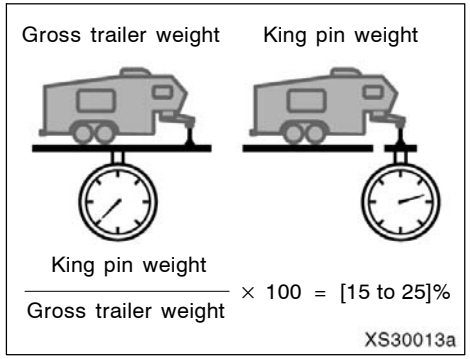

Fifth wheel towing

CAUTION

- A recommended tongue load or king pin weight varies in accordance with the types of trailers or towing as described below.
- In order to ensure the recommended values shown below, the trailer must be loaded by referring to the following instructions.

1. Conventional Towing

   The tongue load is 9 to 11 % of the Gross Trailer weight.

   If the gross trailer weight is over 907 kg (2000 lbs), it is necessary to use a sway control device with sufficient capacity.

   If the gross trailer weight is over 2268 kg (5000 lbs), it is necessary to use a weight distributing hitch with sufficient capacity.

   If using a weight distributing hitch when towing, keep your vehicle level with the ground.

2. Fifth wheel Towing

   The king pin weight is 15 to 25 % of the Gross Trailer weight.

   Current fifth–wheel trailer designs are not compatible with Short bed (Crew Max models).

- Trailer hitch assemblies have different weight capacities established by the hitch manufacturer. Even though the vehicle may be physically capable of towing a higher weight, the operator must determine the maximum weight rating of the particular hitch assembly and never exceed the maximum weight rating specified for the trailer–hitch. Exceeding the maximum weight rating set by the trailer hitch manufacturer can cause an accident resulting in death or serious personal injuries.

HITCHES

- If you wish to install a trailer hitch, you should consult with your Toyota dealer.
- Use only a hitch recommended by the hitch manufacturer and the one which conforms to the gross trailer weight requirement.
- The hitch must be bolted securely to the vehicle frame and installed according to the hitch manufacturer's instructions.
- The hitch ball and king pin should have a light coat of grease.
- Toyota recommends removing the trailer hitch whenever you are not towing a trailer to reduce the possibility of additional damage caused by the hitch if your vehicle is struck from behind. After removing the hitch, seal any mounting holes in the vehicle body to prevent entry of pollutants such as exhaust fumes, dirt, water, etc.

TRAILER BALL

Follow these easy steps to properly determine the correct trailer ball for your application:

1. Determine the correct trailer ball size for the trailer coupler. Most couplers are stamped with the required trailer ball size. The sizes you will most likely find stamped on the coupler are:

Trailer class	Typical trailer ball size
IV	2 5/16 in.
II and III	2 in.
I	1 7/8 in.

2. Select the appropriate trailer ball to match or exceed the gross trailer weight rating of the trailer. The trailer ball load rating should be printed on the top of the ball.
3. When mounted in the ball mount, the threaded ball shank must protrude beyond the bottom of the lock washer and nut at least 2 threads. The trailer ball shank must be matched to the ball mount hole diameter size.

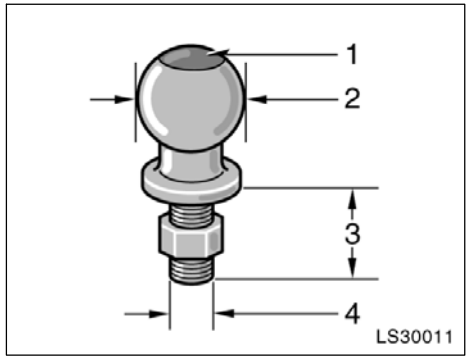

1 Trailer ball load rating
2 Ball diameter
3 Shank length
4 Shank diameter

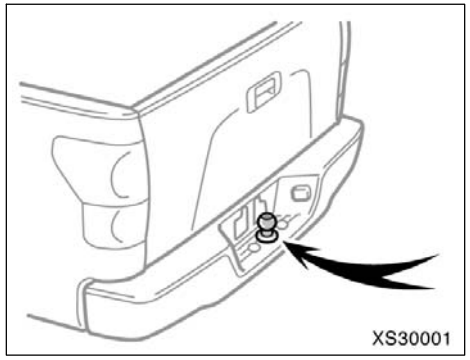

BUMPER TOWING (steel bumper only)

The rear bumper of your vehicle is equipped with a hole to install a trailer ball.

For details, contact your Toyota dealer.

⚠ CAUTION

The gross trailer weight (trailer weight plus cargo weight) when towing with the bumper must never exceed 2268 kg (5000 lb.).

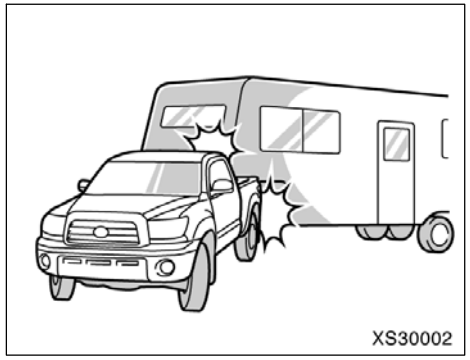

FIFTH WHEEL TRAILER

NOTICE

When towing a fifth wheel trailer, be careful not to hit the cabin or deck by the trailer while making a sharp turn.

MATCHING TRAILER BALL HEIGHT TO TRAILER COUPLER HEIGHT

No matter which class of tow hitch applies, for a safe trailer hookup, the trailer ball setup on must be the proper height for the coupler on the trailer.

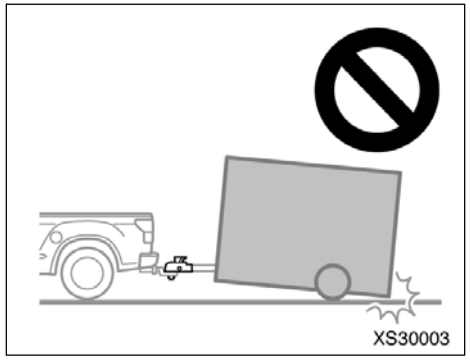

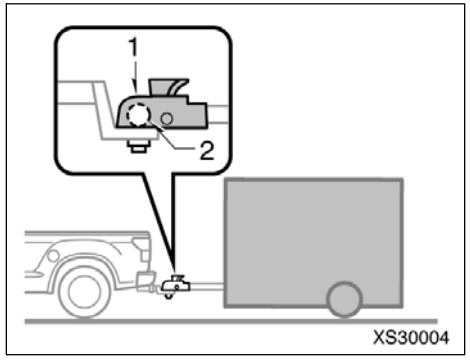

1. Coupler
2. Trailer ball

BRAKES AND SAFETY CHAINS

- **Toyota recommends trailers with brakes that conform to any applicable federal and state/provincial regulations.**
- **A safety chain must always be used between the towing vehicle and the trailer. Leave sufficient slack in the chain for turns. The chain should cross under the trailer tongue to prevent the tongue from dropping to the ground in case it becomes damaged or separated. For correct safety chain procedures, follow the hitch or trailer manufacturer's recommendations.**

⚠ CAUTION

- **If the gross trailer weight exceeds 453 kg (1000 lb.), trailer brakes are required.**
- **Never tap into your vehicle's hydraulic system as it would lower its braking effectiveness.**
- **Never tow a trailer without using a safety chain securely attached to both the trailer and the vehicle. If damage occurs to the coupling unit or hitch ball, there is danger of the trailer wandering over into another lane.**

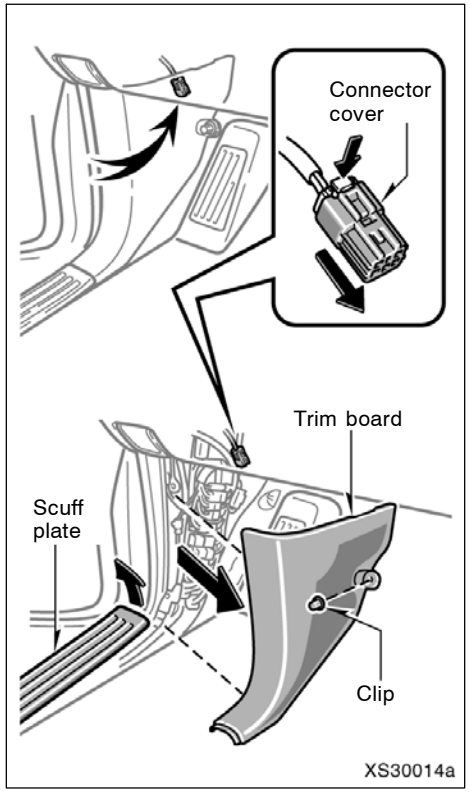

SERVICE CONNECTOR FOR TOWING BRAKE CONTROLLER (with towing package)

Your vehicle is equipped with a service connector for the trailer brake controller as shown.

Access the service connector.

1. Remove the scuff plate.
2. Remove the clip (screw type) and trim board.

Remove the connector cover from the service connector before connecting the connector.

Link the connector to the trailer brake controller via the sub wire harness stored in the glove box. The detailed explanation of the sub wire harness circuit is packed together with the sub wire harness.

Be sure to position the trailer brake controller where it does not prevent the driver from operating the pedal.

Toyota recommends that the sub wire harness be stored in the glove box when it is not in use.

TIRES

- Ensure that your vehicle's tires are properly inflated. See page 548 in Section 7–2 and page 586 in Section 8 for instructions.
- The trailer tires should be inflated to the pressure recommended by the trailer manufacturer in respect to the gross trailer weight.

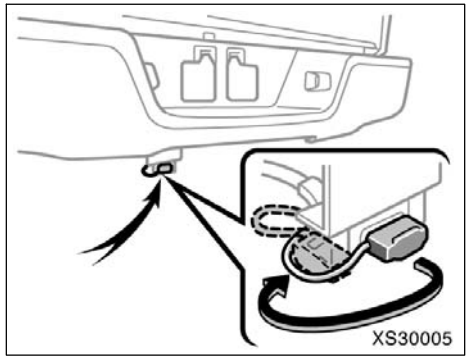

4–Pin connector

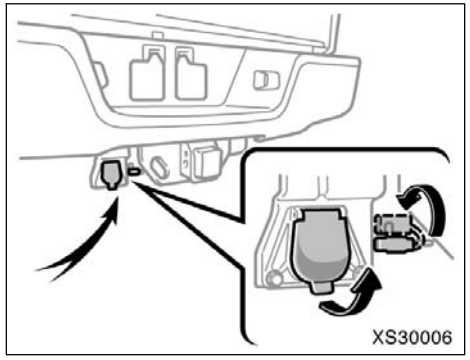

4–Pin, 7–Pin connector

TOWING CONNECTOR FOR TRAILER LIGHTS

- Your vehicle is equipped with wire harness sockets for trailer lights under the rear bumper. Use them to connect and operate the trailer lights. However, the trailer lights must comply with federal, state/provincial and local regulations. See your local recreational vehicle dealer or rental agency for the correct type of wiring and relays for your trailer. Check for correct operation of the turn signals and stop lights each time you hitch up. Direct splicing may damage your vehicle's electrical system and cause a malfunction of your lights.

  The towing connector can be also connected to the trailer brake and trailer sub battery.

BREAK–IN SCHEDULE

- If your vehicle is new or equipped with any new power train components (such as the engine, transmission, differential and wheel bearing), Toyota recommends that you do not tow a trailer until it has been driven for over 800 km (500 miles). After the vehicle has been driven for over 800 km (500 miles), you can start towing. However, drive the vehicle at a speed of less than 80 km/h (50 mph) when towing a trailer for another 800 km (500 miles). In addition, avoid full throttle acceleration.

MAINTENANCE

- If you tow a trailer, your vehicle will require more frequent maintenance due to the additional load. For this information, please refer to the scheduled maintenance information in the "Scheduled Maintenance Guide" or "Owner's Manual Supplement".
- Retighten all fixing bolts of the towing ball and bracket after approximately 1000 km (600 miles) of trailer driving.

PRE–TOWING SAFETY CHECK

- Check that your vehicle remains level when a loaded or unloaded trailer is hitched. Do not drive if the vehicle has an abnormal nose–up or nose–down condition, and check for improper tongue load, overload, worn suspension or other possible causes.
- Make sure the trailer cargo is securely loaded so that it cannot shift.
- Check that your rear view mirrors conform to any applicable federal state/provincial or local regulations. If not, install the rear view mirrors required for towing purpose.

TRAILER TOWING TIPS

When towing a trailer, your vehicle will handle differently than when not towing. The three main causes of vehicle–trailer accidents are driver error, excessive speed and improper trailer loading. Keep these in mind when towing:

- Speed limits for towing a trailer vary by state or province. Do not exceed the posted towing speed limit.
- Before starting out, check operation of the lights and all vehicle–trailer connections. After driving a short distance, stop and recheck the lights and connections. Before actually towing a trailer, practice turning, stopping and backing with a trailer in an area away from traffic until you learn the feel.
- Backing with a trailer is difficult and requires practice. Grip the bottom of the steering wheel and move your hand to the left to move the trailer to the left. Move your hand to the right to move the trailer to the right. (This procedure is generally opposite to that when backing without a trailer.) Also, just turn the steering wheel a little at a time, avoiding sharp or prolonged turning. Have someone guide you when backing to reduce the risk of an accident.
- Because stopping distance may be increased, following distance should be increased when towing a trailer. For each 16 km/h (10 mph) of speed, allow at least one vehicle and trailer length between you and the vehicle ahead. Avoid sudden braking as you may skid, resulting in jackknifing and loss of control. This is especially true on wet or slippery surfaces.
- Avoid jerky steering and sharp turns. The trailer could hit your vehicle in a tight turn. Slow down before making a turn to avoid the necessity of sudden braking.
- Remember that when making a turn, the trailer wheels will be closer than the vehicle wheels to the inside of the turn. Therefore, compensate for this by making a larger than normal turning radius with your vehicle.
- Crosswinds and rough roads will adversely affect handling of your vehicle and trailer, causing sway. Pay attention to the rear from time to time to prepare yourself for being passed by large trucks or buses, which may cause your vehicle and trailer to sway. If swaying happens, firmly grip the steering wheel and reduce speed immediately but gradually. Never increase speed. Steer straight ahead. If you make no extreme correction with the steering or brakes, the vehicle and trailer will stabilize.
- Be careful when passing other vehicles. Passing requires considerable distance. After passing a vehicle, do not forget the length of your trailer and be sure you have plenty of room before changing lanes.

- In order to maintain engine braking efficiency when driving on a long steep downgrade, do not use the transmission in “D”. Select an appropriate shift range in “S” mode (See “Automatic transmission” on page 209 in Section 1–7).
- Because of the added load of the trailer, your vehicle’s engine may overheat on hot days (at temperatures over 30°C [85°F]) when going up a long or steep grade with a trailer. If the engine coolant temperature gauge indicates overheating, immediately turn off the air conditioning (if in use), pull off the road and stop in a safe spot. Refer to “If your vehicle overheats” on page 497 in Section 4.
- Always place wheel blocks under both the vehicle and trailer wheels when parking. Apply the parking brake firmly. Put the transmission in “P”. Avoid parking on a slope with a trailer, but if it cannot be avoided, do so only after performing the following:

1. Apply the brakes and hold.
2. Have someone place wheel blocks under both the vehicle and trailer wheels.
3. When the wheel blocks are in place, release your brakes slowly until the blocks absorb the load.
4. Apply the parking brake firmly.
5. Shift into “P” and turn off the engine.

When restarting out after parking on a slope:

1. With the transmission in “P” position, start the engine. Be sure to keep the brake pedal depressed.
2. Shift into gear.
3. Release the parking brake and brake pedal, and slowly pull or back away from the wheel blocks. Stop and apply your brakes.
4. Have someone retrieve the blocks.

⚠ CAUTION

- **Do not use cruise control when you are towing down long, steep grades or with heavy loads.**
- **Slow down and downshift before descending steep or long downhill grades. Do not make sudden downshifts.**
- **Avoid holding the brake pedal down too long or too frequently. This could cause the brakes to overheat and result in reduced braking efficiency.**

How to save fuel and make your vehicle last longer

Improving fuel economy is easy—just take it easy. It will help make your vehicle last longer, too. Here are some specific tips on how to save money on both fuel and repairs:

- **Keep your tires inflated at the correct pressure.** Underinflation causes tire wear and wastes fuel. See page 548 in Section 7–2 for instructions.
- **Do not carry unneeded weight in your vehicle.** Excess weight puts a heavier load on the engine, causing greater fuel consumption.
- **Avoid lengthy warm–up idling.** Once the engine is running smoothly, begin driving—but gently. Remember, however, that on cold winter days this may take a little longer.
- **Put the selector lever into the "D" when engine braking is not required.**

  Driving with the selector lever in a position other than "D" will reduce the fuel economy (For details, see "Automatic transmission" on page 209 in Section 1–7.)
- **Accelerate slowly and smoothly.** Avoid jackrabbit starts. Get into high gear as quickly as possible.
- **Avoid long engine idling.** If you have a long wait and you are not in traffic, it is better to turn off the engine and start again later.
- **Avoid engine lugging or over–revving.** Use a gear position suitable for the road on which you are travelling.
- **Avoid continuous speeding up and slowing down.** Stop–and–go driving wastes fuel.
- **Avoid unnecessary stopping and braking.** Maintain a steady pace. Try to time the traffic signals so you only need to stop as little as possible or take advantage of through streets to avoid traffic lights. Keep a proper distance from other vehicles to avoid sudden braking. This will also reduce wear on your brakes.
- **Avoid heavy traffic or traffic jams whenever possible.**
- **Do not rest your foot on brake pedal.** This causes premature wear, overheating and poor fuel economy.
- **Maintain a moderate speed on highways.** The faster you drive, the greater the fuel consumption. By reducing your speed, you will cut down on fuel consumption.
- **Keep the front wheels in proper alignment.** Avoid hitting the curb and slow down on rough roads. Improper alignment not only causes faster tire wear but also puts an extra load on the engine, which, in turn, wastes fuel.
- **Keep the bottom of your vehicle free from mud, etc.** This not only lessens weight but also helps prevent corrosion
- **Keep your vehicle tuned–up and in top shape.** A dirty air cleaner, improper valve clearance, dirty plugs, dirty oil and grease,brakes not adjusted, etc. all lower engine performance and contribute to poor fuel economy. For longer life of all parts and lower operating costs, keep all maintenance work on schedule, and if you often drive under severe conditions, see that your vehicle receives more frequent maintenance. (For scheduled maintenance information, please refer to the "Scheduled Maintenance Guide" or "Owner's Manual Supplement".)

⚠ CAUTION

Never turn off the engine to coast down hills. Your power steering and brake booster will not function without the engine running. Also, the emission control system operates properly only when the engine is running.

SECTION 4

IN CASE OF AN EMERGENCY

In case of an emergency

If your vehicle will not start 493
If your engine stalls while driving 497
If you cannot increase engine speed 497
If your vehicle overheats 497
If you have a flat tire 498
If your vehicle becomes stuck 511
If your vehicle needs to be towed 511
If you cannot shift automatic transmission selector lever 516
If you lose your keys 518
If you lose your wireless remote control transmitter 518

If your vehicle will not start—
(a) Simple checks

Before making these checks, make sure you have followed the correct starting procedure given in “How to start the engine” on page 468 in Section 3 and that you have sufficient fuel. If your vehicle is equipped with the engine immobilizer system, also check whether the other keys will start the engine. If they work, your key may be broken. Have the key checked at your Toyota dealer. If none of your keys work, there may be a malfunction in the immobilizer system. Call your Toyota dealer. (See “Keys (with engine immobilizer system)” on page 18 in Section 1–2.)

If the engine is not turning over or is turning over too slowly—

1. Check that the battery terminals are tight and clean.
2. If the battery terminals are O.K., switch on the interior lights or personal lights.
3. If the light is out, dim or goes out when the starter is cranked, the battery is discharged. You may try jump starting. See “(c) Jump starting” for further instructions.

If the light is O.K., but the engine still will not start, it needs adjustment or repair. Call a Toyota dealer or qualified repair shop.

NOTICE

Do not pull– or push–start the vehicle. It may damage the vehicle or cause a collision when the engine starts. Also the three–way catalytic converter may overheat and become a fire hazard.

If the engine turns over at its normal speed but will not start—

1. Turn the ignition switch to the “ACC” or “LOCK” position and try starting the engine again.
2. If the engine will not start, the engine may be flooded because of repeated cranking. See “(b) Starting a flooded engine” for further instructions.
3. If the engine still will not start, it needs adjustment or repair. Call a Toyota dealer or qualified repair shop.

(b) Starting a flooded engine

If the engine will not start, your engine may be flooded because of repeated cranking.

If this happens, turn the ignition switch to the “START” position with the accelerator pedal fully depressed. Keep the key and accelerator pedal in these positions for 15 seconds and release them. Then try starting the engine with your foot off the accelerator pedal.

If the engine does not start after 15 seconds of cranking, release the key, wait a few minutes and try again.

If the engine still will not start, it needs adjustment or repair. Call a Toyota dealer or qualified repair shop for assistance.

NOTICE

Do not crank for more than 30 seconds at a time. This may overheat the starter and wiring systems.

(c) Jump starting

To avoid serious personal injury and damage to your vehicle which might result from battery explosion, acid burns, electrical burns, or damaged electronic components, these instructions must be followed precisely.

If you are unsure about how to follow this procedure, we strongly recommend that you seek the help of a competent mechanic or towing service.

⚠ CAUTION

- **Batteries contain sulfuric acid which is poisonous and corrosive. Wear protective safety glasses when jump starting, and avoid spilling acid on your skin, clothing, or vehicle.**
- **If you should accidentally get acid on yourself or in your eyes, remove any contaminated clothing and flush the affected area with water immediately. Then get immediate medical attention. If possible, continue to apply water with a sponge or cloth while en route to the medical office.**
- **The gas normally produced by a battery will explode if a flame or spark is brought near. Use only standardized jumper cables and do not smoke or light a match while jump starting.**

NOTICE

The battery used for boosting must be 12 V. Do not jump start unless you are sure that the booster battery is correct.

JUMP STARTING PROCEDURE

1. If the booster battery is installed in another vehicle, make sure the vehicles are not touching. Turn off all unnecessary lights and accessories.

   When boosting, use the battery of matching or higher quality. Any other battery may be difficult to jump start with.

   If jump starting is difficult, charge the battery for several minutes.
2. If required, remove all the vent plugs from the booster and discharged batteries. Lay a cloth over the open vents on the batteries. (This helps reduce the explosion hazard, personal injuries and burns.)
3. If the engine in the vehicle with the booster battery is not running, start it and let it run for a few minutes. During jump starting, run the engine at about 2000 rpm with the accelerator pedal lightly depressed.

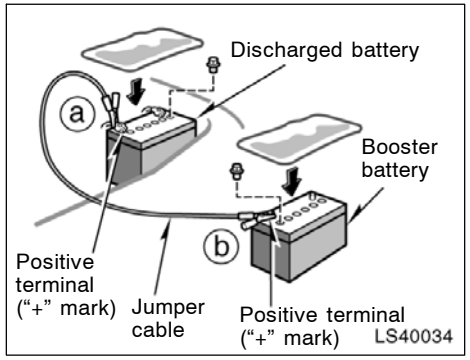

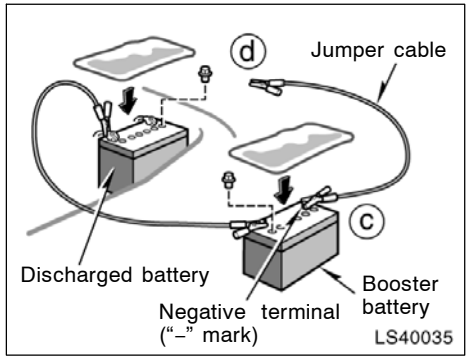

4. Make the cable connections in the order a, b, c, d.

   a. Connect the clamp of the positive (red) jumper cable to the positive (+) terminal on the discharged battery.

   b. Connect the clamp at the other end of the positive (red) jumper cable to the positive (+) terminal on the booster battery.

   c. Connect the clamp of the negative (black) jumper cable to the negative (–) terminal on the booster battery.

   d. Connect the clamp at the other end of the negative (black) jumper cable to a solid, stationary, unpainted, metallic point of the vehicle with the discharged battery.

   The recommended connecting points are shown in the following illustrations:

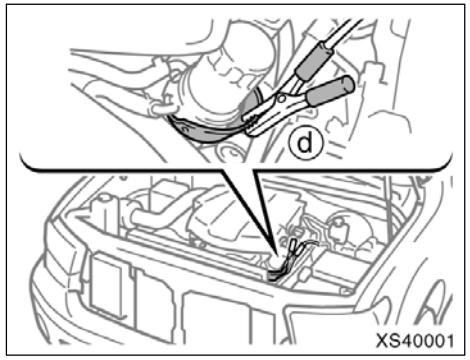

Connecting point for 4.0 L V6 (1GR–FE) engine

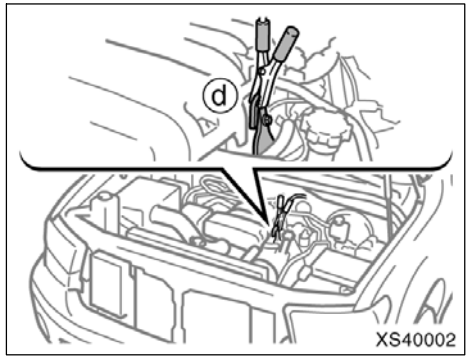

Connecting point for 4.7 L V8 (2UZ–FE) engine

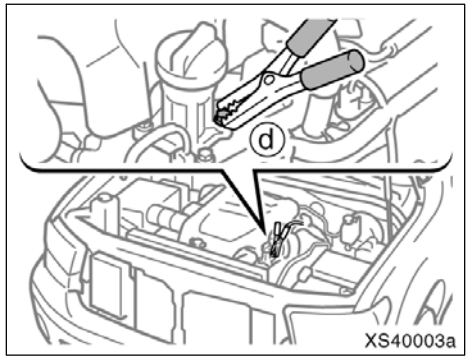

Connecting point for 5.7 L V8 (3UR–FE) engine

Do not connect the cable to or near any part that moves when the engine is cranked.

⚠ CAUTION

When making the connections, to avoid serious injury, do not lean over the battery or accidentally let the jumper cables or clamps touch anything except the correct battery terminals or the ground.

5. Charge the discharged battery with the jumper cables connected for approximately 5 minutes. At this time, run the engine in the vehicle with the booster battery at about 2000 rpm with the accelerator pedal lightly depressed.
6. Start your engine in the normal way. After starting, run it at about 2000 rpm for several minutes with the accelerator pedal lightly depressed.
7. Carefully disconnect the cables in the exact reverse order: the negative cable and then the positive cable.
8. Carefully dispose of the battery cover cloths—they may now contain sulfuric acid.
9. If removed, replace all the battery vent plugs.

If the cause of your battery discharging is not apparent (for example, lights left on), you should have it checked at your Toyota dealer.

If the first start attempt is not successful...

Check that the clamp on the jumper cables are tight. Recharge the discharged battery with the jumper cables connected for several minutes and restart your engine in the normal way.

If another attempt is not successful, the battery may be depleted. Have it checked at your Toyota dealer.

If your engine stalls while driving

If your engine stalls while driving...

1. Reduce your speed gradually, keeping a straight line. Move cautiously off the road to a safe place.
2. Turn on your emergency flashers.
3. Turn the ignition switch to the “ACC” or “LOCK” position, and try starting the engine again.

If the engine will not start, see “If your vehicle will not start” on page 493 in this Section.

CAUTION

If the engine is not running, the power assist for the brakes and steering will not work so steering and braking will be much harder than usual.

If you cannot increase engine speed

If engine speed does not increase when the accelerator pedal is depressed, there may be a problem somewhere in the electronic throttle control system.

At this time, vibration may occur. However, if you depress the accelerator pedal more firmly and slowly, you can drive your vehicle at low speeds. Have your vehicle checked by your Toyota dealer as soon as possible.

Even if the abnormality of the electronic throttle control system is corrected during low speed driving, the system may not be recovered until the engine is stopped and the ignition switch is turned to the “ACC” or “LOCK” position.

CAUTION

Be especially careful to prevent erroneous pedal operation.

If your vehicle overheats

If your engine coolant temperature gauge indicates overheating, if you experience a loss of power, or if you hear a loud knocking or pinging noise, the engine has probably overheated. You should follow this procedure...

1. Pull safely off the road, stop the vehicle and turn on your emergency flashers. Put the transmission in “P” and apply the parking brake. Turn off the air conditioning if it is being used.
2. If coolant or steam is boiling out of the radiator or reservoir, stop the engine. Wait until the steam subsides before opening the hood. If there is no coolant boiling over or steam, leave the engine running.

CAUTION

To help avoid personal injury, keep the hood closed until there is no steam. Escaping steam or coolant is a sign of very high pressure.

3. Visually check to see if the engine drive belt (fan belt) is broken or loose. Look for obvious coolant leaks from the radiator, hoses, and under the vehicle. However, note that water draining from the air conditioning is normal if it has been used.

⚠ CAUTION

When the engine is running, keep hands and clothing away from the moving fan and engine drive belts.

4. If the engine drive belt is broken or the coolant is leaking, stop the engine immediately. Call a Toyota dealer for assistance.
5. If the engine drive belt is O.K. and there are no obvious leaks, you may help the engine cool down more quickly by running it at about 1500 rpm for a few minutes with the accelerator pedal lightly depressed.
6. Check the coolant reservoir. If it is dry, add coolant to the reservoir while the engine is running. Fill it about half full.

   For the coolant type, See “Coolant type selection” on page 546 in Section 7–2.

⚠ CAUTION

Do not attempt to remove the radiator cap when the engine and radiator are hot. Serious injury could result from scalding hot fluid and steam blown out under pressure.

7. After the engine coolant temperature has cooled to normal, again check the coolant level in the reservoir. If necessary, bring it up to half full again. Serious coolant loss indicates a leak in the system. You should have it checked as soon as possible at your Toyota dealer.

If you have a flat tire—

1. Reduce your speed gradually, keeping a straight line. Move cautiously off the road to a safe place well away from the traffic. Avoid stopping on the center divider of a highway. Park on a level spot with firm ground.
2. Stop the engine and turn on your emergency flashers.
3. With the transmission in “P” firmly set the parking brake.
4. Have everyone get out of the vehicle on the side away from traffic.
5. Read the following instructions thoroughly.

⚠ CAUTION

When jacking, be sure to observe the following to reduce the possibility of death or serious injury:

- **Follow jacking instructions.**
- **Do not put any part of your body under the vehicle supported by the jack. Otherwise, personal injury may occur.**
- **Do not start or run the engine while your vehicle is supported by the jack.**
- **Stop the vehicle on a level firm ground, firmly set the parking brake and put the transmission in "P". Block the wheel diagonally opposite to the one being changed if necessary.**

- **Make sure to set the jack properly in the jack point. Raising the vehicle with jack improperly positioned will damage the vehicle or may allow the vehicle to fall off the jack and cause death or serious injury.**
- **Never get under the vehicle when the vehicle is supported by the jack alone.**
- **Use the jack only for lifting your vehicle during wheel changing.**
- **Do not raise the vehicle with someone in the vehicle.**
- **When raising the vehicle, do not place any objects on top of or underneath the jack.**
- **Raise the vehicle only high enough to remove and change the tire.**

NOTICE

Do not continue driving with a deflated tire. Driving even a short distance can damage a tire and wheel beyond repair.

—Temporary spare tire

The temporary spare tire is designed for temporary emergency use only.

See also the tire information on page 548 through 557 in Section 7–2 for details on the treadwear indicators and other service information.

⚠ CAUTION

- **The temporary spare tire was designed especially for your Toyota. Do not use it on any other vehicle.**
- **Do not use more than one temporary spare tire at the same time.**
- **The pressure for the temporary spare tire must be 230 kPa (2.3 kgf/cm^2 or 2.3 bar, 33 psi).**
- **Do not exceed 80 km/h (50 mph) when driving with the temporary spare tire.**
- **Replace the temporary spare tire with the standard tire as soon as possible.**
- **Avoid sudden acceleration, sudden deceleration and sharp turns with the temporary spare tire.**

NOTICE

The temporary spare tire does not have a tire pressure warning valves and transmitters. If you replace one of the road tires with the spare, the tire pressure warning light may be illuminated. Tire pressure warning system should be operated properly by re–install the road tire containing the tire pressure warning valves and transmitters.

—Required tools and temporary spare tire

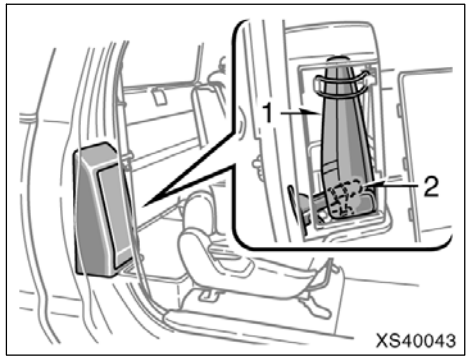

Regular cab models (behind the right seatback)

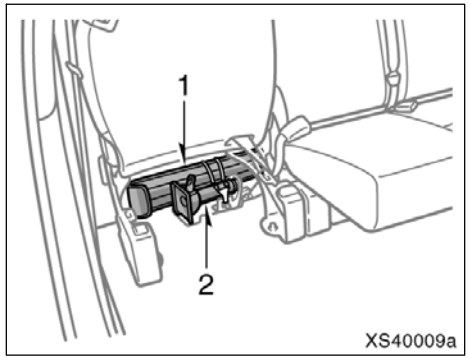

Double cab models (under the right rear seats without storage box)

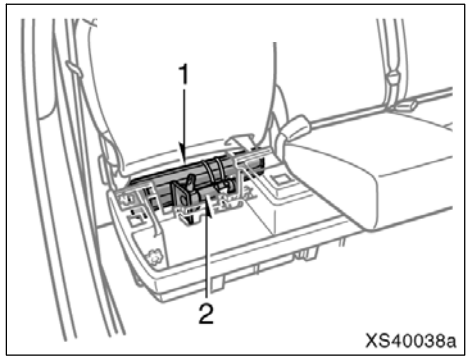

Double cab models (under the right rear seats with storage box)

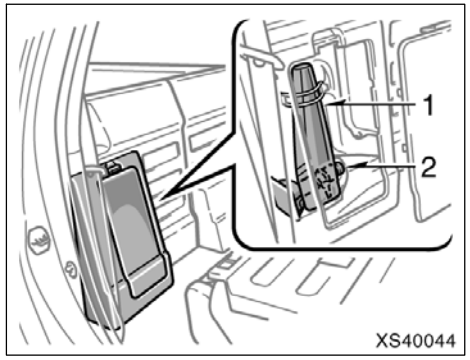

Crew Max models (behind the right rear seatback)

1. **Get the required tools and temporary spare tire.**
   1 Tool bag
   2 Jack

To prepare yourself for an emergency, you should familiarize yourself with the use of the jack, each of the tools and their storage locations.

When storing the tool bag, make sure it is securely by the tightening strap.

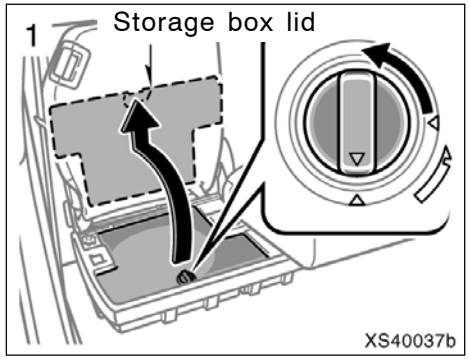

Before getting the required tools (Double cab models with the storage box)

1. Remove the right storage box lid by following the procedure below:
   1 Turn the knob to the open position.
   2 Lift the lid to an upright position.
   3 Slide the lid forward until it disengages from the box.

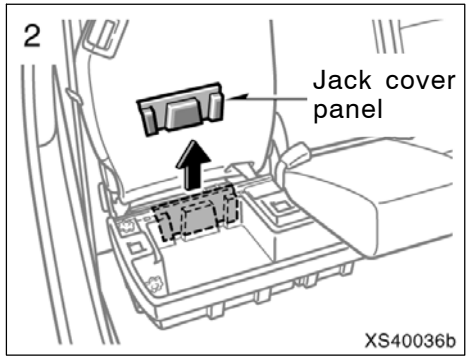

2. Remove the jack cover panel as shown in the illustration.

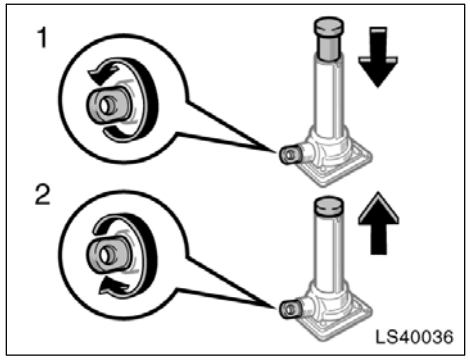

Turn the jack joint by hand.

To remove: Turn the joint in direction 1 until the jack is free.
To store: Turn the joint in direction 2 until the jack is firmly secured to prevent it flying forward during a collision or sudden braking.

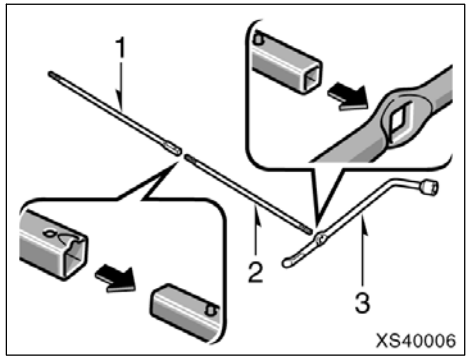

To remove the temporary spare tire:

1. Put a jack handle extension and jack handle end together as shown in the illustration.
   1 Jack handle extension No.1
   2 Jack handle extension No.2
   3 Wheel nut wrench

⚠ CAUTION

Make sure they are each securely fixed.

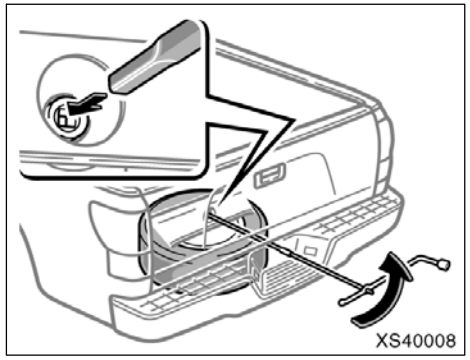

2. Insert the end of the jack handle extension No.1 into the lowering screw and turn it counterclockwise.
3. After the tire is lowered completely to the ground, remove the holding bracket.

When storing the temporary spare tire, put it in place with the outer side of the wheel facing up. Then secure the tire, taking care that the tire goes straight up without catching on any other part, to prevent it from flying forward during a collision or sudden braking.

Keep winding until three clicks are heard.

—Blocking the wheel

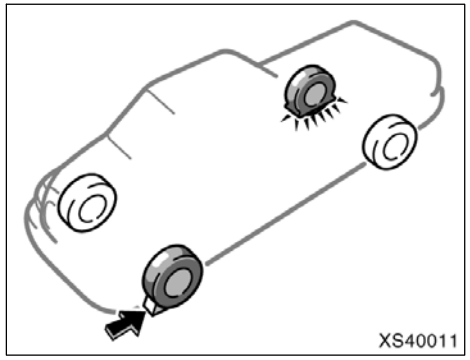

2. Block the wheel diagonally opposite the flat tire to keep the vehicle from rolling when it is jacked up.

When blocking the wheel, place a wheel block in front of one of the front wheels or behind one of the rear wheels.

—Loosening wheel nuts

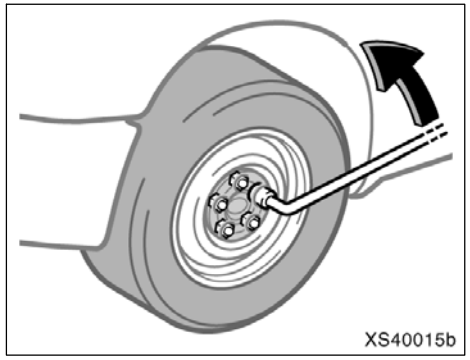

3. Loosen all the wheel nuts.

Always loosen the wheel nuts before raising the vehicle.

Turn the wheel nuts counterclockwise to loosen. To get maximum leverage, fit the wrench to the nut so that the handle is on the right side, as shown above. Grab the wrench near the end of the handle and pull up on the handle. Be careful that the wrench does not slip off the nut.

Do not remove the nuts yet—just unscrew them about one–half turn.

⚠ CAUTION

Never use oil or grease on the bolts or nuts. The nuts may loose and the wheels may fall off, which could cause a serious accident.

—Positioning the jack

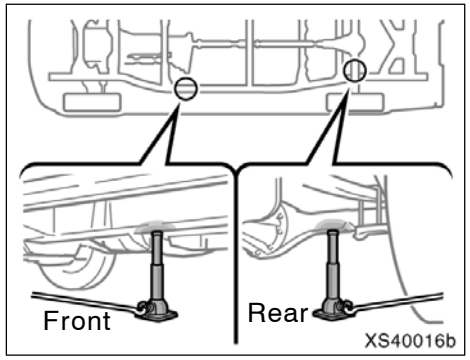

4. Position the jack at the correct jack point as shown.

Make sure the jack is positioned on a level and solid place.

JACK POINTS:

Front—Under the frame side rail
Rear—Under the rear axle housing

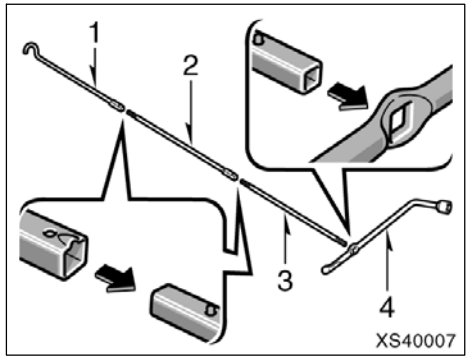

Put a wheel nut wrench, jack handle extension and jack handle end together as shown in the illustration.

1 Jack handle end
2 Jack handle extension No.1
3 Jack handle extension No.2
4 Wheel nut wrench

⚠ CAUTION

Make sure they are each securely fixed.

—Raising your vehicle

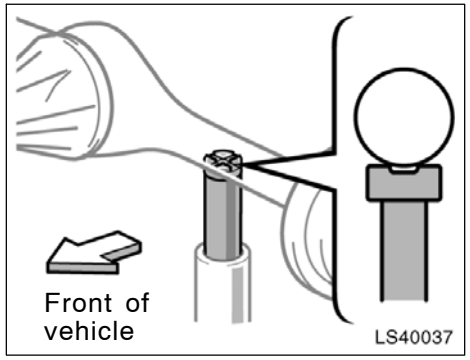

5. **After making sure that no one is in the vehicle, as the jack touches the vehicle and begins to lift, double–check that it is properly positioned.**

Rear side only—

When positioning the jack under the rear axle housing, make sure the groove on the top of the jack fits with the rear axle housing.

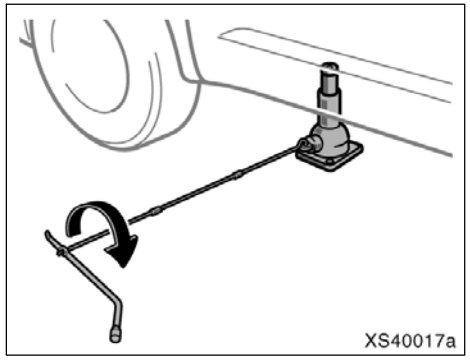

6. **After making sure that no one is in the vehicle, raise it high enough so that the temporary spare tire can be installed.**

Remember you will need more ground clearance when putting on the temporary spare tire than when removing the flat tire.

To raise the vehicle, insert the jack handle end with the extension into the jack (it is a loose fit) and turn it clockwise with the handle. As the jack touches the vehicle and begins to lift, double–check that it is properly positioned.

⚠ CAUTION

Never get under the vehicle when the vehicle is supported by the jack alone.

—Changing wheels

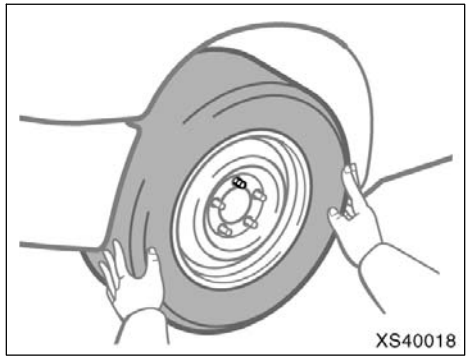

7. Remove the wheel nuts and change tires.

Lift the flat tire straight off and put it aside.

Roll the spare wheel into position and align the holes in the wheel with the bolts. Then lift up the wheel and get at least the top bolt started through its hole. Wiggle the tire and press it back over the other bolts.

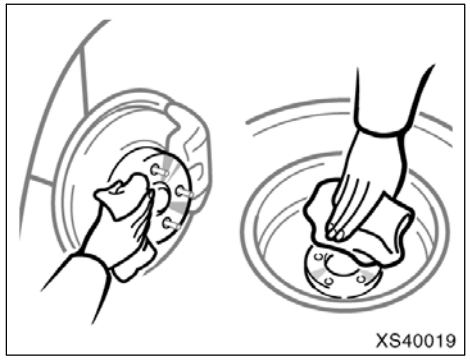

Before putting on wheels, remove any corrosion on the mounting surfaces with a wire brush or such. Installation of wheels without good metal–to–metal contact at the mounting surface can cause wheel nuts to loosen and eventually cause a wheel to come off while driving.

—Reinstalling wheel nuts

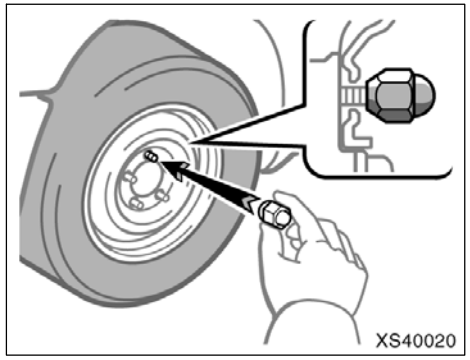

8. Reinstall all the wheel nuts finger tight.

Reinstall the wheel nuts (tapered end inward) and tighten them as much as you can by hand. Press back on the tire back and see if you can tighten them more.

⚠ CAUTION

Never use oil or grease on the bolts or nuts. Doing so may lead to overtightening the nuts and damaging the bolts. The nuts may loosen and the wheels may fall off, which could cause a serious accident. If there is oil or grease on any bolt or nut, clean it.

—Lowering your vehicle

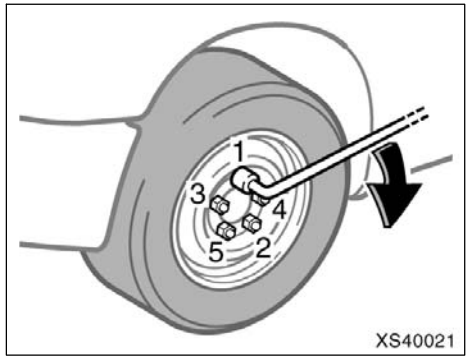

9. Lower the vehicle completely and tighten the wheel nuts.

Turn the jack handle end with the extension counterclockwise with handle to lower the vehicle, making sure the handle remains firmly fitted onto the jack handle extension.

Use only the wheel nut wrench and turn it clockwise to tighten the nuts. Do not use other tools or any additional leverage other than your hands, such as a hammer, pipe or your foot. Make sure the wrench is securely engaged over the nut.

Tighten each nut a little at a time in the order shown. Repeat the process until all the nuts are tight.

⚠ CAUTION

- **When lowering the vehicle, make sure all portions of your body and all other persons around will not be injured as the vehicle is lowered to the ground.**

- **Have the wheel nuts tightened with a torque wrench to the following torques, as soon as possible after changing wheels. Retighten the wheel nuts within 160 km (100 miles) of driving. Otherwise, the nuts may loosen and the wheels may fall off, which could cause a serious accident.**

  Due to the higher torque specification for these wheel nuts, if in doubt about the correct tightness, have them checked by your Toyota dealer or at a service station.

Taper type
(Steel wheels)

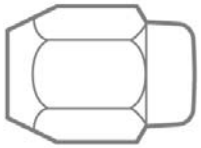

Flat washer type
(Aluminum wheels)

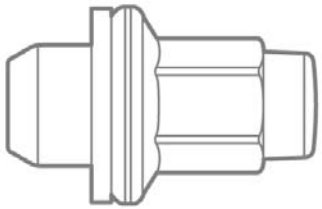

XS40047

Torque specification:

Taper type (Steel wheels)—
209 N·m (21.3 kgf·m, 154 ft·lbf)

Flat washer type
(Aluminum wheels)—
131 N·m (13.4 kgf·m, 97 ft·lbf)*

*: When temporarily used on spare tire/wheel, apply 209 N·m (21.3 kgf·m, 154 ft·lbf)

—After changing wheels

10. Check the air pressure of the replaced tire.

Adjust the air pressure to the specification designated on page 586 in Section 8. If the pressure is lower, drive slowly to the nearest service station and fill to the correct pressure.

Do not forget to reinstall the tire inflation valve cap as dirt and moisture could get into the valve core and possibly cause air leakage. If the cap is missing, have a new one put on as soon as possible.

11. Restow all the tools, jack and flat tire securely.

As soon after changing wheels as possible, tighten the wheel nuts to the torque specified on page 509 with a torque wrench. Have a technician repair the flat tire and replace the temporary spare tire with it.

Initial adjustment of the tire pressure warning system is necessary after your have replaced your tires or wheels. See "Tire pressure warning system" on page 251 in Section 1–7.

⚠ CAUTION

Before driving, make sure all the tools, jack and flat tire are securely in place in their storage location to reduce the possibility of personal injury during a collision or sudden braking.

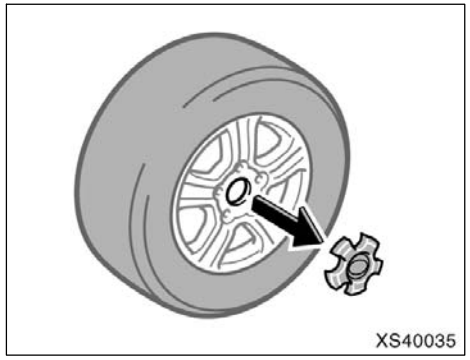

Aluminum wheels:

Before stowing the flat tire, remove the center wheel ornament by pushing from the reverse side.

Be careful not to lose the wheel ornament.

If your vehicle becomes stuck

If your vehicle becomes stuck in snow, mud, sand, etc., then you may attempt to rock the vehicle free by moving it forward and backward.

Your vehicle is equipped with the "AUTO LSD" system, you can use it in this situation. (For details, see "AUTO LSD system" on page 244 in Section 1–7.)

⚠ CAUTION

Do not attempt to rock the vehicle free by moving it forward and backward if people or objects are anywhere near the vehicle. During the rocking operation the vehicle may suddenly move forward or backward as it becomes unstuck, causing injury or damage to nearby people or objects.

NOTICE

If you rock your vehicle, observe the following precautions to prevent damage to the transmission and other parts.

- ***Do not depress the accelerator pedal while shifting the selector lever or before the transmission is completely shifted to forward or reverse gear.***
- ***Do not race the engine and avoid spinning the wheels.***
- ***If your vehicle remains stuck after rocking the vehicle several times, consider other ways such as towing.***

If your vehicle needs to be towed—

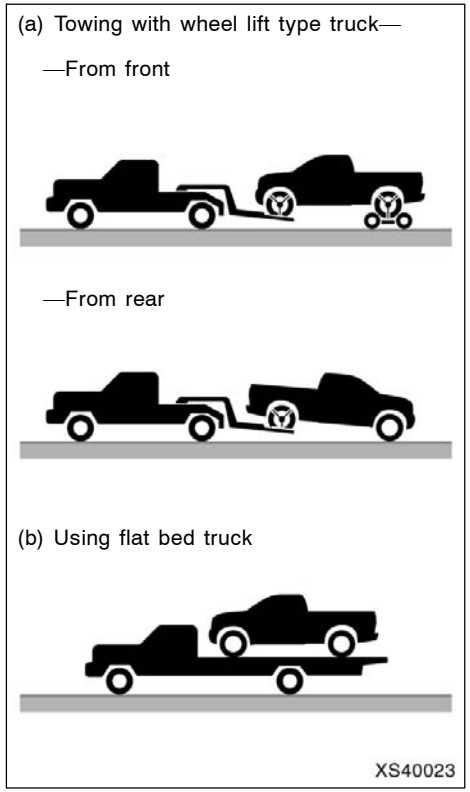

Two–wheel drive models

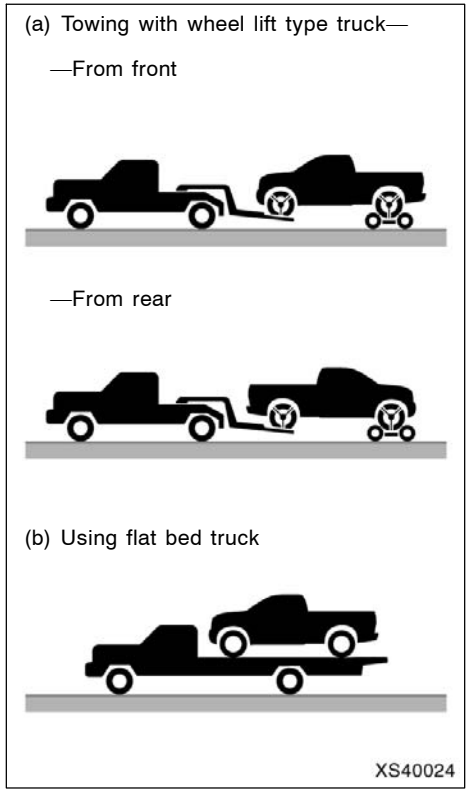

Four-wheel drive models

If towing is necessary, we recommend you have it done by your Toyota dealer or a commercial tow truck service. In consultation with them, have your vehicle towed using either (a) or (b).

Only when you cannot receive a towing service from a Toyota dealer or commercial tow truck service, tow your vehicle carefully in accordance with the instructions given in "—Emergency towing" on page 514 or 515 in this Section.

Proper equipment will help ensure that your vehicle is not damaged while being towed. Commercial operators are generally aware of the state/provincial and local laws pertaining to towing.

Your vehicle can be damaged if it is towed incorrectly. Although most operators know the correct procedure, it is possible to make a mistake. To avoid damage to your vehicle, make sure the following precautions are observed. If necessary, show this page to the tow truck driver.

TOWING PRECAUTIONS:

Use a safety chain system for all towing, and abide by the state/provincial and local laws. The wheels and axle on the ground must be in good condition. If they are damaged, use a towing dolly.

Two-wheel drive models—

(a) Towing with wheel lift type truck

From front—

Use a towing dolly under the rear wheels.

NOTICE
Never tow a vehicle from the front with the rear wheels on the ground, as this may cause serious damage to the transmission.

From rear—Place the ignition switch in the “ACC” position.

NOTICE

- ***When lifting wheels, take care to ensure adequate ground clearance for towing at the opposite end of the raised vehicle. Otherwise, the bumper and/or underbody of the towed vehicle will be damaged during towing.***
- ***Do not tow with the key removed or in the “LOCK” position, as the steering lock mechanism is not strong enough to hold the front wheels straight while towing.***

(b) Using flat bed truck

Four-wheel drive models—

(a) Towing with wheel lift type truck

From front—

Use a towing dolly under the rear wheels.

NOTICE

Never tow a vehicle from the front with the rear wheels on the ground, as this may cause serious damage to the transmission.

From rear—We recommend using a towing dolly under the front wheels. If you do not use a towing dolly, place the ignition switch in the “ACC” position, put the transmission in “N” and the front drive control switch knob in “2WD”.

NOTICE

Do not tow with the key removed or in the “LOCK” position when towing from the rear without a towing dolly. The steering lock mechanism is not strong enough to hold the front wheels straight.

(b) Using flat bed truck

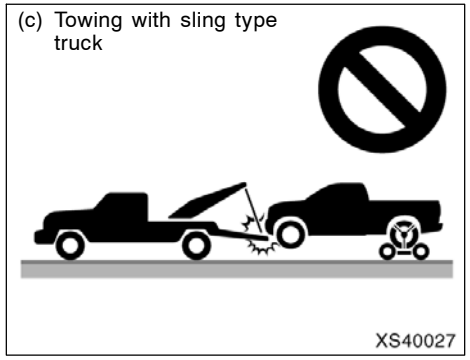

All models—

(c) Towing with sling type truck

NOTICE
Do not tow with sling type truck, either from the front or rear. This may cause body damage.

—Emergency towing

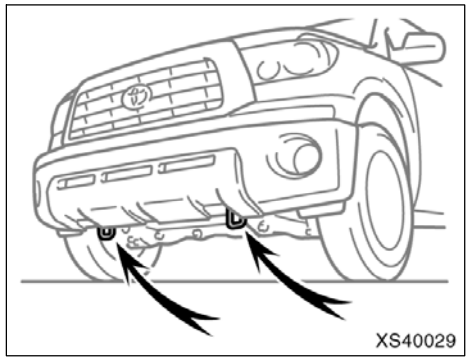

Type A

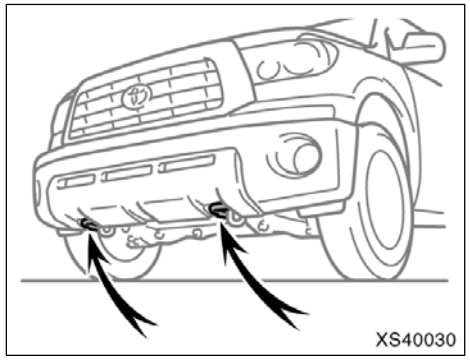

Type B

If towing is necessary, we recommend you to have it done by your Toyota dealer or a commercial tow truck service.

If towing service is not available in an emergency, your vehicle may be temporarily towed by a cable or chain secured to one of the emergency towing eyelet under the front of the vehicle. Use extreme caution when towing the vehicle.

NOTICE
Only use specified towing eyelet; otherwise your vehicle may be damaged.

A driver must be in the vehicle to steer it and operate the brakes.

Towing in this manner may be done only on hard–surfaced roads for a short distance and at low speeds. Also, the wheels, axles, drive train, steering and brakes must all be in good condition.

⚠ CAUTION

Use extreme caution when towing the vehicle. Avoid sudden starts or erratic driving maneuvers which would place excessive stress on the emergency towing eyelet and towing cable or chain. The eyelet and towing cable or chain may break and cause serious injury or damage.

NOTICE

Use only a cable or chain specifically intended for use in towing vehicles. Securely fasten the cable or chain to the towing eyelet provided.

Before towing, release the parking brake and put the transmission in “N”. The ignition switch must be in the “ACC” (engine off) or “ON” (engine running) position.

Four–wheel drive models—Put the front drive control switch knob in “2WD”.

⚠ CAUTION

If the engine is not running, the power assist for the brakes and steering will not work so steering and braking will be much harder than usual.

—Emergency towing eyelet precautions

- Before emergency towing, check that the eyelet is not broken or damaged and that the installation bolts are not loose.
- Fasten the towing cable or chain securely to eyelet.
- Do not jerk the eyelet. Apply steady and even force.
- To avoid damaging the eyelet, do not pull from the side or at a vertical angle. Always pull straight ahead.

CAUTION

If the emergency towing eyelet is used to get out when your vehicle becomes stuck in the mud, sand or other condition from which the vehicle cannot be driven out under its own power, make sure to observe the precautions mentioned below. Otherwise, excessive stress will be placed on the towing cable or chain, which could cause breakage to the cable or chain. As a result, serious injury or damage may occur.

- **If the towing vehicle can hardly move, do not forcibly continue the towing. Contact your Toyota dealer or a commercial tow truck service for assistance.**
- **Tow the vehicle as straight ahead as possible.**
- **Keep away from the vehicle during towing.**

—Tips for towing a stuck vehicle

The following methods are effective to use when your vehicle is stuck in the mud, sand or other condition from which the vehicle cannot be driven out under its own power. Use extreme caution when towing the vehicle. In addition, keep away from the vehicles and towing cable or chain when towing.

- Remove the sand and soil in the front and the back of the tires.
- Place stones or wood under the tires.

If you cannot shift automatic transmission selector lever

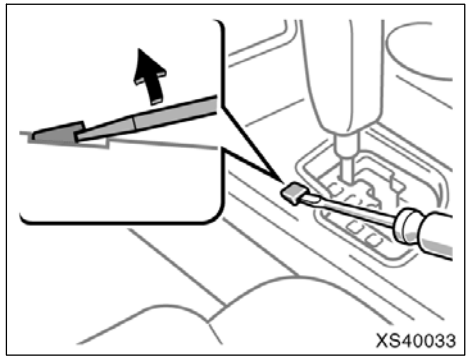

Floor shift type

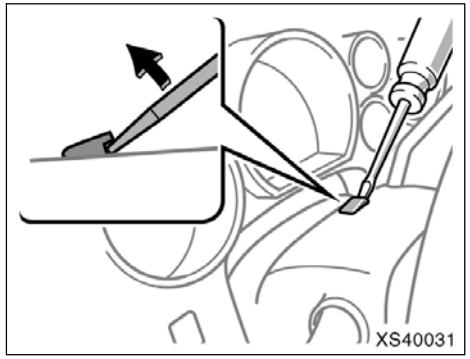

Column shift type

If you cannot shift the selector lever out of "P" position to other positions even though the brake pedal is depressed, use the shift lock override button as follows:

1. **Turn the ignition switch to the "LOCK" position. Make sure the parking brake is applied.**
2. **Pry up the cover with a flathead screwdriver or equivalent.**

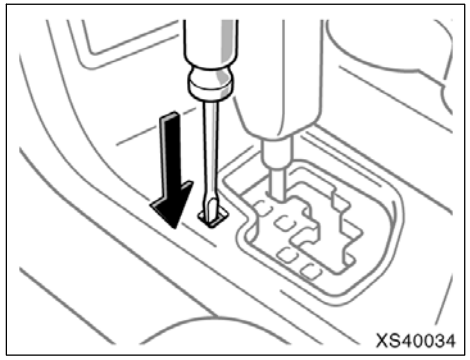

Floor shift type

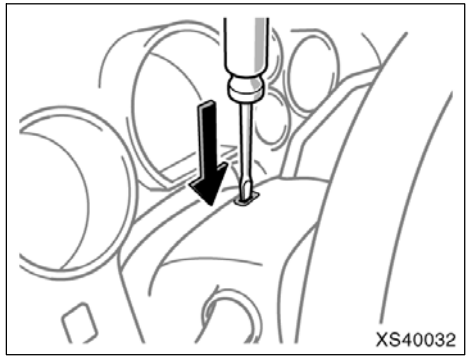

Column shift type

3. **Insert the screwdriver or equivalent into the hole to push down the shift lock override button. You can shift out of "P" position only while pushing the button.**
4. **Shift into "N" position.**
5. **Insert the cover.**
6. **Start the engine. For your safety, keep the brake pedal depressed.**

Be sure to have the system checked by your Toyota dealer as soon as possible.

If you lose your keys

You can purchase a new key at your Toyota dealer if you can give them the key number. If your vehicle is equipped with the engine immobilizer system, the dealer will also need your master key.

Vehicles with engine immobilizer system—Even if you lose only one key, contact your Toyota dealer to make a new key. If you lose all your master keys, you cannot make new keys; the whole engine immobilizer system must be replaced.

See the suggestion given in “Keys” on page 18 in Section 1–2.

If your keys are locked in the vehicle and you cannot get a duplicate, many Toyota dealers can still open the door for you, using their special tools. If you must break a window to get in, we suggest breaking the smallest side window because it is the least expensive to replace. Be extremely cautious to avoid cuts from the glass.

If you lose your wireless remote control transmitter

You can purchase a new wireless remote control transmitter at your Toyota dealer.

Have the registered identification numbers of your transmitters deleted from your vehicle by your Toyota dealer as soon as possible to avoid the possibility of theft or an accident. Then, have the identification number of your new transmitter registered. At the same time, you must bring all of the remaining transmitters to have them registered again as well.

You can use the wireless remote control system with the new transmitter. Contact your Toyota dealer for detailed information.

SECTION 5

CORROSION PREVENTION AND APPEARANCE CARE

Corrosion prevention and appearance care

Protecting your Toyota from corrosion 521
Washing and waxing your Toyota 522
Cleaning the interior 524

Protecting your Toyota from corrosion

Toyota, through its diligent research, design and use of the most advanced technology available, helps prevent corrosion and provides you with the finest quality vehicle construction. Now, it is up to you. Proper care of your Toyota can help ensure long–term corrosion prevention.

The most common causes of corrosion to your vehicle are:

- The accumulation of road salt, dirt and moisture in hard–to–reach areas under the vehicle.
- Chipping of paint, or undercoating caused by minor accidents or by stones and gravel.

Care is especially important if you live in particular areas or operate your vehicle under certain environmental conditions:

- Road salt or dust control chemicals will accelerate corrosion, as will the presence of salt in the air near the sea–coast or in areas of industrial pollution.
- High humidity accelerates corrosion especially when temperatures range just above the freezing point.
- Wetness or dampness to certain parts of your vehicle for an extended period of time, may cause corrosion even though other parts of the vehicle may be dry.
- High ambient temperatures can cause corrosion to those components of the vehicle which do not dry quickly due to lack of proper ventilation.

The above signifies the necessity to keep your vehicle, particularly the underside, as clean as possible and to repair any damage to paint or protective coatings as soon as possible.

To help prevent corrosion on your Toyota, follow these guidelines:

Wash your vehicle frequently. It is, of course, necessary to keep your vehicle clean by regular washing, but to prevent corrosion, the following points should be observed:

- If you drive on salted roads in the winter or if you live near the ocean, you should hose off the undercarriage at least once a month to minimize corrosion.
- High pressure water or steam is effective for cleaning the vehicle's underside and wheel housings. Pay particular attention to these areas as it is difficult to see all the mud and dirt. It will do more harm than good to simply wet the mud and debris without removing. The lower edge of doors, rocker panels and frame members have drain holes which should not be allowed to clog with dirt as trapped water in these areas can cause corrosion.
- Wash the underside of the vehicle thoroughly when winter is over.

See "Washing and waxing your Toyota" on page 522 in this Section for more tips.

Check the condition of your vehicle's paint and trim. If you find any chips or scratches in the paint, touch them up immediately to prevent corrosion from starting. If the chips or scratches have gone through the bare metal, have a qualified body shop make the repair.

Check the interior of your vehicle. Water and dirt can accumulate under the floor mats and could cause corrosion. Occasionally check under the mats to make sure the area is dry. Be particularly careful when transporting chemicals, cleansers, fertilizers, salt, etc.; these should be transported in proper containers. If a spill or leak should occur, immediately clean and dry the area.

Use mud shields on your wheels. If you drive on salted or gravel roads, mud shields help protect your vehicle. Full–size shields, which come as near to the ground as possible, are the best. We recommend that the fittings and the area where the shields are installed be treated to resist corrosion. Your Toyota dealer will be happy to assist in supplying and installing the shields if they are recommended for your area.

Keep your vehicle in a well ventilated garage or a roofed place. Do not park your vehicle in a damp, poorly ventilated garage. If you wash your vehicle in the garage, or if you drive it covered with water or snow, your garage may be so damp as to cause corrosion. Even if your garage is heated, a wet vehicle can corrode if the ventilation is poor.

Washing and waxing your Toyota

Washing your Toyota

Keep your vehicle clean by regular washing.

The following cases may cause weakness to the paint or corrosion to the body and parts. Wash your vehicle as soon as possible.

- When driving in a coastal area
- When driving on a road sprinkled with antifreeze
- When exposed to coal tar, tree sap, bird droppings and carcass of an insect
- When driving in areas where there is a lot of smoke, soot, dust, iron dust or chemical substances
- When the vehicle becomes remarkably dirty with dust and mud

Hand–washing your Toyota

Work in the shade and wait until the vehicle body is not warm to the touch.

⚠ CAUTION

- **When cleaning under floor or chassis, be careful not to injure your hands.**
- **Exhaust gases cause the exhaust pipe to become quite hot. When washing the vehicle, be careful not to touch the pipe until it has cooled sufficiently, as touching a hot exhaust pipe can cause burns.**

1. Rinse off loose dirt with a hose. Remove any mud or road salt from the underside of the vehicle or the wheel wells.
2. Wash with a mild car–wash soap, mixed according to the manufacturer's instructions. Use a soft cotton mitt and keep it wet by dipping it frequently into the wash water. Do not rub hard—let the soap and water remove the dirt.

Fuel filler door: Do not apply water (high–pressure car wash, for example) at or near the fuel tank inlet with the fuel filler door opened. If the water enters the air vent, you may experience trouble with refueling or rough engine idling.

Plastic wheel ornaments: The plastic wheel ornaments are damaged easily by organic substances. If any organic substances splash an ornament, be sure to wash them off with water and check if the ornament is damaged.

Aluminum wheels: Use only a mild soap or neutral detergent.

NOTICE

- ***Do not use corrosive chemical–based cleaners on your wheels. (Example: hydrofluoric acid)***
- ***Do not use steam cleaners or the chemicals therein to clean your wheels.***
- ***Do not use scouring pads, wire brushes, or coarse abrasives to clean your wheels.***
- ***Do not use alcohol, solvents, gasoline, or other non–neutral detergents, because they may alter the wheel's appearance and resistance to corrosion.***

Plastic bumpers: Wash carefully. Do not scrub with abrasive cleaners. The bumper faces are soft.

Exterior lights: Wash carefully. Do not use organic substances or scrub them with a hard brush. This may damage the surfaces of the lights.

Road tar: Remove with turpentine or cleaners that are marked safe for painted surfaces.

3. Rinse thoroughly—dried soap can cause streaking. In hot weather you may need to rinse each section right after you wash it.
4. To prevent water spots, dry the vehicle using a clean soft cotton towel. Do not rub or press hard—you might scratch the paint.

NOTICE

- ***Do not use organic substances (gasoline, kerosene, benzine or strong solvents), which may be toxic or cause damage.***
- ***Do not scrub any part of the vehicle with a hard brush, which may cause damage.***

Waxing your Toyota

Polishing and waxing is recommended to maintain the original beauty of your Toyota's finish.

Apply wax once a month or if the vehicle surface does not repel water well.

1. Always wash and dry the vehicle before you begin waxing, even if you are using a combined cleaner and wax.
2. Use a good quality polish and wax. If the finish has become extremely weathered, use a car–cleaning polish, followed by a separate wax. Carefully follow the manufacturer's instructions and precautions. Be sure to polish and wax the chrome trim as well as the paint.

Windshield washer nozzles: Make sure that the nozzles do not become blocked when waxing. If a nozzle becomes blocked, contact your Toyota dealer to have the vehicle serviced.

NOTICE

If a nozzle becomes blocked, do not try to clear it with a pin or other object. The nozzle will be damaged.

Exterior lights: Do not apply wax on the surfaces of the lights. Wax may cause damage to the lenses. If you accidentally put wax on the light surfaces, wipe or wash it off.

3. Wax the vehicle again when water does not bead but remains on the surface in large patches.

Cleaning the interior

CAUTION

- **Be careful not to splash water or spill liquid on the floor. This may prevent the side airbags and curtain shield airbags from activating correctly, resulting in serious injury.**
- **Do not wash the vehicle floor with water, or allow water to get onto the floor when cleaning the vehicle interior or exterior. Water may get into audio components or other electrical components above or under the floor carpet (or mat) and cause a malfunction; and it may cause body corrosion.**

Vinyl interior

The vinyl upholstery may be easily cleaned with a mild soap or detergent and water.

First vacuum over the upholstery to remove loose dirt. Then, using a sponge or soft cloth, apply the soap solution to the vinyl. After allowing it to soak in for a few minutes to loosen the dirt, remove the dirt and wipe off the soap with a clean damp cloth. If all the dirt do not come off, repeat the procedure. Commercial foaming–type vinyl cleaners are also available which work well. Follow the manufacturer's instructions.

NOTICE

Do not use solvent, thinner, gasoline or window cleaner on the interior.

Carpets

Use a good foam–type shampoo to clean the carpets.

Begin by vacuuming thoroughly to remove as much dirt as possible. Several types of foam cleaners are available; some are in aerosol cans and others are powders or liquids which you mix with water to produce a foam. To shampoo the carpets, use a sponge or brush to apply the foam. Rub in overlapping circles.

Do not apply water—the best results are obtained by keeping the carpet as dry as possible. Read the shampoo instructions and follow them closely.

Seat belts

The seat belts may be cleaned with mild soap and water or with lukewarm water.

Use a cloth or sponge. As you are cleaning, check the belts for excessive wear, fraying, or cuts.

NOTICE

- ***Do not use dye or bleach on the belts—it may weaken them.***
- ***Do not use the belts until they become dry.***

Windows

The windows may be cleaned with any household window cleaner.

Air conditioning control panel, audio panel, instrument panel, console panel, and switches

Use a soft damp cloth for cleaning.

Soak a clean soft cloth in water or lukewarm water then lightly wipe off dirt.

NOTICE

- ***Do not use organic substances (solvents, kerosene, alcohol, gasoline, etc.) or alkaline or acidic solutions. These chemicals can cause discoloring, staining or peeling of the surface.***
- ***If you use cleaners or polishing agents, make sure their ingredients do not include the substances mentioned above.***
- ***If you use a liquid car freshener, do not spill the liquid onto the vehicle's interior surfaces. It may contain the ingredients mentioned above. Immediately clean any spill using the method mentioned above.***

Leather Interior

The leather upholstery may be cleaned with neutral detergent for wool.

Remove dirt using a soft cloth dampened with 5% solution of neutral detergent for wool. Then thoroughly wipe off all traces of detergent with a clean damp cloth.

After cleaning or whenever any part of the leather gets wet, dry with a soft clean cloth. Allow the leather to dry in a ventilated shaded area.

NOTICE

- ***If a stain should fail to come out with a neutral detergent, apply a cleaner that does not contain an organic solvent.***
- ***Never use organic substances such as benzine, alcohol or gasoline or alkaline or acid solutions for cleaning the leather as these could cause discoloring.***
- ***Use of a nylon brush or synthetic fiber cloth, etc. may scratch the fine grained surface of the leather.***
- ***Mildew may develop on soiled leather upholstery. Be especially careful to avoid oil spots. Try to keep your upholstery always clean.***
- ***Long exposure to direct sunlight may cause the leather surface to harden and shrink. Keep your vehicle in a shaded area, especially in the summer.***

- ***The interior of your vehicle is apt to heat up on hot summer days, so avoid placing on the upholstery items made of vinyl or plastic or containing wax as these tend to stick to leather when warm.***
- ***Improper cleaning of the leather upholstery could result in discoloration or staining.***

If you have any questions about the cleaning of your Toyota, your local Toyota dealer will be pleased to answer them.

SECTION 6

VEHICLE MAINTENANCE AND CARE

Vehicle maintenance and care

Maintenance requirements 529
General maintenance 530
Does your vehicle need repairing? 532
Emissions Inspection and Maintenance (I/M) programs 533

For scheduled maintenance information, please refer to the “Scheduled Maintenance Guide” or “Owner’s Manual Supplement”.

Maintenance requirements

Your Toyota vehicle has been designed for fewer maintenance requirements with longer service intervals to save both your time and money. However, each regular maintenance, as well as day–to–day care, is more important than ever before to ensure smooth, and trouble–free, safe, and economical drivings.

It is the owner's responsibility to make sure the specified maintenance, including general maintenance service, is performed. Note that both the new vehicle and emission control system warranties specify that proper maintenance and care must be performed. See "Owner's Warranty Information Booklet" or "Owner's Manual Supplement" for complete warranty information.

General maintenance

General maintenance items are those day–to–day care practices that are important to your vehicle for proper operation. It is the owner's responsibility to ensure that the general maintenance items are performed regularly.

These checks or inspections can be done either by yourself or a qualified technician, or if you prefer, your Toyota dealer will be pleased to do them at a nominal cost.

Scheduled maintenance

The scheduled maintenance items listed in the "Scheduled Maintenance Guide" or "Owner's Manual Supplement" are those required to be serviced at regular intervals.

For details of your maintenance schedule, read the "Scheduled Maintenance Guide" or "Owner's Manual Supplement".

It is recommended that any replacement parts used for maintenance or for the repair of the emission control system be Toyota supplied.

The owner may elect to use non–Toyota supplied parts for replacement purposes without invalidating the emission control system warranty. However, use of replacement parts which are not of equivalent quality may impair the effectiveness of the emission control systems.

You may also elect to have maintenance, replacement, or repair of the emission control devices and system performed by any automotive repair establishment or individual without invalidating this warranty. See "Owner's Warranty Information Booklet" or "Owner's Manual Supplement" for complete warranty information.

Where to go for service?

Toyota technicians are well–trained specialists and are kept up to date with the latest service information through technical bulletins, service tips, and in–dealership training programs. They learn to work on Toyotas before they work on your vehicle, rather than while they are working on it.

You can be confident that your Toyota dealer's service department performs the best job to meet the maintenance requirements on your vehicle—reliably and economically.

Your copy of the repair order is proof that all required maintenance has been performed for warranty coverage. If any problems should arise with your vehicle while under warranty, your Toyota dealer will promptly take care of it. Again, be sure to keep a copy of the repair order for any service performed on your Toyota.

General maintenance

What about do–it–yourself maintenance?

Many of the maintenance items are easy to do yourself if you have a little mechanical ability and a few basic automotive tools. Simple instructions for how to perform them are presented on page 535 in Section 7.

If you are a skilled do–it–yourself mechanic, the Toyota service manuals are recommended. Please be aware that do–it–yourself maintenance can affect your warranty coverage. See “Owner’s Warranty Information Booklet” or “Owner’s Manual Supplement” for the details.

Listed below are the general maintenance items that should be performed as frequently as specified. In addition to checking the items listed, if you notice any unusual noise, smell or vibration, you should investigate the cause or take your vehicle to your Toyota dealer or a qualified service shop immediately. It is recommended that any problem you notice be brought to the attention of your dealer or the qualified service shop for their advice.

⚠ CAUTION

Make these checks only with adequate ventilation if you run the engine.

IN THE ENGINE COMPARTMENT

Items listed below should be checked from time to time, e.g. each time when refueling.

Washer fluid

Make sure there is sufficient fluid in the tank. See page 563 in Section 7–3 for additional information.

Engine coolant level

Make sure the coolant level is between the “FULL” and “LOW” lines on the see–through reservoir when the engine is cold. See page 546 in Section 7–2 for additional information.

Radiator, condenser and hoses

Check that the front of the radiator and condenser are clean and not blocked with leaves, dirt, or insects. See page 547 in Section 7–2 for additional information.

Battery condition

Check the battery condition by the indicator color. See page 560 in Section 7–3 for additional information.

Brake fluid level

Make sure the brake fluid level is correct. See page 547 in Section 7–2 for additional information.

Engine oil level

Check the level on the dipstick with the engine turned off and the vehicle parked on a level spot. See page 543 in Section 7–2 for additional information.

Power steering fluid level

Check the level through the reservoir. The level should be in the “HOT” or “COLD” range depending on the fluid temperature. See page 548 in Section 7–2 for additional information.

Exhaust system

If you notice any change in the sound of the exhaust or smell exhaust fumes, have the cause located and corrected immediately. (See “Engine exhaust cautions” on page 441 in Section 2.)

INSIDE THE VEHICLE

Items listed below should be checked regularly, e.g. while performing periodic services, cleaning the vehicle, etc.

Lights

Make sure the headlights, stop lights, tail lights, turn signal lights, and other lights are all working. Check headlight aim.

Service reminder indicators and warning buzzers

Check that all service reminder indicators and warning buzzers function properly.

Steering wheel

Be alert for changes in steering condition, such as hard steering or strange noise.

Seats

Check that all seat controls such as seat adjusters, seatback recliner, etc. operate smoothly and that all latches lock securely in any position. Check that the head restraints move up and down smoothly and that the locks hold securely in any latched position. For folding–down seatback (Regular cab and Crew Max models) and lift up seat cushion (Double cab models), check that the latches lock securely.

Seat belts

Check that the seat belt system such as buckles, retractors and anchors operate properly and smoothly. Make sure the belt webbing is not cut, frayed, worn or damaged.

Accelerator pedal

Check the pedal for smooth operation and uneven pedal effort or catching.

Brake pedal

Check the pedal for smooth operation and that the pedal has the proper clearance. Check the brake booster function.

Brakes

In a safe place, check that the brakes do not pull to one side when applied.

Parking brake

Check that the pedal has the proper travel and that, on a safe incline, your vehicle is held securely with only the parking brake applied.

Automatic transmission “Park” mechanism

On a safe incline, check that your vehicle is held securely with the selector lever in “P” position and all brakes released.

OUTSIDE THE VEHICLE

Items listed below should be performed from time to time, unless otherwise specified.

Fluid leaks

Check underneath for leaking fuel, oil, water or other fluid after the vehicle has been parked for a while. If you smell fuel fumes or notice any leak, have the cause found and corrected immediately.

Doors and engine hood

Check that all doors including tailgate operate smoothly and all latches lock securely. Make sure the engine hood secondary latch secures the hood from opening when the primary latch is released.

Tire inflation pressure

Check the pressure with a gauge every two weeks, or at least once a month. See page 548 in Section 7–2 for additional information.

Tire surface and wheel nuts

Check the tires carefully for cuts, damage or excessive wear. See page 551 in Section 7–2 for additional information. When checking the tires, make sure no nuts are missing, and check the nuts for looseness. Tighten them if necessary.

Tire rotation

Rotate the tires according to the maintenance schedule. (For scheduled maintenance information, please refer to the “Scheduled Maintenance Guide” or “Owner’s Manual Supplement”.) See page 553 in Section 7–2 for additional information.

Does your vehicle need repairing?

Be on the alert for changes in performance, sounds, and visual tip–offs that indicate service is needed. Some important clues are as follows:

- Engine missing, stumbling, or pinging
- Appreciable loss of power
- Strange engine noises
- A leak under the vehicle (however, water dripping from the air conditioning after use is normal.)
- Change in exhaust sound (This may indicate a dangerous carbon monoxide leak. Drive with the windows open and have the exhaust system checked immediately.)
- Flat–looking tire; excessive tire squeal when cornering; uneven tire wear
- Vehicle pulls to one side when driving straight on a level road
- Strange noises related to suspension movement
- Loss of brake effectiveness; spongy feeling brake or clutch pedal; pedal almost touches floor; vehicle pulls to one side when braking
- Engine coolant temperature continually higher than normal

If you notice any of these clues, take your vehicle to your Toyota dealer as soon as possible. It probably needs adjustment or repair.

⚠ CAUTION

Do not continue driving with the vehicle unchecked. It could result in serious vehicle damage and possibly personal injury.

Emissions Inspection and Maintenance (I/M) programs

Some states have vehicle emission inspection programs which include OBD (On–Board Diagnostics) checks.

The OBD system monitors the operation of the emission control system. When the OBD system determines that a problem exists somewhere in the emission control system, the malfunction indicator lamp comes on. In this case, your vehicle may not pass the I/M test and need to be repaired. Contact your Toyota dealer to service the vehicle.

Even if the malfunction indicator lamp does not come on, your vehicle may not pass the I/M test as readiness codes have not been set in the OBD system.

Readiness codes are automatically set during ordinary driving. However, when the battery is disconnected or run down, the codes are erased. Also, depending on your driving habits, the codes may not be completely set.

Also, if the malfunction indicator lamp had come on recently due to temporary malfunction such as a loose fuel tank cap, your vehicle may not pass the I/M test.

The malfunction indicator lamp will go off after taking several driving trips, but the error code in the OBD system will not be cleared unless about 40 trips or more are taken.

If your vehicle does not pass the I/M test even the malfunction indicator lamp does not come on, contact your Toyota dealer to prepare the vehicle for re–testing.

SECTION 7 – 1

DO–IT–YOURSELF MAINTENANCE

Introduction

Engine compartment overview 535
Fuse locations 538
Do–it–yourself service precautions 538
Parts and tools 540

Engine compartment overview

▶4.0 L V6 (1GR–FE) engine

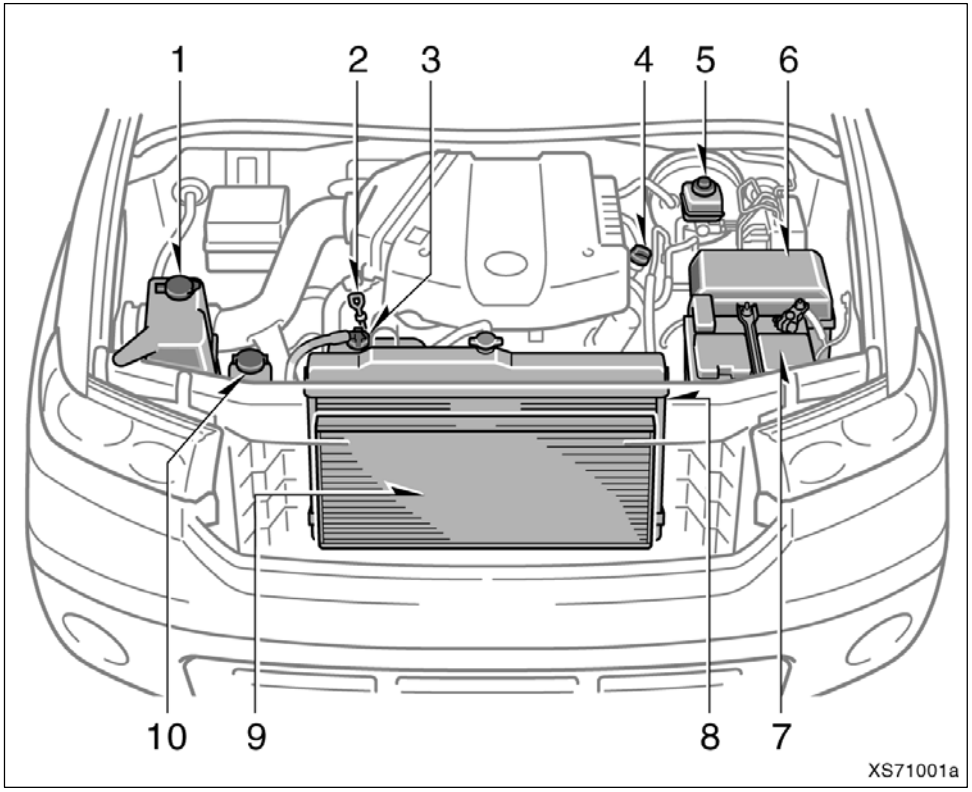

1. Windshield washer fluid tank
2. Engine oil level dipstick
3. Engine coolant reservoir
4. Engine oil filler cap
5. Brake fluid reservoir
6. Fuse block
7. Battery
8. Radiator
9. Condenser
10. Power steering fluid reservoir

▶4.7 L V8 (2UZ–FE) engine

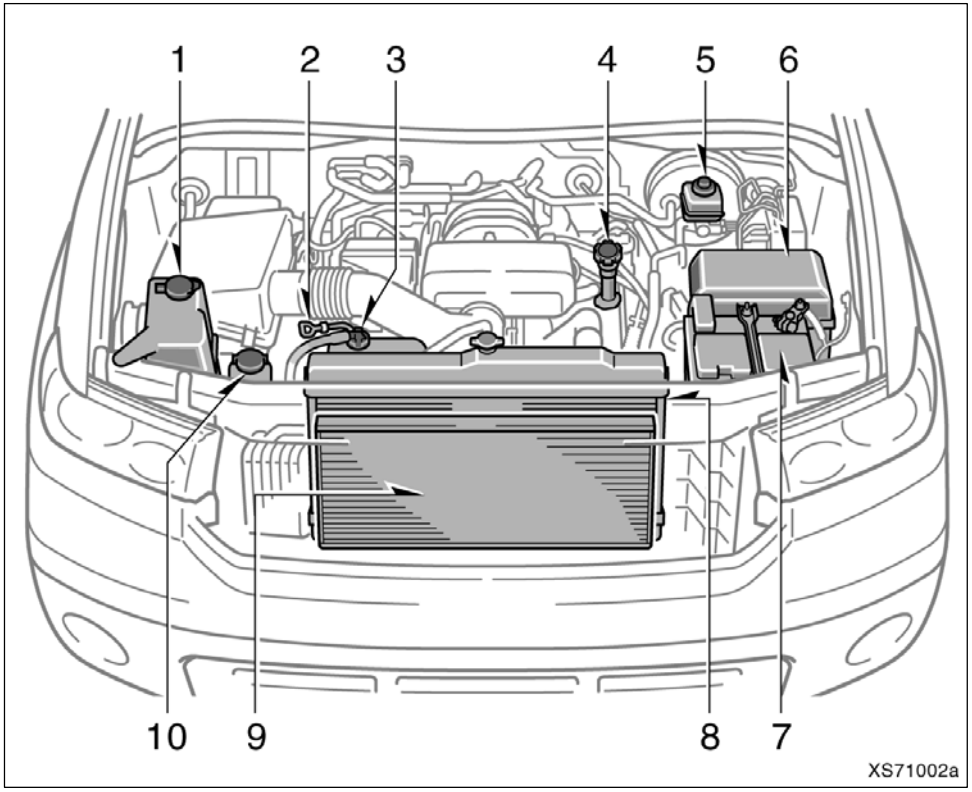

1. Windshield washer fluid tank
2. Engine oil level dipstick
3. Engine coolant reservoir
4. Engine oil filler cap
5. Brake fluid reservoir
6. Fuse block
7. Battery
8. Radiator
9. Condenser
10. Power steering fluid reservoir

▶5.7 L V8 (3UR–FE) engine

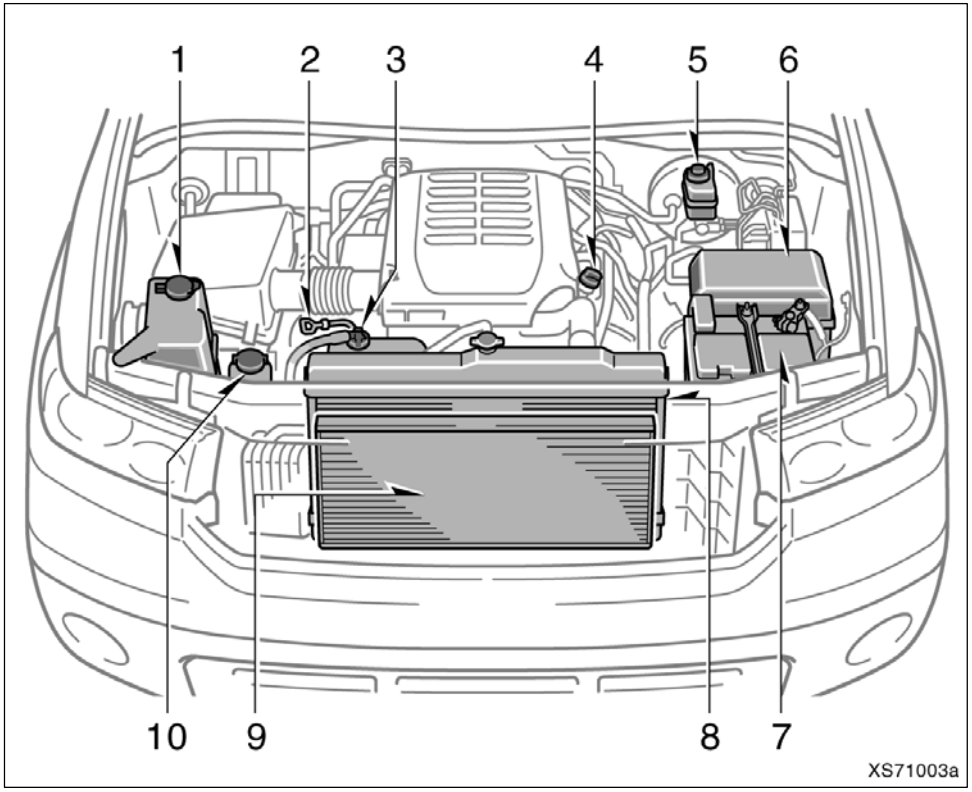

1. Windshield washer fluid tank
2. Engine oil level dipstick
3. Engine coolant reservoir
4. Engine oil filler cap
5. Brake fluid reservoir
6. Fuse block
7. Battery
8. Radiator
9. Condenser
10. Power steering fluid reservoir

Fuse locations

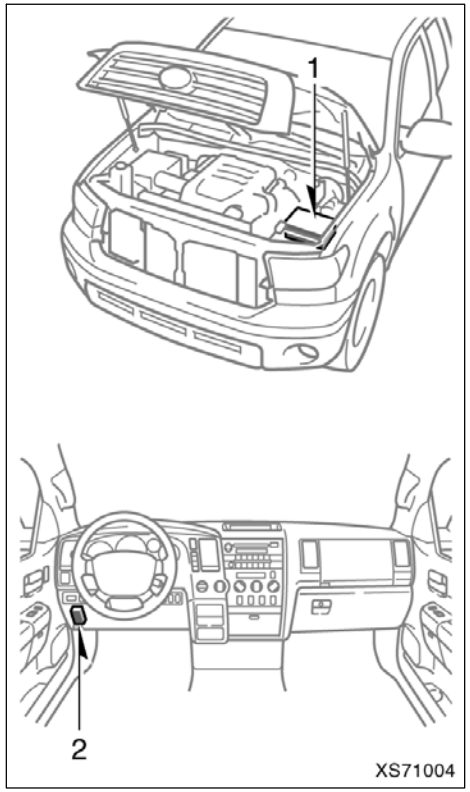

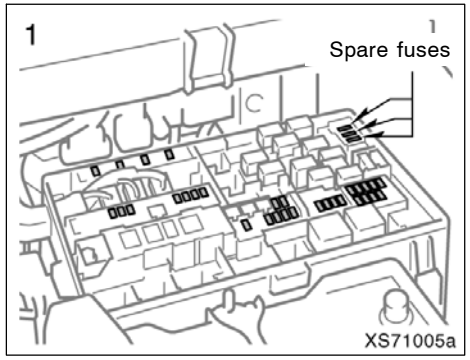

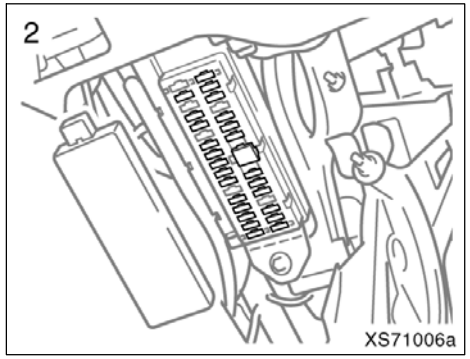

Do–it–yourself service precautions

If you perform maintenance by yourself, be sure to follow the correct procedure given in this Section.

You should be aware that improper or incomplete servicing may result in operating problems.

Performing do–it–yourself maintenance during the warranty period may affect your warranty coverage. Read the separate Toyota Warranty statement for details and suggestions.

This Section gives instructions only for those items that are relatively easy for an owner to perform. As explained in Section 6, there are still a number of items that must be done by a qualified technician with special tools.

For information on tools and parts for do–it–yourself maintenance, see “Parts and tools” on page 540 in this Section.

Utmost care should be taken when working on your vehicle to prevent accidental injury. Here are a few precautions that you should be especially careful to observe:

⚠ CAUTION

- When the engine is running, keep hands, clothing, and tools away from the moving fan and engine drive belts. (Removing rings, watches, and ties is advisable.)
- Right after driving, the engine compartment—the engine, radiator, exhaust manifold, power steering fluid reservoir and spark plug boots, etc.—will be hot. So be careful not to touch them. Oil, fluids and spark plugs may also be hot.
- If the engine is hot, do not remove the radiator cap or loosen the drain plugs to prevent burning yourself.
- Do not leave anything that may burn easily, such as paper or rags, in the engine compartment.
- Do not smoke, cause sparks or allow open flames around fuel or the battery. Their fumes are flammable.
- Do not get under your vehicle with just the body jack supporting it. Always use automotive jack stands or other solid supports.

- Use eye protection whenever you work on or under your vehicle where you may be exposed to flying or falling material, fluid spray, etc.
- Used engine oil contains potentially harmful contaminants which may cause skin disorders such as inflammation or skin cancer, so care should be taken to avoid prolonged and repeated contact with it. To remove used engine oil from your skin, wash thoroughly with soap and water.
- Do not leave used oil within the reach of children.
- Dispose of used oil and filter only in a safe and acceptable manner. Do not dispose of used oil and filter in household trash, in sewers or onto the ground. Call your dealer or a service station for information concerning recycling or disposal.
- Be extremely cautious when working on the battery. It contains poisonous and corrosive sulfuric acid.

NOTICE

- *Remember that battery and ignition cables carry high currents or voltages. Be careful of accidentally causing a short circuit.*
- *Add only "Toyota Super Long Life Coolant" or similar high quality ethylene glycol based non–silicate, non–amine, non–nitrite, and non–borate coolant with long–life hybrid organic acid technology to fill the radiator. "Toyota Super Long Life Coolant" is a mixture of 50% coolant and 50% deionized water (for the U.S.A.) or 55% coolant and 45% deionized water (for Canada).*
- *If you spill some of the coolant, be sure to wash it off with water to prevent it from damaging the parts or paint.*
- *Do not allow dirt or anything else to fall through the spark plug holes.*
- *Use only spark plugs of the specified type. Using other types will cause engine damage, loss of performance or radio noise.*

- ◆*Do not reuse iridium–tipped spark plugs by cleaning or regapping.*
- ◆*Do not overfill automatic transmission fluid, or the transmission could be damaged.*
- ◆*Do not drive with the air cleaner filter removed, or excessive engine wear could result. Also backfiring could cause a fire in the engine compartment.*
- ◆*Be careful not to scratch the glass surface with the wiper frame.*
- ◆*When closing the engine hood, check to see that you have not forgotten any tools, rags, etc.*

Parts and tools

Here is a list of parts and tools you will need to perform do–it–yourself maintenance. Remember all Toyota parts are designed in metric sizes, so your tools must be metric.

CHECKING THE ENGINE OIL LEVEL

Parts (if level is low):

- "Toyota Genuine Motor Oil" or equivalent
  See page 543 in Section 7–2 for details about engine oil selection.

Tools:

- Rag or paper towel
- Funnel (only for adding oil)

CHECKING THE ENGINE COOLANT LEVEL

Parts (if level is low):

- "Toyota Super Long Life Coolant" or similar high quality ethylene glycol based non–silicate, non–amine, non–nitrite, and non–borate coolant with long–life hybrid organic acid technology.

  "Toyota Super Long Life Coolant" is a mixture of 50% coolant and 50% deionized water(for the U.S.A.) or 55% coolant and 45% deionized water (for Canada).

Tools:

- Funnel (only for adding coolant)

CHECKING BRAKE FLUID

Parts (if level is low):

- SAE J1703 or FMVSS No.116 DOT 3 brake fluid

Tools:

- Rag or paper towel
- Funnel (only for adding fluid)

CHECKING POWER STEERING FLUID

Parts (if level is low):

- Automatic transmission fluid DEXRON®II or III

Tools:

- Rag or paper towel
- Funnel (only for adding fluid)

CHECKING BATTERY CONDITION

Tools:

- Warm water
- Baking soda
- Grease
- Conventional wrench (for terminal clamp bolts)

CHECKING AND REPLACING FUSES

Parts (if replacement is necessary):

- Fuse with same amperage rating as original

ADDING WASHER FLUID

Parts:

- Water
- Washer fluid containing antifreeze (for winter use)

Tools:

- Funnel

REPLACING LIGHT BULBS

Parts:

- Bulb with same number and wattage rating as original (See charts in “Replacing light bulbs” on page 564 in Section 7–3.)

Tools:

- Screwdriver
- Wrench

SECTION 7–2

DO–IT–YOURSELF MAINTENANCE

Engine and Chassis

Checking the engine oil level 543
Checking the engine coolant level 546
Checking the radiator and condenser 547
Checking brake fluid 547
Checking power steering fluid 548
Checking tire inflation pressure 548
Checking and replacing tires 551
Rotating tires 553
Installing snow tires and chains 554
Replacing wheels 556
Wheel precautions 557

Checking the engine oil level

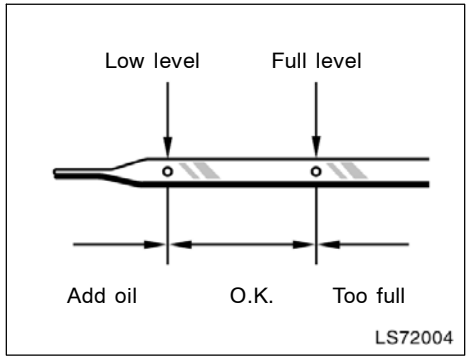

4.0 L V6 (1GR–FE) engine

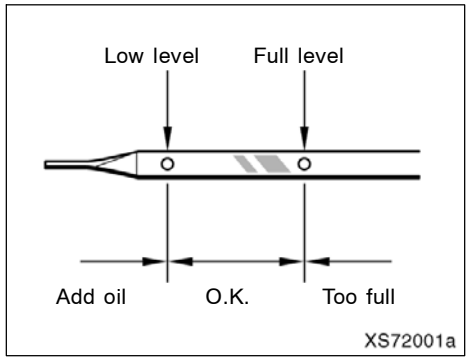

4.7 L V8 (2UZ–FE) engine

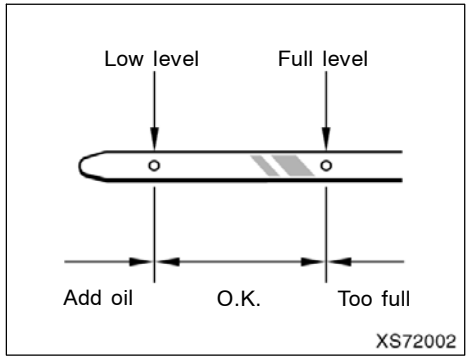

5.7 L V8 (3UR–FE) engine

With the engine at operating temperature and turned off, check the oil level on the dipstick.

1. To get a correct reading, the vehicle should be on level ground. After turning off the engine, wait a few minutes for the oil to drain back into the bottom of the engine.
2. Pull the dipstick out, hold a rag under the end and wipe it clean.
3. Reinsert the dipstick—push it in as far as it will go, or the reading will not be correct.
4. Pull the dipstick out and look at the oil level while holding a rag under the end.

⚠ CAUTION

Be careful not to touch the hot exhaust manifold.

NOTICE

Be careful not to drop engine oil on the vehicle components.

If the oil level is below or only slightly above the low level, add engine oil of the same type as already in the engine.

Remove the oil filler cap and add engine oil in small quantities at a time, checking the dipstick. We recommend that you use a funnel when adding oil.

The approximate quantity of oil needed to raise the level between low and full on the dipstick is indicated as follows:

1.5 L (1.6 qt., 1.3 Imp.qt.)

For the engine oil capacity, see “Service specifications” on page 582 in Section 8.

When the level reaches within the correct range, install the filler cap hand–tight.

NOTICE

- ***Be careful not to spill engine oil on the vehicle components.***
- ***Avoid overfilling, or the engine could be damaged.***
- ***Check the oil level on the dipstick once again after adding the oil.***

Engine oil selection

“Toyota Genuine Motor Oil” is used in your Toyota vehicle. Use Toyota approved “Toyota Genuine Motor Oil” or equivalent to satisfy the following grade and viscosity.

Oil grade:
ILSAC multigrade engine oil

Recommended viscosity:
4.0 L V6 (1GR–FE) and 4.7 L V8 (2UZ–FE) engine
SAE 5W–30

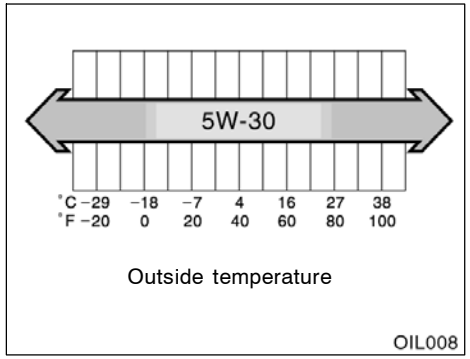

SAE 5W–30 is the best choice for good fuel economy, and good starting in cold weather.

If SAE 5W–30 oil is not available, SAE 10W–30 oil may be used. However, it should be replaced with SAE 5W–30 at the next oil change.

5.7 L V8 (3UR–FE) engine
SAE 5W–20 or 0W–20

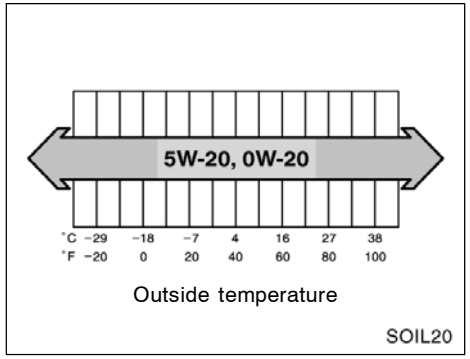

SAE 5W–20 or 0W–20 engine oil may be used. However, SAE 0W–20 is the best choice for good fuel economy, and good starting in cold weather.

Oil identification mark

The ILSAC (International Lubricant Standardization and Approval Committee) Certification Mark is added to some oil containers to help you select the oil you should use.

To ensure excellent lubrication performance for your engine, “Toyota Genuine Motor Oil” is available, which has been specifically tested and approved for all Toyota engines.

Please contact your Toyota dealer for further details about “Toyota Genuine Motor Oil”.

Checking the engine coolant level

Look at the see–through coolant reservoir when the engine is cold. The coolant level is satisfactory if it is between the "FULL" and "LOW" lines on the reservoir. If the level is low, add the coolant. (For the coolant type, see "Coolant type selection" described below.)

The coolant level in the reservoir will vary with engine temperature. However, if the level is on or below the "LOW" line, add coolant. Bring the level up to the "FULL" line.

If the coolant level drops within a short time after replenishing, there may be a leak in the system. Visually check the radiator, hoses, radiator cap and drain cock and water pump.

If you can find no leak, have your Toyota dealer test the cap pressure and check for leaks in the cooling system.

⚠ CAUTION

To prevent burning yourself, do not remove the radiator cap when the engine is hot.

Coolant type selection

Use of improper coolants may damage your engine cooling system.

Only use "Toyota Super Long Life Coolant" or similar high quality ethylene glycol based non–silicate, non–amine, non–nitrite, and non–borate coolant with long–life hybrid organic acid technology. (Coolant with long–life hybrid organic acid technology is a combination of low phosphates and organic acids.)

For the U.S.A.—"Toyota Super Long Life Coolant" is a mixture of 50% coolant and 50% deionized water. This coolant provides protection down to about –35°C (–31°F).

For Canada—"Toyota Super Long Life Coolant" is a mixture of 55% coolant and 45% deionized water. This coolant provides protection down to about –42°C (–44°F).

NOTICE

Do not use plain water alone.

Toyota recommends "Toyota Super Long Life Coolant", which has been tested to ensure that it will not cause corrosion nor result in malfunction of your engine coolant system with proper usage. "Toyota Super Long Life Coolant" is formulated with long–life hybrid organic acid technology and has been specifically designed to avoid engine cooling system malfunction on Toyota vehicles.

Please contact your Toyota dealer for further details.

Checking the radiator and condenser

If either of the above parts are extremely dirty or you are not sure of their condition, take your vehicle to a Toyota dealer.

⚠ CAUTION

To prevent burning yourself, be careful not to touch the radiator or condenser when the engine is hot.

NOTICE

To prevent damage to the radiator and condenser, do not perform the work by yourself.

Checking brake fluid

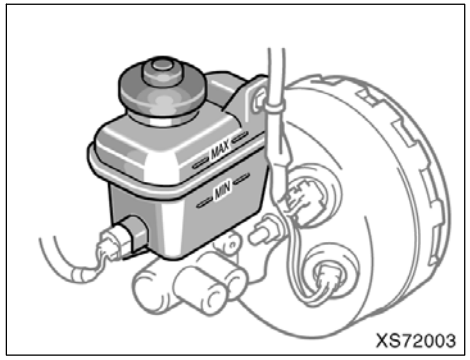

To check the fluid level, simply look at the see–through reservoir. The level should be between the "MAX" and "MIN" lines on the reservoir.

It is normal for the brake fluid level to go down slightly as the brake pads wear. So be sure to keep the reservoir filled.

If the reservoir needs frequent refilling, it may indicate a serious mechanical problem.

If the level is low, add SAE J1703 or FMVSS No.116 DOT 3 brake fluid to the brake reservoir.

Remove and replace the reservoir cap by hand. Fill the brake fluid to the dotted line. This brings the fluid to the correct level when you put the cap back on.

Use only newly opened brake fluid. Once opened, brake fluid absorbs moisture from the air, and excess moisture can cause a dangerous loss of braking.

⚠ CAUTION

Take care when filling the reservoir because brake fluid can harm your hands or eyes. If fluid gets on your hands or in your eyes, flush the affected area with clean water immediately. If you still feel uncomfortable with your hands or eyes, go to the doctor.

NOTICE

If you spill some of the fluid, be sure to wipe it off to prevent it from damaging the parts or paintwork.

Checking power steering fluid

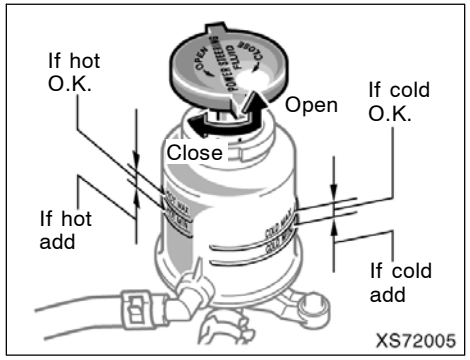

Check the fluid level through the reservoir. If necessary, add automatic transmission fluid DEXRON®II or III.

If the vehicle has been driven around 80 km/h (50 mph) for 20 minutes (a little more in frigid temperatures), the fluid is hot (60°C—80°C or 140°F—175°F). You may also check the level when the fluid is cold (about room temperature, 10°C—30°C or 50°F—85°F) if the engine has not been run for about five hours.

Clean all dirt from the outside of the reservoir tank and look at the fluid level. If the fluid is cold, the level should be in the "COLD" range. Similarly, if it is hot, the fluid level should be in the "HOT" range. If the level is at the low side of either range, add automatic transmission fluid DEXRON®II or III to bring the level within the range.

To remove the reservoir cap, turn it counterclockwise and lift up. To reinstall it, turn it clockwise. After replacing the reservoir cap, visually check the steering box case, vane pump and hose connections for leaks or damage.

⚠ CAUTION

The reservoir tank may be hot so be careful not to burn yourself.

NOTICE

Avoid overfilling, or the power steering could be damaged.

Checking tire inflation pressure

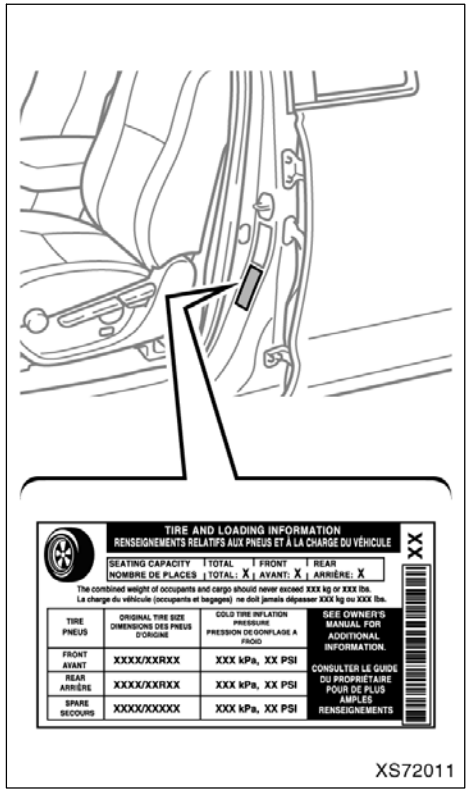

Keep your tire inflation pressures at the proper level.

The recommended cold tire inflation pressures, tire sizes and the combined weight of occupants and cargo (vehicle capacity weight) are described on page 576 in Section 8. They are also described on the tire and loading information label as shown.

You should check the tire inflation pressure every two weeks, or at least once a month. And do not forget the spare!

The following instructions for checking tire inflation pressure should be observed:

- **The pressure should be checked only when the tires are cold.** If your vehicle has been parked for at least 3 hours and has not been driven for more than 1.5 km or 1 mile since, you will get an accurate cold tire inflation pressure reading.
- **Always use a tire pressure gauge.** The appearance of a tire can be misleading. Besides, tire inflation pressures that are even just a few pounds off can degrade ride and handling.
- **Do not bleed or reduce tire inflation pressure after driving.** It is normal for the tire inflation pressure to be higher after driving.
- **Never exceed the vehicle capacity weight.** Passenger and luggage weight should be located so that the vehicle is balanced.

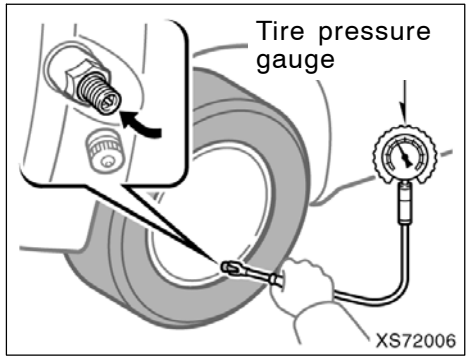

INSPECTION AND ADJUSTMENT PROCEDURE

1. Remove the tire valve cap.
2. Press the tip of the tire pressure gauge to the tire valve.
3. Read the pressure using the graduations of the gauge.
4. In case the tire inflation pressure is not within the prescribed range, insert the compressed air from the valve. In case of applying too much air, press the center of the valve and release the air to adjust.

5. After completing the tire inflation pressure measurement and adjustment, apply soapy water to the valve and check for leakage.
6. Install the tire valve cap.

If a gauge and air pump are not available, have your vehicle checked by your Toyota dealer.

⚠ CAUTION

Be sure to reinstall the tire valve caps. Without the valve caps, dirt or moisture could get into the valve core and cause air leakage. If the caps have been lost, have new ones put on as soon as possible.

Incorrect tire inflation pressure may waste fuel, reduce the comfort of driving, reduce tire life and make your vehicle less safe to drive.

If a tire frequently needs refilling, have it checked by your Toyota dealer.

⚠ CAUTION

Keep your tires properly inflated. Otherwise, the following conditions may occur and cause an accident resulting in death or serious injuries.

Low tire pressure (underinflation)—

- **Excessive wear**
- **Uneven wear**
- **Poor handling**
- **Possibility of blowouts from an overheated tire**
- **Poor sealing of the tire bead**
- **Wheel deformation and/or tire separation**
- **A greater possibility of tire damage from road hazards**

High tire pressure (overinflation)—

- **Poor handling**
- **Excessive wear**
- **Uneven wear**
- **A greater possibility of tire damage from road hazards**

Checking and replacing tires

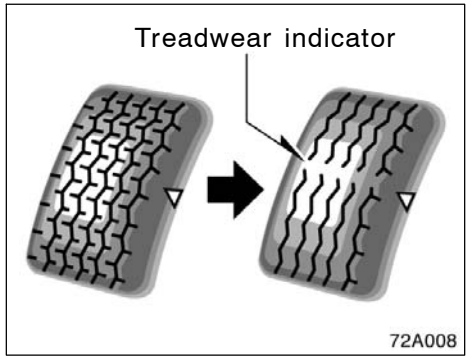

CHECKING YOUR TIRES

Check the tire's tread for treadwear indicators. If the indicators show, replace the tires. The location of treadwear indicators is shown by the "TWI" or "Δ" marks, etc., molded on the sidewall of each tire.

The tires on your Toyota have built–in treadwear indicators to help you know when the tires need replacement. When the tread depth wears to 1.6 mm (0.06 in.) or less, the indicators will appear. If you can see the indicators in two or more adjacent grooves, the tire should be replaced. The lower the tread, the higher the risk of skidding.

The effectiveness of snow tires is lost if the tread wears down below 4 mm (0.16 in.).

If you have tire damage such as cuts, splits, cracks deep enough to expose the fabric, or bulges indicating internal damage, the tire should be replaced.

If a tire often goes flat or cannot be properly repaired due to the size or location of a cut or other damage, it should be replaced. If you are not sure, consult with your Toyota dealer.

If air loss occurs while driving, do not continue driving. Driving even a short distance can damage a tire beyond repair.

Any tires which are over 6 years old must be checked by a qualified technician even if damage is not obvious.

Tires deteriorate with age even if they have never or seldom been used.

This applies also to the temporary spare tire and tires stored for future use.

REPLACING YOUR TIRES

When replacing a tire, use a tire of the same size and construction, and the same or greater maximum load as the originally installed tires. Also, on four–wheel drive models, all the tires must be the same brand and have the same tread patterns.

Using any other size or type of tire may seriously affect handling, ride, speedometer/odometer calibration, ground clearance, and clearance between the body and tires or snow chains.

Check that the maximum load of the replaced tire is greater than 1/2 of the Gross Axle Weight Ratings (GAWR) of either the front axle or the rear axle, whichever is greater. As for the maximum load of the tire, see the load limit at maximum cold tire inflation pressure mentioned on the sidewall of the tire, and as for the Gross Axle Weight Ratings (GAWR), see the Certification Label.

For details about the sidewall of the tire and the Certification Label, see "Tire information" on page 451 in Section 2 and "Your Toyota's identification" on page 449 in Section 2.

⚠ CAUTION

Observe the following instructions. Otherwise, an accident may occur resulting in death or serious injuries.

- **Do not mix radial, bias belted, or bias–ply tires on your vehicle, as this may cause dangerous handling characteristics resulting in loss of control.**
- **Do not use tires other than the manufacturer's recommended size, as this may cause dangerous handling characteristics resulting in loss of control.**
- **Do not use tires of different brands, sizes and constructions. This may damage the drive system and prevent the vehicle stability control system from functioning correctly.**
- **Four–wheel drive models: Do not use tires of different brands, sizes, construction or tread patterns, as this may cause dangerous handling characteristics resulting in loss of control.**

Toyota recommends all four tires, or at least both of the front or rear tires be replaced at a time as a set.

See "If you have a flat tire" on page 498 in Section 4 for tire change procedure.

When a tire is replaced, the wheel should always be balanced.

An unbalanced wheel may affect vehicle handling and tire life. Wheels can get out of balance with regular use and should therefore be balanced occasionally.

The tire pressure warning system must be initialized when the specified tire inflation pressure is changed due to tire replacement. See "Tire pressure warning system" on page 251 in Section 1–7.

NOTICE

- ***When the tires must be repaired or replaced, have them repaired or replaced by the nearest Toyota dealer or authorized tire dealer. Failure to do so may cause the tire pressure sensors to be damaged when the tires are removed or installed.***
- ***Remove the air pressure sensors before replacing the tires to prevent the sensors from being damaged.***

Rotating tires

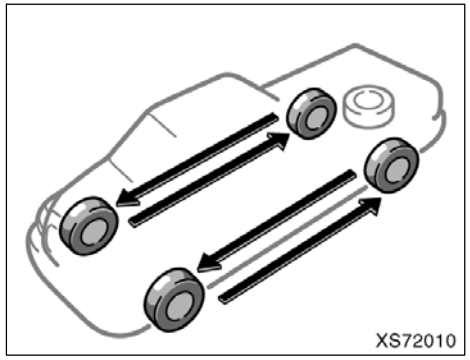

To equalize the wear and help extend tire life, Toyota recommends that you rotate your tires according to the maintenance schedule. (For scheduled maintenance information, please refer to the "Scheduled Maintenance Guide" or "Owner's Manual Supplement".) However, the most appropriate timing for tire rotation may vary according to your driving habits and road surface conditions.

See “If you have a flat tire” on page 498 in Section 4 for tire change procedure.

When rotating tires, check for uneven wear and damage. Abnormal wear is usually caused by incorrect tire pressure, improper wheel alignment, out–of–balance wheels, or severe braking.

The tire pressure warning system must be initialized when rotating tires, in case that the specified tire inflation pressure is different between front and rear. See “Tire pressure warning system” on page 251 in Section 1–7.

Installing snow tires and chains

WHEN TO USE SNOW TIRES OR CHAINS

Snow tires or chains are recommended when driving on snow or ice.

On wet or dry roads, conventional tires provide better traction than snow tires.

SNOW TIRE SELECTION

If you need snow tires, select tires of the same size, construction and load capacity as the originally installed tires. Also, on four–wheel drive models, all the tires must be the same brand and have the same tread patterns.

Do not use tires other than those mentioned above. Do not install studded tires without first checking local regulations for possible restrictions.

⚠ CAUTION

Observe the following instructions. Otherwise, an accident may occur resulting in death or serious injuries.

- **Do not use snow tires other than the manufacturer’s recommended size, as this may cause dangerous handling characteristics resulting in loss of control.**
- **Four–wheel drive models: Do not use snow tires of different brands, sizes, construction or tread patterns, as this may cause dangerous handling characteristics resulting in loss of control.**

SNOW TIRE INSTALLATION

Snow tires should be installed on all wheels.

Installing snow tires on the rear wheels only can lead to an excessive difference in road grip capability between the front and rear tires which could cause loss of vehicle control.

When storing removed tires, you should store them in a cool dry place.

Mark the direction of rotation and be sure to install them in the same direction when replacing.

⚠ CAUTION

- **Do not drive with the snow tires incorrectly inflated.**
- **Never drive over 120 km/h (75 mph) with any type of snow tires.**

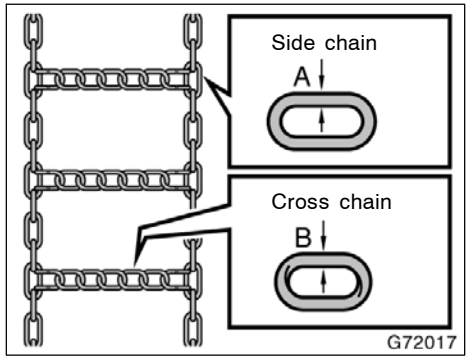

TIRE CHAIN SELECTION

Use the tire chains of correct size.

Use the following type chains.

	mm (in.)
A Diameter of side chain:	5.0 (0.20)
B Diameter of cross chain:	6.3 (0.25)

Regulations regarding the use of tire chains vary according to location or type of road, so always check local regulations before installing chains.

NOTICE

If the wrong combination of tire and chain is used, the chains could damage the vehicle body.

CHAIN INSTALLATION

Install the chains on the rear tires as tightly as possible. Do not use tire chains on the front tires. Retighten chains after driving 0.5—1.0 km (1/4—1/2 miles).

When installing chains on your tires, carefully follow the instructions of the chain manufacturer.

If wheel covers are used, they will be scratched by the chain band, so remove the covers before putting on the chains.

⚠ CAUTION

- **Do not exceed 50 km/h (30 mph) or the chain manufacturer's recommended speed limit, whichever is lower.**
- **Drive carefully avoiding bumps, holes, and sharp turns, which may cause the vehicle to bounce.**
- **Avoid sharp turns or locked-wheel braking, as use of chains may adversely affect vehicle handling.**
- **When driving with chains installed, be sure to drive carefully. Slow down before entering curves to avoid losing control of the vehicle. Otherwise an accident may occur.**

NOTICE

Snow tires or chains may affect the tire pressure warning system. See "Tire pressure warning system" on page 251 in Section 1-7.

Replacing wheels

As you might have difficulty in identifying a flat or deflated tire, a tire pressure warning system is provided on this vehicle.

When replacing the wheels, be sure to install tire pressure warning valves and transmitters on the wheels. Consult your Toyota dealer about how to set up the tire pressure warning valves and transmitters.

CAUTION

- **Have the tires, wheels or tire pressure warning valves and transmitters replaced and ID codes registered by Toyota dealer. If you need tire pressure warning valves and transmitters, purchase from Toyota dealer.**
- **The tire pressure warning valve and transmitter nuts should always be tightened to a torque of 4 N·m (0.4 kgf·m, 2.9 ft·lbf).**
- **The use of non–genuine wheels may result in the tire pressure warning system failure or air–leak.**

WHEN TO REPLACE YOUR WHEELS

If you have wheel damage such as bending, cracks or heavy corrosion, the wheel should be replaced.

If you fail to replace a damaged wheel, the tire may slip off the wheel or cause loss of handling control.

WHEEL SELECTION

When replacing wheels, care should be taken to ensure that the wheels are replaced by ones with the same load capacity, diameter, rim width, and offset.

Correct replacement wheels are available at your Toyota dealer.

A wheel of a different size or type may adversely affect handling, wheel and bearing life, brake cooling, speedometer/odometer calibration, stopping ability, headlight aim, bumper height, vehicle ground clearance, and tire or snow chain clearance to the body and chassis.

Replacement with used wheels is not recommended as they may have been subjected to rough treatment or high mileage and could fail without warning. Also, bent wheels which have been straightened may have structural damage and therefore should not be used. Never use an inner tube in a leaking wheel which is designed for a tubeless tire.

CAUTION

Observe the following instructions. Otherwise, an accident may occur resulting in death or serious injuries.

- **Do not use wheels other than the manufacturer's recommended size, as this may cause dangerous handling characteristics resulting in loss of control.**
- **Four–wheel drive models:**
  Do not use wheels of different brands, sizes and types, as this may cause dangerous handling characteristics resulting in loss of control.

Wheel precautions

- When installing wheels, check that the wheel nuts are tight after driving your vehicle the first 160 km (100 miles).
- If you have rotated, repaired, or changed your tires, check that the wheel nuts are still tight after driving 160 km (100 miles).
- Wheel nut torque.
  Steel wheel:
  209 N·m (21.3 kgf·m, 154 ft·lbf)
  Aluminum wheel:
  131 N·m (13.4 kgf·m, 97 ft·lbf)
- When using tire chains, be careful not to damage the aluminum wheels.
- Use only the Toyota wheel nuts and wrench designed for your aluminum wheels.
- When balancing your aluminum wheels, use only Toyota balance weights or equivalent and a plastic or rubber hammer.
- As with any wheel, periodically check your aluminum wheels for damage. If damaged, replace immediately.

SECTION 7 – 3

DO–IT–YOURSELF MAINTENANCE

Electrical components

Checking battery condition 560
Battery recharging precautions 561
Checking and replacing fuses 562
Adding washer fluid 563
Replacing light bulbs 564

Checking battery condition——Precautions

⚠ CAUTION

BATTERY PRECAUTIONS

The battery produces flammable and explosive hydrogen gas.

- **Do not cause a spark from the battery with tools.**
- **Do not smoke or light a match near the battery.**

The electrolyte contains poisonous and corrosive sulfuric acid.

- **Avoid contact with eyes, skin or clothes.**
- **Never ingest electrolyte.**
- **Wear protective safety glasses when working near the battery.**
- **Keep children away from the battery.**

EMERGENCY MEASURES

- **If electrolyte gets in your eyes, flush your eyes with clean water immediately and get immediate medical attention. If possible, continue to apply water with a sponge or cloth while en route to the medical office.**
- **If electrolyte gets on your skin, thoroughly wash the contact area. If you feel pain or burning, get medical attention immediately.**
- **If electrolyte gets on your clothes, there is a possibility of its soaking through to your skin, so immediately take off the exposed clothing and follow the procedure above, if necessary.**
- **If you accidentally swallow electrolyte, drink a large quantity of water or milk. Follow with milk of magnesia, beaten raw egg or vegetable oil. Then go immediately for emergency help.**

—Checking battery exterior

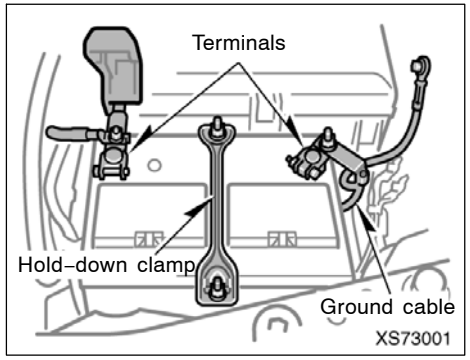

Check the battery for corroded or loose terminal connections, cracks, or loose hold–down clamp.

a. If the battery is corroded, wash it off with a solution of warm water and baking soda. Coat the outside of the terminals with grease to prevent further corrosion.

b. If the terminal connections are loose, tighten their clamp nuts—but do not overtighten.

c. Tighten the hold–down clamp only enough to keep the battery firmly in place. Overtightening may damage the battery case.

NOTICE

- ***Be sure the engine and all accessories are off before performing maintenance.***
- ***When checking the battery, remove the ground cable from the negative terminal ("–" mark) first and reinstall it last.***
- ***Be careful not to cause a short circuit with tools.***
- ***Take care no solution gets into the battery when washing it.***

If the battery is disconnected or run down, the moon roof may not operate automatically and the jam protection function will not function correctly after you reconnect, replace or recharge the battery. In any of these cases, you should normalize the moon roof. To normalize the moon roof, see "Electric moon roof" on page 43 in Section 1–2.

—Checking battery fluid

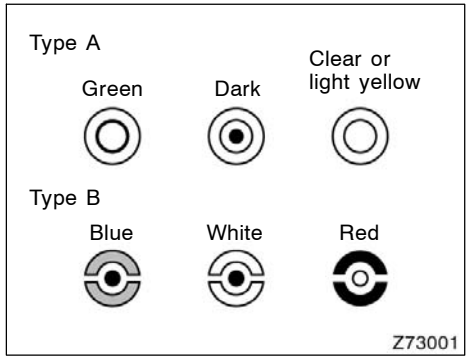

CHECKING BY INDICATOR

Check the battery condition by the indicator color.

Indicator color		Condition
Type A	Type B	
Green	Blue	Good
Dark	White	Charging necessary. Have battery checked by your Toyota dealer.
Clear or light yellow	Red	Have battery checked by your Toyota dealer.

Battery recharging precautions

During recharging, the battery is producing hydrogen gas.

Therefore, before recharging:

1. If recharging with the battery installed on the vehicle, be sure to disconnect the ground cable.
2. Be sure the power switch on the recharger is off when connecting the charger cables to the battery and when disconnecting them.

⚠ CAUTION

- **Always charge the battery in an unconfined area. Do not charge the battery in a garage or closed room where there is not sufficient ventilation.**
- **Only do a slow charge (5 A or less). Charging at a quicker rate is dangerous. The battery may explode, causing personal injuries.**

NOTICE

Never recharge the battery while the engine is running. Also, be sure all accessories are turned off.

Checking and replacing fuses

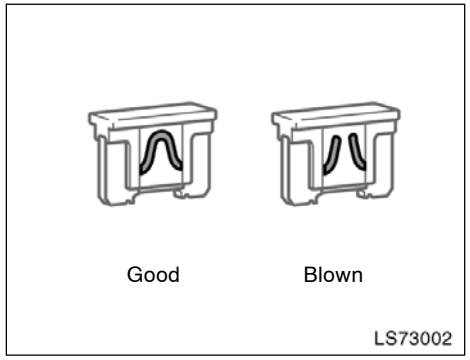

Type A

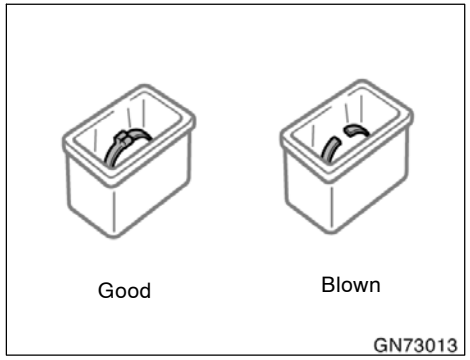

Type C

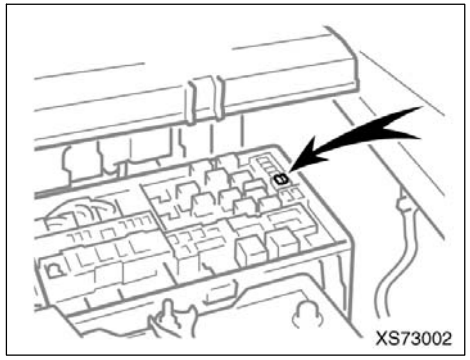

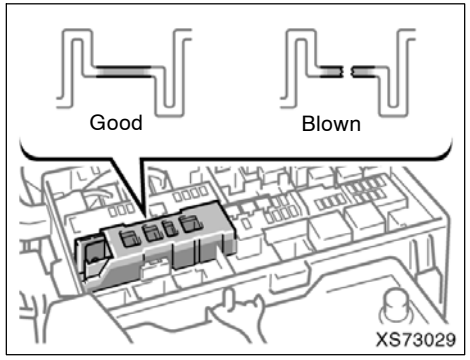

Type B

If the headlights or other electrical components do not work, check the fuses. If any of the fuses are blown, they must be replaced.

See “Fuse locations” on page 538 in Section 7–1 for locations of the fuses.

Turn the ignition switch and inoperative component off. Pull the suspected fuse straight out and check it.

Determine which fuse may be causing the problem. The lid of the fuse box shows the name of the circuit for each fuse. See page 587 in Section 8 for the functions controlled by each circuit.

Type A fuses can be pulled out by the pull–out tool. The location of the pull–out tool is shown in the illustration.

Type B fuses—When any of the fuses are blown, contact your Toyota dealer.

If you are not sure whether the fuse has blown, try replacing the suspected fuse with one that you know is good.

If the fuse has blown, push a new fuse into the clip.

Only install a fuse with the amperage rating designated on the fuse box lid.

If you do not have a spare fuse, in an emergency you can pull out the “A/C” fuse, which may be dispensable for normal driving, and use it if its amperage rating is the same.

If you cannot use one of the same amperage, use one that is lower, but as close to the rating as possible. If the amperage is lower than that specified, the fuse might blow out again but this does not indicate anything wrong. Be sure to get the correct fuse as soon as possible and return the substitute to its original clip.

It is a good idea to purchase a set of spare fuses and keep them in your vehicle for emergencies.

If the new fuse immediately blows out, there is a problem with the electrical system. Have your Toyota dealer correct it as soon as possible.

You should normalize the moon roof if it does not operate automatically or the jam protection function does not operate correctly after replacing blown fuses. To normalize the moon roof, see “Electric moon roof” on page 43 in Section 1–2.

⚠ CAUTION

Never use a fuse with a higher amperage rating, or any other object, in place of a fuse. This may cause extensive damage and possibly a fire.

Make sure that the fuse box lid has been closed securely after closing it.

Adding washer fluid

If any washer does not work or the low windshield washer fluid level warning light comes on, the washer tank may be empty. Add washer fluid.

You may use plain water as washer fluid. However, in cold areas where temperatures range below the freezing point, use washer fluid containing antifreeze. This product is available at your Toyota dealer and most auto parts stores. Follow the manufacturer’s directions for how much to mix with water.

NOTICE

Do not use engine antifreeze or any other substitute because it may damage your vehicle’s paint.

Replacing light bulbs—

The following illustrations show how to gain access to the bulbs. When replacing a bulb, make sure the ignition switch and light switch are off. Use bulbs with the wattage ratings given in the table.

The side turn signal lights consist of a number of LEDs. If any of the LEDs burn out, take your vehicle to your Toyota dealer to have the light replaced.

⚠ CAUTION

- **To prevent burning yourself, do not replace the light bulbs while they are hot.**
- **Halogen bulbs have pressurized gas inside and require special handling. They can burst or shatter if scratched or dropped. Hold a bulb only by its plastic or metal case. Do not touch the glass part of a bulb with bare hands.**

NOTICE

Only use a bulb of the listed type.

The inside of the lens of exterior lights such as headlights may temporarily fog up when the lens becomes wet in the rain or in a car wash. This is not a problem because the fogging is caused by the temperature difference between the outside and inside of the lens, just like the windshield fogs up in the rain. However, if there is a large drop of water on the inside of the lens, or if there is water pooled inside the light, contact your Toyota dealer.

Light bulbs	Bulb No.	W	Type
Headlights (high beam)	9005	65	A
Headlights (low beam)	—	55	B
Front fog lights	9145	45	C
Parking and front side marker lights	168	5	D
Front turn signal/parking lights	4157 NAK	27/8	E
Rear turn signal lights	3157A	27/8	E
Stop/tail and rear side marker lights	3157	27/8	D
Back–up lights	921	18	D
License plate lights	168	4.9	D
High mounted stoplight and cargo lamps	921	18	D
Interior lights	—	5	D

Light bulbs	Bulb No.	W	Type
Front personal lights	—	5	D
Rear personal lights	—	5	D
Glove box light	74	1.2	D
Foot light	—	1.4	D
Door courtesy light	168	5	D

A: HB3 halogen bulbs
B: H11 halogen bulbs
C: H10 halogen bulbs
D: Wedge base bulbs (clear)
E: Wedge base bulbs (amber)

—Headlights (high beam)

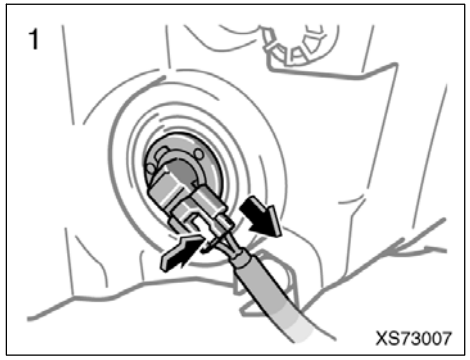

1. Open the hood. Unplug the connector while depressing the lock release.

If the connector is tight, wiggle it.

If additional space is required to access the connector, move the battery rearward by loosening the battery hold–down clamp.

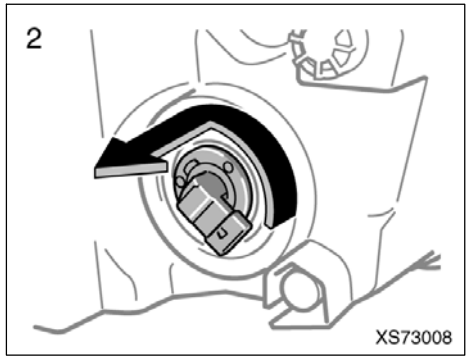

2. Turn the bulb base counterclockwise and remove it.

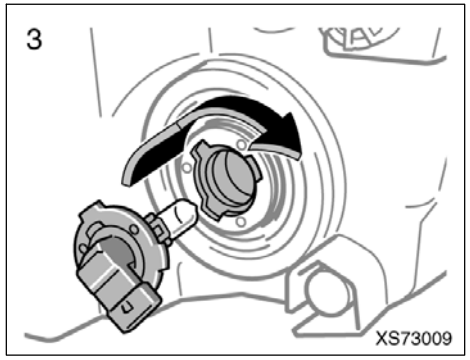

3. Plug in a new bulb install it into the mounting hole.

Aiming is not necessary after replacing the bulb. When aiming adjustment is necessary, contact your Toyota dealer.

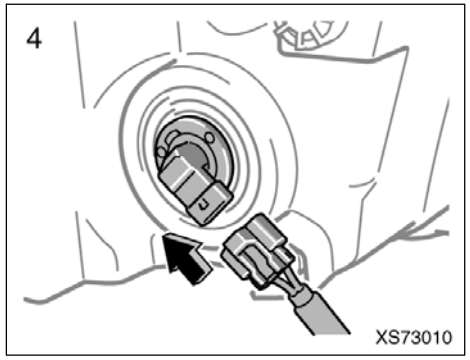

4. Install the connector to the bulb.

If the battery has been moved, reinstall the battery and check that the battery is installed securely by wiggling it.

—Headlights (low beam)

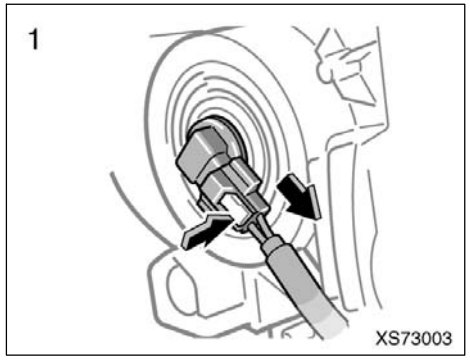

1. Open the hood. Unplug the connector while depressing the lock release.

If the connector is tight, wiggle it.

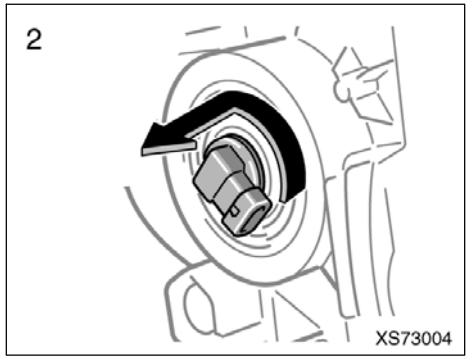

2. Turn the bulb base counterclockwise and remove it.

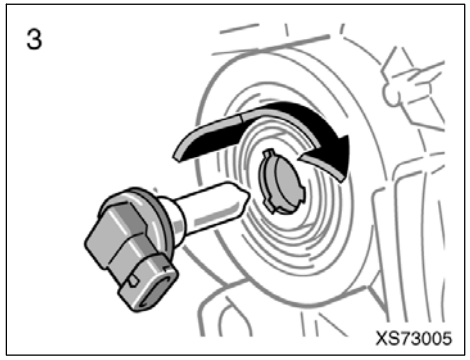

3. Plug in a new bulb install it into the mounting hole.

Aiming is not necessary after replacing the bulb. When aiming adjustment is necessary, contact your Toyota dealer.

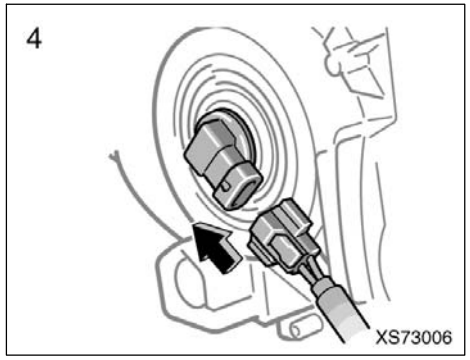

4. Install the connector to the bulb.

—Front fog lights

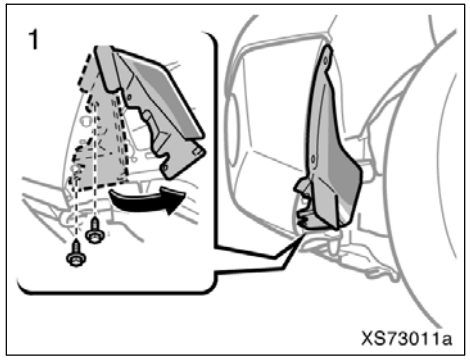

1. **Remove the bolts and cover.**

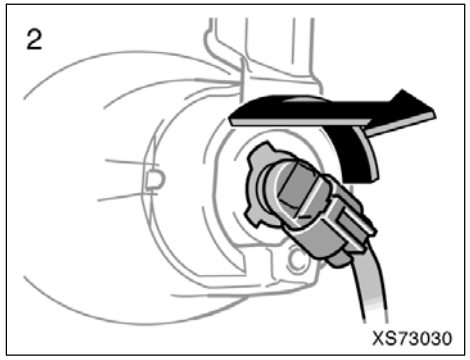

2. **Turn the bulb base counterclockwise and remove it.**

If the connector is tight, wiggle it.

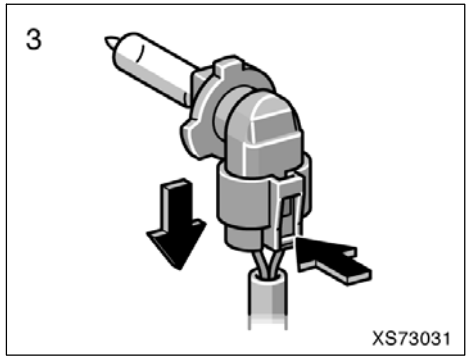

3. **Pull the bulb out of the base. Install a new bulb.**

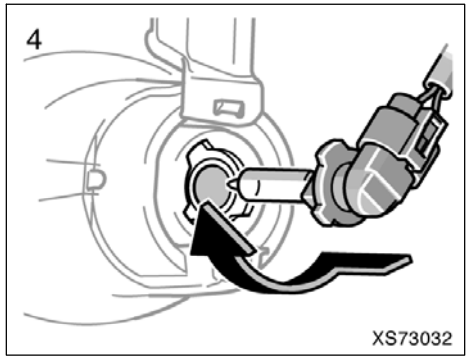

4. Install the bulb base into the mounting hole by turning it clockwise.

Aiming is not necessary after replacing the bulb. When aiming adjustment is necessary, contact your Toyota dealer.

—Parking and front side marker lights

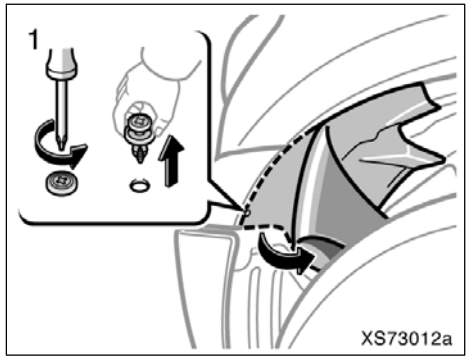

Remove the clip and cover.

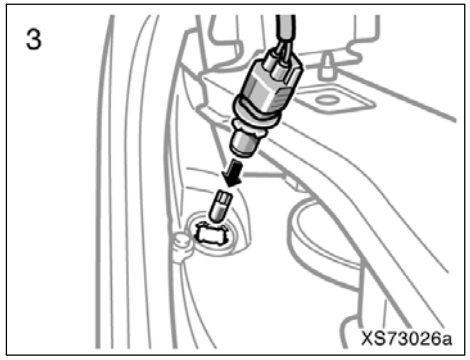

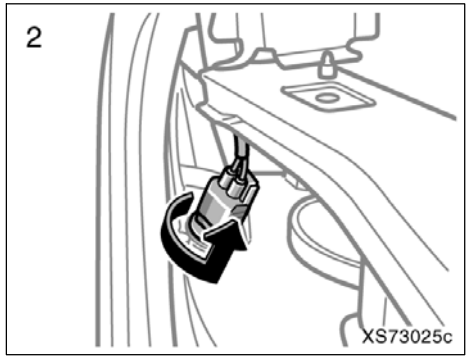

—Front turn signal and parking lights

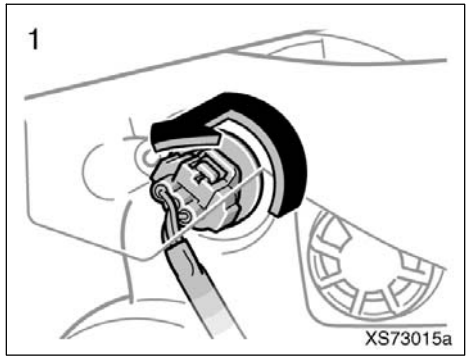

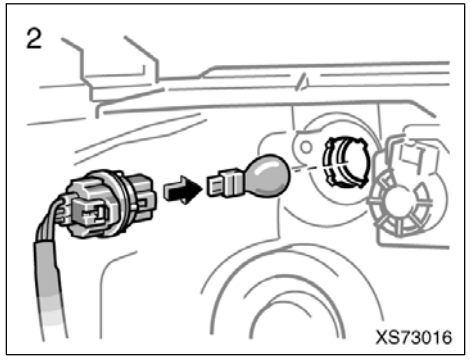

—Rear turn signal, stop/tail, rear side marker and back-up lights

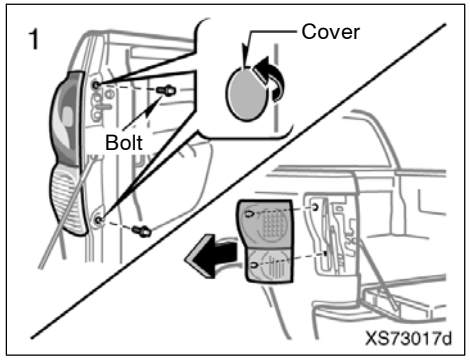

Remove the covers (seal type) and bolts.

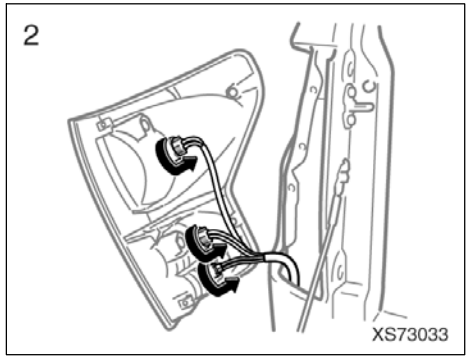

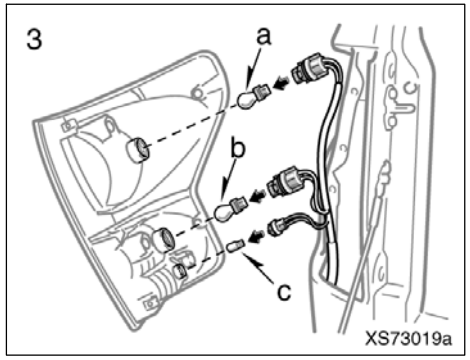

a: Rear turn signal light
b: Stop/tail and rear side marker light
c: Back-up light

—License plate lights

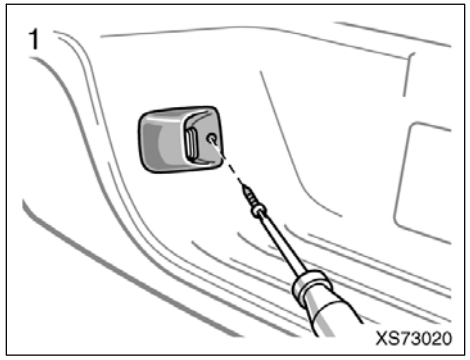

Use a Phillips–head screwdriver.

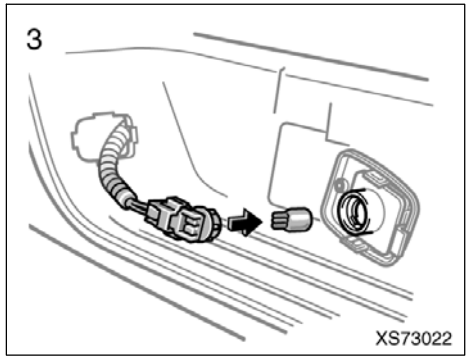

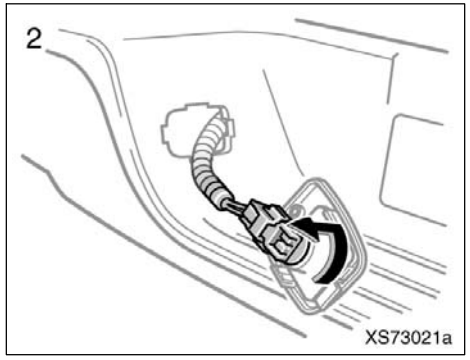

—High mounted stoplight and cargo lamps

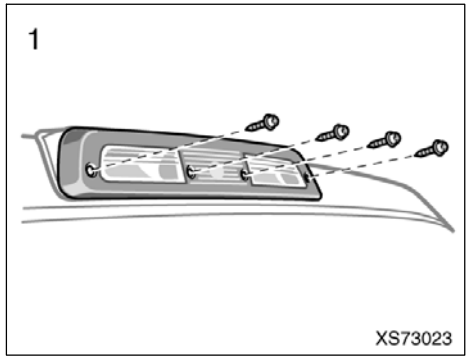

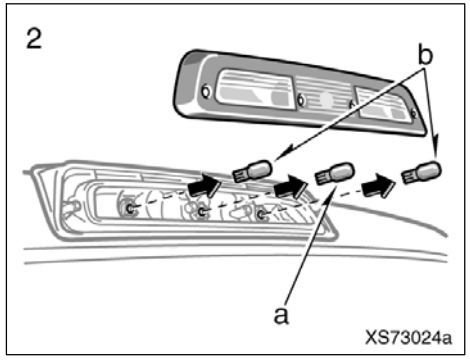

a: High mounted stoplight
b: Cargo lamps

SECTION 8

SPECIFICATIONS

Specifications

Dimensions 574
Vehicle capacity weight 576
Towing capacity 579
Engine 582
Fuel 582
Service specifications 582
Tires 586
Fuses 587

Dimensions

Two–wheel drive models

mm (in.)

Cabin type	Regular cab models		Double cab models		Crew Max models
Bed type	Standard bed	Long bed	Standard bed	Long bed	Short bed
Overall length	5330 (209.8)	5810 (228.7)	5810 (228.7)	6290 (247.6)	5810 (228.7)
Overall width	2030 (79.9)	2030 (79.9)	2030 (79.9)	2030 (79.9)	2030 (79.9)
Overall height	1930 (75.9)*1	1925 (75.7)*1	1930 (75.9)*1	1925 (75.7)*1	1925 (75.7)*1
	1925 (75.7)*2,*3	1920 (75.5)*2	1925 (75.7)*2,*3	1920 (75.5)*2	1920 (75.5)*2,*3
Wheelbase	3220 (126.7)	3700 (145.6)	3700 (145.6)	4180 (164.5)	3700 (145.6)
Front tread	1725 (67.9)	1725 (67.9)	1725 (67.9)	1725 (67.9)	1725 (67.9)
Rear tread	1725 (67.9)	1725 (67.9)	1725 (67.9)	1725 (67.9)	1725 (67.9)

*1: With P255/70R18 tires

*2: With P275/65R18 tires

*3: With P275/55R20 tires

Four–wheel drive models

mm (in.)

Cabin type	Regular cab models		Double cab models		Crew Max models
Bed type	Standard bed	Long bed	Standard bed	Long bed	Short bed
Overall length	5330 (209.8)	5810 (228.7)	5810 (228.7)	6290 (247.6)	5810 (228.7)
Overall width	2030 (79.9)	2030 (79.9)	2030 (79.9)	2030 (79.9)	2030 (79.9)
Overall height	1940 (76.3)*1	1935 (76.1)*1	1940 (76.3)*1	1935 (76.1)*1	1935 (76.1)*1
	1935 (76.1)*2,*3	1930 (75.9)*2	1935 (76.1)*2,*3	1930 (75.9)*2	1930 (75.9)*2,*3
Wheelbase	3220 (126.7)	3700 (145.6)	3700 (145.6)	4180 (164.5)	3700 (145.6)
Front tread	1725 (67.9)	1725 (67.9)	1725 (67.9)	1725 (67.9)	1725 (67.9)
Rear tread	1725 (67.9)	1725 (67.9)	1725 (67.9)	1725 (67.9)	1725 (67.9)

*1: With P255/70R18 tires

*2: With P275/65R18 tires

*3: With P275/55R20 tires

Vehicle capacity weight

kg (lb.)

Cab type	Engine	Driving system	Bed type	Vehicle capacity weight
Regular	4.0 L V6 (1GR–FE)	Two–wheel drive models	Standard	675 (1495)
			Long	710 (1575)
	4.7 L V8 (2UZ–FE)	Two–wheel drive models	Standard	780 (1730)
				750 (1655)*1
			Long	830 (1830)
				795 (1755)*1
		Four–wheel drive models	Standard	755 (1670)
				720 (1595)*1
			Long	800 (1765)
				765 (1690)*1
	5.7 L V8 (3UR–FE)	Two–wheel drive models	Standard	750 (1660)
				715 (1585)*1
			Long	895 (1975)
				860 (1900)*1
				925 (2045)*2
		Four–wheel drive models	Standard	725 (1605)
				690 (1530)*1
			Long	865 (1910)
				830 (1835)*1

*1: With towing package
*2: Without option

kg (lb.)

Cab type	Engine	Driving system	Bed type	Grade	Vehicle capacity weight
Double	4.0 L V6 (1GR–FE)	Two–wheel drive models	Standard	SR5	585 (1300)
	4.7 L V8 (2UZ–FE)	Two–wheel drive models	Standard	SR5	640 (1415)
					605 (1340)*1
				Limited	655 (1450)
					620 (1375)*1
			Long	SR5	590 (1305)*1
		Four–wheel drive models	Standard	SR5	600 (1330)
					565 (1255)*1
				Limited	615 (1360)
					580 (1285)*1
			Long	SR5	550 (1220)*1
	5.7 L V8 (3UR–FE)	Two–wheel drive models	Standard	SR5	700 (1550)
					665 (1475)*1
				Limited	720 (1590)
					685 (1515)*1
			Long	SR5	655 (1455)*1
		Four–wheel drive models	Standard	SR5	665 (1470)
					630 (1395)*1
				Limited	680 (1505)
					645 (1430)*1
			Long	SR5	615 (1365)*1

*1: With towing package

kg (lb.)

Cab type	Engine	Driving system	Bed type	Grade	Vehicle capacity weight
Crew Max	4.7 L V8 (2UZ–FE)	Two–wheel drive models	Short	SR5	605 (1335)
					570 (1260)*1
					555 (1225)*2
				Limited	615 (1360)
					580 (1285)*1
					565 (1250)*2
		Four–wheel drive models		SR5	570 (1260)
					535 (1185)*1
					520 (1150)*2
				Limited	580 (1280)
					545 (1205)*1
					530 (1170)*2
	5.7 L V8 (3UR–FE)	Two–wheel drive models		SR5	665 (1470)
					630 (1395)*1
					615 (1360)*2
				Limited	690 (1530)
					655 (1455)*1
					640 (1420)*2
		Four–wheel drive models		SR5	635 (1400)
					600 (1325)*1
					585 (1290)*2
				Limited	640 (1420)
					610 (1345)*1
					590 (1310)*2

*1: With towing package or electric moon roof
*2: With towing package and electric moon roof

Towing capacity*1

kg (lb.)

Cab type	Engine	Driving system	Bed type	Towing capacity*1
Regular	4.0 L V6 (1GR-FE)	Two-wheel drive models	Standard	2310 (5100)
			Long	2265 (5000)
	4.7 L V8 (2UZ-FE)	Two-wheel drive models	Standard	3175 (7000)
				3855 (8500)*2
			Long	3125 (6900)
				3810 (8400)*2
		Four-wheel drive models	Standard	3035 (6700)
				3715 (8200)*2
			Long	2990 (6600)
				3670 (8100)*2
	5.7 L V8 (3UR-FE)	Two-wheel drive models	Standard	4035 (8900)
				4715 (10400)*2
				4490 (9900)*2,3
			Long	3990 (8800)
				4895 (10800)*2
		Four-wheel drive models	Standard	3945 (8700)
				4580 (10100)*2
				4350 (9600)*2,3
			Long	3900 (8600)
				4760 (10500)*2

*1: Trailer weight + cargo weight
*2: With Towing package
*3: With P275/55R20 tires

kg (lb.)

Cab type	Engine	Driving system	Bed type	Grade	Towing capacity*1
Double	4.0 L V6 (1GR–FE)	Two–wheel drive models	Standard	SR5	2175 (4800)
	4.7 L V8 (2UZ–FE)	Two–wheel drive models	Standard	SR5	3035 (6700)
					3670 (8100)*2
				Limited	2990 (6600)
					3670 (8100)*2
			Long	SR5	3625 (8000)*2
		Four–wheel drive models	Standard	SR5	2900 (6400)
					3535 (7800)*2
				Limited	2855 (6300)
					3535 (7800)*2
			Long	SR5	3490 (7700)*2
	5.7 L V8 (3UR–FE)	Two–wheel drive models	Standard	SR5	3900 (8600)
					4805 (10600)*2
				Limited	3900 (8600)
					4805 (10600)*2
			Long	SR5	4760 (10500)*2
		Four–wheel drive models	Standard	SR5	3760 (8300)
					4670 (10300)*2
				Limited	3760 (8300)
					4670 (10300)*2
			Long	SR5	4625 (10200)*2

*1: Trailer weight + cargo weight
*2: With Towing package

kg (lb.)

Cab type	Engine	Driving system	Bed type	Grade	Towing capacity*1
Crew Max	4.7 L V8 (2UZ–FE)	Two–wheel drive models	Short	SR5	2945 (6500)
					3625 (8000)*2
				Limited	2945 (6500)
					3625 (8000)*2
		Four–wheel drive models		SR5	2810 (6200)
					3490 (7700)*2
				Limited	2810 (6200)
					3490 (7700)*2
	5.7 L V8 (3UR–FE)	Two–wheel drive models		SR5	3810 (8400)
					4715 (10400)*2
				Limited	3810 (8400)
					4715 (10400)*2
		Four–wheel drive models		SR5	3670 (8100)
					4580 (10100)*2
				Limited	3670 (8100)
					4580 (10100)*2

*1: Trailer weight + cargo weight
*2: With Towing package

Engine

Model:
4.0 L V6 (1GR–FE), 4.7 L V8 (2UZ–FE) and 5.7 L V8 (3UR–FE) engine

Type:
4.0 L V6 (1GR–FE) engine
6 cylinder V type, 4 cycle, gasoline

4.7 L V8 (2UZ–FE) engine
8 cylinder V type, 4 cycle, gasoline

5.7 L V8 (3UR–FE) engine
8 cylinder V type, 4 cycle, gasoline

Bore and stroke, mm (in.):

4.0 L V6 (1GR–FE) engine
94.0 × 95.0 (3.70 × 3.74)

4.7 L V8 (2UZ–FE) engine
94.0 × 84.0 (3.70 × 3.31)

5.7 L V8 (3UR–FE) engine
94.0 × 102.0 (3.70 × 4.02)

Displacement, cm^3 (cu. in.):
4.0 L V6 (1GR–FE) engine
3956 (241.4)
4.7 L V8 (2UZ–FE) engine
4664 (284.5)
5.7 L V8 (3UR–FE) engine
5663 (345.4)

Fuel

Fuel type:
Unleaded gasoline, Octane Rating 87 (Research Octane Number 91) or higher.

Fuel tank capacity, L (gal., Imp. gal.):

100 (26.4, 22.0)

Service specifications

ENGINE

Valve clearance (engine cold), mm (in.):

4.0 L V6 (1GR–FE) engine

Intake	0.15—0.25 (0.006—0.010)
Exhaust	0.29—0.39 (0.011—0.015)

4.7 L V8 (2UZ–FE) engine

Intake	0.15—0.25 (0.006—0.010)
Exhaust	0.25—0.35 (0.010—0.014)

5.7 L V8 (3UR–FE) engine
Automatic adjustment

Spark plug type:

4.0 L V6 (1GR–FE) engine

DENSO	K20HR–U11
NGK	LFR6C11

4.7 L V8 (2UZ–FE) engine

DENSO	SK20R11
NGK	IFR6A11

5.7 L V8 (3UR–FE) engine

DENSO	SK20HR11

Spark plug gap, mm (in.):
1.1 (0.043)

ENGINE LUBRICATION

Oil capacity (drain and refill),
L (qt., Imp. qt.):

4.0 L V6 (1GR–FE) engine

With filter	5.2 (5.5, 4.6)
Without filter	4.9 (5.2, 4.3)

4.7 L V8 (2UZ–FE) engine

With filter	6.2 (6.6, 5.5)
Without filter	5.7 (6.0, 5.0)

5.7 L V8 (3UR–FE) engine

With filter	7.0 (7.4, 6.2)
Without filter	6.6 (6.9, 5.8)

“Toyota Genuine Motor Oil” is used in your Toyota vehicle. Use Toyota approved “Toyota Genuine Motor Oil” or equivalent to satisfy the following grade and viscosity.

Oil grade:
ILSAC multigrade engine oil

Recommended oil viscosity:
4.0 L V6 (1GR–FE) and 4.7 L V8 (2UZ–FE) engine
SAE 5W–30

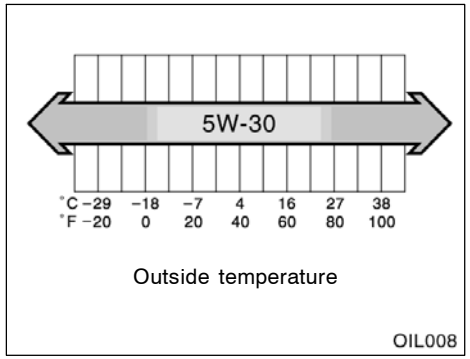

5.7 L V8 (3UR–FE) engine
SAE 5W–20 or 0W–20

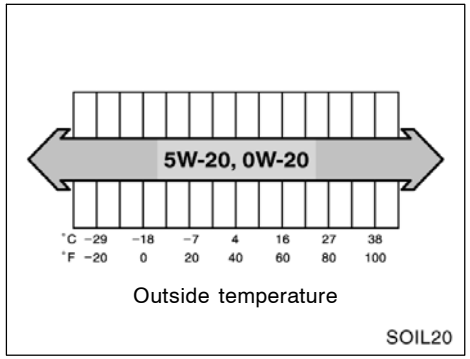

Please contact your Toyota dealer for further details.

COOLING SYSTEM

Total capacity, L (qt., Imp. qt.):

4.0 L V6 (1GR–FE) engine
9.6 (10.1, 8.4)

4.7 L V8 (2UZ–FE) engine
9.7 (10.3, 8.5)

5.7 L V8 (3UR–FE) engine
With towing package
13.0 (13.7, 11.4)
Without towing package
12.1 (12.8, 10.6)

Coolant type:

"Toyota Super Long Life Coolant" is used in your Toyota vehicle at factory fill. In order to avoid technical problems, only use "Toyota Super Long Life Coolant" or similar high quality ethylene glycol based non–silicate, non–amine, non–nitrite, and non–borate coolant with long–life hybrid organic acid technology. (Coolant with long–life hybrid organic acid technology is a combination of low phosphates and organic acids.)

Do not use plain water alone.

Please contact your Toyota dealer for further details.

BATTERY

Open voltage* at 20°C (68°F):

12.6—12.8 V	Fully charged
12.2—12.4 V	Half charged
11.8—12.0 V	Discharged

*: Voltage that is checked 20 minutes after the key is removed with all the lights turned off

Charging rates:
5 A max.

AUTOMATIC TRANSMISSION

Fluid capacity (drain and refill),
L (qt., Imp. qt.):
Up to 3.0 (3.2, 2.6)

Fluid type:
Toyota Genuine ATF WS

Change automatic transmission fluid only as necessary.

Generally, it is necessary to change automatic transmission fluid only if your vehicle is driven under one of the Special Operating Conditions listed in your "Scheduled Maintenance Guide" or "Owner's Manual Supplement". When changing the automatic transmission fluid, use only "Toyota Genuine ATF WS" (ATF JWS3324 or NWS9638) to aid in assuring optimum transmission performance.

Notice: Using automatic transmission fluid other than "Toyota Genuine ATF WS" may cause deterioration in shift quality, locking up of your transmission accompanied by vibration, and ultimately damage the automatic transmission of your vehicle.

Please contact your Toyota dealer for further details.

TRANSFER

Oil capacity, L (qt., Imp. qt.):
1.12 (1.2, 1.0)

Oil type:
Gear Oil API GL–4 or GL–5

Recommended oil viscosity:
SAE 75W–90

DIFFERENTIAL

Oil capacity, L (qt., Imp. qt.):

Front differential
(four–wheel drive models)
2.10 (2.2, 1.8)

Rear differential

4.0 L V6 (1GR–FE) and 4.7 L V8 (2UZ–FE) engine

Regular cab models

Standard bed	4.05 (4.3, 3.6)
Long bed	4.60 (4.9, 4.0)

Double cab and Crew Max models
4.60 (4.9, 4.0)

5.7 L V8 (3UR–FE) engine

Regular cab models

Standard bed	3.45 (3.6, 3.0)
Long bed	3.60 (3.8, 3.2)

Double cab models

Standard bed	3.60 (3.8, 3.2)
Long bed	3.75 (4.0, 3.3)

Crew Max models

Two–wheel drive model
3.75 (4.0, 3.3)

Four–wheel drive model
3.60 (3.8, 3.2)

Oil type and viscosity:
Toyota Genuine Differential Gear Oil LT 75W–85 GL–5 or equivalent

“Genuine Differential Gear Oil” is filled in your Toyota vehicle at factory fill. Use Toyota approved “Genuine Differential Gear Oil” or an equivalent of matching quality to satisfy the above specification. Please contact your Toyota dealer for further details.

CHASSIS LUBRICATION

Front drive shaft thrust bushings:
Synthetic oil and lithium soap base chassis grease, NLGI No.1

Propeller shafts:

Spiders
Lithium base chassis grease, NLGI No.2

Slide yokes
Lithium base chassis grease, NLGI No.2 or Molybdenum–disulfide lithium base chassis grease, NLGI No.2

BRAKES

Minimum pedal clearance when depressed with the force of 490 N (50 kgf, 110 lbf) with the engine running, mm (in.):
104 (4.1)

Pedal free play, mm (in.):
1—5 (0.04—0.20)

Pad wear limit, mm (in.):
1.0 (0.04)

Lining wear limit, mm (in.):
1.0 (0.04)

Parking brake adjustment:

Pedal type—when depressed with the force of 300 N (30.6 kgf, 67.1 lbf)
6—9 clicks

Fluid type:
SAE J1703 or FMVSS No.116 DOT 3

STEERING

Wheel free play:
Less than 30 mm (1.2 in.)

Power steering fluid type:
Automatic transmission fluid DEXRON®II or III

Tires

Tire size, cold tire inflation pressure and wheel size:

Tire size	Cold tire inflation pressure kPa (kgf/cm^2 or bar, psi)		Temporary spare	Wheel size
	Front	Rear		
P255/70R18 112T	210 (2.1, 30)	230 (2.3, 33)	230 (2.3, 33)	18 × 8J
P275/65R18 114T	210 (2.1, 30)	230 (2.3, 33)	230 (2.3, 33)	18 × 8J
P275/55R20 111H	210 (2.1, 30)	230 (2.3, 33)	230 (2.3, 33)	20 × 8J

Wheel nut torque, N·m (kgf·m, ft·lbf):

Steel wheels	209 (21.3, 154)
Aluminum wheels	131 (13.4, 97)

NOTE: For complete information on tires (e.g. replacing tires or replacing wheels), see “Checking tire inflation pressure” through “Wheel precautions”, pages 548 through 557, in Section 7–2.

Fuses

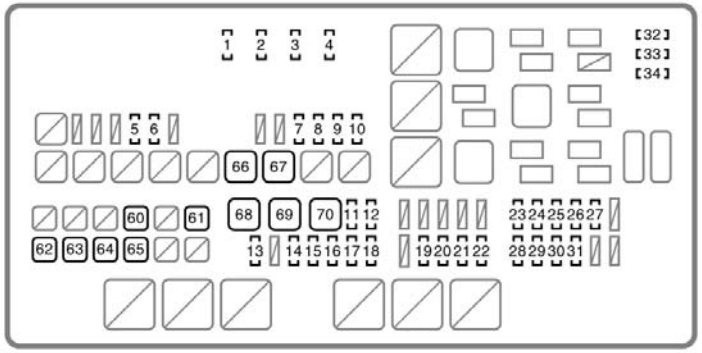

Engine compartment

Fuses (type A)

1. **A/F 15 A:** Multiport fuel injection system/sequential multiport fuel injection system
2. **HORN 10 A:** Horn
3. **EFI NO.1 25 A:** Multiport fuel injection system/sequential multiport fuel injection system
4. **IG2 MAIN 30 A:** “INJ”, “MET”, “IGN” fuses
5. **DEICER 20 A:** Front window deicer
6. **TOW TAIL 30 A:** Trailer lights (tail lights)
7. **POWER NO.2 30 A:** Power back window
8. **FOG 15 A:** Front fog lights
9. **STOP 15 A:** Stop lights, high mounted stop light, vehicle stability control system, anti–lock brake system, shift lock system, multiport fuel injection system/sequential multiport fuel injection system, towing converter
10. **TOW BRK 30 A:** Trailer brake controller
11. **IMB 7.5 A:** Engine immobilizer system
12. **AM2 7.5 A:** Starting system
13. **TOWING 30 A:** Towing converter
14. **ALT–S 5 A:** Charging system

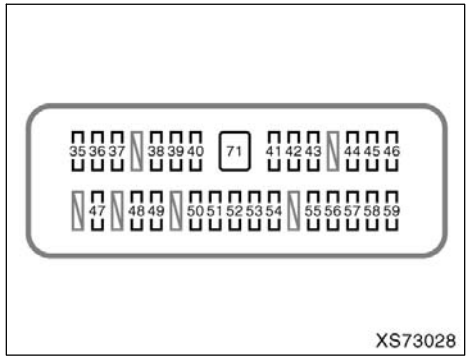

Instrument panel

15. **TURN–HAZ 15 A:** Turn signal lights, emergency flashers, towing converter
16. **F/PMP 15 A:** No circuit
17. **ETCS 10 A:** Multiport fuel injection system/Sequential multiport fuel injection system, electric throttle control system
18. **MET–B 5 A:** Gauges and meters
19. **AMP 30 A:** Audio system, rear view monitor, navigation system, rear seat entertainment system
20. **RAD NO.1 15 A:** Audio system, rear view monitor, navigation system, rear seat entertainment system
21. **ECU–B1 7.5 A:** Multiplex communication system, Multiport fuel injection system/sequential multiport fuel injection system, auto anti–glare inside rear view mirror, power outlets, power front drivers seat, power tilt and telescopic system
22. **DOME 7.5 A:** Interior lights, personal lights, vanity lights, ignition switch light, foot light, door courtesy lights, accessory meter
23. **HEAD LH 15 A:** Left–hand headlight (high beam)
24. **HEAD LL 15 A:** Left–hand headlight (low beam)
25. **INJ 10 A:** Multiport fuel injection system/sequential multiport fuel injection system, ignition system
26. **MET 7.5 A:** Gauges and meters
27. **IGN 10 A:** SRS airbag system, multiport fuel injection system/sequential multiport fuel injection system, engine immobilizer system, cruise control system
28. **HEAD RH 15 A:** Right–hand headlight (high beam)
29. **HEAD RL 15 A:** Right–hand headlight (low beam)
30. **EFI NO.2 10 A:** Multiport fuel injection system/sequential multiport fuel injection system, leak detection pump
31. **DEF I/UP 5 A:** No circuit
32. **SPARE 5 A:** Spare fuse
33. **SPARE 15 A:** Spare fuse
34. **SPARE 30 A:** Spare fuse
35. **INVERTER 15 A:** Power outlet No circuit(115 V)
36. **FR P/SEAT LH 30 A:** Power front drivers seat
37. **DR/LCK 25 A:** Multiplex communication system
38. **OBD 7.5 A:** On–board diagnosis system
39. **PWR OUTLET 15 A:** Power outlets
40. **CARGO LP 7.5 A:** Cargo lamp
41. **AM1 7.5 A:** Shift lock system, starting system
42. **A/C 7.5 A:** Air conditioning system
43. **MIR 15 A:** Outside rear view mirror control, outside rear view mirror heaters
44. **FR P/SEAT RH 30 A:** Power front passenger seat
45. **TI&TE 15 A:** Power tilt and power telescopic

46. **S/ROOF 25 A:** Electric moon roof
47. **ECU–IG NO.1 7.5 A:** Anti–lock brake system, vehicle stability control system, multiplex communication system, intuitive parking assist system, power front drivers seat, power tilt and power telescopic, shift lock, tire pressure warning system, accessory meter, trailer towing, power outlet, electric moon roof
48. **LH–IG 7.5 A:** Back–up lights, charging system, gauge and meters, turn signal lights, air conditioning system, seat heaters, back window defogger
49. **4WD 20 A:** Four–wheel drive control system
50. **WSH 20 A:** Window washer
51. **WIPER 30 A:** Wiper and washer
52. **ECU–IG NO.2 7.5 A:** Multiplex communication system
53. **TAIL 15 A:** Tail lights, trailer lights (tail lights), parking lights, outside rear view mirror lights
54. **A/C IG 10 A:** Air conditioning system
55. **SEAT–HTR 20 A:** Seat heaters
56. **PANEL 7.5 A:** Instrument panel lights, glove box light, ashtray, accessory meter, audio system, rear view monitor, navigation system, rear seat entertainment system, gauges and meters, air conditioning system
57. **ACC 7.5 A:** Accessory meter, audio system, rear seat entertainment system, rear view monitor, navigation system, back–up lights, trailer lights (back–up lights), multiplex communication system, power outlet, outside rear view mirror
58. **BK/UP LP 10 A:** Back–up light, gauges and meters
59. **CIG 15 A:** Cigarette lighter

Fuses (type B)

60. **HTR 50 A:** Air conditioning system
61. **LH–J/B 150 A:** “AM1”, “TAIL”, “PANEL”, “ACC”, “CIG”, “LH–IG”, “4WD”, “ECU–IG NO.1”, “BK/UP LP”, “SEAT–HTR”, “A/C IG”, “ECU–IG NO.2”, “WSH”, “WIPER”, “OBD”, “A/C”, “TI&TE”, “FR P/SEAT RH”, “MIR”, “DR/LCK”, “FR P/SEAT LH”, “CARGO LP”, “PWR OUTLET”, “POWER NO.1” fuses
62. **ALT 180 A (3UR–FE engine with towing package), 140 A (others):** “LH–J/B”, “HTR”, “SUB BATT”, “TOW BRK”, “STOP”, “FOG”, “TOW TAIL”, “DEICER” fuses
63. **A/PUMP NO.1 50 A:** Multiport fuel injection system/sequential multiport fuel injection system
64. **A/PUMP NO.2 50 A:** Multiport fuel injection system/sequential multiport fuel injection system
65. **MAIN 40 A:** “HEAD LL”, “HEAD RL”, “HEAD LH”, “HEAD RH” fuses

Fuses (type C)

66. **DEFOG 40 A:** Back window defogger
67. **SUB BATT 40 A:** Trailer towing
68. **ABS1 50 A:** Anti–lock brake system, vehicle stability control system
69. **ABS2 40 A:** Anti–lock brake system, vehicle stability control system
70. **ST 30 A:** Starting system
71. **POWER NO.1 30 A:** Power windows, power back window

SECTION 9

REPORTING SAFETY DEFECTS FOR U.S. OWNERS AND CAMPER INFORMATION

Reporting safety defects for U.S. owners and camper information

Reporting safety defects for U.S. owners 592
Camper information 592

Reporting safety defects for U.S. owners

If you believe that your vehicle has a defect which could cause a crash or could cause injury or death, you should immediately inform the National Highway Traffic Safety Administration (NHTSA) in addition to notifying Toyota Motor Sales, U.S.A., Inc. (Toll–free: 1–800–331–4331).

If NHTSA receives similar complaints, it may open an investigation, and if it finds that a safety defect exists in a group of vehicles, it may order a recall and remedy campaign. However, NHTSA cannot become involved in individual problems between you, your dealer, or Toyota Motor Sales, U.S.A., Inc.

To contact NHTSA, you may call the Vehicle Safety Hotline toll–free at 1–888–327–4236 (TTY: 1–800–424–9153); go to *http://www.safercar.gov*; or write to: Administrator, NHTSA, 400 Seventh Street, SW., Washington, DC 20590. You can also obtain other information about motor vehicle safety from *http://www.safercar.gov.*

Camper information—

This information has been prepared in accordance with regulation issued by the National Highway Traffic Safety Administration of the U.S. Department of Transportation. It provides the purchasers and/or prospective purchasers of Toyota vehicles with information on truck–camper loading. Your Toyota dealer will help answer any questions you may have as you read this information.

—Center of gravity location

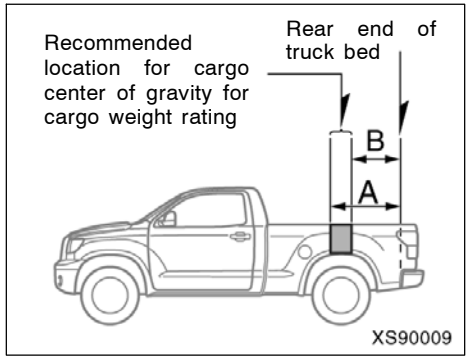

Regular cab models (with standard bed)

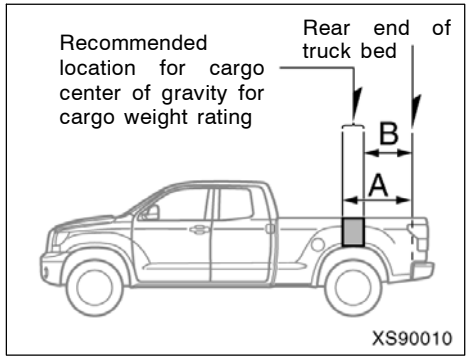

Double cab models (with standard bed)

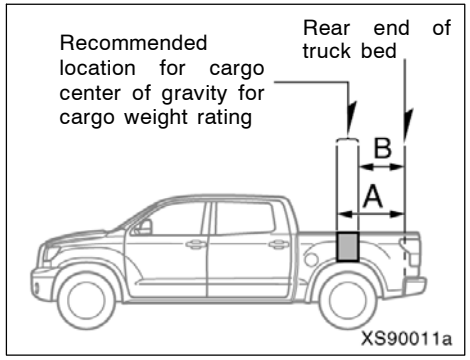

Crew Max models

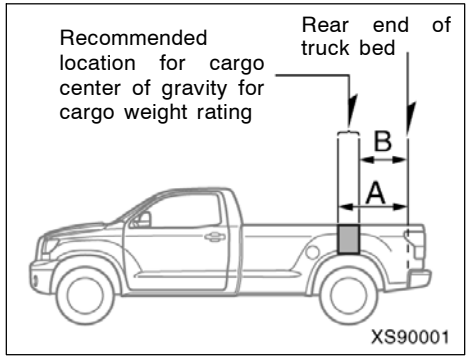

Regular cab models (with long bed)

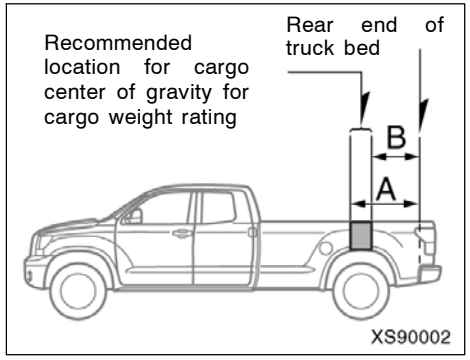

Double cab models (with long bed)

The figures given in the illustration indicate the recommended center of gravity zone.

mm (in.)

	A	B
Regular cab models	1082 (42.6)	955 (37.6)
Double cab models		
Crew Max models		

⚠ CAUTION

If a load is too far back, it can cause dangerous handling. If it is too far forward, the front axle may be overloaded.

—Cargo weight rating and proper matching

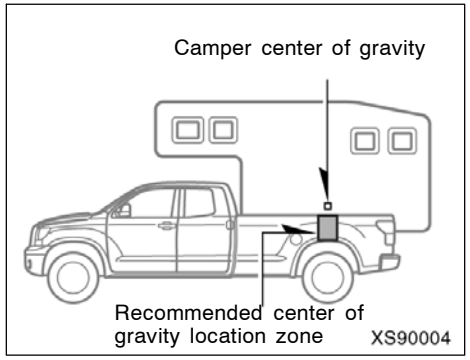

CWR: Cargo Weight Rating

Engine	Drive	Cab	Bed	Grade	Passenger number	C.W.R	
						(kg)	(lb.)
1GR	2WD	Regular	Standard	—	3	474	1045
			Long		3	510	1125
2UZ	2WD		Standard		3	547	1205
			Long		3	592	1305
	4WD		Standard		3	519	1145
			Long		3	562	1240
3UR	2WD		Standard		3	515	1135
			Long		3	658	1450
	4WD		Standard		3	490	1080
			Long		3	628	1385

CWR: Cargo Weight Rating

Engine	Drive	Cab	Bed	Grade	Passenger number	C.W.R	
						(kg)	(lb.)
1GR	2WD	Double	Standard	SR5	6	181	400
2UZ	2WD		Standard	SR5	6	200	440
				Limited	5	284	625
			Long	SR5	6	184	405
	4WD		Standard	SR5	6	161	355
				Limited	5	243	535
			Long	SR5	6	145	320
3UR	2WD		Standard	SR5	6	261	575
				Limited	5	347	765
			Long	SR5	6	252	555
	4WD		Standard	SR5	6	225	495
				Limited	5	308	680
			Long	SR5	6	211	465

CWR: Cargo Weight Rating

Engine	Drive	Cab	Bed	Grade	Passenger number	C.W.R	
						(kg)	(lb.)
2UZ	2WD	Crew Max	Short	SR5	6	147	325
				Limited	5	227	500
	4WD			SR5	6	113	250
				Limited	5	191	420
3UR	2WD			SR5	6	209	460
				Limited	5	304	670
	4WD			SR5	6	177	390
				Limited	5	254	560

When the truck is used to carry a slide–in camper, the total cargo load of the truck consists of the manufacturer's camper weight figure, the weight of installed additional camper equipment not included in the manufacturer's camper weight figure, the weight of camper cargo, and the weight of passengers in the camper.

The total cargo load should not exceed the truck's cargo weight rating and the camper's center of gravity should fall within the truck's recommended center of gravity zone when installed.

⚠ CAUTION

Be careful—overloading can cause dangerous braking and handling problems, and can damage your vehicle and its tires.

—Gross axle and vehicle weight ratings

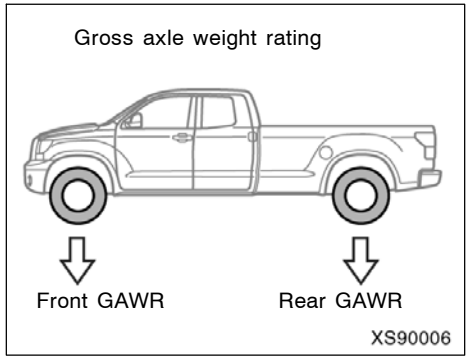

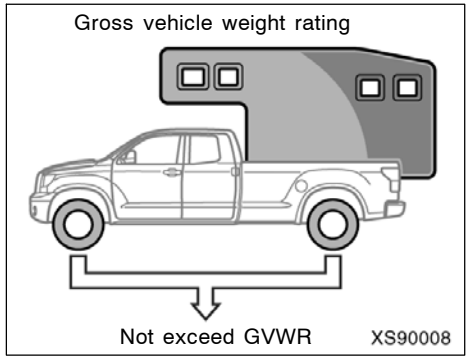

Secure loose items to prevent weight shifts that could affect the balance of your vehicle. When the truck camper is loaded, drive to a scale and weigh on the front and on the rear wheels separately to determine axle loads. Individual axle loads should not exceed either of the Gross Axle Weight Ratings (GAWR). The total of the axle loads should not exceed the Gross Vehicle Weight Rating (GVWR). These ratings are given on the vehicle certification label which is located on the door latch post on the left side of the vehicle. See “Your Toyota’s identification” on page 449 in Section 2 for the Certification Label location. If weight ratings are exceeded, move or remove items to bring all weights below the ratings.

GAWR, GVWR

kg (lb.)

Cab type	Engine	Driving system	Bed type	GAWR		GVWR
				Front	Rear	
Regular	4.0 L V6 (1GR–FE)	2WD	Standard	1765 (3900)	1675 (3700)	2810 (6200)
			Long	1765 (3900)	1720 (3800)	2900 (6400)
	4.7 L V8 (2UZ–FE)	2WD	Standard	1765 (3900)	1790 (3950)	2990 (6600)
			Long	1765 (3900)	1835 (4050)	3080 (6800)
		4WD	Standard	1810 (4000)	1835 (4050)	3080 (6800)
			Long	1810 (4000)	1880 (4150)	3175 (7000)
	5.7 L V8 (3UR–FE)	2WD	Standard	1765 (3900)	1790 (3950)	2990 (6600)
			Long	1765 (3900)	1880 (4150)	3175 (7000)
		4WD	Standard	1810 (4000)	1835 (4050)	3080 (6800)
			Long	1810 (4000)	1880 (4150)	3265 (7200)

kg (lb.)

Cab type	Engine	Driving system	Bed type	Grade	GAWR		GVWR
					Front	Rear	
Double	4.0 L V6 (1GR–FE)	2WD	Standard	SR5	1765 (3900)	1720 (3800)	2900 (6400)
	4.7 L V8 (2UZ–FE)	2WD	Standard	SR5	1765 (3900)	1810 (4000)	3035 (6700)
				Limited	1765 (3900)	1810 (4000)	3035 (6700)
			Long	SR5	1765 (3900)	1835 (4050)	3080 (6800)
		4WD	Standard	SR5	1810 (4000)	1855 (4100)	3125 (6900)
				Limited	1810 (4000)	1855 (4100)	3125 (6900)
			Long	SR5	1810 (4000)	1880 (4150)	3175 (7000)
	5.7 L V8 (3UR–FE)	2WD	Standard	SR5	1765 (3900)	1855 (4100)	3125 (6900)
				Limited	1765 (3900)	1855 (4100)	3125 (6900)
			Long	SR5	1765 (3900)	1880 (4150)	3175 (7000)
		4WD	Standard	SR5	1810 (4000)	1880 (4150)	3220 (7100)
				Limited	1810 (4000)	1880 (4150)	3220 (7100)
			Long	SR5	1810 (4000)	1880 (4150)	3265 (7200)

kg (lb.)

Cab type	Engine	Driving system	Bed type	Grade	GAWR		GVWR
					Front	Rear	
Crew Max	4.7 L V8 (2UZ–FE)	2WD	Short	SR5	1765 (3900)	1835 (4050)	3080 (6800)
				Limited	1765 (3900)	1835 (4050)	3080 (6800)
		4WD		SR5	1810 (4000)	1880 (4150)	3175 (7000)
				Limited	1810 (4000)	1880 (4150)	3175 (7000)
	5.7 L V8 (3UR–FE)	2WD		SR5	1765 (3900)	1880 (4150)	3175 (7000)
				Limited	1765 (3900)	1880 (4150)	3175 (7000)
		4WD		SR5	1810 (4000)	1880 (4150)	3265 (7200)
				Limited	1810 (4000)	1880 (4150)	3265 (7200)

TU–3

Quick index

- If a service reminder indicator or warning buzzer comes on 197
- If your vehicle will not start 493
- If your engine stalls while driving 498
- If you cannot increase engine speed 498
- If your vehicle overheats 498
- If you have a flat tire 499
- If your vehicle needs to be towed 512
- Tips for driving during break–in period 438
- How to start the engine 469
- General maintenance 531

Gas station information

Fuel type:

UNLEADED gasoline, Octane Rating 87 (Research Octane Number 91) or higher

See page 438 for detailed information.

Fuel tank capacity:
100 L (26.4 gal., 22.0 Imp. gal.)

Engine oil:
ILSAC multigrade engine oil is recommended.

See page 545 for detailed information.

Tire information: See pages 549 through 558.

Tire inflation pressure: See page 586.

2007 TUNDRA from Jul. '07 Prod. (OM34463U)

Publication No. OM34463U
Part No. 01999-34463
Printed in Japan 01–0707–00 Z
222
(22U)