WATER PUMP ASSY (1ZZ–FE/3ZZ–FE)

INSPECTION

160AO–01

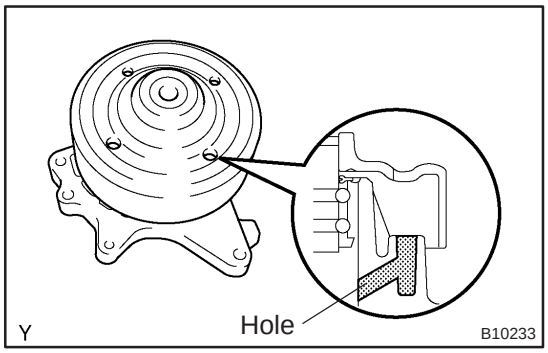

1. INSPECT WATER PUMP ASSY

(a) Visually check the drain hole for coolant leakage.

cardiagn.com

CYLINDER BLOCK (1ZZ–FE/3ZZ–FE)

COMPONENTS

140KO–01

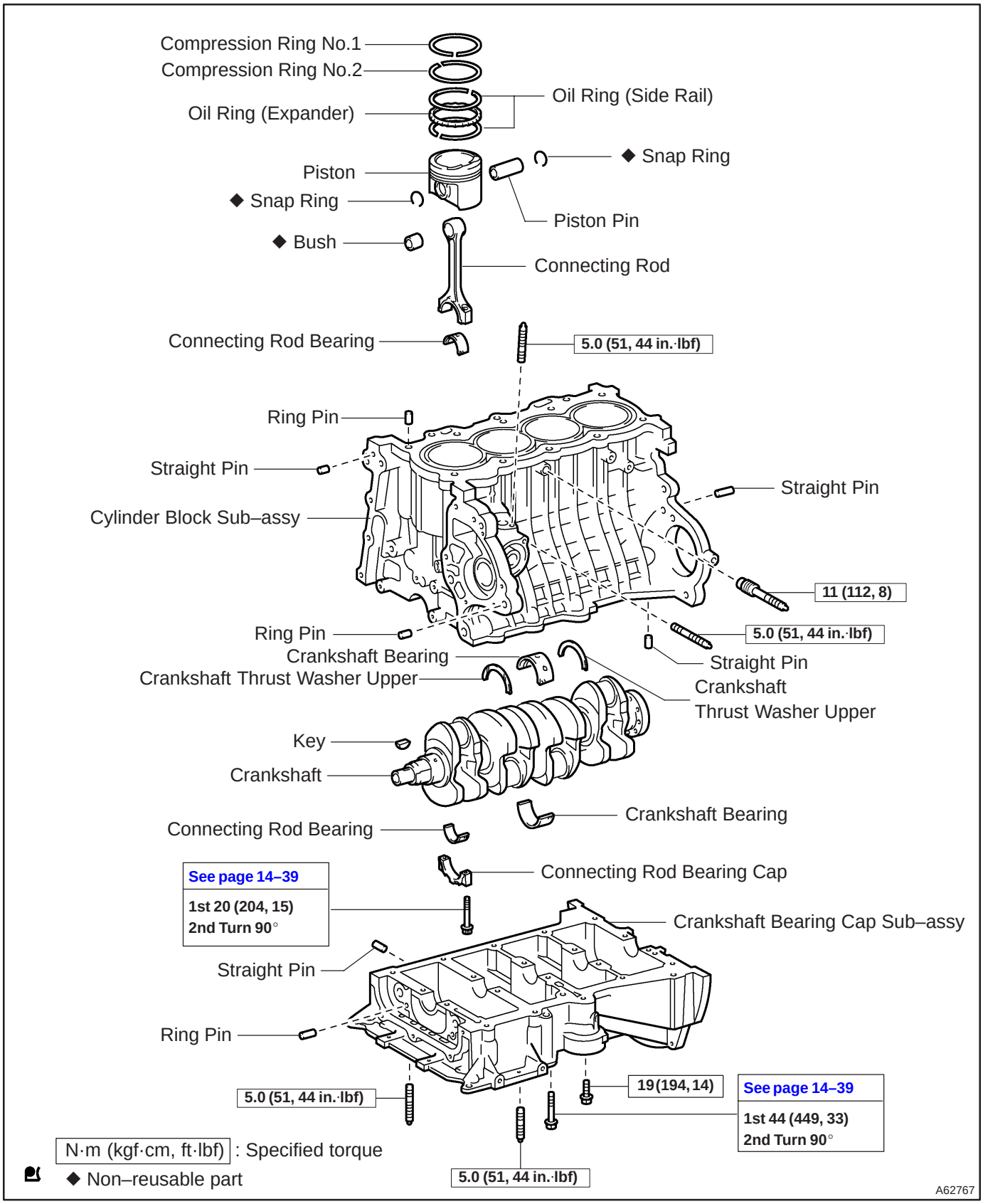

cardiagn.com

OVERHAUL

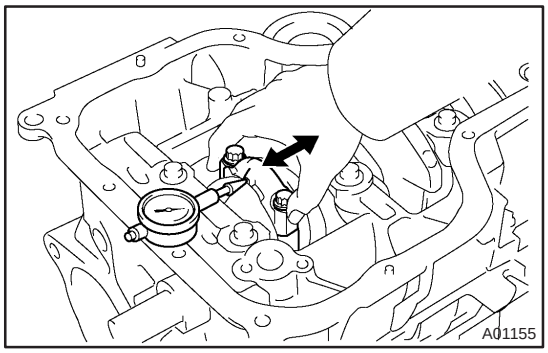

1. INSPECT CONNECTING ROD THRUST CLEARANCE

(a) Using a dial indicator, measure the thrust clearance while moving the connecting rod back and forth.
Standard thrust clearance:
0.160 – 0.342 mm (0.063 – 0.0135 in.)
Maximum thrust clearance: 0.342 mm (0.0135 in.)

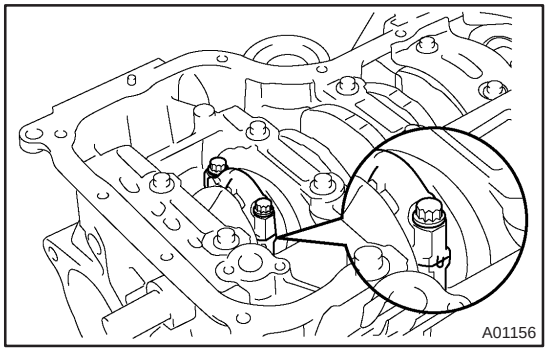

2. INSPECT CONNECTING ROD BEARING OIL CLEARANCE

NOTICE:
Do not turn the crankshaft.

(a) Using marking paint, write the matched cylinder number on each connecting rod and cap.

HINT:
The match marks on the connecting rods and caps are for ensuring correct reassembly.

(b) Using SST, remove the 2 connecting rod cap bolts.
SST 09205–16010

(c) Clean the crank pin and bearing.

(d) Check the crank pin and bearing for pitting and scratches.

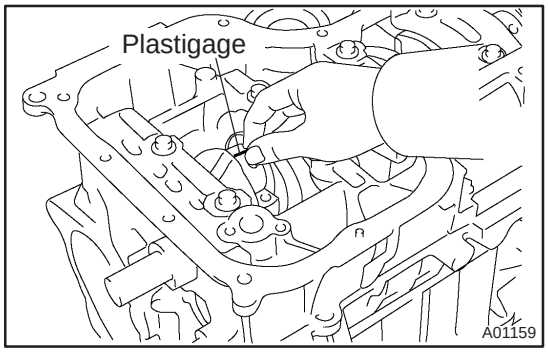

(e) Lay a strip of Plastigage across the crank pin.

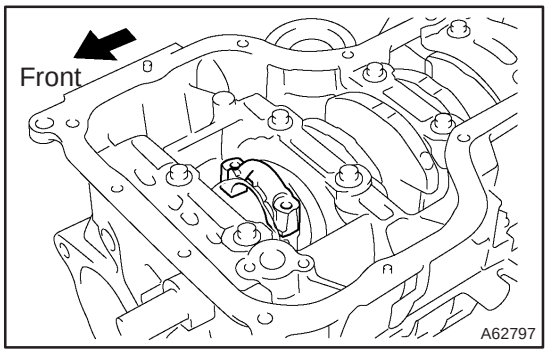

(f) Check that the protrusion of the connecting rod cap is facing in the correct direction.

cardiagn.com

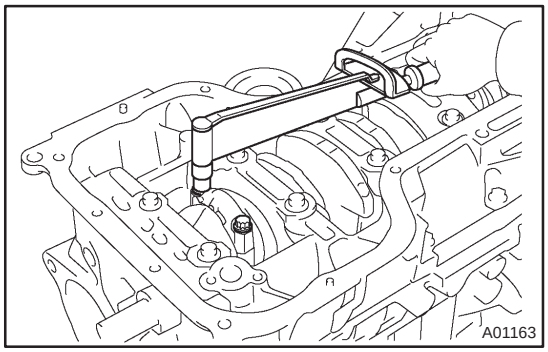

(g) Apply a light coat of engine oil on the threads and under the heads of the connecting rod cap bolts.

(h) Using SST, tighten the bolts in several passes by the specified torque.
SST 09205–16010
Torque: 20 N·m (204 kgf·cm, 15 ft·lbf)

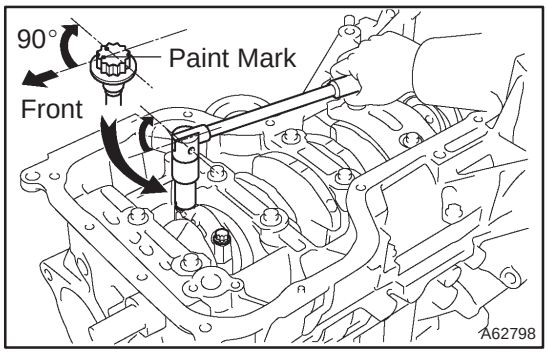

(i) Mark the front of the connecting cap bolts with paint.

(j) Retighten the cap bolts by 90° as shown in the illustration.

(k) Check that the crankshaft turns smoothly.

(l) Remove the 2 bolts, connecting rod cap and lower bearing.

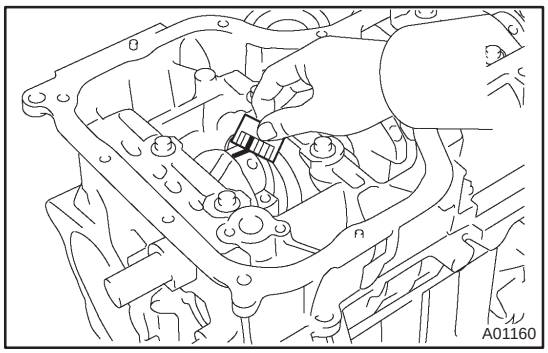

(m) Measure the Plastigage at its widest point.
Standard oil clearance:
0.028 – 0.060 mm (0.0011 – 0.0024 in.)
Maximum oil clearance: 0.080 mm (0.0031 in.)

NOTICE:
Remove the Plastigage completely after the measurement.

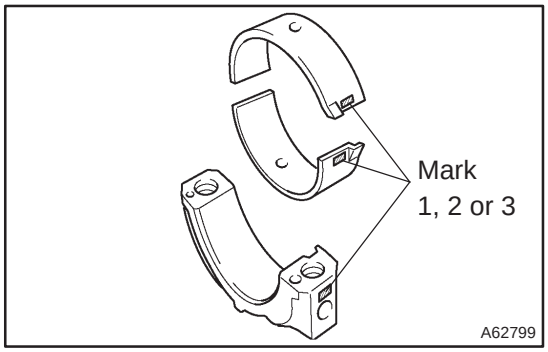

(n) If replacing a bearing, select a new one having the same number as marked on the connecting rod. There are 3 sizes of standard bearings, marked ”1”, ”2” and ”3” accordingly.
Reference:
Standard bearing center wall thickness

Mark	mm (in.)
1	1.486 – 1.490 (0.0585 – 0.0587)
2	1.490 – 1.494 (0.0587 – 0.0588)
3	1.494 – 1.498 (0.0588 – 0.0590)

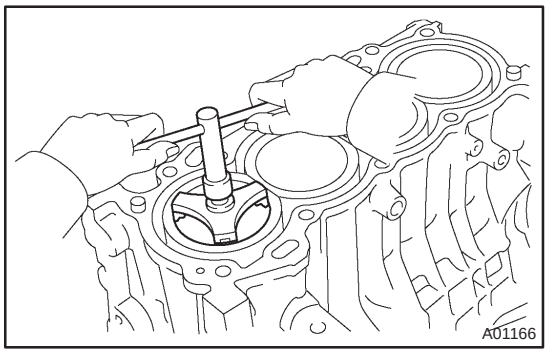

3. REMOVE PISTON SUB–ASSY W/CONNECTING ROD

(a) Using a ride reamer, remove all the carbon from the top of the cylinder.

(b) Push the piston, connecting rod assembly and upper bearing through the top of the cylinder block.

HINT:
- Keep the bearing, connecting rod and cap together.
- Arrange the piston and connecting rod assemblies in the correct order.

cardiagn.com

4. REMOVE CONNECTING ROD BEARING

(a) Remove the connecting rod bearing from the connecting rod and crankshaft.

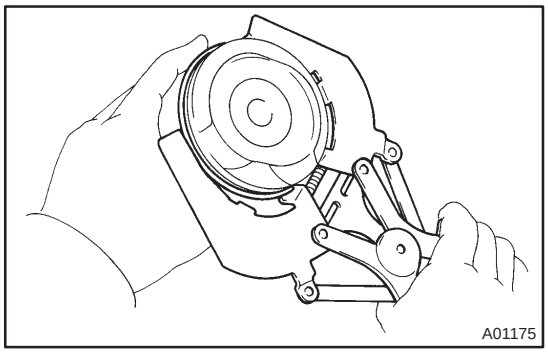

5. REMOVE PISTON RING SET

HINT:
Take care not to misplace the piston rings on both the match with the piston and the direction of the rings.

(a) Using a piston ring expander, remove the 2 compression rings.
(b) Remove the 2 side rails and oil ring by hand.

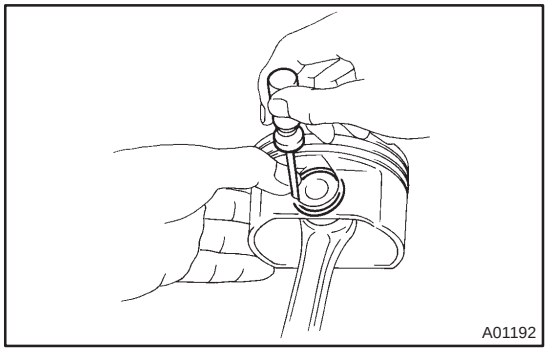

6. REMOVE PISTON PIN HOLE SNAP RING

(a) Using a small screwdriver, pry out the 2 snap rings.

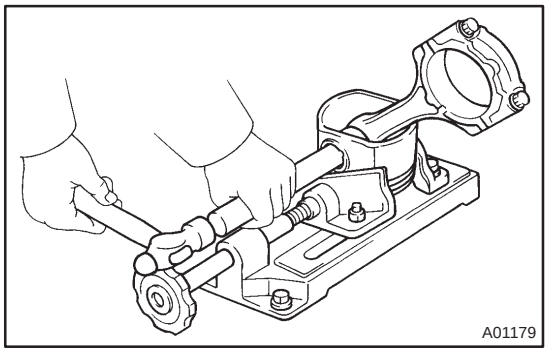

7. REMOVE W/PIN PISTON SUB–ASSY

(a) Gradually heat the piston to 80 – 90°C (176 – 194°F).
(b) Using a plastic hammer and brass bar, lightly tap out the piston pin and remove the connecting rod.

HINT:
- The piston and pin are a matched set.
- Arrange the piston, pins, ring, connecting rod and bearings in the correct order.

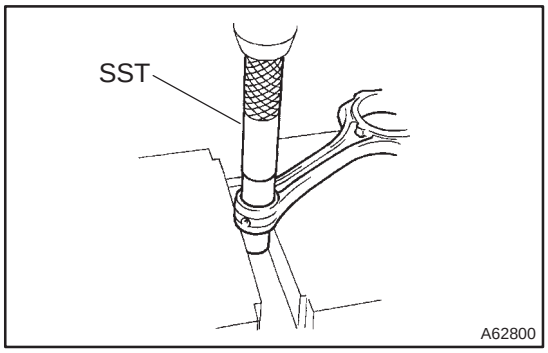

8. REMOVE CONNECTING ROD SMALL END BUSH

(a) Using SST and a press, press out the bushing.
SST 09222–30010

cardiagn.com

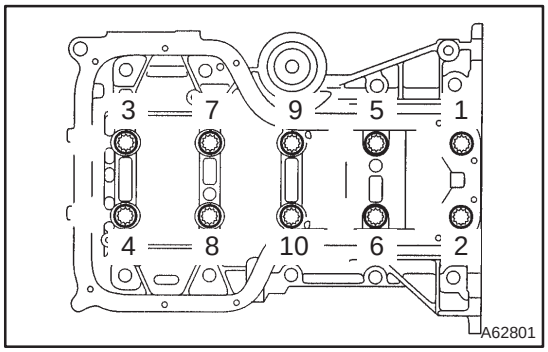

9. REMOVE CRANKSHAFT BEARING CAP SUB ASSY

(a) Remove the 10 bearing cap bolts.

(b) Uniformly loosen the 10 bearing cap sub–assy bolts, in several passes, in the sequence shown in the illustration.
SST 09011–38121

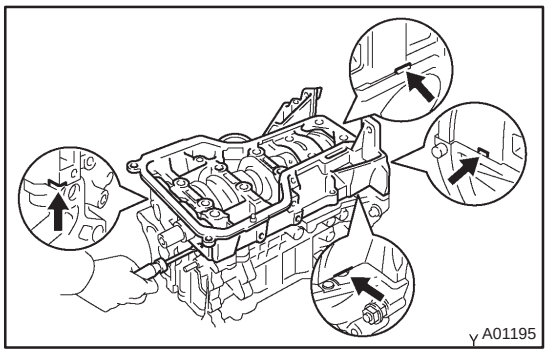

(c) Using a screwdriver, remove the bearing cap sub–assembly by prying the indicated portions between the cylinder block and bearing cap sub–assembly. Remove the 5 lower main bearings.

NOTICE:
Be careful not to damage the contact surfaces of the cylinder block and bearing cap sub–assembly.

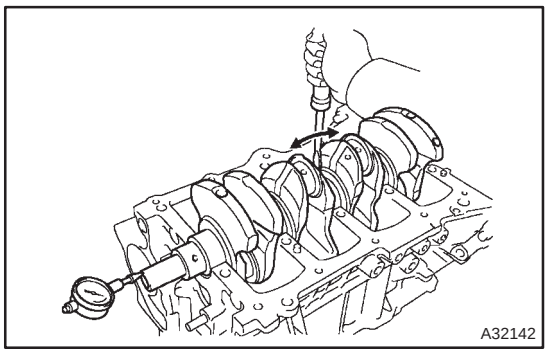

10. INSPECT CRANKSHAFT THRUST CLEARANCE

(a) Using a dial indicator, measure the thrust clearance while prying the crankshaft back and forth with a screwdriver.
Standard thrust clearance:
0.04 – 0.24 mm (0.0016 – 0.0094 in.)
Maximum thrust clearance: 0.30 mm (0.0118 in.)

(b) If the thrust clearance is greater than maximum, measure the thrust washer thickness. If the thickness is not specified, replace the thrust washer.
Thrust washer thickness:
2.430 – 2.480 mm (0.0957 – 0.0976 in.)

11. REMOVE CRANKSHAFT THRUST WASHER UPPER

(a) Remove the crankshaft thrust washer from the cylinder block.

12. REMOVE CRANKSHAFT

(a) Lift out the crankshaft.

(b) Remove the 5 upper main bearings and 2 thrust washers from the cylinder block.

NOTICE:
Arrange the main bearings and thrust washers in the correct order.

13. REMOVE CRANKSHAFT BEARING

(a) Remove the crankshaft bearing from the cylinder block.

14. REMOVE STUD BOLT

(a) Remove the 9 stud bolts from the cylinder block.

cardiagn.com

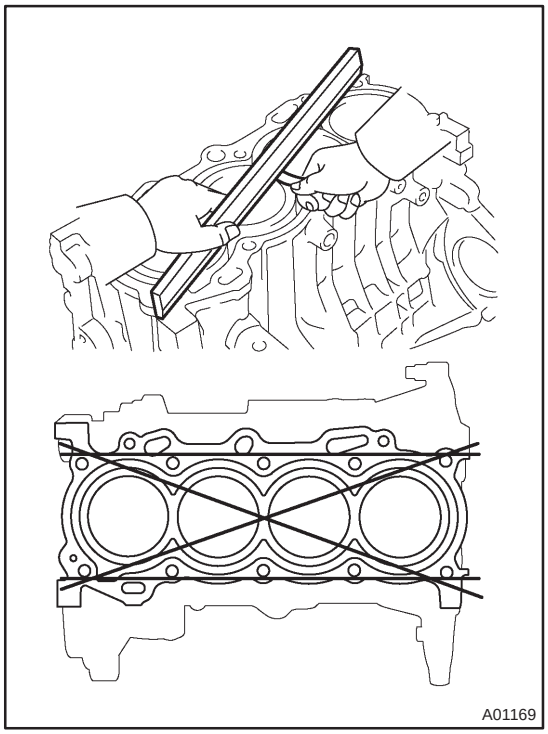

15. INSPECT CYLINDER BLOCK FOR FLATNESS

(a) Using a precision straight edge and feeler gauge, measure the surface contacting the cylinder head gasket for warpage.

Maximum warpage: 0.05 mm (0.0020 in.)

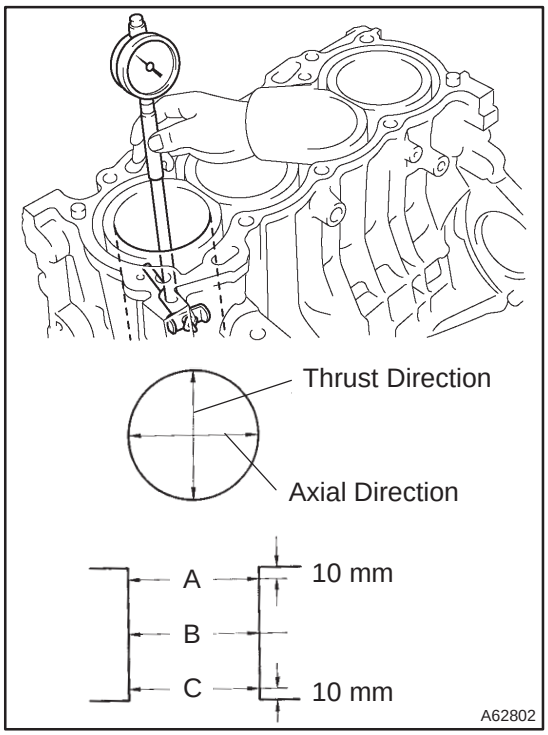

16. INSPECT CYLINDER BORE

(a) Using a cylinder gauge, measure the cylinder bore diameter at positions A, B and C in the thrust and axial directions.

Standard diameter:
79.000 – 79.013 mm (3.1102 – 3.1108 in.)
Maximum diameter: 79.013 mm (3.1108 in.)

If the diameter is greater than the maximum, replace the cylinder block.

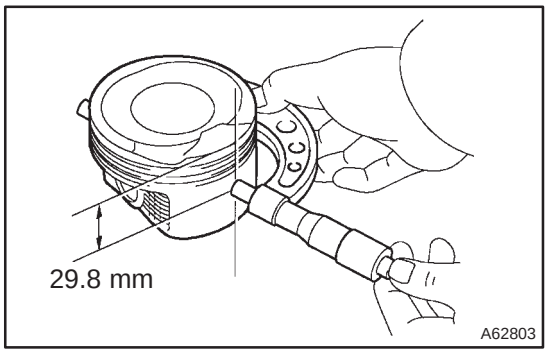

17. INSPECT PISTON DIAMETER

(a) Using a micrometer, measure the piston diameter at a right angle to the piston pin hole, and at the piston of 29.8 mm (1.173 in.) from the piston head.

Piston diameter:
1ZZ–FE 78.925 – 78.935 mm (3.1073 – 3.1077 in.)
3ZZ–FE 78.955 – 78.965 mm (3.1085 – 3.1089 in.)

cardiagn.com

18. INSPECT PISTON OIL CLEARANCE

(a) Subtract the piston diameter measurement from the cylinder bore diameter measurement.
Standard oil clearance:
1ZZ–FE 0.065 – 0.088 mm (0.0026 – 0.0035 in.)
3ZZ–FE 0.035 – 0.058 mm (0.0014 – 0.0023 in.)
Maximum oil clearance:
1ZZ–FE 0.088 mm (0.0035 in.)
3ZZ–FE 0.058 mm (0.0023 in.)

If the oil clearance is greater than maximum, replace all the 4 pistons. If necessary, replace the cylinder block.

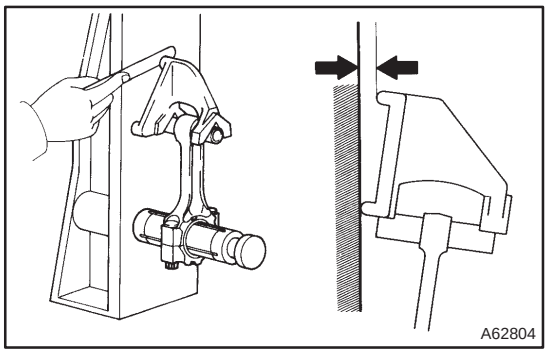

19. INSPECT CONNECTING ROD SUB–ASSY

(a) Using a connecting rod aligner and feeler gauge, check the connecting rod alignment.
(1) Check for out–of–alignment.
Maximum out–of alignment:
0.05 mm (0.0020 in.) per 100 mm (3.94 in.)

If out–of alignment is greater than maximum, replace the connecting rod assembly.

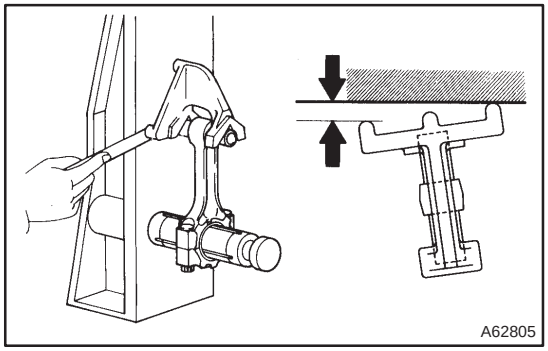

(2) Check for twist.
Maximum twist:
0.05mm (0.0020 in.) per 100 mm (3.94 in.)

If twist is greater than maximum, replace the connecting rod assembly.

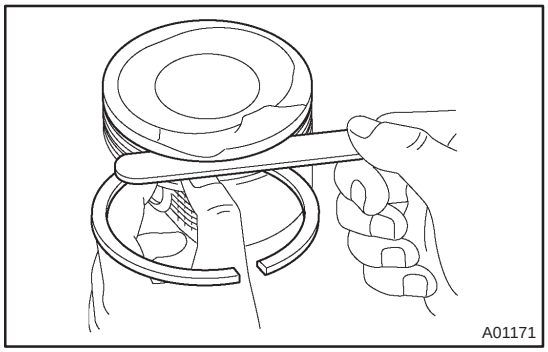

20. INSPECT RING GROOVE CLEARANCE

(a) Using a feeler gauge, measure the clearance between the new piston ring and the wall of the ring groove.
Ring groove clearance:
No. 1 0.020 – 0.070 mm (0.0008 – 0.0028 in.)
No. 2 0.030 – 0.070 mm (0.0012 – 0.0028 in.)

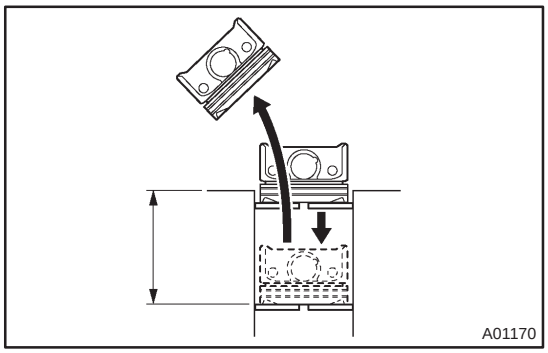

21. INSPECT PISTON RING END GAP

(a) Using a piston, push the piston ring a little beyond the bottom of the ring travel, that means 100 mm (3.94 in.) from the top of the cylinder block.

cardiagn.com

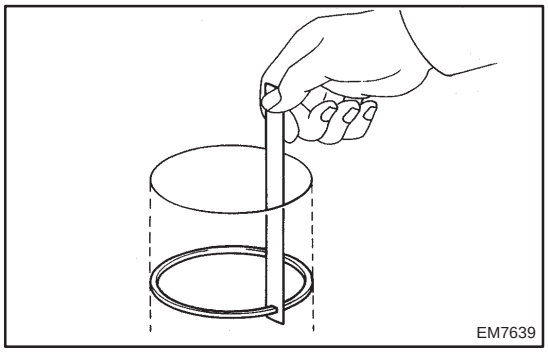

(b) Using a feeler gauge, measure the end gap.
Standard end gap:
No. 1 0.25 – 0.35 mm (0.0098 – 0.0138 in.)
No. 2 0.35 – 0.50 mm (0.0138 – 0.0197 in.)
Maximum end gap:
No. 1 0.74 mm (0.029 in.)
No. 2 0.89 mm (0.035 in.)

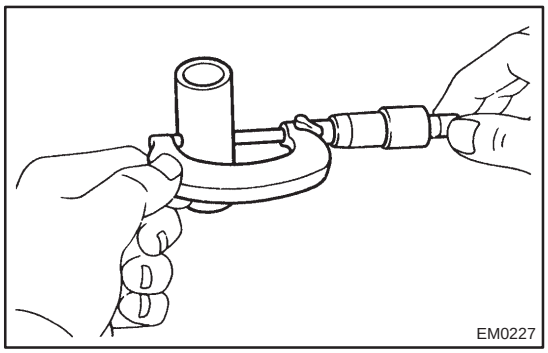

22. INSPECT PISTON PIN

(a) Using a micrometer, measure the piston pin diameter.
Piston pin diameter:
20.004 – 20.013 mm (0.7876 – 0.7879 in.)

NOTICE:
Push the piston pin into the matched piston.

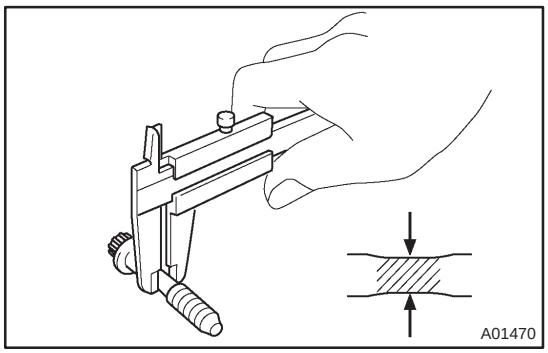

23. INSPECT CONNECTING ROD BOLT

(a) Using a vernier caliper, measure the tension portion diameter of the bolts.
Standard diameter:
6.6 – 6.7 mm (0.260 – 0.264 in.)
Maximum diameter: 6.4 mm (0.252 in.)

(b) If the diameter is less than minimum, replace the bolt.

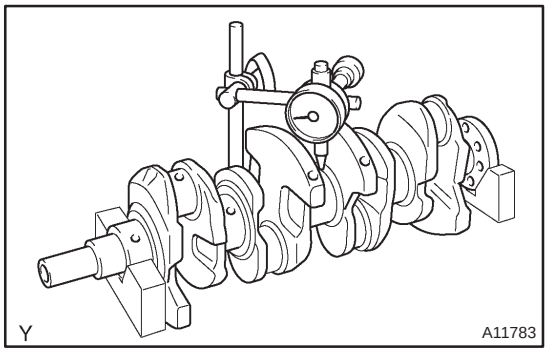

24. INSPECT CRANKSHAFT

(a) Using a dial indicator and V–blocks, measure the circle runout, as shown in the illustration.
Maximum circle runout: 0.03 mm (0.0012 in.)

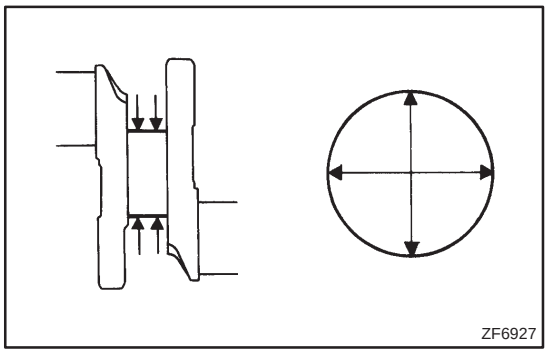

(b) Using a micrometer, measure the diameter of each main journal at the points shown in the illustration.
Diameter: 47.988 – 48.000 mm (1.8893 – 1.8898 in.)

(c) Check each main journal for taper and out–of–round as shown.
Maximum taper and out–of–round:
0.02 mm (0.0008 in.)

cardiagn.com

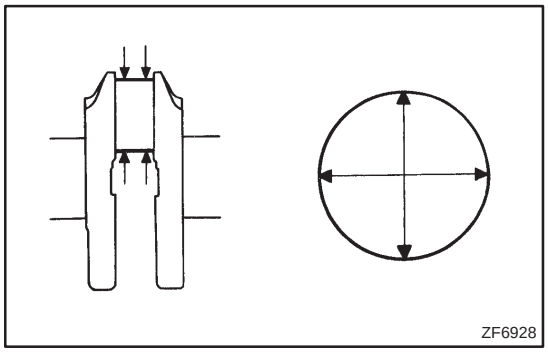

(d) Using a micrometer, measure the diameter of each crank pin at the points shown in the illustration.
Diameter: 43.992 – 44.000 mm (1.7320 – 1.7323 in.)

(e) Check each crank pin for taper and out–of–round as shown.
Maximum taper and out–of–round:
0.02 mm (0.0008 in.)

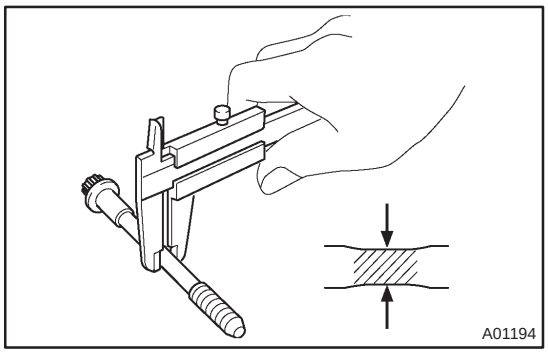

25. INSPECT CRANKSHAFT BEARING CAP SET BOLT

(a) Using vernier caliper, measure the tension portion diameter of the bolts.
Standard diameter: 7.3 – 7.5 mm (0.287 – 0.295 in.)
Minimum diameter: 7.2 mm (0.283 in.)

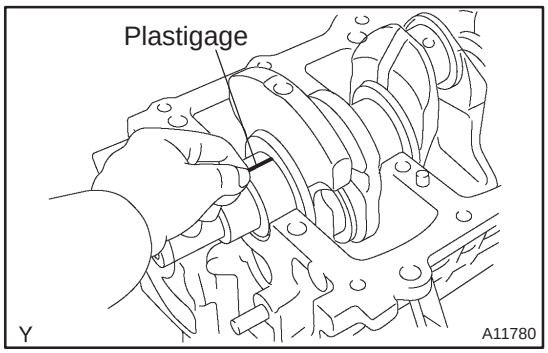

26. INSPECT CRANKSHAFT OIL CLEARANCE

(a) Clean each main journal and bearing.

(b) Place the crankshaft on the cylinder block.

(c) Lay a strip of Plastigage across each journal.

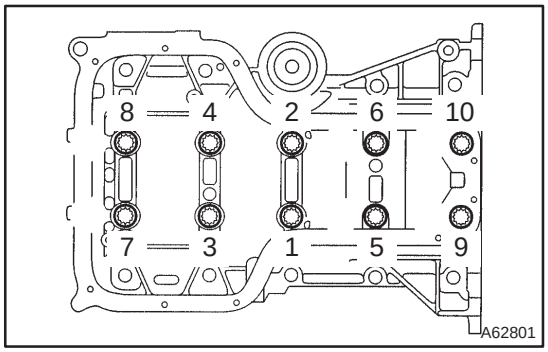

(d) Using SST, tighten the bolts in several passes, in the sequence shown, by the specified torque.
SST 09011–38121
Torque: 44 N·m (449 kgf·cm, 33 ft·lbf)

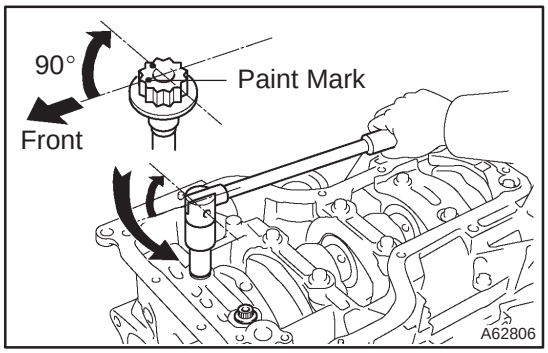

(e) Mark the front of the bearing cap sub–assembly bolts with paint.

(f) Retighten the bearing cap sub–assy bolts by 90° as shown in the illustration.

(g) Check that the painted mark is now at a 90° angle to the front.

NOTICE:
Do not turn the crankshaft.

(h) Remove the bearing cap sub–assy.

cardiagn.com

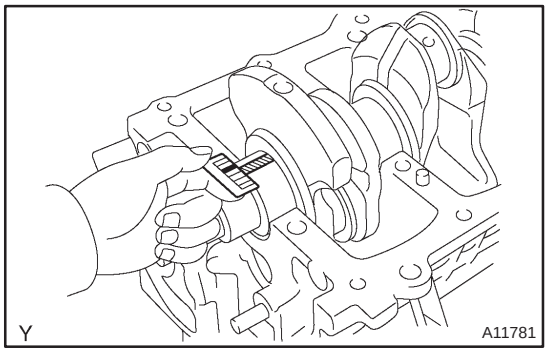

(i) Measure the Plastigage at its widest point.
Standard oil clearance:
0.013 – 0.030 mm (0.0005 – 0.0012 in.)
Minimum oil clearance: 0.05 mm (0.0020 in.)

NOTICE:
Completely remove the plastigage

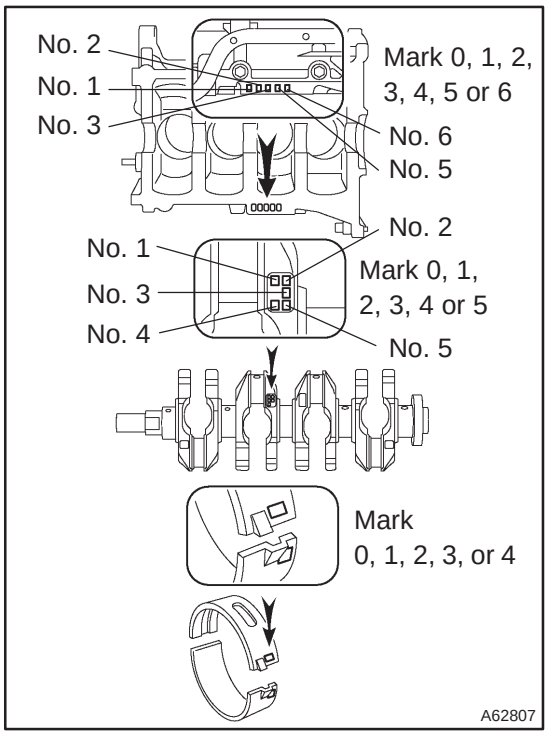

(j) If replacing a bearing, select a new one having the same number. If the number of the bearing cannot be determined, calculate the correct use bearing number by adding together the numbers imprinted on the cylinder block and crankshaft, then select a new bearing having the calculated number. There are 4 sizes of standard bearings, marked ”1”, ”2”, ”3” and ”4” accordingly.

Cylinder block (A) + Crankshaft (B)	0–2	3–5	6–8	9–11
Use bearing	”1”	”2”	”3”	”4”

HINT:
EXAMPLE:
Cylinder block ”4” (A) + Crankshaft ”3” (B) = Total number 7 (Use bearing ”3”)

Item	Mark	mm (in.)
Cylinder block main journal bore diameter (A)	”0”	52.000 – 52.003 (2.0472 – 2.0473)
	”1”	52.003 – 52.005 (2.0473 – 2.0474)
	”2”	52.005 – 52.007 (2.0474 – 2.0475)
	”3”	52.007 – 52.010 (2.0475 – 2.0476)
	”4”	52.010 – 52.012 (2.0476 – 2.0477)
	”5”	52.012 – 52.014 (2.0477 – 2.0478)
	”6”	52.014 – 52.016 (2.0478 – 2.0479)
Crankshaft main journal diameter (B)	”0”	47.998 – 48.000 (1.8897 – 1.8898)
	”1”	47.996 – 47.998 (1.8896 – 1.8897)
	”2”	47.994 – 47.996 (1.8895 – 1.8896)
	”3”	47.992 – 47.994 (1.8894 – 1.8895)
	”4”	47.990 – 47.992 (1.8893 – 1.8894)
	”5”	47.988 – 47.990 (1.8892 – 1.8893)
Standard bearing center wall thickness	”1”	1.994 – 1.997 (0.0785 – 0.0786)
	”2”	1.997 – 2.000 (0.0786 – 0.0787)
	”3”	2.000 – 2.003 (0.0787 – 0.0789)
	”4”	2.003 – 2.006 (0.0789 – 0.0790)

cardiagn.com

27. INSTALL STUD BOLT

(a) Install the 9 stud bolt to the cylinder block.

Torque:
Stud bolt A, B and C 5.0 N·m (51 kgf·cm, 44 in.·lbf)
Stud bolt D 11 N·m (112 kgf·cm, 8 ft·lbf)

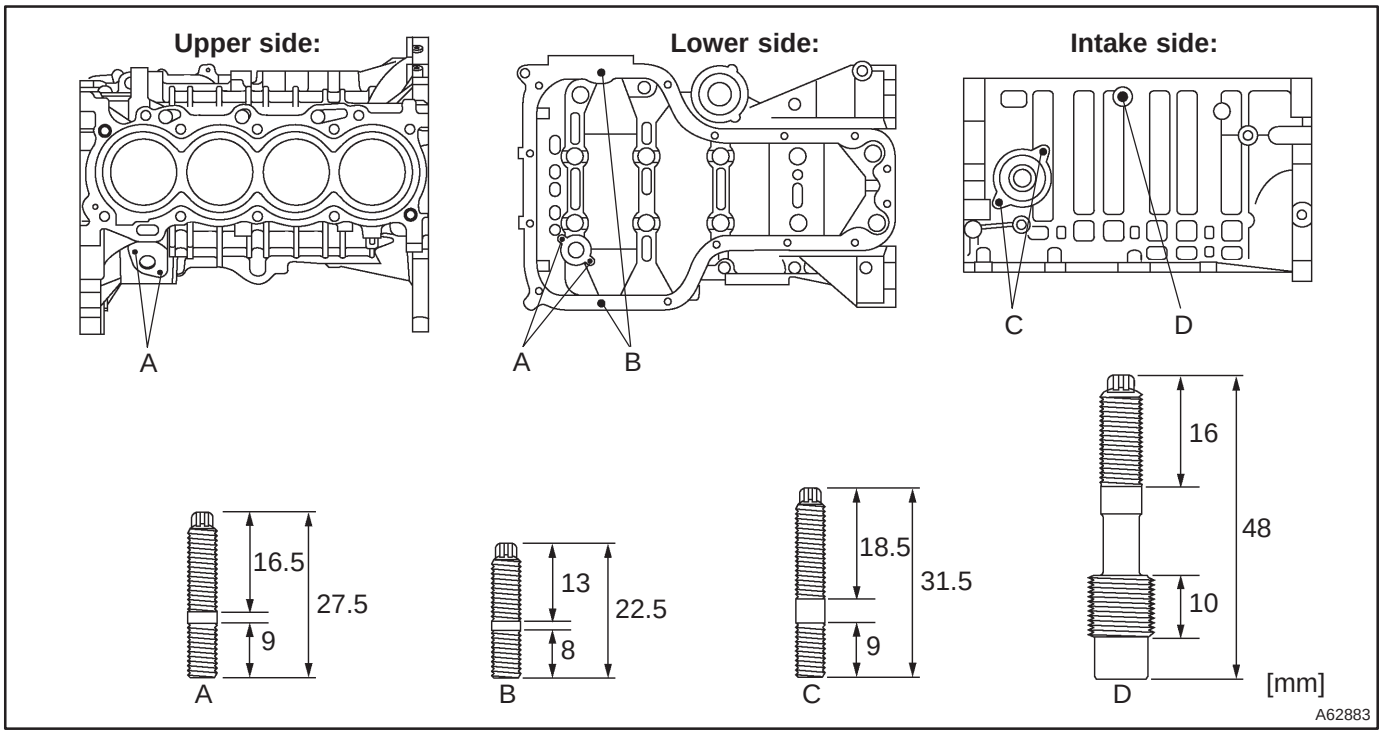

28. INSTALL RING PIN

(a) Using a plastic hammer, install the 5 ring pins to the cylinder block.

Standard protrusion:
Ring pin A 6 mm (0.24 in.)
Ring pin B 10 mm (0.39 in.)
RIng pin C 7 mm (0.28 in.)

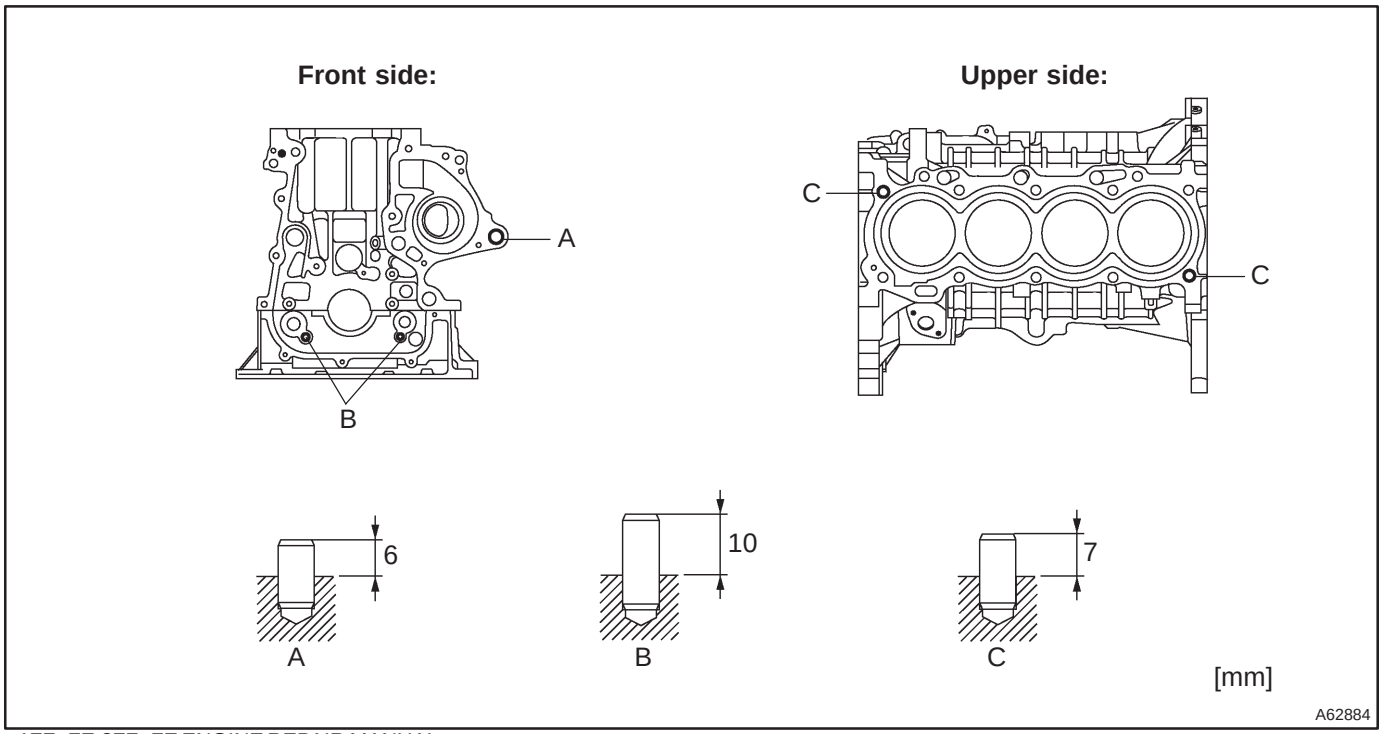

cardiagn.com

29. INSTALL STRAIGHT PIN

(a) Using a plastic hammer, install the 9 straight pins to the cylinder block.
Standard protrusion:
Straight pin A 5 mm (0.20 in.)
Straight pin B 7.5 mm (0.30 in.)
Straight pin C 8 mm (0.31 in.)
Straight pin D 12 mm (0.47 in.)

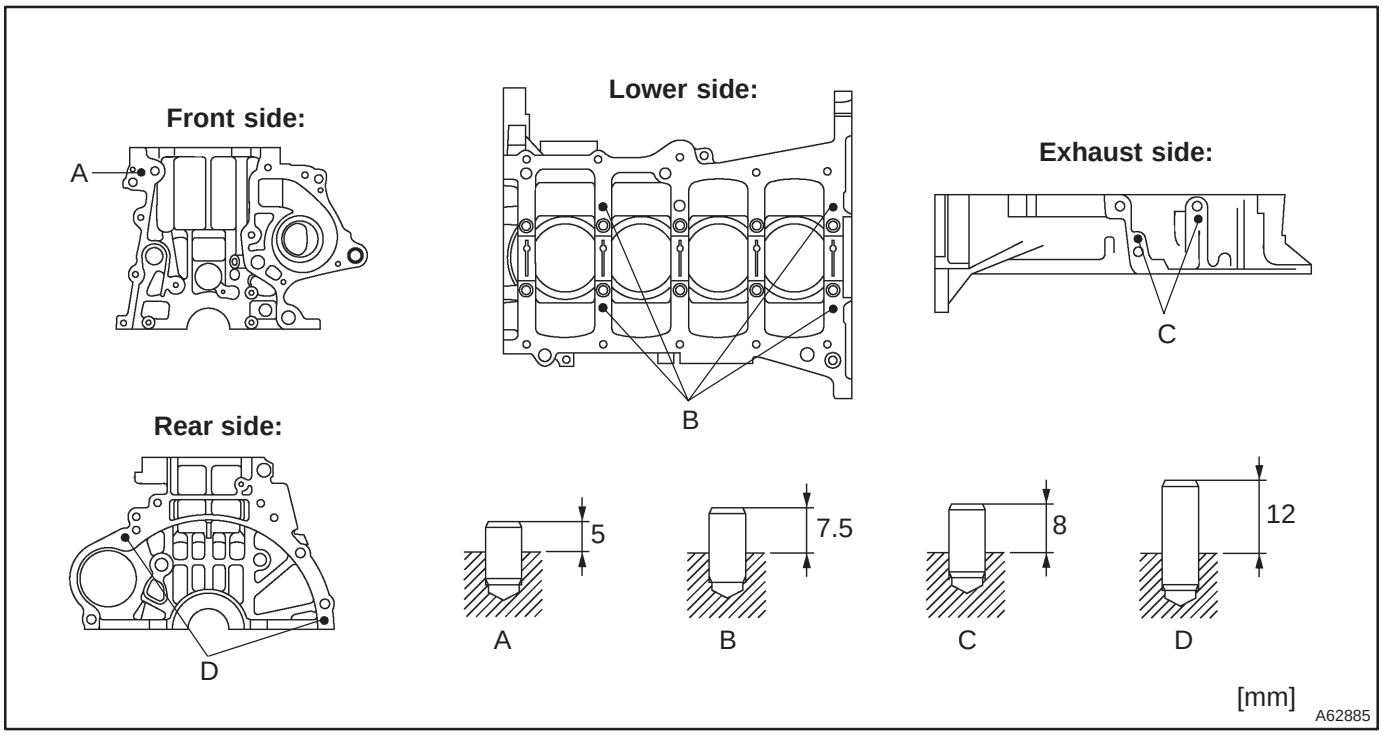

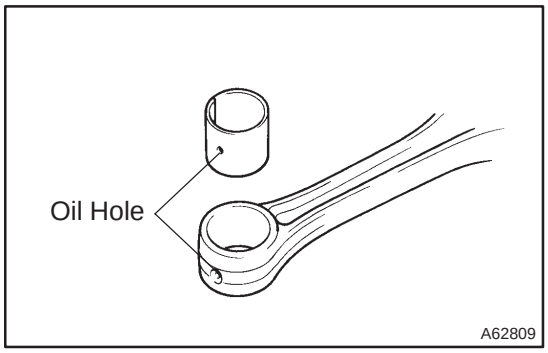

30. INSTALL CONNECTING ROD SMALL END BUSH

(a) Align the oil hole of a new bushing with the one of the connecting rod.

cardiagn.com

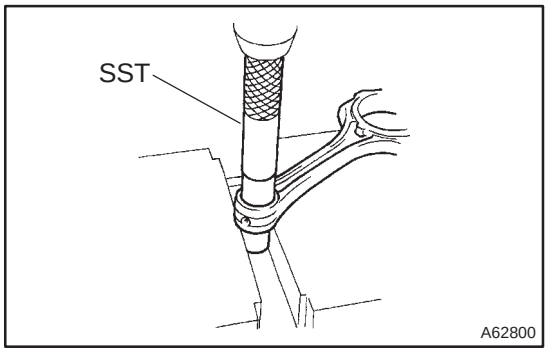

(b) Using SST and a press, press into the small end bushing.
SST 09222–30010

(c) After installing the bushing, check that the oil hole of the connecting rod is aligned with the hole of the small end bushing and that the oil clearance measured on both sides of connecting rod are equal.

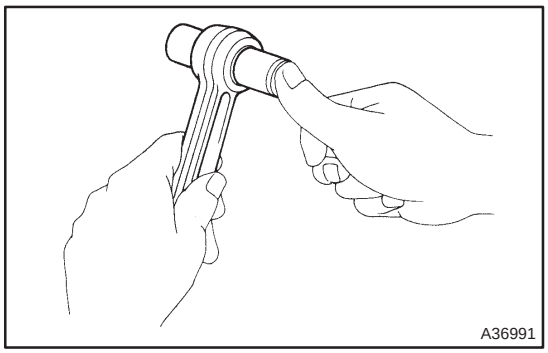

(d) Horn the connecting rod end bushing to obtain the standard specified oil clearance.
Oil clearance: 0.005 – 0.011 mm (0.0002 – 0.0004 in.)

HINT:
When pushing the piston pin with engine oil applied into the connecting rod with thumb, the piston pin is supposed to have a little resistance to insert at normal room temperature.

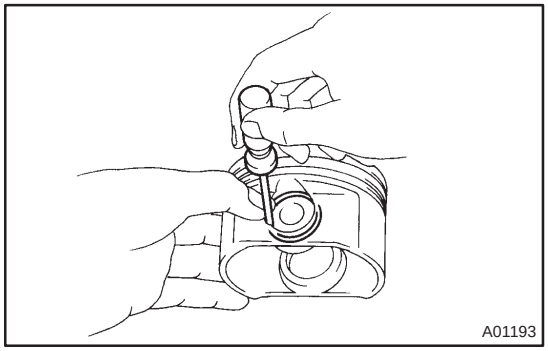

31. INSTALL PISTON PIN HOLE SNAP RING

(a) Using a small screwdriver, install a new snap ring at one end of the piston pin hole.

HINT:
Be sure that end gap of the snap ring is aligned with the pin hole cutout portion of the piston.

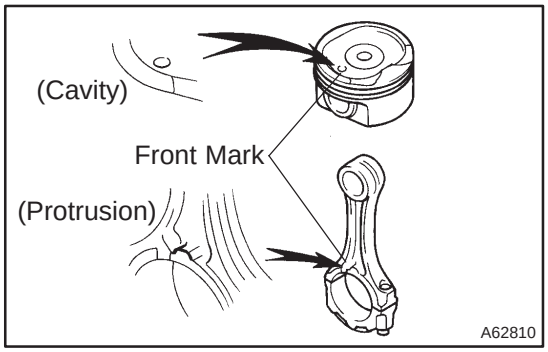

32. INSTALL W/PIN PISTON SUB–ASSY

(a) Gradually heat the piston to 80 – 90°C (176–194°F).

(b) Align the front marks on the piston with connecting rod, and push in the piston with your thumb.

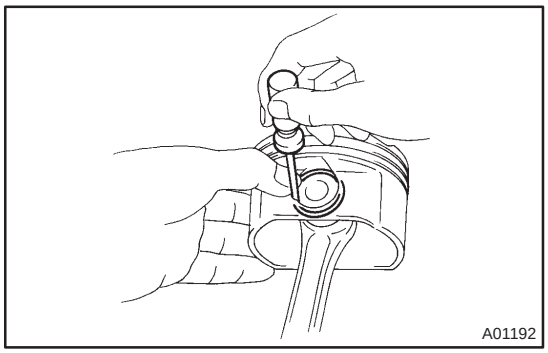

33. INSTALL PISTON PIN HOLE SNAP RING

(a) Using a small screwdriver, install a new snap ring on the other end of the piston pin hole.

HINT:
Be sure that end gap of the snap ring is aligned with the pin hole cutout portion of the piston.

cardiagn.com

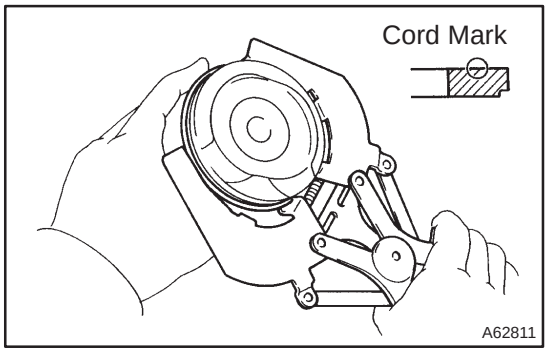

34. INSTALL PISTON RING SET

HINT:
In case of reusing the piston rings, install them to the matched pistons with the surfaces faced correctly.

(a) Install the oil ring expander and 2 side rails by hand.

(b) Using a piston ring expander, install the 2 compression rings with the code mark facing upward.
Code mark (No.2 only): T or 2R

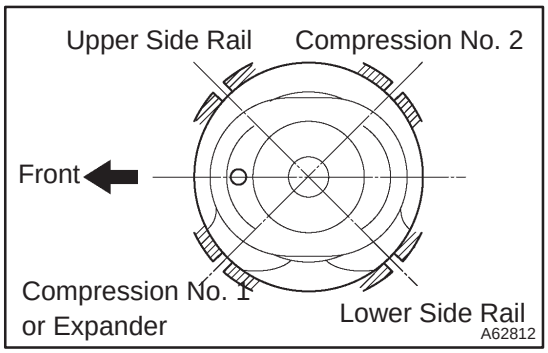

(c) Position the piston rings so that the ring ends are as shown.

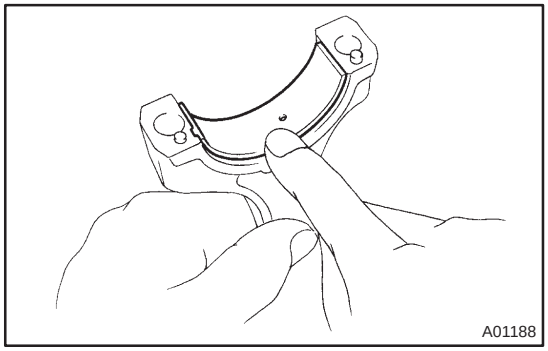

35. INSTALL CONNECTING ROD BEARING

(a) Align the bearing claw with the groove of the connecting rod or connecting cap.

NOTICE:
Clean the backside of the bearing and the bearing surface of the connecting rod and let not stick the oils and fats.

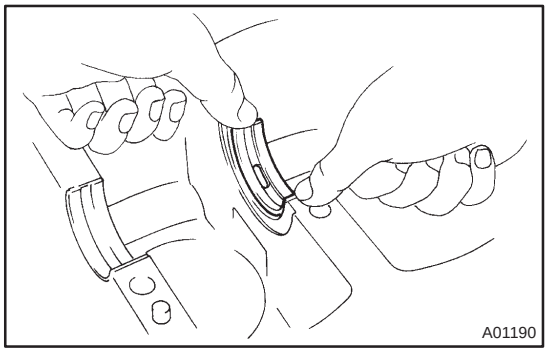

36. INSTALL CRANKSHAFT

(a) Install the upper bearing with an oil groove on cylinder block.

NOTICE:
Clean the backside of the bearing and the bearing surface of the bearing cap and let not stick the oils and fats.

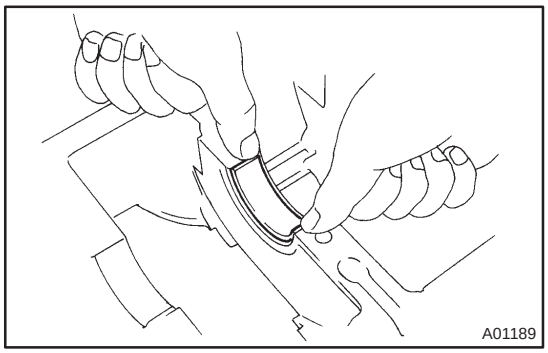

(b) Install the lower bearing on the bearing cap sub–assy.

NOTICE:
Clean the backside of the bearing and the bearing surface of the bearing cap and let not stick the oils and fats.

cardiagn.com

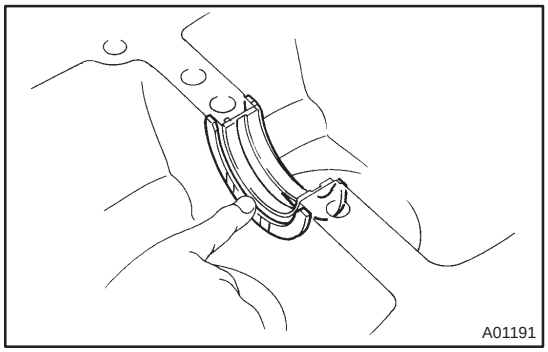

(c) Install the 2 thrust washers under the No. 3 journal position of the cylinder block with the oil grooves facing outward.

(d) Apply engine oil to upper bearing and install the crankshaft on the cylinder block.

(e) Apply a light coat of engine oil on the bolt threads, the bolt seats, and the bearings of the bearing cap sub–assy.

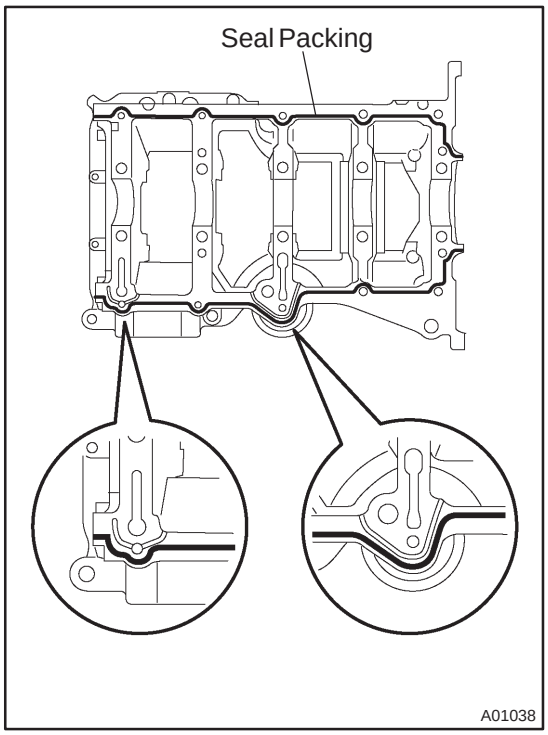

(f) Apply seal packing in the shape of bead (Diameter 2.5 – 3.5 mm (0.08 – 0.12 in.) consequently as shown in the illustration.

Seal packing: Part No. 08826–00080 or equivalent

NOTICE:

- **Remove any oil from the contact surface.**
- **Install the bearing cap sub–assembly within 3 minutes after applying seal packing.**
- **Do not put into engine oil within 2 hours after the installation.**

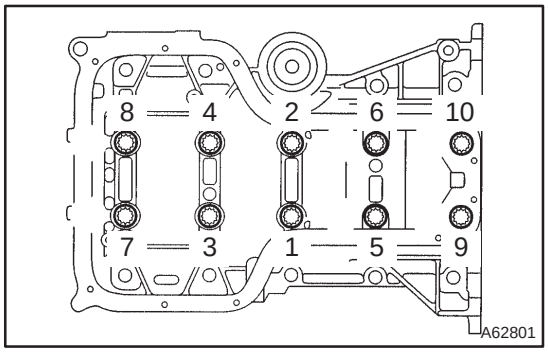

(g) Using SST, tighten the bolts in several passes, in the sequence shown, by the specified torque.

SST 09011–38121

Torque: 44 N·m (449 kgf·cm, 33 ft·lbf)

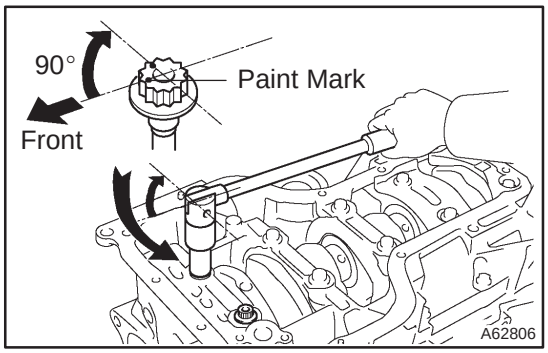

(h) Mark the front of the bearing cap sub–assy bolts with paint.

(i) Retighten the bearing cap sub–assy bolts by 90° as shown in the illustration.

(j) Check that the painted mark is now at a 90° angle to the front.

(k) Tighten 10 other bolts for the bearing cap.

Torque: 19 N·m (194 kgf·cm, 14 ft·lbf)

cardiagn.com

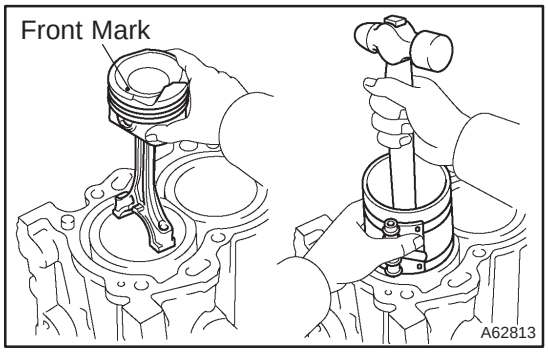

37. INSTALL CONNECTING ROD SUB–ASSY

(a) Apply engine oil to the cylinder walls, the pistons, and the surfaces of connecting rod bearings.
(b) Check the position of the piston ring ends.
(c) Using a piston ring compressor, push the correctly numbered piston and connecting rod assemblies into each cylinder with the front mark of the piston facing forward.
(d) Align the pin dowels of the connecting rod cap with the pins of the connecting rod, and install the connecting rod.

NOTICE:

- **Clean the backside and the surface of the connecting rod cap bearing and let not stick the oils and fats.**
- **Match the numbered connecting rod cap with the same numbered connecting rod.**

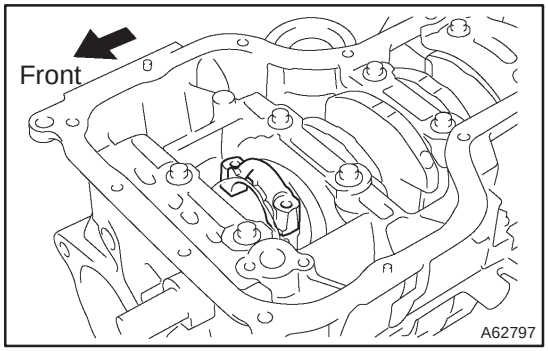

(e) Check that the protrusion of the connecting rod cap is facing in the correct direction.

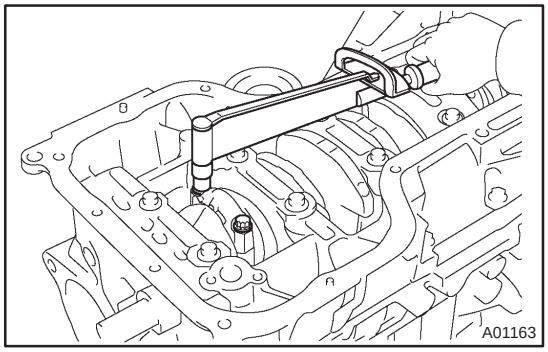

(f) Apply a light coat of engine oil on the threads and under the heads of the connecting rod cap bolts.
(g) Using SST, tighten the bolts in several passes by the specified torque.
SST 09205–16010
Torque: 20 N·m (204 kgf·cm, 15 ft·lbf)

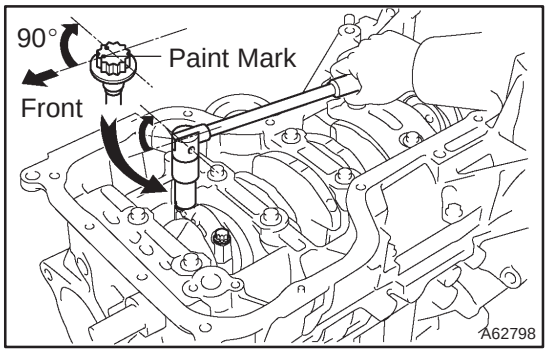

(h) Mark the front of the connecting cap bolts with paint.
(i) Retighten the cap bolts by 90° as shown in the illustration.
(j) Check that the crankshaft turns smoothly.

cardiagn.com

CYLINDER HEAD ASSY (1ZZ–FE/3ZZ–FE)

140KM–01

COMPONENTS

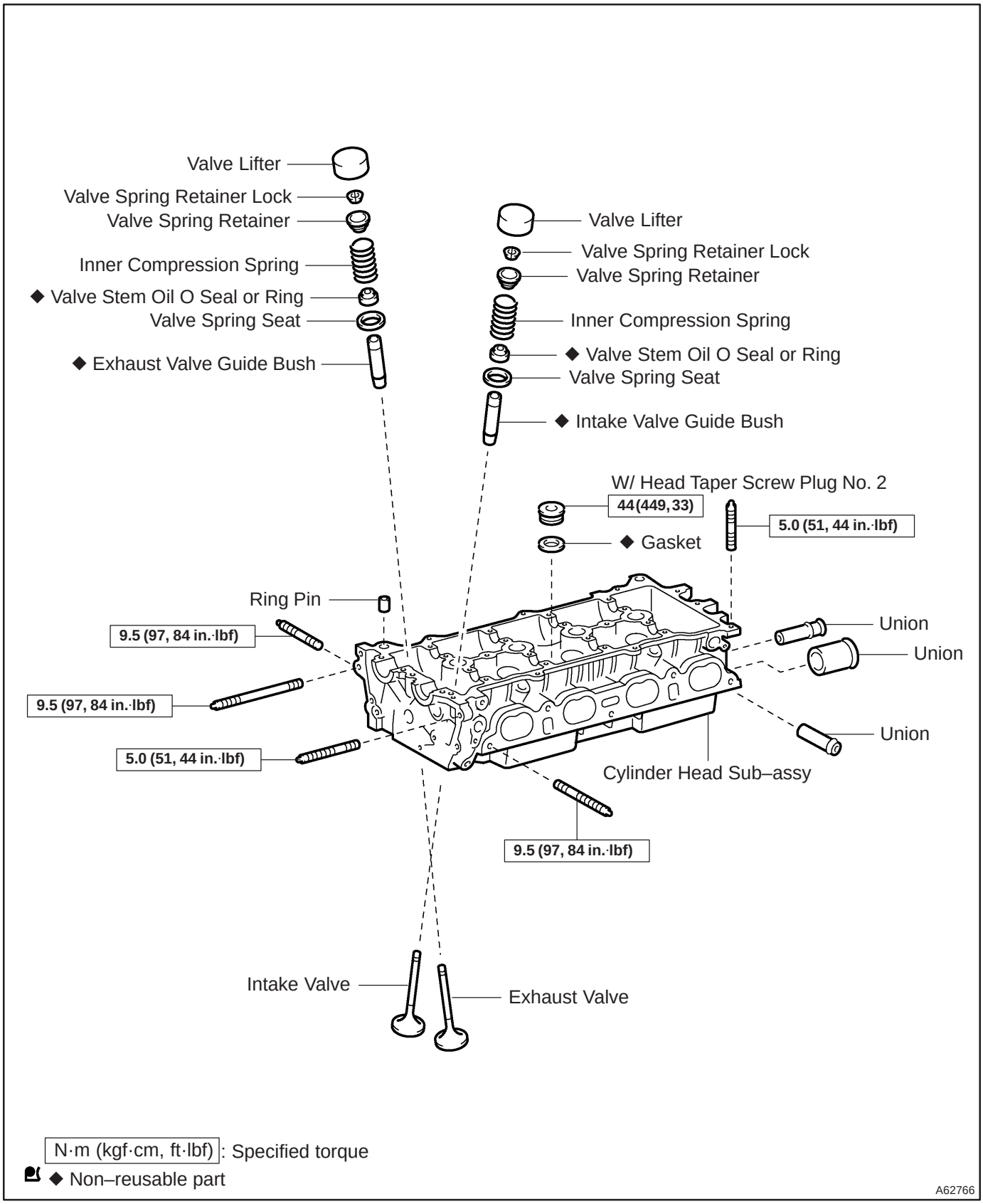

cardiagn.com

140KN–01

OVERHAUL

1. REMOVE W/HEAD TAPER SCREW PLUG NO.2

(a) Using a socket hexagon wench 10, remove the taper screw plug and gasket.

2. REMOVE VALVE LIFTER

(a) Remove the 16 valve lifters from the cylinder head.

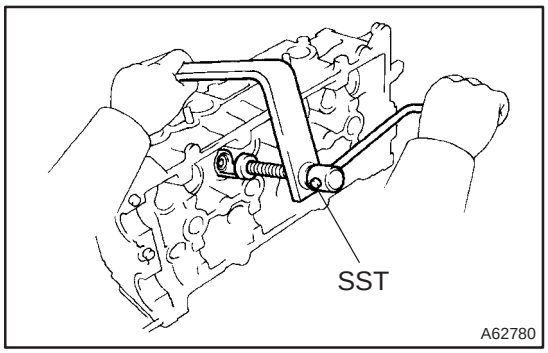

3. REMOVE INNER COMPRESSION SPRING

(a) Using SST, compress the valve spring and remove the 2 keepers, the retainer, and the spring seat.
SST 09202–70020 (09202–00010)

4. REMOVE INTAKE VALVE

(a) Remove the 8 intake valves from the cylinder head.

5. REMOVE EXHAUST VALVE

(a) Remove the 8 exhaust valves from the cylinder head.

6. REMOVE VALVE STEM OIL O SEAL OR RING

(a) Remove the 16 valve stem oil seals from the valve guide bush.

7. REMOVE VALVE SPRING SEAT

(a) Remove the 16 valve spring seats from the cylinder head.

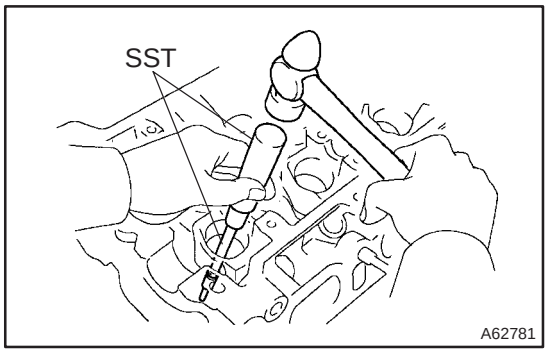

8. REMOVE VALVE GUIDE BUSH

(a) Heat the cylinder head to 80 – 100°C (176 – 212°F).
(b) Using SST, tap out the valve guide bush.
SST 09201–10000, 09201–01055, 09950–70010 (09951–07100)

9. REMOVE STUD BOLT

(a) Remove the 11 stud bolts from the cylinder head.

cardiagn.com

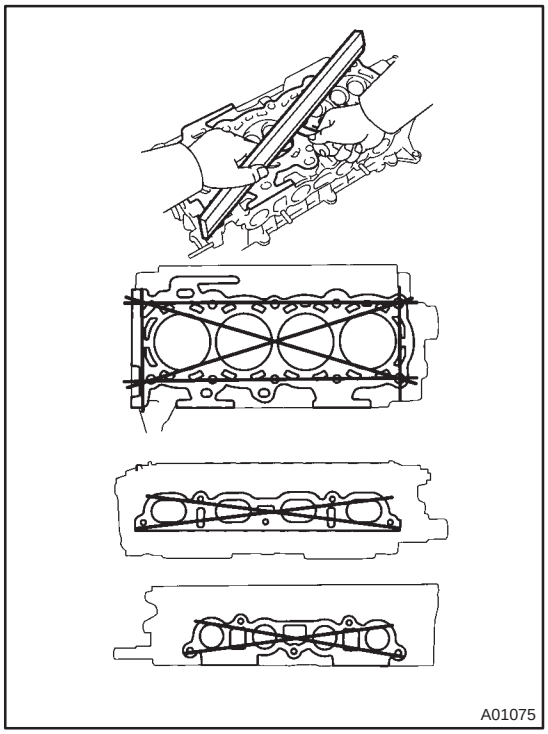

10. INSPECT CYLINDER HEAD FOR FLATNESS

(a) Using a precision straight edge and a feeler gauge, measure the surface contacting the cylinder block and the manifolds for warpage.

Maximum warpage:

Cylinder block side	0.05 mm (0.0020 in.)
Intake manifold side	0.10 mm (0.0040 in.)
Exhaust manifold side	0.10 mm (0.0040 in.)

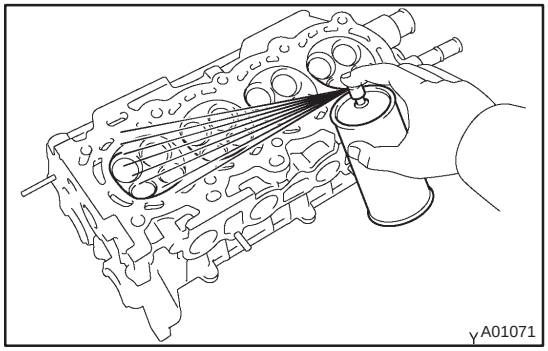

11. INSPECT CYLINDER HEAD FOR CRACKS

(a) Using a dye penetrate, check the combustion chamber, intake ports, exhaust ports and cylinder block surface for cracks.

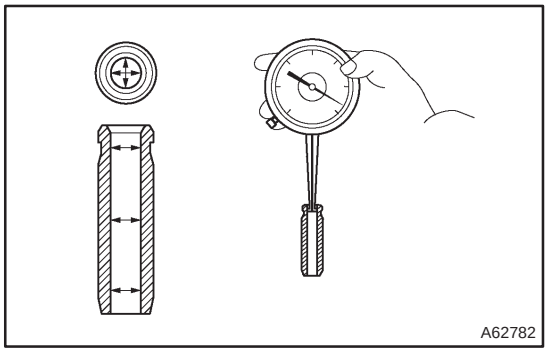

12. INSPECT VALVE GUIDE BUSHING OIL CLEARANCE

(a) Using a caliper gauge, measure the inside diameter of the valve guide bush.

Busing inside diameter:
5.510 – 5.530 mm (0.2169 – 0.2177 in.)

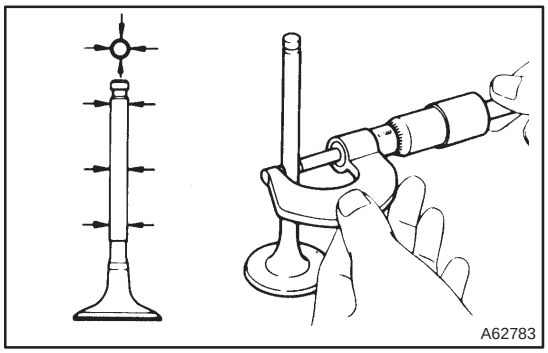

(b) Using a micrometer, measure the diameter of the valve stem.

Valve stem diameter:
Intake 5.470 – 5.485 mm (0.2154 – 0.2159 in.)
Exhaust 5.465 – 5.480 mm (0.2152 – 0.2158 in.)

cardiagn.com

(c) Subtract the valve stem diameter measurement from the guide bushing inside diameter measurement.
Standard oil clearance:
Intake 0.025 – 0.060 mm (0.0010 – 0.0024 in.)
Exhaust 0.030 – 0.065 mm (0.0012 – 0.0026 in.)
Maximum oil clearance:
Intake 0.08 mm (0.0031 in.)
Exhaust 0.01 mm (0.0039 in.)

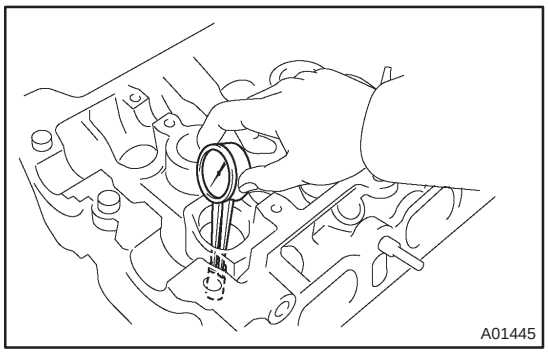
A01445

13. INSPECT VALVE GUIDE BUSH

(a) Using a caliper gauge, measure the bushing bore diameter of the cylinder head.
Diameter: 10.285 – 10.306 mm (0.4049 – 0.4057 in.)

(b) If the bushing bore diameter of the cylinder head is greater than 10.306 mm (0.4057 in.), machine the bushing bore to the dimension of 10.335 – 10.356 mm (0.4068 – 0.4077 in.) to install a over size bushing.

HINT:

bushing bore diameter mm (in.)	Bushing size
10.285 – 10.306 (0.4049 – 0.4057)	Use STD
10.335 – 10.356 (0.4068 – 0.4077)	Use O/S 0.05

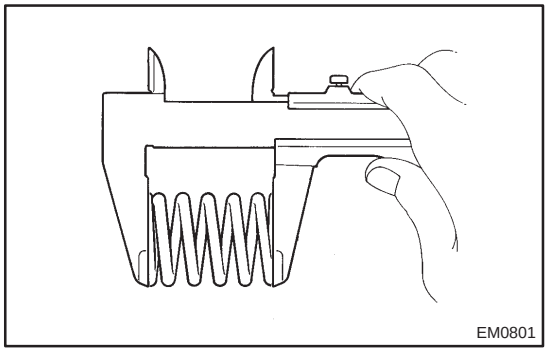
EM0801

14. INSPECT INNER COMPRESSION SPRING

(a) Using a vernier caliper, measure the free length of the valve spring.
Free length: 43.40 mm (1.7087 in.)

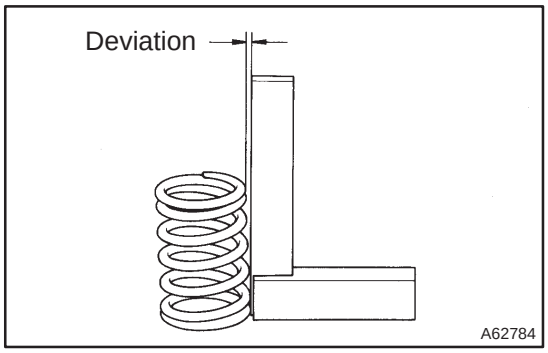

A62784

(b) Using a steel square, measure the deviation of the valve spring.
Maximum deviation: 2.0 mm (0.078 in.)
Maximum angle (reference): 2°

cardiagn.com

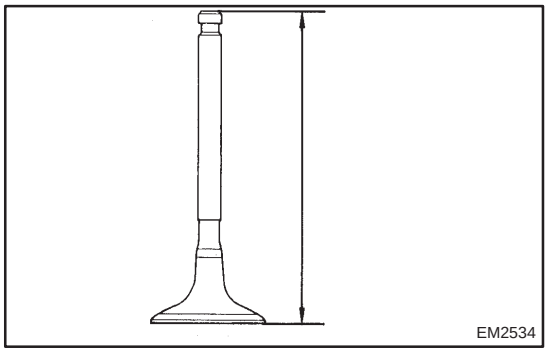

15. INSPECT INTAKE VALVE

(a) Using a vernier calipers, check the valve overall length.
Standard overall length: 88.65 mm (3.4902 in.)
Minimum overall length: 88.35 mm (3.4784 in.)

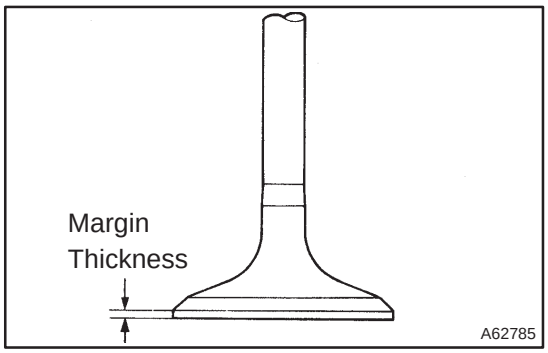

(b) Using a vernier calipers, check the valve head margin thickness.
Standard margin thickness: 1.0 mm (0.039 in.)
Minimum margin thickness: 0.7 mm (0.028 in.)

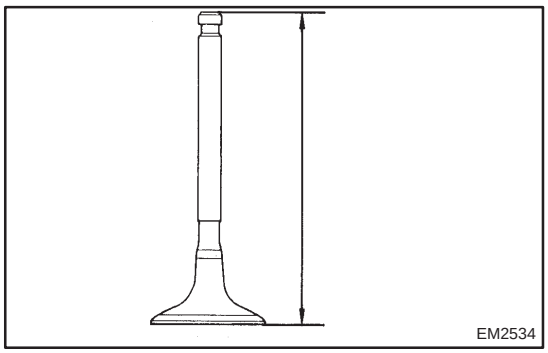

16. INSPECT EXHAUST VALVE

(a) Using a vernier calipers, check the valve overall length.
Standard overall length: 88.69 mm (3.4917 in.)
Minimum overall length: 88.39 mm (3.4799 in.)

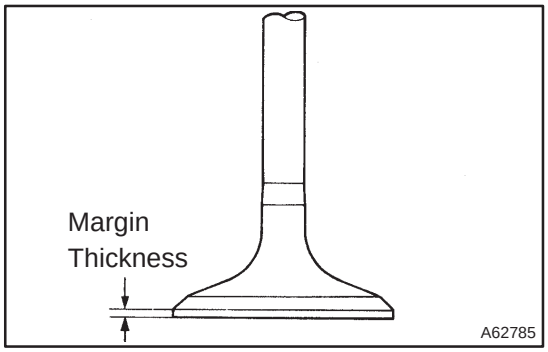

(b) Using a vernier calipers, check the valve head margin thickness.
Standard margin thickness: 1.0 mm (0.039 in.)
Minimum margin thickness: 0.7 mm (0.028 in.)

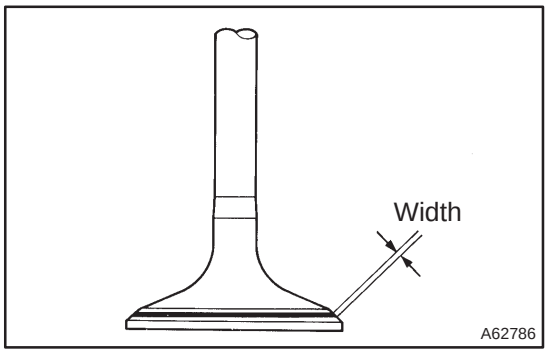

17. INSPECT VALVE SEATS

(a) Apply a light coat of prussian blue (or white lead) to the valve face.
(b) Lightly press the valve against the seat.
(c) Check the valve face and seat according to the following procedure.
(1) If blue appears 360° around the face, the valve is concentric. If not, replace the valve.

cardiagn.com

(2) If blue appears 360° around the valve seat, the guide and face are concentric. If not, resurface the seat.

(3) Check that the seat contact is in the middle of the valve face with the width between 1.0 – 1.4 mm (0.039 – 0.055 in.).

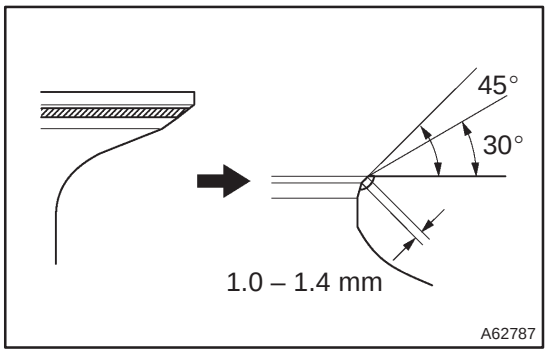

18. REPAIR VALVE SEATS

NOTICE:

Take off a cutter gradually to make smooth valve seats.

(a) If the seating is too high on the valve face, use 30° and 45 ° cutters to correct the seat.

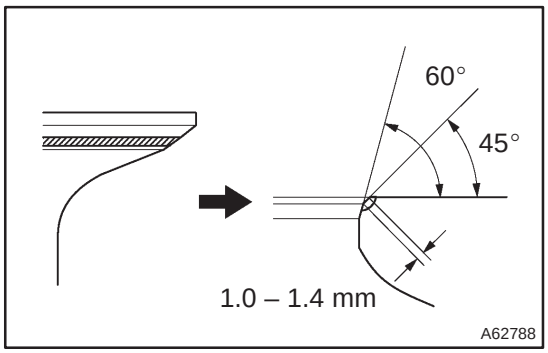

(b) If the seating is too low on the valve face, use 75° and 45° cutters to correct the seat.

(c) Hand–lap the valve and valve seat with an abrasive compound.

(d) Check the valve seating position.

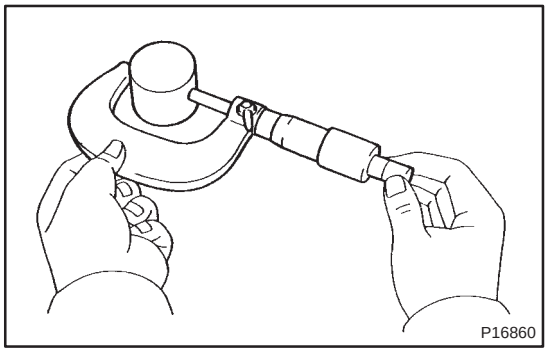

19. INSPECT VALVE LIFTER

(a) Using a micrometer, measure the lifter diameter.
Lifter diameter:
30.966 – 30.976 mm (1.2191 –1.2195 in.)

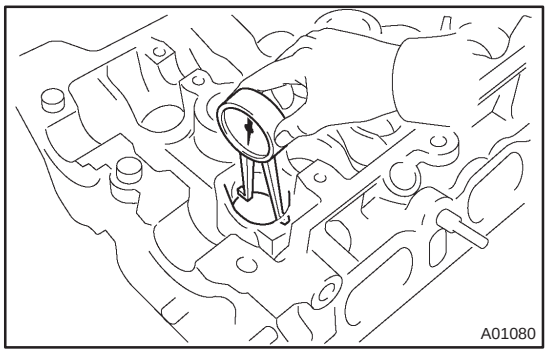

20. INSPECT VALVE LIFTER OIL CLEARANCE

(a) Using a caliper gauge, measure the lifter bore diameter of the cylinder head.
Lifter bore diameter:
31.000 – 31.025 mm (1.2205 – 1.2215 in.)

(b) Subtract the lifter diameter measurement from the lifter bore diameter measurement.
Standard oil clearance:
0.024 – 0.059 mm (0.0009 – 0.0023 in.)
Maximum oil clearance: 0.1 mm (0.0039 in.)

cardiagn.com

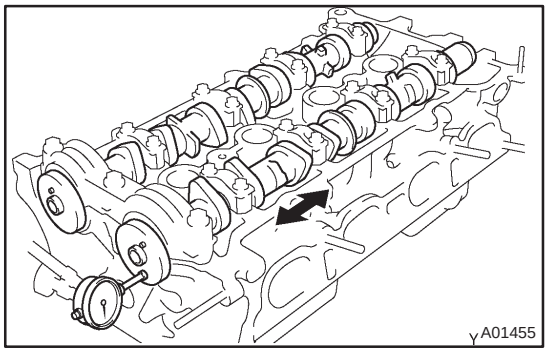

21. INSPECT CAMSHAFT THRUST CLEARANCE

(a) Install the 2 camshafts.

(b) Using a dial indicator, measure the thrust clearance while moving the camshaft back and forth.
Standard thrust clearance:
0.040 – 0.095 mm (0.0016 – 0.0037 in.)
Maximum thrust clearance: 0.110 mm (0.0043 in.)

(c) If the thrust clearance is greater than maximum, replace the cylinder head. If damages are found on the camshaft thrust surfaces, the camshaft also has to be replaced.

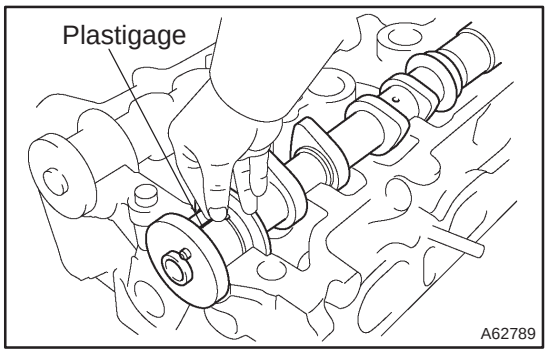

22. INSPECT CAMSHAFT OIL CLEARANCE

(a) Clean the bearing caps and camshaft journals.

(b) Place the camshafts on the cylinder head.

(c) Lay a strip of Plastigage across each of the camshaft journal.

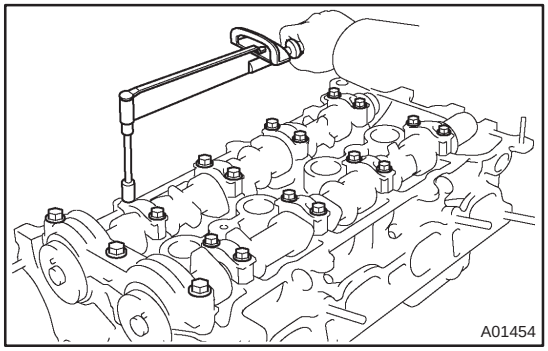

(d) Install the bearing caps (See page 14–4).
Torque:
No. 1 23 N·m (235 kgf·cm, 17 ft·lbf)
No. 3 13 N·m (132 kgf·cm, 10 ft·lbf)

NOTICE:
Do not turn the camshaft.

(e) Remove the bearing caps.

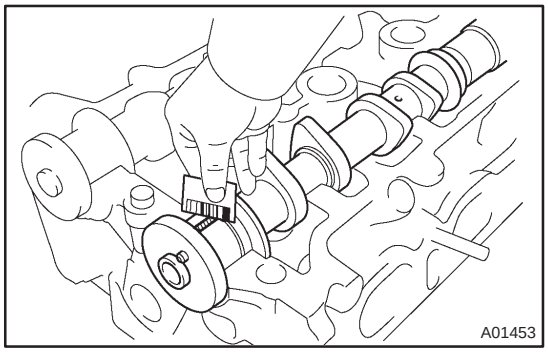

(f) Measure the plastigage at its widest point.
Standard oil clearance:
0.035 – 0.072 mm (0.0014 – 0.0028 in.)
Maximum oil clearance: 0.10 mm (0.0039 in.)

NOTICE:
Completely remove the Plastigage after the measuring.

If the oil clearance is greater than maximum, replace the cylinder head.

cardiagn.com

23. INSTALL STUD BOLT AND RING PIN

(a) Install the 11 stud bolts to cylinder head,
Torque:
Stud bolt A, D and E 9.5 N·m (97, 84 in.·lbf)
Stud bolt B and C 5.0 N·m (51, 44 in.·lbf)

(b) Using a plastic hammer, install the new 2 ring pins to the cylinder head.
Standard protrusion: 5 mm (0.020 in.)

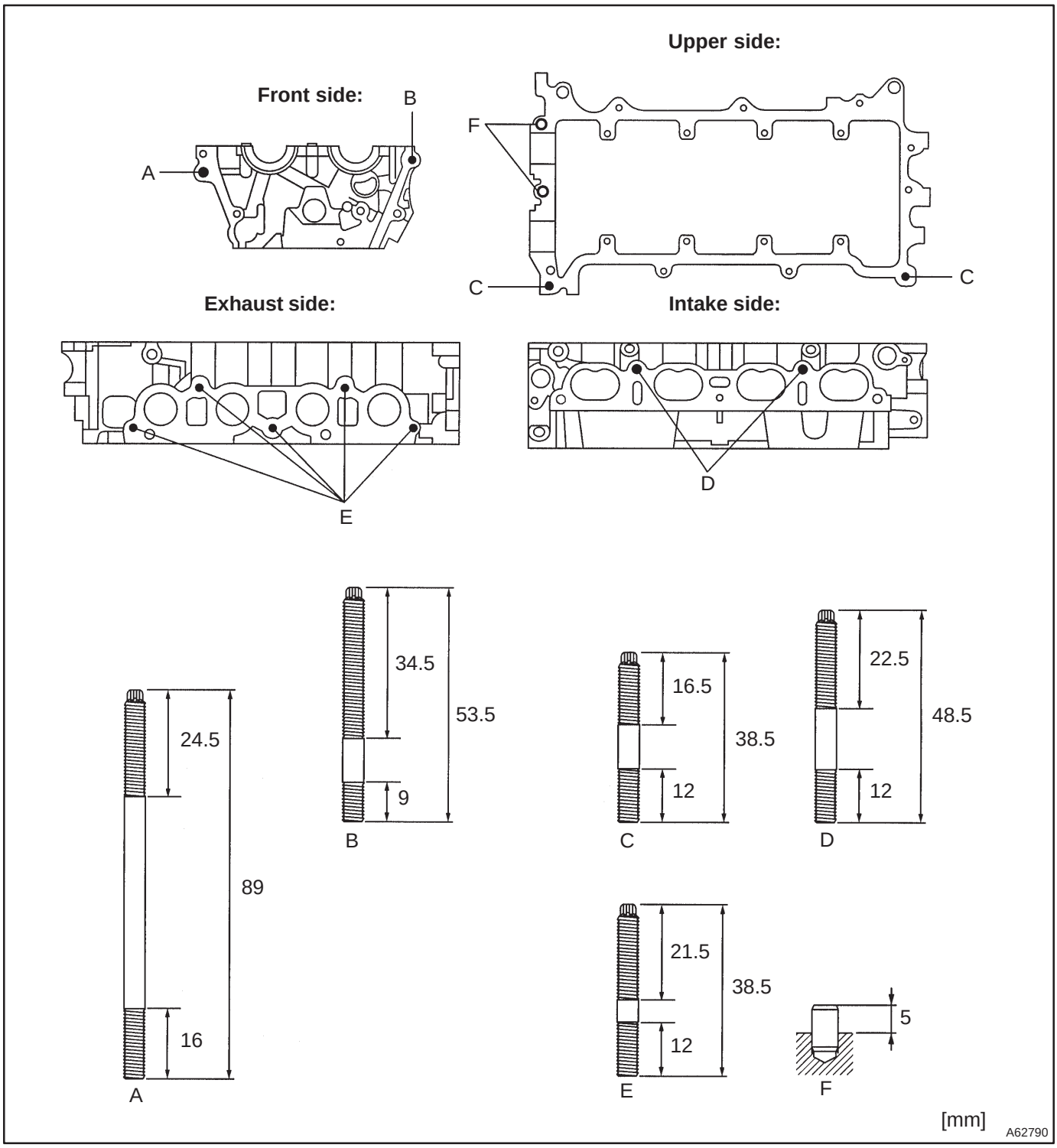

cardiagn.com

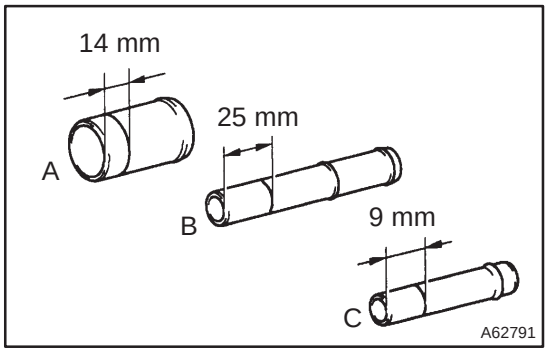

24. INSTALL UNION

(a) Mark the standard position away from the edge, onto the water hose union as shown in the illustration.

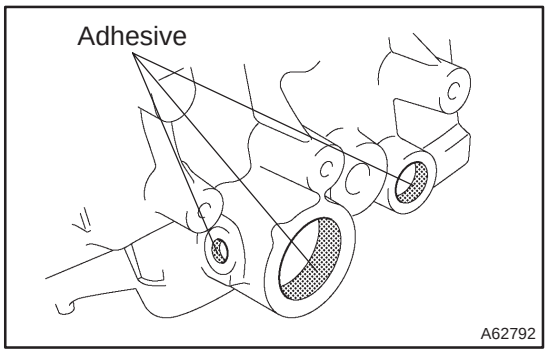

(b) Apply adhesive to the water hose union hole of the cylinder head.
Adhesive:
Part No. 08833–00070, THREE BOND 1324 or equivalent.

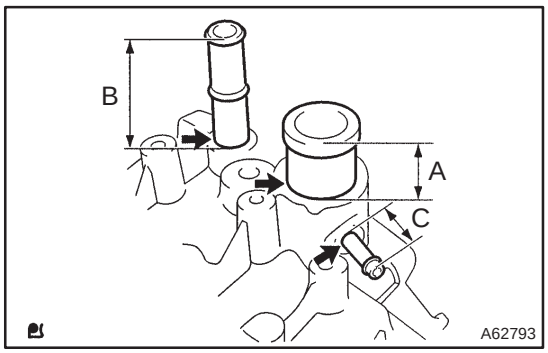

(c) Using a press, press in a new water hose union until the standard marks come to the level of the cylinder head surface.
Standard protrusion:
A 29 mm (1.14 in.)
B 66.5 mm (2.62 in.)
C 24 mm (0.95 in.)

NOTICE:

- **Install the water hose union within 3 minutes after applying adhesive.**
- **Do not put into coolant within an hour after installing.**

cardiagn.com

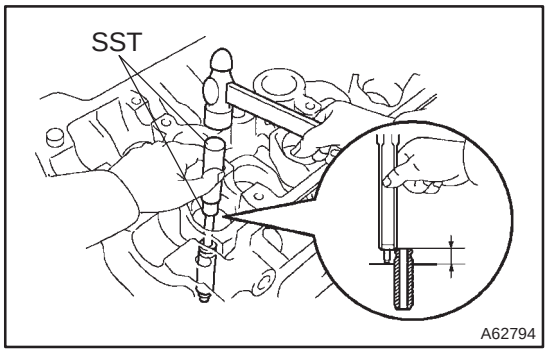

25. INSTALL VALVE GUIDE BUSH

(a) Gradually heat the cylinder head to 80 – 100°C (176 – 212°F).

(b) Using SST and a hammer, tap in a new guide bushing to the specified protrusion height.
SST 09201–10000, 09201–01055, 09950–70010 (09951–07100)
Protrusion height: 8.7 – 9.1 mm (0.342 – 0.358 in.)

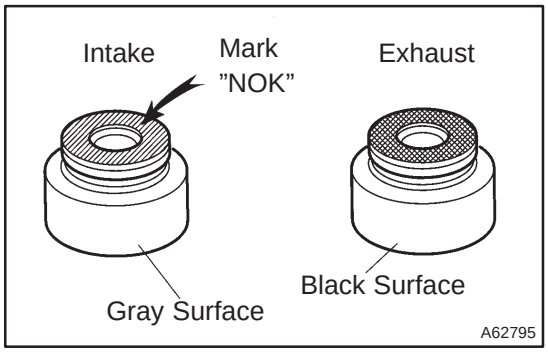

26. INSTALL VALVE STEM OIL O SEAL OR RING

(a) Apply a light coat of engine oil on the valve stem oil seals.

NOTICE:

Be very careful to assemble the oil seal for intake and exhaust. Assembling the wrong one may cause a failure.

HINT:

The intake valve stem oil seal is gray and the exhaust valve stem oil seal is black.

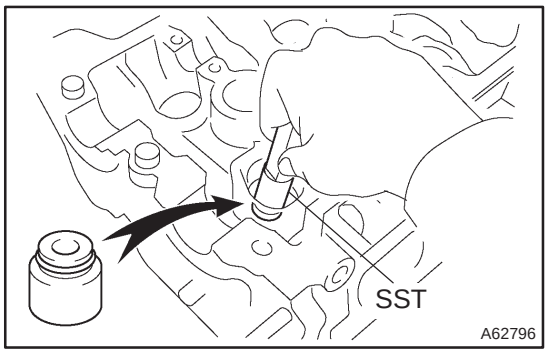

(b) Using SST, push in a new valve stem oil seal.
SST 09201–41020

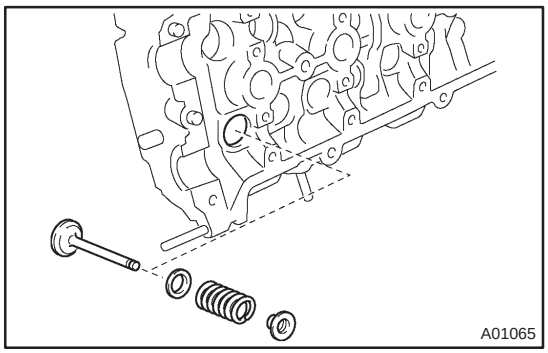

27. INSTALL INNER COMPRESSION SPRING

(a) Install the valve, spring seat, valve spring, and spring retainer.

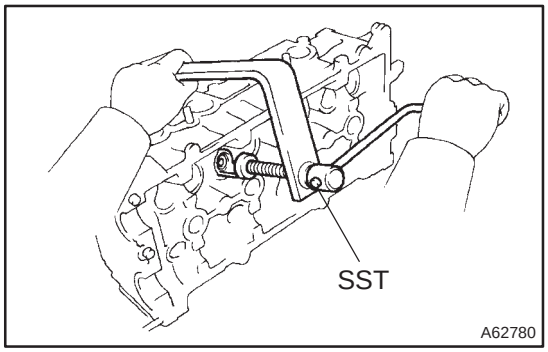

(b) Using SST, compress the valve spring and place the 2 keepers around the valve stem.
SST 09202–70020 (09202–00010)

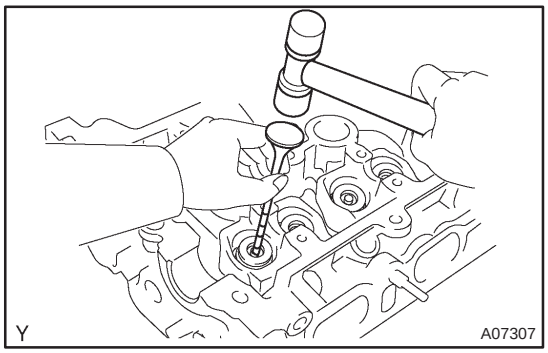

(c) Using a plastic hammer and the valve stem (not in use) tip wound with vinyl tape, lightly tap the valve stem tip to ensure a proper fit.

NOTICE:

Be careful not to damage the valve stem tip.

cardiagn.com

28. INSTALL W/HEAD TAPER SCREW PLUG NO.2

(a) Using a socket hexagon wrench 10, install the taper screw plug with a new gasket.
Torque: 44 N·m (449 kgf·cm, 33 ft·lbf)

cardiagn.com

PARTIAL ENGINE ASSY (1ZZ–FE/3ZZ–FE)

140KJ–01

COMPONENTS

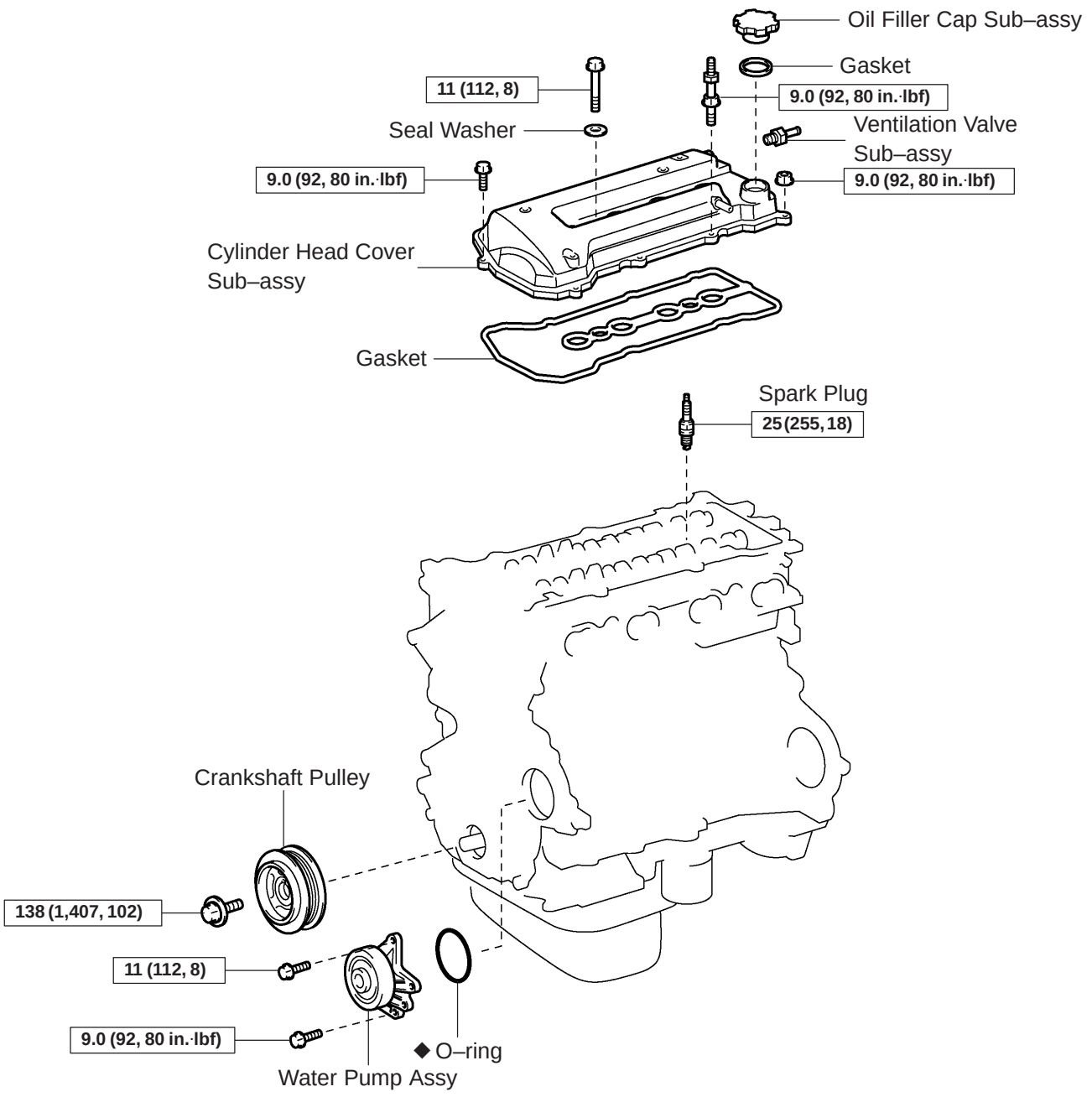

N·m (kgf·cm, ft·lbf) : Specified torque

◆ Non–reusable part

A62768

cardiagn.com

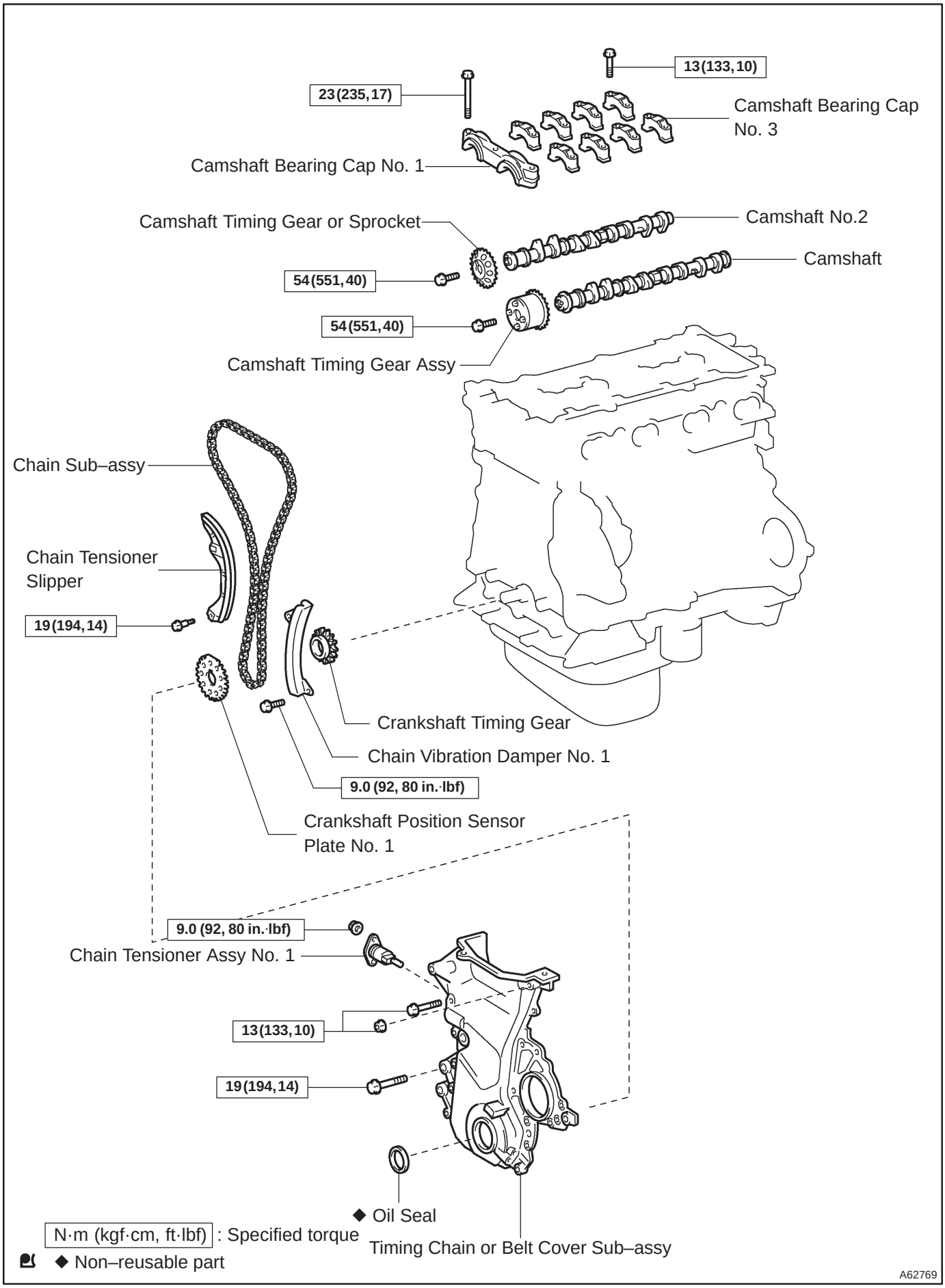

cardiagn.com

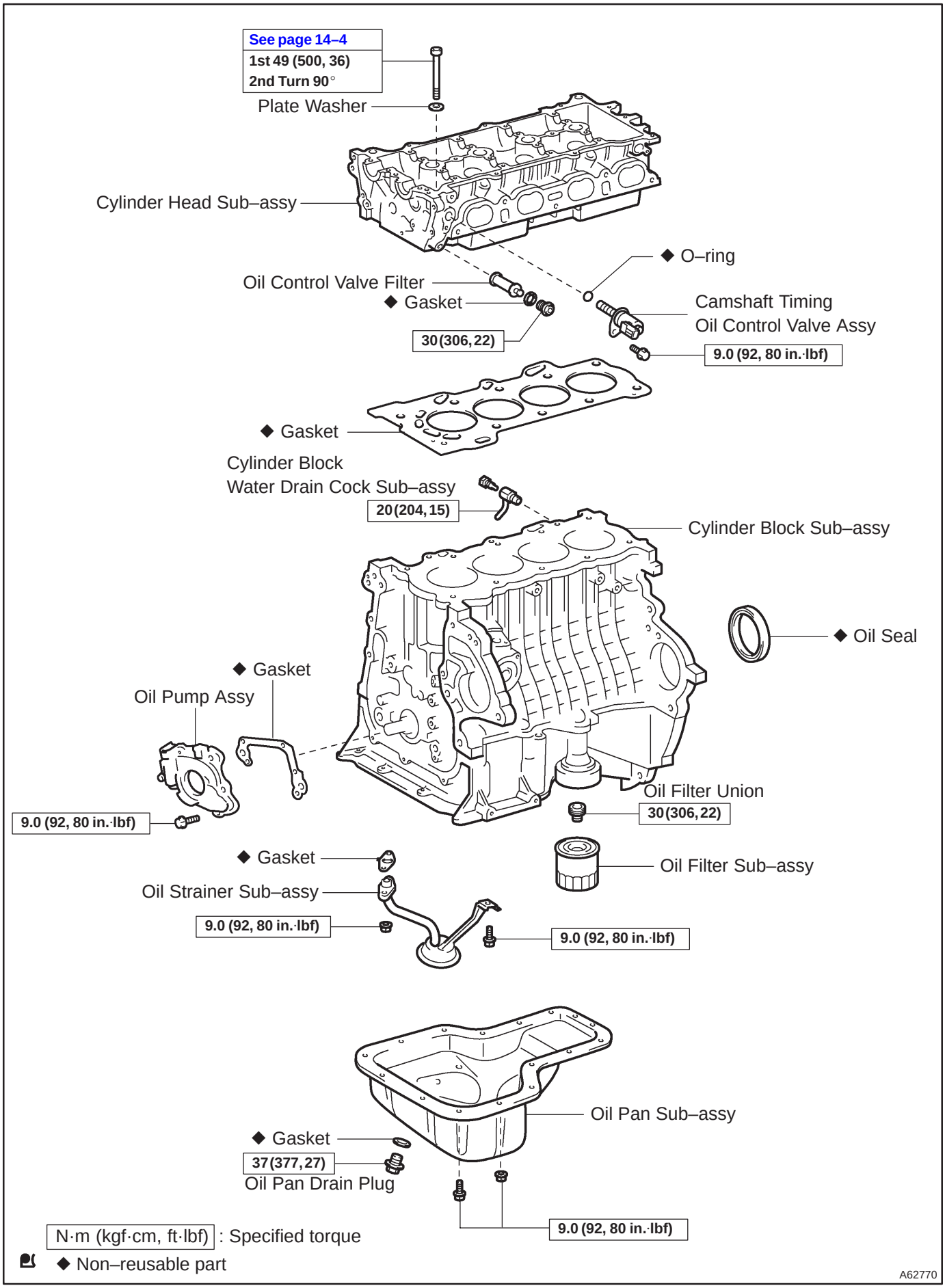

cardiagn.com

140KL–01

OVERHAUL

1. REMOVE OIL FILLER CAP SUB–ASSY

(a) Remove the oil filler cap from the cylinder head cover.

2. REMOVE OIL FILLER CAP GASKET

(a) Remove the gasket from the oil filler cap.

3. REMOVE VENTILATION VALVE SUB–ASSY

(a) Remove the ventilation valve from the cylinder head cover.

4. REMOVE SPARK PLUG

(a) Using a spark plug wrench, remove the 4 spark plugs.

5. REMOVE CYLINDER HEAD COVER SUB–ASSY

(a) Remove the 9 bolts, 2 seal washer, 2 nuts and cylinder head cover.

6. REMOVE CYLINDER HEAD COVER GASKET

(a) Remove the gasket from the cylinder head cover.

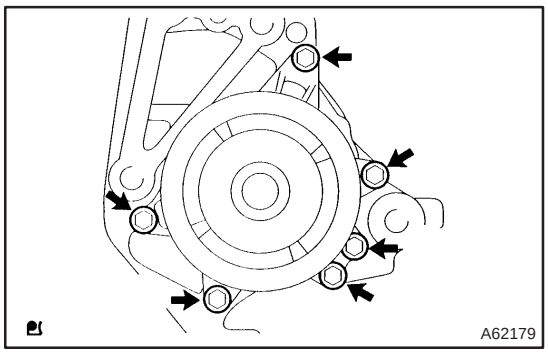

7. REMOVE WATER PUMP ASSY

(a) Remove the 6 bolts, water pump and O–ring.

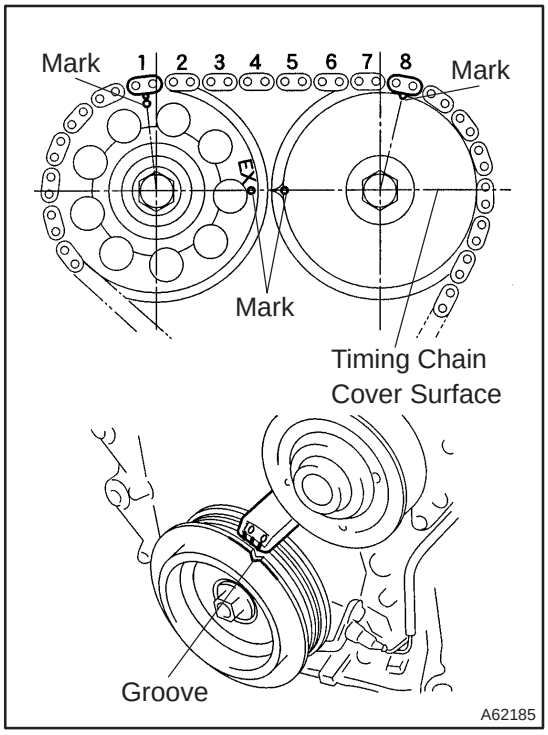

8. REMOVE CRANKSHAFT PULLEY

(a) Set No. 1 cylinder to TDC/compression.
  (1) Turn the crankshaft pulley, and align its groove with timing mark ”0” of the timing chain cover.
  (2) Check that the point marks of the camshaft timing sprocket and VVT timing sprocket are in straight line on the timing chain cover surface as shown in the illustration.

HINT:
If not, turn the crankshaft 1 revolution (360°) and align the marks as above.

cardiagn.com

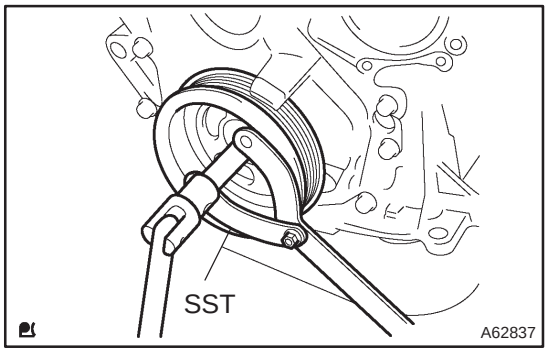

(b) Using SST, remove the pulley bolt.
SST 09960–10010 (09962–01000, 09963–01000)

(c) Remove the crankshaft pulley from the crankshaft.

9. REMOVE CHAIN TENSIONER ASSY NO.1

(a) Remove the 2 nuts and chain tensioner.

NOTICE:

Be sure not to revolve the crank shaft without the chain tensioner.

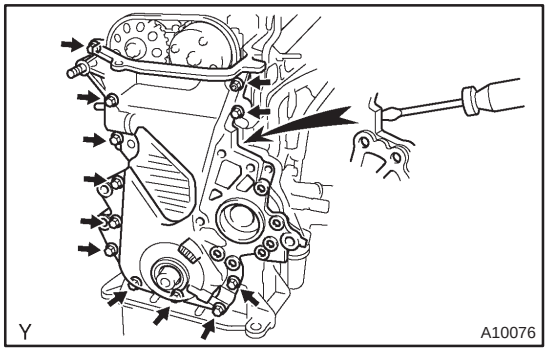

10. REMOVE TIMING CHAIN OR BELT COVER SUB–ASSY

(a) Remove the 11 bolts and nuts.

(b) Remove the timing chain cover by prying the portions between the cylinder head and cylinder block with a screw–driver.

NOTICE:

Be careful not to damage the contact surfaces of the timing chain cover, cylinder head and cylinder block.

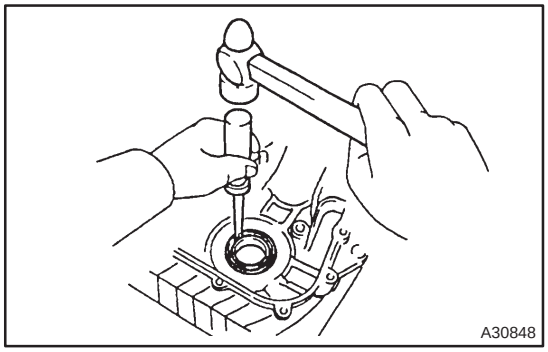

11. REMOVE TIMING GEAR COVER OIL SEAL

(a) Using a screwdriver remove the oil seal.

12. REMOVE CRANKSHAFT POSITION SENSOR PLATE NO.1

(a) Remove the crankshaft position sensor plate from the crankshaft.

13. REMOVE CHAIN TENSIONER SLIPPER

(a) Remove the bolt and chain tensioner slipper.

14. REMOVE CHAIN VIBRATION DAMPER NO.1

(a) Remove the 2 bolts and chain vibration damper.

cardiagn.com

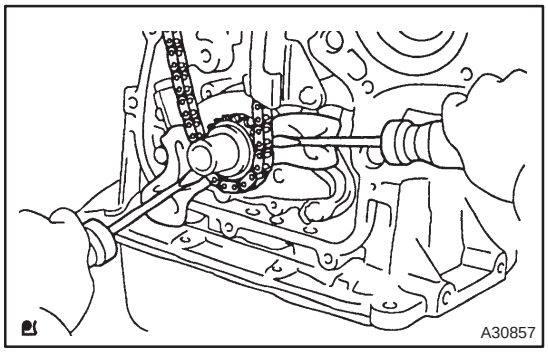

15. REMOVE CHAIN SUB–ASSY

(a) Using screwdrivers, ply out the timing chain with the crankshaft timing gear as shown in the illustration.

NOTICE:

- **Put shop rag to protect the engine.**
- **In case of revolving the camshafts with the chain off the sprockets, turn the crankshaft 1/4 revolution for valves not to touch the pistons.**

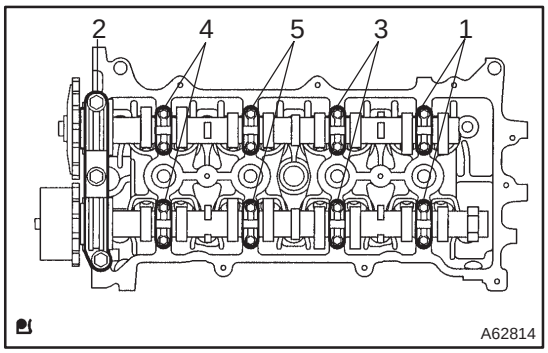

16. REMOVE CAMSHAFT

(a) Uniformly loosen and remove the 19 bearing cap bolts, in several passes, in the sequence shown, and remove the 9 bearing caps, intake and exhaust camshafts.

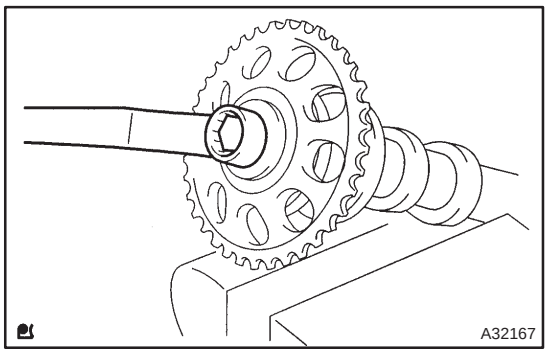

17. REMOVE CAMSHAFT TIMING GEAR OR SPROCKET

(a) Grip the camshaft with a vice, and remove the bolt and camshaft timing gear.

NOTICE:

Be careful not to damage the camshaft.

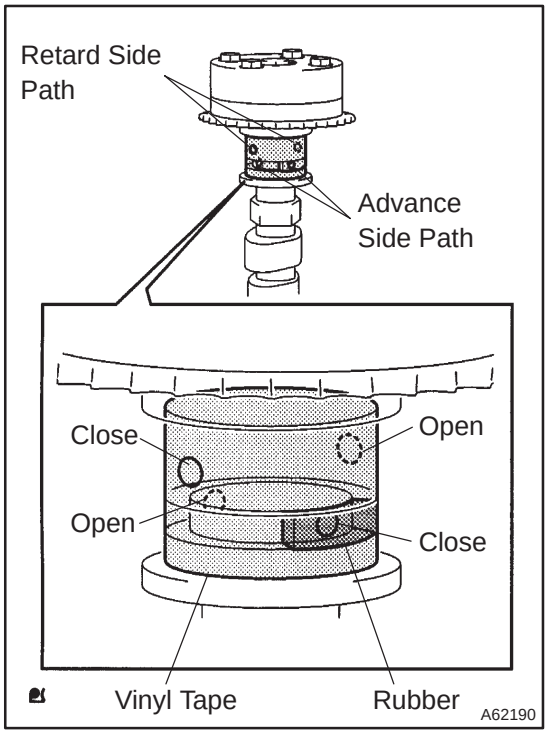

18. INSPECT CAMSHAFT TIMING GEAR ASSY

(a) Check the lock of camshaft timing gear.

(1) Grip the camshaft with a vice, and confirm the camshaft timing gear is locked.

NOTICE:

Be careful not to damage the camshaft.

(b) Release lock pin.

(1) Cover 4 oil paths of cam journal with vinyl tape as shown in the illustration.

HINT:

Two advance side paths are provided in the groove of the camshaft. Plug one of the path with a rubber piece.

(2) Break through the tapes of the advance side path and the retard side path on the opposite side of the groove.

cardiagn.com

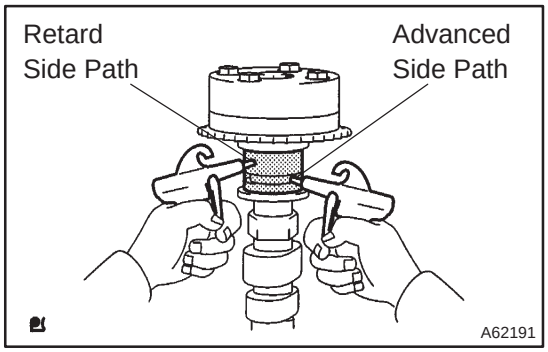

(3) Put air pressure into two broken paths (the advance side path and the retard side path) with about 150 kPa {1.5 kgf·cm}.

CAUTION:
Cover the pathes with shop rag to avoid oil splashing.

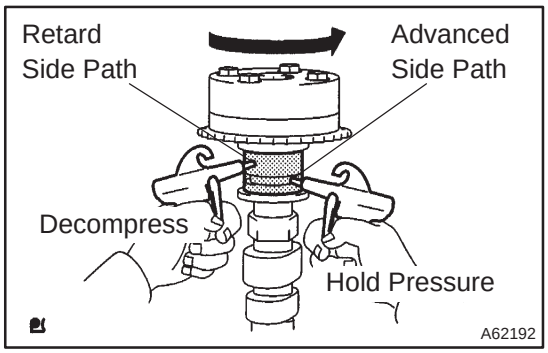

(4) Confirm if the camshaft timing gear assembly revolves in the timing advance direction when weakening the air pressure of the timing retard path.

HINT:
The lock pin is released, and camshaft timing gear, revolves in the advance direction.

(5) When the camshaft timing gear comes to the most advanced position, take out the air pressure of the timing retard side path, and then, take out that of timing advance side path.

CAUTION:
Camshaft timing assembly gear occasionally shifts to the retard side abruptly, if the air compression of the advanced side path is released before retard side path. It often causes the breakage of the lock pin.

(c) Check smooth revolution

(1) Revolve the camshaft timing gear assembly within the movable range except for the most retarded position several times, and check the smooth revolution.

CAUTION:
Be sure to perform this check by hand, instead of air pressure.

(d) Check the lock in the most retarded position.

(1) Confirm that the camshaft timing gear assembly is locked at the most retarded position.

cardiagn.com

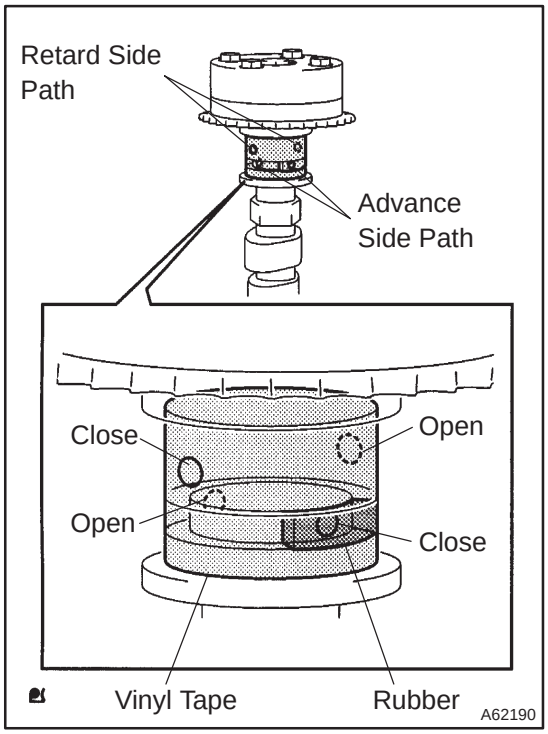

19. REMOVE CAMSHAFT TIMING GEAR ASSY

(a) Grip the camshaft with a vice, and confirm that the gear is locked.

CAUTION:
Be careful not to damage the camshaft.

(b) Cover 4 oil paths of cam journal with vinyl tape as shown in the illustration.

HINT:
Two advance side paths are provided in the groove of the camshaft. Plug one of the path with a rubber piece.

(c) Break through the tapes of the advance side path and the retard side path on the opposite side of the groove.

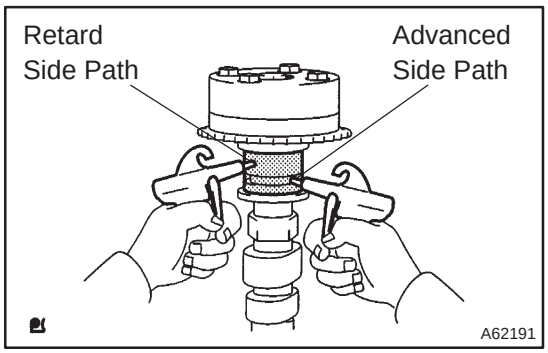

(d) Put air pressure into two broken paths (the advance side path and the retard side path) with about 150 kPa {1.5 kgf/cm^2}.

CAUTION:
Cover the pathes with shop rag to avoid oil splashing.

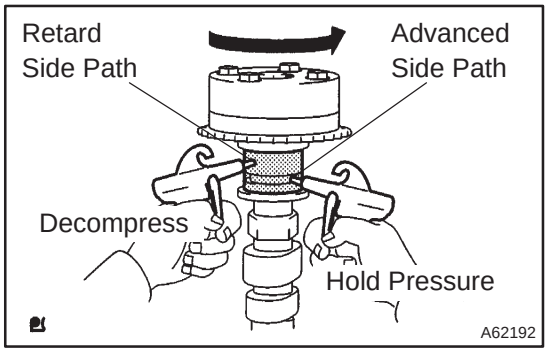

(e) Confirm if the camshaft timing gear assembly revolves in the timing advance direction when weakening the air pressure of the timing retard path.

HINT:
The lock pin is released, and camshaft timing gear revolves in the advance direction.

(f) When the camshaft timing gear comes to the most advanced position, take out the air pressure of the timing retard side path, and then, takeout that of timing advance side path.

CAUTION:
Camshaft timing gear assembly occasionally shifts to the retard side abruptly, if the air compression of the advanced side path is released before retard side paths. It often causes the breakage of the lock pin.

cardiagn.com

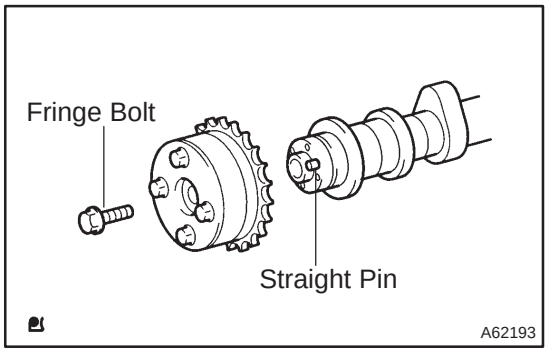

(g) Remove the fringe bolt of camshaft timing gear assembly.

NOTICE:

- **Be sure not to remove the other 4 bolts.**
- **In case of reusing the camshaft timing gear, release the strait pin locking first, and then install the gear.**

20. REMOVE CAMSHAFT TIMING OIL CONTROL VALVE ASSY

(a) Remove the bolt and camshaft timing oil control valve.

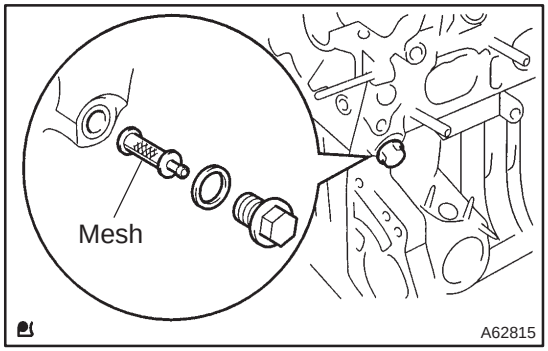

21. REMOVE OIL CONTROL VALVE FILTER

(a) Remove the bolt, gasket and oil control valve filter.

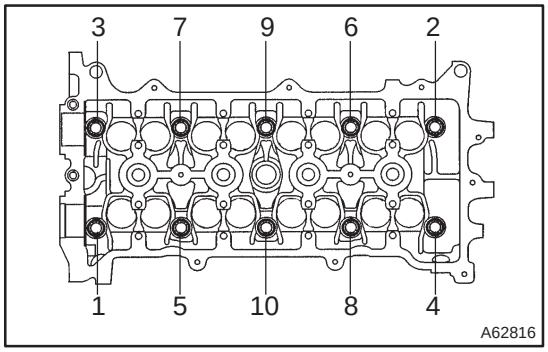

22. REMOVE CYLINDER HEAD SUB–ASSY

(a) Using a bi–hexagon wrench 10, uniformly loosen and remove the 10 cylinder head bolts, in several passes, in the sequence shown. Remove the 10 cylinder head bolts and plate washers.

NOTICE:

- **Be careful not to drop washers into the cylinder head.**
- **Head warpage or cracking could result from removing bolts in an incorrect order.**

23. REMOVE CYLINDER HEAD GASKET

(a) Remove the gasket from the cylinder block.

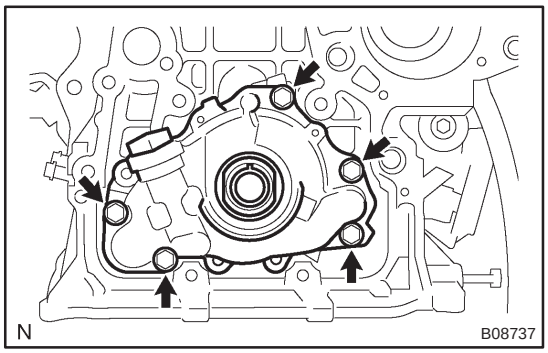

24. REMOVE OIL PUMP ASSY

(a) Remove the 5 bolts, oil pump and gasket.

cardiagn.com

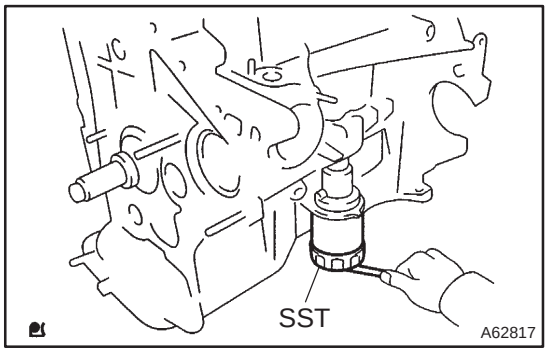

25. REMOVE OIL FILTER SUB–ASSY

(a) Using SST, remove the oil filter.
SST 09228–06501

26. REMOVE OIL FILTER UNION

(a) Using a socket hexagon wrench 12, remove the oil filter union.

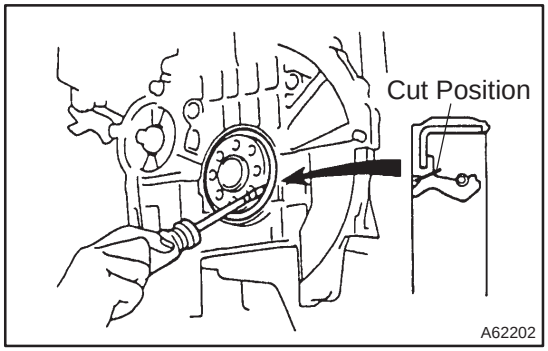

27. REMOVE ENGINE REAR OIL SEAL

(a) Using a knife, cut off the oil seal lip.
(b) Using a screwdriver with its tip taped, pry out the oil seal.

NOTICE:
After the removal, check if the crankshaft is not damaged. If there is, mend it with a sandpaper (# 400).

28. REMOVE OIL PAN DRAIN PLUG

(a) Remove the oil pan drain plug and gasket from the oil pan.

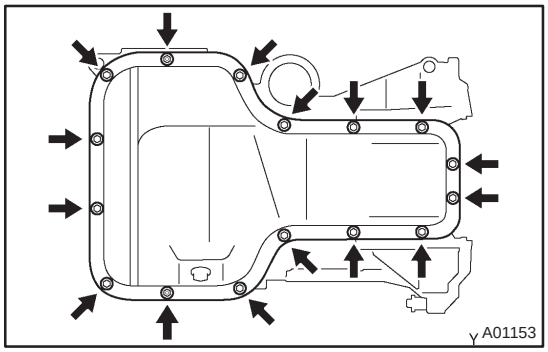

29. REMOVE OIL PAN SUB–ASSY

(a) Remove the 14 bolts and 2 nuts.

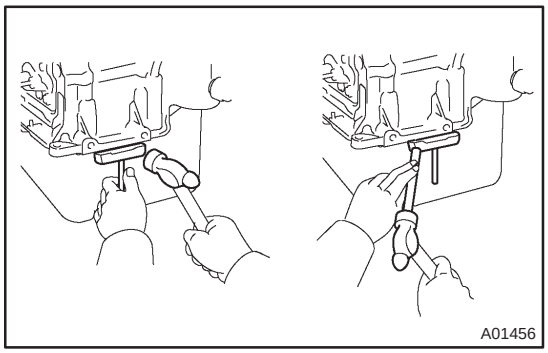

(b) Insert the blade of SST between the bearing cap sub–assembly and oil pan, and cut off applied sealer and remove the oil pan.
SST 09032–00100

NOTICE:
Be careful not to damage the oil pan contact surface of the bearing cap sub–assembly and the oil pan flange.

cardiagn.com

30. REMOVE OIL STRAINER SUB–ASSY

(a) Remove the bolt, 2 nuts, oil strainer and gasket.

31. REMOVE CYLINDER BLOCK WATER DRAIN COCK SUB–ASSY

(a) Remove the cylinder block water drain cock from the cylinder block.

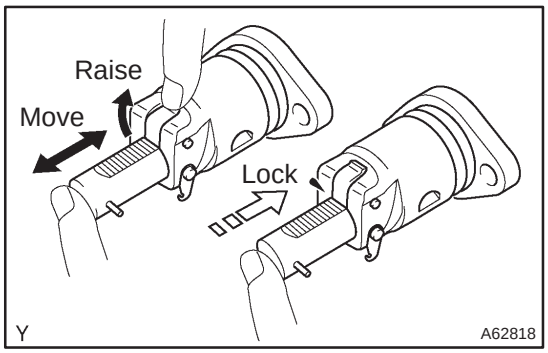

32. INSPECT CHAIN TENSIONER ASSY NO.1

(a) Check that the plunger moves smoothly when the ratchet pawl is raised with your finger.

(b) Release the ratchet pawl and check that the plunger is locked in place by the ratchet pawl and does not move when pushed with your finger.

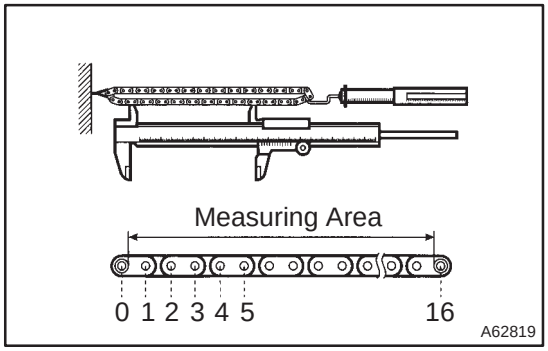

33. INSPECT CHAIN SUB–ASSY

(a) Using a spring tension gauge and vernier calipers, pull the timing chain with 140 N (4.3 kgf, 315 lb) and measure the length of it.
Maximum chain elongation : 112.6 mm (4.433 in.)

HINT:
Make the same measurements pulling at 3 or more places selected at random.

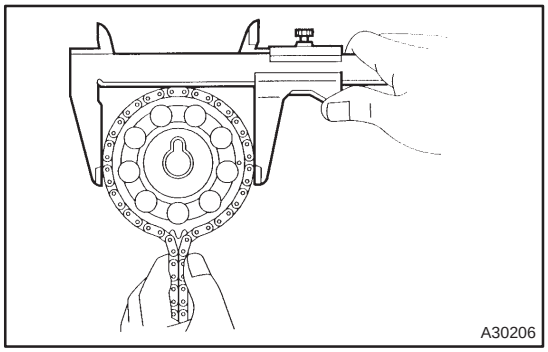

34. INSPECT CAMSHAFT TIMING GEAR OR SPROCKET

(a) Wrap the chain around the timing sprocket.

(b) Using a vernier calipers, measure the timing sprocket diameter with the chain.
Minimum sprocket diameter (w / chain):
97.3mm (3.831 in.)

NOTICE:
Vernier calipers must contact the chain rollers for measuring.

cardiagn.com

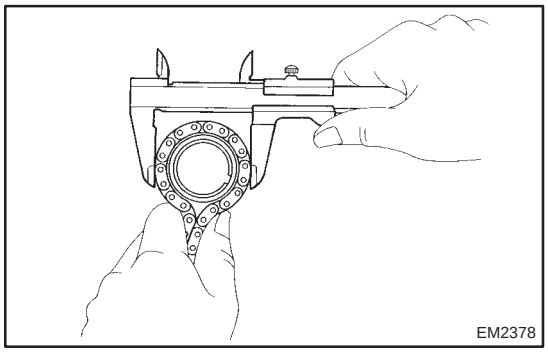

35. INSPECT CRANKSHAFT TIMING GEAR OR SPROCKET

(a) Wrap the chain around the timing sprocket.
(b) Using a vernier calipers, measure the timing sprocket diameter with the chain.

NOTICE:
Vernier calipers must contact the chain rollers for the measuring.

Minimum sprocket diameter (w / chain):
51.6mm (2.032 in.)

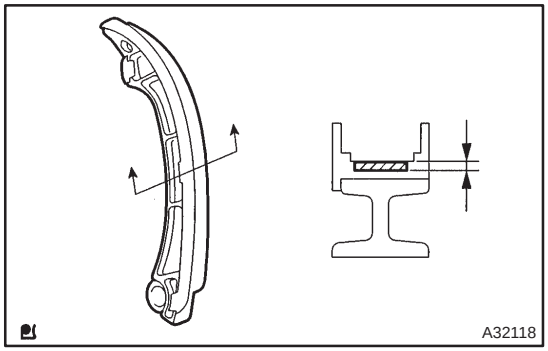

36. INSPECT CHAIN TENSIONER SLIPPER

(a) Using a vernier calipers, measure the chain tensioner slipper wears.
Maximum wear: 1.0 mm (0.039 in.)

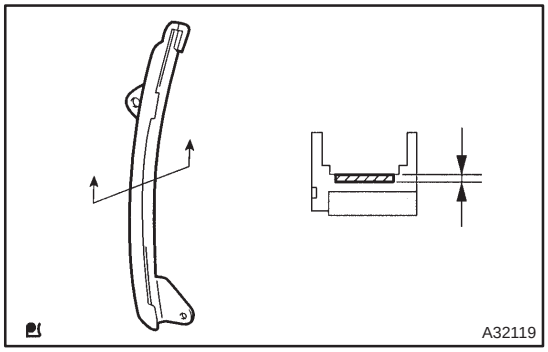

37. INSPECT CHAIN VIBRATION DAMPER NO.1

(a) Using a vernier calipers, measure the vibration damper wears.
Maximum wear: 1.0 mm (0.039 in.)

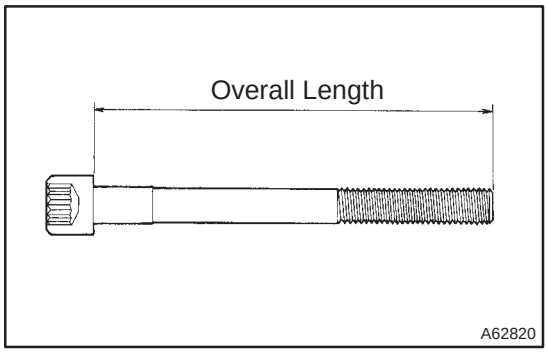

38. INSPECT CYLINDER HEAD SET BOLT

(a) Using a vernier calipers, measure the length of head bolts from the seat to the end.
Standard bolt length:
156.0 – 159.0 mm (6.142–6.260 in.)
Maximum bolt length: 159.5 mm (6.280 in.)

cardiagn.com

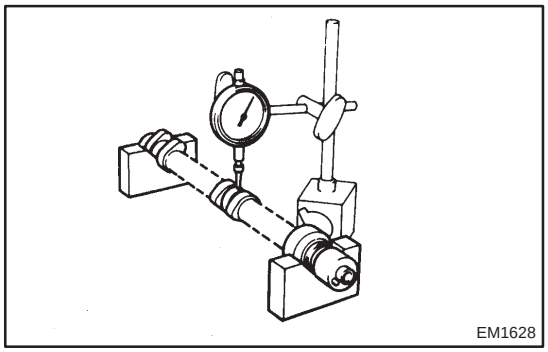

39. INSPECT CAMSHAFT

(a) Inspect camshaft for runout.
  (1) Place the camshaft on V–blocks.
  (2) Using a dial indicator, measure the circle runout at the center journal.
  Maximum circle runout: 0.03 mm (0.0012 in.)

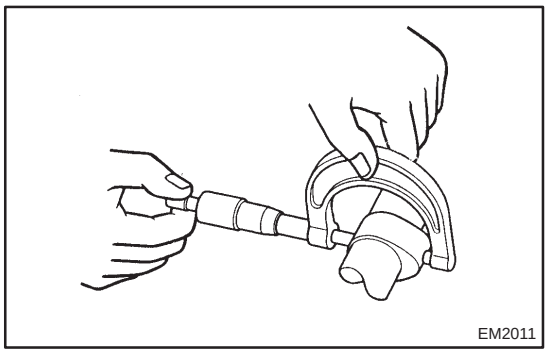

(b) Inspect cam lobes.
  (1) Using a micrometer, measure the cam lobe height.
  Standard cam lobe height:
  Intake 44.333 – 44.433 mm (1.7454 – 1.7493 in.)
  Exhaust 43.761 – 43.861 mm (1.7229 – 1.7268 in.)
  Minimum cam lobe height:
  Intake 44.18 mm (1.7394 in.)
  Exhaust 43.61 mm (1.7169 in.)

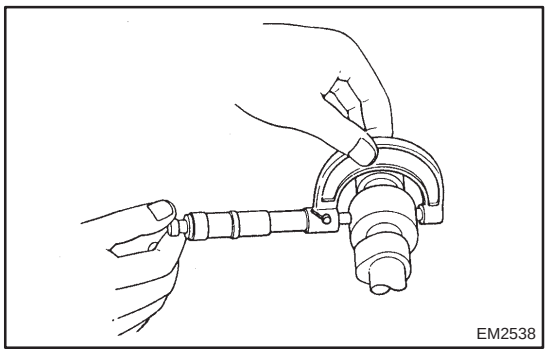

(c) Inspect camshaft journals.
  (1) Using a micrometer, measure the journal diameter.
  No. 1 journal diameter:
  34.449 – 34.465 mm (1.3563 – 1.3569 in.)
  Others journal diameter:
  22.949 – 22.965 mm (0.9035 – 0.9041 in.)

If the journal diameter is not as specified, check the oil clearance.

40. INSTALL CYLINDER BLOCK WATER DRAIN COCK SUB–ASSY

(a) Apply two or three threads of adhesive to the drain union, and install it within 3 minutes.
  Torque: 20 N·m (204 kgf·cm15 ft·lbf)

(b) After applying the specified torque, rotate the drain union clockwise until its drain port faces downward.

NOTICE:

- **Do not put into coolant in an hour after the installation.**
- **Do not rotate the drain union more than 360° in (b), and never loosen it after setting the union correctly.**

41. INSTALL OIL STRAINER SUB–ASSY

(a) Install a new gasket and the oil strainer with the 2 nuts and a bolt.
  Torque: 9.0 N·m (92 kgf·cm, 80 in.·lbf)

cardiagn.com

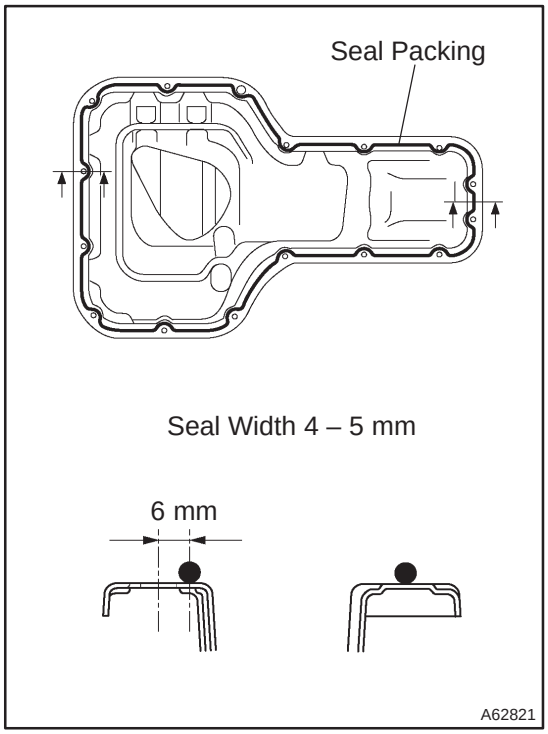

42. INSTALL OIL PAN SUB–ASSY

(a) Remove any old packing material from the contact surface.

(b) Apply seal packing in the shape of bead (Diameter 3.5 mm – 4.5 mm(0.1379–0.177in)) consequently as shown in the illustration.
Seal packing: Part No. 08826–00080 or equivalent

NOTICE:

- **Remove any oil from the contact surface.**
- **Install the oil pan within 3 minutes after applying seal packing.**
- **Do not put into engine oil within 2 hours after installing.**

(c) Install the oil pan with the 14 bolts and 2 nuts.
Torque: 9.0 N·m (92 kgf·cm, 80 in.·lbf)

43. INSTALL OIL PAN DRAIN PLUG

(a) Place a new gasket on the oil pan drain plug, and install it.
Torque: 37 N·m (377 kgf·cm, 27 ft·lbf)

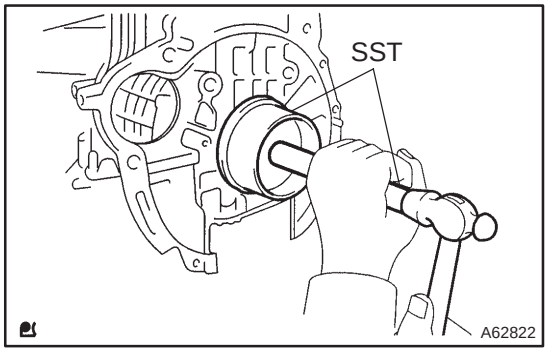

44. INSTALL ENGINE REAR OIL SEAL

(a) Apply MP grease to a new oil seal lip.

NOTICE:

Keep the lip off foreign materials.

(b) Using SST, tap in the oil seal until its surface is flush with the oil seal retainer edge.
SST 09223–15030, 09950–70010 (09951–07100)

NOTICE:

Wipe off extra grease on the crank shaft.

45. INSTALL OIL FILTER UNION

(a) Using a socket hexagon wrench 12, install the oil filter union.
Torque: 30 N·m (306 kgf·cm, 22 ft·lbf)

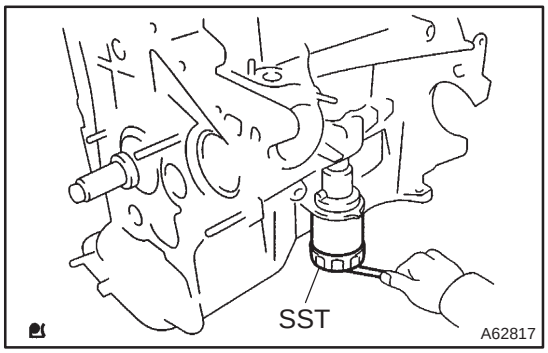

46. INSTALL OIL FILTER SUB–ASSY

(a) Check and clean the oil filter installation surface.

(b) Apply clean engine oil to the gasket of a new oil filter.

(c) Lightly screw the oil filter into place, and tighten it until the gasket contacts the seat.

(d) Using SST, tighten it an additional 3/4 turn.
SST 09228–06501

cardiagn.com

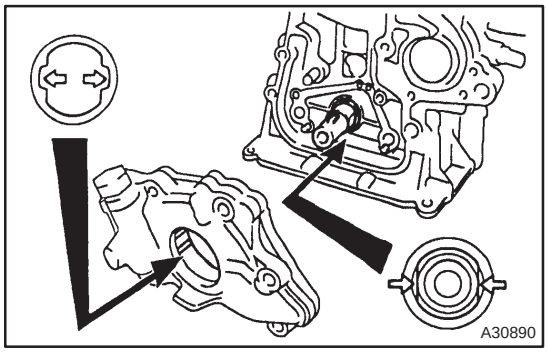

47. INSTALL OIL PUMP ASSY

(a) Engage the spline teeth of the oil pump drive rotor with the large teeth of the crankshaft, and side the oil pump.

(b) Install the oil pump with the 5 bolts.
Torque: 9.0 N·m (92 kgf·cm, 80 in.·lbf)

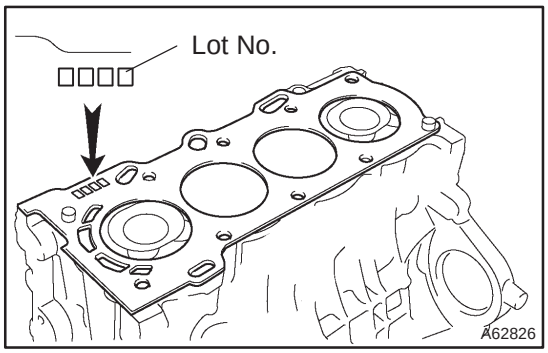

48. INSTALL CYLINDER HEAD GASKET

(a) Place a new cylinder head gasket on the cylinder block surface with the Lot No. stamp upward.

NOTICE:

- **Pay attention to the installation direction.**
- **Place the cylinder head quietly in order not to damage the gasket with the bottom part of the head.**

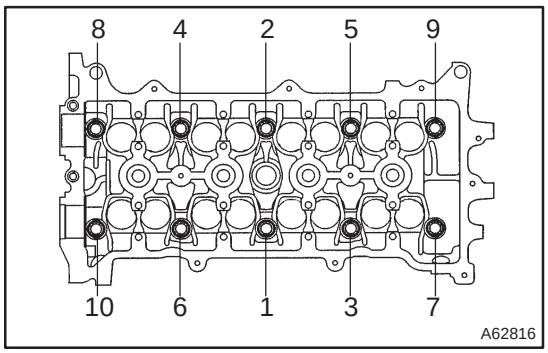

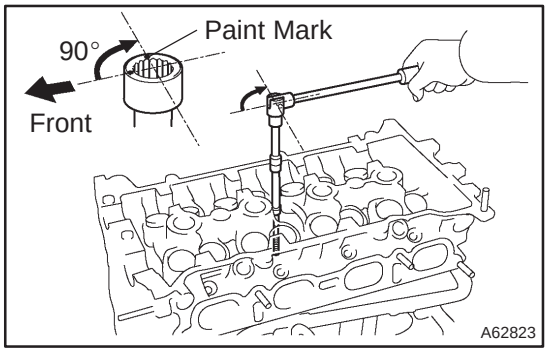

49. INSTALL CYLINDER HEAD SUB–ASSY

HINT:
The cylinder head bolts are tightened in 2 progressive steps.

(a) Apply a light coat of engine oil on the threads and under the heads of the cylinder head bolts.

(b) Using a bi–hexagon wrench 10, install and uniformly tighten the 10 cylinder head bolts with plate washers, in several passes, in the sequence shown.
Torque: 49 N·m (500 kgf·cm, 36 ft·lbf)

(c) Mark the front of the cylinder head bolt with paint.

(d) Retighten the cylinder head bolts 90° in the numerical order shown.

(e) Check that the point marked bolts are moved at 90 ° angle.

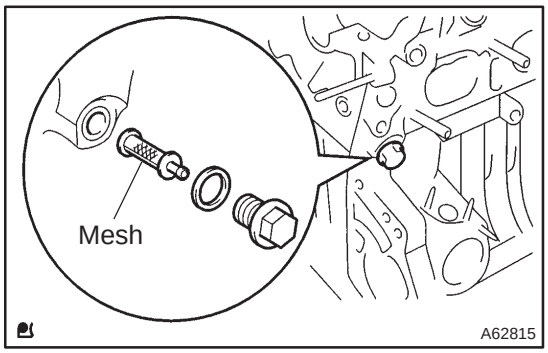

50. INSTALL OIL CONTROL VALVE FILTER

(a) Confirm that the filter is clear.

(b) Install the oil control valve filter to the cylinder head.

(c) Place a new gasket on the bolt, and install it.
Torque: 30 N·m (306 kgf·cm, 22 ft·lbf)

cardiagn.com

51. INSTALL CAMSHAFT TIMING OIL CONTROL VALVE ASSY

(a) Install a new O–ring to the camshaft timing oil control valve.
(b) Install the camshaft timing oil control valve with the bolt.
Torque: 9.0 N·m (92 kgf·cm, 80 in.·lbf)

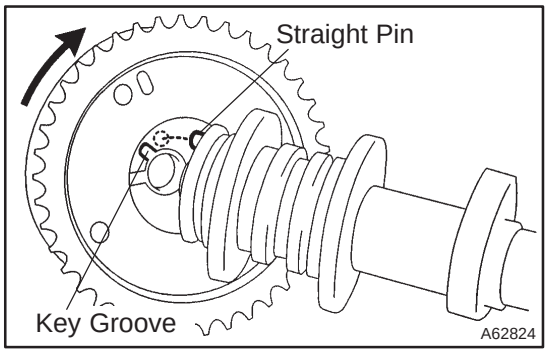

52. INSTALL CAMSHAFT TIMING GEAR ASSY

(a) Put the camshaft timing gear assembly and the camshaft together with the straight pin off the key groove.
(b) Turn the camshaft timing gear assembly to the left direction (as shown in the illustration) with pushing it lightly against the camshaft. Push further at the position where the pin gets into the groove.

CAUTION:
Be sure not to turn the camshaft timing gear to the retard angle side (to the right angle).

(c) Check that there is no clearance between the gear's fringe and the camshaft.
(d) Tighten the fringe bolt with the camshaft timing gear fixed.
Torque: 54 N·m (551 kgf·cm 40 ft·lbf)
(e) Check that the camshaft timing gear assembly can move to the retard angle side (the right angle), and is locked at the most retarded position.

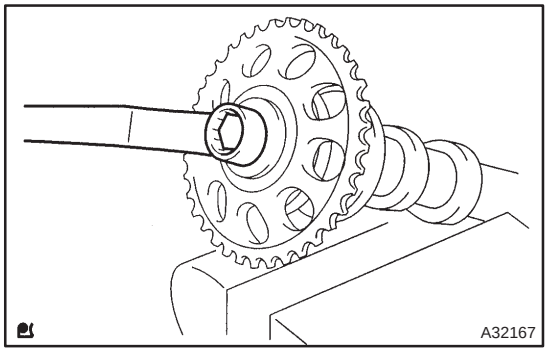

53. INSTALL CAMSHAFT TIMING GEAR OR SPROCKET

(a) Grip the camshaft with a vice, and install the camshaft timing gear.
Torque: 54 N·m (551 kgf·cm 40 ft·lbf)

NOTICE:
Be careful not to damage the camshaft.

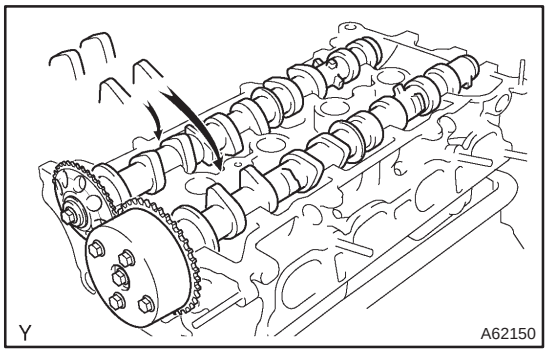

54. INSTALL CAMSHAFT

(a) Apply light coat of engine oil on the camshaft journals.
(b) Place the 2 camshafts on the cylinder head with the No. 1 cam lobes facing as shown the illustration.

cardiagn.com

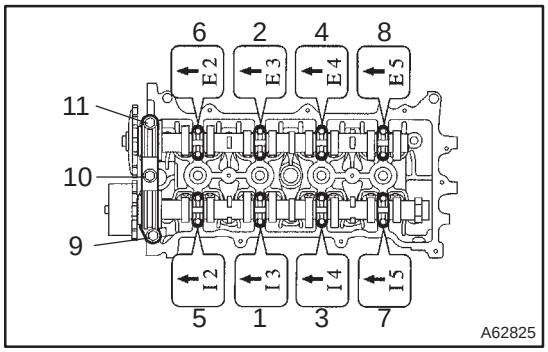

(c) Examine the front marks and numbers and tighten the bolts in the order shown in the illustration.
Torque:
Bearing cap No. 1 23 N·m (235 kgf·cm, 17 ft·lbf)
Bearing cap No. 3 13 N·m (133 kgf·cm, 10 ft·lbf)

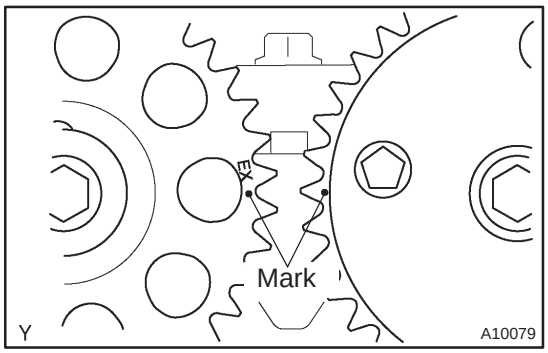

55. INSTALL CHAIN SUB–ASSY

(a) Set No. 1 cylinder to TDC/compression.
(1) Turn the hexagonal wrench head portion of the camshafts, and align the point marks of the camshaft timing gears.

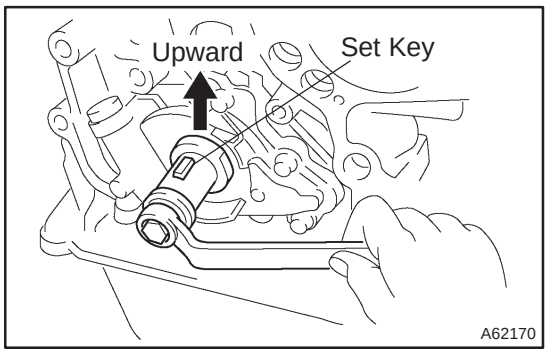

(2) Using a crankshaft pulley bolt, turn the crankshaft and set the set key on the crankshaft upward.

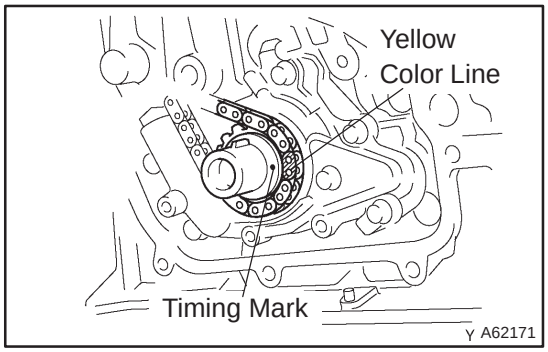

(b) Install the timing chain on the crankshaft timing sprocket with the yellow color link aligned with the timing mark on the crankshaft timing sprocket.

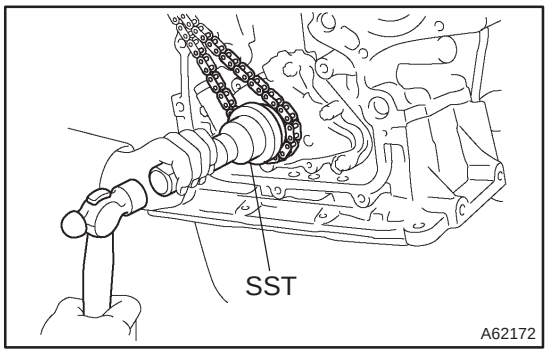

(c) Using a SST, install the sprocket.
SST 09223–22010

cardiagn.com

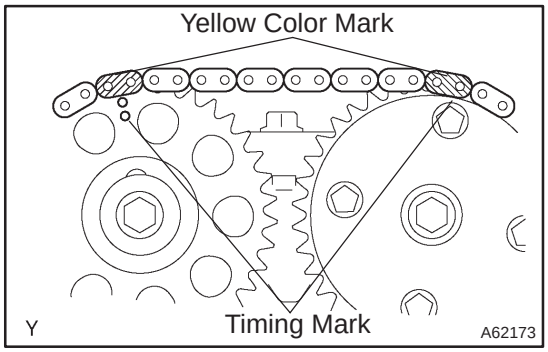

(d) Install the timing chain on the camshaft timing sprockets with the yellow color links aligned with the timing marks on the camshaft timing sprockets.

56. INSTALL CHAIN VIBRATION DAMPER NO.1

(a) Install the chain vibration damper with the 2 bolts.
Torque: 9.0 N·m (92 kgf·cm, 80 in.·lbf)

57. INSTALL CHAIN TENSIONER SLIPPER

(a) Install the chain tensioner slipper with the bolt.
Torque: 19 N·m (194 kgf·cm, 14 ft·lbf)

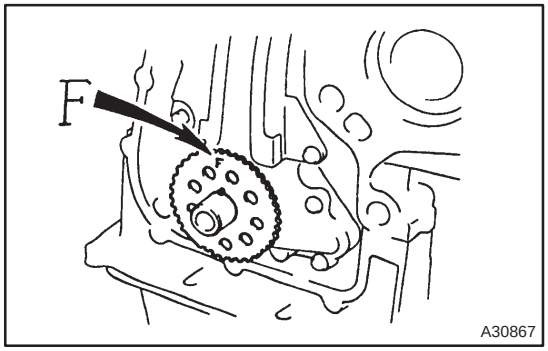

58. INSTALL CRANKSHAFT POSITION SENSOR PLATE NO.1

(a) Install the plate with the ”F” mark facing forward.

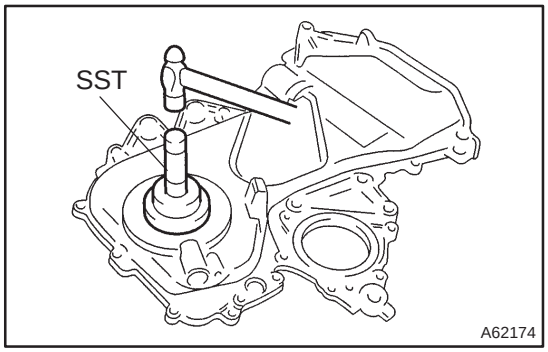

59. INSTALL TIMING GEAR COVER OIL SEAL

(a) Apply MP grease to the oil seal lip.
(b) Using SST, tap in a new oil seal until its surface is flush with the timing chain cover edge.
SST 09223–22010

NOTICE:
Keep the lip off foreign materials.

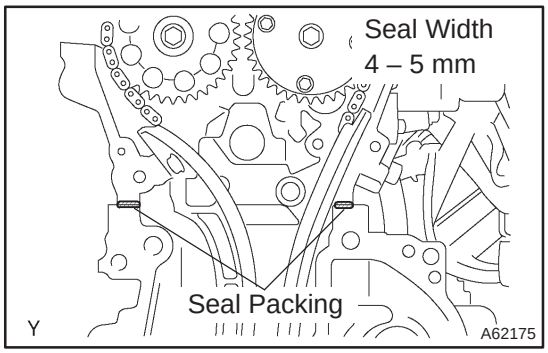

60. INSTALL TIMING CHAIN OR BELT COVER SUB–ASSY

(a) Remove any old packing material from the contact surface.

cardiagn.com

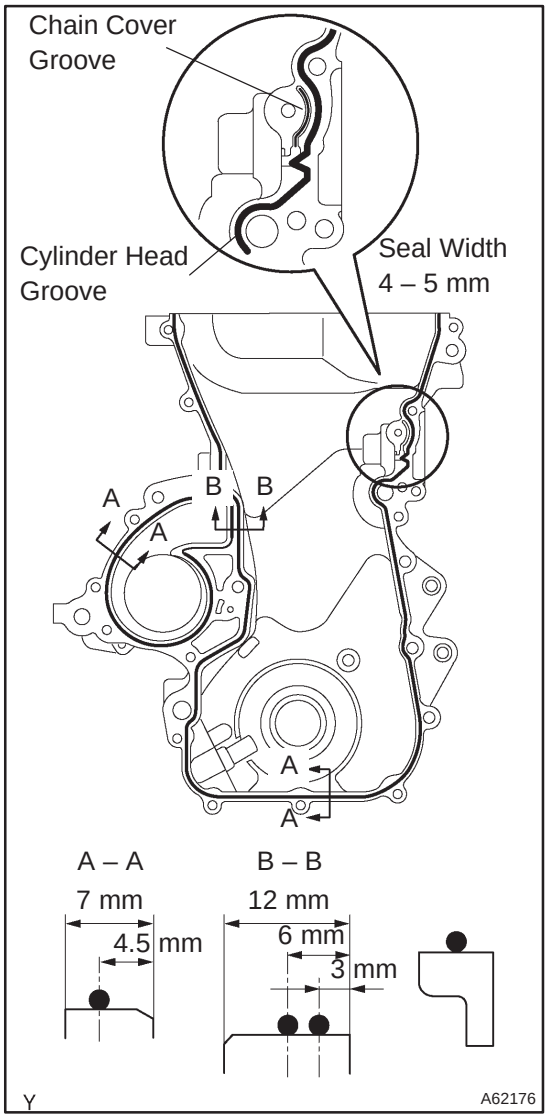

(b) Apply seal packing in the shape of bead (Diameter 3.5 mm – 4.5 mm(0.1379–0.177in)) consequently as shown in the illustration.
Seal packing:
Water pump part part No. 08826–00100 or equivalent
Other part part No. 08826–00080 or equivalent

(c) Install the timing chain cover, with the 12 bolts and nut.
Torque:
M6 13 N·m (133 kgf·cm, 10 ft·lbf)
M8 19 N·m (194 kgf·cm, 14 ft·lbf)

NOTICE:
- **Remove any oil from the contact surface.**
- **Install the oil pan within 3 minutes after applying seal packing.**
- **Do not put into engine oil within 2 hours after installing.**

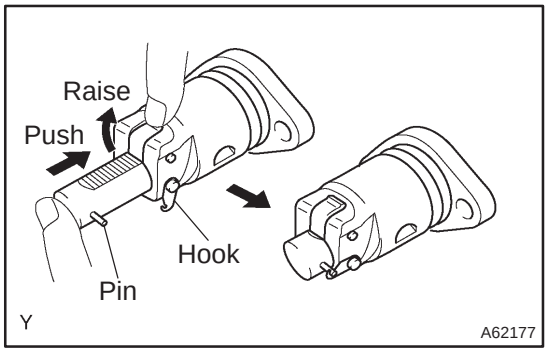

61. INSTALL CHAIN TENSIONER ASSY NO.1

(a) Check the O–ring is clean, and set the hook as shown in the illustration.

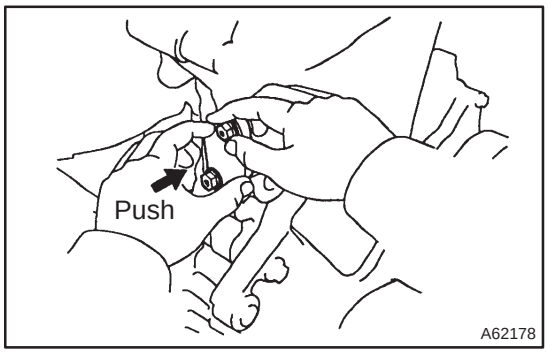

(b) Apply engine oil to the chain tensioner and install it with the 2 nuts..
Torque: 9.0 N·m (92 kgf·cm, 80 in.·lbf)

NOTICE:
When installing the tensioner, set the hook again if the hook releases the plunger.

cardiagn.com

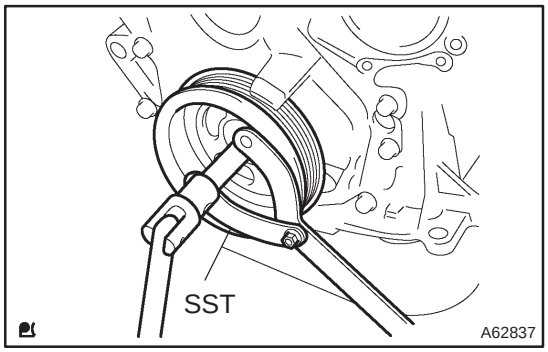

62. INSTALL CRANKSHAFT PULLEY

(a) Align the pulley set key with the key groove of the pulley, and slide on the pulley.

(b) Using SST, install the pulley bolt.
SST 09960–10010 (09962–01000, 09963–01000)
Torque: 138 N·m (1,407 kgf·cm, 102 ft·lbf)

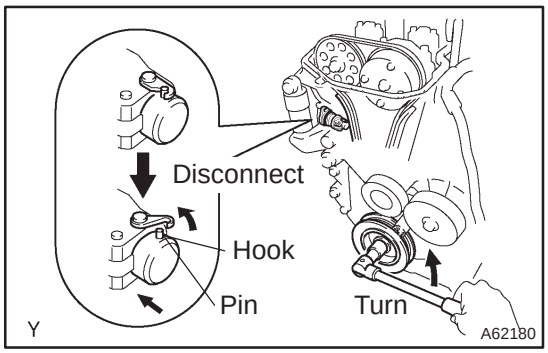

(c) Turn the crankshaft counterclockwise, and disconnect the plunger knock pin from the hook.

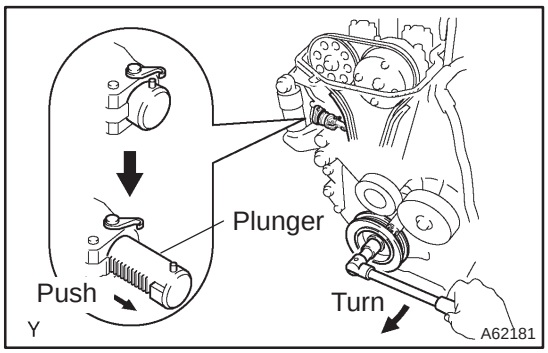

(d) Turn the crankshaft clockwise, and check that the slipper is pushed by the plunger.

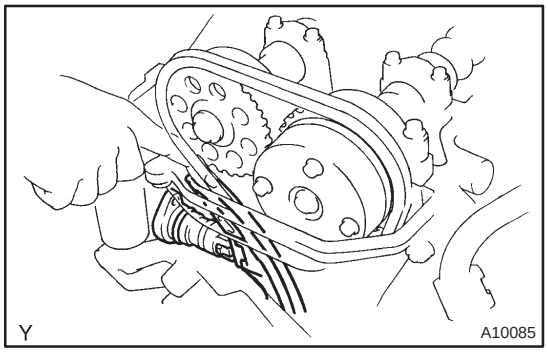

HINT:
If the plunger does not spring out, press the slipper into the chain tensioner with a screwdriver or your finger so that the hook is released from the knock pin and the plunger springs out.

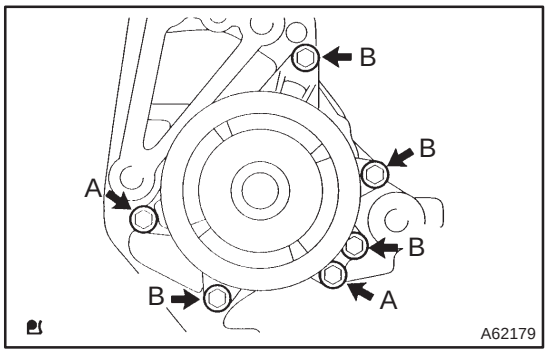

63. INSTALL WATER PUMP ASSY

(a) Place a new O–ring on the timing chain cover.

(b) Install the water pump with the 6 bolts.
Torque:
Bolt A 9.0 N·m (92 kgf·cm, 80 in·lbf)
Bolt B 11 N·m (112 kgf·cm, 8 ft·lbf)

HINT:
Each bolt length is indicated in the illustration.

cardiagn.com

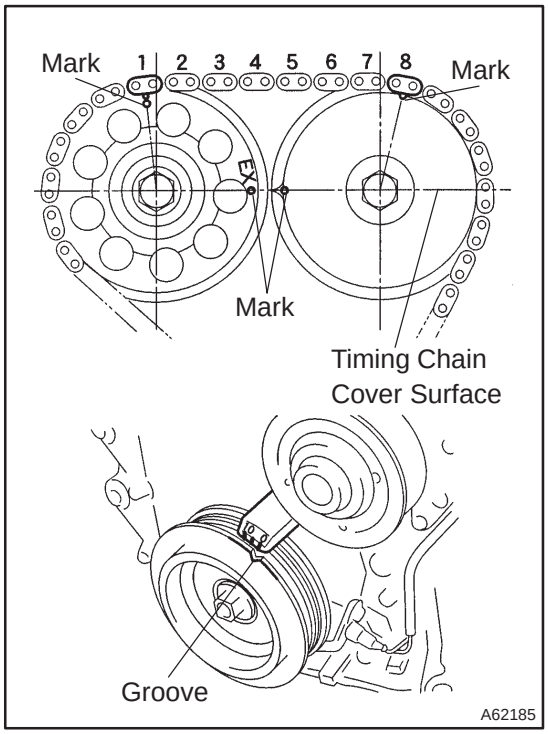

64. INSPECT VALVE CLEARANCE

(a) Set No. 1 cylinder to TDC/compression.

(1) Turn the crankshaft pulley, and align its groove with timing mark ”0” of the timing chain cover.

(2) Check that the point marks of the camshaft timing sprocket and VVT timing sprocket are in straight line on the timing chain cover surface as shown in the illustration.

HINT:

If not, turn the crankshaft 1 revolution (360°) and align the marks as above.

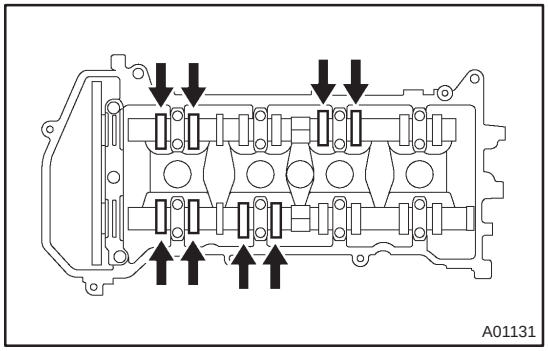

(b) Check only the valves indicated.

(1) Using a feeler gauge, measure the clearance between the valve lifter and camshaft.

(2) Record the out–of specification valve clearance measurements. They will be used later to determine the required replacement adjusting shim.

Valve clearance (Cold):
Intake 0.15 – 0.25 mm (0.006 – 0.010 in.)
Exhaust 0.25 – 0.35 mm (0.010 – 0.014 in.)

(c) Turn the crankshaft 1 revolution (360°) and set No. 4 cylinder to TDC/compression.

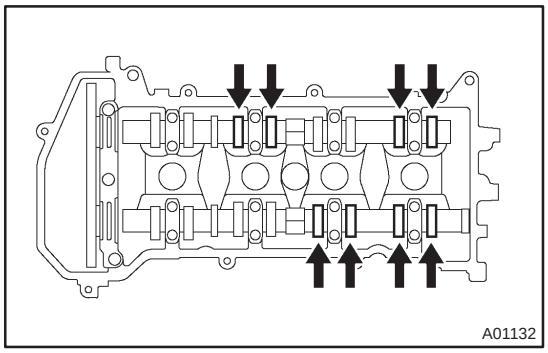

(d) Check only the valves indicated.

(1) Using a feeler gauge, measure the clearance between the valve lifter and camshaft.

(2) Record the out–of specification valve clearance measurements. They will be used later to determine the required replacement adjusting shim.

Valve clearance (Cold):
Intake 0.15 – 0.25 mm (0.006 – 0.010 in.)
Exhaust 0.25 – 0.35 mm (0.010 – 0.014 in.)

cardiagn.com

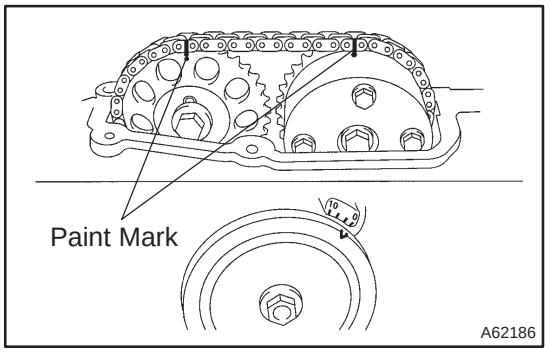

65. ADJUST VALVE CLEARANCE

NOTICE:

Be sure not to revolve the crankshaft without the chain tensioner.

(a) Set the No. 1 cylinder to the TDC/compression.

(b) Place match marks on the timing chain and camshaft timing sprockets.

(c) Remove the 2 bolts and chain tensioner.

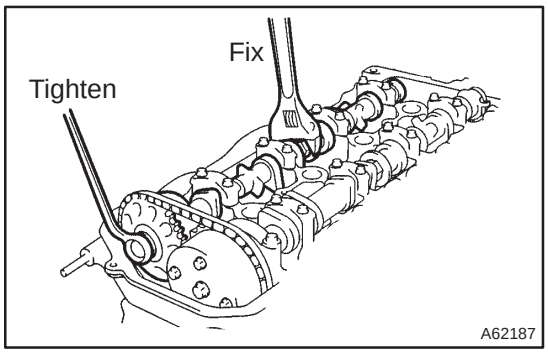

(d) Fix the camshaft with a spanner and so on, then loosen the camshaft timing gear set bolt.

NOTICE:

Be careful not to damage the valve lifter.

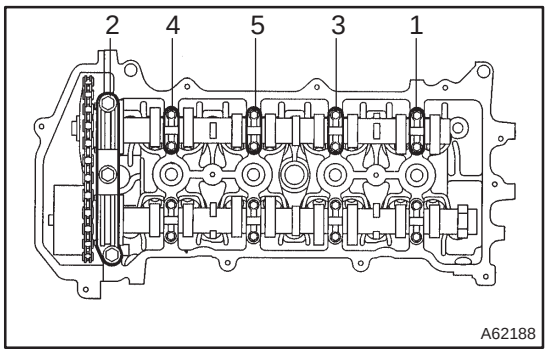

(e) Loosen the camshaft bearing cap bolts on No. 2 camshaft in the order as shown in the illustration in several passes, and remove the caps.

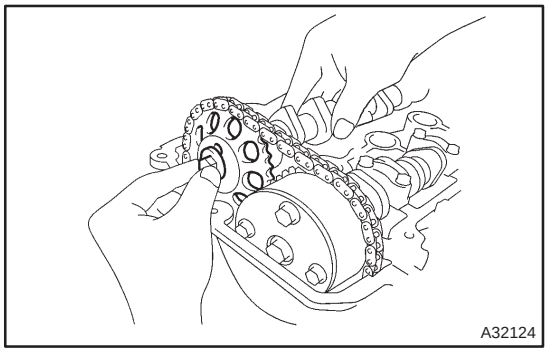

(f) Remove the camshaft timing gear as shown in the illustration.

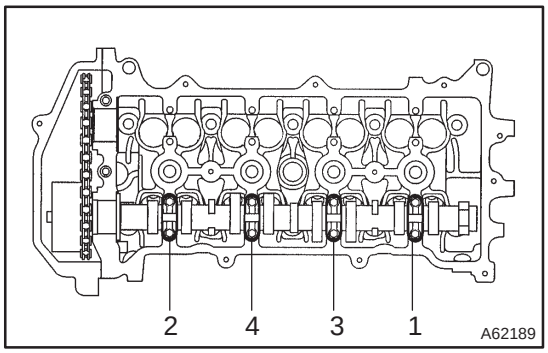

(g) Loosen the camshaft bearing cap bolts on camshaft in the order as shown in the illustration in several passes, and remove the caps.

cardiagn.com

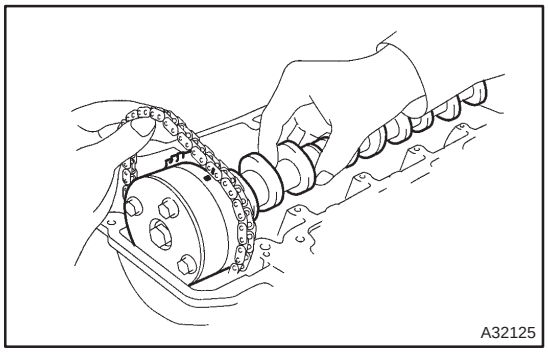

(h) Remove the camshaft with holding the timing chain.

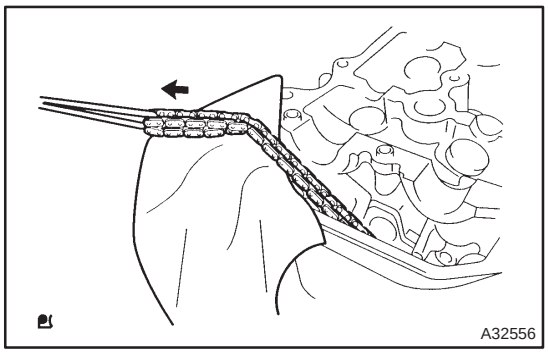

(i) Tie the timing chain with a string as shown in the illustration.

NOTICE:

Be careful not to drop anything inside the timing chain cover.

(j) Remove the valve lifters.

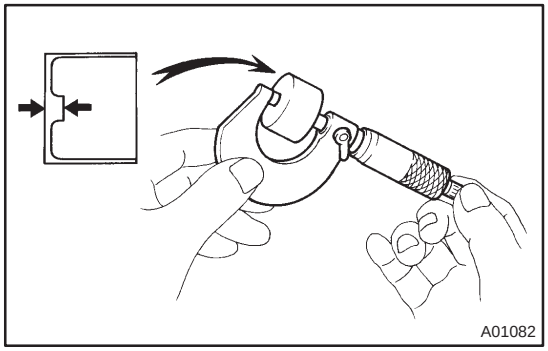

(k) Using a micrometer, measure the thickness of the removed lifters.

(l) Calculate the thickness of a new lifter so that the valve clearance comes within the specified value.

A	Thickness of new lifter
B	Thickness of used lifter
C	Measured valve clearance

Intake: A = B + (C – 0.20 mm (0.008 in.))

Exhaust: A = B + (C – 0.30 mm (0.012 in.))

HINT:

- Select a new lifter with a thickness as close as possible to the calculated values.
- Lifter are available in 35 sizes in increments of 0.020 mm (0.0008 in.), from 5.060 mm (0.1992 in.) to 5.740 mm (0.2260 in.).

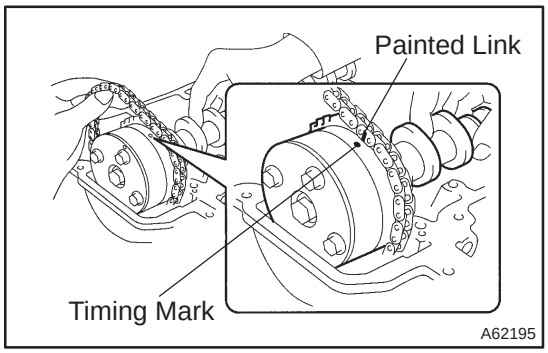

(m) As shown in the illustration, install the timing chain on the camshaft timing gear, with the painted links aligned with the timing marks on the camshaft timing sprockets.

cardiagn.com

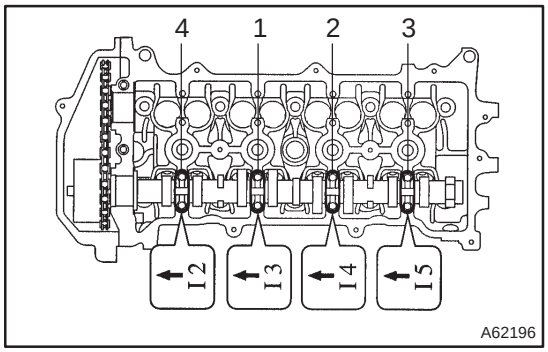

(n) Examine the front marks and numbers and tighten the bolts in the order shown in the illustration.
Torque: 13 N·m (133 kgf·cm, 10 ft·lbf)

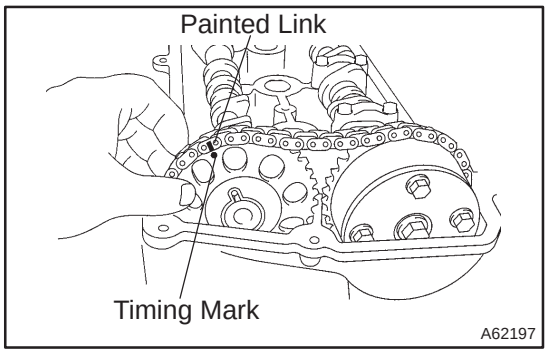

(o) Put the camshaft No.2 on the cylinder head with the painted links of the chain aligned with the timing mark on the camshaft timing sprockets.

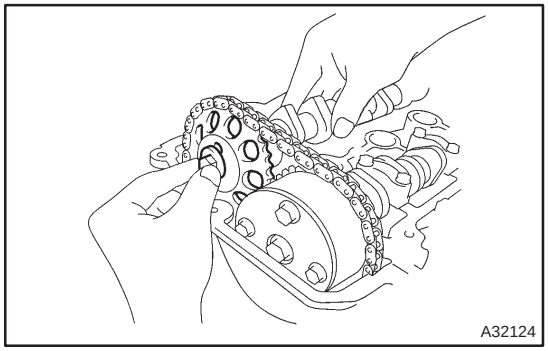

(p) Tighten the set bolt temporarily.

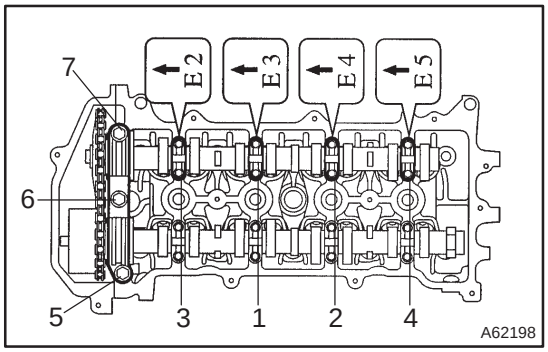

(q) Examine the front marks and numbers and tighten the bolts in the order shown in the illustration.
Torque: 13 N·m (133 kgf·cm, 10 ft·lbf)

(r) Install the bearing cap No. 1.
Torque: 23 N·m (235 kgf·cm, 17 ft·lbf)

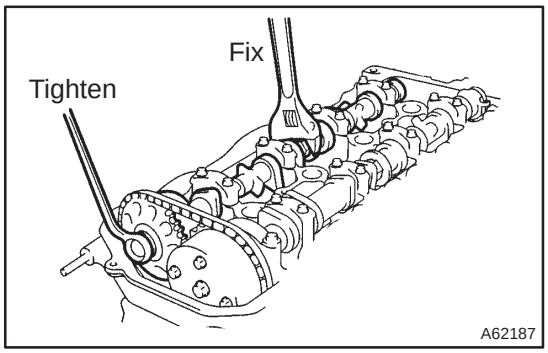

(s) Fix the camshaft with a spanner and so on, then tighten the camshaft timing gear set bolt.
Torque: 54 N·m (551 kgf·cm, 40 ft·lbf)

NOTICE:
Be careful not to damage the valve lifter.

cardiagn.com

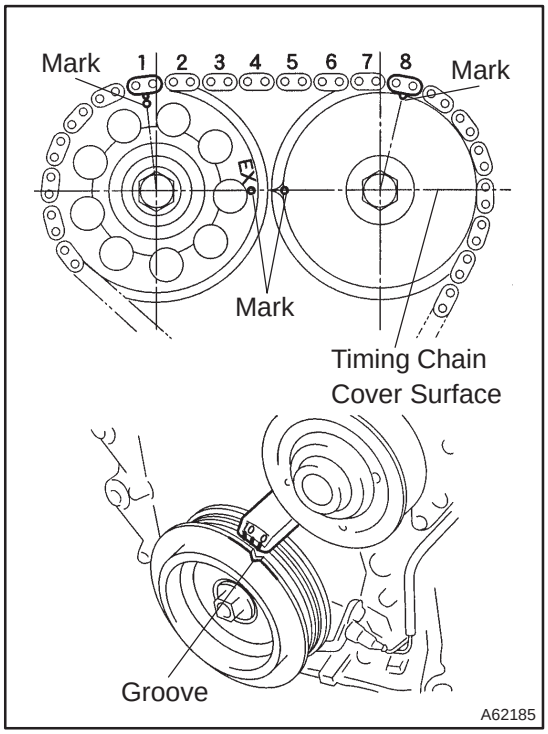

(t) Check the match marks on the timing chain and camshaft timing sprockets, and then the alignment of the pulley groove with timing mark of the chain cover as shown in the illustration.

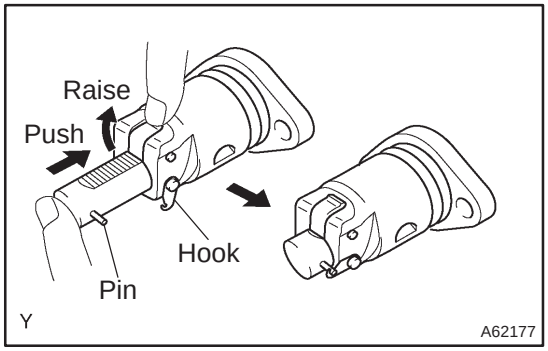

(u) Install chain tensioner.

(1) Check the O–ring is clean, and set the hook as shown in the illustration.

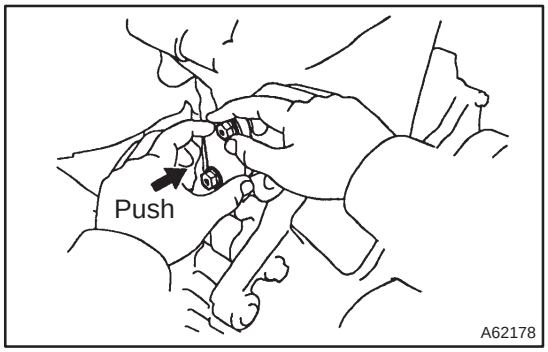

(2) Apply engine oil to the chain tensioner and install it.
Torque: 9.0 N·m (92 kgf·cm, 80 in·lbf)

NOTICE:
When installing the tensioner, set the hook again if the hook release the plunger.

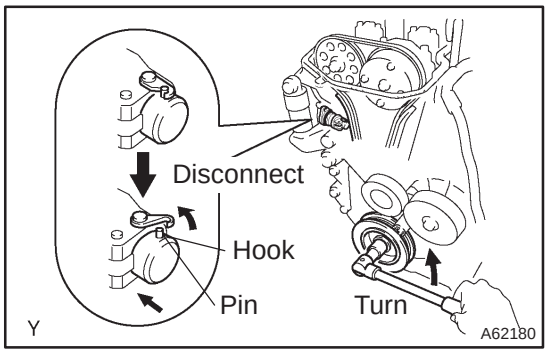

(3) Turn the crankshaft counterclockwise, and disconnect the plunger knock pin from the hook.

cardiagn.com

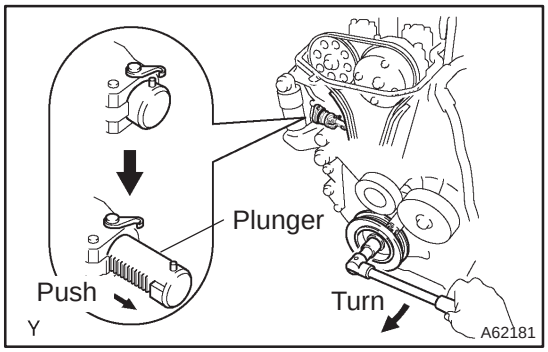

(4) Turn the crankshaft clockwise, and check that the slipper is pushed by the plunger.

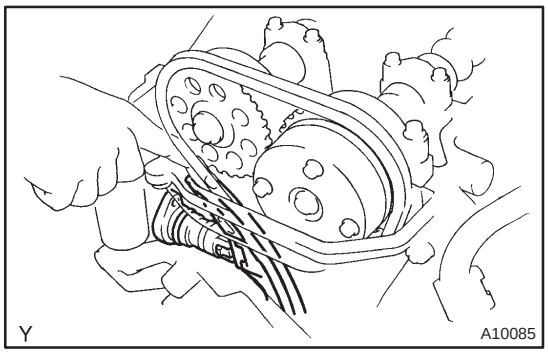

HINT:
If the plunger does not spring out, press the slipper into the chain tensioner with a screwdriver or your finger so that the hook is released from the knock pin and the plunger springs out.

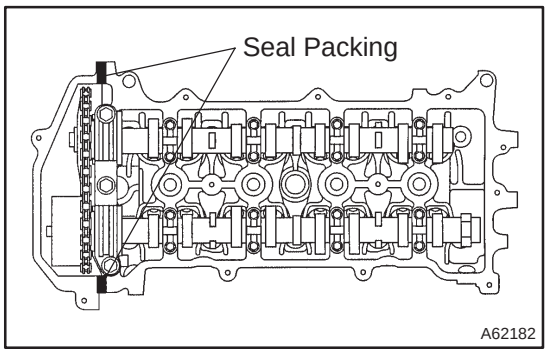

66. INSTALL CYLINDER HEAD COVER SUB–ASSY

(a) Install the gasket to the cylinder head cover.
(b) Remove any old packing (FIPG) material.
(c) Apply seal packing to 2 locations as shown in the illustration.
Seal packing: Part No. 08826–00080 or equivalent

NOTICE:
- **Remove any oil from the contact surface.**
- **Install the cylinder head cover within 3 minutes after applying seal packing.**
- **Do not put into engine oil 2 hours after installing.**

(d) Install the cylinder head cover and cable bracket with the 9 bolts, 2 seal washers and 2 nuts
Uniformly tighten the bolts and nuts, in the several passes.
Torque:
w/o washer 11 N·m (112 kgf·cm, 8 ft·lbf)
w/ washer 9.0 N·m (92 kgf·cm, 80 in·lbf)

67. INSTALL SPARK PLUG

(a) Using a spark lug wrench, install the 4 spark plugs.
Torque: 25 N·m (255 kgf·cm, 18 ft·lbf)

cardiagn.com

TERMS (1ZZ–FE/3ZZ–FE)

ABBREVIATIONS USED IN THIS MANUAL

010BJ–01

Abbreviations	Meaning
ABS	Anti–Lock Brake System
A/C	Air Conditioner
AC	Alternating Current
ACC	Accessory
ACIS	Acoustic Control Induction System
ACSD	Automatic Cold Start Device
A.D.D.	Automatic Disconnecting Differential
A/F	Air–Fuel Ratio
AHC	Active Height Control Suspension
ALR	Automatic Locking Retractor
ALT	Alternator
AMP	Amplifier
ANT	Antenna
APPROX.	Approximately
ASSY	Assembly
A/T	Automatic Transmission (Transaxle)
ATF	Automatic Transmission Fluid
AUTO	Automatic
AUX	Auxiliary
AVG	Average
AVS	Adaptive Variable Suspension
B+	Battery Voltage
BACS	Boost Altitude Compensation System
BAT	Battery
BDC	Bottom Dead Center
B/L	Bi–Level
B/S	Bore–Stroke Ratio
BTDC	Before Top Dead Center
BVSV	Bimetallic Vacuum Switching Valve
CB	Circuit Breaker
CCo	Catalytic Converter For Oxidation
CD	Compact Disc
CF	Cornering Force
CG	Center Of Gravity
CH	Channel
CKD	Complete Knock Down
COMB.	Combination
CPE	Coupe
CPS	Combustion Pressure Sensor
CPU	Central Processing Unit
CRS	Child Restraint System
CTR	Center
C/V	Check Valve
CV	Control Valve
CW	Curb Weight
DC	Direct Current
DEF	Defogger
DFL	Deflector

cardiagn.com

Abbreviations	Meaning
DIFF.	Differential
DIFF. LOCK	Differential Lock
D/INJ	Direct Injection
DLC	Data Link Connector
DLI	Distributorless Ignition
DOHC	Double Overhead Cam
DP	Dash Pot
DS	Dead Soak
DSP	Digital Signal Processor
DTC	Diagnostic Trouble Code
ECAM	Engine Control And Measurement System
ECD	Electronic Controlled Diesel
ECDY	Eddy Current Dynamometer
ECT	Electronic Control Transmission
ECU	Electronic Control Unit
ED	Electro–Deposited Coating
EDU	Electronic Driving Unit
EDIC	Electric Diesel Injection Control
EFI	Electronic Fuel Injection
E/G	Engine
EGR	Exhaust Gas Recirculation
EGR–VM	EGR–Vacuum Modulator
ELR	Emergency Locking Retractor
ENG	Engine
ESA	Electronic Spark Advance
ETCS	Electronic Throttle Control System
EVAP	Evaporative Emission Control
EVP	Evaporator
E–VRV	Electric Vacuum Regulating Valve
EX	Exhaust
FE	Fuel Economy
FF	Front–Engine Front–Wheel–Drive
F/G	Fuel Gauge
FIPG	Formed In Place Gasket
FL	Fusible Link
F/P	Fuel Pump
FPU	Fuel Pressure Up
FR	Front
F/W	Flywheel
FW/D	Flywheel Damper
FWD	Front–Wheel–Drive
GAS	Gasoline
GND	Ground
HAC	High Altitude Compensator
H/B	Hatchback
H–FUSE	High Current Fuse
HI	High
HID	High Intensity Discharge (Head Lamp)
HSG	Housing
HT	Hard Top
HWS	Heated Windshield System

cardiagn.com

Abbreviations	Meaning
IC	Integrated Circuit
IDI	Indirect Diesel Injection
IFS	Independent Front Suspension
IG	Ignition
IIA	Integrated Ignition Assembly
IN	Intake (Manifold, Valve)
INT	Intermittent
I/P	Instrument Panel
IRS	Independent Rear Suspension
ISC	Idle Speed Control
J/B	Junction Block
J/C	Junction Connector
KD	Kick–Down
LAN	Local Area Network
LB	Liftback
LCD	Liquid Crystal Display
LED	Light Emitting Diode
LH	Left–Hand
LHD	Left–Hand Drive
L/H/W	Length, Height, Width
LLC	Long–Life Coolant
LNG	Liquified Natural Gas
LO	Low
LPG	Liquified Petroleum Gas
LSD	Limited Slip Differential
LSP & PV	Load Sensing Proportioning And Bypass Valve
LSPV	Load Sensing Proportioning Valve
MAP	Manifold Absolute Pressure
MAX.	Maximum
MIC	Microphone
MIL	Malfunction Indicator Lamp
MIN.	Minimum
MP	Multipurpose
MPI	Multipoint Electronic Injection
MPX	Multiplex Communication System
M/T	Manual Transmission
MT	Mount
MTG	Mounting
N	Neutral
NA	Natural Aspiration
NO.	Number
O2S	Oxygen Sensor
O/D	Overdrive
OEM	Original Equipment Manufacturing
OHC	Overhead Camshaft
OHV	Overhead Valve
OPT	Option
O/S	Oversize
P & BV	Proportioning And Bypass Valve
PCS	Power Control System
PCV	Positive Crankcase Ventilation

cardiagn.com

Abbreviations	Meaning
PKB	Parking Brake
PPS	Progressive Power Steering
PS	Power Steering
PTO	Power Take–Off
P/W	Power Window
R & P	Rack And Pinion
R/B	Relay Block
RBS	Recirculating Ball Type Steering
R/F	Reinforcement
RFS	Rigid Front Suspension
RRS	Rigid Rear Suspension
RH	Right–Hand
RHD	Right–Hand Drive
RLY	Relay
ROM	Read Only Memory
RR	Rear
RRS	Rear–Wheel Drive
RWD	Rear–Wheel Drive
SDN	Sedan
SEN	Sensor
SICS	Starting Injection Control System
SOC	State Of Charge
SOHC	Single Overhead Camshaft
SPEC	Specification
SPI	Single Point Injection
SRS	Supplemental Restraint System
SSM	Special Service Materials
SST	Special Service Tools
STD	Standard
STJ	Cold–Start Fuel Injection
SW	Switch
SYS	System
T/A	Transaxle
TACH	Tachometer
TBI	Throttle Body Electronic Fuel Injection
TC	Turbocharger
TCCS	TOYOTA Computer–Controlled System
TCV	Timing Control Valve
TDC	Top Dead Center
TEMP.	Temperature
TEMS	TOYOTA Electronic Modulated Suspension
TFT	Toyota Free–Tronic
TIS	Total Information System For Vehicle Development
T/M	Transmission
TMC	TOYOTA Motor Corporation
TMMK	TOYOTA Motor Manufacturing Kentucky, Inc.
TRC	Traction Control System
TURBO	Turbocharge
TWC	Three–Way Catalyst
U/D	Underdrive
U/S	Undersize

cardiagn.com

Abbreviations	Meaning
VCV	Vacuum Control Valve
VENT	Ventilator
VIN	Vehicle Identification Number
VPS	Variable Power Steering
VSC	Vehicle Skid Control
VSV	Vacuum Switching Valve
VTV	Vacuum Transmitting Valve
VVT–i	Variable Valve Timing–intelligent
W/	With
WGN	Wagon
W/H	Wire Harness
W/O	Without
1ST	First
2ND	Second
2WD	Two Wheel Drive Vehicle (4 x 2)
3RD	Third
4TH	Fourth
4WD	Four Wheel Drive Vehicle (4 x 4)
4WS	Four Wheel Steering System
5TH	Fifth

cardiagn.com

HOW TO USE THIS MANUAL (1ZZ–FE/3ZZ–FE)

010BH–01

GENERAL INFORMATION

1. GENERAL DESCRIPTION

(a) This manual is made in accordance with SAE J2008.

(b) Generally repair operations can be separated in the following 3 main processes:
1. Diagnosis
2. Removing and Installing, Replacing, Disassembling, Installing and Checking, Adjusting
3. Final Inspection

(c) This manual explains ”Removing and Installing, Replacing, Disassembling, Installing and Checking, Adjusting”, but ”Final Inspection” is omitted.

(d) The following essential operations are not written in this manual, however these operations must be done in the practical situation.
(1) Operation with a jack or lift
(2) Cleaning of a removed part when necessary
(3) Visual check

2. INDEX

(a) An alphabetical INDEX is provided as a section on the end of the book to guide you to the item to be repaired.

3. PREPARATION

(a) Use of special service tools (SST) and special service materials (SSM) may be required, depending on the repairing condition. Be sure to use SST and SSM when they are required and follow the working procedure properly. A list of SST and SSM is in the Preparation section of this manual.

4. REPAIR PROCEDURES

(a) Component drawing is placed as the section or title when necessary.

(b) Illustrations of the parts catalog are placed as the ”disassembled parts drawing” so that it enables you to understand the fitting condition of the components.

(c) Non–reusable parts, grease applied parts, precoated parts and tightening torque are specified in the components drawing.

Example:

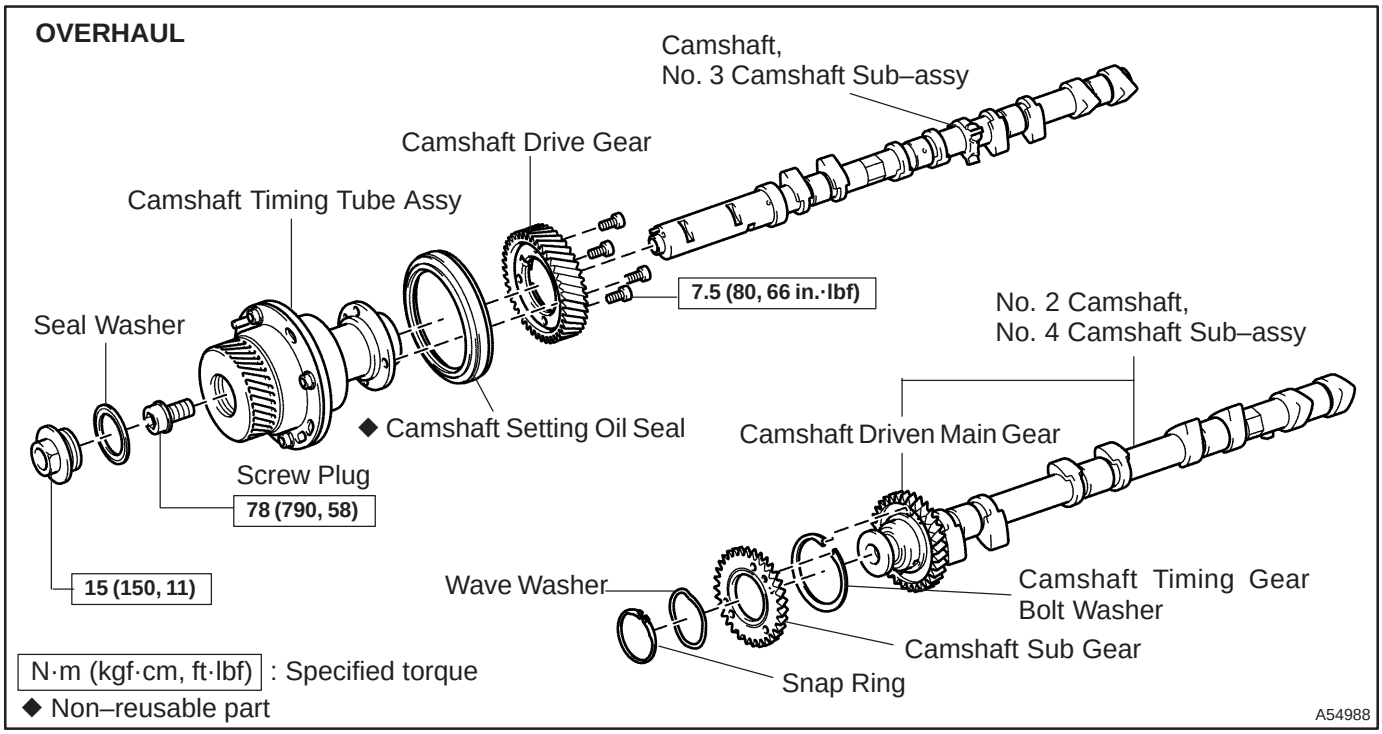

cardiagn.com

(d) Tightening torque, oil applying position, and non–reusable parts are described as important points in the procedure.

NOTICE:

There are cases where such information can only be indicated by an illustration. In that case, all the information such as torque, oil, etc. are described in the illustration.

(e) Installing procedure of operation items is performed in the reverse order of the removing, and only the important points are described.

(f) Only items with points are described in the procedure, and the operational portion and content are placed using an illustration. In the explanations, details of the operational method, standard value and notice are placed.

(g) There may be a case where the illustrations of similar models are used. In that case the details may be different from the actual vehicle.

(h) The procedures are presented in a step–by–step format:

(1) The illustration shows what to do and where to do it.

(2) The task heading tells what to do.

(3) The detailed text tells how to perform the task and gives other information such as specifications and warnings.

Example:

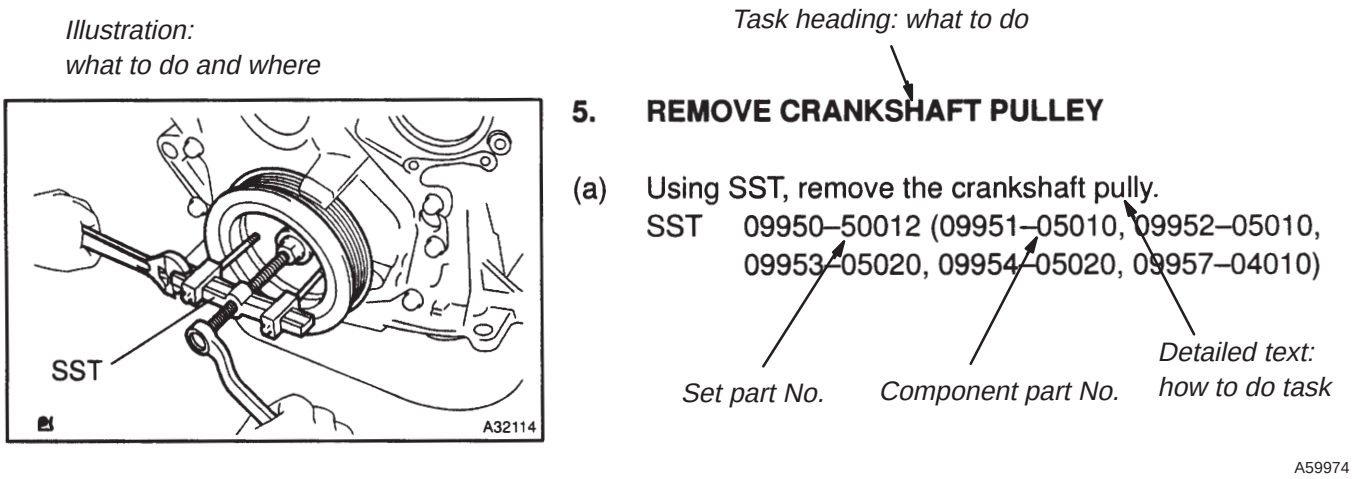

HINT:

This format provides an experienced technician with a FAST TRACK to the necessary information. The task heading can be read at a glance when necessary, and the text below provides detailed information. Important specifications and warnings always stand out in bold type.

5. SERVICE SPECIFICATIONS

(a) Specifications are presented in bold type throughout the manual. You never have to leave the procedure to look up your specifications. The specifications are also found in the Service Specifications section for a quick reference.

6. TERMS DEFINITION

CAUTION	Indicate the possibility of injury to you or other people.
NOTICE	Indicate the possibility of damage to the components being repaired.
HINT	Provide additional information to help you perform the repair efficiently.

cardiagn.com

7. SI UNIT

(a) The UNITS given in this manual are primarily expressed according to the SI UNIT (International System of Unit), and alternately expressed in the metric system and in the English System.

Example:

Torque: 30 N·m (310 kgf·cm, 22 ft·lbf)

cardiagn.com

010BK–01

GLOSSARY OF SAE AND TOYOTA TERMS

This glossary lists all SAE–J1930 terms and abbreviations used in this manual in compliance with SAE recommendations, as well as their TOYOTA equivalents.

SAE ABBREVIATIONS	SAE TERMS	TOYOTA TERMS ( )—ABBREVIATIONS
A/C	Air Conditioning	Air Conditioner
ACL	Air Cleaner	Air Cleaner, A/CL
AIR	Secondary Air Injection	Air Injection (AI)
AP	Accelerator Pedal	–
B+	Battery Positive Voltage	+B, Battery Voltage
BARO	Barometric Pressure	HAC
CAC	Charge Air Cooler	Intercooler
CARB	Carburetor	Carburetor
CFI	Continuous Fuel Injection	–
CKP	Crankshaft Position	Crank Angle
CL	Closed Loop	Closed Loop
CMP	Camshaft Position	Cam Angle
CPP	Clutch Pedal Position	–
CTOX	Continuous Trap Oxidizer	–
CTP	Closed Throttle Position	LL ON, Idle ON
DFI	Direct Fuel Injection (Diesel)	Direct Injection (DI)
DI	Distributor Ignition	–
DLC1 DLC2 DLC3	Data Link Connector 1 Data Link Connector 2 Data Link Connector 3	1: Check Connector 2: Total Diagnosis Comunication Link (TDCL) 3: OBD II Diagnostic Connector
DTC	Diagnostic Trouble Code	Diagnostic Code
DTM	Diagnostic Test Mode	–
ECL	Engine Control Level	–
ECM	Engine Control Module	Engine ECU (Electronic Control Unit)
ECT	Engine Coolant Temperature	Coolant Temperature, Water Temperature (THW)
EEPROM	Electrically Erasable Programmable Read Only Memory	Electrically Erasable Programmable Read Only Memory (EEPROM), Erasable Programmable Read Only Memory (EPROM)
EFE	Early Fuel Evaporation	Cold Mixture Heater (CMH), Heat Control Valve (HCV)
EGR	Exhaust Gas Recirculation	Exhaust Gas Recirculation (EGR)
EI	Electronic Ignition	TOYOTA Distributorless Ignition (TDI)
EM	Engine Modification	Engine Modification (EM)
EPROM	Erasable Programmable Read Only Memory	Programmable Read Only Memory (PROM)
EVAP	Evaporative Emission	Evaporative Emission Control (EVAP)
FC	Fan Control	–
FEEPROM	Flash Electrically Erasable Programmable Read Only Memory	–
FEPROM	Flash Erasable Programmable Read Only Memory	–
FF	Flexible Fuel	–
FP	Fuel Pump	Fuel Pump
GEN	Generator	Alternator
GND	Ground	Ground (GND)

cardiagn.com

HO2S	Heated Oxygen Sensor	Heated Oxygen Sensor (HO_2S)
IAC	Idle Air Control	Idle Speed Control (ISC)
IAT	Intake Air Temperature	Intake or Inlet Air Temperature
ICM	Ignition Control Module	–
IFI	Indirect Fuel Injection	Indirect Injection (IDL)
IFS	Inertia Fuel–Shutoff	–
ISC	Idle Speed Control	–
KS	Knock Sensor	Knock Sensor
MAF	Mass Air Flow	Air Flow Meter
MAP	Manifold Absolute Pressure	Manifold Pressure Intake Vacuum
MC	Mixture Control	Electric Bleed Air Control Valve (EBCV) Mixture Control Valve (MCV) Electric Air Control Valve (EACV)
MDP	Manifold Differential Pressure	–
MFI	Multiport Fuel Injection	Electronic Fuel Injection (EFI)
MIL	Malfunction Indicator Lamp	Check Engine Lamp
MST	Manifold Surface Temperature	–
MVZ	Manifold Vacuum Zone	–
NVRAM	Non–Volatile Random Access Memory	–
O2S	Oxygen Sensor	Oxygen Sensor, O_2 Sensor (O_2S)
OBD	On–Board Diagnostic	On–Board Diagnostic System (OBD)
OC	Oxidation Catalytic Converter	Oxidation Catalyst Convert (OC), CCo
OP	Open Loop	Open Loop
PAIR	Pulsed Secondary Air Injection	Air Suction (AS)
PCM	Powertrain Control Module	–
PNP	Park/Neutral Position	–
PROM	Programmable Read Only Memory	–
PSP	Power Steering Pressure	–
PTOX	Periodic Trap Oxidizer	Diesel Particulate Filter (DPF) Diesel Particulate Trap (DPT)
RAM	Random Access Memory	Random Access Memory (RAM)
RM	Relay Module	–
ROM	Read Only Memory	Read Only Memory (ROM)
RPM	Engine Speed	Engine Speed
SC	Supercharger	Supercharger
SCB	Supercharger Bypass	E–ABV
SFI	Sequential Multiport Fuel Injection	Electronic Fuel Injection (EFI), Sequential Injection
SPL	Smoke Puff Limiter	–
SRI	Service Reminder Indicator	–
SRT	System Readiness Test	–
ST	Scan Tool	–
TB	Throttle Body	Throttle Body
TBI	Throttle Body Fuel Injection	Single Point Injection Central Fuel Injection (Ci)
TC	Turbocharger	Turbocharger
TCC	Torque Converter Clutch	Torque Converter

cardiagn.com

TCM	Transmission Control Module	Transmission ECU, ECT ECU
TP	Throttle Position	Throttle Position
TR	Transmission Range	–
TVV	Thermal Vacuum Valve	Bimetallic Vacuum Switching Valve (BVSV) Thermostatic Vacuum Switching Valve (TVSV)
TWC	Three–Way Catalytic Converter	Three–Way Catalytic (TWC) Manifold Converter CC_{RO}
TWC+OC	Three–Way + Oxidation Catalytic Converter	CC_R + CCo
VAF	Volume Air Flow	Air Flow Meter
VR	Voltage Regulator	Voltage Regulator
VSS	Vehicle Speed Sensor	Vehicle Speed Sensor
WOT	Wide Open Throttle	Full Throttle
WU–OC	Warm Up Oxidation Catalytic Converter	–
WU–TWC	Warm Up Three–Way Catalytic Converter	–
3GR	Third Gear	–
4GR	Fourth Gear	–

cardiagn.com

REPAIR INSTRUCTION (1NZ–FE/2NZ–FE)

010BI–01

PRECAUTION

1. TO PREVENT FROM ENTERING FOREIGN SUBSTANCES.

(a) When foreign substances such as dust, grain of sand or metallic dust enter inside of engine, it often causes functional failure of the engine.

(1) Precaution before disassembly.

- Remove adequately all sand and mud adhere to the outside of engine.

(2) Precaution at reassembly.

- Protect disassembled parts from dust by using vinyl sheet to cover.

2. TO PREVENT SCRATCHES ON THE PARTS.

(a) The existence of scratches on the contact and revolving surfaces often causes oil leak and seisure.

(1) Precautions at disassembly and reassembly.

- When disassemble the contact surface of the parts, use plastic hummer striking lightly. (Do not pry out by screwdriver).
- When fix the parts to the vise, do not directly catch it in the vise. Fix the parts through aluminum bar.

3. TO CLEAN AND WASH THE PARTS.

(a) Each parts needs to be well cleaned, washed, and dried by air, and apply specified oil before reassembly.

(1) Cleaning and washing by alkaline solvent is prohibited:

- Parts made of aluminum and rubber. (ex. cylinder head cover gasket etc.)

(2) Cleaning and washing by flushing oil (ex. kerosene, white gasoline etc.) is prohibited:

- Parts made of rubber. (ex. cylinder head cover gasket etc.)

4. POSITION AND DIRECTION OF EACH PARTS.

(a) Each parts needs to be reassembled as the same position and direction as it disassembled.

(1) Precautions at disassembly and reassembly.

- Follow the directions when the manual designates to mark the matchmark and/or direction mark.
- Disassembled parts needs to be put in order as disassembled, not to change position and/or direction.
- Follow the directions when the manual instructs the position and direction.

5. INSTALL ENGINE ASSEMBLY TO OVERHAUL STAND WHEN OVERHAUL THE ENGINE.

6. PUT THE DISASSEMBLED PARTS IN ORDER AS THEY DISASSEMBLED.

7. APPLY ENGINE OIL TO THE SLIDING AND ROTATING SURFACES.

8. NON–REUSABLE PARTS SUCH AS GASKET AND SEAL NEEDS TO BE CHANGED TO THE NEW PARTS.

9. BASIC REPAIR HINT

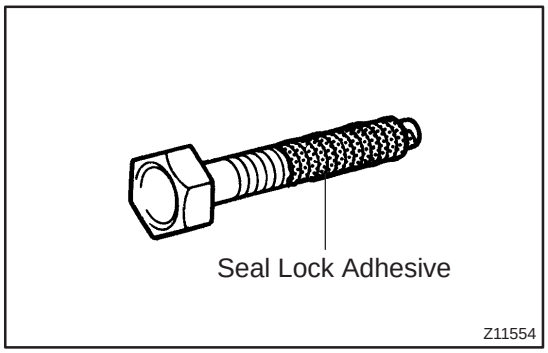

(a) Precoated Parts:

(1) Precoated parts are bolts, nuts, etc. that are coated with a seal lock adhesive at the factory.

(2) If a precoated part is retightened, loosened or caused to move in any way, it must be recoated with the specified adhesive.

(3) When reusing precoated parts, clean off the old adhesive and dry with compressed air. Then apply the specified seal lock adhesive to the bolt, nut or threads.

cardiagn.com

NOTICE:
Do the torque checking with the lower limit value of the torque tolerance.

(4) Depending on the seal lock agent to apply, there may be a case where it is necessary to leave it for a specified time until it hardens.

(b) Gaskets:
When necessary, use a sealer on gaskets to prevent leaks.

(c) Bolts, Nuts and Screws:
Carefully observe all specifications for bolt tightening torques. Always use a torque wrench.

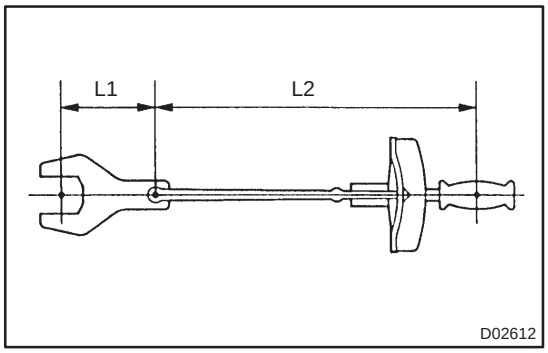

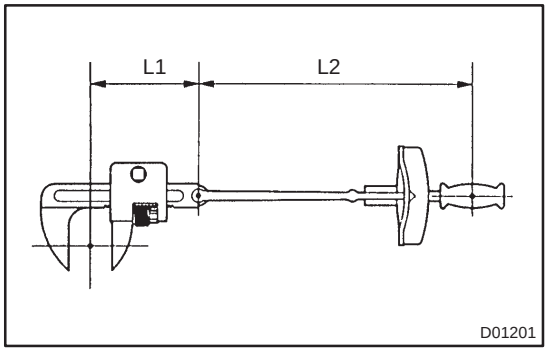

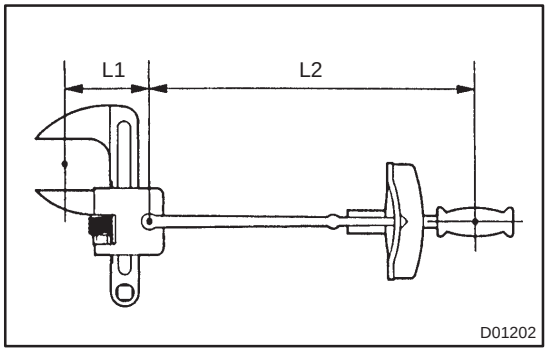

(d) Torque When Using Extension Tool with Torque Wrench:

(1) In case of tightening by extending the entire length of the torque wrench combined with SST or tool, if you tighten until the reading of the torque wrench reached the specified torque value, the actual torque becomes excessive.

(2) In this text, only the specified torque is described. In case of using SST or extension tool, find the reading of the torque wrench by the formula.

(3) Formula T'=T x L2/(L1 + L2)

T'	Reading of torque wrench {N·m (kgf·cm, ft·lbf)}
T	Torque {N·m (kgf·cm, ft·lbf)}
L1	Length of SST or tool (cm)
L2	Length of torque wrench (cm)

10. REMOVAL AND INSTALLATION OF FUEL CONTROL PARTS

(a) Place for Removing and Installing Fuel System Parts:

(1) Place with good air ventilation and without anything flammable such as welder, grinder, drill, electric motor or stove in the surroundings.

(2) Never work in a place like a pit or nearby pit as there is a possibility that vaporized fuel fills those places.

(b) Removing and Installing of Fuel System Parts:

(1) Prepare a fire extinguisher before starting the operation.

(2) For prevention of the static electricity, install a ground on the fuel changer, vehicle and fuel tank, and do not spray much water so as to prevent slipping.

cardiagn.com

(3) Never use any electric equipment like an electric motor or a working light as they may cause spark or high temperature.
(4) Never use an iron hammer as it may cause spark.
(5) Dispose the shop lag separately from any fuel deposit.

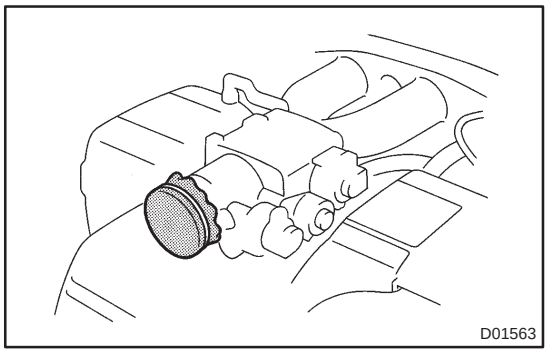

11. REMOVAL AND INSTALLATION OF ENGINE INTAKE PARTS

(a) If any metal tip is mixed in the inlet pass, that may give a bad effect to the engine and turbo charger.
(b) When removing and installing of the inlet system parts, close the opening of the removed inlet system parts and the engine with a clean shop lag or gum tape.
(c) When installing the inlet system parts, check that there is no mixing of a metal tip.

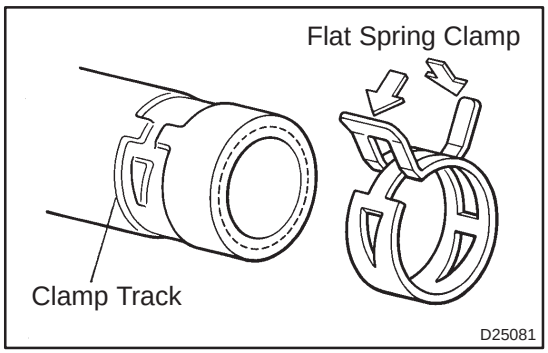

12. HANDLING OF HOSE CLAMPS

(a) Before removing the hose, check the depth of inserting portion and the clamp position to restore it surely.
(b) Change a deformed or dented into a new one.
(c) In case of reusing the hose, install the clamp on the hose where it has a clamp track.
(d) For a flat spring type clamp, make it adjust by adding force to the arrow mark direction after the installation.

cardiagn.com

OIL PUMP ASSY (1ZZ–FE/3ZZ–FE)

COMPONENTS

1706D–01

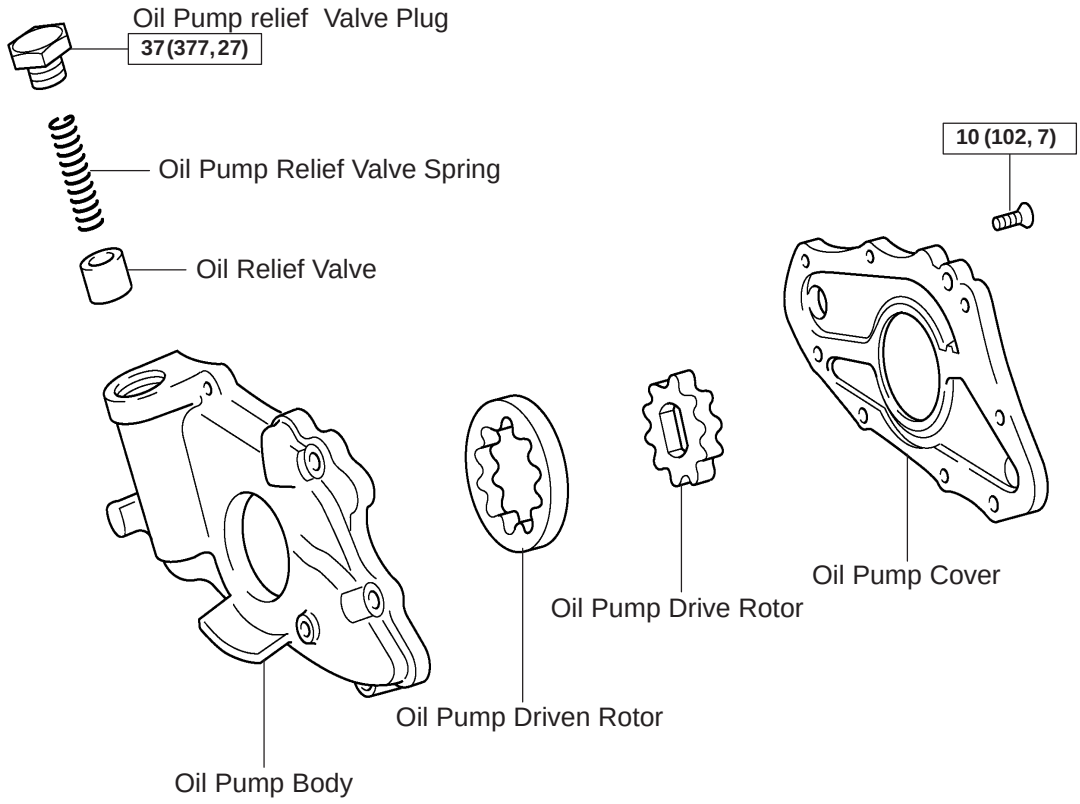

N·m (kgf·cm, ft·lbf) : Specified torque

A62218

cardiagn.com

OVERHAUL

1. REMOVE OIL PUMP DRIVE AND DRIVEN ROTORS

(a) Remove the 3 screws and oil pump cover.

(b) Remove the oil pump drive and driven rotors from the oil pump.

2. REMOVE VALVE, OIL PUMP RELIEF

(a) Remove the plug, spring and valve from the oil pump.

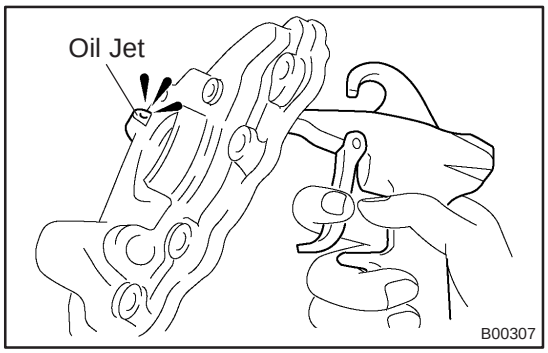

3. INSPECT OIL JET

(a) Check the oil jet for damage or clogging.

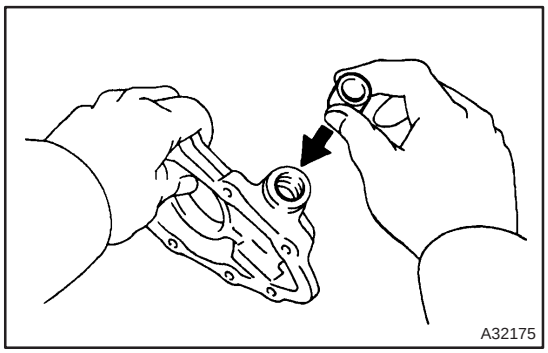

4. INSPECT OIL PUMP RELIEF VALVE

(a) Coat the oil pump relief valve with engine oil, and check that it falls smoothly into the valve hole by its own weight.

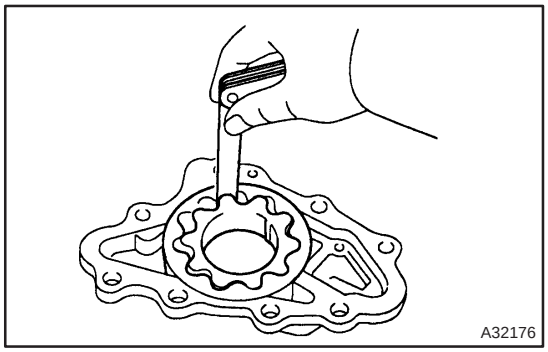

5. INSPECT ROTOR TIP CLEARANCE

(a) Using a feeler gauge, measure the clearance between the drive and driven rotor tips.
Standard tip clearance:
0.040 – 0.160 mm (0.0016 – 0.0063 in.)
Maximum tip clearance: 0.160 mm (0.0063 in.)

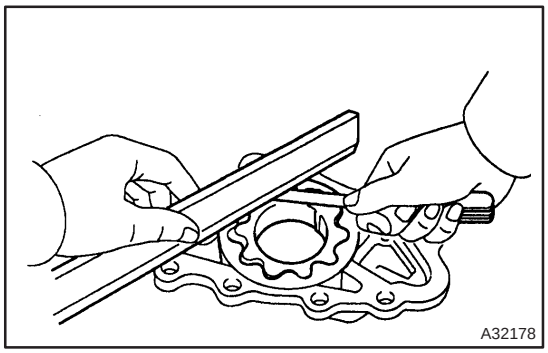

6. INSPECT ROTOR SIDE CLEARANCE

(a) Using a feeler gauge and precision straight edge, measure the clearance between the 2 rotors and precision straight edge.
Standard side clearance:
0.025 – 0.071 mm (0.0010 – 0.0028 in.)
Maximum side clearance: 0.071 mm (0.0028 in.)

cardiagn.com

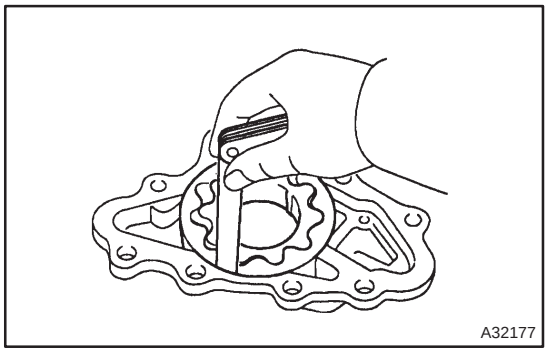

7. INSPECT BODY CLEARANCE

(a) Using a feeler gauge, measure the clearance between the driven rotor and oil pump body.
Standard body clearance:
0.260 – 0.325 mm (0.0102 – 0.0128 in.)
Maximum body clearance: 0.325 mm (0.0128 in.)

8. INSTALL OIL PUMP RELIEF VALVE

(a) Coat the oil pump relief valve with engine oil, and insert oil pump relief valve and spring to the valve hole.
(b) Install the oil pump relief valve plug.
Torque: 37 N·m (377 kgf·cm, 27 ft·lbf)

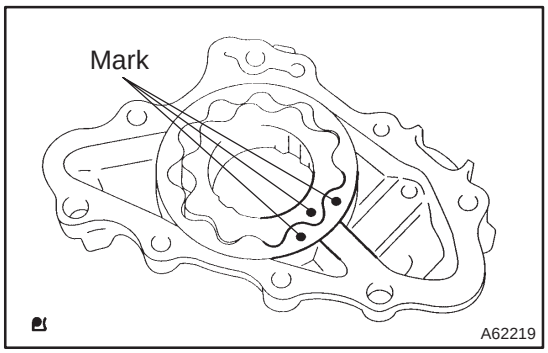

9. INSTALL OIL PUMP DRIVE AND DRIVEN ROTORS

(a) Coat the oil pump drive and driven rotors with engine oil, and place it into the oil pump with marks facing the oil pump cover side.
(b) Install the oil pump cover with the 3 screw.
Torque: 10 N·m (102 kgf·cm, 7 ft·lbf)

cardiagn.com

ENGINE MECHANICAL

PREPARATION

0214A–01

SST

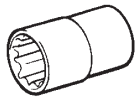	09011–38121	12 mm Socket Wrench for 12 Pointed Head	CYLINDER BLOCK (1ZZ–FE/3ZZ–FE)
	09032–00100	Oil Pan Seal Cutter	PARTIAL ENGINE ASSY (1ZZ–FE/3ZZ–FE)
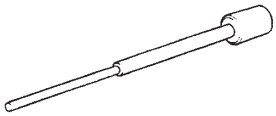	09201–01055	Valve Guide Bushing Remover & Replacer 5.5	CYLINDER HEAD ASSY (1ZZ–FE/3ZZ–FE)
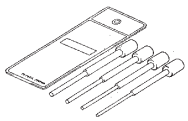	09201–10000	Valve Guide Bushing Remover & Replacer Set	CYLINDER HEAD ASSY (1ZZ–FE/3ZZ–FE)
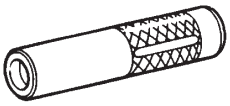	09201–41020	Valve Stem Oil Seal Replacer	CYLINDER HEAD ASSY (1ZZ–FE/3ZZ–FE)
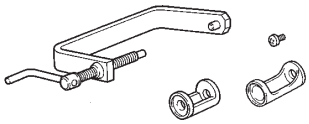	09202–70020	Valve Spring Compressor	CYLINDER HEAD ASSY (1ZZ–FE/3ZZ–FE)
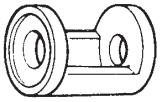	(09202–00010)	Attachment	CYLINDER HEAD ASSY (1ZZ–FE/3ZZ–FE)
	09205–16010	Cylinder Head Bolt Wrench	CYLINDER BLOCK (1ZZ–FE/3ZZ–FE)
	09222–30010	Connecting Rod Bushing Remover & Replacer	CYLINDER BLOCK (1ZZ–FE/3ZZ–FE)
	09223–15030	Oil Seal & Bearing Replacer	PARTIAL ENGINE ASSY (1ZZ–FE/3ZZ–FE)
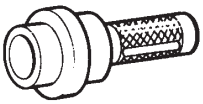	09223–22010	Crankshaft Front Oil Seal Replacer	PARTIAL ENGINE ASSY (1ZZ–FE/3ZZ–FE)
	09228–06501	Oil Filter Wrench	PARTIAL ENGINE ASSY (1ZZ–FE/3ZZ–FE)

cardiagn.com

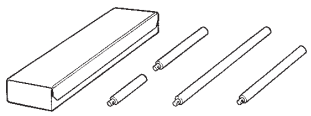	09950–70010	Handle Set	PARTIAL ENGINE ASSY (1ZZ–FE/3ZZ–FE) CYLINDER HEAD ASSY (1ZZ–FE/3ZZ–FE)
	(09951–07100)	Handle 100	PARTIAL ENGINE ASSY (1ZZ–FE/3ZZ–FE) CYLINDER HEAD ASSY (1ZZ–FE/3ZZ–FE)
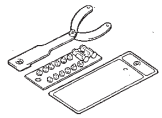	09960–10010	Variable Pin Wrench Set	PARTIAL ENGINE ASSY (1ZZ–FE/3ZZ–FE)
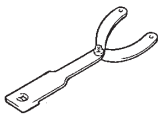	(09962–01000)	Variable Pin Wrench Arm Assy	PARTIAL ENGINE ASSY (1ZZ–FE/3ZZ–FE)
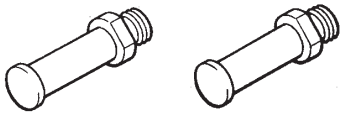	(09963–01000)	Pin 10	PARTIAL ENGINE ASSY (1ZZ–FE/3ZZ–FE)

Recomended Tools

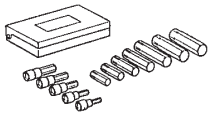	09040–00011	Hexagon Wrench Set	PARTIAL ENGINE ASSY (1ZZ–FE/3ZZ–FE) CYLINDER HEAD ASSY (1ZZ–FE/3ZZ–FE)
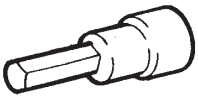	(09043–20100)	Socket Hexagon Wrench 10	CYLINDER HEAD ASSY (1ZZ–FE/3ZZ–FE)
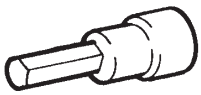	(09043–20120)	Socket Hexagon Wrench 12	PARTIAL ENGINE ASSY (1ZZ–FE/3ZZ–FE)
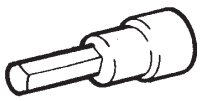	(09043–20100)	Socket Hexagon Wrench 10	CYLINDER HEAD ASSY (1ZZ–FE/3ZZ–FE)
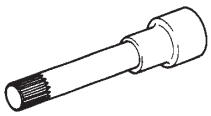	09043–50100	Bi–hexagon Wrench 10 mm	PARTIAL ENGINE ASSY (1ZZ–FE/3ZZ–FE)

SSM

	08826–00080	Seal Packing Black or equivalent (FIPG)	PARTIAL ENGINE ASSY (1ZZ–FE/3ZZ–FE) CYLINDER BLOCK (1ZZ–FE/3ZZ–FE)
	08826–00100	”Seal Packing 1282B,” THREE BOND 1282B or equivalent (FIPG)	PARTIAL ENGINE ASSY (1ZZ–FE/3ZZ–FE)

cardiagn.com

08833–00070	”Adhesive 1324,” THREE BOND 1324 or equivalent	CYLINDER HEAD ASSY (1ZZ–FE/3ZZ–FE) CYLINDER BLOCK (1ZZ–FE/3ZZ–FE)

Equipment

Wooden block	
Spring tension gauge	
Vernier calipers	
V–block	
Dial indicator	
Micrometer	
Torque wrench	
Heater	
Precision straight edge	
Feeler gauge	
Caliper gauge	
Steel square	
Plastigage	
Valve seat cutter	
Ride reamer	
Piston ring expander	
Plastic hammer	
Cylinder gauge	
Connecting rod aligner	
Piston ring compressor	

cardiagn.com

LUBRICATION

PREPARATION

02149–01

Equipment

Feeler gauge	
Precision straight edge	
Torque wrench	

cardiagn.com

ENGINE MECHANICAL

PREPARATION

0214A–01

SST

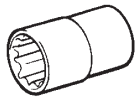	09011–38121	12 mm Socket Wrench for 12 Pointed Head	CYLINDER BLOCK (1ZZ–FE/3ZZ–FE)
	09032–00100	Oil Pan Seal Cutter	PARTIAL ENGINE ASSY (1ZZ–FE/3ZZ–FE)
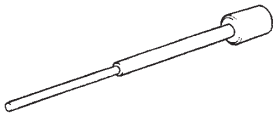	09201–01055	Valve Guide Bushing Remover & Replacer 5.5	CYLINDER HEAD ASSY (1ZZ–FE/3ZZ–FE)
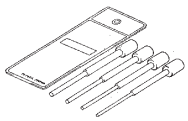	09201–10000	Valve Guide Bushing Remover & Replacer Set	CYLINDER HEAD ASSY (1ZZ–FE/3ZZ–FE)
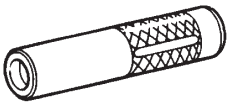	09201–41020	Valve Stem Oil Seal Replacer	CYLINDER HEAD ASSY (1ZZ–FE/3ZZ–FE)
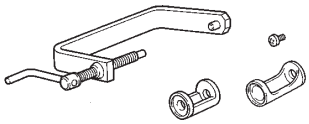	09202–70020	Valve Spring Compressor	CYLINDER HEAD ASSY (1ZZ–FE/3ZZ–FE)
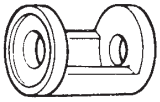	(09202–00010)	Attachment	CYLINDER HEAD ASSY (1ZZ–FE/3ZZ–FE)
	09205–16010	Cylinder Head Bolt Wrench	CYLINDER BLOCK (1ZZ–FE/3ZZ–FE)
	09222–30010	Connecting Rod Bushing Remover & Replacer	CYLINDER BLOCK (1ZZ–FE/3ZZ–FE)
	09223–15030	Oil Seal & Bearing Replacer	PARTIAL ENGINE ASSY (1ZZ–FE/3ZZ–FE)
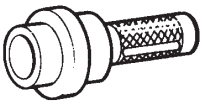	09223–22010	Crankshaft Front Oil Seal Replacer	PARTIAL ENGINE ASSY (1ZZ–FE/3ZZ–FE)
	09228–06501	Oil Filter Wrench	PARTIAL ENGINE ASSY (1ZZ–FE/3ZZ–FE)

cardiagn.com

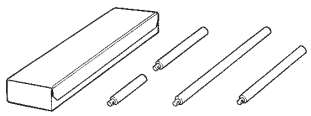	09950–70010	Handle Set	PARTIAL ENGINE ASSY (1ZZ–FE/3ZZ–FE) CYLINDER HEAD ASSY (1ZZ–FE/3ZZ–FE)
	(09951–07100)	Handle 100	PARTIAL ENGINE ASSY (1ZZ–FE/3ZZ–FE) CYLINDER HEAD ASSY (1ZZ–FE/3ZZ–FE)
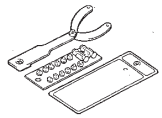	09960–10010	Variable Pin Wrench Set	PARTIAL ENGINE ASSY (1ZZ–FE/3ZZ–FE)
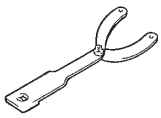	(09962–01000)	Variable Pin Wrench Arm Assy	PARTIAL ENGINE ASSY (1ZZ–FE/3ZZ–FE)
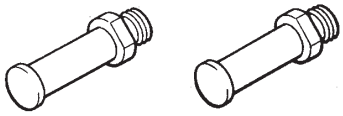	(09963–01000)	Pin 10	PARTIAL ENGINE ASSY (1ZZ–FE/3ZZ–FE)

Recomended Tools

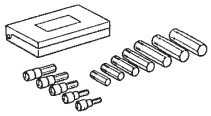	09040–00011	Hexagon Wrench Set	PARTIAL ENGINE ASSY (1ZZ–FE/3ZZ–FE) CYLINDER HEAD ASSY (1ZZ–FE/3ZZ–FE)
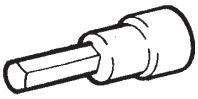	(09043–20100)	Socket Hexagon Wrench 10	CYLINDER HEAD ASSY (1ZZ–FE/3ZZ–FE)
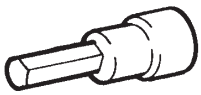	(09043–20120)	Socket Hexagon Wrench 12	PARTIAL ENGINE ASSY (1ZZ–FE/3ZZ–FE)
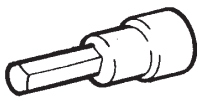	(09043–20100)	Socket Hexagon Wrench 10	CYLINDER HEAD ASSY (1ZZ–FE/3ZZ–FE)
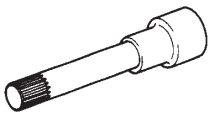	09043–50100	Bi–hexagon Wrench 10 mm	PARTIAL ENGINE ASSY (1ZZ–FE/3ZZ–FE)

SSM

	08826–00080	Seal Packing Black or equivalent (FIPG)	PARTIAL ENGINE ASSY (1ZZ–FE/3ZZ–FE) CYLINDER BLOCK (1ZZ–FE/3ZZ–FE)
	08826–00100	”Seal Packing 1282B,” THREE BOND 1282B or equivalent (FIPG)	PARTIAL ENGINE ASSY (1ZZ–FE/3ZZ–FE)

cardiagn.com

08833–00070	”Adhesive 1324,” THREE BOND 1324 or equivalent	CYLINDER HEAD ASSY (1ZZ–FE/3ZZ–FE) CYLINDER BLOCK (1ZZ–FE/3ZZ–FE)

Equipment

Wooden block	
Spring tension gauge	
Vernier calipers	
V–block	
Dial indicator	
Micrometer	
Torque wrench	
Heater	
Precision straight edge	
Feeler gauge	
Caliper gauge	
Steel square	
Plastigage	
Valve seat cutter	
Ride reamer	
Piston ring expander	
Plastic hammer	
Cylinder gauge	
Connecting rod aligner	
Piston ring compressor	

cardiagn.com

STARTING & CHARGING

02148–01

PREPARATION

SST

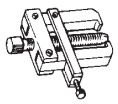	09286–46011	Injection Pump Spline Shaft Puller	GENERATOR ASSY (1ZZ–FE/3ZZ–FE)
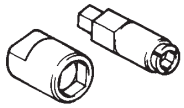	09820–63010	Alternator Pulley Set Nut Wrench Set	GENERATOR ASSY (1ZZ–FE/3ZZ–FE)
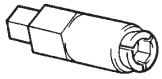	(09820–06010)	Alternator Rotor Shaft Wrench	GENERATOR ASSY (1ZZ–FE/3ZZ–FE)
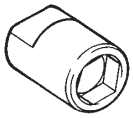	(09820–06020)	Alternator Pulley Set Nut 22 mm Wrench	GENERATOR ASSY (1ZZ–FE/3ZZ–FE)

Recomended Tools

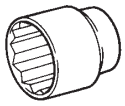	09011–12291	Socket Wrench for 29 mm .	GENERATOR ASSY (1ZZ–FE/3ZZ–FE)
	09082–00040	TOYOTA Electrical Tester	STARTER ASSY (1ZZ–FE/3ZZ–FE) GENERATOR ASSY (1ZZ–FE/3ZZ–FE)
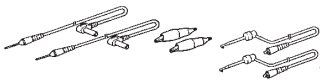	(09083–00150)	Test Lead Set	STARTER ASSY (1ZZ–FE/3ZZ–FE) GENERATOR ASSY (1ZZ–FE/3ZZ–FE)

Equipment

Ohmmeter	
Sandpaper	
V–block	
Dial indicator	
Vernier calipers	
Plastic hammer	
Torque wrench	
Wooden block	

cardiagn.com

ENGINE MECHANICAL

SERVICE DATA

0300O–02

Chain sub–assy		
Length at 16 links	Maximum	112.6 mm (4.433 in.)
Camshaft timing gear or sprocket		
Diameter (w/ chain)	Minimum	97.3 mm (3.831 in.)
Crankshaft timing gear or sprocket		
Diameter (w/ chain)	Minimum	51.6 mm (2.032 in.)
Chain tensioner slipper		
Wear	Maximum	1.0 mm (0.039 in.)
Chain vibration damper No. 1		
Wear	maximum	1.0 mm (0.039 in.)
Cylinder head set bolt		
Length	Standard	156.0 – 159.0 mm (6.142 – 6.260 in.)
	Maximum	159.5 mm (6.280 in.)
Camshaft		
Circle runout	Maximum	0.03 mm (0.0012 in.)
Lobe height	Standard Intake	44.333 – 44.433 mm (1.7454 – 1.7493 in.)
	Exhaust	43.761 – 43.861 mm (1.7229 – 1.7268 in.)
	Minimum Intake	44.18 mm (1.7394 in.)
	Exhaust	43.61 mm (1.7169 in.)
Journal diameter	No. 1	34.449 – 34.465 mm (1.3563 – 1.3569 in.)
	Others	22.949 – 22.965 mm (0.9035 – 0.9041 in.)
Thrust clearance	Standard	0.040 – 0.095 mm (0.0009 – 0.0023 in.)
	Maximum	0.110 mm (0.0043 in.)
Oil clearance	Standard	0.035 – 0.072 mm (0.0014 – 0.0028 in.)
	Maximum	0.10 mm (0.0039 in.)
Valve clearance (Cold)	Intake	0.15 – 0.25 mm (0.006 – 0.010 in.)
	Exhaust	0.25 – 0.35 mm (0.010 – 0.014 in.)
Cylinder head sub–assy		
Warpage	Maximum Cylinder block side	0.05 mm (0.0020 in.)
	Intake manifold side	0.10 mm (0.0040 in.)
	Exhaust manifold side	0.10 mm (0.0040 in.)
Valve guide bushing		
Inside diameter		5.510 – 5.530 mm (0.2169 – 0.2177 in.)
Oil clearance	Standard Intake	0.025 – 0.060 mm (0.0010 – 0.0024 in.)
	Exhaust	0.030 – 0.065 mm (0.0012 – 0.0026 in.)
	Maximum Intake	0.08 mm (0.0031 in.)
	Exhaust	0.01 mm (0.0039 in.)
Bore diameter		10.285 – 10.306 mm (0.4049 – 0.4057 in.)
Protrusion height		8.7 – 9.1 mm (0.342 – 0.358 in.)
Valve stem		
Diameter	Intake	5.470 – 5.485 mm (0.2154 – 0.2159 in.)
	Exhaust	5.465 – 5.480 mm (0.2152 – 0.2158 in.)
Inner compression spring		
Free length		43.40 mm (1.7087 in.)
Deviation	Maximum	2.0 mm (0.078 in.)
Angle (reference)	Maximum	2°
Valve		
Overall length	Standard Intake	88.65 mm (3.4902 in.)
	Exhaust	88.69 mm (3.4917 in.)
	Minimum Intake	88.35 mm (3.4874 in.)
	Exhaust	88.39 mm (3.4799 in.)
Head margin thickness	Standard	1.0 mm (0.039 in.)
	Minimum	0.7 mm (0.028 in.)

cardiagn.com

Valve lifter		
Diameter		30.966 – 30.976 mm (1.2191 – 1.2195 in.)
Bore diameter		31.000 – 31.025 mm (1.2205 – 1.2215 in.)
Oil clearance	Standard	0.024 – 0.059 mm (0.0016 – 0.0037 in.)
	Maximum	0.1 mm (0.0039 in.)
Straight pin		
Protrusion height		5 mm (0.20 in.)
Union protrusion		
Protrusion height	Standard A	29 mm (1.14 in.)
	B	66.5 mm (2.62 in.)
	C	24 mm (0.95 in.)
Connecting rod sub–assy		
Thrust clearance	Standard	0.160 – 0.342 mm (0.063 – 0.0135 in.)
	Maximum	0.342 mm (0.0135 in.)
Oil clearance	Standard	0.028 – 0.060 mm (0.0011 – 0.0024 in.)
	Maximum	0.080 mm (0.0031 in.)
Out–of alignment	Maximum per/100 mm (3.94 in.)	0.05 mm (0.0020 in.)
Twist	Maximum per/100 mm (3.94 in.)	0.05 mm (0.0020 in.)
Connecting rod bearing		
Center wall thickness	Reference Mark 1	1.486 – 1.490 mm (0.0585 – 0.0587 in.)
	Mark 2	1.490 – 1.494 mm (0.0587 – 0.0588 in.)
	Mark 3	1.494 – 1.498 mm (0.0588 – 0.0590 in.)
Crankshaft		
Thrust clearance	Standard	0.04 – 0.24 mm (0.0016 – 0.0094 in.)
	Maximum	0.30 mm (0.0118 in.)
Circle runout	Maximum	0.03 mm (0.0012 in.)
Main journal diameter		47.988 – 48.000 mm (1.8893 – 1.8898 in.)
	Maximum taper and out–of–round	0.02 mm (0.0008 in.)
Oil clearance	Standard	0.013 – 0.030 mm (0.0005 – 0.0012 in.)
	Maximum	0.05 mm (0.0020 in.)
Cylinder block sub–assy		
Warpage	Maximum	0.05 mm (0.0020 in.)
Bore diameter	Standard	79.000 – 79.013 mm (3.1073 – 3.1108 in.)
	Maximum	79.013 mm (3.1108 in.)
Piston		
Diameter (at 29.8 mm (1.173 in.) from the piston head)	1ZZ–FE	78.925 – 78.935 mm (3.1073 – 3.1077 in.)
	3ZZ–FE	78.955 – 78.965 mm (3.1085 – 3.1089 in.)
Oil clearance	Standard 1ZZ–FE	0.065 – 0.088 mm (0.0026 – 0.0035 in.)
	3ZZ–FE	0.035 – 0.058 mm (0.0014 – 0.0023 in.)
	Maximum 1ZZ–FE	0.088 mm (0.0035 in.)
	3ZZ–FE	0.058 mm (0.0023 in.)
Piston ring		
Groove clearance	No. 1	0.020 – 0.070 mm (0.0008 – 0.0028 in.)
	No. 2	0.030 – 0.070 mm
End gap	Standard No. 1	0.25 – 0.35 mm (0.0098 – 0.0138 in.)
	No. 2	0.35 – 0.50 mm (0.0138 – 0.0197 in.)
	Maximum No. 1	0.74 mm (0.029 in.)
	No. 2	0.89 mm (0.035 in.)
Piston pin		
Diameter		20.004 – 20.013 mm (0.7876 –0.7879 in.)
Connecting rod bolt		
Diameter	Standard	6.6 –6.7 mm (0.260 – 0.264 in.)
	Maximum	6.4 mm (0.252 in.)
Crank pin		
Diameter		43.992 – 44.000 mm (1.7320 – 1.7323 in.)
	Maximum taper and out–of–round	0.02 mm (0.0008 in.)
Crankshaft bearing cap set bolt		
Diameter	Standard	7.3 – 7.5 mm (0.287 – 0.295 in.)
	Maximum	7.2 mm (0.283 in.)

cardiagn.com

Straight pin	
Timing chain or belt cover sub–assy x cylinder block sub–assy	
length 15 mm (0.59 in.)	5 mm (0.20 in.)
length 12 mm (0.47 in.)	6 mm (0.24 in.)
Transaxle housing x Cylinder block sub–assy	12 mm (0.47 in.)
Cylinder head sub–assy x Cylinder block sub–assy	7 mm (0.28 in.)
Crankshaft bearing cap sub–assy x Cylinder block sub–assy	7.5 mm (030 in.)
Oil pump assy x Cylinder block sub–assy	10 mm (0.39 in.)
Driveshaft bracket x Cylinder block sub–assy	8 mm (0.31 in.)
Connecting rod small end bush	
Oil clearance	0.005 – 0.011 mm (0.0002 – 0.0004 in.)

cardiagn.com

0300P–02

TORQUE SPECIFICATION

Part Tightened		N·m	kgf·cm	ft·lbf
Cylinder block water drain cock sub–assy x Cylinder block sub–assy		20	204	15
Oil strainer sub–assy x Cylinder block sub–assy		9.0	92	80 in.·lbf
Oil pan sub–assy x Cylinder block sub–assy		9.0	92	80 in.·lbf
Oil pan drain plug x Oil pan sub–assy		37	377	27
Oil filter union x Cylinder block sub–assy		30	306	22
Oil pump assy x Cylinder block sub–assy		9.0	92	80 in.·lbf
Cylinder head sub–assy x Cylinder block sub–assy	1st	49	500	36
	2nd	Turn 90°	Turn 90°	Turn 90°
Oil control valve filter x Cylinder head sub–assy		30	306	22
Camshaft timing oil control valve assy x Cylinder head sub–assy		9.0	92	80 in.·lbf
Camshaft timing gear assy x Camshaft		54	551	40
Camshaft timing gear or sprocket x Camshaft No. 2		54	551	40
Camshaft, Camshaft No. 2 x Cylinder head sub–assy	Bearing cap No. 1	23	235	17
	Bearing cap No. 3	13	133	10
Chain vibration damper No. 1 x Cylinder head sub–assy		9.0	92	80 in.·lbf
Chain vibration damper No. 1 x Cylinder block sub–assy		9.0	92	80 in.·lbf
Chain tensioner slipper x Cylinder block sub–assy		19	194	14
Timing chain or belt cover sub–assy x Cylinder head sub–assy		13	133	10
Timing chain or belt cover sub–assy x Cylinder block sub–assy	M6	13	133	10
	M8	19	194	14
Chain tensioner assy No. 1 x Cylinder head sub–assy		9.0	92	80 in.·lbf
Crankshaft pulley x Crankshaft		138	1,407	102
Water pump assy x Cylinder block sub–assy		11	112	8
Water pump assy x Timing chain or belt cover sub–assy		9.0	92	80 in.·lbf
Cylinder head cover sub–assy x Cylinder head sub–assy	w/o washer	11	112	8
	w/ washer	9.0	92	80 in.·lbf
Cylinder head cover sub–assy x Timing chain or belt cover sub–assy		11	112	8
Spark plug x Cylinder head sub–assy		25	255	18
Stud bolt				
Timing chain or belt cover sub–assy x Cylinder head sub–assy				
	length 89 mm (3.50 in.)	9.5	97	84 in.·lbf
	length 53.5 mm (2.11 in.)	5.0	51	44 in.·lbf
Cylinder head cover sub–assy x Cylinder head sub–assy		5.0	51	44 in.·lbf
Intake manifold x Cylinder head sub–assy		9.5	97	84 in.·lbf
Exhaust manifold x Cylinder head sub–assy		9.5	97	84 in.·lbf
W/ Head taper screw plug No. 2 x Cylinder head sub–assy		44	449	33
Crankshaft bearing cap sub–assy x Cylinder block sub–assy	M10 1st	22	224	16
	2nd	44	449	33
	3rd	Turn 90°	Turn 90°	Turn 90°
	M8	19	194	14
Connecting rod x Connecting rod cap	1st	20	204	15
	2nd	Turn 90°	Turn 90°	Turn 90°
Stud bolt				
Water by–pass pipe No. 1 x Cylinder block sub–assy		5.0	51	44 in.·lbf
Water inlet x Cylinder block sub–assy		5.0	51	44 in.·lbf
Oil strainer sub–assy x Cylinder block sub–assy		5.0	51	44 in.·lbf
Oil pan sub–assy x Cylinder block sub–assy		5.0	51	44 in.·lbf
Knock control sensor x Cylinder block sub–assy		11	112	8

cardiagn.com

STANDARD BOLT

HOW TO DETERMINE BOLT STRENGTH

030K5–01

Bolt Type				Class
Hexagon Head Bolt		Stud Bolt	Weld Bolt	
Normal Recess Bolt	Deep Recess Bolt			
4 No Mark	No Mark	No Mark		4T
5				5T
6 w/ Washer	w/ Washer			6T
7				7T
8				8T
9				9T
10				10T
11				11T

B06431

cardiagn.com

030K7–01

HOW TO DETERMINE NUT STRENGTH

Nut Type			Class
Present Standard Hexagon Nut	Old Standard Hexagon Nut		
	Cold Forging Nut	Cutting Processed Nut	
No Mark			4N
No Mark (w/ Washer)	No Mark (w/ Washer)	No Mark	5N (4T)
6N			6N
		*	7N (5T)
8N			8N
10N		No Mark	10N (7T)
11N			11N
12N			12N

*: Nut with 1 or more marks on one side surface of the nut.

B06432

HINT:

Use the nut with the same number of the nut strength classification or the greater than the bolt strength classification number when tightening parts with a bolt and nut.

Example: Bolt = 4T

Nut = 4N or more

cardiagn.com

LUBRICATION

SERVICE DATA

0300L–02

Rotor tip clearance	Standard Maximum	0.040 – 0.160 mm (0.0016 – 0.0063 in.) 0.160 mm (0.0063 in.)
Rotor side clearance	Standard Maximum	0.025 – 0.071 mm (0.0010 – 0.0028 in.) 0.071 mm (0.0028 in.)
Body clearance	Standard Maximum	0.260 – 0.325 mm (0.0102 – 0.0128 in.) 0.325 mm (0.0128 in.)

cardiagn.com

0300K–02

TORQUE SPECIFICATION

Part Tightened	N·m	kgf·cm	ft·lbf
Oil pump relief valve plug x Oil pump body	37	377	27
Oil pump cover x Oil pump body	10	102	7

cardiagn.com

ENGINE MECHANICAL

SERVICE DATA

0300O–02

Chain sub–assy		
Length at 16 links	Maximum	112.6 mm (4.433 in.)
Camshaft timing gear or sprocket		
Diameter (w/ chain)	Minimum	97.3 mm (3.831 in.)
Crankshaft timing gear or sprocket		
Diameter (w/ chain)	Minimum	51.6 mm (2.032 in.)
Chain tensioner slipper		
Wear	Maximum	1.0 mm (0.039 in.)
Chain vibration damper No. 1		
Wear	maximum	1.0 mm (0.039 in.)
Cylinder head set bolt		
Length	Standard	156.0 – 159.0 mm (6.142 – 6.260 in.)
	Maximum	159.5 mm (6.280 in.)
Camshaft		
Circle runout	Maximum	0.03 mm (0.0012 in.)
Lobe height	Standard Intake	44.333 – 44.433 mm (1.7454 – 1.7493 in.)
	Exhaust	43.761 – 43.861 mm (1.7229 – 1.7268 in.)
	Minimum Intake	44.18 mm (1.7394 in.)
	Exhaust	43.61 mm (1.7169 in.)
Journal diameter	No. 1	34.449 – 34.465 mm (1.3563 – 1.3569 in.)
	Others	22.949 – 22.965 mm (0.9035 – 0.9041 in.)
Thrust clearance	Standard	0.040 – 0.095 mm (0.0009 – 0.0023 in.)
	Maximum	0.110 mm (0.0043 in.)
Oil clearance	Standard	0.035 – 0.072 mm (0.0014 – 0.0028 in.)
	Maximum	0.10 mm (0.0039 in.)
Valve clearance (Cold)	Intake	0.15 – 0.25 mm (0.006 – 0.010 in.)
	Exhaust	0.25 – 0.35 mm (0.010 – 0.014 in.)
Cylinder head sub–assy		
Warpage	Maximum Cylinder block side	0.05 mm (0.0020 in.)
	Intake manifold side	0.10 mm (0.0040 in.)
	Exhaust manifold side	0.10 mm (0.0040 in.)
Valve guide bushing		
Inside diameter		5.510 – 5.530 mm (0.2169 – 0.2177 in.)
Oil clearance	Standard Intake	0.025 – 0.060 mm (0.0010 – 0.0024 in.)
	Exhaust	0.030 – 0.065 mm (0.0012 – 0.0026 in.)
	Maximum Intake	0.08 mm (0.0031 in.)
	Exhaust	0.01 mm (0.0039 in.)
Bore diameter		10.285 – 10.306 mm (0.4049 – 0.4057 in.)
Protrusion height		8.7 – 9.1 mm (0.342 – 0.358 in.)
Valve stem		
Diameter	Intake	5.470 – 5.485 mm (0.2154 – 0.2159 in.)
	Exhaust	5.465 – 5.480 mm (0.2152 – 0.2158 in.)
Inner compression spring		
Free length		43.40 mm (1.7087 in.)
Deviation	Maximum	2.0 mm (0.078 in.)
Angle (reference)	Maximum	2°
Valve		
Overall length	Standard Intake	88.65 mm (3.4902 in.)
	Exhaust	88.69 mm (3.4917 in.)
	Minimum Intake	88.35 mm (3.4874 in.)
	Exhaust	88.39 mm (3.4799 in.)
Head margin thickness	Standard	1.0 mm (0.039 in.)
	Minimum	0.7 mm (0.028 in.)

cardiagn.com

Valve lifter		
Diameter		30.966 – 30.976 mm (1.2191 – 1.2195 in.)
Bore diameter		31.000 – 31.025 mm (1.2205 – 1.2215 in.)
Oil clearance	Standard	0.024 – 0.059 mm (0.0016 – 0.0037 in.)
	Maximum	0.1 mm (0.0039 in.)
Straight pin		
Protrusion height		5 mm (0.20 in.)
Union protrusion		
Protrusion height	Standard A	29 mm (1.14 in.)
	B	66.5 mm (2.62 in.)
	C	24 mm (0.95 in.)
Connecting rod sub–assy		
Thrust clearance	Standard	0.160 – 0.342 mm (0.063 – 0.0135 in.)
	Maximum	0.342 mm (0.0135 in.)
Oil clearance	Standard	0.028 – 0.060 mm (0.0011 – 0.0024 in.)
	Maximum	0.080 mm (0.0031 in.)
Out–of alignment	Maximum per/100 mm (3.94 in.)	0.05 mm (0.0020 in.)
Twist	Maximum per/100 mm (3.94 in.)	0.05 mm (0.0020 in.)
Connecting rod bearing		
Center wall thickness	Reference Mark 1	1.486 – 1.490 mm (0.0585 – 0.0587 in.)
	Mark 2	1.490 – 1.494 mm (0.0587 – 0.0588 in.)
	Mark 3	1.494 – 1.498 mm (0.0588 – 0.0590 in.)
Crankshaft		
Thrust clearance	Standard	0.04 – 0.24 mm (0.0016 – 0.0094 in.)
	Maximum	0.30 mm (0.0118 in.)
Circle runout	Maximum	0.03 mm (0.0012 in.)
Main journal diameter		47.988 – 48.000 mm (1.8893 – 1.8898 in.)
	Maximum taper and out–of–round	0.02 mm (0.0008 in.)
Oil clearance	Standard	0.013 – 0.030 mm (0.0005 – 0.0012 in.)
	Maximum	0.05 mm (0.0020 in.)
Cylinder block sub–assy		
Warpage	Maximum	0.05 mm (0.0020 in.)
Bore diameter	Standard	79.000 – 79.013 mm (3.1073 – 3.1108 in.)
	Maximum	79.013 mm (3.1108 in.)
Piston		
Diameter (at 29.8 mm (1.173 in.) from the piston head)	1ZZ–FE	78.925 – 78.935 mm (3.1073 – 3.1077 in.)
	3ZZ–FE	78.955 – 78.965 mm (3.1085 – 3.1089 in.)
Oil clearance	Standard 1ZZ–FE	0.065 – 0.088 mm (0.0026 – 0.0035 in.)
	3ZZ–FE	0.035 – 0.058 mm (0.0014 – 0.0023 in.)
	Maximum 1ZZ–FE	0.088 mm (0.0035 in.)
	3ZZ–FE	0.058 mm (0.0023 in.)
Piston ring		
Groove clearance	No. 1	0.020 – 0.070 mm (0.0008 – 0.0028 in.)
	No. 2	0.030 – 0.070 mm
End gap	Standard No. 1	0.25 – 0.35 mm (0.0098 – 0.0138 in.)
	No. 2	0.35 – 0.50 mm (0.0138 – 0.0197 in.)
	Maximum No. 1	0.74 mm (0.029 in.)
	No. 2	0.89 mm (0.035 in.)
Piston pin		
Diameter		20.004 – 20.013 mm (0.7876 –0.7879 in.)
Connecting rod bolt		
Diameter	Standard	6.6 –6.7 mm (0.260 – 0.264 in.)
	Maximum	6.4 mm (0.252 in.)
Crank pin		
Diameter		43.992 – 44.000 mm (1.7320 – 1.7323 in.)
	Maximum taper and out–of–round	0.02 mm (0.0008 in.)
Crankshaft bearing cap set bolt		
Diameter	Standard	7.3 – 7.5 mm (0.287 – 0.295 in.)
	Maximum	7.2 mm (0.283 in.)

cardiagn.com

Straight pin	
Timing chain or belt cover sub–assy x cylinder block sub–assy	
length 15 mm (0.59 in.)	5 mm (0.20 in.)
length 12 mm (0.47 in.)	6 mm (0.24 in.)
Transaxle housing x Cylinder block sub–assy	12 mm (0.47 in.)
Cylinder head sub–assy x Cylinder block sub–assy	7 mm (0.28 in.)
Crankshaft bearing cap sub–assy x Cylinder block sub–assy	7.5 mm (030 in.)
Oil pump assy x Cylinder block sub–assy	10 mm (0.39 in.)
Driveshaft bracket x Cylinder block sub–assy	8 mm (0.31 in.)
Connecting rod small end bush	
Oil clearance	0.005 – 0.011 mm (0.0002 – 0.0004 in.)

cardiagn.com

030K6–01

SPECIFIED TORQUE FOR STANDARD BOLTS

Class	Diameter mm	Pitch mm	Specified torque					
			Hexagon head bolt			Hexagon flange bolt		
			N·m	kgf·cm	ft·lbf	N·m	kgf·cm	ft·lbf
4T	6	1	5	55	48 in.·lbf	6	60	52 in.·lbf
	8	1.25	12.5	130	9	14	145	10
	10	1.25	26	260	19	29	290	21
	12	1.25	47	480	35	53	540	39
	14	1.5	74	760	55	84	850	61
	16	1.5	115	1,150	83	–	–	–
5T	6	1	6.5	65	56 in.·lbf	7.5	75	65 in.·lbf
	8	1.25	15.5	160	12	17.5	175	13
	10	1.25	32	330	24	36	360	26
	12	1.25	59	600	43	65	670	48
	14	1.5	91	930	67	100	1,050	76
	16	1.5	140	1,400	101	–	–	–
6T	6	1	8	80	69 in.·lbf	9	90	78 in.·lbf
	8	1.25	19	195	14	21	210	15
	10	1.25	39	400	29	44	440	32
	12	1.25	71	730	53	80	810	59
	14	1.5	110	1,100	80	125	1,250	90
	16	1.5	170	1,750	127	–	–	–
7T	6	1	10.5	110	8	12	120	9
	8	1.25	25	260	19	28	290	21
	10	1.25	52	530	38	58	590	43
	12	1.25	95	970	70	105	1,050	76
	14	1.5	145	1,500	108	165	1,700	123
	16	1.5	230	2,300	166	–	–	–
8T	8	1.25	29	300	22	33	330	24
	10	1.25	61	620	45	68	690	50
	12	1.25	110	1,100	80	120	1,250	90
9T	8	1.25	34	340	25	37	380	27
	10	1.25	70	710	51	78	790	57
	12	1.25	125	1,300	94	140	1,450	105
10T	8	1.25	38	390	28	42	430	31
	10	1.25	78	800	58	88	890	64
	12	1.25	140	1,450	105	155	1,600	116
11T	8	1.25	42	430	31	47	480	35
	10	1.25	87	890	64	97	990	72
	12	1.25	155	1,600	116	175	1,800	130

cardiagn.com

STARTING & CHARGING

SERVICE DATA

0300Q–02

Starter armature assy		
Circle runout	Maximum	0.05 mm (0.0020 in.)
Commutator diameter	Standard	28 mm (1.102 in.)
	Minimum	27 mm (1.063 in.)
Undercut depth	Standard	0.6 mm (0.024 in.)
	Minimum	0.2 mm (0.008 in.)
Starter yoke assy		
Brush length	Standard	14 mm (0.551 in.)
	Minimum	9 mm (0.354 in.)
Starter brush holder assy		
Brush length	Standard	14 mm (0.551 in.)
	Minimum	9 mm (0.354 in.)
Generator rotor assy		
Coil resistance	at 20°C (68°F)	2.1 – 2.5 Ω
Slip ring diameter	Standard	14.2 – 14.4 mm (0.559 – 0.567 in.)
	Minimum	12.8 mm (0.504 in.)
Generator brush holder assy		
Exposed brush length	Standard	9.5 – 11.5 mm (0.374 – 0.453 in.)
	Minimum	1.5 mm (0.059 in.)

cardiagn.com

0300R–02

TORQUE SPECIFICATION

Part Tightened		N·m	kgf·cm	ft·lbf
Starter commutator end frame assy x Starter brush holder assy		1.5	15	13 in.·lbf
Starter yoke assy x Starter drive housing assy		5.9	60	52 in.·lbf
Magnet starter switch assy x Starter drive housing assy		8.3	85	73 in.·lbf
Lead wire x Magnet starter switch assy		9.8	100	7
Generator rectifier end frame x Generator drive end frame	w/o cord clip	4.5	46	40 in.·lbf
	w/ cord clip	5.4	55	48 in.·lbf
Generator holder w/ rectifier x Generator drive end frame		2.9	30	26 in.·lbf
Generator regulator x Generator holder w/ rectifier		2.0	20	18 in.·lbf
Generator brush holder assy x Generator holder w/ rectifier		2.0	20	18 in.·lbf
Generator rear end cover x Generator rectifier end frame		4.4	45	39 in.·lbf
Terminal plate x Generator rectifier end frame	Bolt	3.9	40	35 in.·lbf
	Nut	4.4	45	39 in.·lbf
Terminal insulator x Generator holder w/ rectifier		4.1	42	36 in.·lbf
Generator pulley x Generator rotor assy		111	1,132	82

cardiagn.com

0300P–02

TORQUE SPECIFICATION

Part Tightened		N·m	kgf·cm	ft·lbf
Cylinder block water drain cock sub–assy x Cylinder block sub–assy		20	204	15
Oil strainer sub–assy x Cylinder block sub–assy		9.0	92	80 in.·lbf
Oil pan sub–assy x Cylinder block sub–assy		9.0	92	80 in.·lbf
Oil pan drain plug x Oil pan sub–assy		37	377	27
Oil filter union x Cylinder block sub–assy		30	306	22
Oil pump assy x Cylinder block sub–assy		9.0	92	80 in.·lbf
Cylinder head sub–assy x Cylinder block sub–assy	1st	49	500	36
	2nd	Turn 90°	Turn 90°	Turn 90°
Oil control valve filter x Cylinder head sub–assy		30	306	22
Camshaft timing oil control valve assy x Cylinder head sub–assy		9.0	92	80 in.·lbf
Camshaft timing gear assy x Camshaft		54	551	40
Camshaft timing gear or sprocket x Camshaft No. 2		54	551	40
Camshaft, Camshaft No. 2 x Cylinder head sub–assy	Bearing cap No. 1	23	235	17
	Bearing cap No. 3	13	133	10
Chain vibration damper No. 1 x Cylinder head sub–assy		9.0	92	80 in.·lbf
Chain vibration damper No. 1 x Cylinder block sub–assy		9.0	92	80 in.·lbf
Chain tensioner slipper x Cylinder block sub–assy		19	194	14
Timing chain or belt cover sub–assy x Cylinder head sub–assy		13	133	10
Timing chain or belt cover sub–assy x Cylinder block sub–assy	M6	13	133	10
	M8	19	194	14
Chain tensioner assy No. 1 x Cylinder head sub–assy		9.0	92	80 in.·lbf
Crankshaft pulley x Crankshaft		138	1,407	102
Water pump assy x Cylinder block sub–assy		11	112	8
Water pump assy x Timing chain or belt cover sub–assy		9.0	92	80 in.·lbf
Cylinder head cover sub–assy x Cylinder head sub–assy	w/o washer	11	112	8
	w/ washer	9.0	92	80 in.·lbf
Cylinder head cover sub–assy x Timing chain or belt cover sub–assy		11	112	8
Spark plug x Cylinder head sub–assy		25	255	18
Stud bolt				
Timing chain or belt cover sub–assy x Cylinder head sub–assy				
	length 89 mm (3.50 in.)	9.5	97	84 in.·lbf
	length 53.5 mm (2.11 in.)	5.0	51	44 in.·lbf
Cylinder head cover sub–assy x Cylinder head sub–assy		5.0	51	44 in.·lbf
Intake manifold x Cylinder head sub–assy		9.5	97	84 in.·lbf
Exhaust manifold x Cylinder head sub–assy		9.5	97	84 in.·lbf
W/ Head taper screw plug No. 2 x Cylinder head sub–assy		44	449	33
Crankshaft bearing cap sub–assy x Cylinder block sub–assy	M10 1st	22	224	16
	2nd	44	449	33
	3rd	Turn 90°	Turn 90°	Turn 90°
	M8	19	194	14
Connecting rod x Connecting rod cap	1st	20	204	15
	2nd	Turn 90°	Turn 90°	Turn 90°
Stud bolt				
Water by–pass pipe No. 1 x Cylinder block sub–assy		5.0	51	44 in.·lbf
Water inlet x Cylinder block sub–assy		5.0	51	44 in.·lbf
Oil strainer sub–assy x Cylinder block sub–assy		5.0	51	44 in.·lbf
Oil pan sub–assy x Cylinder block sub–assy		5.0	51	44 in.·lbf
Knock control sensor x Cylinder block sub–assy		11	112	8

cardiagn.com

GENERATOR ASSY (1ZZ–FE/3ZZ–FE)

190A9–01

COMPONENTS

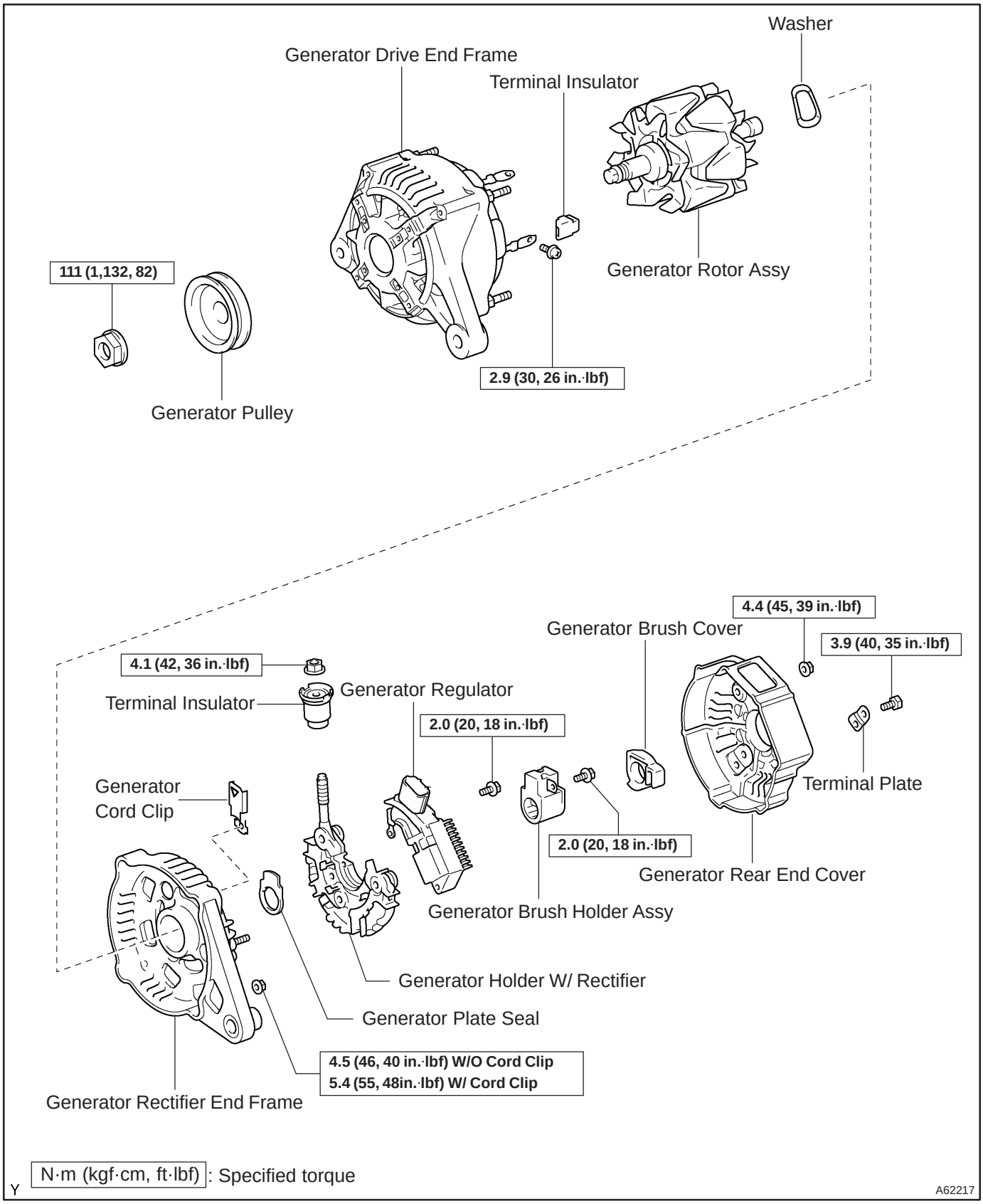

cardiagn.com

OVERHAUL

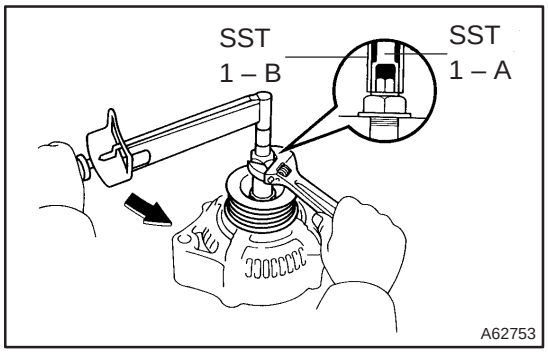

1. REMOVE GENERATOR PULLEY

SST 09820–63010 (09820–06010, 09820–06020)

HINT:

SST1 – A, B	09820–06010
SST2	09820–06020

(a) Hold SST 1 – A with a torque wrench, and tighten SST 1 – B clockwise to the specified torque.
Torque: 39 N·m (398 kgf·cm, 29 ft·lbf)

NOTICE:
Check that SST is secured to the rotor shaft.

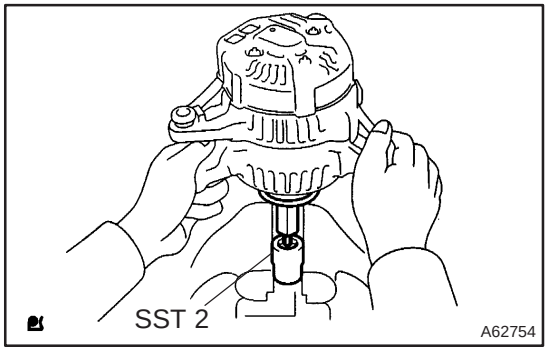

(b) Mount SST 2 in a vise.
(c) Insert SST 1 – A, B into SST 2, and attach the pulley nut to SST 2.

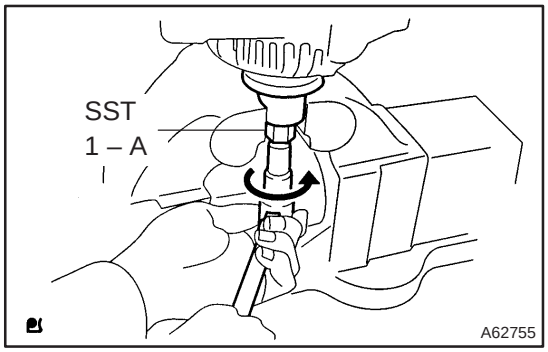

(d) To loosen the pulley nut, turn SST 1 – A in the direction shown in the illustration.

NOTICE:
To prevent damage to the rotor shaft, do not loosen the pulley nut more than one–half of a turn.

(e) Remove the alternator form SST 2.

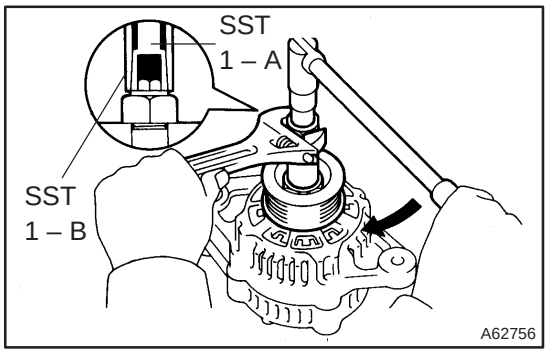

(f) Turn SST 1 – B, and remove SST 1 – A, B.
(g) Remove the pulley nut and pulley.

cardiagn.com

2. REMOVE GENERATOR BRUSH HOLDER ASSY

(a) Remove the nut and terminal insulator.
(b) Remove the screw, nut and terminal plate.
(c) Remove the 2 nuts and rear end cover.
(d) Remove the brush cover from the brush holder.
(e) Remove the 2 screw and brush holder.

3. REMOVE GENERATOR REGULATOR ASSY

(a) Remove the 3 screws and regulator.

4. REMOVE GENERATOR HOLDER W/RECTIFIER

(a) Remove the 4 screws and holder w/ rectifier.

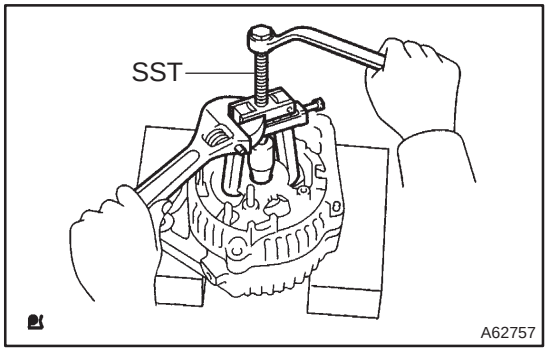

5. REMOVE GENERATOR ROTOR ASSY

(a) Remove the plate seal from the rectifier end frame.
(b) Remove the 4 terminal insulator, 4 nuts and cord clip.
(c) Using SST, remove the rectifier end frame.
SST 09286–46011
(d) Remove the rotor from drive end frame.

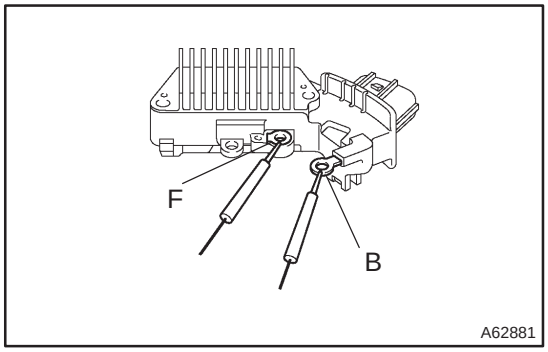

6. INSPECT GENERATOR REGULATOR ASSY

(a) Using an ohmmeter, check the continuity between terminals F and B.
Standard:
When the positive and negative poles between terminals F and B are exchanged, there is continuity in one way but no continuity in another way.

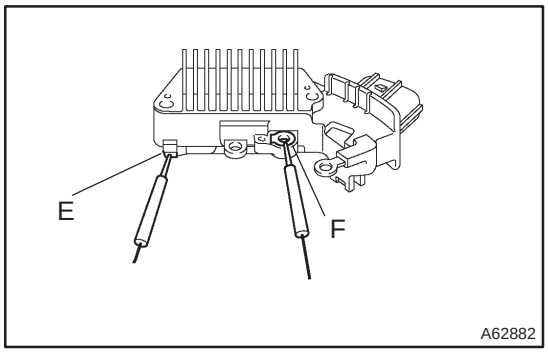

(b) Using an ohmmeter, check the continuity between terminals F and E.
Standard:
When the positive and negative poles between terminals F and E are exchanged, there is continuity in one way but no continuity in another way.

cardiagn.com

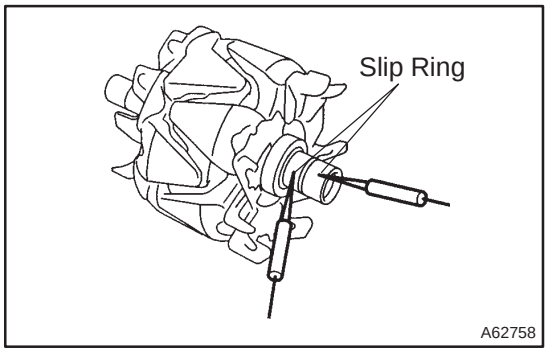

7. INSPECT GENERATOR ROTOR ASSY

(a) Using an ohmmeter, check that there is continuity between the slip rings.
Standard resistance: 2.1 – 2.5 Ω at 20°C (68°F)

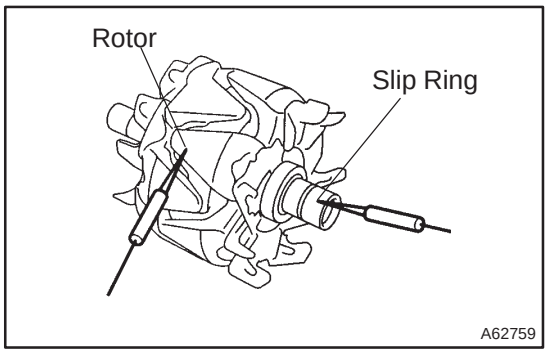

(b) Using an ohmmeter, check that there is no continuity between the slip ring and rotor.

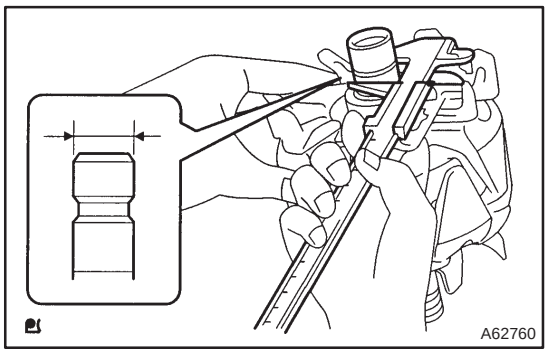

(c) Using a vernier calipers, measure the slip ring diameter.
Standard diameter: 14.2 – 14.4 mm (0.559 – 0.567 in.)
Minimum diameter: 12.8 mm (0.504 in.)

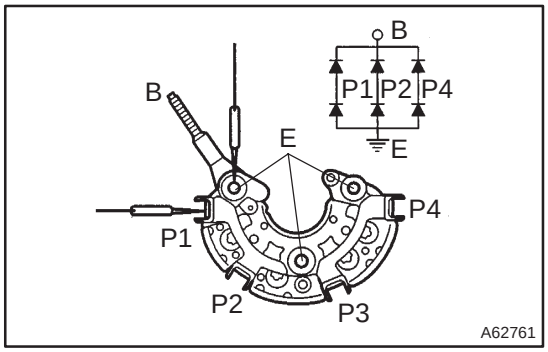

8. INSPECT GENERATOR HOLDER W/RECTIFIER

(a) Using an ohmmeter, connect one tester probe to the B or E terminal and the other to each rectifier terminal.
(b) Reverse the polarity of the tester probes and repeat step (a).
(c) Check that one shows continuity and the other shows no continuity.

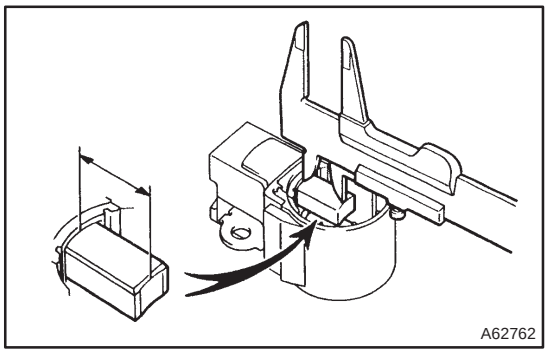

9. INSPECT GENERATOR BRUSH HOLDER ASSY

(a) Using a vernier calipers, measure the exposed brush length.
Standard exposed length:
9.5 – 11.5 mm (0.374 – 0.453 in.)
Minimum exposed length: 1.5 mm (0.059 in.)

cardiagn.com

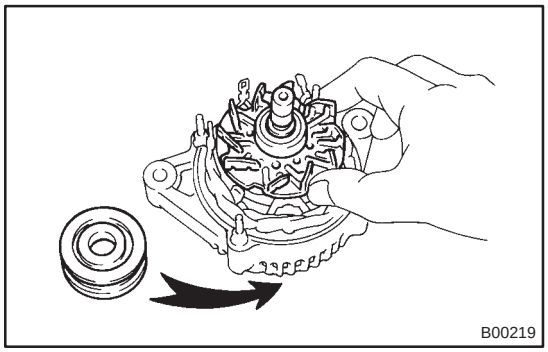

10. INSTALL GENERATOR ROTOR ASSY

(a) Install the rotor to the drive end frame.

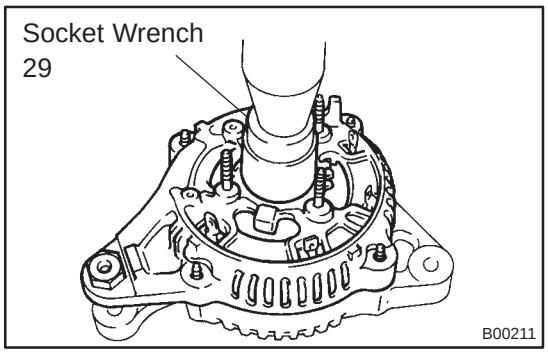

(b) Using a socket wrench 29 and press, slowly press in the rectifier end frame.

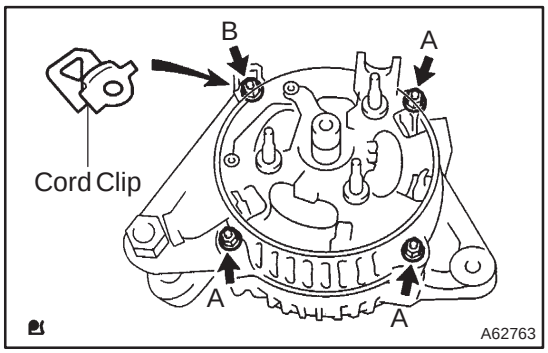

(c) Install the cord clip and 4 nuts.
Torque:
Nut A 4.5 N·m (46 kgf·cm, 40 in.·lbf)
Nut B 5.4 N·m (55 kgf·cm, 48 in.·lbf)

11. INSTALL GENERATOR HOLDER W/RECTIFIER

(a) Install the holder w/ rectifier with 4 screws.
Torque: 2.9 N·m (30 kgf·cm, 26 in.·lbf)

12. INSTALL GENERATOR REGULATOR ASSY

(a) Install the regulator with the 3 screw.
Torque: 2.0 N·m (20 kgf·cm, 18 in.·lbf)

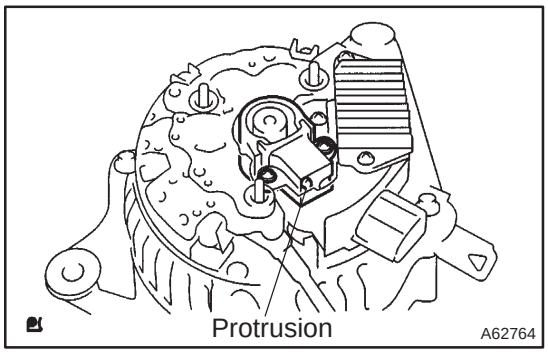

13. INSTALL GENERATOR BRUSH HOLDER ASSY

(a) Install the brush holder with the 2 screws.
Torque: 2.0 N·m (20 kgf·cm, 18 in.·lbf)

NOTICE:
Pay attention to the holder installation direction.

cardiagn.com

(b) Install the rear end cover with the 2 nuts.
Torque: 4.4 N·m (45 kgf·cm, 39 in.·lbf)

(c) Install the terminal plate with the screw and nut.
Torque:
Bolt 3.9 N·m (40 kgf·cm, 35 in.·lbf)
Nut 4.4 N·m (45 kgf·cm, 39 in.·lbf)

(d) Install the terminal insulator withe the nut.
Torque: 4.1 N·m (42 kgf·cm, 36 in.·lbf)

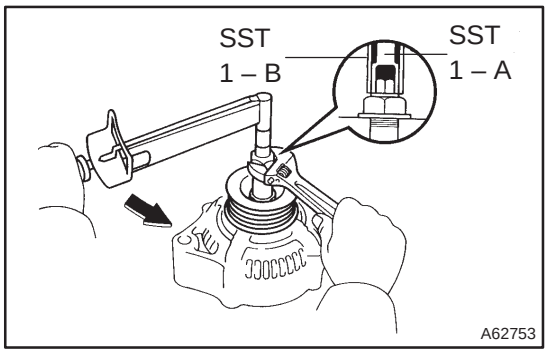

14. INSTALL GENERATOR PULLEY

SST 09820–63010 (09820–06010, 09820–06020)

HINT:

SST1 – A, B	09820–06010
SST2	09820–06020

(a) Install the pulley to the rotor shaft by tightening the pulley nut by hand.

(b) Hold SST 1 – A with a torque wrench, and tighten SST 1 – B clockwise to the specified torque.
Torque: 39 N·m (398 kgf·cm, 29 ft·lbf)

NOTICE:
Check that SST is secured to the pulley shaft.

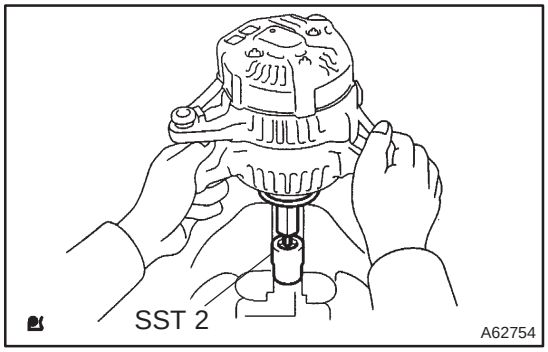

(c) Mount SST 2 in a vise.

(d) Insert SST 1 – A, B into SST 2, and attach the pulley nut to SST 2.

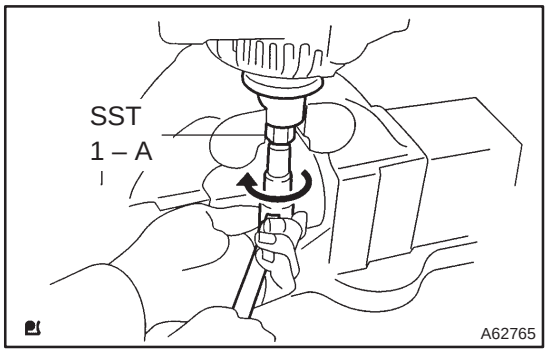

(e) Tighten the pulley nut, turn SST 1 – A in the direction shown in the illustration.
Torque: 111 N·m (1,132 kgf·cm, 82 ft·lbf)

(f) Remove the alternator form SST 2.

cardiagn.com

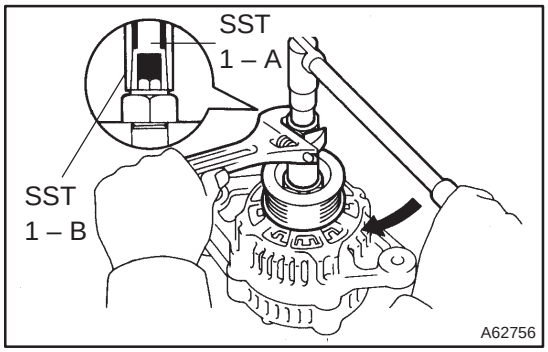

(g) Turn SST 1 – B, and remove SST 1 – A, B.

(h) Turn the pulley, and check that the pulley moves smoothly.

cardiagn.com

STARTER ASSY (1ZZ–FE/3ZZ–FE)

COMPONENTS

190A8–01

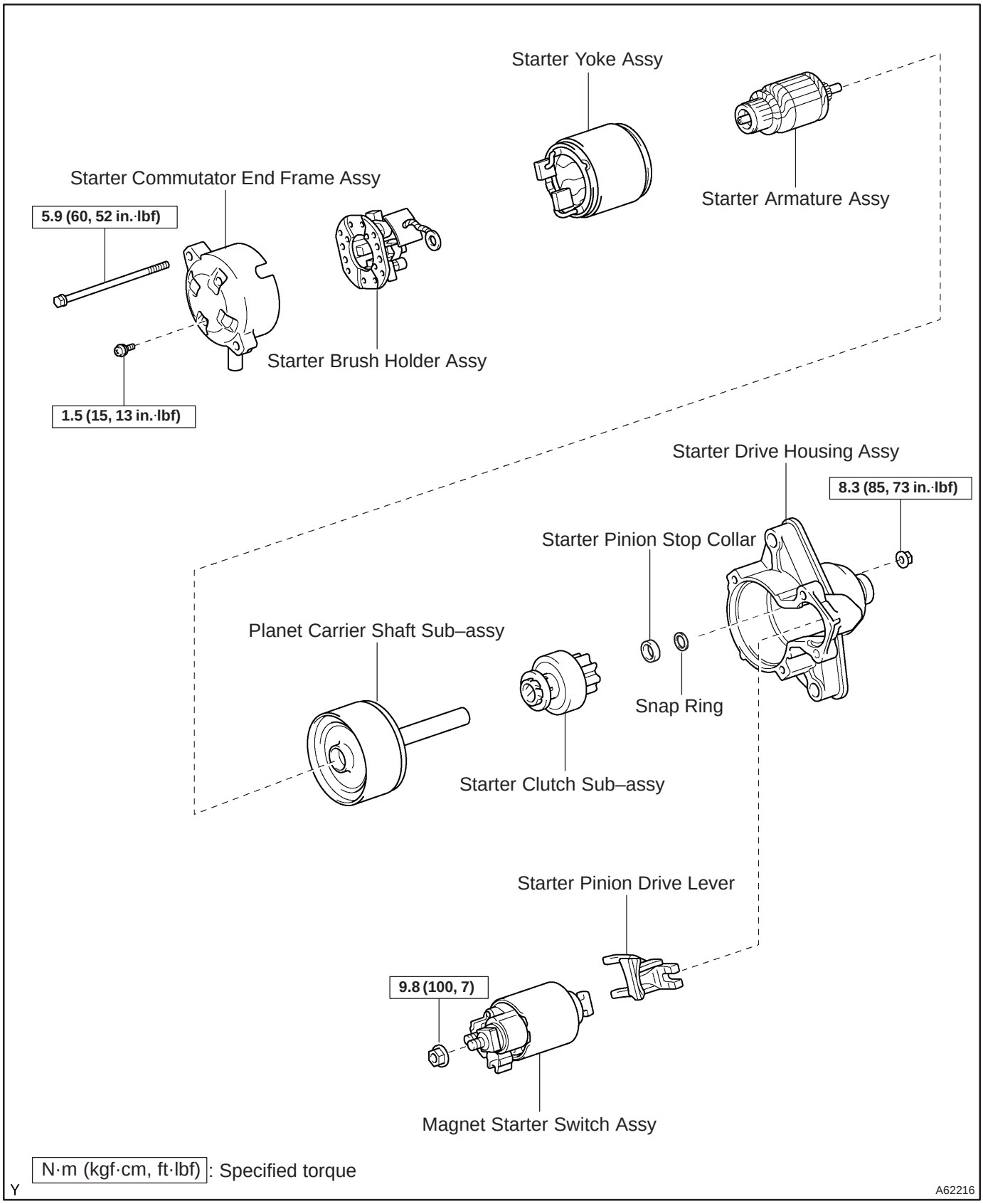

cardiagn.com

OVERHAUL

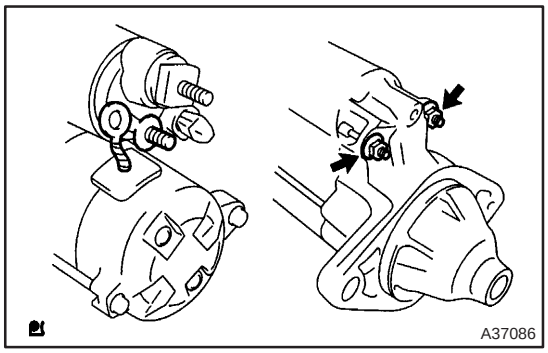

1. REMOVE MAGNET STARTER SWITCH ASSY

(a) Remove the nut, and disconnect the lead wire from the magnetic switch terminal.
(b) Loosen the 2 nuts holding the magnetic switch to the starter housing.
(c) Pull the magnetic switch and while lifting the front part of the magnetic switch, release the plunger hook from the driver lever, then release the magnetic switch.

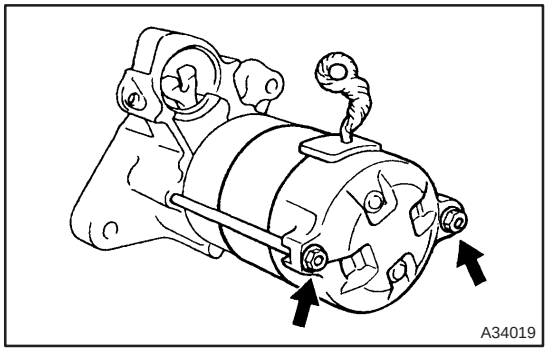

2. REMOVE STARTER YOKE ASSY

(a) Remove the 2 through bolts, and pull out the field frame together with the armature.

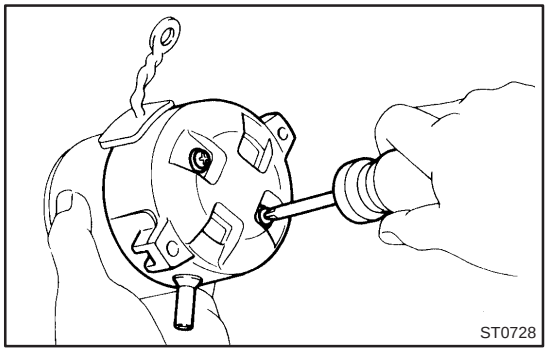

3. REMOVE STARTER BRUSH HOLDER ASSY

(a) Remove the 2 screws and commutator end frame, and hold down the lead wire while releasing the commutator end frame.

NOTICE:
To avoid interference between the brush holder and the dust protector pull the commutator end frame away at an angle.

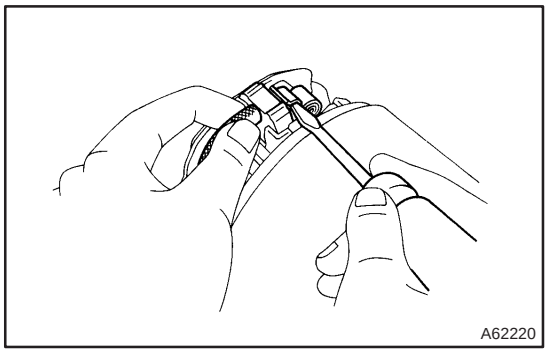

(b) Using a screwdriver, hold the spring back and disconnect the brush holder.
(c) Disconnect the 4 brushes, and remove the starter brush holder.

4. REMOVE STARTER ARMATURE ASSY

(a) Remove the starter armature from the starter yoke.

cardiagn.com

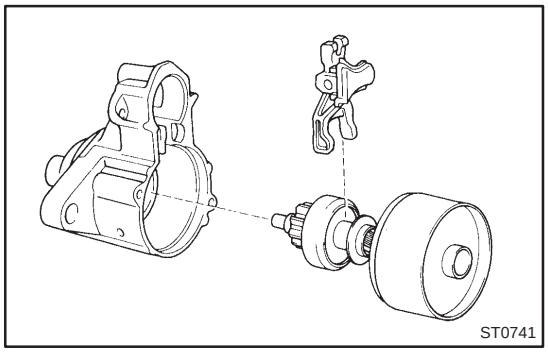

5. REMOVE STARTER CLUTCH SUB–ASSY

(a) Remove drive lever and starter clutch with shock absorber from starter housing.

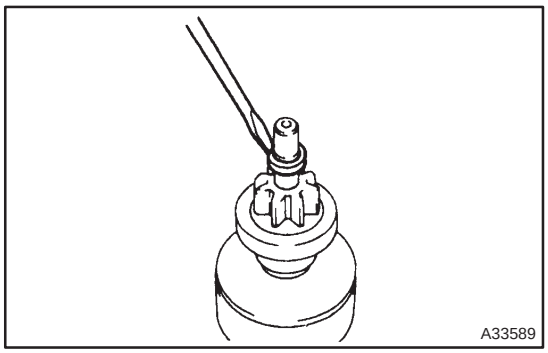

(b) Using a screwdriver, tap in the stop collar towards the starter clutch.

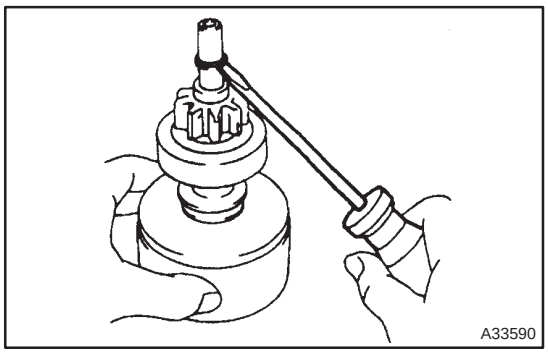

(c) Using a screwdriver, pry off the snap ring.
(d) Remove the stop collar and starter clutch from the planetary shaft.

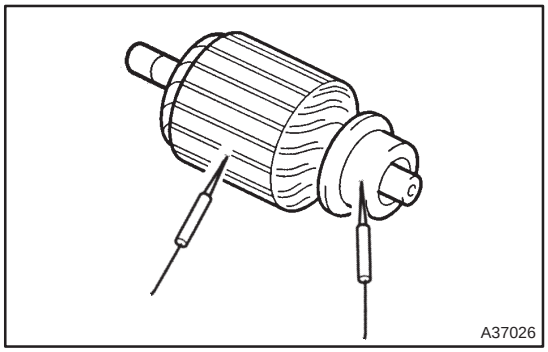

6. INSPECT STARTER ARMATURE ASSY

(a) Using an ohmmeter, check that there is no continuity between the commutator and armature coil core.

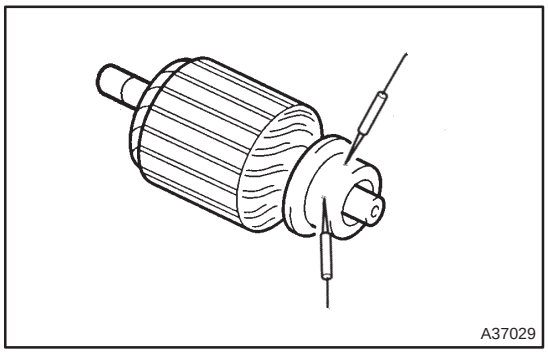

(b) Using an ohmmeter, check that there is continuity between the segments of the commutator.

cardiagn.com

(c) Check the commutator for dirty and burn on surface.
If the surface is dirty or burnt, correct it with sandpaper (No. 400) or a lathe.

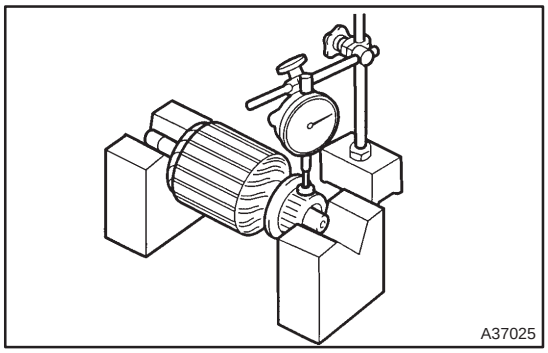

(d) Place the commutator on V – blocks.
(e) Using a dial indicator, measure the circle runout.
Maximum circle runout: 0.05 mm (0.0020 in.)

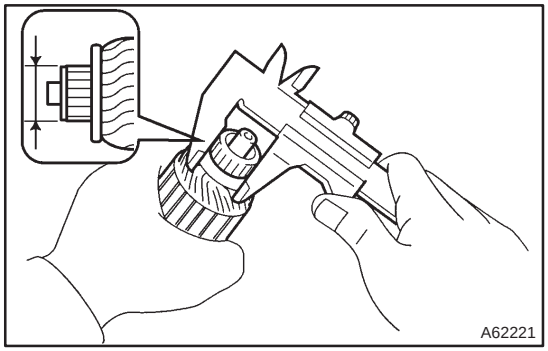

(f) Using a vernier calipers, measure the commutator diameter.
Standard diameter: 28 mm (1.102 in.)
Minimum diameter: 27 mm (1.063 in.)

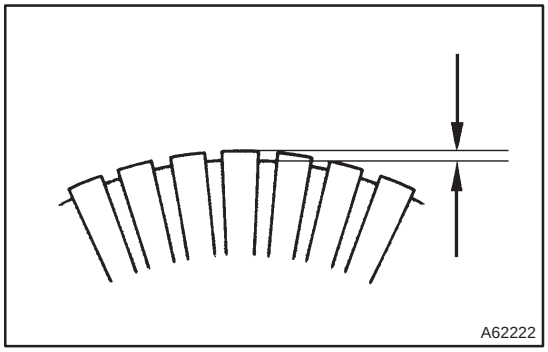

(g) Check that the undercut depth is clean and free of foreign materials. Smooth out the edge.
Standard undercut depth: 0.6 mm (0.024 in.)
Minimum undercut depth: 0.2 mm (0.008 in.)

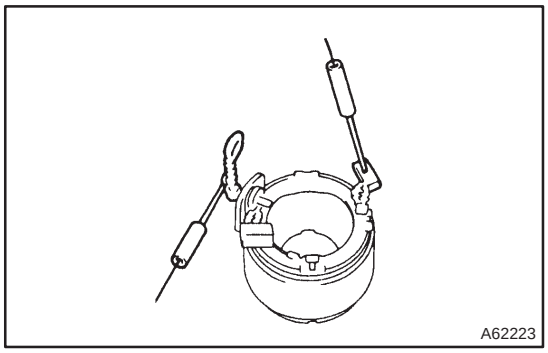

7. INSPECT FIELD COIL

(a) Using an ohmmeter, check that there is continuity between the lead wire and field coil brush lead.

cardiagn.com

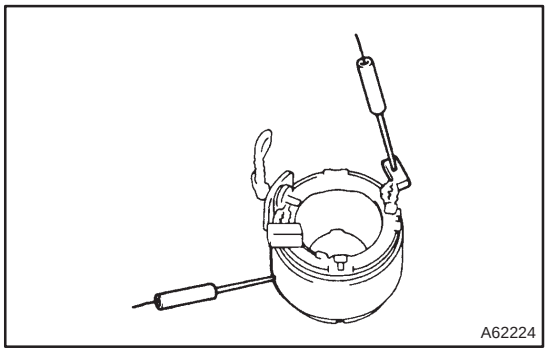

(b) Using an ohmmeter, check that there is no continuity between the field coil end and field frame.

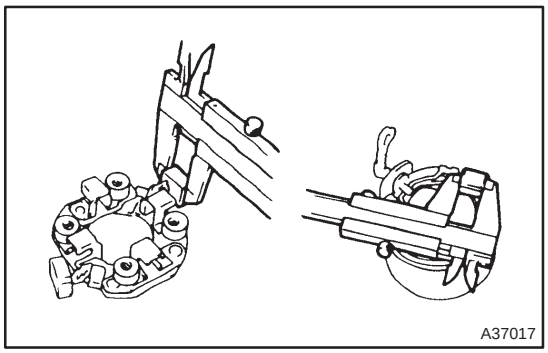

8. INSPECT BRUSH

(a) Using a vernier calipers, measure the brush length.
Standard length: 14 mm (0.551 in.)
Minimum length: 9 mm (0.354 in.)

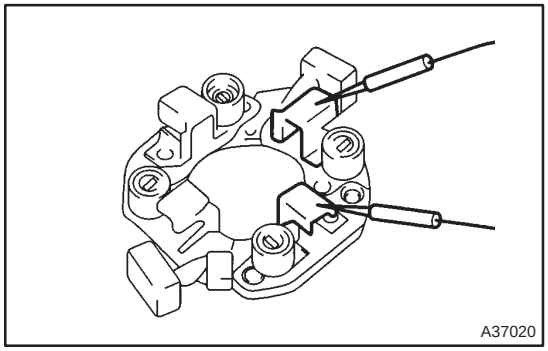

9. INSPECT STARTER BRUSH HOLDER ASSY

(a) Using an ohmmeter, check that there is no continuity between the positive (+) and negative (–) brush holders.

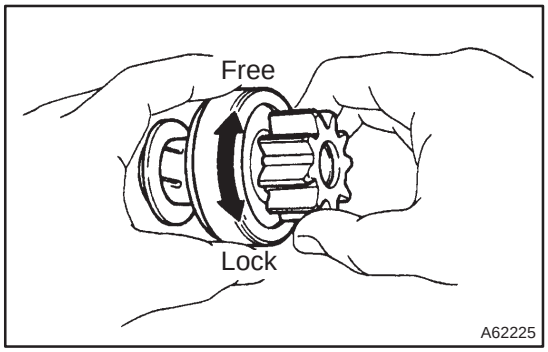

10. INSPECT STARTER CLUTCH SUB–ASSY

(a) Rotate the clutch pinion gear clockwise and check that it turns freely. Try to rotate the clutch pinion gear counterclockwise and check that it locks.

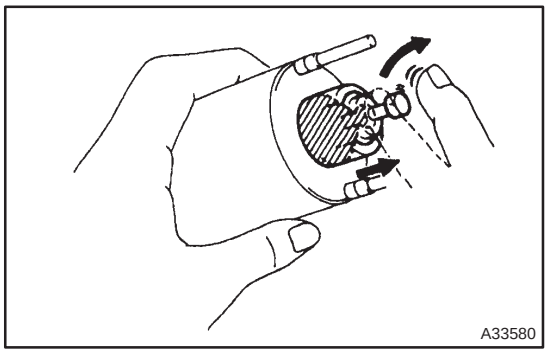

11. INSPECT MAGNET STARTER SWITCH ASSY

(a) Push in the plunger and check that it returns quickly to its original position.

cardiagn.com

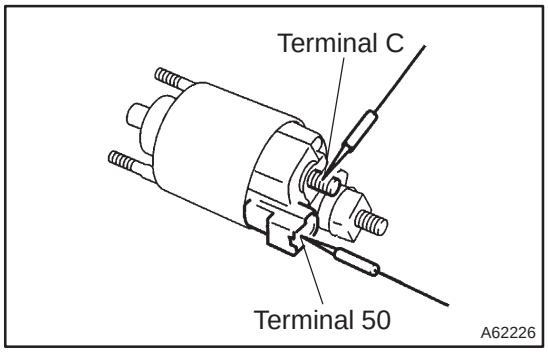

(b) Using an ohmmeter, check that there is continuity between terminals 50 and C.

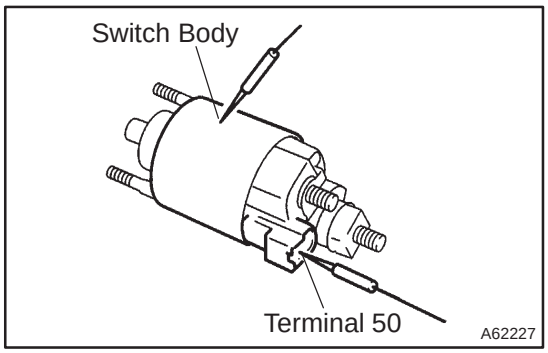

(c) Using an ohmmeter, check that there is continuity between terminals 50 and the switch body.

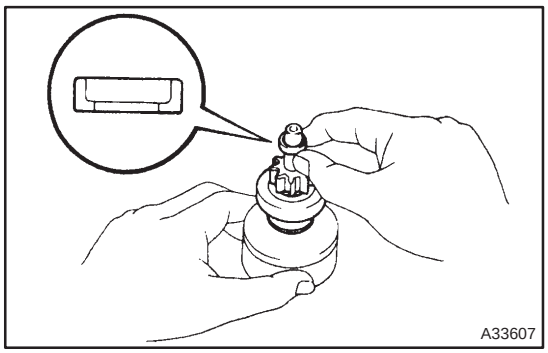

12. INSTALL STARTER CLUTCH SUB–ASSY

(a) Apply grease to the bushing and spline of the starter clutch and stop collar.

(b) Place the starter clutch and stop collar on the planetary shaft.

(c) Apply grease to the snap ring, and install it to the planetary shaft groove.

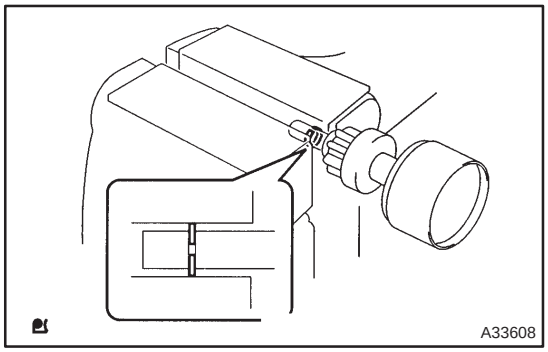

(d) Using a vise, compress the snap ring.

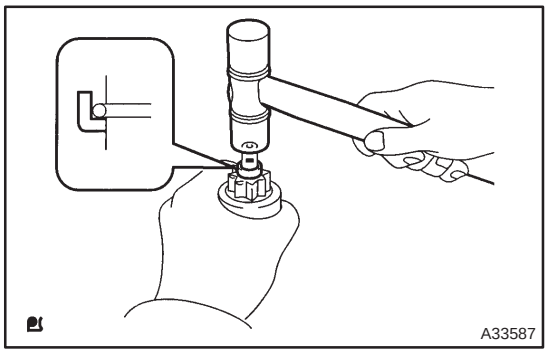

(e) Hold the starter clutch, tap the planetary shaft and install the stop collar onto the snap ring with a plastic hammer.

cardiagn.com

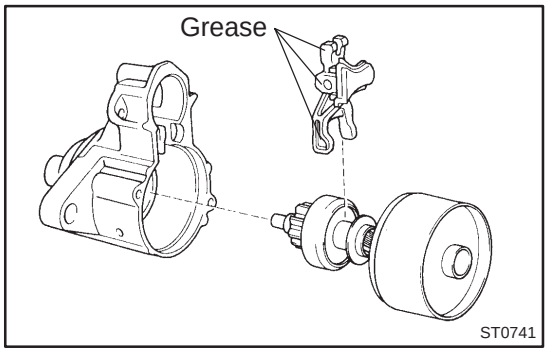

(f) Apply grease to the drive lever touching the starter pivot part of the drive lever.

(g) Install the drive lever to the starter clutch.

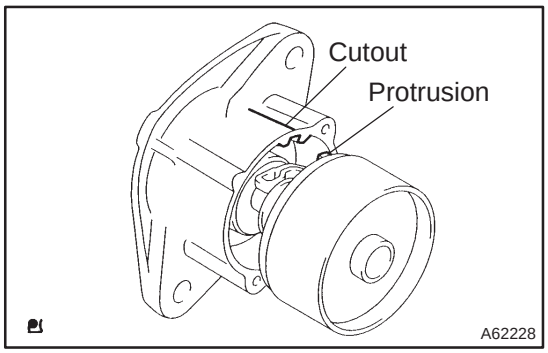

(h) Align the protrusion of the shock absorber with the cutout of the starter housing and install them.

13. INSTALL STARTER ARMATURE ASSY

(a) Install the starter armature to the starter yoke.

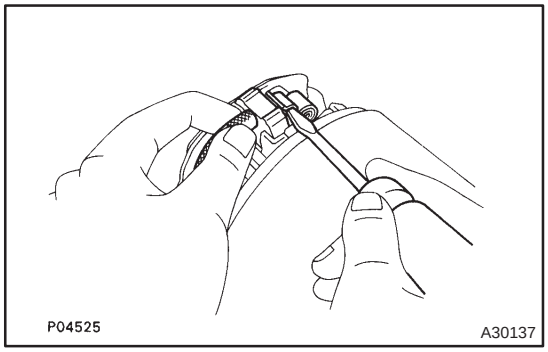

14. INSTALL STARTER BRUSH HOLDER ASSY

(a) Install the brush holder.

(b) Using a screwdriver, hold the brush spring back, and connect the brush into the brush holder.
Connect the 4 brushes.

(c) Apply turbine oil with additives to the bearing of the end frame.

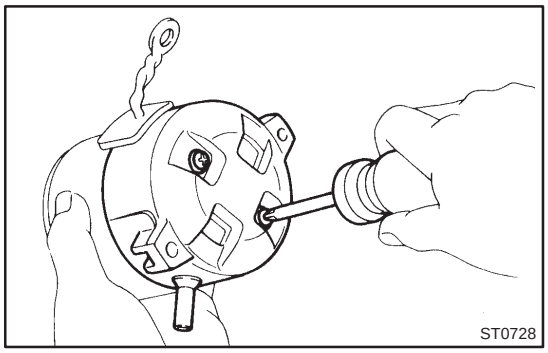

(d) Install the end frame with 2 new screws.
Torque: 1.5 N·m (15 kgf·cm, 13 in.·lbf)

NOTICE:
To avoid interference between the brush holder and the dust protector push the commutator and frame away at an angle.

cardiagn.com

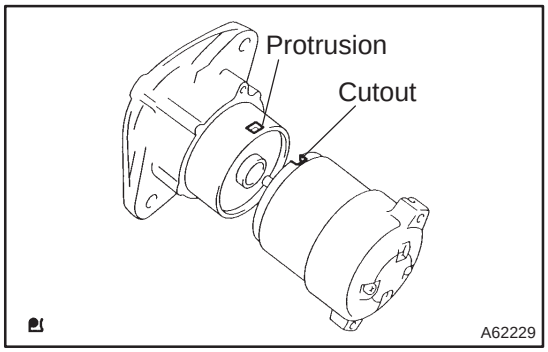

15. INSTALL STARTER YOKE ASSY

(a) Align the cutout of the field frame with the protrusion of the shock absorber.

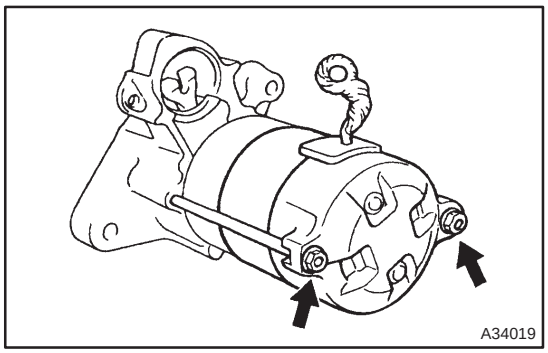

(b) Install the field frame and armature assembly with the 2 through bolts.
Torque: 5.9 N·m (60 kgf·cm, 52 in.·lbf)

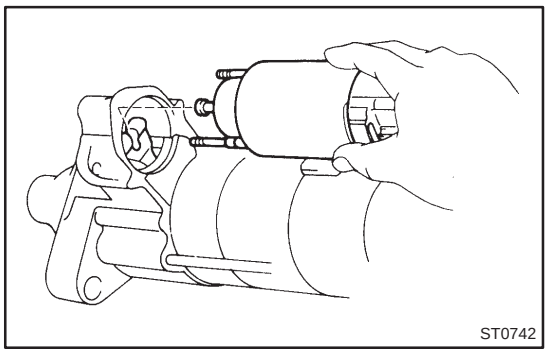

16. INSTALL MAGNET STARTER SWITCH ASSY

(a) Hang the plunger of the magnetic switch to the driver lever from the upper side.

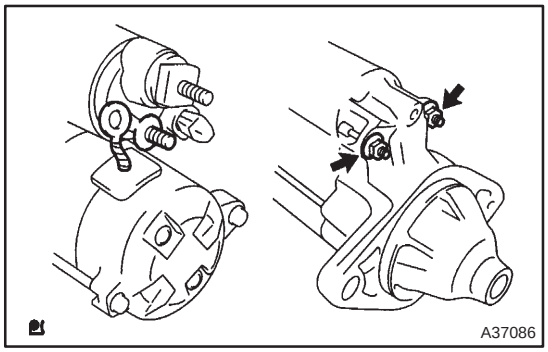

(b) Install the magnetic switch with the 2 nuts.
Torque: 8.3 N·m (85 kgf·cm, 73 in.·lbf)

(c) Connect the lead wire to the terminal with the nut.
Torque: 9.8 N·m (100 kgf·cm, 7 ft·lbf)

cardiagn.com