UPPER INSTRUMENT PANEL (for Sedan)

PRECAUTION

1. **PRECAUTION FOR VEHICLES WITH SRS AIRBAG AND SEAT BELT PRETENSIONER**
   (a) Some of these operations may affect the SRS airbag system. Read the precautionary notices concerning the SRS airbag system before servicing (See page RS-1).

COMPONENTS

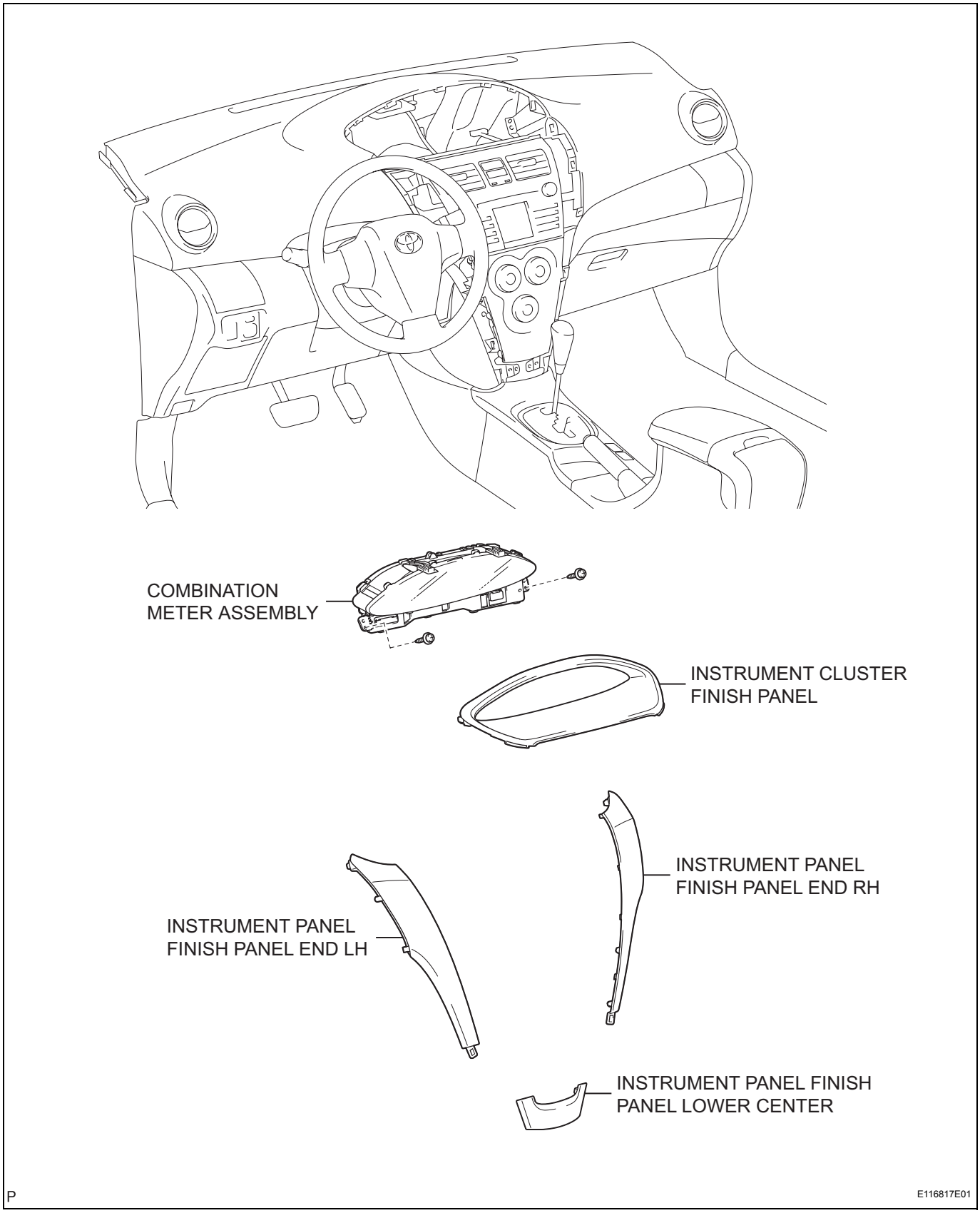
COMBINATION
METER ASSEMBLY
INSTRUMENT CLUSTER
FINISH PANEL
INSTRUMENT PANEL
FINISH PANEL END RH
INSTRUMENT PANEL
FINISH PANEL END LH
INSTRUMENT PANEL FINISH
PANEL LOWER CENTER
P
E116817E01

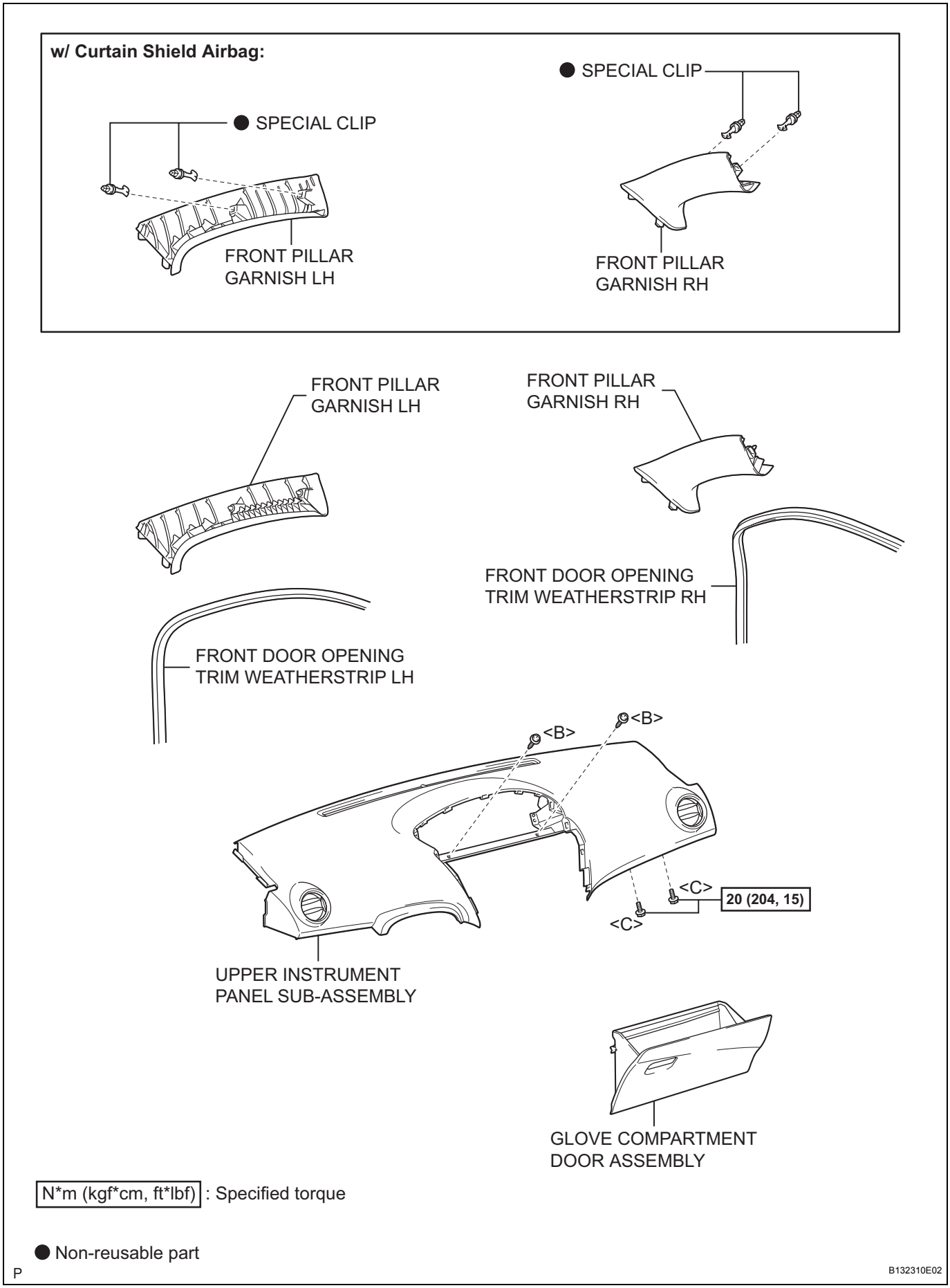
w/ Curtain Shield Airbag:
● SPECIAL CLIP
FRONT PILLAR GARNISH LH
● SPECIAL CLIP
FRONT PILLAR GARNISH RH
FRONT PILLAR GARNISH LH
FRONT PILLAR GARNISH RH
FRONT DOOR OPENING TRIM WEATHERSTRIP RH
FRONT DOOR OPENING TRIM WEATHERSTRIP LH
<B>
<B>
<C>
<C>
20 (204, 15)
UPPER INSTRUMENT PANEL SUB-ASSEMBLY
GLOVE COMPARTMENT DOOR ASSEMBLY
N*m (kgf*cm, ft*lbf) : Specified torque
● Non-reusable part
P
B132310E02

IP

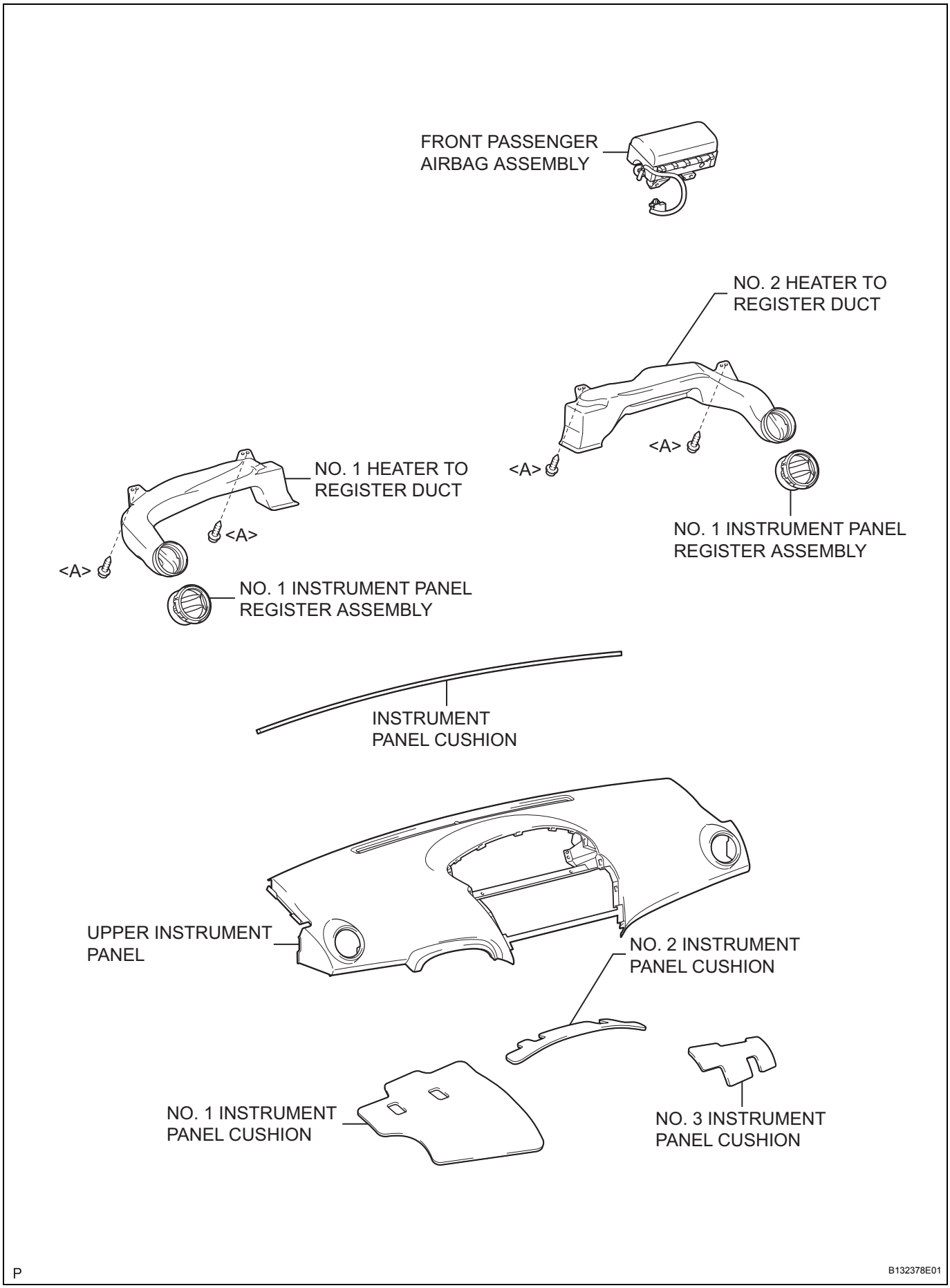
FRONT PASSENGER AIRBAG ASSEMBLY
NO. 2 HEATER TO REGISTER DUCT
<A>
<A>
NO. 1 HEATER TO REGISTER DUCT
<A>
<A>
NO. 1 INSTRUMENT PANEL REGISTER ASSEMBLY
NO. 1 INSTRUMENT PANEL REGISTER ASSEMBLY
INSTRUMENT PANEL CUSHION
UPPER INSTRUMENT PANEL
NO. 2 INSTRUMENT PANEL CUSHION
NO. 1 INSTRUMENT PANEL CUSHION
NO. 3 INSTRUMENT PANEL CUSHION
P
B132378E01

REMOVAL

HINT:
Use the same procedure for both the RH and LH sides.

1. **BOLTS, SCREWS AND NUTS TABLE**
   HINT:
   All bolts, screws and nuts relevant to installing and removing the instrument panel are shown, along with their alphabetic codes, in the table below.

mm(in.) (L=Length)

Code	Shape	Code	Shape	Code	Shape
<A>	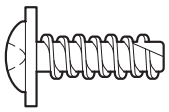 φ=5 (0.20) L=14 (0.55) 93568-15014	<B>	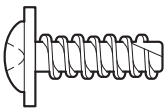 φ=5 (0.20) L=14 (0.55) 93568-55014	<C>	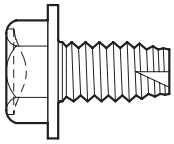 φ=8 (0.31) L=15 (0.59) 90105-08120 91643-80820

P B118994E01

2. **DISCONNECT CABLE FROM NEGATIVE BATTERY TERMINAL**
   (a) Wait for at least 90 seconds after disconnecting the cable to prevent the airbag from working.
3. **REMOVE INSTRUMENT PANEL FINISH PANEL LOWER CENTER (See page ME-138)**
4. **REMOVE INSTRUMENT PANEL FINISH PANEL END LH (See page ME-138)**
5. **REMOVE INSTRUMENT PANEL FINISH PANEL END RH (See page ME-138)**
6. **REMOVE INSTRUMENT CLUSTER FINISH PANEL (See page ME-139)**
7. **REMOVE COMBINATION METER ASSEMBLY (See page ME-139)**
8. **SEPARATE FRONT DOOR OPENING TRIM WEATHERSTRIP RH**
   (a) Separate the front door opening trim weatherstrip.
9. **SEPARATE FRONT DOOR OPENING TRIM WEATHERSTRIP LH**
   (a) Separate the front door opening trim weatherstrip.
10. **REMOVE FRONT PILLAR GARNISH RH (See page IR-18)**
11. **REMOVE FRONT PILLAR GARNISH LH (See page IR-19)**

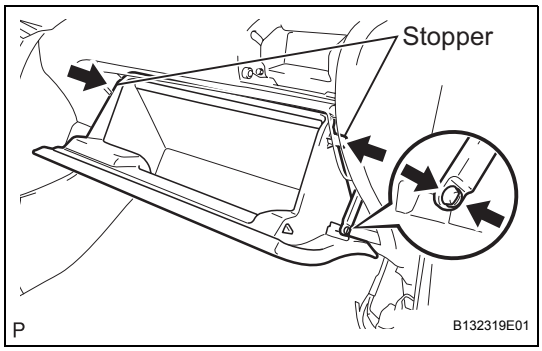

12. REMOVE GLOVE COMPARTMENT DOOR ASSEMBLY

(a) Disengage the claw and separate the 2 glove compartment door stoppers from the glove compartment door.

(b) Slightly flex the upper part of the glove compartment door to release the 2 stoppers and open the glove compartment door assembly until it becomes horizontal.

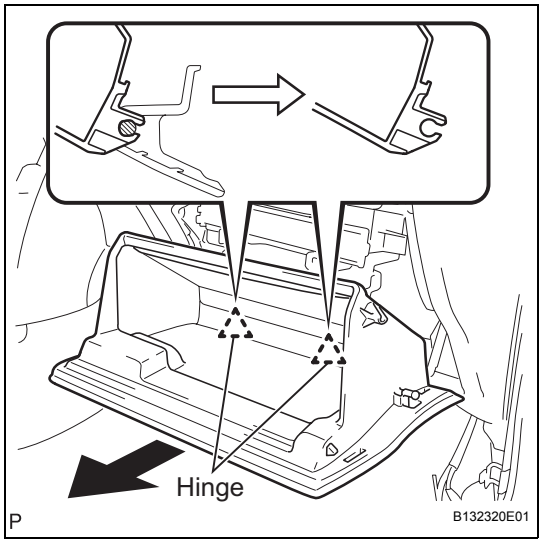

(c) Pull the glove compartment door assembly out horizontally to disengage the hinge portion and remove the glove compartment door.
NOTICE:
Pull the glove compartment door out horizontally, otherwise, installation failure caused by excessive play around the hinge portion will result.

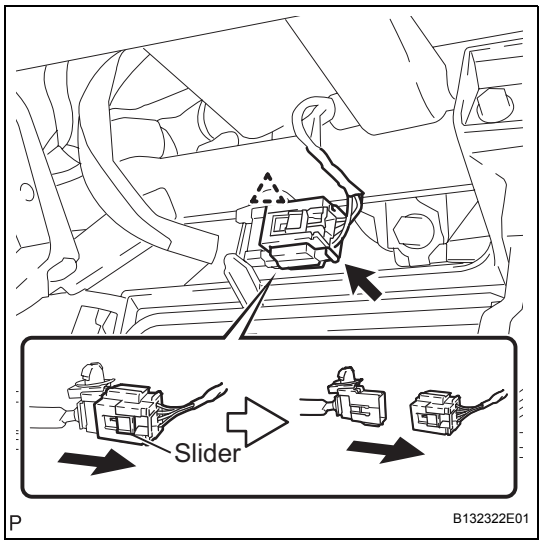

13. REMOVE UPPER INSTRUMENT PANEL SUB-ASSEMBLY

(a) Slide the slider and disconnect the passenger airbag connector.

(b) Disconnect the clamp.

(c) Remove the 2 <C> bolts and 2 <B> screws.

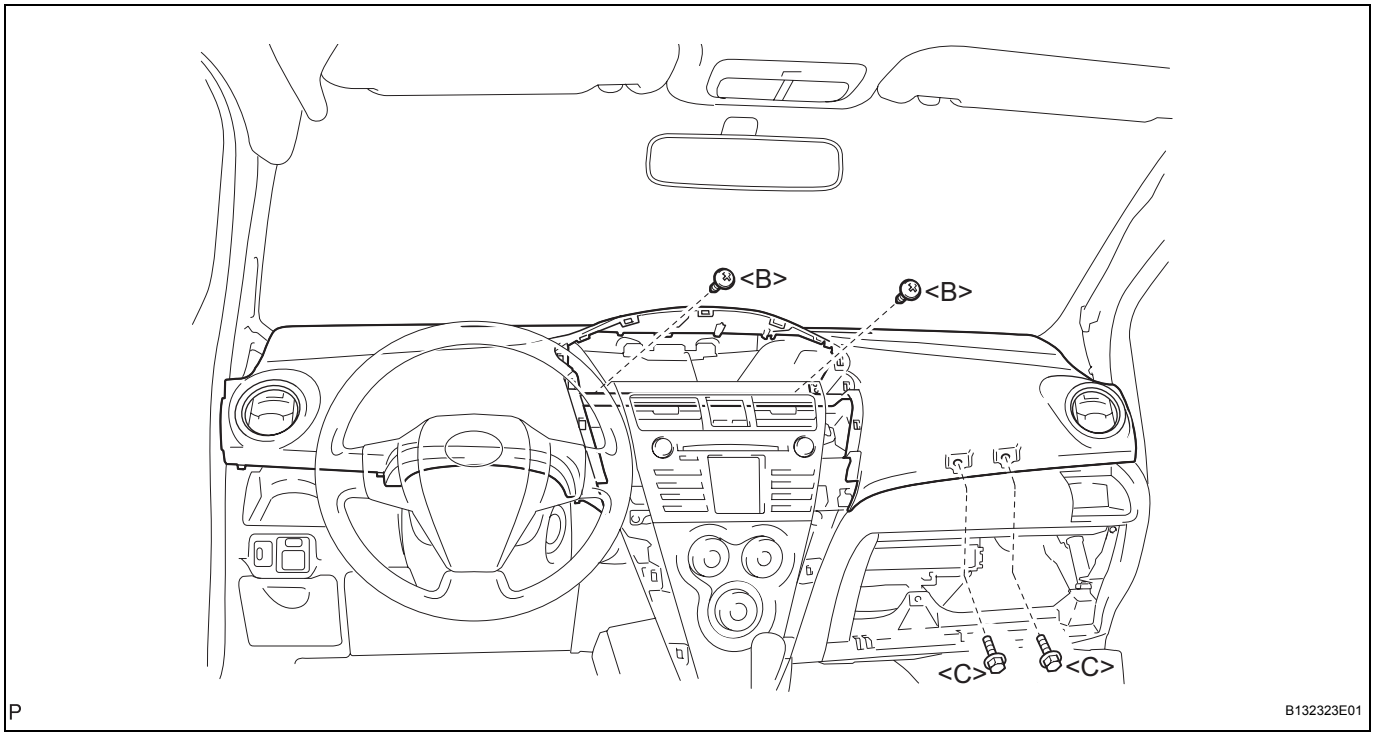

(d) Disengage the 7 clips by lifting the rear side of the instrument panel up.

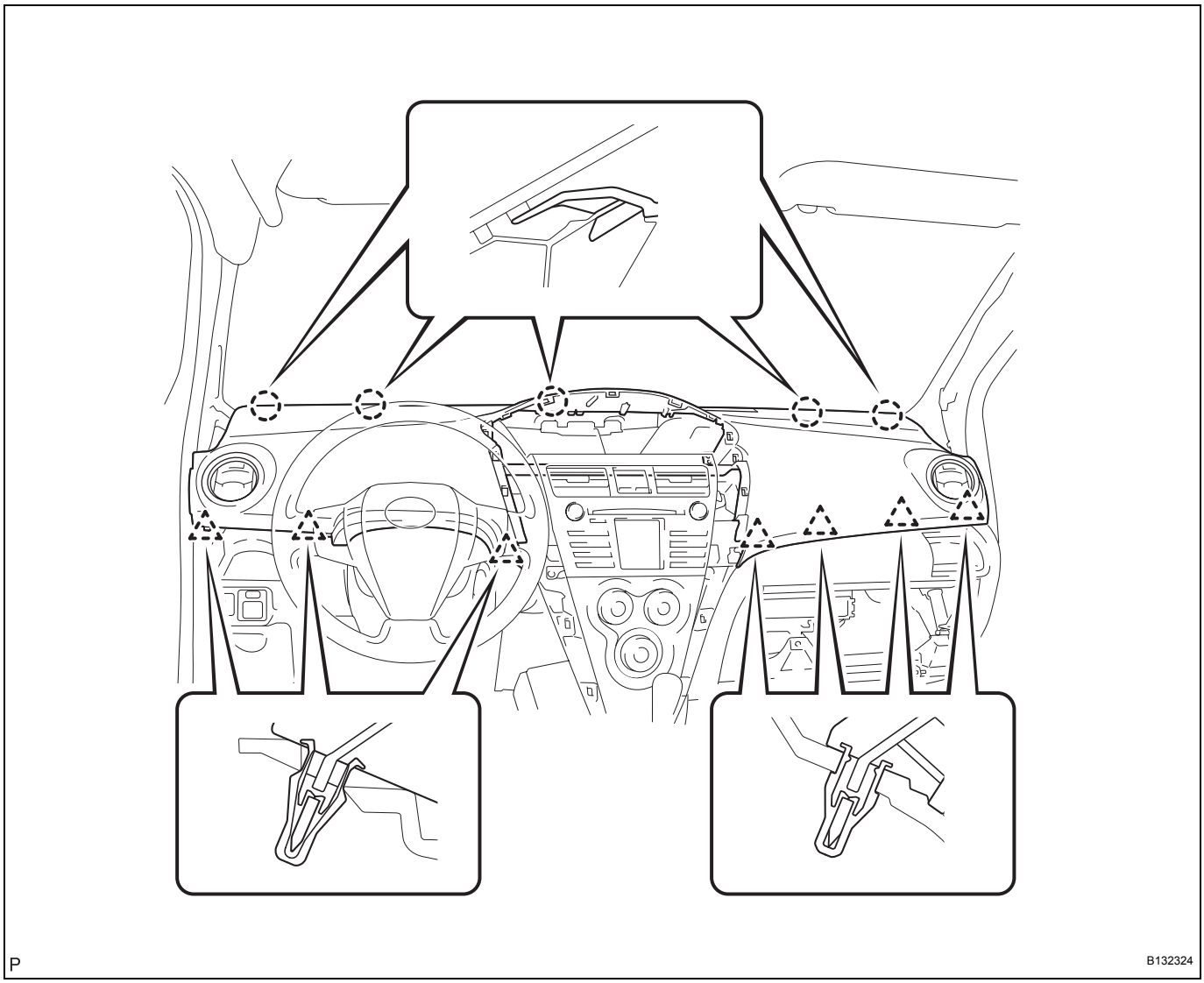

(e) While lifting the instrument panel, slide it toward the rear of the vehicle. Disengage the 5 claws from the front side of the instrument panel and remove the instrument panel.

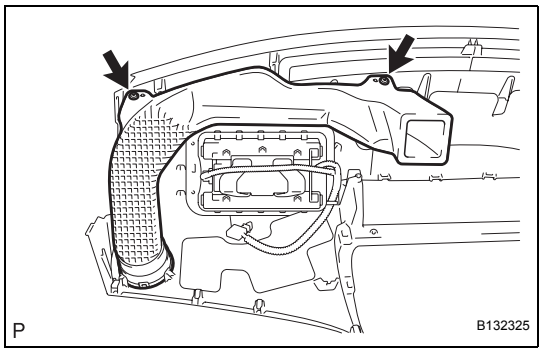

14. REMOVE NO. 2 HEATER TO REGISTER DUCT

(a) Remove the 2 <A> screws and remove the register duct.

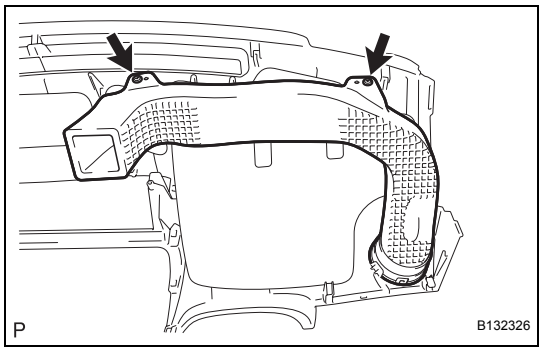

15. REMOVE NO. 1 HEATER TO REGISTER DUCT

(a) Remove the 2 <A> screws and remove the register duct.

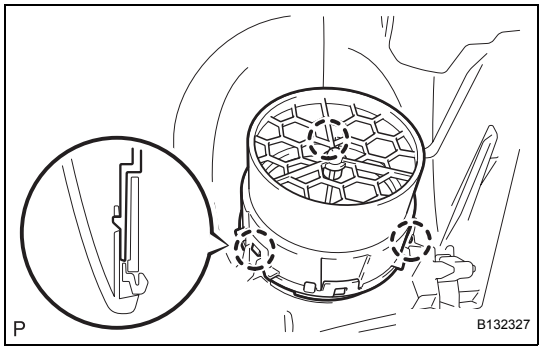

16. REMOVE NO. 1 INSTRUMENT PANEL REGISTER ASSEMBLY

(a) Disengage the 3 claws and remove the register.
HINT:
Use the same procedure for both sides.

17. REMOVE FRONT PASSENGER AIRBAG ASSEMBLY (See page RS-328)

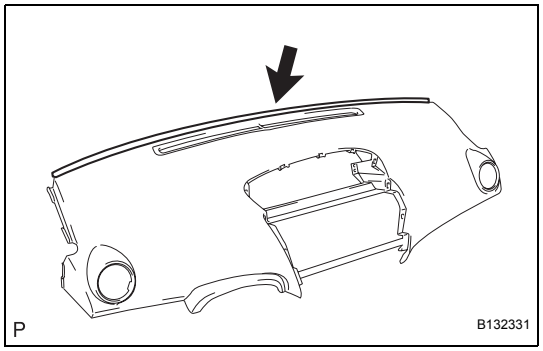

18. REMOVE INSTRUMENT PANEL CUSHION

(a) Remove the instrument panel cushion from the upper instrument panel.

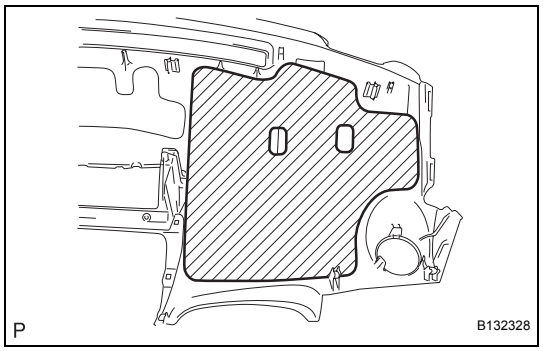

19. REMOVE NO. 1 INSTRUMENT PANEL CUSHION

(a) Remove the instrument panel cushion from the upper instrument panel.

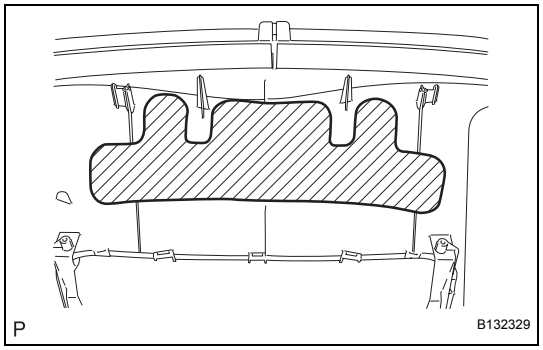

20. REMOVE NO. 2 INSTRUMENT PANEL CUSHION

(a) Remove the instrument panel cushion from the upper instrument panel.

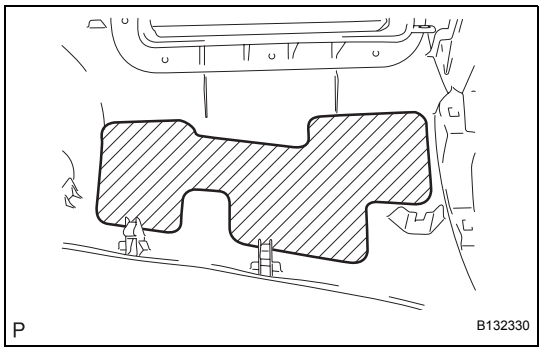

21. REMOVE NO. 3 INSTRUMENT PANEL CUSHION

(a) Remove the instrument panel cushion from the upper instrument panel.

INSTALLATION

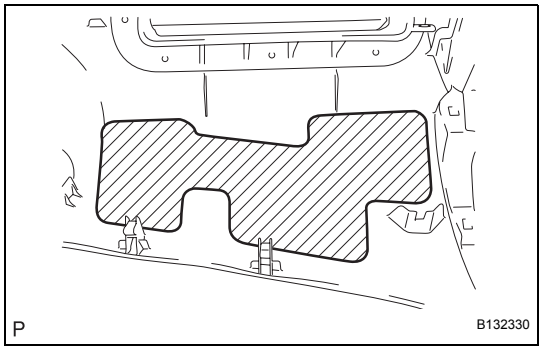

1. INSTALL NO. 3 INSTRUMENT PANEL CUSHION

(a) Install the instrument panel cushion onto the upper instrument panel.

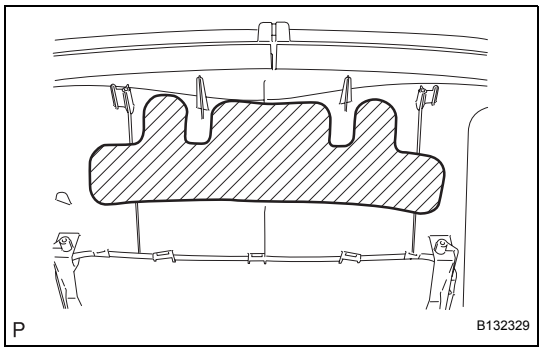

2. INSTALL NO. 2 INSTRUMENT PANEL CUSHION

(a) Install the instrument panel cushion onto the upper instrument panel.

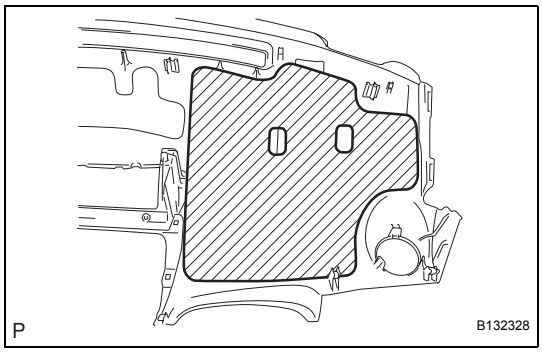

3. INSTALL NO. 1 INSTRUMENT PANEL CUSHION

(a) Install the instrument panel cushion onto the upper instrument panel.

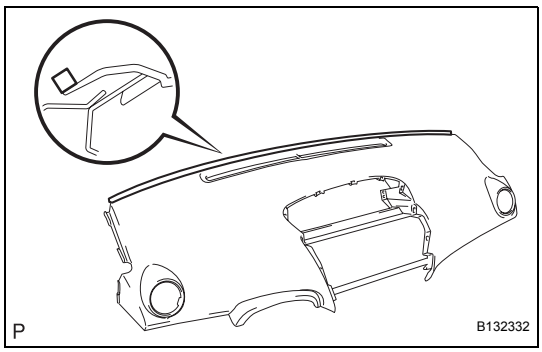

4. INSTALL INSTRUMENT PANEL CUSHION

(a) Install the instrument panel cushion onto the upper instrument panel.

5. INSTALL FRONT PASSENGER AIRBAG ASSEMBLY
(See page RS-329)

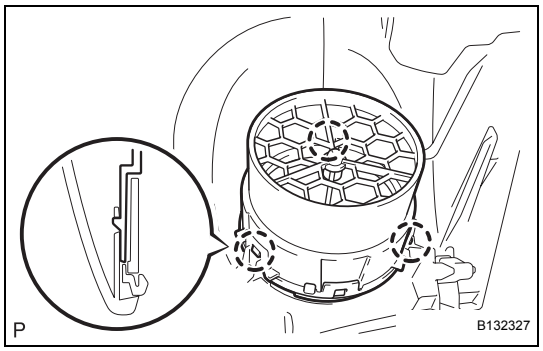

6. INSTALL NO. 1 INSTRUMENT PANEL REGISTER ASSEMBLY

(a) Engage the 3 claws and install the register.
HINT:
Use the same procedure for both sides.

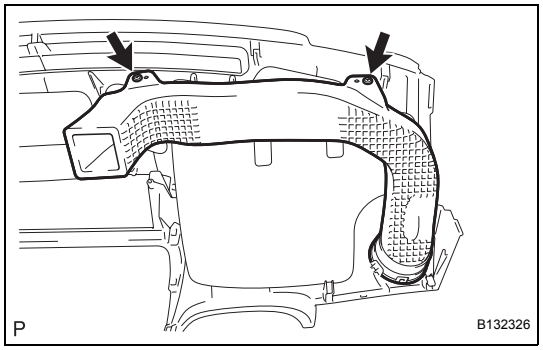

7. INSTALL NO. 1 HEATER TO REGISTER DUCT

(a) Install the register duct with the 2 <A> screws.

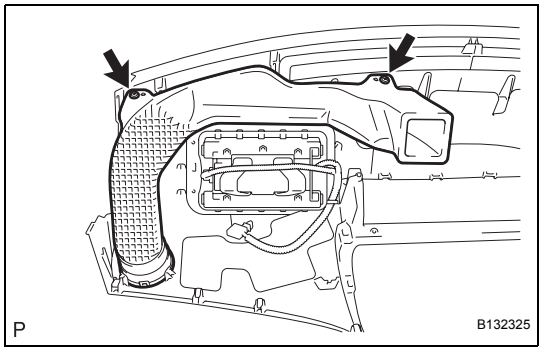

8. INSTALL NO. 2 HEATER TO REGISTER DUCT

(a) Install the register duct with the 2 <A> screws.

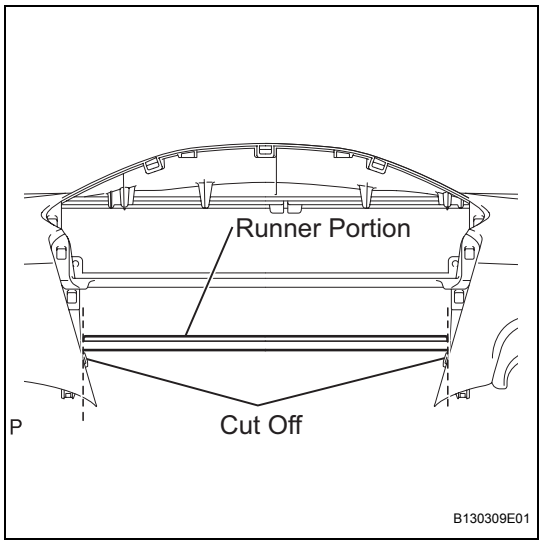

9. INSTALL UPPER INSTRUMENT PANEL SUB-ASSEMBLY

(a) Using a nipper, cut off both ends of the runner portion shown in the illustration (When installing a new one).

(b) Engage the 5 claws at the front side of the instrument panel.

(c) Engage the 7 clips at the rear side of the instrument panel.

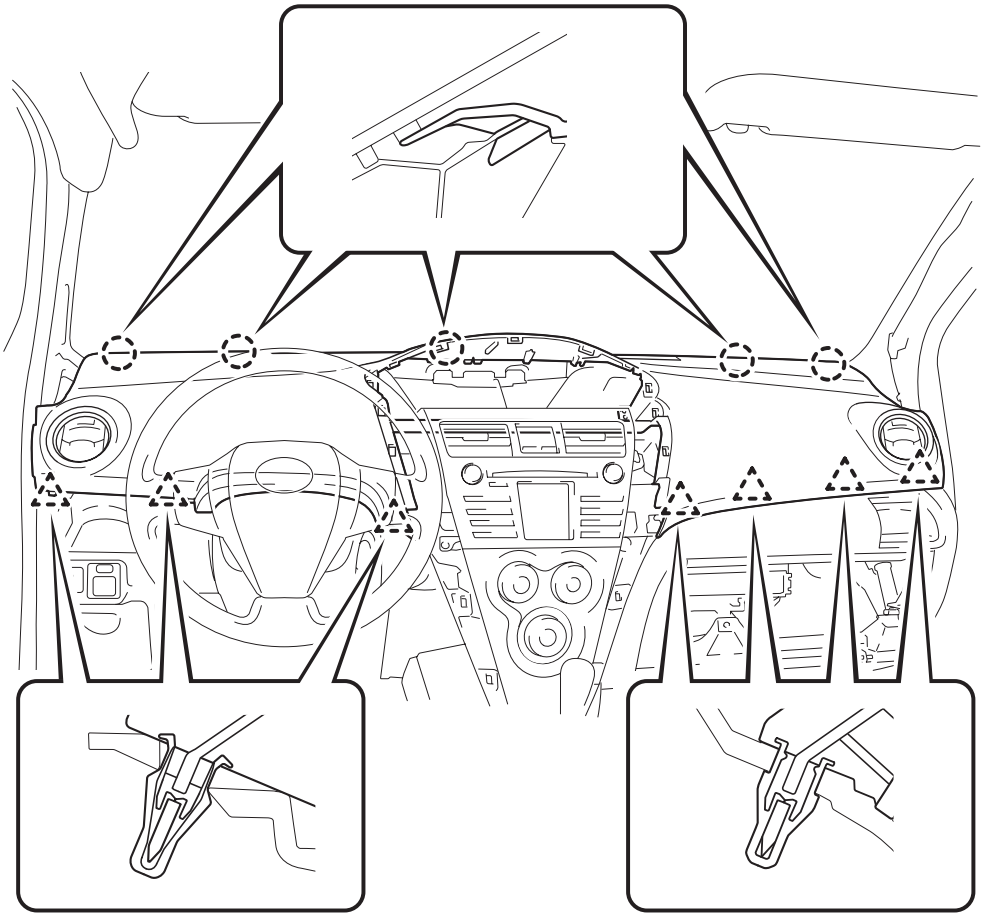

P

B132324

(d) Install the upper instrument panel with the 2 <C> bolts and the 2 <B> screws.

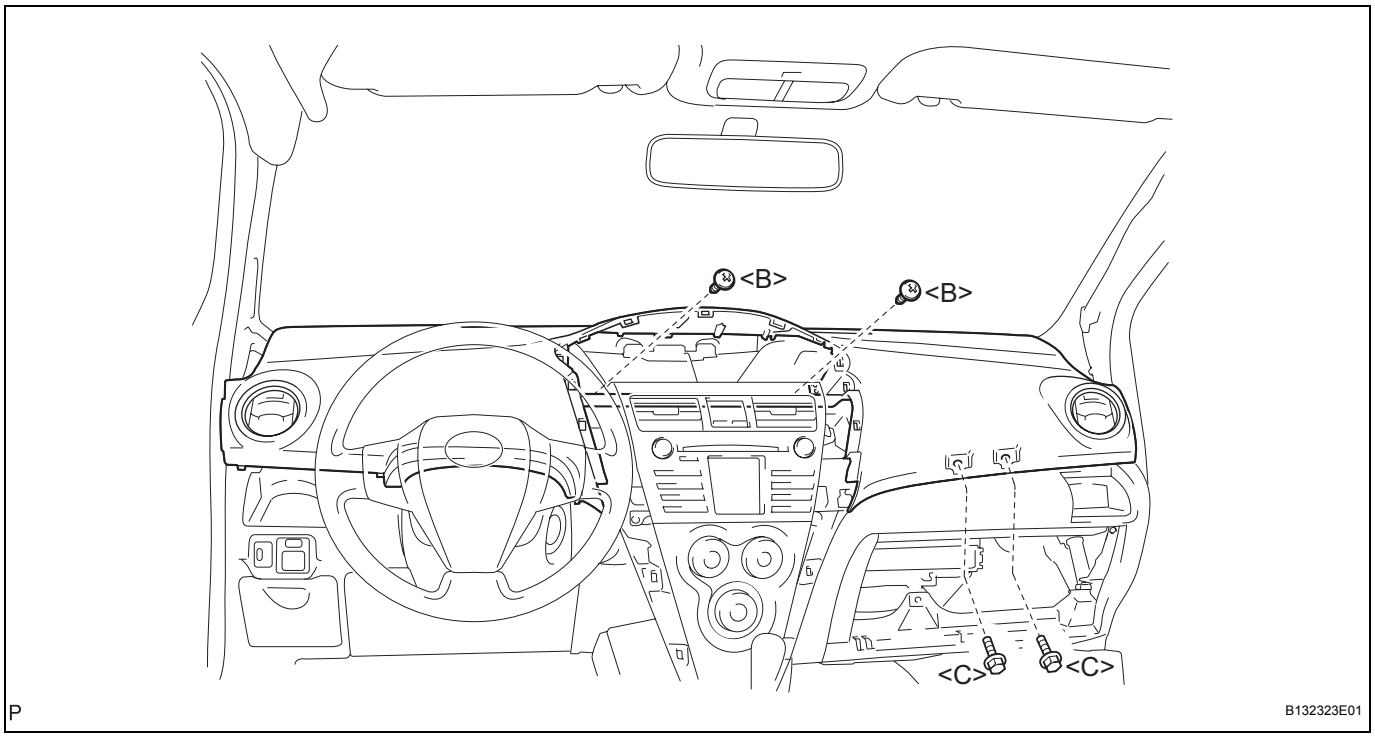

Torque: 20 N*m (204 kgf*cm, 15 ft.*lbf) for bolt <C>

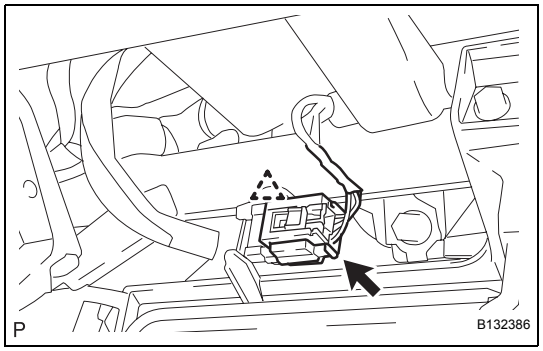

(e) Connect the passenger airbag connector and clamp.

IP

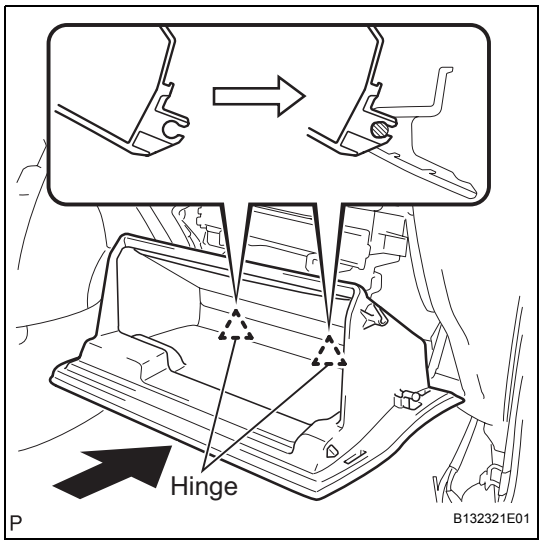

10. INSTALL GLOVE COMPARTMENT DOOR ASSEMBLY

(a) Engage the claws of the hinge portions by pushing the glove compartment door in the horizontal direction to install the glove compartment door assembly.

NOTICE:

Engage the claw by pushing it in the horizontal direction, otherwise, installation failure caused by excessive play around the hinge portion will result.

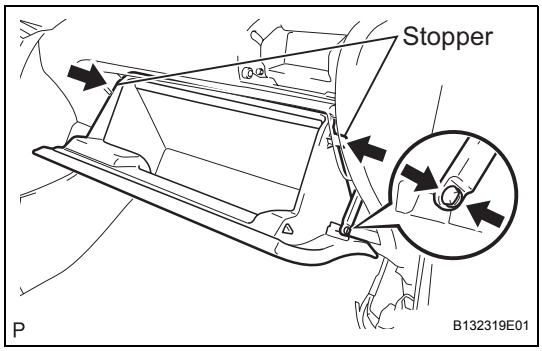

(b) Slightly flex the upper portion of the glove compartment door assembly to engage the stopper.
(c) Install the 2 glove compartment door stoppers onto the glove compartment door.

11. INSTALL FRONT PILLAR GARNISH RH (See page IR-29)

12. INSTALL FRONT PILLAR GARNISH LH (See page IR-30)

13. INSTALL FRONT DOOR OPENING TRIM WEATHERSTRIP RH
(a) Install the front door opening trim weatherstrip.

14. INSTALL FRONT DOOR OPENING TRIM WEATHERSTRIP LH
(a) Install the front door opening trim weatherstrip.

15. INSTALL COMBINATION METER ASSEMBLY (See page ME-140)

16. INSTALL INSTRUMENT CLUSTER FINISH PANEL (See page ME-140)

17. INSTALL INSTRUMENT PANEL FINISH PANEL END RH (See page ME-141)

18. INSTALL INSTRUMENT PANEL FINISH PANEL END LH (See page ME-141)

19. INSTALL INSTRUMENT PANEL FINISH PANEL LOWER CENTER (See page ME-142)

20. CONNECT CABLE TO NEGATIVE BATTERY TERMINAL
Torque: 5.4 N*m (55 kgf*cm, 48 in.*lbf)

21. CHECK SRS WARNING LIGHT
(See page RS-31)

UPPER INSTRUMENT PANEL (for Hatchback)

PRECAUTION

1. **PRECAUTION FOR VEHICLE WITH SRS AIRBAG AND SEAT BELT PRETENSIONER**
   (a) Some of these operations may affect the SRS airbag system. Read the precautionary notices concerning the SRS airbag system before servicing (See page RS-31).

COMPONENTS

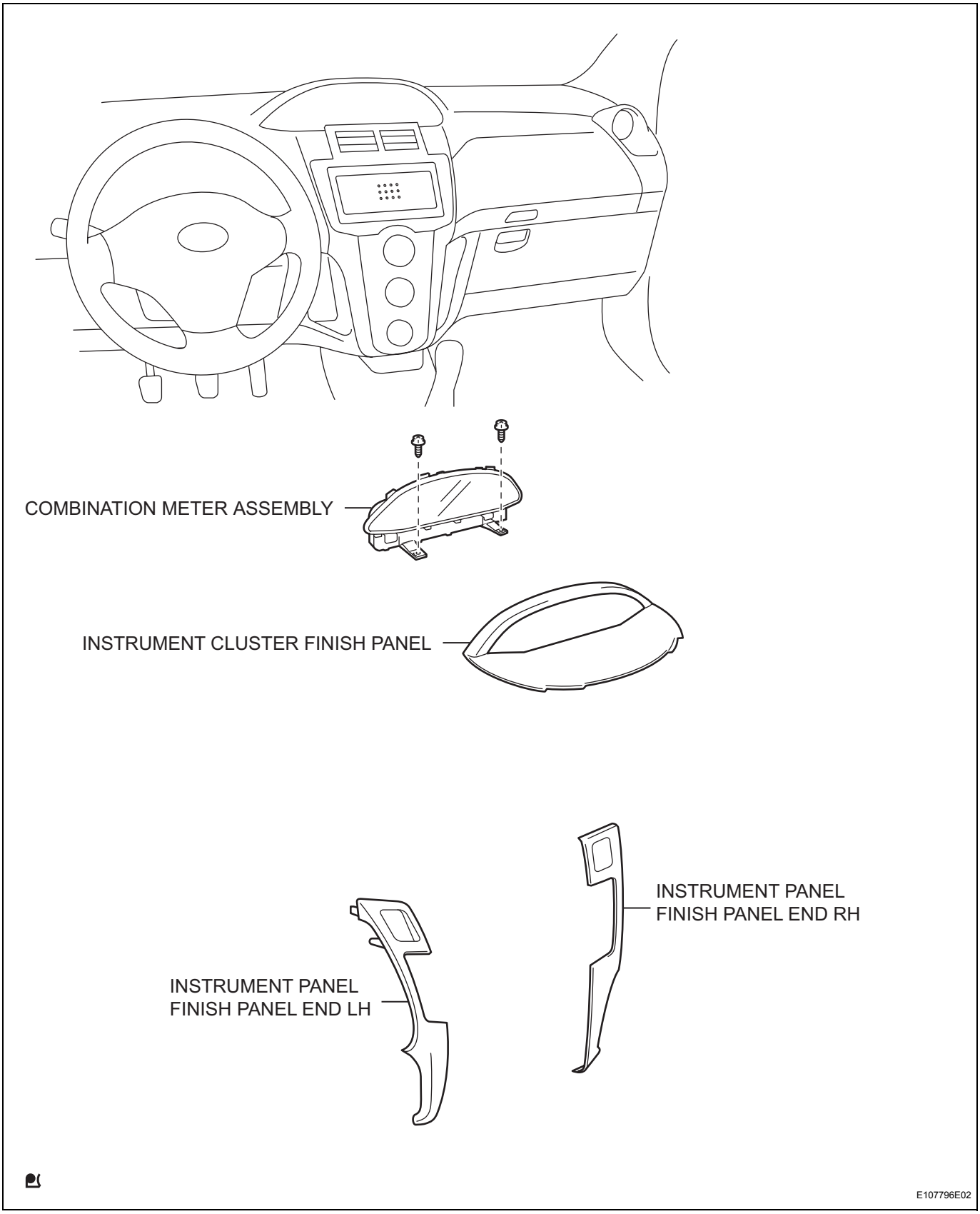
COMBINATION METER ASSEMBLY
INSTRUMENT CLUSTER FINISH PANEL
INSTRUMENT PANEL FINISH PANEL END RH
INSTRUMENT PANEL FINISH PANEL END LH
E107796E02

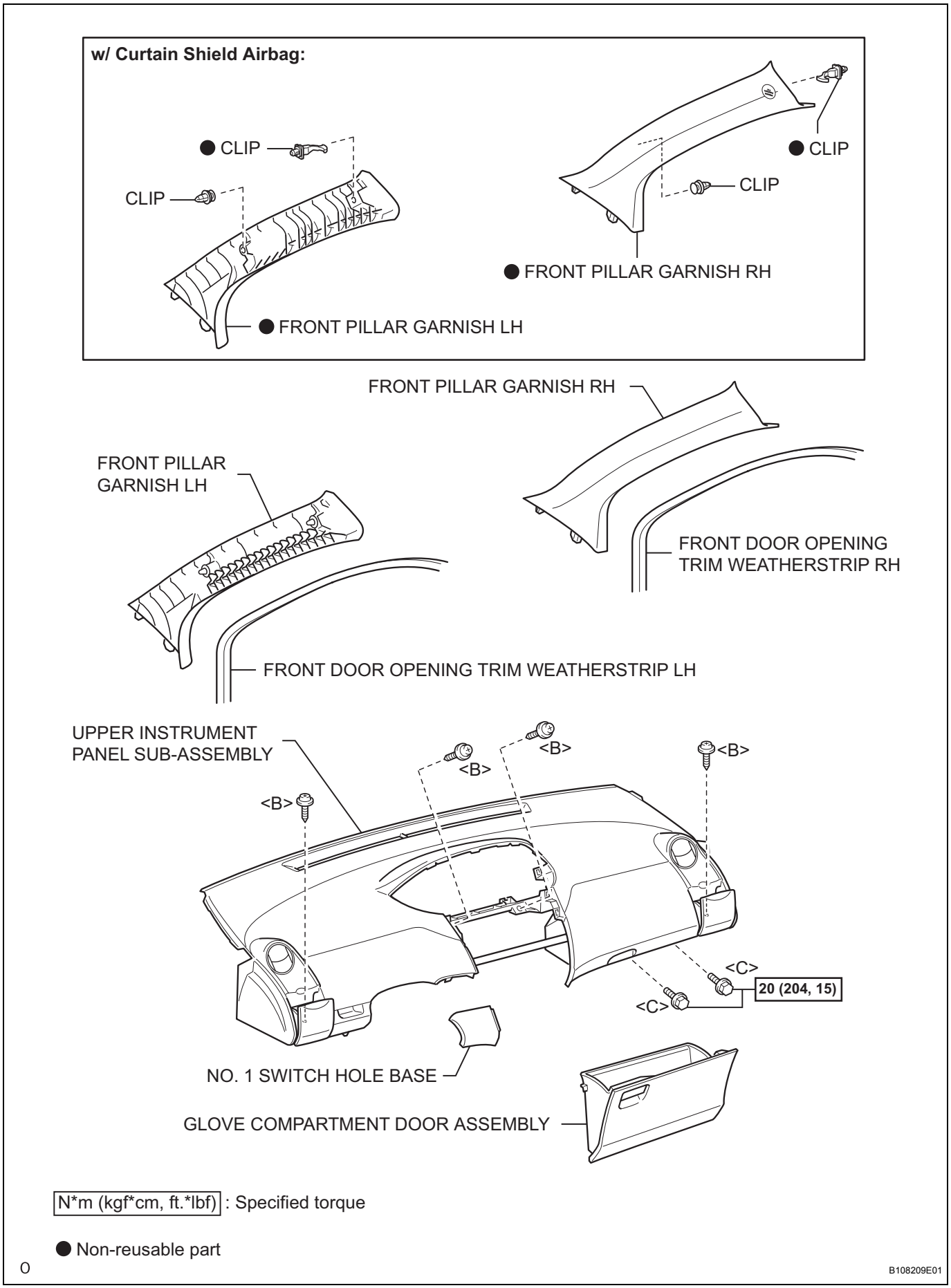
w/ Curtain Shield Airbag:
● CLIP
CLIP
● CLIP
CLIP
● FRONT PILLAR GARNISH RH
● FRONT PILLAR GARNISH LH
FRONT PILLAR GARNISH RH
FRONT PILLAR GARNISH LH
FRONT DOOR OPENING TRIM WEATHERSTRIP RH
FRONT DOOR OPENING TRIM WEATHERSTRIP LH
UPPER INSTRUMENT PANEL SUB-ASSEMBLY
<B>
<B>
<B>
<B>
<C>
<C>
20 (204, 15)
NO. 1 SWITCH HOLE BASE
GLOVE COMPARTMENT DOOR ASSEMBLY
N*m (kgf*cm, ft.*lbf) : Specified torque
● Non-reusable part
O
B108209E01

IP

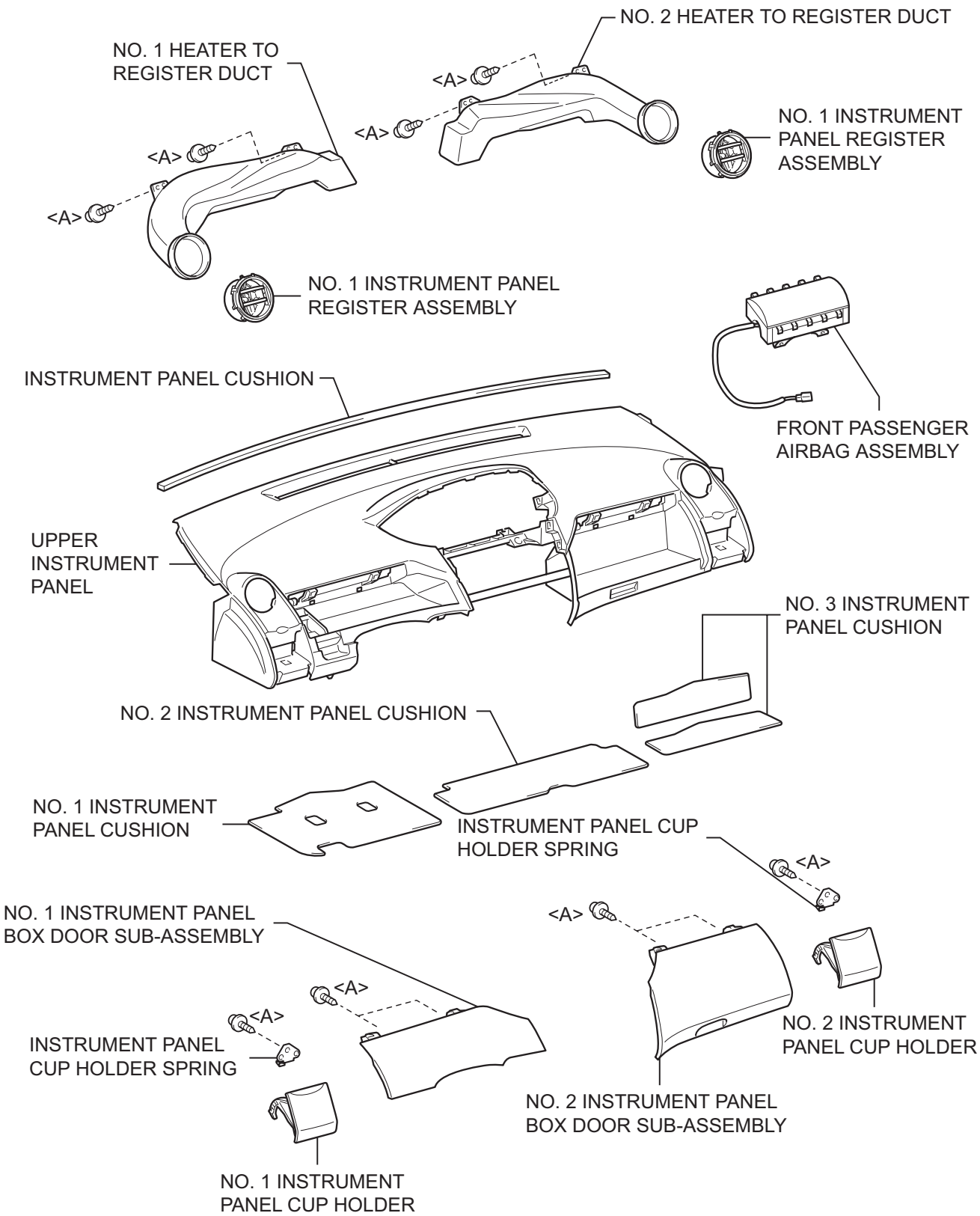

O

B105349E01

IP

REMOVAL

HINT:
Use the same procedure for both the RH and LH sides.

1. **BOLTS, SCREWS AND NUTS TABLE**
   HINT:
   All bolts, screws and nuts relevant to installing and removing the instrument panel are shown, along with their alphabetic codes, in the table below.

mm(in.) (L=Length)

Code	Shape	Code	Shape	Code	Shape
<A>	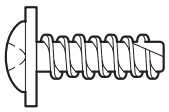 φ=5 (0.20) L=14 (0.55) 93568-15014	<B>	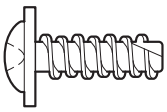 φ=5 (0.20) L=14 (0.55) 93568-55014	<C>	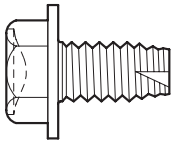 φ=8 (0.31) L=15 (0.59) 90105-08120 91643-80820

P B118994E01

2. **DISCONNECT CABLE FROM NEGATIVE BATTERY TERMINAL**
   (a) Wait for at least 90 seconds after disconnecting the cable to prevent the airbag from working.
3. **REMOVE INSTRUMENT PANEL FINISH PANEL END LH (See page ME-145)**
4. **REMOVE INSTRUMENT PANEL FINISH PANEL END RH (See page ME-145)**
5. **REMOVE INSTRUMENT CLUSTER FINISH PANEL (See page ME-145)**
6. **REMOVE COMBINATION METER ASSEMBLY (See page ME-146)**
7. **REMOVE FRONT DOOR OPENING TRIM WEATHERSTRIP RH (See page IR-50)**
8. **REMOVE FRONT DOOR OPENING TRIM WEATHERSTRIP LH (See page IR-50)**
9. **REMOVE FRONT PILLAR GARNISH RH (See page IR-58)**
10. **REMOVE FRONT PILLAR GARNISH LH (See page IR-59)**

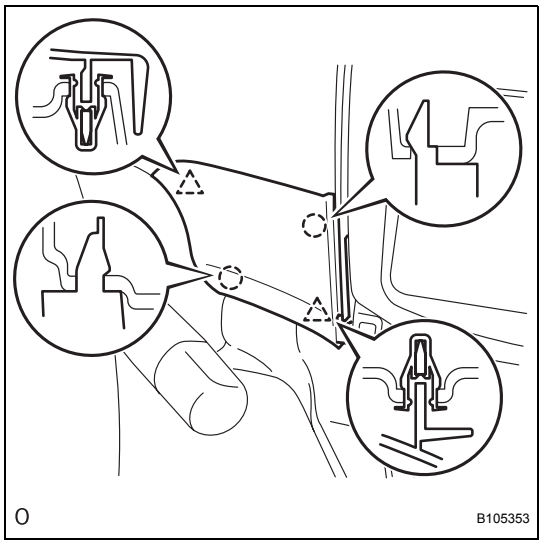

11. REMOVE NO. 1 SWITCH HOLE BASE

(a) Disengage the 2 clips and 2 claws and remove the switch hole base.

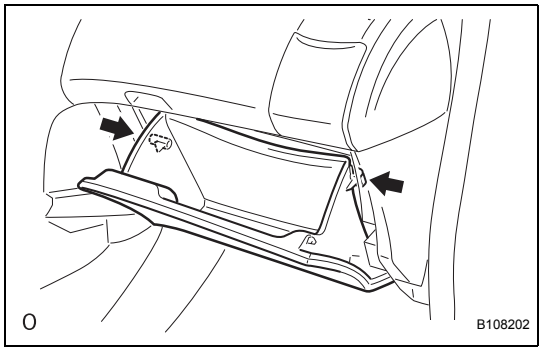

12. REMOVE GLOVE COMPARTMENT DOOR ASSEMBLY

(a) Slightly deform the upper part of the glove compartment door assembly to release the 2 stoppers and open the glove compartment door assembly until it becomes horizontal.

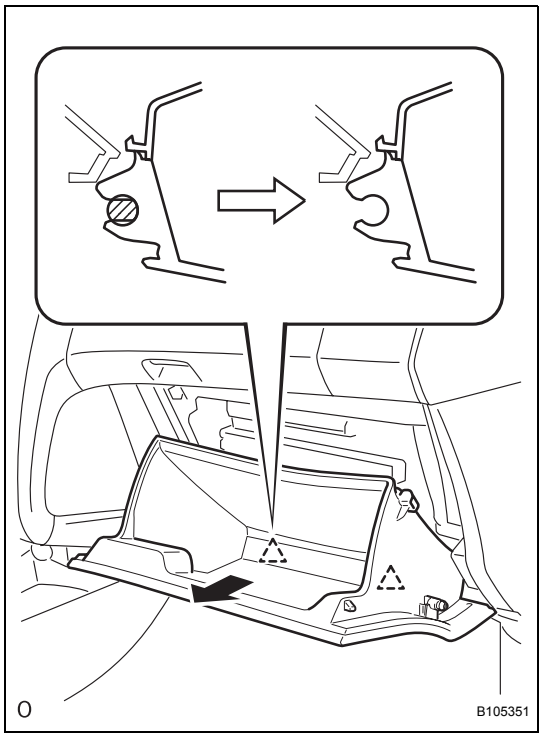

(b) Pull the glove compartment door assembly out horizontally to disengage the hinge portion and remove the glove compartment door assembly.
NOTICE:
Pull the glove compartment door out horizontally, otherwise, installation failure caused by excessive play around the hinge portion will result.

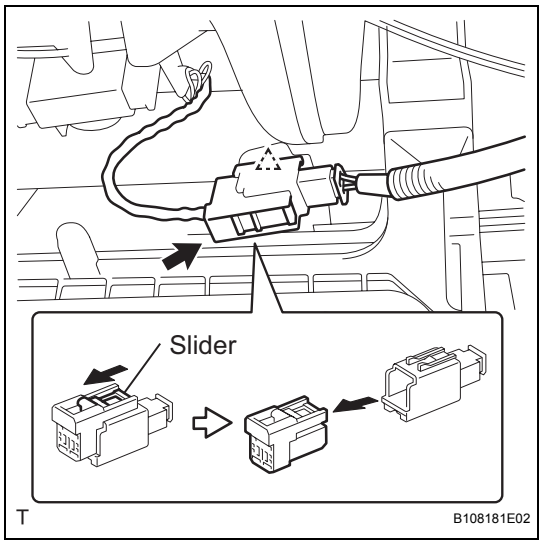

13. REMOVE UPPER INSTRUMENT PANEL SUB-ASSEMBLY

(a) Slide the slider and disconnect the passenger airbag connector.
(b) Disconnect the clamp.
(c) Remove the 2 <C> bolts and 4 <B> screws.

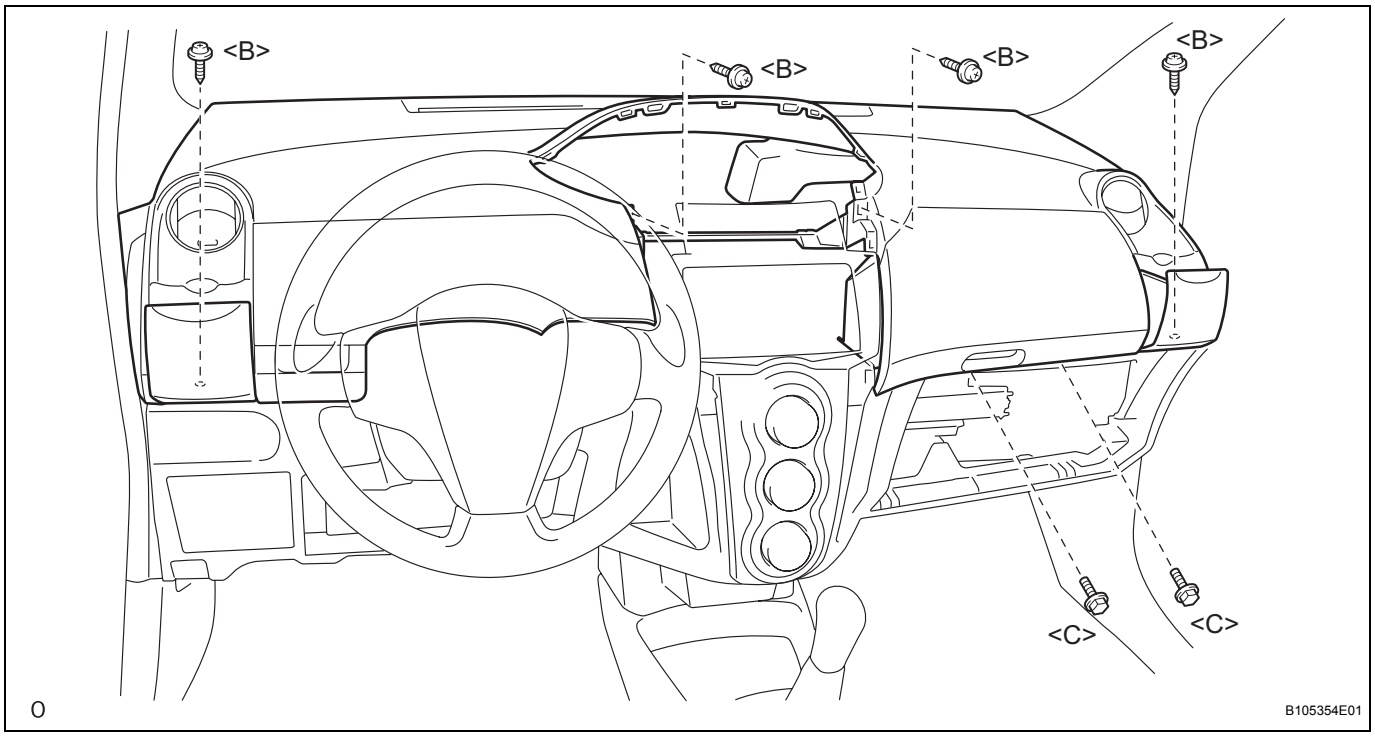

(d) Disconnect the connectors.
(e) Disengage the claw and 3 clips while lifting the rear instrument panel up.

(f) While lifting the instrument panel, slide it toward the rear of the vehicle. Disengage the 5 claws of the front side of the instrument panel and remove the instrument panel.

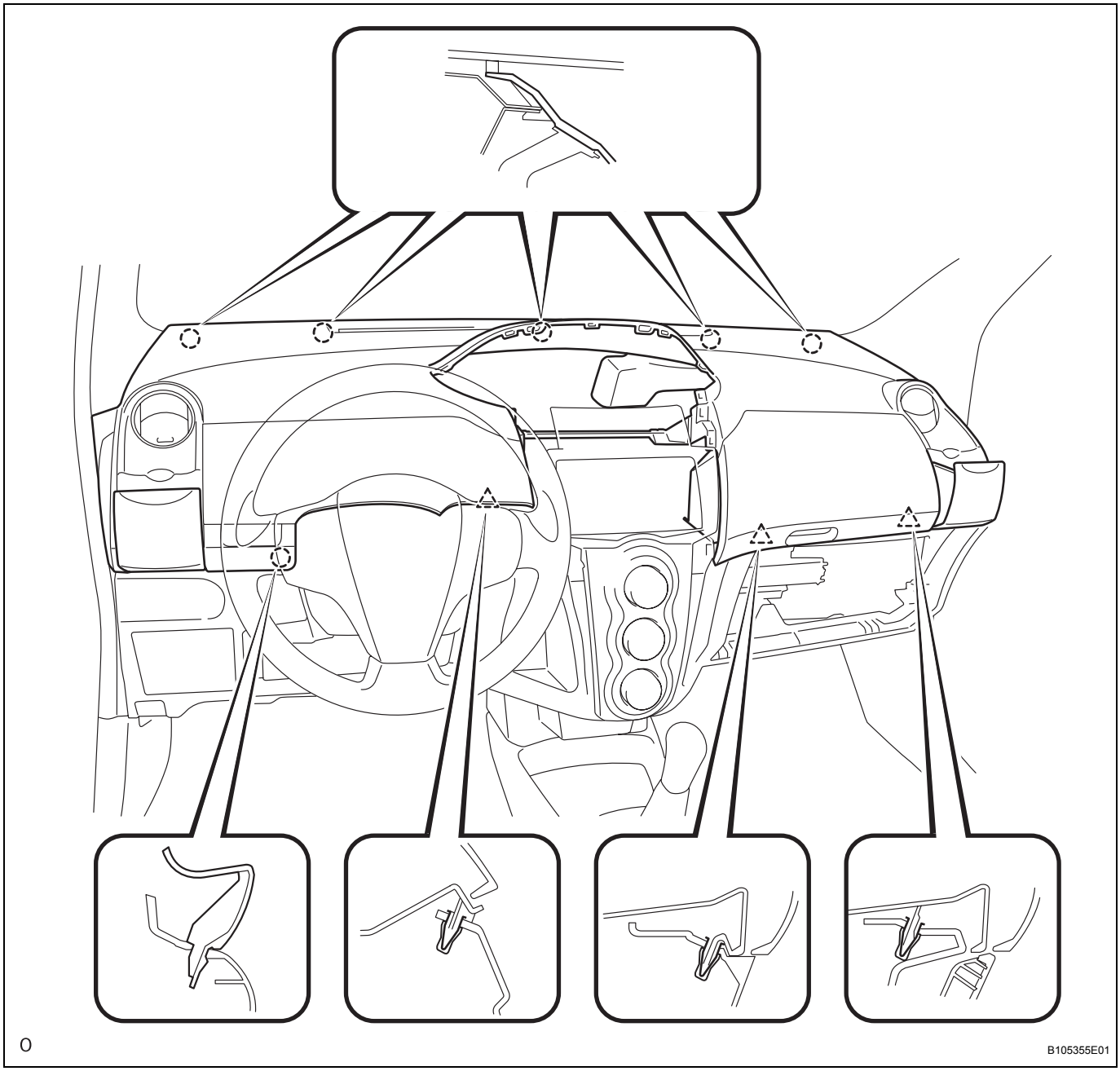

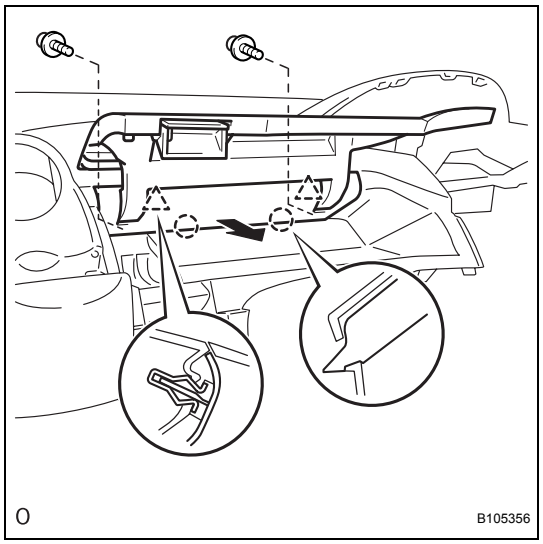

14. REMOVE NO. 1 INSTRUMENT PANEL BOX DOOR SUB-ASSEMBLY

(a) Remove the 2 <A> screws.

(b) Pull the instrument panel box door toward the rear of the vehicle, disengage the 2 claws and 2 clips and remove the instrument panel box door.

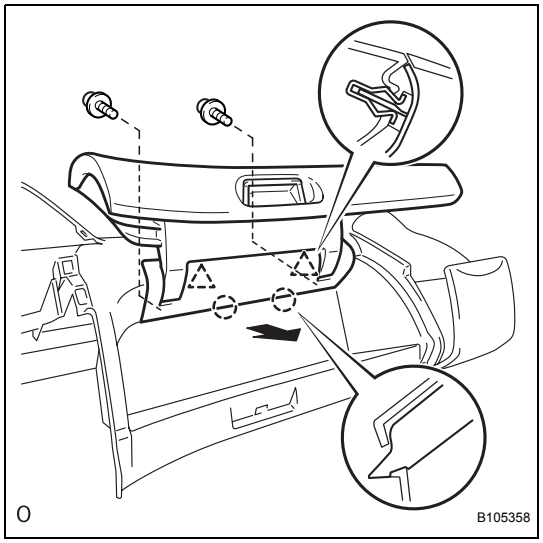

15. REMOVE NO. 2 INSTRUMENT PANEL BOX DOOR SUB-ASSEMBLY

(a) Remove the 2 <A> screws.

(b) Pull the instrument panel box door toward the rear of the vehicle, disengage the 2 claws and 2 clips and remove the instrument panel box door.

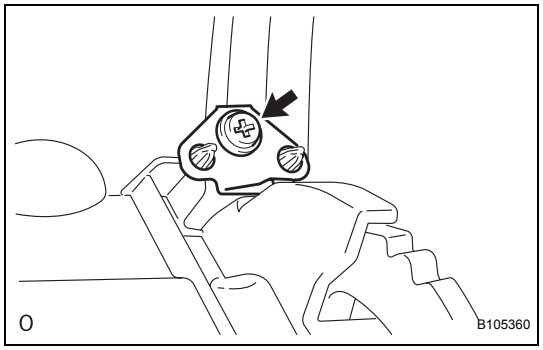

16. REMOVE INSTRUMENT PANEL CUP HOLDER SPRING

(a) Remove screw <A> and remove the cup holder spring.

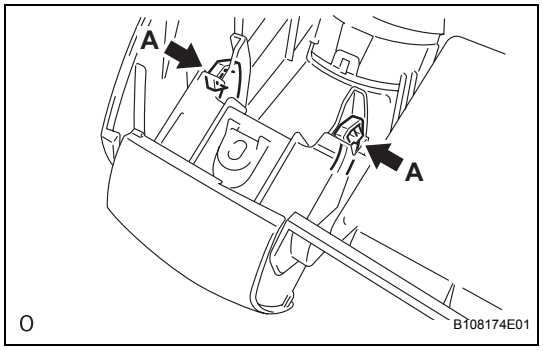

17. REMOVE NO. 1 INSTRUMENT PANEL CUP HOLDER

(a) Slightly deform portion A of the cup holder by pressing it and release the stopper.

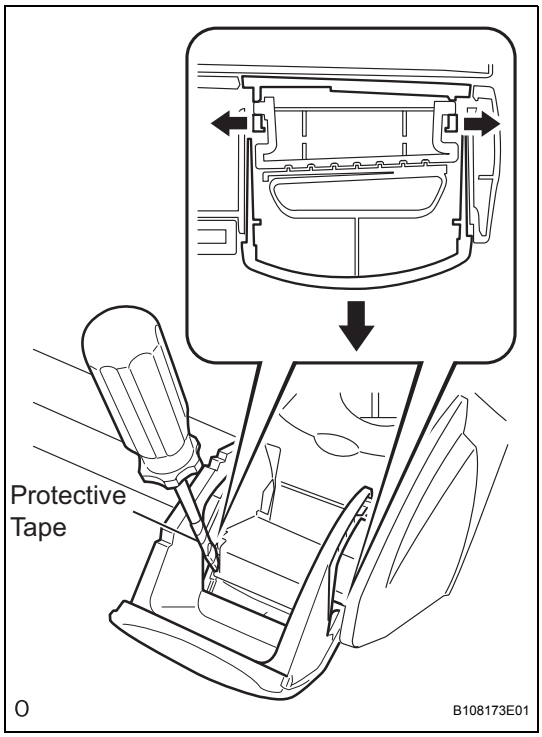

(b) Using a screwdriver with its tip wrapped in protective tape, prize the hinge portion of the cup holder from side to side while being careful not to apply excessive load to the axis of the instrument panel upper, and remove the cup holder.

18. REMOVE NO. 2 INSTRUMENT PANEL CUP HOLDER

HINT:
Use the same procedure as for the RH side.

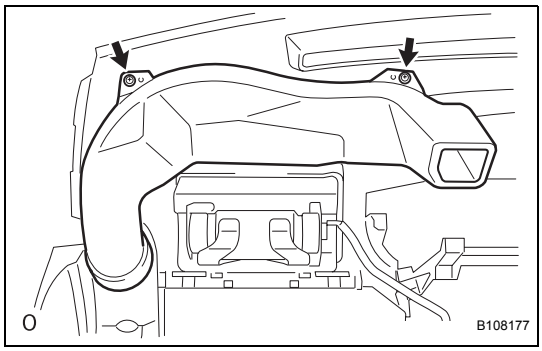

19. REMOVE NO. 2 HEATER TO REGISTER DUCT

(a) Remove the 2 <A> screws and remove the register duct.

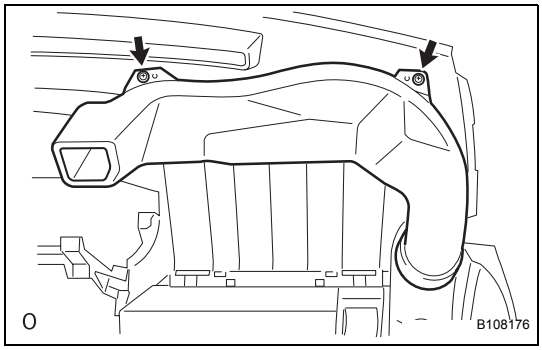

20. REMOVE NO. 1 HEATER TO REGISTER DUCT

(a) Remove the 2 <A> screws and remove the register duct.

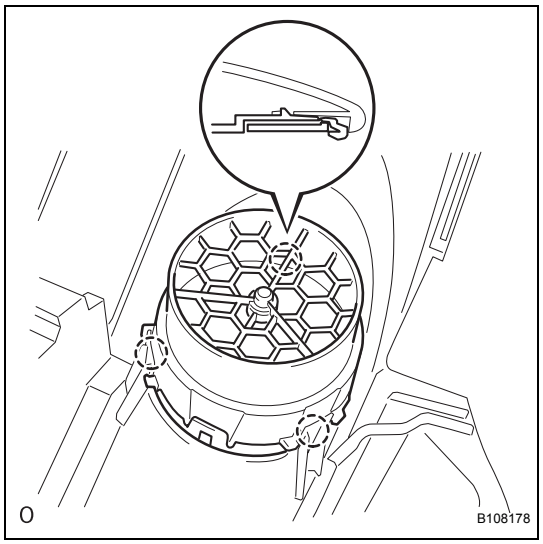

21. REMOVE NO. 1 INSTRUMENT PANEL REGISTER ASSEMBLY

(a) Disengage the 3 claws and remove the register.
HINT:
Use the same procedure as for the opposite side.

22. REMOVE FRONT PASSENGER AIRBAG ASSEMBLY (See page RS-340)

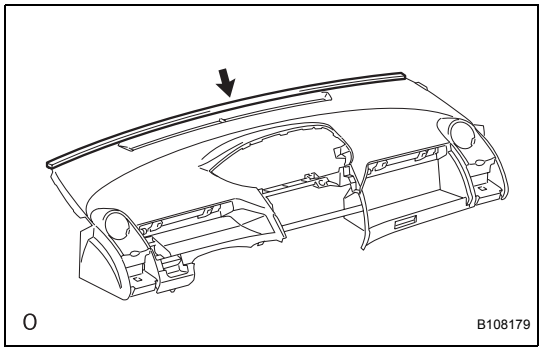

23. REMOVE INSTRUMENT PANEL CUSHION

(a) Remove the instrument panel cushion from the instrument panel upper.

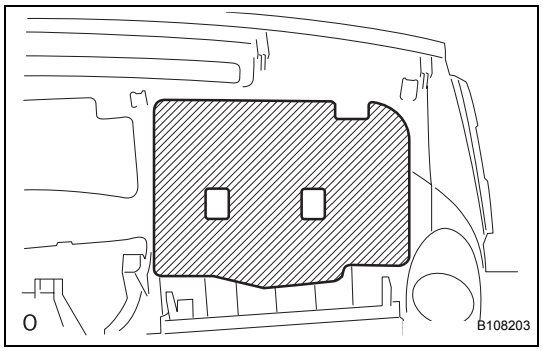

24. REMOVE NO. 1 INSTRUMENT PANEL CUSHION

(a) Remove the instrument panel cushion from the instrument panel upper.

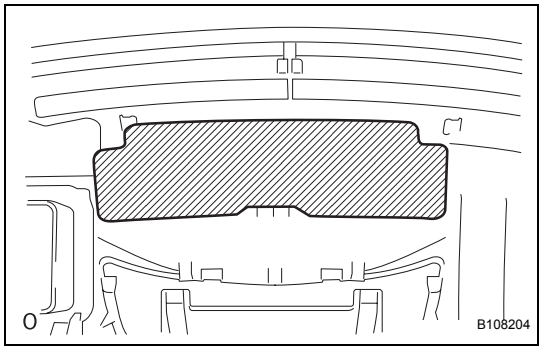

25. REMOVE NO. 2 INSTRUMENT PANEL CUSHION

(a) Remove the instrument panel cushion from the instrument panel upper.

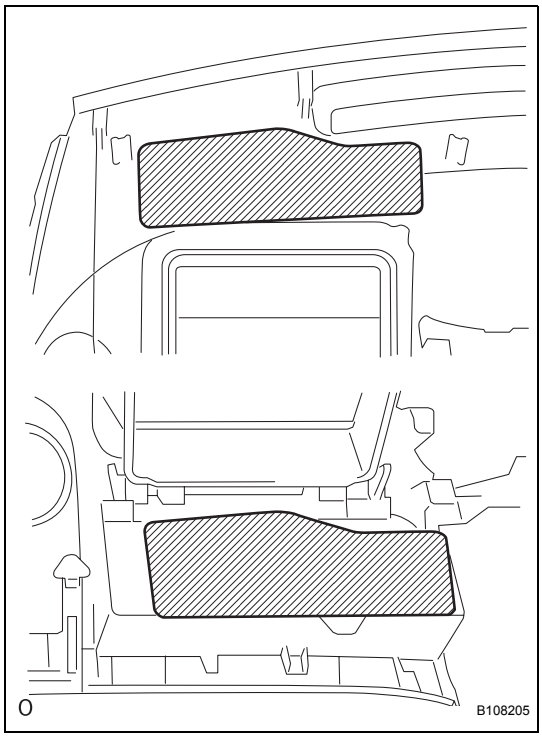

26. REMOVE NO. 3 INSTRUMENT PANEL CUSHION

(a) Remove the 2 instrument panel cushions from the instrument panel upper.

INSTALLATION

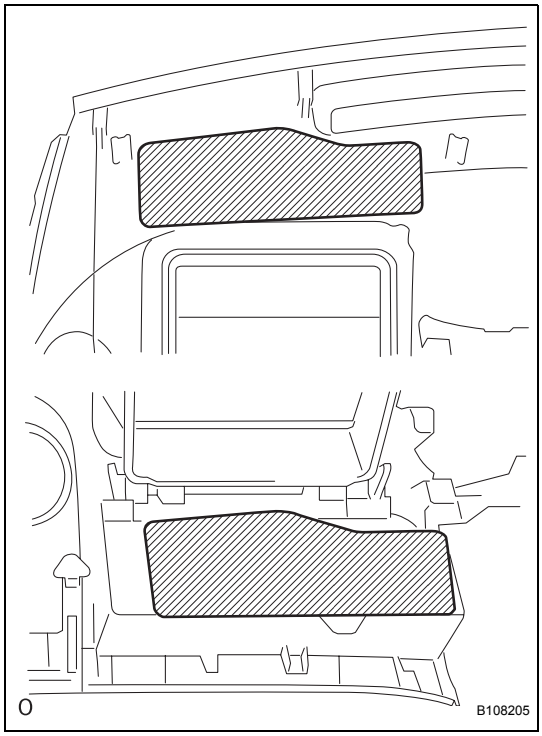

1. INSTALL NO. 3 INSTRUMENT PANEL CUSHION

(a) Install the 2 instrument panel cushions onto the instrument panel upper.

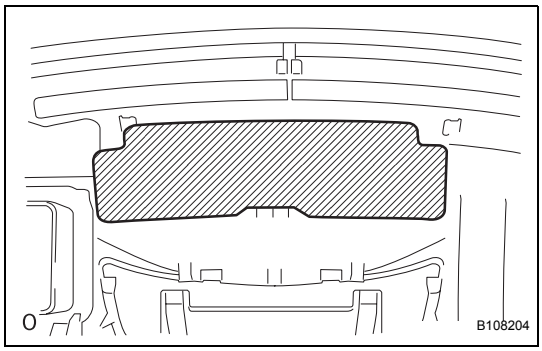

2. INSTALL NO. 2 INSTRUMENT PANEL CUSHION

(a) Install the instrument panel cushion onto the instrument panel upper.

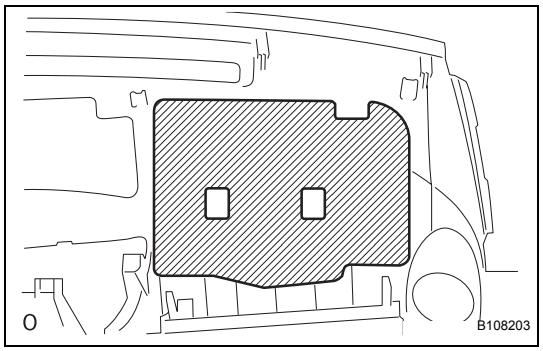

3. INSTALL NO. 1 INSTRUMENT PANEL CUSHION

(a) Install the instrument panel cushion onto the instrument panel upper.

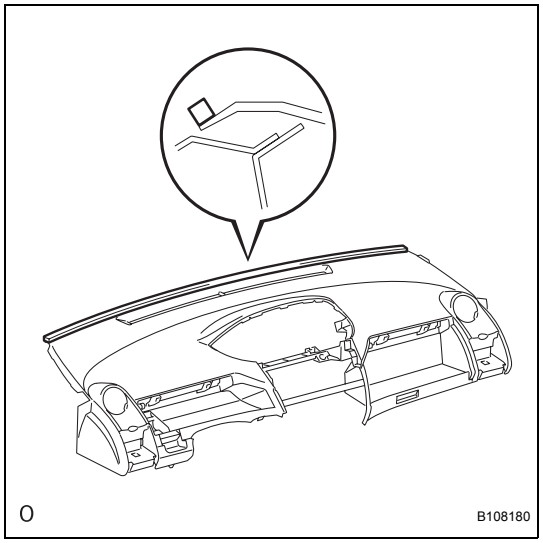

4. INSTALL INSTRUMENT PANEL CUSHION

(a) Install the instrument panel cushion onto the instrument panel upper.

5. INSTALL FRONT PASSENGER AIRBAG ASSEMBLY (See page RS-341)

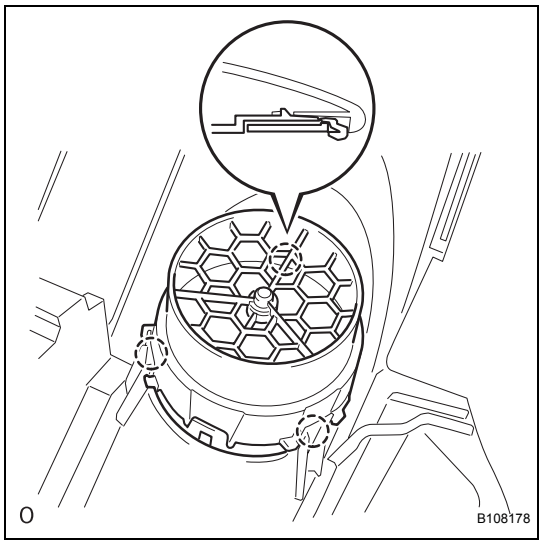

6. INSTALL NO. 1 INSTRUMENT PANEL REGISTER ASSEMBLY

(a) Engage the 3 claws and install the register.
HINT:
Use the same procedure as for the opposite side.

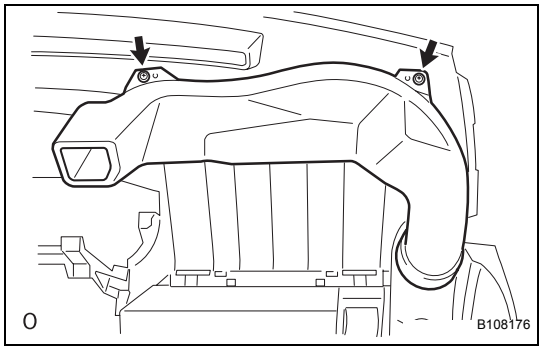

7. INSTALL NO. 1 HEATER TO REGISTER DUCT

(a) Install the register duct with the 2 <A> screws.

IP

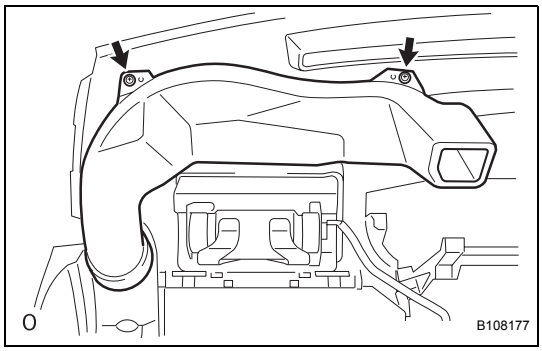

8. INSTALL NO. 2 HEATER TO REGISTER DUCT

(a) Install the register duct with the 2 <A> screws.

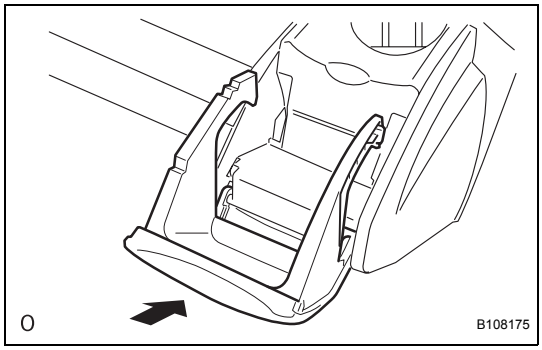

9. INSTALL NO. 1 INSTRUMENT PANEL CUP HOLDER

(a) Engage the hinge portion of the cup holder and install the cup holder.

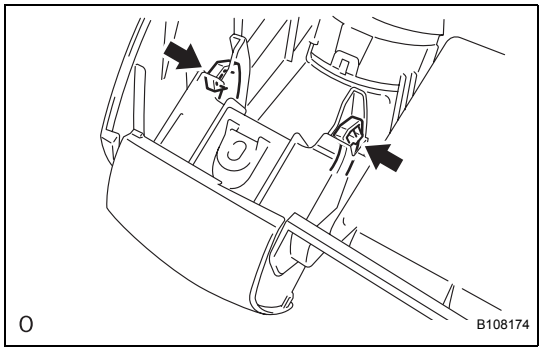

(b) Engage the stopper of the cup holder.

10. INSTALL NO. 2 INSTRUMENT PANEL CUP HOLDER

HINT:
Use the same procedure as for the RH side.

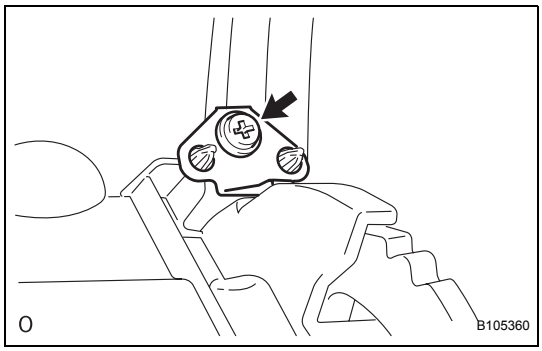

11. INSTALL INSTRUMENT PANEL CUP HOLDER SPRING

(a) Install the cup holder spring with screw <A>.

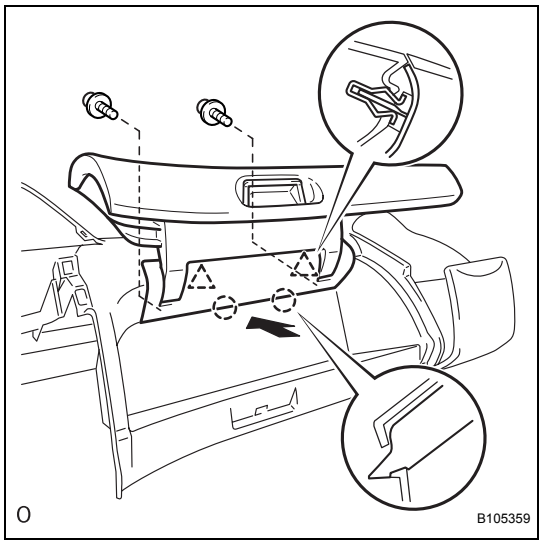

12. INSTALL NO. 2 INSTRUMENT PANEL BOX DOOR SUB-ASSEMBLY

(a) Engage the 2 claws and 2 clips.

(b) Install the box door with the 2 <A> screws.

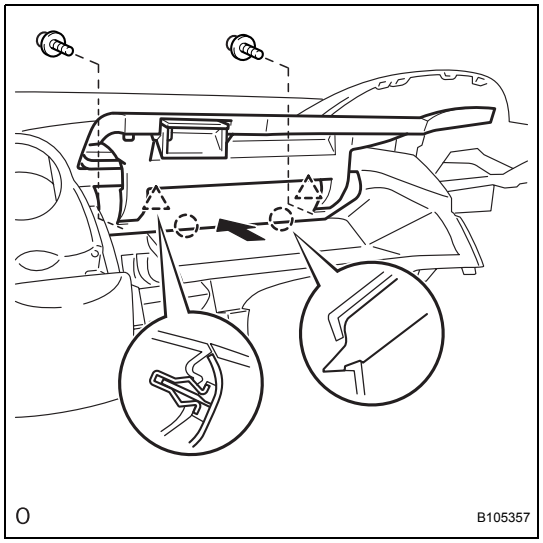

13. INSTALL NO. 1 INSTRUMENT PANEL BOX DOOR SUB-ASSEMBLY

(a) Engage the 2 claws and 2 clips.

(b) Install the box door with the 2 <A> screws.

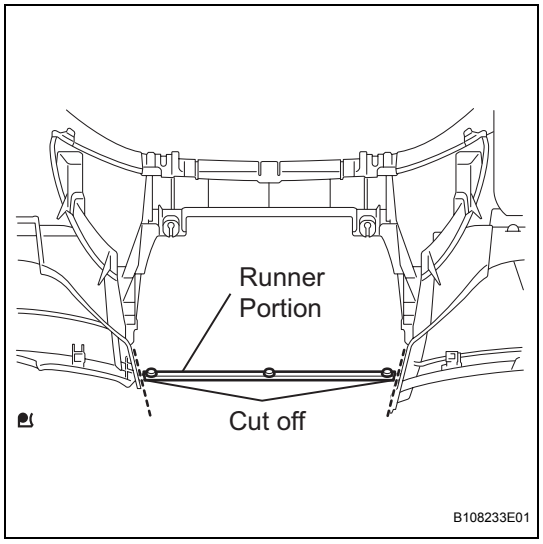

14. INSTALL UPPER INSTRUMENT PANEL SUB-ASSEMBLY

(a) Using a nipper, cut off both ends of the runner portion shown in the illustration (When installing a new one).

(b) Engage the 5 claws at the upper side of the instrument panel.

(c) Engage the claw and the 3 clips at the lower side of the instrument panel.

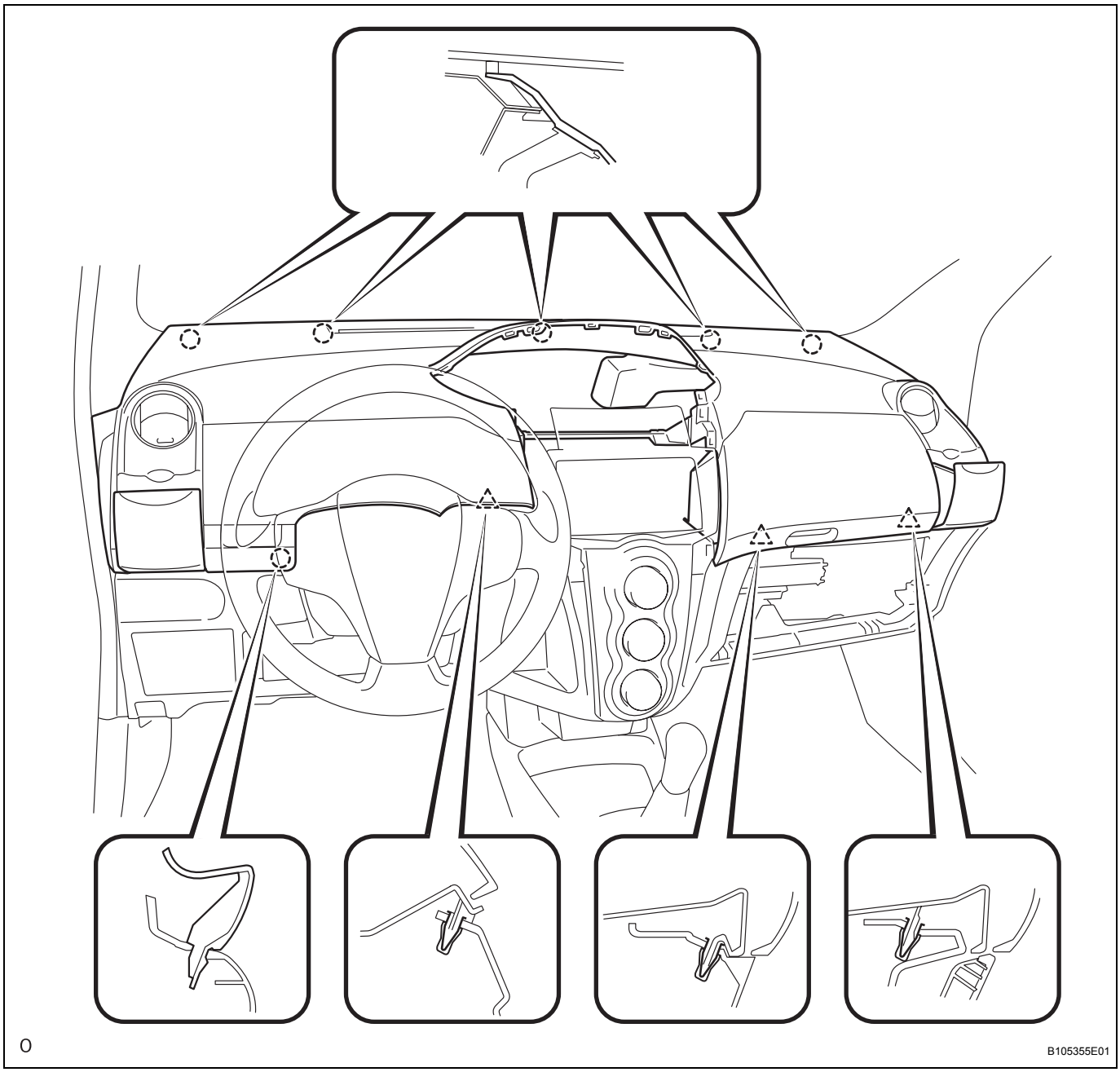

(d) Install the instrument panel upper with the 2 <C> bolts and 4 <B> screws.
Torque: 20 N*m (204 kgf*cm, 15 ft.*lbf) for bolt

(e) Connect the connectors.

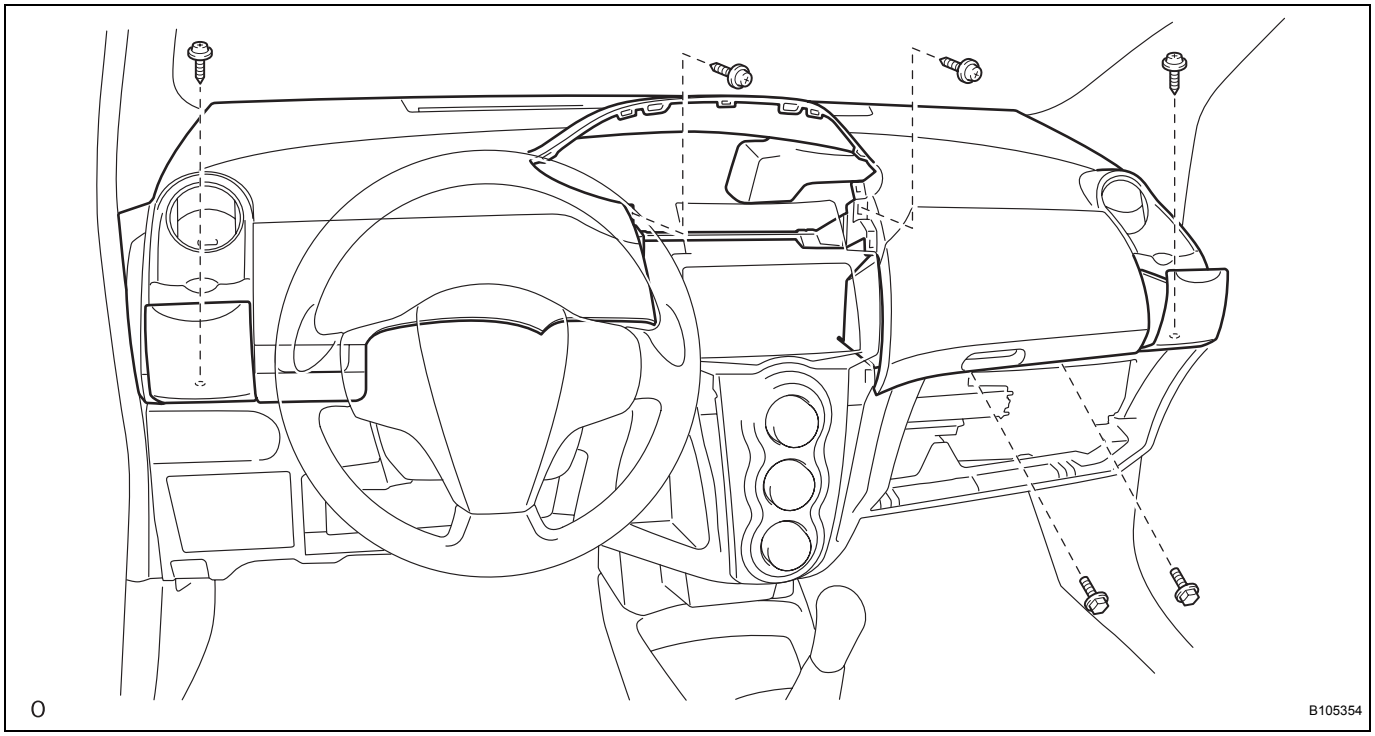

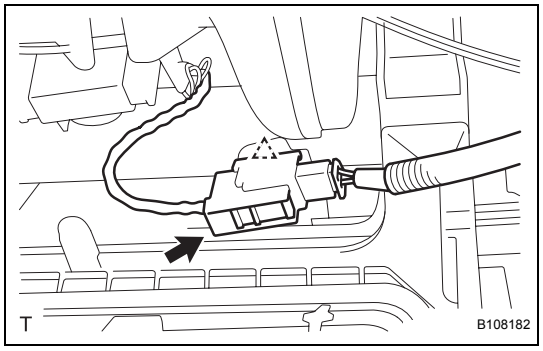

(f) Connect the passenger airbag connector and clamp.

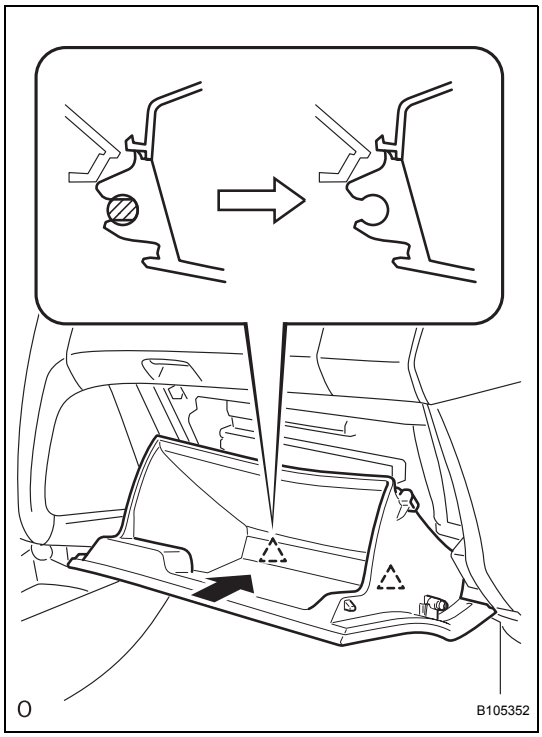

15. INSTALL GLOVE COMPARTMENT DOOR ASSEMBLY

(a) Engage the claw of the hinge portion in the horizontal direction to install the glove compartment door assembly.

NOTICE:

Engage the claw in the horizontal direction, otherwise, installation failure caused by excessive play around the hinge portion will result.

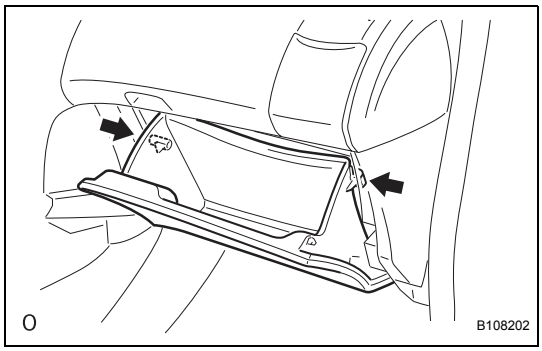

(b) Slightly deform the upper portion of the glove compartment door assembly to engage the stopper.

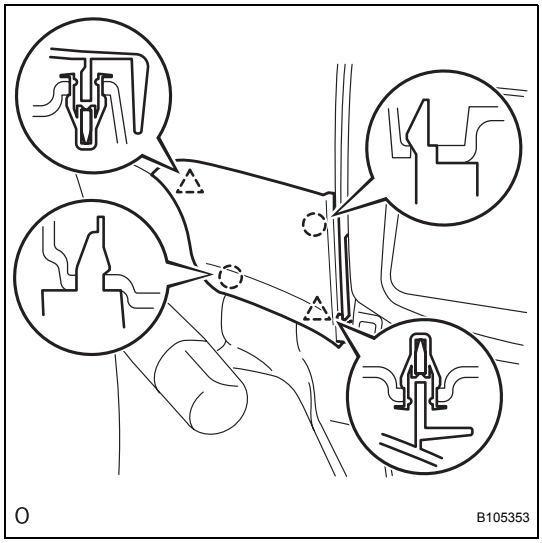

16. INSTALL NO. 1 SWITCH HOLE BASE

(a) Disengage the 2 clips and 2 claws and install the switch hole base.

17. INSTALL FRONT PILLAR GARNISH RH (See page IR-71)

18. INSTALL FRONT PILLAR GARNISH LH (See page IR-72)

19. INSTALL FRONT DOOR OPENING TRIM WEATHERSTRIP RH (See page IR-81)

20. INSTALL FRONT DOOR OPENING TRIM WEATHERSTRIP LH (See page IR-81)

21. INSTALL COMBINATION METER ASSEMBLY (See page ME-148)

22. INSTALL INSTRUMENT CLUSTER FINISH PANEL (See page ME-148)

23. INSTALL INSTRUMENT PANEL FINISH PANEL END RH (See page ME-149)

24. **INSTALL INSTRUMENT PANEL FINISH PANEL END LH (See page ME-149)**
25. **CONNECT CABLE TO NEGATIVE BATTERY TERMINAL**
    Torque: 5.4 N*m (55 kgf*cm, 48 in.*lbf)
26. **CHECK SRS WARNING LIGHT**
    RS-31

LOWER INSTRUMENT PANEL (for Sedan)

COMPONENTS

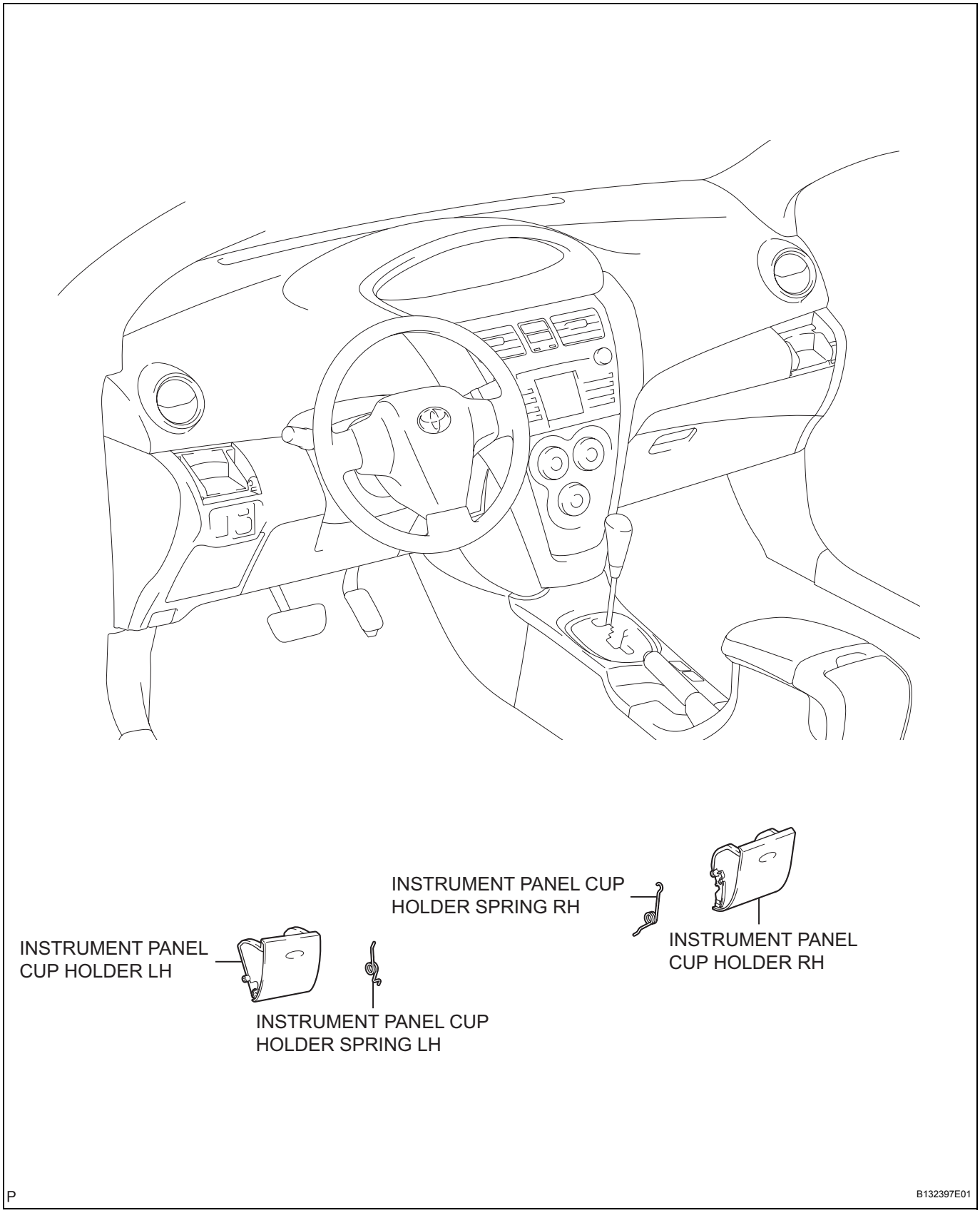

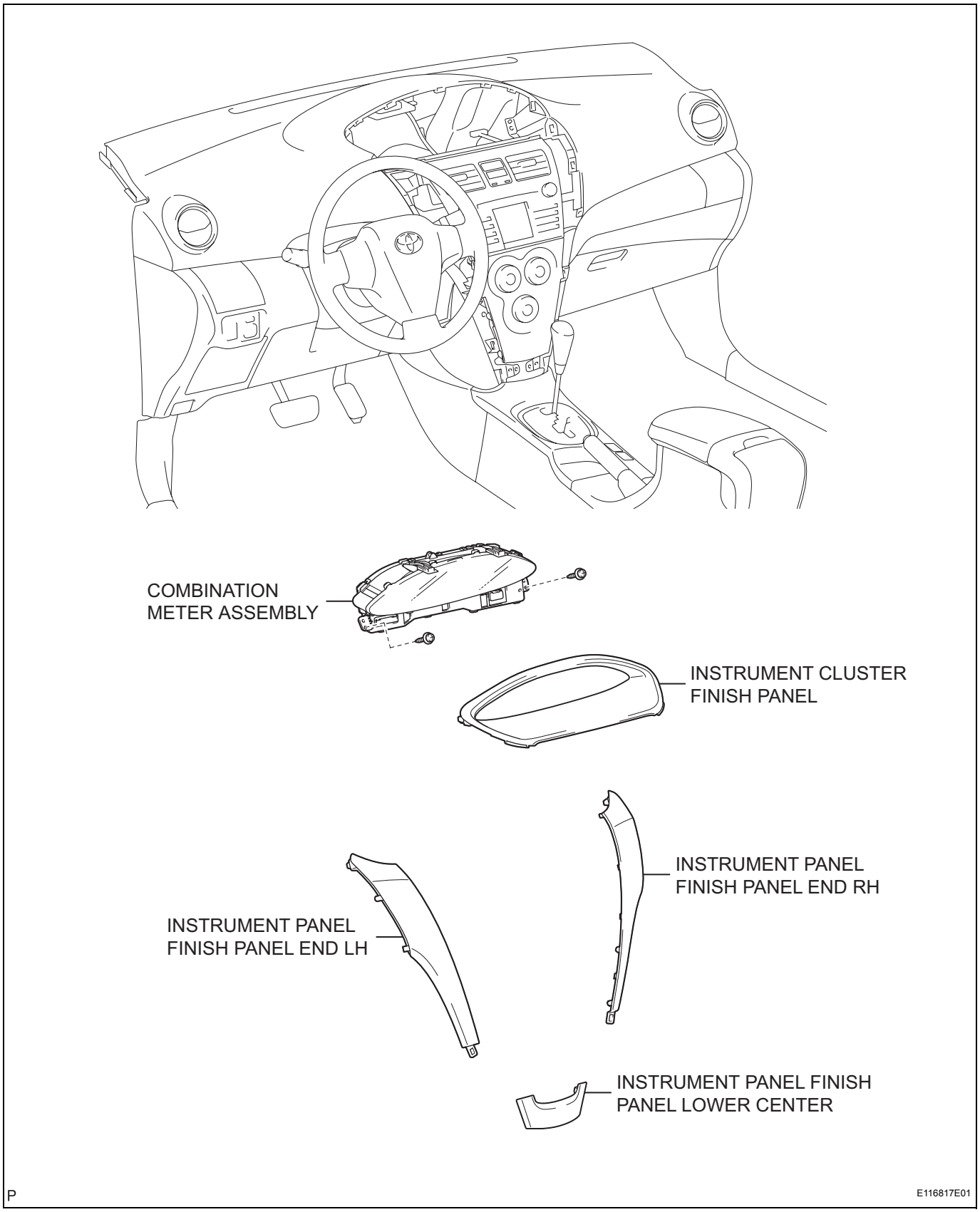
COMBINATION
METER ASSEMBLY
INSTRUMENT CLUSTER
FINISH PANEL
INSTRUMENT PANEL
FINISH PANEL END RH
INSTRUMENT PANEL
FINISH PANEL END LH
INSTRUMENT PANEL FINISH
PANEL LOWER CENTER
P
E116817E01

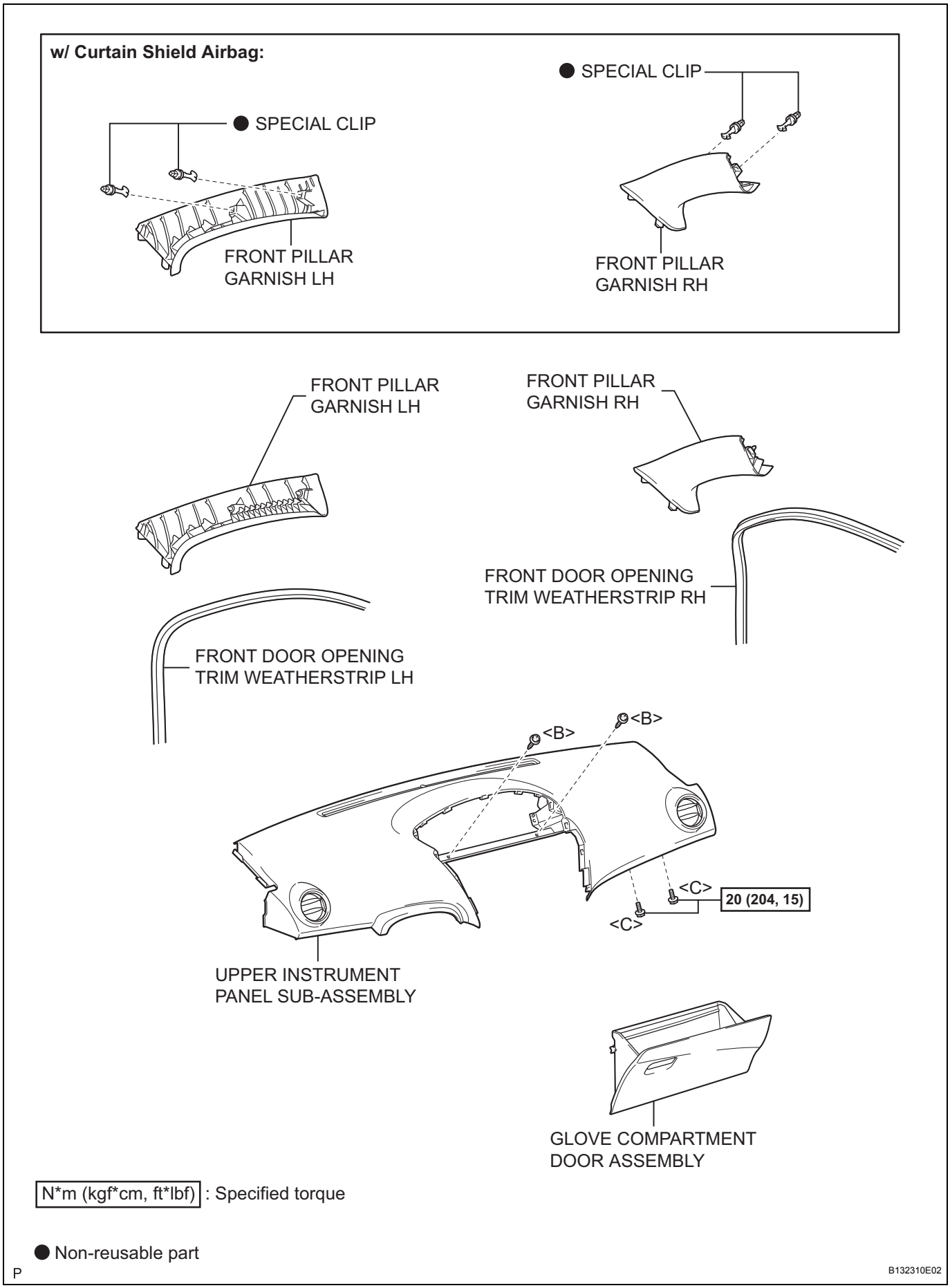
w/ Curtain Shield Airbag:
● SPECIAL CLIP
FRONT PILLAR GARNISH LH
● SPECIAL CLIP
FRONT PILLAR GARNISH RH
FRONT PILLAR GARNISH LH
FRONT PILLAR GARNISH RH
FRONT DOOR OPENING TRIM WEATHERSTRIP RH
FRONT DOOR OPENING TRIM WEATHERSTRIP LH
<B>
<B>
<C>
<C>
20 (204, 15)
UPPER INSTRUMENT PANEL SUB-ASSEMBLY
GLOVE COMPARTMENT DOOR ASSEMBLY
N*m (kgf*cm, ft*lbf) : Specified torque
● Non-reusable part
P
B132310E02

for Integrated w/ Panel:

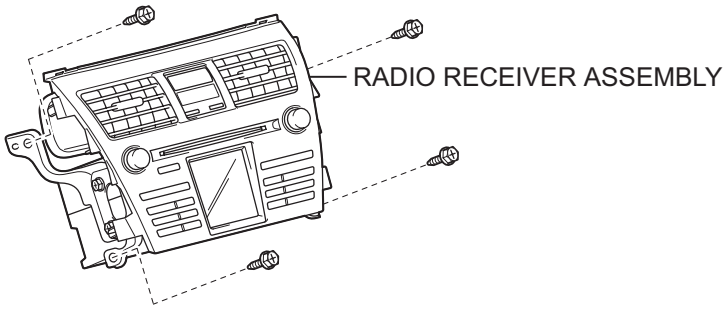

w/o Radio Receiver:

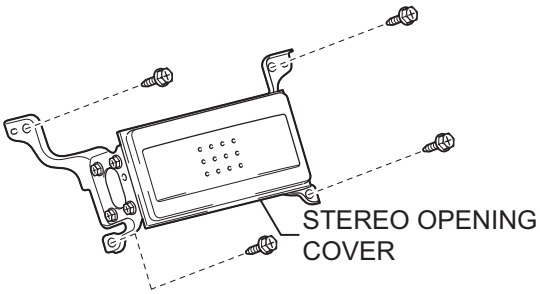

Except for Integrated w/ Panel:

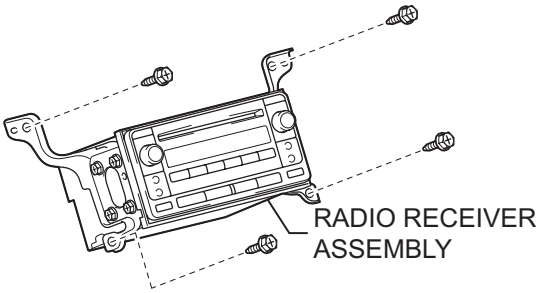

Except for Integrated w/ Panel:

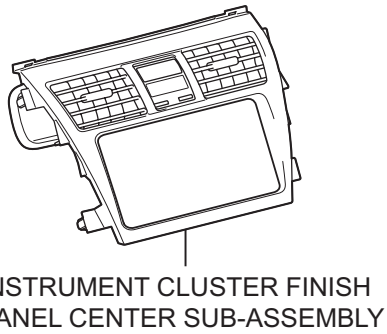

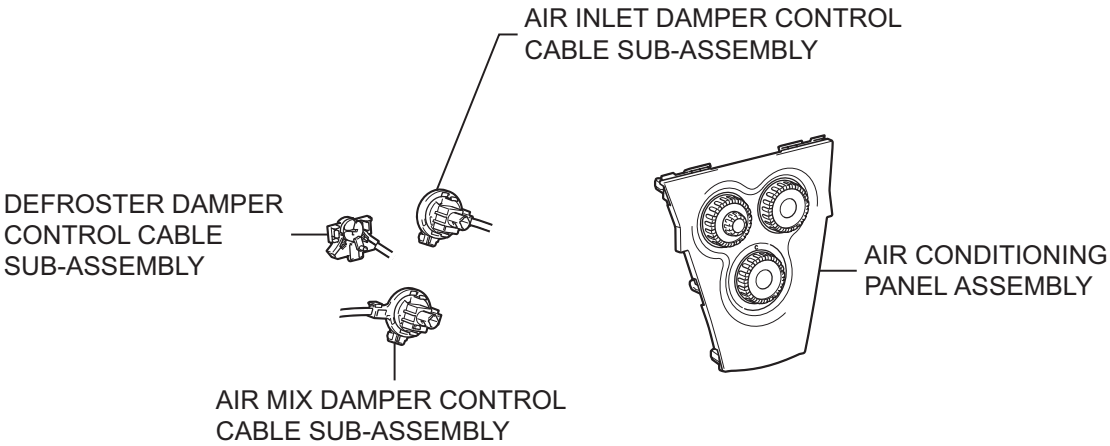

P

B132383E01

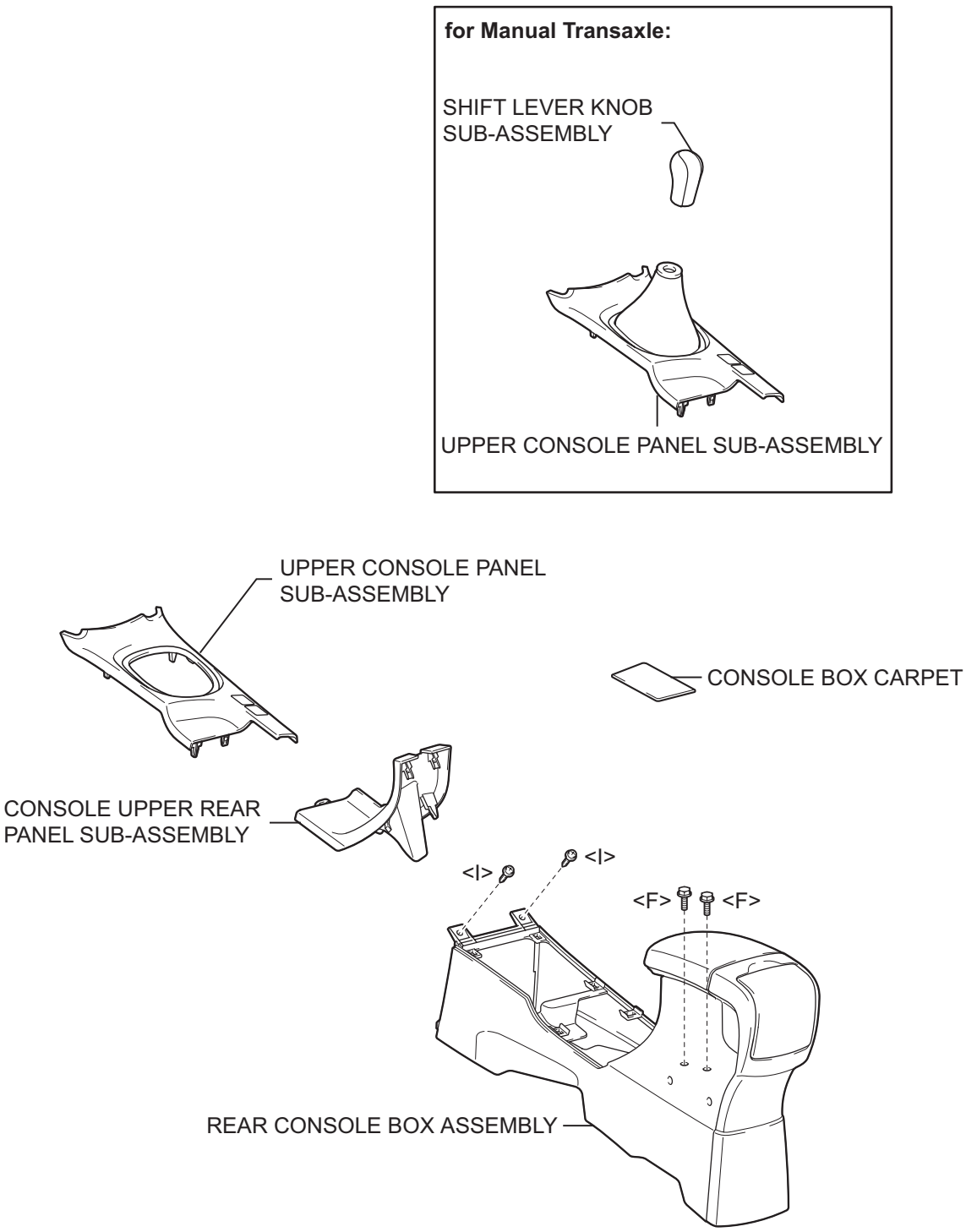
for Manual Transaxle:
SHIFT LEVER KNOB SUB-ASSEMBLY
UPPER CONSOLE PANEL SUB-ASSEMBLY
UPPER CONSOLE PANEL SUB-ASSEMBLY
CONSOLE BOX CARPET
CONSOLE UPPER REAR PANEL SUB-ASSEMBLY
<I>
<I>
<F>
<F>
REAR CONSOLE BOX ASSEMBLY

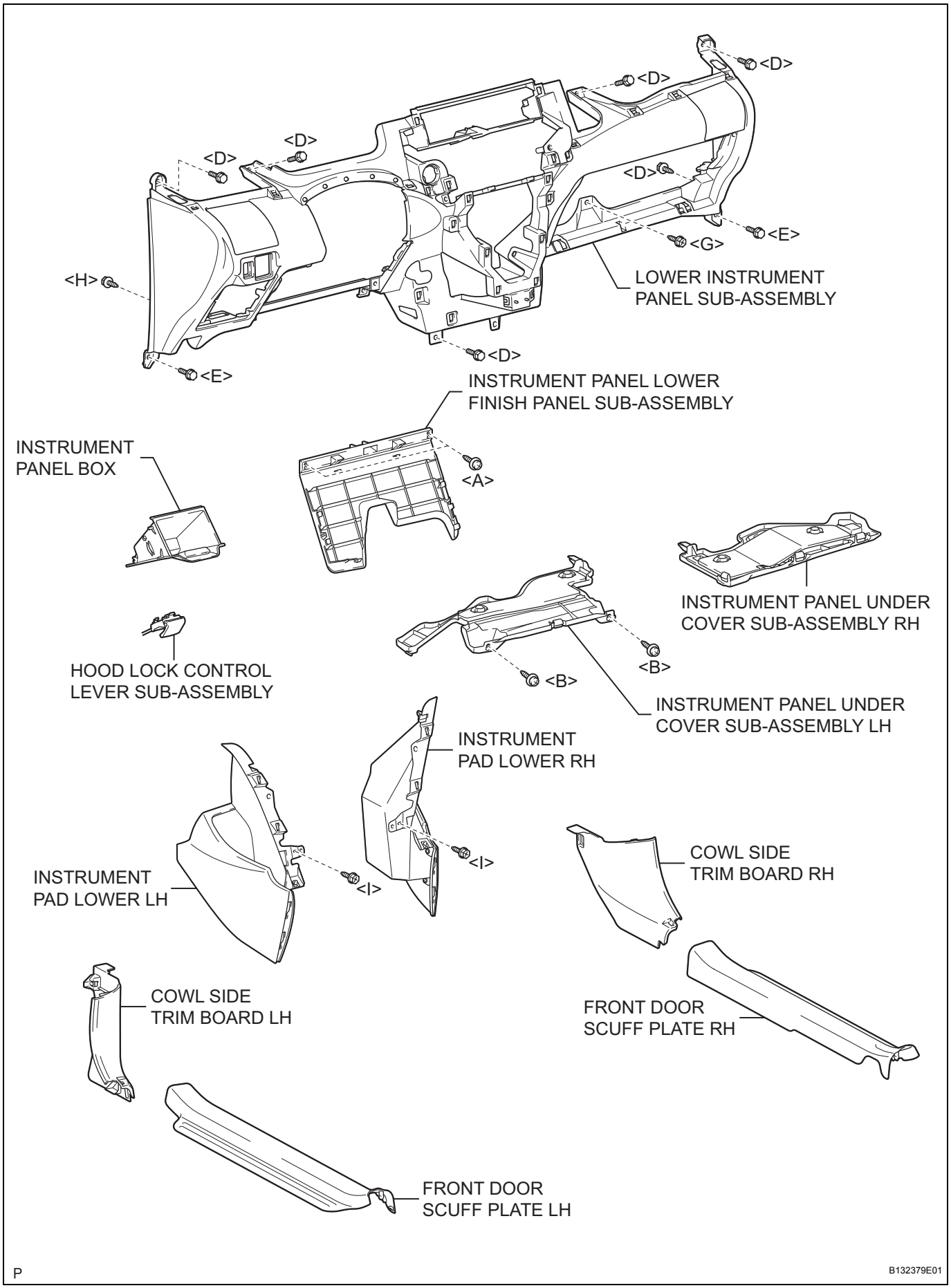
<D>
<D>
<D>
<D>
<D>
<D>
<E>
<G>
<H>
<E>
LOWER INSTRUMENT PANEL SUB-ASSEMBLY
INSTRUMENT PANEL LOWER FINISH PANEL SUB-ASSEMBLY
<A>
INSTRUMENT PANEL BOX
INSTRUMENT PANEL UNDER COVER SUB-ASSEMBLY RH
HOOD LOCK CONTROL LEVER SUB-ASSEMBLY
<B>
<B>
INSTRUMENT PANEL UNDER COVER SUB-ASSEMBLY LH
INSTRUMENT PAD LOWER RH
<I>
<I>
INSTRUMENT PAD LOWER LH
COWL SIDE TRIM BOARD RH
COWL SIDE TRIM BOARD LH
FRONT DOOR SCUFF PLATE RH
FRONT DOOR SCUFF PLATE LH
P
B132379E01

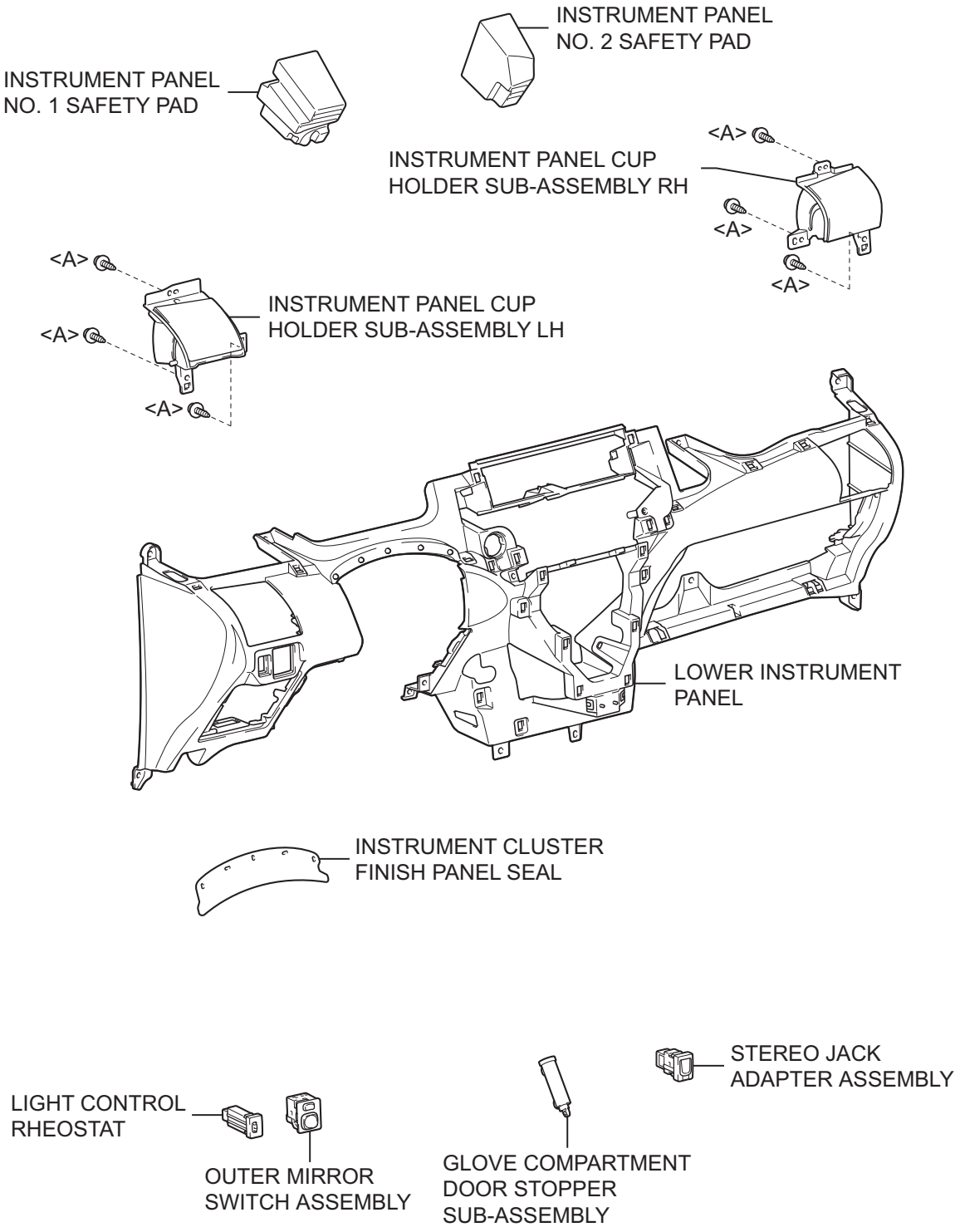

P

B132380E01

REMOVAL

HINT:
Use the same procedure for both the RH and LH sides.

1. BOLTS, SCREWS AND NUTS TABLE

HINT:
All bolts, screws and nuts relevant to installing and removing the instrument panel are shown, along with their alphabetic codes, in the table below.

mm(in.) (L=Length)

Code	Shape	Code	Shape	Code	Shape
<A>	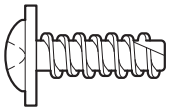 φ=5 (0.20) L=14 (0.55) 93568-15014	<B>	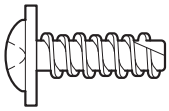 φ=5 (0.20) L=14 (0.55) 93568-55014	<C>	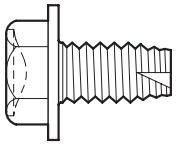 φ=8 (0.31) L=15 (0.59) 90105-08120 91643-80820
<D>	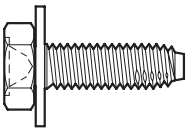 φ=6 (0.24) L=20 (0.79) 90159-60610	<E>	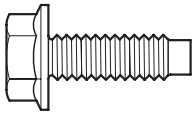 φ=6 (0.24) L=16 (0.63) 91533-80616	<F>	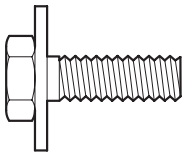 φ=6 (0.24) L=16 (0.63) 91635-60616
<G>	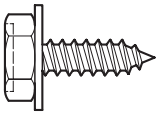 φ=5 (0.20) L=16 (0.63) 90159-50322	<H>	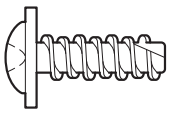 φ=5 (0.20) L=16 (0.63) 93568-15016	<I>	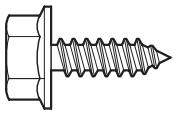 φ=5 (0.20) L=16 (0.63) 90159-50384

P B132394E01

2. DISCONNECT CABLE FROM NEGATIVE BATTERY TERMINAL

Wait for at least 90 seconds after disconnecting the cable to prevent the airbag from working.

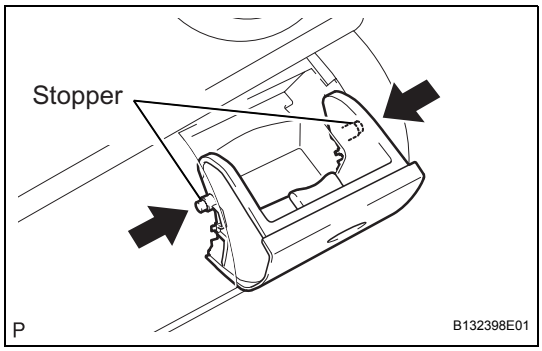

3. REMOVE INSTRUMENT PANEL CUP HOLDER RH

(a) Open the instrument panel cup holder.

(b) Flex both sides of the instrument panel cup holder and disengage the 2 stoppers.

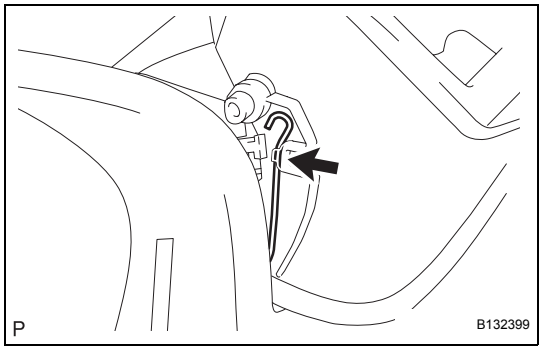

(c) Disengage the spring.

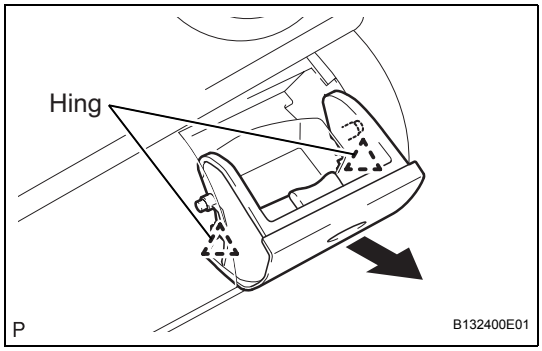

(d) Remove the instrument panel cup holder by moving it toward either the inside or the outside of the vehicle and disengaging the 2 hinges one at a time.

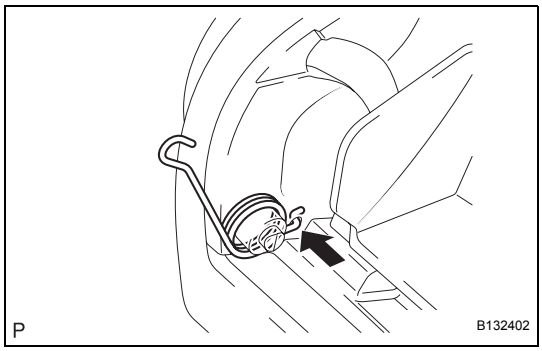

4. REMOVE INSTRUMENT PANEL CUP HOLDER SPRING RH

(a) Remove the spring.

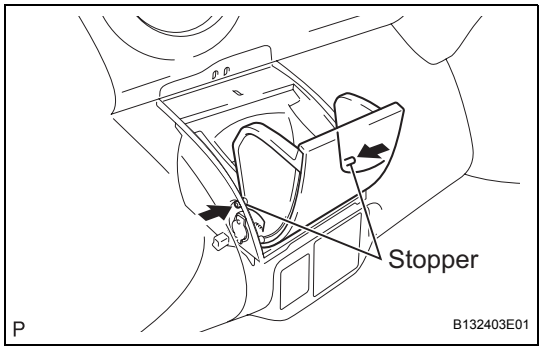

5. REMOVE INSTRUMENT PANEL CUP HOLDER LH

(a) Open the instrument panel cup holder.

(b) Flex both sides of the instrument panel cup holder and disengage the 2 stoppers.

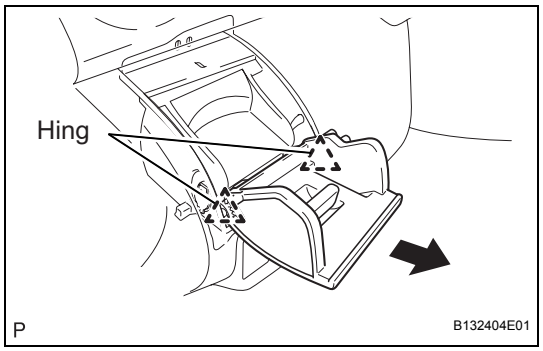

(c) Remove the instrument panel cup holder by moving it toward either the inside or the outside of the vehicle and disengaging the 2 hinges one at a time.

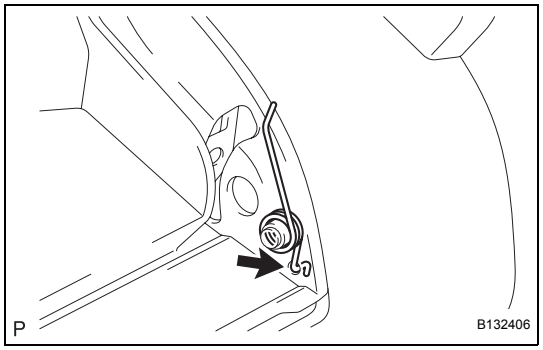

6. REMOVE INSTRUMENT PANEL CUP HOLDER SPRING LH

(a) Remove the spring.

7. REMOVE INSTRUMENT PANEL FINISH PANEL LOWER CENTER (See page ME-138)

8. REMOVE INSTRUMENT PANEL FINISH PANEL END LH (See page ME-138)

9. REMOVE INSTRUMENT PANEL FINISH PANEL END RH (See page ME-138)

10. REMOVE INSTRUMENT CLUSTER FINISH PANEL (See page ME-139)

11. REMOVE COMBINATION METER ASSEMBLY (See page ME-139)

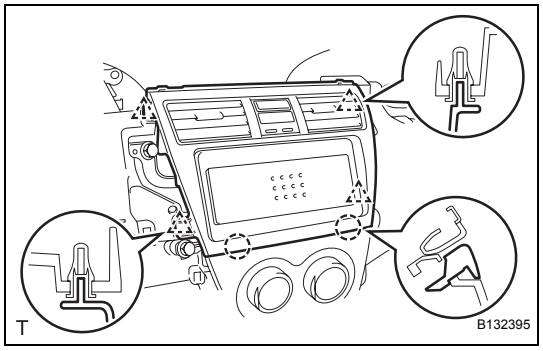

12. REMOVE INSTRUMENT CLUSTER FINISH PANEL CENTER SUB-ASSEMBLY

(a) Disengage the 2 claws and 4 clips and remove the instrument cluster panel center.

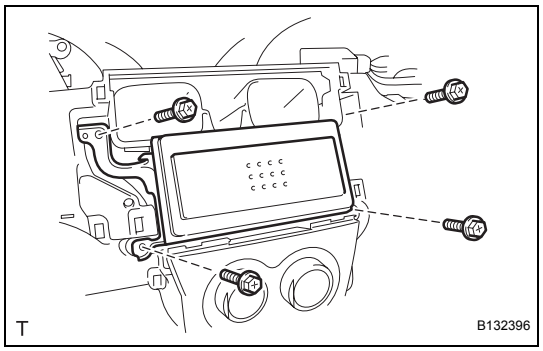

13. REMOVE STEREO OPENING COVER (w/o Radio Receiver)

(a) Remove the 4 screws and remove the stereo opening cover.

14. REMOVE RADIO RECEIVER ASSEMBLY (See page AV-38)

15. REMOVE AIR CONDITIONING PANEL ASSEMBLY (See page AC-239)

16. DISCONNECT AIR MIX DAMPER CONTROL CABLE SUB-ASSEMBLY (See page AC-240)

17. DISCONNECT DEFROSTER DAMPER CONTROL CABLE SUB-ASSEMBLY (See page AC-240)

18. DISCONNECT AIR INLET DAMPER CONTROL CABLE SUB-ASSEMBLY (See page AC-240)

19. **SEPARATE FRONT DOOR OPENING TRIM WEATHERSTRIP RH (See page IP-5)**
20. **SEPARATE FRONT DOOR OPENING TRIM WEATHERSTRIP LH (See page IP-5)**
21. **REMOVE FRONT PILLAR GARNISH RH (See page IR-18)**
22. **REMOVE FRONT PILLAR GARNISH LH (See page IR-19)**
23. **REMOVE GLOVE COMPARTMENT DOOR ASSEMBLY (See page IP-6)**
24. **REMOVE UPPER INSTRUMENT PANEL SUB-ASSEMBLY (See page IP-6)**
25. **REMOVE FRONT DOOR SCUFF PLATE RH (See page IR-14)**
26. **REMOVE FRONT DOOR SCUFF PLATE LH (See page IR-14)**
27. **REMOVE INSTRUMENT PANEL UNDER COVER SUB-ASSEMBLY LH (See page IR-14)**
28. **REMOVE INSTRUMENT PANEL UNDER COVER SUB-ASSEMBLY RH (See page IR-14)**
29. **REMOVE COWL SIDE TRIM BOARD RH (See page IR-15)**
30. **REMOVE COWL SIDE TRIM BOARD LH (See page IR-15)**
31. **REMOVE SHIFT LEVER KNOB SUB-ASSEMBLY (for Manual Transaxle) (See page IP-84)**
32. **REMOVE UPPER CONSOLE PANEL SUB-ASSEMBLY (See page IP-84)**
33. **REMOVE CONSOLE UPPER REAR PANEL SUB-ASSEMBLY (See page IP-84)**
34. **REMOVE CONSOLE BOX CARPET (See page IP-85)**
35. **REMOVE REAR CONSOLE BOX ASSEMBLY (See page IP-85)**
36. **REMOVE INSTRUMENT PAD LOWER LH**
    (a) Remove screw <I>.
    (b) Disengage the claw and 3 clips and remove the instrument panel pad lower.

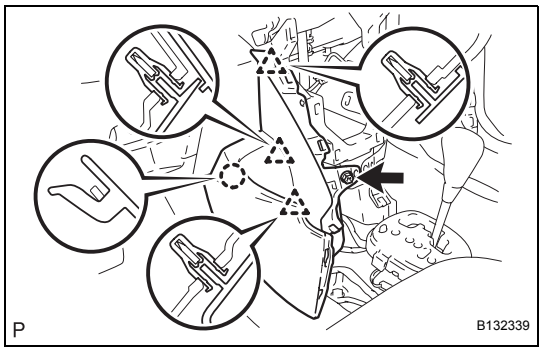

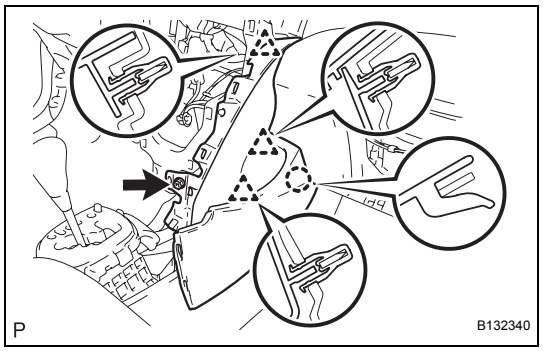

37. REMOVE INSTRUMENT PAD LOWER RH

(a) Remove screw <I>.

(b) Disengage the claw and 3 clips and remove the instrument panel pad lower.

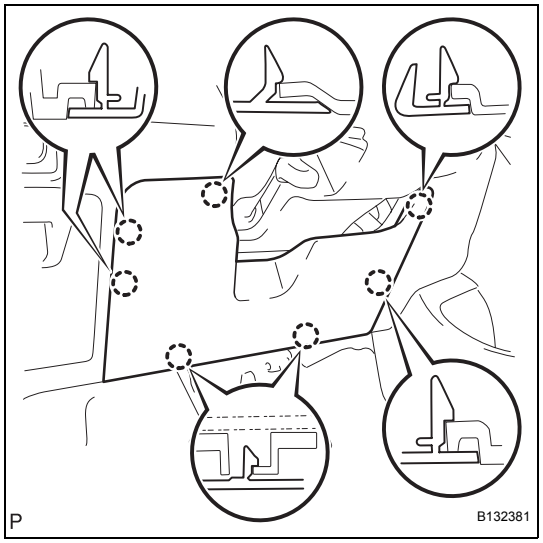

38. REMOVE INSTRUMENT PANEL LOWER FINISH PANEL SUB-ASSEMBLY

(a) Disengage the 7 claws and open the instrument panel lower finish panel.

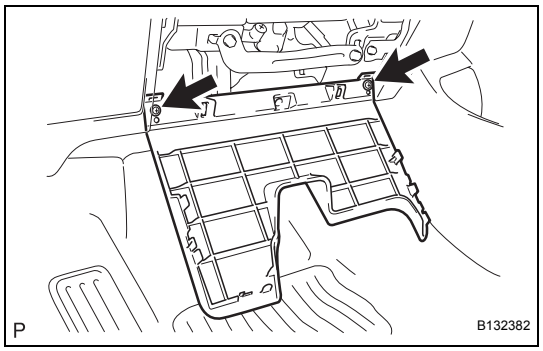

(b) Remove the 2 <A> screws and remove the instrument panel lower finish panel.

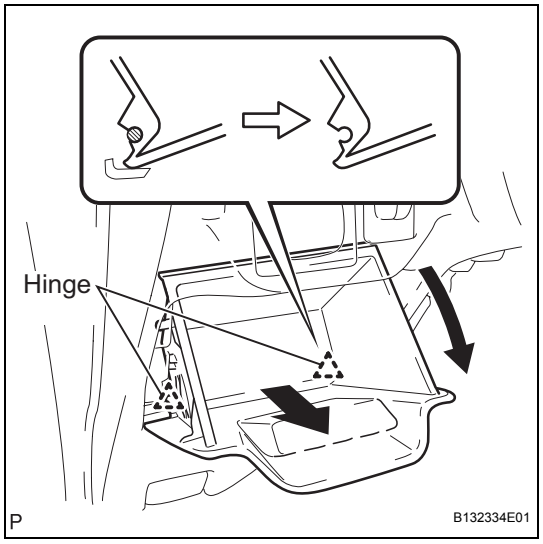

39. REMOVE INSTRUMENT PANEL BOX

(a) Open the instrument panel box.

(b) Pull the instrument panel box out horizontally with the instrument panel open and disengage the 2 hinges.

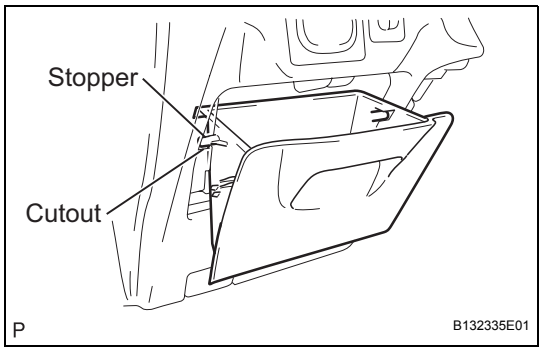

(c) Remove the stopper of the instrument panel box from the cutout of the instrument panel lower and remove the instrument panel box.

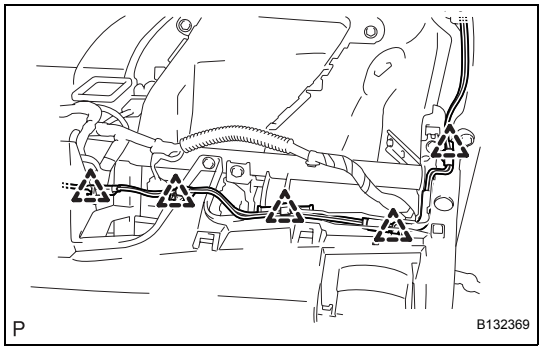

40. DISCONNECT ANTENNA CORD SUB-ASSEMBLY

(a) Disconnect the 5 antenna cord clamps.

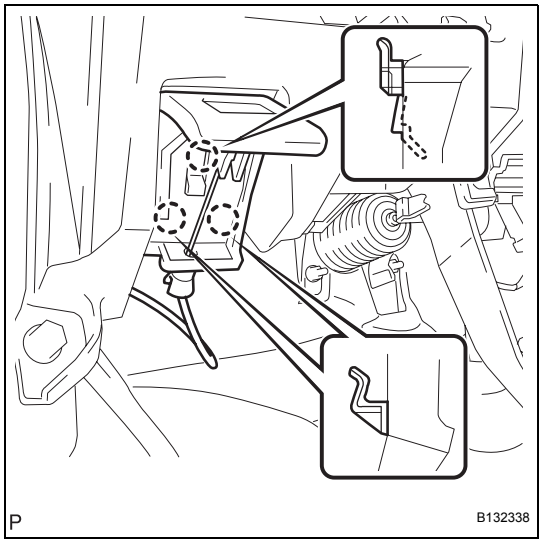

41. SEPARATE HOOD LOCK CONTROL LEVER SUB-ASSEMBLY

(a) Disengage the 3 claws and separate the hood lock control lever.

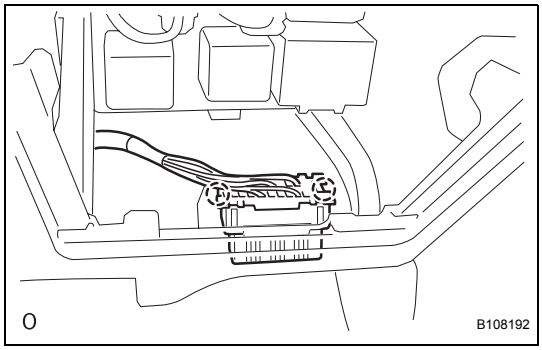

42. REMOVE LOWER INSTRUMENT PANEL SUB-ASSEMBLY

(a) Disengage the 2 claws and disconnect the DLC3 connector.

(b) Disconnect the clamps and connectors.

(c) Remove the 6 <D> bolts, 2 <E> bolts, screw <G> and screw <H> and remove the lower instrument panel.

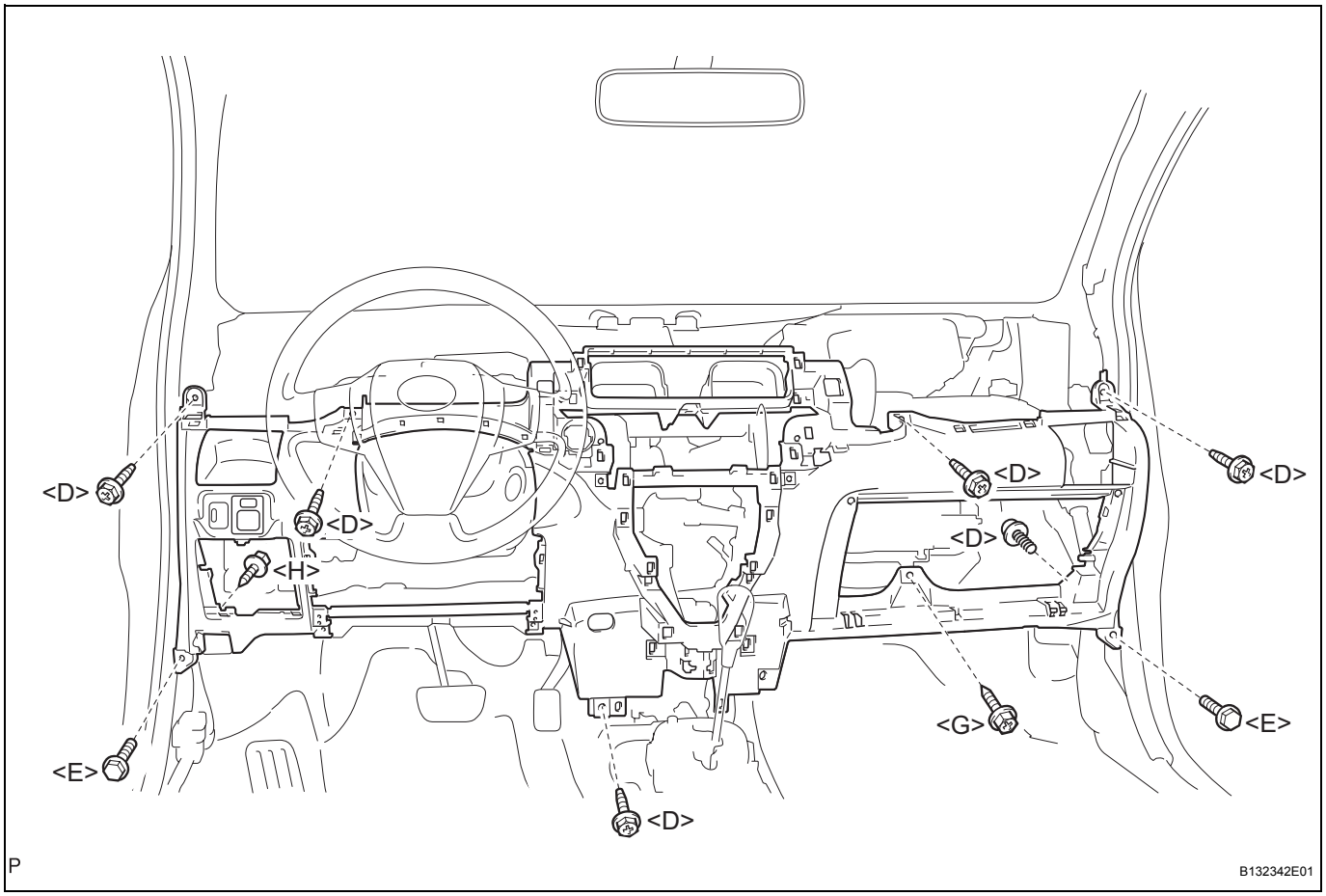

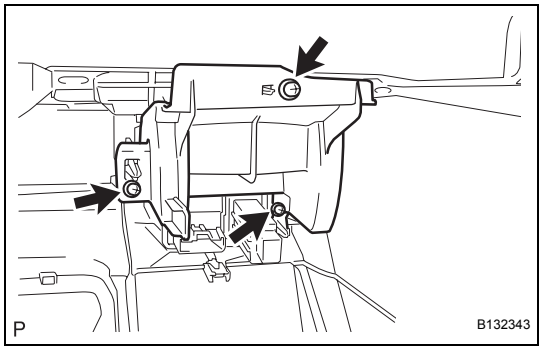

43. REMOVE INSTRUMENT PANEL CUP HOLDER SUB-ASSEMBLY LH

(a) Remove the 3 <A> screws and the instrument panel cup holder.

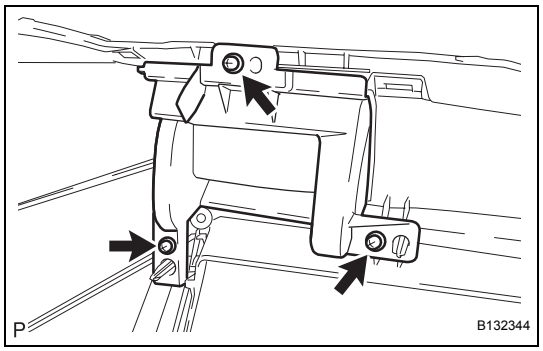

44. REMOVE INSTRUMENT PANEL CUP HOLDER SUB-ASSEMBLY RH

(a) Remove the 3 <A> screws and the instrument panel box.

IP

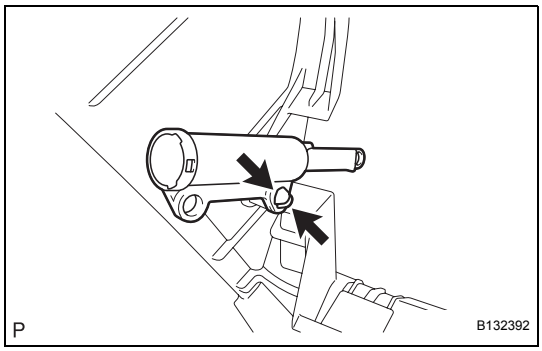

45. REMOVE GLOVE COMPARTMENT DOOR STOPPER SUB-ASSEMBLY

(a) Disengage the claw and remove the glove compartment door stopper.

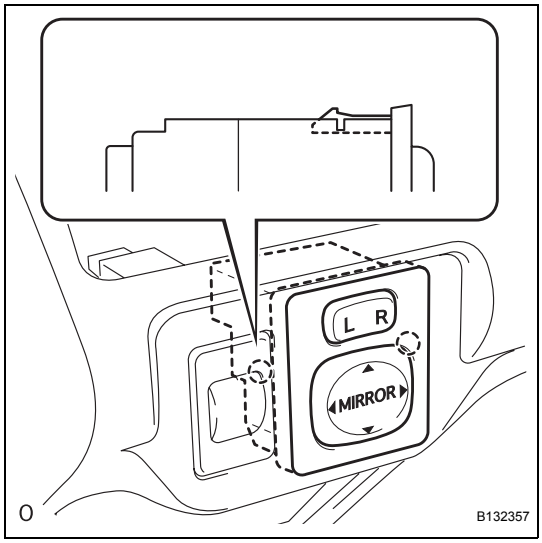

46. REMOVE OUTER MIRROR SWITCH ASSEMBLY

(a) Disengage the 2 claws and remove the outer mirror switch.

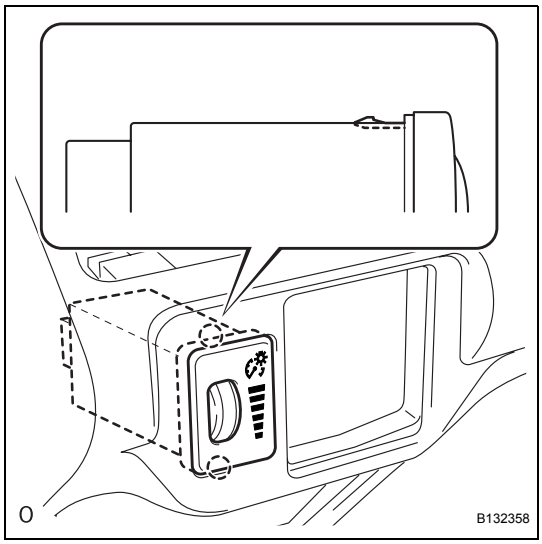

47. REMOVE LIGHT CONTROL RHEOSTAT

(a) Disengage the 2 claws and remove the light control rheostat.

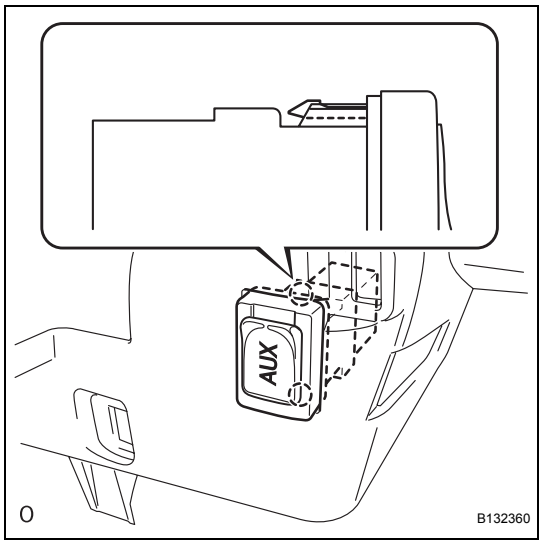

48. REMOVE STEREO JACK ADAPTER ASSEMBLY

(a) Disengage the 2 claws and remove the stereo jack adapter.

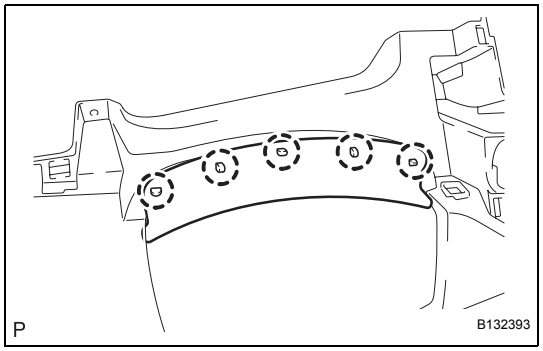

49. REMOVE INSTRUMENT CLUSTER FINISH PANEL SEAL

(a) Disengage the 5 claws and remove the panel seal.

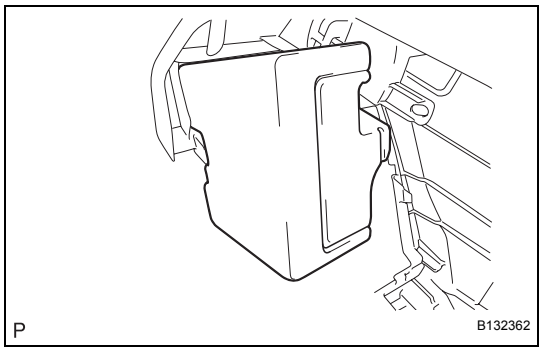

50. REMOVE INSTRUMENT PANEL NO. 1 SAFETY PAD

(a) Remove the safety pad.

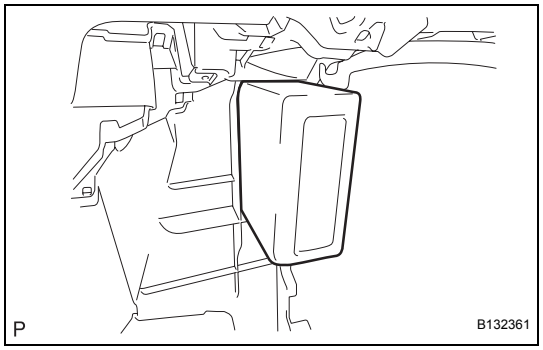

51. REMOVE INSTRUMENT PANEL NO. 2 SAFETY PAD

(a) Remove the safety pad.

INSTALLATION

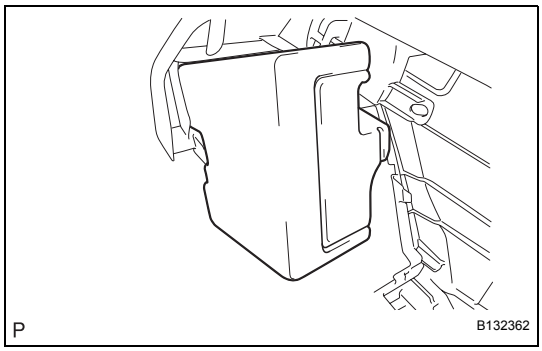

1. INSTALL INSTRUMENT PANEL NO. 1 SAFETY PAD

(a) Apply butyl tape to install the instrument panel safety pad No. 1 onto the instrument panel lower (When installing a new one).

Adhesive:

Part No. 08850-00065, Butyl Tape Set or the equivalent

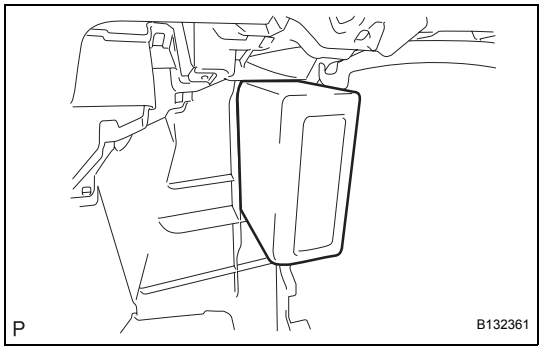

2. INSTALL INSTRUMENT PANEL NO. 2 SAFETY PAD

(a) Apply butyl tape to install the instrument panel safety pad No. 2 onto the instrument panel lower (When installing a new one).

Adhesive:

Part No. 08850-00065, Butyl Tape Set or the equivalent

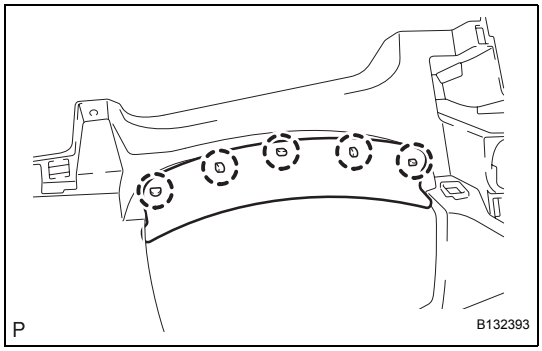

3. INSTALL INSTRUMENT CLUSTER FINISH PANEL SEAL

(a) Engage the 5 claws and install the panel seal.

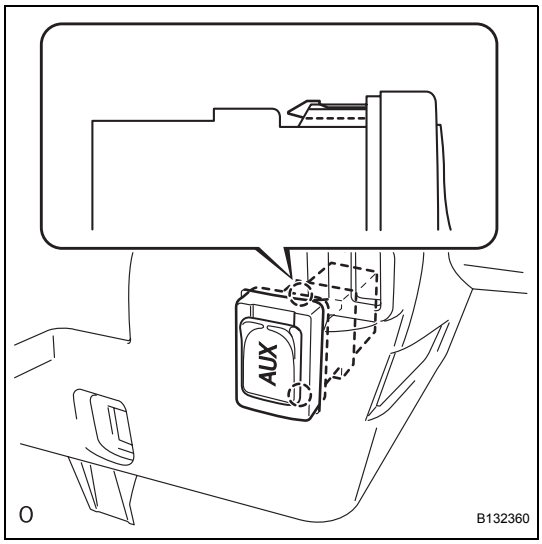

4. INSTALL STEREO JACK ADAPTER ASSEMBLY

(a) Engage the 2 claws and install the stereo jack adapter.

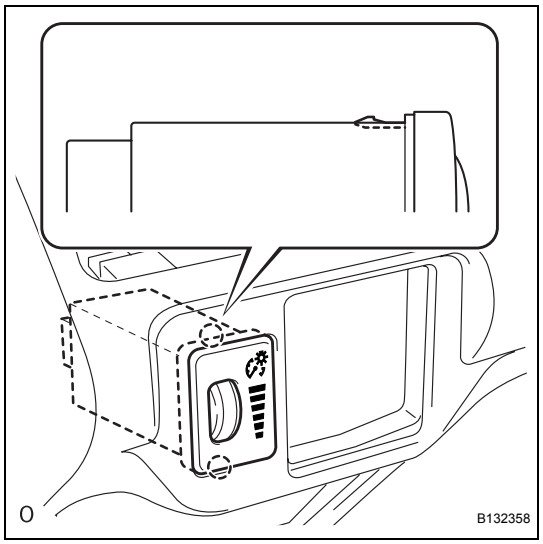

5. INSTALL LIGHT CONTROL RHEOSTAT

(a) Engage the 2 claws and install the light control rheostat.

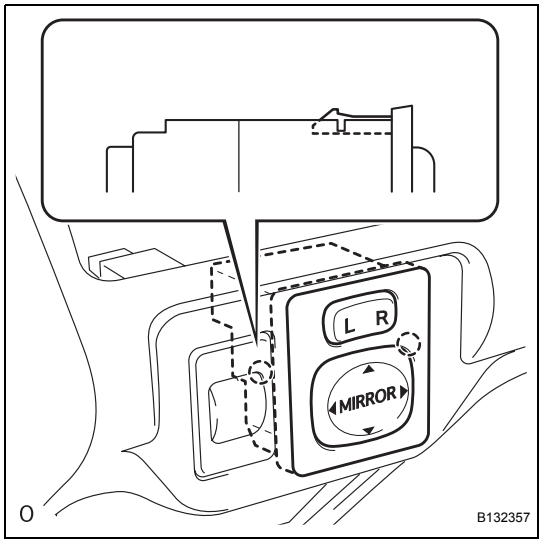

6. INSTALL OUTER MIRROR SWITCH ASSEMBLY

(a) Engage the 2 claws and install the outer mirror switch.

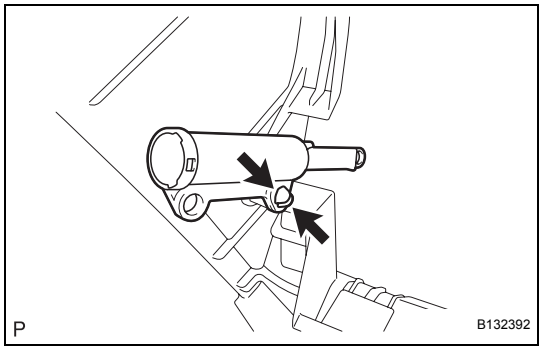

7. INSTALL GLOVE COMPARTMENT DOOR STOPPER SUB-ASSEMBLY

(a) Engage the claw and install the glove compartment door stopper.

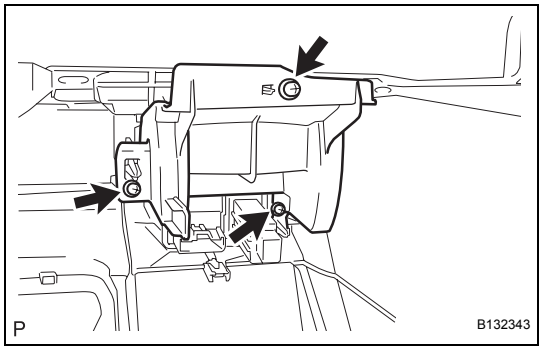

8. INSTALL INSTRUMENT PANEL CUP HOLDER SUB-ASSEMBLY LH

(a) Install the instrument panel cup holder with the 3 <A> screws.

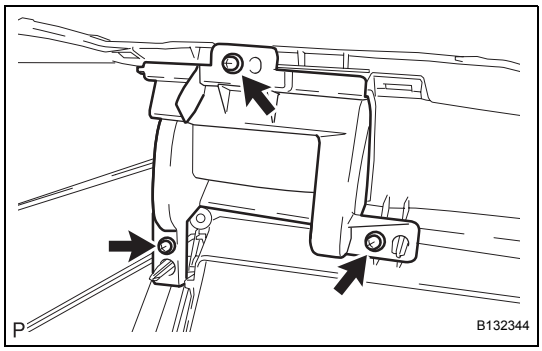

9. INSTALL INSTRUMENT PANEL CUP HOLDER SUB-ASSEMBLY RH

(a) Install the instrument panel cup holder with the 3 <A> screws.

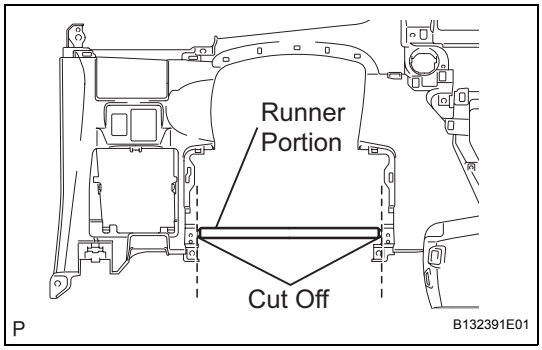

10. INSTALL LOWER INSTRUMENT PANEL SUB-ASSEMBLY

(a) Using a nipper, cut off both ends of the runner portion shown in the illustration (When installing a new one).

(b) Install the lower instrument panel with the 6 <D> bolts, 2 <E> bolts, screw <G> and screw <H>.
NOTICE:
Do not excessively tighten the <D> bolts, as this may damage the area not being tightened.

(c) Connect the clamps and connectors.

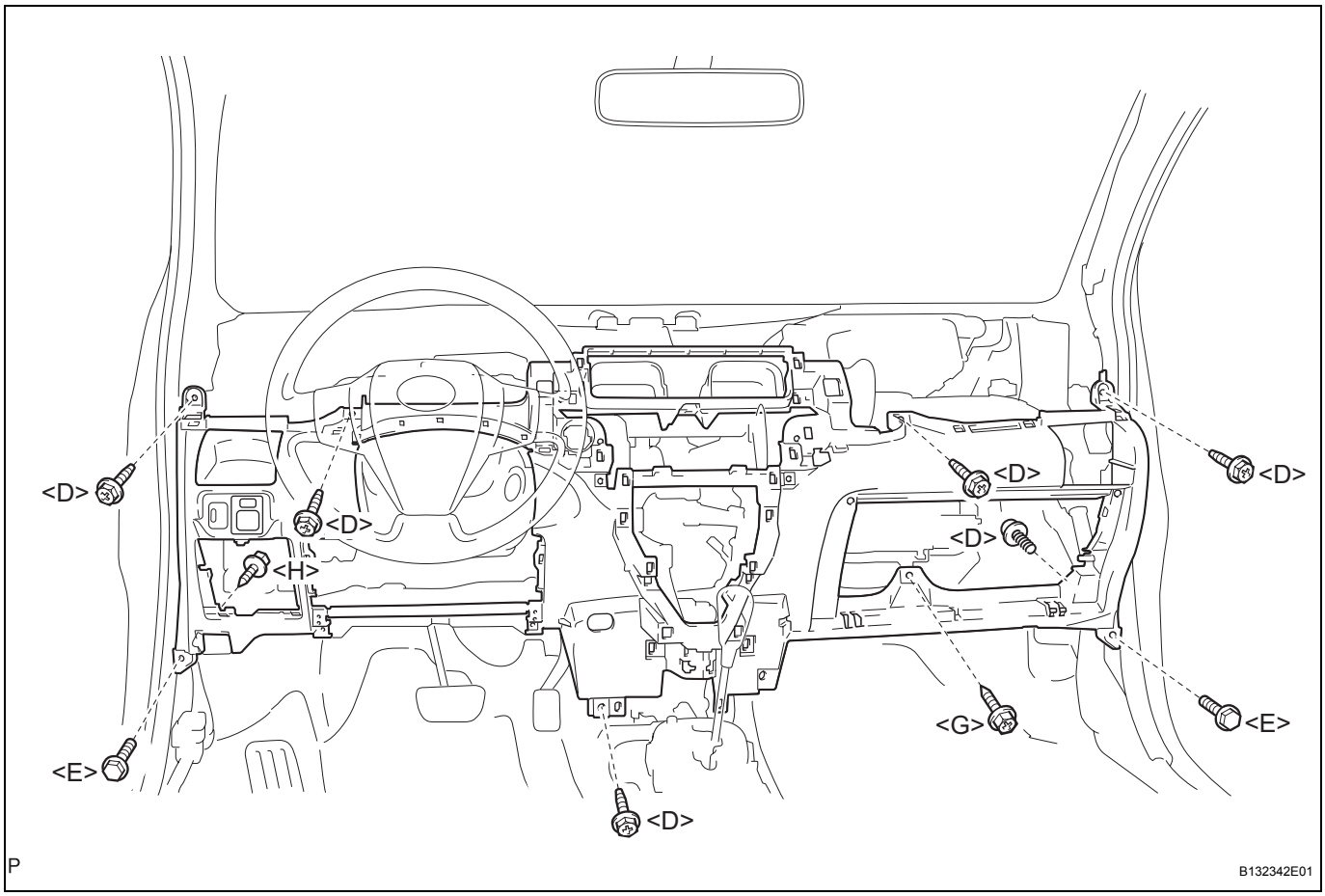

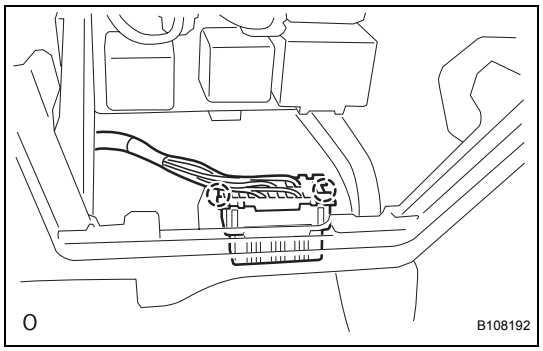

(d) Engage the 2 claws and connect the DLC3 connector.

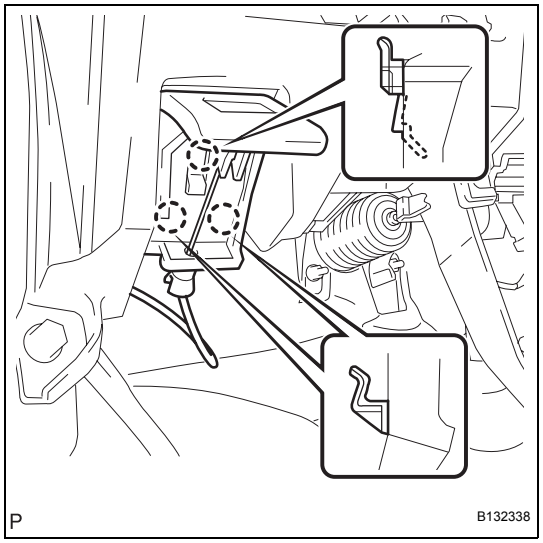

11. CONNECT HOOD LOCK CONTROL LEVER SUB-ASSEMBLY

(a) Engage the 3 claws to connect the control lever.

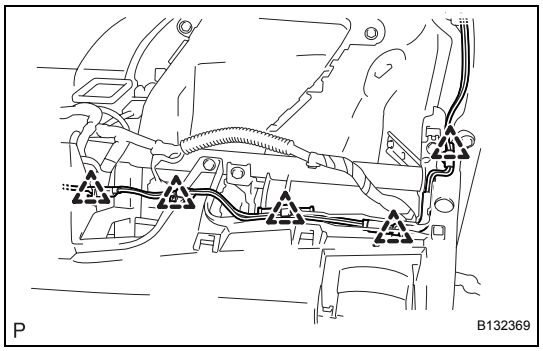

12. CONNECT ANTENNA CORD SUB-ASSEMBLY

(a) Connect the 5 antenna cord clamps.

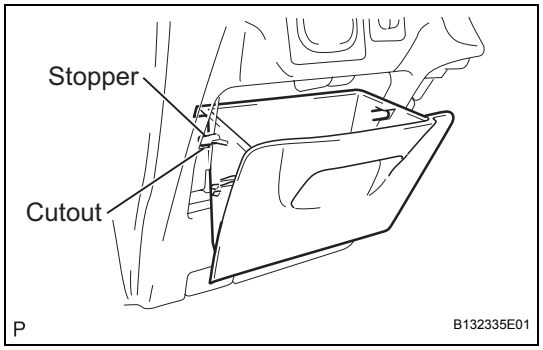

13. INSTALL INSTRUMENT PANEL BOX

(a) Insert the stopper of the instrument panel box from the cutout of the instrument panel lower.

IP

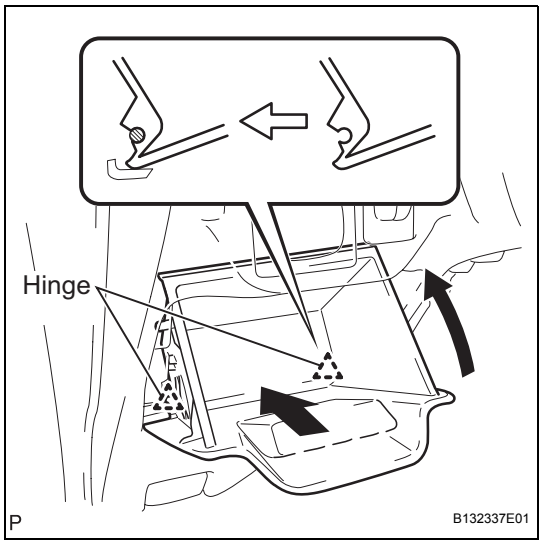

(b) Engage the 2 hinges with the instrument panel open.
(c) Close the instrument panel box.

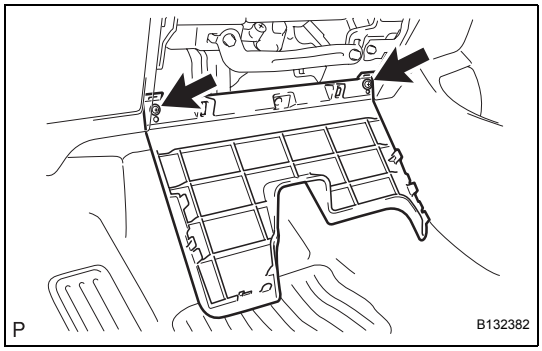

14. INSTALL INSTRUMENT PANEL LOWER FINISH PANEL SUB-ASSEMBLY

(a) Install the 2 <A> screws.

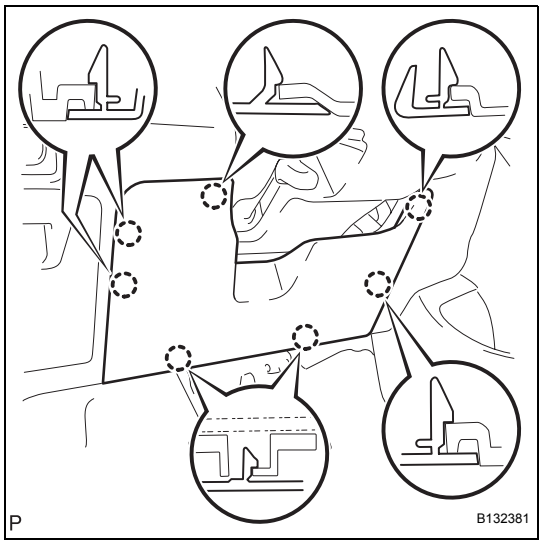

(b) Engage the 7 claws and install the instrument panel lower finish panel.

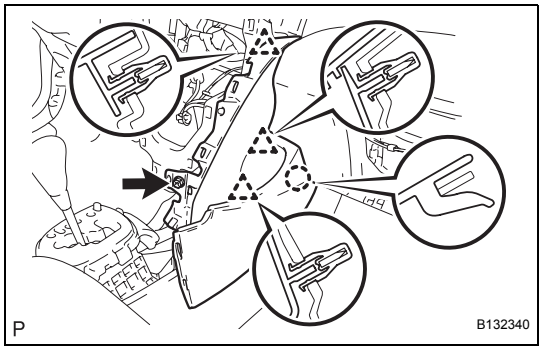

15. INSTALL INSTRUMENT PAD LOWER RH

(a) Engage the claw and 3 clips and install the instrument pad lower.
(b) Install screw <I>.

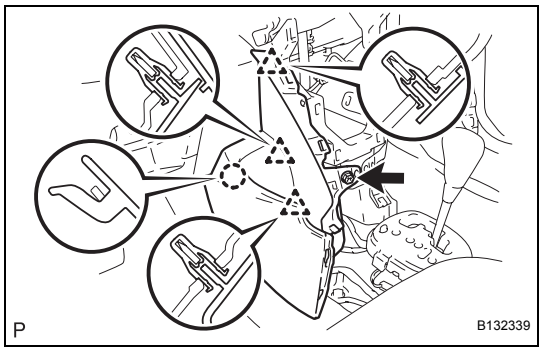

16. **INSTALL INSTRUMENT PAD LOWER LH**
    (a) Engage the claw and 3 clips and install the instrument pad lower.
    (b) Install screw <I>.
17. **INSTALL REAR CONSOLE BOX ASSEMBLY (See page IP-88)**
18. **INSTALL CONSOLE BOX CARPET (See page IP-88)**
19. **INSTALL CONSOLE UPPER REAR PANEL SUB-ASSEMBLY (See page IP-89)**
20. **INSTALL UPPER CONSOLE PANEL SUB-ASSEMBLY (See page IP-89)**
21. **INSTALL SHIFT LEVER KNOB SUB-ASSEMBLY (for Manual Transaxle) (See page IP-89)**
22. **INSTALL COWL SIDE TRIM BOARD RH (See page IR-34)**
23. **INSTALL COWL SIDE TRIM BOARD LH (See page IR-34)**
24. **INSTALL INSTRUMENT PANEL UNDER COVER SUB-ASSEMBLY RH (See page IR-35)**
25. **INSTALL INSTRUMENT PANEL UNDER COVER SUB-ASSEMBLY LH (See page IR-34)**
26. **INSTALL FRONT DOOR SCUFF PLATE RH (See page IR-35)**
27. **INSTALL FRONT DOOR SCUFF PLATE LH (See page IR-35)**
28. **INSTALL UPPER INSTRUMENT PANEL SUB-ASSEMBLY (See page IP-11)**
29. **INSTALL GLOVE COMPARTMENT DOOR ASSEMBLY (See page IP-13)**
30. **INSTALL FRONT PILLAR GARNISH RH (See page IR-29)**
31. **INSTALL FRONT PILLAR GARNISH LH (See page IR-30)**
32. **INSTALL FRONT DOOR OPENING TRIM WEATHERSTRIP RH (See page IP-14)**
33. **INSTALL FRONT DOOR OPENING TRIM WEATHERSTRIP LH (See page IP-14)**
34. **CONNECT AIR INLET DAMPER CONTROL CABLE SUB-ASSEMBLY (See page AC-246)**
35. **CONNECT DEFROSTER DAMPER CONTROL CABLE SUB-ASSEMBLY (See page AC-246)**
36. **CONNECT AIR MIX DAMPER CONTROL CABLE SUB-ASSEMBLY (See page AC-246)**
37. **INSTALL AIR CONDITIONING PANEL ASSEMBLY (See page AC-246)**

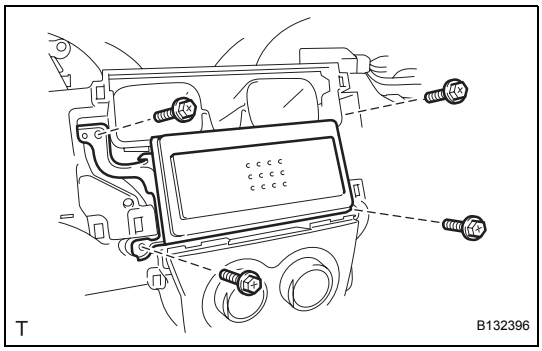

38. INSTALL STEREO OPENING COVER (w/o Radio Receiver)

(a) Install the stereo opening cover with the 4 screws.

39. INSTALL RADIO RECEIVER ASSEMBLY (See page AV-40)

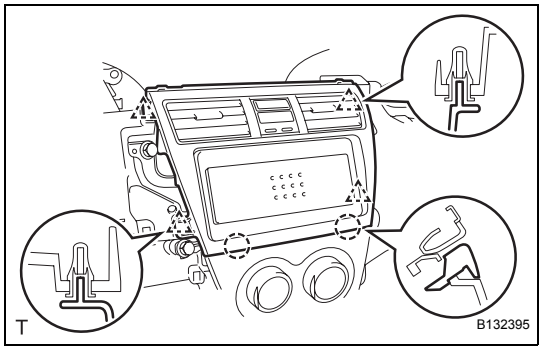

40. INSTALL INSTRUMENT CLUSTER FINISH PANEL CENTER SUB-ASSEMBLY

(a) Engage the 2 claws and 4 clips and install the instrument cluster finish panel center.

41. INSTALL COMBINATION METER ASSEMBLY (See page ME-140)

42. INSTALL INSTRUMENT CLUSTER FINISH PANEL (See page ME-140)

43. INSTALL INSTRUMENT PANEL FINISH PANEL END RH (See page ME-141)

44. INSTALL INSTRUMENT PANEL FINISH PANEL END LH (See page ME-141)

45. INSTALL INSTRUMENT PANEL FINISH PANEL LOWER CENTER (See page ME-142)

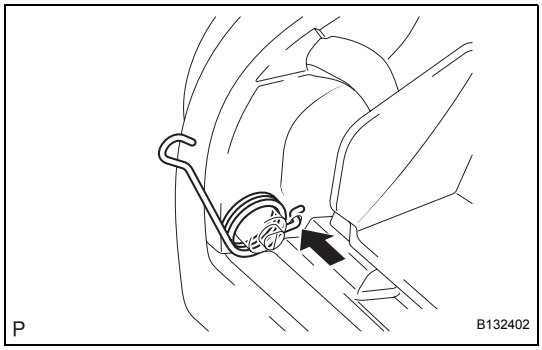

46. INSTALL INSTRUMENT PANEL CUP HOLDER SPRING RH

(a) Install the spring.

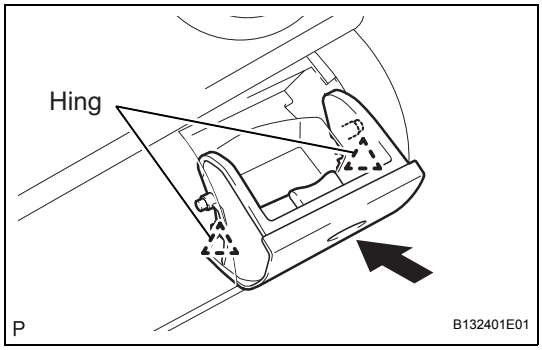

47. INSTALL INSTRUMENT PANEL CUP HOLDER RH

(a) Install the 2 hinges of the cup holder one at a time.

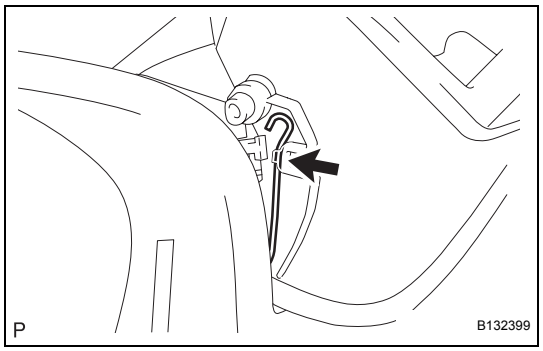

(b) Engage the spring with the instrument panel cup holder.

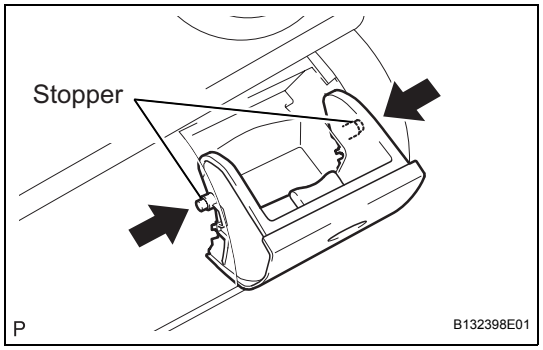

(c) Flex both sides of the cup holder and engage the 2 stoppers.
(d) Close the instrument panel cup holder.

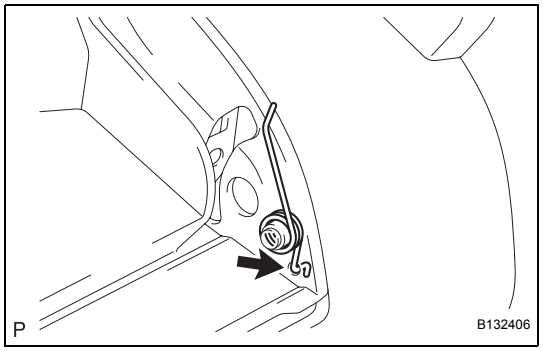

48. INSTALL INSTRUMENT PANEL CUP HOLDER SPRING LH

(a) Install the spring.

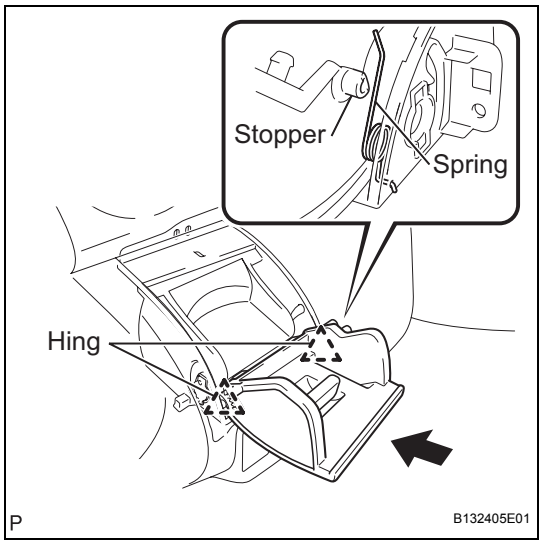

49. INSTALL INSTRUMENT PANEL CUP HOLDER LH

(a) Install the 2 hinges of the cup holder one at a time.
HINT:
Make sure that the spring is set in the position shown in the illustration.

IP

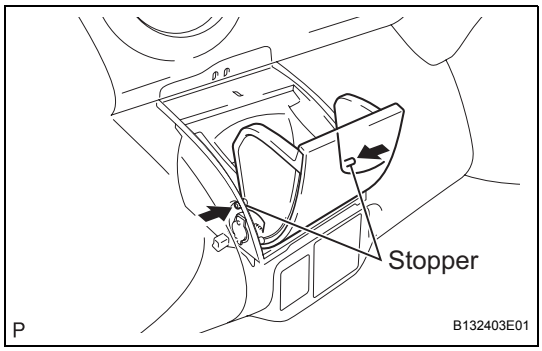

(b) Flex both sides of the cup holder and engage the 2 stoppers.
(c) Close the instrument panel cup holder.

50. CONNECT CABLE TO NEGATIVE BATTERY TERMINAL
Torque: 5.4 N*m (55 kgf*cm, 48 in.*lbf)

51. CHECK SRS WARNING LIGHT
(See page RS-31)

LOWER INSTRUMENT PANEL (for Hatchback)

COMPONENTS

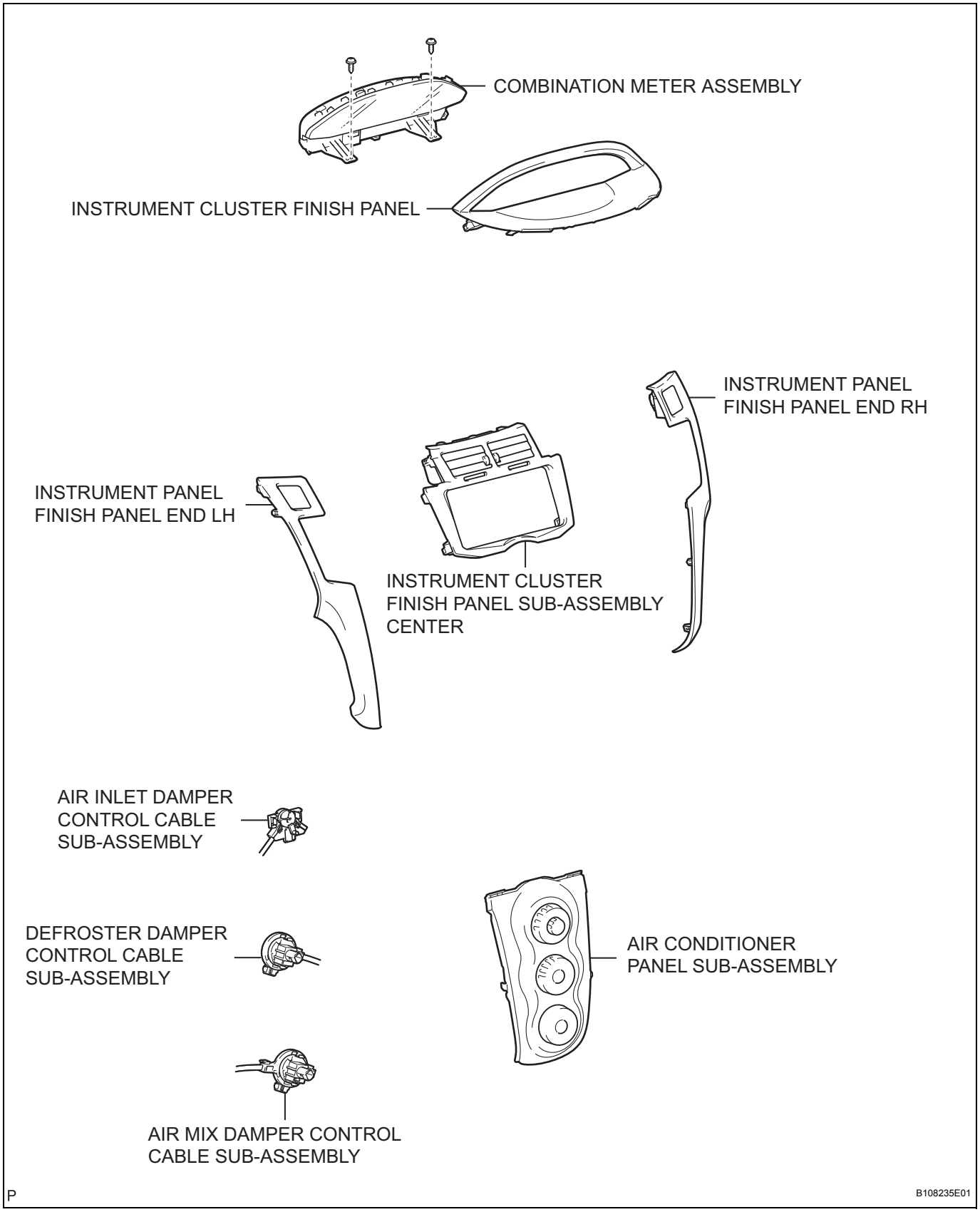

IP

w/o Radio Receiver:

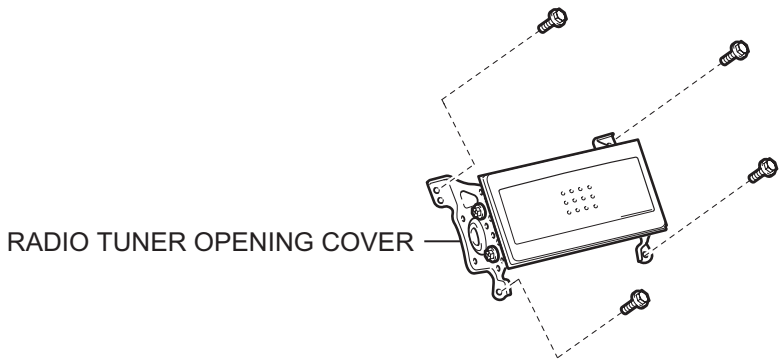

w/o CD Player:

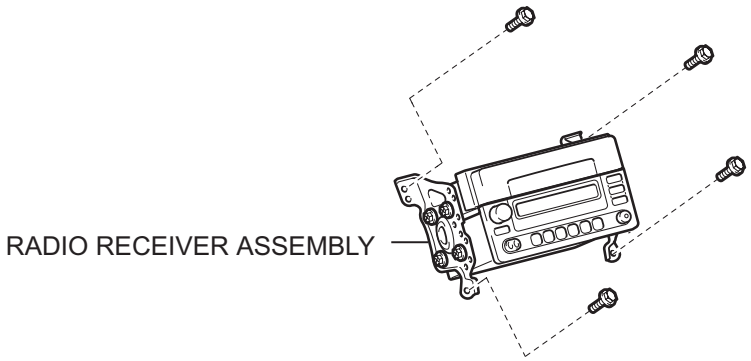

w/ CD Player:

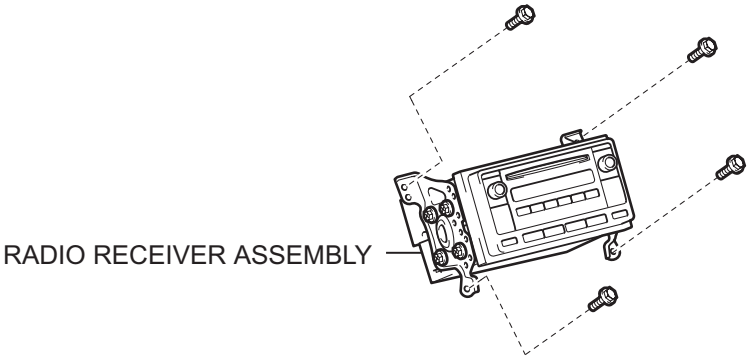

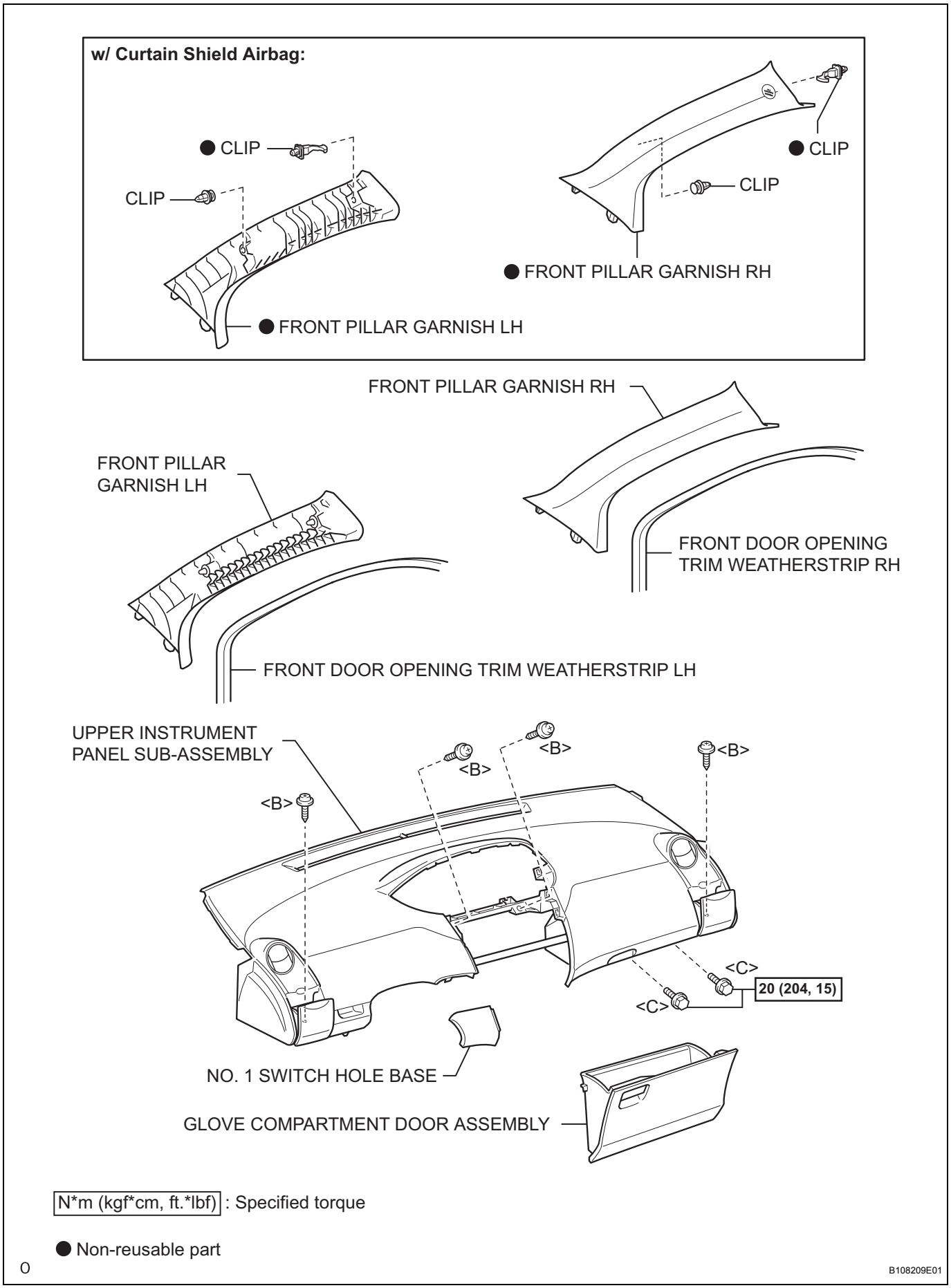
w/ Curtain Shield Airbag:
● CLIP
CLIP
● CLIP
CLIP
● FRONT PILLAR GARNISH RH
● FRONT PILLAR GARNISH LH
FRONT PILLAR GARNISH RH
FRONT PILLAR GARNISH LH
FRONT DOOR OPENING TRIM WEATHERSTRIP RH
FRONT DOOR OPENING TRIM WEATHERSTRIP LH
UPPER INSTRUMENT PANEL SUB-ASSEMBLY
<B>
<B>
<B>
<B>
<C>
<C>
20 (204, 15)
NO. 1 SWITCH HOLE BASE
GLOVE COMPARTMENT DOOR ASSEMBLY
N*m (kgf*cm, ft.*lbf) : Specified torque
● Non-reusable part
O
B108209E01

IP

for Manual Transaxle:

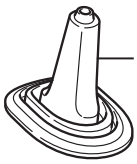

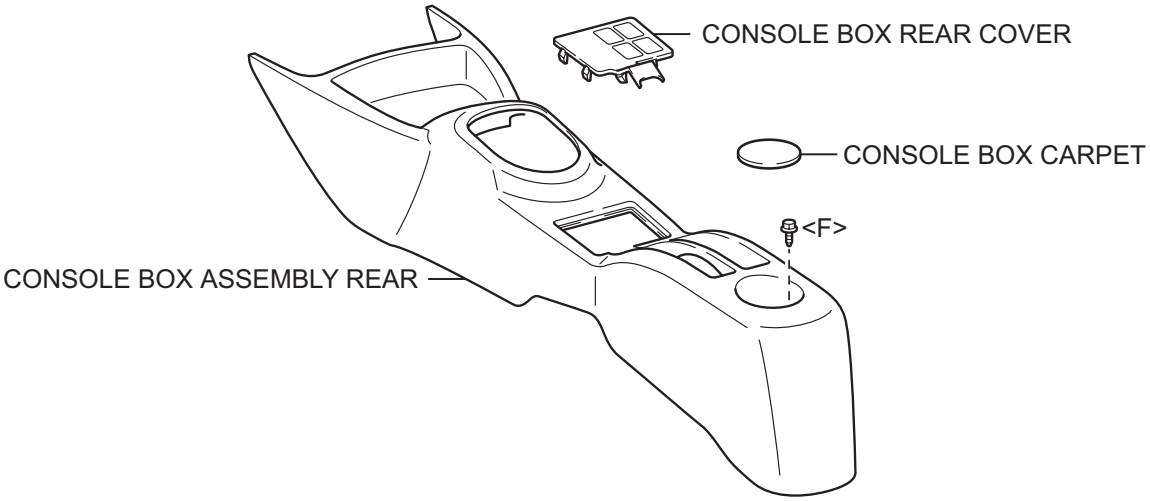

T

B108229E02

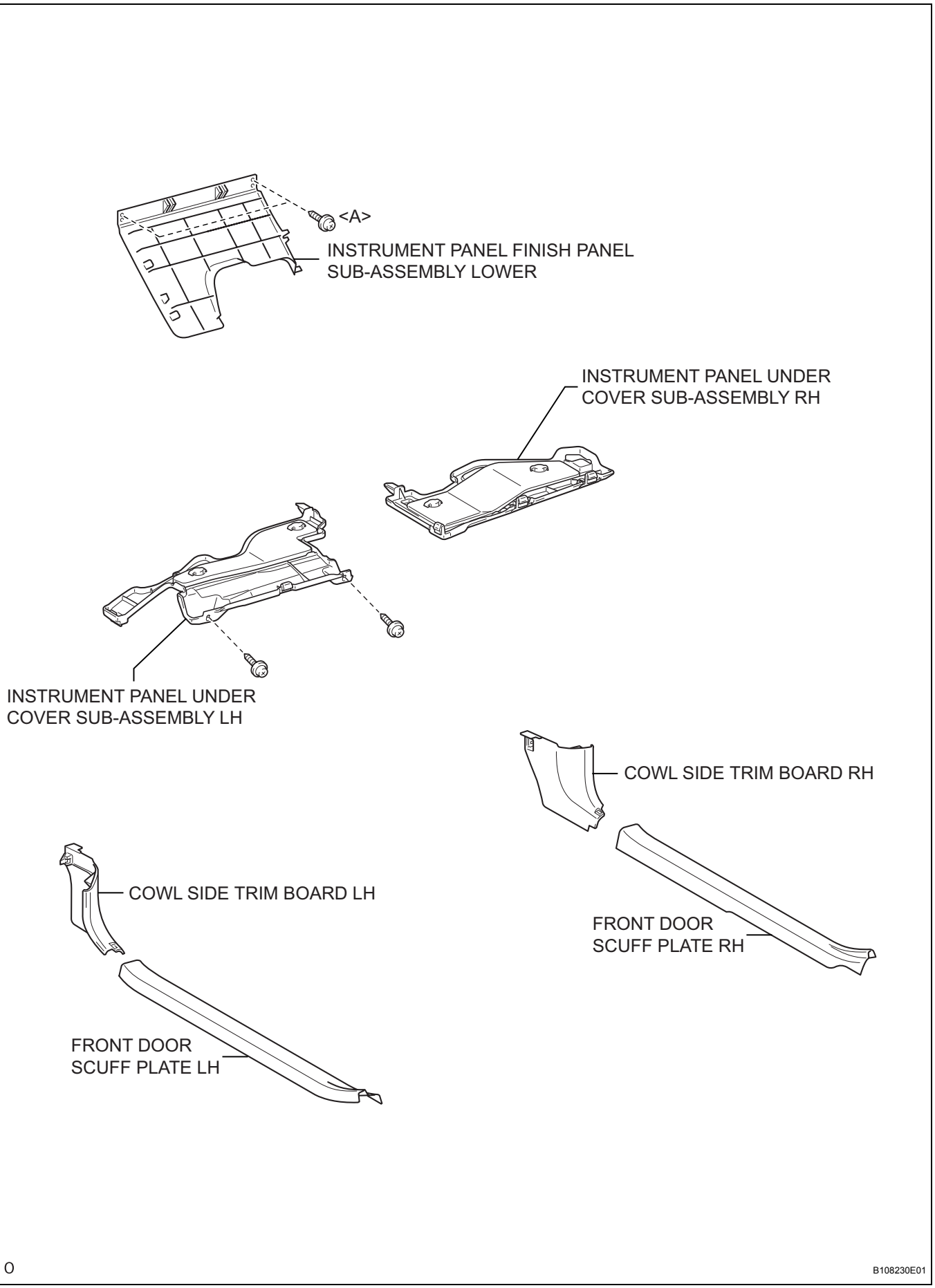
<A>
INSTRUMENT PANEL FINISH PANEL SUB-ASSEMBLY LOWER
INSTRUMENT PANEL UNDER COVER SUB-ASSEMBLY RH
INSTRUMENT PANEL UNDER COVER SUB-ASSEMBLY LH
COWL SIDE TRIM BOARD RH
FRONT DOOR SCUFF PLATE RH
COWL SIDE TRIM BOARD LH
FRONT DOOR SCUFF PLATE LH
O
B108230E01

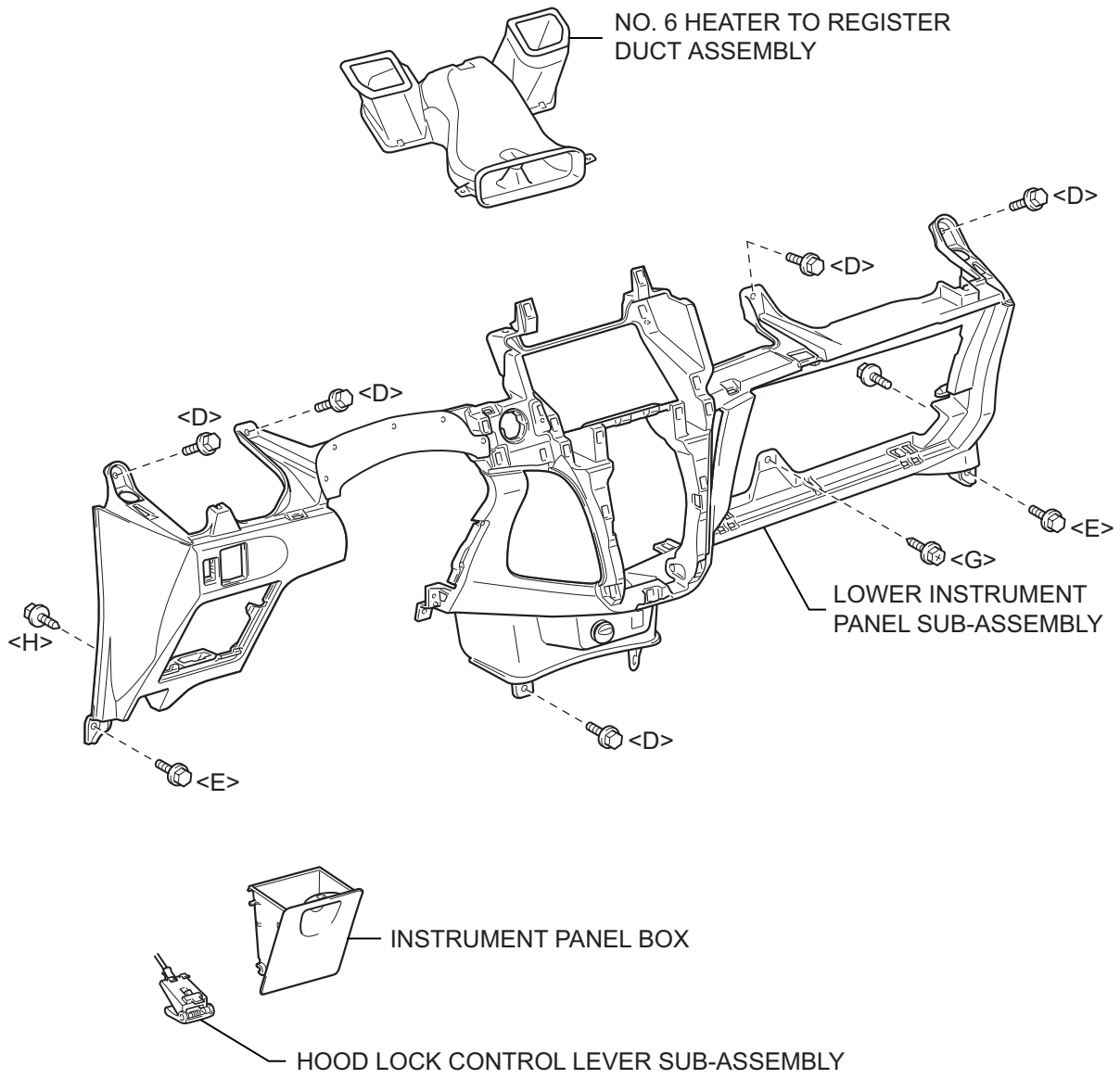

O

B108207E01

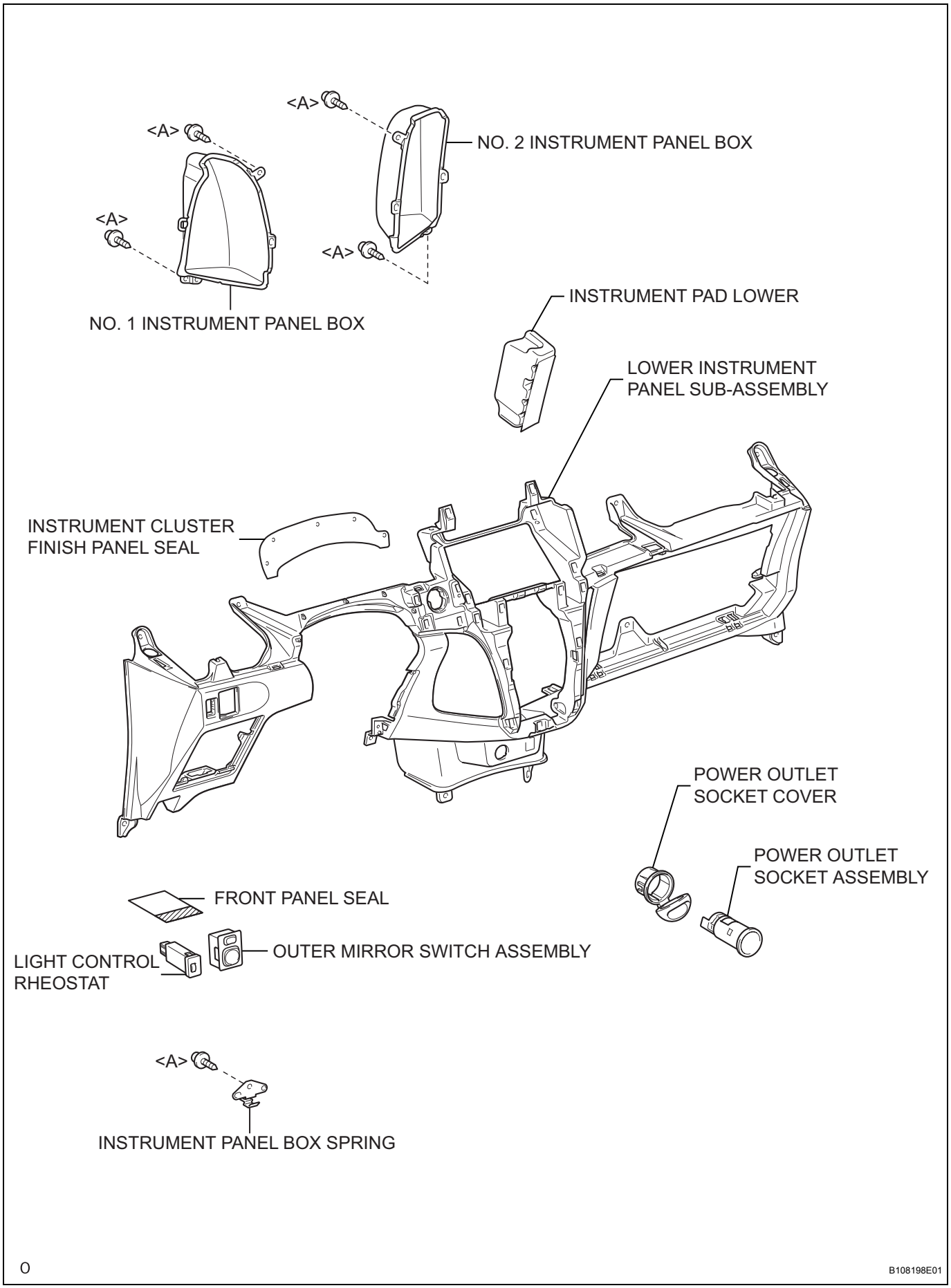
<A>
<A>
<A>
<A>
NO. 2 INSTRUMENT PANEL BOX
NO. 1 INSTRUMENT PANEL BOX
INSTRUMENT PAD LOWER
LOWER INSTRUMENT PANEL SUB-ASSEMBLY
INSTRUMENT CLUSTER FINISH PANEL SEAL
POWER OUTLET SOCKET COVER
POWER OUTLET SOCKET ASSEMBLY
FRONT PANEL SEAL
OUTER MIRROR SWITCH ASSEMBLY
LIGHT CONTROL RHEOSTAT
<A>
INSTRUMENT PANEL BOX SPRING
O
B108198E01

REMOVAL

HINT:
Use the same procedure for both the RH and LH sides.

1. **BOLTS, SCREWS AND NUTS TABLE**
   HINT:
   All bolts, screws and nuts relevant to installing and removing the instrument panel are shown, along with their alphabetic codes, in the table below.

mm(in.) (L=Length)

Code	Shape	Code	Shape	Code	Shape
<A>	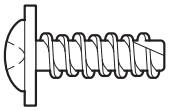 φ=5 (0.20) L=14 (0.55) 93568-15014	<B>	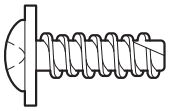 φ=5 (0.20) L=14 (0.55) 93568-55014	<C>	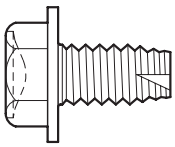 φ=8 (0.31) L=15 (0.59) 90105-08120
<D>	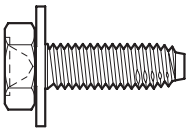 φ=6 (0.24) L=20 (0.79) 90159-60610	<E>	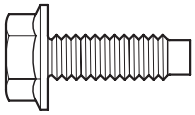 φ=6 (0.24) L=16 (0.63) 91533-80616	<F>	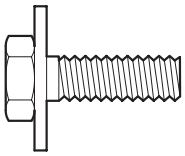 φ=6 (0.24) L=16 (0.63) 91635-60616
<G>	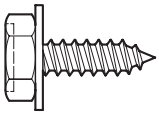 φ=5 (0.20) L=16 (0.63) 90159-50322	<H>	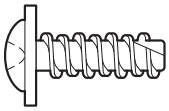 φ=5 (0.20) L=16 (0.63) 93568-15016		

P B118995E01

2. **DISCONNECT CABLE FROM NEGATIVE BATTERY TERMINAL**
   Wait for at least 90 seconds after disconnecting the cable to prevent the airbag from working.
3. **REMOVE INSTRUMENT PANEL FINISH PANEL END LH (See page ME-145)**
4. **REMOVE INSTRUMENT PANEL FINISH PANEL END RH (See page ME-145)**
5. **REMOVE INSTRUMENT CLUSTER FINISH PANEL (See page ME-145)**

6. **REMOVE COMBINATION METER ASSEMBLY (See page ME-146)**
7. **REMOVE INSTRUMENT CLUSTER FINISH PANEL SUB-ASSEMBLY CENTER (See page AC-250)**
8. **REMOVE RADIO TUNER OPENING COVER (w/o Radio Receiver) (See page AC-125)**
9. **REMOVE RADIO RECEIVER ASSEMBLY (See page AV-44)**
10. **REMOVE AIR CONDITIONER PANEL SUB-ASSEMBLY (See page AC-250)**
11. **DISCONNECT AIR MIX DAMPER CONTROL CABLE SUB-ASSEMBLY (See page AC-251)**
12. **DISCONNECT DEFROSTER DAMPER CONTROL CABLE SUB-ASSEMBLY (See page AC-251)**
13. **DISCONNECT AIR INLET DAMPER CONTROL CABLE SUB-ASSEMBLY (See page AC-251)**
14. **REMOVE FRONT DOOR OPENING TRIM WEATHERSTRIP RH (See page IR-50)**
15. **REMOVE FRONT DOOR OPENING TRIM WEATHERSTRIP LH (See page IR-50)**
16. **REMOVE FRONT PILLAR GARNISH RH (See page IR-58)**
17. **REMOVE FRONT PILLAR GARNISH LH (See page IR-59)**
18. **REMOVE NO. 1 SWITCH HOLE BASE (See page IP-20)**
19. **REMOVE GLOVE COMPARTMENT DOOR ASSEMBLY (See page IP-20)**
20. **REMOVE UPPER INSTRUMENT PANEL SUB-ASSEMBLY (See page IP-21)**
21. **REMOVE FRONT DOOR SCUFF PLATE RH (See page IR-49)**
22. **REMOVE FRONT DOOR SCUFF PLATE LH (See page IR-49)**
23. **REMOVE INSTRUMENT PANEL UNDER COVER SUB-ASSEMBLY RH (See page IR-50)**
24. **REMOVE INSTRUMENT PANEL UNDER COVER SUB-ASSEMBLY LH (See page IR-50)**
25. **REMOVE COWL SIDE TRIM BOARD RH (See page IR-50)**
26. **REMOVE COWL SIDE TRIM BOARD LH (See page IR-50)**

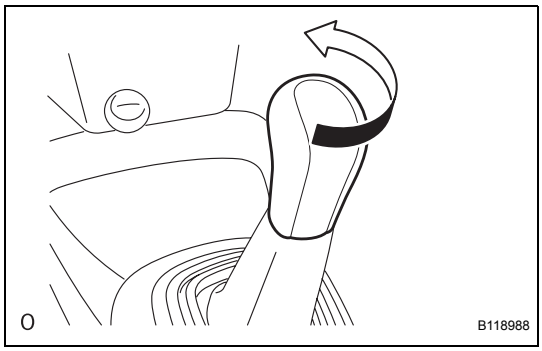

27. REMOVE SHIFT LEVER KNOB SUB-ASSEMBLY (for Manual Transaxle)

(a) Remove the shift lever knob.

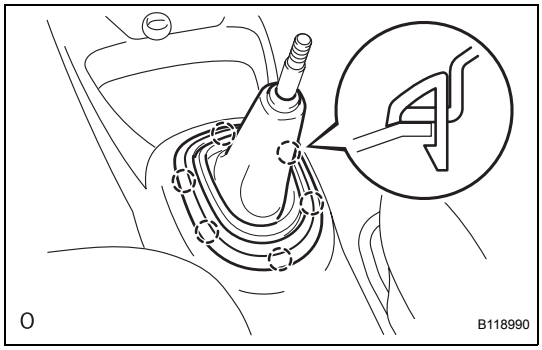

28. REMOVE SHIFTING HOLE COVER SUB-ASSEMBLY (for Manual Transaxle)

(a) Disengage the 6 claws and remove the shifting hole cover.

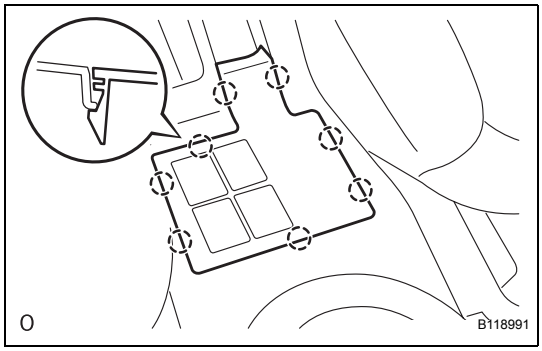

29. REMOVE CONSOLE BOX REAR COVER

(a) Disengage the 8 claws and remove the console box rear cover.

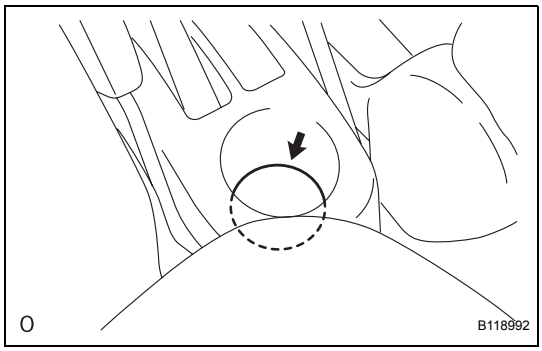

30. REMOVE CONSOLE BOX CARPET

(a) Remove the console box carpet.

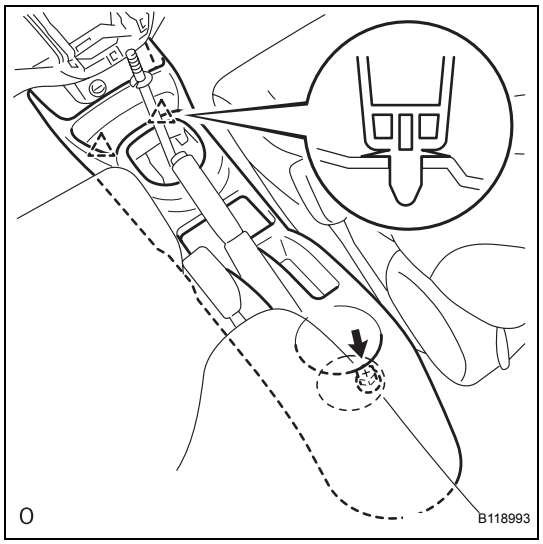

31. REMOVE CONSOLE BOX ASSEMBLY REAR

(a) Remove bolt <F>.

(b) Disengage the 2 clips and remove the console box rear.

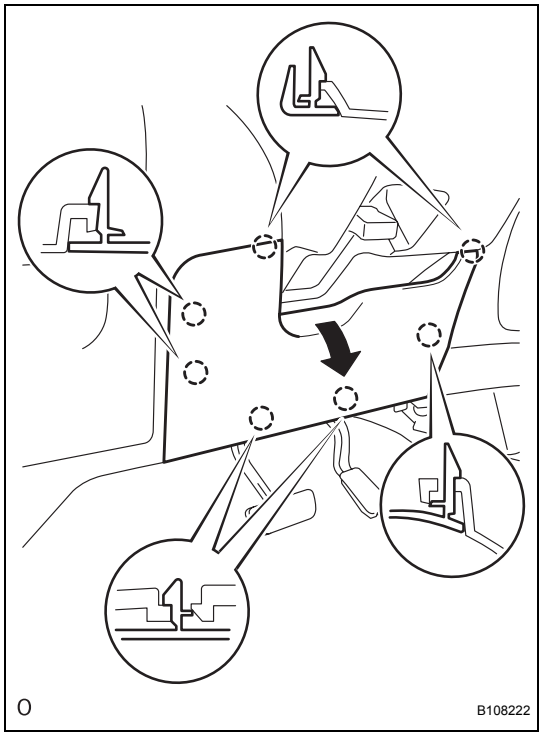

32. REMOVE INSTRUMENT PANEL FINISH PANEL SUB-ASSEMBLY LOWER

(a) Disengage the 7 claws and open the instrument panel finish panel lower.

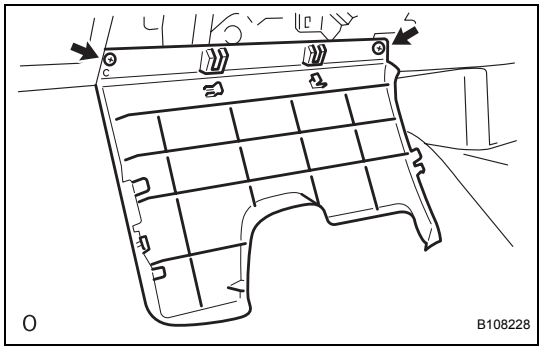

(b) Remove the 2 <A> screws and the instrument panel finish panel lower.

IP

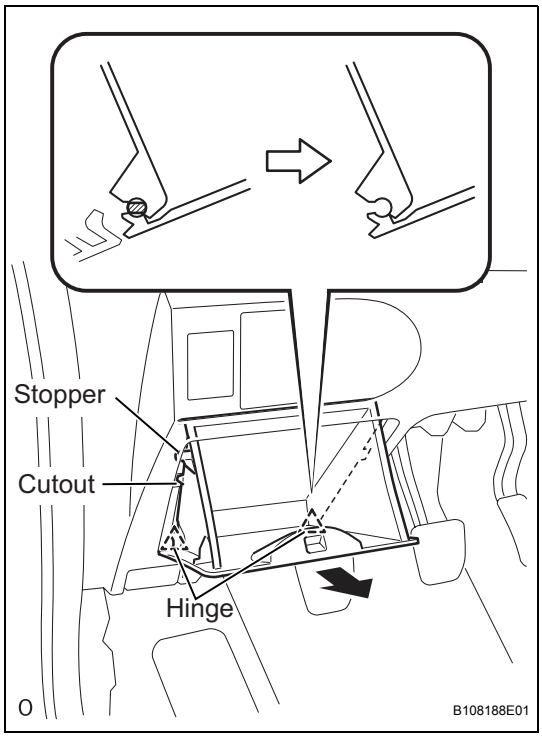

33. REMOVE INSTRUMENT PANEL BOX

(a) Open the instrument panel box.

(b) Pull the hinge side of the instrument panel box out horizontally with the instrument panel open and disengage the 2 hinges.

(c) Remove the stopper of the instrument panel box from the cutout of the instrument panel lower and remove the instrument panel box.

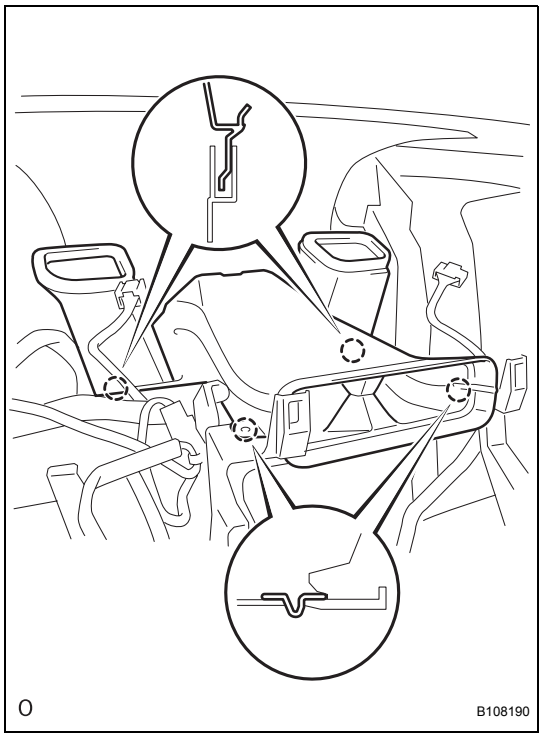

34. REMOVE NO. 6 HEATER TO REGISTER DUCT ASSEMBLY

(a) Disengage the 4 claws and remove the heater to register duct.

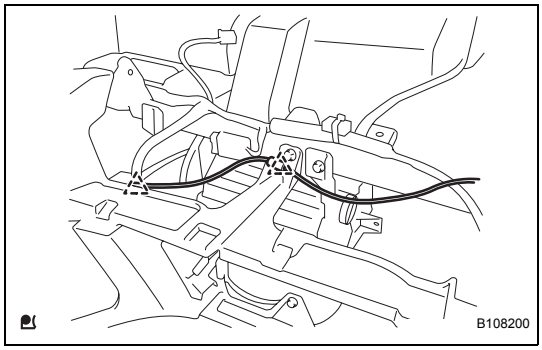

35. DISCONNECT ANTENNA CORD SUB-ASSEMBLY

(a) Disconnect the 2 antenna cord clamps.

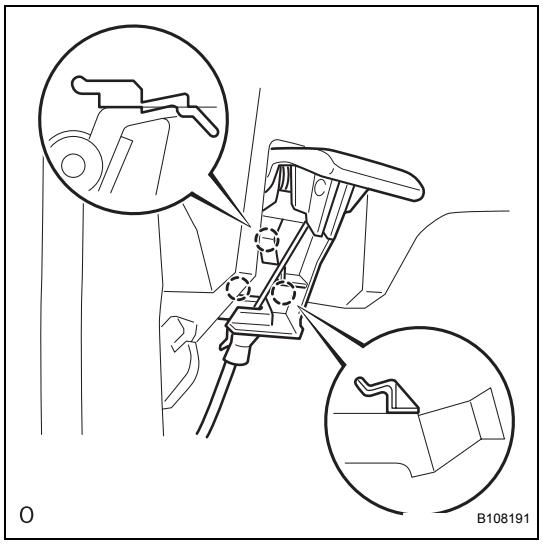

36. SEPARATE HOOD LOCK CONTROL LEVER SUB-ASSEMBLY

(a) Disengage the 3 claws and separate the hood lock control lever.

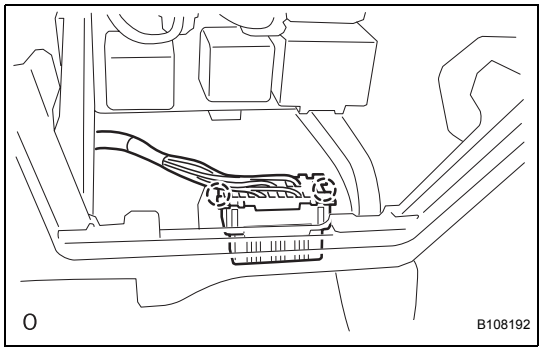

37. REMOVE LOWER INSTRUMENT PANEL SUB-ASSEMBLY

(a) Disengage the 2 claws and disconnect the DLC3 connector.
(b) Disconnect the clamps and connectors.
(c) Remove the 5 <D> bolts, 2 <E> bolts, screw <G> and screw <H> and remove the lower instrument panel.

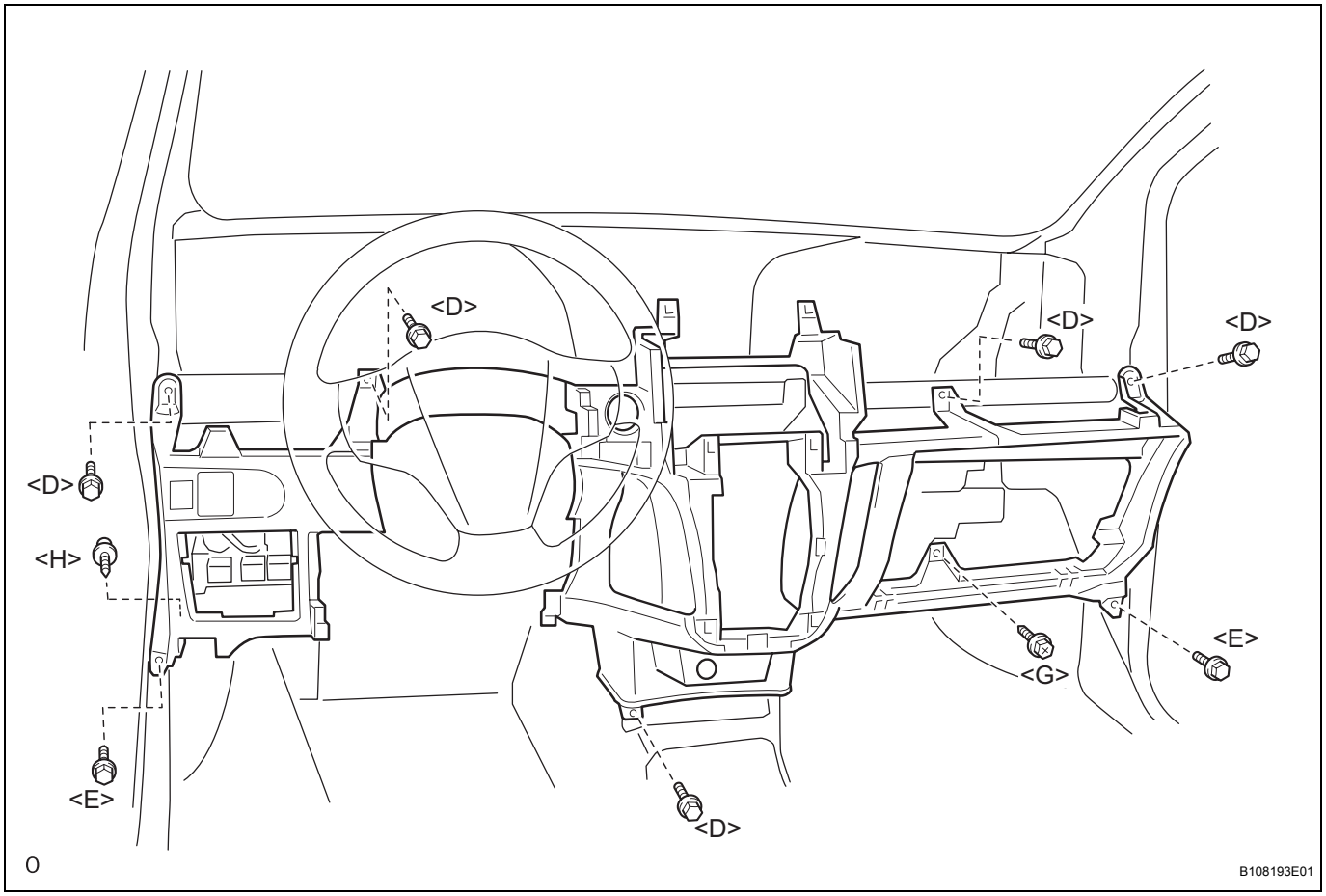

IP

38. REMOVE POWER OUTLET SOCKET ASSEMBLY (See page OT-9)

39. REMOVE POWER OUTLET SOCKET COVER (See page OT-10)

40. REMOVE OUTER MIRROR SWITCH ASSEMBLY

(a) Disengage the 2 claws and remove the outer mirror switch.

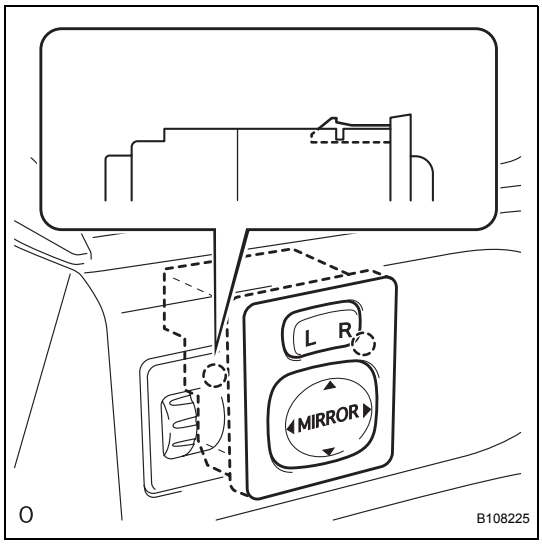

41. REMOVE LIGHT CONTROL RHEOSTAT

(a) Disengage the 2 claws and remove the light control rheostat.

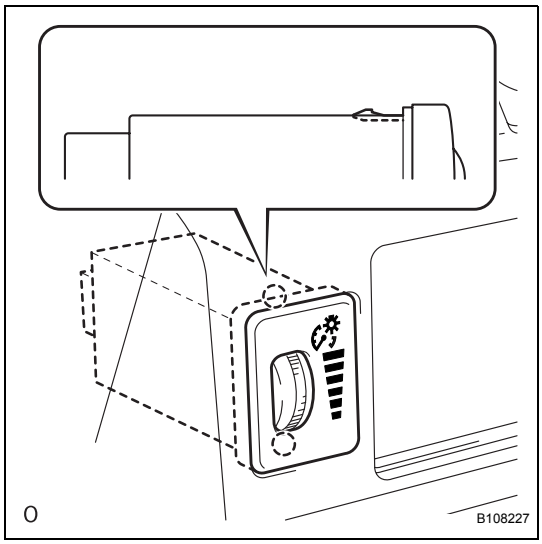

42. REMOVE FRONT PANEL SEAL

(a) Remove the front panel seal.

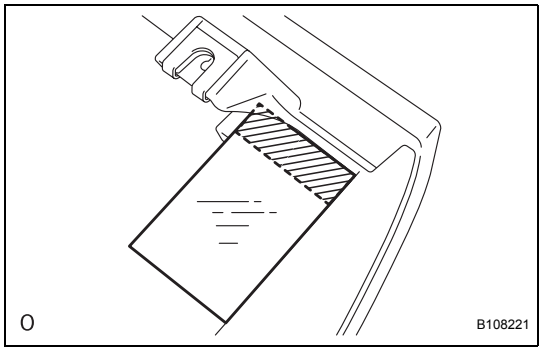

IP

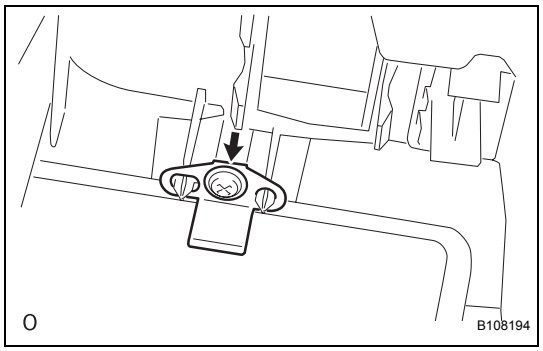

43. REMOVE INSTRUMENT PANEL BOX SPRING

(a) Remove screw <A> and the instrument panel box spring.

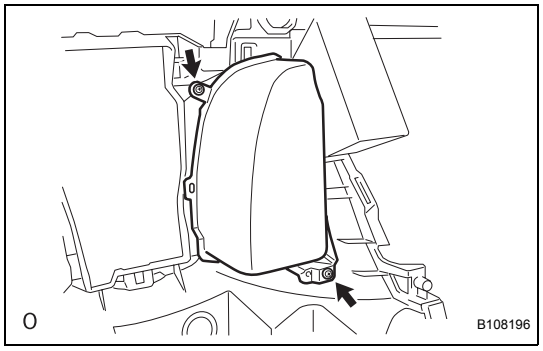

44. REMOVE NO. 1 INSTRUMENT PANEL BOX

(a) Remove the 2 <A> screws and the instrument panel box.

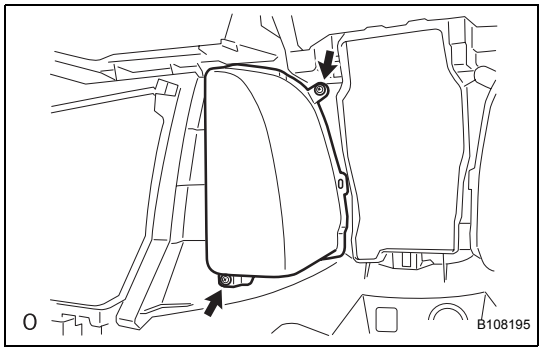

45. REMOVE NO. 2 INSTRUMENT PANEL BOX

(a) Remove the 2 <A> screws and the instrument panel box.

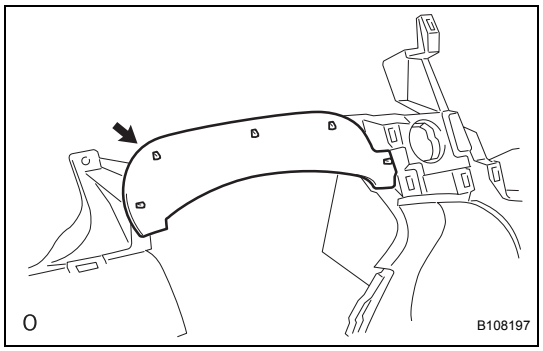

46. REMOVE INSTRUMENT CLUSTER FINISH PANEL SEAL

(a) Disengage the 5 claws and remove the panel seal.

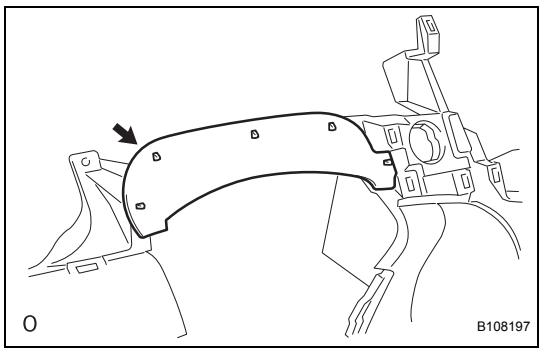

INSTALLATION

1. INSTALL INSTRUMENT CLUSTER FINISH PANEL SEAL

(a) Engage the 5 claws and install the panel seal.

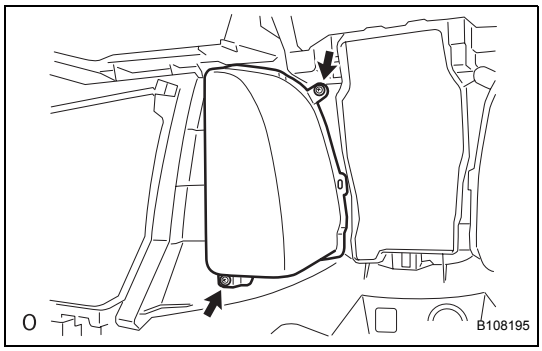

2. INSTALL NO. 2 INSTRUMENT PANEL BOX

(a) Install the instrument panel box with the 2 <A> screws.

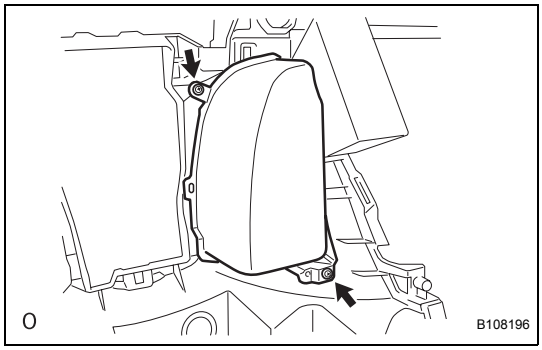

3. INSTALL NO. 1 INSTRUMENT PANEL BOX

(a) Install the instrument panel box with the 2 <A> screws.

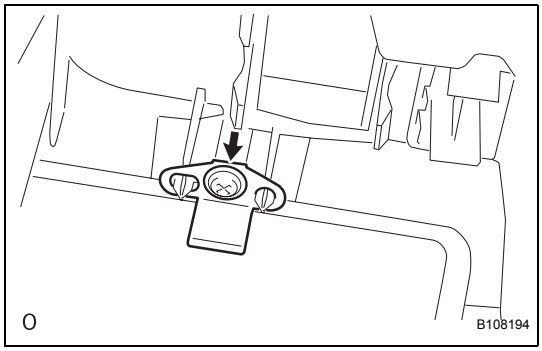

4. INSTALL INSTRUMENT PANEL BOX SPRING

(a) Install the instrument panel box spring with screw <A>.

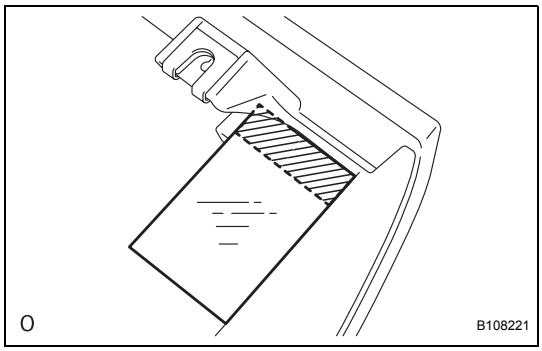

5. INSTALL FRONT PANEL SEAL

(a) Install the front panel seal.

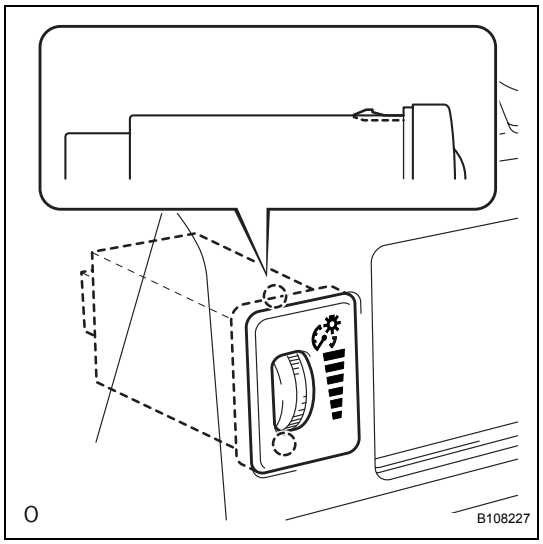

6. INSTALL LIGHT CONTROL RHEOSTAT

(a) Engage the 2 claws and install the light control rheostat.

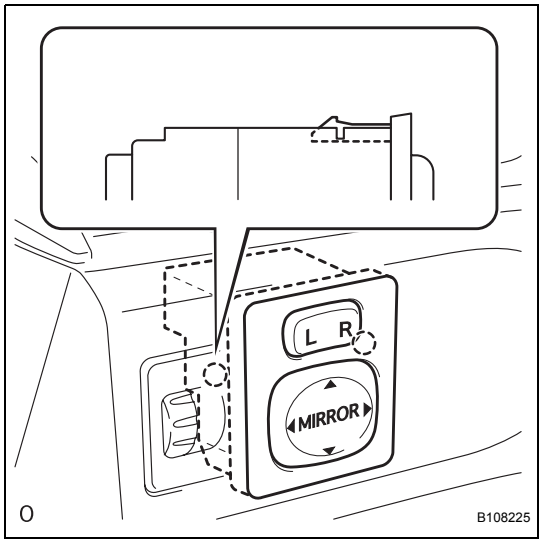

7. INSTALL OUTER MIRROR SWITCH ASSEMBLY

(a) Engage the 2 claws and install the outer mirror switch.

8. INSTALL POWER OUTLET SOCKET COVER (See page OT-10)

9. INSTALL POWER OUTLET SOCKET ASSEMBLY (See page OT-10)

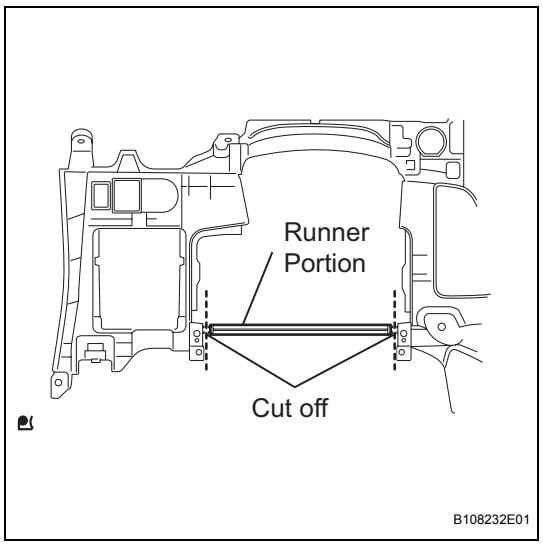

10. INSTALL LOWER INSTRUMENT PANEL SUB-ASSEMBLY

(a) Using a nipper, cut off both ends of the runner portion shown in the illustration (When installing a new one).

(b) Apply butyl tape to install a new instrument panel pad lower onto the instrument panel lower (When installing a new one).

Adhesive:

Part No. 08850-00065, Butyl Tape Set or the equivalent

(c) Install the lower instrument panel with the 5 <D> bolts, 2 <E> bolts, screw <G> and screw <H>.

NOTICE:

Do not excessively tighten the <D> bolts, otherwise, it may damage the area not being tightened.

IP

(d) Connect the clamps and connectors.

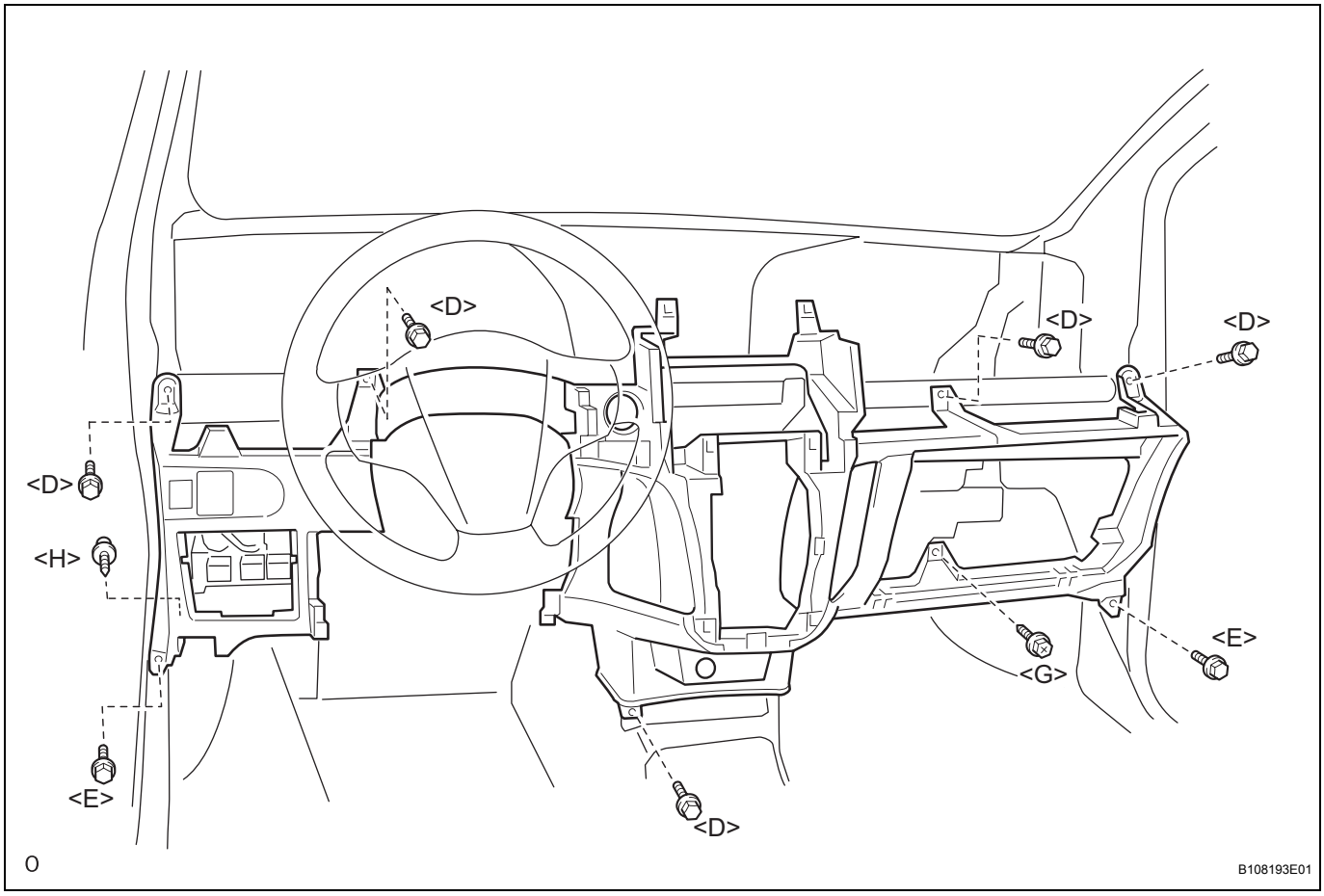

(e) Engage the 2 claws to connect the DLC3 connector.

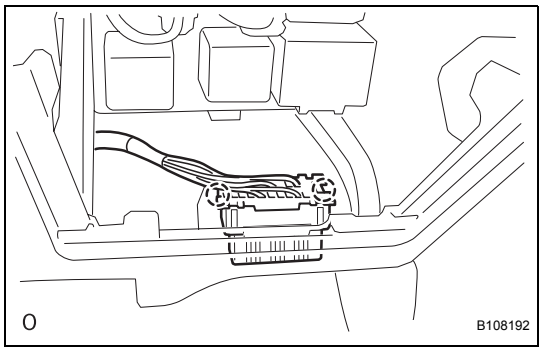

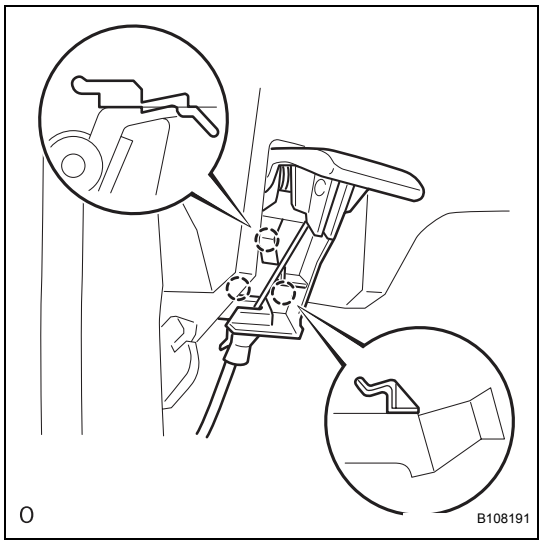

11. CONNECT HOOD LOCK CONTROL LEVER SUB-ASSEMBLY

(a) Engage the 3 claws to connect the control lever.

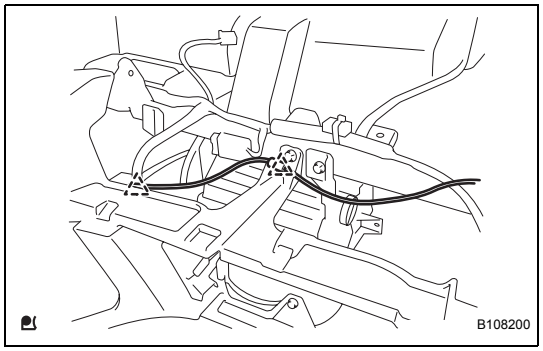

12. CONNECT ANTENNA CORD SUB-ASSEMBLY

(a) Connect the 2 antenna cord clamps.

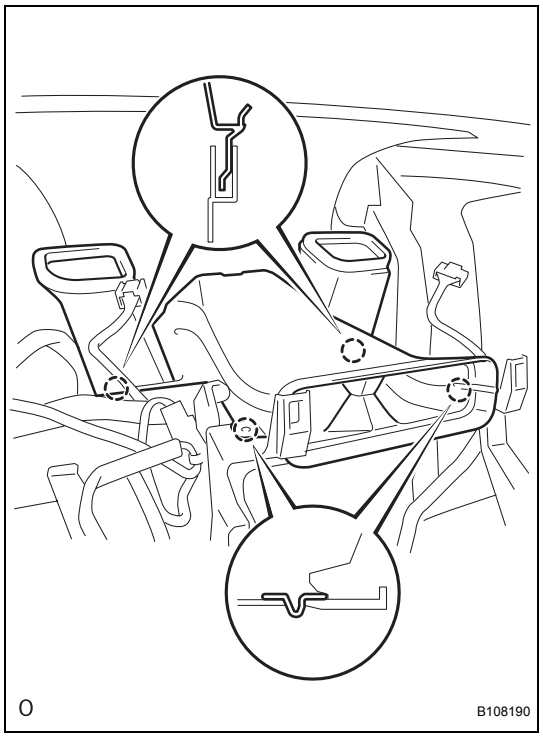

13. INSTALL NO. 6 HEATER TO REGISTER DUCT ASSEMBLY

(a) Engage the 4 claws and install the heater to register duct.

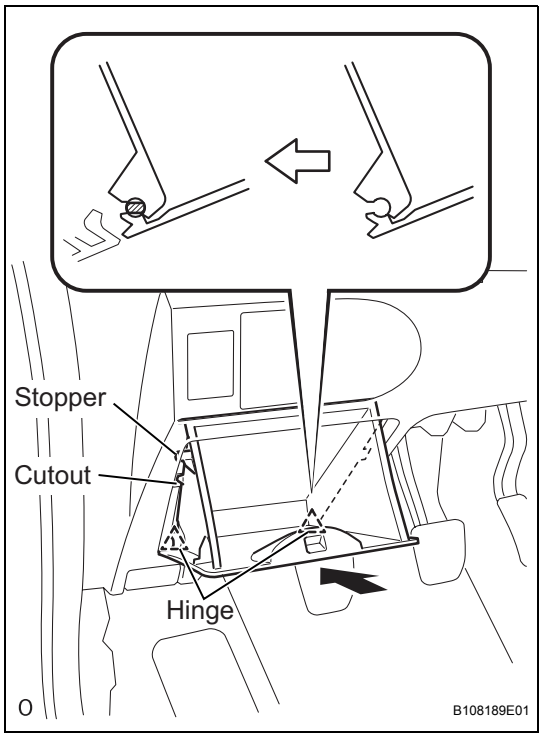

14. INSTALL INSTRUMENT PANEL BOX

(a) Insert the stopper of the instrument panel box from the cutout of the instrument panel lower.
(b) Engage the hinges with the instrument panel open.
(c) Close the instrument panel box.

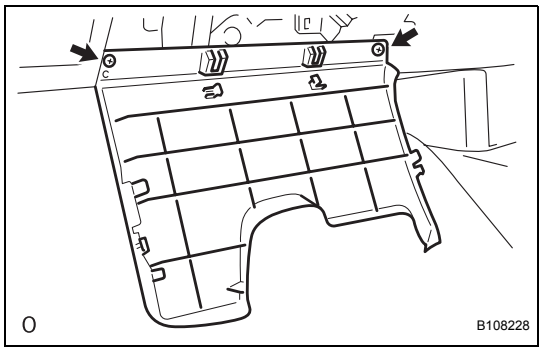

15. INSTALL INSTRUMENT PANEL FINISH PANEL SUB-ASSEMBLY LOWER

(a) Install the 2 <A> screws.

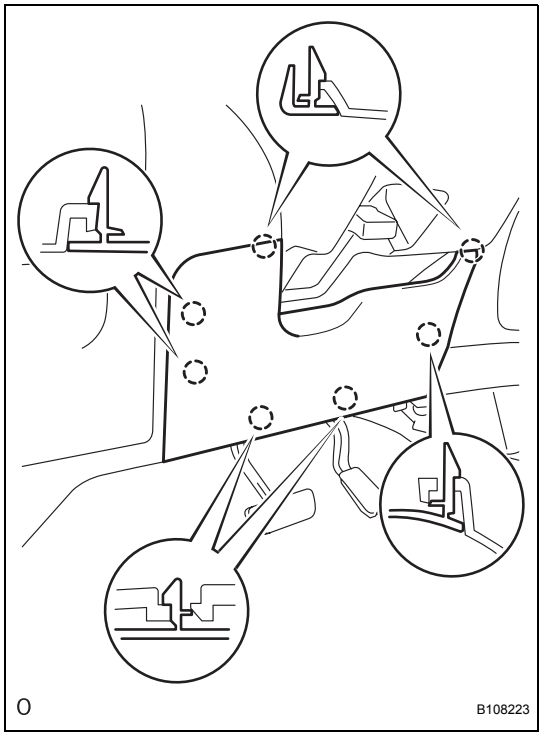

(b) Engage the 7 claws and install the instrument panel finish panel lower.

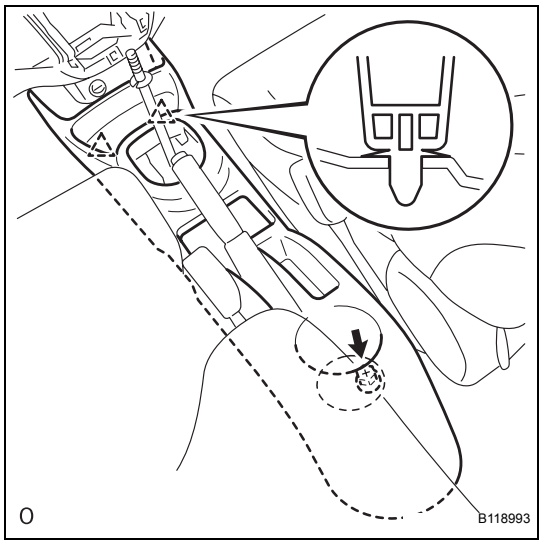

16. INSTALL CONSOLE BOX ASSEMBLY REAR

(a) Engage the 2 clips and install the console box rear.

(b) Install bolt <F>.

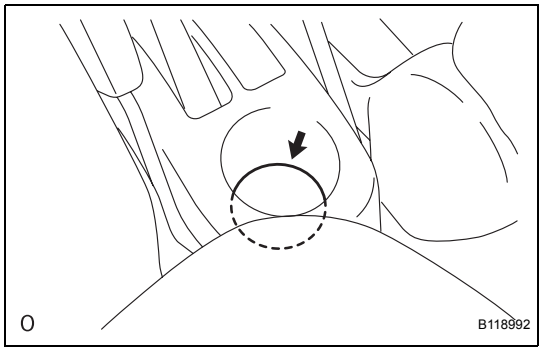

17. INSTALL CONSOLE BOX CARPET

(a) Install the console box carpet.

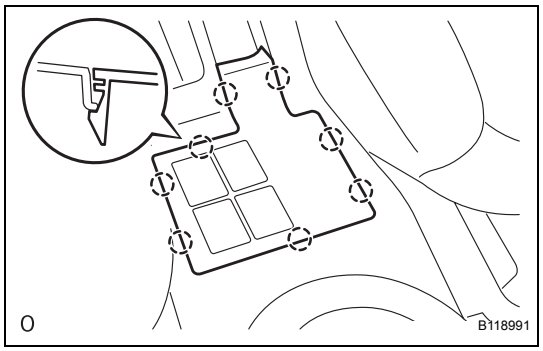

18. INSTALL CONSOLE BOX REAR COVER

(a) Engage the 8 claws and install the console box rear cover.

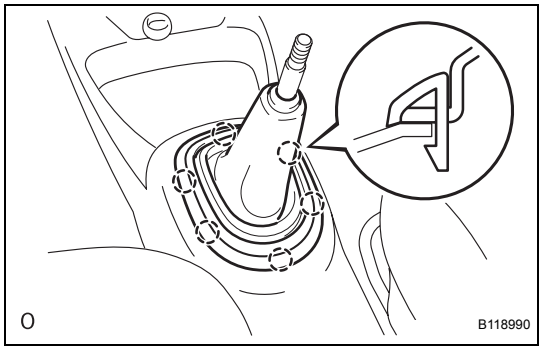

19. INSTALL SHIFTING HOLE COVER SUB-ASSEMBLY (for Manual Transaxle)

(a) Engage the 6 claws and install the shifting hole cover.

IP

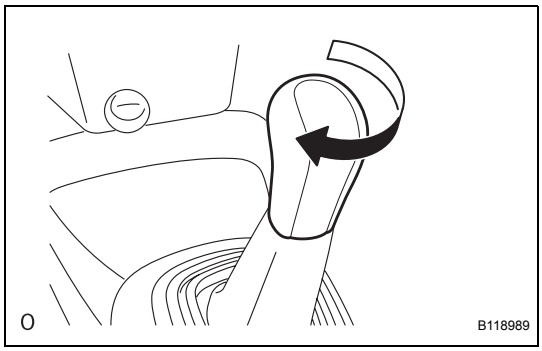

20. **INSTALL SHIFT LEVER KNOB SUB-ASSEMBLY (for Manual Transaxle)**
    (a) Install the shift lever knob.
21. **INSTALL COWL SIDE TRIM BOARD RH (See page IR-81)**
22. **INSTALL COWL SIDE TRIM BOARD LH (See page IR-81)**
23. **INSTALL INSTRUMENT PANEL UNDER COVER SUB-ASSEMBLY LH (See page IR-82)**
24. **INSTALL INSTRUMENT PANEL UNDER COVER SUB-ASSEMBLY RH (See page IR-81)**
25. **INSTALL FRONT DOOR SCUFF PLATE RH (See page IR-82)**
26. **INSTALL FRONT DOOR SCUFF PLATE LH (See page IR-82)**
27. **INSTALL UPPER INSTRUMENT PANEL SUB-ASSEMBLY (See page IP-29)**
28. **INSTALL GLOVE COMPARTMENT DOOR ASSEMBLY (See page IP-32)**
29. **INSTALL NO. 1 SWITCH HOLE BASE (See page IP-32)**
30. **INSTALL FRONT PILLAR GARNISH RH (See page IR-71)**
31. **INSTALL FRONT PILLAR GARNISH LH (See page IR-72)**
32. **INSTALL FRONT DOOR OPENING TRIM WEATHERSTRIP RH (See page IR-81)**
33. **INSTALL FRONT DOOR OPENING TRIM WEATHERSTRIP LH (See page IR-81)**
34. **CONNECT AIR INLET DAMPER CONTROL CABLE SUB-ASSEMBLY (See page AC-257)**
35. **CONNECT DEFROSTER DAMPER CONTROL CABLE SUB-ASSEMBLY (See page AC-257)**
36. **CONNECT AIR MIX DAMPER CONTROL CABLE SUB-ASSEMBLY (See page AC-257)**
37. **INSTALL AIR CONDITIONER PANEL SUB-ASSEMBLY (See page AC-257)**
38. **INSTALL RADIO TUNER OPENING COVER (w/o Radio Receiver) (See page AC-150)**
39. **INSTALL RADIO RECEIVER ASSEMBLY (See page AV-46)**
40. **INSTALL INSTRUMENT CLUSTER FINISH PANEL SUB-ASSEMBLY CENTER (See page AC-258)**
41. **INSTALL COMBINATION METER ASSEMBLY (See page ME-148)**

42. **INSTALL INSTRUMENT CLUSTER FINISH PANEL (See page ME-148)**
43. **INSTALL INSTRUMENT PANEL FINISH PANEL END RH (See page ME-149)**
44. **INSTALL INSTRUMENT PANEL FINISH PANEL END LH (See page ME-149)**
45. **CONNECT CABLE TO NEGATIVE BATTERY TERMINAL**
    Torque: 5.4 N*m (55 kgf*cm, 48 in.*lbf)
46. **CHECK SRS WARNING LIGHT**
    RS-31

REAR CONSOLE BOX (for Sedan)

COMPONENTS

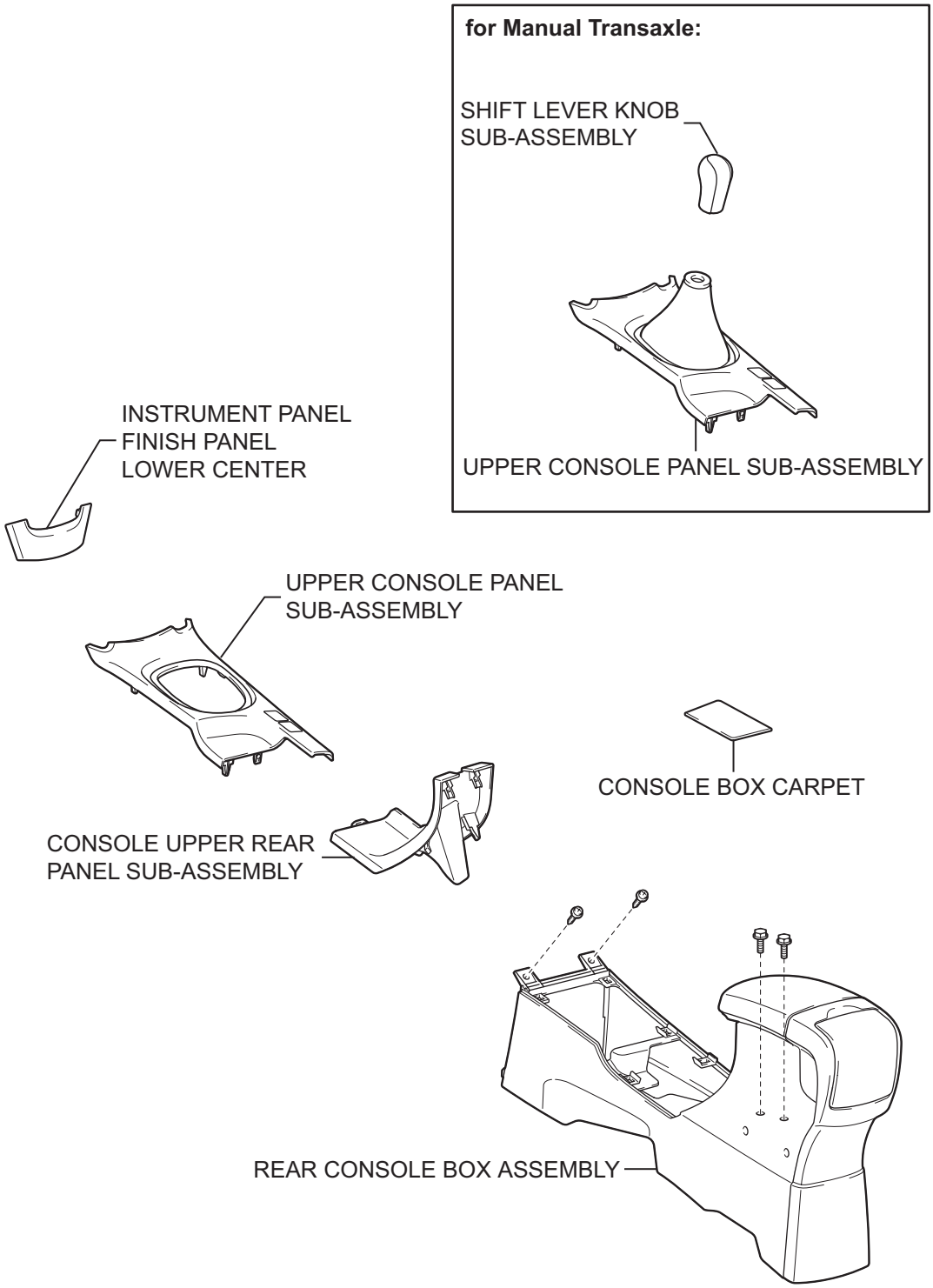

P

B132385E01

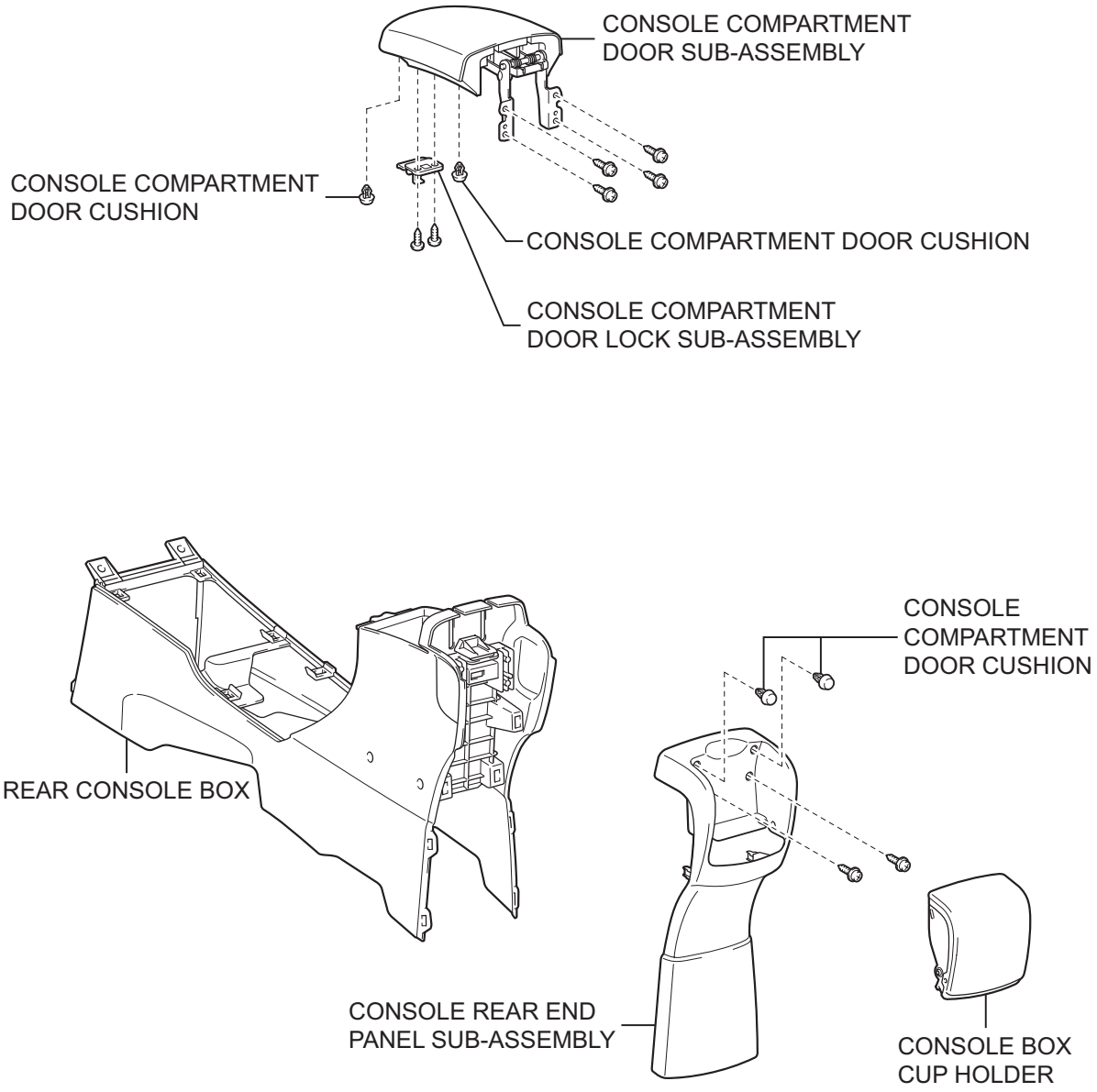

P

B132345E01

REMOVAL

1. **DISCONNECT CABLE FROM NEGATIVE BATTERY TERMINAL**

2. **REMOVE INSTRUMENT PANEL FINISH PANEL LOWER CENTER (See page ME-138)**

3. **REMOVE SHIFT LEVER KNOB SUB-ASSEMBLY (for Manual Transaxle)**
   (a) Remove the shift lever knob.

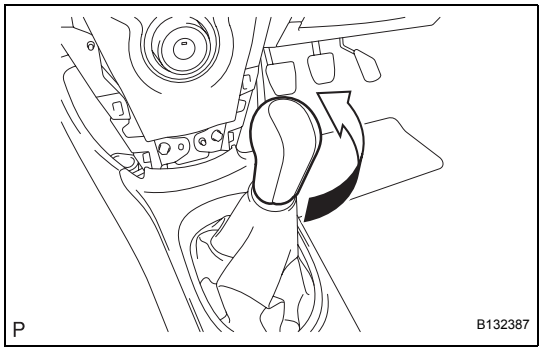

4. **REMOVE UPPER CONSOLE PANEL SUB-ASSEMBLY**
   (a) Shift the shift lever into the N position.
   (b) Disengage the 5 clips and the claw and remove the upper console panel.

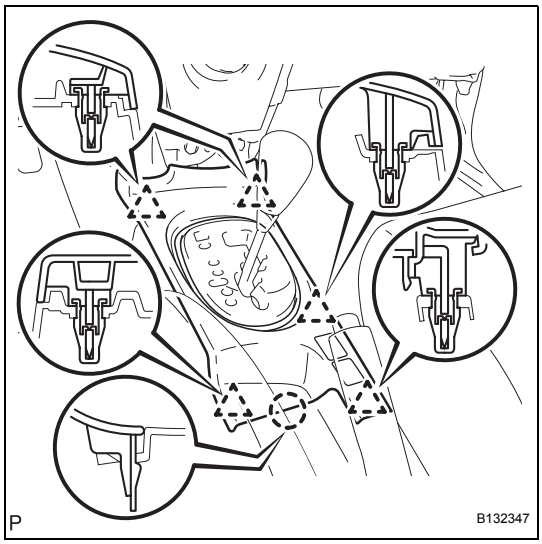

5. **REMOVE CONSOLE UPPER REAR PANEL SUB-ASSEMBLY**
   (a) Disengage the 3 clips and 3 claws.
   (b) Disconnect the connector and remove the console upper rear panel.

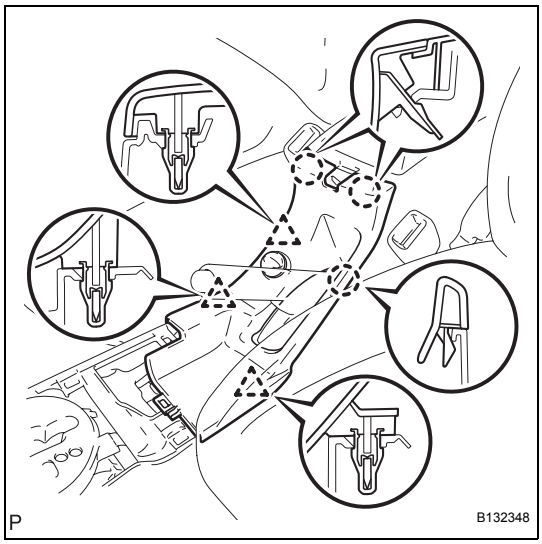

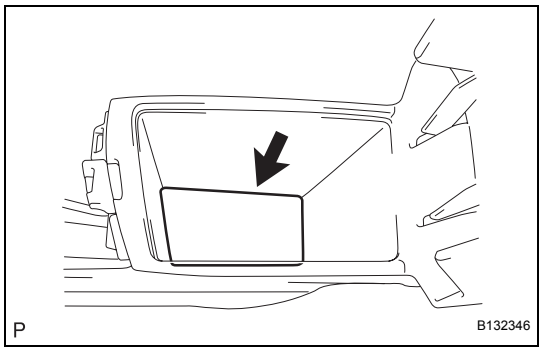

6. REMOVE CONSOLE BOX CARPET

(a) Remove the console box carpet.

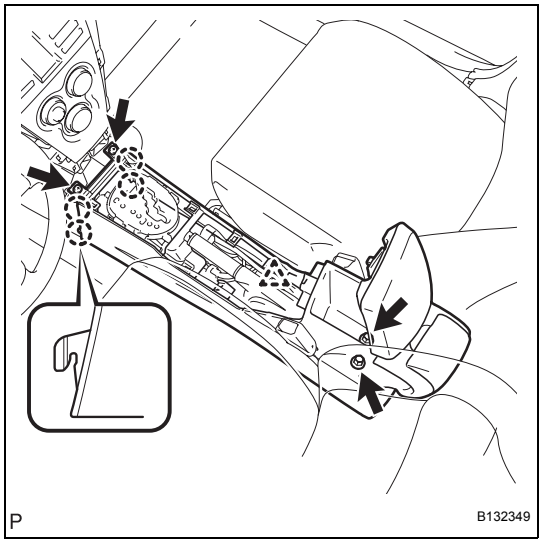

7. REMOVE REAR CONSOLE BOX ASSEMBLY

(a) Disconnect the clamp.
(b) Remove the 2 bolts and 2 screws.
(c) Disengage the 4 claws and remove the rear console box.

DISASSEMBLY

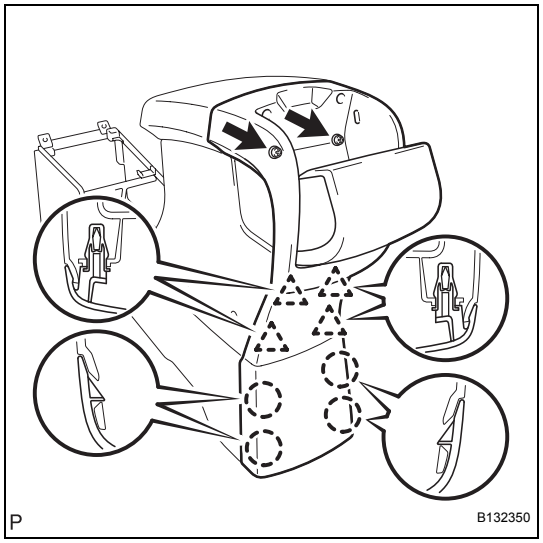

1. REMOVE CONSOLE REAR END PANEL SUB-ASSEMBLY

(a) Remove the 2 screws.
(b) Disengage the 4 claws and 4 clips and remove the console rear end panel.

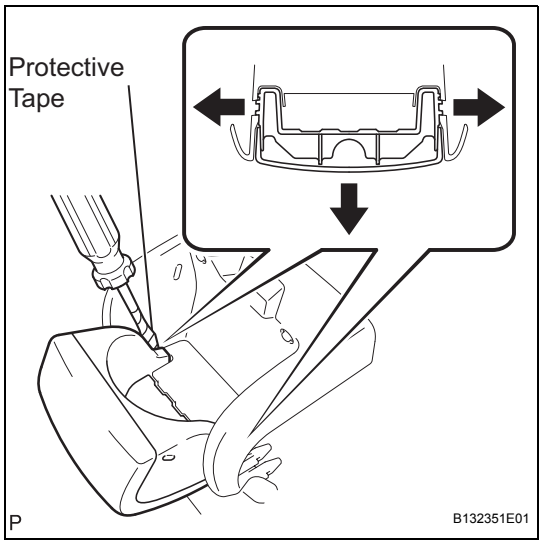

2. REMOVE CONSOLE BOX CUP HOLDER

(a) Using a screwdriver with its tip wrapped in protective tape, prize the hinge portion of the cup holder from side to side while being careful not to apply excessive load to the axis of the instrument panel upper, and remove the cup holder.

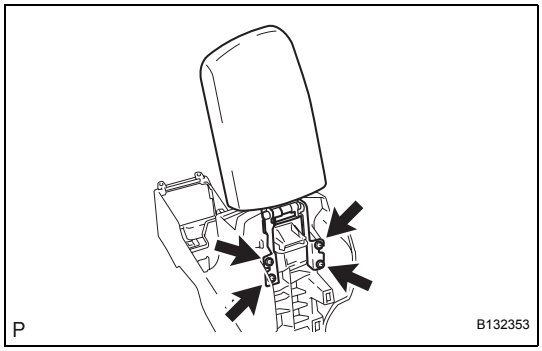

3. REMOVE CONSOLE COMPARTMENT DOOR SUB-ASSEMBLY

(a) Remove the 4 screws and remove the console compartment door.

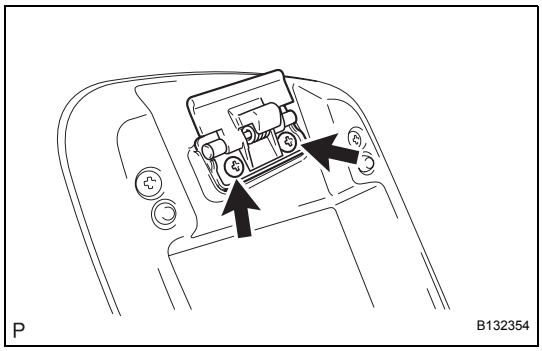

4. REMOVE CONSOLE COMPARTMENT DOOR LOCK SUB-ASSEMBLY

(a) Remove the 2 screws and remove the console compartment door lock.

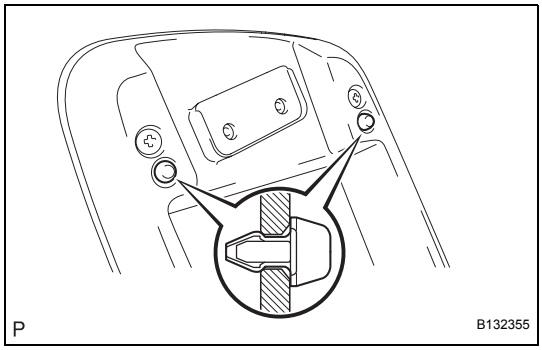

5. REMOVE CONSOLE COMPARTMENT DOOR CUSHION

(a) for Console compartment door:

(1) Remove the console compartment door cushion.

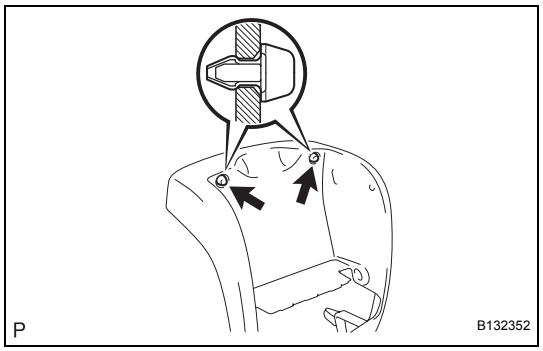

(b) for Console rear end panel:
(1) Remove the console compartment door cushion.

REASSEMBLY

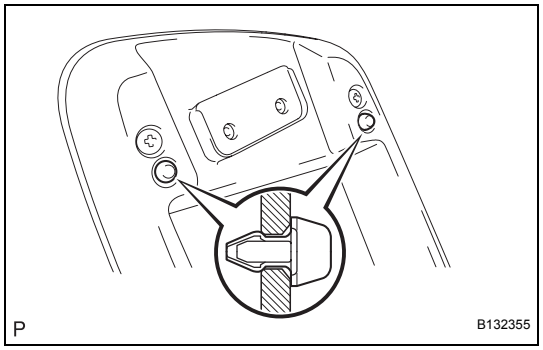

1. INSTALL CONSOLE COMPARTMENT DOOR CUSHION

(a) for Console compartment door:
(1) Install the console compartment door cushion.

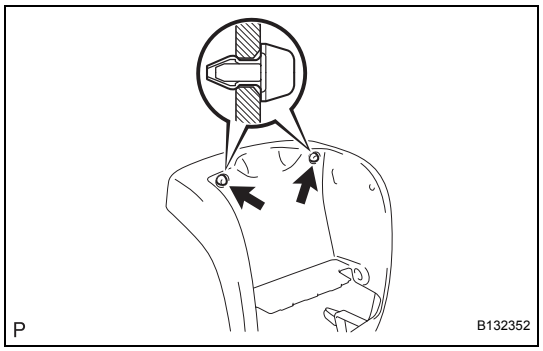

(b) for Console rear end panel:
(1) Install the console compartment door cushion.

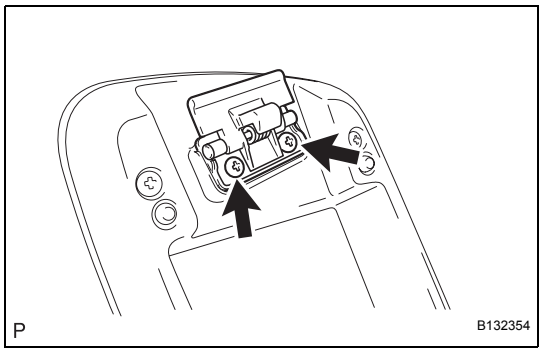

2. INSTALL CONSOLE COMPARTMENT DOOR LOCK SUB-ASSEMBLY

(a) Install the console compartment door lock with the 2 screws.

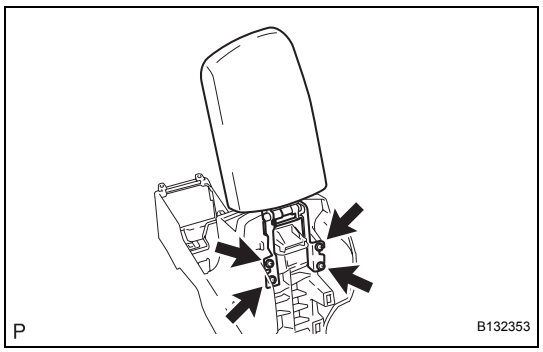

3. INSTALL CONSOLE COMPARTMENT DOOR SUB-ASSEMBLY

(a) Install the console compartment door lock with the 4 screws.

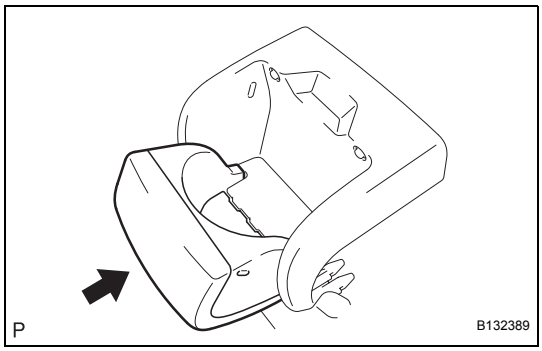

4. INSTALL CONSOLE BOX CUP HOLDER

(a) Engage the hinge portion of the cup holder and install the cup holder.

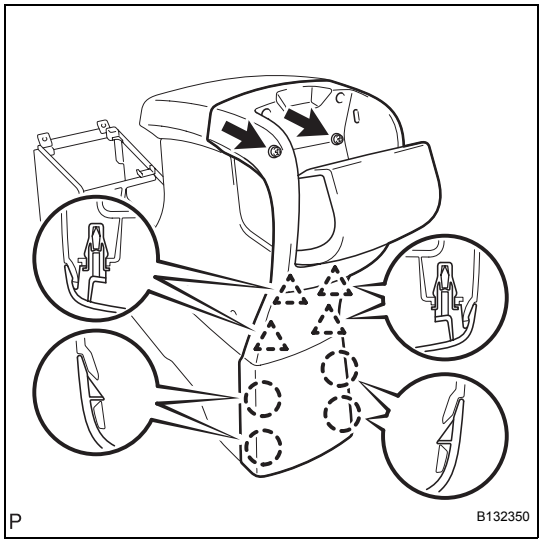

5. INSTALL CONSOLE REAR END PANEL SUB-ASSEMBLY

(a) Engage the 4 claws and 4 clips.
(b) Install the console rear end panel with the 2 screws.

INSTALLATION

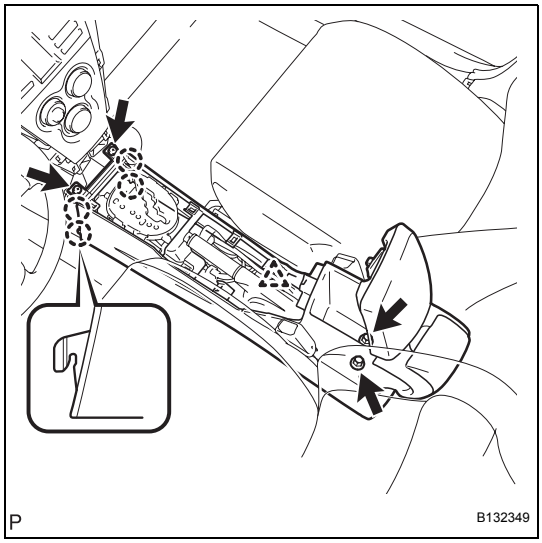

1. INSTALL REAR CONSOLE BOX ASSEMBLY

(a) Engage the 4 claws and install the rear console box.
(b) Install the 2 bolts and 2 screws.
(c) Connect the clamp.

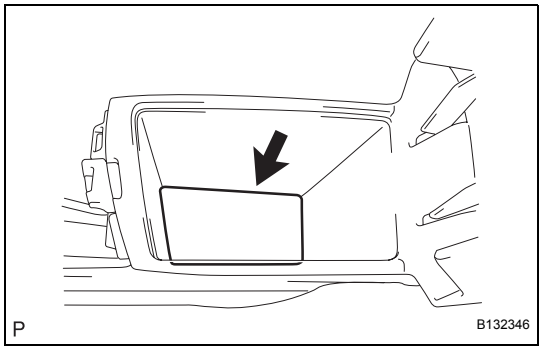

2. INSTALL CONSOLE BOX CARPET

(a) Install the console box carpet.

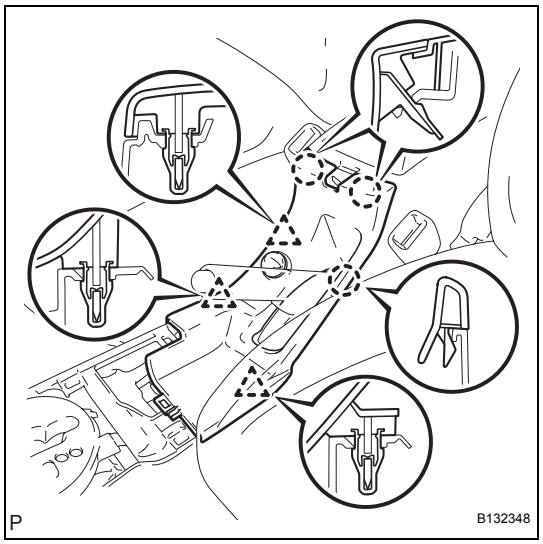

3. INSTALL CONSOLE UPPER REAR PANEL SUB-ASSEMBLY

(a) Connect the connector.

(b) Engage the 3 clips and 3 claws and install the console upper rear panel.

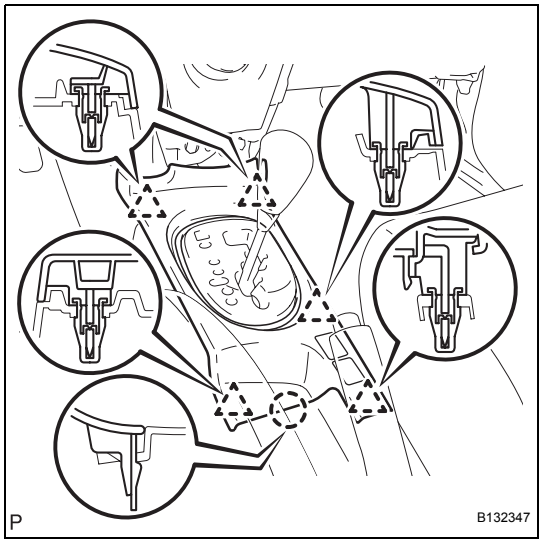

4. INSTALL UPPER CONSOLE PANEL SUB-ASSEMBLY

(a) Engage the 5 clips and the claw and install the upper console panel.

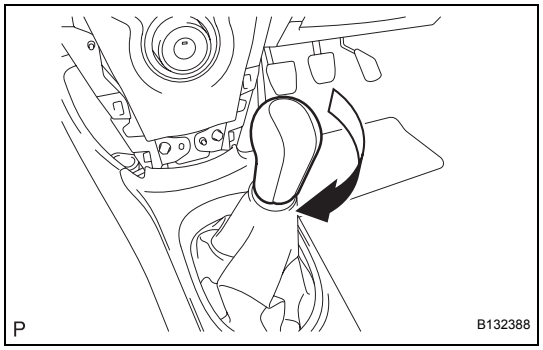

5. INSTALL SHIFT LEVER KNOB SUB-ASSEMBLY (for Manual Transaxle)

(a) Install the shift lever knob.

6. INSTALL INSTRUMENT PANEL FINISH PANEL LOWER CENTER (See page ME-142)

7. CONNECT CABLE TO NEGATIVE BATTERY TERMINAL

Torque: 5.4 N*m (55 kgf*cm, 48 in.*lbf)