2008 Pontiac Torrent Owner Manual

Seats and Restraint Systems 1-1
Front Seats 1-2
Rear Seats 1-10
Safety Belts 1-12
Child Restraints 1-31
Airbag System 1-56
Restraint System Check 1-71

Features and Controls 2-1
Keys 2-3
Doors and Locks 2-11
Windows 2-15
Theft-Deterrent Systems 2-17
Starting and Operating Your Vehicle 2-20
Mirrors 2-37
OnStar® System 2-39
Storage Areas 2-43
Sunroof 2-48

Instrument Panel 3-1
Instrument Panel Overview 3-4
Climate Controls 3-20
Warning Lights, Gages, and Indicators 3-26
Driver Information Center (DIC) 3-45
Audio System(s) 3-67

Driving Your Vehicle 4-1
Your Driving, the Road, and Your Vehicle 4-2
Towing 4-27

Service and Appearance Care 5-1
Service 5-3
Fuel 5-5
Checking Things Under the Hood 5-10
All-Wheel Drive 5-44
Headlamp Aiming 5-46
Bulb Replacement 5-47
Windshield Wiper Blade Replacement 5-51
Tires 5-52
Appearance Care 5-88
Vehicle Identification 5-98
Electrical System 5-99
Capacities and Specifications 5-105

Maintenance Schedule 6-1
Maintenance Schedule 6-2

Customer Assistance Information 7-1
Customer Assistance and Information 7-2
Reporting Safety Defects 7-15
Vehicle Data Recording and Privacy 7-17

Index 1

Downloaded from www.Manualslib.com manuals search engine

GENERAL MOTORS, GM, the GM Emblem, PONTIAC, the PONTIAC Emblem, and the name TORRENT are registered trademarks of General Motors Corporation.

This manual includes the latest information at the time it was printed. We reserve the right to make changes after that time without further notice. For vehicles first sold in Canada, substitute the name “General Motors of Canada Limited” for Pontiac Division whenever it appears in this manual.

This manual describes features that may be available in this model, but your vehicle may not have all of them. For example, more than one entertainment system may be offered or your vehicle may have been ordered without a front passenger or rear seats.

Keep this manual in the vehicle for quick reference.

Canadian Owners

A French language copy of this manual can be obtained from your dealer/retailer or from:

Helm, Incorporated
P.O. Box 07130
Detroit, MI 48207

1-800-551-4123
www.helminc.com

Propriétaires Canadiens

On peut obtenir un exemplaire de ce guide en français auprès de concessionnaire ou à l’adresse suivante:

Helm Incorporated
P.O. Box 07130
Detroit, MI 48207

1-800-551-4123
www.helminc.com

Litho in U.S.A.
Part No. 15860880 A First Printing

©2007 General Motors Corporation. All Rights Reserved.

Downloaded from www.Manualslib.com manuals search engine

Using this Manual

Many people read the owner manual from beginning to end when they first receive their new vehicle to learn about the vehicle's features and controls. Pictures and words work together to explain things.

Index

A good place to quickly locate information about the vehicle is the Index in the back of the manual. It is an alphabetical list of what is in the manual and the page number where it can be found.

Safety Warnings and Symbols

There are a number of safety cautions in this book. A box with the word CAUTION is used to tell about things that could hurt you or others if you were to ignore the warning.

⚠ CAUTION:

These mean there is something that could hurt you or other people.

We tell you what the hazard is and what to do to help avoid or reduce the hazard. Please read these cautions. If you do not, you or others could be hurt.

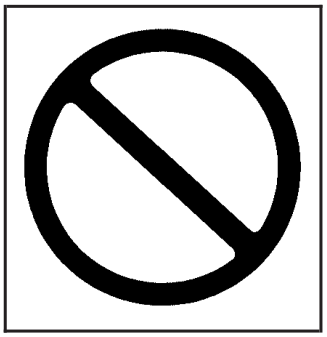

A circle with a slash through it is a safety symbol which means "Do Not," "Do Not do this" or "Do Not let this happen."

Downloaded from www.Manualslib.com manuals search engine

Vehicle Damage Warnings

You will also find notices in this manual.

Notice: **These mean there is something that could damage your vehicle.**

A notice tells about something that can damage the vehicle. Many times, this damage would not be covered by your vehicle's warranty, and it could be costly. The notice tells what to do to help avoid the damage.

When you read other manuals, you might see CAUTION and NOTICE warnings in different colors or in different words.

There are also warning labels on the vehicle which use the same words, CAUTION or NOTICE.

Vehicle Symbols

The vehicle has components and labels that use symbols instead of text. Symbols are shown along with the text describing the operation or information relating to a specific component, control, message, gage, or indicator.

Downloaded from www.Manualslib.com manuals search engine

Section 1 Seats and Restraint Systems

Front Seats 1-2
Manual Seats 1-2
Seat Height Adjuster 1-3
Power Seat 1-3
Manual Lumbar 1-4
Heated Seats 1-4
Manual Reclining Seatbacks 1-5
Head Restraints 1-7
Passenger Folding Seatback 1-8

Rear Seats 1-10
Split Folding Rear Seat 1-10

Safety Belts 1-12
Safety Belts: They Are for Everyone 1-12
How to Wear Safety Belts Properly 1-17
Lap-Shoulder Belt 1-25
Safety Belt Use During Pregnancy 1-30
Safety Belt Extender 1-30

Child Restraints 1-31
Older Children 1-31
Infants and Young Children 1-34
Child Restraint Systems 1-37
Where to Put the Restraint 1-40
Lower Anchors and Tethers for Children (LATCH) 1-42
Securing a Child Restraint in a Rear Seat Position 1-50
Securing a Child Restraint in the Right Front Seat Position 1-52

Airbag System 1-56
Where Are the Airbags? 1-59
When Should an Airbag Inflate? 1-61
What Makes an Airbag Inflate? 1-62
How Does an Airbag Restrain? 1-62
What Will You See After an Airbag Inflates? 1-63
Passenger Sensing System 1-64
Servicing Your Airbag-Equipped Vehicle 1-69
Adding Equipment to Your Airbag-Equipped Vehicle 1-70

Restraint System Check 1-71
Checking the Restraint Systems 1-71
Replacing Restraint System Parts After a Crash 1-72

Downloaded from www.Manualslib.com manuals search engine

Front Seats

Manual Seats

⚠ CAUTION:

You can lose control of the vehicle if you try to adjust a manual driver's seat while the vehicle is moving. The sudden movement could startle and confuse you, or make you push a pedal when you do not want to. Adjust the driver's seat only when the vehicle is not moving.

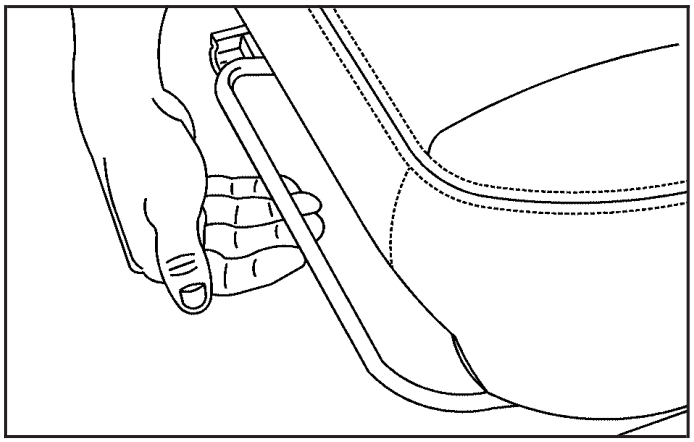

Lift the bar located under the front of the seat to unlock it. Slide the seat to where you want it and release the bar. Try to move the seat with your body to be sure the seat is locked in place.

Downloaded from www.Manualslib.com manuals search engine

Seat Height Adjuster

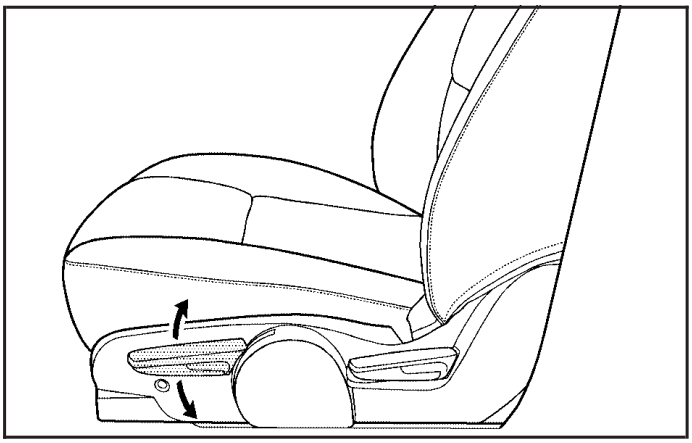

If your vehicle has a manual driver seat height adjuster, it is located on the outboard side of the seat near the front of the seat cushion. To raise the seat, move the lever upward repeatedly until the seat is at the desired height. To lower the seat, move the lever downward repeatedly until the seat is at the desired height.

Power Seat

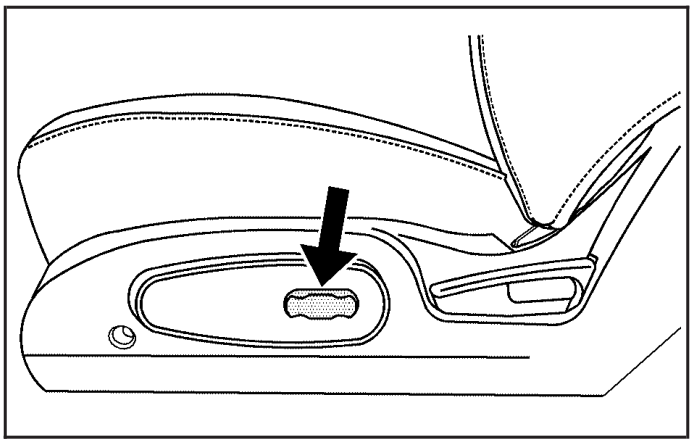

If the vehicle has a power seat, the control used to operate it is located on the outboard side of the driver's seat. To adjust the seat do any of the following:

- Move the seat forward or rearward by sliding the control forward or rearward.
- Raise or lower the front part of the seat cushion by moving the front of the control up or down.
- Raise or lower the rear part of the seat cushion by moving the rear of the control up or down.

Downloaded from www.Manualslib.com manuals search engine

Manual Lumbar

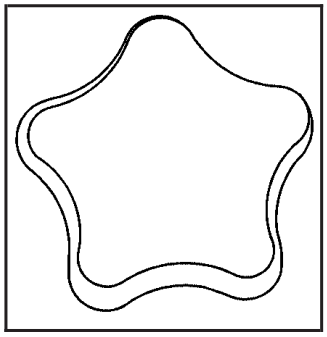

If your vehicle has this feature, the knob is located on the front of the driver seat lower cushion on the inboard side.

Turn the knob clockwise or counterclockwise to increase or decrease the lumbar support.

Heated Seats

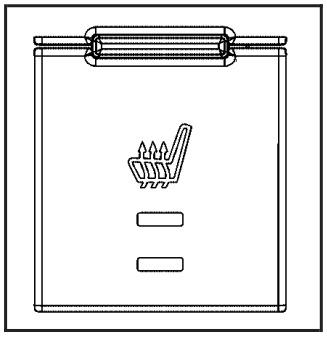

If your vehicle has heated seats, the switches are located on the instrument panel near the climate controls.

The ignition must be on for the heated seats to operate.

Press the switch, nearest to the seat, once to turn the heated seat on to the high setting. Both indicator lights will be lit. Press the switch a second time to turn the heated seat to the low setting. One indicator light will be lit. Press the switch a third time to turn the heated seat off.

If your vehicle has remote vehicle start and is started using the remote keyless entry transmitter, the heated seats may automatically turn on if it is cold outside. See “Remote Vehicle Start” under *Remote Keyless Entry (RKE) System Operation on page 2-5*. When the key is inserted into the ignition and the ignition is turned to RUN, the heated seat feature will turn off. To turn the heated seats back on, press the desired button.

Downloaded from www.Manualslib.com manuals search engine

Manual Reclining Seatbacks

⚠ CAUTION:

You can lose control of the vehicle if you try to adjust a manual driver's seat while the vehicle is moving. The sudden movement could startle and confuse you, or make you push a pedal when you do not want to. Adjust the driver's seat only when the vehicle is not moving.

⚠ CAUTION:

If the seatback is not locked, it could move forward in a sudden stop or crash. That could cause injury to the person sitting there. Always push and pull on the seatback to be sure it is locked.

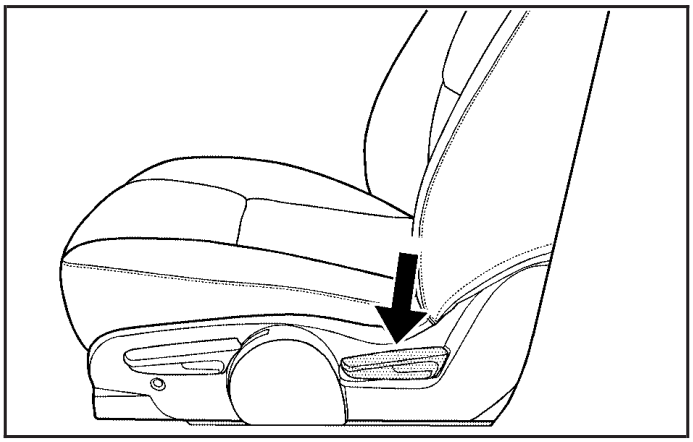

Driver's Seat shown, Passenger Seat similar

To adjust the seatback, lift the lever on the outboard side of the seat and move the seatback to the desired position. Then release the lever to lock the seatback in place. If your front passenger's seat is a flat folding seat, you must fully raise the lever to disengage the seatback.

Downloaded from www.Manualslib.com manuals search engine

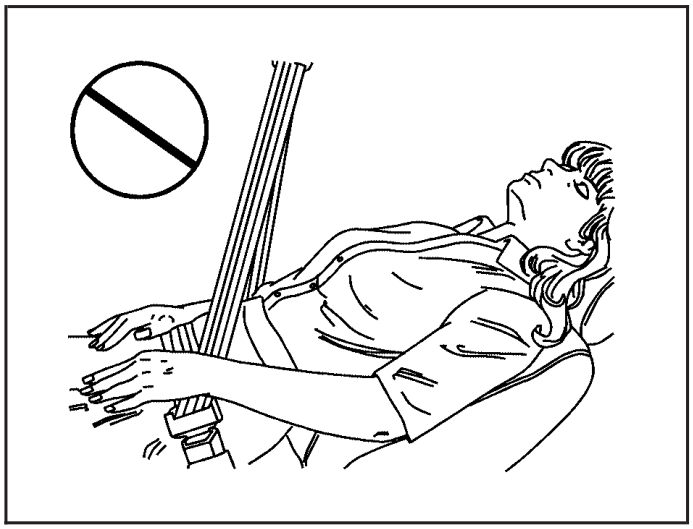

⚠ CAUTION:

Sitting in a reclined position when your vehicle is in motion can be dangerous. Even if you buckle up, your safety belts cannot do their job when you are reclined like this.

The shoulder belt cannot do its job because it will not be against your body. Instead, it will be in front of you. In a crash, you could go into it, receiving neck or other injuries.

The lap belt cannot do its job either. In a crash, the belt could go up over your abdomen. The belt forces would be there, not at your pelvic bones. This could cause serious internal injuries.

For proper protection when the vehicle is in motion, have the seatback upright. Then sit well back in the seat and wear your safety belt properly.

Do not have a seatback reclined if your vehicle is moving.

Downloaded from www.Manualslib.com manuals search engine

Head Restraints

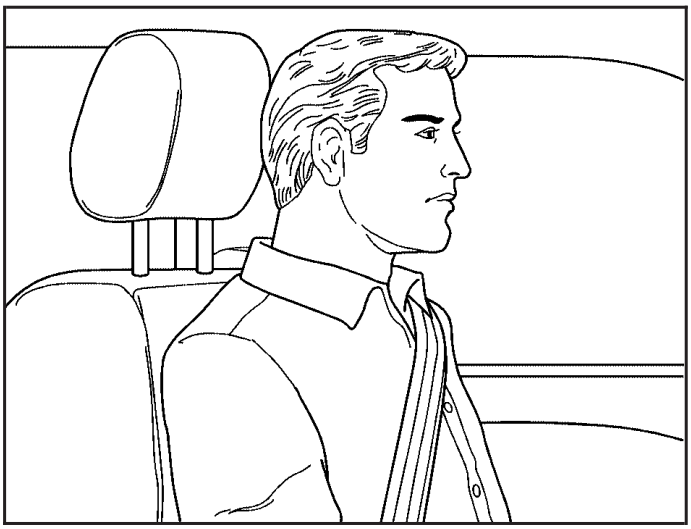

Adjust the head restraint so that the top of the restraint is at the same height as the top of the occupant's head. This position reduces the chance of a neck injury in a crash.

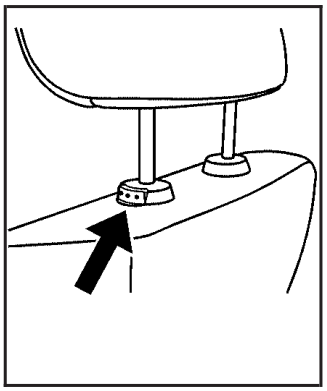

Pull the head restraint up to raise it. To lower the head restraint, press the button, located on the top of the seatback, and push the restraint down.

Downloaded from www.Manualslib.com manuals search engine

Passenger Folding Seatback

The front passenger's seatback may fold flat.

⚠ CAUTION:

If you fold the seatback forward to carry longer objects, such as skis, be sure any such cargo is not near an airbag. In a crash, an inflating airbag might force that object toward a person. This could cause severe injury or even death. Secure objects away from the area in which an airbag would inflate. For more information, see *Where Are the Airbags? on page 1-59* and *Loading Your Vehicle on page 4-22*.

⚠ CAUTION:

Things you put on this seatback can strike and injure people in a sudden stop or turn, or in a crash. Remove or secure all items before driving.

To fold the seatback, do the following:

1. Lower the head restraint all the way.
2. Lift the bar under the front of the seat to unlock it. Slide the seat as far back as it will go and release the bar. Try to move the seat back and forth to make sure it is locked into place.

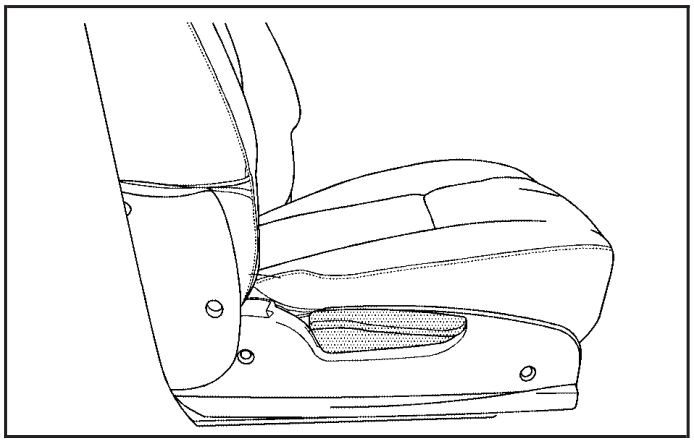

3. Lift the recliner lever, located on the outboard side of the seat, up fully and fold the seatback forward until it disengages.

Downloaded from www.Manualslib.com manuals search engine

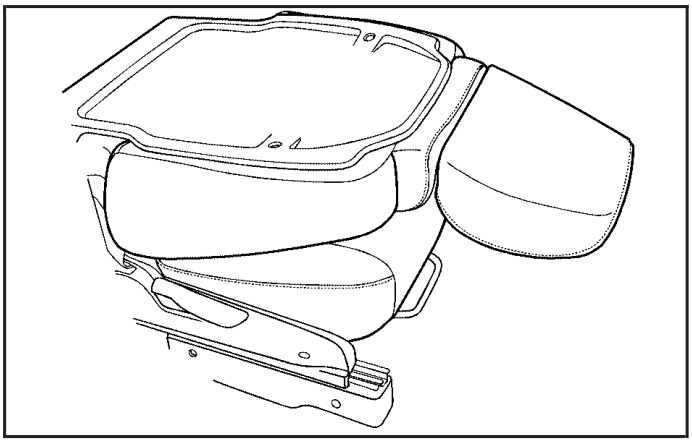

4. Continue to fold the seat forward until it locks in the folded position.
5. Pull up on the seatback to be sure it is locked.

To raise the seatback, do the following:

1. Lift the recliner lever, located on the outboard side of the seat, up fully and push up on the seatback.
2. Continue raising the seatback until the seatback re-engages.

⚠ CAUTION:

If the seatback is not locked, it could move forward in a sudden stop or crash. That could cause injury to the person sitting there. Always push and pull on the seatback to be sure it is locked.

3. Push and pull on the seatback to make sure it is locked in place.

The recliner lever is also used to recline the seatback while a passenger is seated. See *Manual Reclining Seatbacks on page 1-5*.

Downloaded from www.Manualslib.com manuals search engine

Rear Seats

Split Folding Rear Seat

The rear split bench seatbacks have three available positions — folded forward, upright, or partially reclined. Both of the seatbacks can be moved to any of the three positions independent of the other seatback position. The rear bench seat can also be moved forward and rearward.

⚠ CAUTION:

If the seatback is not locked, it could move forward in a sudden stop or crash. That could cause injury to the person sitting there. Always push and pull on the seatback to be sure it is locked.

⚠ CAUTION:

A safety belt that is improperly routed, not properly attached, or twisted will not provide the protection needed in a crash. The person wearing the belt could be seriously injured. After raising the rear seatback, always check to be sure that the safety belts are properly routed and attached, and are not twisted.

To fold the seatback down, do the following:

Notice: **Folding a rear seat with the safety belts still fastened may cause damage to the seat or the safety belts. Always unbuckle the safety belts and return them to their normal stowed position before folding a rear seat.**

1. Ensure all three of the safety belts are unbuckled and the front seatbacks are not reclined.

Downloaded from www.Manualslib.com manuals search engine

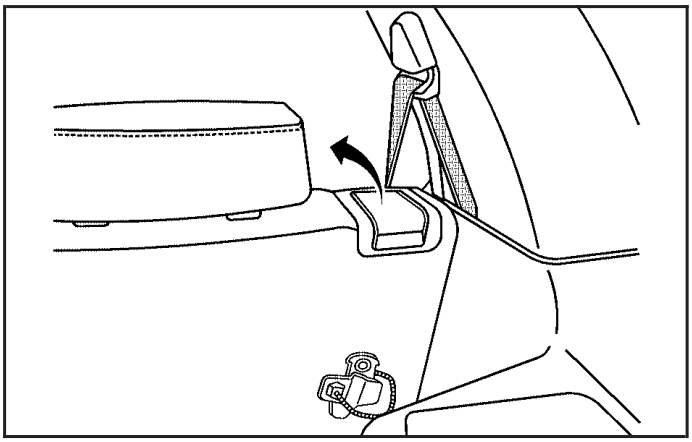

2. Lift the lever located on the top of the seatback to release the seatback.
3. Fold the seatback forward to the desired position.

To recline the seatback, do the following:

1. Lift and hold the lever located on top of the seatback.
2. Tilt the seatback rearward, then release the lever when the seatback is in the desired position.

To slide the entire seat forward or rearward, do the following:

1. Lift and hold the release bar located under the front of the seat cushion to unlock the seat.
2. Slide the seat to the desired position.
3. Release the bar.
4. Try to move the seat back and forth to ensure the seat is locked in place.

Downloaded from www.Manualslib.com manuals search engine

Safety Belts

Safety Belts: They Are for Everyone

This part of the manual tells you how to use safety belts properly. It also tells you some things you should not do with safety belts.

⚠ CAUTION:

Do not let anyone ride where he or she cannot wear a safety belt properly. If you are in a crash and you are not wearing a safety belt, your injuries can be much worse. You can hit things inside the vehicle harder or be ejected from it and be seriously injured or killed. In the same crash, you might not be, if you are buckled up. Always fasten your safety belt, and check that your passenger(s) are restrained properly too.

⚠ CAUTION:

It is extremely dangerous to ride in a cargo area, inside or outside of a vehicle. In a collision, people riding in these areas are more likely to be seriously injured or killed. Do not allow people to ride in any area of your vehicle that is not equipped with seats and safety belts. Be sure everyone in your vehicle is in a seat and using a safety belt properly.

Your vehicle has indicators as a reminder to buckle your safety belts. See *Safety Belt Reminders on page 3-28*.

In most states and in all Canadian provinces, the law requires wearing safety belts. Here is why:

You never know if you will be in a crash. If you do have a crash, you do not know if it will be a serious one.

A few crashes are mild, and some crashes can be so serious that even buckled up, a person would not survive. But most crashes are in between. In many of them, people who buckle up can survive and sometimes walk away. Without belts they could have been badly hurt or killed.

After more than 40 years of safety belts in vehicles, the facts are clear. In most crashes buckling up does matter... a lot!

Downloaded from www.Manualslib.com manuals search engine

Why Safety Belts Work

When you ride in or on anything, you go as fast as it goes.

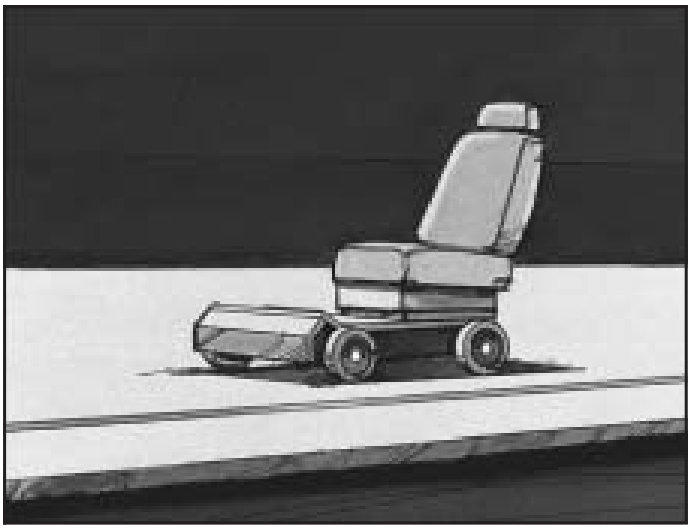

Take the simplest vehicle. Suppose it is just a seat on wheels.

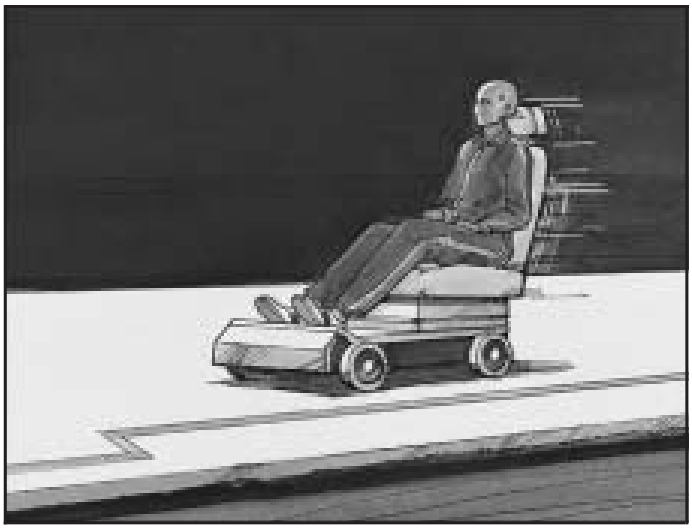

Put someone on it.

Downloaded from www.Manualslib.com manuals search engine

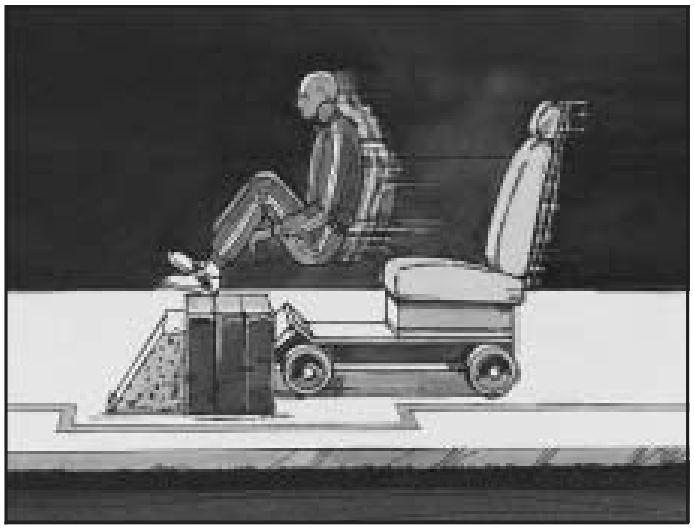

Get it up to speed. Then stop the vehicle. The rider does not stop.

The person keeps going until stopped by something. In a real vehicle, it could be the windshield...

Downloaded from www.Manualslib.com manuals search engine

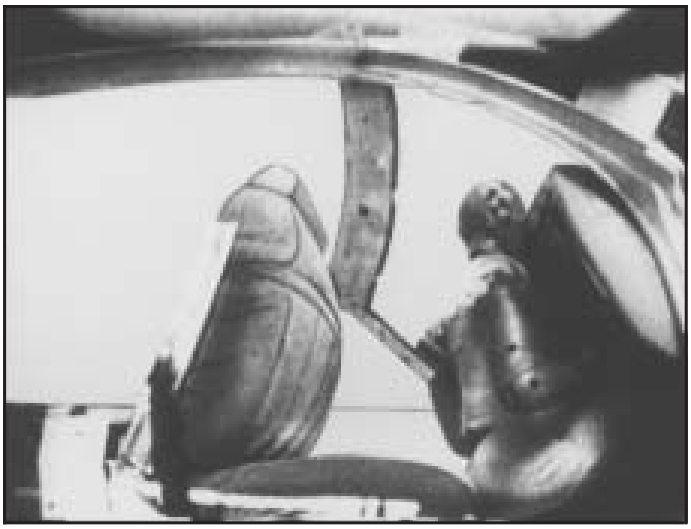

or the instrument panel...

or the safety belts!

With safety belts, you slow down as the vehicle does. You get more time to stop. You stop over more distance, and your strongest bones take the forces. That is why safety belts make such good sense.

Downloaded from www.Manualslib.com manuals search engine

Questions and Answers About Safety Belts

Q: Will I be trapped in the vehicle after a crash if I am wearing a safety belt?

A: You *could* be — whether you are wearing a safety belt or not. But your chance of being conscious during and after an accident, so you *can* unbuckle and get out, is *much* greater if you are belted. And you can unbuckle a safety belt, even if you are upside down.

Q: If my vehicle has airbags, why should I have to wear safety belts?

A: Airbags are supplemental systems only; so they work *with* safety belts — not instead of them. Whether or not an airbag is provided, all occupants still have to buckle up to get the most protection. That is true not only in frontal collisions, but especially in side and other collisions.

Q: If I am a good driver, and I never drive far from home, why should I wear safety belts?

A: You may be an excellent driver, but if you are in a crash — even one that is not your fault — you and your passenger(s) can be hurt. Being a good driver does not protect you from things beyond your control, such as bad drivers.

Most accidents occur within 25 miles (40 km) of home. And the greatest number of serious injuries and deaths occur at speeds of less than 40 mph (65 km/h).

Safety belts are for everyone.

Downloaded from www.Manualslib.com manuals search engine

How to Wear Safety Belts Properly

This section is only for people of adult size.

Be aware that there are special things to know about safety belts and children. And there are different rules for smaller children and babies. If a child will be riding in your vehicle, see *Older Children on page 1-31* or *Infants and Young Children on page 1-34*. Follow those rules for everyone's protection.

It is very important for all occupants to buckle up. Statistics show that unbelted people are hurt more often in crashes than those who are wearing safety belts.

Occupants who are not buckled up can be thrown out of the vehicle in a crash. And they can strike others in the vehicle who are wearing safety belts.

First, before you or your passenger(s) wear a safety belt, there is important information you should know.

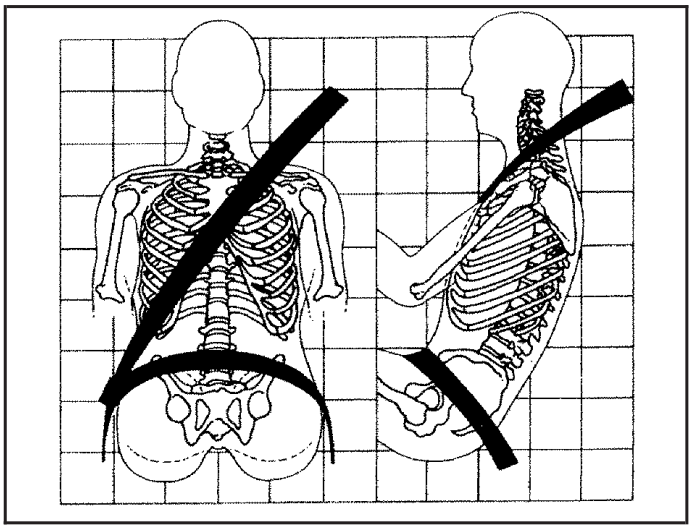

Sit up straight and always keep your feet on the floor in front of you. The lap part of the belt should be worn low and snug on the hips, just touching the thighs. In a crash, this applies force to the strong pelvic bones and you would be less likely to slide under the lap belt. If you slid under it, the belt would apply force on your abdomen. This could cause serious or even fatal injuries. The shoulder belt should go over the shoulder and across the chest. These parts of the body are best able to take belt restraining forces.

The shoulder belt locks if there is a sudden stop or crash.

Downloaded from www.Manualslib.com manuals search engine

Q: What is wrong with this?

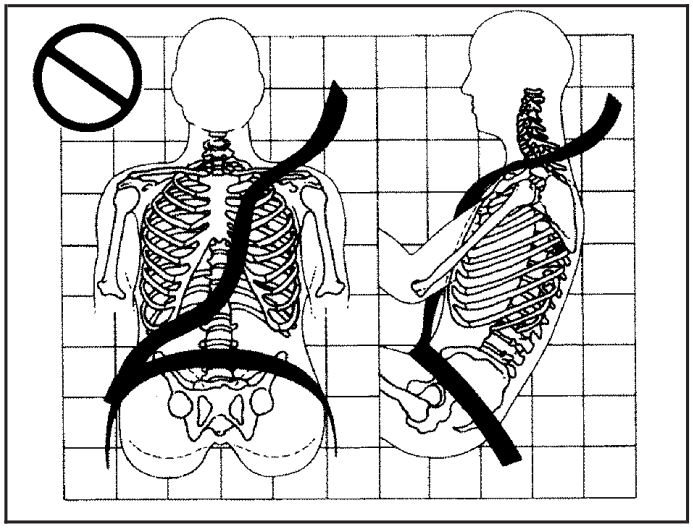

A: The shoulder belt is too loose. It will not give nearly as much protection this way.

⚠ CAUTION:

You can be seriously hurt if your shoulder belt is too loose. In a crash, you would move forward too much, which could increase injury. The shoulder belt should fit snugly against your body.

Downloaded from www.Manualslib.com manuals search engine

Q: What is wrong with this?

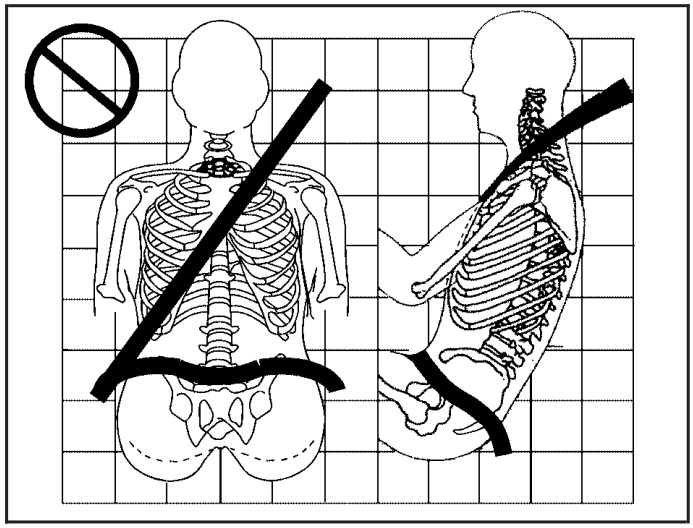

A: The lap belt is too loose. It will not give as much protection this way.

⚠ CAUTION:

You can be seriously hurt if your lap belt is too loose. In a crash, you could slide under the lap belt and apply force on your abdomen. This could cause serious or even fatal injuries. The lap belt should be worn low and snug on the hips, just touching the thighs.

Downloaded from www.Manualslib.com manuals search engine

Q: **What is wrong with this?**

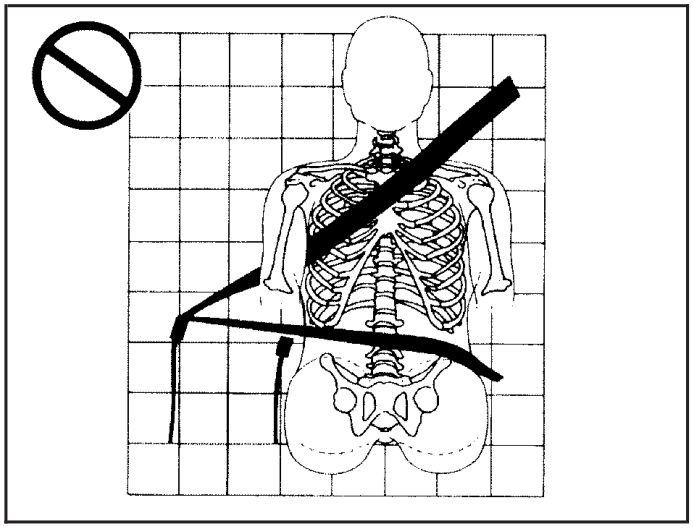

A: The belt is buckled in the wrong place.

⚠ CAUTION:

You can be seriously injured if your belt is buckled in the wrong place like this. In a crash, the belt would go up over your abdomen. The belt forces would be there, not on the pelvic bones. This could cause serious internal injuries. Always buckle your belt into the buckle nearest you.

Downloaded from www.Manualslib.com manuals search engine

Q: What is wrong with this?

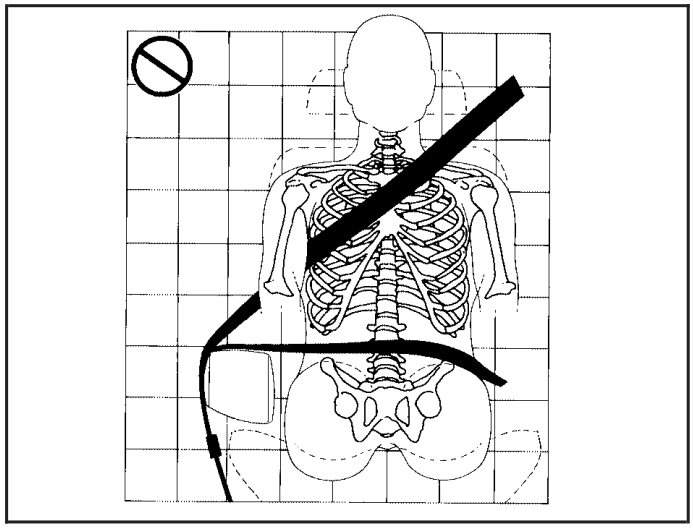

A: The belt is over an armrest.

⚠ CAUTION:

You can be seriously injured if your belt goes over an armrest like this. The belt would be much too high. In a crash, you can slide under the belt. The belt force would then be applied on the abdomen, not on the pelvic bones, and that could cause serious or fatal injuries. Be sure the belt goes under the armrests.

Downloaded from www.Manualslib.com manuals search engine

Q: What is wrong with this?

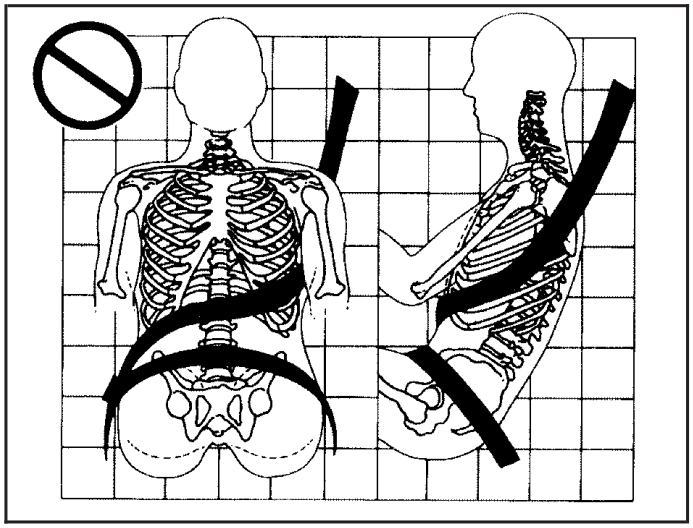

A: The shoulder belt is worn under the arm. It should be worn over the shoulder at all times.

⚠ CAUTION:

You can be seriously injured if you wear the shoulder belt under your arm. In a crash, your body would move too far forward, which would increase the chance of head and neck injury. Also, the belt would apply too much force to the ribs, which are not as strong as shoulder bones. You could also severely injure internal organs like your liver or spleen. The shoulder belt should go over the shoulder and across the chest.

Downloaded from www.Manualslib.com manuals search engine

Q: What is wrong with this?

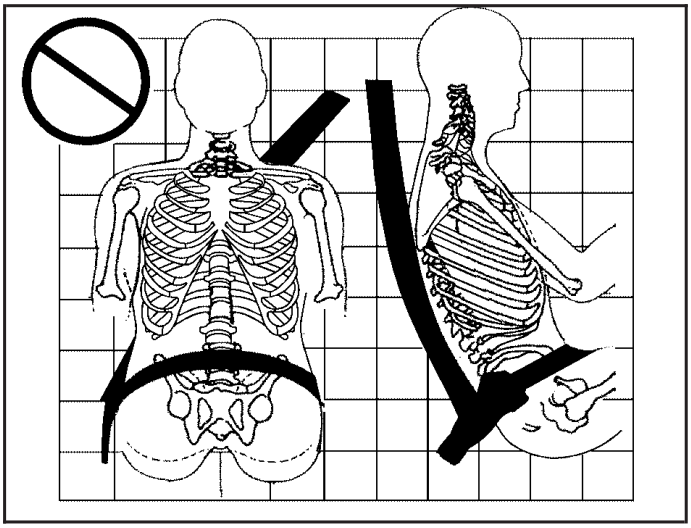

A: The belt is behind the body.

⚠ CAUTION:

You can be seriously injured by not wearing the lap-shoulder belt properly. In a crash, you would not be restrained by the shoulder belt. Your body could move too far forward increasing the chance of head and neck injury. You might also slide under the lap belt. The belt force would then be applied right on the abdomen. That could cause serious or fatal injuries. The shoulder belt should go over the shoulder and across the chest.

Downloaded from www.Manualslib.com manuals search engine

Q: **What is wrong with this?**

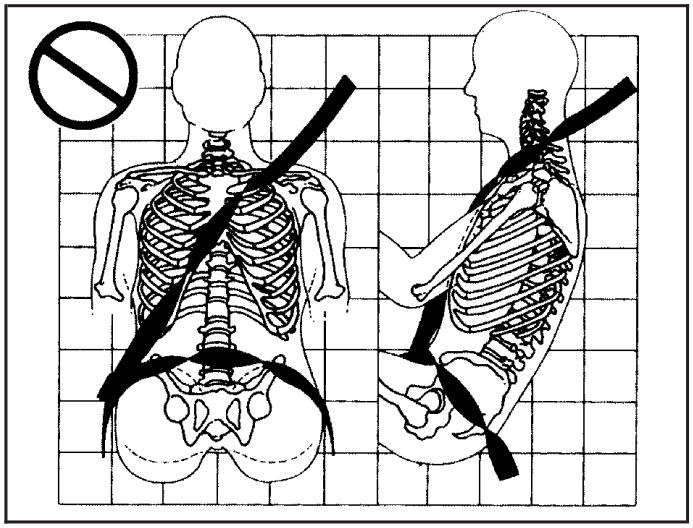

A: The belt is twisted across the body.

⚠ CAUTION:

You can be seriously injured by a twisted belt. In a crash, you would not have the full width of the belt to spread impact forces. If a belt is twisted, make it straight so it can work properly, or ask your dealer/retailer to fix it.

Downloaded from www.Manualslib.com manuals search engine

Lap-Shoulder Belt

All seating positions in your vehicle have a lap-shoulder belt.

Here is how to wear a lap-shoulder belt properly.

1. Adjust the seat, if the seat is adjustable, so you can sit up straight. To see how, see “Seats” in the Index.
2. Pick up the latch plate and pull the belt across you. Do not let it get twisted.

   The lap-shoulder belt may lock if you pull the belt across you very quickly. If this happens, let the belt go back slightly to unlock it. Then pull the belt across you more slowly.

   If you ever pull the shoulder portion of a passenger belt out all the way, you may engage the child restraint locking feature. If this happens, just let the belt go back all the way and start again.

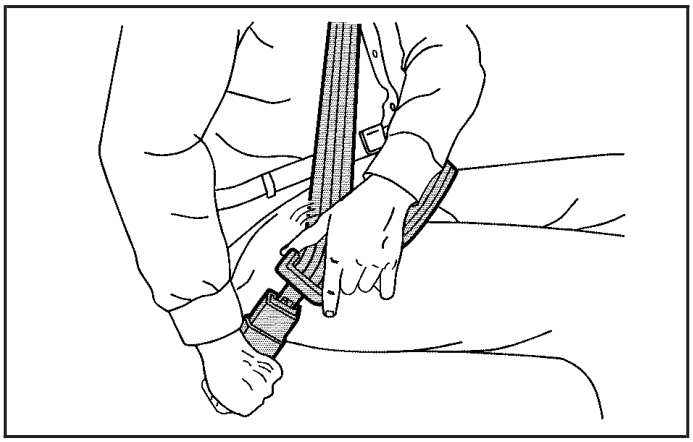

3. Push the latch plate into the buckle until it clicks.

   Pull up on the latch plate to make sure it is secure. If the belt is not long enough, see *Safety Belt Extender on page 1-30*.

   Make sure the release button on the buckle is positioned so you would be able to unbuckle the safety belt quickly if necessary.
4. If equipped with a shoulder belt height adjuster, move it to the height that is right for you. Improper shoulder belt height adjustment could reduce the effectiveness of the safety belt in a crash. See “Shoulder Belt Height Adjustment” later in this section.

Downloaded from www.Manualslib.com manuals search engine

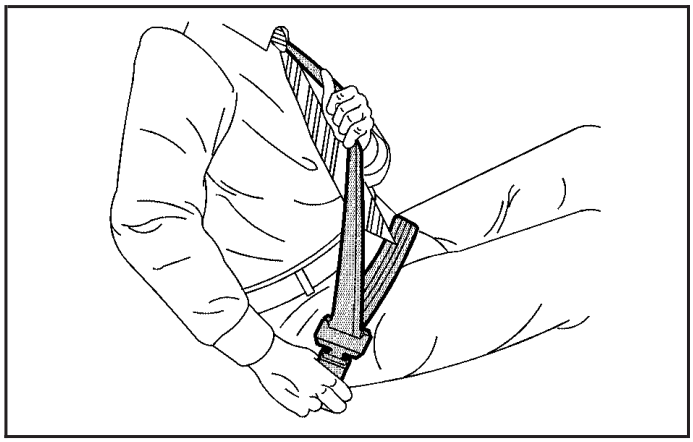

5. To make the lap part tight, pull up on the shoulder belt.

   It may be necessary to pull stitching on the safety belt through the latch plate to fully tighten the lap belt on smaller occupants.

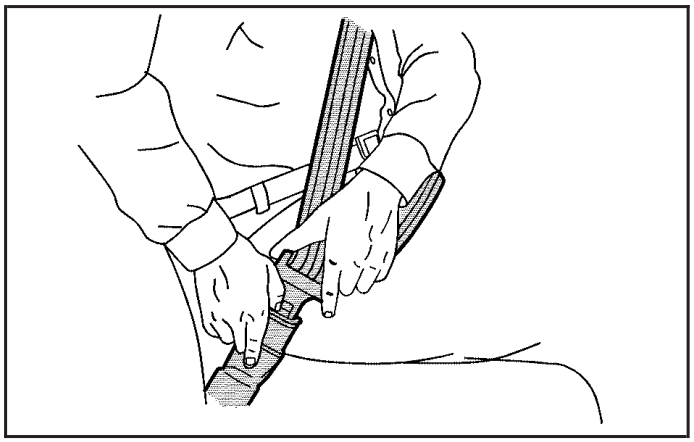

To unlatch the belt, just push the button on the buckle. For outboard seating positions, when the safety belt is not in use, slide the latch plate up the safety belt webbing. The latch plate should rest on the stitching on the safety belt, near the guide loop.

Before you close a door, be sure the belt is out of the way. If you slam the door on it, you can damage both the belt and your vehicle.

Downloaded from www.Manualslib.com manuals search engine

Shoulder Belt Height Adjuster

Your vehicle has a shoulder belt height adjuster for the driver and right front passenger.

Adjust the height so that the shoulder portion of the belt is centered on your shoulder. The belt should be away from your face and neck, but not falling off your shoulder. Improper shoulder belt height adjustment could reduce the effectiveness of the safety belt in a crash.

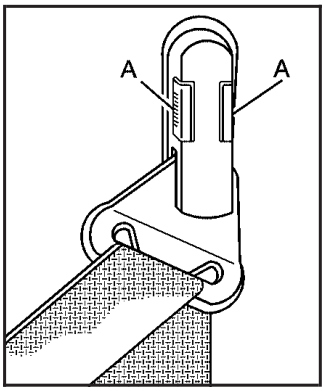

To move it up or down, squeeze the release buttons (A) together and move the height adjuster to the desired position.

After you move the height adjuster to where you want it, try to move it up or down without squeezing the release buttons to make sure it has locked into position.

Safety Belt Pretensioners

Your vehicle has safety belt pretensioners for front outboard occupants. Although you cannot see them, they are part of the safety belt assembly. They can help tighten the safety belts during the early stages of a moderate to severe frontal and near frontal crash if the threshold conditions for pretensioner activation are met.

Pretensioners work only once. If they activate in a crash, you will need to get new ones, and probably other new parts for your safety belt system. See *Replacing Restraint System Parts After a Crash on page 1-72*.

Rear Safety Belt Comfort Guides

Rear shoulder belt comfort guides may provide added safety belt comfort for older children who have outgrown booster seats and for some adults. When installed on a shoulder belt, the comfort guide positions the belt away from the neck and head.

There is one guide for each outside passenger position in the rear seat. Here is how to install the comfort guide to the shoulder belt:

1. Remove the guide from its storage clip on the back of the seatback.

Downloaded from www.Manualslib.com manuals search engine

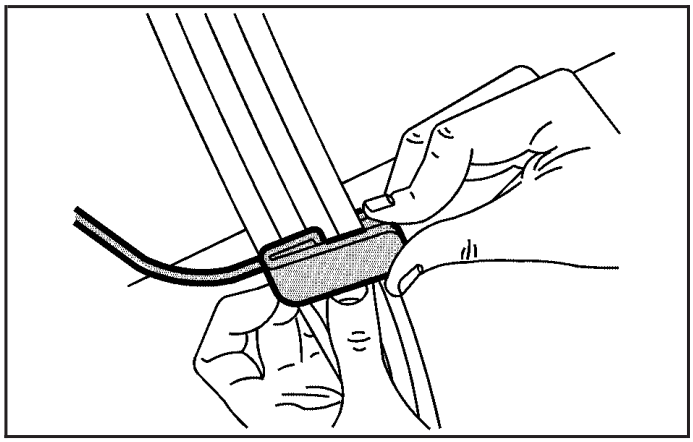

2. Place the guide over the belt, and insert the two edges of the belt into the slots of the guide.

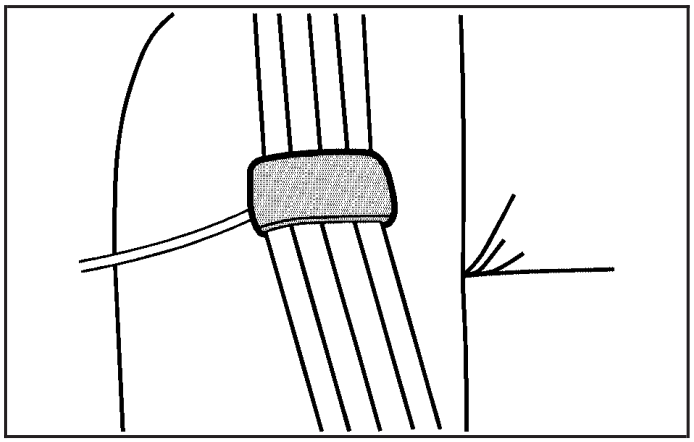

3. Be sure that the belt is not twisted and it lies flat. The elastic cord must be under the belt and the guide on top.

Downloaded from www.Manualslib.com manuals search engine

⚠ CAUTION:

A safety belt that is not properly worn may not provide the protection needed in a crash. The person wearing the belt could be seriously injured. The shoulder belt should go over the shoulder and across the chest. These parts of the body are best able to take belt restraining forces.

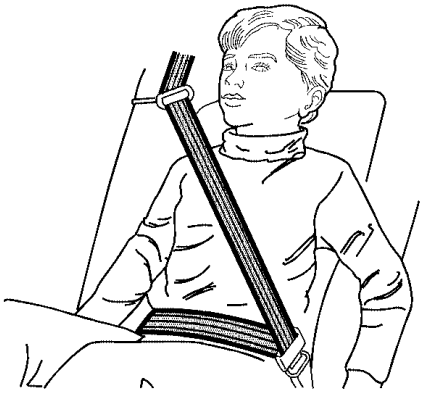

4. Buckle, position, and release the safety belt as described previously in this section. Make sure that the shoulder belt crosses the shoulder.

To remove and store the comfort guide, squeeze the belt edges together so that you can take them out of the guide. Slide the guide back onto its storage clip located on the seatback.

Downloaded from www.Manualslib.com manuals search engine

Safety Belt Use During Pregnancy

Safety belts work for everyone, including pregnant women. Like all occupants, they are more likely to be seriously injured if they do not wear safety belts.

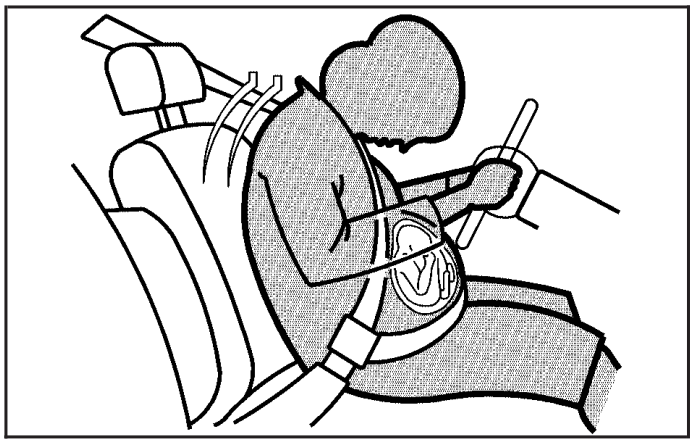

A pregnant woman should wear a lap-shoulder belt, and the lap portion should be worn as low as possible, below the rounding, throughout the pregnancy.

The best way to protect the fetus is to protect the mother. When a safety belt is worn properly, it is more likely that the fetus will not be hurt in a crash. For pregnant women, as for anyone, the key to making safety belts effective is wearing them properly.

Safety Belt Extender

If the vehicle's safety belt will fasten around you, you should use it.

But if a safety belt is not long enough, your dealer/retailer will order you an extender. When you go in to order it, take the heaviest coat you will wear, so the extender will be long enough for you. To help avoid personal injury, do not let someone else use it, and use it only for the seat it is made to fit. The extender has been designed for adults. Never use it for securing child seats. To wear it, attach it to the regular safety belt. For more information, see the instruction sheet that comes with the extender.

Downloaded from www.Manualslib.com manuals search engine

Child Restraints

Older Children

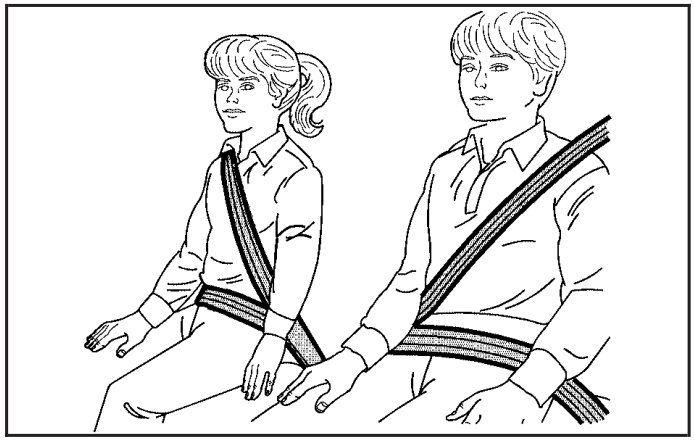

Older children who have outgrown booster seats should wear the vehicle's safety belts.

The manufacturer's instructions that come with the booster seat, state the weight and height limitations for that booster. Use a booster seat with a lap-shoulder belt until the child passes the below fit test:

- Sit all the way back on the seat. Do the knees bend at the seat edge? If yes, continue. If no, return to the booster seat.
- Buckle the lap-shoulder belt. Does the shoulder belt rest on the shoulder? If yes, continue. If no, try using the rear safety belt comfort guide. See "Rear Safety Belt Comfort Guides" under *Lap-Shoulder Belt on page 1-25* for more information. If the shoulder belt still does not rest on the shoulder, then return to the booster seat.
- Does the lap belt fit low and snug on the hips, touching the thighs? If yes, continue. If no, return to the booster seat.
- Can proper safety belt fit be maintained for the length of the trip? If yes, continue. If no, return to the booster seat.

Downloaded from www.Manualslib.com manuals search engine

Q: What is the proper way to wear safety belts?

A: An older child should wear a lap-shoulder belt and get the additional restraint a shoulder belt can provide. The shoulder belt should not cross the face or neck. The lap belt should fit snugly below the hips, just touching the top of the thighs. This applies belt force to the child's pelvic bones in a crash. It should never be worn over the abdomen, which could cause severe or even fatal internal injuries in a crash.

Also see "Rear Safety Belt Comfort Guides" under *Lap-Shoulder Belt on page 1-25*.

According to accident statistics, children and infants are safer when properly restrained in the rear seating positions than in the front seating positions.

In a crash, children who are not buckled up can strike other people who are buckled up, or can be thrown out of the vehicle. Older children need to use safety belts properly.

⚠ CAUTION:

Never do this.

Here two children are wearing the same belt. The belt cannot properly spread the impact forces. In a crash, the two children can be crushed together and seriously injured. A belt must be used by only one person at a time.

Downloaded from www.Manualslib.com manuals search engine

⚠ CAUTION:

Never do this.

Here a child is sitting in a seat that has a lap-shoulder belt, but the shoulder part is behind the child. In a crash, the child would not be restrained by the shoulder belt. The child might slide under the lap belt. The belt force would then be applied right on the abdomen. That could cause serious or fatal injuries. The child could also move too far forward increasing the chance of head and neck injury. The shoulder belt should go over the shoulder and across the chest.

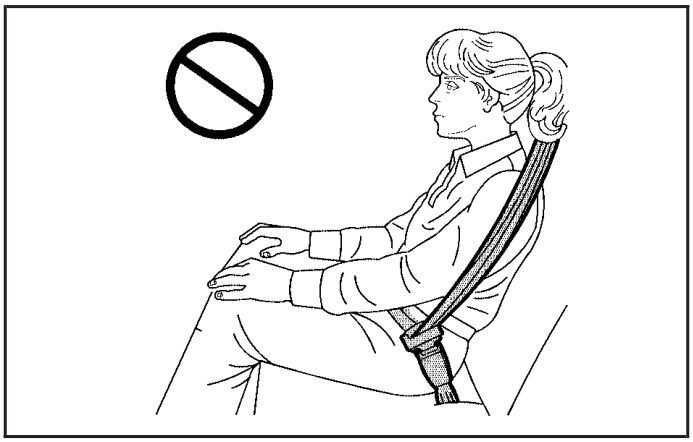

Downloaded from www.Manualslib.com manuals search engine

Infants and Young Children

Everyone in a vehicle needs protection! This includes infants and all other children. Neither the distance traveled nor the age and size of the traveler changes the need, for everyone, to use safety restraints. In fact, the law in every state in the United States and in every Canadian province says children up to some age must be restrained while in a vehicle.

⚠ CAUTION:

Children can be seriously injured or strangled if a shoulder belt is wrapped around their neck and the safety belt continues to tighten. Never leave children unattended in a vehicle and never allow children to play with the safety belts.

Every time infants and young children ride in vehicles, they should have the protection provided by appropriate restraints. Children who are not restrained properly can strike other people, or can be thrown out of the vehicle. In addition, young children should not use the vehicle's adult safety belts alone; they need to use a child restraint.

⚠ CAUTION:

People should never hold an infant in their arms while riding in a vehicle. An infant does not weigh much — until a crash. During a crash an infant will become so heavy it is not possible to hold it. For example, in a crash at only 25 mph (40 km/h), a 12 lb (5.5 kg) infant will suddenly become a 240 lb (110 kg) force on a person's arms. An infant should be secured in an appropriate restraint.

Downloaded from www.Manualslib.com manuals search engine

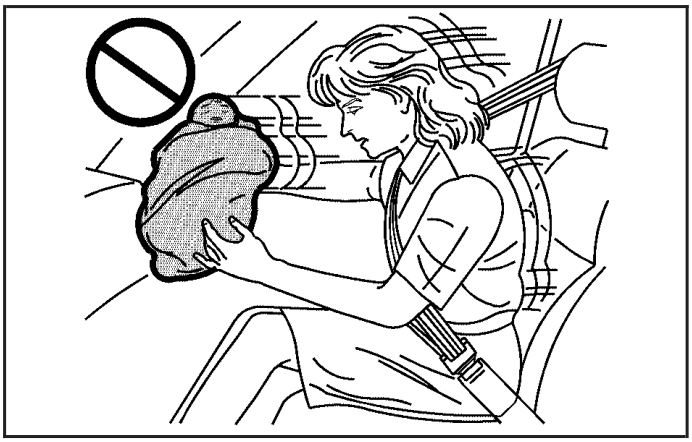

⚠ CAUTION:

Children who are up against, or very close to, any airbag when it inflates can be seriously injured or killed. Airbags plus lap-shoulder belts offer protection for adults and older

CAUTION: (Continued)

CAUTION: (Continued)

children, but not for young children and infants. Neither the vehicle's safety belt system nor its airbag system is designed for them. Young children and infants need the protection that a child restraint system can provide.

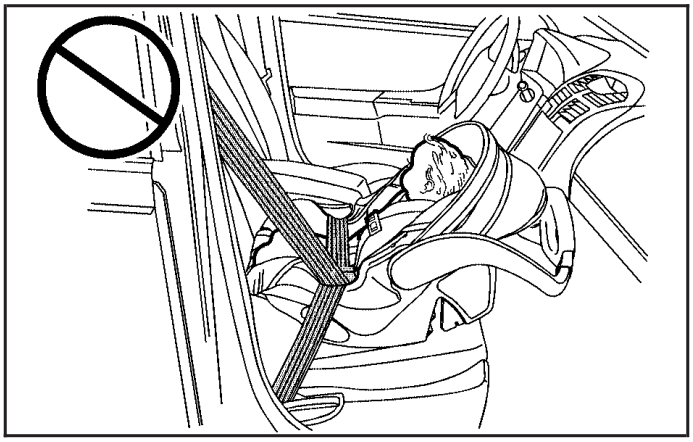

Downloaded from www.Manualslib.com manuals search engine

Q: What are the different types of add-on child restraints?

A: Add-on child restraints, which are purchased by the vehicle's owner, are available in four basic types. Selection of a particular restraint should take into consideration not only the child's weight, height, and age but also whether or not the restraint will be compatible with the motor vehicle in which it will be used.

For most basic types of child restraints, there are many different models available. When purchasing a child restraint, be sure it is designed to be used in a motor vehicle. If it is, the restraint will have a label saying that it meets federal motor vehicle safety standards.

The restraint manufacturer's instructions that come with the restraint state the weight and height limitations for a particular child restraint. In addition, there are many kinds of restraints available for children with special needs.

⚠ CAUTION:

Newborn infants need complete support, including support for the head and neck. This is necessary because a newborn infant's neck is weak and its head weighs so much compared with the rest of its body. In a crash, an infant in a rear-facing seat settles into the restraint, so the crash forces can be distributed across the strongest part of an infant's body, the back and shoulders. Infants should always be secured in appropriate infant restraints.

Downloaded from www.Manualslib.com manuals search engine

⚠ CAUTION:

The body structure of a young child is quite unlike that of an adult or older child, for whom the safety belts are designed. A young child's hip bones are still so small that the vehicle's regular safety belt may not remain low on the hip bones, as it should. Instead, it may settle up around the child's abdomen. In a crash, the belt would apply force on a body area that is unprotected by any bony structure. This alone could cause serious or fatal injuries. Young children should always be secured in appropriate child restraints.

Child Restraint Systems

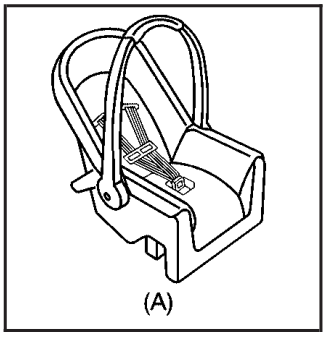

A rear-facing infant seat (A) provides restraint with the seating surface against the back of the infant.

The harness system holds the infant in place and, in a crash, acts to keep the infant positioned in the restraint.

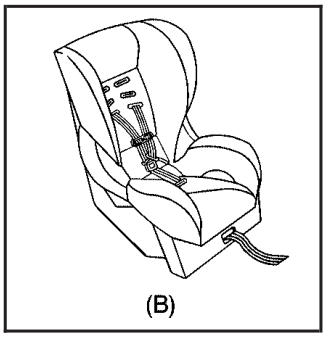

A forward-facing child seat (B) provides restraint for the child's body with the harness.

Downloaded from www.Manualslib.com manuals search engine

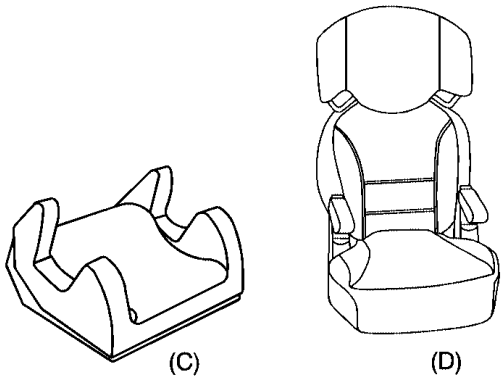

A booster seat (C-D) is a child restraint designed to improve the fit of the vehicle's safety belt system. A booster seat can also help a child to see out the window.

Securing an Add-On Child Restraint in the Vehicle

⚠ CAUTION:

A child can be seriously injured or killed in a crash if the child restraint is not properly secured in the vehicle. Make sure the child restraint is properly installed in the vehicle using the vehicle's safety belt or LATCH system, following the instructions that came with that restraint, and also the instructions in this manual.

To help reduce the chance of injury, the child restraint must be secured in the vehicle. Child restraint systems must be secured in vehicle seats by lap belts or the lap belt portion of a lap-shoulder belt, or by the LATCH system. See *Lower Anchors and Tethers for Children (LATCH) on page 1-42* for more information. A child can be endangered in a crash if the child restraint is not properly secured in the vehicle.

Downloaded from www.Manualslib.com manuals search engine

When securing an add-on child restraint, refer to the instructions that come with the restraint which may be on the restraint itself or in a booklet, or both, and to this manual. The child restraint instructions are important, so if they are not available, obtain a replacement copy from the manufacturer.

Keep in mind that an unsecured child restraint can move around in a collision or sudden stop and injure people in the vehicle. Be sure to properly secure any child restraint in your vehicle — even when no child is in it.

Securing the Child Within the Child Restraint

⚠ CAUTION:

A child can be seriously injured or killed in a crash if the child is not properly secured in the child restraint. Because there are different systems, it is important to refer to the instructions that come with the restraint. Make sure the child is properly secured, following the instructions that came with that restraint.

Downloaded from www.Manualslib.com manuals search engine

Where to Put the Restraint

Accident statistics show that children are safer if they are restrained in the rear rather than the front seat.

We recommend that children and child restraints be secured in a rear seat, including: an infant or a child riding in a rear-facing child restraint; a child riding in a forward-facing child seat; an older child riding in a booster seat; and children, who are large enough, using safety belts.

A label on your sun visor says, “Never put a rear-facing child seat in the front.” This is because the risk to the rear-facing child is so great, if the airbag deploys.

⚠ CAUTION:

A child in a rear-facing child restraint can be seriously injured or killed if the right front passenger’s airbag inflates. This is because the back of the rear-facing child restraint would be very close to the inflating airbag.

CAUTION: (Continued)

CAUTION: (Continued)

Even though the passenger sensing system is designed to turn off the right front passenger’s frontal airbag if the system detects a rear-facing child restraint, no system is fail-safe, and no one can guarantee that an airbag will not deploy under some unusual circumstance, even though it is turned off. We recommend that rear-facing child restraints be secured in a rear seat, even if the airbag is off.

If you secure a forward-facing child restraint in the right front seat, always move the front passenger seat as far back as it will go. It is better to secure the child restraint in a rear seat.

See *Passenger Sensing System on page 1-64* for additional information.

When securing a child restraint in a rear seating position, study the instructions that came with your child restraint to make sure it is compatible with this vehicle.

If your vehicle does not have a rear seat that will accommodate a rear-facing child restraint, we recommend that rear-facing child restraints not be transported in your vehicle, even if the airbag is off.

Downloaded from www.Manualslib.com manuals search engine

Wherever you install a child restraint, be sure to secure the child restraint properly.

Keep in mind that an unsecured child restraint can move around in a collision or sudden stop and injure people in the vehicle. Be sure to properly secure any child restraint in your vehicle — even when no child is in it.

If you need to secure more than one child restraint in the rear seat, review the following illustrations. Depending on where you place the child restraint or the size of the child restraint, you may not be able to access certain safety belt assemblies or LATCH anchors for additional passengers or child restraints.

Configurations for Use of Child Restraints

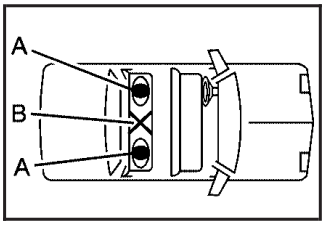

A. Child restraint using LATCH

B. Occupant prohibited

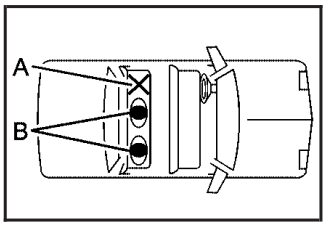

A. Occupant prohibited

B. Child restraint using LATCH

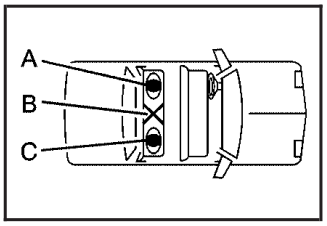

A. Child restraint using LATCH

B. Occupant prohibited

C. Child restraint or occupant using safety belt

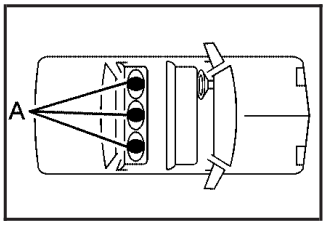

A. Child restraint or occupant using safety belt

Downloaded from www.Manualslib.com manuals search engine

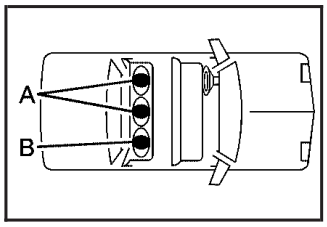

A. Child restraint or occupant using safety belt

B. Child restraint using LATCH

Lower Anchors and Tethers for Children (LATCH)

The LATCH system holds a child restraint during driving or in a crash. This system is designed to make installation of a child restraint easier. The LATCH system uses anchors in the vehicle and attachments on the child restraint that are made for use with the LATCH system.

Make sure that a LATCH-compatible child restraint is properly installed using the anchors, or use the vehicle's safety belts to secure the restraint, following the instructions that came with that restraint, and also the instructions in this manual. When installing a child restraint with a top tether, you must also use either the lower anchors or the safety belts to properly secure the child restraint. A child restraint must never be installed using only the top tether and anchor.

In order to use the LATCH system in your vehicle, you need a child restraint that has LATCH attachments. The child restraint manufacturer will provide you with instructions on how to use the child restraint and its attachments. The following explains how to attach a child restraint with these attachments in your vehicle.

Not all vehicle seating positions or child restraints have lower anchors and attachments or top tether anchors and attachments.

Downloaded from www.Manualslib.com manuals search engine

Lower Anchors

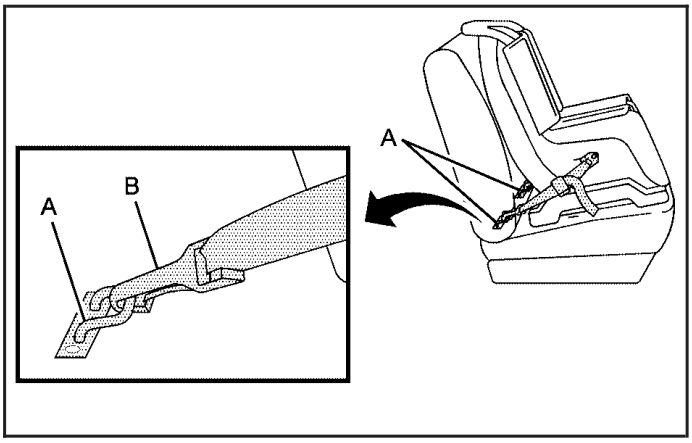

Lower anchors (A) are metal bars built into the vehicle. There are two lower anchors for each LATCH seating position that will accommodate a child restraint with lower attachments (B).

Top Tether Anchor

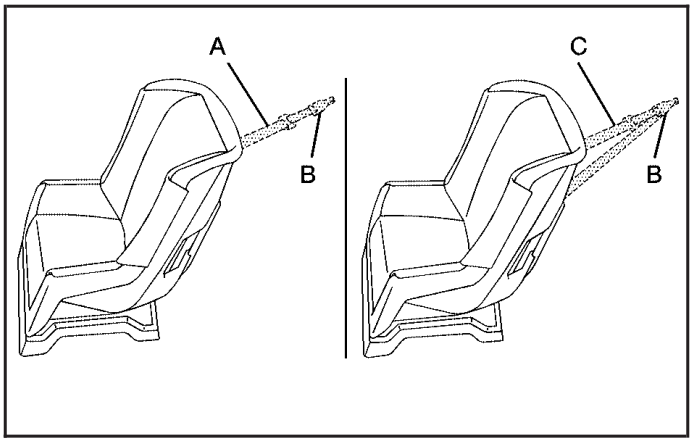

A top tether (A, C) anchors the top of the child restraint to the vehicle. A top tether anchor is built into the vehicle. The top tether attachment (B) on the child restraint connects to the top tether anchor in the vehicle in order to reduce the forward movement and rotation of the child restraint during driving or in a crash.

Downloaded from www.Manualslib.com manuals search engine

Your child restraint may have a single tether (A) or a dual tether (C). Either will have a single attachment (B) to secure the top tether to the anchor.

Some child restraints that have a top tether are designed for use with or without the top tether being attached. Others require the top tether always to be attached. In Canada, the law requires that forward-facing child restraints have a top tether, and that the tether be attached. Be sure to read and follow the instructions for your child restraint.

If the child restraint does not have a top tether, one can be obtained, in kit form, for many child restraints. Ask the child restraint manufacturer whether or not a kit is available.

Lower Anchor and Top Tether Anchor Locations

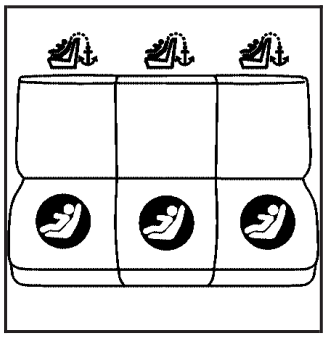

Rear Seat

(Top Tether Anchor): Seating positions with top tether anchors.

(Lower Anchor): Seating positions with two lower anchors.

Each rear seating position has exposed metal anchors located in the crease between the seatback and the seat cushion.

Downloaded from www.Manualslib.com manuals search engine

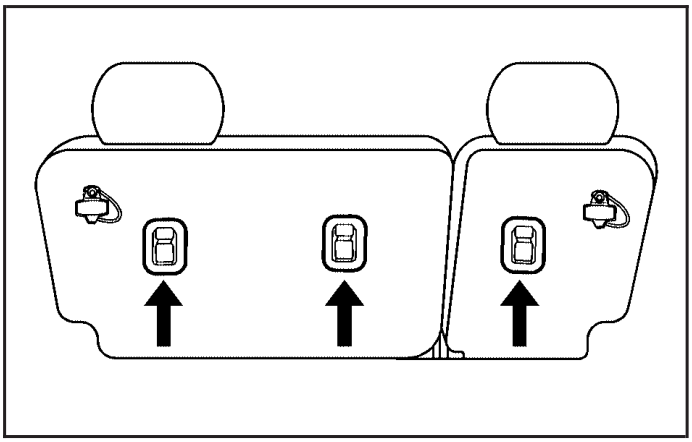

The top tether anchors for each rear seating position are located on the back of the rear seatback. You may need to adjust the rear compartment storage panel/ cover in the rear cargo area to access the anchors. Be sure to use an anchor located on the same side of the vehicle as the seating position where the child restraint will be placed.

Do not secure a child restraint in a position without a top tether anchor if a national or local law requires that the top tether be attached, or if the instructions that come with the child restraint say that the top tether must be attached.

Accident statistics show that children are safer if they are restrained in the rear rather than the front seat. See *Where to Put the Restraint on page 1-40* for additional information.

Downloaded from www.Manualslib.com manuals search engine

Securing a Child Restraint Designed for the LATCH System

⚠ CAUTION:

If a LATCH-type child restraint is not attached to anchors, the restraint will not be able to protect the child correctly. In a crash, the child could be seriously injured or killed. Make sure that a LATCH-type child restraint is properly installed using the anchors, or use the vehicle's safety belts to secure the restraint, following the instructions that came with that restraint, and also the instructions in this manual.

⚠ CAUTION:

Each top tether anchor and lower anchor in the vehicle is designed to hold only one child restraint. Attaching more than one child restraint to a single anchor could cause the

CAUTION: (Continued)

CAUTION: (Continued)

anchor or attachment to come loose or even break during a crash. A child or others could be injured if this happens. To help prevent injury to people and damage to your vehicle, attach only one child restraint per anchor.

⚠ CAUTION:

Children can be seriously injured or strangled if a shoulder belt is wrapped around their neck and the safety belt continues to tighten. Secure any unused safety belts behind the child restraint so children cannot reach them. Pull the shoulder belt all the way out of the retractor to set the lock, if your vehicle has one, after the child restraint has been installed. Be sure to follow the instructions of the child restraint manufacturer.

Downloaded from www.Manualslib.com manuals search engine

Notice: **Contact between the child restraint LATCH attachment parts and the vehicle's safety belt assembly may cause damage to these parts. Make sure when securing unused safety belts behind the child restraint that there is no contact between the child restraint LATCH attachment parts and the vehicle's safety belt assembly.**

Folding an empty rear seat with the safety belts secured may cause damage to the safety belt or the seat. When removing the child restraint, always remember to return the safety belts to their normal, stowed position before folding the rear seat.

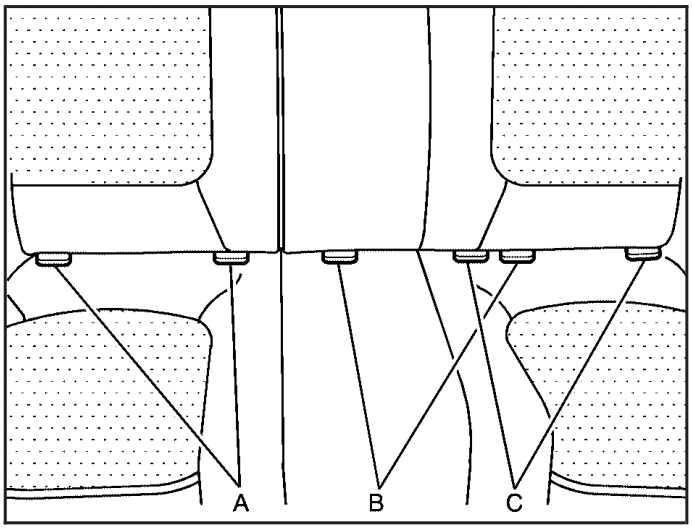

A. Passenger's Side Rear Seat Lower Anchors

B. Center Rear Seat Lower Anchors

C. Driver's Side Rear Seat Lower Anchors

Make sure to attach the child restraint at the proper anchor location.

Downloaded from www.Manualslib.com manuals search engine

This system is designed to make installation of child restraints easier. When using lower anchors, do not use the vehicle's safety belts. Instead use the vehicle's anchors and child restraint attachments to secure the restraints. Some restraints also use another vehicle anchor to secure a top tether.

1. Attach and tighten the lower attachments to the lower anchors. If the child restraint does not have lower attachments or the desired seating position does not have lower anchors, secure the child restraint with the top tether and the safety belts. Refer to your child restraint manufacturer instructions and the instructions in this manual.
   1.1. Find the lower anchors for the desired seating position.
   1.2. Put the child restraint on the seat.
   1.3. Attach and tighten the lower attachments on the child restraint to the lower anchors.
2. If the child restraint manufacturer recommends that the top tether be attached, attach and tighten the top tether to the top tether anchor, if equipped. Refer to the child restraint instructions and the following steps:
   2.1. Find the top tether anchor.
   2.2. You may need to adjust the rear compartment storage panel/cover in the rear cargo area to access the anchors. See *Rear Compartment Storage Panel/Cover on page 2-45*.
   2.3. Route, attach and tighten the top tether according to your child restraint instructions and the following instructions:

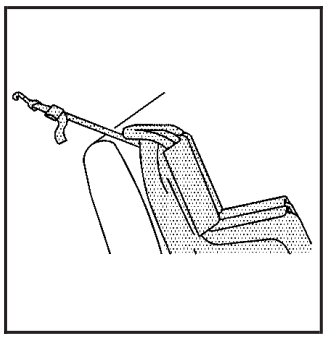

If the position you are using does not have a headrest or head restraint and you are using a single tether, route the tether over the seatback.

Downloaded from www.Manualslib.com manuals search engine

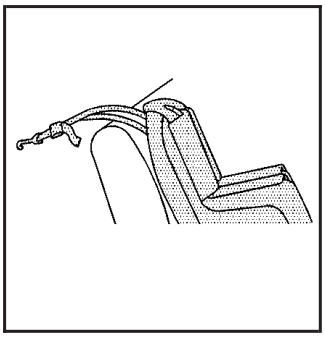

If the position you are using does not have a headrest or head restraint and you are using a dual tether, route the tether over the seatback.

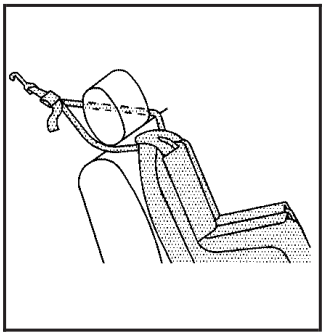

If the position you are using has an adjustable headrest or head restraint and you are using a dual tether, route the tether around the headrest or head restraint.

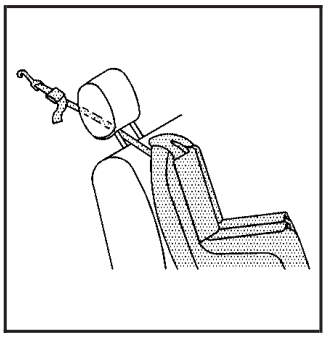

If the position you are using has an adjustable headrest or head restraint and you are using a single tether, raise the headrest or head restraint and route the tether under the headrest or head restraint and in between the headrest or head restraint posts.

3. Push and pull the child restraint in different directions to be sure it is secure.

Downloaded from www.Manualslib.com manuals search engine

Securing a Child Restraint in a Rear Seat Position

When securing a child restraint in a rear seating position, study the instructions that came with your child restraint to make sure it is compatible with this vehicle.

If your child restraint has the LATCH system, see *Lower Anchors and Tethers for Children (LATCH) on page 1-42* for how to install your child restraint using LATCH. If you secure a child restraint using a safety belt and it uses a top tether, see *Lower Anchors and Tethers for Children (LATCH) on page 1-42* for top tether anchor locations.

Do not secure a child seat in a position without a top tether anchor if a national or local law requires that the top tether be anchored, or if the instructions that come with the child restraint say that the top strap must be anchored.

In Canada, the law requires that forward-facing child restraints have a top tether, and that the tether be attached.

If your child restraint does not have the LATCH system, you will be using the safety belt to secure the child restraint in this position. Be sure to follow the instructions that came with the child restraint. Secure the child in the child restraint when and as the instructions say.

If you need to install more than one child restraint in the rear seat, be sure to read *Where to Put the Restraint on page 1-40*.

1. Put the child restraint on the seat.
2. Pick up the latch plate, and run the lap and shoulder portions of the vehicle's safety belt through or around the restraint. The child restraint instructions will show you how.

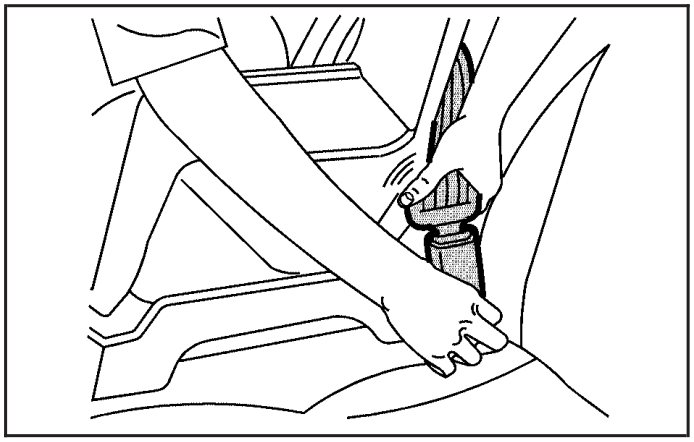

3. Push the latch plate into the buckle until it clicks.

   Make sure the release button is positioned so you would be able to unbuckle the safety belt quickly if necessary.

Downloaded from www.Manualslib.com manuals search engine

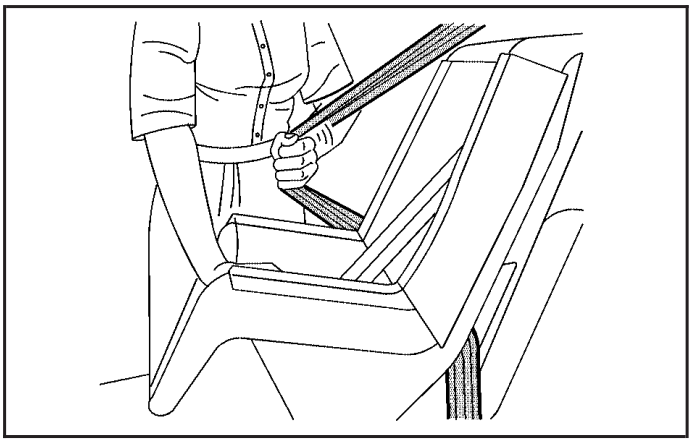

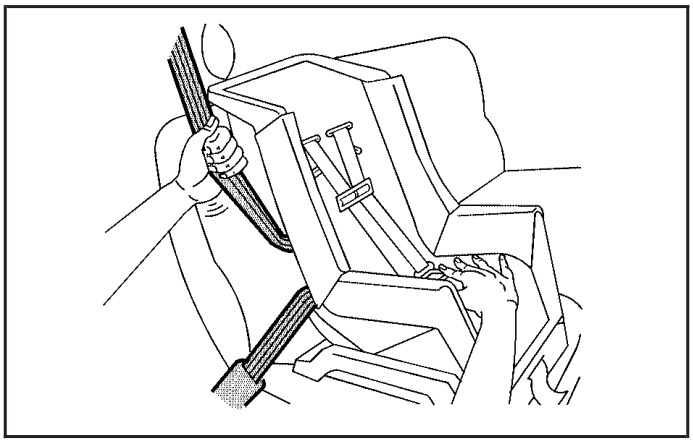

4. Pull the rest of the shoulder belt all the way out of the retractor to set the lock.

5. To tighten the belt, push down on the child restraint, pull the shoulder portion of the belt to tighten the lap portion of the belt, and feed the shoulder belt back into the retractor. If you are using a forward-facing child restraint, you may find it helpful to use your knee to push down on the child restraint as you tighten the belt.

6. If your child restraint has a top tether, follow the child restraint manufacturer's instructions regarding the use of the top tether. See *Lower Anchors and Tethers for Children (LATCH) on page 1-42* for more information.

Downloaded from www.Manualslib.com manuals search engine

7. Push and pull the child restraint in different directions to be sure it is secure.

To remove the child restraint, unbuckle the vehicle's safety belt and let it go back all the way. If the top tether is attached to a top tether anchor, disconnect it.

Securing a Child Restraint in the Right Front Seat Position

Your vehicle has airbags. A rear seat is a safer place to secure a forward-facing child restraint. See *Where to Put the Restraint on page 1-40*.

In addition, your vehicle has a passenger sensing system which is designed to turn off the right front passenger's frontal airbag under certain conditions. See *Passenger Sensing System on page 1-64* and *Passenger Airbag Status Indicator on page 3-30* for more information on this, including important safety information.

A label on your sun visor says, "Never put a rear-facing child seat in the front." This is because the risk to the rear-facing child is so great, if the airbag deploys.

⚠ CAUTION:

A child in a rear-facing child restraint can be seriously injured or killed if the right front passenger's airbag inflates. This is because the back of the rear-facing child restraint would be very close to the inflating airbag.

Even though the passenger sensing system is designed to turn off the right front passenger's frontal airbag if the system detects a rear-facing child restraint, no system is fail-safe, and no one can guarantee that an airbag will not deploy under some unusual circumstance, even though it is turned off. We recommend that rear-facing child restraints be secured in a rear seat, even if the airbag is off.

If you secure a forward-facing child restraint in the right front seat, always move the front passenger seat as far back as it will go. It is better to secure the child restraint in a rear seat.

See *Passenger Sensing System on page 1-64* for additional information.

Downloaded from www.Manualslib.com manuals search engine

If your vehicle does not have a rear seat that will accommodate a rear-facing child restraint, we recommend that rear-facing child restraints not be transported in your vehicle, even if the airbag is off.

If your child restraint has the LATCH system, see *Lower Anchors and Tethers for Children (LATCH) on page 1-42* for how to install your child restraint using LATCH. If you secure a child restraint using a safety belt and it uses a top tether, see *Lower Anchors and Tethers for Children (LATCH) on page 1-42* for top tether anchor locations.

Do not secure a child seat in a position without a top tether anchor if a national or local law requires that the top tether be anchored, or if the instructions that come with the child restraint say that the top strap must be anchored.

In Canada, the law requires that forward-facing child restraints have a top tether, and that the tether be attached.

You will be using the lap-shoulder belt to secure the child restraint in this position. Follow the instructions that came with the child restraint.

1. Move the seat as far back as it will go before securing the forward-facing child restraint.

   When the passenger sensing system has turned off the right front passenger's frontal airbag, the off indicator on the passenger airbag status indicator should light and stay lit when you start the vehicle. See *Passenger Airbag Status Indicator on page 3-30*.

2. Put the child restraint on the seat.
3. Pick up the latch plate, and run the lap and shoulder portions of the vehicle's safety belt through or around the restraint. The child restraint instructions will show you how.

Downloaded from www.Manualslib.com manuals search engine

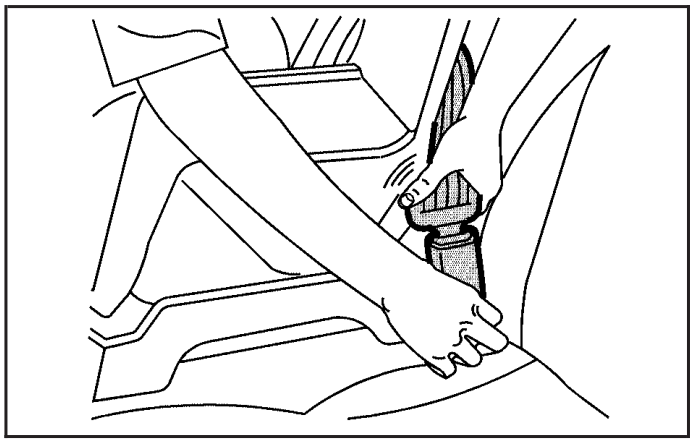

4. Push the latch plate into the buckle until it clicks.

   Make sure the release button is positioned so you would be able to unbuckle the safety belt quickly if necessary.

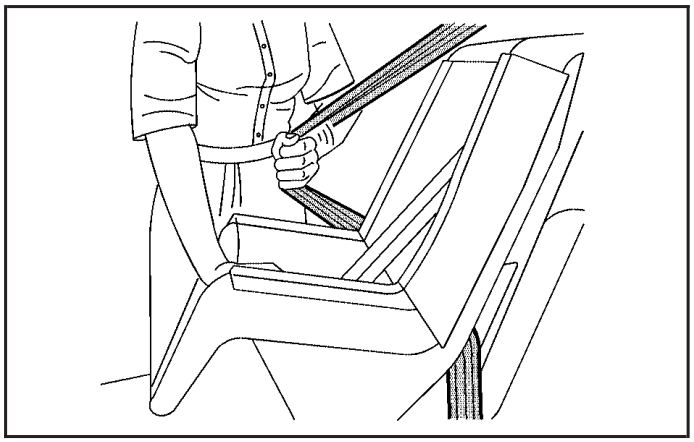

5. Pull the rest of the shoulder belt all the way out of the retractor to set the lock.

Downloaded from www.Manualslib.com manuals search engine

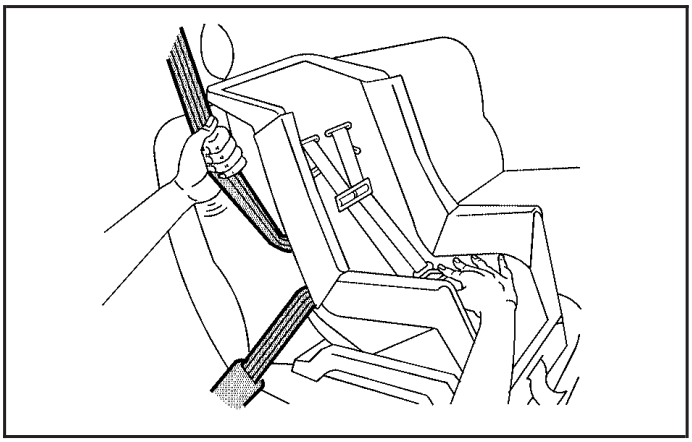

6. To tighten the belt, push down on the child restraint, pull the shoulder portion of the belt to tighten the lap portion of the belt and feed the shoulder belt back into the retractor. If you are using a forward-facing child restraint, you may find it helpful to use your knee to push down on the child restraint as you tighten the belt.
7. If your vehicle does not have a rear seat and your child restraint has a top tether, follow the child restraint manufacturer's instructions regarding the use of the top tether. See *Lower Anchors and Tethers for Children (LATCH) on page 1-42* for more information.
8. Push and pull the child restraint in different directions to be sure it is secure.

If the airbag is off, the off indicator in the passenger airbag status indicator will come on and stay on when the vehicle is started.

If a child restraint has been installed and the on indicator is lit, turn the vehicle off. Remove the child restraint from the vehicle and reinstall the child restraint.

If, after reinstalling the child restraint and restarting the vehicle, the on indicator is still lit, check to make sure that the vehicle's seatback is not pressing the child restraint into the seat cushion. If this happens, slightly recline the vehicle's seatback and adjust the seat cushion if possible. Also make sure the child restraint is not trapped under the vehicle head restraint. If this happens, adjust the head restraint.

Remove any additional material from the seat such as blankets, cushions, seat covers, seat heaters or seat massagers before reinstalling or securing the child restraint.

If the on indicator is still lit, secure the child in the child restraint in a rear seat position in the vehicle and check with your dealer/retailer. If no rear seat is available, do not install a child restraint in this vehicle and check with your dealer/retailer.

To remove the child restraint, unbuckle the vehicle's safety belt and let it go back all the way. If the top tether is attached to a top tether anchor, disconnect it.

Downloaded from www.Manualslib.com manuals search engine

Airbag System

Your vehicle has the following airbags:

- A frontal airbag for the driver.
- A frontal airbag for the right front passenger.

Your vehicle may have the following airbags:

- A roof-rail airbag for the driver and the passenger seated directly behind the driver.
- A roof-rail airbag for the right front passenger and the passenger seated directly behind that passenger.

All of the airbags in your vehicle will have the word AIRBAG embossed in the trim or on an attached label near the deployment opening.

For frontal airbags, the word AIRBAG will appear on the middle part of the steering wheel for the driver and on the instrument panel for the right front passenger.

With roof-rail airbags, the word AIRBAG will appear along the headliner or trim.

Even if you do not have a right front passenger seat in your vehicle there is still an active frontal airbag in the right side of the instrument panel. Do not place cargo in front of this airbag.

⚠ CAUTION:

Be sure that cargo is not near an airbag. In a crash, an inflating airbag might force that object toward a person. This could cause severe injury or even death. Secure objects away from the area in which an airbag would inflate. For more information, see *Where Are the Airbags? on page 1-59* and *Loading Your Vehicle on page 4-22*.

Airbags are designed to supplement the protection provided by safety belts. Even though today's airbags are also designed to help reduce the risk of injury from the force of an inflating bag, all airbags must inflate very quickly to do their job.

Downloaded from www.Manualslib.com manuals search engine

Here are the most important things to know about the airbag system:

⚠ CAUTION:

You can be severely injured or killed in a crash if you are not wearing your safety belt — even if you have airbags. Wearing your safety belt during a crash helps reduce your chance of hitting things inside the vehicle or being ejected from it. Airbags are "supplemental restraints" to the safety belts. All airbags are designed to work with safety belts, but do not replace them.

⚠ CAUTION:

Frontal airbags are designed to deploy in moderate to severe frontal and near frontal crashes. They are not designed to inflate in rollover, rear crashes, or in many side crashes.

If your vehicle has rollover capable roof-rail airbags, they are designed to inflate in moderate to severe crashes where something hits the side of your vehicle and in the event of a vehicle rollover. They are not designed to inflate in frontal or in rear crashes.

Everyone in your vehicle should wear a safety belt properly — whether or not there is an airbag for that person.

Downloaded from www.Manualslib.com manuals search engine

⚠ CAUTION:

Airbags inflate with great force, faster than the blink of an eye. Anyone who is up against, or very close to, any airbag when it inflates can be seriously injured or killed. Do not sit unnecessarily close to the airbag, as you would be if you were sitting on the edge of your seat or leaning forward. Safety belts help keep you in position before and during a crash. Always wear your safety belt, even with airbags. The driver should sit as far back as possible while still maintaining control of the vehicle.

Occupants should not lean on or sleep against the door or side windows in seating positions with roof-rail airbags.

⚠ CAUTION:

Airbags plus lap-shoulder belts offer the best protection for adults, but not for young children and infants. Neither the vehicle's safety belt system nor its airbag system is designed for them. Young children and infants need the protection that a child restraint system can provide. Always secure children properly in your vehicle. To read how, see *Older Children on page 1-31* or *Infants and Young Children on page 1-34*.

There is an airbag readiness light on the instrument panel cluster, which shows the airbag symbol.

The system checks the airbag electrical system for malfunctions. The light tells you if there is an electrical problem. See *Airbag Readiness Light on page 3-29* for more information.

Downloaded from www.Manualslib.com manuals search engine

Where Are the Airbags?

The driver's airbag is in the middle of the steering wheel.

The right front passenger's airbag is in the instrument panel on the passenger's side.

Downloaded from www.Manualslib.com manuals search engine

Driver Side shown, Passenger Side similar

If your vehicle has roof-rail airbags for the driver, right front passenger, and second row outboard passengers, they are in the ceiling above the side windows.

⚠ CAUTION:

If something is between an occupant and an airbag, the airbag might not inflate properly or it might force the object into that person causing severe injury or even death. The path of an inflating airbag must be kept clear. Do not put anything between an occupant and an airbag, and do not attach or put anything on the steering wheel hub or on or near any other airbag covering.

If your vehicle has roof-rail airbags, never secure anything to the roof of your vehicle by routing the rope or tie down through any door or window opening. If you do, the path of an inflating roof-rail airbag will be blocked.

Downloaded from www.Manualslib.com manuals search engine

When Should an Airbag Inflate?

Frontal airbags are designed to inflate in moderate to severe frontal or near-frontal crashes to help reduce the potential for severe injuries mainly to the driver's or right front passenger's head and chest. However, they are only designed to inflate if the impact exceeds a predetermined deployment threshold. Deployment thresholds are used to predict how severe a crash is likely to be in time for the airbags to inflate and help restrain the occupants.

Whether your frontal airbags will or should deploy is not based on how fast your vehicle is traveling. It depends largely on what you hit, the direction of the impact, and how quickly your vehicle slows down.

Frontal airbags may inflate at different crash speeds. For example:

- If the vehicle hits a stationary object, the airbags could inflate at a different crash speed than if the vehicle hits a moving object.
- If the vehicle hits an object that deforms, the airbags could inflate at a different crash speed than if the vehicle hits an object does not deform.
- If the vehicle hits a narrow object (like a pole), the airbags could inflate at a different crash speed than if the vehicle hits a wide object (like a wall).
- If the vehicle goes into an object at an angle, the airbags could inflate at a different crash speed than if the vehicle goes straight into the object.

Thresholds can also vary with specific vehicle design.

Frontal airbags are not intended to inflate during vehicle rollovers, rear impacts, or in many side impacts.

In addition, your vehicle has dual-stage frontal airbags. Dual-stage airbags adjust the restraint according to crash severity. Your vehicle has electronic frontal sensors, which help the sensing system distinguish between a moderate frontal impact and a more severe frontal impact. For moderate frontal impacts, dual-stage airbags inflate at a level less than full deployment. For more severe frontal impacts, full deployment occurs.

Your vehicle may or may not have roof-rail airbags. See *Airbag System on page 1-56*. Roof-rail airbags are intended to inflate in moderate to severe side crashes. In addition, these roof-rail airbags are intended to inflate during a rollover. Roof-rail airbags will inflate if the crash severity is above the system's designed threshold level. The threshold level can vary with specific vehicle design.

Downloaded from www.Manualslib.com manuals search engine

Roof-rail airbags are not intended to inflate in frontal impacts, near-frontal impacts, or rear impacts. Both roof-rail airbags will deploy when either side of the vehicle is struck or if the sensing system predicts that the vehicle is about to roll over.

In any particular crash, no one can say whether an airbag should have inflated simply because of the damage to a vehicle or because of what the repair costs were. For frontal airbags, inflation is determined by what the vehicle hits, the angle of the impact, and how quickly the vehicle slows down. For roof-rail airbags, deployment is determined by the location and severity of the side impact. In a rollover event, roof-rail airbag deployment is determined by the direction of the roll.

What Makes an Airbag Inflate?

In a deployment event, the sensing system sends an electrical signal triggering a release of gas from the inflator. Gas from the inflator fills the airbag causing the bag to break out of the cover and deploy. The inflator, the airbag, and related hardware are all part of the airbag module.

Frontal airbag modules are located inside the steering wheel and instrument panel. For vehicles with roof-rail airbags, there are airbag modules in the ceiling of the vehicle, near the side windows that have occupant seating positions.

How Does an Airbag Restrain?

In moderate to severe frontal or near frontal collisions, even belted occupants can contact the steering wheel or the instrument panel. In moderate to severe side collisions, even belted occupants can contact the inside of the vehicle.

Airbags supplement the protection provided by safety belts. Frontal airbags distribute the force of the impact more evenly over the occupant's upper body, stopping the occupant more gradually. Roof-rail airbags distribute the force of the impact more evenly over the occupant's upper body.

Rollover capable roof-rail airbags are designed to help contain the head and chest of occupants in the outboard seating positions in the first and second rows. The rollover capable roof-rail airbags are designed to help reduce the risk of full or partial ejection in rollover events, although no system can prevent all such ejections.

But airbags would not help in many types of collisions, primarily because the occupant's motion is not toward those airbags. See *When Should an Airbag Inflate? on page 1-61* for more information.

Airbags should never be regarded as anything more than a supplement to safety belts.

Downloaded from www.Manualslib.com manuals search engine

What Will You See After an Airbag Inflates?

After the frontal airbags inflate, they quickly deflate, so quickly that some people may not even realize an airbag inflated. Roof-rail airbags may still be at least partially inflated for some time after they deploy. Some components of the airbag module may be hot for several minutes. For location of the airbag modules, see *What Makes an Airbag Inflate? on page 1-62*.

The parts of the airbag that come into contact with you may be warm, but not too hot to touch. There may be some smoke and dust coming from the vents in the deflated airbags. Airbag inflation does not prevent the driver from seeing out of the windshield or being able to steer the vehicle, nor does it prevent people from leaving the vehicle.

⚠ CAUTION:

When an airbag inflates, there may be dust in the air. This dust could cause breathing problems for people with a history of asthma or other breathing trouble. To avoid this, everyone in the vehicle should get out as soon as it is safe to do so. If you have breathing problems but cannot get out of the vehicle after an airbag inflates, then get fresh air by opening a window or a door. If you experience breathing problems following an airbag deployment, you should seek medical attention.

Your vehicle has a feature that may automatically unlock the doors, turn the interior lamps on, and turn the hazard warning flashers on when the airbags inflate. You can lock the doors, turn the interior lamps off, and turn the hazard warning flashers off by using the controls for those features.

Downloaded from www.Manualslib.com manuals search engine

In many crashes severe enough to inflate the airbag, windshields are broken by vehicle deformation. Additional windshield breakage may also occur from the right front passenger airbag.

- Airbags are designed to inflate only once. After an airbag inflates, you will need some new parts for the airbag system. If you do not get them, the airbag system will not be there to help protect you in another crash. A new system will include airbag modules and possibly other parts. The service manual for your vehicle covers the need to replace other parts.
- Your vehicle has a crash sensing and diagnostic module which records information after a crash. See *Vehicle Data Recording and Privacy on page 7-17* and *Event Data Recorders on page 7-18*.
- Let only qualified technicians work on the airbag systems. Improper service can mean that an airbag system will not work properly. See your dealer/retailer for service.

Passenger Sensing System

Your vehicle has a passenger sensing system for the right front passenger's position. The passenger airbag status indicator will be visible on the instrument panel when you start your vehicle.

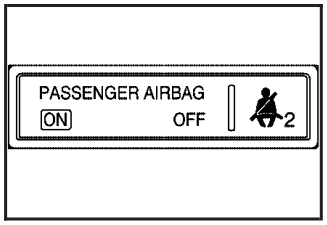

United States

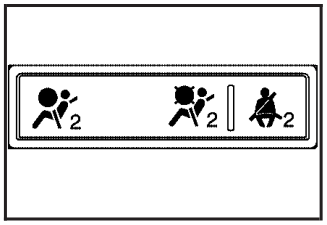

Canada

The words ON and OFF, or the symbol for on and off, will be visible during the system check. When the system check is complete, either the word ON or the word OFF, or the symbol for on or the symbol for off, will be visible. See *Passenger Airbag Status Indicator on page 3-30*.

The passenger sensing system will turn off the right front passenger's frontal airbag under certain conditions. The driver's airbags are not part of the passenger sensing system.

Downloaded from www.Manualslib.com manuals search engine

The passenger sensing system works with sensors that are part of the right front passenger's seat. The sensors are designed to detect the presence of a properly-seated occupant and determine if the right front passenger's frontal airbag should be enabled (may inflate) or not.

Accident statistics show that children are safer if they are restrained in the rear rather than the front seat.

We recommend that children be secured in a rear seat, including: an infant or a child riding in a rear-facing child restraint; a child riding in a forward-facing child seat; an older child riding in a booster seat; and children, who are large enough, using safety belts.

A label on your sun visor says, "Never put a rear-facing child seat in the front." This is because the risk to the rear-facing child is so great, if the airbag deploys.

⚠ CAUTION:

A child in a rear-facing child restraint can be seriously injured or killed if the right front passenger's airbag inflates. This is because the back of the rear-facing child restraint would be very close to the inflating airbag.

CAUTION: (Continued)

CAUTION: (Continued)

Even though the passenger sensing system is designed to turn off the right front passenger's frontal airbag if the system detects a rear-facing child restraint, no system is fail-safe, and no one can guarantee that an airbag will not deploy under some unusual circumstance, even though it is turned off. We recommend that rear-facing child restraints be secured in a rear seat, even if the airbag is off.

If you secure a forward-facing child restraint in the right front seat, always move the front passenger seat as far back as it will go. It is better to secure the child restraint in a rear seat.

If your vehicle does not have a rear seat that will accommodate a rear-facing child restraint, we recommend that rear-facing child restraints not be transported in your vehicle, even if the airbag is off.

Downloaded from www.Manualslib.com manuals search engine

The passenger sensing system is designed to turn off the right front passenger's frontal airbag if:

- The right front passenger seat is unoccupied.
- The system determines that an infant is present in a rear-facing infant seat.
- The system determines that a small child is present in a child restraint.
- The system determines that a small child is present in a booster seat.
- A right front passenger takes his/her weight off of the seat for a period of time.
- The right front passenger seat is occupied by a smaller person, such as a child who has outgrown child restraints.
- Or, if there is a critical problem with the airbag system or the passenger sensing system.

When the passenger sensing system has turned off the right front passenger's frontal airbag, the off indicator will light and stay lit to remind you that the airbag is off. See *Passenger Airbag Status Indicator on page 3-30*.

If a child restraint has been installed and the on indicator is lit, turn the vehicle off. Remove the child restraint from the vehicle and reinstall the child restraint following the child restraint manufacturer's directions and refer to *Securing a Child Restraint in the Right Front Seat Position on page 1-52*.

If, after reinstalling the child restraint and restarting the vehicle, the on indicator is still lit, check to make sure that the vehicle's seatback is not pressing the child restraint into the seat cushion. If this happens, slightly recline the vehicle's seatback and adjust the seat cushion if possible. Also make sure the child restraint is not trapped under the vehicle head restraint. If this happens, adjust the head restraint. See *Head Restraints on page 1-7*.

Downloaded from www.Manualslib.com manuals search engine

Remove any additional material from the seat such as blankets, cushions, seat covers, seat heaters, or seat massagers before reinstalling or securing the child restraint.

If the on indicator is still lit, secure the child in the child restraint in a rear seat position in the vehicle, and check with your dealer/retailer. If no rear seat is available, do not install a child restraint in this vehicle, and check with your dealer/retailer.

The passenger sensing system is designed to enable (may inflate) the right front passenger's frontal airbag anytime the system senses that a person of adult size is sitting properly in the right front passenger's seat. When the passenger sensing system has allowed the airbag to be enabled, the on indicator will light and stay lit to remind you that the airbag is active.

For some children who have outgrown child restraints and for very small adults, the passenger sensing system may or may not turn off the right front passenger's frontal airbag, depending upon the person's seating posture and body build. Everyone in your vehicle who has outgrown child restraints should wear a safety belt properly — whether or not there is an airbag for that person.

If a person of adult-size is sitting in the right front passenger's seat, but the off indicator is lit, it could be because that person is not sitting properly in the seat. If this happens, turn the vehicle off, remove any additional material from the seat, such as blankets, cushions, seat covers, seat heaters or seat massagers and ask the person to place the seatback in the fully upright position, then sit upright in the seat, centered on the seat cushion, with the person's legs comfortably extended. Restart the vehicle and have the person remain in this position for two to three minutes. This will allow the system to detect that person and then enable the right front passenger's frontal airbag.

Downloaded from www.Manualslib.com manuals search engine

Safety belts help keep the passenger in position on the seat during vehicle maneuvers and braking, which helps the passenger sensing system maintain the passenger airbag status. See “Safety Belts” and “Child Restraints” in the Index for additional information about the importance of proper restraint use.

⚠ CAUTION:

If the airbag readiness light in the instrument panel cluster ever comes on and stays on, it means that something may be wrong with the airbag system. If this ever happens, have the vehicle serviced promptly, because an adult-size person sitting in the right front passenger’s seat may not have the protection of the airbag(s). See *Airbag Readiness Light on page 3-29* for more on this, including important safety information.

A thick layer of additional material, such as a blanket or cushion, or aftermarket equipment such as seat covers, seat heaters, and seat massagers can affect how well the passenger sensing system operates. We recommend that you not use seat covers or other aftermarket equipment other than any that GM has approved for your specific vehicle. See *Adding Equipment to Your Airbag-Equipped Vehicle on page 1-70* for more information about modifications that can affect how the system operates.

Downloaded from www.Manualslib.com manuals search engine

⚠ CAUTION:

Stowing of articles under the passenger's seat or between the passenger's seat cushion and seatback may interfere with the proper operation of the passenger sensing system.

Servicing Your Airbag-Equipped Vehicle

Airbags affect how your vehicle should be serviced. There are parts of the airbag system in several places around your vehicle. Your dealer/retailer and the service manual have information about servicing your vehicle and the airbag system. To purchase a service manual, see *Service Publications Ordering Information on page 7-16*.

⚠ CAUTION:

For up to 10 seconds after the ignition is turned off and the battery is disconnected, an airbag can still inflate during improper service. You can be injured if you are close to an airbag when it inflates. Avoid yellow connectors. They are probably part of the airbag system. Be sure to follow proper service procedures, and make sure the person performing work for you is qualified to do so.

Downloaded from www.Manualslib.com manuals search engine

Adding Equipment to Your Airbag-Equipped Vehicle

Q: Is there anything I might add to or change about the vehicle that could keep the airbags from working properly?

A: Yes. If you add things that change your vehicle's frame, bumper system, height, front end or side sheet metal, they may keep the airbag system from working properly. Changing or moving any parts of the front seats, safety belts, the airbag sensing and diagnostic module, steering wheel, instrument panel, roof-rail airbag modules, ceiling headliner or pillar garnish trim, overhead console, front sensors, side impact sensors, rollover sensor module, or airbag wiring can affect the operation of the airbag system.

In addition, your vehicle has a passenger sensing system for the right front passenger's position, which includes sensors that are part of the passenger's seat. The passenger sensing system may not operate properly if the original seat trim is replaced with non-GM covers, upholstery or trim, or with GM covers, upholstery or trim designed for a different vehicle. Any object, such as an aftermarket seat heater or a comfort enhancing pad or device, installed under or on top of the seat fabric, could also interfere with the operation of the passenger sensing system. This could either prevent proper deployment of the passenger airbag(s) or prevent the passenger sensing system from properly turning off the passenger airbag(s). See *Passenger Sensing System on page 1-64*.

If you have any questions about this, you should contact Customer Assistance before you modify your vehicle. The phone numbers and addresses for Customer Assistance are in Step Two of the Customer Satisfaction Procedure in this manual. See *Customer Satisfaction Procedure on page 7-2*.

If your vehicle has rollover roof-rail airbags, see *Different Size Tires and Wheels on page 5-72* for additional important information.

Q: Because I have a disability, I have to get my vehicle modified. How can I find out whether this will affect my airbag system?

A: If you have questions, call Customer Assistance. The phone numbers and addresses for Customer Assistance are in Step Two of the Customer Satisfaction Procedure in this manual. See *Customer Satisfaction Procedure on page 7-2*.

In addition, your dealer/retailer and the service manual have information about the location of the airbag sensors, sensing and diagnostic module and airbag wiring.

Downloaded from www.Manualslib.com manuals search engine

Restraint System Check

Checking the Restraint Systems

Safety Belts

Now and then, make sure the safety belt reminder light and all your belts, buckles, latch plates, retractors and anchorages are working properly.

Look for any other loose or damaged safety belt system parts. If you see anything that might keep a safety belt system from doing its job, have it repaired. Torn or frayed safety belts may not protect you in a crash. They can rip apart under impact forces. If a belt is torn or frayed, get a new one right away.

Make sure the safety belt reminder light is working. See *Safety Belt Reminders on page 3-28* for more information.

Keep safety belts clean and dry. See *Care of Safety Belts on page 5-92*.

Airbags

The airbag system does not need regularly scheduled maintenance or replacement. Make sure the airbag readiness light is working. See *Airbag Readiness Light on page 3-29* for more information.

Notice: **If an airbag covering is damaged, opened, or broken, the airbag may not work properly. Do not open or break the airbag coverings. If there are any opened or broken airbag covers, have the airbag covering and/or airbag module replaced. For the location of the airbag modules, see *What Makes an Airbag Inflate? on page 1-62*. See your dealer/retailer for service.**

Downloaded from www.Manualslib.com manuals search engine

Replacing Restraint System Parts After a Crash

⚠ CAUTION:

A crash can damage the restraint systems in your vehicle. A damaged restraint system may not properly protect the person using it, resulting in serious injury or even death in a crash. To help make sure your restraint systems are working properly after a crash, have them inspected and any necessary replacements made as soon as possible.

If you have had a crash, do you need new belts or LATCH system (if equipped) parts?

After a very minor crash, nothing may be necessary. But the belt assemblies that were used during any crash may have been stressed or damaged. See your dealer/retailer to have your safety belt assemblies inspected or replaced.

If your vehicle has the LATCH system and it was being used during a crash, you may need new LATCH system parts.

New parts and repairs may be necessary even if the belt or LATCH system (if equipped), was not being used at the time of the crash.

If an airbag inflates, you will need to replace airbag system parts. See the part on the airbag system earlier in this section.

Have your safety belt pretensioners checked if your vehicle has been in a crash, if your airbag readiness light stays on after you start your vehicle, or while you are driving. See *Airbag Readiness Light on page 3-29*.

Downloaded from www.Manualslib.com manuals search engine

Section 2 Features and Controls

Keys 2-3
Remote Keyless Entry (RKE) System 2-4
Remote Keyless Entry (RKE) System Operation 2-5
Remote Vehicle Start 2-8

Doors and Locks 2-11
Door Locks 2-11
Power Door Locks 2-11
Delayed Locking 2-12
Programmable Automatic Door Locks 2-12
Rear Door Security Locks 2-12
Lockout Protection 2-13
Liftgate 2-13

Windows 2-15
Power Windows 2-16
Sun Visors 2-17

Theft-Deterrent Systems 2-17
Content Theft-Deterrent 2-18
PASS-Key® III+ 2-18
PASS-Key® III+ Operation 2-19

Starting and Operating Your Vehicle 2-20
New Vehicle Break-In 2-20
Ignition Positions 2-21
Retained Accessory Power (RAP) 2-22
Starting the Engine 2-22
Engine Coolant Heater 2-23
Automatic Transmission Operation (3.4L V6 with 5-Speed) 2-25
Automatic Transmission Operation (3.6L V6 with 6-Speed) 2-28
Parking Brake 2-32
Shifting Into PARK (P) 2-33
Shifting Out of PARK (P) 2-35
Parking Over Things That Burn 2-35
Engine Exhaust 2-36
Running the Engine While Parked 2-36

Mirrors 2-37
Manual Rearview Mirror 2-37
Manual Rearview Mirror with OnStar® 2-37
Automatic Dimming Rearview Mirror with OnStar® 2-38
Outside Power Mirrors 2-38
Outside Convex Mirrors 2-39

Downloaded from www.Manualslib.com manuals search engine

Section 2 Features and Controls

OnStar® System 2-39
Storage Areas 2-43
Glove Box 2-43
Cupholder(s) 2-43
Center Console Storage 2-43
Luggage Carrier 2-43
Rear Compartment Storage Panel/Cover 2-45
Rear Seat Armrest 2-46
Table 2-47
Convenience Net 2-48
Sunroof 2-48

Downloaded from www.Manualslib.com manuals search engine

Keys

⚠ CAUTION:

Leaving children in a vehicle with the ignition key is dangerous for many reasons, children or others could be badly injured or even killed. They could operate the power windows or other controls or even make the vehicle move. The windows will function with the keys in the ignition and they could be seriously injured or killed if caught in the path of a closing window. Do not leave the keys in a vehicle with children.

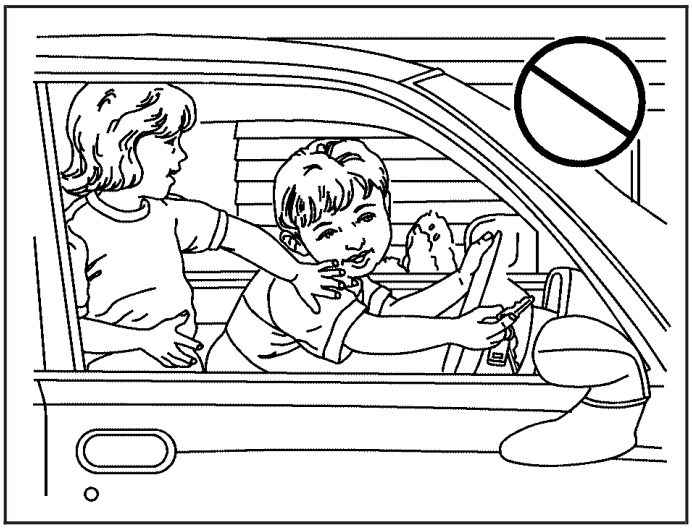

The key can be used for the ignition and all locks.

The key has a bar-coded key tag that the dealer/retailer or qualified locksmith can use to make new keys. Store this information in a safe place, not in your vehicle.

Notice: **If you ever lock your keys in your vehicle, you may have to damage the vehicle to get in. Be sure you have spare keys.**

If you are locked out of your vehicle, contact Roadside Assistance. See *Roadside Assistance Program on page 7-7* for more information.

Downloaded from www.Manualslib.com manuals search engine

Remote Keyless Entry (RKE) System

If the vehicle has the Remote Keyless Entry (RKE) system, it operates on a radio frequency subject to Federal Communications Commission (FCC) Rules and with Industry Canada.

This device complies with Part 15 of the FCC Rules. Operation is subject to the following two conditions:

1. This device may not cause interference.
2. This device must accept any interference received, including interference that may cause undesired operation of the device.

This device complies with RSS-210 of Industry Canada. Operation is subject to the following two conditions:

1. This device may not cause interference.
2. This device must accept any interference received, including interference that may cause undesired operation of the device.

Changes or modifications to this system by other than an authorized service facility could void authorization to use this equipment.

At times you may notice a decrease in range. This is normal for any RKE system. If the transmitter does not work or if you have to stand closer to your vehicle for the transmitter to work, try this:

- Check the distance. You may be too far from your vehicle. You may need to stand closer during rainy or snowy weather.
- Check the location. Other vehicles or objects may be blocking the signal. Take a few steps to the left or right, hold the transmitter higher, and try again.
- Check to determine if battery replacement is necessary. See “Battery Replacement” later in this section.
- If you are still having trouble, see your dealer/retailer or a qualified technician for service.

Downloaded from www.Manualslib.com manuals search engine

Remote Keyless Entry (RKE) System Operation

The vehicle's doors can be locked and unlocked from about 3 feet (1 m) up to 65 feet (20 m) away with the Remote Keyless Entry (RKE) transmitter.

If your vehicle has the remote start feature you can also start your vehicle with the RKE transmitter. Your RKE transmitter, with the remote start button, provides an increased range of 195 feet (60 m) away. However, the range may be less while the vehicle is running. As a result, you may need to be closer to your vehicle to turn it off than you were to turn it on.

There are other conditions which can affect the performance of the transmitter. See *Remote Keyless Entry (RKE) System on page 2-4*.

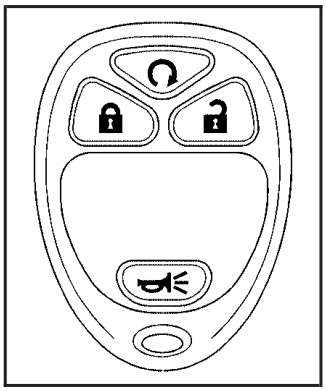

With Remote Start Shown, Without Remote Start Similar

(Remote Vehicle Start): If your vehicle has this feature, press to start the engine from outside the vehicle using the RKE transmitter. See *Remote Vehicle Start on page 2-8* for additional information.

Downloaded from www.Manualslib.com manuals search engine

(Lock): Press to lock the doors and liftgate. If enabled through the Driver Information Center (DIC), the parking lamps will flash once to indicate locking has occurred. If enabled through the DIC, the horn will chirp when is pressed again within five seconds of the previous press of the lock button. See *DIC Vehicle Personalization on page 3-60* for additional information. Pressing may arm the content theft-deterrent system. See *Content Theft-Deterrent on page 2-18*.

(Unlock): Press to unlock the driver's door. If is pressed again within five seconds, all remaining doors, and the liftgate, will unlock. The interior lamps will come on and stay on for 20 seconds or until the ignition is turned on. If enabled through the DIC, the parking lamps will flash twice to indicate unlocking has occurred. See *DIC Vehicle Personalization on page 3-60*. Pressing on the RKE transmitter will disarm the content theft-deterrent system. See *Content Theft-Deterrent on page 2-18*.

(Vehicle Locator/Panic Alarm): Press and release to locate your vehicle. The turn signal lamps will flash and the horn will sound three times.

Press and hold for more than two seconds to activate the panic alarm. The turn signal lamps will flash and the horn will sound repeatedly for 30 seconds. The alarm will turn off when the ignition is moved to ON/RUN or is pressed again. The ignition must be in LOCK/OFF for the panic alarm to work.

The RKE transmitter is used to arm/disarm the content theft-deterrent system. Your vehicle's theft-deterrent system can be programmed to three different modes. See *Content Theft-Deterrent on page 2-18*.

If you accidentally set off the alarm when entering or exiting the vehicle, you can shut it off by pressing or once or twice.

Downloaded from www.Manualslib.com manuals search engine

Matching Transmitter(s) to Your Vehicle

Each RKE transmitter is coded to prevent another transmitter from unlocking your vehicle. If a transmitter is lost or stolen, a replacement can be purchased through your dealer/retailer. All transmitters need to be re-coded to match the new transmitter. The lost transmitter will no longer work after the new transmitters are re-coded. The vehicle can have a maximum of four transmitters matched to it. Or, see “Learn Remote Key” under *DIC Operation and Displays on page 3-45* for instructions on how to match RKE transmitters to your vehicle.

Battery Replacement

The battery is weak if the transmitter will not work at the normal range in any location. If you have to get close to your vehicle before the transmitter works, change the battery.

Notice: **When replacing the battery, use care not to touch any of the circuitry. Static from your body transferred to these surfaces may damage the transmitter.**

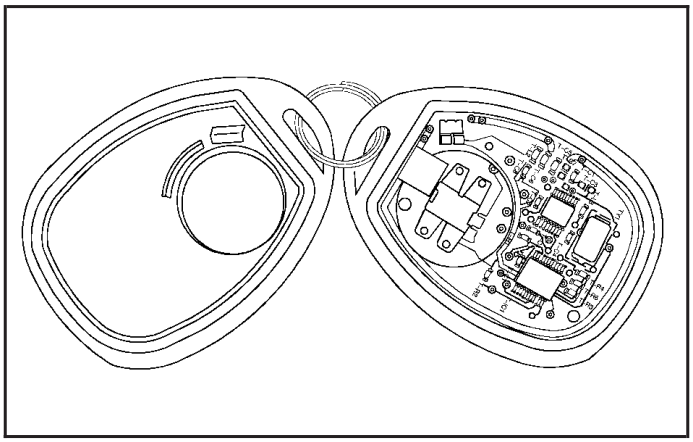

To replace the battery in the RKE transmitter:

1. Separate the halves of the transmitter with a flat, thin object inserted into the notch on the side.
2. Remove the old battery. Do not use a metal object.
3. Insert the new battery, positive side facing down. Replace with a CR2032 or equivalent battery.
4. Put the transmitter back together tightly.

Downloaded from www.Manualslib.com manuals search engine

Remote Vehicle Start

Your vehicle may have the remote start feature. This feature allows you to start the engine from outside the vehicle. See “REMOTE START” under *DIC Vehicle Personalization on page 3-60* for instructions on how to enable and disable this feature.

During a remote start, the climate control system will turn on at the fan, temperature, and mode settings the vehicle was set to when the vehicle was last turned off. The rear window defogger will also turn on.

If your vehicle has heated seats, they may turn on during colder outside temperatures and will shut off when the key is turned to ON/RUN. You may not notice an increase in seat surface temperature until the seat is occupied for a short period of time.

Laws in some local communities may restrict the use of remote starters. For example, some laws may require a person using remote start to have the vehicle in view when doing so. Check local regulations for any requirements on remote starting of vehicles.

(Remote Vehicle Start): This button will be on the RKE transmitter if you have remote start.

Your RKE transmitter, with the remote start button, provides an increased range of operation. However, the range may be less while the vehicle is running. As a result, you may need to be closer to your vehicle to turn it off, than you were to turn it on.

If your vehicle is low on fuel, do not use the remote start feature. The vehicle may run out of fuel.

To start the engine using the remote start feature:

1. Aim the RKE transmitter, that has a remote vehicle start button, at the vehicle.
2. Press and release the transmitter’s lock button, then immediately press and hold the remote vehicle start button. Hold the remote start button until the vehicle’s turn signal lamps flash, or for at least four seconds if the vehicle’s lights are not visible. The vehicle’s doors will be locked.

   Pressing the remote start button again after the vehicle has started will turn off the ignition.

   When the vehicle’s engine starts, the parking lamps will turn on and remain on while the engine is running.

Downloaded from www.Manualslib.com manuals search engine

3. To extend the engine run time by 10 minutes, repeat Steps 1 and 2 while the engine is still running. The engine run time can only be extended if it is the first remote start since the vehicle has been driven. Remote start can be extended one time.

   If the remote start procedure is used again before the first 10 minute time frame has ended, the first 10 minutes will immediately expire and the second 10 minute time frame will start.

   For example, if the lock button and then the remote start buttons are pressed again after the vehicle has been running for five minutes, 10 minutes are added, allowing the engine to run for 15 minutes.

4. After entering the vehicle during a remote start, insert and turn the key to ON/RUN to drive the vehicle.

   After a remote start, the engine will automatically shut off after 10 minutes unless a time extension has been done or the vehicle's key is inserted into the ignition switch and turned to ON/RUN.

A maximum of two remote starts or remote start attempts are allowed between ignition cycles.

After your vehicle's engine has been started two times using the remote start button, the vehicle's ignition switch must be turned to ON/RUN and then back to LOCK/OFF using the key before the remote start procedure can be used again.

To manually shut off the engine after a remote start, do any of the following:

- Aim the RKE transmitter at the vehicle and press the remote start button until the parking lamps turn off.
- Turn on the hazard warning flashers.
- Insert the vehicle's key into the ignition switch and turn the switch to ON/RUN and then back to LOCK/OFF.

Downloaded from www.Manualslib.com manuals search engine

The remote vehicle start feature will not operate if any of the following occur:

- The vehicle's key is in the ignition.
- The vehicle's hood, liftgate or doors are not closed.
- The hazard warning flashers are on.
- There is an emission control system malfunction.
- The engine coolant temperature is too high.
- The oil pressure is low.
- Two remote vehicle starts have already been used. The maximum number of remote starts or remote start attempts between ignition cycles with the key is two.
- The remote start feature may be disabled. The system may be enabled or disabled through the DIC. See "REMOTE START" under *DIC Vehicle Personalization on page 3-60* for additional information.

  Vehicles that have the remote vehicle start feature are shipped from the factory with the remote vehicle start system enabled.

Remote Start Ready

If your vehicle does not have the remote vehicle start feature, it may have the remote start ready feature. This feature allows your dealer/retailer to add the manufacturer's remote vehicle start feature.

If your vehicle has the remote start ready feature, your RKE transmitter will have extended range that will allow you to lock or unlock your vehicle from approximately 195 feet (60 m) away.

See your dealer/retailer if you would like to add the manufacturer's remote vehicle start feature to your vehicle.

Downloaded from www.Manualslib.com manuals search engine

Doors and Locks

Door Locks

⚠ CAUTION:

Unlocked doors can be dangerous.

- **Passengers, especially children, can easily open the doors and fall out of a moving vehicle. When a door is locked, the handle will not open it. You increase the chance of being thrown out of the vehicle in a crash if the doors are not locked. So, wear safety belts properly and lock the doors whenever you drive.**
- **Young children who get into unlocked vehicles may be unable to get out. A child can be overcome by extreme heat and can suffer permanent injuries or even death from heat stroke. Always lock your vehicle whenever you leave it.**
- **Outsiders can easily enter through an unlocked door when you slow down or stop your vehicle. Locking your doors can help prevent this from happening.**

There are a couple of ways to manually lock or unlock your vehicle.

From the outside, use the key in the driver's door.

From the inside, use the lock control on the door.

Power Door Locks

The power door lock switches are located on the driver's and front passenger's doors.

(Unlock): To unlock the doors, press the unlock symbol.

(Lock): Remove the ignition key and press the lock symbol to lock all of the doors.

Downloaded from www.Manualslib.com manuals search engine

Delayed Locking

A chime will sound three times to indicate a door or liftgate is open when you try to lock the doors with the power door lock switch. The doors will not lock, and the theft-deterrent system will not arm until all the doors are closed and ten seconds have passed.

The delayed locking feature can be programmed through the Driver Information Center (DIC). See *DIC Vehicle Personalization on page 3-60*.

See also *Remote Keyless Entry (RKE) System Operation on page 2-5*.

Programmable Automatic Door Locks

Your vehicle has an automatic lock/unlock feature which enables you to program the power door locks through the Driver Information Center (DIC). See *DIC Vehicle Personalization on page 3-60* for more information on DIC programming.

Rear Door Security Locks

Your vehicle has rear door security locks that prevent passengers from opening the rear doors from the inside.

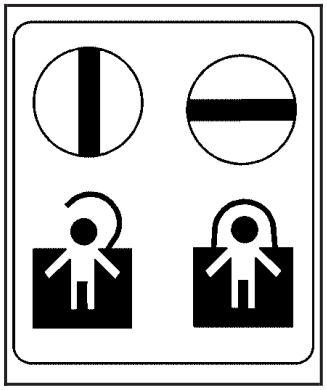

The rear door security locks are located on the inside edge of each rear door. You must open the rear doors to access them.

To set the security locks, do the following:

1. Insert the key into the lock above the rear door security lock label and turn it to the horizontal position.
2. Close the door.
3. Repeat the steps for the other rear door.

Downloaded from www.Manualslib.com manuals search engine

To open a rear door while the security lock is on, do the following:

1. Unlock the door using the remote keyless entry transmitter, the front door power lock switch, or the rear door manual lock.
2. Open the door from the outside.

To cancel the rear door security lock, do the following:

1. Unlock the door and open it from the outside.
2. Insert the key into the slot next to the rear door security lock label and turn it to the vertical position.
3. Repeat the steps for the other lock.

Lockout Protection

If you press the power door lock switch when the key is in the ignition and any door is open, all the doors will lock and only the driver's door will unlock. Be sure to remove the key from the ignition when locking your vehicle.

If the keyless entry transmitter is used to lock the doors and the key is in the ignition, a chime will sound three times. All passenger doors will lock, but the driver's door will remain unlocked.

Liftgate

⚠ CAUTION:

It can be dangerous to drive with the liftgate or liftglass open because carbon monoxide (CO) gas can come into your vehicle. You cannot see or smell CO. It can cause unconsciousness and even death. If you must drive with the liftgate open or if electrical wiring or other cable connections must pass through the seal between the body and the liftgate or liftglass:

- **Make sure all other windows are shut.**
- **Turn the fan on your climate control system to its highest speed and select the control setting that will force outside air into your vehicle. See "Climate Control System" in the Index.**
- **If you have air outlets on or under the instrument panel, open them all the way. See *Engine Exhaust on page 2-36*.**

To unlock the liftgate, press the unlock button on the Remote Keyless Entry (RKE) transmitter twice or use the power door lock switch.

Downloaded from www.Manualslib.com manuals search engine

To lock the liftgate, press the lock button on the RKE transmitter or use the power door lock switch. The liftgate does not have a key lock cylinder.

To open the liftgate, press the touchpad centered on the underside of the liftgate handle and pull up.

When closing the liftgate, use the molded handles to pull the liftgate down. Push the liftgate closed until it latches.

Liftgate Operation with Loss of Power

The liftgate is equipped with an electric latch. If the battery is disconnected or has low voltage, the liftgate will not open.

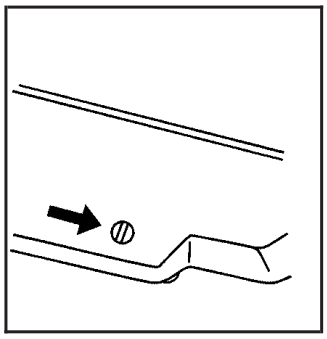

To open the liftgate if this happens, remove the interior trim plug located at the base of the liftgate from inside the vehicle.

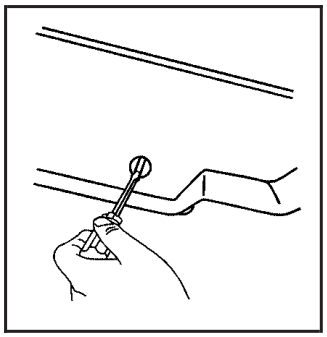

Use a tool to push the service release lever located on the latch until you hear or feel the gate release.

The liftgate can now be opened and closed manually. You will need to use this procedure to open the liftgate until the power is restored.

Downloaded from www.Manualslib.com manuals search engine

Windows

⚠ CAUTION:

Leaving children, helpless adults, or pets in a vehicle with the windows closed is dangerous. They can be overcome by the extreme heat and suffer permanent injuries or even death from heat stroke. Never leave a child, a helpless adult, or a pet alone in a vehicle, especially with the windows closed in warm or hot weather.

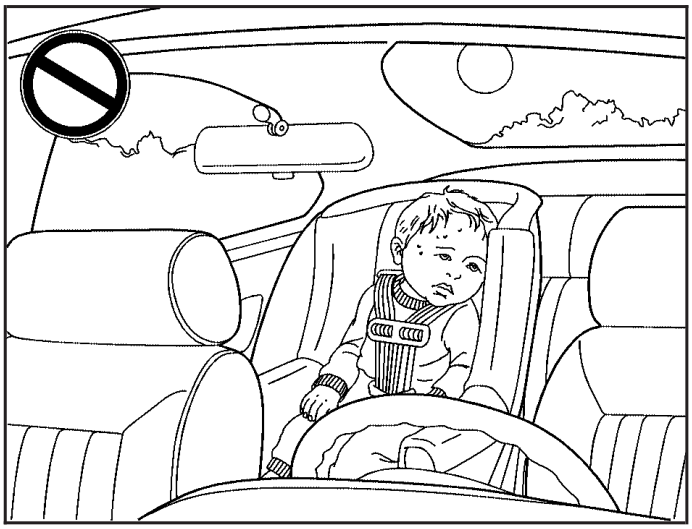

Downloaded from www.Manualslib.com manuals search engine

Power Windows

⚠ CAUTION:

Leaving children, helpless adults, or pets in a vehicle with the windows closed is dangerous. They can be overcome from extreme heat in warm or hot weather and suffer permanent injuries or even death from heat stroke.

Leaving children in a vehicle with the ignition key is dangerous for many reasons, children or others could be badly injured or even killed. They could operate the power windows or other controls or even make the vehicle move. The windows will function with the keys in the ignition and they could be seriously injured or killed if caught in the path of a closing window. Do not leave keys in a vehicle with children.

When there are children in the rear seat use the window lockout button to prevent unintentional operation of the windows.

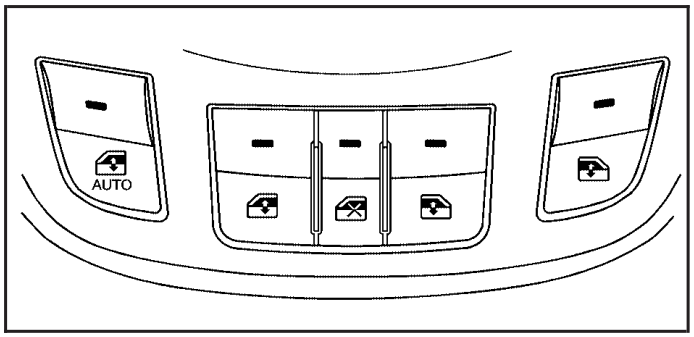

The window switches for all doors are located on the center console. A window switch for each rear window is located on each rear door.

To open a window, press the bottom of the switch. To close a window, press the top of the switch.

The power windows operate when the ignition is RUN or ACC (Accessory), or while in Retained Accessory Power (RAP). See *Retained Accessory Power (RAP) on page 2-22*.

Downloaded from www.Manualslib.com manuals search engine

Express-Down Window

The driver's window switch has an express-down feature that allows the window to be lowered without holding the switch. Press the bottom of the switch part way, and the driver's window will open a small amount. Press the switch down all the way down and release it and the window will go down automatically.

To stop the window while it is lowering, press and release the top of the switch.

Window Lockout

(Window Lockout): Your vehicle has a lockout feature to prevent rear seat passengers from operating the windows. Press the lockout button, located with the power window switches, to turn the feature on and off. The window switch has a light that will come on when the switch is active.

Sun Visors

To block out glare, swing the sun visor down. You can also detach the driver's sun visor from the center mount and slide it along the rod from side-to-side for greater coverage.

Visor Vanity Mirrors

Your vehicle has covered visor vanity mirrors on both the driver's and passenger's side.

Theft-Deterrent Systems

Vehicle theft is big business, especially in some cities. Although your vehicle has a number of theft-deterrent features, we know that nothing we put on it can make it impossible to steal.

Downloaded from www.Manualslib.com manuals search engine

Content Theft-Deterrent

Your vehicle has a content theft-deterrent alarm system.

To activate the theft-deterrent system:

1. Open the door.
2. Lock the door with the power door lock switch or the Remote Keyless Entry (RKE) transmitter. If you are using the RKE transmitter, the door does not need to be open.
3. Close all doors.

   The key must be removed from the ignition to arm the system.

If the theft-deterrent system is activated and a door or the liftgate is opened without using the RKE transmitter, a 10 second pre-alarm will occur, and the security light will flash. The horn will sound rapidly for 10 seconds. If you do not press unlock on the RKE transmitter or insert the key in the ignition and turn if from the LOCK/OFF position, the alarm will go off. The horn will sound and the headlamps will flash for 30 seconds.

After the alarm has sounded for 30 seconds, the system will re-arm itself automatically.

To disarm the theft-deterrent system, do one of the following:

1. Unlock the doors with the RKE transmitter.
2. Insert the key in the ignition and turn it from the LOCK/OFF position.

PASS-Key® III+

The PASS-Key® III+ system operates on a radio frequency subject to Federal Communications Commission (FCC) Rules and with Industry Canada.

This device complies with Part 15 of the FCC Rules. Operation is subject to the following two conditions:

1. This device may not cause harmful interference.
2. This device must accept any interference received, including interference that may cause undesired operation.

This device complies with RSS-210 of Industry Canada. Operation is subject to the following two conditions:

1. This device may not cause interference.
2. This device must accept any interference received, including interference that may cause undesired operation of the device.

Downloaded from www.Manualslib.com manuals search engine

Changes or modifications to this system by other than an authorized service facility could void authorization to use this equipment.

PASS-Key® III+ uses a radio frequency transponder in the key that matches a decoder in your vehicle.

PASS-Key® III+ Operation

Your vehicle has PASS-Key® III+ (Personalized Automotive Security System) theft-deterrent system. PASS-Key® III+ is a passive theft-deterrent system.

The system is automatically armed when the key is removed from the ignition.

The system is automatically disarmed when the key is turned to ON/RUN, ACC/ACCESSORY or START from the LOCK/OFF position.

You do not have to manually arm or disarm the system.

The security light will come on if there is a problem with arming or disarming the theft-deterrent system.

When the PASS-Key® III+ system senses that someone is using the wrong key, it prevents the vehicle from starting. Anyone using a trial-and-error method to start the vehicle will be discouraged because of the high number of electrical key codes.

If the engine does not start and the security light on the instrument panel comes on when trying to start the vehicle, there may be a problem with your theft-deterrent system. Turn the ignition off and try again.

If the engine still does not start, and the key appears to be undamaged, try another ignition key. At this time, you may also want to check the fuse, see *Fuses and Circuit Breakers on page 5-99*. If the engine still does not start with the other key, your vehicle needs service. If your vehicle does start, the first key may be faulty. See your dealer/retailer who can service the PASS-Key® III+ to have a new key made. In an emergency, contact Roadside Assistance.

It is possible for the PASS-Key® III+ decoder to “learn” the transponder value of a new or replacement key. Up to nine additional keys may be programmed for the vehicle. The following procedure is for programming additional keys only. If all the currently programmed keys are lost or do not operate, you must see your dealer/retailer or a locksmith who can service PASS-Key® III+ to have keys made and programmed to the system.

Downloaded from www.Manualslib.com manuals search engine

See your dealer/retailer or a locksmith who can service PASS-Key® III+ to get a new key blank that is cut exactly as the ignition key that operates the system.

To program the new additional key:

1. Verify that the new key has a ⊕ stamped on it.
2. Insert the original, already programmed, key in the ignition and start the engine. If the engine will not start, see your dealer/retailer for service.
3. After the engine has started, turn the key to LOCK/OFF, and remove the key.
4. Insert the new key to be programmed and turn it to the ON/RUN position within five seconds of removing the original key.

   The security light will turn off once the key has been programmed.
5. Repeat Steps 1 through 4 if additional keys are to be programmed.

If you lose or damage your PASS-Key® III+ key, see your dealer/retailer or a locksmith who can service PASS-Key® III+ to have a new key made.

Do not leave the key or device that disarms or deactivates the theft deterrent system in the vehicle.

Starting and Operating Your Vehicle

New Vehicle Break-In

Notice: **Your vehicle does not need an elaborate break-in. But it will perform better in the long run if you follow these guidelines:**

- **Do not drive at any one constant speed, fast or slow, for the first 500 miles (805 km). Do not make full-throttle starts. Avoid downshifting to brake or slow the vehicle.**
- **Avoid making hard stops for the first 200 miles (322 km) or so. During this time the new brake linings are not yet broken in. Hard stops with new linings can mean premature wear and earlier replacement. Follow this breaking-in guideline every time you get new brake linings.**
- **Do not tow a trailer during break-in. See *Towing a Trailer on page 4-32* for the trailer towing capabilities of your vehicle and more information.**

Following break-in, engine speed and load can be gradually increased.

Downloaded from www.Manualslib.com manuals search engine

Ignition Positions

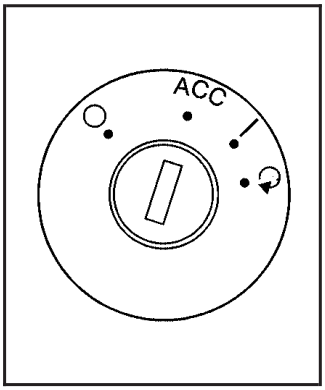

With the key in the ignition switch, you can turn it to four different positions. A warning tone will sound if you open the driver's door when the key has not been removed from the ignition.

In order to shift out of PARK (P), ignition must be in the ON/RUN or ACC/ACCESSORY and the regular brake pedal must be applied.

Notice: **Using a tool to force the key from the ignition switch could cause damage or break the key. Use the correct key and turn the key only with your hand. Make sure the key is in all the way. If none of this works, then your vehicle needs service.**

(LOCK/OFF): You will only be able to remove your key when the ignition is turned to LOCK/OFF.

The ignition switch cannot be turned to LOCK/OFF unless the shift lever is in PARK (P).

ACC (ACC/ACCESSORY): This position operates some of your electrical accessories.

(ON/RUN): This is the position the switch returns to after you start your engine and release the switch. The switch stays in the ON/RUN position when the engine is running. But even when the engine is not running, you can use ON/RUN to operate your electrical accessories and to display some warning and indicator lights.

The battery could be drained if you leave the key in the ACC/ACCESSORY or ON/RUN position with the engine off. You may not be able to start your vehicle if the battery is allowed to drain for an extended period of time.

(START): This position starts the engine. When the engine starts, release the key. The ignition switch will return to ON/RUN for normal driving.

Downloaded from www.Manualslib.com manuals search engine

Key In the Ignition

Never leave your vehicle with the keys inside, as it is an easy target for joy riders or thieves. If you leave the key in the ignition and park your vehicle, a chime will sound, when you open the driver's door. Always remember to remove your key from the ignition and take it with you. This will lock your ignition and transmission. Also, always remember to lock the doors.

The battery could be drained if you leave the key in the ignition while your vehicle is parked. You may not be able to start your vehicle after it has been parked for an extended period of time.

Retained Accessory Power (RAP)

These vehicle accessories can be used for up to 10 minutes after the engine is turned off:

- Audio System
- Power Windows
- Sunroof (if equipped)

Power to these accessories will continue to operate for up to 10 minutes or until the driver's door is opened.

All these features will work when the key is in ON/RUN or ACC/ACCESSORY.

Starting the Engine

Move your shift lever to PARK (P) or NEUTRAL (N). Your engine will not start in any other position – this is a safety feature. To restart when you are already moving, use NEUTRAL (N) only.

Notice: **Do not try to shift to PARK (P) if your vehicle is moving. If you do, you could damage the transmission. Shift to PARK (P) only when your vehicle is stopped.**

Starting Procedure

1. With your foot off the accelerator pedal, turn the ignition key to START. When the engine starts, let go of the key. The idle speed will go down as your engine gets warm. Do not race the engine immediately after starting it. Operate the engine and transmission gently to allow the oil to warm up and lubricate all moving parts.

   Your vehicle has a Computer-Controlled Cranking System. This feature assists in starting the engine and protects components. If the ignition key is turned to the START position, and then released when the engine begins cranking, the engine will continue cranking for a few seconds or until the vehicle starts. If the engine does not start and the key is held in START for many seconds, cranking will be stopped after 15 seconds to prevent cranking motor damage.

Downloaded from www.Manualslib.com manuals search engine

To prevent gear damage, this system also prevents cranking if the engine is already running. Engine cranking can be stopped by turning the ignition switch to the ACC/ACCESSORY or LOCK/OFF position.

Notice: **Cranking the engine for long periods of time, by returning the key to the START position immediately after cranking has ended, can overheat and damage the cranking motor, and drain the battery. Wait at least 15 seconds between each try, to let the cranking motor cool down.**

2. If the engine does not start after 5-10 seconds, especially in very cold weather (below 0°F or –18°C), it could be flooded with too much gasoline. Try pushing the accelerator pedal all the way to the floor and holding it there as you hold the key in START for up to a maximum of 15 seconds. Wait at least 15 seconds between each try, to allow the cranking motor to cool down. When the engine starts, let go of the key and accelerator. If the vehicle starts briefly but then stops again, do the same thing. This clears the extra gasoline from the engine. Do not race the engine immediately after starting it. Operate the engine and transmission gently until the oil warms up and lubricates all moving parts.

Notice: **The engine is designed to work with the electronics in your vehicle. If you add electrical parts or accessories, you could change the way the engine operates. Before adding electrical equipment, check with your dealer/retailer. If you do not, your engine might not perform properly. Any resulting damage would not be covered by your vehicle's warranty.**

Engine Coolant Heater

The engine coolant heater, if available, can help in cold weather conditions at or below 0°F (–18°C) for easier starting and better fuel economy during engine warm-up. Plug in the coolant heater at least four hours before starting your vehicle. An internal thermostat in the plug-end of the cord may exist which will prevent engine coolant heater operation at temperatures.

Downloaded from www.Manualslib.com manuals search engine

To Use the Engine Coolant Heater

1. Turn off the engine.
2. Open the hood and unwrap the electrical cord. The cord is located on the passenger's side of the engine compartment, near the radiator.
3. Plug it into a normal, grounded 110-volt AC outlet.

⚠ CAUTION:

Plugging the cord into an ungrounded outlet could cause an electrical shock. Also, the wrong kind of extension cord could overheat and cause a fire. You could be seriously injured. Plug the cord into a properly grounded three-prong 110-volt AC outlet. If the cord will not reach, use a heavy-duty three-prong extension cord rated for at least 15 amps.

4. Before starting the engine, be sure to unplug and store the cord as it was before to keep it away from moving engine parts. If you do not, it could be damaged.

How long should you keep the coolant heater plugged in? The answer depends on the outside temperature, the kind of oil you have, and some other things. Instead of trying to list everything here, we ask that you contact your dealer/retailer in the area where you will be parking your vehicle. The dealer/retailer can give you the best advice for that particular area.

Downloaded from www.Manualslib.com manuals search engine

Automatic Transmission Operation (3.4L V6 with 5-Speed)

The shift lever is located on the center console. When you change gears, the different shift positions will display on the instrument panel cluster.

P R N D I L

There are several different positions for the automatic transmission.

PARK (P): This position locks your front wheels. It is the best position to use when you start your engine because your vehicle cannot move easily.

⚠ CAUTION:

It is dangerous to get out of your vehicle if the shift lever is not fully in PARK (P) with the parking brake firmly set. Your vehicle can roll.

Do not leave your vehicle when the engine is running unless you have to. If you have left the engine running, the vehicle can move suddenly. You or others could be injured. To be sure your vehicle will not move, even when you are on fairly level ground, always set your parking brake and move the shift lever to PARK (P). See *Shifting Into PARK (P) on page 2-33*. If you are pulling a trailer, see *Towing a Trailer on page 4-32*.

Make sure the shift lever is fully in PARK (P) before starting the engine. Your vehicle has an automatic transmission shift lock control system.

Downloaded from www.Manualslib.com manuals search engine

You must fully apply your regular brakes first and then press the shift lever button before you can shift from PARK (P) when the ignition key is in ON/RUN. If you cannot shift out of PARK (P), ease pressure on the shift lever and push the shift lever all the way into PARK (P) as you maintain brake application. Then press the shift lever button and move the shift lever into another gear. See *Shifting Out of PARK (P) on page 2-35*.

REVERSE (R): Use this gear to back up.

Notice: **Shifting to REVERSE (R) while your vehicle is moving forward could damage the transmission. The repairs would not be covered by your warranty. Shift to REVERSE (R) only after your vehicle is stopped.**

To rock your vehicle back and forth to get out of snow, ice, or sand without damaging your transmission, see *If Your Vehicle is Stuck in Sand, Mud, Ice, or Snow on page 4-21*.

NEUTRAL (N): In this position, your engine does not connect with the wheels. To restart when you are already moving, use NEUTRAL (N) only.

⚠ CAUTION:

Shifting into a drive gear while the engine is running at high speed is dangerous. Unless your foot is firmly on the brake pedal, your vehicle could move very rapidly. You could lose control and hit people or objects. Do not shift into a drive gear while your engine is running at high speed.

Notice: **Shifting out of PARK (P) or NEUTRAL (N) with the engine running at high speed may damage the transmission. The repairs would not be covered by your warranty. Be sure the engine is not running at high speed when shifting your vehicle.**

Notice: **Shifting to a drive gear from NEUTRAL (N) while the vehicle is moving could damage the transmission. Make sure the vehicle is stopped before shifting from NEUTRAL (N) into a drive gear.**

Downloaded from www.Manualslib.com manuals search engine

DRIVE (D): This position is for normal driving with the automatic transmission. It provides the best fuel economy for your vehicle. If you need more power for passing, and you are:

- Going less than about 35 mph (55 km/h), push your accelerator pedal about halfway down.
- Going about 35 mph (55 km/h), push your accelerator all the way down.

Downshifting the transmission in slippery road conditions could result in skidding, see “Skidding” under *Loss of Control on page 4-12*.

INTERMEDIATE (I): This position is also used for normal driving. However, it reduces vehicle speed without using your brakes for slight downgrades where the vehicle would otherwise accelerate due to steepness of grade. If constant upshifting or downshifting occurs while driving up steep hills, this position can be used to prevent repetitive types of shifts. You might choose INTERMEDIATE (I) instead of DRIVE (D) when driving on hilly, winding roads and when towing a trailer, so that there is less shifting between gears.

LOW (L): This position reduces vehicle speed more than INTERMEDIATE (I) without actually using your brakes. You can use it on very steep hills, or in deep snow or mud. If the shift lever is put in LOW (L), the transmission will not shift into LOW (L) until the vehicle is going slowly enough.

Notice: **Spinning the tires or holding the vehicle in one place on a hill using only the accelerator pedal may damage the transmission. The repair will not be covered by your warranty. If you are stuck, do not spin the tires. When stopping on a hill, use the brakes to hold the vehicle in place.**

Transmission Overheating

If the transmission fluid temperature rises above 284°F (140°C) or rises rapidly, the Engine Coolant Temperature Warning Light will flash. See *Engine Coolant Temperature Warning Light on page 3-35* for more information. When the transmission overheats it will go into a protection mode and will default shift into fifth gear if in the DRIVE (D) position, or second gear if in the LOW (L) position. Continue driving the vehicle in either position depending on the required vehicle speed and load. Once the fluid temperature lowers to the normal temperature range, the transmission will return to the normal shift patterns. Towing or driving on long hills can cause the transmission fluid temperature to be higher than normal. If the transmission fluid temperature will not cool, you may need to pull over and check the transmission fluid level. You should also check the engine coolant temperature. If it is hot, see *Engine Overheating on page 5-25*.

Downloaded from www.Manualslib.com manuals search engine

Automatic Transmission Operation (3.6L V6 with 6-Speed)

The shift lever for the automatic transmission is located on the console between the seats.

Maximum engine speed is limited when the vehicle is in PARK (P) or NEUTRAL (N) to protect driveline components from improper operation.

There are several different positions for the shift lever. When using the Manual Shift Mode (MSM), a number indicating the gear selected will appear on the instrument cluster below the shift position display. For more information on the manual shift option see “Manual Shift Mode” in this section.

PARK (P): This position locks the front wheels. It is the best position to use when the engine is started because the vehicle cannot move easily.

⚠ CAUTION:

It is dangerous to get out of your vehicle if the shift lever is not fully in PARK (P) with the parking brake firmly set. Your vehicle can roll.

Do not leave your vehicle when the engine is running unless you have to. If you have left the engine running, the vehicle can move suddenly. You or others could be injured. To be sure your vehicle will not move, even when you are on fairly level ground, always set your parking brake and move the shift lever to PARK (P). See *Shifting Into PARK (P) on page 2-33*. If you are pulling a trailer, see *Towing a Trailer on page 4-32*.

Make sure the shift lever is fully in PARK (P) before starting the engine. The vehicle has an automatic transmission shift lock control system.

Downloaded from www.Manualslib.com manuals search engine

You must fully apply your regular brakes first and then press the shift lever button, before you can shift from PARK (P) when the ignition is in RUN. If you cannot shift out of PARK (P), ease pressure on the shift lever and push the shift lever all way into PARK (P) as you maintain brake application. Then press the shift lever button and move the shift lever into another gear. See *Shifting Out of PARK (P) on page 2-35*.

REVERSE (R): Use this gear to back up.

Notice: **Shifting to REVERSE (R) while your vehicle is moving forward could damage the transmission. The repairs would not be covered by your warranty. Shift to REVERSE (R) only after your vehicle is stopped.**

To rock the vehicle back and forth to get out of snow, ice, or sand without damaging the transmission, see *If Your Vehicle is Stuck in Sand, Mud, Ice, or Snow on page 4-21*.

NEUTRAL (N): In this position, the engine does not connect with the wheels. To restart when the vehicle is already moving, use NEUTRAL (N) only.

⚠ CAUTION:

Shifting into a drive gear while the engine is running at high speed is dangerous. Unless your foot is firmly on the brake pedal, your vehicle could move very rapidly. You could lose control and hit people or objects. Do not shift into a drive gear while your engine is running at high speed.

Notice: **Shifting out of PARK (P) or NEUTRAL (N) with the engine running at high speed may damage the transmission. The repairs would not be covered by your warranty. Be sure the engine is not running at high speed when shifting your vehicle.**

Downloaded from www.Manualslib.com manuals search engine

DRIVE (D): This position is for normal driving. It provides the best fuel economy for your vehicle. If the vehicle needs more power for passing, and it is:

- Going less than 35 mph (55 km/h), push the accelerator pedal about halfway down.
- Going about 35 mph (55 km/h) or more, push the accelerator pedal all the way down.

  The vehicle will shift down to the next gear and have more power.

Downshifting the transmission in slippery road conditions could result in skidding, see Skidding under *Loss of Control on page 4-12*.

Notice: **Spinning the tires or holding the vehicle in one place on a hill using only the accelerator pedal may damage the transmission. The repair will not be covered by your warranty. If you are stuck, do not spin the tires. When stopping on a hill, use the brakes to hold the vehicle in place.**

MANUAL SHIFT MODE (M): This position, available on the models with the Manual Shift Mode (MSM), allows you to change gears similar to a manual transmission. If your vehicle has this feature, see “Manual Shift Mode (MSM)”.

Manual Shift Mode (MSM) (Automatic Transmission)

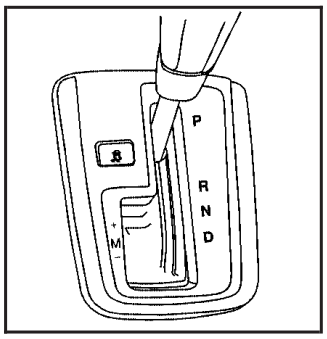

To use this feature, do the following:

1. Move the shift lever from DRIVE (D) to the left into the manual gate.

   While driving in manual shift mode, the transmission will remain in the driver gear selected. When coming to a stop in the manual position, the vehicle will automatically shift to FIRST (1) gear.

Downloaded from www.Manualslib.com manuals search engine

2. Push the shift lever forward toward the plus (+) to upshift or rearward toward the minus (–) to downshift.

   When using the Manual Shift Mode (MSM) the number of the gear selected will appear on the instrument cluster below the shift position display.

In manual shift mode all six forward gears can be selected.

While using the MSM feature the vehicle will have operation similar to a manual transmission. You can use this for sport driving or when driving hilly roads to stay in gear longer or to downshift for more power or engine braking.

The transmission will only allow you to shift into gears appropriate for the vehicle speed:

- The transmission will not automatically shift to the next higher gear without moving the shift lever.
- The transmission will not allow shifting to the next lower gear if the vehicle speed is too high.

If the vehicle does not respond to a gear change, or detects a problem with the transmission, the range of gears may be reduced and the Malfunction Indicator Lamp will come on. See *Malfunction Indicator Lamp on page 3-36*.

Transmission Overheating

If the transmission fluid temperature rises above 270°F (132°C) or rises rapidly, the Engine Coolant Temperature Warning Light will flash. See *Engine Coolant Temperature Warning Light on page 3-35* for more information. When the transmission overheats it will go into a protection mode and will default into a different shift sequence to help cool the transmission fluid. This shift sequence is the same for both DRIVE (D) position and manual mode. Continue driving the vehicle in either position depending on the required vehicle speed and load. Once the fluid temperature lowers to the normal temperature range, the transmission will return to the normal shift patterns. Towing or driving on long hills can cause the transmission fluid temperature to be higher than normal. If the transmission fluid temperature will not cool, you may need to pull over and check the transmission fluid level. You should also check the engine coolant temperature. If it is hot, see *Engine Overheating on page 5-25*.

Downloaded from www.Manualslib.com manuals search engine

SECOND (2) and THIRD (3) Gear Start Feature

When accelerating your vehicle from a stop in snowy and icy conditions, you may want to select SECOND (2) and THIRD (3) gear. A higher gear, and light application of the gas pedal, may allow you to gain more traction on slippery surfaces.

With the Manual Shift Mode, the vehicle can accelerate from a stop in SECOND (2) or THIRD (3).

1. Move the shift lever from DRIVE (D) into the manual gate.
2. With the vehicle stopped, move the shift lever forward to select SECOND (2) or THIRD (3). The vehicle will start from a stop position in SECOND (2) or THIRD (3).
3. Once the vehicle is moving select the desired drive gear or move the shift lever to the DRIVE (D) position.

Parking Brake

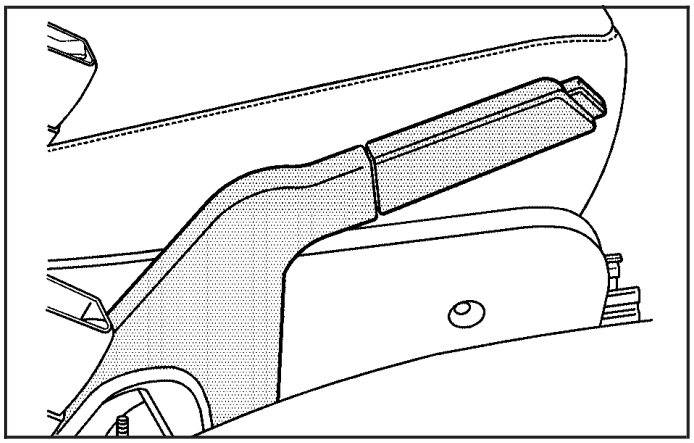

The parking brake lever is located to the right of the driver's seat.

To set the parking brake, hold the brake pedal down and pull up on the parking brake lever. If the ignition is on, the brake system warning light will come on.

Downloaded from www.Manualslib.com manuals search engine

To release the parking brake, hold the brake pedal down. Pull the parking brake lever up until you can press the release button. Hold the release button in as you move the brake lever all the way down.

Make sure to release the parking brake before driving the vehicle.

If the parking brake is applied and the vehicle is moving at least 4 mph (6 km/h), a chime will activate to remind you to release the parking brake.

Notice: **Driving with the parking brake on can overheat the brake system and cause premature wear or damage to brake system parts. Make sure that the parking brake is fully released and the brake warning light is off before driving.**

Shifting Into PARK (P)

⚠ CAUTION:

It can be dangerous to get out of your vehicle if the shift lever is not fully in PARK (P) with the parking brake firmly set. Your vehicle can roll. If you have left the engine running, the vehicle can move suddenly. You or others could be injured. To be sure your vehicle will not move, even when you are on fairly level ground, use the steps that follow. If you are pulling a trailer, see *Towing a Trailer on page 4-32*.

1. Hold the brake pedal down with your foot and set the parking brake. See *Parking Brake on page 2-32* for more information.
2. Move the shift lever into PARK (P) by pressing the button on the shift lever and pushing the lever all the way toward the front of the vehicle.
3. Turn the ignition key to LOCK/OFF.
4. Remove the key and take it with you. If you can leave your vehicle with the key, your vehicle is in PARK (P).

Downloaded from www.Manualslib.com manuals search engine

Leaving Your Vehicle With the Engine Running

⚠ CAUTION:

It can be dangerous to leave your vehicle with the engine running. Your vehicle could move suddenly if the shift lever is not fully in PARK (P) with the parking brake firmly set. And, if you leave the vehicle with the engine running, it could overheat and even catch fire. You or others could be injured. Do not leave your vehicle with the engine running.

If you have to leave your vehicle with the engine running, be sure your vehicle is in PARK (P) and your parking brake is firmly set before you leave it. After you have moved the shift lever into PARK (P), hold the regular brake pedal down. Then, see if you can move the shift lever away from PARK (P) without first pressing the button on the console shift lever. If you can, it means that the shift lever was not fully locked into PARK (P).

Torque Lock

If you are parking on a hill and you do not shift your transmission into PARK (P) properly, the weight of the vehicle may put too much force on the parking pawl in the transmission. You may find it difficult to pull the shift lever out of PARK (P). This is called “torque lock.” To prevent torque lock, set the parking brake and then shift into PARK (P) properly before you leave the driver’s seat. To find out how, see *Shifting Into PARK (P) on page 2-33*.

When you are ready to drive, move the shift lever out of PARK (P) before you release the parking brake.

If torque lock does occur, you may need to have another vehicle push yours a little uphill to take some of the pressure from the parking pawl in the transmission, so you can pull the shift lever out of PARK (P).

Downloaded from www.Manualslib.com manuals search engine

Shifting Out of PARK (P)

This vehicle is equipped with an electronic shift lock release system. The shift lock release is designed to:

- Prevent ignition key removal unless the shift lever is in PARK (P) with the shift lever button fully released, and
- Prevent movement of the shift lever out of PARK (P), unless the ignition is in ON/RUN or ACC/ACCESSORY and the regular brake pedal is applied.

The shift lock release is always functional except in the case of an uncharged or low voltage (less than 9 volt) battery.

If your vehicle has an uncharged battery or a battery with low voltage, try charging or jump starting the battery. See *Jump Starting on page 5-38* for more information.

To shift out of PARK (P) use the following:

1. Apply the brake pedal.
2. Then press the shift lever button.
3. Move the shift lever to the desired position.

If you still are unable to shift out of PARK (P):

1. Fully release the shift lever button.
2. While holding down the brake pedal, press the shift lever button again.
3. Move the shift lever to the desired position.

If you still cannot move the shift lever from PARK (P), consult your dealer/retailer or a professional towing service.

Parking Over Things That Burn

⚠ CAUTION:

Things that can burn could touch hot exhaust parts under your vehicle and ignite. Do not park over papers, leaves, dry grass, or other things that can burn.

Downloaded from www.Manualslib.com manuals search engine

Engine Exhaust

⚠ CAUTION:

Engine exhaust can kill. It contains the gas carbon monoxide (CO), which you cannot see or smell. It can cause unconsciousness and death.

You might have exhaust coming in if:

- **The exhaust system sounds strange or different.**
- **Your vehicle gets rusty underneath.**
- **Your vehicle was damaged in a collision.**
- **Your vehicle was damaged when driving over high points on the road or over road debris.**
- **Repairs were not done correctly.**
- **Your vehicle or the exhaust system has been modified improperly.**

If you ever suspect exhaust is coming into your vehicle:

- **Drive it only with all the windows down to blow out any CO; and**
- **Have your vehicle fixed immediately.**

Running the Engine While Parked

It is better not to park with the engine running. But if you ever have to, here are some things to know.

⚠ CAUTION:

Idling the engine with the climate control system off could allow dangerous exhaust into your vehicle. See the earlier caution under *Engine Exhaust on page 2-36*.

Also, idling in a closed-in place can let deadly carbon monoxide (CO) into your vehicle even if the climate control fan is at the highest setting. One place this can happen is a garage. Exhaust — with CO — can come in easily. NEVER park in a garage with the engine running.

Another closed-in place can be a blizzard. See *Winter Driving on page 4-18*.

Downloaded from www.Manualslib.com manuals search engine

⚠ CAUTION:

It can be dangerous to get out of your vehicle if the shift lever is not fully in PARK (P) with the parking brake firmly set. Your vehicle can roll. Do not leave your vehicle when the engine is running unless you have to. If you have left the engine running, the vehicle can move suddenly. You or others could be injured. To be sure your vehicle will not move, even when you are on fairly level ground, always set the parking brake and move the shift lever to PARK (P).

Follow the proper steps to be sure your vehicle will not move. See *Shifting Into PARK (P) on page 2-33*.

If you are parking on a hill and if you are pulling a trailer, also see *Towing a Trailer on page 4-32*.

Mirrors

Manual Rearview Mirror

When you are sitting in a comfortable driving position, adjust the mirror so you can see clearly behind your vehicle. Hold the mirror in the center to move it up or down and side to side. The day/night adjustment allows you to adjust the mirror to avoid glare from the lamps behind you. Push the tab forward for daytime use and pull it for nighttime use.

Manual Rearview Mirror with OnStar®

To adjust the angle of the mirror, move the mirror to a position that allows you see to out of the back window. To adjust the height of the mirror, adjust the arm that connects the mirror to the windshield.

To reduce glare from lights behind you, move the lever toward you to the night position.

There are also OnStar® buttons located at the bottom of the mirror face. See your dealer for more information on the system and how to subscribe to OnStar®. See *OnStar® System on page 2-39* for more information about the services OnStar® provides.

Downloaded from www.Manualslib.com manuals search engine

Automatic Dimming Rearview Mirror with OnStar®

The vehicle may have an automatic dimming inside rearview mirror with OnStar® controls. For more information about OnStar®, see *OnStar® System on page 2-39*.

⏻ **(On/Off):** The on/off button, located on the lower left side of the mirror, is used for the automatic dimming functions of the rearview mirror.

Mirror Operation

The automatic dimming feature comes on each time the vehicle is started. Automatic dimming reduces the glare of lights from behind the vehicle.

To turn the automatic dimming feature on or off, press and release the AUTO/○ (off) button. The indicator light will come on when this feature is on.

Outside Power Mirrors

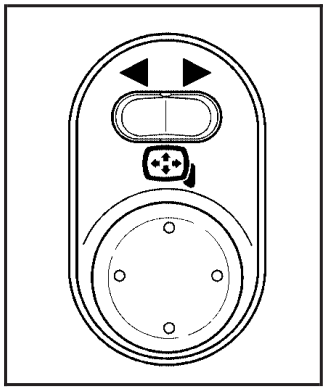

The controls for the power mirrors are located on the instrument panel.

To adjust the mirrors, do the following:

1. Move the selector switch to the left or right to choose the driver's or passenger's mirror.
2. Press the corresponding edges of the round control pad to move each mirror to the desired direction.

Adjust each outside mirror so that you can see a little of your vehicle, and the area behind your vehicle.

Downloaded from www.Manualslib.com manuals search engine

Both mirrors can manually be folded by pulling them toward the vehicle. This feature may be useful when going through a car wash or a confined space. Push the mirrors away from the vehicle, to the normal position, before driving.

Outside Convex Mirrors

The passenger's side mirror is convex. A convex mirror's surface is curved, creating a wider area of vision for the driver.

⚠ CAUTION:

A convex mirror can make things (like other vehicles) look farther away than they really are. If you cut too sharply into the right lane, you could hit a vehicle on your right. Check your inside mirror or glance over your shoulder before changing lanes.

OnStar® System

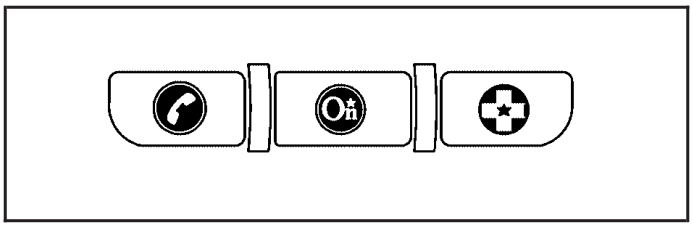

OnStar uses several innovative technologies and live advisors to provide you with a wide range of safety, security, information, and convenience services. If your airbags deploy, the system is designed to make an automatic call to OnStar Emergency advisors who can request emergency services be sent to your location. If you lock your keys in the vehicle, call OnStar at 1-888-4-ONSTAR and they can send a signal to unlock your doors. If you need roadside assistance, press the OnStar button and they can contact Roadside Service for you.

Downloaded from www.Manualslib.com manuals search engine

OnStar service is provided to you subject to the OnStar Terms and Conditions. You may cancel your OnStar service at any time by contacting OnStar. A complete OnStar Owner's Guide and the OnStar Terms and Conditions are included in the vehicle's OnStar Subscriber glove box literature. For more information, visit onstar.com or onstar.ca, contact OnStar at 1-888-4-ONSTAR (1-888-466-7827) or TTY 1-877-248-2080, or press the OnStar button to speak with an OnStar advisor 24 hours a day, 7 days a week.

Not all OnStar features are available on all vehicles. To check if your vehicle is equipped to provide the services described below, or for a full description of OnStar services and system limitations, see the OnStar Owner's Guide in your glove box or visit onstar.com.

OnStar Services

For new vehicles with OnStar, the Safe & Sound Plan, or the Directions & Connections Plan is included for one year from the date of purchase. You can extend this plan beyond the first year, or upgrade to the Directions & Connections Plan. For more information, press the OnStar button to speak with an advisor. Some OnStar services (such as Remote Door Unlock or Stolen Vehicle Location Assistance) may not be available until you register with OnStar.

Available Services with Safe & Sound Plan

- Automatic Notification of Airbag Deployment
- Advanced Automatic Crash Notification (AACN) (If equipped)
- Link to Emergency Services
- Roadside Assistance
- Stolen Vehicle Location Assistance
- AccidentAssist
- Remote Door Unlock/Vehicle Alert
- OnStar Vehicle Diagnostics
- GM Goodwrench® On Demand Diagnostics
- OnStar Hands-Free Calling with 30 complimentary minutes
- OnStar Virtual Advisor (U.S. Only)

Downloaded from www.Manualslib.com manuals search engine

Available Services included with Directions & Connections Plan

- All Safe and Sound Plan Services
- Driving Directions - Advisor delivered or OnStar Turn-by-Turn Navigation (If equipped)
- RideAssist
- Information and Convenience Services

OnStar Hands-Free Calling

OnStar Hands-Free Calling allows eligible OnStar subscribers to make and receive calls using voice commands. Hands-Free Calling is fully integrated into the vehicle, and can be used with OnStar Pre-Paid Minute Packages. Hands-Free Calling may also be linked to a Verizon Wireless service plan in the U.S. or a Bell Mobility service plan in Canada, depending on eligibility. To find out more, refer to the OnStar Owner's Guide in the vehicle's glove box, visit www.onstar.com or www.onstar.ca, or speak with an OnStar advisor by pressing the OnStar button or calling 1-888-4-ONSTAR (1-888-466-7827).

OnStar Virtual Advisor

OnStar Virtual Advisor is a feature of OnStar Hands-Free Calling that uses your minutes to access location-based weather, local traffic reports, and stock quotes. By pressing the phone button and giving a few simple voice commands, you can browse through the various topics. See the OnStar Owner's Guide for more information (Only available in the continental U.S.).

OnStar Steering Wheel Controls

Your vehicle may have a Talk/Mute button that can be used to interact with OnStar Hands-Free Calling. See *Audio Steering Wheel Controls on page 3-110* for more information.

On some vehicles, you may have to hold the button for a few seconds and give the command "ONSTAR" to activate the OnStar Hands-Free Calling.

On some vehicles, the mute button can be used to dial numbers into voicemail systems, or to dial phone extensions. See the OnStar Owner's Guide for more information.

Downloaded from www.Manualslib.com manuals search engine

How OnStar Service Works

Your vehicle's OnStar system has the capability of recording and transmitting vehicle information. This information is automatically sent to an OnStar Call Center at the time of an OnStar button press, Emergency button press or if your airbags or AACN system deploys. The vehicle information usually includes your GPS location and, in the event of a crash, additional information regarding the accident that your vehicle has been involved in (e.g. the direction from which your vehicle was hit). When you use the Virtual Advisor feature of OnStar Hands-Free Calling, your vehicle also sends OnStar your GPS location so that we can provide you with location-based services.

OnStar service cannot work unless your vehicle is in a place where OnStar has an agreement with a wireless service provider for service in that area. OnStar service also cannot work unless you are in a place where the wireless service provider OnStar has hired for that area has coverage, network capacity and reception when the service is needed, and technology that is compatible with the OnStar service. Not all services are available everywhere, particularly in remote or enclosed areas, or at all times.

Location information about your vehicle is only available if the GPS satellite signals are unobstructed and available.

Your vehicle must have a working electrical system (including adequate battery power) for the OnStar equipment to operate. There are other problems OnStar cannot control that may prevent OnStar from providing OnStar service to you at any particular time or place. Some examples are damage to important parts of your vehicle in an accident, hills, tall buildings, tunnels, weather or wireless phone network congestion.

Your Responsibility

Increase the radio volume if you cannot hear the OnStar advisor. If the light next to the OnStar buttons is red, this means that your system is not functioning properly and should be checked by your dealer/retailer. If the light appears clear (no light is appearing), your OnStar subscription has expired. You can always press the OnStar button to confirm that your OnStar equipment is active.

Downloaded from www.Manualslib.com manuals search engine

Storage Areas

Glove Box

To open the glove box, pull the handle to the left and pull the glove box door down until it stops and is fully open.

Cupholder(s)

There are two cupholders located at the lower front of the center console armrest and a molded cupholder on the floor of the center console. To use the cupholders on the armrest, pull the tray forward. There are two cupholders located at the rear of the center console. Pull downward on the lid to use the cupholders.

Center Console Storage

Your vehicle has a center console armrest with storage area. Use the lever on the front of the console to open it.

Luggage Carrier

⚠ CAUTION:

If you try to carry something on top of your vehicle that is longer or wider than the luggage carrier — like paneling, plywood, a mattress and so forth — the wind can catch it as you drive along. This can cause you to lose control. What you are carrying could be violently torn off, and this could cause you or other drivers to have a collision, and of course damage your vehicle. You may be able to carry something like this inside. But, never carry something longer or wider than the luggage carrier on top of your vehicle.

If equipped, a luggage carrier allows you to load things on top of your vehicle. The luggage carrier has side rails attached to the roof, sliding crossrails, if the vehicle has them, and places to use for tying things down. These let you load some things on top of your vehicle, as long as they are not wider or longer than the luggage carrier.

Downloaded from www.Manualslib.com manuals search engine

The roof rack crossrails lock along the straight section of the side rail.

Press the levers down until the locking mechanisms fully engage to the side rail. Make sure each lever is in the down position. The crossrail will not slide when properly engaged.

To move the crossrail, pull up on the end levers on each side of the crossrail to the upright position. This will release the locking mechanism from the siderail. Lift and place the crossrail into the new position. Press the levers down until the locking mechanisms fully engage to the side rail. Make sure each lever is in the down position. The crossrail will not slide when properly engaged.

Notice: **Loading cargo on the luggage carrier that weighs more than 150 lbs (68 kg) or hangs over the rear or sides of the vehicle may damage your vehicle. When loading cargo, tie it to the crossrail and against the siderail. Lock the crossrails to the far forward and backward location to make sure the load is evenly distributed on the luggage carrier.**

Do not stand on the plastic lower body panels when loading cargo on the luggage carrier.

Loading cargo on the luggage carrier will make the center of vehicle gravity higher. Avoid high speeds, sudden starts, sharp turns, sudden braking or abrupt maneuvers. This could result in loss of control of the vehicle.

Do not exceed the maximum vehicle capacity when loading your vehicle. For more information on vehicle capacity and loading, see *Loading Your Vehicle on page 4-22.*

To prevent damage or loss of cargo as you are driving, check now and then to make sure the luggage carrier crossrails are locked and cargo is still securely fastened.

When the luggage carrier is not in use, store the crossrail inside the vehicle. If not possible, lock one crossrail at the rear most position on the siderails and lock the other crossrail above the opening of the rear door to reduce wind noise.

Downloaded from www.Manualslib.com manuals search engine

Rear Compartment Storage Panel/Cover

Your vehicle may have an adjustable panel/cargo cover feature. The panel/cargo cover can be adjusted into three positions.

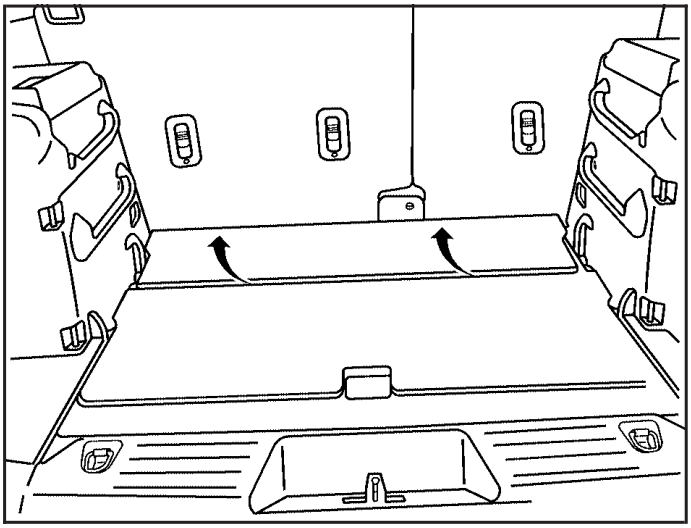

There is a flip panel towards the front of the cargo cover. You may have to flip this panel upward in order to gain access to the cargo cover.

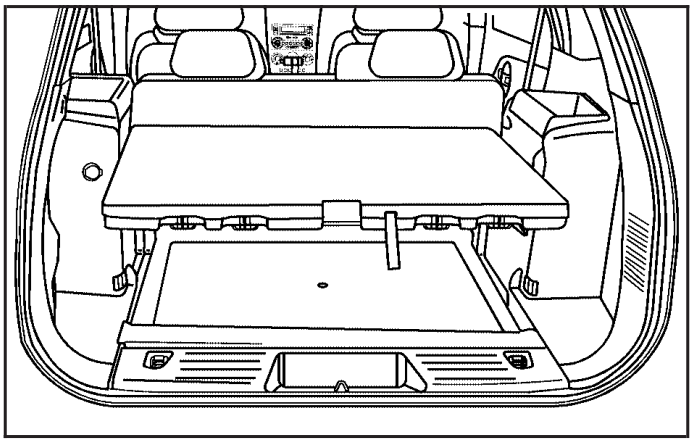

To use the panel in the lower position, do the following:

1. Insert the front corners of the panel into the lower guides.
2. Slide the panel forward.
3. Press down on the back of the panel to lock it in place.

The panel can be used in this position if you need additional space above the panel. Place the cargo on top of the panel in this position.

Downloaded from www.Manualslib.com manuals search engine

⚠ CAUTION:

If you were to carry things on the adjustable panel when it is in the upper (cargo cover) or center positions, during a sudden vehicle movement or a crash, those things could be thrown around in the vehicle. You or others could be injured. When it is in the upper or center position, always secure any cargo on the floor beneath the panel/cover.

To use the panel in the center position, do the following:

1. Insert the front corners of the panel into the middle guides.
2. Slide the panel forward.
3. Press down and pull rearward on the back of the panel to lock it in place.

The panel can be used in this position when you have to place a flat or spare tire in the rear cargo area.

To use the panel in the upper position, do the following:

1. Insert the front corners of the panel into the top guides.
2. Slide the panel forward.
3. Press down and pull rearward on the back of the panel to lock it in place.

This can be used as a cargo cover for the rear area. The panel may be installed either carpet or plastic side up. The panel may also be used as a table in this position. See *Table on page 2-47* for more information.

Rear Seat Armrest

Your vehicle may have a rear seat armrest that contains two cupholders. To access the cupholders, pull the armrest down from the rear seatback.

Downloaded from www.Manualslib.com manuals search engine

Table

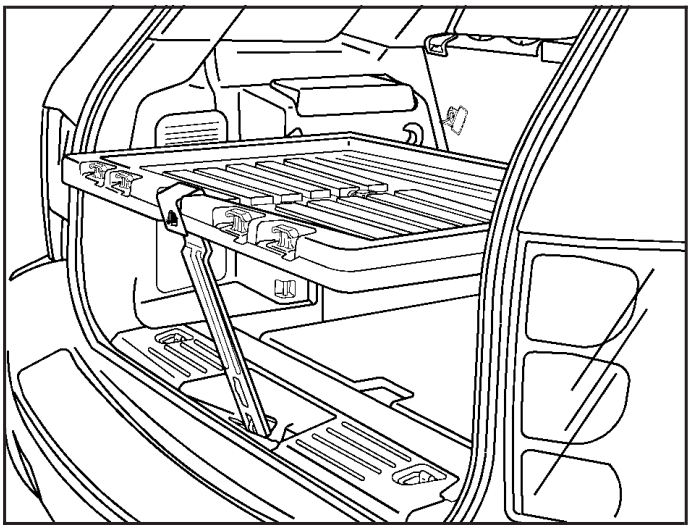

Your vehicle may have an adjustable panel that also functions as a table. The maximum load for the table is 100 lbs. distributed (45 kg).

To set up the table, do the following:

1. With the adjustable panel in the upper position, pull it rearward to position it for use as a table. The plastic side should be up.
2. Turn the knob to release the leg from the plastic side of the table and turn the leg outward.
3. Set the table leg onto the liftgate lock striker at the rear edge of the vehicle.

Make sure to place the table leg securely onto the liftgate lock striker.

Notice: **Driving with the panel extended into the table position could damage your vehicle. Always have the panel in the stored position while you are driving.**

Notice: **Placing hot items on the surface of the table could damage it. Always be sure that the items that are placed on the surface of the table are of moderate temperature.**

There are four hooks located on the table that can be used for grocery bags.

Downloaded from www.Manualslib.com manuals search engine

Convenience Net

Your vehicle may have a convenience net in the rear of the vehicle. Store small loads as far forward as possible. The net should not be used to store heavy loads.

Sunroof

If the vehicle is equipped with a sunroof, the controls to operate it are located on the headliner above the rearview mirror. The ignition must be in RUN or ACC, or Retained Accessory Power (RAP) must be active, to operate the sunroof. See *Retained Accessory Power (RAP) on page 2-22* for more information.

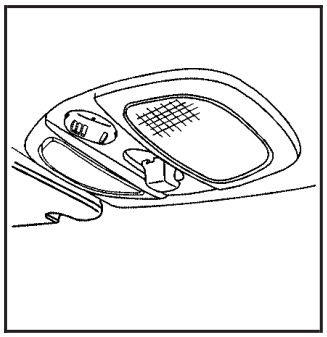

To express-open the sunroof glass panel and sunshade, press the switch rearward and release it.

To stop the sunroof before it is completely open, press the switch rearward again. The sunshade cannot be closed with the sunroof open.

To close the sunroof, press forward and hold the switch until the sunroof stops, lifts and seals at the back of the sunroof glass. Press forward on the switch again, to make sure the sunroof is fully closed

To put the sunroof in the vent position, pull down on the front of the switch. Push up on the front of the switch to close it.

Downloaded from www.Manualslib.com manuals search engine

Section 3 Instrument Panel

Instrument Panel Overview 3-4
Hazard Warning Flashers 3-6
Other Warning Devices 3-6
Horn 3-6
Tilt Wheel 3-7
Turn Signal/Multifunction Lever 3-7
Turn and Lane-Change Signals 3-8
Headlamp High/Low-Beam Changer 3-8
Flash-to-Pass 3-9
Windshield Wipers 3-9
Windshield Washer 3-10
Rear Window Wiper/Washer 3-11
Cruise Control 3-11
Headlamps 3-14
Headlamps on Reminder 3-14
Daytime Running Lamps (DRL) 3-15
Automatic Headlamp System 3-15
Fog Lamps 3-16
Instrument Panel Brightness 3-16
Dome Lamp 3-17
Entry Lighting 3-17
Map Lamps 3-17
Cargo Lamp 3-18
Electric Power Management 3-18
Battery Run-Down Protection 3-19
Accessory Power Outlet(s) 3-19
Ashtray(s) and Cigarette Lighter 3-20

Climate Controls 3-20
Climate Control System 3-20
Outlet Adjustment 3-24
Passenger Compartment Air Filter 3-24

Warning Lights, Gages, and Indicators 3-26
Instrument Panel Cluster 3-27
Speedometer and Odometer 3-28
Trip Odometer 3-28
Tachometer 3-28
Safety Belt Reminders 3-28
Airbag Readiness Light 3-29
Passenger Airbag Status Indicator 3-30
Charging System Light 3-32
Brake System Warning Light 3-33
Antilock Brake System Warning Light 3-34
Traction Control System (TCS)
Warning Light 3-34
Engine Coolant Temperature Warning Light 3-35
Engine Coolant Temperature Gage 3-35
Tire Pressure Light 3-36
Malfunction Indicator Lamp 3-36
Oil Pressure Light 3-39
Change Engine Oil Light 3-40
Security Light 3-40
Fog Lamp Light 3-40
Cruise Control Light 3-41

Downloaded from www.Manualslib.com manuals search engine

Section 3 Instrument Panel

Reduced Engine Power Light 3-41
Highbeam On Light 3-41
Service All-Wheel Drive Light 3-42
All-Wheel Drive Disabled Light 3-42
Gate Ajar Light 3-42
Door Ajar Light 3-43
Service Vehicle Soon Light 3-43
Fuel Gage 3-43
Low Fuel Warning Light 3-44

Driver Information Center (DIC) 3-45
DIC Operation and Displays 3-45
DIC Compass 3-49
DIC Warnings and Messages 3-52
DIC Vehicle Personalization 3-60

Audio System(s) 3-67
Setting the Time 3-68
Radio(s) 3-71
Using an MP3 (Radio with CD or Six-Disc CD Player) 3-90
Using an MP3 (Radio with CD and DVD Player) 3-95
XM Radio Messages 3-100
Navigation/Radio System 3-101
Rear Seat Entertainment (RSE) System 3-101
Theft-Deterrent Feature 3-110
Audio Steering Wheel Controls 3-110
Radio Reception 3-111
Multi-Band Antenna 3-112

Downloaded from www.Manualslib.com manuals search engine

✍ NOTES

Downloaded from www.Manualslib.com manuals search engine

Instrument Panel Overview

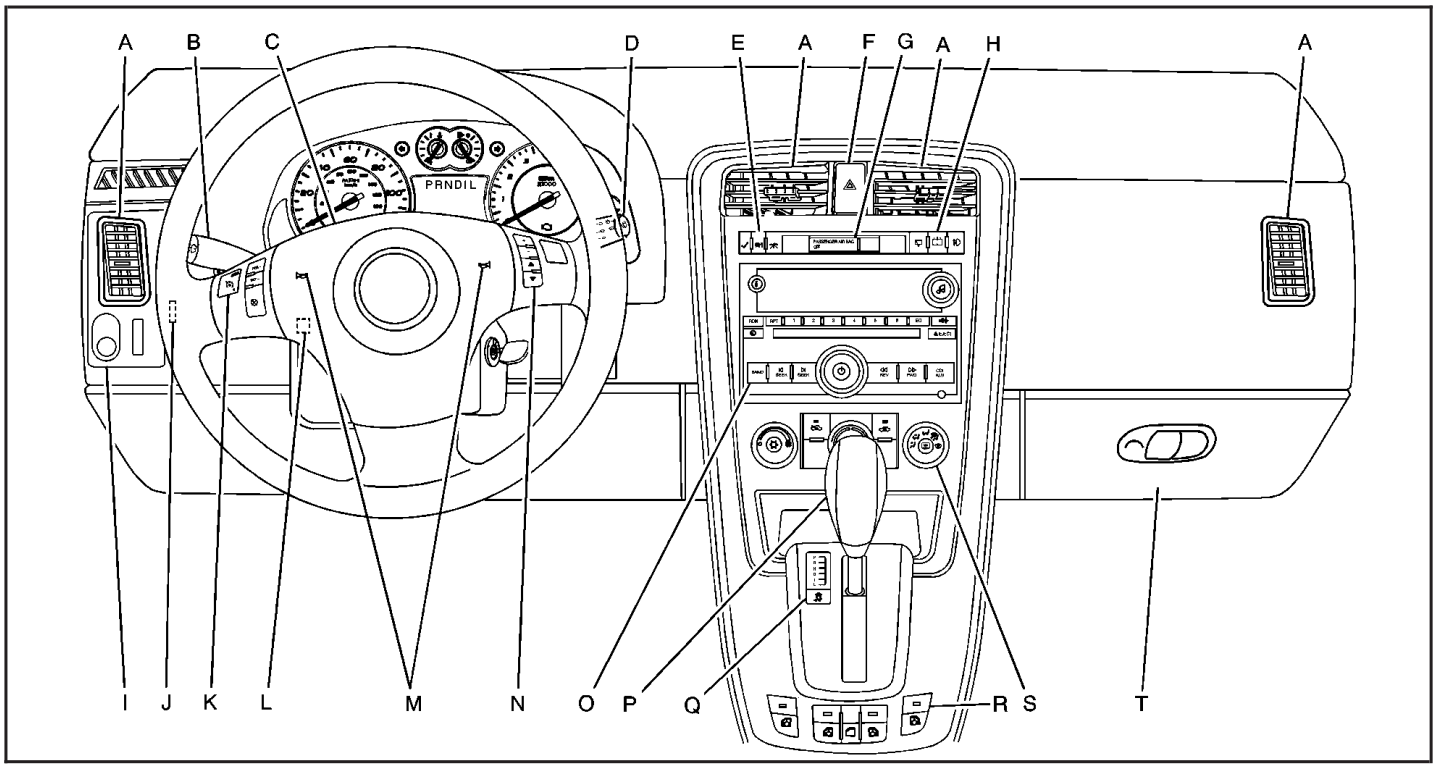

Downloaded from www.Manualslib.com manuals search engine

The main components of your instrument panel are the following:

A. Air Outlets. See *Outlet Adjustment on page 3-24*.

B. Turn Signal/Multifunction Lever. See *Turn Signal/Multifunction Lever on page 3-7*.

C. Instrument Panel Cluster. See *Instrument Panel Cluster on page 3-27*.

D. Windshield Wiper/Washer Lever. See *Windshield Wipers on page 3-9*.

E. Driver Information Center Controls. See *DIC Operation and Displays on page 3-45*.

F. Hazard Warning Flashers. See *Hazard Warning Flashers on page 3-6*.

G. Passenger Airbag Status Indicator. See *Passenger Airbag Status Indicator on page 3-30*.

H. Rear Window Wiper/Washer Buttons. See *Rear Window Wiper/Washer on page 3-11*. Fog Lamps Button. See *Fog Lamps on page 3-16*.

I. Power Mirror Control. See *Outside Power Mirrors on page 2-38*.

J. Instrument Panel Brightness Control. See *Instrument Panel Brightness on page 3-16*.

K. Cruise Controls. See *Cruise Control on page 3-11*.

L. Tilt Wheel. See *Tilt Wheel on page 3-7*.

M. Horn. See *Horn on page 3-6*.

N. Audio Steering Wheel Controls. See *Audio Steering Wheel Controls on page 3-110*.

O. Audio System. See *Audio System(s) on page 3-67*.

P. Shift Lever. See *Shifting Into PARK (P) on page 2-33*.

Q. Traction Control System (TCS) Button. See *Traction Control System (TCS) on page 4-6*.

R. Power Window Switches. See *Power Windows on page 2-16*.

S. Climate Control System. See *Climate Control System on page 3-20*. Heated Seat Buttons (If Equipped). See *Heated Seats on page 1-4*.

T. Glove Box. See *Glove Box on page 2-43*.

Downloaded from www.Manualslib.com manuals search engine

Hazard Warning Flashers

The hazard warning flashers let you warn the police and others that you have a problem. The front and rear turn signal lamps will flash on and off.

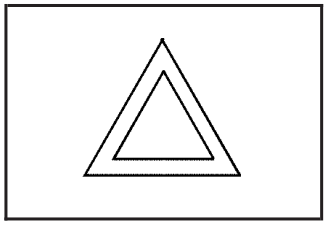

The hazard warning flasher button is located towards the center of the instrument panel.

Press the button to make the front and rear turn signal lamps flash on and off. Press the button again to turn the flashers off.

While the hazard warning flashers are on, the turn signals do not work.

The hazard warning flashers work no matter what position the key is in, and even if the key is not in the ignition switch.

Other Warning Devices

If you carry reflective triangles, you can set them up at the side of the road about 300 feet (100 m) behind your vehicle.

Horn

Press near or on the horn symbols on the steering wheel pad to sound the horn.

Downloaded from www.Manualslib.com manuals search engine

Tilt Wheel

Your vehicle has a tilt wheel that allows you to adjust the steering wheel.

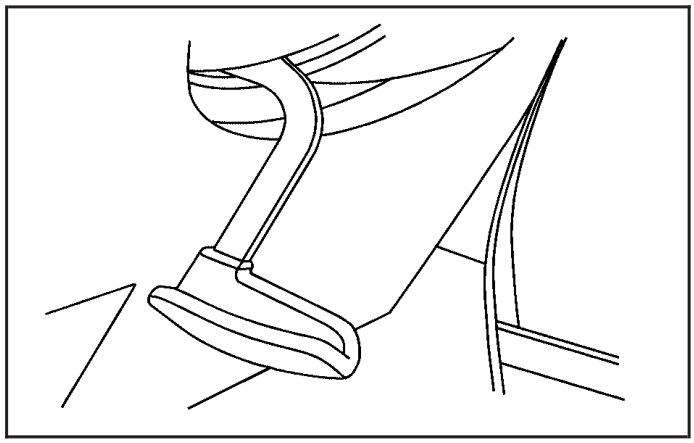

The lever to tilt the steering wheel is located on the left side of the steering column.

To tilt the wheel, hold the steering wheel and push the lever down. Then, move the steering wheel to a comfortable position and pull the lever up firmly to lock the column in place.

Turn Signal/Multifunction Lever

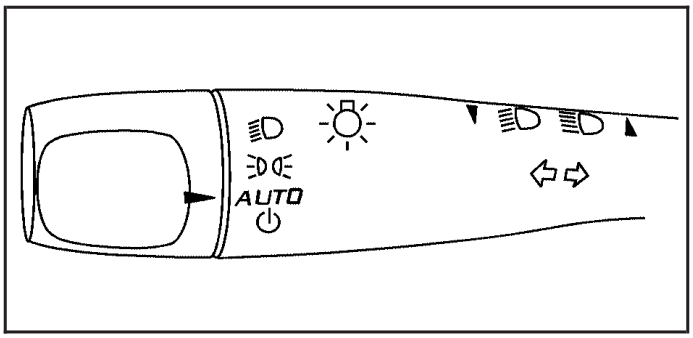

The lever on the left side of the steering column includes the following:

- Turn and Lane-Change Signals. See *Turn and Lane-Change Signals on page 3-8*.
- Headlamp High/Low-Beam Changer. See *Headlamp High/Low-Beam Changer on page 3-8*.
- Flash-to-Pass. See *Flash-to-Pass on page 3-9*.
- Exterior Lamp Control. See *Headlamps on page 3-14*.

Downloaded from www.Manualslib.com manuals search engine

Turn and Lane-Change Signals

The turn signal has two upward (for right) and two downward (for left) positions. These positions allow you to signal a turn or a lane change.

To signal a turn, move the lever all the way up or down. When the turn is finished, the lever will return automatically.

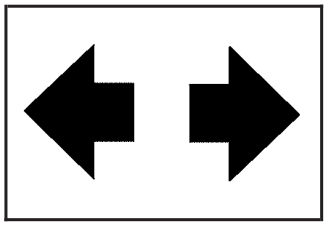

An arrow on the instrument panel cluster will flash in the direction of the turn or lane change.

To signal a lane change, raise or lower the lever until the arrow starts to flash. Hold it there until you complete the lane change. The lever will return by itself when you release it.

As you signal a turn or a lane change, if the arrows flash rapidly, a signal bulb may be burned out and other drivers won't see your turn signal.

If a bulb is burned out, replace it to help avoid an accident. If the arrows do not go on at all when you signal a turn, check the fuse, see *Fuses and Circuit Breakers on page 5-99* and for burned-out bulbs.

Headlamp High/Low-Beam Changer

To change the headlamps from low beam to high, push the turn signal lever away from you. To change from high beam to low beam, pull the turn signal lever towards you. To flash the high beams from low beam, pull the turn signal lever all the way towards you. Then release it.

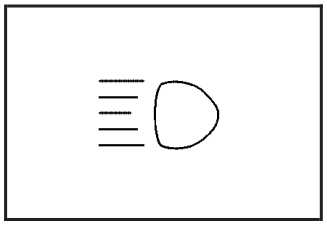

When the high beams are on, this light on the instrument panel cluster will also be on.

Downloaded from www.Manualslib.com manuals search engine

Flash-to-Pass

This feature lets you use your high-beam headlamps to signal a driver in front of you that you want to pass.

To flash the high beams from low beam, pull the turn signal/multifunction lever all the way towards you. Then release it.

Windshield Wipers

Be sure to clear ice and snow from the wiper blades before using them. If the wiper blades are frozen to the windshield, gently loosen or thaw them. If the blades do become damaged, install new blades or blade inserts. See *Windshield Wiper Blade Replacement on page 5-51*.

Heavy snow or ice can overload the wiper motor. A circuit breaker will stop the motor until it cools down. Clear away snow or ice to prevent an overload.

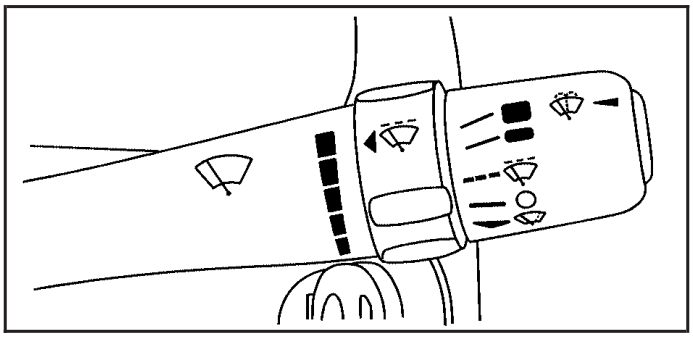

Use the lever on the right side of the steering column to operate the windshield wipers.

(High Speed): Move the lever to this position for steady wiping at high speed.

(Low Speed): Move the lever to this position for steady wiping at low speed.

Downloaded from www.Manualslib.com manuals search engine

(Delay): Move the lever to this position to set a delay between wipes.

(Delay Adjustment): Move the lever to the delay position to choose a delayed wiping cycle. Turn the intermittent adjust band down for a longer delay or up for a shorter delay.

(Off): Move the lever to this position to turn off the windshield wipers.

(Mist): Move the lever all the way down to mist and release for a single wiping cycle. The windshield wipers will stop after one wipe and the lever returns to its parked position. If more wipes are needed, hold the lever on mist longer.

Windshield Washer

⚠ CAUTION:

In freezing weather, do not use your washer until the windshield is warmed. Otherwise the washer fluid can form ice on the windshield, blocking your vision.

There is a button marked with the windshield washer symbol at the end of the windshield wiper lever. Press this button to spray washer fluid on the windshield. The wipers will run for a few cycles to clear the window and then either stop or return to your preset speed. For more wash cycles, press and hold the button longer.

Downloaded from www.Manualslib.com manuals search engine

Rear Window Wiper/Washer

The rear wiper and rear wash buttons are located on the instrument panel above the audio system.

(Rear Wiper): Press this button to turn the rear wiper on and off. When the wiper is on it will run continuously at a preset speed.

(Wash): Press this button to spray washer fluid on the rear window. The window wiper will also come on. Release the button when enough fluid has been sprayed on the window. The rear wiper will run a few more cycles after it is released. If the rear wiper function was already on, prior to pressing the wash button, it will stay on until the wiper button is pressed again.

The rear window washer uses the same fluid that is in the windshield washer reservoir. See *Windshield Washer Fluid on page 5-33*.

Cruise Control

Cruise control lets you maintain a speed of about 25 mph (40 km/h) or more without keeping your foot on the accelerator. This can really help on long trips. Cruise control does not work at speeds below 25 mph (40 km/h).

⚠ CAUTION:

Cruise control can be dangerous where you cannot drive safely at a steady speed. So, do not use your cruise control on winding roads or in heavy traffic.

Cruise control can be dangerous on slippery roads. On such roads, fast changes in tire traction can cause excessive wheel slip, and you could lose control. Do not use cruise control on slippery roads.

Downloaded from www.Manualslib.com manuals search engine

Setting Cruise Control

⚠ CAUTION:

If you leave your cruise control on when you are not using cruise, you might hit a button and go into cruise when you do not want to. You could be startled and even lose control. Keep the cruise control switch off until you want to use cruise control.

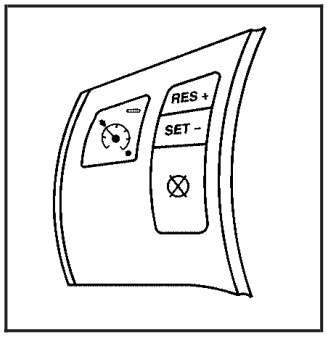

The cruise control buttons are located on the steering wheel.

(On/Off): Press to turn the cruise control system on and off.

RES+ (Resume): Press RES+ to resume a set speed and to accelerate the speed.

SET– (Set): Press SET– to set a speed and to decrease the speed.

CANCEL: Press to cancel cruise control.

To set a speed do the following:

1. Press to turn cruise control on. The indicator light on the button comes on.
2. Get up to the desired speed.
3. Press the SET– and release it. The cruise symbol displays in the instrument panel cluster to show the system is engaged.
4. Take your foot off the accelerator pedal.

When the brakes are applied, the cruise control shuts off.

If the vehicle is in cruise control and the Traction Control System (TCS) begins to limit wheel spin, the cruise control automatically disengages. See *Traction Control System (TCS) on page 4-6*. When road conditions allow, the cruise control can be used again.

Downloaded from www.Manualslib.com manuals search engine

Resuming a Set Speed

Suppose you set the cruise control at a desired speed and then apply the brakes. This disengages the cruise control. The cruise symbol in the instrument panel cluster also goes out indicating cruise is no longer engaged. To return to the previously set speed, you do not need to go through the set process again. Once the vehicle is at a speed of about 25 mph (40 km/h) or more, you can briefly press the RES+.

This takes the vehicle back up to the previously chosen speed and stays there.

Increasing Speed While Using Cruise Control

There are two ways to go to a higher speed.

- If the cruise control system is already engaged, press the RES+. Hold it there until you reach the desired speed, and then release the button.
- To increase the vehicle's speed in very small amounts, briefly press the RES+ and then release it. Each time this is done, the vehicle goes about 1 mph (1.6 km/h) faster.

Reducing Speed While Using Cruise Control

If the cruise control system is already engaged:

- Push and hold the SET– until the desired lower speed is reached, then release it.
- To slow down in very small amounts, briefly push the SET–. Each time this is done, the vehicle goes about 1 mph (1.6 km/h) slower.

Passing Another Vehicle While Using Cruise Control

Use the accelerator pedal to increase the vehicle's speed. When you take your foot off the pedal, the vehicle slows down to the previous cruise control speed that was set earlier.

Using Cruise Control on Hills

How well your cruise control works on hills depends upon the vehicle's speed, load, and the steepness of the hills. When going up steep hills, you might have to step on the accelerator pedal to maintain the vehicle's speed. When going downhill, you might have to brake or shift to a lower gear to keep the vehicle at a lower speed. However, when the brakes are applied the cruise control turns off. Many drivers find this to be too much trouble and do not use cruise control on steep hills.

Downloaded from www.Manualslib.com manuals search engine

Ending Cruise Control

There are three ways to disengage the cruise control:

- Step lightly on the brake pedal.
- Press the button, to turn off the cruise control system.
- Press the button.

  When cruise control disengages, the cruise symbol in the instrument panel cluster goes out.

Erasing Speed Memory

The cruise control set speed memory is erased when the cruise control or the ignition is turned off.

Headlamps

The exterior lamp control is located on the turn signal/multifunction lever.

(Exterior Lamp Control): Turn the control with this symbol on it to operate the exterior lamps.

The exterior lamp control has the following positions:

AUTO (Off/Automatic Headlamps): Turn the control to this position to put the headlamps in automatic mode. Automatic mode will turn the exterior lamps on and off depending upon how much light is available outside of the vehicle.

(Parking Lamps): Turn the control to this position to turn on the parking lamps together with the following:

- Sidemarker Lamps
- Taillamps
- License Plate Lamps
- Instrument Panel Lights

(Headlamps): Turning the control to this position turns on the headlamps, together with the previously listed lamps and lights.

Headlamps on Reminder

If you open the driver's door with the ignition off and the lamps on, you will hear a warning chime.

Downloaded from www.Manualslib.com manuals search engine

Daytime Running Lamps (DRL)

Daytime Running Lamps (DRL) can make it easier for others to see the front of your vehicle during the day. DRL can be helpful in many different driving conditions, but they can be especially helpful in the short periods after dawn and before sunset. Fully functional Daytime Running Lamps (DRL) are required on all vehicles first sold in Canada.

The DRL system will make your low-beam headlamps come on at a reduced brightness in daylight when the following conditions are met:

- The ignition is on.
- The exterior lamp band is in the automatic position.
- The transmission is not in PARK (P).
- The light sensor determines it is daytime.
- The parking brake is released.

When the DRL are on, the low-beam headlamps will be on at a reduced brightness. The taillamps, sidemarker and other lamps will not be on. The instrument panel will not be lit up either.

When the exterior lamp band is turned to the headlamp position, the low-beam headlamps come on. The other lamps that come on with the headlamps will also come on.

When the headlamps are turned off, the regular lamps will go off, and the low-beam headlamps come on to the reduced brightness.

To idle your vehicle with the DRL off, move the shift lever to PARK (P). The DRL will stay off until the shift lever is moved out of the PARK (P) position.

The regular headlamp system should be turned on when needed.

Automatic Headlamp System

When it is dark enough outside and the exterior lamps control is in the automatic position, the headlamps will come on automatically. See *Headlamps on page 3-14*.

Your vehicle has a light sensor located on top of the instrument panel. Make sure it is not covered, or the headlamps will be on when you do not need them.

The system may also turn on the headlamps when driving through a parking garage or tunnel.

Downloaded from www.Manualslib.com manuals search engine

Fog Lamps

Use the fog lamps for better visibility in foggy or misty conditions.

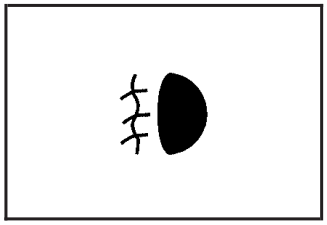

The fog lamps button is located on the instrument panel above the radio.

To use the fog lamps, the parking lamps or low-beam headlamps must be on.

Push the button to turn the fog lamps on or off.

The fog lamp button will be lit when the lamps are on. The Fog lamps will go off whenever you turn the high-beam headlamps on. When the high-beam headlamps are turned off, the fog lamps will come on again.

Some localities have laws that require the headlamps to be on along with the fog lamps.

Instrument Panel Brightness

This feature controls the brightness of the instrument panel lights.

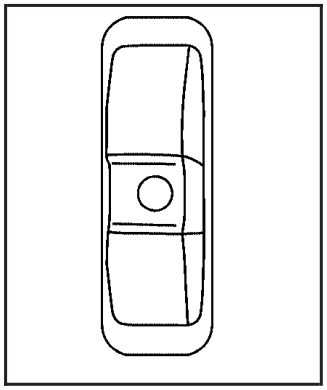

The control for this feature is located on the instrument panel to the left of the steering column.

Turn the control up to brighten the lights or down to dim them.

Downloaded from www.Manualslib.com manuals search engine

Dome Lamp

If the vehicle has a dome lamp with a switch, the following are the settings.

(Off): Move the lever to this position to turn the lamp off, even when a door is open.

(Door): Move the lever to this position so that the lamp comes on when a door is opened.

(On): Move the lever to this position to turn the dome lamp on.

Entry Lighting

The dome lamp and the cargo lamp inside the vehicle comes on when any door is opened, if the dome lamp is in the door position. In addition, these lamps come on when the Remote Keyless Entry (RKE) unlock button is pressed. It stays on for 20 seconds or until a door is opened. After the door is opened and then closed, the light remains on for 20 seconds, or until the key is put in the ignition and turned to the ON/RUN position.

Map Lamps

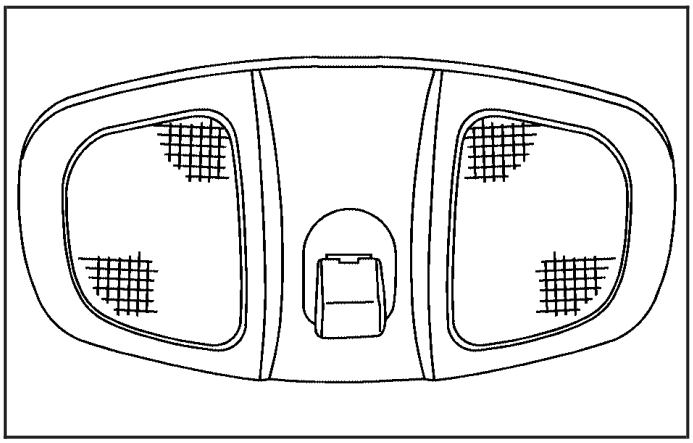

Your vehicle may have lamps located on the headliner above the rearview mirror. Push on the lens in the lamp to turn them on and off.

Downloaded from www.Manualslib.com manuals search engine

Cargo Lamp

The cargo lamp is located over the rear compartment, and is controlled by the dome lamp. See *Dome Lamp on page 3-17*.

Electric Power Management

The vehicle has Electric Power Management (EPM) that estimates the battery's temperature and state of charge. It then adjusts the voltage for best performance and extended life of the battery.

When the battery's state of charge is low, the voltage is raised slightly to quickly put the charge back in. When the state of charge is high, the voltage is lowered slightly to prevent overcharging. If the vehicle has a voltmeter gage or a voltage display on the Driver Information Center (DIC), you may see the voltage move up or down. This is normal. If there is a problem, an alert will be displayed.

The battery can be discharged at idle if the electrical loads are very high. This is true for all vehicles. This is because the generator (alternator) may not be spinning fast enough at idle to produce all the power that is needed for very high electrical loads.

A high electrical load occurs when several of the following loads are on: headlamps, high beams, fog lamps, rear window defogger, climate control fan at high speed, heated seats, engine cooling fans, trailer loads, and loads plugged into accessory power outlets.

EPM works to prevent excessive discharge of the battery. It does this by balancing the generator's output and the vehicle's electrical needs. It can increase engine idle speed to generate more power, whenever needed. It can temporarily reduce the power demands of some accessories.

Normally, these actions occur in steps or levels, without being noticeable. In rare cases at the highest levels of corrective action, this action may be noticeable to the driver. If so, a Driver Information Center (DIC) message might be displayed, such as Battery Saver Active or Service Battery Charging System. If this message is displayed, it is recommended that the driver reduce the electrical loads as much as possible. See *DIC Warnings and Messages on page 3-52*.

Downloaded from www.Manualslib.com manuals search engine

Battery Run-Down Protection

Your vehicle has a battery saver feature designed to protect the vehicle's battery.

When any interior lamp is left on and the ignition is turned off, the battery rundown protection system will automatically turn the lamp off after 20 minutes. This will avoid draining the battery. This vehicle also has a retained accessory power feature. If the radio is on, it will turn off after 10 minutes or if any door on the vehicle is opened. See *Retained Accessory Power (RAP) on page 2-22*.

Accessory Power Outlet(s)

The accessory power outlets can be used to connect electrical equipment such as a cellular phone or CB radio.

The two accessory power outlets are located in the front and at the rear of the center console storage area.

To use the outlets, remove the cover. When not in use, always cover the outlet with the protective cap.

Notice: **If electrical devices are left plugged into a power outlet, the battery may drain causing your vehicle not to start or damage to the battery. This would not be covered by the warranty. Always unplug all electrical devices when turning off your vehicle.**

Certain electrical accessories may not be compatible with the accessory power outlets and could result in blown vehicle or adapter fuses. If you experience a problem, see your dealer/retailer for additional information on the accessory power outlet.

Notice: **Adding any electrical equipment to your vehicle may damage it or keep other components from working as they should. The repairs would not be covered by your warranty. Do not use equipment exceeding maximum amperage rating of 20 amperes. Check with your dealer/retailer before adding electrical equipment.**

When adding electrical equipment, be sure to follow the installation instructions included with the equipment.

Notice: **Improper use of the power outlet can cause damage not covered by your warranty. Do not hang any type of accessory or accessory bracket from the plug because the power outlets are designed for accessory power plugs only.**

Downloaded from www.Manualslib.com manuals search engine

Ashtray(s) and Cigarette Lighter

Your vehicle may have a removable ashtray and cigarette lighter. The ashtray can be placed into the front console cupholders.

To use the lighter, push it in all the way and let go. When it is ready, it will pop back out by itself.

Notice: **Holding a cigarette lighter in while it is heating will not allow the lighter to back away from the heating element when it is hot. Damage from overheating may occur to the lighter or heating element, or a fuse could be blown. Do not hold a cigarette lighter in while it is heating. Do not use equipment exceeding maximum amperage rating of 15 amperes.**

Notice: **If you put papers, pins, or other flammable items in the ashtray, hot cigarettes or other smoking materials could ignite them and possibly damage your vehicle. Never put flammable items in the ashtray.**

Climate Controls

Climate Control System

The heating, cooling, and ventilation for the vehicle can be controlled with this system. If your vehicle has the remote start feature, the climate control system functions as part of the remote start feature. See *Remote Keyless Entry (RKE) System Operation on page 2-5*.

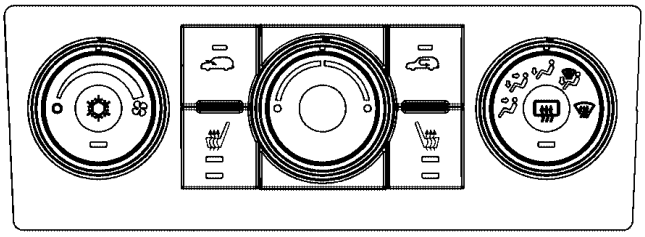

Downloaded from www.Manualslib.com manuals search engine

Operation

(Fan): Turn the left knob clockwise or counterclockwise to increase or decrease the fan speed. In any setting other than off, the fan runs continuously with the ignition on. To turn off the air completely, turn the fan to 0 and select the recirculation button.

Temperature Control: Turn the center knob clockwise or counterclockwise to increase or decrease the temperature inside the vehicle.

Use the right knob to select from the following modes:

There is one position between each mode to finely adjust airflow position.

(Vent): This mode directs air to the instrument panel outlets.

(Bi-Level): This mode splits the air between the instrument panel outlets and the floor outlets.

(Floor): This mode directs most of the air to the floor outlets with some air directed to the windshield and side windows.

The right knob may also be used to select the defrost and defog modes that are described in this section.

You can also select modes by using the following buttons:

(Outside Air): Press this button to turn the outside air mode on. When this mode is on, outside air will circulate throughout the vehicle. When the button is pressed, an indicator light in the button comes on to show that it is activated. The outside air mode can be used with all modes, but it cannot be used with the recirculation mode.

(Recirculation): Press this button to recirculate cabin air through the vehicle. It can be used to prevent outside air and odors from entering the vehicle or to help heat or cool the air inside the vehicle more quickly. An indicator light will come on in this mode. Operation in this mode during periods of high humidity and cool outside temperatures may result in increased window fogging. If window fogging is experienced, select the defrost mode.

The recirculation mode cannot be used with floor, defrost, or defogging modes. If you try to select recirculation in one of those modes, the indicator light flashes several times and turns off.

Downloaded from www.Manualslib.com manuals search engine

(Air Conditioning): Press this button to turn the air conditioning system on or off. When this button is pressed, an indicator light on the button comes on to show that the air conditioning is activated. The air conditioning can be selected in any mode as long as the fan switch is on.

The air conditioning compressor does not operate when outside temperatures fall below 38°F (3°C). The indicator light flashes several times and turns off when outside conditions affect air conditioning operation. This is normal.

On hot days, open the windows to let hot inside air escape; then close them. This helps to reduce the time it takes for the vehicle to cool down. It also helps the system to operate more efficiently.

For quick cool down on hot days, select the following settings together:

1. Vent mode.
2. Outside air.
3. Air conditioning.
4. The coolest temperature.
5. The highest fan speed.
6. Once the vehicle's interior temperature is below the outside temperature, select recirculation mode for enhanced cooling.

Using these settings together for long periods of time may cause the air inside of the vehicle to become too dry. To prevent this from happening, after the air inside of the vehicle has cooled, turn the recirculation mode off.

The air conditioning system removes moisture from the air, so a small amount of water might drip underneath the vehicle while idling or after turning off the engine. This is normal.

(Heated Seats): If your vehicle has heated seats, see *Heated Seats on page 1-4*.

Downloaded from www.Manualslib.com manuals search engine

Defogging and Defrosting

Fog or frost on the inside of windows is a result of high humidity (moisture) condensing on the cool window glass. This can be minimized if the climate control system is used properly.

Use the defog mode to clear the windows of fog or moisture and warm the passengers. Use the defrost mode to remove fog or frost from the windshield more quickly. When either of these modes are selected, the system runs the air conditioning compressor and cancels the recirculation mode to dry the air. For best results, clear all snow and ice from the windshield before defrosting.

Turn the right knob to select the defog or defrost mode.

(Defog): This mode directs half of the air to the windshield and the side window outlets, and half to the floor outlets.

(Defrost): This mode directs most of the air to the windshield and the side window outlets, with some air directed to the floor outlets.

Rear Window Defogger

The rear window defogger uses a warming grid to remove fog from the rear window.

The rear window defogger only works when the ignition is in ON/RUN.

(Rear): Press this button to turn the rear window defogger on or off. An indicator light on the button comes on to show that the rear window defogger is activated.

The rear window defroster stays on for about 10 minutes if the vehicle remains at slower vehicle speeds or until the button is pressed, or unless the ignition is turned to ACC/ACCESSORY or LOCK/OFF. If turned on again, the defogger only runs for about five minutes before turning off again. At higher vehicle speeds, the defogger may stay on continuously. The defogger can always be turned off by pressing the button again or by turning off the ignition.

Downloaded from www.Manualslib.com manuals search engine

If your vehicle has the remote start feature, the rear defogger automatically turns on if it is cold outside. When the vehicle transitions out of the remote start mode, the rear defogger will turn off. See *Remote Keyless Entry (RKE) System Operation on page 2-5*.

Notice: **Do not use anything sharp on the inside of the rear window. If you do, you could cut or damage the warming grid, and the repairs would not be covered by your warranty. Do not attach a temporary vehicle license, tape, a decal or anything similar to the defogger grid.**

Remote Start Climate Control Operation

If your vehicle has the remote start feature and it is activated, the climate control system heats and cools the inside of the vehicle using the modes that were set before the vehicle was turned off and the rear defogger automatically turns on. If your vehicle has heated seats, they may turn on if it is cold outside and will shut off when the key is turned to ON/RUN. See *Heated Seats on page 1-4*.

Outlet Adjustment

Use the louvers located on the air outlets to change the direction of the airflow.

Operation Tips

- Clear away any ice, snow, or leaves from the air inlets at the base of the vehicle that may block the flow of air into your vehicle.
- Do not use any non-GM approved hood deflectors that could adversely affect the performance of the system.
- Keep the path under the front seats clear of objects to help circulate the air inside of your vehicle more effectively.

Passenger Compartment Air Filter

Outside air is routed through a passenger compartment air filter before entering the vehicle. This filter removes certain particles from the air, including pollen and dust particles. Reductions in airflow, which may occur more quickly in dusty areas, indicate that the filter needs to be replaced early.

The filter should be replaced as part of routine scheduled maintenance. See *Scheduled Maintenance on page 6-4* for when to replace the filter.

Downloaded from www.Manualslib.com manuals search engine

To change the passenger compartment air filter, use the following steps:

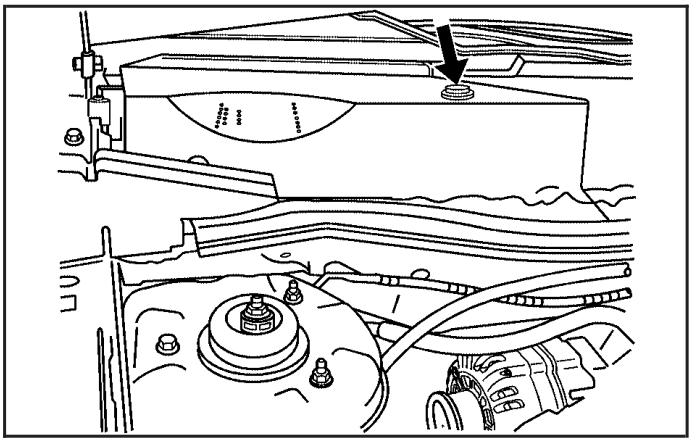

1. The passenger's side air inlet panel is located below the center of the passenger's side wiper blade. Remove the push pin retaining the air inlet panel. Pry the center of the push pin out 0.5 in (13 mm) for removal.
2. Open the hood.
3. Remove the three push pins from the top and forward edge of the passenger's side air inlet panel.
4. Remove the air inlet panel to access the filter.
5. Press the release tab on the driver's side of the filter and pull out the edge of the filter.

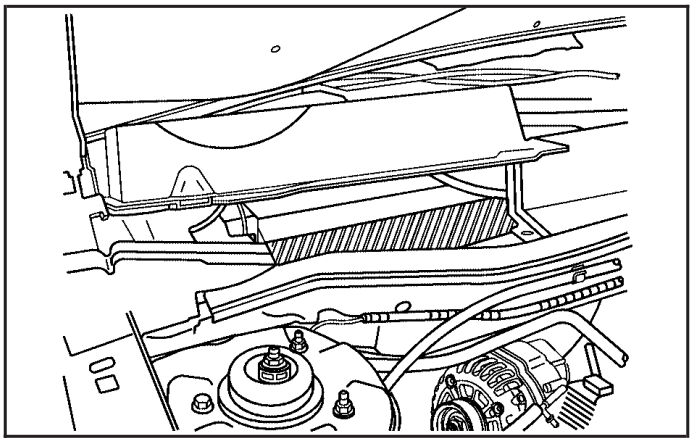

6. Remove the filter from the vehicle.
7. Install a new passenger compartment air filter. For the type of filter to use see *Maintenance Replacement Parts on page 6-14*.
8. Reverse Steps 1 through 5.

Downloaded from www.Manualslib.com manuals search engine

Warning Lights, Gages, and Indicators

This section describes the warning lights and gages on your vehicle.

Warning lights and gages can signal that something is wrong before it becomes serious enough to cause an expensive repair or replacement. Paying attention to the warning lights and gages could also save you or others from injury.

Warning lights come on when there may be or is a problem with one of your vehicle's functions. As the details show on the next few pages, some warning lights come on briefly when you start the engine just to let you know they are working. If you are familiar with this section, you should not be alarmed when this happens.

Gages can indicate when there may be or is a problem with one of your vehicle's functions. Often gages and warning lights work together to let you know when there is a problem with your vehicle.

When one of the warning lights comes on and stays on as you are driving, or when one of the gages shows there may be a problem, check the section that tells you what to do about it. Please follow this manual's advice. Waiting to do repairs can be costly and even dangerous. So get to know your vehicle's warning lights and gages. They can be a big help.

Downloaded from www.Manualslib.com manuals search engine

Instrument Panel Cluster

Your instrument panel cluster is designed to let you know at a glance how your vehicle is running. You will know how fast you are going, how much fuel you are using, and many other things you will need to drive safely and economically.

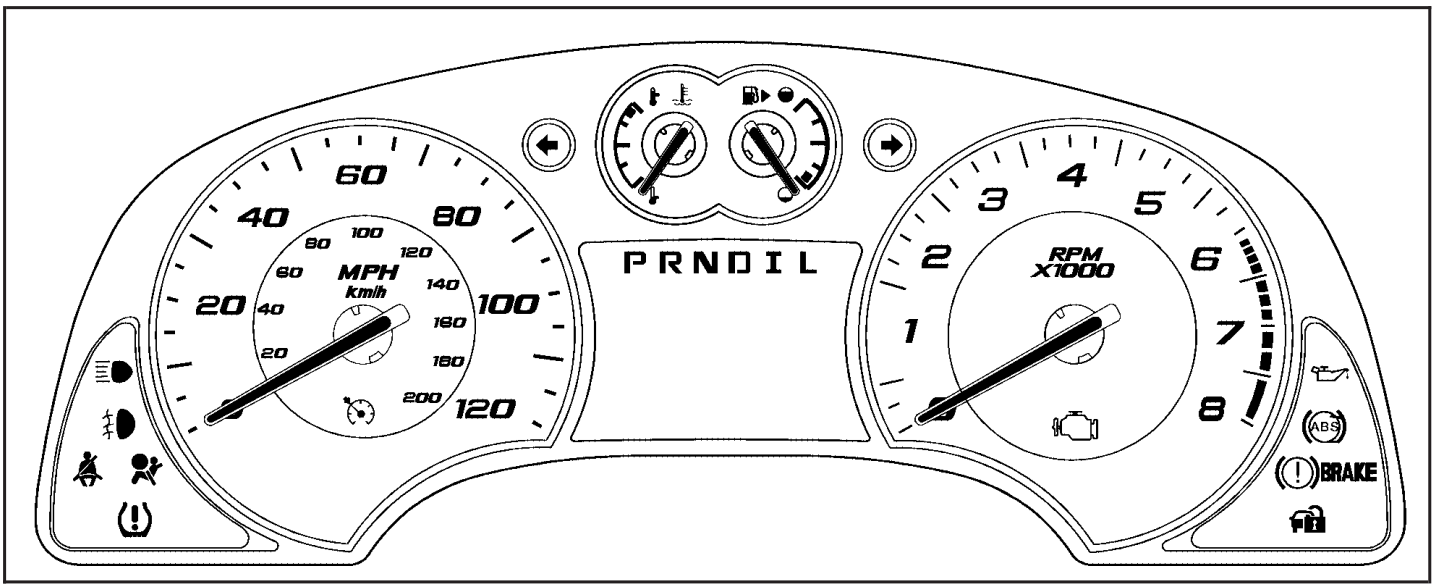

United States version shown, Canada and GXP Model similar

Downloaded from www.Manualslib.com manuals search engine

Speedometer and Odometer

Your speedometer lets you see your speed in both miles per hour (mph) and kilometers per hour (km/h).

Your odometer shows how far your vehicle has been driven, in either miles (used in the United States) or kilometers (used in Canada).

Your vehicle has a tamper resistant odometer. The digital odometer will read 999,999 if someone tries to turn it back.

You may wonder what happens if your vehicle needs a new odometer installed. If the new one can be set to the mileage total of the old odometer, then it must be. If not, then it is set at zero and a label must be put on the driver's door to show the old mileage reading when the new odometer was installed.

Trip Odometer

Your trip odometer is located in the Driver Information Center and shows how far your vehicle has been driven since the trip odometer was last reset. For more information see *DIC Operation and Displays on page 3-45*.

Tachometer

The tachometer shows your engine speed in revolutions per minute (rpm).

Notice: **If you operate the engine with the tachometer in the solid red area, your vehicle could be damaged. The damages would not be covered by your warranty. Do not operate the engine in the solid red area.**

Safety Belt Reminders

Safety Belt Reminder Light

When the engine is started, a chime will come on for several seconds to remind people to fasten their safety belts, unless the driver's safety belt is already buckled.

The safety belt light will also come on and stay on for several seconds, then it will flash for several more.

Downloaded from www.Manualslib.com manuals search engine

This chime and light is repeated if the driver remains unbuckled and the vehicle is in motion. If the driver's belt is already buckled, neither the chime nor the light will come on.

Passenger Safety Belt Reminder Light

Several seconds after the engine is started, a chime will sound for several seconds to remind the front passenger to buckle their safety belt. This would only occur if the passenger airbag is enabled. See *Passenger Sensing System on page 1-64* for more information. The passenger safety belt light, located on the instrument panel, will come on and stay on for several seconds and then flash for several more.

This chime and light are repeated if the passenger remains unbuckled and the vehicle is in motion.

If the passenger's safety belt is buckled, neither the chime nor the light will come on.

Airbag Readiness Light

There is an airbag readiness light on the instrument panel cluster, which shows the airbag symbol. The system checks the airbag's electrical system for malfunctions. The light tells you if there is an electrical problem. The system check includes the airbag sensor, the pretensioners, the airbag modules, the wiring and the crash sensing and diagnostic module. For more information on the airbag system, see *Airbag System on page 1-56*.

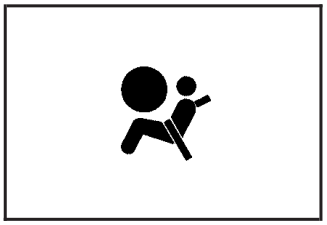

Downloaded from www.Manualslib.com manuals search engine

If the airbag readiness light stays on after you start the vehicle or comes on when you are driving, your airbag system may not work properly. Have your vehicle serviced right away.

⚠ CAUTION:

If the airbag readiness light stays on after you start your vehicle, it means the airbag system may not be working properly. The airbags in your vehicle may not inflate in a crash, or they could even inflate without a crash. To help avoid injury to yourself or others, have your vehicle serviced right away if the airbag readiness light stays on after you start your vehicle.

The airbag readiness light should flash for a few seconds when you start the engine. If the light does not come on then, have it fixed immediately. If there is a problem with the airbag system, an airbag Driver Information Center (DIC) message may also come on. See *DIC Warnings and Messages on page 3-52* for more information.

Passenger Airbag Status Indicator

Your vehicle has the passenger sensing system. Your instrument panel has a passenger airbag status indicator.

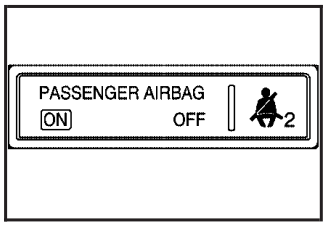

United States

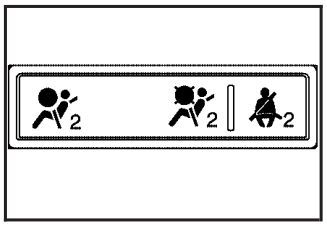

Canada

When you start the vehicle, the passenger airbag status indicator will light ON and OFF, or the symbol for on and off, for several seconds as a system check. Then, after several more seconds, the status indicator will light either ON or OFF, or either the on or off symbol to let you know the status of the right front passenger's frontal airbag.

Downloaded from www.Manualslib.com manuals search engine

If the word ON or the on symbol is lit on the passenger airbag status indicator, it means that the right front passenger's frontal airbag is enabled (may inflate).

⚠ CAUTION:

If the on indicator comes on when you have a rear-facing child restraint installed in the right front passenger's seat, it means that the passenger sensing system has not turned off the passenger's frontal airbag. A child in a rear-facing child restraint can be seriously injured or killed if the right front passenger's airbag inflates. This is because the back of the rear-facing child restraint would be very close to the inflating airbag. Do not use a rear-facing child restraint in the right front passenger's seat if the airbag is turned on.

⚠ CAUTION:

Even though the passenger sensing system is designed to turn off the right front passenger's frontal airbag if the system detects a rear-facing child restraint, no system is fail-safe, and no one can guarantee that an airbag will not deploy under some unusual circumstance, even though it is turned off. We recommend that rear-facing child restraints be secured in the rear seat, even if the airbag is off.

If the word OFF or the off symbol is lit on the airbag status indicator, it means that the passenger sensing system has turned off the right front passenger's frontal airbag. See *Passenger Sensing System on page 1-64* for more on this, including important safety information.

Downloaded from www.Manualslib.com manuals search engine

If, after several seconds, both status indicator lights remain on, or if there are no lights at all, there may be a problem with the lights or the passenger sensing system. See your dealer/retailer for service.

⚠ CAUTION:

If the airbag readiness light in the instrument panel cluster ever comes on and stays on, it means that something may be wrong with the airbag system. If this ever happens, have the vehicle serviced promptly, because an adult-size person sitting in the right front passenger's seat may not have the protection of the airbag(s). See *Airbag Readiness Light on page 3-29* for more on this, including important safety information.

Charging System Light

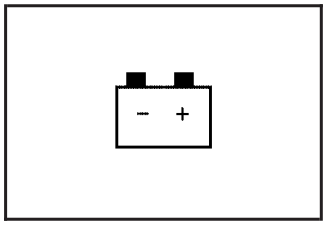

If this light comes on while you are driving, you may have a problem with the charging system.

A charging system Driver Information Center (DIC) message may also appear. See *DIC Warnings and Messages on page 3-52* for more information. This light could indicate that you have problems with a generator drive belt, or another electrical problem. Have it checked right away. If you must drive a short distance with the light on, be certain to turn off all your accessories, such as the radio and air conditioner.

Downloaded from www.Manualslib.com manuals search engine

Brake System Warning Light

Your vehicle's hydraulic brake system is divided into two parts. If one part is not working, the other part can still work and stop you. For good braking, though, you need both parts working well.

If the brake system warning light comes on, there is a brake problem. Have your brake system inspected right away.

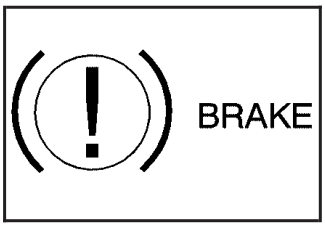

United States

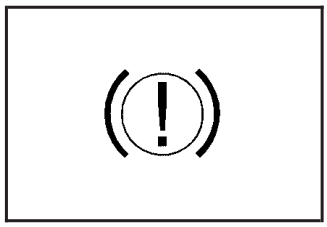

Canada

The brake light is located in the instrument panel cluster.

This light should come on briefly when you turn the ignition key to RUN. If it does not come on then, have it fixed so it will be ready to warn you if there is a problem.

When the ignition is on, the brake light will come on when you set your parking brake. The light will stay on if your parking brake does not release fully.

A chime will also sound if the parking brake is not fully released and the vehicle is moving. If it stays on after your parking brake is fully released, it means you have a brake problem.

The brake light will also come on to indicate a low brake fluid level. See *Brakes on page 5-34* for more information.

If the light comes on while you are driving, pull off the road and stop carefully. You may notice that the pedal is harder to push or the pedal may go closer to the floor. It may take longer to stop. If the light is still on, have the vehicle towed for service. See *Towing Your Vehicle on page 4-27*.

⚠ CAUTION:

Your brake system may not be working properly if the brake system warning light is on. Driving with the brake system warning light on can lead to an accident. If the light is still on after you have pulled off the road and stopped carefully, have the vehicle towed for service.

Downloaded from www.Manualslib.com manuals search engine

Antilock Brake System Warning Light

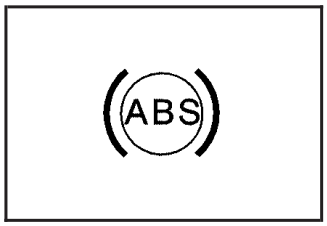

For vehicles with the Antilock Brake System (ABS), this light will come on briefly when you start the engine.

That is normal. If the light does not come on then, have it fixed so it will be ready to warn you if there is a problem.

If the ABS light stays on, turn the ignition off, if the light comes on when you are driving, stop as soon as it is safely possible and turn the ignition off. Then start the engine again to reset the system. If the ABS light still stays on, or comes on again while you are driving, your vehicle needs service. If the regular brake system warning light is not on, you still have brakes, but you do not have antilock brakes. If the regular brake system warning light is also on, you do not have antilock brakes and there is a problem with your regular brakes.
See *Brake System Warning Light on page 3-33*

For vehicles with a Driver Information Center (DIC), see *DIC Warnings and Messages on page 3-52* for all brake related DIC messages.

Traction Control System (TCS) Warning Light

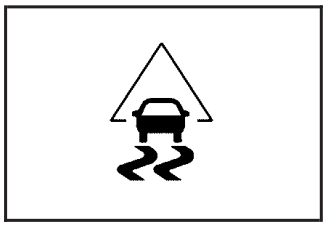

Your vehicle has a Traction Control System (TCS) and StabiliTrak® warning light.

When the traction control is activated the light will flash when the TCS is limiting wheel spin or when the StabiliTrak® system is active. You may feel or hear the system working, but this is normal. This light may also come on after extended heavy braking indicating the brakes have become too hot to limit wheel spin.

This light will come on and stay on if the TCS is turned off using the traction control on/off button, located next to the gear shift lever.

If the TCS warning light comes on and stays on for an extended period of time when the system is turned on, your vehicle needs service. See *Traction Control System (TCS) on page 4-6* and *StabiliTrak® System on page 4-7* for more information.

Downloaded from www.Manualslib.com manuals search engine

Engine Coolant Temperature Warning Light

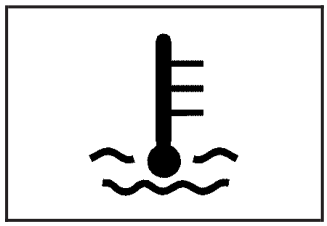

The engine coolant temperature warning light will come on when the engine has overheated.

If this happens you should pull over and turn off the engine as soon as possible. See *Engine Overheating on page 5-25* for more information.

Notice: **Driving with the engine coolant temperature warning light on could cause your vehicle to overheat. See *Engine Overheating on page 5-25*. Your vehicle could be damaged, and it might not be covered by your warranty. Never drive with the engine coolant temperature warning light on.**

Engine Coolant Temperature Gage

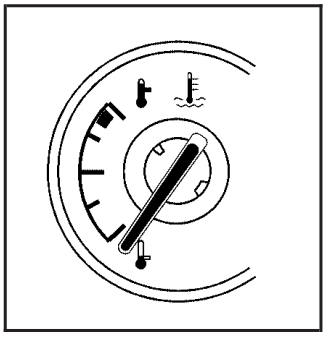

This gage measures the temperature of the vehicle's engine coolant.

If the indicator needle moves towards the shaded in thermostat, the engine is too hot. The engine coolant temperature warning light will turn on. See *Engine Coolant Temperature Warning Light on page 3-35* for more information.

If you have been operating your vehicle under normal driving conditions, and the engine coolant temperature warning light comes on, you should pull off the road, stop your vehicle and turn off the engine as soon as possible.

Downloaded from www.Manualslib.com manuals search engine

Tire Pressure Light

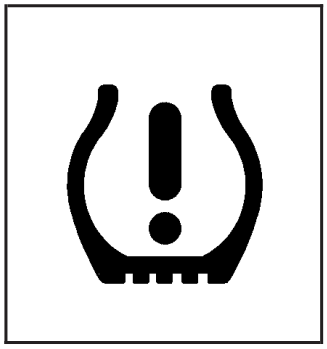

This light comes on briefly when the engine is started.

This light will also come on when one or more of your tires are significantly underinflated.

A tire pressure message in the Driver Information Center (DIC), may accompany the light. See *DIC Warnings and Messages on page 3-52* for more information.

Stop and check your tires as soon as it is safe to do so. If underinflated, inflate to the proper pressure. See *Tires on page 5-52* for more information.

If a problem is detected with the Tire Pressure Monitor System, this light will flash for approximately 60 seconds and then stay on solid for the remainder of the ignition cycle. See *Tire Pressure Monitor System on page 5-62* for more information.

Malfunction Indicator Lamp

Check Engine Light

A computer system called OBD II (On-Board Diagnostics-Second Generation) monitors operation of the fuel, ignition, and emission control systems. It makes sure that emissions are at acceptable levels for the life of the vehicle, helping to produce a cleaner environment.

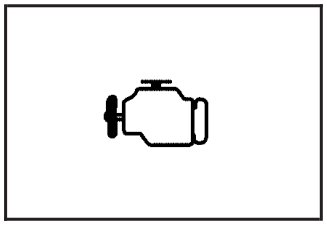

The check engine light comes on to indicate that there is an OBD II problem and service is required.

Malfunctions often are indicated by the system before any problem is apparent. This can prevent more serious damage to your vehicle. This system is also designed to assist your service technician in correctly diagnosing any malfunction.

Notice: **If you keep driving your vehicle with this light on, after a while, the emission controls might not work as well, your vehicle's fuel economy might not be as good, and the engine might not run as smoothly. This could lead to costly repairs that might not be covered by your warranty.**

Downloaded from www.Manualslib.com manuals search engine

Notice: **Modifications made to the engine, transmission, exhaust, intake, or fuel system of your vehicle or the replacement of the original tires with other than those of the same Tire Performance Criteria (TPC) can affect your vehicle's emission controls and can cause this light to come on. Modifications to these systems could lead to costly repairs not covered by your warranty. This could also result in a failure to pass a required Emission Inspection/Maintenance test. See *Accessories and Modifications on page 5-3*.**

This light comes on, as a check to show it is working, when the ignition is turned ON/RUN but the engine is not running. If the light does not come on, have it repaired. This light also comes on during a malfunction in one of two ways:

- **Light Flashing** — A misfire condition has been detected. A misfire increases vehicle emissions and could damage the emission control system on your vehicle. Diagnosis and service might be required.
- **Light On Steady** — An emission control system malfunction has been detected on your vehicle. Diagnosis and service might be required.

If the Light is Flashing

The following can prevent more serious damage to your vehicle:

- Reduce vehicle speed.
- Avoid hard accelerations.
- Avoid steep uphill grades.
- If you are towing a trailer, reduce the amount of cargo being hauled as soon as it is possible.

If the light stops flashing and remains on steady, see "If the Light Is On Steady" following.

If the light continues to flash, when it is safe to do so, stop the vehicle. Find a safe place to park the vehicle. Turn the ignition off, wait at least 10 seconds, and restart the engine. If the light remains on steady, see "If the Light Is On Steady" following. If the light is still flashing, follow the previous steps and see your dealer/retailer for service as soon as possible.

Downloaded from www.Manualslib.com manuals search engine

If the Light Is On Steady

You might be able to correct the emission system malfunction by considering the following:

Did you recently put fuel into your vehicle?

If so, reinstall the fuel cap, making sure to fully install the cap. See *Filling the Tank on page 5-8*. The diagnostic system can determine if the fuel cap has been left off or improperly installed. A loose or missing fuel cap allows fuel to evaporate into the atmosphere. A few driving trips with the cap properly installed should turn the light off.

Did you just drive through a deep puddle of water?

If so, your vehicle's electrical system might be wet. The condition is usually corrected when the electrical system dries out. A few driving trips should turn the light off.

Have you recently changed brands of fuel?

If so, be sure to fuel your vehicle with quality fuel. See *Gasoline Octane on page 5-5*. Poor fuel quality causes the engine not to run as efficiently as designed. You might notice this as stalling after start-up, stalling when you put the vehicle into gear, misfiring, hesitation on acceleration, or stumbling on acceleration — these conditions might go away once the engine is warmed up. This will be detected by the system and cause the light to turn on.

If you experience one or more of these conditions, change the fuel brand you use. It will require at least one full tank of the proper fuel to turn the light off.

If none of the above steps have made the light turn off, your dealer/retailer can check the vehicle. Your dealer/retailer has the proper test equipment and diagnostic tools to fix any mechanical or electrical problems that might have developed.

Downloaded from www.Manualslib.com manuals search engine

Emissions Inspection and Maintenance Programs

Some state/provincial and local governments have or might begin programs to inspect the emission control equipment on your vehicle. Failure to pass this inspection could prevent you from getting a vehicle registration.

Here are some things you need to know to help your vehicle pass an inspection:

Your vehicle will not pass this inspection if the check engine light is on or not working properly.

Your vehicle will not pass this inspection if the OBD (on-board diagnostic) system determines that critical emission control systems have not been completely diagnosed by the system. The vehicle would be considered not ready for inspection. This can happen if you have recently replaced the battery or if the battery has run down. The diagnostic system is designed to evaluate critical emission control systems during normal driving. This can take several days of routine driving. If you have done this and your vehicle still does not pass the inspection for lack of OBD system readiness, your dealer/retailer can prepare the vehicle for inspection.

Oil Pressure Light

⚠ CAUTION:

Do not keep driving if the oil pressure is low. If you do, your engine can become so hot that it catches fire. You or others could be burned. Check your oil as soon as possible and have your vehicle serviced.

Notice: **Lack of proper engine oil maintenance may damage the engine. The repairs would not be covered by your warranty. Always follow the maintenance schedule in this manual for changing engine oil.**

This light will come on briefly when you start your engine. If it does not, have your vehicle serviced.

Downloaded from www.Manualslib.com manuals search engine

When the light comes on and stays on, it means that oil is not flowing through your engine properly. You could be low on oil and you might have some other system problem.

Change Engine Oil Light

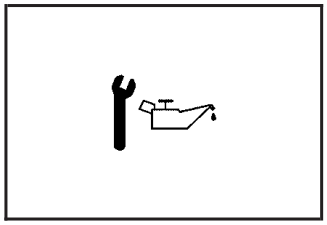

If this light comes on and stays on for 30 seconds, it means that service is required for your vehicle.

A CHANGE OIL SOON message will appear on the DIC. For more information see *DIC Warnings and Messages on page 3-52*.

After having the oil changed you will need to reset the light. See *Engine Oil on page 5-15*, and *Scheduled Maintenance on page 6-4* for more information.

Security Light

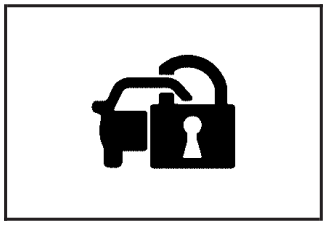

For information regarding this light and the vehicle's security system, see *Content Theft-Deterrent on page 2-18*, and *PASS-Key® III+ Operation on page 2-19*.

Fog Lamp Light

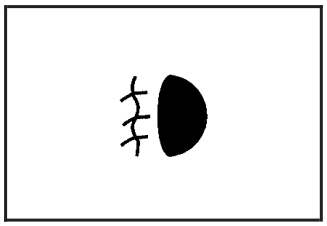

The fog lamp light will come on when the fog lamps are in use.

The light will go out when the fog lamps are turned off. See *Fog Lamps on page 3-16* for more information.

Downloaded from www.Manualslib.com manuals search engine

Cruise Control Light

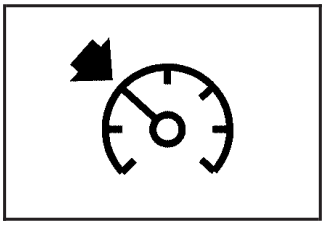

This light comes on whenever you set the cruise control.

The light goes out when the cruise control is turned off. See *Cruise Control on page 3-11* for more information.

Reduced Engine Power Light

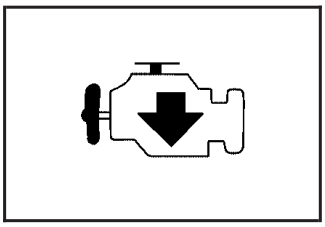

Your vehicle has a reduced engine power light.

This light, along with the service vehicle soon light, will be displayed when a noticeable reduction in the vehicle's performance may occur. Stop the vehicle and turn off the ignition. Wait for 10 seconds and restart your vehicle. This may correct the condition. See *Service Vehicle Soon Light on page 3-43* for more information.

The vehicle may be driven at a reduced speed when the reduced engine power light is on, but acceleration and speed may be reduced. The performance may be reduced until the next time you drive your vehicle. If this light stays on, see your dealer/retailer as soon as possible for diagnosis and repair.

Highbeam On Light

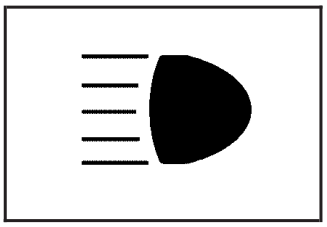

This light comes on when the high-beam headlamps are in use.

See *Headlamp High/Low-Beam Changer on page 3-8* for more information.

Downloaded from www.Manualslib.com manuals search engine

Service All-Wheel Drive Light

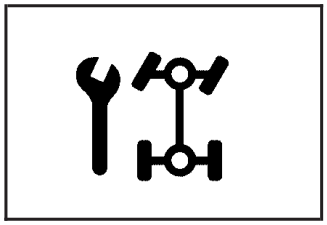

This light is located in the center of your instrument panel cluster.

This light and the SERVICE ALL WHEEL DRIVE message in the Driver Information Center (DIC) will come on and stay on to indicate that there may be a problem with the drive system and service is required. See *All-Wheel Drive (AWD) System on page 4-8* and *DIC Warnings and Messages on page 3-52* for more information.

All-Wheel Drive Disabled Light

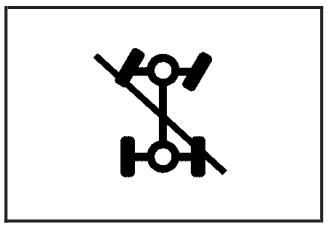

This light will come on when the rear drive system is overheating.

An ALL WHEEL DRIVE OFF message will appear in the Driver Information Center (DIC) too. This light will turn off when the rear drive system cools down. If this light stays on for a while, you need to reset the light. To reset the light, turn the ignition off and then back on again. If the light stays on, see your dealer/retailer right away.

See *All-Wheel Drive on page 5-44* and *DIC Warnings and Messages on page 3-52* for more information.

Gate Ajar Light

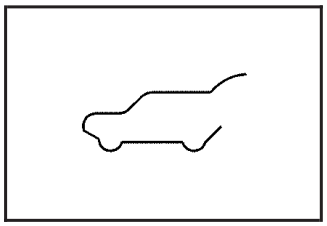

If this light comes on, your liftgate is not completely closed. Driving with the liftgate open can cause carbon monoxide (CO) to enter the vehicle.

See *Engine Exhaust on page 2-36* for more information.

Downloaded from www.Manualslib.com manuals search engine

Door Ajar Light

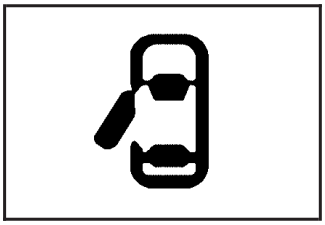

This light will come on when a door is ajar.

Do not drive with a door ajar.

Service Vehicle Soon Light

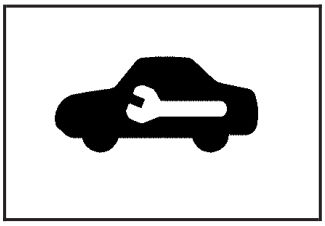

For vehicles with this light, it will come on if a condition exists that may require the vehicle to be taken in for service.

If the light comes on, see your dealer/retailer for service as soon as possible.

Fuel Gage

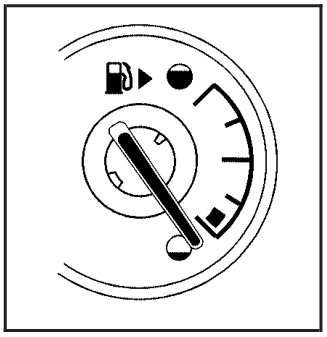

When the ignition is on, the fuel gage tells you about how much fuel you have left in your tank.

When the indicator nears empty, the low fuel light will come on. You still have a little fuel left, but you should get more soon. See *Low Fuel Warning Light on page 3-44* for more information.

Downloaded from www.Manualslib.com manuals search engine

Here are four things that some owners ask about. None of these show a problem with your fuel gage:

- At the service station, the fuel pump shuts off before the gage reads full.
- It takes a little more or less fuel to fill up than the gage indicated. For example, the gage may have indicated the tank was half full, but it actually took a little more or less than half the tank's capacity to fill the tank.
- The gage moves a little when you turn a corner or speed up.
- The gage takes a few seconds to stabilize after the ignition is turned on, and will go back to empty when you turn the ignition off.

For your fuel tank capacity, see *Capacities and Specifications on page 5-105*.

Low Fuel Warning Light

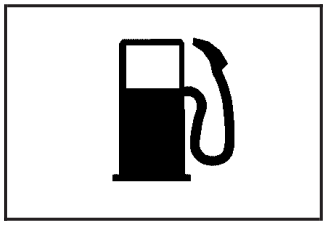

This light is located in the fuel gage. For more information see *Fuel Gage on page 3-43*.

This light comes on when the fuel tank is low on fuel. When you add fuel the light should go off. If it does not, have your vehicle serviced.

A "Fuel Level LOW" message also appears in the Driver Information Center (DIC). See *Fuel Gage on page 3-43* for more information.

Downloaded from www.Manualslib.com manuals search engine

Driver Information Center (DIC)

Your vehicle has a Driver Information Center (DIC).

All messages will appear in the DIC display located in the center of the instrument panel cluster. The DIC buttons are located on the center of the instrument panel.

The DIC comes on when the ignition is on. After a short delay, the DIC will display the information that was last displayed before the engine was turned off.

The DIC displays trip, fuel, and vehicle system information, and warning messages if a system problem is detected. The top of the DIC display shows the shift lever position indicator. See *Automatic Transmission Operation (3.4L V6 with 5-Speed) on page 2-25* or *Automatic Transmission Operation (3.6L V6 with 6-Speed) on page 2-28* for more information.

If your vehicle has these feature, the DIC also displays the compass direction and the outside air temperature when viewing the trip and fuel information. If there is a problem with the system that controls the temperature display, the numbers will be replaced with dashes. If this occurs, have the vehicle serviced by your dealer/retailer. If an abnormal temperature reading is displayed for an extended period of time, consult your dealer/retailer. Under certain circumstances, especially when the engine is idling, a delay updating the temperature display is normal.

The DIC also allows some features to be personalized. See *DIC Vehicle Personalization on page 3-60* for more information.

DIC Operation and Displays

The DIC has different displays which can be accessed by pressing the DIC buttons located on the center of the instrument panel.

DIC Buttons

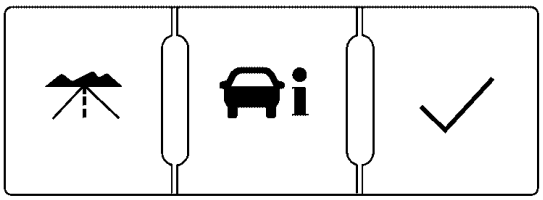

The buttons are the trip/fuel, vehicle information, and set/reset buttons. The button functions are detailed in the following pages.

(Trip/Fuel): Press this button to scroll through the trip and fuel displays. See “Trip/Fuel Menu Items” following for more information on these displays.

(Vehicle Information): Press this button to scroll through the vehicle information displays and to personalize the feature settings on your vehicle. See “Vehicle Information Menu Items” following and *DIC Vehicle Personalization on page 3-60* for more information on these displays.

Downloaded from www.Manualslib.com manuals search engine

√ **(Set/Reset):** Press this button to set or reset certain functions and to turn off or acknowledge messages on the DIC.

Trip/Fuel Menu Items

(Trip/Fuel): Press this button to scroll through the following displays:

ODOMETER

Press the trip/fuel button until ODOMETER displays. This display shows the distance the vehicle has been driven in either miles (mi) or kilometers (km). This display will also show the outside air temperature in either degrees Fahrenheit (°F) or degrees Celsius (°C).

To change the DIC display to English or metric units, see “UNITS” later in this section.

TRIP

Press the trip/fuel button until TRIP displays. This display shows the current distance traveled in either miles (mi) or kilometers (km) since the last reset for the trip odometer. This display will also show the outside air temperature in either degrees Fahrenheit (°F) or degrees Celsius (°C).

The trip odometer can be reset to zero by pressing the set/reset button while the trip odometer is displayed.

AVG (Average) SPD (Speed)

Press the trip/fuel button until AVG (Average) SPD (Speed) displays. This display shows the average speed of the vehicle in miles per hour (mph) or kilometers per hour (km/h). This average is calculated based on the various vehicle speeds recorded since the last reset of this value. To reset the value, press and hold the set/reset button. The display will return to zero.

AVG (Average) ECON (Economy)

Press the trip/fuel button until AVG (Average) ECON (Economy) displays. This display shows the approximate average miles per gallon (mpg) or liters per 100 kilometers (L/100 km). This number is calculated based on the number of mpg (L/100 km) recorded since the last time this menu item was reset. To reset this display, press and hold the set/reset button. The display will return to zero.

Downloaded from www.Manualslib.com manuals search engine

RANGE

Press the trip/fuel button until RANGE displays. This display shows the approximate number of remaining miles (mi) or kilometers (km) the vehicle can be driven without refueling.

The fuel range estimate is based on an average of the vehicle's fuel economy over recent driving history and the amount of fuel remaining in the fuel tank. This estimate will change if driving conditions change. For example, if driving in traffic and making frequent stops, this display may read one number, but if the vehicle is driven on a freeway, the number may change even though the same amount of fuel is in the fuel tank. This is because different driving conditions produce different fuel economies. Generally, freeway driving produces better fuel economy than city driving.

If your vehicle is low on fuel, the FUEL LEVEL LOW message will be displayed. See "FUEL LEVEL LOW" under *DIC Warnings and Messages on page 3-52* for more information.

Blank Display

This display shows no information.

Vehicle Information Menu Items

(Vehicle Information): Press this button to scroll through the following displays:

OIL LIFE

Press the vehicle information button until OIL LIFE REMAINING displays. This display shows an estimate of the oil's remaining useful life. If you see 99% OIL LIFE REMAINING on the display, that means 99% of the current oil life remains. The engine oil life system will alert you to change the oil on a schedule consistent with your driving conditions.

When the remaining oil life is low, the CHANGE ENGINE OIL SOON message will appear on the display along with the Change Engine Oil Light on the instrument panel cluster. See "CHANGE ENGINE OIL SOON" under *DIC Warnings and Messages on page 3-52* and *Change Engine Oil Light on page 3-40*. You should change the oil as soon as possible. See *Engine Oil on page 5-15*. In addition to the engine oil life system monitoring the oil life, additional maintenance is recommended in the Maintenance Schedule in this manual. See *Scheduled Maintenance on page 6-4* for more information.

Downloaded from www.Manualslib.com manuals search engine

Remember, you must reset the OIL LIFE yourself after each oil change. It will not reset itself. Also, be careful not to reset the OIL LIFE accidentally at any time other than when the oil has just been changed. It cannot be reset accurately until the next oil change. To reset the engine oil life system, see *Engine Oil Life System on page 5-18*.

UNITS

Press the vehicle information button until UNITS displays. This display allows you to select between English or Metric units of measurement. Once in this display, press the set/reset button to select between ENGLISH or METRIC units.

FRONT TIRES or REAR TIRES

The pressure for each tire can be viewed in the DIC. The tire pressure will be shown in either pounds per square inch (psi) or kilopascals (kPa). Press the vehicle information button until the DIC displays FRONT TIRES PSI (kPa) LF ## RF ##. Press the vehicle information button again until the DIC displays REAR TIRES PSI (kPa) LR ## RR ##.

If a low or high tire pressure condition is detected by the system while driving, a message advising you to check the pressure in a specific tire will appear in the display. See *Inflation - Tire Pressure on page 5-59* and *DIC Warnings and Messages on page 3-52* for more information.

If the tire pressure display shows dashes instead of a value, there may be a problem with your vehicle. If this consistently occurs, see your dealer/retailer for service.

BATTERY

Press the vehicle information button until BATTERY displays. This display shows the current battery voltage. If the voltage is normal, the display will show NORMAL. If the voltage is low or high, the display will show LOW or HIGH. Your vehicle's charging system regulates voltage based on the state of the battery. The battery voltage may fluctuate when viewing this information on the DIC. This is normal. See *Charging System Light on page 3-32* for more information.

If there is a problem with the battery charging system, the DIC will display SERVICE BATTERY CHARGING SYSTEM. See "SERVICE BATTERY CHARGING SYSTEM" under *DIC Warnings and Messages on page 3-52*. Also, see *Electric Power Management on page 3-18* for more information.

Downloaded from www.Manualslib.com manuals search engine

LEARN REMOTE KEY

This display allows you to match Remote Keyless Entry (RKE) transmitters to your vehicle. To match an RKE transmitter to your vehicle:

1. Make sure the vehicle is in PARK (P).
2. Press the vehicle information button until LEARN REMOTE KEY PRESS ✓ TO BEGIN displays.
3. Press the set/reset button until REMOTE KEY LEARNING ACTIVE is displayed.
4. Press and hold the lock and unlock buttons on the first transmitter at the same time for about 15 seconds.

   A chime will sound indicating that the transmitter is matched.
5. To match additional transmitters at this time, repeat Step 3.

   Each vehicle can have a maximum of four transmitters matched to it.
6. To exit the programming mode, you must cycle the key to LOCK/OFF.

CALIBRATE COMPAS (Compass)

Your vehicle may have this feature. The compass can be manually calibrated. To calibrate the compass through the DIC, see *DIC Compass on page 3-49*.

CHANGE COMPASS ZONE

Your vehicle may have this feature. To change the compass zone through the DIC, see *DIC Compass on page 3-49*.

Blank Display

This display shows no information.

FEATURE SETTNGS (Settings): PRESS ✓ TO SELCT (Select)

This display allows you to personalize the feature settings on your vehicle. See *DIC Vehicle Personalization on page 3-60* for more information.

DIC Compass

Your vehicle may have a compass in the Driver Information Center (DIC).

Downloaded from www.Manualslib.com manuals search engine

Compass Zone

The zone is set to zone eight upon leaving the factory. Your dealer/retailer will set the correct zone for your location.

Under certain circumstances, such as during a long distance cross-country trip or moving to a new state or province, it will be necessary to compensate for compass variance by resetting the zone through the DIC if the zone is not set correctly.

Compass variance is the difference between the earth's magnetic north and true geographic north. If the compass is not set to the zone where you live, the compass may give false readings. The compass must be set to the variance zone in which the vehicle is traveling.

To adjust for compass variance, use the following procedure:

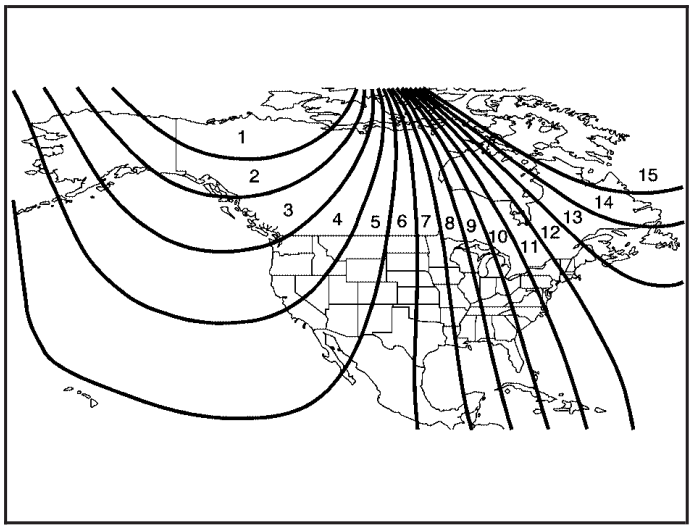

Compass Variance (Zone) Procedure

1. Do not set the compass zone when the vehicle is moving. Only set it when the vehicle is in PARK (P).

   Press the vehicle information button until PRESS ✓ TO CHANGE COMPASS ZONE displays.

2. Find the vehicle's current location and variance zone number on the map.

   Zones 1 through 15 are available.

3. Press the set/reset button to scroll through and select the appropriate variance zone.
4. Press the trip/fuel button until the vehicle heading, for example, N for North, is displayed in the DIC.
5. If calibration is necessary, calibrate the compass. See "Compass Calibration Procedure" following.

Downloaded from www.Manualslib.com manuals search engine

Compass Calibration

The compass can be manually calibrated. Only calibrate the compass in a magnetically clean and safe location, such as an open parking lot, where driving the vehicle in circles is not a danger. It is suggested to calibrate away from tall buildings, utility wires, manhole covers, or other industrial structures, if possible.

If CAL should ever appear in the DIC display, the compass should be calibrated.

If the DIC display does not show a heading, for example, N for North, or the heading does not change after making turns, there may be a strong magnetic field interfering with the compass. Such interference may be caused by a magnetic CB or cell phone antenna mount, a magnetic emergency light, magnetic note pad holder, or any other magnetic item. Turn off the vehicle, move the magnetic item, then turn on the vehicle and calibrate the compass.

To calibrate the compass, use the following procedure:

Compass Calibration Procedure

1. Before calibrating the compass, make sure the compass zone is set to the variance zone in which the vehicle is located. See “Compass Variance (Zone) Procedure” earlier in this section.

   Do not operate any switches such as window, sunroof, climate controls, seats, etc. during the calibration procedure.
2. Press the vehicle information button until PRESS √ TO CALIBRATE COMPAS (Compass) displays.
3. Press the set/reset button to start the compass calibration.
4. The DIC will display CALIBRATING: DRIVE IN CIRCLES. Drive the vehicle in tight circles at less than 5 mph (8 km/h) to complete the calibration. The DIC will display CALIBRATION COMPLETE for a few seconds when the calibration is complete. The DIC display will then return to the previous menu.

Downloaded from www.Manualslib.com manuals search engine

DIC Warnings and Messages

Messages are displayed on the DIC to notify the driver that the status of the vehicle has changed and that some action may be needed by the driver to correct the condition. Multiple messages may appear one after another.

Some messages may not require immediate action, but you can press the set/reset button to acknowledge that you received the messages and to clear them from the display. Pressing any of the DIC buttons also acknowledge and clear any messages.

Some messages cannot be cleared from the DIC display because they are more urgent. These messages require action before they can be cleared. You should take any messages that appear on the display seriously and remember that clearing the messages will only make the messages disappear, not correct the problem.

The following are the possible messages that can be displayed and some information about them.

ALL WHEEL DRIVE OFF

If your vehicle has the All-Wheel Drive (AWD) system, this message displays along with the All-Wheel Drive Disabled light when the rear drive system is overheating. This message turns off when the rear drive system cools down. If the warning message stays on for a while, you need to reset the warning message. To reset the warning message, turn the ignition off and then back on again. If the message stays on, see your dealer/retailer right away. See *All-Wheel Drive (AWD) System on page 4-8* and *All-Wheel Drive Disabled Light on page 3-42* for more information.

BATTERY SAVER ACTIVE

This message displays when the charging system detects that the battery is being drained. You may notice that the vehicle attempts to reduce the drain for you by turning off accessories, such as interior fans, rear defogger, and heated seats. Turn off all accessories. If the vehicle is not running, start and run the engine for at least 10 minutes to allow the battery to recharge. If the engine is running and the condition persists, see your dealer/retailer. See *Electric Power Management on page 3-18* for more information.

Downloaded from www.Manualslib.com manuals search engine

BUCKLE PASSENGER SEATBELT

This message reminds you to buckle the passenger's safety belt. See *Passenger Sensing System on page 1-64*.

This message displays and a chime sounds when the ignition is on, the driver's safety belt is buckled, the passenger's safety belt is unbuckled with the passenger airbag enabled, and the vehicle is in motion. You should have the passenger buckle their safety belt.

This reminder will be repeated if the ignition is on, the vehicle is in motion, the driver is buckled and the passenger is still unbuckled, and the passenger airbag is enabled. If the passenger's safety belt is already buckled, this message and chime will not come on.

BUCKLE SEATBELT

This message reminds you to buckle the driver's safety belt.

This message displays and a chime sounds when the ignition is on, the driver's safety belt is unbuckled, and the vehicle is in motion. You should buckle your safety belt.

If the driver remains unbuckled when the ignition is on and the vehicle is in motion, the reminder will be repeated. If the driver's safety belt is already buckled, this message and chime will not come on.

This message is an additional reminder to the Safety Belt Reminder Light in the instrument panel cluster. See *Safety Belt Reminders on page 3-28*.

CALIBRATING: DRIVE IN CIRCLES

This message displays when calibrating the compass. Drive the vehicle in circles at less than 5 mph (8 km/h) to complete the calibration. See *DIC Compass on page 3-49* for more information.

CALIBRATION COMPLETE

This message displays when the compass calibration is complete. See *DIC Compass on page 3-49* for more information.

CHANGE ENGINE OIL SOON

This message displays and the Change Engine Oil Light in the instrument panel cluster turns on when service is required for the vehicle. See your dealer/retailer. See *Change Engine Oil Light on page 3-40*, *Engine Oil on page 5-15* and *Scheduled Maintenance on page 6-4* for more information.

Acknowledging this message will not reset the OIL LIFE REMAINING display. That must be done at the OIL LIFE screen under the vehicle information menu. See "OIL LIFE" under *DIC Operation and Displays on page 3-45* and *Engine Oil Life System on page 5-18* for more information.

Downloaded from www.Manualslib.com manuals search engine

CHECK TIRE PRESSURE

This message displays when the pressure in one or more of the vehicle's tires needs to be checked. This message also displays LEFT FRONT, RIGHT FRNT (Front), LEFT REAR, or RIGHT REAR to indicate which tire needs to be checked. You can receive more than one tire pressure message at a time. To read the other messages that may have been sent at the same time, press the set/reset button. If a tire pressure message appears on the DIC, stop as soon as you can. Have the tire pressures checked and set to those shown on the Tire Loading Information label. See *Tires on page 5-52*, *Loading Your Vehicle on page 4-22*, and *Inflation - Tire Pressure on page 5-59*. The DIC also shows the tire pressure values. See *DIC Operation and Displays on page 3-45*. If the tire pressure is low, the low tire pressure warning light comes on. See *Tire Pressure Light on page 3-36*.

DRIVER DOOR OPEN

This message displays when the driver door is not closed properly. Close the door completely.

ENGINE HOT
A/C (Air Conditioning) OFF

This message displays when the engine coolant becomes hotter than the normal operating temperature. To avoid added strain on a hot engine, the air conditioning compressor is automatically turned off. When the coolant temperature returns to normal, the A/C operation automatically resumes. You can continue to drive your vehicle.

ENGINE OVERHEATD (Overheated)
IDLE ENGINE

Notice: **If you drive your vehicle while the engine is overheating, severe engine damage may occur. If an overheat warning appears on the instrument panel cluster and/or DIC, stop the vehicle as soon as possible. Do not increase the engine speed above normal idling speed. See *Engine Overheating on page 5-25* for more information.**

This message displays when the engine coolant temperature is too hot. Stop and allow the vehicle to idle until it cools down.

Downloaded from www.Manualslib.com manuals search engine

ENGINE OVRHEATD (Overheated) STOP ENGINE

Notice: **If you drive your vehicle while the engine is overheating, severe engine damage may occur. If an overheat warning appears on the instrument panel cluster and/or DIC, stop the vehicle as soon as possible. See *Engine Overheating on page 5-25* for more information.**

This message displays along with a continuous chime when the engine has overheated. Stop and turn the engine off immediately to avoid severe engine damage. See *Engine Overheating on page 5-25*.

ENGINE POWER IS REDUCED

This message displays when the vehicle's engine power is reduced. Reduced engine power can affect the vehicle's ability to accelerate. If this message is on, but there is no reduction in performance, proceed to your destination. The performance may be reduced the next time the vehicle is driven. The vehicle may be driven at a reduced speed while this message is on, but acceleration and speed may be reduced. Anytime this message stays on, the vehicle should be taken to your dealer/retailer for service as soon as possible.

FUEL LEVEL LOW

This message displays and the Low Fuel Warning Light in the instrument panel cluster comes on when your vehicle is low on fuel. Refill the fuel tank as soon as possible. See *Fuel Gage on page 3-43*, *Low Fuel Warning Light on page 3-44*, and *Filling the Tank on page 5-8* for more information.

HOOD OPEN

This message displays on some vehicles when the hood is not closed properly. Close the hood completely. See *Hood Release on page 5-11*.

ICE POSSIBLE DRIVE WITH CARE

This message displays when the outside air temperature is cold enough to create icy road conditions. Adjust your driving accordingly.

LIFTGATE OPEN

This message displays when the liftgate is not closed completely. Close the liftgate completely. See *Liftgate on page 2-13*.

Downloaded from www.Manualslib.com manuals search engine

OIL PRSSURE (Pressure) LOW STOP ENGINE

Notice: **If you drive your vehicle while the engine oil pressure is low, severe engine damage may occur. If a low oil pressure warning appears on the Driver Information Center (DIC), stop the vehicle as soon as possible. Do not drive the vehicle until the cause of the low oil pressure is corrected. See *Engine Oil on page 5-15* for more information.**

This message displays when the vehicle's engine oil pressure is low. The oil pressure light also appears on the instrument panel cluster. See *Oil Pressure Light on page 3-39*.

Stop the vehicle immediately, as engine damage can result from driving a vehicle with low oil pressure. Have the vehicle serviced by your dealer/retailer as soon as possible when this message is displayed.

PASSENGER DOOR FRONT/ REAR OPEN

This message displays when one or more of the passenger doors are not closed properly. Close the doors completely.

REMOTE KEY LEARNING ACTIVE

This message displays while you are matching a Remote Keyless Entry (RKE) transmitter to your vehicle. See "LEARN REMOTE KEY" under *DIC Operation and Displays on page 3-45* for more information.

SERVICE A/C (Air Conditioning) SYSTEM

This message displays when there is a problem detected in the air conditioning system. Have the vehicle serviced by your dealer/retailer.

SERVICE AIR BAG

This message displays when there is a problem with the airbag system. Have your vehicle serviced by your dealer/retailer immediately. See *Airbag Readiness Light on page 3-29* for more information.

SERVICE ALL WHEEL DRIVE

If your vehicle has the All-Wheel Drive (AWD) system, this message displays along with the service all-wheel drive light if a problem occurs with this system. See *Service All-Wheel Drive Light on page 3-42*. If this message appears, stop as soon as possible and turn off the vehicle. Restart the vehicle and check for the message on the DIC display. If the message is still displayed or appears again when you begin driving, the AWD system needs service. See your dealer/retailer.

Downloaded from www.Manualslib.com manuals search engine

SERVICE BATTERY CHARGING SYSTEM

This message displays when there is a problem with the generator and battery charging systems. Driving with this problem could drain the vehicle's battery. Turn off all unnecessary accessories. Stop and turn off the vehicle as soon as it is safe to do so. Have the electrical system checked by your dealer/retailer immediately.

Connecting a battery charger to your vehicle while the ignition is in any position other than LOCK/OFF may cause this message to appear. If you need to charge your vehicle, make sure that the key is in LOCK/OFF or out of the ignition during charging.

SERVICE BRAKE SYSTEM

This message displays and a chime sounds when the brake fluid level is low. The brake system warning light also appears on the instrument panel cluster when this message appears on the DIC. See *Brake System Warning Light on page 3-33*. Have the brake system serviced by your dealer/retailer as soon as possible.

SERVICE POWER STEERING

On some vehicles, this message displays when a problem is detected with the power steering system. When this message is displayed, you may notice that the effort required to steer the vehicle increases or feels heavier, but you will still be able to steer the vehicle. Have your vehicle serviced by your dealer/retailer immediately.

SERVICE STABILITRAK

This message displays if there has been a problem detected with the StabiliTrak® System. A warning light also appears on the instrument panel cluster. See *Traction Control System (TCS) Warning Light on page 3-34*. See *StabiliTrak® System on page 4-7* for more information.

If this message turns on while you are driving, pull off the road as soon as possible and stop carefully. Try resetting the system by turning the ignition off and then back on. If this message still stays on or turns back on again while you are driving, your vehicle needs service. Have the StabiliTrak® System inspected by your dealer/retailer as soon as possible.

Downloaded from www.Manualslib.com manuals search engine

SERVICE THEFT DETERRENT SYSTEM

This message displays when there is a problem with the theft-deterrent system. A fault has been detected in the system which means that the system is disabled and it is not protecting the vehicle. The vehicle usually restarts; however, you may want to take the vehicle to your dealer/retailer before turning off the engine. See *PASS-Key® III+ Operation on page 2-19* for more information.

SERVICE TIRE MONITOR SYSTEM

This message displays if a part on the Tire Pressure Monitor System (TPMS) is not working properly. The tire pressure light also flashes and then remains on during the same ignition cycle. See *Tire Pressure Light on page 3-36*. Several conditions may cause this message to appear. See *Tire Pressure Monitor Operation on page 5-63* for more information. If the warning comes on and stays on, there may be a problem with the TPMS. See your dealer/retailer.

SERVICE TRACTION CONTROL

This message displays when the Traction Control System (TCS) is not functioning properly. A warning light also appears on the instrument panel cluster. See *Traction Control System (TCS) Warning Light on page 3-34* and *Traction Control System (TCS) on page 4-6* for more information. Have the TCS serviced by your dealer/retailer as soon as possible.

SERVICE VEHICLE SOON

This message displays when a non-emissions related malfunction occurs. Have the vehicle serviced by your dealer/retailer as soon as possible.

STABILITRAK NOT READY

This message may display and a warning light on the instrument panel cluster may be on after first driving the vehicle and exceeding 30 mph (48 km/h) for 30 seconds. See *Traction Control System (TCS) Warning Light on page 3-34*. The StabiliTrak® System is not functional until the light has turned off. See *StabiliTrak® System on page 4-7* for more information.

Downloaded from www.Manualslib.com manuals search engine

STABILITRAK OFF

This message displays any time the StabiliTrak® System turns off. When this message has been displayed, StabiliTrak® is no longer available to assist you with directional control of the vehicle. Adjust your driving accordingly. See *StabiliTrak® System on page 4-7*.

This message displays only while the ignition is in ON/RUN.

Any of the following conditions may cause the StabiliTrak® System to turn off:

- The StabiliTrak® System is turned off by pressing and holding the traction control button. See *StabiliTrak® System on page 4-7* for more information.
- The battery is low.
- There is a StabiliTrak® System failure. See your dealer/retailer for service.

STARTING DISABLD (Disabled) SERVICE THRTTLE (Throttle)

This message displays if the starting of the engine is disabled due to the electronic throttle control system. Have your vehicle serviced by your dealer/retailer immediately.

This message only appears while the ignition is in ON/RUN, and will not disappear until the problem is resolved.

This message cannot be acknowledged.

THEFT ATTEMPTED

This message displays if the content theft-deterrent system has detected a break-in attempt while you were away from your vehicle. See *Content Theft-Deterrent on page 2-18* for more information.

TIRE LEARNING ACTIVE

This message displays when the Tire Pressure Monitor System (TPMS) is re-learning the tire positions on your vehicle. The tire positions must be re-learned after rotating the tires or after replacing a tire or sensor. See *Tire Inspection and Rotation on page 5-67*, *Tire Pressure Monitor System on page 5-62*, and *Inflation - Tire Pressure on page 5-59* for more information.

Downloaded from www.Manualslib.com manuals search engine

TRACTION CONTROL OFF

This message displays when the Traction Control System (TCS) turns off. See *Traction Control System (TCS) on page 4-6* for more information.

This message only displays while the ignition is in ON/RUN and disappears after 10 seconds, unless it is acknowledged or an urgent warning appears.

Any of the following conditions may cause the TCS to turn off:

- The TCS is turned off by pressing the traction control button. See *Traction Control System (TCS) on page 4-6* for more information.
- The battery is low.
- There is a TCS failure. See your dealer/retailer for service.

TRACTION CONTROL ON

This message displays when the Traction Control System (TCS) turns on. See *Traction Control System (TCS) on page 4-6* for more information.

TURN SIGNAL ON

This message displays as a reminder to turn off the turn signal if you drive your vehicle for more than about 0.75 mile (1.2 km) with a turn signal on. See *Turn Signal/Multifunction Lever on page 3-7*.

This message displays and a chime sounds only when the ignition is in ON/RUN. The message will not disappear until the turn signal is manually turned off, or a turn is completed.

DIC Vehicle Personalization

Your vehicle has personalization capabilities that allow you to program certain features to one preferred setting.

All of the personalization options may not be available on your vehicle. Only the options available will be displayed on the DIC.

The default settings for the personalization features were set when your vehicle left the factory, but may have been changed from their default state since then.

The personalization preferences are automatically recalled.

To change personalization preferences, use the following procedure.

Downloaded from www.Manualslib.com manuals search engine

Entering the Feature Settings Menu

1. Turn the ignition on and place the vehicle in PARK (P).

   To avoid excessive drain on the battery, it is recommended that the headlamps are turned off.

2. Press the vehicle information button until FEATURE SETTNGS (Settings): PRESS √ TO SELCT (Select) appears on the DIC display.

3. Press the set/reset button to enter the feature settings menu.

   If the menu is not available, FEATURE SETTNGS (Settings): AVAILABLE IN PRK (Park) will display. Before entering the menu, make sure the vehicle is in PARK (P).

Feature Settings Menu Items

The following are personalization features that allow you to program settings to the vehicle:

DISPLAY ENGLISH

This feature will only display if a language other than English has been set. This feature allows you to change the language in which the DIC messages appear to English.

Press the vehicle information button until the PRESS √ TO DISPLAY ENGLISH screen appears on the DIC display. Press the set/reset button to display all DIC messages in English.

DISPLAY LANG. (Language)

This feature allows you to select the language in which the DIC messages will appear.

Press the vehicle information button until DISPLAY LANG. (Language) appears on the DIC display. Press the set/reset button to access the settings for this feature. Then press the vehicle information button to scroll through the following settings:

ENGLISH (default): All messages will appear in English.

FRENCH: All messages will appear in French.

SPANISH: All messages will appear in Spanish.

NO CHANGE: No change will be made to this feature. The current setting will remain.

To select a setting, press the set/reset button while the desired setting is displayed on the DIC.

Downloaded from www.Manualslib.com manuals search engine

AUTO LOCK

This feature allows you to select when the vehicle's doors will automatically lock. See *Programmable Automatic Door Locks on page 2-12* for more information.

Press the vehicle information button until AUTO LOCK appears on the DIC display. Press the set/reset button to access the settings for this feature. Then press the vehicle information button to scroll through the following settings:

OUT OF PARK (default): The vehicle's doors automatically lock when the doors are closed and the vehicle is shifted out of PARK (P).

AT SPEED: The vehicle's doors automatically lock when the vehicle speed is above 5 mph (8 km/h) for three seconds.

NO CHANGE: No change will be made to this feature. The current setting will remain.

To select a setting, press the set/reset button while the desired setting is displayed on the DIC.

AUTO UNLOCK

This feature allows you to select whether or not to turn off the automatic door unlocking feature. It also allows you to select which doors and when the doors will automatically unlock. See *Programmable Automatic Door Locks on page 2-12* for more information.

Press the vehicle information button until AUTO UNLOCK appears on the DIC display. Press the set/reset button to access the settings for this feature. Then press the vehicle information button to scroll through the following settings:

OFF: None of the doors will automatically unlock.

DRIVER KEY OUT: Only the driver's door will unlock when the key is taken out of the ignition.

DRIVER IN PARK: Only the driver's door will unlock when the vehicle is shifted into PARK (P).

ALL AT KEY OUT: All of the doors will unlock when the key is taken out of the ignition.

ALL IN PARK (default): All of the doors will unlock when the vehicle is shifted into PARK (P).

NO CHANGE: No change will be made to this feature. The current setting will remain.

To select a setting, press the set/reset button while the desired setting is displayed on the DIC.

Downloaded from www.Manualslib.com manuals search engine

REMOTE LOCK

This feature allows you to select the type of feedback you will receive when locking the vehicle with the Remote Keyless Entry (RKE) transmitter. You will not receive feedback when locking the vehicle with the RKE transmitter if any of the doors are open. See *Remote Keyless Entry (RKE) System Operation on page 2-5* for more information.

Press the vehicle information button until REMOTE LOCK appears on the DIC display. Press the set/reset button to access the settings for this feature. Then press the vehicle information button to scroll through the following settings:

HORN/LIGHTS OFF: There will be no feedback when you press the lock button on the RKE transmitter.

LIGHTS ONLY: The exterior lamps will flash when you press the lock button on the RKE transmitter.

HORN CHIRP ONLY: The horn will sound on the second press of the lock button on the RKE transmitter.

HORN/ LIGHTS ON (default): The exterior lamps will flash when you press the lock button on the RKE transmitter, and the horn will sound when the lock button is pressed again within five seconds of the previous command.

NO CHANGE: No change will be made to this feature. The current setting will remain.

To select a setting, press the set/reset button while the desired setting is displayed on the DIC.

REMOTE UNLOCK

This feature allows you to select the type of feedback you will receive when unlocking the vehicle with the RKE transmitter. You will not receive feedback when unlocking the vehicle with the RKE transmitter if the doors are open. See *Remote Keyless Entry (RKE) System Operation on page 2-5* for more information.

Press the vehicle information button until REMOTE UNLOCK appears on the DIC display. Press the set/reset button to access the settings for this feature. Then press the vehicle information button to scroll through the following settings:

LIGHTS OFF: The exterior lamps will not flash when you press the unlock button on the RKE transmitter.

LIGHTS ON (default): The exterior lamps will flash when you press the unlock button on the RKE transmitter.

NO CHANGE: No change will be made to this feature. The current setting will remain.

To select a setting, press the set/reset button while the desired setting is displayed on the DIC.

Downloaded from www.Manualslib.com manuals search engine

DELAY LOCK

This feature allows you to select whether or not the locking of the vehicle's doors and liftgate will be delayed. When locking the doors and liftgate with the power door lock switch and a door or the liftgate is open, this feature will delay locking the doors and liftgate until five seconds after the last door is closed. You will hear three chimes to signal that the delayed locking feature is in use. The key must be out of the ignition for this feature to work. You can temporarily override delayed locking by pressing the power door lock switch twice or the lock button on the RKE transmitter twice. See *Delayed Locking on page 2-12* for more information.

Press the vehicle information button until DELAY LOCK appears on the DIC display. Press the set/reset button to access the settings for this feature. Then press the vehicle information button to scroll through the following settings:

LOCK DELAY OFF: There will be no delayed locking of the vehicle's doors.

LOCK DELAY ON (default): The doors will not lock until five seconds after the last door or the liftgate is closed.

NO CHANGE: No change will be made to this feature. The current setting will remain.

To select a setting, press the set/reset button while the desired setting is displayed on the DIC.

EXIT LIGHTNG (Lighting)

This feature allows you to select the amount of time you want the exterior lamps to remain on when it is dark enough outside. This happens after the key is turned from ON/RUN to LOCK/OFF.

Press the vehicle information button until EXIT LIGHTNG (Lighting) appears on the DIC display. Press the set/reset button to access the settings for this feature. Then press the vehicle information button to scroll through the following settings:

OFF: The exterior lamps will not turn on.

30 SECONDS (default): The exterior lamps will stay on for 30 seconds.

1 MINUTE: The exterior lamps will stay on for one minute.

2 MINUTES: The exterior lamps will stay on for two minutes.

NO CHANGE: No change will be made to this feature. The current setting will remain.

To select a setting, press the set/reset button while the desired setting is displayed on the DIC.

Downloaded from www.Manualslib.com manuals search engine

APPRCH (Approach) LIGHTNG (Lighting)

This feature allows you to select whether or not to have the exterior lights turn on briefly during low light periods after unlocking the vehicle using the RKE transmitter.

Press the vehicle information button until APPRCH (Approach) LIGHTNG (Lighting) appears on the DIC display. Press the set/reset button to access the settings for this feature. Then press the vehicle information button to scroll through the following settings:

OFF: The exterior lights will not turn on when you unlock the vehicle with the RKE transmitter.

ON (default): If it is dark enough outside, the exterior lights will turn on briefly when you unlock the vehicle with the RKE transmitter.

The lights will remain on for 20 seconds or until the lock button on the RKE transmitter is pressed, or the vehicle is no longer off. See *Remote Keyless Entry (RKE) System Operation on page 2-5* for more information.

NO CHANGE: No change will be made to this feature. The current setting will remain.

To select a setting, press the set/reset button while the desired setting is displayed on the DIC.

CHIME VOLUME

This feature allows you to select the volume level of the chime.

Press the vehicle information button until CHIME VOLUME appears on the DIC display. Press the set/reset button to access the settings for this feature. Then press the vehicle information button to scroll through the following settings:

NORMAL: The chime volume will be set to a normal level.

LOUD: The chime volume will be set to a loud level.

NO CHANGE: No change will be made to this feature. The current setting will remain.

There is no default for chime volume. The volume will stay at the last known setting.

To select a setting, press the set/reset button while the desired setting is displayed on the DIC.

Downloaded from www.Manualslib.com manuals search engine

REMOTE START

If your vehicle has this feature, it allows you to turn the remote start off or on. The remote start feature allows you to start the engine from outside of the vehicle using the RKE transmitter. See *Remote Vehicle Start on page 2-8* for more information.

Press the vehicle information button until REMOTE START appears on the DIC display. Press the set/reset button to access the settings for this feature. Then press the vehicle information button to scroll through the following settings:

OFF: The remote start feature will be disabled.

ON (default): The remote start feature will be enabled.

NO CHANGE: No change will be made to this feature. The current setting will remain.

To select a setting, press the set/reset button while the desired setting is displayed on the DIC.

FACTORY SETTNGS (Settings)

This feature allows you to set all of the personalization features back to their factory default settings.

Press the vehicle information button until FACTORY SETTNGS (Settings) appears on the DIC display. Press the set/reset button to access the settings for this feature. Then press the vehicle information button to scroll through the following settings:

RESTORE ALL (default): The personalization features will be set to their factory default settings.

DO NOT RESTORE: The personalization features will not be set to their factory default settings.

To select a setting, press the set/reset button while the desired setting is displayed on the DIC.

Downloaded from www.Manualslib.com manuals search engine

FEATURE SETTNGS (Settings): PRESS ✓ TO EXIT

This feature allows you to exit the feature settings menu.

Press the vehicle information button until FEATURE SETTNGS (Settings): PRESS ✓ TO EXIT appears in the DIC display. Press the set/reset button to exit the menu.

If you do not exit, pressing the vehicle information button again will return you to the beginning of the vehicle information menu.

Exiting the Feature Settings Menu

The feature settings menu will be exited when any of the following occurs:

- The vehicle is shifted out of PARK (P).
- The vehicle is no longer in ON/RUN.
- The trip/fuel DIC button is pressed.
- The end of the feature settings menu is reached and exited.
- A 40 second time period has elapsed with no selection made.

Audio System(s)

Determine which radio your vehicle has and then read the pages following to familiarize yourself with its features.

⚠ CAUTION:

This system provides you with far greater access to audio stations and song listings. Giving extended attention to entertainment tasks while driving can cause a crash and you or others can be injured or killed. Always keep your eyes on the road and your mind on the drive — avoid engaging in extended searching while driving.

Keeping your mind on the drive is important for safe driving. See *Defensive Driving on page 4-2*. Here are some ways in which you can help avoid distraction while driving.

Downloaded from www.Manualslib.com manuals search engine

While your vehicle is parked:

- Familiarize yourself with all of its controls.
- Familiarize yourself with its operation.
- Set up your audio system by presetting your favorite radio stations, setting the tone, and adjusting the speakers. Then, when driving conditions permit, you can tune to your favorite radio stations using the presets and steering wheel controls if the vehicle has them.

Notice: **Before adding any sound equipment to your vehicle, such as an audio system, CD player, CB radio, mobile telephone, or two-way radio, make sure that it can be added by checking with your dealer/retailer. Also, check federal rules covering mobile radio and telephone units. If sound equipment can be added, it is very important to do it properly. Added sound equipment may interfere with the operation of your vehicle's engine, radio, or other systems, and even damage them. Your vehicle's systems may interfere with the operation of sound equipment that has been added.**

Your vehicle has a feature called Retained Accessory Power (RAP). With RAP, the audio system can be played even after the ignition is turned off. See *Retained Accessory Power (RAP) on page 2-22* for more information.

Setting the Time

Without Date Display

AM/FM Base Radio with a Single CD Player

This type of radio has a ◷ (clock) button for setting the time. Set the time by following these steps:

1. Turn the radio on.
2. Press the ◷ button until the hour begins flashing on the display. Press the ◷ button a second time and the minutes begin flashing on the display.
3. While either the hour or the minutes are flashing, turn the ♫ (tune) knob, located on the upper right side of the radio, clockwise or counterclockwise to increase or decrease the time. Instead of using the ♫ knob, you can also press the SEEK arrows, ▷▷ FWD (forward), or ◁◁ REV (reverse) buttons to adjust the time.
4. Press the ◷ button again until the clock display stops flashing to set the currently displayed time; otherwise, the flashing stops after five seconds and the current time displayed is automatically set.

Downloaded from www.Manualslib.com manuals search engine

With Date Display

Single CD (MP3) or a Single CD and DVD (MP3) Player

These radios have a ◷ (clock) button for setting the time and date.

To set the time and date, follow these instructions:

1. Turn the radio on.
2. Press the ◷ button and the HR, MIN, MM, DD, YYYY (hour, minute, month, day, and year) displays.
3. Press the pushbutton located under any one of the labels that you want to change. Every time the pushbutton is pressed again, the time or the date if selected, increases by one.
   - Another way to increase the time or date, is to press the right SEEK arrow or ▷▷ FWD (forward) button.
   - To decrease, press the left SEEK arrow or ◁◁ REV (reverse) button. You can also turn the ♫ (tune) knob, located on the upper right side of the radio, to adjust the selected setting.

The date does not automatically display. To see the date press the ◷ (clock) button while the radio is on. The date with display times out after a few seconds and goes back to the normal radio and time display.

To change the time default setting from 12 hour to 24 hour, press the ◷ button and then the pushbutton located under the forward arrow label. Once the time 12H and 24H are displayed, press the pushbutton located under the desired option to select the default. Press the ◷ button again to apply the selected default, or let the screen time out.

Radio with Six-Disc CD (MP3)

This type of radio has a MENU button instead of the ◷ button to set the time and date.

To set the time and date, follow these instructions:

1. Turn the ignition key to ACC/ACCESSORY or ON/RUN. Press the ⏻ knob, located in the center of the radio, to turn the radio on.
2. Press the MENU button. Once the clock option is displayed.
3. Press the pushbutton located under that label. The HR, MIN, MM, DD, YYYY displays.

Downloaded from www.Manualslib.com manuals search engine

4. Press the pushbutton located under any one of the labels that you want to change. Every time the pushbutton is pressed again, the time or the date if selected, increases by one.
   - Another way to increase the time or date, is to press the right ⊳| SEEK arrow or ▷▷ FWD button.
   - To decrease the time or date, press the left |⊲ SEEK arrow or ◁◁ REV button, or turn the ♫ knob, located on the upper right side of the radio.

The date does not automatically display. To see the date press the MENU button and then the ◷ button while the radio is on. The date with display times out after a few seconds and goes back to the normal radio and time display.

To change the time default setting from 12 hour to 24 hour or to change the date default setting from month/day/year to day/month/year, follow these instructions:

1. Press the ◷ button and then the pushbutton located under the forward arrow label. Once the time 12H and 24H, and the date MM/DD/YYYY (month, day, and year) and DD/MM/YYYY (day, month, and year) displays.
2. Press the pushbutton located under the desired option.
3. Press the ◷ or MENU button again to apply the selected default, or let the screen time out.

Downloaded from www.Manualslib.com manuals search engine

Radio(s)

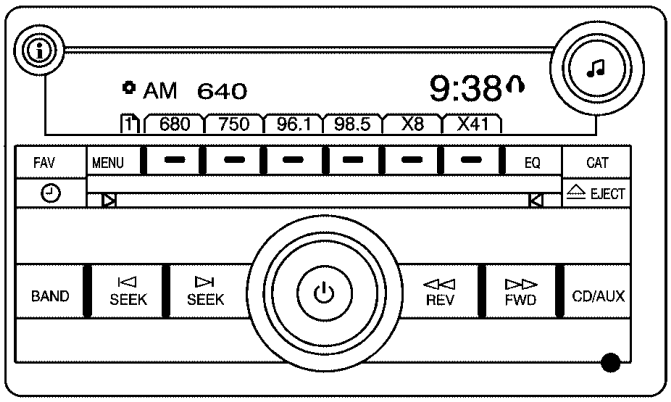

Radio with CD (MP3) shown, Base Radio with CD and Radio with Six-Disc CD (MP3) similar

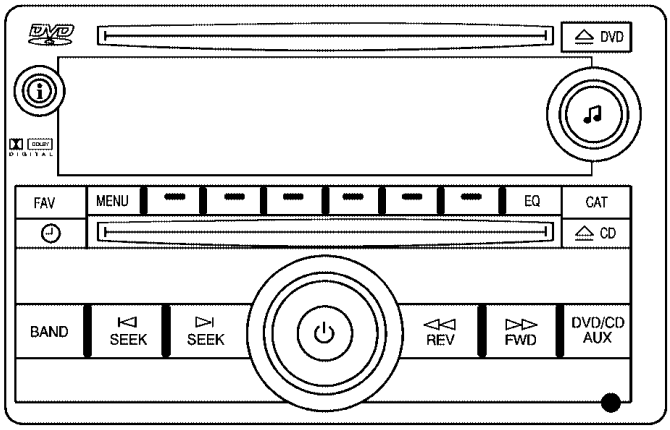

Radio with CD and DVD (MP3)

Your vehicle has one of these radios as its audio system.

If your vehicle has a Rear Seat Entertainment (RSE) system, it has a CD/DVD radio. See *Rear Seat Entertainment (RSE) System on page 3-101* for more information on the vehicle's RSE system.

The DVD player is the top slot on the radio faceplate. The player can read the DTS programmed DVD Audio or DVD Video media (DTS and DTS 2.0 are trademarks of Digital Theater Systems Inc.).

Dolby® is manufactured under license from Dolby® Laboratories. Dolby® and the double-D symbol are trademarks of Dolby® Laboratories.

Downloaded from www.Manualslib.com manuals search engine

Radio Data System (RDS)

Your vehicle's audio system may have Radio Data System (RDS). The RDS feature is available for use only on FM stations that broadcast RDS information. This system relies upon receiving specific information from these stations and only works when the information is available. While the radio is tuned to an FM-RDS station, the station name or call letters appear on the display. In rare cases, a radio station may broadcast incorrect information that causes the radio features to work improperly. If this happens, contact the radio station.

Playing the Radio

⏻ **(Power/Volume):** Press to turn the system on and off.

Turn clockwise or counterclockwise to increase or decrease the volume.

Speed Compensated Volume (SCV): Your vehicle's audio system may also have Speed Compensated Volume (SCV). While SCV is on, the radio volume automatically adjusts to compensate for road and wind noise as the vehicle speeds up or slows down. That way, the volume level should sound about the same while driving. To activate SCV:

1. Set the radio volume to the desired level.
2. Press the MENU button to display the radio setup menu.
3. Press the pushbutton under the AUTO VOLUM (automatic volume) label on the radio display.
4. Press the pushbutton under the desired Speed Compensated Volume setting (OFF, Low, Med, or High) to select the level of radio volume compensation. The display times out after approximately 10 seconds. Each higher setting allows for more radio volume compensation at faster vehicle speeds.

Downloaded from www.Manualslib.com manuals search engine

Finding a Station

BAND: Press to switch between AM, FM, or XM (if equipped). The selection displays.

♫ **(Tune):** Turn to select radio stations.

⏮ **SEEK** ⏭ **:** Press the arrows to go to the previous or to the next station and stay there.

To scan stations, press and hold either arrow for a few seconds until a beep sounds. The radio goes to a station, plays for a few seconds, then goes to the next station. Press either arrow again to stop scanning.

The radio only seeks and scans stations with a strong signal that are in the selected band.

i (Information) (Base Radio with CD): Press to switch the display between the radio station frequency and the time. When the ignition is off, press to display the time.

i (Information) (XM™ Satellite Radio Service, MP3/WMA, and RDS Features): Press to display additional text information related to the current FM-RDS or XM station, or MP3/WMA song. A choice of additional information such as: Channel, Song, Artist, and CAT (category) can appear. Continue pressing to highlight the desired label, or press the pushbutton positioned under any one of the labels and the information about that label displays.

When information is not available, No Info displays.

Setting Preset Stations

If the radio does not have XM™, up to 18 stations (six FM1, six FM2, and six AM) can be programmed on the six numbered pushbuttons, by performing the following steps:

1. Turn the radio on.
2. Press BAND to select FM1, FM2, or AM.
3. Tune in the desired station.
4. Press and hold one of the six numbered pushbuttons for three seconds until a beep sounds. When that pushbutton is pressed and released, the station that was set, returns.
5. Repeat the Steps 2 through 4 for each pushbutton.

Downloaded from www.Manualslib.com manuals search engine

Storing a Radio Station as a Favorite

Drivers are encouraged to set up their radio station favorites while the vehicle is parked. Tune to your favorite stations using the presets, favorites button, and steering wheel controls, if your vehicle has them. See *Defensive Driving on page 4-2*.

If your radio has XM, a maximum of 36 stations can be programmed as favorites using the six pushbuttons positioned below the radio station frequency labels and by using the radio favorites page button (FAV button).

FAV (Favorites): Press the FAV button to go through up to six pages of favorites, each having six favorite stations available per page. Each page of favorites can contain any combination of AM, FM, or XM (if equipped) stations. To store a station as a favorite, perform the following steps:

1. Tune to the desired radio station.
2. Press the FAV button to display the page where the station is to be stored.
3. Press and hold one of the six pushbuttons until a beep sounds. When that pushbutton is pressed and released, the station that was set, returns.
4. Repeat the steps for each pushbutton radio station to be stored as a favorite.

The number of favorites pages can be setup using the MENU button. To setup the number of favorites pages, perform the following steps:

1. Press the MENU button to display the radio setup menu.
2. Press the pushbutton located below the FAV 1-6 label.
3. Select the desired number of favorites pages by pressing the pushbutton located below the displayed page numbers.
4. Press the FAV button, or let the menu time out, to return to the original main radio screen showing the radio station frequency labels and to begin the process of programming your favorites for the chosen amount of numbered pages.

Setting the Tone (Bass/Treble) (Base Radio with CD)

EQ (Equalization): To adjust the bass or treble, press the ♫ knob or EQ button until the desired tone control label displays. Turn the ♫ knob clockwise or counterclockwise to increase or decrease the setting. The display shows the current bass or treble level. If a station's frequency is weak, or if there is static, decrease the treble.

Downloaded from www.Manualslib.com manuals search engine

Setting the Tone (Bass/Treble)

BASS/MID/TREB (Bass, Midrange, or Treble): To adjust bass, midrange, or treble, press the ♫ knob until the tone control labels display. Continue pressing to highlight the desired label, or press the pushbutton positioned under the desired label. Turn the ♫ knob clockwise or counterclockwise to adjust the highlighted setting. The highlighted setting can also be adjusted by pressing the SEEK arrows, ▷▷ FWD (forward) or ◁◁ REV (reverse) button until the desired levels are obtained. If a station's frequency is weak, or if there is static, decrease the treble.

To quickly adjust bass, midrange, or treble to the middle position, press the pushbutton positioned under the BASS, MID, or TREB label for more than two seconds. A beep sounds and the level adjusts to the middle position.

To quickly adjust all tone and speaker controls to the middle position, press the ♫ knob for more than two seconds until a beep sounds.

EQ (Equalization): Press to select preset equalization settings.

To return to the manual mode, press the EQ button until Manual displays or starts to manually adjust the bass, midrange, or treble by pressing the ♫ knob.

EQ (Equalization) (Radio with CD and DVD): Press to choose bass and treble equalization settings designed for different types of music. Your choices are pop, rock, country, talk, jazz, and classical. Selecting MANUAL or changing bass or treble, returns the EQ to the manual bass and treble settings.

Unique EQ settings can be saved for each source.

If your radio has a Bose® audio system, your EQ settings are either MANUAL or TALK.

Adjusting the Speakers (Balance/Fade) (Base Radio with CD)

BAL/FADE (Balance/Fade): To adjust the balance or fade, press the button or the ♫ knob until the desired speaker control label displays. Turn the ♫ knob clockwise or counterclockwise to adjust the setting.

Downloaded from www.Manualslib.com manuals search engine

Adjusting the Speakers (Balance/Fade)

BAL/FADE (Balance/Fade): To adjust balance or fade, press the ♫ knob until the speaker control labels display. Continue pressing to highlight the desired label, or press the pushbutton positioned under the desired label. Turn the ♫ knob clockwise or counterclockwise to adjust the highlighted setting. You can also adjust the highlighted setting by pressing the SEEK arrows, ▷▷ FWD, or ◁◁ REV button until the desired levels are obtained.

To quickly adjust balance or fade to the middle position, press the pushbutton positioned under the BAL or FADE label for more than two seconds. A beep sounds and the level adjusts to the middle position.

To quickly adjust all speaker and tone controls to the middle position, press the ♫ knob for more than two seconds until a beep sounds.

Finding a Category (CAT) Station

If the radio has XM, the CAT button can be used to find XM stations when the radio is in the XM mode.

CAT (Category): To find XM channels within a desired category, perform the following:

1. Press the BAND button until the XM frequency is displayed. Press the CAT button to display the category labels on the radio display. Continue pressing the CAT button until the desired category name displays.
   - Depending on the radio, another way to navigate the category list is to press the ◁◁ REV button or the ▷▷ FWD button.
2. Press either of the two buttons below the desired category label to immediately tune to the first XM station associated with that category.
3. Turn the ♫ knob, press the buttons below the right or left arrows displayed, or press the Seek arrows to go to the previous or to the next XM station within the selected category.
4. To exit the category search mode, press the FAV button or BAND button to display your favorites again.

Downloaded from www.Manualslib.com manuals search engine

Undesired XM categories can be removed through the setup menu. To remove an undesired category, perform the following:

1. Press the MENU button to display the radio setup menu.
2. Press the pushbutton located below the XM CAT label.
3. Turn the ♫ knob to display the category to be removed.
4. Press the pushbutton located under the Remove label until the category name along with the word Removed displays.
5. Repeat the steps to remove more categories.

Removed categories can be restored by pressing the pushbutton under the Add label when a removed category displays or by pressing the pushbutton under the Restore All label.

The radio does not let you remove or add categories while the vehicle is moving faster than 5 mph (8 km/h).

Radio Messages

Calibration Error: The audio system has been calibrated for your vehicle from the factory. If Calibration Error displays, it means that the radio has not been configured properly for your vehicle and it must be returned to your dealer/retailer for service.

Loc or Locked: This message displays when the THEFTLOCK® system has locked up the radio. Take the vehicle to your dealer/retailer for service.

If any error occurs repeatedly or if an error cannot be corrected, contact your dealer/retailer.

XM™ Satellite Radio Service

XM™ is a satellite radio service that is based in the 48 contiguous United States and 10 Canadian provinces. XM Satellite Radio has a wide variety of programming and commercial-free music, coast-to-coast, and in digital-quality sound. During your trial or when you subscribe, you will get unlimited access to XM Radio Online for when you are not in your vehicle. A service fee is required to receive the XM service. For more information, contact XM at www.xmradio.com or call 1-800-929-2100 in the U.S. and www.xmradio.ca or call 1-877-438-9677 in Canada.

Downloaded from www.Manualslib.com manuals search engine

Radio Messages for XM™ Only

See *XM Radio Messages on page 3-100* later in this section for further detail.

Playing a CD (Single CD Player)

Insert a CD partway into the slot, label side up. The player pulls it in and the CD should begin playing.

Playing a CD(s) (Six-Disc CD Player)

LOAD ⊽: Press to load CDs into the CD player. This CD player holds up to six CDs.

To insert one CD, do the following:

1. Press and release the ⊽ button.
2. Wait for the message to insert the disc.
3. Load a CD. Insert the CD partway into the slot, label side up. The player pulls the CD in.

To insert multiple CDs, do the following:

1. Press and hold the ⊽ button for two seconds. A beep sounds and Load All Discs displays.
2. Follow the displayed instruction on when to insert the discs. The CD player takes up to six CDs.
3. Press the ⊽ button again to cancel loading more CDs.

If the ignition or radio is turned off, with a CD in the player, it stays in the player. When the ignition or radio is turned on, the CD starts playing where it stopped, if it was the last selected audio source.

When a CD is inserted, the CD symbol appears on the CD. As each new track starts to play, the track number displays.

The CD player can play the smaller 3 inch (8 cm) single CDs with an adapter ring. Full-size CDs and the smaller CDs are loaded in the same manner.

Care of Your CDs

If playing a CD, the sound quality can be reduced due to CD quality, the method of recording, the quality of the music that has been recorded, and the way the CD has been handled. Handle them carefully. Store CD(s) in their original cases or other protective cases and away from direct sunlight and dust. The CD and DVD player scans the bottom surface of the disc. If the surface of a CD is damaged, such as cracked, broken, or scratched, the CD does not play properly or not at all. Do not touch the bottom side of a CD while handling it; this could damage the surface. Pick up CDs by grasping the outer edges or the edge of the hole and the outer edge.

If the surface of a CD is soiled, take a soft, lint free cloth or dampen a clean, soft cloth in a mild, neutral detergent solution mixed with water, and clean it. Make sure the wiping process starts from the center to the edge.

Downloaded from www.Manualslib.com manuals search engine

Care of Your CD and DVD Player

Do not add any label to a CD, it could get caught in the CD player. If a CD is recorded on a personal computer and a description label is needed, try labeling the top of the recorded CD with a marking pen.

The use of CD lens cleaners for CDs is not advised, due to the risk of contaminating the lens of the CD optics with lubricants internal to the CD and DVD player mechanism.

Notice: **If a label is added to a CD, or more than one CD is inserted into the slot at a time, or an attempt is made to play scratched or damaged CDs, the CD player could be damaged. While using the CD player, use only CDs in good condition without any label, load one CD at a time, and keep the CD player and the loading slot free of foreign materials, liquids, and debris.**

If an error displays, see “CD Messages” later in this section.

⏏ **EJECT (Base Radio with CD):** Press to eject the CD. If the CD is not removed, after several seconds, the CD automatically pulls back into the player.

⏏ **EJECT:** Press to eject CD(s). To eject the CD that is currently playing, press and release this button. A beep sounds and Ejecting Disc displays. Once the disc is ejected, Remove Disc displays. The CD can be removed. If the CD is not removed, after several seconds, the CD automatically pulls back into the player and begins playing.

For the Six-Disc CD player, press and hold for two seconds to eject all discs.

♫ **(Tune):** Turn to select tracks on the CD currently playing.

⏮ **SEEK** ⏭ **:** Press the left arrow to go to the start of the current track, if more than ten seconds have played. Press the right arrow to go to the next track. If either arrow is held, or pressed multiple times, the player continues moving backward or forward through the tracks on the CD.

◁◁ **REV (Fast Reverse):** Press and hold to reverse playback quickly within a track. Sound is heard at a reduced volume. Release to resume playing the track. The elapsed time of the track displays.

▷▷ **FWD (Fast Forward):** Press and hold to advance playback quickly within a track. Sound is heard at a reduced volume. Release to resume playing the track. The elapsed time of the track displays.

Downloaded from www.Manualslib.com manuals search engine

RDM (Random) (Base Radio with CD): With the random setting, CD tracks can be listened to in random, rather than sequential order. To use random, do the following:

1. Press to play tracks from the CD in random order. The random icon displays.
2. Press again to turn off random play. The random icon disappears from the display.

RDM (Random): With the random setting, tracks can be listened to in random, rather than sequential order, on one CD or all CDs in a six-disc CD player. To use random, do one of the following:

- Press the CD/AUX button, or for a single CD player, insert a disc partway into the slot of the CD player. A RDM label displays.

  To play the tracks from the single CD in random order, press the pushbutton positioned under the RDM label until Random Current Disc displays. Press the pushbutton again to turn off random play.
- Press the CD/AUX button, or for a six-disc CD player, press and hold the ▽ button. A beep sounds and Load All Discs displays. Insert one or more discs partway into the slot of the CD player.

  To play tracks from all CDs loaded in a six-disc CD player in random order, press the pushbutton positioned under the RDM label until Randomize All Discs displays. Press the same pushbutton again to turn off random play.

RPT (Repeat) (Base Radio with CD): With the repeat setting, one track can be repeated.

- To repeat the track you are listening to, press and release the RPT button. An arrow symbol displays. Press again to turn off repeat play. When repeat is off, the arrow symbol no longer displays.

i (Information) (Base Radio with CD): Press to switch the display between the track number, elapsed time of the track, and the time. When the ignition is off, press to display the time.

BAND: Press to listen to the radio when a CD is playing. The CD remains safely inside the radio for future listening.

CD/AUX (CD/Auxiliary): Press to play a CD when listening to the radio. The CD icon and a message showing disc and/or track number displays when a CD is in the player. Press again and the system automatically searches for an auxiliary input device, such as a portable audio player.

Downloaded from www.Manualslib.com manuals search engine

Playing a CD (In Either the DVD or CD Slot)

Insert a CD partway into the slot, label side up. The player pulls it in and the CD should begin playing (loading a disc into the system, depending on media type and format ranges from 5 to 20 seconds for a CD, and up to 30 seconds for a DVD to begin playing).

If the ignition or radio is turned off, with a CD in the player, it stays in the player. When the ignition or radio is turned on, the CD starts playing where it stopped, if it was the last selected audio source. The CD is controlled by the buttons on the radio faceplate. The DVD/CD decks, (upper slot is the DVD deck and the lower slot is the CD deck) of the radio are compatible with most audio CDs, CD-R, CD-RW, and MP3s/WMAs.

When a CD is inserted, the text label DVD or CD symbol appears on the left side of the radio display. As each new track starts to play, the track number displays.

⏏ **CD (Eject):** Press and release to eject the CD that is currently playing in the bottom slot. A beep sounds and Ejecting Disc displays. Once the disc is ejected, Remove Disc displays. The CD can be removed. If the CD is not removed, after several seconds, the CD automatically pulls back into the player.

If loading and reading of a CD cannot be completed, such as unknown format, etc., and the disc fails to eject, press and hold for more than five seconds to force the disc to eject.

⏏ **DVD (Eject):** Press and release to eject the CD that is currently playing in the top slot. A beep sounds and Ejecting Disc displays. Once the disc is ejected, Remove Disc displays. The CD can be removed. If the CD is not removed, after several seconds, the CD automatically pulls back into the player.

If loading and reading of a CD cannot be completed, such as unknown format, etc., and the disc fails to eject, press and hold for more than five seconds to force the disc to eject.

♫ **(Tune):** Turn to select tracks on the CD currently playing.

⏮ **SEEK** ⏭ **:** Press the left arrow to go to the start of the current track, if more than five seconds have played. If less than five seconds have played, the previous track plays. Press the right arrow to go to the next track. If either arrow is held, or pressed multiple times, the player continues moving backward or forward through the tracks on the CD.

Downloaded from www.Manualslib.com manuals search engine

◁◁ **REV (Fast Reverse):** Press and hold to reverse playback quickly within a track. Sound is heard at a reduced volume. Release to resume playing the track. The elapsed time of the track displays.

▷▷ **FWD (Fast Forward):** Press and hold to advance playback quickly within a track. Sound is heard at a reduced volume. Release to resume playing the track. The elapsed time of the track displays.

RDM (Random): With the random setting, tracks can be listened to in random, rather than sequential order. To play the tracks from the CD, press the DVD/CD AUX button when not sourced to the CD, or insert a disc partway into the slot. A RDM label displays. Press the pushbutton positioned under the RDM label until Random Current Disc displays. Press the pushbutton again to turn off random play.

BAND: Press to listen to the radio when a CD or DVD is playing. The CD or DVD remains inside the radio for future listening or viewing entertainment.

DVD/CD AUX (Auxiliary): Press to cycle through DVD, CD, or Auxiliary when listening to the radio. The DVD/CD text label and a message showing track or chapter number displays when a disc is in either slot. Press again and the system automatically searches for an auxiliary input device, such as a portable audio player. If a portable audio player is not connected, “No Aux Input Device” displays. If a disc is in both the DVD slot and the CD slot the DVD/CD AUX button cycles between the two sources and does not indicate “No Aux Input Device”. If a front auxiliary device is connected, the DVD/CD AUX button cycles through all available options, such as: DVD slot, CD slot, Front AUX, and Rear AUX (if available). See “Using the Auxiliary Input Jack(s)” later in this section, or *Rear Seat Entertainment (RSE) System on page 3-101*, “Audio/Video (A/V) Jacks” for more information.

If a disc is inserted into top DVD slot, the rear seat operator can turn on the video screen and use the remote control to navigate the CD (tracks only) through the remote control.

Downloaded from www.Manualslib.com manuals search engine

Audio Output

Only one audio source can be heard through the speakers at one time. An audio source is defined as DVD slot, CD slot, XM, FM/AM, Front Aux Jack, or Rear Aux Jack.

Press the ⏻ button to turn the radio on. The radio can be heard through all of the vehicle speakers.

Front seat passengers can listen to the radio (AM, FM, or XM) by pressing the BAND button or the DVD/CD AUX button to select CD slot, DVD slot, front or rear auxiliary input (if available).

If a playback device is plugged into the radio's front auxiliary input jack or the rear auxiliary jack, the front seat passengers is able to listen to playback from this source through the vehicle speakers. See "Using the Auxiliary Input Jack(s)" later in this section, or *Rear Seat Entertainment (RSE) System on page 3-101*, "Audio/Video (A/V) Jacks" for more information.

Playing an MP3/WMA CD-R or CD-RW Disc

If you have a radio with a single CD (MP3/WMA), a six-disc CD (MP3/WMA), or a radio with a CD and DVD player, it is capable of playing an MP3/WMA CD-R or CD-RW disc. For more information on how to play an MP3/WMA CD-R or CD-RW disc, see "Using an MP3" in the index.

CD Messages

If these messages display and/or the CD comes out, it could be for one of the following reasons:

Optical Error: If the disc was inserted upside down.

Disk Read Error: If a disc was inserted with an invalid or unknown format.

Player Error: If there are disc ▽ or disc ⏏ problems.

CHECK DISC: If this error message displays, it could be for one of the following reasons:

- It is very hot. When the temperature returns to normal, the CD should play.
- You are driving on a very rough road. When the road becomes smoother, the CD should play.
- The CD is dirty, scratched, wet, or upside down.
- The air is very humid. If so, wait about an hour and try again.
- There could have been a problem while burning the CD.
- The label could be caught in the CD player.

If any error occurs repeatedly or if an error cannot be corrected, contact your dealer/retailer. If the radio displays an error message, write it down and provide it to your dealer/retailer when reporting the problem.

Downloaded from www.Manualslib.com manuals search engine

Using the DVD Player

The DVD player is controlled by the buttons on the remote control, by the RSA system, or by the buttons on the radio faceplate. See “Remote Control”, under *Rear Seat Entertainment (RSE) System on page 3-101* for more information.

The DVD player is only compatible with DVDs of the appropriate region code that is printed on the jacket of most DVDs.

The DVD slot of the radio is compatible with most audio CDs, CD-R, CD-RW, DVD-Video, DVD-Audio, DVD-R/RW, DVD+R/RW media along with MP3 and WMA formats.

If an error message appears on the video screen or the radio, see “DVD Display Error Messages” under, *Rear Seat Entertainment (RSE) System on page 3-101* and “DVD Radio Error Messages” in this section for more information.

Playing a DVD

DVD/CD AUX (Auxiliary): Press to cycle through DVD, CD, or Auxiliary when listening to the radio. The DVD/CD text label and a message showing track or chapter number displays when a disc is in either slot. Press again and the system automatically searches for an auxiliary input device, such as a portable audio player. If a portable audio player is not connected, “No Aux Input Device” displays. If a disc is in both the DVD slot and the CD slot the DVD/CD AUX button cycles between the two sources and does not indicate “No Aux Input Device”. If a front auxiliary device is connected, the DVD/CD AUX button cycles through all available options, such as: DVD slot, CD slot, Front AUX, and Rear AUX (if available). See “Using the Auxiliary Input Jack(s)” later in this section, or *Rear Seat Entertainment (RSE) System on page 3-101*, “Audio/Video (A/V) Jacks” for more information.

Downloaded from www.Manualslib.com manuals search engine

⏻ **(Power):** Press to turn the radio on or off. Turn clockwise or counterclockwise to increase or decrease the volume. Press and hold for more than two seconds turns off the entire radio and Rear Seat Entertainment (RSE) system and starts the parental control feature which prevents the rear seat occupant from operating the Rear Seat Audio (RSA) system or remote control.

A lock symbol appears next to the clock display. The parental control feature remains on until a subsequent press and hold of the power button is performed (more than two seconds), or until the driver turns the ignition off and exits the vehicle.

♫ **(Tune):** Turn to change tracks on a CD or DVD, to manually tune a radio station, or to change clock or date settings, while in the clock or date setting mode. See the information given earlier in this section specific to the radio, CD, and the DVD. Also, see *Setting the Time on page 3-68*, for setting the clock and date.

⏮ **SEEK (Previous Track/Chapter):** Press to return to the start of the current track or chapter. Press again to go to the previous track or chapter. This button might not work when the DVD is playing the copyright information or the previews.

SEEK ⏭ **(Next Track/Chapter):** Press this button to go to the next track or chapter. This button might not work when the DVD is playing the copyright information or the previews.

⏪ **REV (Fast Reverse):** Press to fast reverse the CD or DVD, five times the normal speed. The radio displays the elapsed time while in fast reverse. To stop fast reversing, press again. This button might not work when the DVD is playing the copyright information or the previews.

⏩ **FWD (Fast Forward):** Press to fast forward the CD or DVD. The radio displays the elapsed time and fast forwards five times the normal speed. To stop fast forwarding, press again. This button might not work when the DVD is playing the copyright information or the previews.

⏏ **(Eject):** Press to eject a CD or DVD. If a CD or DVD is ejected, but not removed, the player automatically pulls it back in after 15 seconds.

If loading and reading of a CD cannot be completed, such as unknown format, etc., and the disc fails to eject, press and hold for more than five seconds to force the disc to eject.

Downloaded from www.Manualslib.com manuals search engine

DVD-V (Video) Display Buttons

Once a DVD-V is inserted, the radio display menu shows several tag options for DVD playing. Press the pushbuttons located under any desired tag option during DVD playback. See the tag options listed below for more information.

The rear seat passenger navigates the DVD-V menus and controls through the remote control. See “Remote Control”, under *Rear Seat Entertainment (RSE) System on page 3-101* for more information. The Video Screen automatically turns on when the DVD-V is inserted into the DVD slot.

▶ / ❚❚ **(Play/Pause):** Press either play or pause displayed on the radio system, to toggle between pausing or restarting playback of a DVD. If the forward arrow is showing on the display, the system is in pause mode. If the pause icon is showing on the display, the system is in playback mode. If the DVD screen is off, press this button to turn the screen on.

Some DVDs begin playing after the previews have finished, although there might be a delay of up to 30 seconds. If the DVD does not begin playing the movie automatically, press the pushbutton located under the play/pause symbol tag displayed on the radio. If the DVD still does not play, refer to the on-screen instructions, if available.

■ **(Stop):** Press to stop playing, rewinding, or fast forwarding a DVD.

◄┘ **(Enter):** Press to select the choices that are highlighted in any menu.

▤ **(Menu):** Press to access the DVD menu. The DVD menu is different on every DVD. Use the pushbuttons located under the navigation arrows to navigate the cursor through the DVD menu. After making a selection press the enter button. This button only operates when using a DVD.

Nav (Navigate): Press to display directional arrows for navigating through the menus.

↶● **(Return):** Press to exit the current active menu and return to the previous menu. This button operates only when a DVD is playing and a menu is active.

Downloaded from www.Manualslib.com manuals search engine

DVD-A (Audio) Display Buttons

Once a DVD-A is inserted, a radio display menu shows several tag options for DVD playing. Press the pushbuttons located under any desired tag option during DVD playback. See the tag options listed below for more information.

The rear seat operator navigates the DVD-A menus and controls through the remote control. See “Remote Control”, under *Rear Seat Entertainment (RSE) System on page 3-101* for more information. The Video Screen does not automatically power on when the DVD-A is inserted into the DVD slot. It must be manually turned on by the rear seat occupant through the remote control power button.

▶ / ❚❚ **(Play/Pause):** Press either play or pause displayed on the radio system, to toggle between pausing or restarting playback of a DVD. If the forward arrow is showing on the display, the system is in pause mode. If the pause icon is showing on the display, the system is in playback mode.

◀ **Group** ▶ **:** Press to cycle through musical groupings on the DVD-A disc.

Nav (Navigate): Press to display directional arrows for navigating through the menus.

♪ **(Audio Stream):** Press to cycle through audio steam formats located on DVD-A disc. There is not any type of notification for the customer to see through the radio display, but video screen has a text field that shows audio stream changing.

Inserting a Disc

To play a disc, gently insert the disc, with the label side up, into the loading slot. The DVD player might not accept some paper labeled media. The player starts loading the disc into the system and display “Loading Disc” on the radio display. At the same time, the radio displays a softkey menu of option(s). Some discs automatically play the movie while others default to the softkey menu display which requires the Play, Enter, or Navigation softkeys to be pressed (either by softkey or by the rear seat passenger using the remote control).

Loading a disc into the system, depending on media type and format, ranges from 5 to 20 seconds for a CD, and up to 30 seconds for a DVD.

Downloaded from www.Manualslib.com manuals search engine

Stopping and Resuming Playback

To stop playing a DVD without turning off the system, press the ■ button on the remote control, or press the pushbutton located under the stop or the play/pause symbol tags displayed on the radio. If the radio head is sourced to something other than DVD-V, press the DVD/CD AUX button to make DVD-V the active source.

To resume DVD playback, press the play/pause button on the remote control, or press the pushbutton located under the play/pause symbol tag displayed on the radio. The DVD should resume play from where it last stopped if the disc has not been ejected and the stop button has not been pressed twice on the remote control. If the disc has been ejected or the stop button has been pressed twice on the remote control, the disc resumes playing at the beginning of the disc.

Ejecting a Disc

Press the ⏏ button on the radio to eject the disc. If a disc is ejected from the radio, but not removed, the radio reloads the disc after a short period of time. The disc is stored in the radio. The radio does not resume play of the disc automatically. If the RSA system is sourced to the DVD, the movie when reloaded into the DVD player begins to play again. In case loading and reading of a DVD or CD cannot be completed (unknown format, etc.), and the disc fails to eject, press and hold the ⏏ DVD button more than 5 seconds to force the disc to eject.

DVD Radio Error Messages

Player Error: This message displays when there are disc load or eject problems.

Disc Format Error: This message displays, if the disc is inserted with the disc label wrong side up, or if the disc is damaged.

Disc Region Error: This message displays, if the disc is not from a correct region.

No Disc Inserted: This message displays, if no disc is present when the ⏏ or DVD/CD AUX button is pressed on the radio.

Downloaded from www.Manualslib.com manuals search engine

Using the Auxiliary Input Jack

The radio system has an auxiliary input jack located on the lower right side of the faceplate. This is not an audio output; do not plug the headphone set into the front auxiliary input jack. An external audio device such as an iPod, laptop computer, MP3 player, CD changer, etc. can be connected to the auxiliary input jack for use as another source for audio listening.

Drivers are encouraged to set up any auxiliary device while the vehicle is in PARK (P). See *Defensive Driving on page 4-2* for more information on driver distraction.

To use a portable audio player, connect a 3.5 mm (1/8 inch) cable to the radio's front auxiliary input jack. When a device is connected, press the radio CD/AUX button to begin playing audio from the device over the vehicle speakers.

⏻ **(Power/Volume):** Turn clockwise or counterclockwise to increase or decrease the volume of the portable player. Additional volume adjustments might need to be made from the portable device if the volume does not go loud or soft enough.

BAND: Press to listen to the radio when a portable audio device is playing. The portable audio device continues playing, so you might want to stop it or power it off.

CD/AUX (CD/Auxiliary): Press to play a CD when a portable audio device is playing. Press again and the system begins playing audio from the connected portable audio player. If a portable audio player is not connected, No Input Device Found or No Aux may display.

DVD/CD AUX (CD/Auxiliary) (Radio with CD and DVD): Press to cycle through DVD, CD, or Auxiliary while listening to the radio. The DVD/CD text label and a message showing track or chapter number displays when a disc is in either slot. Press again and the system automatically searches for an auxiliary input device, such as a portable audio player. If a portable audio player is not connected, "No Aux Input Device" displays. If a disc is in both the DVD slot and the CD slot the DVD/CD AUX button cycles between the two sources and does not indicate "No Aux Input Device". If a front auxiliary device is connected, the DVD/CD AUX button cycles through all available options, such as: DVD slot, CD slot, Front AUX, and Rear AUX (if available). See "Using the Auxiliary Input Jack(s)" later in this section, or *Rear Seat Entertainment (RSE) System on page 3-101*, "Audio/Video (A/V) Jacks" for more information.

Downloaded from www.Manualslib.com manuals search engine

Using an MP3 (Radio with CD or Six-Disc CD Player)

MP3/WMA CD-R or CD-RW Disc

The radio plays MP3 and WMA files that were recorded on a CD-R or CD-RW disc. The files can be recorded with the following fixed bit rates: 32 kbps, 40 kbps, 56 kbps, 64 kbps, 80 kbps, 96 kbps, 112 kbps, 128 kbps, 160 kbps, 192 kbps, 224 kbps, 256 kbps, and 320 kbps or a variable bit rate. Song title, artist name, and album are displayed by the radio when recorded using ID3 tags version 1 and 2.

Compressed Audio

The radio also plays discs that contain both uncompressed CD audio (.CDA files) and MP3/WMA files. By default the radio reads only the uncompressed audio and ignores the MP3/WMA files. Pressing the CAT (category) button toggles between compressed and uncompressed audio format.

MP3/WMA Format

If you burn your own MP3/WMA disc on a personal computer:

- Make sure the MP3/WMA files are recorded on a CD-R or CD-RW disc.
- Do not mix standard audio and MP3/WMA files on one disc.
- The CD player is able to read and play a maximum of 50 folders, 50 playlists, and 255 files.
- Create a folder structure that makes it easy to find songs while driving. Organize songs by albums using one folder for each album. Each folder or album should contain 18 songs or less.
- Avoid subfolders. The system can support up to 8 subfolders deep, however, keep the total number of folders to a minimum in order to reduce the complexity and confusion in trying to locate a particular folder during playback.
- Make sure playlists have a .mp3 or .wpl extension (other file extensions might not work).

Downloaded from www.Manualslib.com manuals search engine

- Minimize the length of the file, folder, or playlist names. Long file, folder, or playlist names, or a combination of a large number of files and folders, or playlists can cause the player to be unable to play up to the maximum number of files, folders, playlists, or sessions. If you wish to play a large number of files, folders, playlists, or sessions, minimize the length of the file, folder, or playlist name. Long names also take up more space on the display and might not fully display.
- Finalize the audio disc before you burn it. Trying to add music to an existing disc can cause the disc not to function in the player.

Playlists can be changed by using < (previous) and > (next) folder buttons, the ♫ knob, or the SEEK arrows. An MP3/WMA CD-R or CD-RW that was recorded using no file folders can also be played. If a CD-R CD-RW contains more than the maximum of 50 folders, 50 playlists, and 255 files, the player lets you access and navigate up to the maximum, but all items over the maximum are not accessible.

Root Directory

The root directory of the CD-R or CD-RW is treated as a folder. If the root directory has compressed audio files, the directory displays as F1 ROOT. All files contained directly under the root directory are accessed prior to any root directory folders. However, playlists (Px) are always accessed before root folders or files.

Empty Directory or Folder

If a root directory or a folder exists somewhere in the file structure that contains only folders/subfolders and no compressed files directly beneath them, the player advances to the next folder in the file structure that contains compressed audio files. The empty folder does not display.

No Folder

When the CD contains only compressed files, the files are located under the root folder. The next and previous folder functions are not displayed on a CD that was recorded without folders or playlists. When displaying the name of the folder the radio displays ROOT.

When the CD contains only playlists and compressed audio files, but no folders, all files are located under the root folder. The folder down and the folder up buttons search playlists (Px) first and then go to the root folder. When the radio displays the name of the folder, the radio displays ROOT.

Downloaded from www.Manualslib.com manuals search engine

Order of Play

Tracks recorded to the CD-R or CD-RW are played in the following order:

- Play begins from the first track in the first playlist and continues sequentially through all tracks in each playlist. When the last track of the last playlist has played, play continues from the first track of the first playlist.
- Play begins from the first track in the first folder and continues sequentially through all tracks in each folder. When the last track of the last folder has played, play continues from the first track of the first folder.

When play enters a new folder, the display does not automatically show the new folder name unless the folder mode was chosen as the default display. The new track name displays.

File System and Naming

The song name that displays is the song name that is contained in the ID3 tag. If the song name is not present in the ID3 tag, then the radio displays the file name without the extension (such as .mp3) as the track name.

Track names longer than 32 characters or four pages are shortened. Parts of words on the last page of text and the extension of the filename displays.

Preprogrammed Playlists

Preprogrammed playlists that were created using WinAmp™, MusicMatch™, or Real Jukebox™ software can be accessed, however, they cannot be edited using the radio. These playlists are treated as special folders containing compressed audio song files.

Downloaded from www.Manualslib.com manuals search engine

Playing an MP3/WMA

Insert a CD-R or CD-RW partway into the slot (Single CD Player), or press the button and wait for the message to insert disc (Six-Disc CD Player), label side up. The player pulls it in, and the CD-R or CD-RW should begin playing.

If the ignition or radio is turned off with a CD-R or CD-RW in the player, it stays in the player. When the ignition or radio is turned on, the CD-R or CD-RW starts to play where it stopped, if it was the last selected audio source.

As each new track starts to play, the track number and song title displays.

EJECT: Press this button to eject CD-R(s) or CD-RW(s). To eject the CD-R or CD-RW that is currently playing, press and release this button. A beep sounds and Ejecting Disc displays. Once the disc is ejected, Remove Disc displays. The CD-R or CD-RW can be removed. If the CD-R is not removed, after several seconds, the CD-R or CD-RW automatically pulls back into the player and begins playing.

For the Six-Disc CD player, press and hold this button for two seconds to eject all discs.

(Tune): Turn this knob to select MP3/WMA files on the CD-R or CD-RW currently playing.

SEEK : Press the left SEEK arrow to go to the start of the current MP3/WMA file, if more than ten seconds have played. Press the right SEEK arrow to go to the next MP3/WMA file. If either SEEK arrow is held or pressed multiple times, the player continues moving backward or forward through MP3/WMA files on the CD.

(Previous Folder): Press the pushbutton positioned under the Folder label to go to the first track in the previous folder.

(Next Folder): Press the pushbutton positioned under the Folder label to go to the first track in the next folder.

REV (Reverse): Press and hold this button to reverse playback quickly within an MP3/WMA file. Sound is heard at a reduced volume. Release this button to resume playing the file. The elapsed time of the file displays.

FWD (Fast Forward): Press and hold this button to advance playback quickly within an MP3/WMA file. Sound is heard at a reduced volume. Release this button to resume playing the file. The elapsed time of the file displays.

Downloaded from www.Manualslib.com manuals search engine

RDM (Random): With the random setting, MP3 files on the CD-R can be listened to in random, rather than sequential order, on one CD-R/CD-RW or all discs in a six-disc CD player. To use random, do one of the following:

1. To play MP3/WMA files from the CD-R or CD-RW in random order, press the pushbutton positioned under the RDM label until Random Current Disc displays. Press the same pushbutton again to turn off random play.
2. To play songs from all CDs loaded in a six-disc CD player in random order, press the pushbutton positioned under the RDM label until Randomize All Discs displays. Press the same pushbutton again to turn off random play.

(Music Navigator): Use the music navigator feature to play MP3 files on the CD-R or CD-RW in order by artist or album. Press the pushbutton located below the music navigator label. The player scans the disc to sort the files by artist and album ID3 tag information. It can take several minutes to scan the disc depending on the number of MP3/WMA files recorded to the CD-R or CD-RW. The radio can begin playing while it is scanning the disc in the background. When the scan is finished, the CD-R or CD-RW begins playing again.

Once the disc has been scanned, the player defaults to playing MP3/WMA files in order by artist. The current artist playing is shown on the second line of the display between the arrows. Once all songs by that artist are played, the player moves to the next artist in alphabetical order on the CD-R or CD-RW and begins playing MP3 files by that artist. If you want to listen to MP3/WMA files by another artist, press the pushbutton located below either arrow button. The CD goes to the next or previous artist in alphabetical order. Continue pressing either button until the desired artist displays.

To change from playback by artist to playback by album, press the pushbutton located below the Sort By label. From the sort screen, push one of the buttons below the album button. Press the pushbutton below the back label to return to the main music navigator screen. Now the album name is displayed on the second line between the arrows and songs from the current album begins to play. Once all songs from that album are played, the player moves to the next album in alphabetical order on the CD-R/CD-RW and begin playing MP3/WMA files from that album.

To exit music navigator mode, press the pushbutton below the Back label to return to normal MP3/WMA playback.

Downloaded from www.Manualslib.com manuals search engine

BAND: Press this button to listen to the radio when a CD is playing. The inactive CD remains inside the radio for future listening.

CD/AUX (CD/Auxiliary): Press this button to play a CD when listening to the radio. The CD icon and a message showing disc and/or track number displays when a CD is in the player. Press this button again and the system automatically searches for an auxiliary input device such as a portable audio player. If a portable audio player is not connected, “No Input Device Found” displays.

Using an MP3 (Radio with CD and DVD Player)

MP3/WMA CD-R or CD-RW Disc

Compressed Audio or Mixed Mode Discs

The radio also plays discs that contain both uncompressed CD audio (.CDA files) and MP3/WMA files depending on which slot the disc is loaded into. By default the radio reads only the uncompressed audio (.CDA) and ignores the MP3/WMA files on the DVD deck. On the CD deck, pressing the CAT (category) button toggles between compressed and uncompressed audio format, the default being the uncompressed format (.CDA).

MP3/WMA Format

If you burn your own MP3/WMA disc on a personal computer:

- Make sure the MP3/WMA files are recorded on a CD-R or CD-RW disc.
- Do not mix standard audio and MP3/WMA files on one disc.
- The CD player (lower slot) is able to read and play a maximum combination of 512 files and folders. The DVD player (upper slot) is able to read 255 folders, 15 playlists and 40 sessions.
- Create a folder structure that makes it easy to find songs while driving. Organize songs by albums using one folder for each album. Each folder or album should contain 18 songs or less.
- Avoid subfolders. The system can support up to 8 subfolders deep, however, keep the total number of folders to a minimum in order to reduce the complexity and confusion in trying to locate a particular folder during playback.
- Make sure playlists have a .m3u, .wpl or .pls extension, other file extensions might not work.

Downloaded from www.Manualslib.com manuals search engine

- Minimize the length of the file, folder, or playlist names. Long file, folder, or playlist names, or a combination of a large number of files and folders, or playlists can cause the player to be unable to play up to the maximum number of files, folders, playlists, or sessions. If you wish to play a large number of files, folders, playlists, or sessions, minimize the length of the file, folder or playlist name. Long names also take up more space on the display.
- Finalize the audio disc before you burn it. Trying to add music to an existing disc can cause the disc not to function in the player.

Root Directory

The root directory of the CD-R or CD-RW is treated as a folder. If the root directory has compressed audio files, the directory is displayed as F1 ROOT. All files contained directly under the root directory are accessed prior to any root directory folders. However, playlists (Px) are always accessed before root folders or files.

Empty Directory or Folder

If a root directory or a folder exists somewhere in the file structure that contains only folders/subfolders and no compressed files directly beneath them, the player advances to the next folder in the file structure that contains compressed audio files. The empty folder does not display.

No Folder

When the CD contains only compressed files, the files are located under the root folder. The next and previous folder functions are not displayed on a CD that was recorded without folders or playlists. When displaying the name of the folder the radio displays ROOT.

When the CD contains only playlists and compressed audio files, but no folders, all files are located under the root folder. The folder down and the folder up buttons search playlists (Px) first and then go to the root folder. When the radio displays the name of the folder the radio displays ROOT.

Downloaded from www.Manualslib.com manuals search engine

Order of Play

Tracks recorded to the CD-R or CD-RW are played in the following order:

- Play begins from the first track in the first playlist and continues sequentially through all tracks in each playlist. When the last track of the last playlist has played, play continues from the first track of the first playlist.
- Play begins from the first track in the first folder and continues sequentially through all tracks in each folder. When the last track of the last folder has played, play continues from the first track of the first folder.

When play enters a new folder, the display does not automatically show the new folder name unless you have chosen the folder mode as the default display. The new track name displays.

File System and Naming

The song name that displays is the song name that is contained in the ID3 tag. If the song name is not present in the ID3 tag, then the radio displays the file name without the extension (such as .mp3) as the track name.

Track names longer than 32 characters or four pages are shortened. Parts of words on the last page of text and the extension of the filename does not display.

Preprogrammed Playlists

Preprogrammed playlists that were created using WinAmp™, MusicMatch™, or Real Jukebox™ software can be accessed, however, they cannot be edited using the radio. These playlists are treated as special folders containing compressed audio song files.

Playing an MP3 (In Either the DVD or CD Slot)

Insert a CD-R or CD-RW partway into either the top or bottom slot, label side up. The player pulls it in, and the CD-R or CD-RW should begin playing.

Depending on the format of the disc, a softkey menu appears and allow navigation of the disc. The menu reads left to right as RDM (Randomize song play order), a Folder icon with left and right arrows (to move up or down through available folders), a PL tag if the disc has a Playlist available, and a Music Navigator tag. If a Playlist tag is shown, toggling this key brings up a Folder softkey only or the menu as previously described.

If the ignition or radio is turned off with a CD-R or CD-RW in the player, it stays in the player. When the ignition or radio is turned on, the CD-R or CD-RW starts to play where it stopped, if it was the last selected audio source.

As each new track starts to play, the track number and song title displays.

Downloaded from www.Manualslib.com manuals search engine

⏏ **CD (Eject):** Press and release this button to eject the CD-R or CD-RW that is currently playing in the bottom slot. A beep sounds and Ejecting Disc displays. Once the disc is ejected, Remove Disc displays. The CD-R or CD-RW can be removed. If the CD-R or CD-RW is not removed, after several seconds, the CD-R or CD-RW automatically pulls back into the player.

If loading and reading of a CD cannot be completed, such as unknown format, etc., and the disc fails to eject, press and hold this button for more than five seconds to force the disc to eject.

⏏ **DVD (Eject):** Press and release this button to eject the CD-R or CD-RW that is currently playing in the top slot. A beep sounds and Ejecting Disc displays. Once the disc is ejected, Remove Disc displays. The CD-R or CD-RW can be removed. If the CD-R or CD-RW is not removed, after several seconds, the CD-R or CD-RW automatically pulls back into the player. If loading and reading of a CD cannot be completed, such as unknown format, etc., and the disc fails to eject, press and hold this button for more than five seconds to force the disc to eject.

♫ **(Tune):** Turn this knob to select MP3/WMA files on the CD-R or CD-RW currently playing.

⏮ **SEEK** ⏭ **:** Press the left SEEK arrow to go to the start of the current MP3/WMA file, if more than five seconds have played. If less than five seconds have played, the previous MP3/WMA file plays. Press the right SEEK arrow to go to the next MP3/WMA file. If either SEEK arrow is held, or pressed multiple times, the player continues moving backward or forward through the MP3/WMA files on the CD.

< 🗀 **(Previous Folder):** Press the pushbutton positioned under the Folder label to go to the first track in the previous folder.

🗀 > **(Next Folder):** Press the pushbutton positioned under the Folder label to go to the first track in the next folder.

◁◁ **REV (Reverse):** Press and hold this button to reverse playback quickly within an MP3/WMA file. Sound is heard at a reduced volume. Release this button to resume playing the file. The elapsed time of the file displays.

▷▷ **FWD (Fast Forward):** Press and hold this button to advance playback quickly within an MP3/WMA file. Sound is heard at a reduced volume. Release this button to resume playing the file. The elapsed time of the file displays.

Downloaded from www.Manualslib.com manuals search engine

RDM (Random): With the random setting, MP3/WMA files on the CD-R or CD-RW can be played in random, rather than sequential order. To play MP3/WMA files from the CD-R or CD-RW you are listening to in random order, press the pushbutton positioned under the RDM label until Random Current Disc displays. Press the same pushbutton again to turn off random play.

(Music Navigator): Use the music navigator feature to play MP3/WMA files on the CD-R or CD-RW in order by artist or album. Press the pushbutton located below the music navigator label. The player scans the disc to sort the files by artist and album ID3 tag information. It can take several minutes to scan the disc depending on the number of MP3/WMA files recorded to the CD-R or CD-RW.

To cancel music navigator while the player is scanning, press the pushbutton located below the music navigator label or eject the disc.

The radio could begin playing while it is scanning the disc in the background. When the scan is finished, the CD-R or CD-RW begins playing again.

Once the disc has been scanned, the player defaults to playing MP3/WMA files in order by artist. The current artist playing is shown on the second line of the display between the arrows. If you want to listen to MP3/WMA files by another artist, press the pushbutton located below either arrow button. You will go to the next or previous artist in alphabetical order. Continue pressing either button until the desired artist is displayed.

To change from playback by artist to playback by album, press the pushbutton located below the Sort By label. From the sort screen, push one of the buttons below the album button. Press the pushbutton below the back label to return to the main music navigator screen. The album name displays on the second line between the arrows and songs from the current album begins to play. Once all songs from that album are played, the player moves to the next album in alphabetical order on the CD-R/CD-RW and begins playing MP3/WMA files from that album.

To exit music navigator mode, press the pushbutton below the Back label to return to normal MP3/WMA playback.

Downloaded from www.Manualslib.com manuals search engine

BAND: Press this button to listen to the radio when a CD or a DVD is playing. The CD or DVD remains inside the radio for future listening or viewing entertainment.

DVD/CD AUX (Auxiliary): Press this button to cycle through DVD, CD, or Auxiliary when listening to the radio. The DVD/CD text label and a message showing track or chapter number displays when a disc is in either slot. Press this button again and the system automatically searches for an auxiliary input device, such as a portable audio player. If a portable audio player is not connected, “No Aux Input Device” displays. If a disc is in both the DVD slot and the CD slot the DVD/CD AUX button cycles between the two sources and does not indicate “No Aux Input Device”. If a front auxiliary device is connected, the DVD/CD AUX button cycles through all available options, such as: DVD slot, CD slot, Front AUX, and Rear AUX (if available). See “Using the Auxiliary Input Jack(s)” later in this section, or *Rear Seat Entertainment (RSE) System on page 3-101* Rear Seat Entertainment System, “Audio/Video (A/V) Jacks” for more information.

If a MP3/WMA is inserted into top DVD slot, the rear seat operator can turn on the video screen and use the remote control to navigate the CD (tracks only) through the remote control.

XM Radio Messages

XL (Explicit Language Channels): These channels, or any others, can be blocked at a customer’s request, by calling 1-800-852-XMXM (9696).

XM Updating: The encryption code in the receiver is being updated, and no action is required. This process should take no longer than 30 seconds.

No XM Signal: The system is functioning correctly, but the vehicle is in a location that is blocking the XM™ signal. When you move into an open area, the signal should return.

Loading XM: The audio system is acquiring and processing audio and text data. No action is needed. This message should disappear shortly.

Channel Off Air: This channel is not currently in service. Tune to another channel.

Channel Unavail: This previously assigned channel is no longer assigned. Tune to another station. If this station was one of the presets, choose another station for that preset button.

No Artist Info: No artist information is available at this time on this channel. The system is working properly.

Downloaded from www.Manualslib.com manuals search engine

No Title Info: No song title information is available at this time on this channel. The system is working properly.

No CAT Info: No category information is available at this time on this channel. The system is working properly.

No Information: No text or informational messages are available at this time on this channel. The system is working properly.

CAT Not Found: There are no channels available for the selected category. The system is working properly.

XM TheftLocked: The XM receiver in the vehicle could have previously been in another vehicle. For security purposes, XM™ receivers cannot be swapped between vehicles. If this message appears after having your vehicle serviced, check with your dealer/retailer.

XM Radio ID: If tuned to channel 0, this message alternates with the XM Radio eight digit radio ID label. This label is needed to activate the service.

Unknown: If this message is received when tuned to channel 0, there could be a receiver fault. Consult with your dealer/retailer.

Check XM Receivr: If this message does not clear within a short period of time, the receiver could have a fault. Consult with your dealer/retailer.

XM Not Available: If this message does not clear within a short period of time, the receiver could have a fault. Consult with your dealer/retailer.

Navigation/Radio System

Your vehicle may have a navigation radio system.

The navigation system has built-in features intended to minimize driver distraction. Technology alone, no matter how advanced, can never replace your own judgment. See the Navigation System manual for some tips to help you reduce distractions while driving.

Rear Seat Entertainment (RSE) System

Your vehicle may have a DVD Rear Seat Entertainment (RSE) system. The RSE system works with the vehicle's audio system. The DVD player is part of the front radio. The RSE system includes a radio with a DVD player, a video display screen, audio/video jacks, two wireless headphones, and a remote control. See *Radio(s) on page 3-71* for more information on the vehicle's audio/DVD system.

Downloaded from www.Manualslib.com manuals search engine

Parental Control

The RSE system may have a Parental Control feature, depending on which radio you have. To enable Parental Control, press and hold the radio power button for more than two seconds to stop all system features such as: radio, video screen, RSA, DVD and/or CD. While Parental Control is on, a padlock icon displays.

When the radio is turned back on, Parental Control is unlocked.

Before You Drive

The RSE is designed for rear seat passengers only. The driver cannot safely view the video screen while driving and should not try to do so.

In severe or extreme weather conditions the RSE system might not work until the temperature is within the operating range. The operating range for the RSE system is above –4°F (–20°C) or below 140°F (60°C). If the temperature of your vehicle is outside of this range, heat or cool the vehicle until the temperature is within the operating range of the RSE system.

Headphones

The RSE includes two sets of wireless headphones that are only dedicated to this system. These headphones are used to listen to the DVD radio or an auxiliary device connected to the RCA jacks. The wireless headphones have an ON/OFF switch and a volume control.

To use the headphones, turn the switch to ON. An indicator light located on the headphones illuminates. If the light does not illuminate, the batteries might need to be replaced. See “Battery Replacement” later in this section for more information. Switch the headphones to OFF when not in use.

The infrared transmitters are located in the display below the video screen. The headphones shut off automatically to save the battery power if the RSE system and RSA are shut off or if the headphones are out of range of the transmitters for more than three minutes. If you move too far forward or step out of the vehicle, the headphones lose the audio signal.

To adjust the volume on the headphones, use the volume control located on the right side.

Notice: **Do not store the headphones in heat or direct sunlight. This could damage the headphones and repairs will not be covered by your warranty. Storage in extreme cold can weaken the batteries. Keep the headphones stored in a cool, dry place.**

Downloaded from www.Manualslib.com manuals search engine

The foam ear pads attached to the headphones can become worn or damaged if they are not handled or stored properly. If the foam ear pads do become damaged or worn out, the pads can be replaced separately from the headphone set. It is not necessary to replace the complete headphone set. The headphone replacement foam ear pads can be ordered in pairs. See your dealer/retailer for more information.

Battery Replacement

To change the batteries on the headphones, do the following:

1. Turn the screw to loosen the battery door located on the left side of the headphones. Slide the battery door open.
2. Replace the two batteries in the compartment. Make sure that they are installed correctly, using the diagram on the inside of the battery compartment.
3. Replace the battery door and tighten the door screw.

If the headphones are to be stored for a long period of time, remove the batteries and keep them in a cool, dry place.

Audio/Video (A/V) Jacks

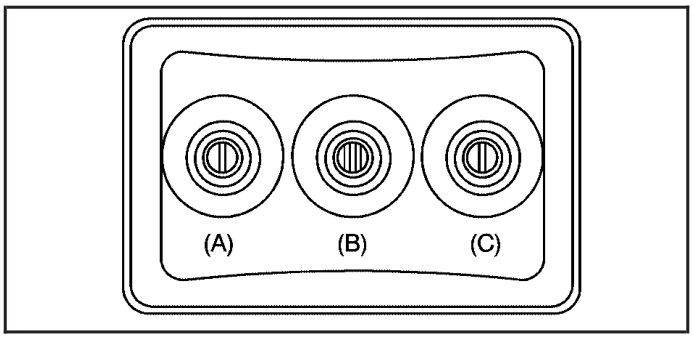

The A/V jacks are located on the rear of the floor console. The A/V jacks allow audio or video signals to be connected from an auxiliary device such as a camcorder or a video game unit to the RSE system. Adapter connectors or cables might be required to connect the auxiliary device to the A/V jacks. Refer to the manufacturer's instructions for proper usage.

The A/V jacks are color coded to match typical home entertainment system equipment. The yellow jack (A) is for the video input. The white jack (B) is for the left audio input. The red jack is (C) for the right audio input.

Power for auxiliary devices is not supplied by the radio system.

Downloaded from www.Manualslib.com manuals search engine

To use the auxiliary inputs of the RSE system, connect an external auxiliary device to the color-coded A/V jacks and turn both the auxiliary device and the video screen power on. If the video screen is in the DVD player mode, pressing the AUX button on the remote control switches the video screen from the DVD player mode to the auxiliary device. The radio can listen to the audio of the connected auxiliary device by sourcing to auxiliary. See *Radio(s) on page 3-71* for more information.

How to Change the RSE Video Screen Settings

The screen display mode (normal, full, and zoom), screen brightness, and setup menu language can be changed from the on screen setup menu. To change any feature, perform the following:

1. Press the ▢ (display menu) button on the remote control.
2. Use the remote control menu ▲, ▼, ◄, ► (navigation) arrows and the ◄┘ (enter) button to use the setup menu.
3. Press the ▢ button again to remove the setup menu from the screen.

Audio Output

Audio from the DVD player or auxiliary inputs may be heard through the following possible sources:

- Wireless Headphones
- Vehicle Speakers
- Vehicle wired headphone jacks on the rear seat audio system, if your vehicle has this feature.

The RSE system always transmits the audio signal to the wireless headphones, if there is audio available. See “Headphones” earlier in this section for more information.

When a device is connected to the radio’s auxiliary input jack, if your vehicle has this feature, or A/V jacks, the rear seat passengers are able to hear audio from the auxiliary device through the wireless or wired headphones. The front seat passengers are able to listen to playback from this device through the vehicle speakers by selecting AUX as the source on the radio.

Downloaded from www.Manualslib.com manuals search engine

Video Screen

The video screen is located in the overhead console.

To use the video screen, do the following:

1. Push the release button located on the overhead console.
2. Move the screen to the desired position.

When the video screen is not in use, push it up into its locked position.

If a DVD is playing and the screen is raised to its locked position, the screen remains on, this is normal, and the DVD continues to play through the previous audio source. Use the remote control ⏻ button or ⏏ the disc to turn off the screen.

The overhead console contains the IR transmitters for the wireless headphones and the IR receivers for the remote control. They are located at the rear of the console.

Notice: **Avoid directly touching the video screen, as damage may occur. See "Cleaning the Video Screen" later in this section for more information.**

Remote Control

To use the remote control, aim it at the transmitter window at the rear of the RSE overhead console and press the desired button. Direct sunlight or very bright light can affect the ability of the RSE transmitter to receive signals from the remote control. If the remote control does not seem to be working, the batteries may need to be replaced. See "Battery Replacement" later in this section. Objects blocking the line of sight can also affect the function of the remote control.

If a CD or DVD is in the Radio DVD slot, the remote control power button can be used to turn on the video screen display and start the disc. The radio can also turn on the video screen display. See *Radio(s) on page 3-71* for more information.

Notice: **Storing the remote control in a hot area or in direct sunlight can damage it, and the repairs will not be covered by your warranty. Storage in extreme cold can weaken the batteries. Keep the remote control stored in a cool, dry place.**

Downloaded from www.Manualslib.com manuals search engine

Remote Control Buttons

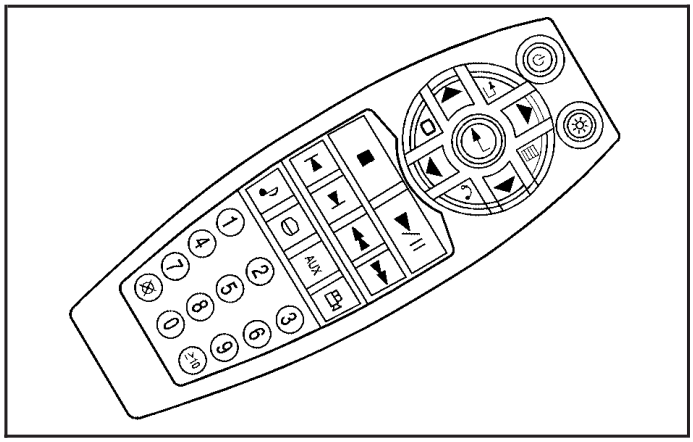

⏻ **(Power):** Press this button to turn the video screen on and off.

☼ **(Illumination):** Press this button to turn the remote control backlight on. The backlight automatically times out after 7 to 10 seconds if no other button is pressed while the backlight is on.

(Title): Press this button to return the DVD to the main menu of the DVD. This function varies for each disc.

(Main Menu): Press this button to access the DVD menu. The DVD menu is different on every DVD. Use the navigation arrows to move the cursor around the DVD menu. After making a selection press the enter button. This button only operates when using a DVD.

▲, ▼, ◄, ► **(Menu Navigation Arrows):** Use the navigation arrows to navigate through a menu.

(Enter): Press this button to select the choice that is highlighted in any menu.

(Display Menu): Press this button to adjust the brightness, screen display mode (normal, full, or zoom), and display the language menu.

(Return): Press this button to exit the current active menu and return to the previous menu. This button operates only when the display menu or a DVD menu is active.

■ **(Stop):** Press this button to stop playing, rewinding, or fast forwarding a DVD. Press this button twice to return to the beginning of the DVD.

►‖ **(Play/Pause):** Press this button to start playing a DVD. Press this button while a DVD is playing to pause it. Press it again to continue playing the DVD.

Downloaded from www.Manualslib.com manuals search engine

When the DVD is playing, depending on the radio, you might be able to do slow play by pressing the play/pause button then pressing the fast forward button. The DVD continues playing in a slow play mode. You can also, depending on the radio, perform reverse slow play by pressing the play/pause button and then pressing the fast reverse button. To cancel slow play mode, press this button.

(Previous Track/Chapter): Press this button to return to the start of the current track or chapter. Press this button again to go to the previous track or chapter. This button might not work when the DVD is playing the copyright information or the previews.

(Next Track/Chapter): Press this button to go to the beginning of the next chapter or track. This button might not work when the DVD is playing the copyright information or the previews.

(Fast Reverse): Press this button to fast reverse the DVD or CD. To stop fast reversing a DVD video, press the play/pause button. To stop fast reversing a DVD audio or CD, release the fast reverse button. This button might not work when the DVD is playing the copyright information or the previews.

(Fast Forward): Press this button to fast forward the DVD or CD. To stop fast forwarding a DVD video, press the play/pause button. To stop fast forwarding a DVD audio or CD, release the fast forward button. This button might not work when the DVD is playing the copyright information or the previews.

(Audio): Press this button to change audio tracks on DVDs that have this feature when the DVD is playing. The format and content of this function vary for each disc.

(Subtitles): Press this button to turn ON/OFF subtitles and to move through subtitle options when a DVD is playing. The format and content of this function vary for each disc.

AUX (Auxiliary): Press this button to switch the system between the DVD player and an auxiliary source.

(Camera): Press this button to change camera angles on DVDs that have this feature when a DVD is playing. The format and content of this function vary for each disc.

1 through 0 (Numeric Keypad): The numeric keypad provides the capability of direct chapter or track number selection.

Downloaded from www.Manualslib.com manuals search engine

⊗ **(Clear):** Press this button within three seconds after inputting a numeric selection, to clear all numeric inputs.

≧ **10 (Double Digit Entries):** Press this button to select chapter or track numbers greater than 9. Press this button before inputting the number.

If the remote control becomes lost or damaged, a new universal remote control can be purchased. If this happens, make sure the universal remote control uses a code set of Toshiba®.

Battery Replacement

To change the remote control batteries, do the following:

1. Slide the rear cover back on the remote control.
2. Replace the two batteries in the compartment. Make sure that they are installed correctly, using the diagram on the inside of the battery compartment.
3. Replace the battery cover.

If the remote control is to be stored for a long period of time, remove the batteries and keep them in a cool, dry place.

Problem	Recommended Action
No power.	The ignition might not be turned ON/RUN or in ACC/ACCESSORY.
The picture does not fill the screen. There are black borders on the top and bottom or on both sides or it looks stretched out.	Check the display mode settings in the setup menu by pressing the display menu button on the remote control.
In auxiliary mode, the picture moves or scrolls.	Check the auxiliary input connections at both devices.
The remote control does not work.	Check to make sure there is no obstruction between the remote control and the transmitter window. Check the batteries to make sure they are not dead or installed incorrectly.
After stopping the player, I push Play but sometimes the DVD starts where I left off and sometimes at the beginning.	If the stop button was pressed one time, the DVD player resumes playing where the DVD was stopped. If the stop button was pressed two times the DVD player begins to play from the beginning of the DVD.

Downloaded from www.Manualslib.com manuals search engine

The auxiliary source is running but there is no picture or sound.	Check that the RSE video screen is in the auxiliary source mode. Check the auxiliary input connections at both devices.
Sometimes the wireless headphone audio cuts out or buzzes.	Check for obstructions, low batteries, reception range, and interference from cellular telephone towers or by using your cellular telephone in the vehicle. Check that the headphones are on correctly using the L (left) and R (right) on the headphones.
I lost the remote and/or the headphones.	See your dealer/retailer for assistance.
The DVD is playing, but there is no picture or sound.	Check that the RSE video screen is sourced to the DVD player.

DVD Display Error Messages

The DVD display error message depends on which radio you have. The video screen can display one of the following:

Disc Load/Eject Error: This message displays when there are disc load or eject problems.

Disc Format Error: This message displays, if the disc is inserted with the disc label wrong side up, or if the disc is damaged.

Disc Region Error: This message displays, if the disc is not from a correct region.

No Disc Inserted: This message displays, if no disc is present when the ⏏ button is pressed on the radio.

DVD Distortion

Video distortion may occur when operating cellular phones, scanners, CB radios, Global Position Systems (GPS)*, two-way radios, mobile fax, or walkie talkies.

It may be necessary to turn off the DVD player when operating one of these devices in or near the vehicle.

*Excludes the OnStar® System.

Downloaded from www.Manualslib.com manuals search engine

Cleaning the RSE Overhead Console

When cleaning the RSE overhead console surface, use only a clean cloth dampened with clean water.

Cleaning the Video Screen

When cleaning the video screen, use only a clean cloth dampened with clean water. Use care when directly touching or cleaning the screen, as damage can result.

Theft-Deterrent Feature

THEFTLOCK® is designed to discourage theft of your vehicle's radio. It works by using a secret code to disable all radio functions when battery power is removed and the radio is placed in a different vehicle. This feature requires no user input to be activated. The radio is automatically armed when it is put into the vehicle for the first time.

If THEFTLOCK is activated, the radio does not operate if stolen. The radio displays LOCKED. If this occurs, the radio needs to be returned to your dealer/retailer.

Audio Steering Wheel Controls

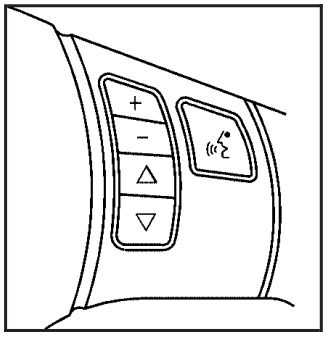

Vehicles with audio steering wheel controls may be different depending on your vehicle's options. Some audio controls can be adjusted at the steering wheel. They include the following:

+ – (Volume): Press the plus or minus volume buttons to increase or to decrease the radio volume.

▽△ **(Next/Previous):** Press the arrows to go to the next or to the previous radio station stored as a favorite.

When a CD is playing, press the arrows to go to the next or to the previous track.

If your vehicle has OnStar®, press the down arrow to end an OnStar® Hands-Free Call or the Advisor Playback. It also cancels or hangs-up an incoming Hands-Free Call.

Downloaded from www.Manualslib.com manuals search engine

(Mute/Voice Recognition): Press and release to silence the system. Press and release again, to turn the sound on.

If your vehicle has the navigation system, press and hold for longer than one second to initiate voice recognition. See “Voice Recognition” in the Navigation System manual for more information.

If your vehicle has OnStar®, press and hold for longer than one second to interact with the OnStar® system. If your vehicle also has the Navigation System, press this button to initiate voice recognition and say “OnStar” to enter OnStar® mode. See the *OnStar® System on page 2-39* in this manual for more information.

Radio Reception

Frequency interference and static can occur during normal radio reception if items such as cell phone chargers, vehicle convenience accessories, and external electronic devices are plugged into the accessory power outlet. If there is interference or static, unplug the item from the accessory power outlet.

AM

The range for most AM stations is greater than for FM, especially at night. The longer range can cause station frequencies to interfere with each other. For better radio reception, most AM radio stations boost the power levels during the day, and then reduce these levels during the night. Static can also occur when things like storms and power lines interfere with radio reception. When this happens, try reducing the treble on your radio.

Downloaded from www.Manualslib.com manuals search engine

FM Stereo

FM stereo gives the best sound, but FM signals only reach about 10 to 40 miles (16 to 65 km). Tall buildings or hills can interfere with FM signals, causing the sound to fade in and out.

XM™ Satellite Radio Service

XM™ Satellite Radio Service gives digital radio reception from coast-to-coast in the 48 contiguous United States, and in Canada. Just as with FM, tall buildings or hills can interfere with satellite radio signals, causing the sound to fade in and out. In addition, traveling or standing under heavy foliage, bridges, garages, or through tunnels could cause loss of the XM signal for a period of time. The radio may display NO XM SIGNAL to indicate interference.

Multi-Band Antenna

The multi-band antenna is located on the roof of your vehicle. This type of antenna is used with the AM/FM radio, as well as OnStar® and the XM™ Satellite Radio Service System, if your vehicle has these features. Keep this antenna clear of snow and ice build up for clear radio reception. If your vehicle has a sunroof, the performance of the radio system may be affected if the sunroof is open. Loading items onto the roof of your vehicle can interfere with the performance of the radio system and, if your vehicle has this feature, OnStar®. Make sure the multi-band antenna is not obstructed.

Downloaded from www.Manualslib.com manuals search engine

Section 4 Driving Your Vehicle

Your Driving, the Road, and Your Vehicle 4-2
Defensive Driving 4-2
Drunk Driving 4-3
Control of a Vehicle 4-4
Braking 4-4
Antilock Brake System (ABS) 4-5
Braking in Emergencies 4-6
Traction Control System (TCS) 4-6
StabiliTrak® System 4-7
All-Wheel Drive (AWD) System 4-8
Steering 4-9
Off-Road Recovery 4-12
Passing 4-12
Loss of Control 4-12
Driving at Night 4-14
Driving in Rain and on Wet Roads 4-15
Before Leaving on a Long Trip 4-16
Highway Hypnosis 4-16
Hill and Mountain Roads 4-17
Winter Driving 4-18
If Your Vehicle is Stuck in Sand, Mud, Ice, or Snow 4-21
Rocking Your Vehicle to Get It Out 4-22
Loading Your Vehicle 4-22
Towing 4-27
Towing Your Vehicle 4-27
Recreational Vehicle Towing 4-27
Towing a Trailer 4-32

Downloaded from www.Manualslib.com manuals search engine

Your Driving, the Road, and Your Vehicle

Defensive Driving

Defensive driving means “always expect the unexpected.” The first step in driving defensively is to wear your safety belt — See *Safety Belts: They Are for Everyone on page 1-12*.

⚠ CAUTION:

Assume that other road users (pedestrians, bicyclists, and other drivers) are going to be careless and make mistakes. Anticipate what they might do and be ready. In addition:

- **Allow enough following distance between you and the driver in front of you.**
- **Focus on the task of driving.**

Driver distraction can cause collisions resulting in injury or possible death. These simple defensive driving techniques could save your life.

Downloaded from www.Manualslib.com manuals search engine

Drunk Driving

⚠ CAUTION:

Drinking and then driving is very dangerous. Your reflexes, perceptions, attentiveness, and judgment can be affected by even a small amount of alcohol. You can have a serious — or even fatal — collision if you drive after drinking. Do not drink and drive or ride with a driver who has been drinking. Ride home in a cab; or if you are with a group, designate a driver who will not drink.

Death and injury associated with drinking and driving is a global tragedy.

Alcohol affects four things that anyone needs to drive a vehicle: judgment, muscular coordination, vision, and attentiveness.

Police records show that almost 40 percent of all motor vehicle-related deaths involve alcohol. In most cases, these deaths are the result of someone who was drinking and driving. In recent years, more than 17,000 annual motor vehicle-related deaths have been associated with the use of alcohol, with about 250,000 people injured.

For persons under 21, it is against the law in every U.S. state to drink alcohol. There are good medical, psychological, and developmental reasons for these laws.

The obvious way to eliminate the leading highway safety problem is for people never to drink alcohol and then drive.

Medical research shows that alcohol in a person's system can make crash injuries worse, especially injuries to the brain, spinal cord, or heart. This means that when anyone who has been drinking — driver or passenger — is in a crash, that person's chance of being killed or permanently disabled is higher than if the person had not been drinking.

Downloaded from www.Manualslib.com manuals search engine

Control of a Vehicle

The following three systems help to control your vehicle while driving — brakes, steering, and accelerator. At times, as when driving on snow or ice, it is easy to ask more of those control systems than the tires and road can provide. Meaning, you can lose control of your vehicle. See *Traction Control System (TCS) on page 4-6*.

Adding non-dealer/non-retailer accessories can affect your vehicle's performance. See *Accessories and Modifications on page 5-3*.

Braking

See *Brake System Warning Light on page 3-33*.

Braking action involves perception time and reaction time. First, you have to decide to push on the brake pedal. That is perception time. Then you have to bring up your foot and do it. That is reaction time.

Average reaction time is about three-fourths of a second. But that is only an average. It might be less with one driver and as long as two or three seconds or more with another. Age, physical condition, alertness, coordination, and eyesight all play a part. So do alcohol, drugs, and frustration. But even in three-fourths of a second, a vehicle moving at 60 mph (100 km/h) travels 66 feet (20 m). That could be a lot of distance in an emergency, so keeping enough space between your vehicle and others is important.

And, of course, actual stopping distances vary greatly with the surface of the road, whether it is pavement or gravel; the condition of the road, whether it is wet, dry, or icy; tire tread; the condition of the brakes; the weight of the vehicle; and the amount of brake force applied.

Avoid needless heavy braking. Some people drive in spurts — heavy acceleration followed by heavy braking — rather than keeping pace with traffic. This is a mistake. The brakes might not have time to cool between hard stops. The brakes will wear out much faster if you do a lot of heavy braking. If you keep pace with the traffic and allow realistic following distances, you will eliminate a lot of unnecessary braking. That means better braking and longer brake life.

If your vehicle's engine ever stops while you are driving, brake normally but do not pump the brakes. If you do, the pedal could get harder to push down. If the engine stops, you will still have some power brake assist. But you will use it when you brake. Once the power assist is used up, it can take longer to stop and the brake pedal will be harder to push.

Adding non-dealer/non-retailer accessories can affect your vehicle's performance. See *Accessories and Modifications on page 5-3*.

Downloaded from www.Manualslib.com manuals search engine

Antilock Brake System (ABS)

Your vehicle has the Antilock Brake System (ABS), an advanced electronic braking system that will help prevent a braking skid.

When you start the engine and begin to drive away, ABS will check itself. You might hear a momentary motor or clicking noise while this test is going on, and you might even notice that the brake pedal moves a little. This is normal.

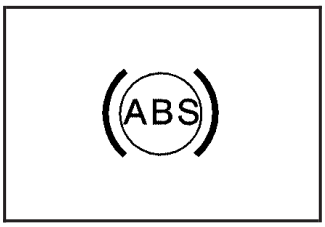

If there is a problem with ABS, this warning light will stay on. See *Antilock Brake System Warning Light on page 3-34*.

Let us say the road is wet and you are driving safely. Suddenly, an animal jumps out in front of you. You slam on the brakes and continue braking. Here is what happens with ABS:

A computer senses that wheels are slowing down. If one of the wheels is about to stop rolling, the computer will separately work the brakes at each wheel.

ABS can change the brake pressure faster than any driver could. The computer is programmed to make the most of available tire and road conditions. This can help you steer around the obstacle while braking hard.

As you brake, the computer keeps receiving updates on wheel speed and controls braking pressure accordingly.

Remember: ABS does not change the time you need to get your foot up to the brake pedal or always decrease stopping distance. If you get too close to the vehicle in front of you, you will not have time to apply the brakes if that vehicle suddenly slows or stops. Always leave enough room up ahead to stop, even though you have ABS.

Using ABS

Do not pump the brakes. Just hold the brake pedal down firmly and let antilock work for you. You might hear the antilock pump or motor operate, and feel the brake pedal pulsate, but this is normal.

Downloaded from www.Manualslib.com manuals search engine

Braking in Emergencies

With ABS, you can steer and brake at the same time. In many emergencies, steering can help you more than even the very best braking.

Panic Brake Assist

Your vehicle has a Panic Brake Assist feature designed to assist the driver in stopping or decreasing vehicle speed in emergency driving conditions. This feature uses the Electronic Stability Control (ESC) hydraulic brake control module to supplement the power brake system under conditions where the driver has quickly and forcefully applied the brake pedal in an attempt to quickly stop or slow down the vehicle. The ESC hydraulic brake control module increases brake pressure at each corner of the vehicle until the Antilock Brake System (ABS) activates. Minor brake pedal pulsations or pedal movement during this time is normal and the driver should continue to apply the brake pedal as the driving situation dictates. The Panic Brake Assist feature will automatically disengage when the brake pedal is released or brake pedal pressure is quickly decreased.

Traction Control System (TCS)

Your vehicle has a traction control system that limits wheel spin. This is especially useful in slippery road conditions. The system operates only if it senses that one or more of the wheels are spinning or beginning to lose traction. When this happens, the system works the brakes and reduces engine power to limit wheel spin.

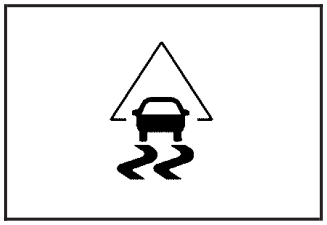

This light flashes while the traction control system is limiting wheel spin.

You may feel or hear the system working, but this is normal. This light may also come on after extended heavy braking indicating the brakes have become too hot to limit wheel spin.

Downloaded from www.Manualslib.com manuals search engine

The traction control system automatically comes on whenever the vehicle is started. To limit wheel spin, especially in slippery road conditions, you should always leave the system on. But you can turn the traction control system off if you ever need to. You should turn the system off if your vehicle ever gets stuck in sand, mud, ice, or snow and rocking the vehicle is required. See *Rocking Your Vehicle to Get It Out on page 4-22*.

The traction control system can be turned off by pressing the traction control button, located next to the gear shift lever.

When the traction control system is turned off, the traction control warning light on the instrument panel cluster comes on and TRACTION CONTROL OFF briefly displays.

The traction control system can be activated again by pressing the traction control button. While the traction control system is activated, the traction control system warning light on the instrument panel cluster comes on and TRACTION CONTROL ON briefly displays.

If the system is limiting wheel spin when you press the button, the traction control off light appears on the instrument panel cluster. The system will not turn off until there is no longer a current need to limit wheel spin. Turn the system back on by pressing the button again. If the light does not come on, traction control might not be working and your vehicle should be serviced by a dealer/retailer.

Adding non-dealer/non-retailer accessories can affect your vehicle's performance. See *Accessories and Modifications on page 5-3* for more information.

StabiliTrak® System

Your vehicle has this feature. The StabiliTrak® system is an advanced computer controlled system that helps the driver maintain directional control of the vehicle in difficult driving conditions. This is accomplished by selectively applying any one of the vehicle's brakes and reducing engine power. The StabiliTrak® system comes on automatically whenever you start your vehicle.

Downloaded from www.Manualslib.com manuals search engine

The STABILITRAK NOT READY message may be displayed in the DIC and the traction control system and StabiliTrak® warning light on the instrument panel cluster will be on after first driving the vehicle and exceeding 30 mph 48 (km/h) for 30 seconds. The StabiliTrak® system is off until the light has turned off. This could take up to 15 minutes. See *DIC Warnings and Messages on page 3-52* for more information.

The traction control system and StabiliTrak® warning light on the instrument panel cluster will flash when the system is operating. You may also feel or hear the system working. This is normal. This light may also come on after extended heavy braking indicating the brakes have become too hot to limit wheel spin.

StabiliTrak® can be turned off using the traction control button. To disable StabiliTrak®, press and hold the traction control button for five seconds. StabiliTrak® can be activated again by pressing the traction control button.

The SERVICE STABILITRAK message will be displayed and the traction control system and StabiliTrak® warning light on the instrument panel cluster will come on if there is a problem with the system. When this light and the SERVICE STABILITRAK message are on, the system is not operational. Adjust your driving accordingly.

All-Wheel Drive (AWD) System

If your vehicle has all-wheel drive (AWD), the AWD system operates automatically without any action required by the driver. If the front drive wheels begin to slip, the rear wheels will automatically begin to drive the vehicle as required. Torque is also applied to the rear wheels during launches. There may be a slight engagement noise during hard use but this is normal.

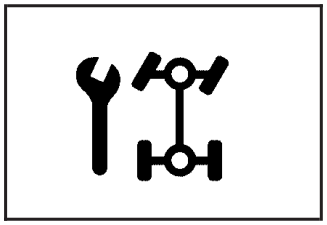

This light is located on the instrument panel cluster.

This light and the SERVICE ALL WHEEL DRIVE message in the DIC will come on and stay on to indicate there may be a problem with the drive system and service is required.

See *Service All-Wheel Drive Light on page 3-42* and *DIC Warnings and Messages on page 3-52* for more information.

Downloaded from www.Manualslib.com manuals search engine

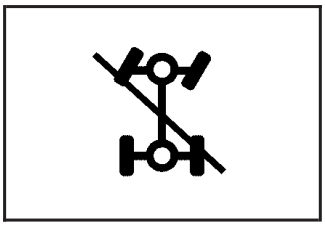

This light will come on along with the ALL WHEEL DRIVE OFF message when the rear drive system is overheating.

This light will turn off when the rear drive system cools down. If this light stays on, it must be reset. To reset the light, turn the ignition off and then back on again. If the light stays on, see your dealer/retailer for service.

See *DIC Warnings and Messages on page 3-52* for more information.

Steering

Electric Power Steering (3.4L V6 Engine)

If the engine stalls while you are driving, the power steering assist system will continue to operate until you are able to stop your vehicle. If you lose power steering assist because the electric power steering system is not functioning, you can steer, but it will take more effort.

If you turn the steering wheel in either direction several times until it stops, or hold the steering wheel in the stopped position for an extended amount of time, you may notice a reduced amount of power steering assist. The normal amount of power steering assist should return shortly after a few normal steering movements.

The electric power steering system does not require regular maintenance. If you suspect steering system problems, such as abnormally high steering effort for a prolonged period of time, contact your dealer/retailer for service repairs.

Hydraulic Power Steering (3.6L V6 Engine)

If you lose power steering assist because the engine stops or the power steering system is not functioning, you can steer, but it will take much more effort.

Downloaded from www.Manualslib.com manuals search engine

Steering Tips

It is important to take curves at a reasonable speed.

A lot of the “driver lost control” accidents mentioned on the news happen on curves. Here is why:

Experienced driver or beginner, each of us is subject to the same laws of physics when driving on curves. The traction of the tires against the road surface makes it possible for the vehicle to change its path when you turn the front wheels. If there is no traction, inertia will keep the vehicle going in the same direction. If you have ever tried to steer a vehicle on wet ice, you will understand this.

The traction you can get in a curve depends on the condition of the tires and the road surface, the angle at which the curve is banked, and your speed. While you are in a curve, speed is the one factor you can control.

Suppose you are steering through a sharp curve. Then you suddenly accelerate. Both control systems — steering and acceleration — have to do their work where the tires meet the road. Adding the sudden acceleration can demand too much of those places. You can lose control. See *Traction Control System (TCS) on page 4-6* and *StabiliTrak® System on page 4-7*.

What should you do if this ever happens? Ease up on the brake or accelerator pedal, steer the vehicle the way you want it to go, and slow down.

Speed limit signs near curves warn that you should adjust your speed. Of course, the posted speeds are based on good weather and road conditions. Under less favorable conditions you will want to go slower.

If you need to reduce your speed as you approach a curve, do it before you enter the curve, while the front wheels are straight ahead.

Try to adjust your speed so you can drive through the curve. Maintain a reasonable, steady speed. Wait to accelerate until you are out of the curve, and then accelerate gently into the straightaway.

Adding non-dealer/non-retailer accessories can affect your vehicle’s performance. See *Accessories and Modifications on page 5-3*.

Downloaded from www.Manualslib.com manuals search engine

Steering in Emergencies

There are times when steering can be more effective than braking. For example, you come over a hill and find a truck stopped in your lane, or a car suddenly pulls out from nowhere, or a child darts out from between parked cars and stops right in front of you. You can avoid these problems by braking — if you can stop in time. But sometimes you cannot; there is not room. That is the time for evasive action — steering around the problem.

Your vehicle can perform very well in emergencies like these. First apply the brakes. See *Braking on page 4-4*. It is better to remove as much speed as you can from a possible collision. Then steer around the problem, to the left or right depending on the space available.

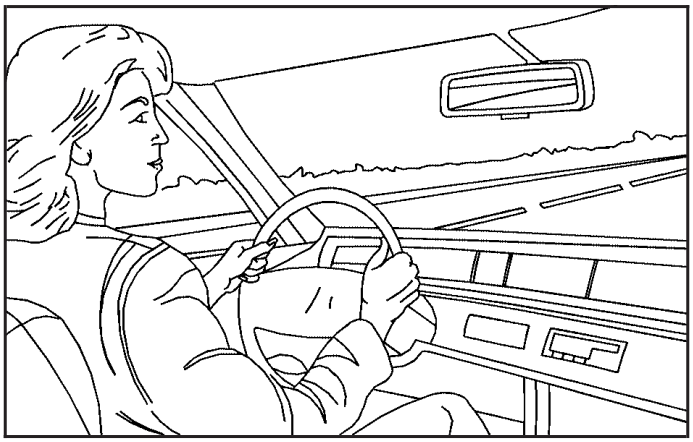

An emergency like this requires close attention and a quick decision. If you are holding the steering wheel at the recommended 9 and 3 o'clock positions, you can turn it a full 180 degrees very quickly without removing either hand. But you have to act fast, steer quickly, and just as quickly straighten the wheel once you have avoided the object.

The fact that such emergency situations are always possible is a good reason to practice defensive driving at all times and wear safety belts properly.

Downloaded from www.Manualslib.com manuals search engine

Off-Road Recovery

You may find that your vehicle's right wheels have dropped off the edge of a road onto the shoulder while you are driving.

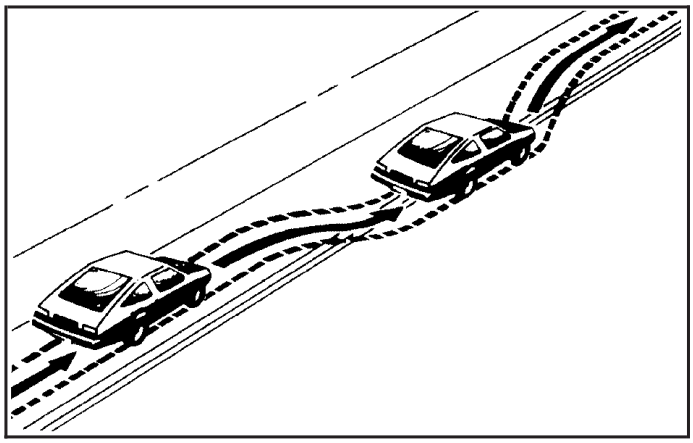

If the level of the shoulder is only slightly below the pavement, recovery should be fairly easy. Ease off the accelerator and then, if there is nothing in the way, steer so that your vehicle straddles the edge of the pavement. You can turn the steering wheel up to one-quarter turn until the right front tire contacts the pavement edge. Then turn the steering wheel to go straight down the roadway.

Passing

Passing another vehicle on a two-lane road can be dangerous. To reduce the risk of danger while passing, we suggest the following tips:

- Look down the road, to the sides, and to crossroads for situations that might affect a successful pass. If in doubt, wait.
- Watch for traffic signs, pavement markings, and lines that could indicate a turn or an intersection. Never cross a solid or double-solid line on your side of the lane.
- Do not get too close to the vehicle you want to pass. Doing so can reduce your visibility.
- Wait your turn to pass a slow vehicle.
- When you are being passed, ease to the right.

Loss of Control

Let us review what driving experts say about what happens when the three control systems — brakes, steering, and acceleration — do not have enough friction where the tires meet the road to do what the driver has asked.

In any emergency, do not give up. Keep trying to steer and constantly seek an escape route or area of less danger.

Downloaded from www.Manualslib.com manuals search engine

Skidding

In a skid, a driver can lose control of the vehicle. Defensive drivers avoid most skids by taking reasonable care suited to existing conditions, and by not overdriving those conditions. But skids are always possible.

The three types of skids correspond to your vehicle's three control systems. In the braking skid, the wheels are not rolling. In the steering or cornering skid, too much speed or steering in a curve causes tires to slip and lose cornering force. And in the acceleration skid, too much throttle causes the driving wheels to spin.

A cornering skid is best handled by easing your foot off the accelerator pedal.

Remember: Any traction control system helps avoid only the acceleration skid. If your traction system is off, then an acceleration skid is also best handled by easing your foot off the accelerator pedal. See *Traction Control System (TCS) on page 4-6* and *StabiliTrak® System on page 4-7*.

If your vehicle starts to slide, ease your foot off the accelerator pedal and quickly steer the way you want the vehicle to go. If you start steering quickly enough, your vehicle may straighten out. Always be ready for a second skid if it occurs.

Of course, traction is reduced when water, snow, ice, gravel, or other material is on the road. For safety, you will want to slow down and adjust your driving to these conditions. It is important to slow down on slippery surfaces because stopping distance will be longer and vehicle control more limited.

While driving on a surface with reduced traction, try your best to avoid sudden steering, acceleration, or braking, including reducing vehicle speed by shifting to a lower gear. Any sudden changes could cause the tires to slide. You may not realize the surface is slippery until your vehicle is skidding. Learn to recognize warning clues — such as enough water, ice, or packed snow on the road to make a mirrored surface — and slow down when you have any doubt.

Remember: Any Antilock Brake System (ABS) helps avoid only the braking skid.

Downloaded from www.Manualslib.com manuals search engine

Driving at Night

Night driving is more dangerous than day driving because some drivers are likely to be impaired — by alcohol or drugs, with night vision problems, or by fatigue.

Night driving tips include:

- Drive defensively.
- Do not drink and drive.
- Reduce headlamp glare by adjusting the inside rearview mirror.
- Slow down and keep more space between you and other vehicles because your headlamps can only light up so much road ahead.
- Watch for animals.
- When tired, pull off the road.
- Do not wear sunglasses.
- Avoid staring directly into approaching headlamps.
- Keep the windshield and all glass on your vehicle clean — inside and out.
- Keep your eyes moving, especially during turns or curves.

No one can see as well at night as in the daytime. But, as we get older, these differences increase. A 50-year-old driver might need at least twice as much light to see the same thing at night as a 20-year-old.

Downloaded from www.Manualslib.com manuals search engine

Driving in Rain and on Wet Roads

Rain and wet roads can reduce vehicle traction and affect your ability to stop and accelerate. Always drive slower in these types of driving conditions and avoid driving through large puddles and deep-standing or flowing water.

⚠ CAUTION:

Wet brakes can cause crashes. They might not work as well in a quick stop and could cause pulling to one side. You could lose control of the vehicle.

After driving through a large puddle of water or a car/vehicle wash, lightly apply the brake pedal until the brakes work normally.

CAUTION: (Continued)

CAUTION: (Continued)

Flowing or rushing water creates strong forces. Driving through flowing water could cause your vehicle to be carried away. If this happens, you and other vehicle occupants could drown. Do not ignore police warnings and be very cautious about trying to drive through flowing water.

Hydroplaning

Hydroplaning is dangerous. Water can build up under your vehicle's tires so they actually ride on the water. This can happen if the road is wet enough and you are going fast enough. When your vehicle is hydroplaning, it has little or no contact with the road.

There is no hard and fast rule about hydroplaning. The best advice is to slow down when the road is wet.

Downloaded from www.Manualslib.com manuals search engine

Other Rainy Weather Tips

Besides slowing down, other wet weather driving tips include:

- Allow extra following distance.
- Pass with caution.
- Keep windshield wiping equipment in good shape.
- Keep the windshield washer fluid reservoir filled.
- Have good tires with proper tread depth. See *Tires on page 5-52*.

Before Leaving on a Long Trip

To prepare your vehicle for a long trip, consider having it serviced by your dealer/retailer before departing.

Things to check on your own include:

- *Windshield Washer Fluid:* Reservoir full? Windows clean — inside and outside?
- *Wiper Blades:* In good shape?
- *Fuel, Engine Oil, Other Fluids:* All levels checked?
- *Lamps:* Do they all work and are lenses clean?
- *Tires:* Are treads good? Are tires inflated to recommended pressure?
- *Weather and Maps:* Safe to travel? Have up-to-date maps?

Highway Hypnosis

Always be alert and pay attention to your surroundings while driving. If you become tired or sleepy, find a safe place to park your vehicle and rest.

Other driving tips include:

- Keep the vehicle well ventilated.
- Keep interior temperature cool.
- Keep your eyes moving — scan the road ahead and to the sides.
- Check the rearview mirror and vehicle instruments often.

Downloaded from www.Manualslib.com manuals search engine

Hill and Mountain Roads

Driving on steep hills or through mountains is different than driving on flat or rolling terrain. Tips for driving in these conditions include:

- Keep your vehicle serviced and in good shape.
- Check all fluid levels and brakes, tires, cooling system, and transmission.
- Going down steep or long hills, shift to a lower gear.

⚠ CAUTION:

If you do not shift down, the brakes could get so hot that they would not work well. You would then have poor braking or even none going down a hill. You could crash. Shift down to let the engine assist the brakes on a steep downhill slope.

⚠ CAUTION:

Coasting downhill in NEUTRAL (N) or with the ignition off is dangerous. The brakes will have to do all the work of slowing down and they could get so hot that they would not work well. You would then have poor braking or even none going down a hill. You could crash. Always have the engine running and your vehicle in gear when you go downhill.

- Stay in your own lane. Do not swing wide or cut across the center of the road. Drive at speeds that let you stay in your own lane.
- Top of hills: Be alert — something could be in your lane (stalled car, accident).
- Pay attention to special road signs (falling rocks area, winding roads, long grades, passing or no-passing zones) and take appropriate action.

Downloaded from www.Manualslib.com manuals search engine

Winter Driving

Here are some tips for winter driving:

- Have your vehicle in good shape for winter.
- You might want to put winter emergency supplies in your vehicle.

Include an ice scraper, a small brush or broom, a supply of windshield washer fluid, a rag, some winter outer clothing, a small shovel, a flashlight, a red cloth, and a couple of reflective warning triangles. And, if you will be driving under severe conditions, include a small bag of sand, a piece of old carpet, or a couple of burlap bags to help provide traction. Be sure you properly secure these items in your vehicle.

Also see *Tires on page 5-52*.

Driving on Snow or Ice

Most of the time, those places where the tires meet the road probably have good traction.

However, if there is snow or ice between the tires and the road, you can have a very slippery situation. You have a lot less traction, or grip, and need to be very careful.

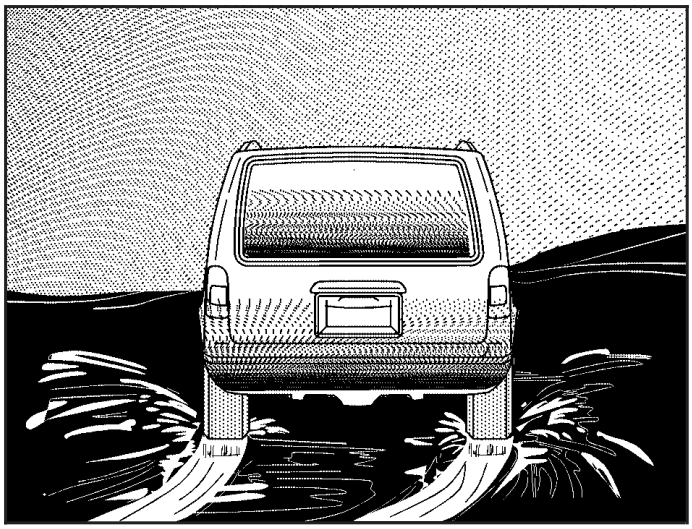

What is the worst time for this? Wet ice. Very cold snow or ice can be slick and hard to drive on. But wet ice can be even more trouble because it can offer the least traction of all. You can get wet ice when it is about freezing, 32°F (0°C), and freezing rain begins to fall. Try to avoid driving on wet ice until salt and sand crews can get there.

Downloaded from www.Manualslib.com manuals search engine

Whatever the condition — smooth ice, packed, blowing, or loose snow — drive with caution.

Traction control improves your ability to accelerate when driving on a slippery road. But you can turn the traction system off if you ever need to. You should turn the traction system off if your vehicle ever gets stuck in sand, mud, ice, or snow. See *If Your Vehicle is Stuck in Sand, Mud, Ice, or Snow on page 4-21*. Even though your vehicle has a traction system, slow down and adjust your driving to the road conditions. Under certain conditions, you might want to turn the traction system off, such as when driving through deep snow and loose gravel, to help maintain vehicle motion at lower speeds. See *Traction Control System (TCS) on page 4-6* and *StabiliTrak® System on page 4-7*.

The Antilock Brake System (ABS) improves your vehicle's stability when you make a hard stop on a slippery road. Even though you have ABS, begin stopping sooner than you would on dry pavement. See *Antilock Brake System (ABS) on page 4-5*.

- Allow greater following distance on any slippery road.
- Watch for slippery spots. The road might be fine until you hit a spot that is covered with ice. On an otherwise clear road, ice patches can appear in shaded areas where the sun cannot reach, such as around clumps of trees, behind buildings, or under bridges. Sometimes the surface of a curve or an overpass can remain icy when the surrounding roads are clear. If you see a patch of ice ahead of you, brake before you are on it. Try not to brake while you are actually on the ice, and avoid sudden steering maneuvers.

If You Are Caught in a Blizzard

If you are stopped by heavy snow, you could be in a serious situation. You should probably stay with your vehicle unless you know for sure that you are near help and you can hike through the snow. Here are some things to do to summon help and keep yourself and your passengers safe:

- Turn on the hazard warning flashers.
- Tie a red cloth to your vehicle to alert police that you have been stopped by the snow.
- Put on extra clothing or wrap a blanket around you. If you do not have blankets or extra clothing, make body insulators from newspapers, burlap bags, rags, floor mats — anything you can wrap around yourself or tuck under your clothing to keep warm.

Downloaded from www.Manualslib.com manuals search engine

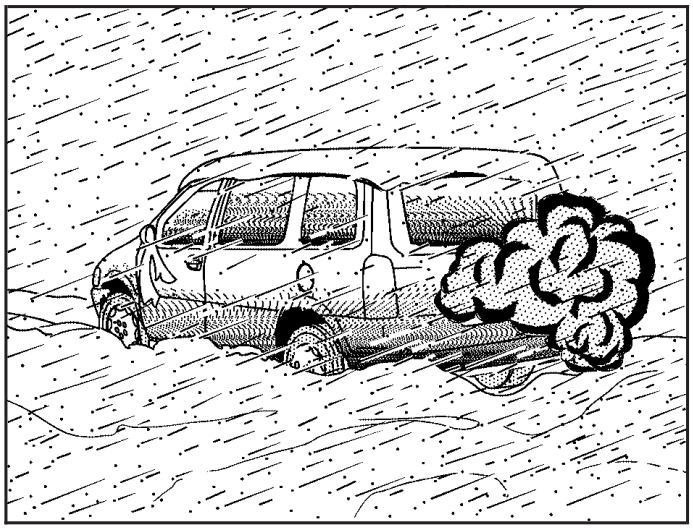

You can run the engine to keep warm, but be careful.

⚠ CAUTION:

Snow can trap exhaust gases under your vehicle. This can cause deadly CO (carbon monoxide) gas to get inside. CO could overcome you and kill you. You cannot see it or smell it, so you might not know it is in your vehicle. Clear away snow from around the base of your vehicle, especially any that is blocking the exhaust pipe. And check around again from time to time to be sure snow does not collect there.

Open a window just a little on the side of the vehicle that is away from the wind. This will help keep CO out.

Run your engine only as long as you must. This saves fuel. When you run the engine, make it go a little faster than just idle. That is, push the accelerator slightly. This uses less fuel for the heat that you get and it keeps the battery charged. You will need a well-charged battery to restart the vehicle, and possibly for signaling later on with the headlamps. Let the heater run for a while.

Downloaded from www.Manualslib.com manuals search engine

Then, shut the engine off and close the window almost all the way to preserve the heat. Start the engine again and repeat this only when you feel really uncomfortable from the cold. But do it as little as possible. Preserve the fuel as long as you can. To help keep warm, you can get out of the vehicle and do some fairly vigorous exercises every half hour or so until help comes.

If Your Vehicle is Stuck in Sand, Mud, Ice, or Snow

Slowly and cautiously spin the wheels to free your vehicle when stuck in sand, mud, ice, or snow. See *Rocking Your Vehicle to Get It Out on page 4-22*.

If your vehicle has a traction system, it can often help to free a stuck vehicle. Refer to your vehicle's traction system in the Index. If the stuck condition is too severe for the traction system to free the vehicle, turn the traction system off and use the rocking method.

⚠ CAUTION:

If you let your vehicle's tires spin at high speed, they can explode, and you or others could be injured. The vehicle can overheat, causing an engine compartment fire or other damage. Spin the wheels as little as possible and avoid going above 35 mph (55 km/h) as shown on the speedometer.

For information about using tire chains on your vehicle, see *Tire Chains on page 5-75*.

Downloaded from www.Manualslib.com manuals search engine

Rocking Your Vehicle to Get It Out

First, turn the steering wheel left and right to clear the area around the front wheels. Turn off any traction or stability system. See *Traction Control System (TCS) on page 4-6* and *StabiliTrak® System on page 4-7*. Then shift back and forth between REVERSE (R) and a forward gear, spinning the wheels as little as possible. To prevent transmission wear, wait until the wheels stop spinning before shifting gears. Release the accelerator pedal while you shift, and press lightly on the accelerator pedal when the transmission is in gear. By slowly spinning the wheels in the forward and reverse directions, you will cause a rocking motion that could free your vehicle. If that does not get your vehicle out after a few tries, it might need to be towed out. If your vehicle does need to be towed out, see *Towing Your Vehicle on page 4-27*.

Loading Your Vehicle

It is very important to know how much weight your vehicle can carry. Two labels on your vehicle show how much weight it may properly carry, the Tire and Loading Information label and the Vehicle Certification label.

⚠ CAUTION:

Do not load your vehicle any heavier than the Gross Vehicle Weight Rating (GVWR), or either the maximum front or rear Gross Axle Weight Rating (GAWR). If you do, parts on your vehicle can break, and it can change the way your vehicle handles. These could cause you to lose control and crash. Also, overloading can shorten the life of your vehicle.

Downloaded from www.Manualslib.com manuals search engine

Tire and Loading Information Label

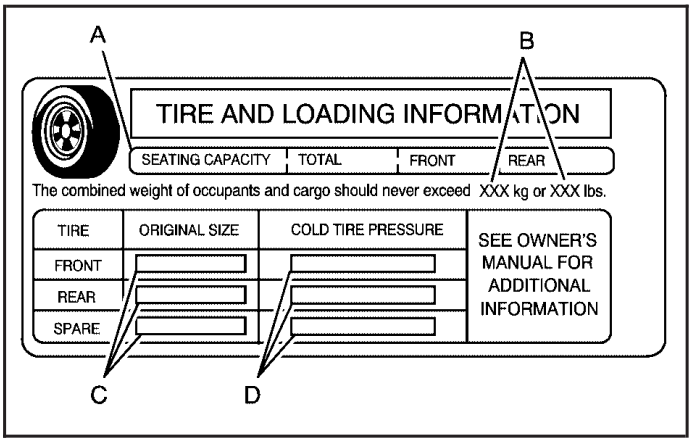

Label Example

A vehicle specific Tire and Loading Information label is attached to the vehicle's center pillar (B-pillar). With the driver's door open, you will find the label attached below the door lock post (striker). The tire and loading information label lists the number of occupant seating positions (A), and the maximum vehicle capacity weight (B) in kilograms and pounds. The vehicle capacity weight includes the weight of all occupants, cargo, and all nonfactory-installed options.

The Tire and Loading Information label also lists the tire size of the original equipment tires (C) and the recommended cold tire inflation pressures (D). For more information on tires and inflation, see *Tires on page 5-52* and *Inflation - Tire Pressure on page 5-59*.

There is also important loading information on the Certification/Tire label. It tells you the Gross Vehicle Weight Rating (GVWR) and the Gross Axle Weight Rating (GAWR) for the front and rear axles. See "Certification/Tire Label" later in this section.

Steps for Determining Correct Load Limit

1. Locate the statement "The combined weight of occupants and cargo should never exceed XXX kg or XXX lbs" on your vehicle's placard.
2. Determine the combined weight of the driver and passengers that will be riding in your vehicle.
3. Subtract the combined weight of the driver and passengers from XXX kg or XXX lbs.

Downloaded from www.Manualslib.com manuals search engine

4. The resulting figure equals the available amount of cargo and luggage load capacity. For example, if the “XXX” amount equals 1400 lbs and there will be five 150 lb passengers in your vehicle, the amount of available cargo and luggage load capacity is 650 lbs (1400 – 750 (5 x 150) = 650 lbs).
5. Determine the combined weight of luggage and cargo being loaded on the vehicle. That weight may not safely exceed the available cargo and luggage load capacity calculated in Step 4.
6. If your vehicle will be towing a trailer, the load from your trailer will be transferred to your vehicle. Consult this manual to determine how this reduces the available cargo and luggage load capacity for your vehicle.

If your vehicle can tow a trailer, see *Towing a Trailer on page 4-32* for important information on towing a trailer, towing safety rules, and trailering tips.

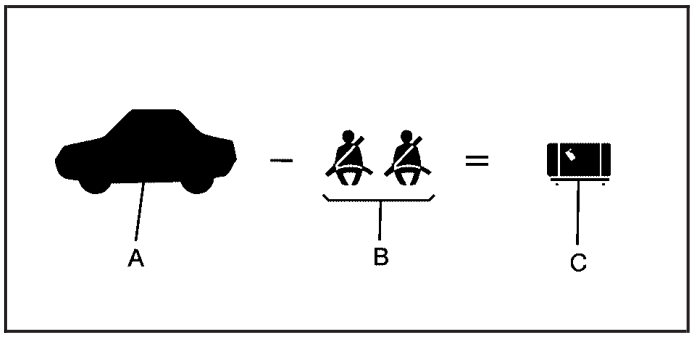

Example 1

Item	Description	Total
A	Maximum Vehicle Capacity Weight for Example 1 =	1,000 lbs (453 kg)
B	Subtract Occupant Weight 150 lbs (68 kg) × 2 =	300 lbs (136 kg)
C	Available Occupant and Cargo Weight =	700 lbs (317 kg)

Downloaded from www.Manualslib.com manuals search engine

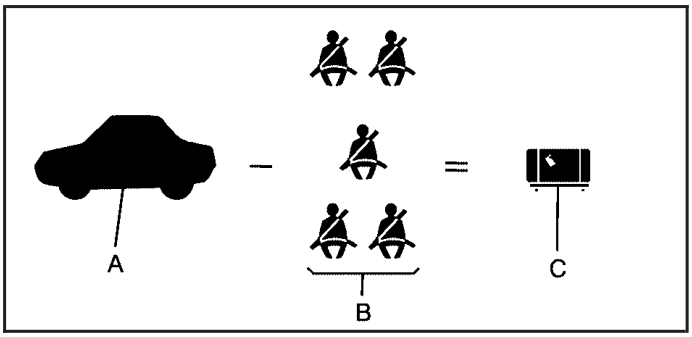

Example 2

Item	Description	Total
A	Maximum Vehicle Capacity Weight for Example 2 =	1,000 lbs (453 kg)
B	Subtract Occupant Weight 150 lbs (68 kg) × 5 =	750 lbs (340 kg)
C	Available Cargo Weight =	250 lbs (113 kg)

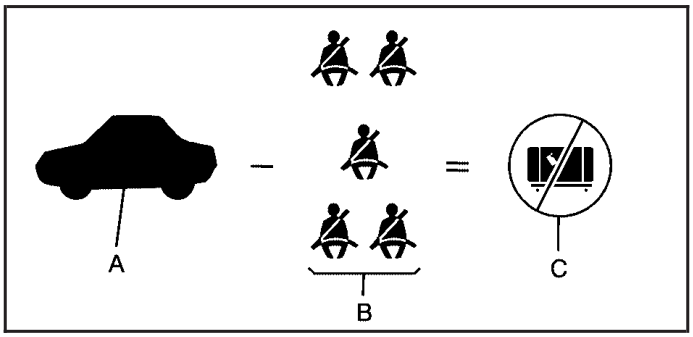

Example 3

Item	Description	Total
A	Maximum Vehicle Capacity Weight for Example 3 =	1,000 lbs (453 kg)
B	Subtract Occupant Weight 200 lbs (91 kg) × 5 =	1,000 lbs (453 kg)
C	Available Cargo Weight =	0 lbs (0 kg)

Refer to your vehicle's tire and loading information label for specific information about your vehicle's maximum vehicle capacity weight and seating positions. The combined weight of the driver, passengers, and cargo should never exceed your vehicle's maximum vehicle capacity weight.

Downloaded from www.Manualslib.com manuals search engine

Certification Label

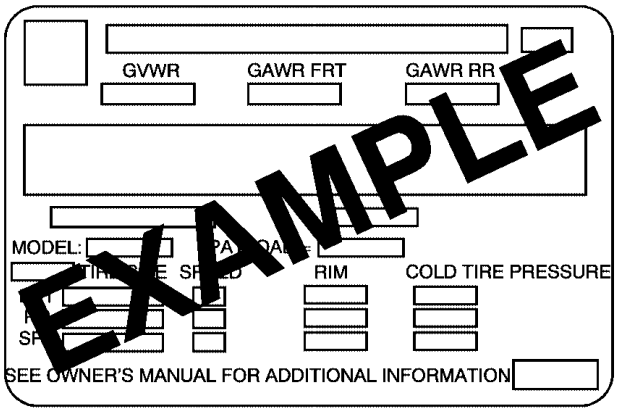

A vehicle specific Certification/Tire label is found on the rear edge of the driver's door, or on the vehicle's center pillar (B-pillar).

The label shows the size of your original tires and the inflation pressures needed to obtain the gross weight capacity of your vehicle. This is called the Gross Vehicle Weight Rating (GVWR). The GVWR includes the weight of the vehicle, all occupants, fuel, and cargo.

The Certification/Tire label also tells you the maximum weights for the front and rear axles, called the Gross Axle Weight Rating (GAWR). To find out the actual loads on your front and rear axles, you need to go to a weigh station and weigh your vehicle. Your dealer can help you with this. Be sure to spread out your load equally on both sides of the centerline.

Never exceed the GVWR for your vehicle or the GAWR for either the front or rear axle.

⚠ CAUTION:

Do not load your vehicle any heavier than the Gross Vehicle Weight Rating (GVWR), or either the maximum front or rear Gross Axle Weight Rating (GAWR). If you do, parts on your vehicle can break, and it can change the way your vehicle handles. These could cause you to lose control and crash. Also, overloading can shorten the life of your vehicle.

Notice: **Overloading your vehicle may cause damage. Repairs would not be covered by your warranty. Do not overload your vehicle.**

Downloaded from www.Manualslib.com manuals search engine

If you put things inside your vehicle — like suitcases, tools, packages, or anything else — they will go as fast as the vehicle goes. If you have to stop or turn quickly, or if there is a crash, they will keep going.

⚠ CAUTION:

Things you put inside your vehicle can strike and injure people in a sudden stop or turn, or in a crash.

- **Put things in the cargo area of your vehicle. Try to spread the weight evenly.**
- **Never stack heavier things, like suitcases, inside the vehicle so that some of them are above the tops of the seats.**
- **Do not leave an unsecured child restraint in your vehicle.**
- **When you carry something inside the vehicle, secure it whenever you can.**
- **Do not leave a seat folded down unless you need to.**

Towing

Towing Your Vehicle

Consult your dealer/retailer or a professional towing service if you need to have your disabled vehicle towed. See *Roadside Assistance Program on page 7-7*.

If you want to tow your vehicle behind another vehicle for recreational purposes (such as behind a motorhome), see “Recreational Vehicle Towing” following.

Recreational Vehicle Towing

Recreational vehicle towing means towing your vehicle behind another vehicle – such as behind a motorhome. The two most common types of recreational vehicle towing are known as “dinghy towing” (towing your vehicle with all four wheels on the ground) and “dolly towing” (towing your vehicle with two wheels on the ground and two wheels up on a device known as a “dolly”).

With the proper preparation and equipment, many vehicles can be towed in these ways. See “Dinghy Towing” and “Dolly Towing,” following.

Downloaded from www.Manualslib.com manuals search engine

Here are some important things to consider before you do recreational vehicle towing:

- What's the towing capacity of the towing vehicle? Be sure you read the tow vehicle manufacturer's recommendations.
- How far will you tow? Some vehicles have restrictions on how far and how long they can tow.
- Do you have the proper towing equipment? See your dealer/retailer or trailering professional for additional advice and equipment recommendations.
- Is your vehicle ready to be towed? Just as you would prepare your vehicle for a long trip, you'll want to make sure your vehicle is prepared to be towed. See *Before Leaving on a Long Trip on page 4-16*.

Dinghy Towing (Vehicles with 5-speed Transmission)

Notice: **Towing an all-wheel-drive vehicle with all four wheels on the ground, or even with only two of its wheels on the ground, will damage drivetrain components. Do not tow an all-wheel-drive vehicle if any of its wheels will be on the ground.**

Your vehicle was not designed to be towed with all of its wheels on the ground. If you have a two-wheel-drive vehicle, it can be towed with two of its wheels on the ground. See "Dolly Towing" following. If you have an all-wheel-drive vehicle, it cannot be towed with any of its wheels on the ground. It can be towed with the car carrier equipment.

Dinghy Towing (Vehicles with 6-speed Transmission)

If you have a front-wheel-drive vehicle, it can be dinghy towed from the front. These vehicles may also be towed by putting the front wheels on a dolly. See "Dolly Towing" later in this section.

If you have an all-wheel-drive vehicle, it can be dinghy towed from the front. You can also tow these vehicles by placing them on a platform trailer with all four wheels off of the ground. These vehicles cannot be towed using a dolly.

For vehicles being dinghy towed, the vehicle should be run at the beginning of each day and at each RV fuel stop for about five minutes. This will ensure proper lubrication of transmission components. Re-connect the vehicle's battery to start the vehicle.

Downloaded from www.Manualslib.com manuals search engine

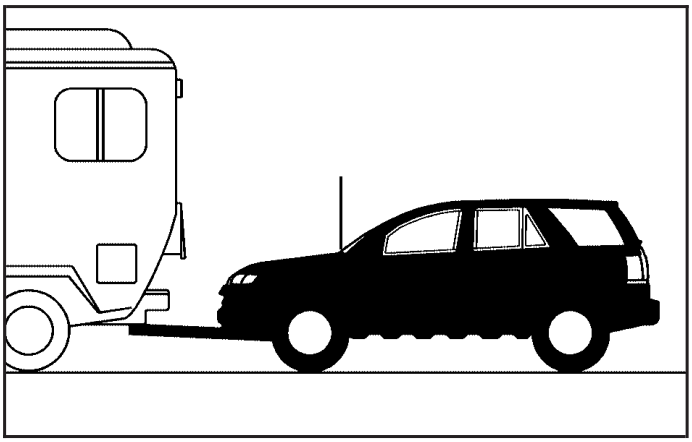

To tow your vehicle from the front with all four wheels on the ground:

1. Position the vehicle to tow and then secure it.
2. Turn the ignition to LOCK/OFF.
3. Set the parking brake.
4. Turn the ignition to ACC/ACCESSORY.
5. Shift your transmission to NEUTRAL (N).
6. To prevent your battery from draining while the vehicle is being towed, disconnect the vehicle's battery. Contact your dealer/retailer for more information on the battery disconnection procedure.
7. Release the parking brake.

Notice: **If you tow your vehicle without performing each of the steps listed under "Dinghy Towing," you could damage the automatic transmission. Be sure to follow all steps of the dinghy towing procedure prior to and after towing your vehicle.**

Notice: **If you exceed 65 mph (105 km/h) while towing your vehicle, it could be damaged. Never exceed 65 mph (105 km/h) while towing your vehicle.**

Once you have reached your destination:

1. Set the parking brake.
2. Put the vehicle in PARK (P).
3. Re-connect the vehicle's battery. Contact your dealer/retailer for more information on the battery connection procedure.
4. Turn the ignition key to LOCK/OFF and remove the key from the ignition.

Notice: **Don't tow a vehicle with the front drive wheels on the ground if one of the front tires is a compact spare tire. Towing with two different tire sizes on the front of the vehicle can cause severe damage to the transmission.**

Downloaded from www.Manualslib.com manuals search engine

Dolly Towing (Vehicles with 5-speed Transmission)

If you have a two-wheel-drive vehicle, it can be towed with two of its wheels on the ground. To dolly tow your vehicle:

1. Put the front wheels on a dolly.
2. Put the vehicle in PARK (P).
3. Set the parking brake and then remove the key.
4. Clamp the steering wheel in a straight-ahead position with a clamping device designed for towing.
5. Release the parking brake.

Notice: **Towing an all-wheel-drive vehicle with all four wheels on the ground, or even with only two of its wheels on the ground, will damage drivetrain components. Do not tow an all-wheel-drive vehicle if any of its wheels will be on the ground.**

If you have an all-wheel-drive vehicle, it cannot be towed with any of its wheels on the ground. It can be towed with car carrier equipment.

Dolly Towing (All-Wheel-Drive Vehicles with 6-speed Transmission)

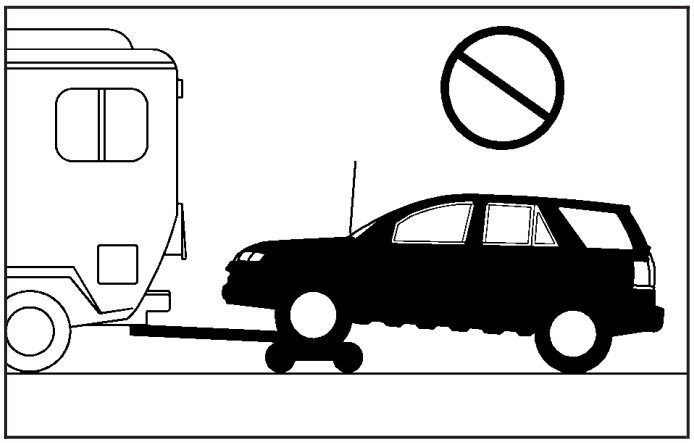

All-wheel-drive vehicles must not be towed with two wheels on the ground. To properly tow these vehicles, they should be placed on a platform trailer with all four wheels off of the ground or dinghy towed from the front.

Downloaded from www.Manualslib.com manuals search engine

Dolly Towing (Front-Wheel-Drive Vehicles with 6-speed Transmission)

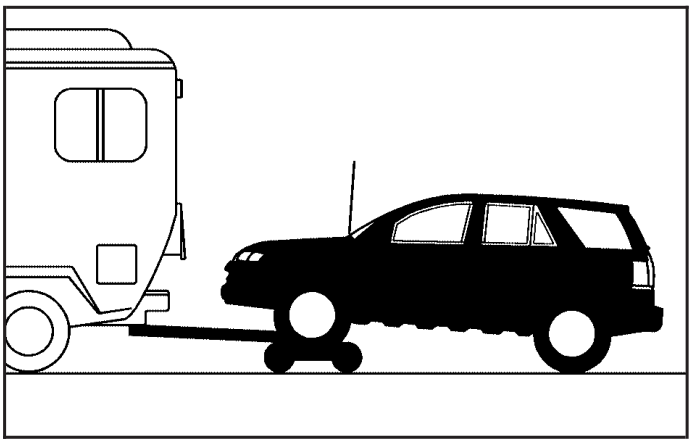

To tow your front-wheel-drive vehicle from the front with two wheels on the ground:

1. Put the front wheels on a dolly.
2. Move the shift lever to PARK (P).
3. Set the parking brake and then remove the key.
4. Clamp the steering wheel in a straight-ahead position with a clamping device designed for towing.
5. Release the parking brake.

Towing Your Vehicle From the Rear

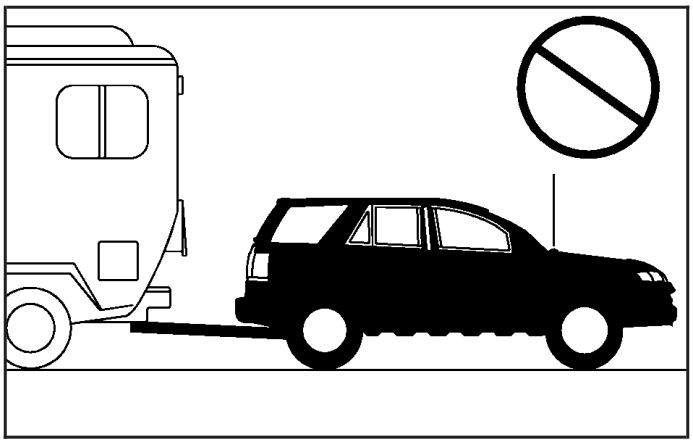

Notice: **Towing your vehicle from the rear could damage it. Also, repairs would not be covered by the warranty. Never have your vehicle towed from the rear.**

Do not tow your vehicle from the rear.

Downloaded from www.Manualslib.com manuals search engine

Towing a Trailer

⚠ CAUTION:

If you do not use the correct equipment and drive properly, you can lose control when you pull a trailer. For example, if the trailer is too heavy, the brakes may not work well — or even at all. You and your passengers could be seriously injured. You may also damage your vehicle; the resulting repairs would not be covered by your warranty. Pull a trailer only if you have followed all the steps in this section. Ask your dealer/retailer for advice and information about towing a trailer with your vehicle.

Notice: **Pulling a trailer improperly can damage your vehicle and result in costly repairs that would not be covered by your warranty. Always follow the instructions in this section and check with your dealer/retailer for more information about towing a trailer with your vehicle.**

To identify the trailering capacity of your vehicle, you should read the information in “Weight of the Trailer” that appears later in this section. Trailering is different than just driving your vehicle by itself. Trailering means changes in handling, acceleration, braking, durability, and fuel economy. Successful, safe trailering takes correct equipment, and it has to be used properly.

That is the reason for this section. In it are many time-tested, important trailering tips and safety rules. Many of these are important for your safety and that of your passengers. So please read this section carefully before you pull a trailer.

Downloaded from www.Manualslib.com manuals search engine

If You Do Decide To Pull A Trailer

If you do, here are some important points:

- There are many different laws, including speed limit restrictions, having to do with trailering. Make sure your rig will be legal, not only where you live but also where you will be driving. A good source for this information can be state or provincial police.
- Consider using a sway control. See “Hitches” later in this section.
- Do not tow a trailer at all during the first 500 miles (800 km) your new vehicle is driven. Your engine, axle or other parts could be damaged.
- During the first 500 miles (800 km) that you tow a trailer, do not drive over 50 mph (80 km/h) and do not make starts at full throttle. This helps your engine and other parts of your vehicle wear in at the heavier loads.

Three important considerations have to do with weight:

- Weight of the trailer
- Weight of the trailer tongue
- Weight on your vehicle’s tires

Weight of the Trailer

How heavy can a trailer safely be?

Your vehicle can tow up to 3,500 lbs (1 575 kg). But even that can be too heavy.

It depends on how you plan to use your rig. For example, speed, altitude, road grades, outside temperature and how much your vehicle is used to pull a trailer are all important. It can also depend on any special equipment that you have on your vehicle, and the amount of tongue weight the vehicle can carry. See “Weight of the Trailer Tongue” later in this section for more information.

Maximum trailer weight is calculated assuming only the driver is in the tow vehicle and it has all the required trailering equipment. The weight of additional optional equipment, passengers and cargo in the tow vehicle must be subtracted from the maximum trailer weight.

Ask your dealer/retailer for our trailering information or advice, or write us at our Customer Assistance Offices. See *Customer Assistance Offices on page 7-5* for more information.

Downloaded from www.Manualslib.com manuals search engine

Weight of the Trailer Tongue

The tongue load (A) of any trailer is an important weight to measure because it affects the total or gross weight of your vehicle. The Gross Vehicle Weight (GVW) includes the curb weight of the vehicle, any cargo you may carry in it, and the people who will be riding in the vehicle. If you have a lot of options, passengers, or cargo in the vehicle, it will reduce the tongue weight your vehicle can carry, which will also reduce the trailer weight your vehicle can tow. And if you will tow a trailer, you must add the tongue load to the GVW because your vehicle will be carrying that weight, too. See *Loading Your Vehicle on page 4-22* for more information about your vehicle's maximum load capacity.

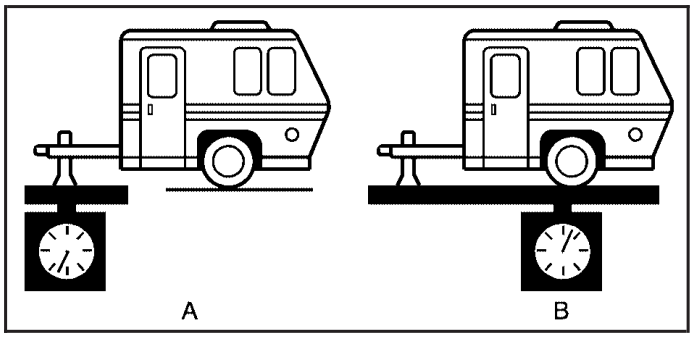

If you are using a weight-carrying or a weight-distributing hitch, the trailer tongue weight (A) should be 10 percent to 15 percent of the total loaded trailer weight (B). Do not exceed the maximum allowable tongue weight for your vehicle.

After you have loaded your trailer, weigh the trailer and then the tongue, separately, to see if the weights are proper. If they are not, you may be able to get them right simply by moving some items around in the trailer.

Downloaded from www.Manualslib.com manuals search engine

Total Weight on Your Vehicle's Tires

Be sure your vehicle's tires are inflated to the upper limit for cold tires. You will find these numbers on the Certification/Tire Label at the rear edge of the driver's door, or see *Loading Your Vehicle on page 4-22*. Then be sure you do not go over the GVW limit for your vehicle, including the weight of the trailer tongue.

Hitches

It is important to have the correct hitch equipment. Crosswinds, large trucks going by and rough roads are a few reasons why you will need the right hitch. Here are some rules to follow:

- If you will be pulling a trailer that, when loaded, will weigh more than 2,000 lbs (900 kg), be sure to use a properly mounted, weight-carrying hitch and sway control of the proper size. This equipment is very important for proper vehicle loading and good handling when you're driving.
- Will you have to make any holes in the body of your vehicle when you install a trailer hitch?

  If you do, remember to seal the holes when you remove the hitch. If you do not seal them, deadly carbon monoxide (CO) from your exhaust can get into your vehicle. See *Engine Exhaust on page 2-36*. Dirt and water can, too.

Safety Chains

You should always attach chains between your vehicle and your trailer. Cross the safety chains under the tongue of the trailer to help prevent the tongue from contacting the road if it becomes separated from the hitch. Instructions about safety chains may be provided by the hitch manufacturer or by the trailer manufacturer. Follow the manufacturer's recommendation for attaching safety chains and do not attach them to the bumper. Always leave just enough slack so you can turn with your rig. Never allow safety chains to drag on the ground.

Trailer Brakes

If your trailer weighs more than 1,000 lbs (450 kg) loaded, then it needs its own brakes – and they must be adequate. Be sure to read and follow the instructions for the trailer brakes so you will be able to install, adjust and maintain them properly.

Because your vehicle may have anti-lock brakes, do not try to tap into your vehicle's brake system. If you do, both brake systems will not work well, or at all.

Downloaded from www.Manualslib.com manuals search engine

Driving with a Trailer

⚠ CAUTION:

If you have the liftgate open and you pull a trailer with your vehicle, carbon monoxide (CO) could come into your vehicle. You cannot see or smell CO. It can cause unconsciousness or death. See *Engine Exhaust on page 2-36*. To maximize your safety when towing a trailer:

- **Have your exhaust system inspected for leaks, and make necessary repairs before starting on your trip.**
- **Keep the liftgate closed.**
- **If exhaust does come into your vehicle through a window in the rear or another opening, drive with your front, main heating or cooling system on and with the fan on any speed. This will bring fresh, outside air into your vehicle. Do not use the climate control setting for maximum air because it only recirculates the air inside your vehicle. See *Climate Control System on page 3-20*.**

Towing a trailer requires a certain amount of experience. Before setting out for the open road, you will want to get to know your rig. Acquaint yourself with the feel of handling and braking with the added weight of the trailer. And always keep in mind that the vehicle you are driving is now a good deal longer and not nearly as responsive as your vehicle is by itself.

Before you start, check all trailer hitch parts and attachments, safety chains, electrical connector, lamps, tires and mirror adjustment. If the trailer has electric brakes, start your vehicle and trailer moving and then apply the trailer brake controller by hand to be sure the brakes are working. This lets you check your electrical connection at the same time.

During your trip, check occasionally to be sure that the load is secure, and that the lamps and any trailer brakes are still working.

Downloaded from www.Manualslib.com manuals search engine

Electronic Trailer Sway Control

Electronic Trailer Sway Control is integrated into the StabiliTrak® system of your vehicle. This feature detects the occurrence of trailer sway that may be caused by improper trailer weight balance, or excessive vehicle speed. When the system detects trailer sway, the StabiliTrak® system may begin to apply the front brakes, without you pressing the brake pedal, to help you in stabilizing the vehicle. The StabiliTrak® warning light will flash to indicate that you should reduce vehicle speed. If the trailer sway continues, StabiliTrak® will reduce engine torque as a method to reduce the speed of the vehicle. Reducing the speed of the vehicle is necessary to reduce trailer sway. Electronic Trailer Sway Control is de-activated when StabiliTrak® is turned off, and is re-activated when it is turned back on. See *StabiliTrak® System on page 4-7*.

Following Distance

Stay at least twice as far behind the vehicle ahead as you would when driving your vehicle without a trailer. This can help you avoid situations that require heavy braking and sudden turns.

Passing

You will need more passing distance up ahead when you are towing a trailer. And, because you are a good deal longer, you will need to go much farther beyond the passed vehicle before you can return to your lane.

Backing Up

Hold the bottom of the steering wheel with one hand. Then, to move the trailer to the left, just move that hand to the left. To move the trailer to the right, move your hand to the right. Always back up slowly and, if possible, have someone guide you.

Making Turns

Notice: **Making very sharp turns while trailering could cause the trailer to come in contact with the vehicle. Your vehicle could be damaged. Avoid making very sharp turns while trailering.**

When you are turning with a trailer, make wider turns than normal. Do this so your trailer will not strike soft shoulders, curbs, road signs, trees or other objects. Avoid jerky or sudden maneuvers. Signal well in advance.

Downloaded from www.Manualslib.com manuals search engine

Turn Signals When Towing a Trailer

When you tow a trailer, your vehicle has to have extra wiring.

The arrows on your instrument panel will flash whenever you signal a turn or lane change. Properly hooked up, the trailer lamps will also flash, telling other drivers you are about to turn, change lanes or stop.

When towing a trailer, the arrows on your instrument panel will flash for turns even if the bulbs on the trailer are burned out. Thus, you may think drivers behind you are seeing your signal when they are not. It's important to check occasionally to be sure the trailer bulbs are still working.

Driving On Grades

Reduce speed and shift to a lower gear before you start down a long or steep downgrade. If you do not shift down, you might have to use your brakes so much that they would get hot and no longer work well.

If you are towing a trailer that weighs more than 1,000 lbs (450 kg), drive in INTERMEDIATE (I) instead of DRIVE (D) or, as you need to, a lower gear. This will minimize heat build-up and extend the life of your transmission.

Parking on Hills

⚠ CAUTION:

You really should not park your vehicle, with a trailer attached, on a hill. If something goes wrong, your rig could start to move. People can be injured, and both your vehicle and the trailer can be damaged.

But if you ever have to park your rig on a hill, do the following:

1. Apply your regular brakes, but do not shift into PARK (P) yet.
2. Have someone place chocks under the trailer wheels.
3. When the wheel chocks are in place, release the regular brakes until the chocks absorb the load.
4. Reapply the regular brakes. Then apply your parking brake, and then shift to PARK (P).
5. Release the regular brakes.

Downloaded from www.Manualslib.com manuals search engine

When You Are Ready to Leave After Parking on a Hill

1. Apply your regular brakes and hold the pedal down while you do the following:
   - Start your engine.
   - Shift into a gear.
   - Release the parking brake.
2. Let up on the brake pedal.
3. Drive slowly until the trailer is clear of the chocks.
4. Stop and have someone pick up and store the chocks.

Maintenance When Trailer Towing

Your vehicle will need service more often when you are pulling a trailer. See the Maintenance Schedule for more on this. Things that are especially important in trailer operation are automatic transmission fluid, engine oil, belts, cooling system and brake system. Each of these is covered in this manual, and the Index will help you find them quickly. If you are trailering, it is a good idea to review these sections before you start your trip.

Check periodically to see that all hitch nuts and bolts are tight.

Downloaded from www.Manualslib.com manuals search engine

✍ NOTES

Downloaded from www.Manualslib.com manuals search engine

Section 5 Service and Appearance Care

Service 5-3
Accessories and Modifications 5-3
California Proposition 65 Warning 5-4
California Perchlorate Materials Requirements 5-4
Doing Your Own Service Work 5-4
Adding Equipment to the Outside of Your Vehicle 5-5

Fuel 5-5
Gasoline Octane 5-5
Gasoline Specifications 5-6
California Fuel 5-6
Additives 5-6
Fuels in Foreign Countries 5-7
Filling the Tank 5-8
Filling a Portable Fuel Container 5-10

Checking Things Under the Hood 5-10
Hood Release 5-11
Engine Compartment Overview 5-12
Engine Oil 5-15
Engine Oil Life System 5-18
Engine Air Cleaner/Filter 5-20
Automatic Transmission Fluid 5-22
Engine Coolant 5-22
Engine Overheating 5-25
Overheated Engine Protection Operating Mode 5-26
Cooling System 5-27
Power Steering Fluid 5-32
Windshield Washer Fluid 5-33
Brakes 5-34
Battery 5-37
Jump Starting 5-38

All-Wheel Drive 5-44

Headlamp Aiming 5-46

Bulb Replacement 5-47
Halogen Bulbs 5-47
Headlamps, Front Turn Signal, Sidemarker, and Parking Lamps 5-47
Taillamps, Turn Signal, Stoplamps and Back-up Lamps 5-49
License Plate Lamp 5-50
Replacement Bulbs 5-50

Windshield Wiper Blade Replacement 5-51

Tires 5-52
Tire Sidewall Labeling 5-53
Tire Terminology and Definitions 5-56
Inflation - Tire Pressure 5-59
High-Speed Operation 5-61
Tire Pressure Monitor System 5-62
Tire Pressure Monitor Operation 5-63
Tire Inspection and Rotation 5-67

Downloaded from www.Manualslib.com manuals search engine

Section 5 Service and Appearance Care

When It Is Time for New Tires 5-69
Buying New Tires 5-70
Different Size Tires and Wheels 5-72
Uniform Tire Quality Grading 5-72
Wheel Alignment and Tire Balance 5-74
Wheel Replacement 5-74
Tire Chains 5-75
If a Tire Goes Flat 5-76
Changing a Flat Tire 5-76
Removing the Spare Tire and Tools 5-78
Removing the Flat Tire and Installing the Spare Tire 5-79
Storing a Flat or Spare Tire and Tools 5-86
Compact Spare Tire 5-88

Appearance Care 5-88
Interior Cleaning 5-88
Fabric/Carpet 5-90
Leather 5-91
Instrument Panel, Vinyl, and Other Plastic Surfaces 5-92
Care of Safety Belts 5-92
Weatherstrips 5-92
Washing Your Vehicle 5-93
Cleaning Exterior Lamps/Lenses 5-93
Finish Care 5-94
Windshield and Wiper Blades 5-94
Aluminum or Chrome-Plated Wheels and Trim 5-95
Tires 5-96
Sheet Metal Damage 5-96
Finish Damage 5-96
Underbody Maintenance 5-96
Chemical Paint Spotting 5-96
Vehicle Care/Appearance Materials 5-97

Vehicle Identification 5-98
Vehicle Identification Number (VIN) 5-98
Service Parts Identification Label 5-98

Electrical System 5-99
Add-On Electrical Equipment 5-99
Windshield Wiper Fuses 5-99
Fuses and Circuit Breakers 5-99
Instrument Panel Fuse Block 5-100
Engine Compartment Fuse Block 5-102

Capacities and Specifications 5-105

Downloaded from www.Manualslib.com manuals search engine

Service

For service and parts needs, visit your dealer/retailer. You will receive genuine GM parts and GM-trained and supported service people.

Genuine GM parts have one of these marks:

Accessories and Modifications

When non-dealer/non-retailer accessories are added to your vehicle they can affect your vehicle's performance and safety, including such things as, airbags, braking, stability, ride and handling, emissions systems, aerodynamics, durability, and electronic systems like antilock brakes, traction control and stability control. Some of these accessories could even cause malfunction or damage not covered by warranty.

GM Accessories are designed to complement and function with other systems on your vehicle. Your GM dealer/retailer can accessorize your vehicle using genuine GM Accessories. When you go to your GM dealer/retailer and ask for GM Accessories, you will know that GM-trained and supported service technicians will perform the work using genuine GM Accessories.

Also, see *Adding Equipment to Your Airbag-Equipped Vehicle on page 1-70*.

Downloaded from www.Manualslib.com manuals search engine

California Proposition 65 Warning

Most motor vehicles, including this one, contain and/or emit chemicals known to the State of California to cause cancer and birth defects or other reproductive harm. Engine exhaust, many parts and systems (including some inside the vehicle), many fluids, and some component wear by-products contain and/or emit these chemicals.

California Perchlorate Materials Requirements

Certain types of automotive applications, such as airbag initiators, seat belt pretensioners, and lithium batteries contained in remote keyless entry transmitters, may contain perchlorate materials. Special handling may be necessary. For additional information, see www.dtsc.ca.gov/hazardouswaste/perchlorate.

Doing Your Own Service Work

⚠ CAUTION:

You can be injured and your vehicle could be damaged if you try to do service work on a vehicle without knowing enough about it.

- **Be sure you have sufficient knowledge, experience, the proper replacement parts, and tools before you attempt any vehicle maintenance task.**
- **Be sure to use the proper nuts, bolts, and other fasteners. English and metric fasteners can be easily confused. If you use the wrong fasteners, parts can later break or fall off. You could be hurt.**

If you want to do some of your own service work, you should use the proper service manual. It tells you much more about how to service your vehicle than this manual can. To order the proper service manual, see *Service Publications Ordering Information on page 7-16*.

Your vehicle has an airbag system. Before attempting to do your own service work, see *Servicing Your Airbag-Equipped Vehicle on page 1-69*.

Downloaded from www.Manualslib.com manuals search engine

You should keep a record with all parts receipts and list the mileage and the date of any service work you perform. See *Maintenance Record on page 6-16*.

Adding Equipment to the Outside of Your Vehicle

Things you might add to the outside of your vehicle can affect the airflow around it. This can cause wind noise and can affect fuel economy and windshield washer performance. Check with your dealer/retailer before adding equipment to the outside of your vehicle.

Fuel

Use of the recommended fuel is an important part of the proper maintenance of your vehicle. To help keep the engine clean and maintain optimum vehicle performance, we recommend the use of gasoline advertised as TOP TIER Detergent Gasoline.

The 8th digit of the Vehicle Identification Number (VIN) shows the code letter or number that identifies your vehicle's engine. The VIN is at the top left of the instrument panel. See *Vehicle Identification Number (VIN) on page 5-98*.

Gasoline Octane

If your vehicle has the 3.4L V6 engine (VIN Code F), use regular unleaded gasoline with a posted octane rating of 87 or higher. If the octane rating is less than 87, you might notice an audible knocking noise when you drive, commonly referred to as spark knock. If this occurs, use a gasoline rated at 87 octane or higher as soon as possible. If you are using gasoline rated at 87 octane or higher and you hear heavy knocking, the engine needs service.

If your vehicle has the 3.6L V6 engine (VIN Code 7), use regular unleaded gasoline with a posted octane rating of 87 or higher. For best performance or trailer towing, you could choose to use middle grade 89 octane unleaded gasoline. If the octane rating is less than 87, you might notice an audible knocking noise when you drive, commonly referred to as spark knock. If this occurs, use a gasoline rated at 87 octane or higher as soon as possible. If you are using gasoline rated at 87 octane or higher and you hear heavy knocking, the engine needs service.

Downloaded from www.Manualslib.com manuals search engine

Gasoline Specifications

At a minimum, gasoline should meet ASTM specification D 4814 in the United States or CAN/CGSB-3.5 or 3.511 in Canada. Some gasolines contain an octane-enhancing additive called methylcyclopentadienyl manganese tricarbonyl (MMT). We recommend against the use of gasolines containing MMT. See *Additives on page 5-5* for additional information.

California Fuel

If your vehicle is certified to meet California Emissions Standards, it is designed to operate on fuels that meet California specifications. See the underhood emission control label. If this fuel is not available in states adopting California emissions standards, your vehicle will operate satisfactorily on fuels meeting federal specifications, but emission control system performance might be affected. The malfunction indicator lamp could turn on and your vehicle might fail a smog-check test. See *Malfunction Indicator Lamp on page 3-36*. If this occurs, return to your authorized dealer/retailer for diagnosis. If it is determined that the condition is caused by the type of fuel used, repairs might not be covered by your warranty.

Additives

To provide cleaner air, all gasolines in the United States are now required to contain additives that help prevent engine and fuel system deposits from forming, allowing the emission control system to work properly. In most cases, you should not have to add anything to the fuel. However, some gasolines contain only the minimum amount of additive required to meet U.S. Environmental Protection Agency regulations. To help keep fuel injectors and intake valves clean, or if your vehicle experiences problems due to dirty injectors or valves, look for gasoline that is advertised as TOP TIER Detergent Gasoline. Also, your dealer/retailer has additives that will help correct and prevent most deposit-related problems.

Downloaded from www.Manualslib.com manuals search engine

Gasolines containing oxygenates, such as ethers and ethanol, and reformulated gasolines might be available in your area. We recommend that you use these gasolines, if they comply with the specifications described earlier. However, E85 (85% ethanol) and other fuels containing more than 10% ethanol must not be used in vehicles that were not designed for those fuels.

Notice: **Your vehicle was not designed for fuel that contains methanol. Do not use fuel containing methanol. It can corrode metal parts in the fuel system and also damage plastic and rubber parts. That damage would not be covered under your warranty.**

Some gasolines that are not reformulated for low emissions can contain an octane-enhancing additive called methylcyclopentadienyl manganese tricarbonyl (MMT); ask the attendant where you buy gasoline whether the fuel contains MMT. We recommend against the use of such gasolines. Fuels containing MMT can reduce the life of spark plugs and the performance of the emission control system could be affected. The malfunction indicator lamp might turn on. If this occurs, return to your dealer/retailer for service.

Fuels in Foreign Countries

If you plan on driving in another country outside the United States or Canada, the proper fuel might be hard to find. Never use leaded gasoline or any other fuel not recommended in the previous text on fuel. Costly repairs caused by use of improper fuel would not be covered by your warranty.

To check the fuel availability, ask an auto club, or contact a major oil company that does business in the country where you will be driving.

Downloaded from www.Manualslib.com manuals search engine

Filling the Tank

⚠ CAUTION:

Fuel vapor burns violently and a fuel fire can cause bad injuries. To help avoid injuries to you and others, read and follow all the instructions on the pump island. Turn off your engine when you are refueling. Do not smoke if you are near fuel or refueling your vehicle. Do not use cellular phones. Keep sparks, flames, and smoking materials away from fuel. Do not leave the fuel pump unattended when refueling your vehicle. This is against the law in some places. Do not re-enter the vehicle while pumping fuel. Keep children away from the fuel pump; never let children pump fuel.

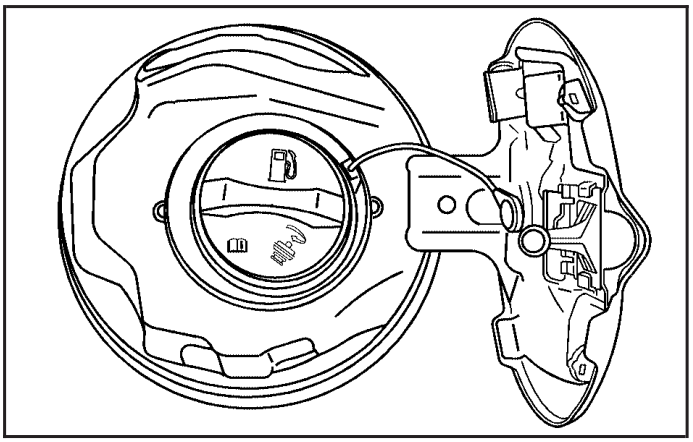

The tethered fuel cap is located behind a hinged fuel door on the passenger's side of the vehicle.

To remove the fuel cap, turn it slowly counterclockwise. The fuel cap has a spring in it; if the cap is released too soon, it will spring back to the right.

Downloaded from www.Manualslib.com manuals search engine

⚠ CAUTION:

Fuel can spray out on you if you open the fuel cap too quickly. If you spill fuel and then something ignites it, you could be badly burned. This spray can happen if your tank is nearly full, and is more likely in hot weather. Open the fuel cap slowly and wait for any hiss noise to stop. Then unscrew the cap all the way.

Be careful not to spill fuel. Do not top off or overfill the tank and wait a few seconds after you have finished pumping before removing the nozzle. Clean fuel from painted surfaces as soon as possible. See *Washing Your Vehicle on page 5-93*.

When replacing the fuel cap, turn it clockwise until it clicks. Make sure the cap is fully installed. The diagnostic system can determine if the fuel cap has been left off or improperly installed. This would allow fuel to evaporate into the atmosphere. See *Malfunction Indicator Lamp on page 3-36*.

⚠ CAUTION:

If a fire starts while you are refueling, do not remove the nozzle. Shut off the flow of fuel by shutting off the pump or by notifying the station attendant. Leave the area immediately.

Notice: **If you need a new fuel cap, be sure to get the right type. Your dealer/retailer can get one for you. If you get the wrong type, it may not fit properly. This may cause your malfunction indicator lamp to light and may damage your fuel tank and emissions system. See *Malfunction Indicator Lamp on page 3-36*.**

Downloaded from www.Manualslib.com manuals search engine

Filling a Portable Fuel Container

⚠ CAUTION:

Never fill a portable fuel container while it is in your vehicle. Static electricity discharge from the container can ignite the fuel vapor. You can be badly burned and your vehicle damaged if this occurs. To help avoid injury to you and others:

- **Dispense fuel only into approved containers.**
- **Do not fill a container while it is inside a vehicle, in a vehicle's trunk, pickup bed, or on any surface other than the ground.**
- **Bring the fill nozzle in contact with the inside of the fill opening before operating the nozzle. Contact should be maintained until the filling is complete.**
- **Do not smoke while pumping fuel.**
- **Do not use a cellular phone while pumping fuel.**

Checking Things Under the Hood

⚠ CAUTION:

An electric fan under the hood can start up and injure you even when the engine is not running. Keep hands, clothing, and tools away from any underhood electric fan.

⚠ CAUTION:

Things that burn can get on hot engine parts and start a fire. These include liquids like fuel, oil, coolant, brake fluid, windshield washer and other fluids, and plastic or rubber. You or others could be burned. Be careful not to drop or spill things that will burn onto a hot engine.

Downloaded from www.Manualslib.com manuals search engine

Hood Release

To open the hood, do the following:

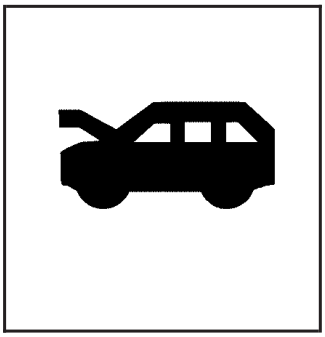

1. Pull the handle with this symbol on it. It is located inside the vehicle, to the left of the brake pedal.

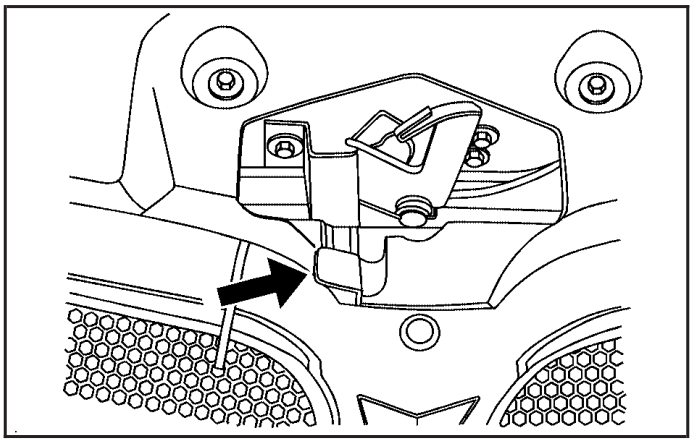

2. Then go to the front of the vehicle and move the secondary hood release lever to the right.
3. Lift the hood.

Before closing the hood, be sure all the filler caps are on properly. Then pull the hood down and close it firmly.

Downloaded from www.Manualslib.com manuals search engine

Engine Compartment Overview

When you open the hood on the 3.4L V6, here is what you will see:

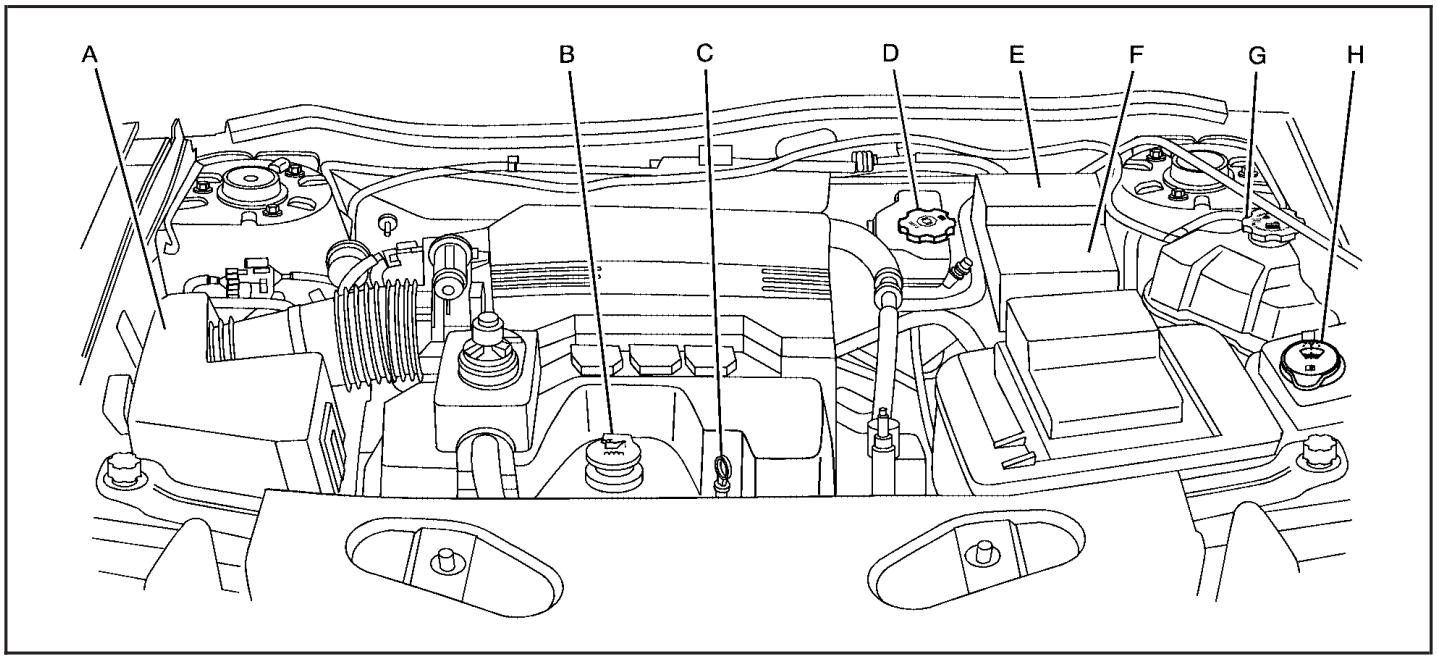

Downloaded from www.Manualslib.com manuals search engine

A. Engine Air Cleaner/Filter. See *Engine Air Cleaner/Filter on page 5-20*.

B. Engine Oil Fill Cap. See “When to Add Engine Oil” under *Engine Oil on page 5-15*.

C. Engine Oil Dipstick. See “Checking Engine Oil” under *Engine Oil on page 5-15*.

D. Brake Fluid Reservoir. See *Brakes on page 5-34*.

E. Engine Compartment Fuse Block. See *Fuses and Circuit Breakers on page 5-99*.

F. Remote Positive (+) Terminal. See *Jump Starting on page 5-38*.

G. Engine Coolant Surge Tank. See *Engine Coolant on page 5-22*.

H. Windshield Washer Fluid Reservoir. See *Windshield Washer Fluid on page 5-33*.

Downloaded from www.Manualslib.com manuals search engine

When you open the hood on the 3.6L V6, here is what you will see:

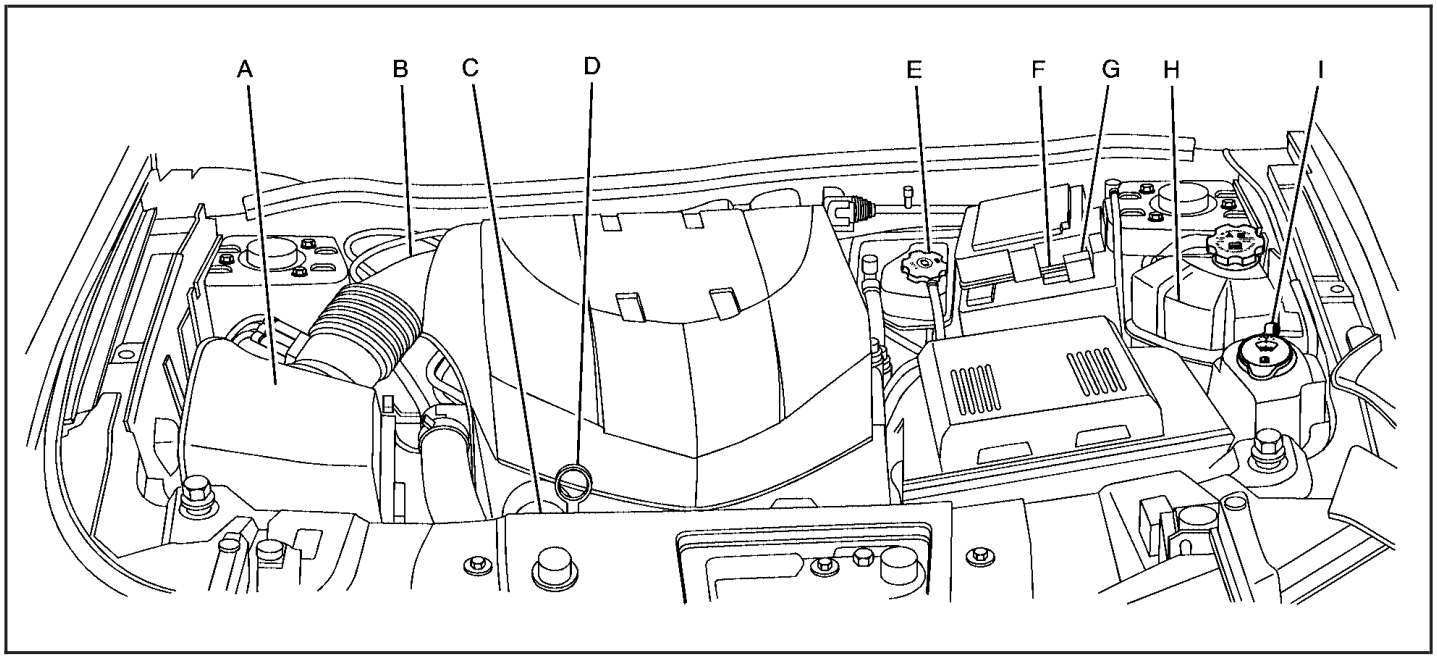

Downloaded from www.Manualslib.com manuals search engine

A. Engine Air Cleaner/Filter. See *Engine Air Cleaner/Filter on page 5-20*.

B. Power Steering Fluid Reservoir (Out of View). See *Power Steering Fluid on page 5-32*.

C. Engine Oil Fill Cap (Out of View). See “When to Add Engine Oil” under *Engine Oil on page 5-15*.

D. Engine Oil Dipstick. See “Checking Engine Oil” under *Engine Oil on page 5-15*.

E. Brake Fluid Reservoir. See “Brake Fluid” under *Brakes on page 5-34*.

F. Underhood Fuse Block. See *Engine Compartment Fuse Block on page 5-102*.

G. Remote Positive (+) Terminal. See *Jump Starting on page 5-38*.

H. Engine Coolant Recovery Tank. See *Cooling System on page 5-27*.

I. Windshield Washer Fluid Reservoir. See “Adding Washer Fluid” under *Windshield Washer Fluid on page 5-33*.

Engine Oil

Checking Engine Oil

It is a good idea to check the engine oil every time you get fuel. In order to get an accurate reading, the oil must be warm and the vehicle must be on level ground.

The engine oil dipstick handle is a yellow loop. See *Engine Compartment Overview on page 5-12* for the location of the engine oil dipstick.

1. Turn off the engine and give the oil several minutes to drain back into the oil pan. If you do not do this, the oil dipstick might not show the actual level.
2. Pull out the dipstick and clean it with a paper towel or cloth, then push it back in all the way. Remove it again, keeping the tip down, and check the level.

Downloaded from www.Manualslib.com manuals search engine

When to Add Engine Oil

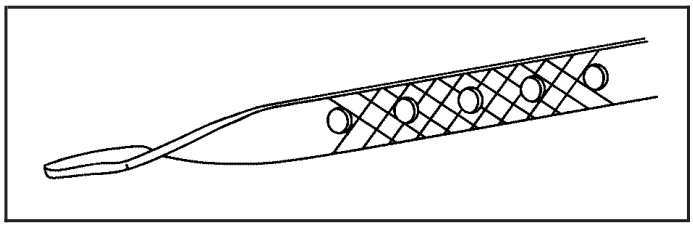

If the oil is below the cross-hatched area at the tip of the dipstick, add at least one quart/liter of the recommended oil. This section explains what kind of oil to use. For engine oil crankcase capacity, see *Capacities and Specifications on page 5-105*.

Notice: **Do not add too much oil. If the engine has so much oil that the oil level gets above the cross-hatched area that shows the proper operating range, the engine could be damaged.**

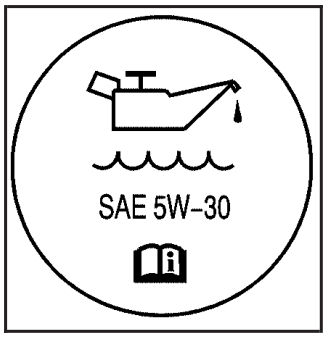

SAE 5W-30 may not appear on all caps.

See *Engine Compartment Overview on page 5-12* for the location of the engine oil fill cap.

Be sure to add enough oil to put the level somewhere in the proper operating range in the cross-hatched area. Push the dipstick all the way back in when you are through.

Downloaded from www.Manualslib.com manuals search engine

What Kind of Engine Oil to Use

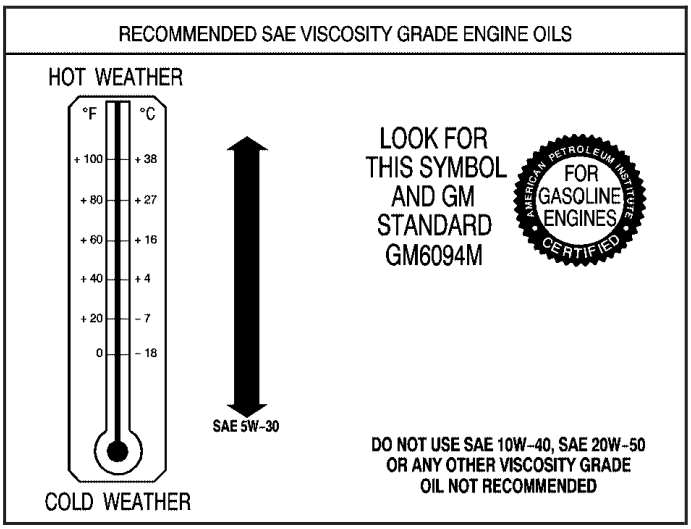

Look for three things:

- GM6094M

  Your vehicle's engine requires oil meeting GM Standard GM6094M. Look for and use only an oil that meets GM Standard GM6094M.

- SAE 5W-30

  As shown in the viscosity chart, SAE 5W-30 is best for your vehicle. If you are in an area of extreme cold, where the temperature falls below –20°F (–29°C), it is recommended that you use either an SAE 5W-30 synthetic oil or an SAE 0W-30 oil. Both will provide easier cold starting and better protection for the engine at extremely low temperatures.

  These numbers on an oil container show its viscosity, or thickness. Do not use other viscosity oils such as SAE 20W-50.

- American Petroleum Institute (API) starburst symbol

Oils meeting these requirements should have the starburst symbol on the container. This symbol indicates that the oil has been certified by the American Petroleum Institute (API).

Downloaded from www.Manualslib.com manuals search engine

Look for this information on the oil container, and use only those oils that are identified as meeting GM Standard GM6094M and have the starburst symbol on the front of the oil container.

Notice: **Use only engine oil identified as meeting GM Standard GM6094M and showing the American Petroleum Institute Certified For Gasoline Engines starburst symbol. Failure to use the recommended oil can result in engine damage not covered by your warranty.**

Engine Oil Additives

Do not add anything to the oil. The recommended oils with the starburst symbol that meet GM Standard GM6094M are all you need for good performance and engine protection.

Engine Oil Life System

When to Change Engine Oil

Your vehicle has a computer system that lets you know when to change the engine oil and filter. This is based on engine revolutions and engine temperature, and not on mileage. Based on driving conditions, the mileage at which an oil change will be indicated can vary considerably. For the oil life system to work properly, you must reset the system every time the oil is changed.

When the system has calculated that oil life has been diminished, it will indicate that an oil change is necessary. A change engine oil light and a CHANGE ENGINE OIL SOON message will come on. Change the oil as soon as possible within the next 600 miles (1 000 km). It is possible that, if you are driving under the best conditions, the oil life system might not indicate that an oil change is necessary for over a year. However, the engine oil and filter must be changed at least once a year and at this time the system must be reset. Your dealer/retailer has trained service people who will perform this work using genuine parts and reset the system. It is also important to check the oil regularly and keep it at the proper level.

If the system is ever reset accidentally, you must change the oil at 3,000 miles (5 000 km) since the last oil change. Remember to reset the oil life system whenever the oil is changed.

Downloaded from www.Manualslib.com manuals search engine

How to Reset the Engine Oil Life System

The Engine Oil Life System calculates when to change the engine oil and filter based on vehicle use. Whenever the oil is changed, reset the system so it can calculate when the next oil change is required. If a situation occurs where you change the oil prior to a change engine oil light or CHANGE ENGINE OIL SOON message being turned on, reset the system.

1. Turn the ignition key to ON/RUN with the engine off.
2. Fully press and release the accelerator pedal three times within five seconds.

   The change engine oil light will flash while the system is resetting.
3. When the light stops flashing, turn the key to LOCK/OFF.

If the light or message comes back on and stays on when you start your vehicle, the engine oil life system has not reset. Repeat the procedure.

What to Do with Used Oil

Used engine oil contains certain elements that can be unhealthy for your skin and could even cause cancer. Do not let used oil stay on your skin for very long. Clean your skin and nails with soap and water, or a good hand cleaner. Wash or properly dispose of clothing or rags containing used engine oil. See the manufacturer's warnings about the use and disposal of oil products.

Used oil can be a threat to the environment. If you change your own oil, be sure to drain all the oil from the filter before disposal. Never dispose of oil by putting it in the trash, pouring it on the ground, into sewers, or into streams or bodies of water. Instead, recycle it by taking it to a place that collects used oil. If you have a problem properly disposing of used oil, ask your dealer/retailer, a service station, or a local recycling center for help.

Downloaded from www.Manualslib.com manuals search engine

Engine Air Cleaner/Filter

The engine air cleaner/filter is located in the engine compartment on the passenger's side of the vehicle. See *Engine Compartment Overview on page 5-12* for more information on location.

When to Inspect the Engine Air Cleaner/Filter

Inspect the air cleaner/filter at the Maintenance II intervals and replace it at the first oil change after each 50,000 mile (80 000 km) interval. See *Scheduled Maintenance on page 6-4* for more information. If you are driving in dusty/dirty conditions, inspect the filter at each engine oil change.

How to Inspect the Engine Air Cleaner/Filter

To inspect the air cleaner/filter remove the filter from the vehicle and lightly shake the filter to release loose dust and dirt. If the filter remains caked with dirt, a new filter is required.

To inspect or replace the engine air cleaner/filter, do the following:

1. Turn off the engine.

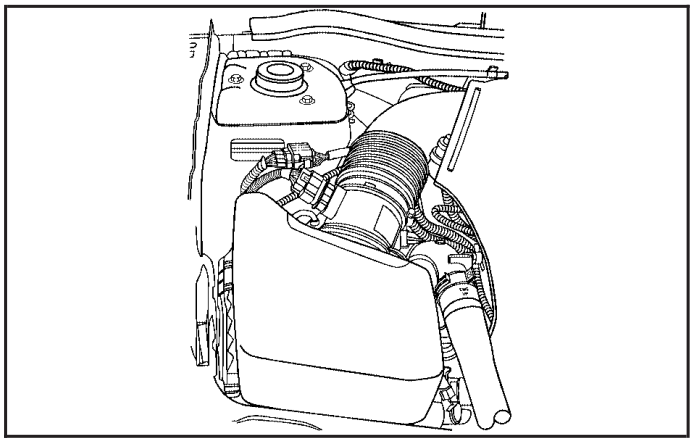

2. Disconnect the air flow sensor electrical connector.
3. Loosen the screws on the clamps holding the air outlet duct in place. Do not pry the clamps off.

Downloaded from www.Manualslib.com manuals search engine

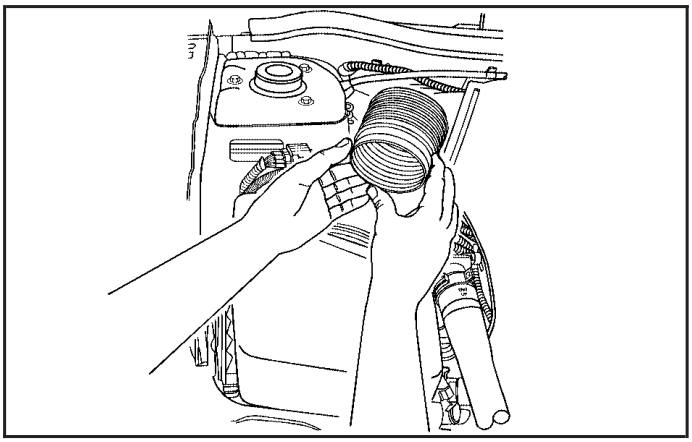

4. Remove the air outlet duct.
5. Undo the clamps on the filter cover. To remove the cover, pull up on the front and then pull the cover out.
6. Inspect or replace the engine air cleaner/filter.

   Wipe all dust from inside of the housing and inspect the air cleaner and air outlet duct for cracks, cuts, and deterioration. The air outlet duct must be replaced if damaged.
7. Reinstall the filter cover and latch the clamps.
8. Reattach the air outlet duct and tighten the screws on the clamps that hold the duct in place.
9. Reconnect the air flow sensor electrical connector.

⚠ CAUTION:

Operating the engine with the air cleaner/filter off can cause you or others to be burned. The air cleaner not only cleans the air; it helps to stop flames if the engine backfires. If it is not there and the engine backfires, you could be burned. Do not drive with it off, and be careful working on the engine with the air cleaner/filter off.

Notice: **If the air cleaner/filter is off, a backfire can cause a damaging engine fire. And, dirt can easily get into your engine, which will damage it. Always have the air cleaner/filter in place when you are driving.**

Downloaded from www.Manualslib.com manuals search engine

Automatic Transmission Fluid

It is not necessary to check the transmission fluid level. A transmission fluid leak is the only reason for fluid loss. If a leak occurs, take your vehicle to the dealer/retailer and have it repaired as soon as possible.

Change the fluid and filter at the intervals listed in *Additional Required Services on page 6-6*, and be sure to use the transmission fluid listed in *Recommended Fluids and Lubricants on page 6-12*.

Notice: **Use of the incorrect automatic transmission fluid may damage your vehicle, and the damages may not be covered by your warranty. Always use the automatic transmission fluid listed in *Recommended Fluids and Lubricants on page 6-12*.**

For the 3.6L engine, the transmission fluid will not reach the end of the dipstick unless the transmission is at operating temperature. If you need to check the transmission fluid level, please take your vehicle to your dealer/retailer.

Engine Coolant

The cooling system in your vehicle is filled with DEX-COOL® engine coolant. This coolant is designed to remain in your vehicle for five years or 150,000 miles (240 000 km), whichever occurs first, if you add only DEX-COOL® extended life coolant.

The following explains your cooling system and how to add coolant when it is low. If you have a problem with engine overheating, see *Engine Overheating on page 5-25*.

A 50/50 mixture of clean, drinkable water and DEX-COOL® coolant will:

- Give freezing protection down to –34°F (–37°C).
- Give boiling protection up to 265°F (129°C).
- Protect against rust and corrosion.
- Help keep the proper engine temperature.
- Let the warning lights and gages work as they should.

Notice: **Using coolant other than DEX-COOL® may cause premature engine, heater core, or radiator corrosion. In addition, the engine coolant may require changing sooner, at the first maintenance service after each 30,000 miles (50 000 km) or 24 months, whichever occurs first. Any repairs would not be covered by your warranty. Always use DEX-COOL® (silicate-free) coolant in your vehicle.**

Downloaded from www.Manualslib.com manuals search engine

What to Use

Use a mixture of one-half clean, drinkable water and one-half DEX-COOL® coolant which will not damage aluminum parts. If you use this coolant mixture, you do not need to add anything else.

⚠ CAUTION:

Adding only plain water to the cooling system can be dangerous. Plain water, or some other liquid such as alcohol, can boil before the proper coolant mixture will. The vehicle's coolant warning system is set for the proper coolant mixture. With plain water or the wrong mixture, the engine could get too hot but you would not get the overheat warning. The engine could catch fire and you or others could be burned. Use a 50/50 mixture of clean, drinkable water and DEX-COOL® coolant.

Notice: **If you use an improper coolant mixture, your engine could overheat and be badly damaged. The repair cost would not be covered by your warranty. Too much water in the mixture can freeze and crack the engine, radiator, heater core, and other parts.**

If you have to add coolant more than four times a year, have your dealer/retailer check your cooling system.

Notice: **If you use extra inhibitors and/or additives in your vehicle's cooling system, you could damage your vehicle. Use only the proper mixture of the engine coolant listed in this manual for the cooling system. See *Recommended Fluids and Lubricants on page 6-12* for more information.**

Downloaded from www.Manualslib.com manuals search engine

Checking Coolant

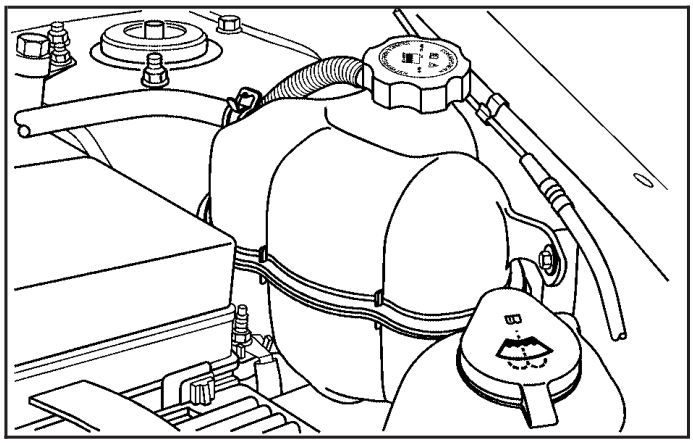

The surge tank is located on the driver's side of the engine compartment. See *Engine Compartment Overview on page 5-12* for more information on location.

⚠ CAUTION:

Turning the surge tank pressure cap when the engine and radiator are hot can allow steam and scalding liquids to blow out and burn you badly. Never turn the surge tank pressure cap — even a little — when the engine and radiator are hot.

The vehicle must be on a level surface. When your engine is cold, the coolant level should be at the COLD FILL line. When your engine is warm, the level should be at the COLD FILL line or a little higher.

Downloaded from www.Manualslib.com manuals search engine

Adding Coolant

If you need more coolant, add the proper DEX-COOL® coolant mixture at the surge tank, but only when the engine is cool.

⚠ CAUTION:

You can be burned if you spill coolant on hot engine parts. Coolant contains ethylene glycol, and it will burn if the engine parts are hot enough. Do not spill coolant on a hot engine.

When replacing the pressure cap, make sure it is hand-tight and fully seated.

Engine Overheating

You will find a coolant temperature gage on your vehicle's instrument panel. See *Engine Coolant Temperature Gage on page 3-35*. There are several different types of engine overheating messages that may be displayed in the Driver Information Center (DIC). See *DIC Warnings and Messages on page 3-52.*

If Steam Is Coming From Your Engine

⚠ CAUTION:

Steam from an overheated engine can burn you badly, even if you just open the hood. Stay away from the engine if you see or hear steam coming from it. Turn it off and get everyone away from the vehicle until it cools down. Wait until there is no sign of steam or coolant before you open the hood.

If you keep driving when the vehicles engine is overheated, the liquids in it can catch fire. You or others could be badly burned. Stop your engine if it overheats, and get out of the vehicle until the engine is cool.

See *Overheated Engine Protection Operating Mode on page 5-26* for information on driving to a safe place in an emergency.

Notice: **If your engine catches fire because you keep driving with no coolant, your vehicle can be badly damaged. The costly repairs would not be covered by your warranty. See *Overheated Engine Protection Operating Mode on page 5-26* for information on driving to a safe place in an emergency.**

Downloaded from www.Manualslib.com manuals search engine

If No Steam Is Coming From Your Engine

An overheat warning can indicate a serious problem.

If you get an engine overheat warning, but see or hear no steam, the problem may not be too serious. Sometimes the engine can get a little too hot when you:

- Climb a long hill on a hot day.
- Stop after high-speed driving.
- Idle for long periods in traffic.
- Tow a trailer.

If you get the overheat warning with no sign of steam, try this for a minute or so:

1. If the air conditioner is on, turn it off.
2. Turn on your heater to full hot at the highest fan speed and open the windows as necessary.
3. Try to minimize engine load. If you are in a traffic jam, shift to NEUTRAL (N); otherwise, shift to the highest gear while driving.

If you no longer have the overheat warning, you can drive. Just to be safe, drive slower for about ten minutes. If the warning does not come back on, you can drive normally.

If the warning continues and you have not stopped, pull over, stop, and park your vehicle right away.

If there is still no sign of steam, you can idle the engine for three minutes while you are parked. If you still have the warning, turn off the engine and get everyone out of the vehicle until it cools down. Also, see "Overheated Engine Protection Operating Mode" later in this section.

You may decide not to lift the hood but to get service help right away.

Overheated Engine Protection Operating Mode

This emergency operating mode lets your vehicle be driven to a safe place in an emergency situation. If an overheated engine condition exists, an overheat protection mode which alternates firing groups of cylinders helps prevent engine damage. In this mode, there is a significant loss in power and engine performance. The temperature gage indicates an overheat condition exists. Driving extended distances and/or towing a trailer in the overheat protection mode should be avoided.

Notice: **After driving in the overheated engine protection operating mode, to avoid engine damage, allow the engine to cool before attempting any repair. The engine oil will be severely degraded. Repair the cause of coolant loss, change the oil and reset the oil life system. See *Engine Oil on page 5-15*.**

Downloaded from www.Manualslib.com manuals search engine

Cooling System

When you decide it is safe to lift the hood, here is what you will see:

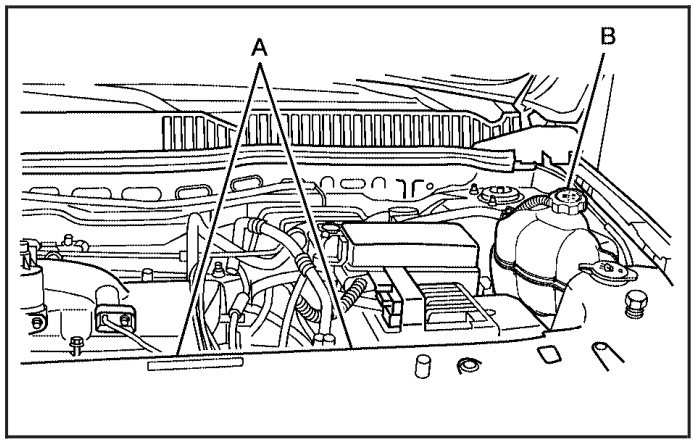

A. Electric Engine Cooling Fans
B. Coolant Surge Tank

⚠ CAUTION:

An electric engine cooling fan under the hood can start up even when the engine is not running and can injure you. Keep hands, clothing, and tools away from any underhood electric fan.

If the coolant inside the coolant surge tank is boiling, do not do anything else until it cools down. The vehicle should be parked on a level surface.

Downloaded from www.Manualslib.com manuals search engine

The coolant level should be at the COLD FILL line. If it is not, you may have a leak at the radiator hoses, heater hoses, radiator, water pump, or somewhere else in the cooling system.

⚠ CAUTION:

Heater and radiator hoses, and other engine parts, can be very hot. Do not touch them. If you do, you can be burned.

Do not run the engine if there is a leak. If you run the engine, it could lose all coolant. That could cause an engine fire, and you could be burned. Get any leak fixed before you drive the vehicle.

If there seems to be no leak, with the engine on, check to see if the electric engine cooling fans are running. If the engine is overheating, both fans should be running. If they are not, your vehicle needs service. Turn off the engine.

Notice: **Engine damage from running your engine without coolant is not covered by your warranty. See *Overheated Engine Protection Operating Mode on page 5-26* for information on driving to a safe place in an emergency.**

Notice: **Using coolant other than DEX-COOL® may cause premature engine, heater core, or radiator corrosion. In addition, the engine coolant could require changing sooner, at 30,000 miles (50 000 km) or 24 months, whichever occurs first. Any repairs would not be covered by the warranty. Always use DEX-COOL® (silicate-free) coolant in the vehicle.**

How to Add Coolant to the Coolant Surge Tank

Notice: **This vehicle has a specific coolant fill procedure. Failure to follow this procedure could cause your engine to overheat and be severely damaged.**

If you have not found a problem yet, check to see if coolant is visible in the surge tank. If coolant is visible but the coolant level is not at the COLD FILL line, add a 50/50 mixture of clean, drinkable water and DEX-COOL® coolant at the coolant surge tank, but be sure the cooling system, including the coolant surge tank pressure cap, is cool before you do it.

Downloaded from www.Manualslib.com manuals search engine

⚠ CAUTION:

Steam and scalding liquids from a hot cooling system can blow out and burn you badly. They are under pressure, and if you turn the coolant surge tank pressure cap — even a little — they can come out at high speed. Never turn the cap when the cooling system, including the coolant surge tank pressure cap, is hot. Wait for the cooling system and coolant surge tank pressure cap to cool if you ever have to turn the pressure cap.

⚠ CAUTION:

Adding only plain water to the cooling system can be dangerous. Plain water, or some other liquid such as alcohol, can boil before the proper coolant mixture will. The vehicle's coolant warning system is set for the proper coolant mixture. With plain water or the wrong mixture, the engine could get too hot but you would not get the overheat warning. The engine could catch fire and you or others could be burned. Use a 50/50 mixture of clean, drinkable water and DEX-COOL® coolant.

Notice: **In cold weather, water can freeze and crack the engine, radiator, heater core and other parts. Use the recommended coolant and the proper coolant mixture.**

Downloaded from www.Manualslib.com manuals search engine

⚠ CAUTION:

You can be burned if you spill coolant on hot engine parts. Coolant contains ethylene glycol and it will burn if the engine parts are hot enough. Do not spill coolant on a hot engine.

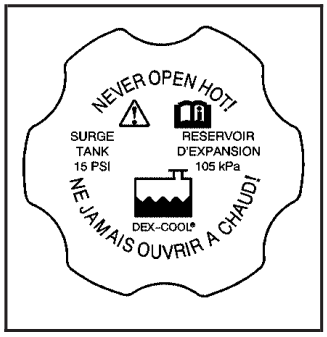

1. You can remove the coolant surge tank pressure cap when the cooling system, including the coolant surge tank pressure cap and upper radiator hose, is no longer hot.

   Turn the pressure cap slowly counterclockwise about one-quarter of a turn. If you hear a hiss, wait for that to stop. This will allow any pressure still left to be vented out the discharge hose.

2. Then keep turning the pressure cap slowly, and remove it.

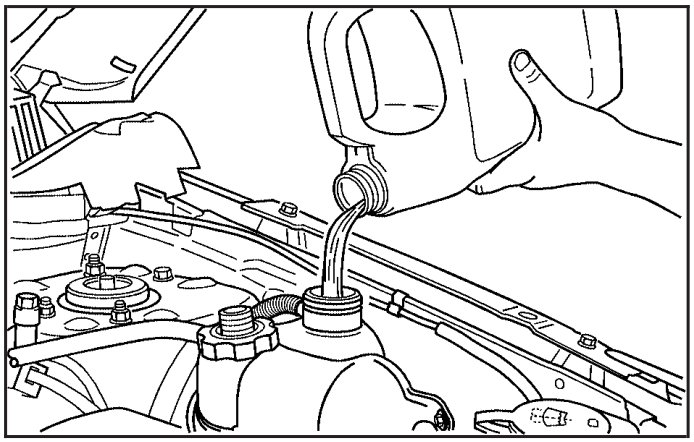

3. Fill the coolant surge tank with the proper DEX-COOL® coolant mixture, to the COLD FILL line.

Downloaded from www.Manualslib.com manuals search engine

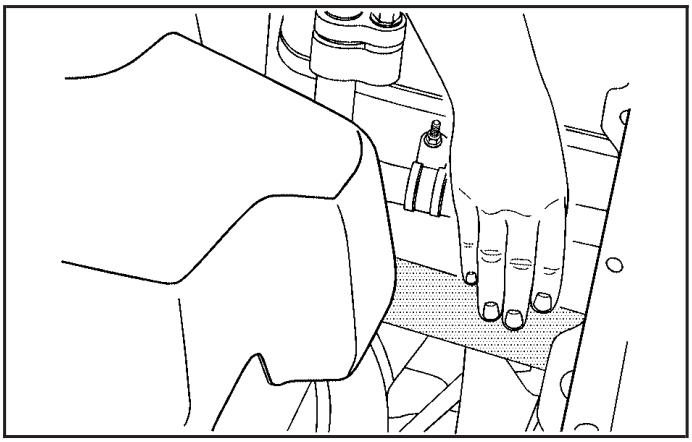

4. With the coolant surge tank pressure cap off, start the engine and let it run until you can feel the upper radiator hose getting hot. Watch out for the engine cooling fans.

   By this time, the coolant level inside the coolant surge tank may be lower. If the level is lower, add more of the proper DEX-COOL® coolant mixture to the coolant surge tank until the level reaches the COLD FILL line.

5. Then replace the pressure cap. Be sure the pressure cap is hand-tight.
6. After driving the vehicle, check the level in the surge tank again when the cooling system has cooled down.

If the coolant is not at the proper level, repeat Steps 1 through 3 and reinstall the pressure cap. If the coolant is not at the proper level when the system cools down again, see your dealer/retailer.

Downloaded from www.Manualslib.com manuals search engine

Power Steering Fluid

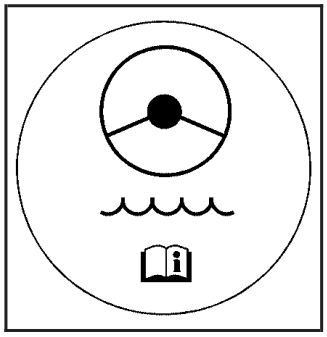

See *Engine Compartment Overview on page 5-12* for reservoir location.

When to Check Power Steering Fluid

Power steering fluid is used in all vehicles with the 3.6L V6 engine. Vehicles with the 3.4L V6 engine have electric power steering and do not use power steering fluid.

It is not necessary to regularly check power steering fluid unless you suspect there is a leak in the system or you hear an unusual noise. A fluid loss in this system could indicate a problem. Have the system inspected and repaired.

How to Check Power Steering Fluid

To check the power steering fluid, do the following:

1. Turn the key off and let the engine compartment cool down.
2. Wipe the cap and the top of the reservoir clean.
3. Unscrew the cap and wipe the dipstick with a clean rag.
4. Replace the cap and completely tighten it.
5. Remove the cap again and look at the fluid level on the dipstick.

The fluid level should be between the Min (Minimum) and Max (Maximum) marks when the engine is cold, and at the Max mark when the engine is hot. If the fluid is at the Min mark when the engine is cold or hot, power steering fluid should be added.

What to Use

To determine what kind of fluid to use, see *Recommended Fluids and Lubricants on page 6-12*. Always use the proper fluid.

Notice: **Use of the incorrect fluid may damage your vehicle and the damages may not be covered by your warranty. Always use the correct fluid listed in *Recommended Fluids and Lubricants on page 6-12*.**

Downloaded from www.Manualslib.com manuals search engine

Windshield Washer Fluid

What to Use

When you need windshield or rear window washer fluid be sure to read the instructions before use. If you will be operating your vehicle in an area where the temperature may fall below freezing, use a fluid that has sufficient protection against freezing.

Adding Windshield Washer Fluid

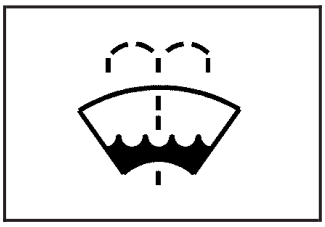

Open the cap with the washer symbol on it. Add washer fluid until the tank is full. See *Engine Compartment Overview on page 5-12* for reservoir location.

Notice:

- **When using concentrated washer fluid, follow the manufacturer's instructions for adding water.**
- **Do not mix water with ready-to-use washer fluid. Water can cause the solution to freeze and damage your washer fluid tank and other parts of the washer system. Also, water does not clean as well as washer fluid.**
- **Fill the washer fluid tank only three-quarters full when it is very cold. This allows for fluid expansion if freezing occurs, which could damage the tank if it is completely full.**
- **Do not use engine coolant (antifreeze) in your windshield washer. It can damage the vehicle's windshield washer system and paint.**

Downloaded from www.Manualslib.com manuals search engine

Brakes

Brake Fluid

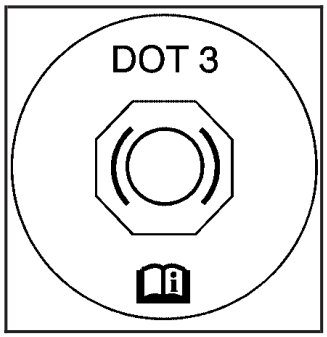

The brake master cylinder reservoir is filled with DOT-3 brake fluid. See *Engine Compartment Overview on page 5-12* for the location of the reservoir.

There are only two reasons why the brake fluid level in the reservoir might go down. The first is that the brake fluid goes down to an acceptable level during normal brake lining wear. When new linings are put in, the fluid level goes back up. The other reason is that fluid is leaking out of the brake hydraulic system. If it is, you should have the brake hydraulic system fixed, since a leak means that sooner or later the brakes will not work well.

It is not a good idea to top off the brake fluid. Adding brake fluid will not correct a leak. If fluid is added when the linings are worn, there will be too much fluid when new brake linings are installed. Add or remove brake fluid, as necessary, only when work is done on the brake hydraulic system.

⚠ CAUTION:

If your vehicle has too much brake fluid, it can spill on the engine. The fluid will burn if the engine is hot enough. You or others could be burned, and your vehicle could be damaged. Add brake fluid only when work is done on the brake hydraulic system.

When the brake fluid falls to a low level, the brake warning light comes on. See *Brake System Warning Light on page 3-33*.

What to Add

When you need brake fluid, use only DOT-3 brake fluid. Use new brake fluid from a sealed container only. See *Recommended Fluids and Lubricants on page 6-12*.

Always clean the brake fluid reservoir cap and the area around the cap before removing it. This helps keep dirt from entering the reservoir.

Downloaded from www.Manualslib.com manuals search engine

⚠ CAUTION:

With the wrong kind of fluid in the brake hydraulic system, the brakes might not work well. This could cause a crash. Always use the proper brake fluid.

Notice:

- **Using the wrong fluid can badly damage brake hydraulic system parts. For example, just a few drops of mineral-based oil, such as engine oil, in the brake hydraulic system can damage brake hydraulic system parts so badly that they will have to be replaced. Do not let someone put in the wrong kind of fluid.**
- **If you spill brake fluid on your vehicle's painted surfaces, the paint finish can be damaged. Be careful not to spill brake fluid on your vehicle. If you do, wash it off immediately. See *Washing Your Vehicle on page 5-93*.**

Brake Wear

Your vehicle has disc brakes. Disc brake pads have built-in wear indicators that make a high-pitched warning sound when the brake pads are worn and new pads are needed. The sound can come and go or be heard all the time your vehicle is moving, except when you are pushing on the brake pedal firmly.

⚠ CAUTION:

The brake wear warning sound means that soon the brakes will not work well. That could lead to an accident. When you hear the brake wear warning sound, have your vehicle serviced.

Notice: **Continuing to drive with worn-out brake pads could result in costly brake repair.**

Some driving conditions or climates can cause a brake squeal when the brakes are first applied or lightly applied. This does not mean something is wrong with the brakes.

Downloaded from www.Manualslib.com manuals search engine

Properly torqued wheel nuts are necessary to help prevent brake pulsation. When tires are rotated, inspect brake pads for wear and evenly tighten wheel nuts in the proper sequence to torque specifications in *Capacities and Specifications on page 5-105*.

Brake linings should always be replaced as complete axle sets.

Brake Pedal Travel

See your dealer/retailer if the brake pedal does not return to normal height, or if there is a rapid increase in pedal travel. This could be a sign that brake service might be required.

Brake Adjustment

Every time you apply the brakes, with or without the vehicle moving, the brakes adjust for wear.

Replacing Brake System Parts

The braking system on a vehicle is complex. Its many parts have to be of top quality and work well together if the vehicle is to have really good braking. Your vehicle was designed and tested with top-quality brake parts. When you replace parts of the braking system — for example, when the brake linings wear down and you need new ones put in — be sure you get new approved replacement parts. If you do not, the brakes might not work properly. For example, if someone puts in brake linings that are wrong for your vehicle, the balance between the front and rear brakes can change — for the worse. The braking performance you have come to expect can change in many other ways if someone puts in the wrong replacement brake parts.

Downloaded from www.Manualslib.com manuals search engine

Battery

Your vehicle has a maintenance free battery. When it is time for a new battery, see your dealer/retailer for one that has the replacement number shown on the original battery's label.

For battery replacement, see your dealer/retailer or the service manual. To purchase a service manual, see *Service Publications Ordering Information on page 7-16*.

Warning: Battery posts, terminals, and related accessories contain lead and lead compounds, chemicals known to the State of California to cause cancer and reproductive harm. Wash hands after handling.

Vehicle Storage

⚠ CAUTION:

Batteries have acid that can burn you and gas that can explode. You can be badly hurt if you are not careful. See *Jump Starting on page 5-38* for tips on working around a battery without getting hurt.

Infrequent Usage: If you drive your vehicle infrequently, remove the black, negative (–) cable from the battery. This will help keep the battery from running down.

Extended Storage: For extended storage of your vehicle, remove the black, negative (–) cable from the battery or use a battery trickle charger. This will help maintain the charge of the battery over an extended period of time.

You must close all doors and the liftgate before reconnecting the battery. After reconnecting the battery, you must press the unlock button on the keyless access transmitter. Failure to follow this procedure could result in the alarm sounding. Pressing unlock on the keyless access transmitter will stop the alarm.

Downloaded from www.Manualslib.com manuals search engine

Jump Starting

If your battery has run down, you may want to use another vehicle and some jumper cables to start your vehicle. Be sure to use the following steps to do it safely.

⚠ CAUTION:

Batteries can hurt you. They can be dangerous because:

- **They contain acid that can burn you.**
- **They contain gas that can explode or ignite.**
- **They contain enough electricity to burn you.**

If you do not follow these steps exactly, some or all of these things can hurt you.

Notice: **Ignoring these steps could result in costly damage to your vehicle that would not be covered by your warranty.**

Trying to start your vehicle by pushing or pulling it will not work, and it could damage your vehicle.

1. Check the other vehicle. It must have a 12-volt battery with a negative ground system.

Notice: **If the other vehicle's system is not a 12-volt system with a negative ground, both vehicles can be damaged. Only use vehicles with 12-volt systems with negative grounds to jump start your vehicle.**

2. Get the vehicles close enough so the jumper cables can reach, but be sure the vehicles are not touching each other. If they are, it could cause a ground connection you do not want. You would not be able to start your vehicle, and the bad grounding could damage the electrical systems.

   To avoid the possibility of the vehicles rolling, set the parking brake firmly on both vehicles involved in the jump start procedure. Put an automatic transmission in PARK (P) or a manual transmission in NEUTRAL before setting the parking brake.

Notice: **If you leave your radio or other accessories on during the jump starting procedure, they could be damaged. The repairs would not be covered by your warranty. Always turn off your radio and other accessories when jump starting your vehicle.**

Downloaded from www.Manualslib.com manuals search engine

3. Turn off the ignition on both vehicles. Unplug unnecessary accessories plugged into the cigarette lighter or the accessory power outlet. Turn off the radio and all lamps that are not needed. This will avoid sparks and help save both batteries. And it could save your radio!
4. Open the hoods and locate the positive (+) and negative (–) terminal locations on each vehicle.

   You will not need to access your battery for jump starting. Your vehicle has a remote positive (+) and a remote negative (–) jump starting terminal for that purpose.

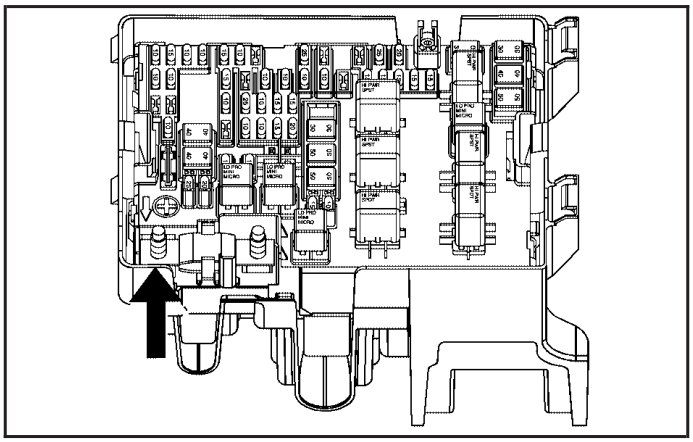

The remote positive (+) terminal is located under the engine compartment fuse block cover, and is marked with a plus (+) symbol on the cover.

To remove the fuse block cover, push in the two locking tabs located on the rear of the cover, and lift. To reinstall, fit together the tabs located on the front of the cover and push down on the cover until the tabs on the rear of the cover, click into place.

Downloaded from www.Manualslib.com manuals search engine

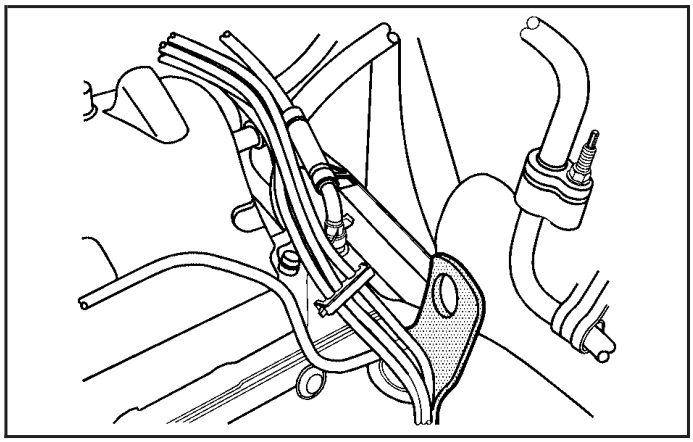

3.4L V6 Engine

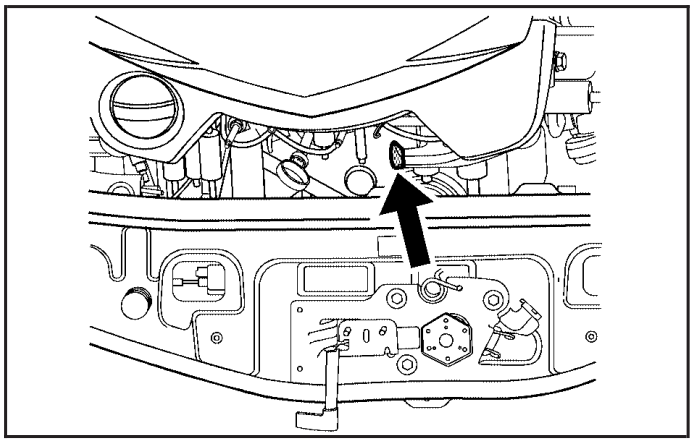

3.6L V6 Engine

The remote negative (–) terminal is located in the front of the engine compartment, near the engine oil dipstick.

See *Engine Compartment Overview on page 5-12* for more information on the location of the remote positive (+) terminal and the engine oil dipstick.

Downloaded from www.Manualslib.com manuals search engine

⚠ CAUTION:

An electric fan can start up even when the engine is not running and can injure you. Keep hands, clothing and tools away from any underhood electric fan.

⚠ CAUTION:

Using a match near a battery can cause battery gas to explode. People have been hurt doing this, and some have been blinded. Use a flashlight if you need more light.

CAUTION: (Continued)

CAUTION: (Continued)

Be sure the battery has enough water. You do not need to add water to the battery installed in your new vehicle. But if a battery has filler caps, be sure the right amount of fluid is there. If it is low, add water to take care of that first. If you do not, explosive gas could be present.

Battery fluid contains acid that can burn you. Do not get it on you. If you accidentally get it in your eyes or on your skin, flush the place with water and get medical help immediately.

⚠ CAUTION:

Fans or other moving engine parts can injure you badly. Keep your hands away from moving parts once the engine is running.

Downloaded from www.Manualslib.com manuals search engine

5. Check that the jumper cables do not have loose or missing insulation. If they do, you could get a shock. The vehicles could be damaged, too.

   Before you connect the cables, here are some basic things you should know. Positive (+) will go to positive (+) or to a remote positive (+) terminal if the vehicle has one. Negative (–) will go to a heavy, unpainted metal engine part or to a remote negative (–) terminal if the vehicle has one.

   Do not connect positive (+) to negative (–) or you will get a short that would damage the battery and maybe other parts, too. And do not connect the negative (–) cable to the negative (–) terminal on the dead battery because this can cause sparks.
6. Connect the red positive (+) cable to the positive (+) terminal of the dead battery. Use a remote positive (+) terminal if the vehicle has one.
7. Do not let the other end touch metal. Connect it to the positive (+) terminal of the good battery. Use a remote positive (+) terminal if the vehicle has one.
8. Now connect the black negative (–) cable to the negative (–) terminal of the good battery. Use a remote negative (–) terminal if the vehicle has one.

   Do not let the other end touch anything until the next step. The other end of the negative (–) cable does not go to the dead battery. It goes to a heavy, unpainted metal engine part or to a remote negative (–) terminal on the vehicle with the dead battery.
9. Connect the other end of the negative (–) cable at least 18 inches (45 cm) away from the dead battery, but not near engine parts that move. The electrical connection is just as good there, and the chance of sparks getting back to the battery is much less.

   Your vehicle has a remote negative (–) terminal for this purpose.
10. Now start the vehicle with the good battery and run the engine for a while.
11. Press the unlock button on the remote keyless entry transmitter to disarm your content theft-deterrent system.
12. Try to start the vehicle that had the dead battery. If it will not start after a few tries, it probably needs service.

Notice: **If the jumper cables are connected or removed in the wrong order, electrical shorting may occur and damage the vehicle. The repairs would not be covered by your warranty. Always connect and remove the jumper cables in the correct order, making sure that the cables do not touch each other or other metal.**

Downloaded from www.Manualslib.com manuals search engine

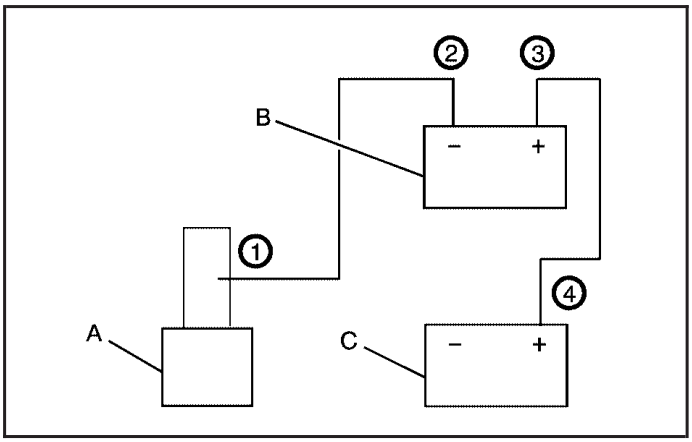

Jumper Cable Removal

A. Heavy, Unpainted Metal Engine Part or Remote Negative (–) Terminal

B. Good Battery or Remote Positive (+) and Remote Negative (–) Terminals

C. Dead Battery or Remote Positive (+) Terminal

To disconnect the jumper cables from both vehicles, do the following:

1. Disconnect the black negative (–) cable from the vehicle that had the dead battery.
2. Disconnect the black negative (–) cable from the vehicle with the good battery.
3. Disconnect the red positive (+) cable from the vehicle with the good battery.
4. Disconnect the red positive (+) cable from the other vehicle.
5. Return the fuse block cover to its original position.

Downloaded from www.Manualslib.com manuals search engine

All-Wheel Drive

If you have an all-wheel-drive vehicle, be sure to perform the lubricant checks described in this section. However, there are two additional systems that need lubrication.

Transfer Case (Power Transfer Unit)

When to Check Lubricant

Refer to the Maintenance Schedule to determine how often to check the lubricant. See *Scheduled Maintenance on page 6-4*.

How to Check Lubricant

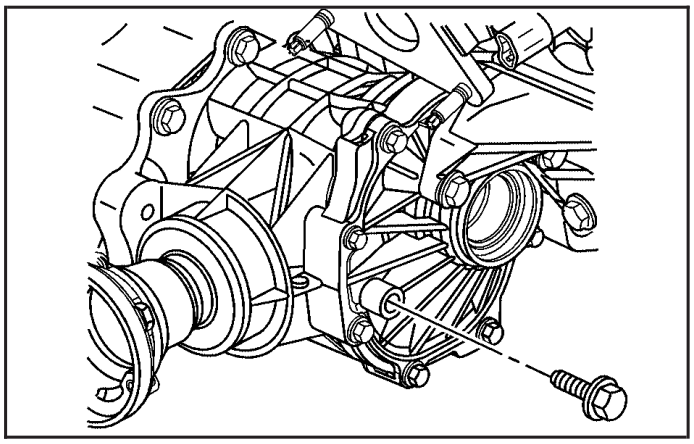

To get an accurate reading, the vehicle should be on a level surface.

If the level is below the bottom of the filler plug hole, you'll need to add some lubricant. Add enough lubricant to raise the level to the bottom of the filler plug hole, located on the transfer case.

What to Use

Refer to the Maintenance Schedule to determine what kind of lubricant to use. See *Recommended Fluids and Lubricants on page 6-12*.

Downloaded from www.Manualslib.com manuals search engine

Carrier Assembly-Differential (Rear Drive Module)

When to Check and Change Lubricant

Refer to the Maintenance Schedule to determine how often to check the lubricant and when to change it. See *Scheduled Maintenance on page 6-4*.

How to Check Lubricant

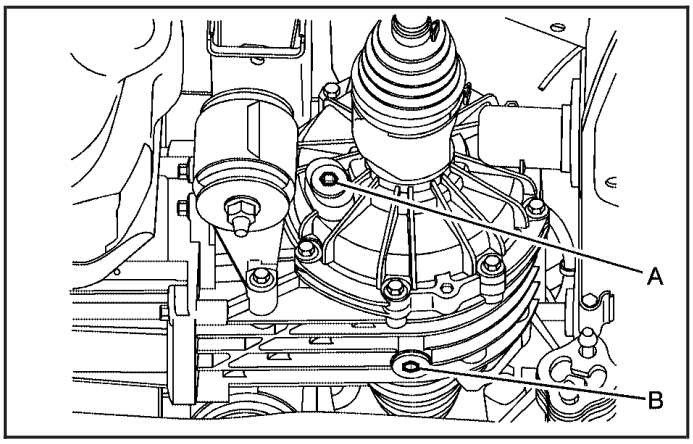

AWD Differential Case for 3.4L V6 Model

A. Fill Plug
B. Drain Plug

Downloaded from www.Manualslib.com manuals search engine

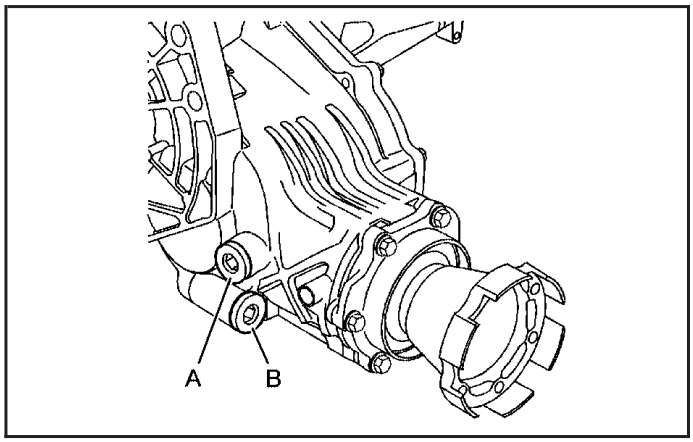

AWD Differential Case for 3.6L V6 Model

A. Fill Plug

B. Drain Plug

To get an accurate reading, the vehicle should be on a level surface.

If the level is below the bottom of the filler plug hole, you'll need to add some lubricant. Add enough lubricant to raise the level to the bottom of the filler plug hole. A fluid loss could indicate a problem; check and have it repaired, if needed.

What to Use

Refer to the Maintenance Schedule to determine what kind of lubricant to use. See *Recommended Fluids and Lubricants on page 6-12*.

Headlamp Aiming

Headlamp aim has been preset at the factory and should need no further adjustment.

However, if your vehicle is damaged in a crash, the headlamp aim may be affected. Aim adjustment to the low-beam headlamps may be necessary if oncoming drivers flash their high-beam headlamps at you (for vertical aim).

If the headlamps need to be re-aimed, it is recommended that you take the vehicle to your dealer/retailer for service.

Downloaded from www.Manualslib.com manuals search engine

Bulb Replacement

For the proper type of replacement bulbs, see *Replacement Bulbs on page 5-50*.

For any bulb changing procedure not listed in this section, contact your dealer/retailer.

Halogen Bulbs

⚠ CAUTION:

Halogen bulbs have pressurized gas inside and can burst if you drop or scratch the bulb. You or others could be injured. Be sure to read and follow the instructions on the bulb package.

Headlamps, Front Turn Signal, Sidemarker, and Parking Lamps

To replace one of these bulbs:

1. Open the hood. See *Hood Release on page 5-11* for more information.

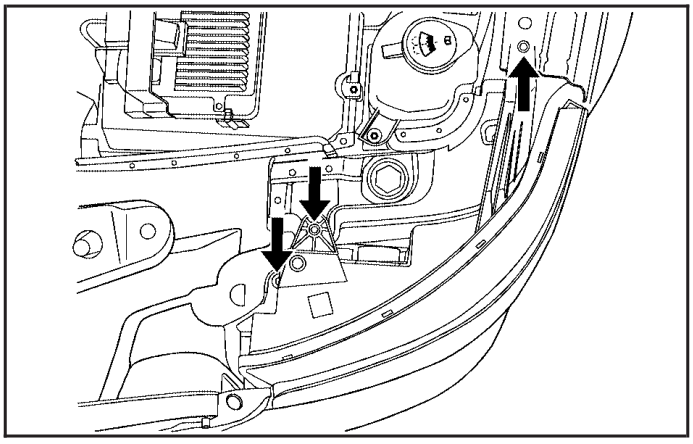

2. Remove the three headlamp assembly attachment screws.
3. Pull the headlamp assembly toward you to release it from the hidden, lower headlamp mount. The headlamp assembly will need to be carefully disengaged from the vehicle.

Downloaded from www.Manualslib.com manuals search engine

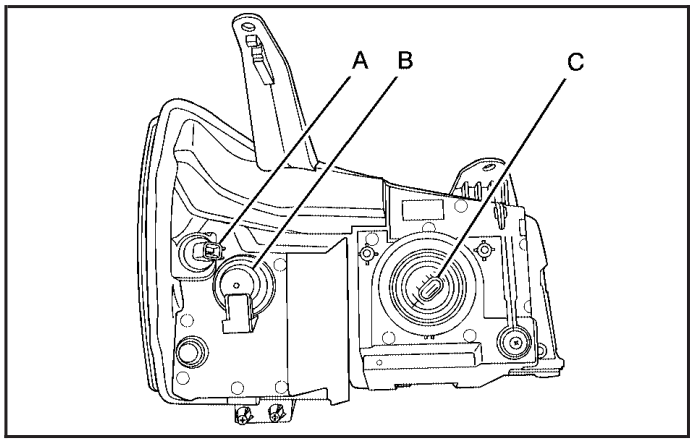

A. Sidemarker Lamp
B. Parking/Turn Signal Lamp
C. Low/High-Beam/DRL Headlamp

4. Pull the locking tab back on the bulb socket and push the release tab in to release the wiring harness. Turn the bulb socket counterclockwise to remove it from the headlamp assembly.
5. Pull the bulb straight out from the socket.
6. Push the new bulb into the socket and reinstall the socket into the headlamp assembly by turning it clockwise.
7. Connect the electrical connector.
8. Reverse Steps 1 through 4 to reinstall the headlamp assembly. When reinstalling the three headlamp screws, do not overtighten.

Downloaded from www.Manualslib.com manuals search engine

Taillamps, Turn Signal, Stoplamps and Back-up Lamps

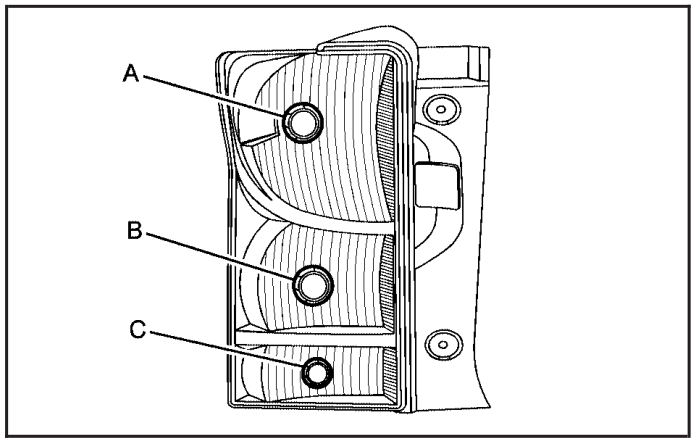

A. Stoplamp/Taillamp/Sidemarker Lamp
B. Turn Signal Lamp/Taillamp
C. Backup Lamp

To replace one of these bulbs:

1. Open the liftgate. See *Liftgate on page 2-13* for more information.

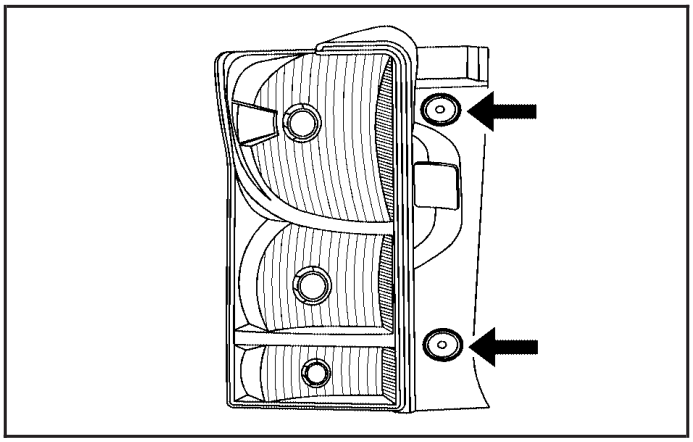

2. Remove the taillamp screw covers.
3. Remove the taillamp screws.
4. Pull the taillamp assembly towards you.
5. Turn the bulb socket counterclockwise to disconnect it from the taillamp assembly.
6. Pull the bulb out of the bulb socket.
7. Push the new bulb into the bulb socket.

Downloaded from www.Manualslib.com manuals search engine

8. Insert the bulb socket into the taillamp assembly and turn it clockwise to secure.
9. Reverse Steps 1 through 3 to reinstall the taillamp assembly. When reinstalling the screws, do not overtighten.

License Plate Lamp

To replace one of these bulbs:

1. Remove the two screws holding each of the license plate lamps to the liftgate handle.

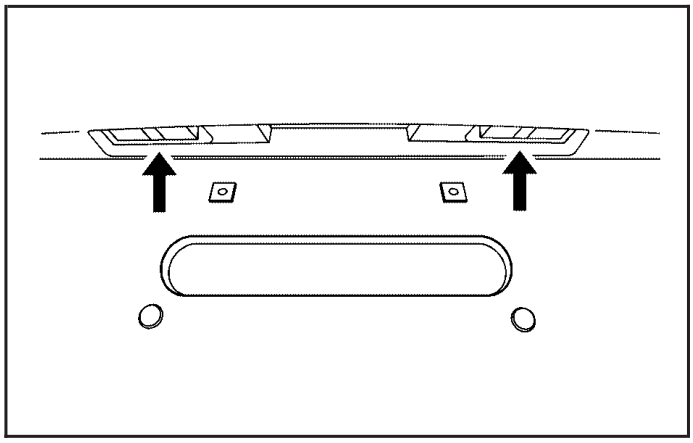

2. Turn and pull the license plate lamp down through the liftgate opening.
3. Turn the bulb socket counterclockwise and pull the bulb straight out of the socket.
4. Install the new bulb.
5. Reverse Steps 1 through 3 to reinstall the license plate lamp.

Replacement Bulbs

Exterior Lamp	Bulb Number
Back-Up, Rear Turn Signal, Stoplamp and Taillamp	3157
Front and Rear Sidemarker Lamp	194
Front Turn Signal Lamp	5702A
License Plate Lamp	9421330
Low/High-Beam Headlamp/DRL	H13

For replacement bulbs not listed here, contact your dealer.

Downloaded from www.Manualslib.com manuals search engine

Windshield Wiper Blade Replacement

Windshield wiper blades should be inspected for wear and cracking. See *Scheduled Maintenance on page 6-4* for more information.

Replacement blades come in different types and are removed in different ways. For proper type and length, see *Maintenance Replacement Parts on page 6-14*.

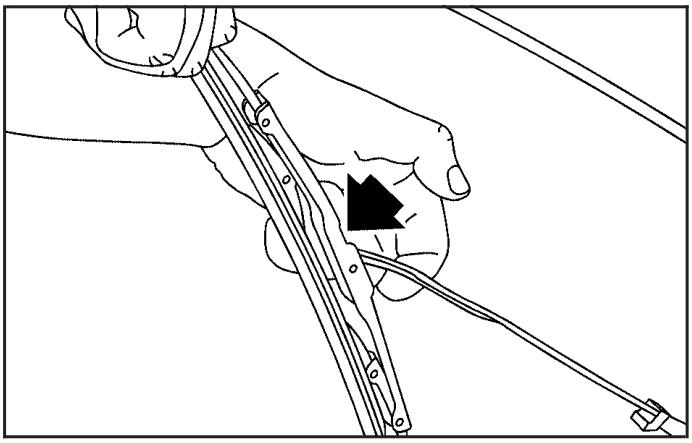

To replace the windshield wiper blade assembly do the following:

1. Lift the wiper arm away from the windshield.

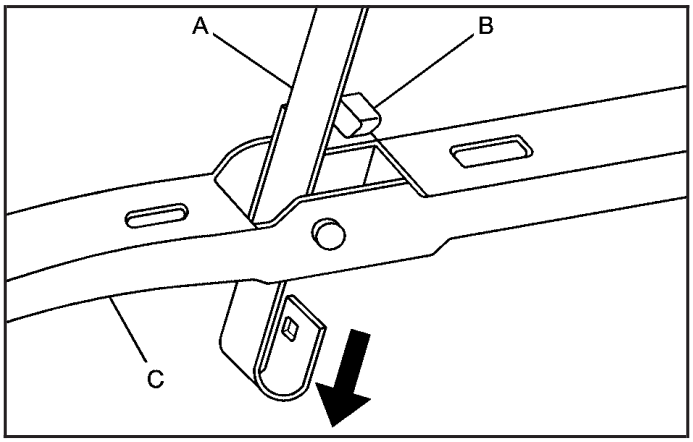

2. Push the release lever (B) to disengage the hook and push the wiper arm (A) out of the blade (C).
3. Push the new wiper blade securely on the wiper arm until you hear the release lever click into place.

To replace the rear window wiper blade do the following:

1. Lift the wiper blade arm straight toward you.
2. Push the blade release button and slide the whole blade to the right to remove.
3. Install the new blade.
4. Push the wiper blade arm back into place.

Downloaded from www.Manualslib.com manuals search engine

Tires

Your new vehicle comes with high-quality tires made by a leading tire manufacturer. If you ever have questions about your tire warranty and where to obtain service, see your vehicle Warranty booklet for details.

⚠ CAUTION:

- **Poorly maintained and improperly used tires are dangerous.**
- **Overloading your tires can cause overheating as a result of too much flexing. You could have an air-out and a serious accident. See *Loading Your Vehicle on page 4-22*.**

CAUTION: (Continued)

CAUTION: (Continued)

- **Underinflated tires pose the same danger as overloaded tires. The resulting accident could cause serious injury. Check all tires frequently to maintain the recommended pressure. Tire pressure should be checked when your tires are cold. See *Inflation - Tire Pressure on page 5-59*.**
- **Overinflated tires are more likely to be cut, punctured, or broken by a sudden impact — such as when you hit a pothole. Keep tires at the recommended pressure.**
- **Worn, old tires can cause accidents. If your tread is badly worn, or if your tires have been damaged, replace them.**

See *High-Speed Operation on page 5-61* for inflation pressure adjustment for high speed driving.

Downloaded from www.Manualslib.com manuals search engine

Tire Sidewall Labeling

Useful information about a tire is molded into its sidewall. The examples below show a typical passenger vehicle tire and a compact spare tire sidewall.

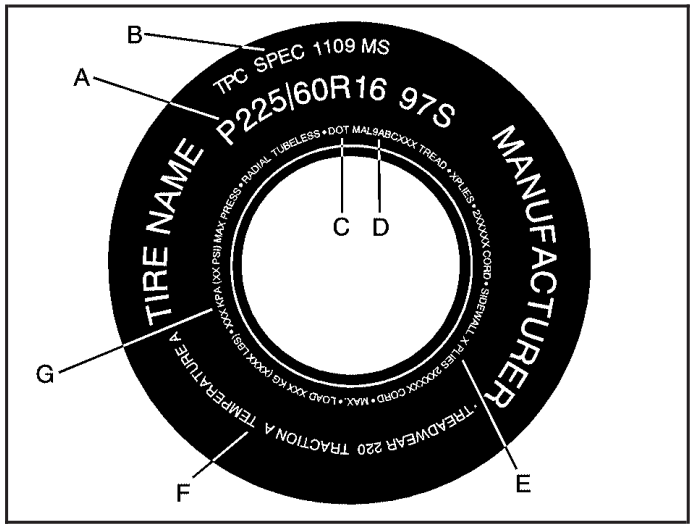

Passenger (P-Metric) Tire Example

(A) Tire Size: The tire size is a combination of letters and numbers used to define a particular tire's width, height, aspect ratio, construction type, and service description. See the "Tire Size" illustration later in this section for more detail.

(B) TPC Spec (Tire Performance Criteria Specification): Original equipment tires designed to GM's specific tire performance criteria have a TPC specification code molded onto the sidewall. GM's TPC specifications meet or exceed all federal safety guidelines.

(C) DOT (Department of Transportation): The Department of Transportation (DOT) code indicates that the tire is in compliance with the U.S. Department of Transportation Motor Vehicle Safety Standards.

(D) Tire Identification Number (TIN): The letters and numbers following DOT (Department of Transportation) code is the Tire Identification Number (TIN). The TIN shows the manufacturer and plant code, tire size, and date the tire was manufactured. The TIN is molded onto both sides of the tire, although only one side may have the date of manufacture.

Downloaded from www.Manualslib.com manuals search engine

(E) Tire Ply Material: The type of cord and number of plies in the sidewall and under the tread.

(F) Uniform Tire Quality Grading (UTQG): Tire manufacturers are required to grade tires based on three performance factors: treadwear, traction, and temperature resistance. For more information see *Uniform Tire Quality Grading on page 5-72*.

(G) Maximum Cold Inflation Load Limit: Maximum load that can be carried and the maximum pressure needed to support that load.

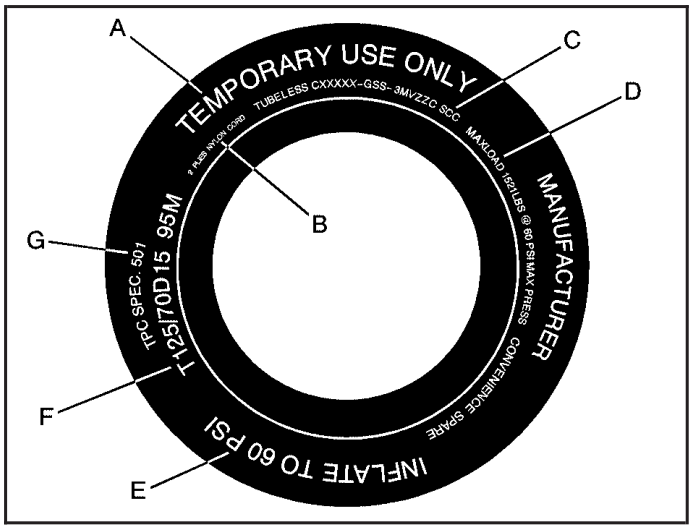

Compact Spare Tire Example

(A) Temporary Use Only: The compact spare tire or temporary use tire has a tread life of approximately 3,000 miles (5 000 km) and should not be driven at speeds over 65 mph (105 km/h). The compact spare tire is for emergency use when a regular road tire has lost air and gone flat. If your vehicle has a compact spare tire, see *Compact Spare Tire on page 5-88* and *If a Tire Goes Flat on page 5-76*.

Downloaded from www.Manualslib.com manuals search engine

(B) Tire Ply Material: The type of cord and number of plies in the sidewall and under the tread.

(C) Tire Identification Number (TIN): The letters and numbers following the DOT (Department of Transportation) code is the Tire Identification Number (TIN). The TIN shows the manufacturer and plant code, tire size, and date the tire was manufactured. The TIN is molded onto both sides of the tire, although only one side may have the date of manufacture.

(D) Maximum Cold Inflation Load Limit: Maximum load that can be carried and the maximum pressure needed to support that load.

(E) Tire Inflation: The temporary use tire or compact spare tire should be inflated to 60 psi (420 kPa). For more information on tire pressure and inflation see *Inflation - Tire Pressure on page 5-59*.

(F) Tire Size : A combination of letters and numbers define a tire's width, height, aspect ratio, construction type, and service description. The letter T as the first character in the tire size means the tire is for temporary use only.

(G) TPC Spec (Tire Performance Criteria Specification): Original equipment tires designed to GM's specific tire performance criteria have a TPC specification code molded onto the sidewall. GM's TPC specifications meet or exceed all federal safety guidelines.

Tire Size

The following illustration shows an example of a typical passenger vehicle tire size.

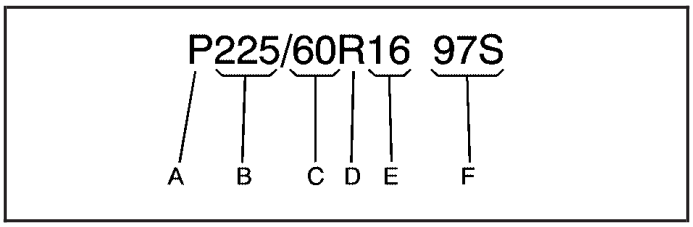

(A) Passenger (P-Metric) Tire: The United States version of a metric tire sizing system. The letter P as the first character in the tire size means a passenger vehicle tire engineered to standards set by the U.S. Tire and Rim Association.

(B) Tire Width: The three-digit number indicates the tire section width in millimeters from sidewall to sidewall.

Downloaded from www.Manualslib.com manuals search engine

(C) Aspect Ratio: A two-digit number that indicates the tire height-to-width measurements. For example, if the tire size aspect ratio is 60, as shown in item C of the illustration, it would mean that the tire's sidewall is 60 percent as high as it is wide.

(D) Construction Code: A letter code is used to indicate the type of ply construction in the tire. The letter R means radial ply construction; the letter D means diagonal or bias ply construction; and the letter B means belted-bias ply construction.

(E) Rim Diameter: Diameter of the wheel in inches.

(F) Service Description: These characters represent the load range and speed rating of the tire. The load index represents the load carry capacity a tire is certified to carry. The load index can range from 1 to 279. The speed rating is the maximum speed a tire is certified to carry a load. Speed ratings range from A to Z.

Tire Terminology and Definitions

Air Pressure: The amount of air inside the tire pressing outward on each square inch of the tire. Air pressure is expressed in pounds per square inch (psi) or kilopascal (kPa).

Accessory Weight: This means the combined weight of optional accessories. Some examples of optional accessories are, automatic transmission, power steering, power brakes, power windows, power seats, and air conditioning.

Aspect Ratio: The relationship of a tire's height to its width.

Belt: A rubber coated layer of cords that is located between the plies and the tread. Cords may be made from steel or other reinforcing materials.

Bead: The tire bead contains steel wires wrapped by steel cords that hold the tire onto the rim.

Bias Ply Tire: A pneumatic tire in which the plies are laid at alternate angles less than 90 degrees to the centerline of the tread.

Downloaded from www.Manualslib.com manuals search engine

Cold Tire Pressure: The amount of air pressure in a tire, measured in pounds per square inch (psi) or kilopascals (kPa) before a tire has built up heat from driving. See *Inflation - Tire Pressure on page 5-59*.

Curb Weight: The weight of a motor vehicle with standard and optional equipment including the maximum capacity of fuel, oil, and coolant, but without passengers and cargo.

DOT Markings: A code molded into the sidewall of a tire signifying that the tire is in compliance with the U.S. Department of Transportation (DOT) motor vehicle safety standards. The DOT code includes the Tire Identification Number (TIN), an alphanumeric designator which can also identify the tire manufacturer, production plant, brand, and date of production.

GVWR: Gross Vehicle Weight Rating. See *Loading Your Vehicle on page 4-22*.

GAWR FRT: Gross Axle Weight Rating for the front axle. See *Loading Your Vehicle on page 4-22*.

GAWR RR: Gross Axle Weight Rating for the rear axle. See *Loading Your Vehicle on page 4-22*.

Intended Outboard Sidewall: The side of an asymmetrical tire, that must always face outward when mounted on a vehicle.

Kilopascal (kPa): The metric unit for air pressure.

Light Truck (LT-Metric) Tire: A tire used on light duty trucks and some multipurpose passenger vehicles.

Load Index: An assigned number ranging from 1 to 279 that corresponds to the load carrying capacity of a tire.

Maximum Inflation Pressure: The maximum air pressure to which a cold tire can be inflated. The maximum air pressure is molded onto the sidewall.

Maximum Load Rating: The load rating for a tire at the maximum permissible inflation pressure for that tire.

Downloaded from www.Manualslib.com manuals search engine

Maximum Loaded Vehicle Weight: The sum of curb weight, accessory weight, vehicle capacity weight, and production options weight.

Normal Occupant Weight: The number of occupants a vehicle is designed to seat multiplied by 150 lbs (68 kg). See *Loading Your Vehicle on page 4-22*.

Occupant Distribution: Designated seating positions.

Outward Facing Sidewall: The side of an asymmetrical tire that has a particular side that faces outward when mounted on a vehicle. The side of the tire that contains a whitewall, bears white lettering, or bears manufacturer, brand, and/or model name molding that is higher or deeper than the same moldings on the other sidewall of the tire.

Passenger (P-Metric) Tire: A tire used on passenger cars and some light duty trucks and multipurpose vehicles.

Recommended Inflation Pressure: Vehicle manufacturer's recommended tire inflation pressure as shown on the tire placard. See *Inflation - Tire Pressure on page 5-59* and *Loading Your Vehicle on page 4-22*.

Radial Ply Tire: A pneumatic tire in which the ply cords that extend to the beads are laid at 90 degrees to the centerline of the tread.

Rim: A metal support for a tire and upon which the tire beads are seated.

Sidewall: The portion of a tire between the tread and the bead.

Speed Rating: An alphanumeric code assigned to a tire indicating the maximum speed at which a tire can operate.

Traction: The friction between the tire and the road surface. The amount of grip provided.

Tread: The portion of a tire that comes into contact with the road.

Treadwear Indicators: Narrow bands, sometimes called wear bars, that show across the tread of a tire when only 1/16 inch (1.6 mm) of tread remains. See *When It Is Time for New Tires on page 5-69*.

Downloaded from www.Manualslib.com manuals search engine

UTQGS (Uniform Tire Quality Grading Standards): A tire information system that provides consumers with ratings for a tire's traction, temperature, and treadwear. Ratings are determined by tire manufacturers using government testing procedures. The ratings are molded into the sidewall of the tire. See *Uniform Tire Quality Grading on page 5-72*.

Vehicle Capacity Weight: The number of designated seating positions multiplied by 150 lbs (68 kg) plus the rated cargo load. See *Loading Your Vehicle on page 4-22*.

Vehicle Maximum Load on the Tire: Load on an individual tire due to curb weight, accessory weight, occupant weight, and cargo weight.

Vehicle Placard: A label permanently attached to a vehicle showing the vehicle's capacity weight and the original equipment tire size and recommended inflation pressure. See "Tire and Loading Information Label" under *Loading Your Vehicle on page 4-22*.

Inflation - Tire Pressure

Tires need the correct amount of air pressure to operate effectively.

Notice: **Do not let anyone tell you that under-inflation or over-inflation is all right. It is not. If your tires do not have enough air (under-inflation), you can get the following:**

- **Too much flexing**
- **Too much heat**
- **Tire overloading**
- **Premature or irregular wear**
- **Poor handling**
- **Reduced fuel economy**

If your tires have too much air (over-inflation), you can get the following:

- **Unusual wear**
- **Poor handling**
- **Rough ride**
- **Needless damage from road hazards**

Downloaded from www.Manualslib.com manuals search engine

A vehicle specific Tire and Loading Information label is attached to your vehicle. This label shows your vehicle's original equipment tires and the correct inflation pressures for your tires when they are cold. The recommended cold tire inflation pressure, shown on the label, is the minimum amount of air pressure needed to support your vehicle's maximum load carrying capacity.

For additional information regarding how much weight your vehicle can carry, and an example of the Tire and Loading Information label, see *Loading Your Vehicle on page 4-22*. How you load your vehicle affects vehicle handling and ride comfort. Never load your vehicle with more weight than it was designed to carry.

When to Check

Check your tires once a month or more. Do not forget to check the compact spare tire, it should be at 60 psi (420 kPa). For additional information regarding the compact spare tire, see *Compact Spare Tire on page 5-88*.

How to Check

Use a good quality pocket-type gage to check tire pressure. You cannot tell if your tires are properly inflated simply by looking at them. Radial tires may look properly inflated even when they are under-inflated. Check the tire's inflation pressure when the tires are cold. Cold means your vehicle has been sitting for at least three hours or driven no more than 1 mile (1.6 km).

Remove the valve cap from the tire valve stem. Press the tire gage firmly onto the valve to get a pressure measurement. If the cold tire inflation pressure matches the recommended pressure on the Tire and Loading Information label, no further adjustment is necessary. If the inflation pressure is low, add air until you reach the recommended amount.

If you overfill the tire, release air by pushing on the metal stem in the center of the tire valve. Re-check the tire pressure with the tire gage.

Be sure to put the valve caps back on the valve stems. They help prevent leaks by keeping out dirt and moisture.

Downloaded from www.Manualslib.com manuals search engine

High-Speed Operation

⚠ CAUTION:

Driving at high speeds, 100 mph (160 km/h) or higher, puts an additional strain on tires. Sustained high-speed driving causes excessive heat build up and can cause sudden tire failure. You could have a crash and you or others could be killed. Some high-speed rated tires require inflation pressure adjustment for high speed operation. When speed limits and road conditions are such that a vehicle can be driven at high speeds, make sure the tires are rated for high speed operation, in excellent condition, and set to the correct cold tire inflation pressure for the vehicle load.

If your vehicle has P235/50R18 size tires, they will require inflation pressure adjustment when driving your vehicle at speeds of 100 mph (160 km/h) or higher. Set the cold inflation pressure to the maximum inflation pressure shown on the tire sidewall, or 35 psi (241 kPa), whichever is lower. See the example following. When you end this high-speed driving, return the tires to the cold tire inflation pressure shown on the Tire and Loading Information label. See *Loading Your Vehicle on page 4-22* and *Inflation - Tire Pressure on page 5-59*.

Example:

You will find the maximum load and inflation pressure molded on the tire's sidewall, in small letters, near the rim flange. It will read something like this: Maximum load 690 kg (1521 lbs) 300 kPa (44 psi) Max. Press.

For this example, you would set the inflation pressure for high-speed driving at 35 psi (241 kPa).

Downloaded from www.Manualslib.com manuals search engine

Tire Pressure Monitor System

The Tire Pressure Monitor System (TPMS) uses radio and sensor technology to check tire pressure levels. The TPMS sensors monitor the air pressure in your vehicle's tires and transmit tire pressure readings to a receiver located in the vehicle.

Each tire, including the spare (if provided), should be checked monthly when cold and inflated to the inflation pressure recommended by the vehicle manufacturer on the vehicle placard or tire inflation pressure label. (If your vehicle has tires of a different size than the size indicated on the vehicle placard or tire inflation pressure label, you should determine the proper tire inflation pressure for those tires.)

As an added safety feature, your vehicle has been equipped with a tire pressure monitoring system (TPMS) that illuminates a low tire pressure telltale when one or more of your tires is significantly under-inflated.

Accordingly, when the low tire pressure telltale illuminates, you should stop and check your tires as soon as possible, and inflate them to the proper pressure. Driving on a significantly under-inflated tire causes the tire to overheat and can lead to tire failure. Under-inflation also reduces fuel efficiency and tire tread life, and may affect the vehicle's handling and stopping ability.

Please note that the TPMS is not a substitute for proper tire maintenance, and it is the driver's responsibility to maintain correct tire pressure, even if under-inflation has not reached the level to trigger illumination of the TPMS low tire pressure telltale.

Your vehicle has also been equipped with a TPMS malfunction indicator to indicate when the system is not operating properly. The TPMS malfunction indicator is combined with the low tire pressure telltale. When the system detects a malfunction, the telltale will flash for approximately one minute and then remain continuously illuminated. This sequence will continue upon subsequent vehicle start-ups as long as the malfunction exists.

When the malfunction indicator is illuminated, the system may not be able to detect or signal low tire pressure as intended. TPMS malfunctions may occur for a variety of reasons, including the installation of replacement or alternate tires or wheels on the vehicle that prevent the TPMS from functioning properly. Always check the TPMS malfunction telltale after replacing one or more tires or wheels on your vehicle to ensure that the replacement or alternate tires and wheels allow the TPMS to continue to function properly.

See *Tire Pressure Monitor Operation on page 5-63*, for additional information.

Downloaded from www.Manualslib.com manuals search engine

Federal Communications Commission (FCC) and Industry and Science Canada

The Tire Pressure Monitor System (TPMS) operates on a radio frequency and complies with Part 15 of the FCC Rules. Operation is subject to the following two conditions:

1. This device may not cause harmful interference.
2. This device must accept any interference received, including interference that may cause undesired operation.

The Tire Pressure Monitor System (TPMS) operates on a radio frequency and complies with RSS-210 of Industry and Science Canada. Operation is subject to the following two conditions:

1. This device may not cause interference.
2. This device must accept any interference received, including interference that may cause undesired operation of the device.

Changes or modifications to this system by other than an authorized service facility could void authorization to use this equipment.

Tire Pressure Monitor Operation

The Tire Pressure Monitor System (TPMS) is designed to warn the driver when a low tire pressure condition exists. TPMS sensors are mounted onto each tire and wheel assembly, excluding the spare tire and wheel assembly. The TPMS sensors monitor the air pressure in the vehicle's tires and transmits the tire pressure readings to a receiver located in the vehicle.

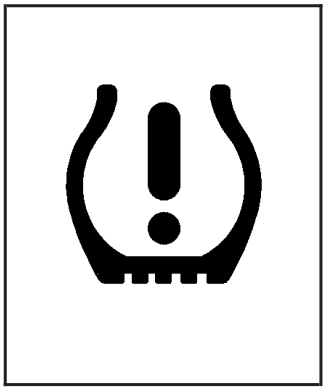

When a low tire pressure condition is detected, the TPMS illuminates the low tire pressure warning light located on the instrument panel cluster.

Downloaded from www.Manualslib.com manuals search engine

At the same time a message to check the pressure in a specific tire appears on the Driver Information Center (DIC) display. The low tire pressure warning light and the DIC warning message come on at each ignition cycle until the tires are inflated to the correct inflation pressure. Using the DIC, tire pressure levels can be viewed by the driver. For additional information and details about the DIC operation and displays see *DIC Operation and Displays on page 3-45* and *DIC Warnings and Messages on page 3-52*.

The low tire pressure warning light may come on in cool weather when the vehicle is first started, and then turn off as you start to drive. This could be an early indicator that the air pressure in the tire(s) are getting low and need to be inflated to the proper pressure.

A Tire and Loading Information label, attached to your vehicle, shows the size of your vehicle's original equipment tires and the correct inflation pressure for your vehicle's tires when they are cold. See *Loading Your Vehicle on page 4-22*, for an example of the Tire and Loading Information label and its location on your vehicle. Also see *Inflation - Tire Pressure on page 5-59*.

Your vehicle's TPMS can warn you about a low tire pressure condition but it does not replace normal tire maintenance. See *Tire Inspection and Rotation on page 5-67* and *Tires on page 5-52*.

Notice: **Liquid tire sealants could damage the Tire Pressure Monitor System (TPMS) sensors. Sensor damage caused by using a tire sealant is not covered by your warranty. Do not use liquid tire sealants.**

Downloaded from www.Manualslib.com manuals search engine

TPMS Malfunction Light and Message

The TPMS will not function properly if one or more of the TPMS sensors are missing or inoperable. When the system detects a malfunction, the low tire warning light flashes for about one minute and then stays on for the remainder of the ignition cycle. A DIC warning message is also displayed. The low tire warning light and DIC warning message come on at each ignition cycle until the problem is corrected. Some of the conditions that can cause the malfunction light and DIC message to come on are:

- One of the road tires has been replaced with the spare tire. The spare tire does not have a TPMS sensor. The TPMS malfunction light and DIC message should go off once you re-install the road tire containing the TPMS sensor.
- The TPMS sensor matching process was started but not completed or not completed successfully after rotating the vehicle's tires. The DIC message and TPMS malfunction light should go off once the TPMS sensor matching process is performed successfully. See "TPMS Sensor Matching Process" later in this section.
- One or more TPMS sensors are missing or damaged. The DIC message and the TPMS malfunction light should go off when the TPMS sensors are installed and the sensor matching process is performed successfully. See your dealer/retailer for service.
- Replacement tires or wheels do not match your vehicle's original equipment tires or wheels. Tires and wheels other than those recommended for your vehicle could prevent the TPMS from functioning properly. See *Buying New Tires on page 5-70*.
- Operating electronic devices or being near facilities using radio wave frequencies similar to the TPMS could cause the TPMS sensors to malfunction.

If the TPMS is not functioning it cannot detect or signal a low tire condition. See your dealer/retailer for service if the TPMS malfunction light and DIC message comes on and stays on.

Downloaded from www.Manualslib.com manuals search engine

TPMS Sensor Matching Process

Each TPMS sensor has a unique identification code. Any time you rotate your vehicle's tires or replace one or more of the TPMS sensors, the identification codes will need to be matched to the new tire/wheel position. The sensors are matched to the tire/wheel positions in the following order: driver side front tire, passenger side front tire, passenger side rear tire, and driver side rear tire using a TPMS diagnostic tool. See your dealer/retailer for service.

The TPMS sensors can also be matched to each tire/wheel position by increasing or decreasing the tire's air pressure. If increasing the tire's air pressure, do not exceed the maximum inflation pressure indicated on the tire's sidewall.

To decrease air-pressure out of a tire you can use the pointed end of the valve cap, a pencil-style air pressure gage, or a key.

You have two minutes to match the first tire/wheel position, and five minutes overall to match all four tire/wheel positions. If it takes longer than two minutes, to match the first tire and wheel, or more than five minutes to match all four tire and wheel positions the matching process stops and you need to start over.

The TPMS sensor matching process is outlined below:

1. Set the parking brake.
2. Turn the ignition switch to ON/RUN with the engine off.
3. Press the Remote Keyless Entry (RKE) transmitter's LOCK and UNLOCK buttons at the same time for approximately five seconds. The horn sounds twice to signal the receiver is in relearn mode and TIRE LEARNING ACTIVE message displays on the DIC screen.
4. Start with the driver side front tire.

Downloaded from www.Manualslib.com manuals search engine

5. Remove the valve cap from the valve cap stem. Activate the TPMS sensor by increasing or decreasing the tire's air pressure for five seconds, or until a horn chirp sounds. The horn chirp, which may take up to 30 seconds to sound, confirms that the sensor identification code has been matched to this tire and wheel position.
6. Proceed to the passenger side front tire, and repeat the procedure in Step 5.
7. Proceed to the passenger side rear tire, and repeat the procedure in Step 5.
8. Proceed to the driver side rear tire, and repeat the procedure in Step 5. The horn sounds two times to indicate the sensor identification code has been matched to the driver side rear tire, and the TPMS sensor matching process is no longer active. The TIRE LEARNING ACTIVE message on the DIC display screen goes off.
9. Turn the ignition switch to LOCK/OFF.
10. Set all four tires to the recommended air pressure level as indicated on the Tire and Loading Information label.
11. Put the valve caps back on the valve stems.

Tire Inspection and Rotation

We recommend that you regularly inspect your vehicle's tires, including the spare tire, for signs of wear or damage. See *When It Is Time for New Tires on page 5-69* for more information.

Tires should be rotated every 5,000 to 8,000 miles (8 000 to 13 000 km). See *Scheduled Maintenance on page 6-4*.

The purpose of a regular tire rotation is to achieve a uniform wear for all tires on the vehicle. This will ensure that your vehicle continues to perform most like it did when the tires were new.

Any time you notice unusual wear, rotate the tires as soon as possible and check wheel alignment. Also check for damaged tires or wheels. See *When It Is Time for New Tires on page 5-69* and *Wheel Replacement on page 5-74*.

Downloaded from www.Manualslib.com manuals search engine

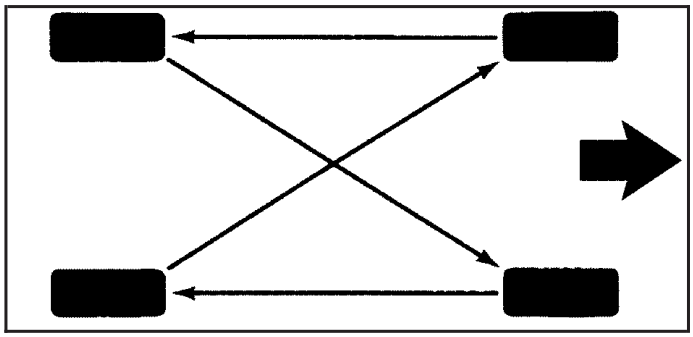

When rotating your vehicle's tires, always use the correct rotation pattern shown here.

Do not include the compact spare tire in the tire rotation.

After the tires have been rotated, adjust the front and rear inflation pressures as shown on the Tire and Loading Information label. See *Inflation - Tire Pressure on page 5-59* and *Loading Your Vehicle on page 4-22*.

Reset the Tire Pressure Monitor System. See *Tire Pressure Monitor Operation on page 5-63*.

Make certain that all wheel nuts are properly tightened. See "Wheel Nut Torque" under *Capacities and Specifications on page 5-105*.

⚠ CAUTION:

Rust or dirt on a wheel, or on the parts to which it is fastened, can make wheel nuts become loose after time. The wheel could come off and cause an accident. When you change a wheel, remove any rust or dirt from places where the wheel attaches to the vehicle. In an emergency, you can use a cloth or a paper towel to do this; but be sure to use a scraper or wire brush later, if needed, to get all the rust or dirt off. See *Changing a Flat Tire on page 5-76*.

Downloaded from www.Manualslib.com manuals search engine

When It Is Time for New Tires

Various factors, such as maintenance, temperatures, driving speeds, vehicle loading, and road conditions, influence when you need new tires.

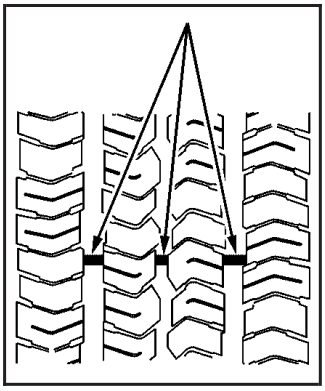

One way to tell when it is time for new tires is to check the treadwear indicators, which appear when your tires have only 1/16 inch (1.6 mm) or less of tread remaining. Some commercial truck tires may not have treadwear indicators.

You need new tires if any of the following statements are true:

- You can see the indicators at three or more places around the tire.
- You can see cord or fabric showing through the tire's rubber.
- The tread or sidewall is cracked, cut, or snagged deep enough to show cord or fabric.
- The tire has a bump, bulge, or split.
- The tire has a puncture, cut, or other damage that cannot be repaired well because of the size or location of the damage.

The rubber in tires degrades over time, even if they are not being used. This is also true for the spare tire, if your vehicle has one. Multiple conditions affect how fast this aging takes place, including temperatures, loading conditions, and inflation pressure maintenance. With proper care and maintenance tires will typically wear out before they degrade due to age. If you are unsure about the need to replace your tires as they get older, consult the tire manufacturer for more information.

Downloaded from www.Manualslib.com manuals search engine

Buying New Tires

GM has developed and matched specific tires for your vehicle. The original equipment tires installed on your vehicle, when it was new, were designed to meet General Motors Tire Performance Criteria Specification (TPC Spec) system rating. If you need replacement tires, GM strongly recommends that you get tires with the same TPC Spec rating. This way, your vehicle will continue to have tires that are designed to give the same performance and vehicle safety, during normal use, as the original tires.

GM's exclusive TPC Spec system considers over a dozen critical specifications that impact the overall performance of your vehicle, including brake system performance, ride and handling, traction control, and tire pressure monitoring performance. GM's TPC Spec number is molded onto the tire's sidewall near the tire size. If the tires have an all-season tread design, the TPC Spec number will be followed by an MS for mud and snow. See *Tire Sidewall Labeling on page 5-53* for additional information.

GM recommends replacing tires in sets of four. This is because uniform tread depth on all tires will help keep your vehicle performing most like it did when the tires were new. Replacing less than a full set of tires can affect the braking and handling performance of your vehicle. See *Tire Inspection and Rotation on page 5-67* for information on proper tire rotation.

⚠ CAUTION:

Mixing tires could cause you to lose control while driving. If you mix tires of different sizes, brands, or types (radial and bias-belted tires), the vehicle may not handle properly, and you could have a crash. Using tires of different sizes, brands, or types may also cause damage to your vehicle. Be sure to use the correct size, brand, and type of tires on all wheels. It is all right to drive with your compact spare temporarily, as it was developed for use on your vehicle. See *Compact Spare Tire on page 5-88*.

Downloaded from www.Manualslib.com manuals search engine

⚠ CAUTION:

If you use bias-ply tires on your vehicle, the wheel rim flanges could develop cracks after many miles of driving. A tire and/or wheel could fail suddenly, causing a crash. Use only radial-ply tires with the wheels on your vehicle.

If you must replace your vehicle's tires with those that do not have a TPC Spec number, make sure they are the same size, load range, speed rating, and construction type (radial and bias-belted tires) as your vehicle's original tires.

Vehicles that have a tire pressure monitoring system could give an inaccurate low-pressure warning if non-TPC Spec rated tires are installed on your vehicle. Non-TPC Spec rated tires may give a low-pressure warning that is higher or lower than the proper warning level you would get with TPC Spec rated tires. See *Tire Pressure Monitor System on page 5-62*.

Your vehicle's original equipment tires are listed on the Tire and Loading Information Label. See *Loading Your Vehicle on page 4-22*, for more information about the Tire and Loading Information Label and its location on your vehicle.

Downloaded from www.Manualslib.com manuals search engine

Different Size Tires and Wheels

If you add wheels or tires that are a different size than your original equipment wheels and tires, this could affect the way your vehicle performs, including its braking, ride and handling characteristics, stability, and resistance to rollover. Additionally, if your vehicle has electronic systems such as anti-lock brakes, rollover airbags, traction control, and electronic stability control, the performance of these systems can be affected.

⚠ CAUTION:

If you add different sized wheels, your vehicle may not provide an acceptable level of performance and safety if tires not recommended for those wheels are selected. You may increase the chance that you will crash and suffer serious injury. Only use GM specific wheel and tire systems developed for your vehicle, and have them properly installed by a GM certified technician.

See *Buying New Tires on page 5-70* and *Accessories and Modifications on page 5-3* for additional information.

Uniform Tire Quality Grading

Quality grades can be found where applicable on the tire sidewall between tread shoulder and maximum section width. For example:

Treadwear 200 Traction AA Temperature A

The following information relates to the system developed by the United States National Highway Traffic Safety Administration (NHTSA), which grades tires by treadwear, traction, and temperature performance. This applies only to vehicles sold in the United States. The grades are molded on the sidewalls of most passenger car tires. The Uniform Tire Quality Grading (UTQG) system does not apply to deep tread, winter-type snow tires, space-saver, or temporary use spare tires, tires with nominal rim diameters of 10 to 12 inches (25 to 30 cm), or to some limited-production tires.

While the tires available on General Motors passenger cars and light trucks may vary with respect to these grades, they must also conform to federal safety requirements and additional General Motors Tire Performance Criteria (TPC) standards.

Downloaded from www.Manualslib.com manuals search engine

Treadwear

The treadwear grade is a comparative rating based on the wear rate of the tire when tested under controlled conditions on a specified government test course. For example, a tire graded 150 would wear one and a half (1.5) times as well on the government course as a tire graded 100. The relative performance of tires depends upon the actual conditions of their use, however, and may depart significantly from the norm due to variations in driving habits, service practices, and differences in road characteristics and climate.

Traction – AA, A, B, C

The traction grades, from highest to lowest, are AA, A, B, and C. Those grades represent the tire's ability to stop on wet pavement as measured under controlled conditions on specified government test surfaces of asphalt and concrete. A tire marked C may have poor traction performance.

Warning: **The traction grade assigned to this tire is based on straight-ahead braking traction tests, and does not include acceleration, cornering, hydroplaning, or peak traction characteristics.**

Temperature – A, B, C

The temperature grades are A (the highest), B, and C, representing the tire's resistance to the generation of heat and its ability to dissipate heat when tested under controlled conditions on a specified indoor laboratory test wheel. Sustained high temperature can cause the material of the tire to degenerate and reduce tire life, and excessive temperature can lead to sudden tire failure. The grade C corresponds to a level of performance which all passenger car tires must meet under the Federal Motor Vehicle Safety Standard No. 109. Grades B and A represent higher levels of performance on the laboratory test wheel than the minimum required by law.

Warning: **The temperature grade for this tire is established for a tire that is properly inflated and not overloaded. Excessive speed, underinflation, or excessive loading, either separately or in combination, can cause heat buildup and possible tire failure.**

Downloaded from www.Manualslib.com manuals search engine

Wheel Alignment and Tire Balance

The tires and wheels on your vehicle were aligned and balanced carefully at the factory to give you the longest tire life and best overall performance. Adjustments to wheel alignment and tire balancing will not be necessary on a regular basis. However, if you notice unusual tire wear or your vehicle pulling to one side or the other, the alignment might need to be checked. If you notice your vehicle vibrating when driving on a smooth road, the tires and wheels might need to be rebalanced. See your dealer/retailer for proper diagnosis.

Wheel Replacement

Replace any wheel that is bent, cracked, or badly rusted or corroded. If wheel nuts keep coming loose, the wheel, wheel bolts, and wheel nuts should be replaced. If the wheel leaks air, replace it (except some aluminum wheels, which can sometimes be repaired). See your dealer/retailer if any of these conditions exist.

Your dealer/retailer will know the kind of wheel you need.

Each new wheel should have the same load-carrying capacity, diameter, width, offset, and be mounted the same way as the one it replaces.

If you need to replace any of your wheels, wheel bolts, wheel nuts, or Tire Pressure Monitor System (TPMS) sensors, replace them only with new GM original equipment parts. This way, you will be sure to have the right wheel, wheel bolts, wheel nuts, and TPMS sensors for your vehicle.

⚠ CAUTION:

Using the wrong replacement wheels, wheel bolts, or wheel nuts on your vehicle can be dangerous. It could affect the braking and handling of your vehicle, make your tires lose air and make you lose control. You could have a collision in which you or others could be injured. Always use the correct wheel, wheel bolts, and wheel nuts for replacement.

Notice: **The wrong wheel can also cause problems with bearing life, brake cooling, speedometer or odometer calibration, headlamp aim, bumper height, vehicle ground clearance, and tire or tire chain clearance to the body and chassis.**

See *Changing a Flat Tire on page 5-76* for more information.

Downloaded from www.Manualslib.com manuals search engine

Used Replacement Wheels

⚠ CAUTION:

Putting a used wheel on your vehicle is dangerous. You cannot know how it has been used or how far it has been driven. It could fail suddenly and cause a crash. If you have to replace a wheel, use a new GM original equipment wheel.

Tire Chains

⚠ CAUTION:

Do not use tire chains. There is not enough clearance. Tire chains used on a vehicle without the proper amount of clearance can cause damage to the brakes, suspension or other vehicle parts. The area damaged by the tire chains could cause you to lose control of your vehicle and you or others may be injured in a crash.

Use another type of traction device only if its manufacturer recommends it for use on your vehicle and tire size combination and road conditions. Follow that manufacturer's instructions. To help avoid damage to your vehicle, drive slowly, readjust or remove the device if it is contacting your vehicle, and do not spin your vehicle's wheels. If you do find traction devices that will fit, install them on the front tires.

Downloaded from www.Manualslib.com manuals search engine

If a Tire Goes Flat

It is unusual for a tire to blowout while you are driving, especially if you maintain your vehicle's tires properly. If air goes out of a tire, it is much more likely to leak out slowly. But if you should ever have a blowout, here are a few tips about what to expect and what to do:

If a front tire fails, the flat tire creates a drag that pulls the vehicle toward that side. Take your foot off the accelerator pedal and grip the steering wheel firmly. Steer to maintain lane position, and then gently brake to a stop well out of the traffic lane.

A rear blowout, particularly on a curve, acts much like a skid and may require the same correction you would use in a skid. In any rear blowout remove your foot from the accelerator pedal. Get the vehicle under control by steering the way you want the vehicle to go. It may be very bumpy and noisy, but you can still steer. Gently brake to a stop, well off the road if possible.

⚠ CAUTION:

Lifting a vehicle and getting under it to do maintenance or repairs is dangerous without the appropriate safety equipment and training. The jack provided with your vehicle is designed only for changing a flat tire. If it is used for anything else, you or others could be badly injured or killed if the vehicle slips off the jack. Use the jack provided with your vehicle only for changing a flat tire.

If a tire goes flat, the next part shows how to use the jacking equipment to change a flat tire safely.

Changing a Flat Tire

If a tire goes flat, avoid further tire and wheel damage by driving slowly to a level place. Turn on your vehicle's hazard warning flashers. See *Hazard Warning Flashers on page 3-6* for more information.

Downloaded from www.Manualslib.com manuals search engine

⚠ CAUTION:

Changing a tire can be dangerous. The vehicle can slip off the jack and roll over or fall on you or other people. You and they could be badly injured or even killed. Find a level place to change your tire. To help prevent the vehicle from moving:

1. **Set the parking brake firmly.**
2. **Put the shift lever in PARK (P).**
3. **Turn off the engine and do not restart while the vehicle is raised.**
4. **Do not allow passengers to remain in the vehicle.**

To be even more certain the vehicle will not move, you should put blocks at the front and rear of the tire farthest away from the one being changed. That would be the tire, on the other side, at the opposite end of the vehicle.

When your vehicle has a flat tire, use the following example as a guide to assist you in the placement of wheel blocks.

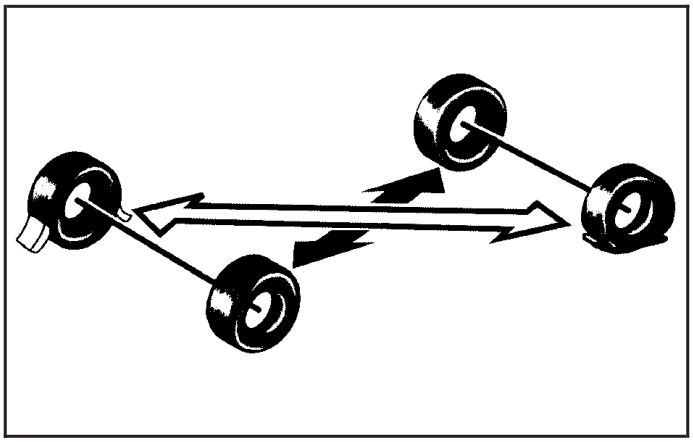

The following information tells you how to use the jack and change a tire.

Downloaded from www.Manualslib.com manuals search engine

Removing the Spare Tire and Tools

If your vehicle has the rear compartment storage panel/cover, you will have to remove it to access the load floor. See *Rear Compartment Storage Panel/Cover on page 2-45* for more information.

To access the spare tire and tools:

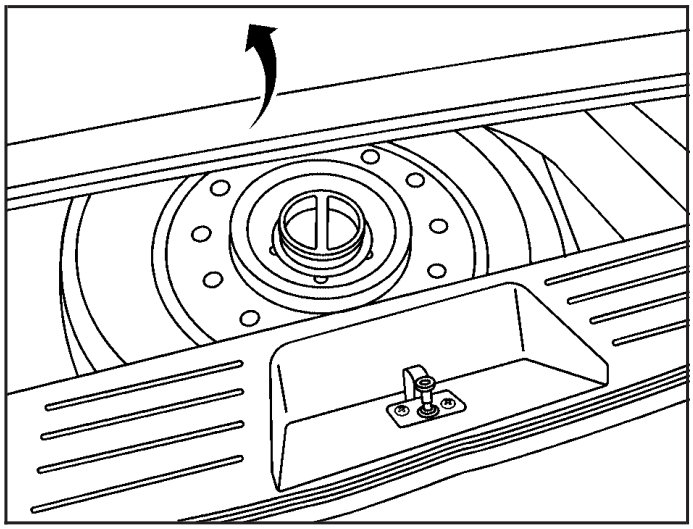

1. Lift the load floor up and pull it out of the vehicle and set it aside.

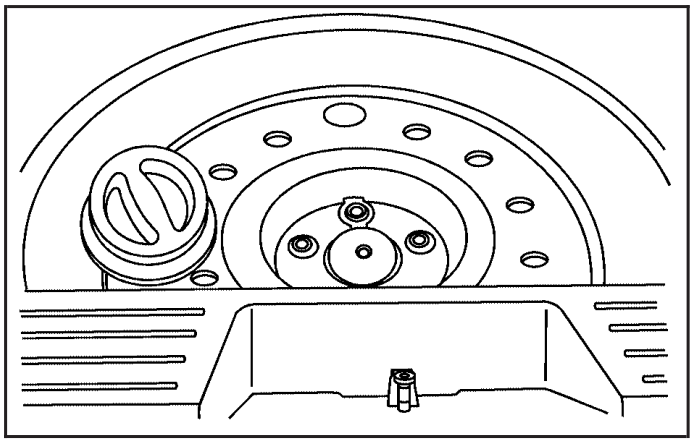

2. Remove the nut retaining the spare tire.
3. Remove the compact spare tire. See *Compact Spare Tire on page 5-88* for more information.
4. Locate the jack and wheel wrench, which are located on the driver's side of the rear cargo area, behind an access door. Pull out the access door to reach them.

Downloaded from www.Manualslib.com manuals search engine

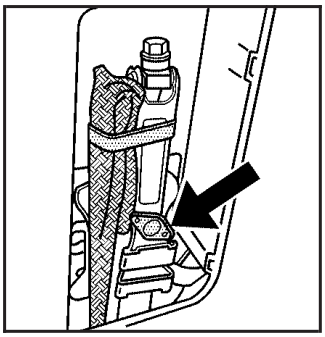

5. Remove the wing-bolt holding the jack and then remove it.

6. Remove the hook and loop fastener straps holding the bag containing the wheel wrench. Remove the wheel wrench from the bag.
7. Extend the socket portion of the wrench from the handle.

Removing the Flat Tire and Installing the Spare Tire

Take off the wheel cover or center cap, if the vehicle has one, to reach the wheel bolts.

1. Do a safety check before proceeding. See *Changing a Flat Tire on page 5-76* for more information.

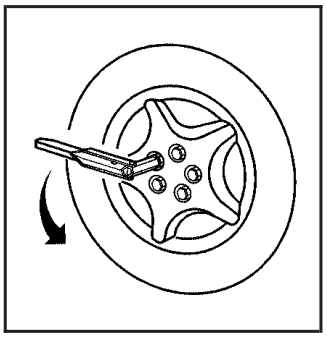

2. Loosen all five plastic caps by turning the wheel wrench counterclockwise. Do not try to remove plastic caps from the cover or center cap.
3. Pull the cover or center cap away from the wheel. Store the wheel cover in the cargo area until you have the flat tire repaired or replaced.
4. Use the wheel wrench to loosen all the wheel nuts. Do not remove them yet.

Downloaded from www.Manualslib.com manuals search engine

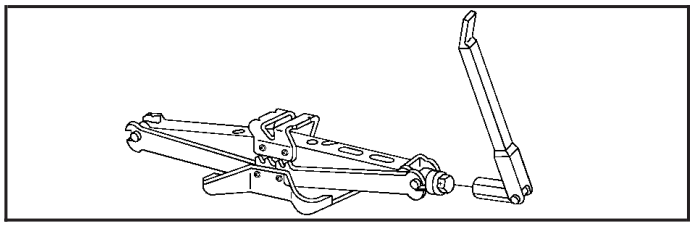

5. Attach the wheel wrench to the jack bolt head and turn the wheel wrench clockwise. That will raise the lift head a little.
6. Place the jack near the flat tire.

Notice: **Make sure that the jack lift head is in the correct position or you may damage your vehicle. The repairs would not be covered by your warranty.**

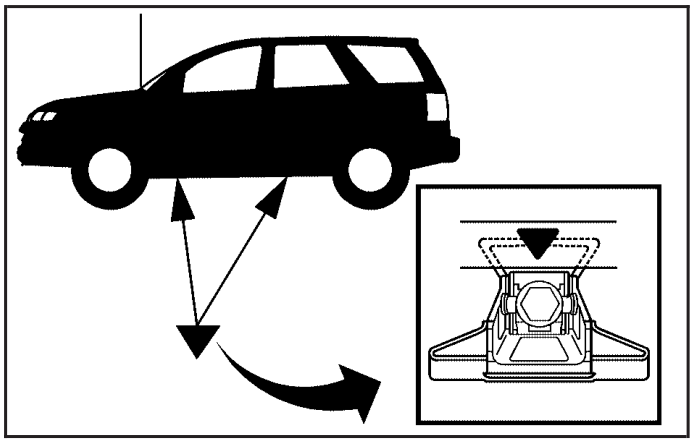

7. Find the arrow on the plastic lower body panel. Position the jack head under the metal jacking flange and not the plastic lower body panel.

Downloaded from www.Manualslib.com manuals search engine

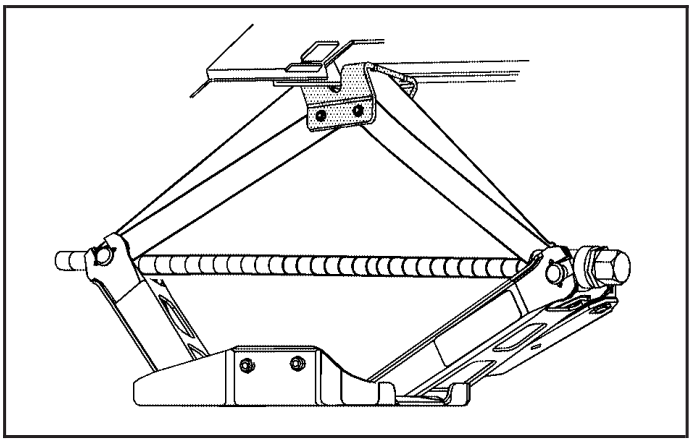

With the jack head positioned correctly on the metal jacking flange, it should look like this underneath the vehicle.

Do not lift the vehicle using the plastic lower body panel.

8. Put the compact spare tire near you.

⚠ CAUTION:

Getting under a vehicle when it is jacked up is dangerous. If the vehicle slips off the jack, you could be badly injured or killed. Never get under a vehicle when it is supported only by a jack.

⚠ CAUTION:

Raising your vehicle with the jack improperly positioned can damage the vehicle and even make the vehicle fall. To help avoid personal injury and vehicle damage, be sure to fit the jack lift head into the proper location before raising the vehicle.

Downloaded from www.Manualslib.com manuals search engine

⚠ CAUTION:

Lifting a vehicle and getting under it to do maintenance or repairs is dangerous without the appropriate safety equipment and training. The jack provided with your vehicle is designed only for changing a flat tire. If it is used for anything else, you or others could be badly injured or killed if the vehicle slips off the jack. Use the jack provided with your vehicle only for changing a flat tire.

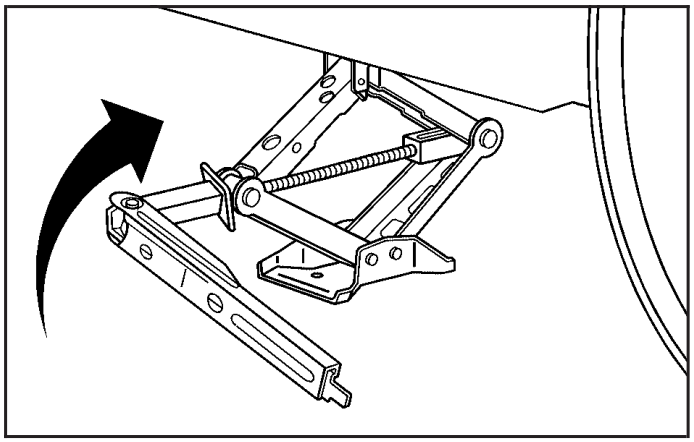

9. Raise the vehicle by turning the jack handle clockwise. Raise the vehicle far enough off the ground so there is enough room for the road tire to clear the ground.

Downloaded from www.Manualslib.com manuals search engine

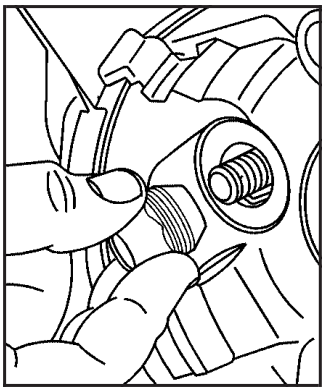

10. Remove all of the wheel nuts.

11. Remove the flat tire.

⚠ CAUTION:

Rust or dirt on a wheel, or on the parts to which it is fastened, can make wheel nuts become loose after time. The wheel could

CAUTION: (Continued)

CAUTION: (Continued)

come off and cause an accident. When you change a wheel, remove any rust or dirt from places where the wheel attaches to the vehicle. In an emergency, you can use a cloth or a paper towel to do this; but be sure to use a scraper or wire brush later, if needed, to get all the rust or dirt off. See *Changing a Flat Tire on page 5-76*.

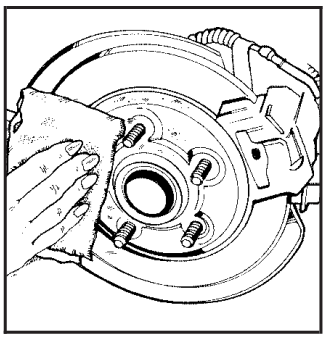

12. Remove any rust or dirt from the wheel bolts, mounting surfaces, and spare wheel.

Downloaded from www.Manualslib.com manuals search engine

13. Place the compact spare tire on the wheel-mounting surface.

⚠ CAUTION:

Never use oil or grease on studs or nuts. Because the nuts might come loose. The vehicle's wheel could fall off, causing a crash.

14. Reinstall the wheel nuts. Tighten each nut by hand until the wheel is held against the hub.

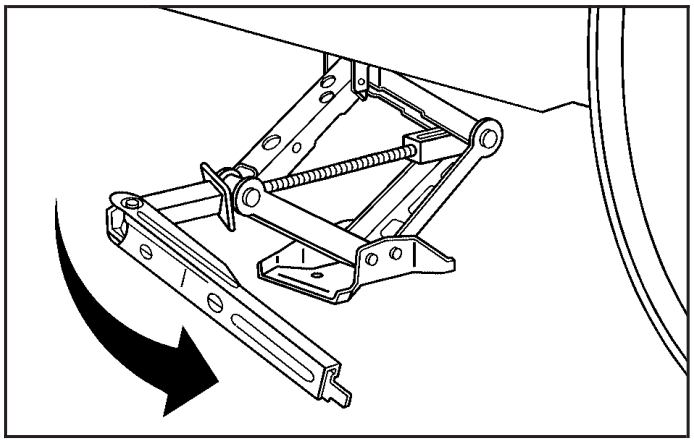

15. Lower the vehicle by turning the jack handle counterclockwise.

Downloaded from www.Manualslib.com manuals search engine

⚠ CAUTION:

Incorrect or improperly tightened wheel nuts can cause the wheel to come loose and even come off. This could lead to a crash. If you have to replace them, be sure to get new original equipment wheel nuts. Stop somewhere as soon as you can and have the nuts tightened with a torque wrench to the proper torque specification. See *Capacities and Specifications on page 5-105* for wheel nut torque specification.

Notice: **Improperly tightened wheel nuts can lead to brake pulsation and rotor damage. To avoid expensive brake repairs, evenly tighten the wheel nuts in the proper sequence and to the proper torque specification. See *Capacities and Specifications on page 5-105* for the wheel nut torque specification.**

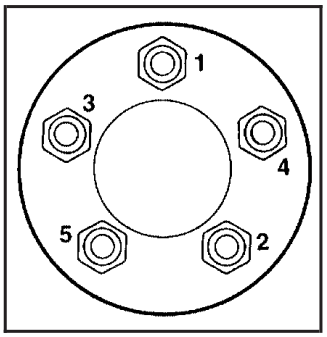

16. Tighten the wheel nuts firmly in a crisscross sequence, as shown.

17. Lower the jack all the way and remove the jack from under the vehicle.

18. Tighten the wheel nuts firmly with the wheel wrench.

When reinstalling the wheel cover or center cap on the full-size tire, tighten all five plastic caps hand snug with the aid of the wheel wrench and tighten them with the wheel wrench an additional one-quarter of a turn.

Notice: **Wheel covers will not fit on your vehicle's compact spare. If you try to put a wheel cover on the compact spare, the cover or the spare could be damaged.**

Downloaded from www.Manualslib.com manuals search engine

Storing a Flat or Spare Tire and Tools

⚠ CAUTION:

Storing a jack, a tire, or other equipment in the passenger compartment of the vehicle could cause injury. In a sudden stop or collision, loose equipment could strike someone. Store all these in the proper place.

To store the flat or spare tire and tools:

1. Place the wheel wrench into the bag.
2. Use the hook and loop fastener straps to secure the bag to the fully collapsed jack.

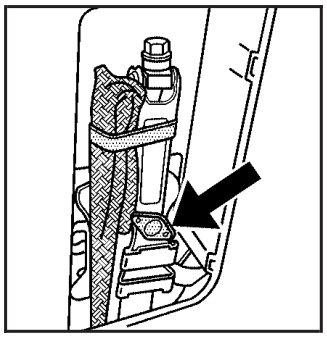

3. Install the jack in the left side panel of cargo area and secure with the wing bolt.
4. Remove the wheel stow rod from the left side of the floor compartment.

Downloaded from www.Manualslib.com manuals search engine

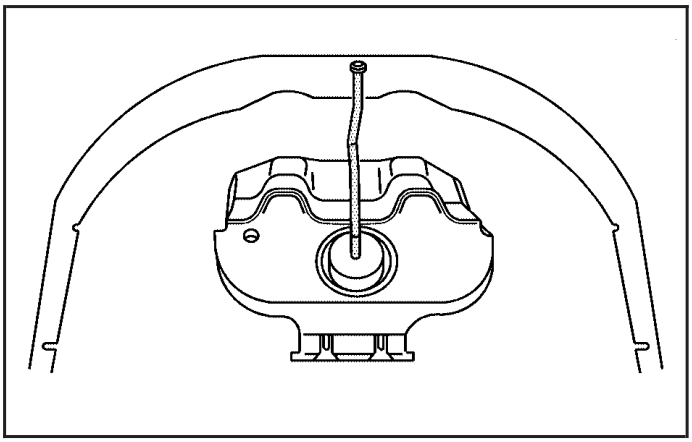

5. Screw the threaded wheel stow rod onto the spare tire bracket. The final position of the wheel stow rod must be turned to the farthest forward position.
6. Remove the cap, if your vehicle has one, from the center of the load floor. Position the rod through the hole. Replace the rear compartment load floor over the wheel stow rod through the hole in the floor.
7. Place the flat, or damaged tire, face down, on the load floor with the threaded wheel stow rod sticking up through the center hole of the wheel.
8. Install the nut onto the wheel stow rod and tighten.
9. Install the rear compartment storage panel/cover in the middle position. See *Rear Compartment Storage Panel/Cover on page 2-45* for more information.

The compact spare is for temporary use only. Replace the compact spare tire with a full-size tire as soon as you can.

Downloaded from www.Manualslib.com manuals search engine

Compact Spare Tire

Although the compact spare tire was fully inflated when the vehicle was new, it can lose air after a time. Check the inflation pressure regularly. It should be 60 psi (420 kPa).

After installing the compact spare on the vehicle, stop as soon as possible and make sure the spare tire is correctly inflated. The compact spare is made to perform well at speeds up to 65 mph (105 km/h) for distances up to 3,000 miles (5 000 km), so you can finish your trip and have the full-size tire repaired or replaced at your convenience. Of course, it is best to replace the spare with a full-size tire as soon as possible. The spare tire will last longer and be in good shape in case it is needed again.

Notice: **When the compact spare is installed, do not take your vehicle through an automatic car wash with guide rails. The compact spare can get caught on the rails. That can damage the tire and wheel, and maybe other parts of your vehicle.**

Do not use the compact spare on other vehicles.

And do not mix the compact spare tire or wheel with other wheels or tires. They will not fit. Keep the spare tire and its wheel together.

Notice: **Tire chains will not fit your compact spare. Using them can damage your vehicle and can damage the chains too. Do not use tire chains on your compact spare.**

Appearance Care

Interior Cleaning

Your vehicle's interior will continue to look its best if it is cleaned often. Although not always visible, dust and dirt can accumulate on your upholstery. Dirt can damage carpet, fabric, leather, and plastic surfaces. Regular vacuuming is recommended to remove particles from your upholstery. It is important to keep your upholstery from becoming and remaining heavily soiled. Soils should be removed as quickly as possible. Your vehicle's interior may experience extremes of heat that could cause stains to set rapidly.

Lighter colored interiors may require more frequent cleaning. Use care because newspapers and garments that transfer color to your home furnishings may also transfer color to your vehicle's interior.

When cleaning your vehicle's interior, only use cleaners specifically designed for the surfaces being cleaned. Permanent damage may result from using cleaners on surfaces for which they were not intended. Use glass cleaner only on glass. Remove any accidental over-spray from other surfaces immediately. To prevent over-spray, apply cleaner directly to the cleaning cloth.

Downloaded from www.Manualslib.com manuals search engine

Notice: **If you use abrasive cleaners when cleaning glass surfaces on your vehicle, you could scratch the glass and/or cause damage to the rear window defogger. When cleaning the glass on your vehicle, use only a soft cloth and glass cleaner.**

Many cleaners contain solvents that may become concentrated in your vehicle's breathing space. Before using cleaners, read and adhere to all safety instructions on the label. While cleaning your vehicle's interior, maintain adequate ventilation by opening your vehicle's doors and windows.

Dust may be removed from small buttons and knobs using a small brush with soft bristles.

Your dealer/retailer has a product for cleaning your vehicle's glass. Should it become necessary, you can also obtain a product from your dealer/retailer to remove odors from your vehicle's upholstery.

Do not clean your vehicle using the following cleaners or techniques:

- Never use a knife or any other sharp object to remove a soil from any interior surface.
- Never use a stiff brush. It can cause damage to your vehicle's interior surfaces.
- Never apply heavy pressure or rub aggressively with a cleaning cloth. Use of heavy pressure can damage your interior and does not improve the effectiveness of soil removal.
- Use only mild, neutral-pH soaps. Avoid laundry detergents or dishwashing soaps with degreasers. Using too much soap will leave a residue that leaves streaks and attracts dirt. For liquid cleaners, about 20 drops per gallon (3.78 L) of water is a good guide.
- Do not heavily saturate your upholstery while cleaning.
- Damage to your vehicle's interior may result from the use of many organic solvents such as naptha, alcohol, etc.

Downloaded from www.Manualslib.com manuals search engine

Fabric/Carpet

Cleaning Fabric/Carpet

Use a vacuum cleaner often to get rid of dust and loose dirt. Wipe vinyl, leather, plastic, and painted surfaces with a clean, damp cloth.

Your dealer/retailer has cleaners for the cleaning of fabric and carpet. They will clean normal spots and stains very well.

If the vehicle has the Ultra Lux® suede fabric, follow the listed procedures except do not use any solvents or dry cleaning products.

Here are some cleaning tips:

- Always read the instructions on the cleaner label.
- Clean up stains as soon as you can, before they set.
- Carefully scrape off any excess stain.
- Use a clean cloth or sponge, and change to a clean area often. A soft brush may be used if stains are stubborn.
- To avoid forming a ring on fabric after spot cleaning, clean the entire area immediately or it will set.

Most stains can be removed with club soda water. To clean, use the following instructions:

1. For liquids: blot with a clean, soft white cloth.

   For solids: remove as much as possible and then vacuum or brush.
2. Apply club soda water to a clean, soft white cloth. Do not over-saturate; the cloth should not drip water.
3. Clean the entire area. Avoid getting the fabric too wet.
4. Start cleaning from the seams into the stain to avoid a ring effect.
5. Continue cleaning, using a clean area of the cloth each time it becomes soiled.
6. When the stain is removed, blot the cleaned area with another dry clean, soft white cloth.

Downloaded from www.Manualslib.com manuals search engine

Using Cleaner on Fabric

1. First, try the cleaner in an inconspicuous area to make sure the cleaner does not affect the color of the fabric.
2. For liquids: blot the stain with a clean, soft white cloth.

   For solids: remove as much as possible and then vacuum or brush.
3. Spray a small amount of the cleaner onto a clean, soft white cloth. Do not apply spray directly to the fabric.
4. Start cleaning from the seams into the stain to avoid a ring effect.
5. Continue cleaning, using a clean area of the cloth each time it becomes soiled.
6. When the stain is removed, blot the cleaned area with another dry clean, soft white cloth.
7. If the cleaner leaves a ring effect, follow up with the club soda water instructions given earlier in this section.

Special Fabric Cleaning Problems

Stains caused by such things as catsup, coffee, tea, milk, fruit, fruit juice, jelly, cheese, chocolate, vomit, urine, and blood can be removed using the club soda water instructions given earlier in this section. If an odor lingers after cleaning vomit or urine, treat the area with a water and baking soda solution: 1 teaspoon (5 ml) of baking soda to 1 cup (250 ml) of lukewarm water. Let dry.

Stains caused by oil and grease can be cleaned with an approved GM cleaner and a clean, white cloth.

1. Carefully scrape off excess stain.
2. Clean with cool water and allow to dry completely.
3. If a stain remains, follow the cleaner instructions described earlier.

Leather

A soft cloth dampened with water can be used to remove dust. If a more thorough cleaning is necessary, a soft cloth dampened with a mild soap solution can be used. Allow the leather to dry naturally. Do not use heat to dry. Never use steam to clean leather. Never use spot lifters or spot removers on leather. Many commercial leather cleaners and coatings that are sold to preserve and protect leather may permanently change the appearance and feel of your leather and are not recommended. Do not use silicone or wax-based products, or those containing organic solvents to clean your vehicle's interior because they can alter the appearance by increasing the gloss in a non-uniform manner. Never use shoe polish on leather.

Downloaded from www.Manualslib.com manuals search engine

Instrument Panel, Vinyl, and Other Plastic Surfaces

A soft cloth dampened with water may be used to remove dust. If a more thorough cleaning is necessary, a clean soft cloth dampened with a mild soap solution can be used to gently remove dust and dirt. Never use spot lifters or removers on plastic surfaces. Many commercial cleaners and coatings that are sold to preserve and protect soft plastic surfaces may permanently change the appearance and feel of your interior and are not recommended. Do not use silicone or wax-based products, or those containing organic solvents to clean your vehicle's interior because they can alter the appearance by increasing the gloss in a non-uniform manner.

Some commercial products may increase gloss on your instrument panel. The increase in gloss may cause annoying reflections in the windshield and even make it difficult to see through the windshield under certain conditions.

Care of Safety Belts

Keep belts clean and dry.

⚠ CAUTION:

Do not bleach or dye safety belts. If you do, it may severely weaken them. In a crash, they might not be able to provide adequate protection. Clean safety belts only with mild soap and lukewarm water.

Weatherstrips

Silicone grease on weatherstrips will make them last longer, seal better, and not stick or squeak. Apply silicone grease with a clean cloth. During very cold, damp weather frequent application may be required. See *Recommended Fluids and Lubricants on page 6-12*.

Downloaded from www.Manualslib.com manuals search engine

Washing Your Vehicle

The best way to preserve your vehicle's finish is to keep it clean by washing it often.

Notice: **Certain cleaners contain chemicals that can damage the emblems or nameplates on your vehicle. Check the cleaning product label. If it states that it should not be used on plastic parts, do not use it on your vehicle or damage may occur and it would not be covered by the warranty.**

Do not wash the vehicle in direct sunlight. Use a car washing soap. Do not use cleaning agents that are petroleum based or that contain acid or abrasives, as they can damage the paint, metal or plastic on your vehicle. Approved cleaning products can be obtained from your dealer/retailer. See *Vehicle Care/Appearance Materials on page 5-97*. Follow all manufacturers' directions regarding correct product usage, necessary safety precautions and appropriate disposal of any vehicle care product.

Rinse the vehicle well, before washing and after to remove all cleaning agents completely. If they are allowed to dry on the surface, they could stain.

Dry the finish with a soft, clean chamois or an all-cotton towel to avoid surface scratches and water spotting

High pressure car washes may cause water to enter the vehicle. Avoid using high pressure washes closer than 12 inches (30 cm) to the surface of the vehicle. Use of power washers exceeding 1,200 psi (8 274 kPa) can result in damage or removal of paint and decals.

Cleaning Exterior Lamps/Lenses

Use only lukewarm or cold water, a soft cloth and a car washing soap to clean exterior lamps and lenses. Follow instructions under *Washing Your Vehicle on page 5-93*.

Downloaded from www.Manualslib.com manuals search engine

Finish Care

Occasional waxing or mild polishing of your vehicle by hand may be necessary to remove residue from the paint finish. You can get approved cleaning products from your dealer/retailer. See *Vehicle Care/Appearance Materials on page 5-97*.

If your vehicle has a basecoat/clearcoat paint finish, the clearcoat gives more depth and gloss to the colored basecoat. Always use waxes and polishes that are non-abrasive and made for a basecoat/clearcoat paint finish.

Notice: **Machine compounding or aggressive polishing on a basecoat/clearcoat paint finish may damage it. Use only non-abrasive waxes and polishes that are made for a basecoat/clearcoat paint finish on your vehicle.**

Foreign materials such as calcium chloride and other salts, ice melting agents, road oil and tar, tree sap, bird droppings, chemicals from industrial chimneys, etc., can damage your vehicle's finish if they remain on painted surfaces. Wash the vehicle as soon as possible. If necessary, use non-abrasive cleaners that are marked safe for painted surfaces to remove foreign matter.

Exterior painted surfaces are subject to aging, weather and chemical fallout that can take their toll over a period of years. You can help to keep the paint finish looking new by keeping your vehicle garaged or covered whenever possible.

Protecting Exterior Bright Metal Parts

Bright metal parts should be cleaned regularly to keep their luster. Washing with water is all that is usually needed. However, you may use chrome polish on chrome or stainless steel trim, if necessary.

Use special care with aluminum trim. To avoid damaging protective trim, never use auto or chrome polish, steam or caustic soap to clean aluminum. A coating of wax, rubbed to high polish, is recommended for all bright metal parts.

Windshield and Wiper Blades

Clean the outside of the windshield with glass cleaner.

Clean the rubber blades using a lint free cloth or paper towel soaked with windshield washer fluid or a mild detergent. Wash the windshield thoroughly when cleaning the blades. Bugs, road grime, sap, and a buildup of vehicle wash/wax treatments may cause wiper streaking. Replace the wiper blades if they are worn or damaged.

Downloaded from www.Manualslib.com manuals search engine

Wipers can be damaged by:

- Extreme dusty conditions
- Sand and salt
- Heat and sun
- Snow and ice, without proper removal

Aluminum or Chrome-Plated Wheels and Trim

Your vehicle may have either aluminum or chrome-plated wheels.

Keep the wheels clean using a soft clean cloth with mild soap and water. Rinse with clean water. After rinsing thoroughly, dry with a soft clean towel. A wax may then be applied.

Notice: **Chrome wheels and other chrome trim may be damaged if you do not wash your vehicle after driving on roads that have been sprayed with magnesium, calcium or sodium chloride. These chlorides are used on roads for conditions such as ice and dust. Always wash your vehicle's chrome with soap and water after exposure.**

Notice: **If you use strong soaps, chemicals, abrasive polishes, cleaners, brushes, or cleaners that contain acid on aluminum or chrome-plated wheels, you could damage the surface of the wheel(s). The repairs would not be covered by your warranty. Use only approved cleaners on aluminum or chrome-plated wheels.**

The surface of these wheels is similar to the painted surface of your vehicle. Do not use strong soaps, chemicals, abrasive polishes, abrasive cleaners, cleaners with acid, or abrasive cleaning brushes on them because you could damage the surface. Do not use chrome polish on aluminum wheels.

Notice: **Using chrome polish on aluminum wheels could damage the wheels. The repairs would not be covered by your warranty. Use chrome polish on chrome wheels only.**

Use chrome polish only on chrome-plated wheels, but avoid any painted surface of the wheel, and buff off immediately after application.

Notice: **If you drive your vehicle through an automatic car wash that has silicone carbide tire cleaning brushes, you could damage the aluminum or chrome-plated wheels. The repairs would not be covered by your warranty. Never drive a vehicle equipped with aluminum or chrome-plated wheels through an automatic car wash that uses silicone carbide tire cleaning brushes.**

Downloaded from www.Manualslib.com manuals search engine

Tires

To clean the tires, use a stiff brush with tire cleaner.

Notice: **Using petroleum-based tire dressing products on your vehicle may damage the paint finish and/or tires. When applying a tire dressing, always wipe off any overspray from all painted surfaces on your vehicle.**

Sheet Metal Damage

If the vehicle is damaged and requires sheet metal repair or replacement, make sure the body repair shop applies anti-corrosion material to parts repaired or replaced to restore corrosion protection.

Original manufacturer replacement parts will provide the corrosion protection while maintaining the warranty.

Finish Damage

Any stone chips, fractures or deep scratches in the finish should be repaired right away. Bare metal will corrode quickly and may develop into major repair expense.

Minor chips and scratches can be repaired with touch-up materials available from your dealer/retailer. Larger areas of finish damage can be corrected in your dealer's/retailer's body and paint shop.

Underbody Maintenance

Chemicals used for ice and snow removal and dust control can collect on the underbody. If these are not removed, corrosion and rust can develop on the underbody parts such as fuel lines, frame, floor pan, and exhaust system even though they have corrosion protection.

At least every spring, flush these materials from the underbody with plain water. Clean any areas where mud and debris can collect. Dirt packed in close areas of the frame should be loosened before being flushed. Your dealer/retailer or an underbody car washing system can do this for you.

Chemical Paint Spotting

Some weather and atmospheric conditions can create a chemical fallout. Airborne pollutants can fall upon and attack painted surfaces on the vehicle. This damage can take two forms: blotchy, ring-shaped discolorations, and small, irregular dark spots etched into the paint surface.

Although no defect in the paint job causes this, we will repair, at no charge to the owner, the surfaces of new vehicles damaged by this fallout condition within 12 months or 12,000 miles (20 000 km) of purchase, whichever occurs first.

Downloaded from www.Manualslib.com manuals search engine

Vehicle Care/Appearance Materials

Description	Usage
Polishing Cloth	Interior and exterior polishing cloth.
Tar and Road Oil Remover	Removes tar, road oil, and asphalt.
Chrome Cleaner and Polish	Use on chrome or stainless steel.
White Sidewall Tire Cleaner	Removes soil and black marks from whitewalls and raised white lettering.
Vinyl Cleaner	Cleans vinyl.
Glass Cleaner	Removes dirt, grime, smoke and fingerprints.
Chrome Wheel Cleaner	Removes dirt and grime from chrome wheels.
Finish Enhancer	Removes dust, fingerprints, and surface contaminants. Spray on and wipe off.

Description	Usage
Swirl Remover Polish	Removes swirl marks, fine scratches, and other light surface contamination.
Cleaner Wax	Removes light scratches and protects finish.
Foaming Tire Shine Low Gloss	Cleans, shines, and protects tires. No wiping necessary.
Wash Wax Concentrate	Medium foaming shampoo. Cleans and lightly waxes. Biodegradable and phosphate free.
Spot Lifter	Quickly removes spots and stains from carpets, vinyl, and cloth upholstery.
Odor Eliminator	Odorless spray odor eliminator used on fabrics, vinyl, leather and carpet.

Downloaded from www.Manualslib.com manuals search engine

Vehicle Identification

Vehicle Identification Number (VIN)

This is the legal identifier for your vehicle. It appears on a plate in the front corner of the instrument panel, on the driver side. You can see it if you look through the windshield from outside your vehicle. The VIN also appears on the Vehicle Certification and Service Parts labels and the certificates of title and registration.

Engine Identification

The eighth character in the VIN is the engine code. This code helps you identify your vehicle's engine, specifications, and replacement parts. See *Capacities and Specifications on page 5-105* for your vehicle's engine code.

Service Parts Identification Label

This label is on the inside of the glove box. It is very helpful if you ever need to order parts. The label has the following information:

- Vehicle Identification Number (VIN)
- Model designation
- Paint information
- Production options and special equipment

Do not remove this label from the vehicle.

Downloaded from www.Manualslib.com manuals search engine

Electrical System

Add-On Electrical Equipment

Notice: **Do not add anything electrical to your vehicle unless you check with your dealer/retailer first. Some electrical equipment can damage your vehicle and the damage would not be covered by your warranty. Some add-on electrical equipment can keep other components from working as they should.**

Add-on equipment can drain your vehicle's battery, even if your vehicle is not operating.

Your vehicle has an airbag system. Before attempting to add anything electrical to your vehicle, see *Servicing Your Airbag-Equipped Vehicle on page 1-69*.

Windshield Wiper Fuses

The windshield wiper motor is protected by a circuit breaker and a fuse. If the motor overheats due to heavy snow or ice, the wiper will stop until the motor cools. If the overload is caused by some electrical problem, have it fixed.

Fuses and Circuit Breakers

The wiring circuits in your vehicle are protected from short circuits by fuses and circuit breakers. This greatly reduces the chance of circuit overload and fire caused by electrical problems.

Your vehicle has an underhood fuse block and an instrument panel fuse block.

To identify and check fuses, circuit breakers, and relays, refer to the Fuse Usage Chart on the inside surface of the fuse panel door.

Downloaded from www.Manualslib.com manuals search engine

Instrument Panel Fuse Block

The instrument panel fuse block is located on the passenger side of the center console, to the left of the glove box near the floor.

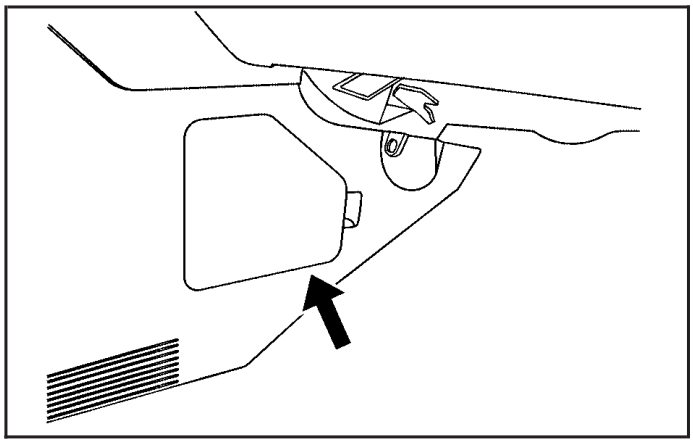

Remove the console cover to access the fuse block.

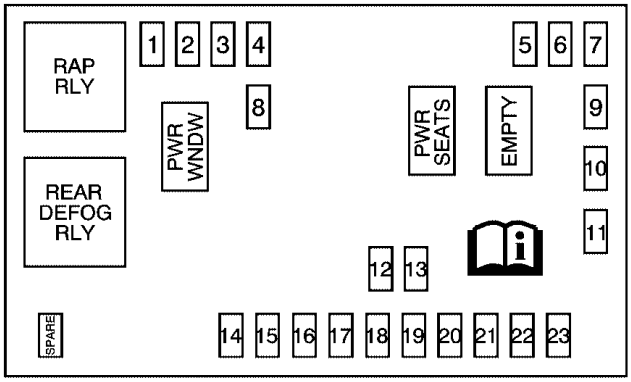

Fuses	Usage
1	Sunroof
2	Rear Seat Entertainment
3	Rear Wiper
4	Liftgate
5	Airbags
6	Heated Seats
7	Driver Side Turn Signal
8	Door Locks
9	Automatic Occupant Sensing Module
10	Power Mirrors

Downloaded from www.Manualslib.com manuals search engine

Fuses	Usage
11	Passenger Side Turn Signal
12	Amplifier
13	Steering Wheel Illumination
14	Infotainment
15	Climate Control System, Remote Function Actuator
16	Canister Vent
17	Radio
18	Cluster
19	Ignition Switch
20	Body Control Module
21	OnStar®
22	Center High-Mounted Stoplamp, Dimmer
23	Interior Lights

Relays	Usage
RAP RLY	Retained Accessory Power Relay
REAR DEFOG RLY	Rear Defogger Relay

Circuit Breakers	Usage
PWR WNDW	Power Windows
PWR SEATS	Power Seats
EMPTY	Empty

Misc.	Usage
PLR	Fuse Puller

Downloaded from www.Manualslib.com manuals search engine

Engine Compartment Fuse Block

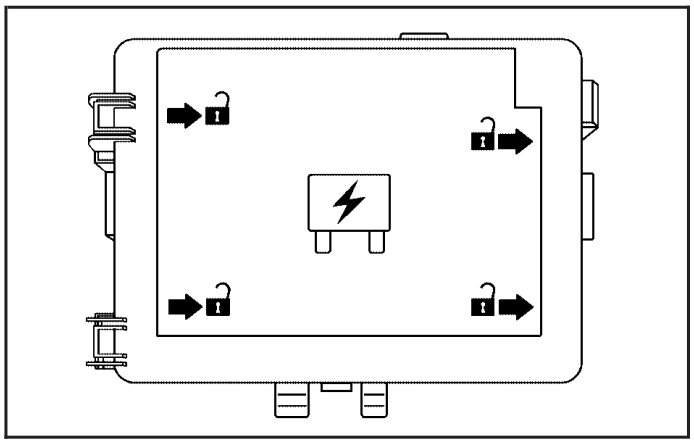

The engine compartment fuse block is located on the driver side of the engine compartment.

See *Engine Compartment Overview on page 5-12* for more information on location.

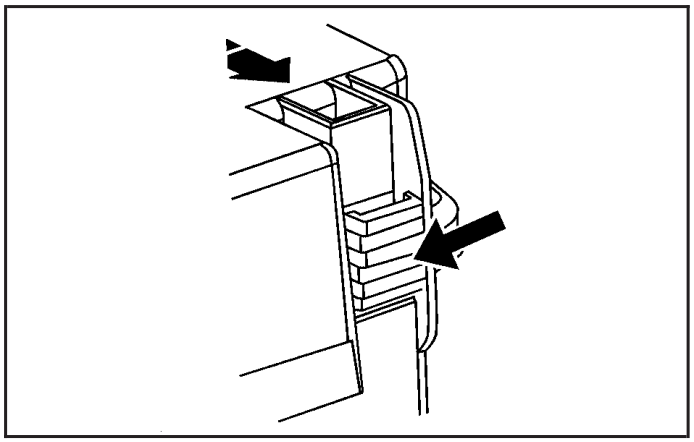

To remove the fuse block cover, push in on the tabs located on the rear of the cover, and lift. To reinstall, fit together the tabs located on the front of the cover, and push down on the cover until the tabs on the rear of the cover click into place.

Notice: **Spilling liquid on any electrical components on your vehicle may damage it. Always keep the covers on any electrical component.**

Downloaded from www.Manualslib.com manuals search engine

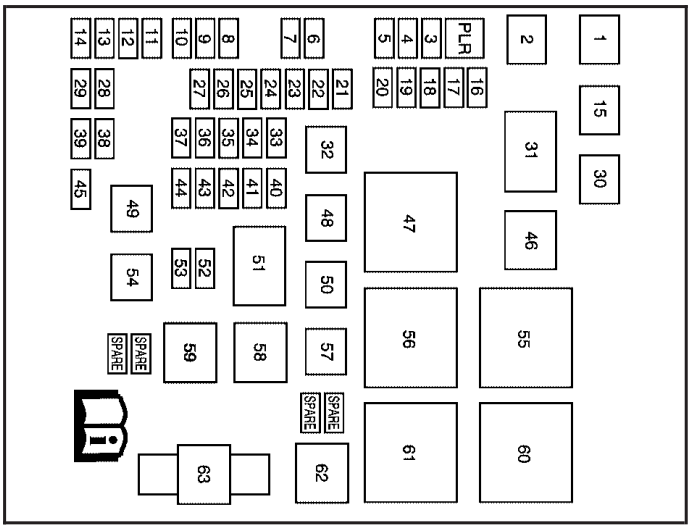

Fuses	Usage
1	Cooling Fan 2
2	Cooling Fan 1
3	Auxiliary Power
4	Rear HVAC
5	Spare
6	Spare
7	Antilock Brake System

Fuses	Usage
8	Air Conditioning Clutch
9	Driver Side Low-Beam
10	Daytime Running Lamp 2
11	Passenger Side High-Beam
12	Passenger Side Park Lamp
13	Horn
14	Driver Side Park Lamp
15	Starter
16	Electronic Throttle Control, Engine Control Module
17	Emission Device 1
18	Even Coils, Injectors
19	Odd Coils, Injectors
20	Emission Device 2
21	Spare
22	Powertrain Control Module, Ignition
23	Transmission
24	Mass Airflow Sensor
25	Airbag Display
26	Spare
27	Stoplamp
28	Passenger Side Low-Beam
29	Driver Side High-Beam
30	Battery Main 3

Downloaded from www.Manualslib.com manuals search engine

Fuses	Usage
32	Spare
33	Engine Control Module, Battery
34	Transmission Control Module, Battery
35	Trailer Park Lamp
36	Front Wiper
37	Driver Side Trailer Stoplamp, Turn Signal
38	Spare
39	Fuel Pump
40	Not Used
41	All-Wheel Drive
42	Regulated Voltage Control
43	Passenger Side Trailer Stoplamp, Turn Signal
44	Spare
45	Front, Rear Washer
48	Rear Defogger
49	Antilock Brake System Motor
50	Battery Main 2
52	Daytime Running Lamps

Fuses	Usage
53	Fog Lamps
54	Climate Control System Blower
57	Battery Main 1
63	Electric Power Steering

Relays	Usage
31	Ignition Main
46	Air Conditioning Compressor Clutch
47	Powertrain
51	Spare
55	Crank
56	Fan 1
58	Passenger Side Trailer Stoplamp, Turn Signal
59	Driver Side Trailer Stoplamp, Turn Signal
60	Fan 3
61	Fan 2
62	Fuel Pump

Downloaded from www.Manualslib.com manuals search engine

Capacities and Specifications

The following approximate capacities are given in English and metric conversions. See *Recommended Fluids and Lubricants on page 6-12* for more information.

Application	Capacities	
	English	Metric
Air Conditioning Refrigerant R134a	For the air conditioning system refrigerant charge amount, see the refrigerant caution label located under the hood. See your dealer for more information.	
Cooling System		
3.4L V6 Engine	10.5 qt	9.9 L
3.6L V6 Engine	12.5 qt	11.1 L
Engine Oil with Filter		
3.4L V6 Engine	4.0 qt	3.8 L
3.6L V6 Engine	5.5 qt	5.2 L
Fuel Tank		
Front-Wheel Drive	20.5 gal	77.6 L
All-Wheel Drive	16.6 gal	62.8 L
Transmission Fluid		
Automatic 5-Speed AF33 Transmission	4.1 qt	3.9 L
Automatic 6-Speed 6T70 Transmission	9.5 qt	9.0 L
Wheel Nut Torque	100 lb ft	140 N•m
All capacities are approximate. When adding, be sure to fill to the approximate level, as recommended in this manual. Recheck fluid level after filling.		

Downloaded from www.Manualslib.com manuals search engine

Engine Specifications

Engine	VIN Code	Transmission	Spark Plug Gap
3.4L V6	F	Automatic	0.060 in (1.52 mm)
3.6L V6	7	Automatic	0.040 in (1.01 mm)

Downloaded from www.Manualslib.com manuals search engine

Section 6 Maintenance Schedule

Maintenance Schedule 6-2
Introduction 6-2
Maintenance Requirements 6-2
Your Vehicle and the Environment 6-2
Using the Maintenance Schedule 6-2
Scheduled Maintenance 6-4
Additional Required Services 6-6
Maintenance Footnotes 6-7
Owner Checks and Services 6-8
At Each Fuel Fill 6-8
At Least Once a Month 6-9
At Least Once a Year 6-9
Recommended Fluids and Lubricants 6-12
Maintenance Replacement Parts 6-14
Engine Drive Belt Routing 6-15
Maintenance Record 6-16

Downloaded from www.Manualslib.com manuals search engine

Maintenance Schedule

Introduction

Important: Keep engine oil at the proper level and change as recommended.

Have you purchased the GM Protection Plan? The Plan supplements your new vehicle warranties. See your Warranty and Owner Assistance booklet or your dealer/retailer for details.

Maintenance Requirements

Notice: **Maintenance intervals, checks, inspections, replacement parts, and recommended fluids and lubricants as prescribed in this manual are necessary to keep your vehicle in good working condition. Any damage caused by failure to follow scheduled maintenance might not be covered by warranty.**

Your Vehicle and the Environment

Proper vehicle maintenance not only helps to keep your vehicle in good working condition, but also helps the environment. All recommended maintenance is important. Improper vehicle maintenance can even affect the quality of the air we breathe. Improper fluid levels or the wrong tire inflation can increase the level of emissions from your vehicle. To help protect our environment, and to keep your vehicle in good condition, be sure to maintain your vehicle properly.

Using the Maintenance Schedule

We want to help you keep your vehicle in good working condition. But we do not know exactly how you will drive it. You might drive very short distances only a few times a week. Or you might drive long distances all the time in very hot, dusty weather. You might use your vehicle in making deliveries. Or you might drive it to work, to do errands, or in many other ways.

Because of all the different ways people use their vehicles, maintenance needs vary. You might need more frequent checks and replacements. So please read the following and note how you drive. If you have any questions on how to keep your vehicle in good condition, see your dealer/retailer.

Downloaded from www.Manualslib.com manuals search engine

This schedule is for vehicles that:

- carry passengers and cargo within recommended limits. You will find these limits on the Tire and Loading Information label. See *Loading Your Vehicle on page 4-22*.
- are driven on reasonable road surfaces within legal driving limits.
- use the recommended fuel. See *Gasoline Octane on page 5-5*.

The services in *Scheduled Maintenance on page 6-4* should be performed when indicated. See *Additional Required Services on page 6-6* and *Maintenance Footnotes on page 6-7* for further information.

⚠ CAUTION:

Performing maintenance work on a vehicle can be dangerous. In trying to do some jobs, you can be seriously injured. Do your own maintenance work only if you have the required know-how and the proper tools and equipment for the job.

CAUTION: (Continued)

CAUTION: (Continued)

If you have any doubt, see your dealer/retailer to have a qualified technician do the work. See *Doing Your Own Service Work on page 5-4*.

Some maintenance services can be complex. So, unless you are technically qualified and have the necessary equipment, you should have your dealer/retailer do these jobs.

When you go to your dealer/retailer for your service needs, you will know that trained and supported service technicians will perform the work using genuine parts.

If you want to purchase service information, see *Service Publications Ordering Information on page 7-16*.

Owner Checks and Services on page 6-8 tells you what should be checked, when to check it, and what you can easily do to help keep your vehicle in good condition.

The proper replacement parts, fluids, and lubricants to use are listed in *Recommended Fluids and Lubricants on page 6-12* and *Maintenance Replacement Parts on page 6-14*. When your vehicle is serviced, make sure these are used. All parts should be replaced and all necessary repairs done before you or anyone else drives the vehicle. We recommend the use of genuine parts from your dealer/retailer.

Downloaded from www.Manualslib.com manuals search engine

Scheduled Maintenance

When the change engine oil light and/or CHANGE ENGINE OIL SOON message comes on, it means that service is required for your vehicle. Have your vehicle serviced as soon as possible within the next 600 miles (1 000 km). It is possible that, if you are driving under the best conditions, the engine oil life system may not indicate that vehicle service is necessary for over a year. However, the engine oil and filter must be changed at least once a year and at this time the system must be reset. Your dealer/retailer has trained service technicians who will perform this work using genuine parts and reset the system.

If the engine oil life system is ever reset accidentally, you must service your vehicle within 3,000 miles (5 000 km) since your last service. Remember to reset the oil life system whenever the oil is changed. See *Engine Oil Life System on page 5-18* for information on the Engine Oil Life System and resetting the system.

When the change engine oil light and/or CHANGE ENGINE OIL SOON message appears, certain services, checks, and inspections are required. Required services are described in the following for "Maintenance I" and "Maintenance II." Generally, it is recommended that your first service be Maintenance I, your second service be Maintenance II, and that you alternate Maintenance I and Maintenance II thereafter. However, in some cases, Maintenance II may be required more often.

Maintenance I — Use Maintenance I if the light/message comes on within 10 months since the vehicle was purchased or Maintenance II was performed.

Maintenance II — Use Maintenance II if the previous service performed was Maintenance I. Always use Maintenance II whenever the light/message comes on 10 months or more since the last service or if the light/message has not come on at all for one year.

Downloaded from www.Manualslib.com manuals search engine

Scheduled Maintenance

Service	Maintenance I	Maintenance II
Change engine oil and filter. See *Engine Oil on page 5-15*. Reset oil life system. See *Engine Oil Life System on page 5-18*. *An Emission Control Service.*	•	•
Visually check for any leaks or damage. *See footnote (k).*	•	•
Inspect engine air cleaner filter. If necessary, replace filter. See *Engine Air Cleaner/Filter on page 5-20*. *See footnote (l).*		•
Rotate tires and check inflation pressures and wear. See *Tire Inspection and Rotation on page 5-67* and “Tire Wear Inspection” in *At Least Once a Month on page 6-9*.	•	•
Inspect brake system. *See footnote (a).*	•	•
Check engine coolant, power steering fluid (3.6L V6 engine only), and windshield washer fluid levels and add fluid as needed.	•	•
Perform any needed additional services. See “Additional Required Services” in this section.	•	•
Inspect suspension and steering components. *See footnote (b).*		•
Inspect engine cooling system. *See footnote (c).*		•
Inspect wiper blades. *See footnote (d).*		•
Inspect restraint system components. *See footnote (e).*		•
Lubricate body components. *See footnote (f).*		•
Replace passenger compartment air filter. *See footnote (g).*		•
3.6L V6 Engine Only: Check automatic transmission fluid level and add fluid as needed.		•
Inspect throttle system. *See footnote (j).*		•

Downloaded from www.Manualslib.com manuals search engine

Additional Required Services

The following services should be performed at the first maintenance service (I or II) after the indicated miles (kilometers) shown for each item.

Additional Required Services

Service and Miles (Kilometers)	25,000 (40 000)	50,000 (80 000)	75,000 (120 000)	100,000 (160 000)	125,000 (200 000)	150,000 (240 000)
Inspect fuel system for damage or leaks.	•	•	•	•	•	•
Inspect exhaust system for loose or damaged components.	•	•	•	•	•	•
Replace engine air cleaner filter. See *Engine Air Cleaner/Filter on page 5-20*.		•		•		•
Change automatic transmission fluid (severe service). *See footnote (h).*		•		•		•
Change automatic transmission fluid (normal service).				•		
Replace spark plugs and inspect spark plug wires. *An Emission Control Service.*				•		
Engine cooling system service (or every five years, whichever occurs first). *An Emission Control Service. See footnote (i).*						•
Inspect engine accessory drive belt. *An Emission Control Service. See footnote (m).*						•

Downloaded from www.Manualslib.com manuals search engine

Maintenance Footnotes

(a) *Visually inspect brake lines and hoses for proper hook-up, binding, leaks, cracks, chafing, etc. Inspect disc brake pads for wear and rotors for surface condition. Inspect other brake parts, including calipers, parking brake, etc. Check parking brake adjustment.*

(b) *Visually inspect front and rear suspension and steering system for damaged, loose, or missing parts or signs of wear. Visually check constant velocity joints, rubber boots, and axle seals for leaks. With 3.4L V6 engine: Inspect electric power steering cables for proper hook-up, binding, cracks, chafing, etc. With 3.6L V6 engine: Inspect hydraulic power steering lines and hoses for proper hook-up, binding, leaks, cracks, chafing, etc.*

(c) *Visually inspect hoses and have them replaced if they are cracked, swollen, or deteriorated. Inspect all pipes, fittings and clamps; replace with genuine parts as needed. To help ensure proper operation, a pressure test of the cooling system and pressure cap and cleaning the outside of the radiator and air conditioning condenser is recommended at least once a year.*

(d) *Inspect wiper blades for wear, cracking, or contamination. Clean the windshield and wiper blades, if contaminated. Replace wiper blades that are worn or damaged. See Windshield Wiper Blade Replacement on page 5-51* and *Windshield and Wiper Blades on page 5-94 for more information.*

(e) *Make sure the safety belt reminder light and safety belt assemblies are working properly. Look for any other loose or damaged safety belt system parts. If you see anything that might keep a safety belt system from doing its job, have it repaired. Have any torn or frayed safety belts replaced. Also see Checking the Restraint Systems on page 1-71*.

(f) *Lubricate all key lock cylinders, hood latch assemblies, secondary latches, pivots, spring anchor and release pawl, hood and door hinges, rear folding seats, and liftgate hinges. More frequent lubrication may be required when exposed to a corrosive environment. Applying silicone grease on weatherstrips with a clean cloth will make them last longer, seal better, and not stick or squeak.*

(g) *If you drive regularly under dusty conditions, the filter may require replacement more often.*

(h) *Change automatic transmission fluid if the vehicle is mainly driven under one or more of these conditions:*

- *In heavy city traffic where the outside temperature regularly reaches 90°F (32°C) or higher.*
- *In hilly or mountainous terrain.*
- *When doing frequent trailer towing.*
- *Uses such as found in taxi, police, or delivery service.*

Downloaded from www.Manualslib.com manuals search engine

(i) *Drain, flush, and refill cooling system. This service can be complex; you should have your dealer/retailer perform this service. See Engine Coolant on page 5-22 for what to use. Inspect hoses. Clean radiator, condenser, pressure cap, and filler neck. Pressure test the cooling system and pressure cap.*

(j) *Check system for interference or binding and for damaged or missing parts. Replace parts as needed. Replace any components that have high effort or excessive wear.*

(k) *A fluid loss in any vehicle system could indicate a problem. Have the system inspected and repaired and the fluid level checked. Add fluid if needed.*

(l) *If you drive regularly under dusty conditions, inspect the filter at each engine oil change.*

(m) *Visually inspect belt for fraying, excessive cracks, or obvious damage. Replace belt if necessary.*

Owner Checks and Services

These owner checks and services should be performed at the intervals specified to help ensure the safety, dependability, and emission control performance of your vehicle. Your dealer/retailer can assist you with these checks and services.

Be sure any necessary repairs are completed at once. Whenever any fluids or lubricants are added to your vehicle, make sure they are the proper ones, as shown in *Recommended Fluids and Lubricants on page 6-12*.

At Each Fuel Fill

It is important to perform these underhood checks at each fuel fill.

Engine Oil Level Check

Notice: **It is important to check the engine oil regularly and keep it at the proper level. Failure to keep the engine oil at the proper level can cause damage to the engine not covered by your warranty.**

Check the engine oil level and add the proper oil if necessary. See *Engine Oil on page 5-15*.

Engine Coolant Level Check

Check the engine coolant level and add DEX-COOL® coolant mixture if necessary. See *Engine Coolant on page 5-22*.

Windshield Washer Fluid Level Check

Check the windshield washer fluid level in the windshield washer fluid reservoir and add the proper fluid if necessary.

Downloaded from www.Manualslib.com manuals search engine

At Least Once a Month

Tire Inflation Check

Inspect your vehicle's tires and make sure they are inflated to the correct pressures. Do not forget to check the spare tire. See *Inflation - Tire Pressure on page 5-59*. Check to make sure the spare tire is stored securely. See *Changing a Flat Tire on page 5-76*.

Tire Wear Inspection

Tire rotation may be required for high mileage highway drivers prior to the Engine Oil Life System service notification. Check the tires for wear and, if necessary, rotate the tires. See *Tire Inspection and Rotation on page 5-67*.

At Least Once a Year

Starter Switch Check

⚠ CAUTION:

When you are doing this inspection, the vehicle could move suddenly. If the vehicle moves, you or others could be injured.

1. Before you start, be sure you have enough room around the vehicle.
2. Firmly apply both the parking brake and the regular brake. See *Parking Brake on page 2-32*.

   Do not use the accelerator pedal, and be ready to turn off the engine immediately if it starts.
3. Try to start the engine in each gear. The vehicle should start only in PARK (P) or NEUTRAL (N). If the vehicle starts in any other position, contact your dealer/retailer for service.

Downloaded from www.Manualslib.com manuals search engine

Automatic Transmission Shift Lock Control System Check

⚠ CAUTION:

When you are doing this inspection, the vehicle could move suddenly. If the vehicle moves, you or others could be injured.

1. Before you start, be sure you have enough room around the vehicle. It should be parked on a level surface.
2. Firmly apply the parking brake. See *Parking Brake on page 2-32*.

   Be ready to apply the regular brake immediately if the vehicle begins to move.
3. With the engine off, turn the ignition to ON/RUN, but do not start the engine. Without applying the regular brake, try to move the shift lever out of PARK (P) with normal effort. If the shift lever moves out of PARK (P), contact your dealer/retailer for service.

Ignition Transmission Lock Check

While parked, and with the parking brake set, try to turn the ignition to LOCK/OFF in each shift lever position.

- The ignition should turn to LOCK/OFF only when the shift lever is in PARK (P).
- The ignition key should come out only in LOCK/OFF.

Contact your dealer/retailer if service is required.

Downloaded from www.Manualslib.com manuals search engine

Parking Brake and Automatic Transmission Park (P) Mechanism Check

⚠ CAUTION:

When you are doing this check, your vehicle could begin to move. You or others could be injured and property could be damaged. Make sure there is room in front of your vehicle in case it begins to roll. Be ready to apply the regular brake at once should the vehicle begin to move.

Park on a fairly steep hill, with the vehicle facing downhill. Keeping your foot on the regular brake, set the parking brake.

- To check the parking brake's holding ability: With the engine running and the transmission in NEUTRAL (N), slowly remove foot pressure from the regular brake pedal. Do this until the vehicle is held by the parking brake only.
- To check the PARK (P) mechanism's holding ability: With the engine running, shift to PARK (P). Then release the parking brake followed by the regular brake.

Contact your dealer/retailer if service is required.

Underbody Flushing Service

At least every spring, use plain water to flush any corrosive materials from the underbody. Take care to clean thoroughly any areas where mud and other debris can collect.

Downloaded from www.Manualslib.com manuals search engine

Recommended Fluids and Lubricants

Fluids and lubricants identified below by name, part number, or specification can be obtained from your dealer/retailer.

Usage	Fluid/Lubricant
Engine Oil	Engine oil which meets GM Standard GM6094M and displays the American Petroleum Institute Certified for Gasoline Engines starburst symbol. To determine the proper viscosity for your vehicle's engine, see *Engine Oil on page 5-15*.
Engine Coolant	50/50 mixture of clean, drinkable water and use only DEX-COOL® Coolant. See *Engine Coolant on page 5-22*.

Usage	Fluid/Lubricant
Hydraulic Brake System	Delco® Supreme 11 Brake Fluid or equivalent DOT-3 brake fluid.
Windshield Washer	Optikleen® Washer Solvent.
Hydraulic Power Steering System (3.6L V6 engine only)	GM Power Steering Fluid (GM Part No. U.S. 89021184, in Canada 89021186).
5-speed Automatic Transmission (3.4L V6 engine only)	Use only T-IV Automatic Transmission Fluid (GM Part No. U.S. 88900925, in Canada 22689186). See *Automatic Transmission Fluid on page 5-22*.
6-speed Automatic Transmission (3.6L V6 engine only)	DEXRON®-VI Automatic Transmission Fluid.
Key Lock Cylinders	Multi-Purpose Lubricant, Superlube (GM Part No. U.S. 12346241, in Canada 10953474).

Downloaded from www.Manualslib.com manuals search engine

Usage	Fluid/Lubricant
Carrier Assembly — Differential (Rear Drive Module)	Axle Lubricant (GM Part No. U.S. 89021677, in Canada 89021678).
Transfer Case (Power Transfer Unit)	With 3.4L V6 engine: VERSATRAK® Fluid (GM Part No. U.S. 12378514, in Canada 88901045). With 3.6L V6 engine: SAE 75W-90 Synthetic Axle Lubricant (GM Part No. U.S. 89021677, in Canada 89021678) meeting GM Specification 9986115.
Hood Latch Assembly, Secondary Latch, Pivots, Spring Anchor, and Release Pawl	Lubriplate Lubricant Aerosol (GM Part No. U.S. 12346293, in Canada 992723) or lubricant meeting requirements of NLGI #2, Category LB or GC-LB.

Usage	Fluid/Lubricant
Hood and Door Hinges, Rear Folding Seat	Multi-Purpose Lubricant, Superlube (GM Part No. U.S. 12346241, in Canada 10953474).
Weatherstrip Conditioning	Weatherstrip Lubricant (GM Part No. U.S. 3634770, in Canada 10953518) or Dielectric Silicone Grease (GM Part No. U.S. 12345579, in Canada 992887).

Downloaded from www.Manualslib.com manuals search engine

Maintenance Replacement Parts

Replacement parts identified below by name, part number, or specification can be obtained from your dealer/retailer.

Part	GM Part Number	ACDelco® Part Number
Engine Air Cleaner/Filter	22676970	A1627C
Engine Oil Filter		
3.4L V6 Engine	25010792	PF47
3.6L V6 Engine	89017524	PF48
Passenger Compartment Air Filter Element	15781507	CF137
Replacement Battery	15104967	75-6YR
Spark Plugs		
3.4L V6 Engine	12568387	41-101
3.6L V6 Engine	12597464	41-990
Windshield Wiper Blades		
Driver's Side – 24 inches (60.0 cm)	22703508	—
Passenger's Side – 19 inches (47.5 cm)	22703507	—
Rear – 15.2 inches (38.6 cm)	19120327	—

Downloaded from www.Manualslib.com manuals search engine

Engine Drive Belt Routing

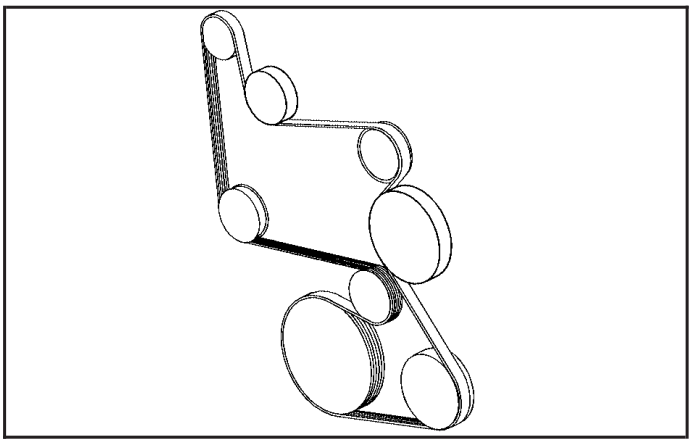

3.4L V6 Engine

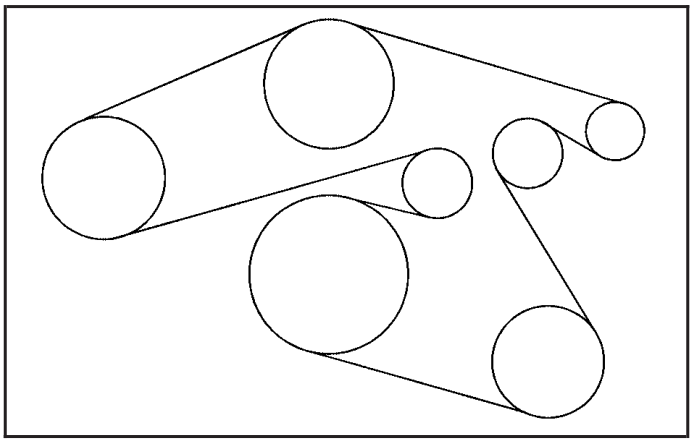

3.6L V6 Engine

Downloaded from www.Manualslib.com manuals search engine

Maintenance Record

After the scheduled services are performed, record the date, odometer reading, who performed the service, and the type of services performed in the boxes provided. See *Maintenance Requirements on page 6-2*. Any additional information from *Owner Checks and Services on page 6-8* can be added on the following record pages. You should retain all maintenance receipts.

Maintenance Record

Date	Odometer Reading	Serviced By	Maintenance I or Maintenance II	Services Performed

Downloaded from www.Manualslib.com manuals search engine

Maintenance Record (cont'd)

Date	Odometer Reading	Serviced By	Maintenance I or Maintenance II	Services Performed

Downloaded from www.Manualslib.com manuals search engine

Maintenance Record (cont'd)

Date	Odometer Reading	Serviced By	Maintenance I or Maintenance II	Services Performed

Downloaded from www.Manualslib.com manuals search engine

Section 7 Customer Assistance Information

Customer Assistance and Information 7-2
Customer Satisfaction Procedure 7-2
Online Owner Center 7-4
Customer Assistance for Text Telephone (TTY) Users 7-5
Customer Assistance Offices 7-5
GM Mobility Reimbursement Program 7-6
Roadside Assistance Program 7-7
Scheduling Service Appointments 7-10
Courtesy Transportation 7-10
Collision Damage Repair 7-12

Reporting Safety Defects 7-15
Reporting Safety Defects to the United States Government 7-15
Reporting Safety Defects to the Canadian Government 7-16
Reporting Safety Defects to General Motors 7-16
Service Publications Ordering Information 7-16

Vehicle Data Recording and Privacy 7-17
Event Data Recorders 7-18
OnStar® 7-19
Navigation System 7-19
Radio Frequency Identification (RFID) 7-19

Downloaded from www.Manualslib.com manuals search engine

Customer Assistance and Information

Customer Satisfaction Procedure

Your satisfaction and goodwill are important to your dealer and to Pontiac. Normally, any concerns with the sales transaction or the operation of your vehicle will be resolved by your dealer's sales or service departments. Sometimes, however, despite the best intentions of all concerned, misunderstandings can occur. If your concern has not been resolved to your satisfaction, the following steps should be taken:

STEP ONE: Discuss your concern with a member of dealership management. Normally, concerns can be quickly resolved at that level. If the matter has already been reviewed with the sales, service, or parts manager, contact the owner of the dealership or the general manager.

STEP TWO: If after contacting a member of dealership management, it appears your concern cannot be resolved by the dealership without further help, in the U.S., contact the Pontiac Customer Assistance Center by calling 1-800-762-2737. In Canada, contact General Motors of Canada Customer Communication Centre in Oshawa by calling 1-800-263-3777 (English) or 1-800-263-7854 (French).

We encourage you to call the toll-free number in order to give your inquiry prompt attention. Please have the following information available to give the Customer Assistance Representative:

- Vehicle Identification Number (VIN). This is available from the vehicle registration or title, or the plate at the top left of the instrument panel and visible through the windshield.
- Dealership name and location.
- Vehicle delivery date and present mileage.

When contacting Pontiac, please remember that your concern will likely be resolved at a dealer's facility. That is why we suggest you follow Step One first if you have a concern.

STEP THREE — U.S. Owners: Both General Motors and your dealer are committed to making sure you are completely satisfied with your new vehicle. However, if you continue to remain unsatisfied after following the procedure outlined in Steps One and Two, you should file with the BBB Auto Line Program to enforce your rights.

The BBB Auto Line Program is an out of court program administered by the Council of Better Business Bureaus to settle automotive disputes regarding vehicle repairs or the interpretation of the New Vehicle Limited Warranty.

Downloaded from www.Manualslib.com manuals search engine

Although you may be required to resort to this informal dispute resolution program prior to filing a court action, use of the program is free of charge and your case will generally be heard within 40 days. If you do not agree with the decision given in your case, you may reject it and proceed with any other venue for relief available to you.

You can contact the BBB Auto Line Program using the toll-free telephone number or write them at the following address:

BBB Auto Line Program
Council of Better Business Bureaus, Inc.
4200 Wilson Boulevard
Suite 800
Arlington, VA 22203-1838

Telephone: 1-800-955-5100

This program is available in all 50 states and the District of Columbia. Eligibility is limited by vehicle age, mileage and other factors. General Motors reserves the right to change eligibility limitations and/or discontinue its participation in this program.

STEP THREE — Canadian Owners: In the event that you do not feel your concerns have been addressed after following the procedure outlined in Steps One and Two, General Motors of Canada Limited wants you to be aware of its participation in a no-charge Mediation/Arbitration Program. General Motors of Canada Limited has committed to binding arbitration of owner disputes involving factory-related vehicle service claims.

The program provides for the review of the facts involved by an impartial third party arbiter, and may include an informal hearing before the arbiter. The program is designed so that the entire dispute settlement process, from the time you file your complaint to the final decision, should be completed in approximately 70 days. We believe our impartial program offers advantages over courts in most jurisdictions because it is informal, quick, and free of charge.

For further information concerning eligibility in the Canadian Motor Vehicle Arbitration Plan (CAMVAP), call toll-free 1-800-207-0685. Alternatively, you can call the General Motors Customer Communication Centre, 1-800-263-3777 (English), 1-800-263-7854 (French), or write to:

Mediation/Arbitration Program
c/o Customer Communication Centre
General Motors of Canada Limited
Mail Code: CA1-163-005
1908 Colonel Sam Drive
Oshawa, Ontario L1H 8P7

Your inquiry should be accompanied by your Vehicle Identification Number (VIN).

Downloaded from www.Manualslib.com manuals search engine

Online Owner Center

(United States only)

The Owner Center is a resource for your GM ownership needs. Specific vehicle information can be found in one place.

The Online Owner Center allows you to:

- Get e-mail service reminders.
- Access information about your specific vehicle, including tips and videos and an electronic version of this owner manual.
- Keep track of your vehicle's service history and maintenance schedule.
- Find GM dealers/retailers for service nationwide.
- Receive special promotions and privileges only available to members.

Refer to www.MyGMLink.com on the web for updated information and to register your vehicle.

My GM Canada (Canada only)

My GM Canada is a password-protected section of gmcanada.com where you can save information on GM vehicles, get personalized offers, and use handy tools and forms with greater ease.

Here are a few of the valuable tools and services you will have access to:

- My Showroom: Find and save information on vehicles and current offers in your area.
- My Dealers/Retailers: Save details such as address and phone number for each of your preferred GM Dealers or Retailers.
- My Driveway: Receive service reminders and helpful advice on owning and maintaining your vehicle.
- My Preferences: Manage your profile, subscribe to E-News and use tools and forms with greater ease.

To sign up to My GM Canada, visit the My GM Canada section within www.gmcanada.com.

Downloaded from www.Manualslib.com manuals search engine

Customer Assistance for Text Telephone (TTY) Users

To assist customers who are deaf, hard of hearing, or speech-impaired and who use Text Telephones (TTYs), Pontiac has TTY equipment available at its Customer Assistance Center. Any TTY user in the U.S. can communicate with Pontiac by dialing: 1-800-833-PONT (7668). (TTY users in Canada can dial 1-800-263-3830.)

Customer Assistance Offices

Pontiac encourages customers to call the toll-free number for assistance. However, if a customer wishes to write or e-mail Pontiac, the letter should be addressed to:

United States — Customer Assistance

Pontiac Customer Assistance Center
P.O. Box 33172
Detroit, MI 48232-5172

www.Pontiac.com
1-800-762-2737 or
1-800-833-7668 (For Text Telephone devices (TTYs))
Roadside Assistance: 1-800-ROADSIDE (762-3743)
Fax Number: 313-381-0022

From Puerto Rico:
1-800-496-9992 (English)
1-800-496-9993 (Spanish)
Fax Number: 313-381-0022

From U.S. Virgin Islands:
1-800-496-9994
Fax Number: 313-381-0022

Canada — Customer Assistance

General Motors of Canada Limited
Customer Communication Centre, CA1-163-005
1908 Colonel Sam Drive
Oshawa, Ontario L1H 8P7

www.gmcanada.com
1-800-263-3777 (English)
1-800-263-7854 (French)
1-800-263-3830 (For Text Telephone devices (TTYs))
Roadside Assistance: 1-800-268-6800

Overseas — Customer Assistance

Please contact the local General Motors Business Unit.

Downloaded from www.Manualslib.com manuals search engine

Mexico, Central America and Caribbean Islands/Countries (Except Puerto Rico and U.S. Virgin Islands) — Customer Assistance

General Motors de Mexico, S. de R.L. de C.V.
Customer Assistance Center
Paseo de la Reforma #2740
Col. Lomas de Bezares
C.P. 11910, Mexico, D.F.
01-800-508-0000
Long Distance: 011-52-53 29 0 800

GM Mobility Reimbursement Program

GM MOBILITY℠

This program, available to qualified applicants, can reimburse you up to $1,000 of the cost of eligible aftermarket adaptive equipment required for your vehicle, such as hand controls or a wheelchair/scooter lift.

The offer is available for a very limited period of time from the date of vehicle purchase/lease. For more details, or to determine your vehicle's eligibility, visit gmmobility.com or call the GM Mobility Assistance Center at 1-800-323-9935. Text telephone (TTY) users, call 1-800-833-9935.

General Motors of Canada also has a Mobility Program. Call 1-800-GM-DRIVE (463-7483) for details. TTY users call 1-800-263-3830.

Downloaded from www.Manualslib.com manuals search engine

Roadside Assistance Program

For vehicles purchased in the U.S., call **1-800-ROADSIDE (762-3743); (Text telephone (TTY): 1-888-889-2438)**.

For vehicles purchased in Canada, call **1-800-268-6800**.

Service is available 24 hours a day, 365 days a year.

As the owner of a new Pontiac vehicle, you are automatically enrolled in the Pontiac Roadside Assistance program.

Who is Covered?

Roadside Assistance coverage is for the vehicle operator, regardless of ownership. In Canada, a person driving this vehicle without the consent of the owner is not eligible for coverage.

Services Provided

The following services are provided in the U.S. and Canada up to 5 years/100,000 miles (160 000 km), whichever occurs first, and, in Canada only, up to a maximum coverage of $100.

- **Fuel Delivery:** Delivery of enough fuel for the vehicle to get to the nearest service station (approximately $5 in Canada). In Canada, service to provide diesel may be restricted. For safety reasons, propane and other alternative fuels will not be provided through this service.
- **Lock-out Service:** Lock-out service is covered at no charge if you are unable to gain entry into your vehicle. A remote unlock may be available if you have an active OnStar® subscription. To ensure security, the driver must present personal identification before lock-out service is provided. In Canada, the vehicle registration is also required.

Downloaded from www.Manualslib.com manuals search engine

- **Emergency Tow From a Public Roadway or Highway:** Tow to the nearest dealership for warranty service or in the event of a vehicle-disabling crash. Winch-out assistance is provided when the vehicle is mired in sand, mud, or snow.
- **Flat Tire Change:** Installation of a spare tire in good condition, when equipped and properly inflated, is covered at no charge. The customer is responsible for the repair or replacement of the tire if not covered by a warrantable failure.
- **Jump Start:** A battery jump start is covered at no charge if the vehicle does not start.
- **Trip Routing Service (Canada only):** Upon request, Roadside Assistance will send you detailed, computer personalized maps, highlighting your choice of either the most direct route or the most scenic route to your destination, anywhere in North America, along with helpful travel information pertaining to your trip.

  Please allow three weeks before your planned departure date. Trip routing requests will be limited to six per calendar year.
- **Trip Interruption Benefits and Assistance (Canada only):** In the event of a warranty related vehicle disablement, while en route and over 250 kilometres from the original point of departure, you may qualify for trip interruption expense assistance. This assistance covers reasonable reimbursement of up to a maximum of $500 (Canadian) for (A) meals (maximum of $50/day), (B) lodging (maximum of $100/night) and (C) alternate ground transportation (maximum of $40/day). This benefit is to assist you with some of the unplanned expense you may incur while waiting for your vehicle to be repaired.

  Pre-authorization, original detailed receipts and a copy of the repair order are required.

  Once authorization has been given, your advisor will help you make any necessary arrangements and explain how to claim for trip interruption expense assistance.

Downloaded from www.Manualslib.com manuals search engine

- **Alternative Service (Canada only):** There may be times, when Roadside Assistance cannot provide timely assistance. Your advisor may authorize you to secure local emergency road service, and you will be reimbursed up to $100 upon submission of the original receipt to Roadside Assistance.

In many instances, mechanical failures may be covered. However, any cost for parts and labor for non-warranty repairs are the responsibility of the driver.

Pontiac and General Motors of Canada Limited reserve the right to limit services or reimbursement to an owner or driver when, in their sole discretion, the claims become excessive in frequency or type of occurrence.

Calling For Assistance

For prompt and efficient assistance when calling, please provide the following to the Roadside Assistance Representative:

- Your name, home address, and home telephone number
- Telephone number of your location
- Location of the vehicle
- Model, year, color, and license plate number of the vehicle
- Odometer reading, Vehicle Identification Number (VIN), and delivery date of the vehicle
- Description of the problem

Towing and Road Service Exclusions

Specifically excluded from Roadside Assistance coverage are towing or services for vehicles operated on a non-public roadway or highway, fines, impound towing caused by a violation of local, Municipal, State, Provincial, or Federal law, and mounting, dismounting or changing of snow tires, chains, or other traction devices.

Roadside Assistance is not part of or included in the coverage provided by the New Vehicle Limited Warranty. Pontiac and General Motors of Canada Limited reserve the right to make any changes or discontinue the Roadside Assistance program at any time without notification.

Downloaded from www.Manualslib.com manuals search engine

Scheduling Service Appointments

When your vehicle requires warranty service, contact your dealer/retailer and request an appointment. By scheduling a service appointment and advising your service consultant of your transportation needs, your dealer/retailer can help minimize your inconvenience.

If your vehicle cannot be scheduled into the service department immediately, keep driving it until it can be scheduled for service, unless, of course, the problem is safety-related. If it is, please call your dealership/retailer, let them know this, and ask for instructions.

If the dealer/retailer requests that you simply drop the vehicle off for service, you are urged to do so as early in the work day as possible to allow for the same day repair.

Courtesy Transportation

To enhance your ownership experience, we and our participating dealers are proud to offer Courtesy Transportation, a customer support program for vehicles with the Bumper to Bumper (Base Warranty Coverage period in Canada) and extended powertrain warranty in both the U.S. and Canada.

Several courtesy transportation options are available to assist in reducing your inconvenience when warranty repairs are required.

Courtesy Transportation is not a part of the New Vehicle Limited Warranty. A separate booklet entitled “Warranty and Owner Assistance Information” furnished with each new vehicle provides detailed warranty coverage information.

Transportation Options

Warranty service can generally be completed while you wait. However, if you are unable to wait, GM helps to minimize your inconvenience by providing several transportation options. Depending on the circumstances, your dealer can offer you one of the following:

Shuttle Service

Shuttle service is the preferred means of offering Courtesy Transportation. Dealers may provide you with shuttle service to get you to your destination with minimal interruption of your daily schedule. This includes one-way or round trip shuttle service within reasonable time and distance parameters of the dealer’s area.

Downloaded from www.Manualslib.com manuals search engine

Public Transportation or Fuel Reimbursement

If your vehicle requires overnight warranty repairs, and public transportation is used instead of the dealer's shuttle service, the expense must be supported by original receipts and can only be up to the maximum amount allowed by GM for shuttle service. In addition, for U.S. customers, should you arrange transportation through a friend or relative, limited reimbursement for reasonable fuel expenses may be available. Claim amounts should reflect actual costs and be supported by original receipts. See your dealer for information regarding the allowance amounts for reimbursement of fuel or other transportation costs.

Courtesy Rental Vehicle

Your dealer may arrange to provide you with a courtesy rental vehicle or reimburse you for a rental vehicle that you obtain if your vehicle is kept for an overnight warranty repair. Rental reimbursement will be limited and must be supported by original receipts. This requires that you sign and complete a rental agreement and meet state/provincial, local, and rental vehicle provider requirements. Requirements vary and may include minimum age requirements, insurance coverage, credit card, etc. You are responsible for fuel usage charges and may also be responsible for taxes, levies, usage fees, excessive mileage, or rental usage beyond the completion of the repair.

It may not be possible to provide a like-vehicle as a courtesy rental.

Additional Program Information

All program options, such as shuttle service, may not be available at every dealer. Please contact your dealer for specific information about availability. All Courtesy Transportation arrangements will be administered by appropriate dealer personnel.

General Motors reserves the right to unilaterally modify, change or discontinue Courtesy Transportation at any time and to resolve all questions of claim eligibility pursuant to the terms and conditions described herein at its sole discretion.

Downloaded from www.Manualslib.com manuals search engine

Collision Damage Repair

If your vehicle is involved in a collision and it is damaged, have the damage repaired by a qualified technician using the proper equipment and quality replacement parts. Poorly performed collision repairs diminish your vehicle's resale value, and safety performance can be compromised in subsequent collisions.

Collision Parts

Genuine GM Collision parts are new parts made with the same materials and construction methods as the parts with which your vehicle was originally built. Genuine GM Collision parts are your best choice to ensure that your vehicle's designed appearance, durability, and safety are preserved. The use of Genuine GM parts can help maintain your GM New Vehicle Warranty.

Recycled original equipment parts may also be used for repair. These parts are typically removed from vehicles that were total losses in prior crashes. In most cases, the parts being recycled are from undamaged sections of the vehicle. A recycled original equipment GM part, may be an acceptable choice to maintain your vehicle's originally designed appearance and safety performance, however, the history of these parts is not known. Such parts are not covered by your GM New Vehicle Limited Warranty, and any related failures are not covered by that warranty.

Aftermarket collision parts are also available. These are made by companies other than GM and may not have been tested for your vehicle. As a result, these parts may fit poorly, exhibit premature durability/corrosion problems, and may not perform properly in subsequent collisions. Aftermarket parts are not covered by your GM New Vehicle Limited Warranty, and any vehicle failure related to such parts are not covered by that warranty.

Repair Facility

GM also recommends that you choose a collision repair facility that meets your needs before you ever need collision repairs. Your dealer/retailer may have a collision repair center with GM-trained technicians and state of the art equipment, or be able to recommend a collision repair center that has GM-trained technicians and comparable equipment.

Downloaded from www.Manualslib.com manuals search engine

Insuring Your Vehicle

Protect your investment in your GM vehicle with comprehensive and collision insurance coverage. There are significant differences in the quality of coverage afforded by various insurance policy terms. Many insurance policies provide reduced protection to your GM vehicle by limiting compensation for damage repairs by using aftermarket collision parts. Some insurance companies will not specify aftermarket collision parts. When purchasing insurance, we recommend that you assure your vehicle will be repaired with GM original equipment collision parts. If such insurance coverage is not available from your current insurance carrier, consider switching to another insurance carrier.

If your vehicle is leased, the leasing company may require you to have insurance that assures repairs with Genuine GM Original Equipment Manufacturer (OEM) parts or Genuine Manufacturer replacement parts. Read your lease carefully, as you may be charged at the end of your lease for poor quality repairs.

If a Crash Occurs

Here is what to do if you are involved in a crash.

- Try to relax and then check to make sure you are all right. If you are uninjured, make sure that no one else in your vehicle, or the other vehicle, is injured.
- If there has been an injury, call emergency services for help. Do not leave the scene of a crash until all matters have been taken care of. Move your vehicle only if its position puts you in danger or you are instructed to move it by a police officer.
- Give only the necessary and requested information to police and other parties involved in the crash. Do not discuss your personal condition, mental frame of mind, or anything unrelated to the crash. This will help guard against post-crash legal action.
- If you need roadside assistance, call GM Roadside Assistance. See *Roadside Assistance Program on page 7-7* for more information.

Downloaded from www.Manualslib.com manuals search engine

- If your vehicle cannot be driven, know where the towing service will be taking it. Get a card from the tow truck operator or write down the driver's name, the service's name, and the phone number.
- Remove any valuables from your vehicle before it is towed away. Make sure this includes your insurance information and registration if you keep these items in your vehicle.
- Gather the important information you will need from the other driver. Things like name, address, phone number, driver's license number, vehicle license plate, vehicle make, model and model year, Vehicle Identification Number (VIN), insurance company and policy number, and a general description of the damage to the other vehicle.
- If possible, call your insurance company from the scene of the crash. They will walk you through the information they will need. If they ask for a police report, phone or go to the police department headquarters the next day and you can get a copy of the report for a nominal fee. In some states/provinces with "no fault" insurance laws, a report may not be necessary. This is especially true if there are no injuries and both vehicles are driveable.
- Choose a reputable collision repair facility for your vehicle. Whether you select a dealer/retailer or a private collision repair facility to fix the damage, make sure you are comfortable with them. Remember, you will have to feel comfortable with their work for a long time.
- Once you have an estimate, read it carefully and make sure you understand what work will be performed on your vehicle. If you have a question, ask for an explanation. Reputable shops welcome this opportunity.

Managing the Vehicle Damage Repair Process

In the event that your vehicle requires damage repairs, GM recommends that you take an active role in its repair. If you have a pre-determined repair facility of choice, take your vehicle there, or have it towed there. Specify to the facility that any required replacement collision parts be original equipment parts, either new Genuine GM parts or recycled original GM parts. Remember, recycled parts will not be covered by your GM vehicle warranty.

Downloaded from www.Manualslib.com manuals search engine

Insurance pays the bill for the repair, but you must live with the repair. Depending on your policy limits, your insurance company may initially value the repair using aftermarket parts. Discuss this with your repair professional, and insist on Genuine GM parts. Remember if your vehicle is leased you may be obligated to have the vehicle repaired with Genuine GM parts, even if your insurance coverage does not pay the full cost.

If another party's insurance company is paying for the repairs, you are not obligated to accept a repair valuation based on that insurance company's collision policy repair limits, as you have no contractual limits with that company. In such cases, you can have control of the repair and parts choices as long as cost stays within reasonable limits.

Reporting Safety Defects

Reporting Safety Defects to the United States Government

If you believe that your vehicle has a defect which could cause a crash or could cause injury or death, you should immediately inform the National Highway Traffic Safety Administration (NHTSA) in addition to notifying General Motors.

If NHTSA receives similar complaints, it may open an investigation, and if it finds that a safety defect exists in a group of vehicles, it may order a recall and remedy campaign. However, NHTSA cannot become involved in individual problems between you, your dealer/retailer, or General Motors.

To contact NHTSA, you may call the Vehicle Safety Hotline toll-free at 1-888-327-4236 (TTY: 1-800-424-9153); go to http://www.safercar.gov; or write to:

Administrator, NHTSA
400 Seventh Street, SW.
Washington D.C., 20590

You can also obtain other information about motor vehicle safety from http://www.safercar.gov.

Downloaded from www.Manualslib.com manuals search engine

Reporting Safety Defects to the Canadian Government

If you live in Canada, and you believe that your vehicle has a safety defect, notify Transport Canada immediately, in addition to notifying General Motors of Canada Limited. Call them at 1-800-333-0510 or write to:

Transport Canada
Road Safety Branch
2780 Sheffield Road
Ottawa, Ontario K1B 3V9

Reporting Safety Defects to General Motors

In addition to notifying NHTSA (or Transport Canada) in a situation like this, please notify General Motors.

Call 1-800-762-2737, or write:

Pontiac Customer Assistance Center
P.O. Box 33172
Detroit, MI 48232-5172

In Canada, call 1-800-263-3777 (English) or 1-800-263-7854 (French), or write:

General Motors of Canada Limited
Customer Communication Centre, CA1-163-005
1908 Colonel Sam Drive
Oshawa, Ontario L1H 8P7

Service Publications Ordering Information

Service Manuals

Service Manuals have the diagnosis and repair information on engines, transmission, axle suspension, brakes, electrical, steering, body, etc.

Service Bulletins

Service Bulletins' give additional technical service information needed to knowledgeably service General Motors cars and trucks. Each bulletin contains instructions to assist in the diagnosis and service of your vehicle.

Owner Information

Owner publications are written specifically for owners and intended to provide basic operational information about the vehicle. The owner manual includes the Maintenance Schedule for all models.

In-Portfolio: Includes a Portfolio, Owner Manual, and Warranty Booklet.

RETAIL SELL PRICE: $35.00 (U.S.) plus processing fee

Without Portfolio: Owner Manual only.

RETAIL SELL PRICE: $25.00 (U.S.) plus processing fee

Downloaded from www.Manualslib.com manuals search engine

Current and Past Model Order Forms

Technical Service Bulletins and Manuals are available for current and past model GM vehicles. To request an order form, specify year and model name of the vehicle.

ORDER TOLL FREE: 1-800-551-4123 Monday-Friday 8:00 AM - 6:00 PM Eastern Time

For Credit Card Orders Only (VISA-MasterCard-Discover), visit Helm, Inc. on the World Wide Web at: www.helminc.com

Or you can write to:

Helm, Incorporated
P.O. Box 07130
Detroit, MI 48207

Prices are subject to change without notice and without incurring obligation. Allow ample time for delivery.

Note to Canadian Customers: All listed prices are quoted in U.S. funds. Canadian residents are to make checks payable in U.S. funds.

Vehicle Data Recording and Privacy

Your GM vehicle has a number of sophisticated computers that record information about the vehicle's performance and how it is driven. For example, your vehicle uses computer modules to monitor and control engine and transmission performance, to monitor the conditions for airbag deployment and deploy airbags in a crash and, if so equipped, to provide antilock braking to help the driver control the vehicle. These modules may store data to help your dealer/retailer technician service your vehicle. Some modules may also store data about how you operate the vehicle, such as rate of fuel consumption or average speed. These modules may also retain the owner's personal preferences, such as radio pre-sets, seat positions, and temperature settings.

Downloaded from www.Manualslib.com manuals search engine

Event Data Recorders

This vehicle has an Event Data Recorder (EDR). The main purpose of an EDR is to record, in certain crash or near crash-like situations, such as an airbag deployment or hitting a road obstacle, data that will assist in understanding how a vehicle's systems performed. The EDR is designed to record data related to vehicle dynamics and safety systems for a short period of time, typically 30 seconds or less. The EDR in this vehicle is designed to record such data as:

- How various systems in your vehicle were operating
- Whether or not the driver and passenger safety belts were buckled/fastened
- How far, if at all, the driver was pressing the accelerator and/or brake pedal
- How fast the vehicle was traveling

This data can help provide a better understanding of the circumstances in which crashes and injuries occur.

Important: EDR data is recorded by your vehicle only if a non-trivial crash situation occurs; no data is recorded by the EDR under normal driving conditions and no personal data (e.g., name, gender, age, and crash location) is recorded. However, other parties, such as law enforcement, could combine the EDR data with the type of personally identifying data routinely acquired during a crash investigation.

To read data recorded by an EDR, special equipment is required, and access to the vehicle or the EDR is needed. In addition to the vehicle manufacturer, other parties, such as law enforcement, that have the special equipment, can read the information if they have access to the vehicle or the EDR.

GM will not access this data or share it with others except: with the consent of the vehicle owner or, if the vehicle is leased, with the consent of the lessee; in response to an official request of police or similar government office; as part of GM's defense of litigation through the discovery process; or, as required by law. Data that GM collects or receives may also be used for GM research needs or may be made available to others for research purposes, where a need is shown and the data is not tied to a specific vehicle or vehicle owner.

Downloaded from www.Manualslib.com manuals search engine

OnStar®

If your vehicle has OnStar and you subscribe to the OnStar services, please refer to the OnStar Terms and Conditions for information on data collection and use. See also *OnStar® System on page 2-39* in this manual for more information.

Navigation System

If your vehicle has a navigation system, use of the system may result in the storage of destinations, addresses, telephone numbers, and other trip information. Refer to the navigation system operating manual for information on stored data and for deletion instructions.

Radio Frequency Identification (RFID)

RFID technology is used in some vehicles for functions such as tire pressure monitoring and ignition system security, as well as in connection with conveniences such as key fobs for remote door locking/unlocking and starting, and in-vehicle transmitters for garage door openers. RFID technology in GM vehicles does not use or record personal information or link with any other GM system containing personal information.

Downloaded from www.Manualslib.com manuals search engine

NOTES

Downloaded from www.Manualslib.com manuals search engine

A

Accessories and Modifications 5-3
Adding Equipment to Your Airbag-Equipped
  Vehicle 1-70
Additives, Fuel 5-6
Add-On Electrical Equipment 5-99
Air Cleaner/Filter, Engine 5-20
Air Conditioning 3-20
Airbag
  Passenger Status Indicator 3-30
  Readiness Light 3-29
Airbag System 1-56
  What Will You See After an Airbag Inflates? 1-63
  When Should an Airbag Inflate? 1-61
  Where Are the Airbags? 1-59
Airbag Systems
  Adding Equipment to Your Airbag-Equipped
    Vehicle 1-70
  How Does an Airbag Restrain? 1-62
  Passenger Sensing System 1-64
  Servicing Your Airbag-Equipped Vehicle 1-69
  What Makes an Airbag Inflate? 1-62
All-Wheel Drive 5-44
All-Wheel Drive Disabled Light 3-42
All-Wheel-Drive (AWD) System 4-8
All-Wheel-Drive Service Light 3-42
Antilock Brake System (ABS) 4-5
Antilock Brake, System Warning Light 3-34
Appearance Care
  Aluminum or Chrome-Plated Wheels 5-95
  Care of Safety Belts 5-92
  Chemical Paint Spotting 5-96
  Cleaning Exterior Lamps/Lenses 5-93
  Fabric/Carpet 5-90
  Finish Care 5-94
  Finish Damage 5-96
  Instrument Panel, Vinyl, and Other Plastic
    Surfaces 5-92
  Interior Cleaning 5-88
  Leather 5-91
  Sheet Metal Damage 5-96
  Tires 5-96
  Underbody Maintenance 5-96
  Vehicle Care/Appearance Materials 5-97
  Washing Your Vehicle 5-93
  Weatherstrips 5-92
  Windshield and Wiper Blades 5-94
Appointments, Scheduling Service 7-10
Ashtray 3-20
Audio System 3-67
  Audio Steering Wheel Controls 3-110
  Navigation/Radio System, see Navigation
    Manual 3-101
  Radio Reception 3-111
  Setting the Time 3-68
  Theft-Deterrent Feature 3-110

Downloaded from www.Manualslib.com manuals search engine

Audio System(s) 3-71
Automatic Headlamp System 3-15
Automatic Transmission
  Fluid 5-22
  Operation 2-25, 2-28

B

Battery 5-37
  Electric Power Management 3-18
  Run-Down Protection 3-19
Brake
  Emergencies 4-6
Brakes 5-34
  System Warning Light 3-33
Braking 4-4
Braking in Emergencies 4-6
Break-In, New Vehicle 2-20
Bulb Replacement 5-47
  Halogen Bulbs 5-47
  Headlamp Aiming 5-46
  Headlamps, Front Turn Signal, Sidemarker,
    and Parking Lamps 5-47
  License Plate Lamps 5-50
  Replacement Bulbs 5-50
  Taillamps, Turn Signal, Stoplamps and
    Back-up Lamps 5-49
Buying New Tires 5-70

C

Calibration 3-49
California Fuel 5-6
California Perchlorate Materials Requirements 5-4
California Proposition 65 Warning 5-4
Canadian Owners ii
Capacities and Specifications 5-105
Carbon Monoxide 2-36, 4-18, 4-32
Care of
  Safety Belts 5-92
Cargo Lamp 3-18
CD, MP3 ..... 3-90, 3-95
Center Console Storage Area 2-43
Chains, Tire 5-75
Charging System Light 3-32
Check
  Engine Light 3-36
Checking Things Under the Hood 5-10
Chemical Paint Spotting 5-96
Child Restraints
  Child Restraint Systems 1-37
  Infants and Young Children 1-34
  Lower Anchors and Tethers for Children 1-42
  Older Children 1-31
  Securing a Child Restraint in a Rear Seat
    Position 1-50
  Securing a Child Restraint in the Right Front
    Seat Position 1-52
  Where to Put the Restraint 1-40

Downloaded from www.Manualslib.com manuals search engine

Cigarette Lighter 3-20
Cleaning
Aluminum or Chrome-Plated Wheels 5-95
Exterior Lamps/Lenses 5-93
Fabric/Carpet 5-90
Finish Care 5-94
Instrument Panel, Vinyl, and Other Plastic Surfaces 5-92
Interior 5-88
Leather 5-91
Tires 5-96
Underbody Maintenance 5-96
Washing Your Vehicle 5-93
Weatherstrips 5-92
Windshield and Wiper Blades 5-94
Climate Control System 3-20
Air Filter, Passenger Compartment 3-24
Outlet Adjustment 3-24
Clock 3-68
Collision Damage Repair 7-12
Compact Spare Tire 5-88
Compass 3-49
Content Theft-Deterrent 2-18
Control of a Vehicle 4-4
Convenience Net 2-48
Coolant
Engine Temperature Gage 3-35
Engine Temperature Warning Light 3-35
Heater, Engine 2-23
Cooling System 5-27
Cruise Control 3-11
Cruise Control Light 3-41
Cupholder(s) 2-43
Customer Assistance Information
Courtesy Transportation 7-10
Customer Assistance for Text Telephone (TTY) Users 7-5
Customer Assistance Offices 7-5
Customer Satisfaction Procedure 7-2
GM Mobility Reimbursement Program 7-6
Reporting Safety Defects to General Motors 7-16
Reporting Safety Defects to the Canadian Government 7-16
Reporting Safety Defects to the United States Government 7-15
Roadside Assistance Program 7-7
Service Publications Ordering Information 7-16

D

Daytime Running Lamps 3-15
Defensive Driving 4-2
Delayed Locking 2-12
DIC Compass 3-49
Disc, MP3 ..... 3-90, 3-95
Doing Your Own Service Work 5-4
Dome Lamp 3-17

Downloaded from www.Manualslib.com manuals search engine

Door
Ajar Light 3-43
Delayed Locking 2-12
Locks 2-11
Power Door Locks 2-11
Programmable Automatic Door Locks 2-12
Rear Door Security Locks 2-12
Driver
Seat Height Adjuster 1-3
Driver Information Center (DIC) 3-45
DIC Operation and Displays 3-45
DIC Vehicle Personalization 3-60
DIC Warnings and Messages 3-52
Driving
At Night 4-14
Before a Long Trip 4-16
Defensive 4-2
Drunken 4-3
Highway Hypnosis 4-16
Hill and Mountain Roads 4-17
In Rain and on Wet Roads 4-15
Rocking Your Vehicle to Get it Out 4-22
Winter 4-18
DVD
Rear Seat Entertainment System 3-101

E

EDR 7-17
Electrical System
Add-On Equipment 5-99
Engine Compartment Fuse Block 5-102
Fuses and Circuit Breakers 5-99
Instrument Panel Fuse Block 5-100
Windshield Wiper Fuses 5-99
Engine
Air Cleaner/Filter 5-20
Change Engine Oil Light 3-40
Check and Service Engine Soon Light 3-36
Coolant 5-22
Coolant Heater 2-23
Coolant Temperature Gage 3-35
Coolant Temperature Warning Light 3-35
Drive Belt Routing 6-15
Engine Compartment Overview 5-12
Exhaust 2-36
Oil 5-15
Oil Life System 5-18
Overheated Protection Operating Mode 5-26
Overheating 5-25
Reduced Power Light 3-41
Running While Parked 2-36
Starting 2-22
Entry Lighting 3-17
Event Data Recorders 7-18
Extender, Safety Belt 1-30

Downloaded from www.Manualslib.com manuals search engine

F

Filter
Engine Air Cleaner 5-20
Finish Damage 5-96
Flashers, Hazard Warning 3-6
Flash-to-Pass 3-9
Flat Tire 5-76
Flat Tire, Changing 5-76
Flat Tire, Storing 5-86
Fluid 5-22
Power Steering 5-32
Windshield Washer 5-33
Fog Lamp
Fog 3-16
Fog Lamp Light 3-40
Folding Rear Seat 1-10
Folding Seatback, Passenger 1-8
Fuel 5-5
Additives 5-6
California Fuel 5-6
Filling a Portable Fuel Container 5-10
Filling the Tank 5-8
Fuels in Foreign Countries 5-7
Gage 3-43
Gasoline Octane 5-5
Gasoline Specifications 5-6
Low Warning Light 3-44
Fuses
Engine Compartment Fuse Block 5-102
Fuses and Circuit Breakers 5-99
Instrument Panel Fuse Block 5-100
Windshield Wiper 5-99

G

Gage
Engine Coolant Temperature 3-35
Fuel 3-43
Speedometer 3-28
Tachometer 3-28
Gasoline
Octane 5-5
Specifications 5-6
Gate Ajar Light 3-42
Glove Box 2-43
GM Mobility Reimbursement Program 7-6

H

Hazard Warning Flashers 3-6
Head Restraints 1-7
Headlamp
Aiming 5-46

Downloaded from www.Manualslib.com manuals search engine

Headlamps 3-14
Bulb Replacement 5-47
Daytime Running Lamps 3-15
Flash-to-Pass 3-9
Halogen Bulbs 5-47
Headlamps, Front Turn Signal, Sidemarker, and Parking Lamps 5-47
High/Low Beam Changer 3-8
On Reminder 3-14
Heated Seats 1-4
Heater 3-20
Height Adjuster, Driver Seat 1-3
Highbeam On Light 3-41
High-Speed Operation, Tires 5-61
Highway Hypnosis 4-16
Hill and Mountain Roads 4-17
Hood
Checking Things Under 5-10
Release 5-11
Horn 3-6
How to Wear Safety Belts Properly 1-17

I

Ignition Positions 2-21
Infants and Young Children, Restraints 1-34
Inflation - Tire Pressure 5-59
Instrument Panel
Overview 3-4
Instrument Panel (I/P)
Brightness 3-16
Cluster 3-27

J

Jump Starting 5-38

K

Keyless Entry System 2-4
Keys 2-3

L

Labeling, Tire Sidewall 5-53
Lamps
Cargo 3-18
Dome 3-17
Map 3-17
Lap-Shoulder Belt 1-25
LATCH System
Child Restraints 1-42
License Plate Lamps 5-50

Downloaded from www.Manualslib.com manuals search engine

Liftgate
Carbon Monoxide 2-13
Light
Airbag Readiness 3-29
All-Wheel Drive Disabled 3-42
Antilock Brake System Warning 3-34
Brake System Warning 3-33
Change Engine Oil 3-40
Charging System 3-32
Cruise Control 3-41
Door Ajar 3-43
Engine Coolant Temperature Warning 3-35
Fog Lamp 3-40
Gate Ajar 3-42
Highbeam On 3-41
Low Fuel Warning 3-44
Malfunction Indicator 3-36
Oil Pressure 3-39
Passenger Airbag Status Indicator 3-30
Reduced Engine Power 3-41
Safety Belt Reminders 3-28
Security 3-40
Service All-Wheel-Drive 3-42
Service Vehicle Soon 3-43
TCS Warning Light 3-34
Tire Pressure 3-36
Traction Control System (TCS) Warning 3-34
Lighting
Entry 3-17
Lights 3-14
Flash-to-Pass 3-9
High/Low Beam Changer 3-8
On Reminder 3-14
Loading Your Vehicle 4-22
Lockout Protection 2-13
Locks
Delayed Locking 2-12
Door 2-11
Lockout Protection 2-13
Power Door 2-11
Programmable Automatic Door Locks 2-12
Rear Door Security Locks 2-12
Loss of Control 4-12
Low Fuel Warning Light 3-44
Luggage Carrier 2-43
Lumbar
Manual Controls 1-4

M

Maintenance Schedule
Additional Required Services 6-6
At Each Fuel Fill 6-8
At Least Once a Month 6-9

Downloaded from www.Manualslib.com manuals search engine

Maintenance Schedule (cont.)
At Least Once a Year 6-9
Introduction 6-2
Maintenance Footnotes 6-7
Maintenance Record 6-16
Maintenance Replacement Parts 6-14
Maintenance Requirements 6-2
Owner Checks and Services 6-8
Recommended Fluids and Lubricants 6-12
Scheduled Maintenance 6-4
Using 6-2
Your Vehicle and the Environment 6-2
Malfunction Indicator Light 3-36
Manual Lumbar Controls 1-4
Manual Reclining Seatbacks 1-5
Manual Seats 1-2
Manual, Using iii
Map Lamps 3-17
Message
DIC Warnings and Messages 3-52
Mirrors
Automatic Dimming Rearview with OnStar® 2-38
Manual Rearview Mirror 2-37
Manual Rearview Mirror with OnStar® 2-37
Outside Convex Mirrors 2-39
Outside Power Mirrors 2-38
MP3 ..... 3-90, 3-95
MyGMLink.com 7-4

N

Navigation System, Privacy 7-19
Navigation/Radio System, see Navigation Manual 3-101
New Vehicle Break-In 2-20

O

Odometer 3-28
Odometer, Trip 3-28
Off-Road Recovery 4-12
Oil
Change Engine Oil Light 3-40
Engine 5-15
Pressure Light 3-39
Oil, Engine Oil Life System 5-18
Older Children, Restraints 1-31
Online Owner Center 7-4
OnStar, Privacy 7-19
OnStar® System, see OnStar® Manual 2-39
Other Warning Devices 3-6
Outlet Adjustment 3-24
Outlets
Accessory Power 3-19
Outside
Convex Mirrors 2-39
Power Mirrors 2-38

Downloaded from www.Manualslib.com manuals search engine

Overheated Engine Protection
Operating Mode 5-26
Owner Checks and Services 6-8
Owners, Canadian ii

P

Paint, Damage 5-96
Park Brake 2-32
Park (P)
Shifting Into 2-33
Shifting Out of 2-35
Parking
Over Things That Burn 2-35
Passenger Airbag Status Indicator 3-30
Passenger Compartment Air Filter 3-24
Passenger Sensing System 1-64
Passing 4-12
PASS-Key® III+ 2-18
PASS-Key® III+ Operation 2-19
Perchlorate Materials Requirements, California 5-4
Power
Door Locks 2-11
Reduced Engine Light 3-41
Retained Accessory (RAP) 2-22
Seat 1-3
Steering Fluid 5-32
Windows 2-16
Privacy 7-17
Event Data Recorders 7-18
Navigation System 7-19
OnStar 7-19
Radio Frequency Identification 7-19
Programmable Automatic Door Locks 2-12

R

Radio Frequency Identification (RFID), Privacy 7-19
Radios 3-67
Radio(s) 3-71
Radios
Navigation/Radio System, see Navigation Manual 3-101
Reception 3-111
Setting the Time 3-68
Theft-Deterrent 3-110
Rear Compartment Storage Panel/Cover 2-45
Rear Door Security Locks 2-12
Rear Seat Armrest 2-46
Rear Seat Entertainment System 3-101
Rear Windshield Washer/Wiper 3-11
Rearview Mirror, Automatic Dimming with OnStar® 2-38
Rearview Mirror with OnStar® 2-37
Rearview Mirrors 2-37

Downloaded from www.Manualslib.com manuals search engine

Reclining Seatbacks, Manual 1-5
Recommended Fluids and Lubricants 6-12
Recreational Vehicle Towing 4-27
Reduced Engine Power Light 3-41
Remote Keyless Entry (RKE) System 2-4
Remote Keyless Entry (RKE) System,
Operation 2-5
Remote Vehicle Start 2-8
Removing the Flat Tire and Installing the Spare
Tire 5-79
Removing the Spare Tire and Tools 5-78
Replacement Bulbs 5-50
Replacement Parts, Maintenance 6-14
Reporting Safety Defects
Canadian Government 7-16
General Motors 7-16
United States Government 7-15
Restraint System Check
Checking the Restraint Systems 1-71
Replacing Restraint System Parts After
a Crash 1-72
Retained Accessory Power (RAP) 2-22
Roadside
Assistance Program 7-7
Rocking Your Vehicle to Get it Out 4-22
Routing, Engine Drive Belt 6-15
Running the Engine While Parked 2-36

S

Safety Belt
Reminder Light 3-28
Safety Belts
Care of 5-92
How to Wear Safety Belts Properly 1-17
Lap-Shoulder Belt 1-25
Safety Belt Extender 1-30
Safety Belt Use During Pregnancy 1-30
Safety Belts Are for Everyone 1-12
Safety Warnings and Symbols iii
Scheduled Maintenance 6-4
Seatback, Folding Passenger 1-8
Seats
Driver Seat Height Adjuster 1-3
Head Restraints 1-7
Heated Seats 1-4
Manual Lumbar 1-4
Manual Reclining Seatbacks 1-5
Passenger Folding Seatback 1-8
Power Seat 1-3
Split Folding Rear Seat 1-10

Downloaded from www.Manualslib.com manuals search engine

Securing a Child Restraint
Rear Seat Position 1-50
Right Front Seat Position 1-52
Security Light 3-40
Service 5-3
Accessories and Modifications 5-3
Adding Equipment to the Outside of Your Vehicle 5-5
All-Wheel-Drive Light 3-42
California Pershlorate Materials Requirements 5-4
California Proposition 65 Warning 5-4
Doing Your Own Work 5-4
Engine Soon Light 3-36
Publications Ordering Information 7-16
Vehicle Soon Light 3-43
Service, Scheduling Appointments 7-10
Servicing Your Airbag-Equipped Vehicle 1-69
Sheet Metal Damage 5-96
Shifting Into Park (P) 2-33
Shifting Out of Park (P) 2-35
Signals, Turn and Lane-Change 3-8
Spare Tire
Compact 5-88
Installing 5-79
Removing 5-78
Storing 5-86
Specifications, Capacities 5-105
Speedometer 3-28
Split Folding Rear Seat 1-10
StabiliTrak® System 4-7
Start Vehicle, Remote 2-8
Starting the Engine 2-22
Steering 4-9
Steering Wheel Controls, Audio 3-110
Steering Wheel, Tilt Wheel 3-7
Storage Areas
Center Console Storage Area 2-43
Convenience Net 2-48
Cupholder(s) 2-43
Glove Box 2-43
Luggage Carrier 2-43
Rear Compartment Storage Panel/Cover 2-45
Rear Seat Armrest 2-46
Table 2-47
Stuck in Sand, Mud, Ice, or Snow 4-21
Sun Visors 2-17
Sunroof 2-48

Downloaded from www.Manualslib.com manuals search engine

T

Table 2-47
Tachometer 3-28
Taillamps
  Turn Signal, Stoplamps and Back-up Lamps 5-49
TCS Warning Light 3-34
Theft-Deterrent, Radio 3-110
Theft-Deterrent Systems 2-17
  Content Theft-Deterrent 2-18
  PASS-Key® III+ 2-18
  PASS-Key® III+ Operation 2-19
Tilt Wheel 3-7
Time, Setting 3-68
Tire
  Pressure Light 3-36
Tires 5-52
  Aluminum or Chrome-Plated Wheels,
    Cleaning 5-95
  Buying New Tires 5-70
  Chains 5-75
  Changing a Flat Tire 5-76
  Cleaning 5-96
  Compact Spare Tire 5-88
  Different Size 5-72
  High-Speed Operation 5-61
  If a Tire Goes Flat 5-76
  Inflation - Tire Pressure 5-59
Tires (cont.)
  Inspection and Rotation 5-67
  Installing the Spare Tire 5-79
  Pressure Monitor Operation 5-63
  Pressure Monitor System 5-62
  Removing the Flat Tire 5-79
  Removing the Spare Tire and Tools 5-78
  Storing a Flat or Spare Tire and Tools 5-86
  Tire Sidewall Labeling 5-53
  Tire Terminology and Definitions 5-56
  Uniform Tire Quality Grading 5-72
  Wheel Alignment and Tire Balance 5-74
  Wheel Replacement 5-74
  When It Is Time for New Tires 5-69
Towing
  Recreational Vehicle 4-27
  Towing a Trailer 4-32
  Your Vehicle 4-27
Traction
  Control System (TCS) 4-6
  Control System Warning Light 3-34
  StabiliTrak® System 4-7
Transmission
  Fluid, Automatic 5-22
Transmission Operation, Automatic 2-25, 2-28
Trip Odometer 3-28
Turn and Lane-Change Signals 3-8
Turn Signal/Multifunction Lever 3-7

Downloaded from www.Manualslib.com manuals search engine

U

Uniform Tire Quality Grading 5-72
Using this Manual iii

V

Vehicle
  Control 4-4
  Damage Warnings iv
  Loading 4-22
  Service Soon Light 3-43
  Symbols iv
Vehicle Data Recording and Privacy 7-17
Vehicle Identification
  Number (VIN) 5-98
  Service Parts Identification Label 5-98
Vehicle Personalization
  DIC 3-60
Vehicle, Remote Start 2-8
Ventilation Adjustment 3-24
Visors 2-17

W

Warning Lights, Gages and Indicators 3-26
Warnings
  DIC Warnings and Messages 3-52
  Hazard Warning Flashers 3-6
  Other Warning Devices 3-6
  Safety and Symbols iii
  Vehicle Damage iv
Wheels
  Alignment and Tire Balance 5-74
  Different Size 5-72
  Replacement 5-74
Where to Put the Restraint 1-40
Windows 2-15
  Power 2-16

Downloaded from www.Manualslib.com manuals search engine

Windshield
Washer 3-10
Washer Fluid 5-33
Wiper Blade Replacement 5-51
Wiper Blades, Cleaning 5-94
Wiper Fuses 5-99
Wipers 3-9
Windshield, Rear Washer/Wiper 3-11
Winter Driving 4-18

X

XM Radio Messages 3-100

Y

Your Vehicle and the Environment 6-2

Downloaded from www.Manualslib.com manuals search engine